2023
UNDERGROUND FIELD MAINTENANCE ONLY

Historical Record: 8/25/2023
External Version

SDGE™

GENERAL INFORMATION	3000
PRACTICES	3100
IDENTIFICATION	3200
SUBSTRUCTURES	3300
PADS, RETAINING WALLS & CLEARANCES	3400
PAD & WALL MOUNTED SECTIONALIZING EQUIPMENT	3500
SUBSURFACE SECTIONALIZING EQUIPMENT	3600
TRANSFORMERS	3700
CAPACITORS	3800
SECONDARIES/SERVICES	3900
CABLES	4000
TERMINATIONS SPLICING CONNECTIONS	4100
CABLE POLES	4200
FUSES & FAULT INDICATORS	4300
LIGHTING	4400
GROUNDING	4500
TELECOMMUNICATIONS & SCADA	4600
PRIMARY METER, REGULATOR & BOOSTER STATION	4700
VAULT STANDARDS	4800
TRENCHLESS CONSTRUCTION	5000
DISCLAIMER & CONTACTS	
SUMMARY OF CHANGES	
LEGACY UNDERGROUND FMO	

ATTENTION:

- The contents held within this book are for field maintenance only. Every effort should be made, when possible, to upgrade to current standards.

- Due to the age of the documentation, this book is not a 100% search-able currently. This may be resolved later.

IF YOU HAVE ANY QUESTIONS REGARDING THE CONTENT OF THESE MANUALS, PLEASE EMAIL CONSTRUCTIONSTANDARDSADMINISTRATORS@SEMPRAUTILITIES.COM OR CONTACT:

MANUAL	CONTACT	EMAIL ADDRESS	PHONE
Electric Distribution Design Manual	Martha Lachmayr	mlachmayr@sdge.com	(858) 654-8245
Overhead Construction Standards	Mike Forchette	mforchette@sdge.com	(619) 244-7495
Service Standards & Guide	Israel Juarez	ijuarez@sdge.com	(858) 636-3941
Electric Vehicle Supply Equipment Standards	Israel Juarez	ijuarez@sdge.com	(858) 636-3941
Underground Construction Standards	Eddie Alcobia	ealcobia@sdge.com	(619) 574-4988
Electric Standard Practices	Joey Kucharyski	jkucharyski@sdge.com	(760) 566-5919
Tool Catalog	Roy Guilao	rguilao@sdge.com	(760) 672-6211

REV. January 20, 2023

MAIN TABLE OF CONTENTS

SUMMARY OF CHANGES

DATE	STANDARD PAGES	FILE NAME
04/30/19	New Format Release	UGFMO2019v0430.pdf
05/23/19	3000, 3112, 4700, 4800	UGFMO2019v0523.pdf
06/13/19	No Updates	UGFMO2019v0613.pdf
07/15/19	No Updates	UGFMO2019v0715.pdf
07/18/19	Moved Legacy FMO files into the book	UGFMO2019v0718.pdf
08/19/19	4301, 4306, 4308	UGFMO2019v0819.pdf
09/20/19	No Updates	UGFMO2019v0920.pdf
10/25/19	Legacy Standards: 3000, 3100, 3400, 3600, 3700, 4100, 4200	UGFMO2019v1025.pdf
12/20/19	4101, 4181, 4198	UGFMO2019v1220.pdf
01/24/20	COVER PAGE	UGFMO2020v0124.pdf
04/24/20	4201, 4287	UGFMO2020v0424.pdf
05/22/20	INTERNAL SERVER UPGRADE	UGFMO2020v0522.pdf
06/19/20	4101, 4110	UGFMO2020v0619.pdf
07/24/20	4401, 4411	UGFMO2020v0724.pdf
08/21/20	4201, 4205, 4208	UGFMO2020v0821.pdf
10/23/20	3701, 3720, 4101, 4111	UGFMO2020v1023.pdf
01/22/21	COVER PAGE, DISCLAIMER	UGFMO2021v0122.pdf
06/25/21	3701, 3703	UGFMO2021v0625.pdf
08/20/21	4201, 4230	UGFMO2021v0820.pdf
12/17/21	3501, 3523, 4101, 4122, 4183	UGFMO2021v1217.pdf
01/21/22	Cover Page	UGFMO2022v0121.pdf
02/25/22	4101, 4113, 4301, 4305, 4307, 4308, 4401	UGFMO2022v0225.pdf
10/14/22	3501, 3525	UGFMO2022v1014.pdf
01/20/23	COVER PAGE, DISCLAIMER, 3301, 3313	UGFMO2023v0120.pdf
02/24/23	UGL3599.207	UGFMO2023v0224.pdf
03/24/23	4601, 4641	UGFMO2023v0324.pdf
04/21/23	4701, 4702	UGFMO2023v0421.pdf
05/19/23	3301, 3383	UGFMO2023v0519.pdf
08/25/23	4401, 4410	UGFMO2023v0825.pdf

MAIN TABLE OF CONTENTS

ARCHIVED BOOKS AVAILABLE ON THE INTERNAL VERSION

PAGE	SUBJECT

MAIN TABLE OF CONTENTS

No FMO content available at this time.

© 1998 - 2019 San Diego Gas & Electric Company. All rights reserved. Removal of this copyright notice without permission is not permitted under law.

REV	CHANGE	BY	DSGN	APPV	DATE	REV	CHANGE	BY	DSGN	APPV	DATE
C						F					
B						E					
A	ORIGINAL ISSUE	JIK	JES	CZH	5/23/2019	D					

Indicates Latest Revision | Completely Revised | X | New Page | Information Removed

SDG&E ELECTRIC UNDERGROUND FIELD MAINTENANCE ONLY STANDARDS

GENERAL INFORMATION
TABLE OF CONTENTS

PAGES	SUBJECT
3103	DISTRIBUTION STATION NUMBERING
3112	GFMS SUMMARY OPERATING MAP SYMBOL TABLE

MAIN TABLE OF CONTENTS

THIS SECTION HAS BEEN REMOVED FROM THE EXTERNAL VERSION. DUE TO CONFIDENTIAL INFORMATION.

© 1998 - 2016 San Diego Gas & Electric Company. All rights reserved. Removal of this copyright notice without permission is not permitted under law.

REV	CHANGE	BY	DSGN	APPV	DATE	REV	CHANGE	BY	DSGN	APPV	DATE
C						F					
B						E					
A	ORIGINAL ISSUE	JS	TR	MDJ	7/25/2016	D					

3200 - IDENTIFICATION

3200 - IDENTIFICATION

MAIN TABLE OF CONTENTS

PAGES	SUBJECT
3212	TRANSFORMER AND FUSE IDENTIFICATION
3222	LINE FAULT INDICATOR TAGS LOCATION IDENTIFICATION
3241	SOIL GAS MITIGATION WARNING DECAL

THIS SECTION HAS BEEN REMOVED FROM THE EXTERNAL VERSION. DUE TO CONFIDENTIAL INFORMATION.

© 1998 - 2016 San Diego Gas & Electric Company. All rights reserved. Removal of this copyright notice without permission is not permitted under law.

REV	CHANGE	BY	DSGN	APPV	DATE	REV	CHANGE	BY	DSGN	APPV	DATE
C						F					
B						E					
A	ORIGINAL ISSUE	JS	TR	MDJ	7/25/2016	D					

X Indicates Latest Revision | Completely Revised | New Page | Information Removed

SDG&E UNDERGROUND CONSTRUCTION STANDARD

IDENTIFICATION FMO
TABLE OF CONTENTS

FMO
OH 3201

3300 - SUBSTRUCTURES / CONDUITS

3300 - SUBSTRUCTURES / CONDUITS

PAGE	SUBJECT
3313	3313 NON-TRAFFIC RELATED ELECTRIC DISTRIBUTION HANDHOLE PRECAST CONCRETE
3322	MANHOLE - 6' X 10' X 7'
3372	CONDUIT SIZING FOR UNDERGROUND CABLES
3378	CONDUIT INSTALLATION IN CELL BRIDGES
3383	CONDUIT SPLICING INSTALLATION FOR CABLE-IN-CONDUIT (PID & SIDA)
3384	SOIL GAS MITIGATION

MAIN TABLE OF CONTENTS

© 1998 - 2023 San Diego Gas & Electric Company. All rights reserved. Removal of this copyright notice without permission is not permitted under law.

REV	CHANGE	DR	BY	DSN	APV	DATE	REV	CHANGE	DR	BY	DSN	APV	DATE
C	3383 UPDATE	ARC	ADW	JES	KRG	05/08/2023	F						
B	3313 UPDATE	ARC	ADW	JES	KRG	01/16/2023	E						
A	ORIGINAL ISSUE	-	JS	TR	MDJ	7/25/2016	D						

UG3313 FIELD MAINTENANCE ONLY

ALL VERSIONS LISTED IN FMO ARE SUPERSEDED BY THEIR CURRENT VERSION FOUND INSIDE THE UNDERGROUND CONSTRUCTION STANDARD MANUAL.

REVISION HISTORY:

01/16/2023: 3313 NON-TRAFFIC RATED ELECTRIC DISTRIBUTION HANDHOLE PRECAST CONCRETE (OD - 44" X 32") - SHEET 1 & 3

TABLE OF CONTENTS

© 1998 - 2023 San Diego Gas & Electric Company. All rights reserved. Removal of this copyright notice without permission is not permitted under law.

REV	CHANGE	DR	BY	DSN	APV	DATE	REV	CHANGE	DR	BY	DSN	APV	DATE
C							F						
B							E						
A	ORIGINAL ISSUE	ARC	ADW	JES	KRG	01/16/2023	D						

	Indicates Latest Revision		Completely Revised	X New Page		Information Removed

SDG&E ELECTRIC UNDERGROUND FIELD MAINTENANCE ONLY STANDARDS

3313 NON-TRAFFIC RATED ELECTRIC DISTRIBUTION HANDHOLE PRECAST CONCRETE (OD - 44" X 32")

SCOPE: THIS STANDARD SHOWS THE INSTALLATION AND MATERIAL REQUIREMENTS FOR A 3313 NON-TRAFFIC RATED, ELECTRIC DISTRIBUTION AND COMMUNICATION HANDHOLES.

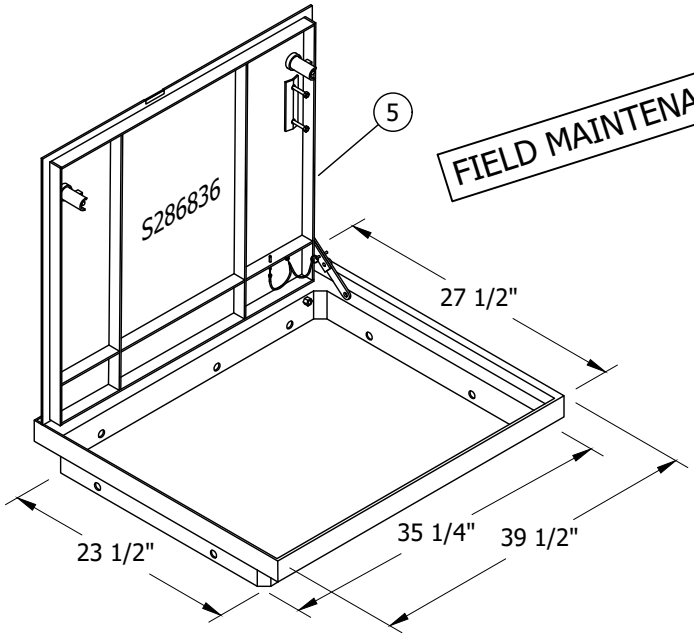

FIGURE 1
PARKWAY EZ-LIFT ALUMINUM COVER (V)
3313 HANDHOLE

FIELD MAINTENANCE ONLY

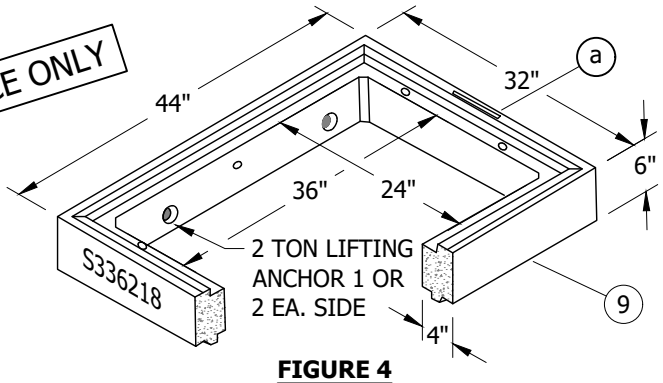

FIGURE 4
6" TOP SECTION
3313 HANDHOLE

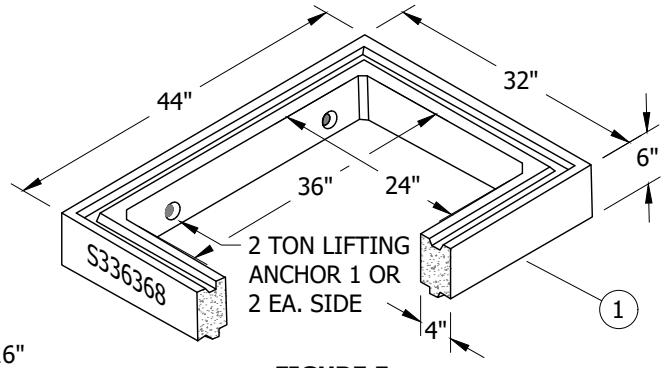

FIGURE 5
6" INTERMEDIATE
EXTENSION SECTION
3313 HANDHOLE

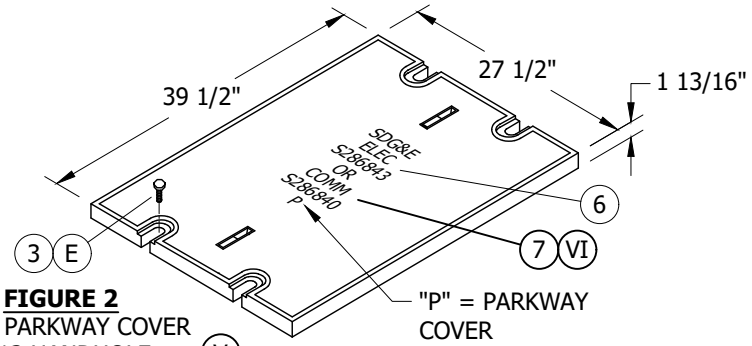

FIGURE 2
STEEL PARKWAY COVER
3313 HANDHOLE
FIELD MAINTENANCE
ONLY
(V)

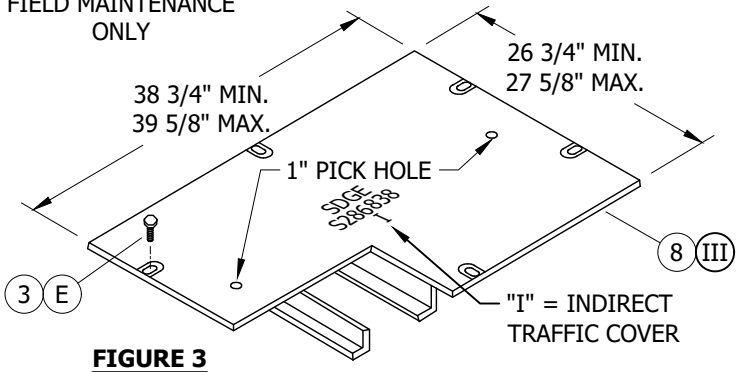

FIGURE 3
STEEL COVER
FIELD MAINTENANCE ONLY

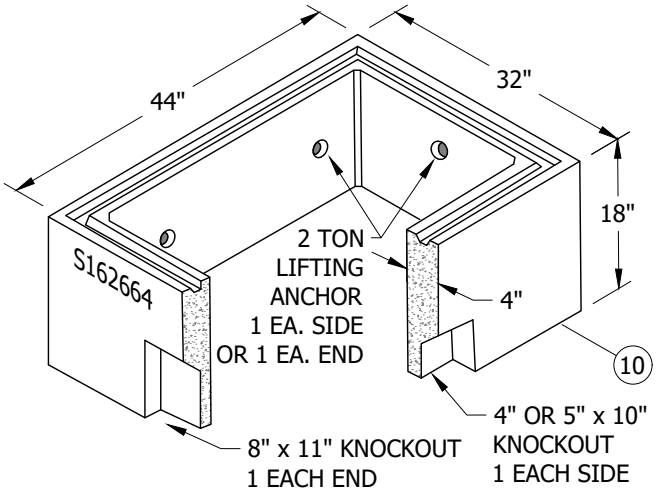

FIGURE 6
18" BASE SECTION
3313 HANDLE

© 1998 - 2023 San Diego Gas & Electric Company. All rights reserved. Removal of this copyright notice without permission is not permitted under law.

REV	CHANGE	DR	BY	DSN	APV	DATE	REV	CHANGE	DR	BY	DSN	APV	DATE
C	DRAWING UPDATE	EDM	ADW	JES	CZH	10/04/2021	F						
B	ADD 3313 L & XL	-	-	GW	JS	06/01/2018	E						
A	EDITORIAL CHANGES	-	-	JS	TR	05/26/2016	D	MOVED TO FMO	ARC	ADW	JES	KRG	01/16/2023

Indicates Latest Revision | Completely Revised | X New Page | Information Removed

SHEET 1 OF 2

SDG&E ELECTRIC UNDERGROUND FIELD MAINTENANCE ONLY STANDARDS

3313 NON-TRAFFIC RATED ELECTRIC DISTRIBUTION HANDHOLE
PRECAST CONCRETE
(OD - 44" X 32")

FMO
UG3313.1

TABLE OF CONTENTS

INSTALLATION (CONT'D):

(G) THE 6-INCH INTERMEDIATE SECTION IS NEEDED IN THE 3313 HANDHOLE FOR THE FOLLOWING SCENARIOS:

1. SECONDARY HANDHOLE WITH 2 OR MORE RUNS OF 350 CABLE
2. SECONDARY HANDHOLE WITH 7 OR 8 SECONDARY/SERVICE RUNS
3. PRIMARY ONLY HANDHOLE

(H) IF STANDARD DIMENSION CANNOT BE MET, FILL WITH 1-SACK SLURRY.

FIELD MAINTENANCE ONLY

ATTENTION:

* LOCATE SECONDARY CONDUITS WITHIN 12 INCHES OF THE END OF THE HANDHOLE CLOSEST TO THE SIDEWALK.

BILL OF MATERIALS:

ITEM	DESCRIPTION	WEIGHT (LBS MAX)	QUANTITY	STANDARD PAGE	STOCK NUMBER		DESIGN UNITS	
INTERMEDIATE SECTION AND MISCELLANEOUS ITEMS - ADD AS NEEDED								
1	EXTENSION SECTION, INTERMEDIATE, 6", 2'-0" X 3'-0" (FIG. 5)	267	AS REQ'D	--	S336368	--	3313X1	--
2	LUBRICANT, EZ-1	--	AS REQ'D	--	S469764	--	--	
3	BOLT, PENTAHEAD, 1/2" X 1 1/2"	--	6	--	S156004	--	--	
4	SEALANT, PLASTIC-MASTIC	--	AS REQ'D	--	S631872	--	--	
PARKWAY 3313 EZ-LIFT ELECTRIC DISTRIBUTION HANDHOLE								
5	COVER, PARKWAY, EZ-LIFT TILT-UP, (FIG. 1)	96	1	--	S286836	--	3313PKEZ	3313PCEZ
9	TOP SECTION, 6", (FIG. 4)	285	1	--	S336218	--	3313X6	
10	BASE SECTION, 18", (FIG. 6)	885	1	--	S162664	--	3313-B	
NON-TRAFFIC RATED 3313 ELECTRIC DISTRIBUTION HANDHOLE (WITHOUT EXTENSION)								
6	COVER, PARKWAY (STEEL), "ELEC", (FIG. 2)	96	1	--	S286843	S400300	3313E	3313PC
9	TOP SECTION, 6"	285	1	--	S336218		3313X6	
10	BASE SECTION, 18"	885	1	--	S162664		3313-B	
NON-TRAFFIC RATED 3313 COMMUNICATION DISTRIBUTION HANDHOLE (WITHOUT EXTENSION)								
7	COVER, PARKWAY (STEEL), "COMM", (FIG. 2)	96	1	--	S286840	--	3313C	--
9	TOP SECTION, 6"	285	1	--	S336218	--	3313X6	
10	BASE SECTION, 18"	885	1	--	S162664	--	3313-B	
NON-TRAFFIC RATED 3313 ELECTRIC DISTRIBUTION HANDHOLE (WITHOUT EXTENSION)								
8	COVER, INDIRECT TRAFFIC (STEEL), (FIG. 3)	150	1	--	S286838	S400302	3313TO	3313TC
9	TOP SECTION, 6"	285	1	--	S336218		3313X6	
10	BASE SECTION, 18"	885	1	--	S162664		3313-B	

NOTES:

(I) IF THE CUSTOMER IS REQUIRED TO INSTALL A HANDHOLE IN A SERVICE LATERAL, THE LID SHALL BE MARKED. "ELECTRIC" NOT "SDG&E".

(II) TO BE ORDERED ONLY FOR ADDITIONAL HEIGHT.

(III) NOT TO BE INSTALLED IN DIRECT TRAFFIC. APPROVED FOR USE IN AREAS OF INDIRECT TRAFFIC SUCH AS ALLEYWAYS, DRIVEWAYS, PARKING LOTS, ETC.

(IV) NOT SHOWN ON FIGURES

(V) ALLOWED ONLY IN AREAS WHERE NO TRAFFIC IS PERMITTED (E.G. SIDEWALKS, GRASS, ETC.)

(VI) INCLUDES ITEMS 9 AND 10.

© 1998 - 2023 San Diego Gas & Electric Company. All rights reserved. Removal of this copyright notice without permission is not permitted under law.

REV	CHANGE	DR	BY	DSN	APV	DATE	REV	CHANGE	DR	BY	DSN	APV	DATE
C	DRAWING UPDATE	EDM	ADW	JES	CZH	10/04/2021	F						
B	ADD 3313 L & XL	-	-	GW	JS	06/01/2018	E						
A	EDITORIAL CHANGES	-	-	JS	TR	05/26/2016	D	MOVED TO FMO	ARC	ADW	JES	KRG	01/16/2023

Indicates Latest Revision | Completely Revised | X New Page | Information Removed

SHEET 2 OF 2

SDG&E ELECTRIC UNDERGROUND FIELD MAINTENANCE ONLY STANDARDS

3313 NON-TRAFFIC RATED ELECTRIC DISTRIBUTION HANDHOLE
PRECAST CONCRETE
(OD - 44" X 32")

FMO
UG3313.2

TABLE OF CONTENTS

FIELD MAINTENANCE ONLY

REVISION HISTORY:

7/13/2016: All versions prior to 2016 are superseded by their current version found inside the Overhead Construction Standard Manual.

TABLE OF CONTENTS

© 1998 - 2016 San Diego Gas & Electric Company. All rights reserved. Removal of this copyright notice without permission is not permitted under law.

REV	CHANGE	BY	DSGN	APPV	DATE	REV	CHANGE	BY	DSGN	APPV	DATE
C						F					
B						E					
A	ORIGINAL ISSUE	JS	IL	MDJ	7/13/2016	D					

X Indicates Latest Revision | Completely Revised | New Page | Information Removed

SHEET 1 OF 1

SDG&E ELECTRIC UNDERGROUND STANDARD

MANHOLE - 6' X 10' X 7'

FMO UG 3322

TABLE OF CONTENTS

SCOPE: THIS STANDARD SHOWS THE MATERIALS AND INSTALLATION INSTRUCTIONS FOR THE 3322 MANHOLE (OLD U28 4)

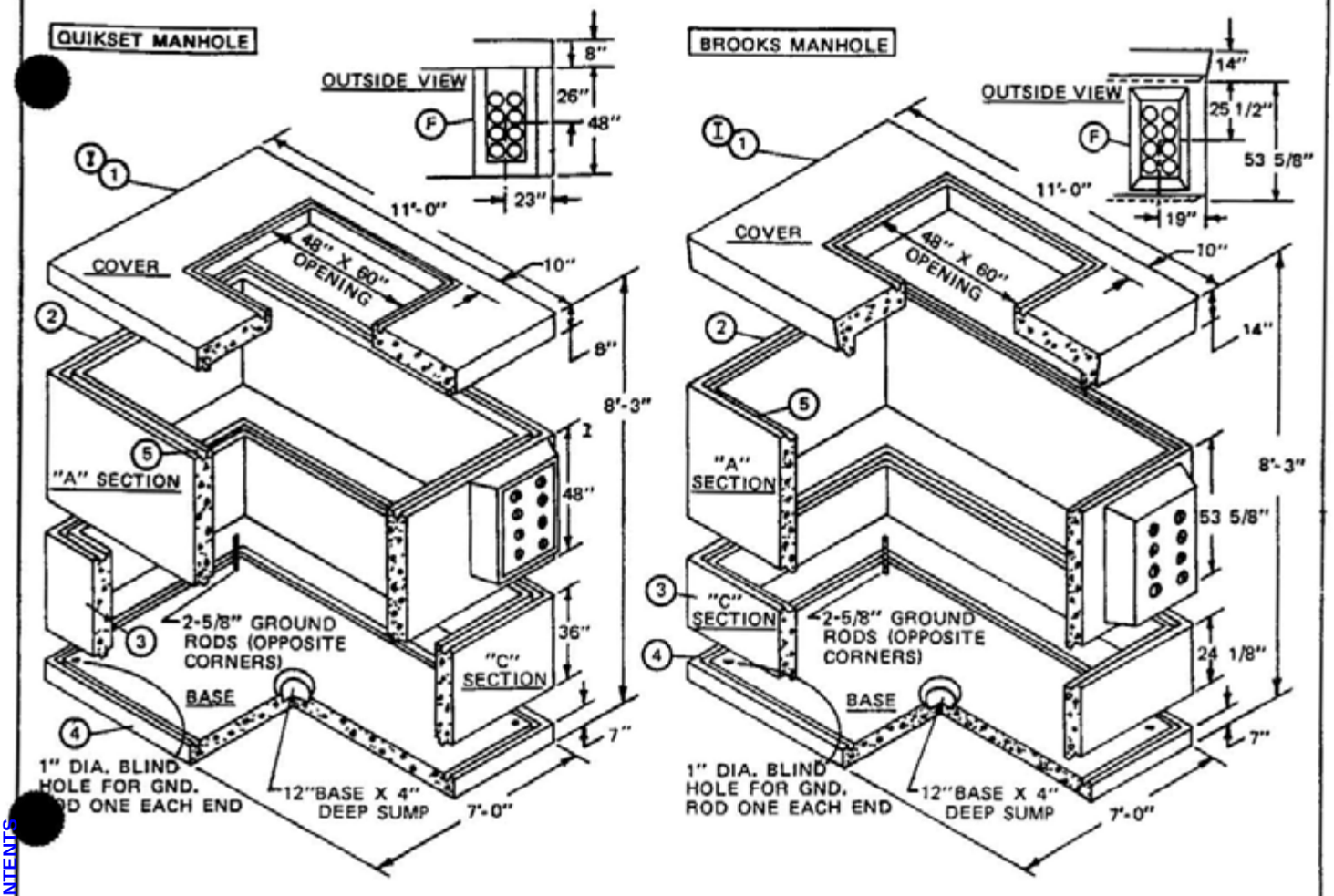

NOTES

- MANUFACTURERS IDENTIFICATION PAINTED INSIDE "A" SECTION ON END.

THIS PAGE FOR FIELD MAINTENANCE ONLY

BILL OF MATERIAL

ITEM	DESCRIPTION	ORDER OF INSTALLATION	1 INCH INSERT	WEIGHT (LBS.)		RISS LIFTER	CONSTR. STD.	STOCK NUMBER
				QUICK-SET	BROOKS			
1	COVER, CONCRETE MANHOLE	TOP	-	5800	7000	4	-	287120
2	EXTENSION, CONCRETE MANHOLE, "A" SECTION	BELOW TOP	2 BESIDE TERMS.	7800	9400	4	-	336268
3	EXTENSION, CONCRETE MANHOLE, "C" SECTION	BELOW "A" SECTION	-	7600	4465	4	-	336276
4	BASE, CONCRETE MANHOLE	BASE	2	5000	6875	4	-	125744
5	SEALANT, JOINT, PLASTIC- MASTIC	-	-	-	-	-	3306	631872
6	CLAMP, GROUND ROD, 5/8"	-	-	-	-	-	-	230016

DATE 1-1-92 APPD JLB/[illegible]	SDG&E ELECTRIC STANDARDS MANHOLE - 6' X 10' X 7'	3399.205 SUPERSEDES 3322 1 (3-9-83)

INSTALLATION:

A. USE MASTIC SEALANT (STOCK NUMBER 631872) BETWEEN ALL SECTIONS, (SEE STANDARD 3306). USE DOUBLE SEAL WHEN FIELD CONDITIONS INDICATE THAT WATER WILL PENETRATE THE MANHOLE THROUGH THE JOINTS.

B. AN EXCAVATION: 9'-0" X 14'-0" X 10'-7" MINIMUM IS REQUIRED FOR INSTALLATION OF THE MANHOLE AT AN ELEVATION 2 FEET BELOW GRADE. DEPTH TO BE 10'-7" MAXIMUM.

C. USE #2 AWG BARE COPPER WIRE FOR GROUNDS. CONNECT TO GROUND RODS WITH GROUND ROD CLAMPS (STOCK NUMBER 230016).

D. WHEN INSTALLING CONDUITS, USE LOWER SET OF CONDUIT KNOCKOUTS FIRST.

(F) DUCT KNOCKOUT - 18" X 35" X 12" DEEP (QUICKSET), 18" X 36" X 12" DEEP (BROOKS).

REFERENCE:

(I) FOR 48" X 60" MANHOLE NECK AND COVER, SEE STANDARD 3332.

THIS PAGE FOR FIELD MAINTENANCE ONLY

TABLE OF CONTENTS

3399.206 SUPERSEDES 3322 2 (3-9-83)	SDG&E ELECTRIC STANDARDS **MANHOLE – 6' x 10' x 7'**	DATE 3-9-83 APPD JWF/DRH

FIELD MAINTENANCE ONLY

REVISION HISTORY:

7/13/2016: All versions prior to 2016 are superseded by their current version found inside the Overhead Construction Standard Manual.

TABLE OF CONTENTS

© 1998 - 2016 San Diego Gas & Electric Company. All rights reserved. Removal of this copyright notice without permission is not permitted under law.

REV	CHANGE	BY	DSGN	APPV	DATE	REV	CHANGE	BY	DSGN	APPV	DATE
C						F					
B						E					
A	ORIGINAL ISSUE	JS	IL	MDJ	7/13/2016	D					

X Indicates Latest Revision | Completely Revised | New Page | Information Removed

SHEET 1 OF 1

SDG&E ELECTRIC UNDERGROUND STANDARD

CONDUIT SIZING FOR UNDERGROUND CABLES

FMO UG 3372

SCOPE: THIS STANDARD LISTS THE MINIMUM CONDUIT SIZE REQUIRED FOR THE INSTALLATION OF PRIMARY AND SECONDARY CABLES.

NOTES:

- IF FUTURE LOAD GROWTH REQUIRES LARGER CABLE THAN INITIAL REQUIREMENTS, SIZE CONDUIT FOR FUTURE NEEDS. SERVICE PLANNING SUPERVISOR'S APPROVAL IS REQUIRED.

FOR FIELD MAINTENANCE ONLY

CONDUIT SIZING CHARTS

PRIMARY				
CABLE TYPE	CONDUCTOR SIZE AWG OR KCMIL	MINIMUM CONDUIT SIZE (INCHES)		
		1/C	2-1/C	3-1/C OR PARALLEL
PECN	2 CU	2"	3" (B)	3" (D)
PECN	2 SOL AL	2"	3" (C)	3" (D)
PECN	2/0 AL	--	--	3" (A)
PECN	4/0 CU	--	--	5" (A) (F)
PECN OR PECN-PEJ	500 CU	--	--	5" (A) (F)
XLPECN	750 AL	--	--	5" (A)
XLPECN	1000 AL	--	--	5" (A)

INSTALLATION:

(A) 2/0 THROUGH 1000 KCMIL PRIMARY CABLES ARE ONLY PURCHASED IN TRIPLEXED CONFIGURATION.

(B) 2-1/C #2 CU PECN CABLES MAY BE PARALLELED IN A 3 INCH CONDUIT FOR SINGLE-PHASE, 12 KV LOAD.

(C) 2-1/C #2 SOL PECN CABLES MAY BE PARALLELED IN A 3 INCH CONDUIT FOR SINGLE-PHASE, 12 KV LOAD.

(D) 3-1/C CABLES MAY BE PARALLELED IN A 3 INCH CONDUIT FOR THREE-PHASE LOAD.

(F) MAY BE INSTALLED IN EXISTING 4 INCH CONDUITS.

TABLE OF CONTENTS

FIELD MAINTENANCE ONLY

REVISION HISTORY:

7/13/2016: All versions prior to 2016 are superseded by their current version found inside the Overhead Construction Standard Manual.

TABLE OF CONTENTS

© 1998 - 2016 San Diego Gas & Electric Company. All rights reserved. Removal of this copyright notice without permission is not permitted under law.

REV	CHANGE	BY	DSGN	APPV	DATE	REV	CHANGE	BY	DSGN	APPV	DATE
C						F					
B						E					
A	ORIGINAL ISSUE	JS	IL	MDJ	7/13/2016	D					

X Indicates Latest Revision | Completely Revised | New Page | Information Removed

SHEET 1 OF 1

SDG&E ELECTRIC UNDERGROUND STANDARD

CONDUIT INSTALLATION IN CELL BRIDGES

FMO UG 3378

SCOPE: THIS STANDARD (3378.1 TO 3378.6) SHOWS THE INSTALLATION OF CONDUITS IN CLOSED CELL BRIDGE CONSTRUCTION.

INSTALLATION:

(A) THE CONDUIT SPACERS SHALL BE SECURELY STRAPPED TO THE CONDUIT SPACER SUPPORT (ITEM 1 THRU 7) WITH #14 GALVANIZED WIRE (ITEM 8), FOR EIGHT CONDUITS. WHEN 6 OR LESS CONDUIT RUNS ARE INSTALLED, EXTRA ROD LENGTH MAY BE CUT OR FOLDED OVER TOP OF CONDUITS TOWARD EACH OTHER INSTEAD OF USING THE GALVANIZED WIRE.

(B) THE FIRST SLIDING SUPPORT INSIDE THE CELL MUST BE PLACED 6" (152) FROM FACE OF EACH END DIAPHRAGM. THE FIRST THREE SLIDING SUPPORTS (ITEM 3) SHALL BE SPACED AT 6 FEET (152) AND FOLLOWED BY TWO FIXED SUPPORTS (ITEM 1) SPACED AT 2 FEET (610). THE REST OF THE SUPPORTS (ITEM 1) SHALL BE PLACED 6 FEET (1828) APART IN THE BRIDGE CELLS.

(C) TOTAL WEIGHT INCLUDES CONDUIT, CONDUIT SPACERS, CONDUIT SUPPORTS AND CONDUCTORS. CONDUCTORS ARE 1000 KCMIL JACKETED AL. SEE TABLE 1, PG. 3378.2.

(D) CONDUIT 12 INCHES (305) EXPANSION SLEEVE (ITEM 12 OR 14), SHALL BE INSTALLED BETWEEN THE FIRST AND SECOND SUPPORTS.

(E) CONDUIT 3 INCHES (76) EXPANSION SLEEVE (ITEM 11 OR 13) SHALL BE INSTALLED A MAXIMUM DISTANCE OF 100 FEET (30480) THROUGHOUT THE RUN.

(F) BRIDGE OPENINGS REQUIRE AN 18 INCH (457) WIDE STEEL SHEAR PLATE (ITEM 17). THE LENGTH OF THE PLATE SHALL BE 15 FEET (4572). USE STOCK ITEM 543110 THE STEEL SHEAR PLATE IS TO BE PLACED FROM THE BRIDGE ABUTMENT WALL EXTENDING 14'–4" (4369) OUTSIDE THE ABUTMENT TO SUPPORT AND PROTECT THE CONDUITS AGAINST SHEAR FROM EMBANKMENT SETTLEMENT, AND REDUCE THE UPLIFT FORCES ON THE SOIL THAT WOULD BE GENERATED FROM THE BRIDGE BACK WALL IMPACTING THE SOIL DURING A LARGE SEISMIC EVENT.

(H) THE CONCRETE CONDUIT BASE SUPPORT (ITEM 1 & 4) SHALL BE SECURELY ATTACHED TO THE BRIDGE SLAB WITH EPOXY BINDER (ITEM 9). THE CONCRETE SURFACE SHALL BE LEVELED AND THOROUGHLY CLEANED PRIOR TO APPLICATION OF THE EPOXY.

(I) THE EPOXY BINDER (CALTRANS APPROVED) IS A 2 COMPONENT ADHESIVE. APPROXIMATELY 1 GAL. OF MIXED EPOXY WILL BE NEEDED FOR EVERY 15 SUPPORTS. "CAREFULLY" FOLLOW MANUFACTURERS INSTRUCTIONS FOR APPLICATION OF EPOXY.

(J) THE SPACE BETWEEN THE CONDUIT AND THE BRIDGE ABUTMENT OPENING SHALL BE SEALED. TIGHTLY WRAP 1 INCH (25) POLYFORM AROUND CONDUITS, THROUGH THE CELL OPENING AND SEAL WITH MORTAR WITH A MINIMUM THICKNESS OF 4 INCHES (102).

(K) FOR CELL OPENING SIZE, SEE 3378.5, FOR POSITIONING OF CELL OPENING WITHIN THE BRIDGE, SEE THE CUSTOMER PROJECT PLANNER.

(L) CONSULT BRIDGE DESIGN ENGINEER FOR LONGITUDINAL & TRANSVERSE DISPLACEMENTS AT SOIL TO ABUTMENT INTERFACE AND ABUTMENT TO BRIDGE INTERFACE.

(M) CONSULT CIVIL/STRUCTURAL ENGINEERING IF THE BRIDGE DESIGN HAS ANY ONE OF THE FOLLOWING PARAMETERS:

a. LONGITUDINAL DISPLACEMENT BETWEEN ABUTMENT AND BRIDGE GREATER THAN 12 INCHES (305).
b. TRANSVERSE DISPLACEMENT BETWEEN ABUTMENT AND BRIDGE GREATER THAN 5 INCHES (127).
c. TRANSVERSE DISPLACEMENT BETWEEN SOIL AND ABUTMENT GREATER THAN 1 INCH (25.4).
d. TRANSVERSE MOVEMENT BETWEEN ABUTMENT BACK–WALL AND SOIL GREATER THAN 1".
e. DISPLACEMENT THAT CAUSES CONFLICT WITH INSTALLATION.
f. BRIDGE LENGTH GREATER THAN 300 FEET (91440).
g. BRIDGE WIDTH SMALLER THAN 50 FEET (15240).
h. BRIDGE DEPTH GREATER THAN 8 FEET (2438).
i. ARCHED FLOOR SLAB (WHERE CONDUIT SUPPORTS ARE ATTACHED).
j. HORIZONTALLY CURVED BRIDGE WITH RADIUS LESS THAN 800 FEET (243840).
k. BRIDGE CONTAIN EXPANSION JOINTS OTHER THAN THOSE AT THE END OF THE BRIDGE AT THE ABUTMENT.
l. ABUTMENT CONFIGURATIONS DIFFERENT THAN SHOWN IN THE STANDARDS.
m. DUCT CONFIGURATIONS NOT SHOWN.

FOR FIELD MAINTENANCE ONLY

TABLE OF CONTENTS

DATE 1–1–2000 APPD	SDG&E ELECTRIC STANDARDS CONDUIT INSTALLATION IN CELL BRIDGES	3399.703 SUPERSEDES 3378.0 (1–1–99)

BILL OF MATERIAL:

ITEM	DESCRIPTION	QUANTITY	CONST STD OR PAGE NO.	STOCK NUMBER	ASSEMBLY UNIT
1	FIXED SUPPORT, TYPE A, CONCRETE CONDUIT SUPPORT, 24" X 6" X 6" (610x152x152)W/ HOT DIPPED GALV. STEEL STEEL REINFORCING BAR, 3/8"(0.375) DIA., ASTM A-615 GR 60.	AS REQ'D	--	703520	BR-FIX
2	FIXED SUPPORT, TYPE B, DIRECT EMBEDDED, H.D. GALV. #4 REBAR ASTM A-615 GR. 60, " ⊔ " SHAPE	AS REQ'D	--	124020	U-SUPP
3	SLIDING SUPPORT, HOT DIP GALVANIZED 3/8"(10) THICK PLATE, 24" x 6"(610 x 152) WITH TWO 3/8" DIA. x 35" (10 x 889) BAR AND TWO 5/8" x 20" (16 x 394) SLOTS	AS REQ'D	3378	703524	BR-SLI ITEM 3 & 4
4	SLIDING SUPPORT TYPE C, CONCRETE CONDUIT SUPPORT, 24" X 6" X 6" (610 x 152 x 152) WITH 1/2" DIA. X 5"(128 x 127) S.S. (304) ANCHOR BOLT WITH 1"(25) LEG. TWO S.S. NUTS AND ONE S.S. FLAT WASHER ON EACH BOLT.	AS REQ'D	3378	703522	
5	SLIDING SUPPORT, TYPE D, HOT DIP GALVANIZED 3/8" (10) THICK STEEL PLATE 24" x 6" (610 x 152) WITH FOUR BOLTS AND TWO BENT RODS.		3378	703560	BR-SLD 3 & 5
6	SPACER, CONDUIT BASE	AS REQ'D	3375	663008	BSPACE
7	SPACER, CONDUIT INTERMEDIATE	AS REQ'D	3375	663528	SPACER
8	WIRE, IRON, #14 GALVANIZED (A)	AS REQ'D	--	815648	--
9	EPOXY BINDER (CAL-TRANS APPROVED) (I)	AS REQ'D	--	213242	--
10	CONDUIT, PVC, SCHEDULE 40, 5"	AS REQ'D	3378	251408	S40-5"
11	SLEEVE, 3"(76) EXPANSION CAPACITY, CONDUIT PLASTIC, 5"(127)	AS REQ'D	3378	650128	5"-EXP
12	JOINT SEISMIC, 12"(305) EXPANSION CAPACITY, CONDUIT PLASTIC, 5"(127)	AS REQ'D	3378	438700	SEJ-5"
13	SLEEVE, 3"(76) EXPANSION CAPACITY, CONDUIT PLASTIC, 4"(102)	AS REQ'D	3378	650126	4"-EXP
14	JOINT SEISMIC, 12"(305) EXPANSION CAPACITY, CONDUIT 4" (102)	AS REQ'D	3378	438698	SEJ-4"
15	POLYFOAM WRAP, 1" (25) THICK	AS REQ'D	--	--	--
16	3/4"(19), DIAMETER HVA ADHESIVE ANCHOR ROD SYSTEM W/HAS SUPER SS58-758 ANCHOR ROD BY HILTI, INC. (1-800-879-8000) (J)	AS REQ'D	--	--	--
17	PLATE, SHEAR LARGE (LIGHT GRAY EPOXY COATED, ALL SIDES) SEE 3378.5 FOR DIMENSIONS (F)	AS REQ'D	3378	543110	SHEAR
18	PLATE, SHEAR SHORT (LIGHT GRAY EPOXY COATED, ALL SIDES) SEE 3378.5 FOR DIMENSIONS (F)	AS REQ'D	3378	543112	SSHEAR
19	FOAM ARCHITECTURAL FOR 4" EXPANSION JOINTS 6' LONG	AS REQ'D	3378.8	359804	4"FOAM
20	FOAM ARCHITECTURAL FOR 5" EXPANSION JOINTS 6' LONG	AS REQ'D	3378.8	359800	5"FOAM
21	CONDUIT, PVC, SCHEDULE 40, 4"	AS REQ'D	3378	251392	S40-4"

FOR FIELD MAINTENANCE ONLY

TABLE 1:

ULTIMATE TOTAL WT. PER 100'(2540) (C)		
4 CONDUIT	6 CONDUIT	8 CONDUIT
4542	6463	8384

REFERENCE:

(N) SEE STANDARD PAGES 3370.3/3371.3 FOR TRENCH SHADING REQUIREMENTS.

(O) SEE STANDARD 3375 FOR CONDUIT SPACER DATA.

(P) SEE STANDARD 3376 FOR CONCRETE ENCASED MULTI-CONDUIT INSTALLATION.

Q. CONSULT DESIGN STANDARDS FOR CABLE AMPACITY AND GROUNDING REQUIREMENTS FOR STEEL CONDUITS.

TABLE OF CONTENTS

3399.704 SUPERSEDES 3378.1 (1-1-97)	SDG&E ELECTRIC STANDARDS CONDUIT INSTALLATION IN CELL BRIDGES	DATE 1-1-2000 APPD BWT/CMK

TABLE OF CONTENTS

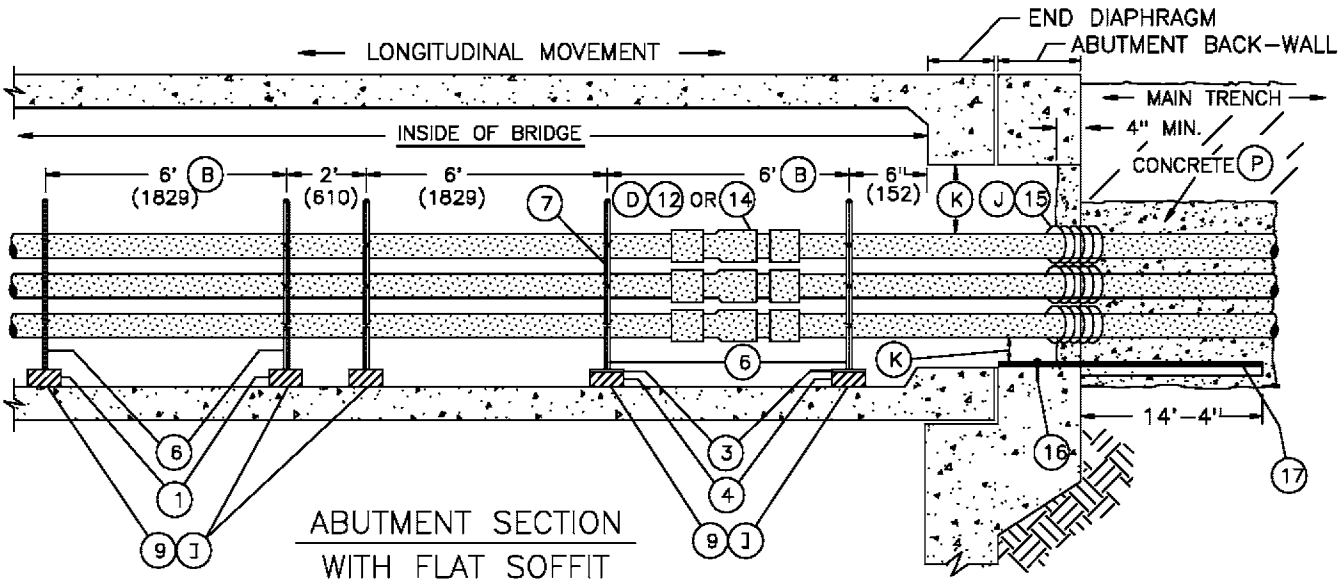

ABUTMENT SECTION
WITH FLAT SOFFIT

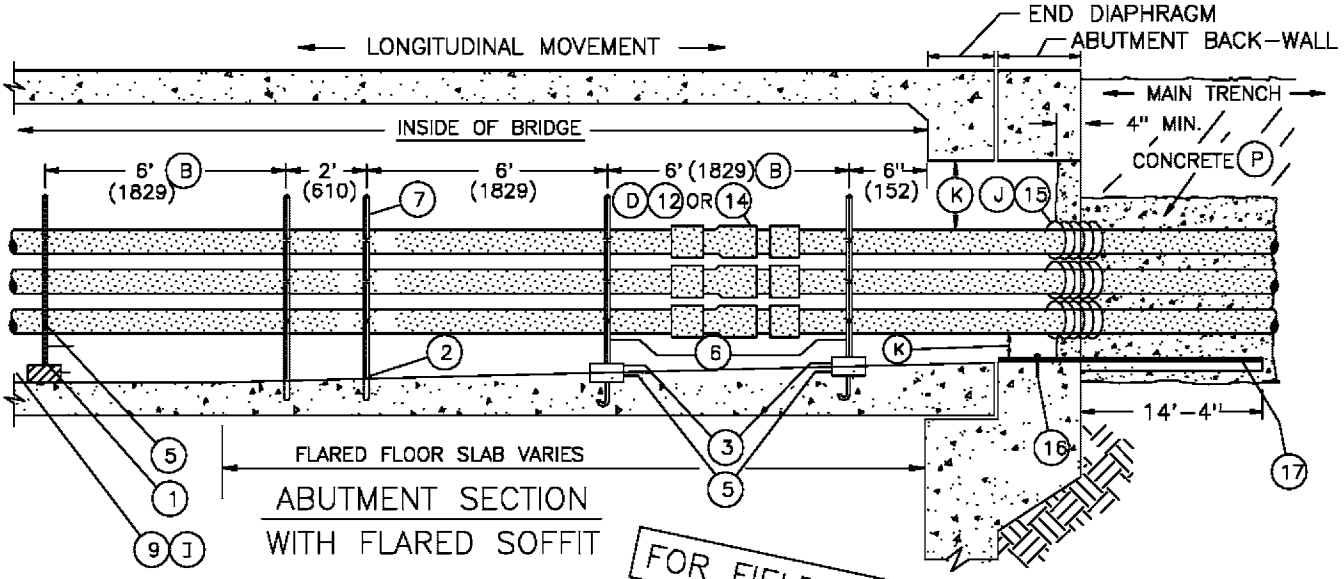

ABUTMENT SECTION
WITH FLARED SOFFIT

FOR FIELD MAINTENANCE ONLY

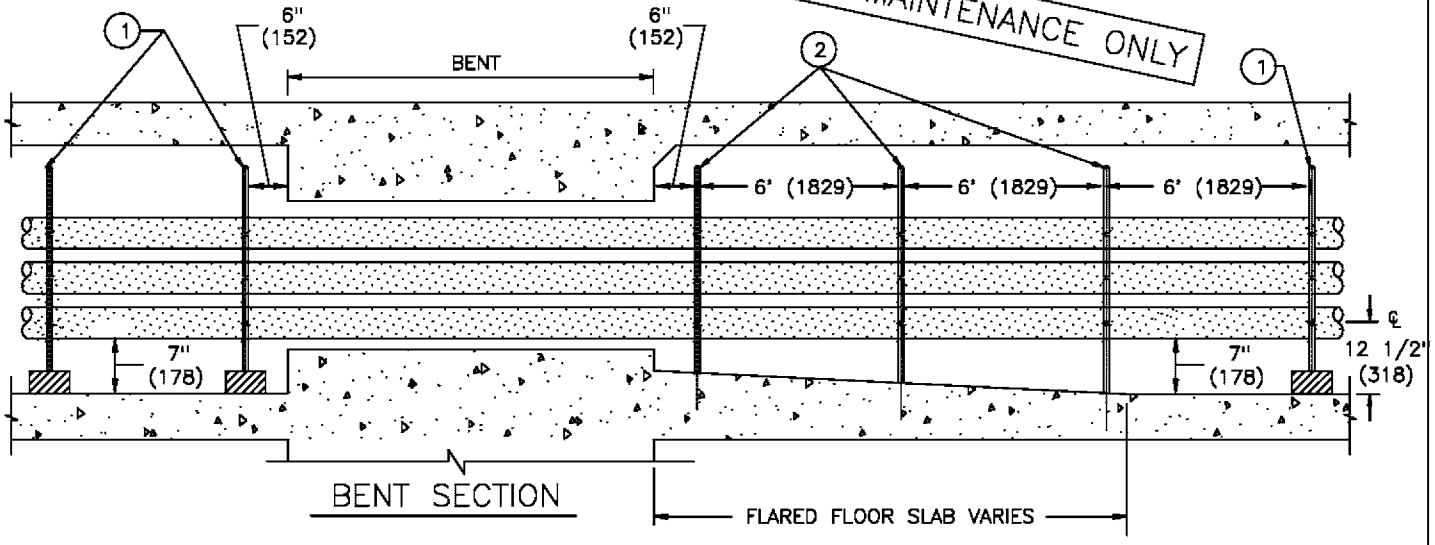

DATE 1-1-2000 APPD	SDG&E ELECTRIC STANDARDS CONDUIT INSTALLATION IN CELL BRIDGES	3399.705 SUPERSEDES 3378.2 (1-1-97)

TABLE OF CONTENTS

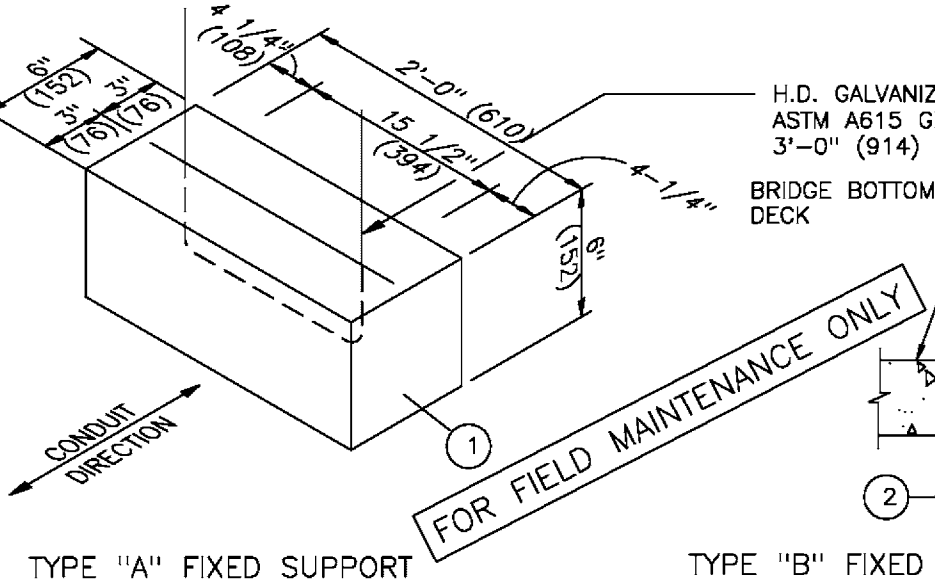

TYPE "A" FIXED SUPPORT

NOT TO SCALE

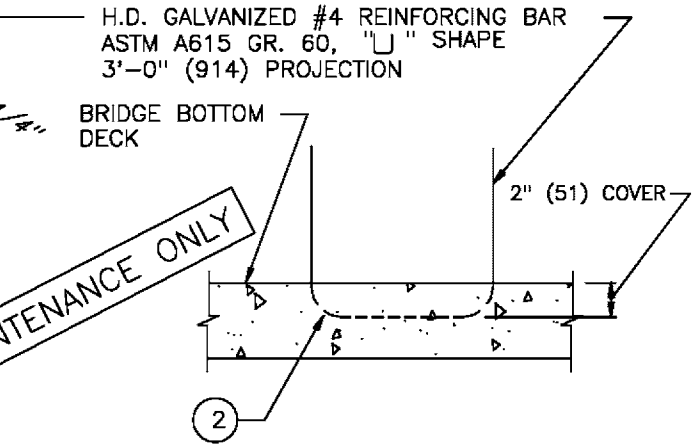

TYPE "B" FIXED FLARED FLOOR SUPPORT

NOT TO SCALE

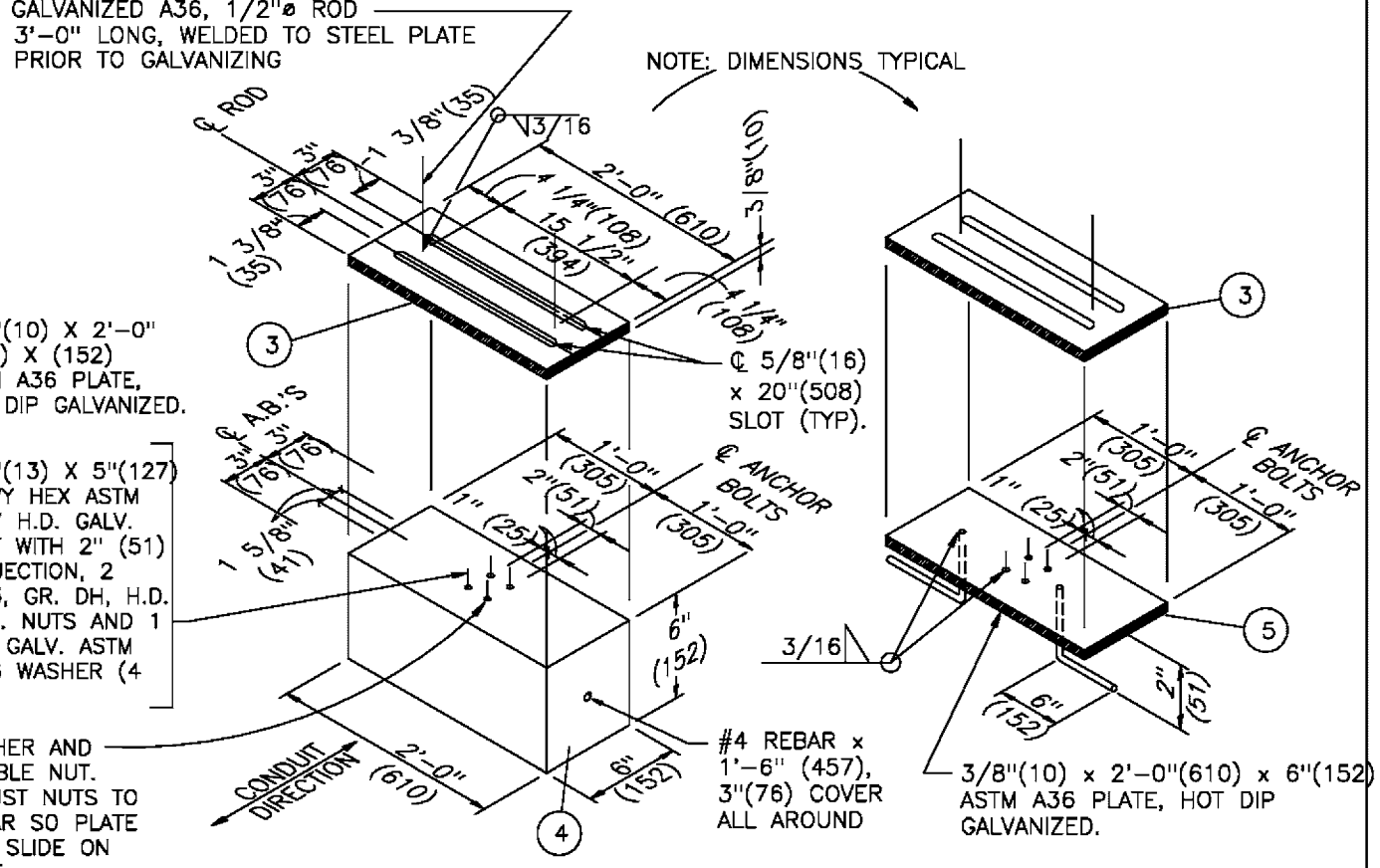

TYPE "C" SLIDING SUPPORT

(NOTE: 5 1/4" LATERAL MOVEMENT)
NOT TO SCALE

TYPE "D" SLIDING FLARED FLOOR SUPPORT

(NOTE: 5 1/4" LATERAL MOVEMENT)
NOT TO SCALE

3399.706 SUPERSEDES 3378.3 (1-1-97)	SDG&E ELECTRIC STANDARDS CONDUIT INSTALLATION IN CELL BRIDGES	DATE 1-1-2000 APPD

TABLE OF CONTENTS

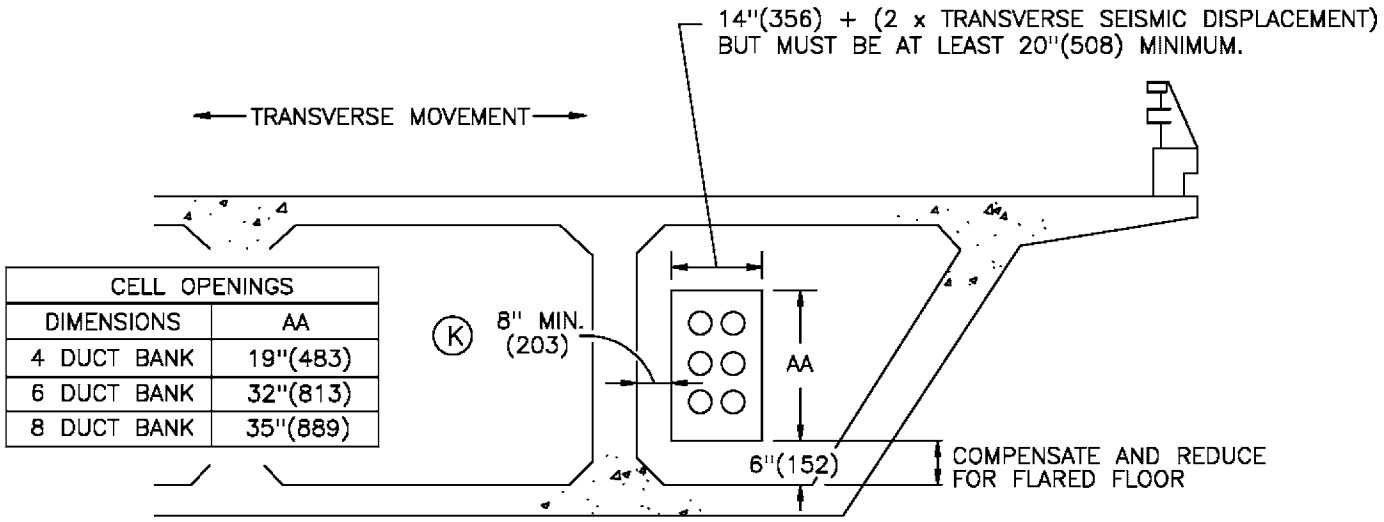

CELL OPENINGS	
DIMENSIONS	AA
4 DUCT BANK	19"(483)
6 DUCT BANK	32"(813)
8 DUCT BANK	35"(889)

ABUTMENT BACK–WALL AND END DIAPHRAGM OPENING

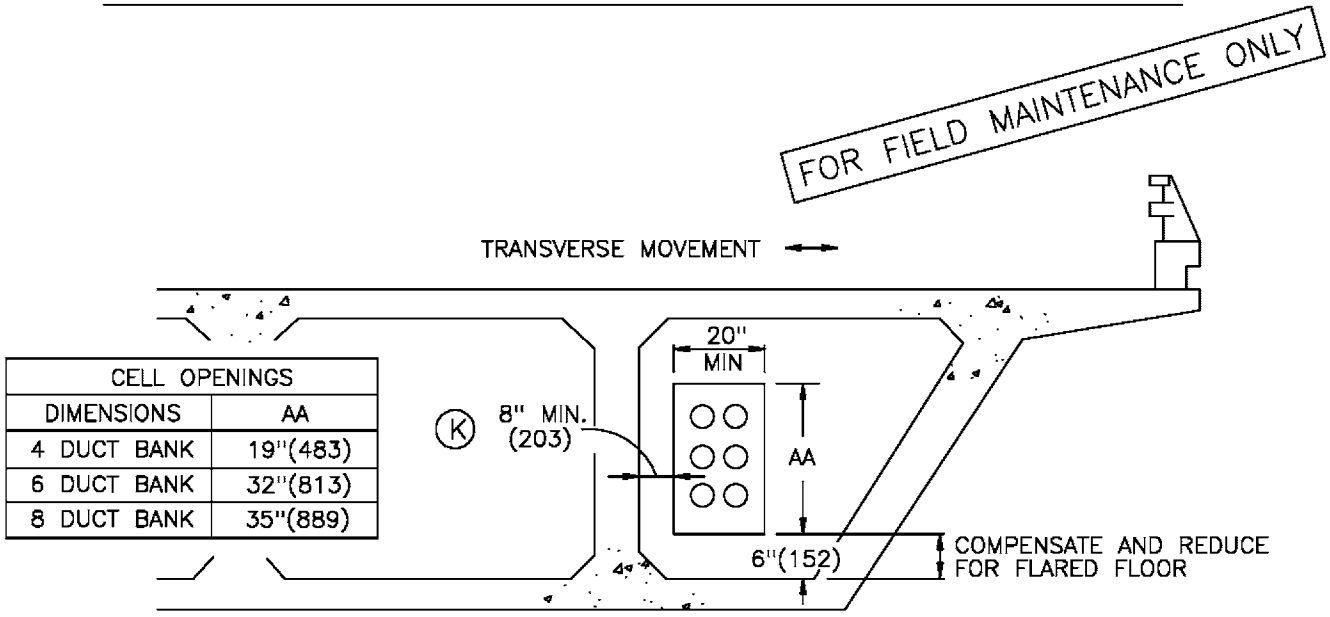

CELL OPENINGS	
DIMENSIONS	AA
4 DUCT BANK	19"(483)
6 DUCT BANK	32"(813)
8 DUCT BANK	35"(889)

BENT OPENING

DATE 1–1–2000 APPD	SDG&E ELECTRIC STANDARDS CONDUIT INSTALLATION IN CELL BRIDGES	3399.707 SUPERSEDES 3378.4 (1–1–97)

TABLE OF CONTENTS

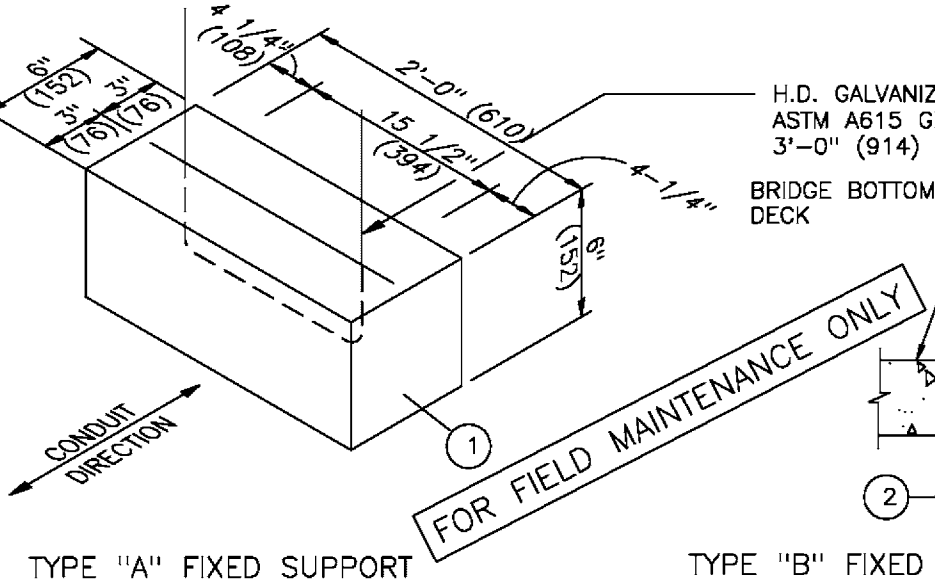

TYPE "A" FIXED SUPPORT

NOT TO SCALE

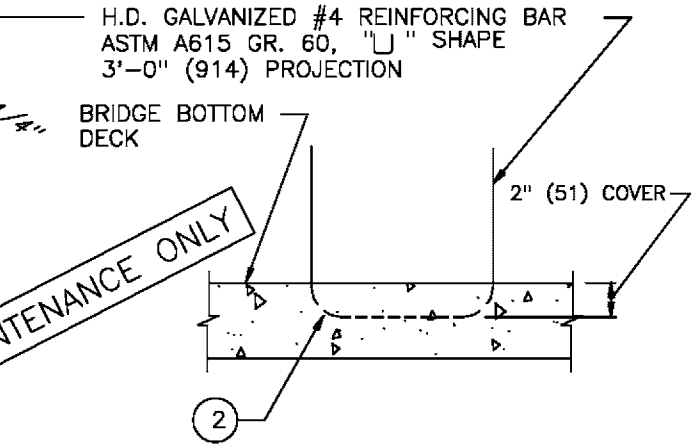

TYPE "B" FIXED FLARED FLOOR SUPPORT

NOT TO SCALE

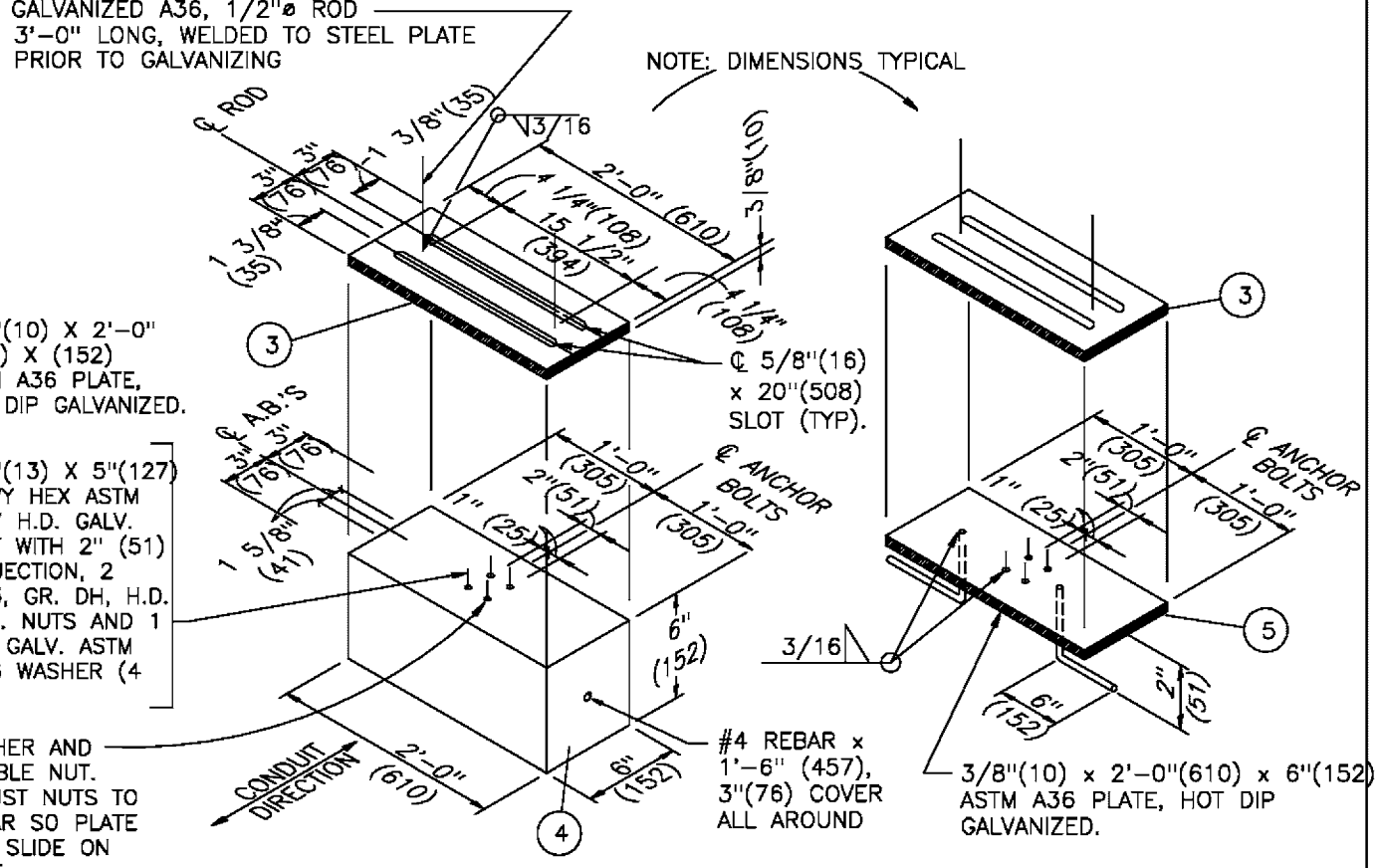

TYPE "C" SLIDING SUPPORT

(NOTE: 5 1/4" LATERAL MOVEMENT)
NOT TO SCALE

TYPE "D" SLIDING FLARED FLOOR SUPPORT

(NOTE: 5 1/4" LATERAL MOVEMENT)
NOT TO SCALE

3399.706 SUPERSEDES 3378.3 (1-1-97)	SDG&E ELECTRIC STANDARDS CONDUIT INSTALLATION IN CELL BRIDGES	DATE 1-1-2000 APPD

SCOPE: THIS STANDARD (3378.7 & 3378.8) SHOWS THE INSTALLATION OF SCHEDULE 40, 4 INCH (102) OR 5 INCH (127) PVC CONDUIT IN A BRIDGE SIDEWALK OR BRIDGE SLAB FOR SLAB BRIDGE INSTALLATIONS.

INSTALLATION:

(R) CONDUIT EXPANSION SLEEVE SHALL BE INSTALLED AT EACH BRIDGE EXPANSION JOINT. IT SHALL BE INSTALLED TO ALLOW SLEEVE MOVEMENT AS BRIDGE EXPANDS AND CONTRACTS.

(S) THE EDGE OF THE OUTER SLEEVE (FEMALE SECTION) MUST LINE UP WITH THE EDGE OF THE BRIDGE EXPANSION JOINT.

(T) A 1/2 INCH (13) EPOXY COATED SHEAR PLATE IS BE REQUIRED IF THE APPROACH SLAB IS NOT SUPPORTED . A SHEAR PLATE CAN PROTECT THE CONDUITS AGAINST SHEAR AS A RESULT OF DIFFERENTIAL SETTLEMENT.

(U) CONDUITS IN THE SIDEWALK MUST BE SCHEDULE 40 PVC AND HAVE A MINIMUM OF 2 INCH CONCRETE COVERAGE.

(V) CONTACT STANDARDS FOR NON-STANDARD MATERIAL SPECIFICATION.

(W) CONSULT BRIDGE DESIGN ENGINEER FOR LONGITUDINAL & TRANSVERSE DISPLACEMENT AT SOIL TO ABUTMENT INTERFACE AND ABUTMENT TO BRIDGE INTERFACE.

(X) CONSULT CIVIL/STRUCTURAL IF THE BRIDGE DESIGN HAS ANY OF THE FOLLOWING PARAMETERS:

1. LONGITUDINAL DISPLACEMENT GREATER THAN 3 INCHES.
2. TRANSVERSE DISPLACEMENT GREATER THAN 1 INCH.
3. DISPLACEMENT THAT CAUSES CONFLICT WITH INSTALLATION.
4. BRIDGE HAVING EXPANSION JOINTS OTHER THAN THOSE AT THE END OF THE BRIDGE AT THE ABUTMENT.
5. ABUTMENT CONFIGURATIONS DIFFERENT THAN SHOWN IN THESE STANDARDS.
6. DUCT CONFIGURATIONS NOT SHOWN.

(Y) USE SHORT SHEAR PLATE IF THERE IS NO APPROACH SLAB OR APPROACH SLAB IS NOT SUPPORTED BY ABUTMENT.

FOR FIELD MAINTENANCE ONLY

TABLE OF CONTENTS

DATE 1-1-2000 APPD [signature]	SDG&E ELECTRIC STANDARDS CONDUIT INSTALLATION IN SLAB BRIDGES	3399.709 SUPERSEDES 3378.6 (1-1-97)

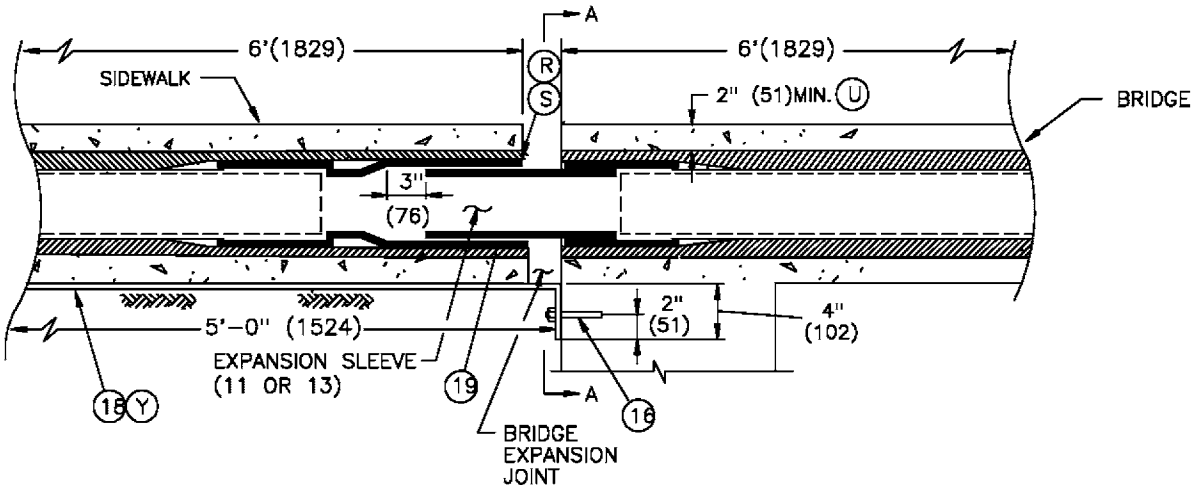

NOTES: IN AN EFFORT TO IMPROVE RESISTANCE TO EARTHQUAKE DAMAGE, 4 INCH CONDUIT IS THE MAXIMUM SIZE PERMITTED BY CALTRANS IN A CALTRANS BRIDGE SIDEWALK.

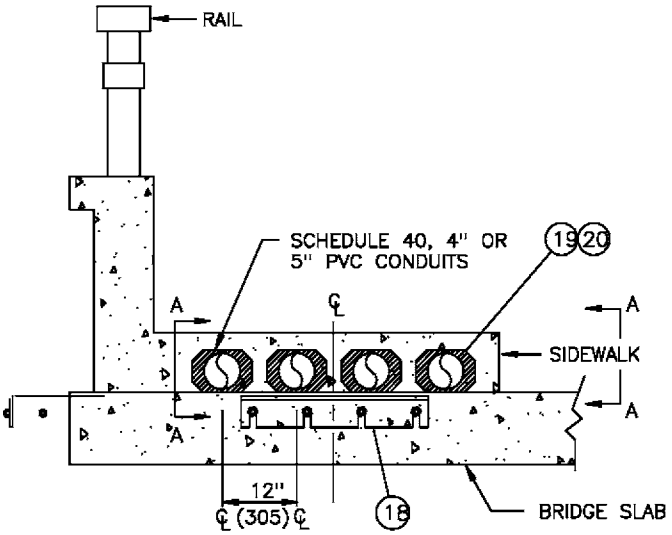

SIDEWALK INSTALLATION, SECTION A–A

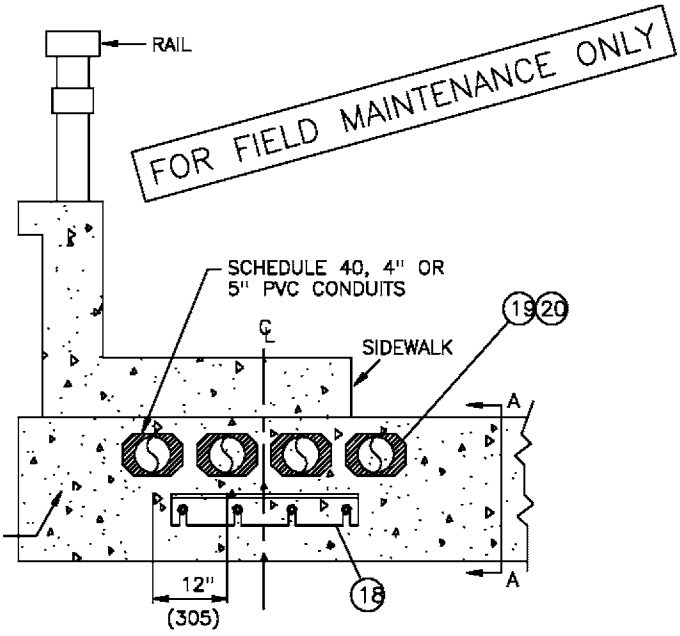

SLAB INSTALLATION, SECTION A–A

EXPANSION SECTION A–A

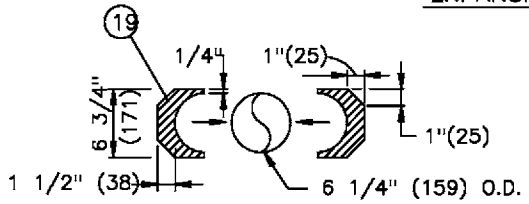

STYROFOAM CASING
FOR 5" (127)ø CONDUIT

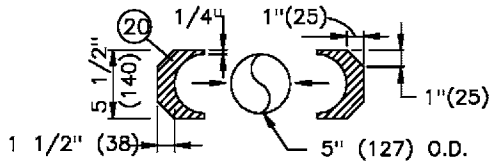

STYROFOAM CASING
FOR 4" (102)ø CONDUIT

NOTES:

1. MATERIAL SHALL BE NON–DENSE STYROFOAM
2. SEAL ALL JOINTS WITH DUCT TAPE TO PREVENT CONCRETE ENTRY.

3399.710 SUPERSEDES 3378.7 (1–1–97)	SDG&E ELECTRIC STANDARDS CONDUIT INSTALLATION IN SLAB BRIDGES	DATE 1–1–2000 APPD

TABLE OF CONTENTS

SCOPE: THIS STANDARD SHOWS THE INSTALLATION OF 5 INCH CONDUITS IN CLOSED CELL BRIDGE CONSTRUCTION.

CONDUIT INSTALLATIONS IN CELL BRIDGES

TYPE 1 BRIDGE ABUTMENT

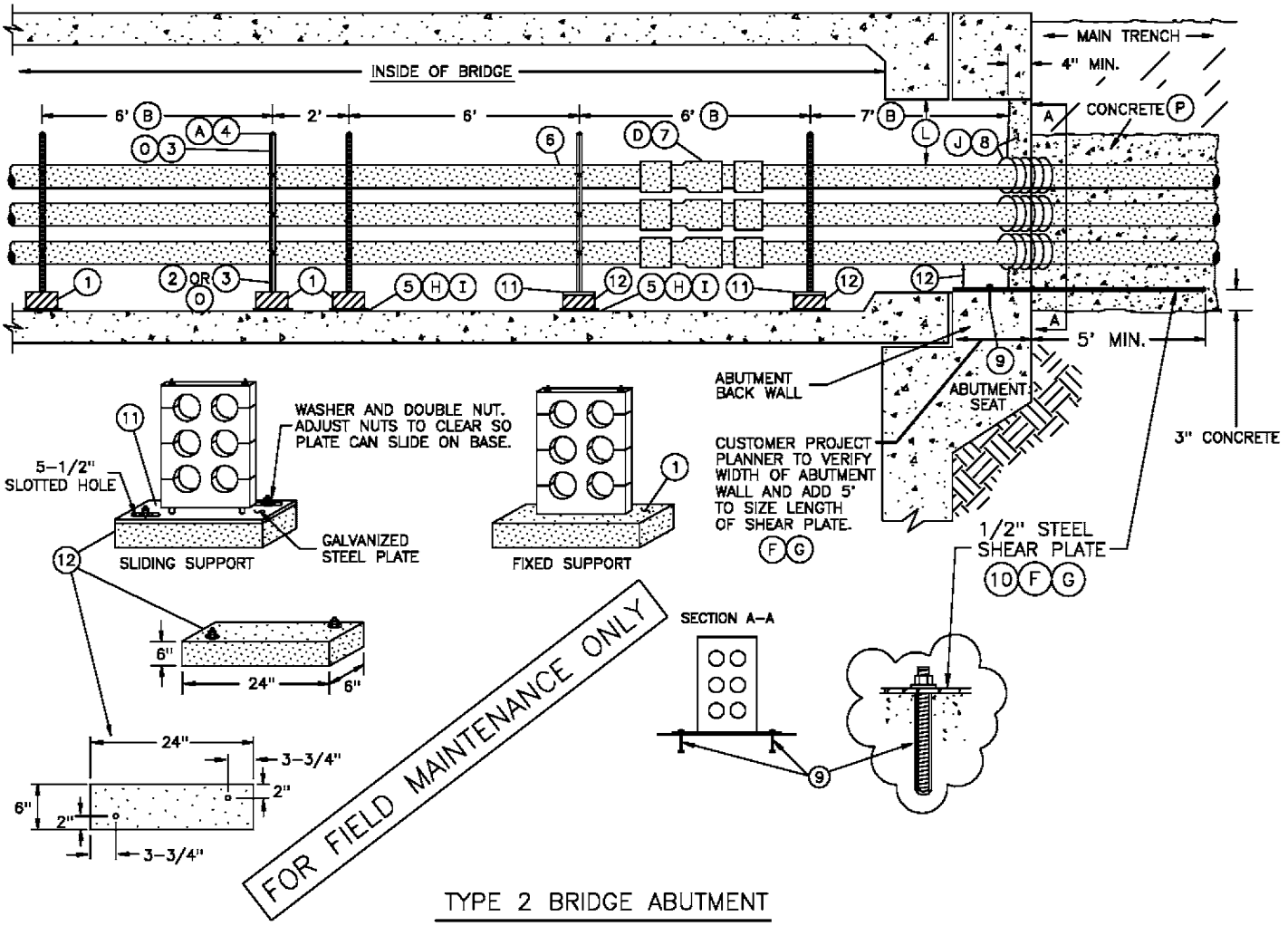

FOR FIELD MAINTENANCE ONLY

TYPE 2 BRIDGE ABUTMENT

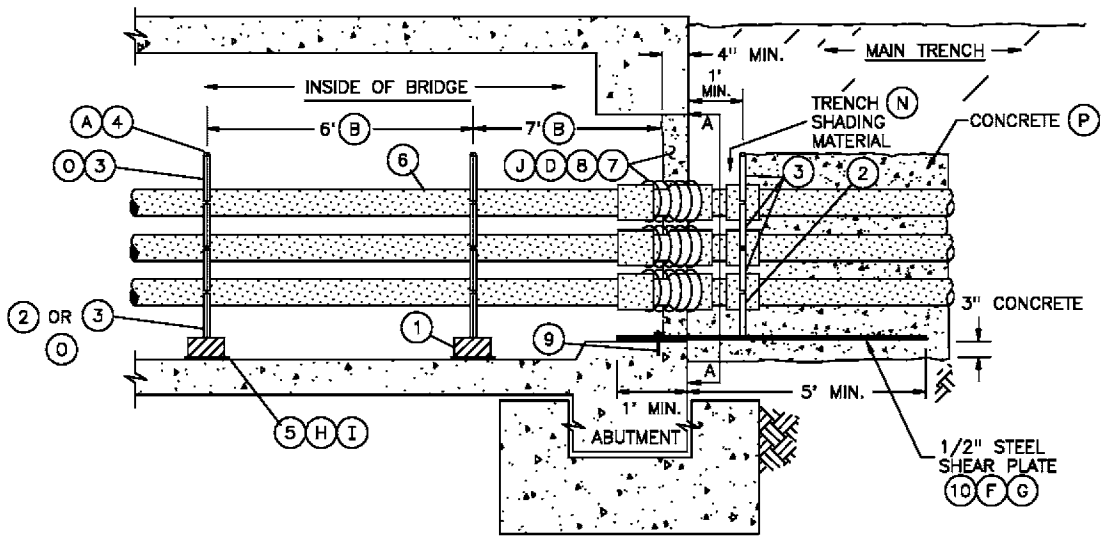

TABLE OF CONTENTS

DATE 1-1-98 APPD	SDG&E ELECTRIC STANDARDS CONDUIT INSTALLATION IN CELL BRIDGES	3399.711 SUPERSEDES 3378.1 (1-1-98)

TABLE 1

CELL OPENINGS (K)				
DIMENSIONS	AA	BB	CC	DD
4 DUCT BANK	20"	19"	6"	8"
6 DUCT BANK	20"	27"	6"	8"
8 DUCT BANK	20"	35"	6"	8"

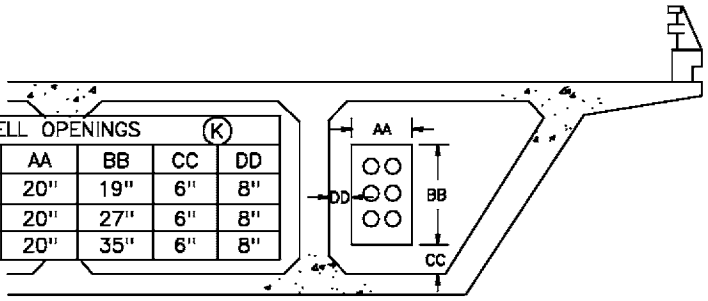

TABLE 2

ULTIMATE TOTAL WT. PER 100' (C)		
4 CONDUIT	6 CONDUIT	8 CONDUIT
4542	6463	8384

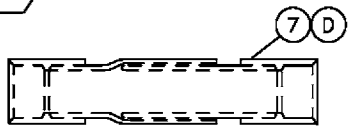

5" EXPANSION SLEEVE

FOR FIELD MAINTENANCE ONLY

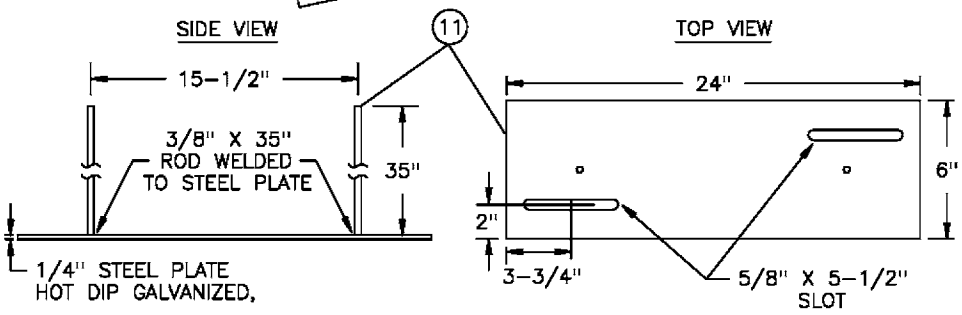

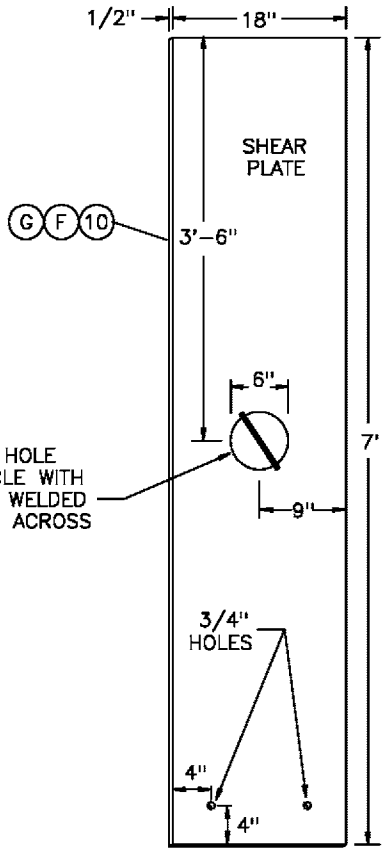

NOTES:

– IN AN EFFORT TO IMPROVE RESISTANCE TO EARTHQUAKE DAMAGE, 4 INCH CONDUIT IS THE MAXIMUM SIZE PERMITTED BY CAL–TRANS IN A BRIDGE SIDEWALK.

BILL OF MATERIAL:

ITEM	DESCRIPTION	QUANTITY	CONST STD OR PAGE NO.	STOCK NUMBER	ASSEMBLY UNIT
1	FIXED SUPPORT, CONCRETE CONDUIT SPACER, 24" X 6" X 6" W/GALV. STEEL STEEL REINFORCING ROD, 3/8"	AS REQ'D	--	703520	BR–FIX
2	SPACER, CONDUIT BASE	AS REQ'D	3375	663008	--
3	SPACER, CONDUIT INTERMEDIATE	AS REQ'D	3375	663528	
4	WIRE, IRON, #14 GALVANIZED (A)	AS REQ'D	--	815648	
5	EPOXY BINDER (CAL–TRANS APPROVED)	AS REQ'D	--	213242	
6	CONDUIT, PVC, SCHEDULE 40, 5"	AS REQ'D	3378	251408	S40–5"
7	SLEEVE, EXPANSION, CONDUIT PLASTIC, 5"	AS REQ'D	3378	650128	--
8	PAPER, BUILDING 15# (ROOFING PAPER)	AS REQ'D	--	--	
9	5/8" HVA ADHESIVE ANCHOR ROD SYSTEM W/HAS SUPER SS58–758 ANCHOR ROD BY HILTI, INC. (1–800–879–8000)	AS REQ'D	--	--	
10	PLATE, SHEAR (LIGHT GREY EPOXY COATED, ALL SIDES) 18" X 7' X 1/2" (F)(G)	AS REQ'D	3378	543110	SHEAR

3399.712 SUPERSEDES 3378.2 (1–1–98)	SDG&E ELECTRIC STANDARDS	DATE 1–1–98 APPD
	CONDUIT INSTALLATION IN CELL BRIDGES	

TABLE OF CONTENTS

BILL OF MATERIAL:

ITEM	DESCRIPTION	QUANTITY	CONST STD OR PAGE NO.	STOCK NUMBER	ASSEMBLY UNIT
11	SLIDING SUPPORT, HOT DIP GALVANIZED STEEL PLATE, 24" X 6" X 1/4" WITH TWO 3/8" X 35" RODS, TWO 5/8" X 5-1/2" SLOTS.	AS REQ'D	3378	703524	BR-SLI
12	SLIDING SUPPORT CONDUIT CONCRETE BASE, 24" X 6" X 6" WITH 1/2" X 5" S.S. (304) ANCHOR BOLT WITH 1" LEG. 2-S.S. NUTS AND 1-S.S. FLAT WASHER ON EACH BOLT.	AS REQ'D	3378	703522	

INSTALLATION:

(A) THE CONDUITS SHALL BE SECURELY STRAPPED TO THE CONDUIT SPACER SUPPORT (ITEM 1 & 11) WITH #14 GALVANIZED WIRE (ITEM 4), FOR EIGHT CONDUITS. WHEN 6 OR LESS CONDUIT RUNS ARE INSTALLED, EXTRA ROD LENGTH MAY BE CUT OR FOLDED OVER TOP OF CONDUITS TOWARD EACH OTHER INSTEAD OF USING THE GALVANIZED WIRE.

(B) THE FIRST SUPPORT INSIDE THE CELL MUST BE PLACED AT 7 FEET TO ALLOW MAXIMUM DEFLECTION. THE FIRST TWO SLIDING SUPPORTS (ITEM 11) SHALL BE SPACED AT 6 FEET AND FOLLOWED BY TWO FIXED SUPPORTS (ITEM 1) SPACED AT 2 FEET. THE REST OF THE SUPPORTS (ITEM 1) SHALL BE PLACED 6 FEET APART IN THE BRIDGE CELLS.

(C) TOTAL WEIGHT INCLUDES CONDUIT, CONDUIT SPACERS, CONDUIT SUPPORTS AND CONDUCTORS. CONDUCTORS ARE 1000 KCMIL JACKETED AL. SEE TABLE 2.

(D) CONDUIT EXPANSION SLEEVE (ITEM 7), SHALL BE INSTALLED AT EACH BRIDGE EXPANSION JOINT AND/OR AT A MAXIMUM DISTANCE BETWEEN EXPANSION JOINTS OF EVERY 100 FEET THROUGHOUT THE RUN.

(F) A 1/2 INCH STEEL SHEER PLATE IS TO BE PLACED FROM THE BRIDGE ABUTMENT WALL EXTENDING 5 FEET MIN. OUTSIDE THE ABUTMENT TO SUPPORT AND PROTECT THE CONDUITS AGAINST SHEAR FROM EMBANKMENT SETTLEMENT.

(G) NEW BRIDGES

TYPE 1 BRIDGE OPENINGS REQUIRE AN 18 INCH WIDE STEEL SHEAR PLATE. THE LENGTH OF THE PLATE SHALL BE 5 FEET MIN. OUTSIDE THE ABUTMENT, PLUS THE WIDTH OF THE ABUTMENT WALL, USE STOCK ITEM 543110. IF A SPECIAL SIZE SHEAR PLATE IS REQUIRED, THE CUSTOMER PROJECT PLANNER IS TO FILL OUT A MACHINE SHOP ORDER FORM, AND SEND IT TO THE MACHINE SHOP.

TYPE 2 BRIDGE OPENINGS REQUIRE AN 18 INCH WIDE STEEL SHEAR PLATE. INSTALL WITH 1 FOOT MIN. OF THE PLATE ON THE BRIDGE ABUTMENT AND 5 FEET MIN. OUTSIDE THE ABUTMENT, USE STOCK ITEM 543110. THE CUSTOMER PROJECT PLANNER IS TO FILL OUT A MACHINE SHOP ORDER FORM IF A SPECIAL SIZE SHEAR PLATE IS REQUIRED AND SEND IT TO THE MACHINE SHOP.

FOR OTHER TYPE BRIDGES, CONSULT DISTRIBUTION STANDARDS ENGINEER FOR INSTALLATION STANDARDS.

(H) THE CONDUIT SPACER SUPPORT (ITEM 1 & 11) SHALL BE SECURELY ATTACHED TO THE BRIDGE SLAB WITH EPOXY BINDER (ITEM 5). THE CONCRETE SURFACE SHALL BE LEVELED AND THOROUGHLY CLEANED PRIOR TO APPLICATION OF THE EPOXY.

(I) THE EPOXY BINDER (CAL-TRANS APPROVED) IS A 2 COMPONENT ADHESIVE. APPROXIMATELY 1 GAL. OF MIXED EPOXY WILL BE NEEDED FOR EVERY 15 SUPPORTS. READ "CAREFULLY" MANUFACTURERS INSTRUCTIONS FOR APPLICATION OF EPOXY.

(J) THE SPACE BETWEEN THE CONDUIT AND THE BRIDGE ABUTMENT OPENING SHALL BE SEALED. TIGHTLY WRAP 2 LAYERS OF #15 BUILDING PAPER AROUND CONDUITS OR EXPANSION SLEEVE, THRU THE CELL OPENING AND SEAL WITH MORTAR AT A MINIMUM THICKNESS OF 4 INCHES.

(K) FOR POSITIONING OF CELL OPENING WITHIN THE BRIDGE, SEE THE CUSTOMER PROJECT PLANNER.

(L) CONSULT BRIDGE DESIGN ENGINEER FOR SEISMIC MOVEMENT REQUIREMENTS. THEN CONSULT CIVIL/STRUCTURAL AND ELECTRIC DISTRIBUTION ANALYST FOR APPROPRIATE SEISMIC DESIGN AND CONSTRUCTION MATERIAL.

M. CONSULT CIVIL/STRUCTURAL ENGINEERING FOR ATTACHMENTS OF CONDUITS TO EXISTING OR SLAB BRIDGES.

FOR FIELD MAINTENANCE ONLY

REFERENCE:

(N) SEE STANDARD PAGES 3370.3/3371.3 FOR TRENCH SHADING REQUIREMENTS.

(O) SEE STANDARD 3375 FOR CONDUIT SPACER DATA.

(P) SEE STANDARD 3376 FOR CONCRETE ENCASED MULTI-CONDUIT INSTALLATION.

Q. CONSULT DESIGN STANDARDS FOR CABLE AMPACITY AND GROUNDING REQUIREMENTS FOR STEEL CONDUITS.

TABLE OF CONTENTS

	SDG&E ELECTRIC STANDARDS	
DATE 1-1-98 APPD	CONDUIT INSTALLATION IN CELL BRIDGES	3399.713 SUPERSEDES 3378.3 (1-1-98)

SCOPE: THIS STANDARD SHOWS THE INSTALLATION OF SCHEDULE 40, 5 INCH PVC CONDUITS IN A BRIDGE SIDEWALK OR BRIDGE SLAB FOR SLAB BRIDGE INSTALLATIONS.

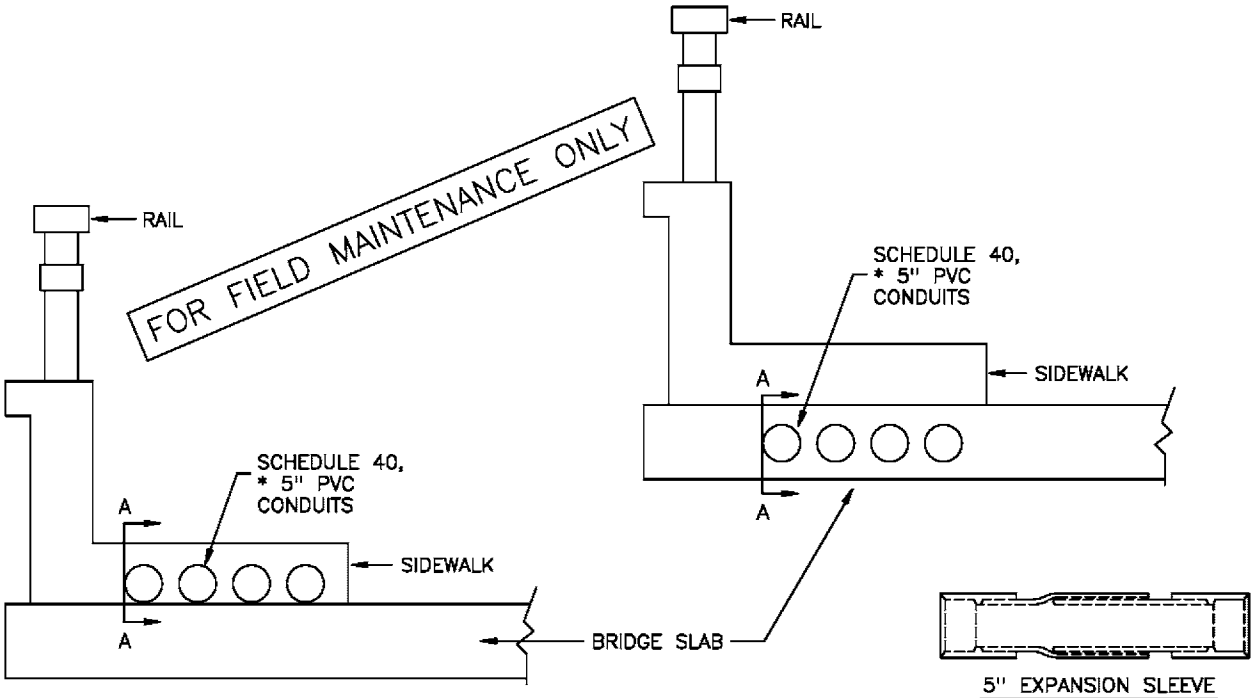

5" EXPANSION SLEEVE

STOCK NUMBER
650128

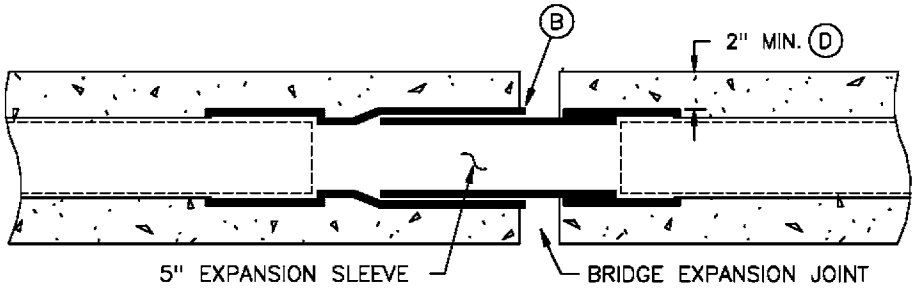

SECTION A–A

* NOTES:

– IN AN EFFORT TO IMPROVE RESISTANCE TO EARTHQUAKE DAMAGE, 4 INCH CONDUIT IS THE MAXIMUM SIZE PERMITTED BY CAL–TRANS IN A CALTRANS BRIDGE SIDEWALK.

INSTALLATION:

A. CONDUIT EXPANSION SLEEVE SHALL BE INSTALLED AT EACH BRIDGE EXPANSION JOINT. IT SHALL BE INSTALLED TO ALLOW SLEEVE MOVEMENT AS CONCRETE EXPANDS AND CONTRACTS.

(B) THE EDGE OF THE OUTER SLEEVE (FEMALE SECTION) MUST LINE UP WITH THE EDGE OF THE EXPANSION JOINT.

C. A 1/2 INCH COAL–TAR EPOXY COATED SHEAR PLATE MAY BE REQUIRED AT THE JUNCTION OF BRIDGE ABUTMENT AND APPROACHING SLAB. A SHEAR PLATE CAN PROTECT THE CONDUITS AGAINST SHEAR AS A RESULT OF DIFFERENTIAL SETTLEMENT. CONTACT CIVIL ENGINEERING FOR REQUIREMENTS. (SEE PG. 3378.2 FOR SHEAR PLATE)

(D) CONDUITS IN THE SIDEWALK MUST BE SCHEDULE 40 PVC AND HAVE A MINIMUM OF 2 INCH CONCRETE COVERAGE.

E. A SET OF PLANS MUST BE SUBMITTED TO CIVIL ENGINEERING FOR REVIEW AND APPROVAL.

F. CONTACT STANDARDS ENGINEER FOR NON–STANDARD MATERIAL SPECIFICATION.

3399.714 SUPERSEDES 3378.4 (1–1–98)	SDG&E ELECTRIC STANDARDS CONDUIT INSTALLATION IN SLAB BRIDGES	DATE 1–1–98 APPD JJG/RDG

UG3383 FIELD MAINTENANCE ONLY

ALL VERSIONS LISTED IN FMO ARE SUPERSEDED BY THEIR CURRENT VERSION FOUND INSIDE THE UNDERGROUND CONSTRUCTION STANDARD MANUAL.

REVISION HISTORY:

05/08/2023: MOVED TO FMO

TABLE OF CONTENTS

© 1998 - 2023 San Diego Gas & Electric Company. All rights reserved. Removal of this copyright notice without permission is not permitted under law.

REV	CHANGE	DR	BY	DSN	APV	DATE	REV	CHANGE	DR	BY	DSN	APV	DATE
C							F						
B							E						
A	ORIGINAL ISSUE	ARC	EJA	GLW	KRG	05/08/2023	D						

	Indicates Latest Revision		Completely Revised	X	New Page	Information Removed

SHEET 1 OF 1

SDG&E ELECTRIC UNDERGROUND FIELD MAINTENANCE ONLY STANDARDS

CONDUIT SPLICING INSTALLATION FOR CABLE-IN-CONDUIT (PID & SIDA)

FMO UG3383

SCOPE: THIS STANDARD SHOWS THE INSTALLATION AND MATERIAL REQUIREMENTS FOR SPLICING OR REPAIRING CABLE-IN-CONDUIT (CIC), CONDUIT OR FLEXIBLE CONDUIT.

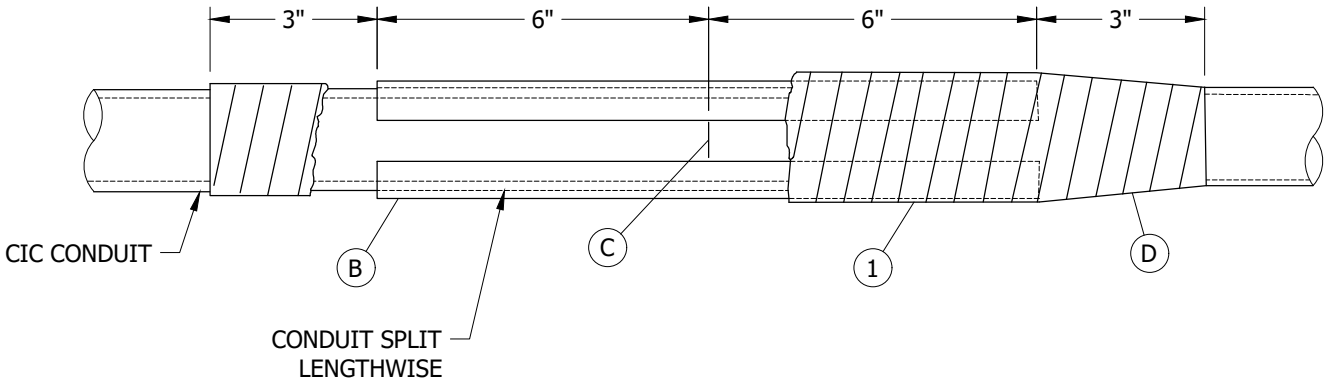

FIGURE 1
SPLICING DETAIL

INSTALLATION:

A. ASSURE CONDUIT SURFACES ARE CLEAN AND DRY.

(B) CUT AND SPLIT LENGTHWISE A PIECE OF CONDUIT A MINIMUM OF 12 INCHES LONG THAT IS THE SAME SIZE CONDUIT AS BEING SPLICED.

(C) CHAMFER THE INSIDE OF THE CONDUIT AND BUTT THE ENDS BEING SPLICED AS CLOSE TOGETHER AS POSSIBLE. PLACE SPLIT SECTION OVER THE CONDUITS BEING JOINED.

(D) WRAP TWO HALF LAP LAYERS OF GRAY TAPE OVER SPLIT SECTION OF THE CIC CONDUIT. OVERLAP ENDS OF SPLIT SECTION AND ONTO CIC CONDUIT A MINIMUM OF 3 INCHES.

BILL OF MATERIALS:

ITEM	DESCRIPTION	QUANTITY	STANDARD PAGE	STOCK NUMBER	DESIGN UNITS
1	GRAY TAPE	AS REQ'D	--	S721120	INT-PD

NOTES:

I. THIS METHOD SHALL BE USED FOR SPLICING FLEXIBLE CONDUIT, PID AND SIDA CONDUIT INCLUDING SIDA IN CORRUGATED CONDUIT WHENEVER REPAIR, REPLACEMENT OR EXTENSION IS NECESSARY.

REFERENCE: NONE

FIELD MAINTENANCE ONLY

© 1998 - 2023 San Diego Gas & Electric Company. All rights reserved. Removal of this copyright notice without permission is not permitted under law.

REV	CHANGE	DR	BY	DSN	APV	DATE	REV	CHANGE	DR	BY	DSN	APV	DATE
C	MOVED TO FMO	ARC	EJA	GLW	KRG	05/08/2023	F						
B	FORMATTING	EDM	JIK	-	-	10/27/2021	E						
A	EDITORIAL CHANGES	-	JS	TR	MDJ	07/25/2016	D						

X Indicates Latest Revision | Completely Revised | New Page | Information Removed

SDG&E ELECTRIC UNDERGROUND FIELD MAINTENANCE ONLY STANDARDS

CONDUIT SPLICING INSTALLATION FOR CABLE-IN-CONDUIT (PID & SIDA)

TABLE OF CONTENTS

FIELD MAINTENANCE ONLY

REVISION HISTORY:

7/13/2016: All versions prior to 2016 are superseded by their current version found inside the Overhead Construction Standard Manual.

TABLE OF CONTENTS

© 1998 - 2016 San Diego Gas & Electric Company. All rights reserved. Removal of this copyright notice without permission is not permitted under law.

REV	CHANGE	BY	DSGN	APPV	DATE	REV	CHANGE	BY	DSGN	APPV	DATE
C						F					
B						E					
A	ORIGINAL ISSUE	JS	IL	MDJ	7/13/2016	D					

X Indicates Latest Revision | Completely Revised | New Page | Information Removed

SHEET 1 OF 1

SDG&E ELECTRIC UNDERGROUND STANDARD

SOIL GAS MITIGATION

FMO UG 3384

SCOPE: THIS STANDARD SHALL BE USED WHEN CONSTRUCTING UNDERGROUND ELECTRIC DISTRIBUTION FACILITIES IN AREAS WHERE IT HAS BEEN DETERMINED HIGH CONCENTRATIONS OF SOIL GAS ARE PRESENT.

THESE STANDARDS HAVE BEEN DEVELOPED BY SDG&E AND QUALIFIED EXPERTS IN THE FIELD OF SOIL GAS MITIGATION.

FOR FIELD MAINTENANCE ONLY

DEFINITIONS

TEST LOCATION – A WELL CAPPED AND A VALVE INSTALLED FOR EXTRACTING A SAMPLE OF THE ATMOSPHERE BELOW GRADE.

AREA OF CONCERN – IS THE ENTIRE AREA WITHIN A 300–FT. RADIUS FROM A TEST LOCATION WHERE METHANE GAS CONCENTRATION LEVELS ARE 25% OF THE LOWER EXPLOSIVE LIMIT 12500PPMV, OR HIGHER.

TRENCH DAM – A PORTION OF A MAIN TRENCH OR SERVICE TRENCH WHICH IS BACK FILLED IN A MANNER TO PREVENT THE MIGRATION OF METHANE GAS THROUGH THE TRENCH. THE DAM HAS A MINIMUM LENGTH OF TWICE THE WIDTH OF THE TRENCH OR A MINIMUM OF 36 INCHES IN LENGTH. THE BACK FILL MATERIAL IS A SAND SLURRY MIXTURE WITH A 10% BENTONITE CLAY POWDER ADDED. THE DAM WILL ENCOMPASS ALL UTILITIES WITHIN THE TRENCH AND WILL EXTEND 3 INCHES BELOW, TO THE SIDES AND ABOVE THE UPPER MOST UTILITIES.

VAPOR BARRIER – AN APPLIED GAS TIGHT MEMBRANE OR BARRIER INSTALLED UNDER ALL PAD–MOUNTED EQUIPMENT. THIS MEMBRANE PREVENTS METHANE GAS FROM MIGRATING INTO THE PAD–MOUNTED EQUIPMENT. THE MEMBRANE CONSISTS OF LAYER OF GEOTEXTILE TRADE NAMED TYPAR (WHICH IS THEN SPRAYED WITH A MATERIAL CALLED "LIQUID BOOT). WHEN COMPLETED THE MEMBRANE IS ABOUT AN 1/8 INCH THICK AND EXTENDS BEYOND THE EDGES OF THE PAD–MOUNTED EQUIPMENT.

NOTE: SHOULD THIS BARRIER BE VIOLATED BY ADDING ADDITIONAL CONDUITS ETC. IT MUST BE REPAIRED BY A QUALIFIED LIQUID BOOT INSTALLER. CARE SHOULD BE TAKEN TO INSTALL ALL NECESSARY CONDUITS AT THE TIME OF INITIAL CONSTRUCTION.

REQUIREMENTS:

WITHIN AN "AREA OF CONCERN" THE INSTALLATION OF "PME" SWITCH GEAR IS PROHIBITED. ALL LOADBREAK EQUIPMENT SHALL BE INSTALLED IN PAD–MOUNTED ENCLOSURES. PADMOUNTED EQUIPMENT WILL BE PASSIVELY VENTED TO ALLOW AN EXCHANGE OF AIR FOUR TIMES PER HOUR.

IN AN AREA OF CONCERN, ONLY NON–LOADBREAK EQUIPMENT WILL BE ALLOWED IN SUB–STRUCTURES. HOWEVER, SHOULD A HANDHOLE BE LOCATED IN AN AREA OF CONCERN AND THE TEE'S BE EQUIPPED WITH LBE'S, THE LBE'S SHALL BE TAGGED "DO NOT OPERATE ENERGIZED". THE END COVERS OF THE HANDHOLES WILL BE VENTED.

SDG&E WILL AFFIX A WARNING DECAL TO ALL DISTRIBUTION EQUIPMENT REFERENCING UNDER–GROUND CONSTRUCTION STANDARD 3384 FOR SPECIAL INSTRUCTIONS. SDG&E WILL PROVIDE THE CUSTOMER WITH WARNING DECALS TO BE AFFIXED INSIDE THE SERVICE PANEL BELOW THE TERMINATION LUGS. THIS DECAL REFERENCES UNDERGROUND CONSTRUCTION STANDARD 3384 FOR SPECIAL INSTRUCTIONS.

THE CUSTOMER WILL BE RESPONSIBLE FOR INSTALLING THE FINAL SEAL AFTER SDG&E HAS INSTALLED THE SERVICE CONDUCTORS AND SEALED THE CONDUIT. THE CUSTOMER WILL ALSO BE BE RESPONSIBLE FOR ALL SERVICE TRENCH AND MAIN TRENCH DAMS AND VAPOR BARRIERS.

THE CUSTOMER MUST PROVIDE AN "AS BUILT DRAWING" SHOWING THE LOCATION OF ALL SERVICE AND MAIN TRENCH DAMS UPON COMPLETION OF THEIR WORK, AND PRIOR TO SDG&E ENERGIZING THE FACILITIES. THE DISTANCE FROM SDG&E'S GAS RISER TO THE CLOSEST EDGE OF THE SERVICE TRENCH DAM MUST BE SHOWN ON THE AS–BUILT.

THE CUSTOMER'S SERVICE LATERAL CONDUIT MAY BE REQUIRED TO BE VENTED BELOW THE SERVICE AND METERING PANEL TO MITIGATE THE ENTRY OF METHANE GAS INTO THE PANEL. CUSTOMER WILL BE REQUIRED TO MAINTAIN THE VENT.

ALL TRENCH DAMS WILL CONSIST OF A SAND SLURRY MIXTURE WITH A 10% BY WEIGHT BENTONITE CLAY ADDITIVE.

© 1998 - 2010 San Diego Gas & Electric Company. All rights reserved. Removal of this copyright notice without permission is not permitted under law.

TABLE OF CONTENTS

SCOPE: THIS STANDARD SHOWS THE INSTALLATION OF A SERVICE LATERAL CONDUIT VENT.

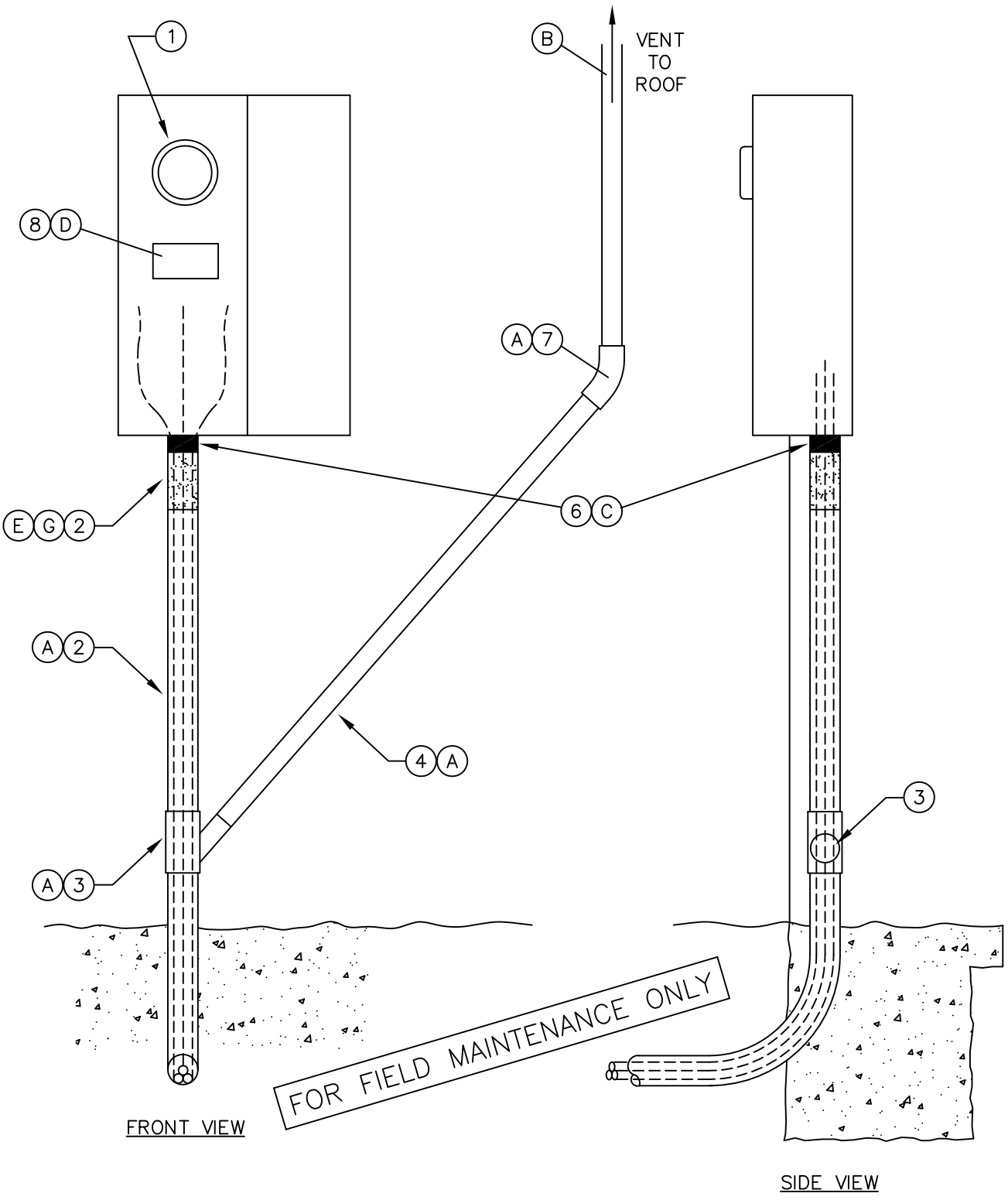

TABLE OF CONTENTS

© 1998 - 2010 San Diego Gas & Electric Company. All rights reserved. Removal of this copyright notice without permission is not permitted under law.

SERVICE GUIDE		Indicates Latest Revision		Completely Revised		New Page		Information Removed

	SDG&E ELECTRIC STANDARDS	REVISION
3384.1	SOIL GAS MITIGATION SERVICE LATERAL CONDUIT VENTING	DATE 6-1-02 APPD

BILL OF MATERIAL:

ITEM	DESCRIPTION	QUANTITY	CONSTR. STD OR PAGE NO.	STOCK NUMBER	ASSEMBLY UNITS
1	METER AND BREAKER PANEL	AS REQ'D	BY CUSTOMER	–	–
2	SERVICE LATERAL CONDUIT	AS REQ'D	BY CUSTOMER	–	–
3	"Y" CONNECTOR ABS	1	BY CUSTOMER	–	–
4	1–1/2 INCH SCH 40 ABS	AS REQ'D	BY CUSTOMER	–	–
5	SEALANT, CONDUIT SEMCO PR–821	2 OZ.	3948.1	S631829	SEAL–2
6	SEALANT, SIKAFLEX 1C SL	AS REQ'D	BY CUSTOMER	–	–
7	1–1/2 INCH 45 DEGREE BEND ABS	1	BY CUSTOMER	–	–
8	WARNING DECAL	1	BY UTILITY	–	–

INSTALLATION:

A. ALL CONDUIT, PIPE AND COUPLINGS ETC. TO BE PROVIDED, INSTALLED AND MAINTAINED BY THE CUSTOMER.

B. VENT RISER SHALL BE CAPPED WITH "TEE" OR APPROPRIATE RAIN HOOD.

C. SIKAFLEX 1C SL 1/2" THICK POLYURETHANE SEALANT IS TO BE INSTALLED AND REPLACED WHEN NECESSARY BY CUSTOMER.

D. WARNING DECAL TO BE INSTALLED INSIDE SERVICE PULL SECTION BY THE CUSTOMER.

E. SEMCO PR–821 BY SDG&E OR IT'S AUTHORIZED AGENT.

REFERENCE:

G. SEE STANDARD 3948.1 FOR INFORMATION ON THE INSTALLATION OF SEMCO PR–821 FOAM SEALANT.

FOR FIELD MAINTENANCE ONLY

TABLE OF CONTENTS

© 1998 - 2010 San Diego Gas & Electric Company. All rights reserved. Removal of this copyright notice without permission is not permitted under law.

SCOPE: THIS STANDARD SHOWS THE PLACEMENT AND CONSTRUCTION OF A TYPICAL SERVICE TRENCH DAM.

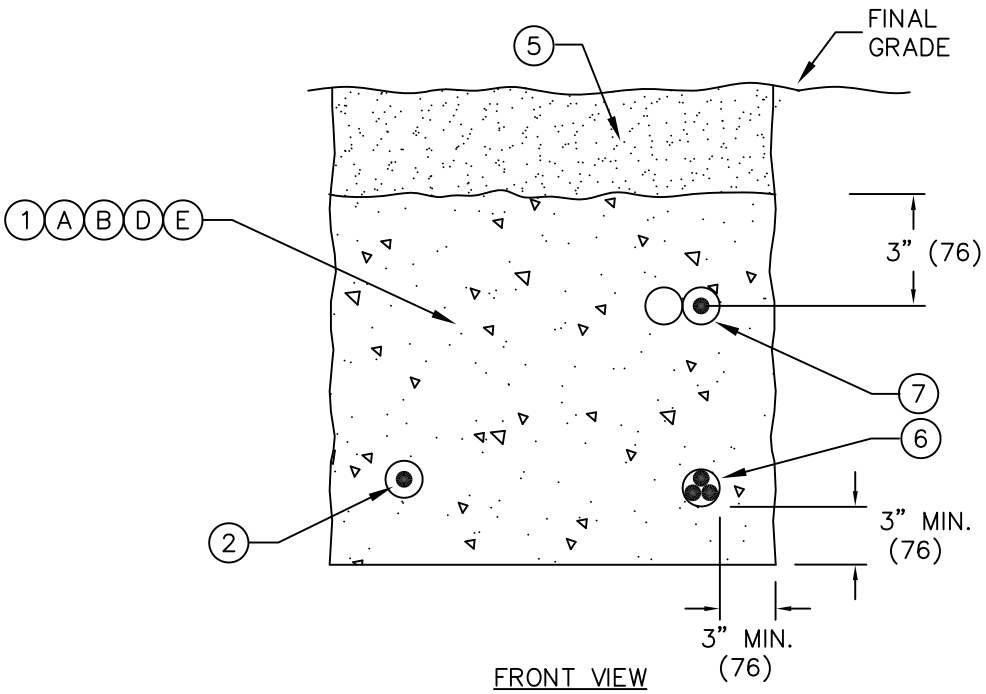

FRONT VIEW

FOR FIELD MAINTENANCE ONLY

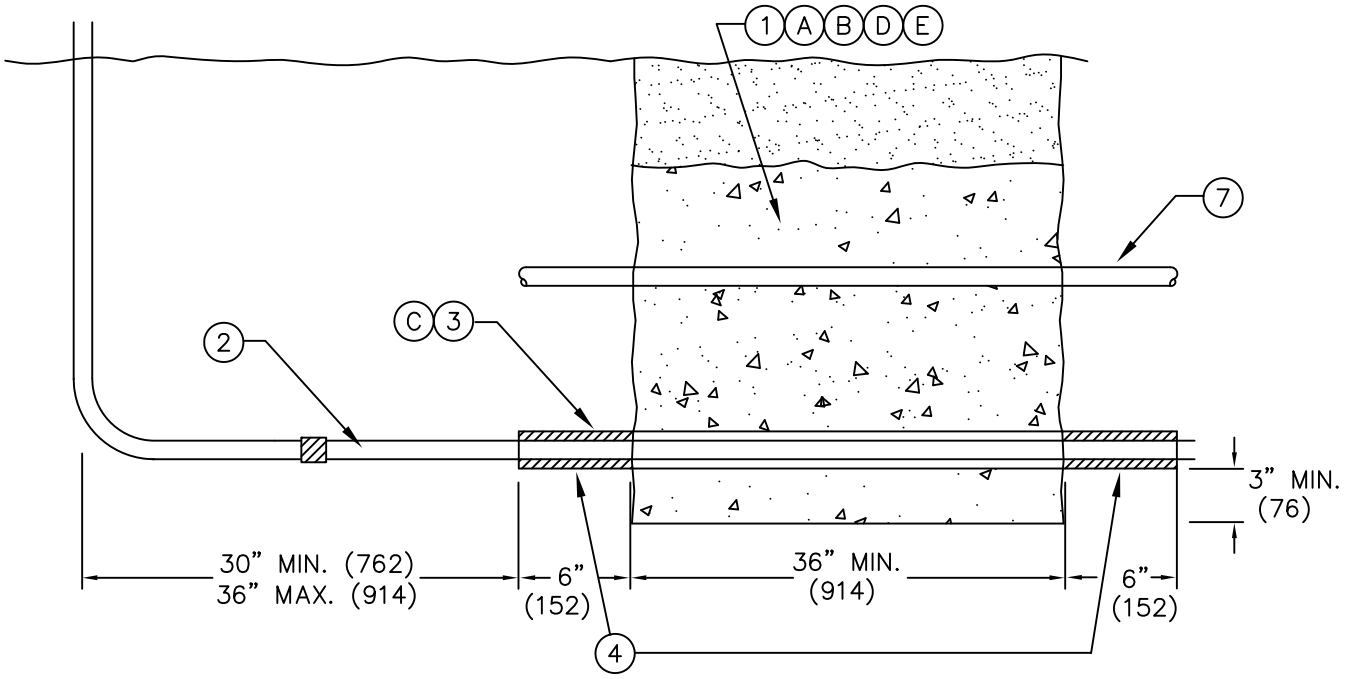

SIDE VIEW

© 1998 - 2010 San Diego Gas & Electric Company. All rights reserved. Removal of this copyright notice without permission is not permitted under law.

SERVICE GUIDE	Indicates Latest Revision	Completely Revised	New Page	Information Removed

	SDG&E ELECTRIC STANDARDS	REVISION
3384.3	SOIL GAS MITIGATION SERVICE TRENCH DAM	DATE 8-1-02 APPD

TABLE OF CONTENTS

BILL OF MATERIAL:

ITEM	DESCRIPTION	QUANTITY	CONSTR. STD OR PAGE NO.	STOCK NUMBER	ASSEMBLY UNITS
1	SLURRY/BENTONITE TRENCH DAM	AS REQ'D	BY CUSTOMER	–	–
2	GAS SERVICE PIPE	AS REQ'D	–	–	–
3	PVC GAS SERVICE SLEEVE PER TABLE 1 ON 3384.9	4' MIN.	BY CUSTOMER	–	–
4	POLYSEAL EXPANDING FOAM SEALANT	AS REQ'D	BY CUSTOMER	–	–
5	COMPACTED NATIVE FILL	–	–	–	–
6	ELECTRIC SERVICE CONDUIT	AS REQ'D	3942.1	–	–
7	COMMUNICATIONS CONDUIT(S)	AS REQ'D	–	–	–

NOTES:

IT SHALL BE THE RESPONSIBILITY OF THE CUSTOMER TO INSTALL AND MAINTAIN WHEN NECESSARY THE SERVICE TRENCH DAM.

FOR FIELD MAINTENANCE ONLY

INSTALLATION:

A. TRENCH DAM SHALL BE CONCRETE SLURRY WITH 10% BENTONITE CLAY POWDER. CONCRETE/ BENTONITE MIX SHALL BE 300–500 PSI (28 DAYS).

B. TRENCH DAM SHALL BE INSTALLED IN JOINT UTILITY SERVICE TRENCH AT A POINT JUST BEFORE UTILITIES SPLIT TO THEIR FINAL SERVICE LOCATION.

C. SPLIT 2 INCH SCH 40 PVC GAS SERVICE SLEEVE IN HALF ALONG ITS LENGTH AND REJOIN BY SPIRAL WRAPPING WITH DUCT TAPE ALONG ENTIRE LENGTH. CENTER GAS SERVICE PIPE IN THE CONDUIT AND SEAL ANNULAR SPACE WITH POLYSEAL POLY FOAM SEALANT A MIN. 6" BEYOND DAM.

D. TRENCH DAM SHALL EXTEND A MIN. 6 INCHES ABOVE THE UPPERMOST UTILITY.

E. TRENCH DAM SHALL EXTEND 3 INCHES BELOW AND A MIN. 3 INCHES TO THE SIDE OF UTILITIES.

TABLE OF CONTENTS

TABLE 1

GAS PIPE SIZE	SCH 40 PVC SLEEVE SIZE
1/2" POLY SERVICE	2" SLEEVE
3/4" STEEL OR 1" POLY SERVICE	3" SLEEVE
2" STEEL OR POLY SERVICE OR MAIN	4"" SLEEVE
3" POLY MAIN OR SERVICE	5" OR 6" SLEEVE
4" MAIN	6" OR 8" SLEEVE
6" MAIN	8" SLEEVE

GREATER THAN 6", CONTACT THE GAS DEPARTMENT

© 1998 - 2010 San Diego Gas & Electric Company. All rights reserved. Removal of this copyright notice without permission is not permitted under law.

SCOPE: THIS STANDARD SHOWS THE CONSTRUCTION OF A TYPICAL DISTRIBUTION TRENCH DAM.

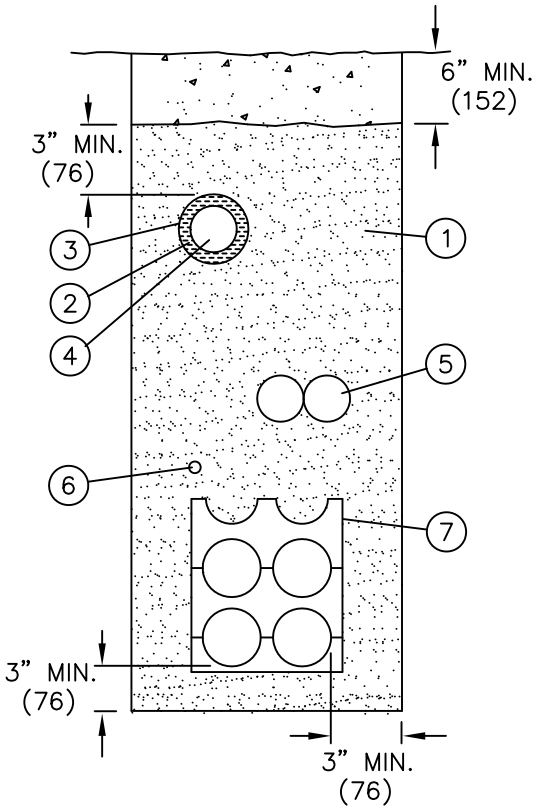

FRONT VIEW

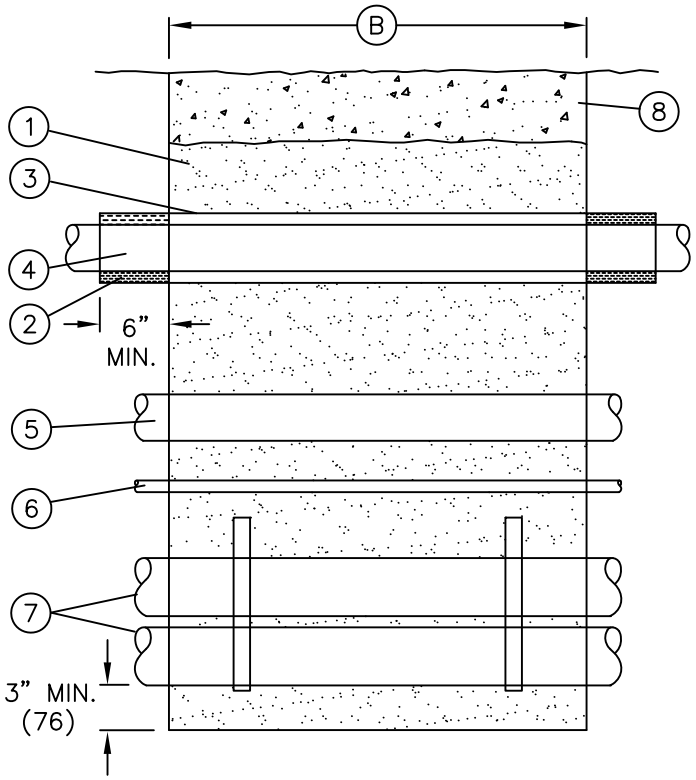

SIDE VIEW

FOR FIELD MAINTENANCE ONLY

BILL OF MATERIAL:

ITEM	DESCRIPTION	QUANTITY	CONSTR. STD OR PAGE NO.	STOCK NUMBER	ASSEMBLY UNITS
1	CONCRETE MIX (300–500 PSI/28 DAY) WITH 10% BENTONITE CLAY POWDER	AS REQ'D	BY CUSTOMER	–	–
2	SEALANT FOR POLY GAS MAIN (SEMCO PR–821)	AS REQ'D	BY CUSTOMER	S631890	–
3	SLEEVE FOR POLY GAS MAIN (SEE TABLE 1)	AS REQ'D	BY CUSTOMER	–	–
4	GAS MAIN	AS REQ'D	BY CUSTOMER	–	–
5	COMMUNICATIONS	AS REQ'D	BY CUSTOMER	–	–
6	STREET LIGHTNING	AS REQ'D	BY CUSTOMER	–	–
7	ELECTRIC CONDUIT & SPACERS	AS REQ'D	BY CUSTOMER	–	–
8	NATIVE BACKFILL	AS REQ'D	BY CUSTOMER	–	–

© 1998 - 2010 San Diego Gas & Electric Company. All rights reserved. Removal of this copyright notice without permission is not permitted under law.

TABLE OF CONTENTS

INSTALLATION:

A. TRENCH DAM SHALL BE CONCRETE SLURRY WITH 10% BENTONITE CLAY POWDER. CONCRETE/BENTONITE MIX SHALL BE 300–500 PSI (28 DAY).

(B) TRENCH DAM SHALL BE TWICE THE WIDTH OF THE TRENCH IN LENGTH OR A MINIMUM OF 36 INCHES WHICHEVER IS GREATER.

C. GAS SLEEVE CONDUIT SHALL BE GRAY OR BLACK IN COLOR. NO OTHER COLOR IS ACCEPTABLE.

D. GAS SLEEVE CONDUIT SHALL BE PVC, SCH 40.

E. FOR RETROFIT APPLICATIONS SPLIT THE SLEEVE IN HALF ALONG ITS LENGTH AND REJOIN BY SPIRAL WRAPPING W/DUCT TAPE ALONE ENTIRE LENGTH. CENTER GAS PIPE IN SLEEVE AND SEAL ANNULAR SPACE WITH POLY SEALANT.

F. TRENCH DAM SHALL EXTEND 3" BELOW AND A MIN. 3" TO THE SIDE OF UTILITIES.

TABLE 1

GAS PIPE SIZE	SCH 40 PVC SLEEVE SIZE
1/2" POLY SERVICE	2" SLEEVE
3/4" STEEL OR 1" POLY SERVICE	3" SLEEVE
2" STEEL OR POLY SERVICE OR MAIN	4"" SLEEVE
3" POLY MAIN OR SERVICE	5" OR 6" SLEEVE
4" MAIN	6" OR 8" SLEEVE
6" MAIN	8" SLEEVE

GREATER THAN 6", CONTACT THE GAS DEPARTMENT

FOR FIELD MAINTENANCE ONLY

TABLE OF CONTENTS

© 1998 - 2005 San Diego Gas & Electric Company. All rights reserved. Removal of this copyright notice without permission is not permitted under law.

SERVICE GUIDE	Indicates Latest Revision	Completely Revised	New Page	Information Removed

REVISION	SDG&E ELECTRIC STANDARDS	
DATE 6-1-02 APPD	SOIL GAS MITIGATION DISTRIBUTION TRENCH DAM	3384.6

SCOPE: THIS STANDARD PROVIDES THE RECOMMENDED PROPORTIONS TO CREATE ONE CUBIC YARD OF SAND SLURRY FOR USE IN TRENCH DAMS.

* THE FOLLOWING PROPORTIONS WILL PROVIDE APPROXIMATELY ONE CUBIC YARD OF CONCRETE SAND/BENTONITE SLURRY. THIS MIX WILL SET UP BETWEEN 8 AND 20 HOURS AND WILL ACHIEVE 471 PSI @28 DAYS AND 266 PSI @4 DAYS.

CONCRETE SAND SLURRY

CONCRETE SAND 3000 LBS. +– 50 LBS.
WATER 350 LBS. (42 GALLONS)
CONCRETE 376 LBS. (4 SACKS)

BENTONITE SLURRY

BENTONITE 34 LBS. (200 MESH FORM)
WATER 564 LBS. (64 GALLONS)

THE MANUFACTURERS OF BENTONITE RECOMMEND ADDING TWO GALLONS OF WATER TO EACH POUND OF BENTONITE TO ACHIEVE A CONSISTENCY OF PANCAKE MIX. THIS MIX SHOULD BE ADDED TO THE ALREADY MIXED CONCRETE SAND SLURRY. A CHEMGROUT PUMP WOULD WORK WELL FOR THIS.

BENTONITE POWDER SHOULD NEVER BE ADDED DIRECTLY TO CONCRETE SAND SLURRY MIXTURE. TO DO SO WILL CAUSE COAGULATION OR LUMPING OF THE BENTONITE POWER IN THE CONCRETE SLURRY MIXTURE.

NOTE:

CONFIRM WITH THE CONCRETE SUPPLIER THAT THEY WILL ALLOW BENTONITE TO BE ADDED TO THE MIXER IF A TRANSIT MIX COMPANY SUPPLIES THE CONCRETE SAND SLURRY.

*THIS MIX WILL YIELD 26 CUBIC FEET (0.96 CUBIC YARD)

FOR FIELD MAINTENANCE ONLY

TABLE OF CONTENTS

© 1998 - 2005 San Diego Gas & Electric Company. All rights reserved. Removal of this copyright notice without permission is not permitted under law.

SERVICE GUIDE	Indicates Latest Revision	Completely Revised	New Page	Information Removed

	SDG&E ELECTRIC STANDARDS	REVISION
3384.7	SOIL GAS MITIGATION CONCRETE SLURRY/BENTONITE MIX	DATE 6–1–02 APPD

SCOPE: THIS STANDARD DESCRIBES THE INSTALLATION OF AN APPLIED MEMBRANE OR METHANE BARRIER UNDER TYPICAL PAD–MOUNTED EQUIPMENT. THIS INCLUDES CONCRETE PADS WITH AND WITHOUT HANDHOLES AND FIBERGLASS STRUCTURES.

FOR FIELD MAINTENANCE ONLY

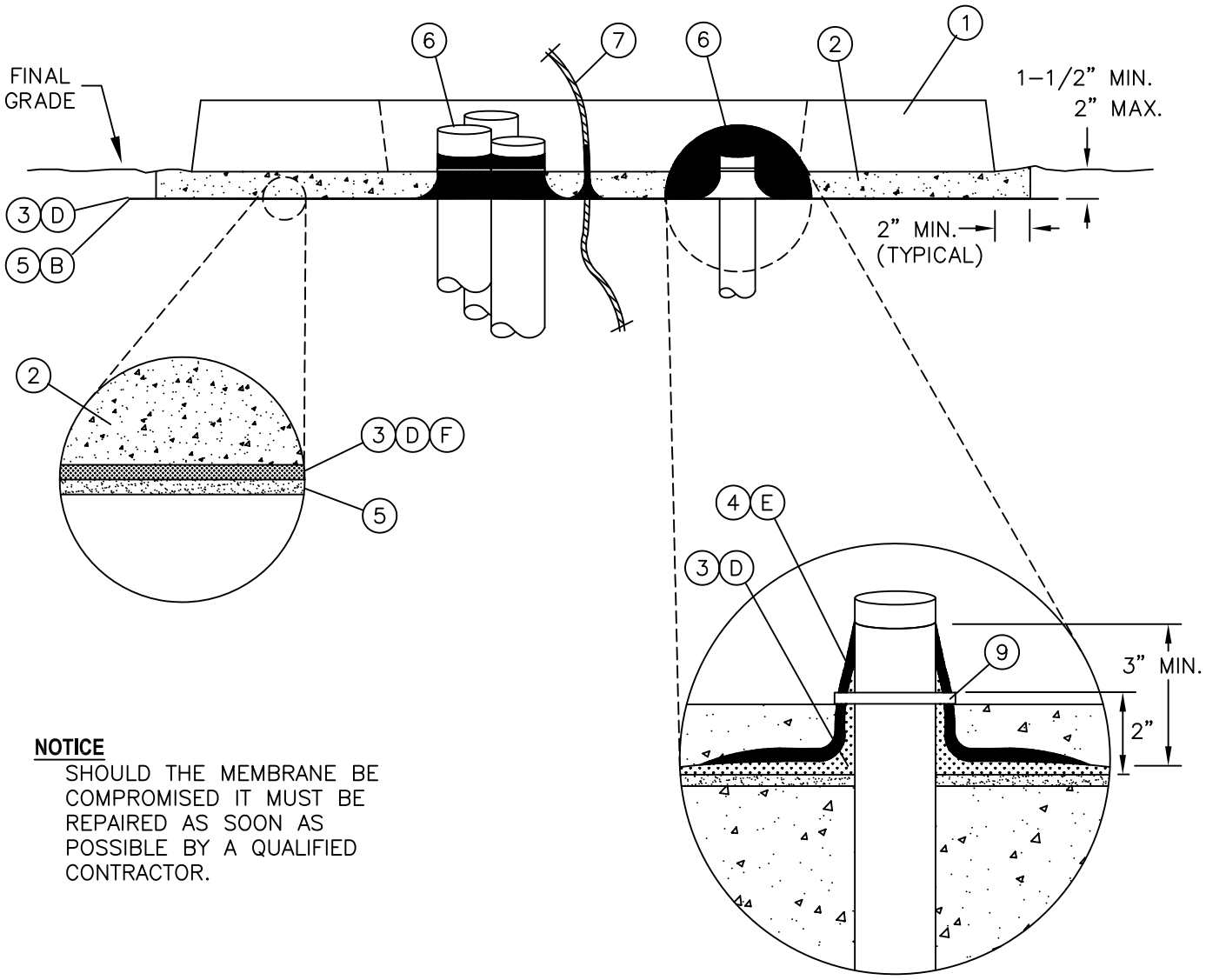

NOTICE

SHOULD THE MEMBRANE BE COMPROMISED IT MUST BE REPAIRED AS SOON AS POSSIBLE BY A QUALIFIED CONTRACTOR.

TABLE OF CONTENTS

© 1998 - 2010 San Diego Gas & Electric Company. All rights reserved. Removal of this copyright notice without permission is not permitted under law.

SERVICE GUIDE	Indicates Latest Revision	Completely Revised	New Page	Information Removed

REVISION	SDG&E ELECTRIC STANDARDS	
DATE 6–1–02 APPD	SOIL GAS MITIGATION PAD–MOUNTED EQUIPMENT VAPOR BARRIER	3384.8

FOR FIELD MAINTENANCE ONLY

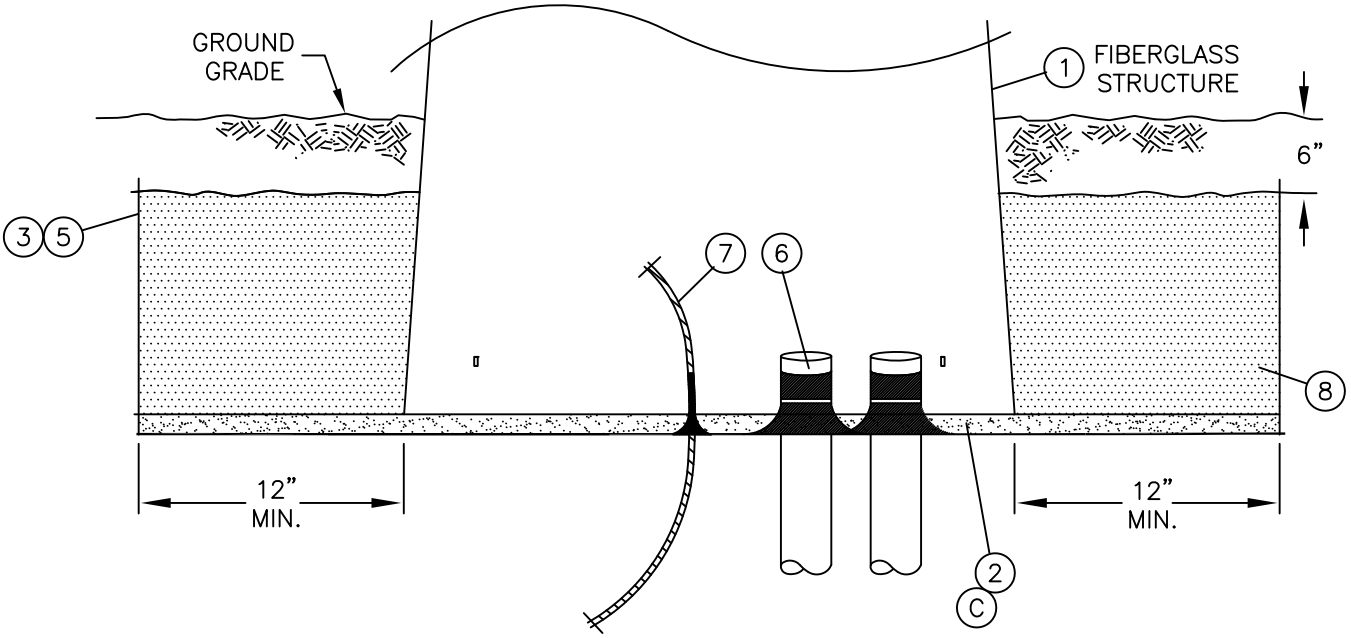

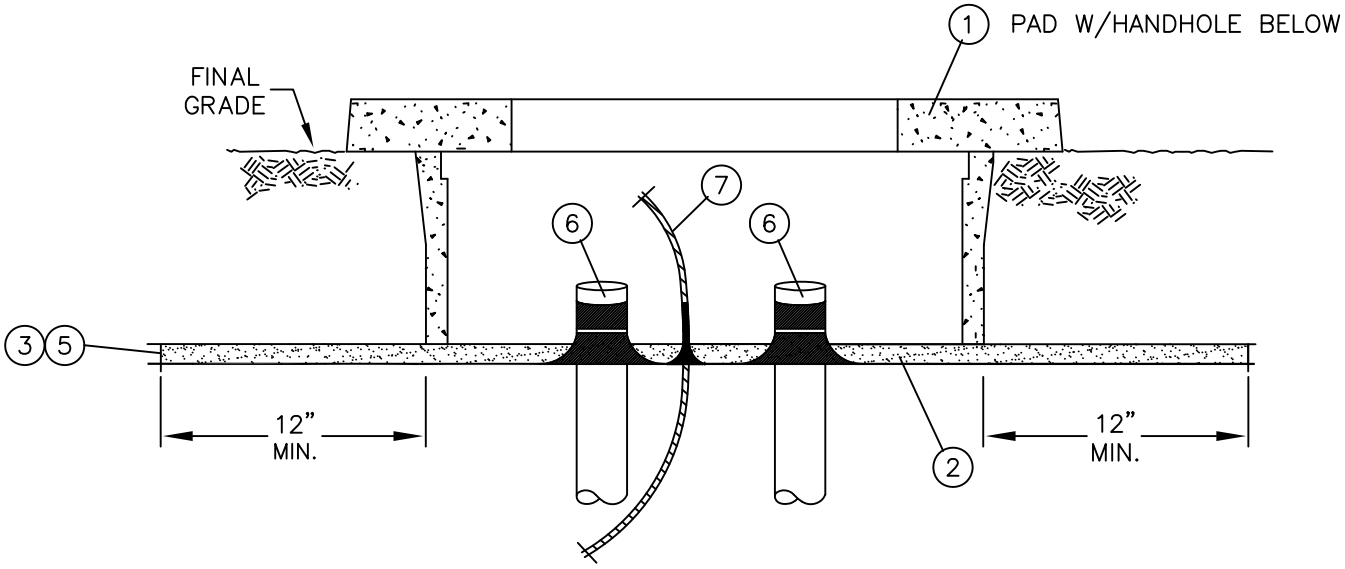

© 1998 - 2010 San Diego Gas & Electric Company. All rights reserved. Removal of this copyright notice without permission is not permitted under law.

SERVICE GUIDE	Indicates Latest Revision	Completely Revised	New Page	Information Removed

	SDG&E ELECTRIC STANDARDS	REVISION
3384.9	SOIL GAS MITIGATION CONCRETE EQUIPMENT PAD VAPOR BARRIER	DATE 6-1-02 APPD

TABLE OF CONTENTS

BILL OF MATERIAL:

ITEM	DESCRIPTION	QUANTITY	CONSTR. STD OR PAGE NO.	STOCK NUMBER	ASSEMBLY UNITS
1	PAD OR FIBERGLASS STRUCTURE	1	BY CUSTOMER	–	–
2	SAND	AS REQ'D	BY CUSTOMER	–	–
3	LIQUID BOOT (COLD SPRAY)	AS REQ'D	BY CUSTOMER	–	–
4	LIQUID BOOT (TROWEL GRADE)	AS REQ'D	BY CUSTOMER	–	–
5	TYPAR OR EQUIVALENT, 4oz. MIN.	AS REQ'D	BY CUSTOMER	–	–
6	CONDUIT	AS REQ'D	BY CUSTOMER	–	–
7	EQUIPMENT GROUND	AS REQ'D	4510	–	–
8	SAND SLURRY	AS REQ'D	BY CUSTOMER	–	–
9	CABLE TIE STRAP	AS REQ'D	BY CUSTOMER	–	–

INSTALLATION:

A. SOIL UNDER PAD OR FIBERGLASS STRUCTURES SHALL BE COMPACTED TO MIN. OF 90%. STOP THE BACKFILL 1–1/2 TO 2 INCHES BELOW THE RECOMMENDED EXCAVATION DEPTH.

B. ROLL OUT ONE LAYER OF APPROVED GEOTEXTILE, HEAT ROLLED SIDE UP, AND ALLOW THE GEOTEXTILE TO EXTEND A MINIMUM OF 2 INCHES BEYOND THE EDGES OF THE PAD. OVERLAP ANY SEAMS BY 6 INCHES. KEEP THE GEOTEXTILE FREE FROM DIRT.

C. FOR FIBERGLASS STRUCTURES THE GEOTEXTILE SHALL EXTEND 12 INCHES BEYOND THE BOTTOM FLANGE OF THE STRUCTURE.

D. SPRAY APPLY LIQUID BOOT AS PER THE MANUFACTURER INSTRUCTIONS. MAINTAIN A MIN. 80 MIL DRY THICKNESS. PAY PARTICULAR ATTENTION TO THE AREAS BETWEEN BUNCHED CONDUITS. SPRAY LIQUID BOOT ONTO CONDUIT A MINIMUM OF 1–1/2 INCHES ABOVE THE GEOTEXTILE.

E. APPLY ADDITIONAL LIQUID BOOT (TROWEL GRADE) TO CONDUITS WHERE THEY PENETRATE THE GEOTEXTILE FABRIC. WORK THE TROWEL GRADE LIQUID BOOT A MINIMUM 1–1/2 INCHES HORIZONTALLY FROM THE CONDUIT AND 1–1/2" ABOVE THE SPRAYED LIQUID BOOT. MAINTAIN A MINIMUM DRY THICKNESS OF 80 MILS. WHERE THE CONDUIT PENETRATES THE GEOTEXTILE AND THE LIQUID BOOT, THE CONDUIT SHOULD EXTEND AT LEAST 3 INCHES ABOVE THE GEOTEXTILE. THIS WILL CREATE A COLLAR AROUND THE CONDUIT. TREAT THE EQUIPMENT GROUND AS A CONDUIT.

F. AFTER THE MEMBRANE HAS CURED, CHECK FOR FLAWS.

G. WHEN MEMBRANE HAS COMPLETELY CURED WRAP PENETRATING CONDUITS WITH A POLYPROPYLENE CABLE TIE AT A POINT 2 INCHES ABOVE THE PENETRATION. TIGHTEN THE CABLE TIE FIRMLY SO AS TO SQUEEZE THE CURED MEMBRANE COLLAR AROUND THE CONDUIT.

H. COVER THE NOW COMPLETED MEMBRANE WITH MINIMUM OF 1–1/2 TO 2 INCHES OF SAND. INSTALL PAD OR FIBERGLASS STRUCTURE TO SDG&E STANDARDS. (FOR FIBERGLASS STRUCTURES THE GRAVEL BASE SHALL BE ELIMINATED).

FOR FIELD MAINTENANCE ONLY

PRODUCT INFORMATION

PRODUCT NAME	MANUFACTURER	PART OR CATALOG NUMBER
TYPAR	LINQ INDUSTRIAL FABRICS, INC	3401
LIQUID BOOT (SPRAY APPLIED)	LBI TECHNOLOGIES, INC	SPRAY APPLIED
LIQUID BOOT (TROWEL GRADE)	LBI TECHNOLOGIES, INC	TROWEL GRADE

© 1998 - 2010 San Diego Gas & Electric Company. All rights reserved. Removal of this copyright notice without permission is not permitted under law.

SCOPE: THIS STANDARD SHOWS THE EQUIPMENT VENT AND INSTALLATION.

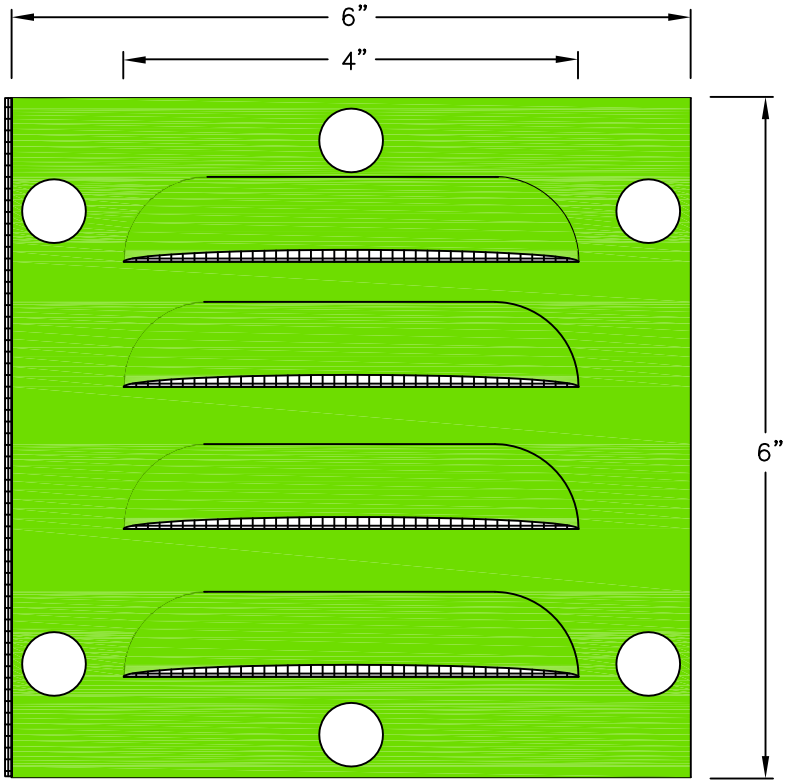

FRONT VIEW

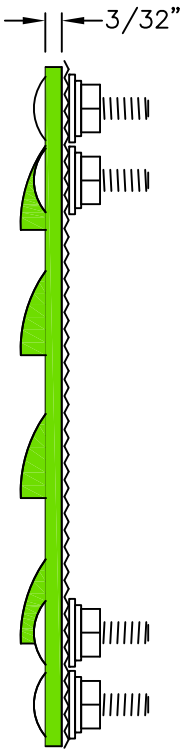

SIDE VIEW

FOR FIELD MAINTENANCE ONLY

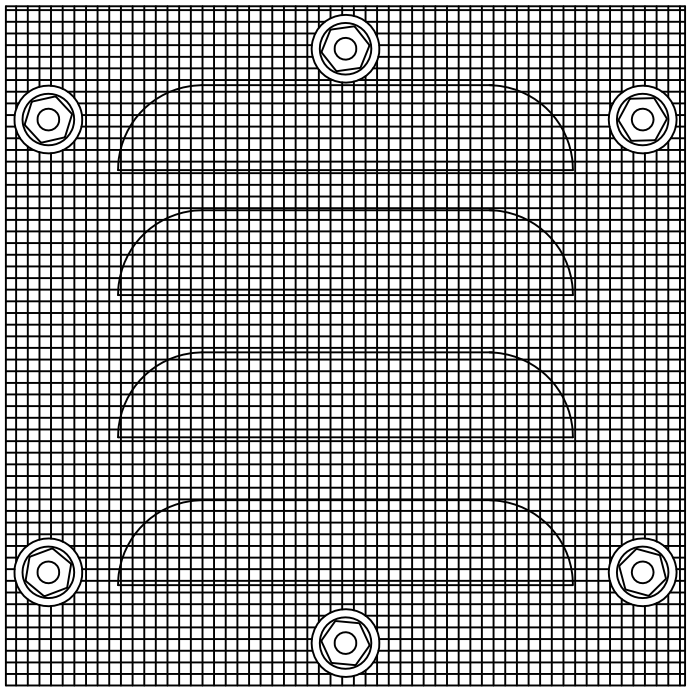

BACK VIEW

© 1998 - 2010 San Diego Gas & Electric Company. All rights reserved. Removal of this copyright notice without permission is not permitted under law.

SERVICE GUIDE	Indicates Latest Revision	Completely Revised	New Page	Information Removed

	SDG&E ELECTRIC STANDARDS	REVISION
3384.11	SOIL GAS MITIGATION EQUIPMENT VENT	DATE 6-1-02 APPD

TABLE OF CONTENTS

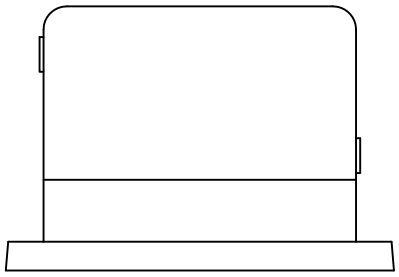

FRONT VIEW

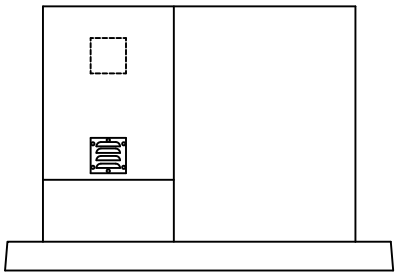

SIDE VIEW

TYPICAL VENT INSTALLATION ON PAD–MOUNTED EQUIPMENT WITH ONE AIR CABINET.

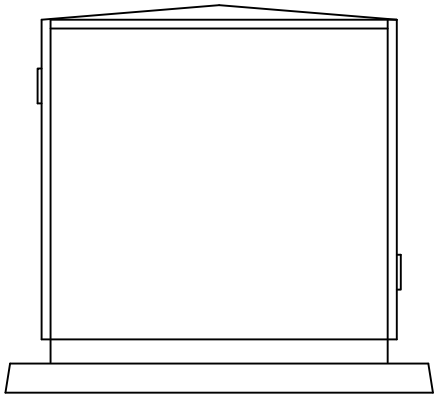

FRONT VIEW

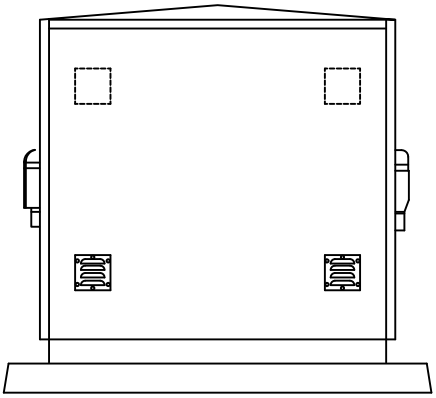

SIDE VIEW

TYPICAL VENT INSTALLATION ON EQUIPMENT WITH TWO AIR CABINETS.

BILL OF MATERIAL:

ITEM	DESCRIPTION	QUANTITY	CONSTR. STD OR PAGE NO.	STOCK NUMBER	ASSEMBLY UNITS
1	VENT	AS REQ'D	–	S791600	–

IMPORTANT

PRIOR TO INSTALLING EQUIPMENT VENTS MAKE SURE THAT THE BOLTS DO NOT CONFLICT WITH ANY EXPOSED ENERGIZED PARTS OR CONDUCTORS. ALSO MAKE SURE THAT PRIOR TO DRILLING ANY POLES THAT THE LOCATION OF THE EQUIPMENT VENT IS IN THE AIR CABINET PORTION OF THE EQUIPMENT.

FOR FIELD MAINTENANCE ONLY

INSTALLATION:

A. INSTALL A MINIMUM OF TWO VENTS PER AIR COMPARTMENT.

B. VENTS SHALL BE INSTALLED DIAGONALLY FROM EACH OTHER, ONE ON EACH SIDE OF THE AIR CABINET, WITH ONE AS LOW AS POSSIBLE THE OTHER AS HIGH AS POSSIBLE ON THE AIR CABINET.

C. AFTER ALL PENETRATIONS IN THE AIR CABINET ARE COMPLETE APPLY A COAT OF AEROSOL PAD–MOUNT GREEN PAINT TO ALL EXPOSED METAL. STOCK NUMBER S518762.

D. ALLOW THE PAINT TO FULLY DRY BEFORE INSTALLING EQUIPMENT VENT.

E. INSTALL EQUIPMENT VENT WITH THE LOUVERS DOWN. DO NOT OVER TIGHTEN HARDWARE.

© 1998 - 2010 San Diego Gas & Electric Company. All rights reserved. Removal of this copyright notice without permission is not permitted under law.

TABLE OF CONTENTS

3400 - PADS, RETAINING WALLS, CLEARANCES

3400 - PADS, RETAINING WALLS, CLEARANCES

PAGES	SUBJECT
3409	MOISTURE BARRIER
3412	FUSED SWITCHING PAD
3413	TERMINATOR PAD
3419	PME 9, 10 & 11 PAD
3420	AIR BREAK PMH 3 SECTIONALIZING SWITCH PAD
3422	AIR BREAK PME 3 SECTIONALIZING SWITCH PAD
3440	3440 PAD & HANDHOLE INSTALLATIONS FOR PAD-MOUNTED 12KV, 600 AMP, 3 PHASE SWITCH
3441	3441 PAD & 3316 HANDHOLE INSTALLATION FOR PAD-MOUNTED, 12KV, 600 AMP, THREE-PHASE SWITCH

MAIN TABLE OF CONTENTS

© 1998 - 2016 San Diego Gas & Electric Company. All rights reserved. Removal of this copyright notice without permission is not permitted under law.

REV	CHANGE	BY	DSGN	APPV	DATE	REV	CHANGE	BY	DSGN	APPV	DATE
C						F					
B						E					
A	ORIGINAL ISSUE	JS	TR	MDJ	7/25/2016	D					

X Indicates Latest Revision | Completely Revised | New Page | Information Removed

SDG&E UNDERGROUND CONSTRUCTION STANDARD

PADS, RETAINING WALLS, CLEARANCES FMO
TABLE OF CONTENTS

FMO
OH 3401

FIELD MAINTENANCE ONLY

REVISION HISTORY:

7/13/2016: All versions prior to 2016 are superseded by their current version found inside the Overhead Construction Standard Manual.

TABLE OF CONTENTS

© 1998 - 2016 San Diego Gas & Electric Company. All rights reserved. Removal of this copyright notice without permission is not permitted under law.

REV	CHANGE	BY	DSGN	APPV	DATE	REV	CHANGE	BY	DSGN	APPV	DATE
C						F					
B						E					
A	ORIGINAL ISSUE	JS	IL	MDJ	7/13/2016	D					

X Indicates Latest Revision | Completely Revised | New Page | Information Removed

SHEET 1 OF 1

SDG&E ELECTRIC UNDERGROUND STANDARD

MOISTURE BARRIER

FMO UG 3409

SCOPE: THIS STANDARD SHOWS HOW TO REDUCE MOISTURE ON EXISTING OIL FILLED PAD-MOUNTED SWITCHES

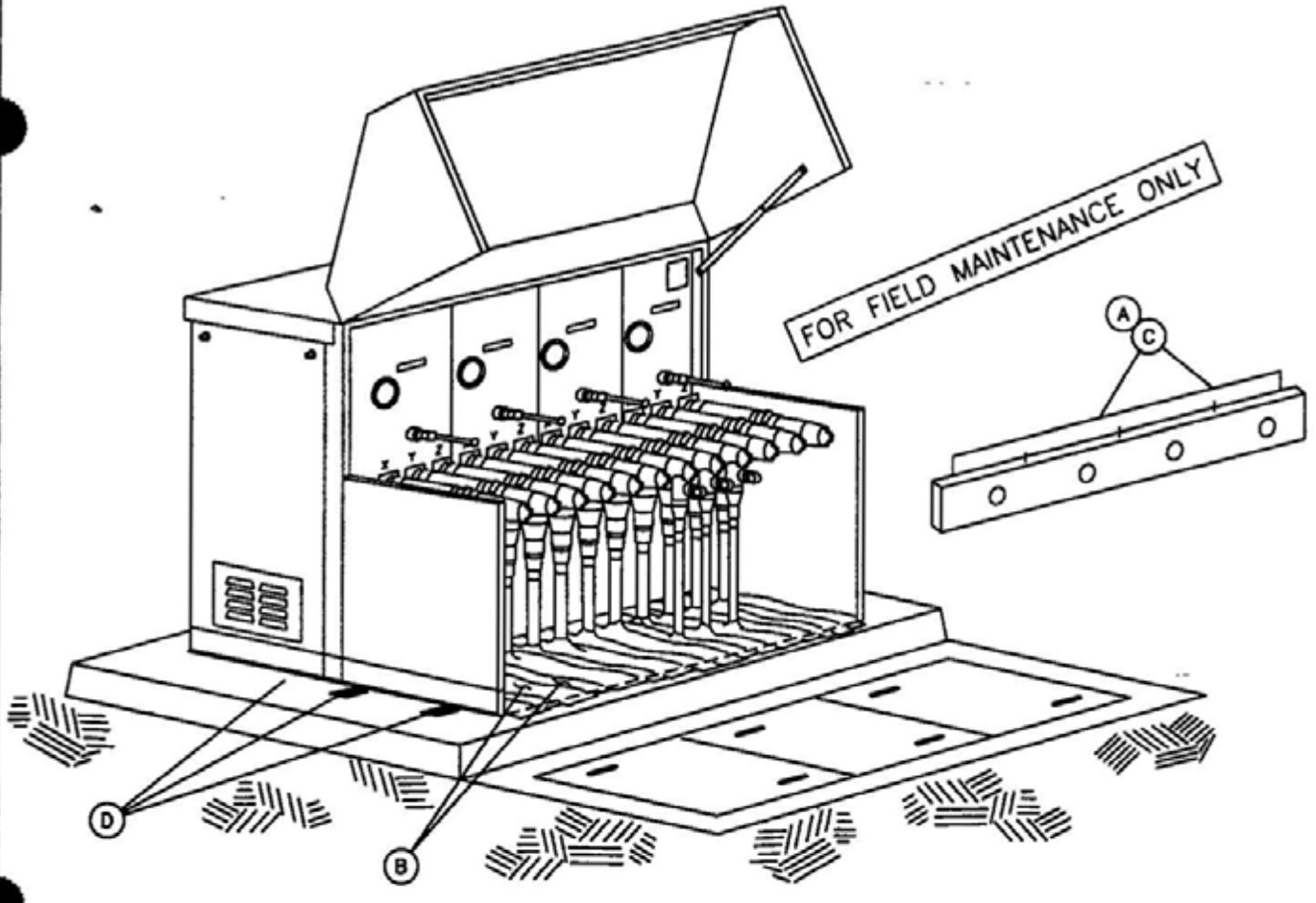

BILL OF MATERIAL

ITEM	DESCRIPTION	QUANTITY	CONSTR STD OR PAGE NO	STOCK NUMBER
1	TAPE, MOISTURE RESISTANT 2" X 50'	AS REQ'D	-	720652
2	TAPE, MOISTURE RESISTANT 6" X 50'	AS REQ'D	-	720654
3	SEALANT	AS REQ'D	3408	631800

INSTALLATION

(A) REMOVE SWITCH SIL

(B) CLEAN CONCRETE SURFACE OR ANY PORTION OF THE SWITCH CABINET WITH SOLVENT BEFORE APPLYING MOISTURE RESISTANT TAPE DRY ANY WET SURFACE THEN APPLY 2 INCH OR 6 INCH TAPE AS REQUIRED APPLY TAPE ON AS MUCH CONCRETE SURFACE AS POSSIBLE TO ASSURE A GOOD BOND DO NOT APPLY TAPE ON ANY WET OR DIRTY SURFACES, TAPE WILL NOT STICK

(C) REPLACE SWITCH SIL AND TRIM OFF EXCESS TAPE

(D) BEFORE APPLYING SEALANT, CAREFULLY FOLLOW INSTRUCTIONS ON THE CARTRIDGE CLEAN CONCRETE SURFACE WITH SOLVENT AND APPLY SEALANT WITH CAULKING GUN COMPLETELY AROUND SWITCH NEXT TO CONCRETE PAD AND IN THE PAD UNISTRUT INSIDE AND OUTSIDE THE SWITCH

TABLE OF CONTENTS

	SDG&E ELECTRIC STANDARDS	
DATE 1-1-91 APPD JLB/BDG	MOISTURE BARRIER	3499.9 SUPERSEDES 3409 (1-1-96)

FIELD MAINTENANCE ONLY

REVISION HISTORY:

7/13/2016: All versions prior to 2016 are superseded by their current version found inside the Overhead Construction Standard Manual.

TABLE OF CONTENTS

© 1998 - 2016 San Diego Gas & Electric Company. All rights reserved. Removal of this copyright notice without permission is not permitted under law.

REV	CHANGE	BY	DSGN	APPV	DATE	REV	CHANGE	BY	DSGN	APPV	DATE
C						F					
B						E					
A	ORIGINAL ISSUE	JS	IL	MDJ	7/13/2016	D					

X Indicates Latest Revision | Completely Revised | New Page | Information Removed

SHEET 1 OF 1

SDG&E ELECTRIC UNDERGROUND STANDARD

FUSED SWITCHING PAD

FMO UG 3412

SCOPE: THIS STANDARD SHOWS THE 3Ø FUSED SWITCHING PAD, HANDHOLE AND CONDUIT PLACEMENT USED WITH THE 3Ø FUSED SWITCHING CABINET (STANDARD 3513).

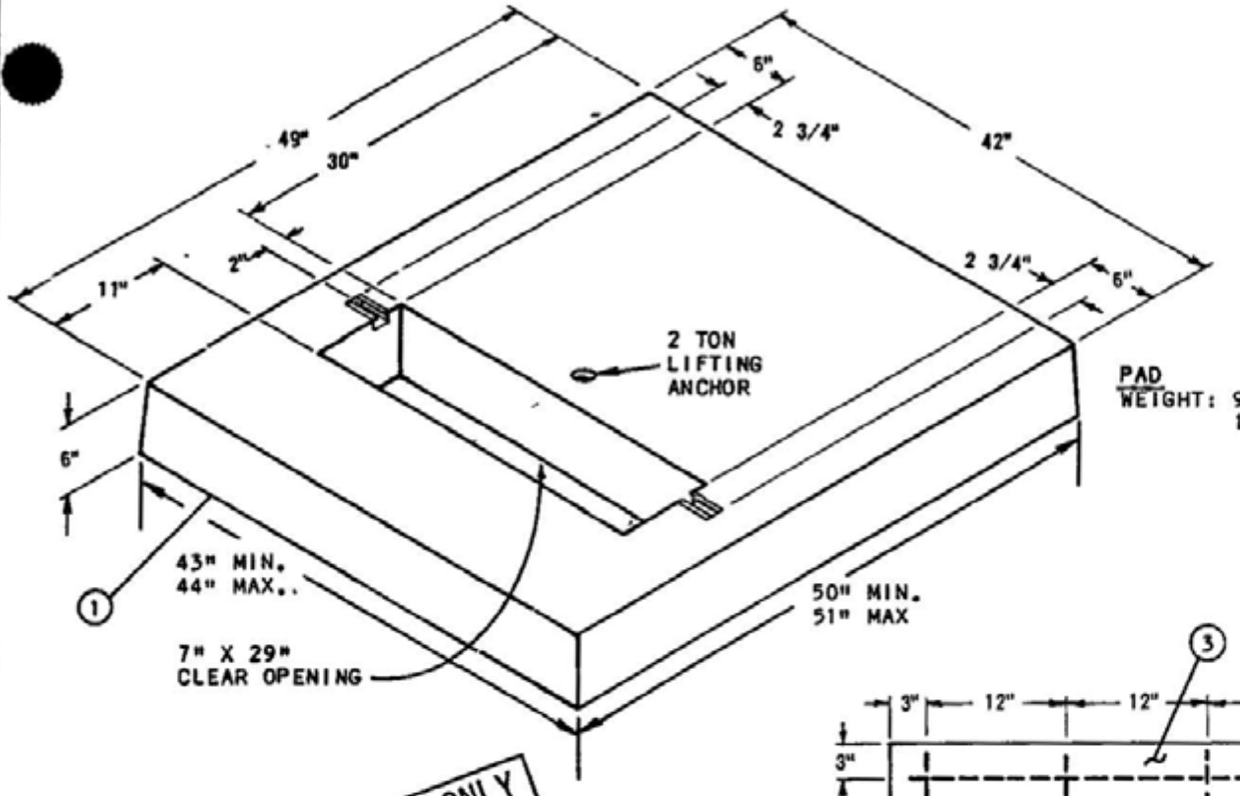

PAD
WEIGHT: 900# MIN.
1005# MAX.

FOR FIELD MAINTENANCE ONLY

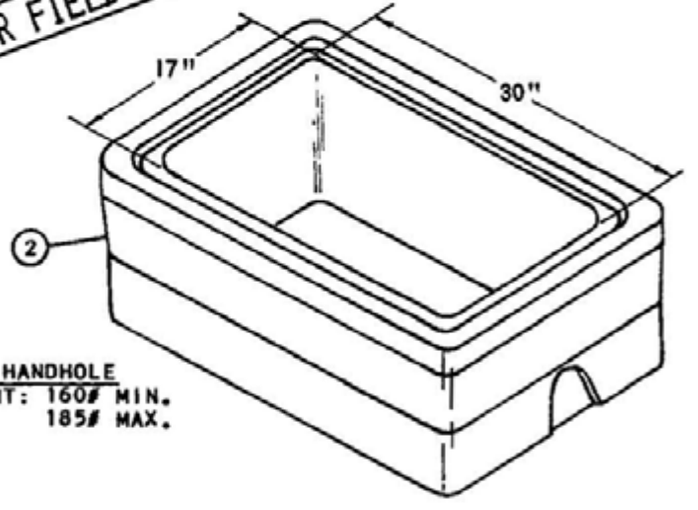

3312 HANDHOLE
WEIGHT: 160# MIN.
185# MAX.

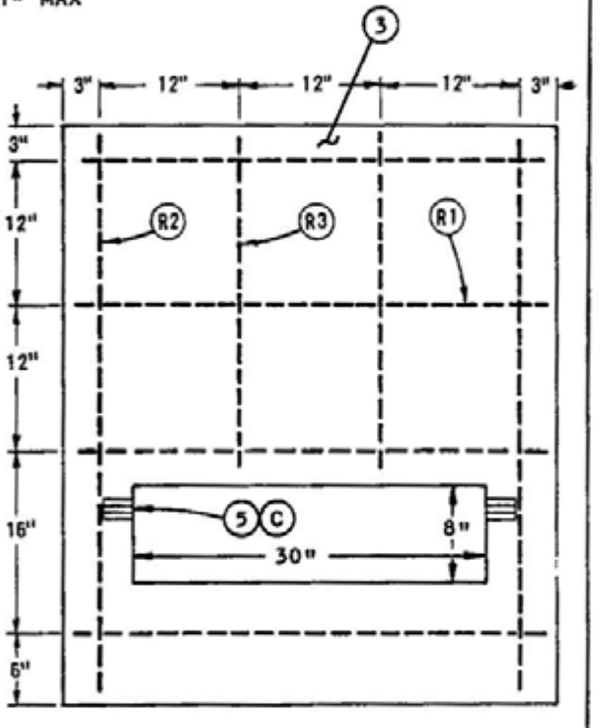

- STEEL DETAIL FOR POURED-IN-PLACE.
- CENTER STEEL IN CONCRETE POUR.

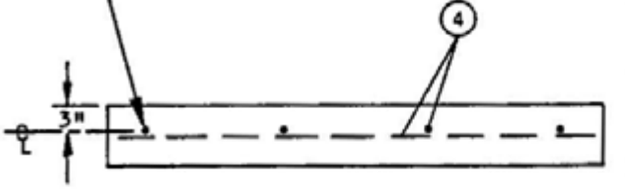

TABLE OF CONTENTS

DATE 1-1-89 APPD SLC/DTE	SDG&E ELECTRIC STANDARDS FUSED SWITCHING PAD	3499.211 (supercedes 3412.1 1-1-86)

3513 INSTALLATION
(TOP VIEW)
30 FUSED SWITCHING CABINET

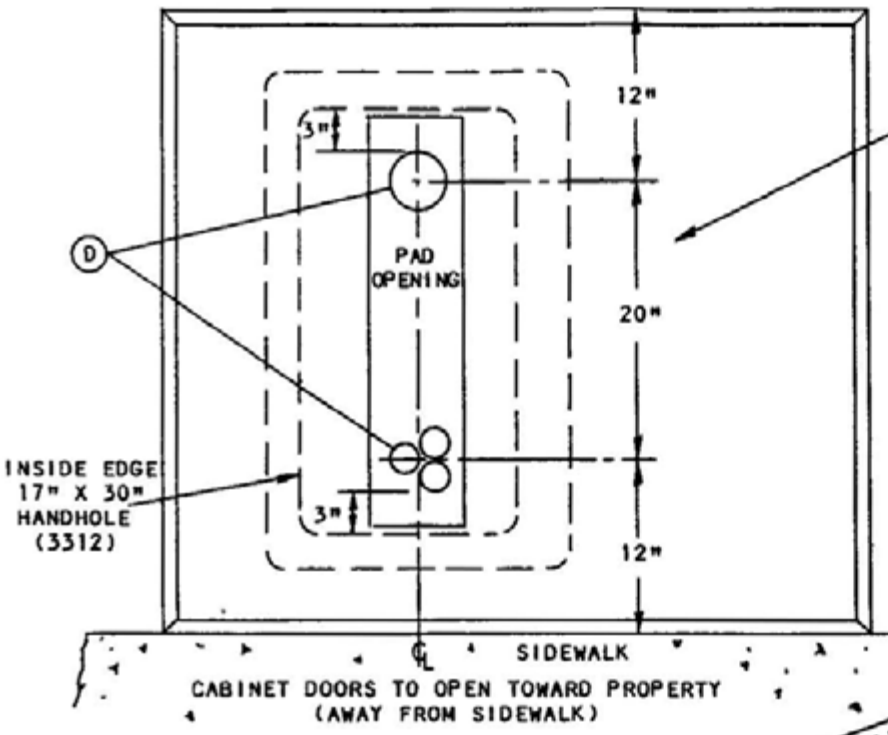

REINFORCING RODS (4)		
TYPE	QUANTITY	DESCRIPTION
R1	4	3/8" X 39"
R2	2	3/8" X 46"
R3	2	3/8" X 27"

FOR FIELD MAINTENANCE ONLY

BILL OF MATERIAL:

ITEM	DESCRIPTION	QUANTITY	CONST STD	STOCK NUMBER
1	FUSED SWITCHING PAD	1	--	513426
2	HANDHOLE, 17" X 30"	1	3312	162426
3	CONCRETE CLASS 'A', 5 1/2 SACK MIX	6.32 CU.FT.	--	--
4	#3 REINFORCING RODS, 3/8" (SEE TABLE ABOVE)	25'-2"	--	685280
5	CHANNEL, CONCRETE INSERTS, 2 3/4" X 1 5/8" X 7/8" UNISTRUT OR EQUAL (C)	2	--	426288
6	GALVANIZED PAINT (C)	AS REQ'D	--	516064

INSTALLATION:

A. THIS PAD MAY BE PRECAST OR POURED IN PLACE. TOP OF PAD MUST BE FINISHED FLAT.
B. WHEN PAD IS POURED IN PLACE, CONDUIT OPENINGS SHALL BE FORMED SO THAT THE CONDUIT STUBS ARE NOT CONCRETE ENCASED.
(C) IF POURED IN PLACE, ITEM 5 TO BE CUT IN FIELD . APPLY GALVANIZED PAINT TO EXPOSED ENDS.
(D) TERMINATE CONDUITS 3" ABOVE THE BOTTOM OF THE HANDHOLE.

REFERENCE:

H. SEE STANDARD 3211 FOR PAD IDENTIFICATION.
I. SEE STANDARD 3481 FOR BARRIER PROTECTION AND CLEARANCE.
J. SEE STANDARD 3483 FOR MINIMUM OPERATING AND CLEARANCE REQUIREMENTS (PAD PLACEMENT).
K. SEE STANDARD 3487 FOR RETAINING WALL REQUIREMENTS.
L. SEE STANDARD 3513 FOR EQUIPMENT OR INSTALLATION DETAILS.
M. SEE STANDARD 4512 FOR PAD GROUNDING.
N. SEE STANDARD 4514 FOR GROUNDING TELCO CONDUCTOR IN PAD-MOUNTED EQUIPMENT.

3499.212 (supercedes 3412.2 1-1-86)	SDG&E ELECTRIC STANDARDS	DATE 1-1-89
	FUSED SWITCHING PAD	APPD SLC / DTE

TABLE OF CONTENTS

FIELD MAINTENANCE ONLY

REVISION HISTORY:

7/13/2016: All versions prior to 2016 are superseded by their current version found inside the Overhead Construction Standard Manual.

TABLE OF CONTENTS

© 1998 - 2016 San Diego Gas & Electric Company. All rights reserved. Removal of this copyright notice without permission is not permitted under law.

REV	CHANGE	BY	DSGN	APPV	DATE	REV	CHANGE	BY	DSGN	APPV	DATE
C						F					
B						E					
A	ORIGINAL ISSUE	JS	IL	MDJ	7/13/2016	D					

X Indicates Latest Revision | Completely Revised | New Page | Information Removed

SHEET 1 OF 1

SDG&E ELECTRIC UNDERGROUND STANDARD

TERMINATOR PAD

FMO UG 3413

SCOPE: THIS STANDARD SHOWS THE EQUIPMENT PAD, HANDHOLE AND CONDUIT PLACEMENT USED WITH THE 30 CABLE TERMINATING ENCLOSURE, 350 KCMIL AND LARGER (STANDARD 3520).

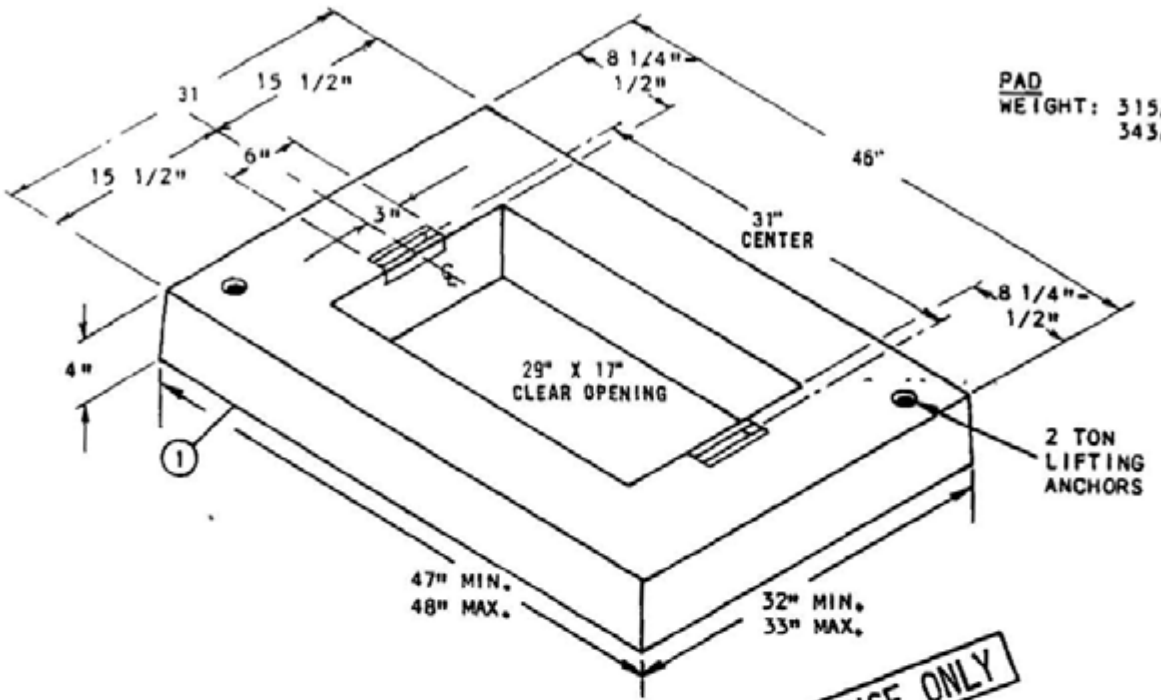

PAD
WEIGHT: 315# MIN.
343# MAX.

FOR FIELD MAINTENANCE ONLY

3312 HANDHOLE
WEIGHT: 160# MIN.
185# MAX.

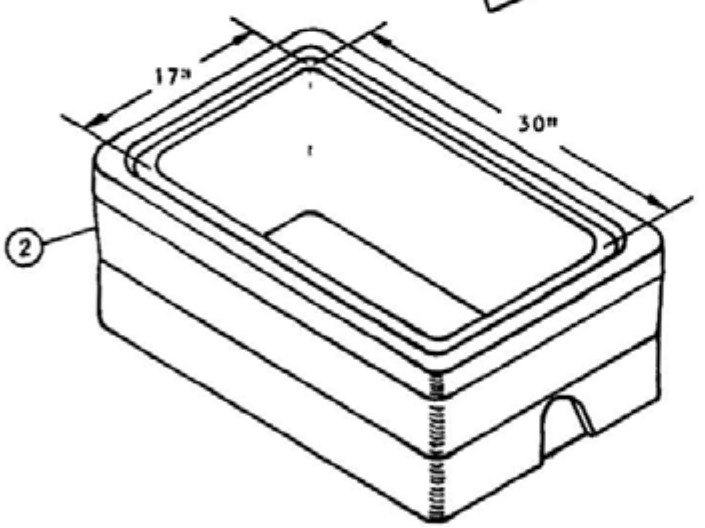

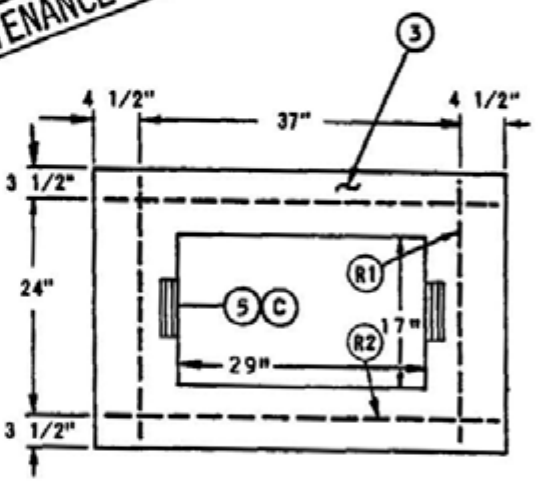

- STEEL DETAIL FOR POURED IN PLACE CENTER STEEL IN CONCRETE POUR.

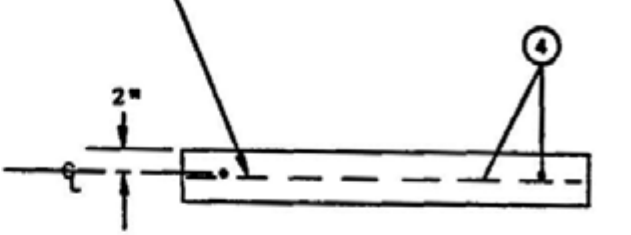

3499.104 SUPERCEDES 3413 (1-1-91)	SDG&E ELECTRIC STANDARDS	DATE 1-1-91
	TERMINATOR PAD	APP'D

TABLE OF CONTENTS

FIELD MAINTENANCE ONLY

REVISION HISTORY:

7/13/2016: All versions prior to 2016 are superseded by their current version found inside the Overhead Construction Standard Manual.

TABLE OF CONTENTS

© 1998 - 2016 San Diego Gas & Electric Company. All rights reserved. Removal of this copyright notice without permission is not permitted under law.

REV	CHANGE	BY	DSGN	APPV	DATE	REV	CHANGE	BY	DSGN	APPV	DATE
C						F					
B						E					
A	ORIGINAL ISSUE	JS	IL	MDJ	7/13/2016	D					

X Indicates Latest Revision | Completely Revised | New Page | Information Removed

SDG&E ELECTRIC UNDERGROUND STANDARD

PME 9, 10 & 11 PAD

SHEET 1 OF 1

FMO UG 3419

TABLE OF CONTENTS

SCOPE: THIS STANDARD SHOWS THE PAD AND HANDHOLE FOR THE PME 9, 10 & 11 PAD-MOUNTED SECTIONALIZING SWITCH CABINET

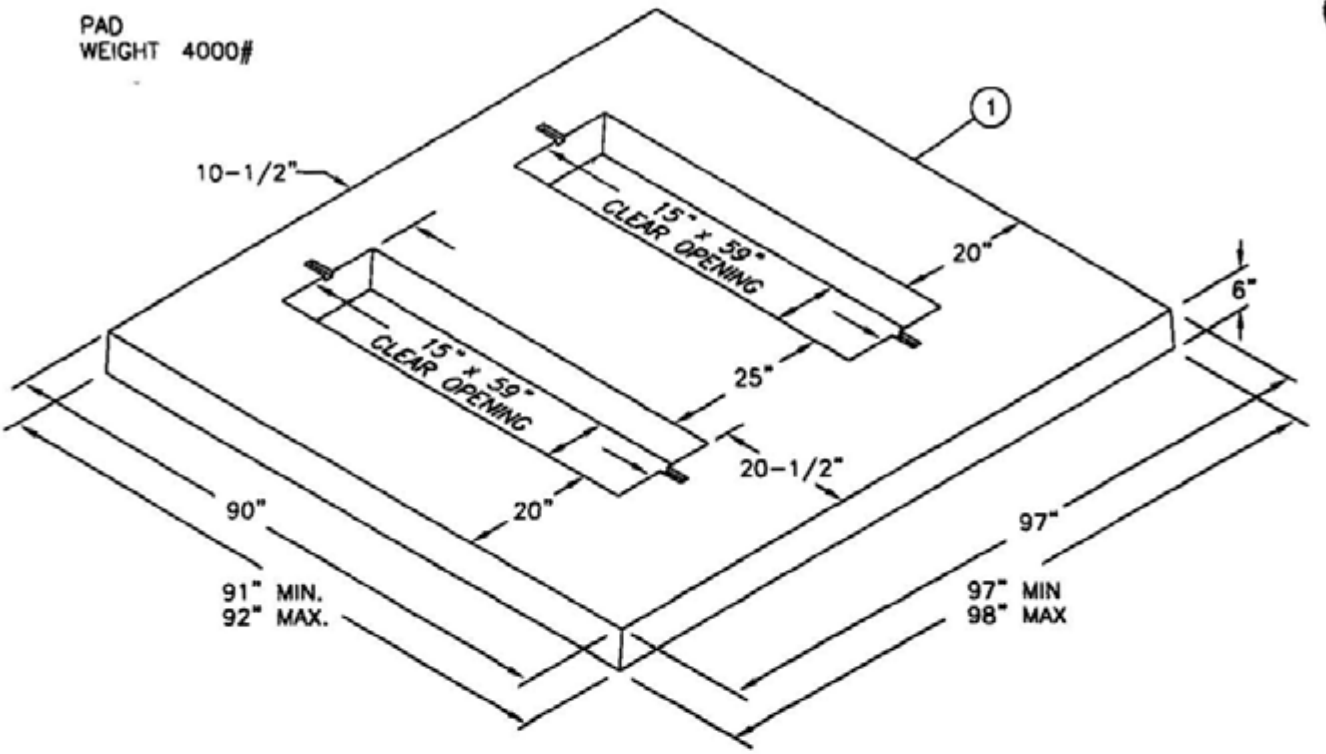

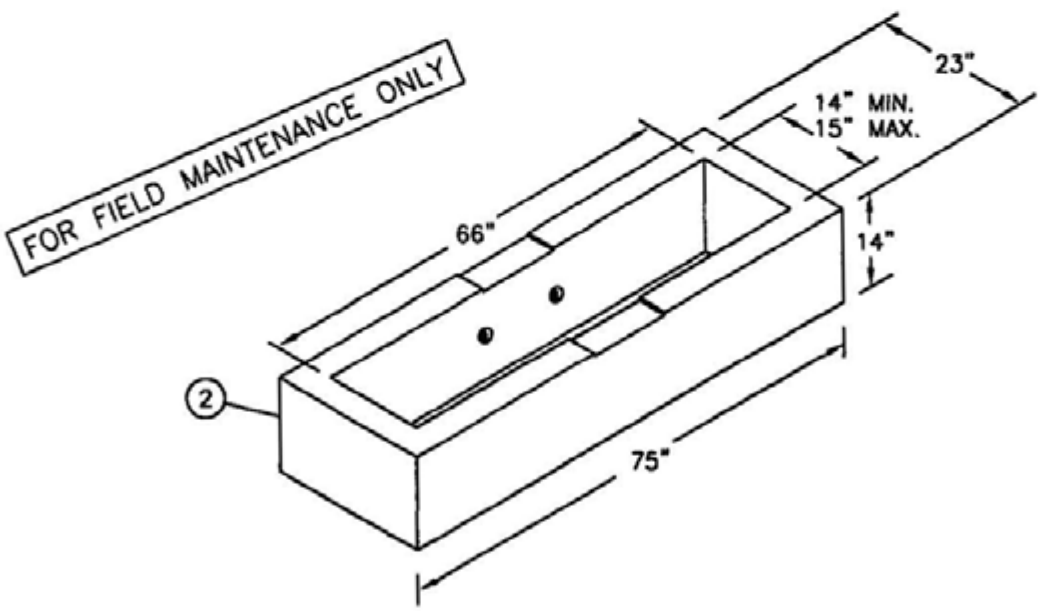

NOTES: – PAD MAY NOT BE POURED IN PLACE. USE PRECAST PADS ONLY.

3499.110 SUPERSEDES 3419 1 (1-1-96)	SDG&E ELECTRIC STANDARDS PME 9, 10 & 11 PAD	DATE 1-1-96 APPD [illegible]/CAK

BOX & CONDUIT PLACEMENT

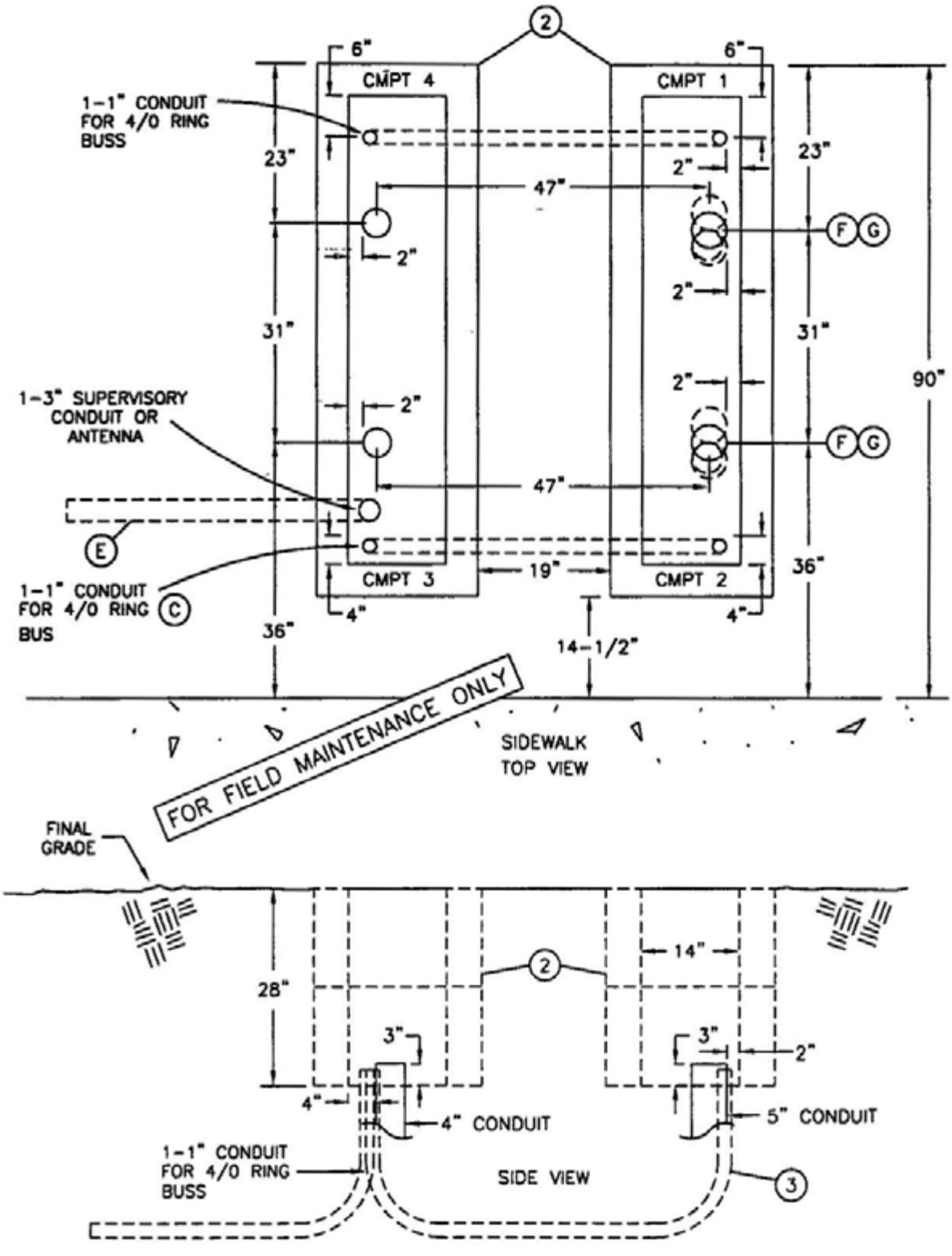

TABLE OF CONTENTS

DATE 1-1-96 APPD [illegible]	SDG&E ELECTRIC STANDARDS PME 9, 10 & 11 PAD	3499.111 SUPERSEDES 3419 2 (1-1-96)

TABLE OF CONTENTS

CONDUIT SIZE AND PLACEMENT FOR PME 9, 10 & 11 PAD-MOUNTED SECTIONALIZING CABINET

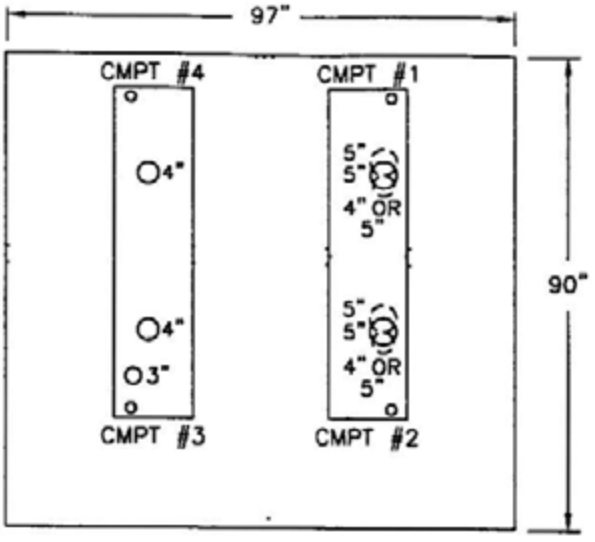

PME 9

FOR FIELD MAINTENANCE ONLY

REFER TO INSTALLATION NOTES (F) & (G) FOR ALLOWABLE CONDUIT SIZES AND PLACEMENT

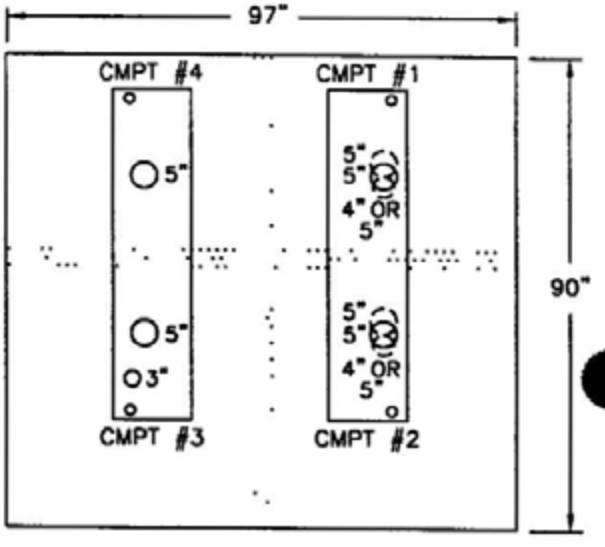

PME 10

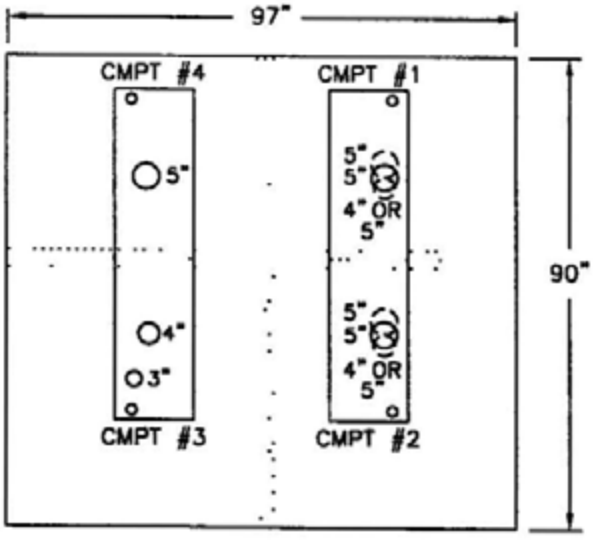

PME 11

3499.112 SUPERSEDES 3419 3 (1-1-96)	SDG&E ELECTRIC STANDARDS PME 9, 10 & 11 PAD	DATE 1-1-96 APPD [illegible] / CMC

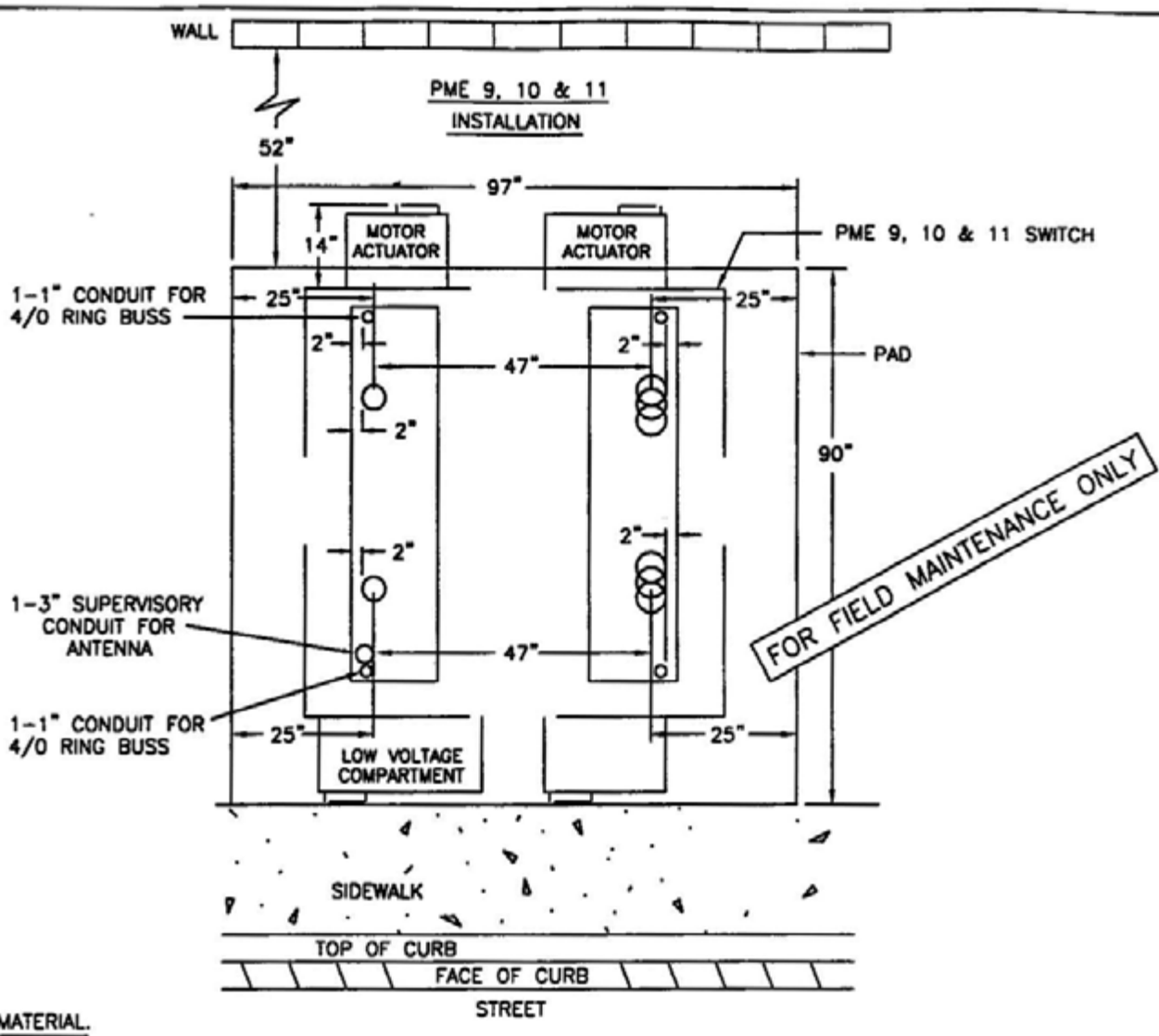

BILL OF MATERIAL.

ITEM	DESCRIPTION	QUANTITY	CONSTR. STD OR PAGE NO	STOCK NUMBER	ASSEMBLY UNIT
1	PME 9, 10 & 11 PAD	1	3419	514024	3419
2	3311 HANDHOLE, 14" X 66" X 14"	4	3311	162660	
3	CONDUIT DB 1" IN POLYETHYLENE	40FT	3373 1	249630	

INSTALLATION.

A THE PAD AND HANDHOLE LOCATION IS TO BE MARKED OUT PAYING PARTICULAR ATTENTION TO FOREIGN UTILITY PLACEMENTS RELOCATING PAD AND HANDHOLE REQUIRES APPROVAL FROM SERVICE PLANNING

B. INSTALL CONDUIT AND HANDHOLES.

(C) INSTALL 2-1" CONDUITS BETWEEN 3311 HANDHOLES FOR 4/0 RING BUSS (RING BUSS IS PROVIDED BY SDG&E)

D SET PAD LEVEL TO FINAL GRADE AND INSTALL EQUIPMENT GROUND

(E) STUB 1-3" CONDUIT FROM CMPT #3 4 FEET FROM EDGE OF PAD.

(F) WHEN TWO CONDUITS ARE INSTALLED IN ONE COMPARTMENT, PLACE CONDUITS SIDE BY SIDE CENTERED ON THE APPROPRIATE DIMENSION. SECOND CONDUIT MAY BE 4" OR 5"

(G) NO MORE THAN 2 CONDUITS MAY BE INSTALLED IN COMPARTMENTS 1 & 2 FOR CABLE PULLING NO ADDITIONAL CONDUITS MAY BE INSTALLED IN COMPARTMENTS 3 & 4

H MAINTAIN 2" CLEARANCE BETWEEN CONDUITS AND THE EDGE OF 3311 HANDHOLES

	SDG&E ELECTRIC STANDARDS	
DATE 1-1-96 APPD [illegible]	PME 9, 10 & 11 PAD	3499 113 SUPERSEDES 3419 4 (1-1-96)

TABLE OF CONTENTS

REFERENCE:

I. SEE STANDARD 3211 FOR INSTALLATION OF IDENTIFICATION TAG

J. SEE STANDARD 3481 FOR EQUIPMENT BARRIER PROTECTION

K SEE STANDARD 3483 FOR MINIMUM OPERATING CLEARANCE REQUIREMENTS (PAD PLACEMENT).

L SEE STANDARD 3484 FOR PAD INSTALLATION OF PAD-MOUNTED EQUIPMENT

M SEE STANDARD 3486 FOR RETAINING WALL REQUIREMENTS AND CLEARANCES FROM REVERSE SUBGRADE RETAINING WALLS.

N SEE STANDARD 3487 FOR RETAINING WALLS.

O SEE STANDARD 3565 FOR PAD-MOUNTED PME 9, 10 & 11 FUSE/SECTIONALIZING SWITCH.

P SEE STANDARD 3566 FOR CABLE AND SWITCH INSTALLATION

Q. SEE STANDARD 4512 FOR EQUIPMENT GROUNDING INSTALLATION.

R SEE STANDARD 4514 FOR GROUNDING TELCO.

FOR FIELD MAINTENANCE ONLY

TABLE OF CONTENTS

3499.114 SUPERSEDES 3419 5 (1-1-96)	SDG&E ELECTRIC STANDARDS PME 9, 10 & 11 PAD	DATE 1-1-96 APPD BSJ/CMC

FIELD MAINTENANCE ONLY

REVISION HISTORY:

7/13/2016: All versions prior to 2016 are superseded by their current version found inside the Overhead Construction Standard Manual.

TABLE OF CONTENTS

© 1998 - 2016 San Diego Gas & Electric Company. All rights reserved. Removal of this copyright notice without permission is not permitted under law.

REV	CHANGE	BY	DSGN	APPV	DATE	REV	CHANGE	BY	DSGN	APPV	DATE
C						F					
B						E					
A	ORIGINAL ISSUE	JS	IL	MDJ	7/13/2016	D					

X Indicates Latest Revision | Completely Revised | New Page | Information Removed

SHEET 1 OF 1

SDG&E ELECTRIC UNDERGROUND STANDARD

AIR BREAK PMH 3 SECTIONALIZING SWITCH PAD

FMO UG 3420

SCOPE: THIS STANDARD SHOWS THE PAD AND HANDHOLE USED WITH THE PAD-MOUNTED 600 AMP AIR BREAK PMH 3 SECTIONALIZING SWITCH CONDUIT PLACEMENT IS ALSO SHOWN.

PAD

WEIGHT 1,106# MAX.

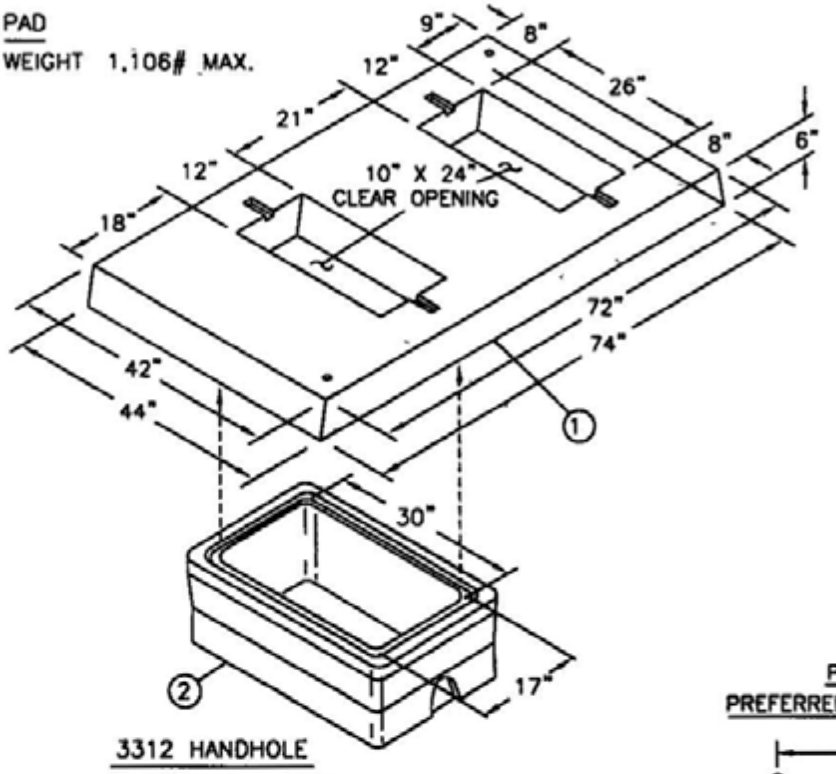

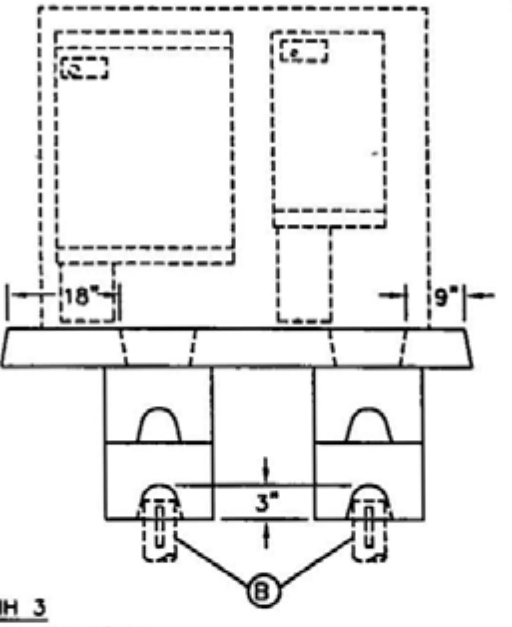

3312 HANDHOLE

WEIGHT: 160# MIN.
185# MAX.

FOR FIELD MAINTENANCE ONLY

PMH 3
PREFERRED INSTALLATION

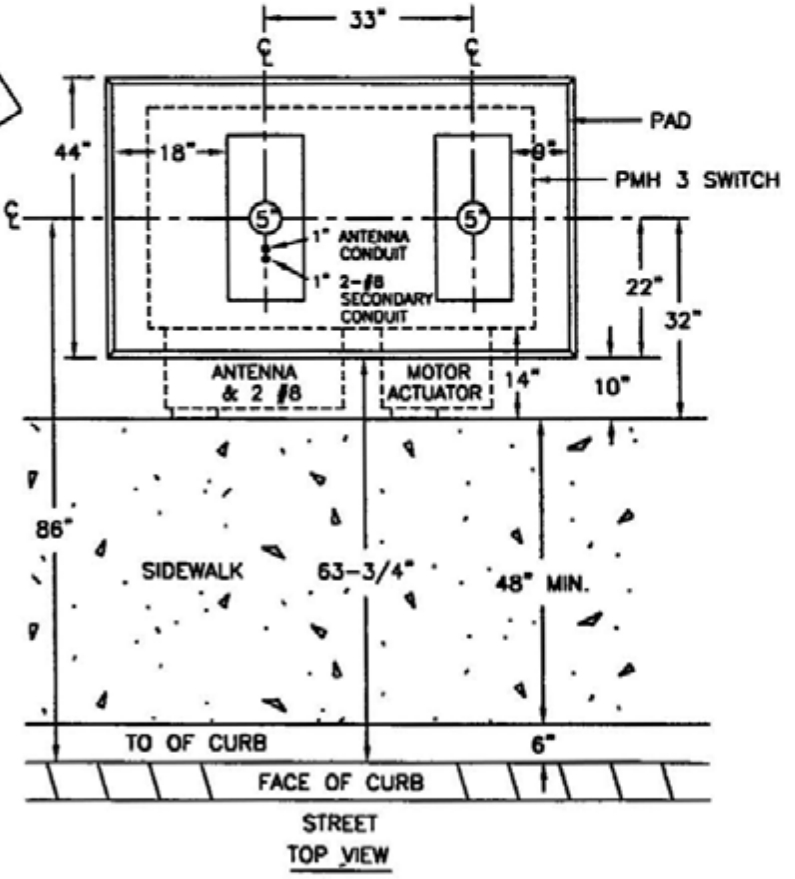

TOP VIEW

NOTES:

- PAD MAY NOT BE POURED IN PLACE. USE PRECAST PAD ONLY

TABLE OF CONTENTS

3499.213 SUPERSEDES 3420.1 (1-1-96)	SDG&E ELECTRIC STANDARDS	DATE 1-1-96 APPD
	AIR BREAK PMH 3 SECTIONALIZING SWITCH PAD	

TABLE OF CONTENTS

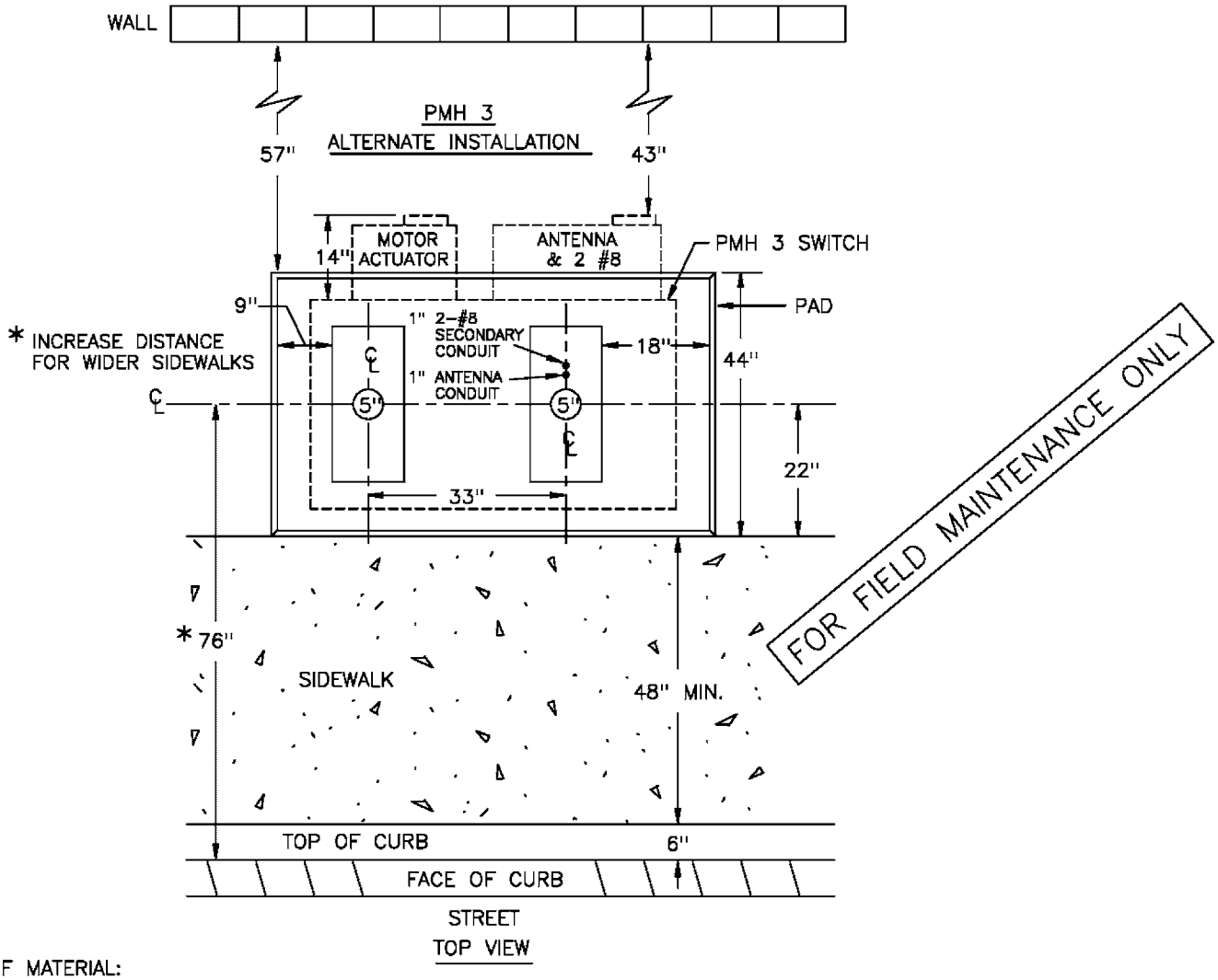

BILL OF MATERIAL:

ITEM	DESCRIPTION	QUANTITY	CONSTR. STD OR PAGE NO.	STOCK NUMBER	ASSEMBLY UNIT
1	PAD, PMH 3 SWITCH	1	3420	513424	3420
2	HANDHOLE, 17" X 30"	4	3312	162426	

INSTALLATION:

A. SET PAD LEVEL TO FINAL GRADE AND INSTALL EQUIPMENT GROUND.
(B) TERMINATE CONDUITS 3 INCHES ABOVE THE BOTTOM OF THE 3312 HANDHOLES.

REFERENCE:

E. SEE STANDARD 3481 FOR BARRIER PROTECTION AND CLEARANCE.
F. SEE STANDARD 3483 FOR MINIMUM OPERATING AND CLEARANCE REQUIREMENTS (PAD PLACEMENT).
G. SEE STANDARD 3484 FOR PAD INSTALLATION OF PAD-MOUNTED EQUIPMENT.
H. SEE STANDARD 3486 FOR RETAINING WALL REQUIREMENTS AND CLEARANCES FROM REVERSE SUBGRADE RETAINING WALLS.
I. SEE STANDARD 3487 FOR RETAINING WALLS.
J. SEE STANDARD 3577 FOR PAD-MOUNTED PMH 3 AIR BREAK SWITCH.
K. SEE STANDARD 3578 FOR INSTALLATION REQUIREMENTS FOR PAD-MOUNTED PMH 3 AIR BREAK SWITCH.
L. SEE STANDARD 4512 FOR EQUIPMENT GROUNDING INSTALLATION.

	SDG&E ELECTRIC STANDARDS	
DATE 1-1-96 APPD	AIR BREAK PMH 3 SECTIONALIZING SWITCH PAD	3499.214 SUPERSEDES 3420.2 (1-1-96)

FIELD MAINTENANCE ONLY

REVISION HISTORY:

7/13/2016: All versions prior to 2016 are superseded by their current version found inside the Overhead Construction Standard Manual.

TABLE OF CONTENTS

© 1998 - 2016 San Diego Gas & Electric Company. All rights reserved. Removal of this copyright notice without permission is not permitted under law.

REV	CHANGE	BY	DSGN	APPV	DATE	REV	CHANGE	BY	DSGN	APPV	DATE
C						F					
B						E					
A	ORIGINAL ISSUE	JS	IL	MDJ	7/13/2016	D					

X Indicates Latest Revision | Completely Revised | New Page | Information Removed

SHEET 1 OF 1

SDG&E ELECTRIC UNDERGROUND STANDARD

AIR BREAK PME 3 SECTIONALIZING SWITCH PAD

FMO UG 3422

SCOPE: THIS STANDARD SHOWS THE PAD AND HANDHOLE USED WITH THE PAD–MOUNTED 600 AMP AIR BREAK PME 3 SECTIONALIZING SWITCH. CONDUIT PLACEMENT IS ALSO SHOWN.

PAD
WEIGHT: 2000 LBS.

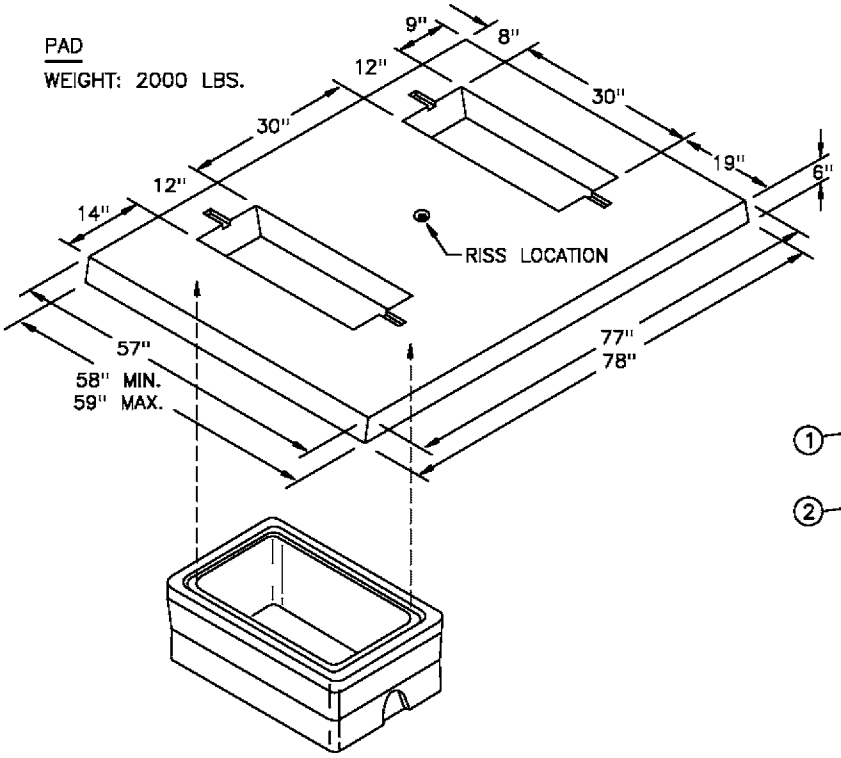

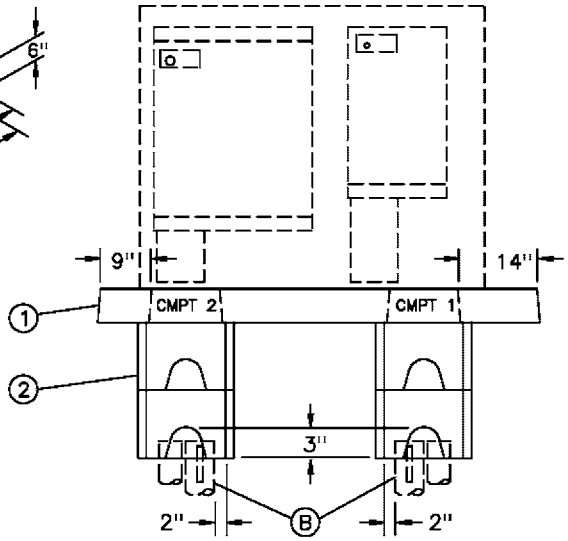

SIDE VIEW

FOR FIELD MAINTENANCE ONLY

PME 3
INSTALLATION

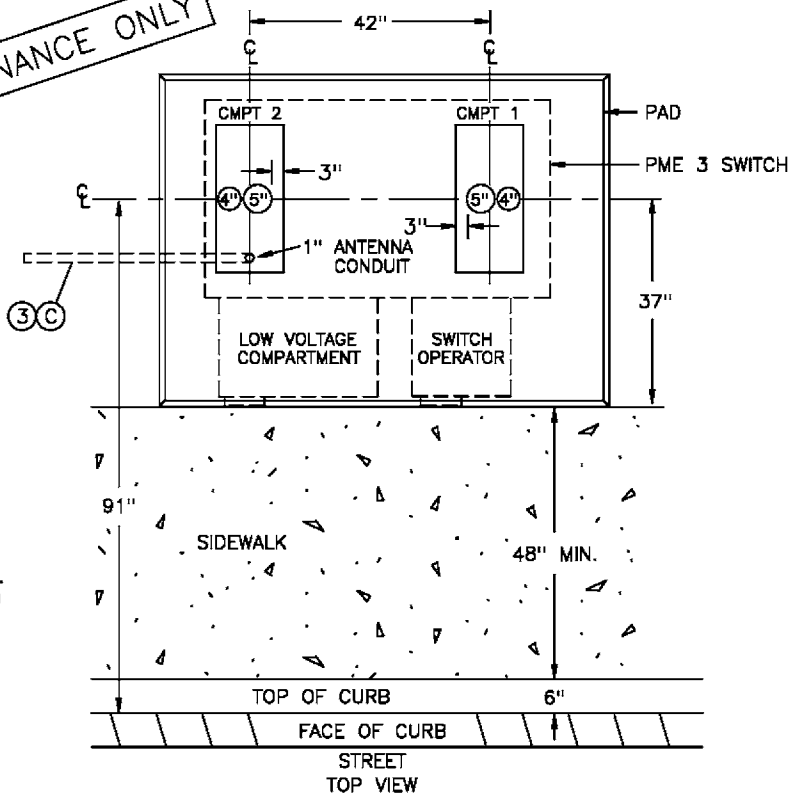

TOP VIEW

NOTES:

– PAD MAY NOT BE POURED IN PLACE. USE PRECAST PAD ONLY.

3499.215 SUPERSEDES 3422.1 (1–1–98)	SDG&E ELECTRIC STANDARDS AIR BREAK PME 3 SECTIONALIZING SWITCH PAD	DATE 7–28–99 APPD

TABLE OF CONTENTS

BILL OF MATERIAL:

ITEM	DESCRIPTION	QUANTITY	CONSTR. STD OR PAGE NO.	STOCK NUMBER	ASSEMBLY UNIT
1	PAD, PME 3 SWITCH	1	3422	514030	3422
2	HANDHOLE, 17" X 30"	4	3312	162426	
3	1" POLYETHYLENE CONDUIT	10 FT	3373	249630	1" PE

INSTALLATION:

A. SET PAD LEVEL TO FINAL GRADE AND INSTALL EQUIPMENT GROUND.

(B) TERMINATE CONDUITS 3 INCHES ABOVE THE BOTTOM OF THE 3312 HANDHOLES.

(C) STUB OUT 1–1" POLY CONDUIT 4' FROM EDGE OF PAD.

REFERENCE:

E. SEE STANDARD 3481 FOR BARRIER PROTECTION AND CLEARANCE.

F. SEE STANDARD 3483 FOR MINIMUM OPERATING AND CLEARANCE REQUIREMENTS (PAD PLACEMENT).

G. SEE STANDARD 3484 FOR PAD INSTALLATION OF PAD–MOUNTED EQUIPMENT.

H. SEE STANDARD 3486 FOR RETAINING WALL REQUIREMENTS AND CLEARANCES FROM REVERSE SUBGRADE RETAINING WALLS.

I. SEE STANDARD 3487 FOR RETAINING WALLS.

J. SEE STANDARD 3583 FOR PAD–MOUNTED PME 3 AIR BREAK SWITCH.

K. SEE STANDARD 3584 FOR INSTALLATION REQUIREMENTS FOR PAD–MOUNTED PME 3 AIR BREAK SWITCH.

L. SEE STANDARD 4512 FOR EQUIPMENT GROUNDING INSTALLATION.

FOR FIELD MAINTENANCE ONLY

TABLE OF CONTENTS

DATE 1–1–98 APPD	SDG&E ELECTRIC STANDARDS AIR BREAK PME 3 SECTIONALIZING SWITCH PAD	3499.216 SUPERSEDES 3422.2 (1–1–98)

FIELD MAINTENANCE ONLY

REVISION HISTORY:

7/13/2016: All versions prior to 2016 are superseded by their current version found inside the Overhead Construction Standard Manual.

TABLE OF CONTENTS

© 1998 - 2016 San Diego Gas & Electric Company. All rights reserved. Removal of this copyright notice without permission is not permitted under law.

REV	CHANGE	BY	DSGN	APPV	DATE	REV	CHANGE	BY	DSGN	APPV	DATE
C						F					
B						E					
A	ORIGINAL ISSUE	JS	IL	MDJ	7/13/2016	D					

X Indicates Latest Revision | Completely Revised | New Page | Information Removed

SHEET
1 OF 1

SDG&E ELECTRIC UNDERGROUND STANDARD

3440 PAD & HANDHOLE INSTALLATIONS
FOR PAD-MOUNTED 12KV, 600 AMP, 3 PHASE SWITCH

FMO
UG 3440

SCOPE: THIS STANDARD SHOWS THE INSTALLATION REQUIREMENTS OF A TYPICAL 3440 PAD AND 3315 HANDHOLE FOR A PAD-MOUNTED 12KV, 600 AMP, 3 PHASE SWITCH

PAD SECTION
WEIGHT 3000# MAX.

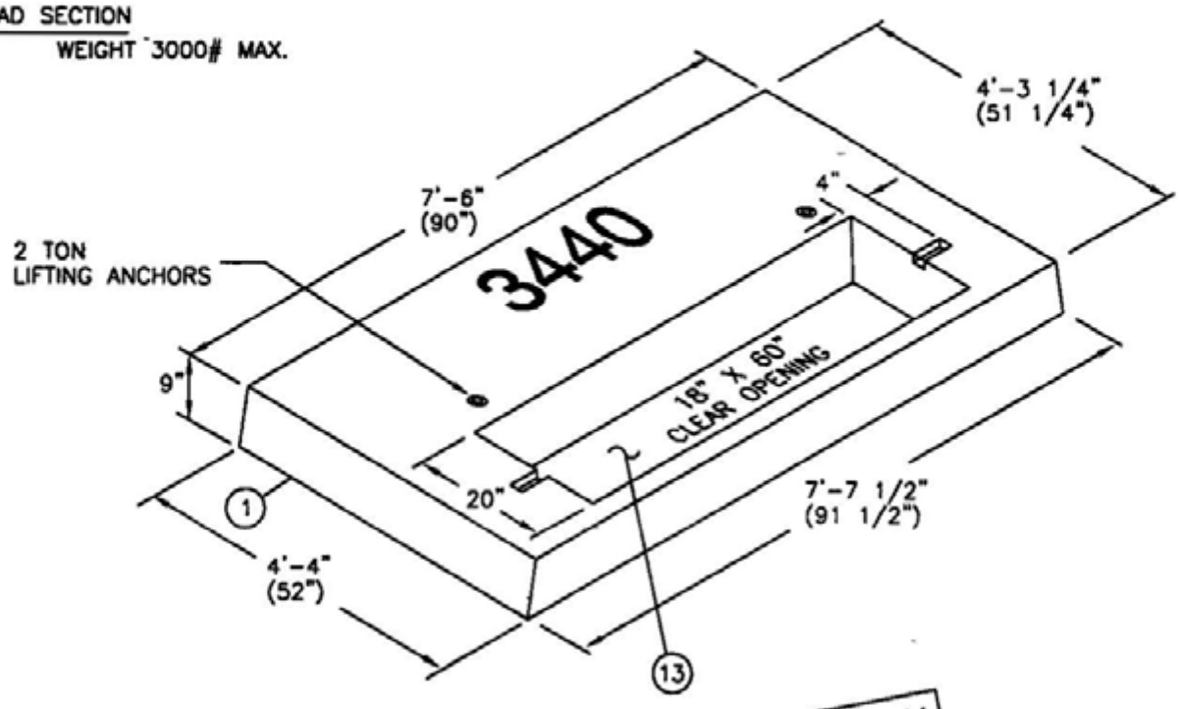

FOR FIELD MAINTENANCE ONLY

COVER SECTION
& REMOVABLE SUPPORT BARS
WEIGHT 315# MAX

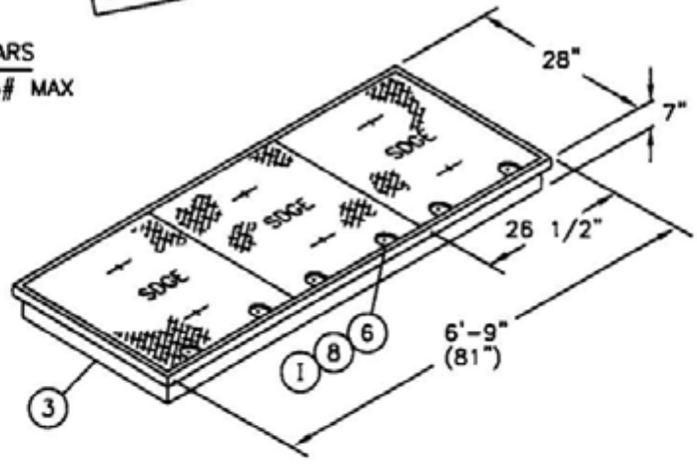

NOTES:

- PADS MAY NOT BE POURED IN PLACE USE PRECAST PADS ONLY

DATE 1-1-96 APPD	SDG&E ELECTRIC STANDARDS 3440 PAD & HANDHOLE INSTALLATIONS FOR PAD-MOUNTED 12KV, 600 AMP, 3 PHASE SWITCH	3499.403 SUPERSEDES 3440 1 (1-1-96)

TABLE OF CONTENTS

TABLE OF CONTENTS

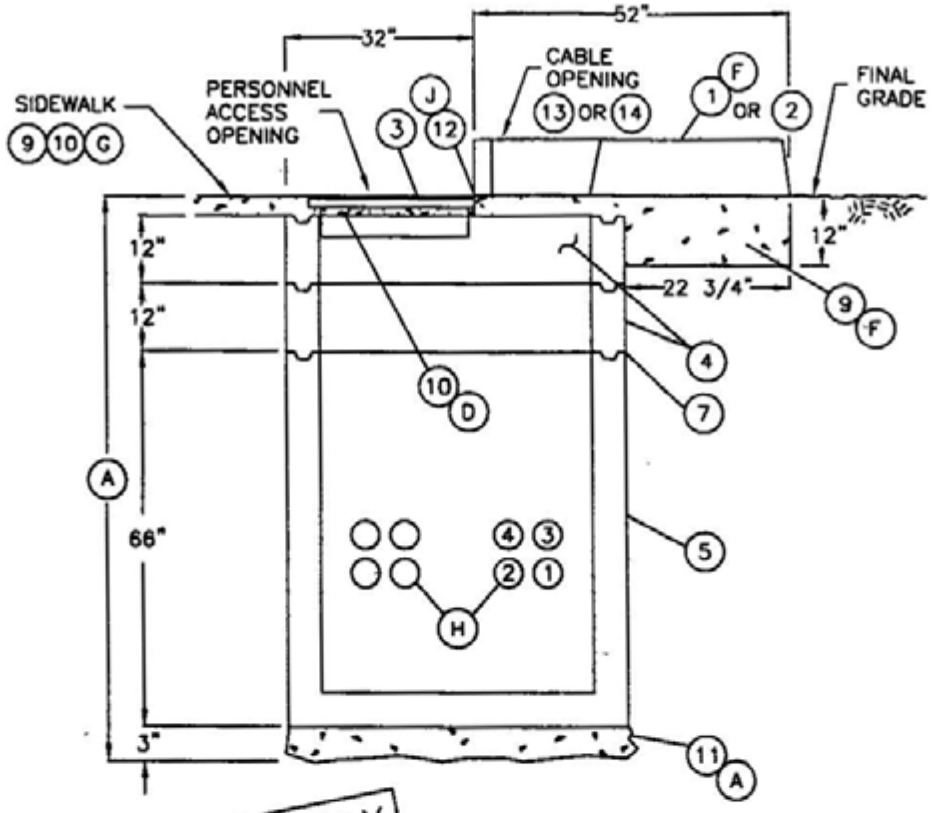

FOR FIELD MAINTENANCE ONLY

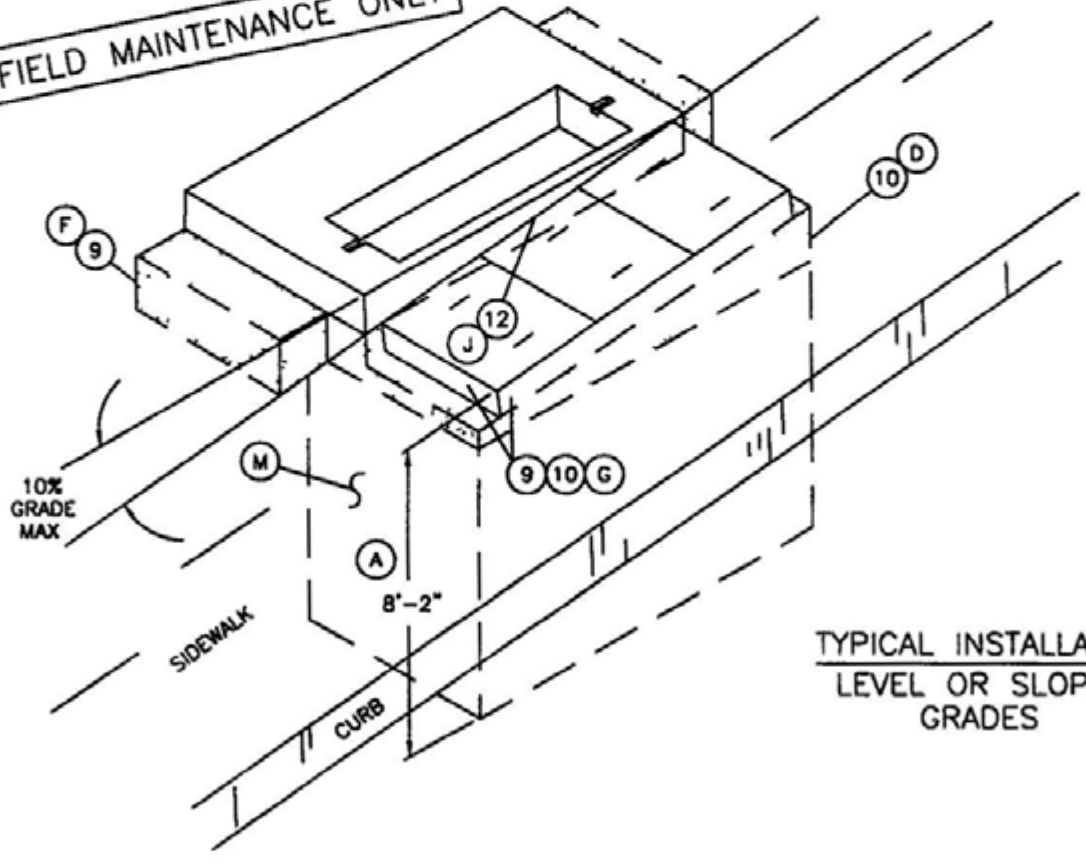

TYPICAL INSTALLATION
LEVEL OR SLOPING GRADES

3499.404 SUPERSEDES 3440 2 (1-1-96)	SDG&E ELECTRIC STANDARDS 3440 PAD & HANDHOLE INSTALLATIONS FOR PAD-MOUNTED 12KV, 600 AMPS, 3 PHASE SWITCH	DATE 1-1-96 APPD

BILL OF MATERIAL FOR 3440 PAD & COVER SECTION OVER 3314 HANDHOLE:

ITEM	DESCRIPTION	QUANTITY	CONSTR STD OR PAGE NO	STOCK NUMBER	ASSEMBLY UNITS	
1	3440 PAD SECTION (FOR SF-6 SWITCH)	1	3440	513912	SW-PAD	COMPLETE UNITS 3440 SWI/15
3	3440 COVER SECTION & REMOVABLE SUPPORT BARS	1	3440	286806	-	
4	3315 EXTENSION SECTION, 12"	2	3315	336246	3315X1	
5	3315 BASE ENCLOSURE, 60"	1	3315	334356	-	
6	BOLT, 1/2" X 1-1/4" PENTAHEAD, STAINLESS STEEL	AS REQ'D	-	156004	-	-
7	SEALANT, PLASTIC-MASTIC	-	3306	631872	-	
8	SILICONE GREASE (I)	AS REQ'D	-	391424	-	
9	CONCRETE, (1 SACK MIX) (F)	AS REQ'D	3376	-	-	
10	CONCRETE, (2 OR 4-SACK MIX WITH 3/8" PEA GRAVEL) (D)(G)	AS REQ'D	-	-	-	
11	GRAVEL, (3/8" - 3/4") (A)	AS REQ'D	-	-	-	
12	SEALANT (J)	AS REQ'D	3408	631800	-	
13	SAFETY PLATE, TEMPORARY (3440)	1	-	541722	PD/COV	
14	SAFETY PLATE, TEMPORARY (3440A)	1	-	541720	PADCOV	

FOR FIELD MAINTENANCE ONLY

INSTALLATION FOR 3440 PAD & COVER SECTION OVER 3315 HANDHOLE:

(A) THE PAD AND HANDHOLE LOCATION IS TO BE MARKED OUT PAYING PARTICULAR ATTENTION TO FOREIGN UTILITY PLACEMENTS RELOCATING PAD AND HANDHOLE REQUIRES APPROVAL FROM SERVICE PLANNING. ONCE THE LOCATION HAS BEEN ESTABLISHED, MARK OUT DIMENSIONS FOR AN EXCAVATION OF 6'-4" WIDE X 8'-10" LONG X 8'-2" DEEP (ON THE LOW SIDE OF THE SLOPE) EXCAVATION DEPTH ALLOWS 3 INCHES FOR ADJUSTMENT TO FINAL GRADE AND 3 INCHES FOR ADDITIONAL PLACEMENT OF GRAVEL FOR BASE SUPPORT

B EXCAVATION IS NOW PREPARED FOR INSTALLATION OF PAD AND SUBSTRUCTURE SECTIONS ASSURE THE SUBSTRUCTURE WALLS ARE STRAIGHT AND THE FLOOR IS LEVEL PLACE PLASTIC-MASTIC SEALANT BETWEEN ALL SECTIONS USE DOUBLE SEAL IF FIELD CONDITIONS INDICATE THAT WATER WILL PENETRATE THE JOINTS DO NOT APPLY SEALANT UNDER THE PAD SECTION IF CONCRETE IS REQUIRED FOR GRADE ADJUSTMENT

C TO DETERMINE FINAL GRADE, ONE OF TWO FOLLOWING METHODS MAY BE USED 1) WHEN CURB OR GRADE LEVEL IS ALREADY ESTABLISHED, MEASURE FROM THE TOP OF CURB OR GRADE OR 2) HAVE THE FIELD ENGINEER SET THE GRADE STAKES AFTER GRADE LEVEL IS ESTABLISHED SET A STRING LINE TO CHECK GRADE LEVEL

(D) BEFORE POURING CONCRETE (4-SACK MIX WITH 3/8 INCH PEA GRAVEL OR AS REQUIRED BY CITY OR COUNTY CODES) BETWEEN HANDHOLE SECTIONS FOR GRADE ADJUSTMENT, FRAME THE INSIDE OPEN AREA BETWEEN SECTIONS SO CONCRETE CAN BE POURED FROM THE OUTSIDE OF THE TOP SECTION MAKE SURE THE BRICKS OR WOODEN WEDGES DO NOT SHOW FROM THE INSIDE ONCE THE CONCRETE IS POURED THE INSIDE FRAME MAY BE OMITTED IF THE CONCRETE IS NOT TOO WET IF FRAME IS OMITTED TROWEL CONCRETE SMOOTH ON THE INSIDE

(F) A CONCRETE BACKFILL (1-SACK MIX) OR 4-SACK MIX WITH 3/8" INCH PEA GRAVEL) IS REQUIRED UNDER THE PAD, 12 INCHES BEYOND THE SIDE EDGES OF PAD AND 12 INCHES DEEP UNDER THE OVERHANGING PAD SECTION LEVEL THE TOP PAD SECTION TO FINAL GRADE SHIM BETWEEN THE TOP PAD SECTION AND 12 INCH SPECIAL EXTENSION WITH WOODEN WEDGES AND BRICKS THE COVER SECTION MAY BE INSTALLED IN THE SIDEWALK ON A SLOPING GRADE

(G) CONCRETE (2-SACK MIX, OR 4-SACK MIX) IS REQUIRED AROUND THE COVER SECTION WHEN THERE IS NO SIDEWALK PRESENT FRAME THE CONCRETE POUR TO THE OUTSIDE EDGE OF THE HANDHOLE AND EVEN WITH THE TOP OF THE COVER SECTION REMOVE FRAME AFTER CONCRETE IS SET

TABLE OF CONTENTS

	SDG&E ELECTRIC STANDARDS	
DATE 1-1-96 APPD [signature]	3440 PAD & HANDHOLE INSTALLATIONS FOR PAD-MOUNTED 12KV, 600 AMP, 3 PHASE SWITCH	3499.405 SUPERSEDES 3440.3 (1-1-96)

(H) INSTALL CONDUITS USING THE BOTTOM OUTSIDE KNOCKOUTS (CLOSEST TO WALL) FIRST ALL CONDUITS MAY COME FROM THE SAME DIRECTION. FEEDER CONDUITS FOR THE SWITCH SHALL ONLY BE INSTALLED IN POSITIONS 1, 2, 3 OR 4 UNDER THE SWITCH

(I) APPLY SILICONE GREASE TO THE PENTAHEAD BOLTS WHEN SECURING THE COVERS TO REDUCE REMOVAL OR INSTALLATION DIFFICULTIES TIGHTEN DOWN BOLTS WITH TORQUE WRENCH TO 30 FT/LBS. MIN., 40 FT/LBS. MAX

(J) WHOEVER INSTALLS PAD SHALL INSTALL SEALANT BETWEEN PAD SECTION AND COVER SECTION.

REFERENCE:

K SEE STANDARD 3211 FOR INSTALLATION OF IDENTIFICATION TAG

L SEE STANDARD 3306 FOR INSTALLATION OF PLASTIC-MASTIC SEALANT.

(M) SEE STANDARD 3365 FOR SLURRY BACKFILL.

N SEE STANDARD 3481 FOR BARRIER PROTECTION

O SEE STANDARD 3484 FOR PAD INSTALLATION OF PAD-MOUNTED EQUIPMENT

P SEE STANDARD 3486 FOR RETAINING WALL REQUIREMENTS AND CLEARANCES FROM REVERSE SUBGRADE RETAINING WALLS.

Q. SEE STANDARD 3487 FOR RETAINING WALLS.

R. SEE STANDARD 3549 FOR PAD-MOUNTED SF-6 SWITCH.

S SEE STANDARD 3550 FOR CABLE AND SWITCH INSTALLATION OF SF-6 SWITCH

T SEE STANDARD 4512 FOR EQUIPMENT GROUNDING INSTALLATION

U. SEE STANDARD 4550 FOR GROUNDING TELCO IN HANDHOLES.

FOR FIELD MAINTENANCE ONLY

TABLE OF CONTENTS

3499.406 SUPERSEDES 3440 4 (1-1-96)	SDG&E ELECTRIC STANDARDS 3440 PAD & HANDHOLE INSTALLATIONS FOR PAD-MOUNTED 12KV, 600 AMP, 3 PHASE SWITCH	DATE 1-1-96 APPD

SCOPE: THESE PAGES SHOW THE INSTALLATION REQUIREMENTS FOR A TYPICAL 3440 PAD SECTION AND 3311 HANDHOLES BELOW A PAD-MOUNTED 12KV, 600 AMP, THREE-PHASE SWITCH **DO NOT USE IF A FEEDER CABLE IS TO BE INSTALLED FROM A PAD-MOUNTED SWITCH TO A CABLE POLE OR SWITCH TO SWITCH WITH BOTH SWITCHES OVER 3311 HANDHOLES.** (THIS IS ASSUMING THAT THE CABLE DOES NOT PASS THROUGH ANY OTHER STRUCTURE). IT MAY BE REQUIRED TO SWAP PHASES ON THE CABLE, AND DUE TO THE LACK OF SPACE IN THE 3311 HANDHOLE, THIS WOULD BE DIFFICULT IF NOT IMPOSSIBLE IF THIS SITUATION ARISES, USE THE 3440 PAD AND 3315 HANDHOLE WHICH ALLOWS ROOM FOR SWAPPING PHASES.

FOR FIELD MAINTENANCE ONLY

3440 PAD SECTION
WEIGHT: 3000# MAX.

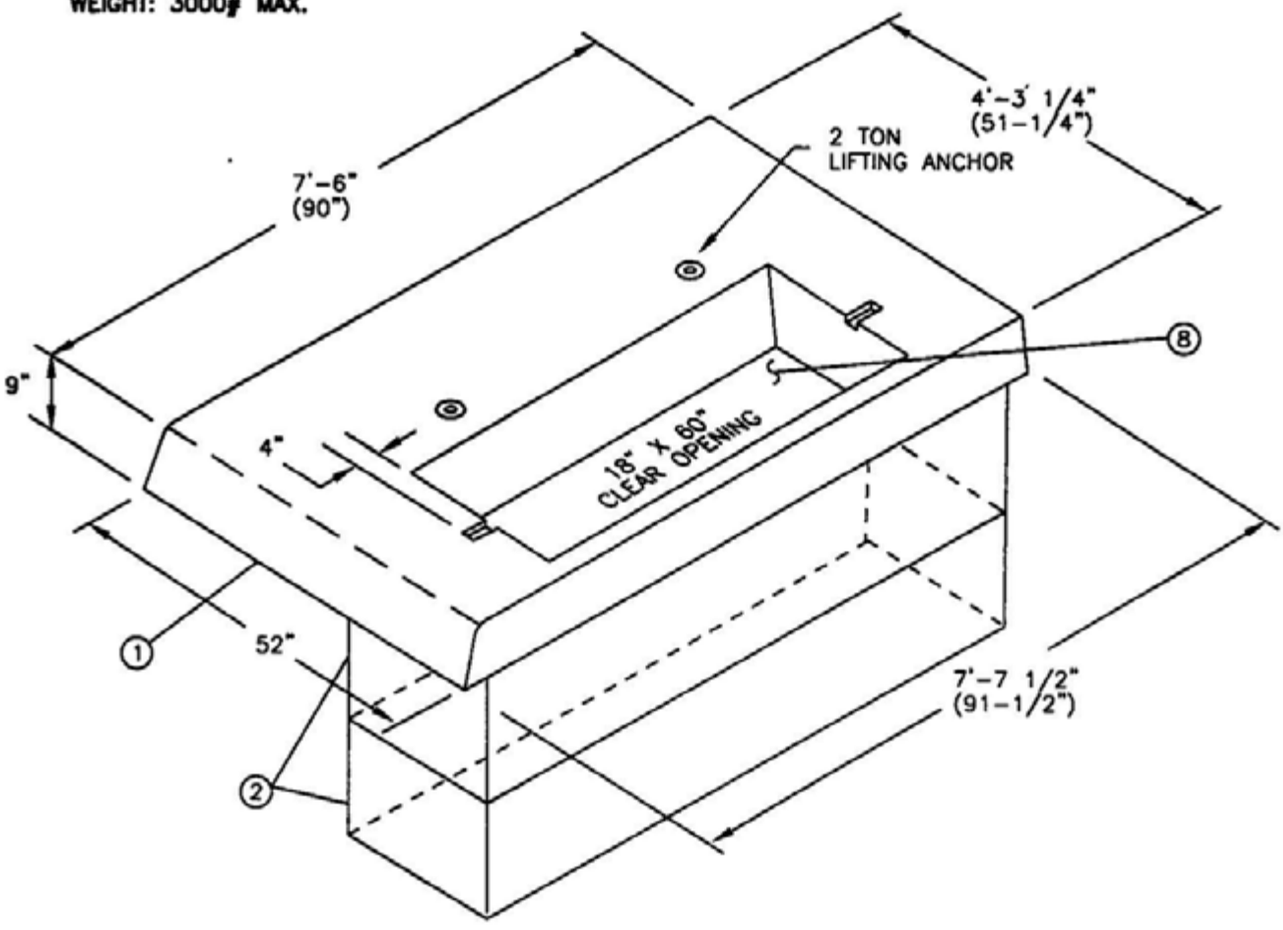

NOTES:
- PAD SECTION MAY **NOT** BE POURED IN PLACE

TABLE OF CONTENTS

DATE 1-1-96 APPD	SDG&E ELECTRIC STANDARDS 3440 PAD & HANDHOLE INSTALLATIONS FOR PAD-MOUNTED 12KV, 600 AMP, THREE-PHASE SWITCH	3499.407 SUPERSEDES 3440 5 (1-1-96)

INSTALLATION LOCATION DETAIL

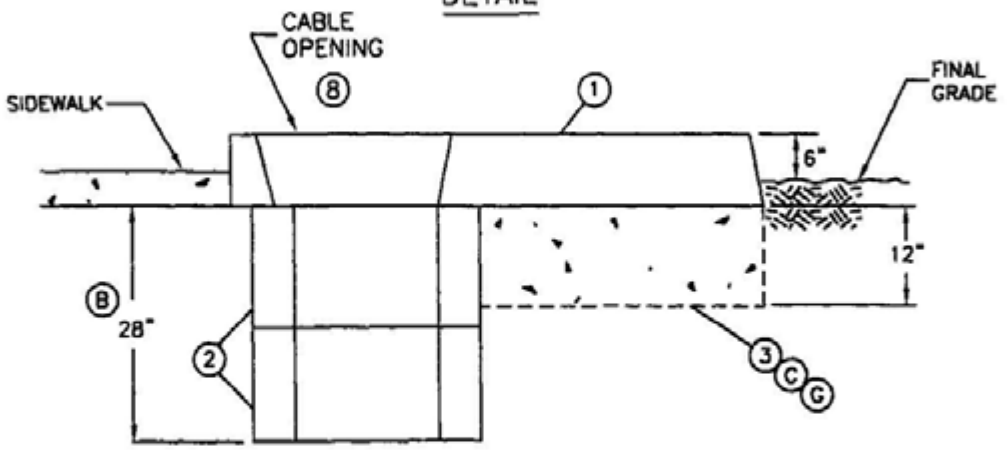

FOR FIELD MAINTENANCE ONLY

CONDUIT ARRANGEMENT
TOP VIEW – 3311 HANDHOLES

CONDUIT SPACING IS CRITICAL TO CABLE TRAINING

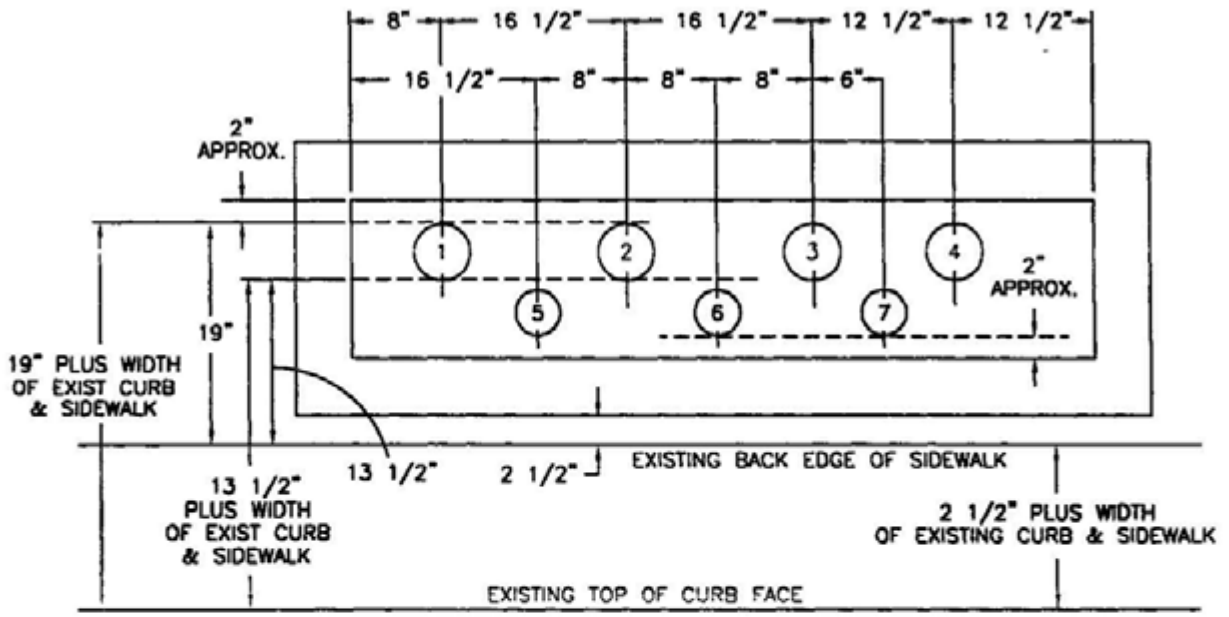

NOTES:

- CONDUITS #1 THROUGH #4 ARE 5 INCH.
- CONDUITS #5 AND #6 ARE 4 INCH **(THESE CONDUITS ARE REQUIRED IN EVERY INSTALLATION)**
- CONDUIT #7 IS 4 INCH AND REQUIRED FOR SCADA OR FUTURE SCADA INSTALLATIONS.

3499.408 SUPERSEDES 3440 6 (1-1-96)	SDG&E ELECTRIC STANDARDS 3440 PAD & HANDHOLE INSTALLATIONS FOR PAD-MOUNTED 12KV, 600 AMP, THREE-PHASE SWITCH	DATE 1-1-96 APPD JLB/BDJ

TABLE OF CONTENTS

DATE 1-1-96
APPD

SDG&E ELECTRIC STANDARDS

3440 PAD & HANDHOLE INSTALLATIONS
FOR PAD-MOUNTED 12KV, 600 AMP, THREE-PHASE SWITCH

3499.409
SUPERSEDES
3440 7 (1-1-96)

CONDUIT PLACEMENT DETAIL

TOP VIEW

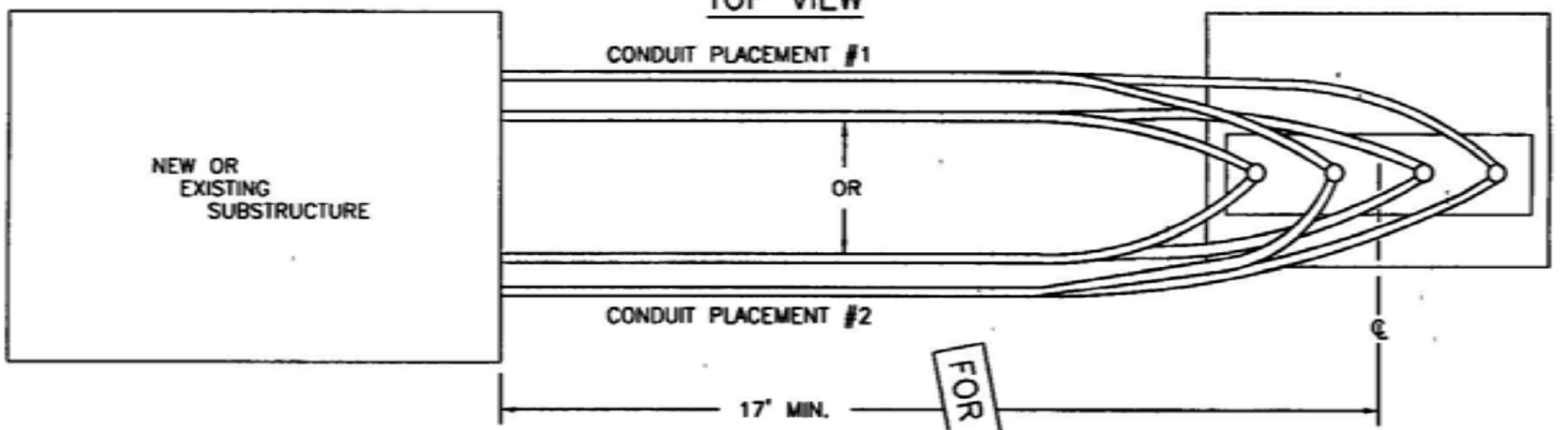

SIDE VIEW

FOR CONDUIT PLACEMENT #2

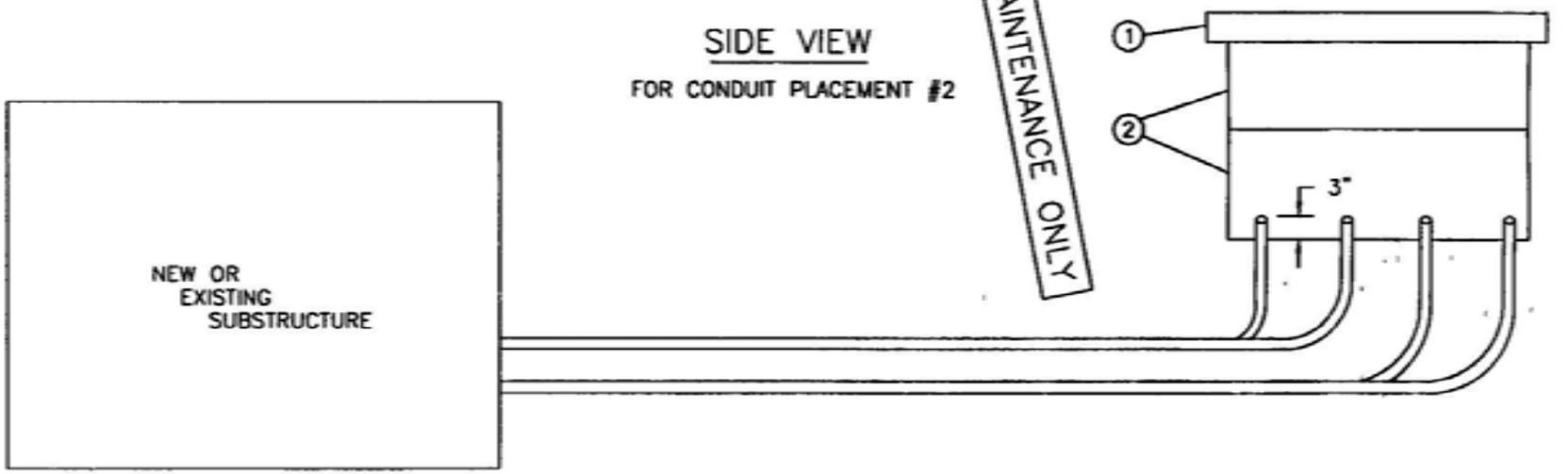

NOTES

THE BEST WAY TO SET UP THE CONDUIT INSTALLATIONS IS TO HAVE ALL THE CONDUITS COME FROM ONE SIDE OF THE SUBSTRUCTURE

BILL OF MATERIAL FOR 3440 PAD OVER 3311 HANDHOLES:

ITEM	DESCRIPTION	QUANTITY	CONSTR STD OR PAGE NO.	STOCK NUMBER	ASSEMBLY UNIT	
1	PAD SECTION	1	3440	513912	SW-PAD	SWI/11
2	3311 HANDHOLE 14" X 66" X 14"	2	3311	162660	3311-S	
3	CONCRETE (1-SACK MIX) Ⓒ	AS REQ'D	–	–	–	–
4	EQUIPMENT GROUNDING EQUIPMENT	1	4512	–	–	–
5	SAFETY PLATE, TEMPORARY (3440)	1	–	541722	PADCOV	–

INSTALLATION FOR 3440 PAD OVER 3311 HANDHOLE:

A INSTALL CONDUITS AS SHOWN ON PAGES 3440.6 AND 3440.7

Ⓑ THE PAD AND HANDHOLE LOCATION IS TO BE MARKED OUT PAYING PARTICULAR ATTENTION TO FOREIGN UTILITY PLACEMENTS RELOCATING PAD AND HANDHOLES REQUIRES APPROVAL FROM SERVICE PLANNING. ONCE THE LOCATION HAS BEEN ESTABLISHED, MARK OUT DIMENSIONS FOR AN EXCAVATION OF 2'-5" WIDE X 6'-9" LONG. THE DEPTH OF THE EXCAVATION IS 28 INCHES ALLOWING THE BOTTOM OF THE PAD TO SET AT FINAL GRADE.

Ⓒ A CONCRETE BACKFILL (1-SACK MIX) IS REQUIRED UNDER THE PAD, 12 INCHES BEYOND THE SIDE EDGES OF PAD AND 12 INCHES DEEP UNDER THE PAD SECTION LEVEL THE TOP PAD SECTION TO FINAL GRADE.

REFERENCE:

F SEE STANDARD 3211 FOR INSTALLATION OF IDENTIFICATION TAG.

G. SEE STANDARD 3365 FOR SLURRY BACKFILL

H SEE STANDARD 3481 FOR EQUIPMENT BARRIER PROTECTION.

I SEE STANDARD 3483 FOR MINIMUM OPERATING AND CLEARANCE REQUIREMENTS (PAD PLACEMENT).

J. SEE STANDARD 3484 FOR PAD INSTALLATION OF PAD-MOUNTED EQUIPMENT.

K SEE STANDARD 3486 FOR RETAINING WALL REQUIREMENTS AND CLEARANCES FROM REVERSE SUBGRADE RETAINING WALLS.

L SEE STANDARD 3487 FOR RETAINING WALLS.

M. SEE STANDARD 3549 FOR PAD-MOUNTED SWITCH.

N. SEE STANDARD 4510 FOR PREFERRED AND ALTERNATE TRENCH GROUND WIRE.

O. SEE STANDARD 4512 FOR EQUIPMENT GROUNDING INSTALLATION.

P. SEE STANDARD 4514 FOR GROUNDING TELCO CONDUCTOR IN PAD-MOUNTED EQUIPMENT.

FOR FIELD MAINTENANCE ONLY

TABLE OF CONTENTS

3499.410 SUPERSEDES 3440.8 (1-1-96)	SDG&E ELECTRIC STANDARDS 3440 PAD & HANDHOLE INSTALLATIONS FOR PAD-MOUNTED 12KV, 600 AMP, 3 PHASE SWITCH	DATE 1-1-96 APPD

FIELD MAINTENANCE ONLY

REVISION HISTORY:

7/13/2016: All versions prior to 2016 are superseded by their current version found inside the Overhead Construction Standard Manual.

TABLE OF CONTENTS

© 1998 - 2016 San Diego Gas & Electric Company. All rights reserved. Removal of this copyright notice without permission is not permitted under law.

REV	CHANGE	BY	DSGN	APPV	DATE	REV	CHANGE	BY	DSGN	APPV	DATE
C						F					
B						E					
A	ORIGINAL ISSUE	JS	IL	MDJ	7/13/2016	D					

X Indicates Latest Revision | Completely Revised | New Page | Information Removed

SHEET
1 OF 1

SDG&E ELECTRIC UNDERGROUND STANDARD

3441 PAD & 3316 HANDHOLE INSTALLATION
FOR PAD-MOUNTED, 12KV, 600 AMP, THREE-PHASE SWITCH

FMO
UG 3441

SCOPE: THIS STANDARD SHOWS THE INSTALLATION REQUIREMENTS FOR A TYPICAL 3441 PAD AND 3316 HANDHOLE FOR A PAD-MOUNTED, 12KV, 600 AMP, 3 PHASE SWITCH.

PAD SECTION

WEIGHT 3900# MAX.

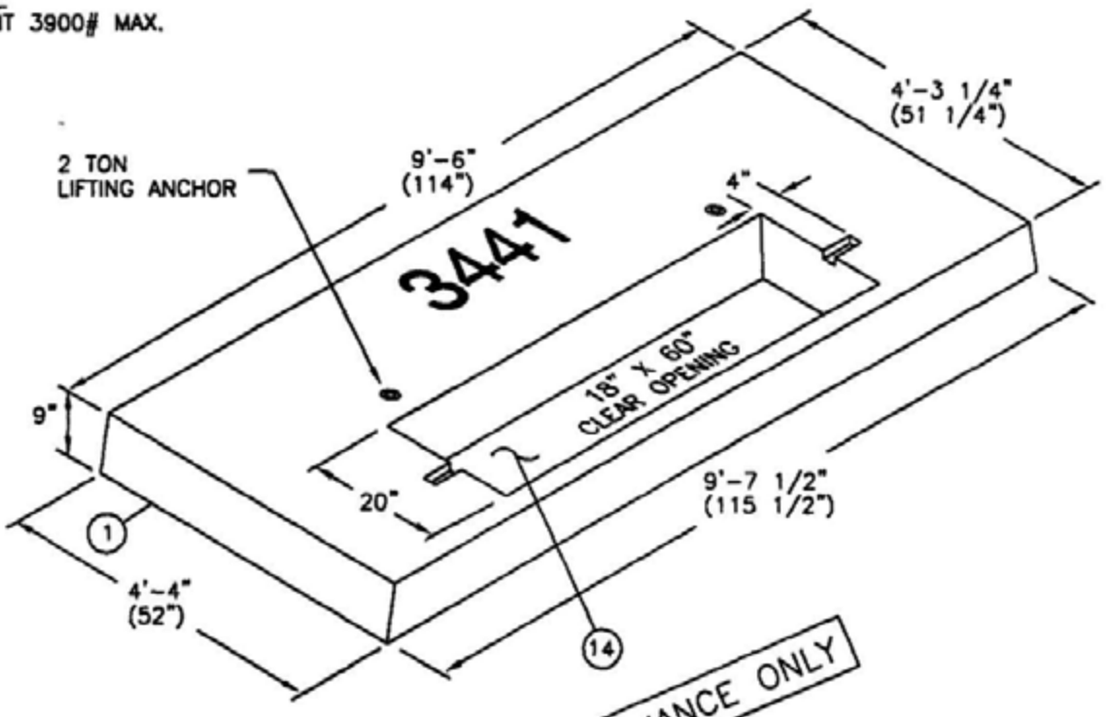

FOR FIELD MAINTENANCE ONLY

COVER SECTION
& REMOVABLE SUPPORT BARS

WEIGHT 499# MAX

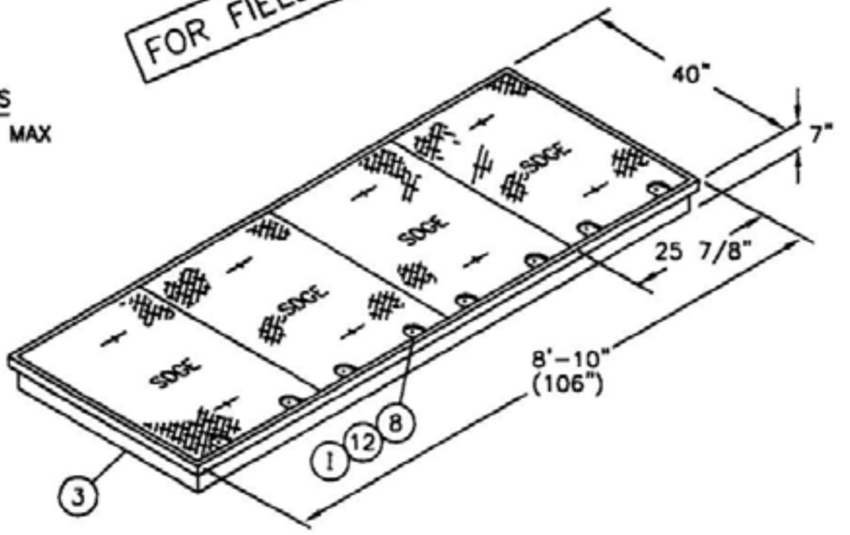

NOTES:

- PADS MAY NOT BE POURED IN PLACE USE PRECAST PADS ONLY

	SDG&E ELECTRIC STANDARDS	
DATE 1-1-96 APPD	3441 PAD & 3316 HANDHOLE INSTALLATION FOR PAD-MOUNTED, 12KV, 600 AMP, THREE-PHASE SWITCH	3499 411 SUPERSEDES 3441 1 (1-1-96)

TABLE OF CONTENTS

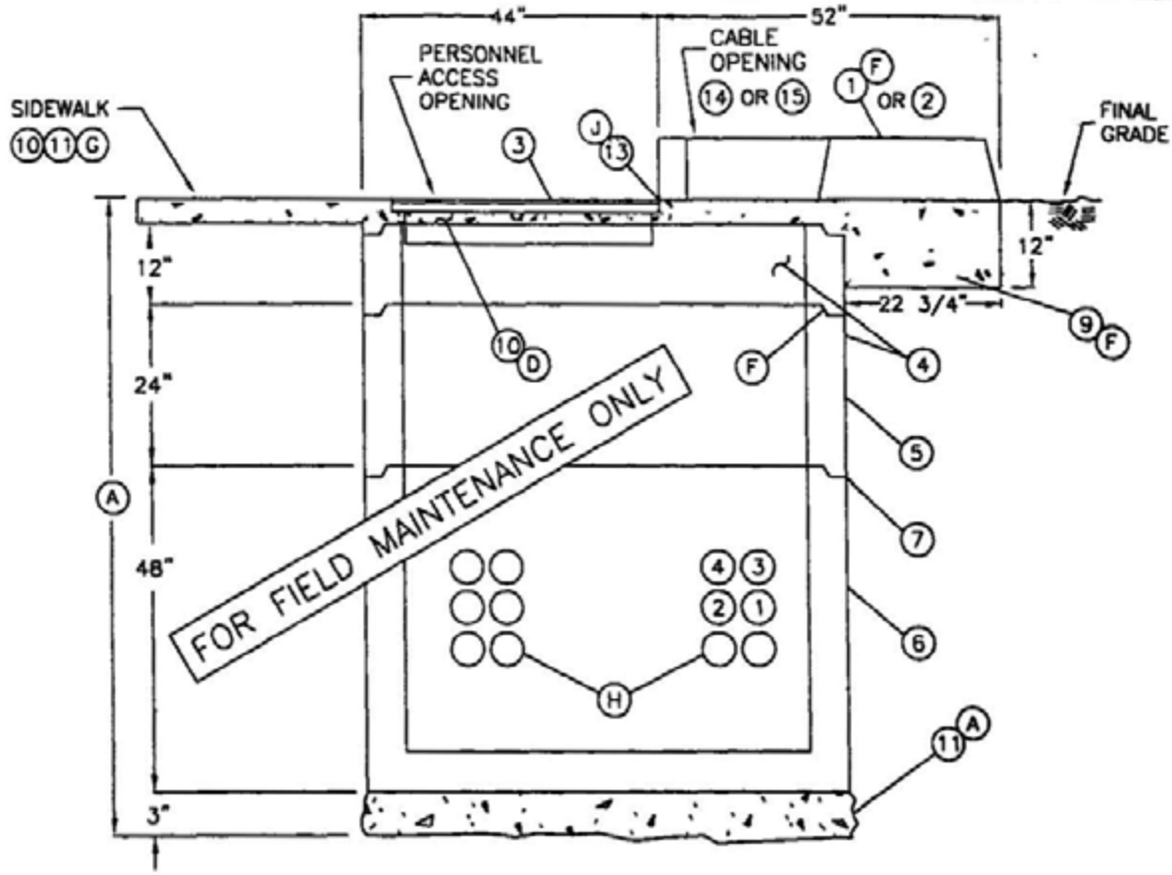

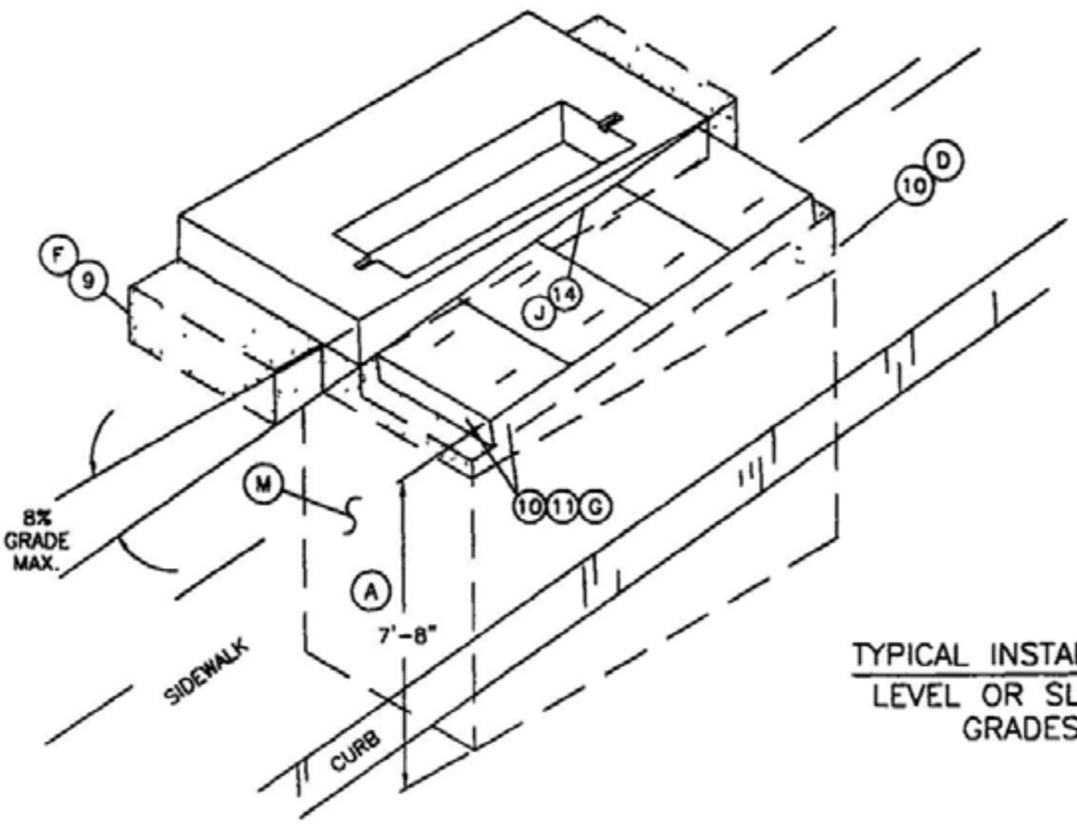

TYPICAL INSTALLATION
LEVEL OR SLOPING GRADES

3499.412 SUPERSEDES 3441 2 (1-1-96)	SDG&E ELECTRIC STANDARDS 3441 PAD & 3316 HANDHOLE INSTALLATION FOR PAD-MOUNTED 12KV 600 AMP 3 PHASE SWITCH	DATE 1-1-96 APPD

BILL OF MATERIAL:

ITEM	DESCRIPTION	QUANTITY	CONSTR STD OR PAGE NO	STOCK NUMBER	ASSEMBLY UNITS	
1	3441 PAD (FOR SF-6 SWITCH)	1	3441	513910	SP3441	UNITS COMPLETE 3441 PAD SWI/16
3	3441 COVER SECTION & REMOVABLE SUPPORT BARS	1	3441	286804	-	
4	3316 12" EXTENSION SECTION	1	3316	336208	3316X1	
5	3316 24" EXTENSION SECTION	1	3316	248162	-	
6	3316 42" BASE ENCLOSURE	1	3316	248160	-	
7	SEALANT, PLASTIC-MASTIC	AS REQ'D	3306	631872	-	-
8	SILICONE GREASE (I)	AS REQ'D	-	391424	-	
9	CONCRETE, (1 SACK MIX) (F)	AS REQ'D	3376	-		
10	CONCRETE, (2 OR 4-SACK MIX 3/8" PEA GRAVEL) (D)(G)	AS REQ'D	-	-	-	
11	GRAVEL, (3/8" - 3/4") (A)	AS REQ'D	-		-	
12	BOLT, 1/2" X 1-1/4" PENTAHEAD, STAINLESS STEEL	AS REQ'D	-	-	-	
13	SEALANT (J)	AS REQ'D		-	-	
14	SAFETY PLATE, TEMPORARY (3441)	1	-	541722	PD/COV	

FOR FIELD MAINTENANCE ONLY

INSTALLATION:

(A) THE PAD AND HANDHOLE LOCATION IS TO BE MARKED OUT PAYING PARTICULAR ATTENTION TO FOREIGN UTILITY PLACEMENTS. RELOCATING PAD AND HANDHOLE REQUIRES APPROVAL FROM SERVICE PLANNING ONCE THE LOCATION HAS BEEN ESTABLISHED, MARK OUT DIMENSIONS FOR AN EXCAVATION OF 7'-4" WIDE X 10'-10" LONG X 7'-8" DEEP (ON THE LOW SIDE OF THE SLOPE) EXCAVATION DEPTH ALLOWS 3 INCHES FOR ADJUSTMENT TO FINAL GRADE AND 3 INCHES FOR ADDITIONAL PLACEMENT OF GRAVEL FOR BASE SUPPORT

B. EXCAVATION IS NOW PREPARED FOR INSTALLATION OF PAD AND SUBSTRUCTURE SECTIONS ASSURE THE SUBSTRUCTURE WALLS ARE STRAIGHT AND THE FLOOR IS LEVEL PLACE PLASTIC-MASTIC SEALANT BETWEEN ALL SECTIONS USE DOUBLE SEAL IF FIELD CONDITIONS INDICATE THAT WATER WILL PENETRATE THE JOINTS DO NOT APPLY SEALANT UNDER THE PAD SECTION IF CONCRETE IS REQUIRED FOR GRADE ADJUSTMENT

C. TO DETERMINE FINAL GRADE, ONE OF TWO FOLLOWING METHODS MAY BE USED 1) WHEN CURB OR GRADE LEVEL IS ALREADY ESTABLISHED, MEASURE FROM THE TOP OF CURB OR GRADE OR 2) HAVE THE FIELD ENGINEER SET THE GRADE STAKES AFTER GRADE LEVEL IS ESTABLISHED SET A STRING LINE TO CHECK GRADE LEVEL

(D) BEFORE POURING CONCRETE (4-SACK MIX WITH 3/8 INCH PEA GRAVEL OR AS REQUIRED BY CITY OR COUNTY CODES) BETWEEN HANDHOLE SECTIONS FOR GRADE ADJUSTMENT, FRAME THE INSIDE OPEN AREA BETWEEN SECTIONS SO CONCRETE CAN BE POURED FROM THE OUTSIDE OF THE TOP SECTION MAKE SURE THE BRICKS OR WOODEN WEDGES DO NOT SHOW FROM THE INSIDE ONCE THE CONCRETE IS POURED THE INSIDE FRAME MAY BE OMITTED IF THE CONCRETE IS NOT TOO WET IF FRAME IS OMITTED TROWEL CONCRETE SMOOTH ON THE INSIDE

(F) A CONCRETE BACKFILL (1-SACK MIX) OR 4-SACK MIX WITH 3/8" INCH PEA GRAVEL) IS REQUIRED UNDER THE PAD, 12 INCHES BEYOND THE SIDE EDGES OF PAD AND 12 INCHES DEEP UNDER THE OVERHANGING PAD SECTION. LEVEL THE TOP PAD SECTION TO FINAL GRADE SHIM BETWEEN THE TOP PAD SECTION AND 12 INCH SPECIAL EXTENSION WITH WOODEN WEDGES AND BRICKS THE COVER SECTION MAY BE INSTALLED IN THE SIDEWALK ON A SLOPING GRADE

(G) CONCRETE (2-SACK MIX, OR 4-SACK MIX) IS REQUIRED AROUND THE COVER SECTION WHEN THERE IS NO SIDEWALK PRESENT FRAME THE CONCRETE POUR TO THE OUTSIDE EDGE OF THE HANDHOLE AND EVEN WITH THE TOP OF THE COVER SECTION REMOVE FRAME AFTER CONCRETE IS SET

TABLE OF CONTENTS

	SDG&E ELECTRIC STANDARDS	
TE 1-1-96 APPD	3441 PAD & 3316 HANDHOLE INSTALLATION FOR PAD-MOUNTED, 12KV, 600 AMP, THREE-PHASE SWITCH	3499.413 SUPERSEDES 3441 3 (1-1-96)

(H) INSTALL CONDUITS USING THE BOTTOM OUTSIDE KNOCKOUTS (CLOSEST TO WALL) FIRST ALL CONDUITS MAY COME FROM THE SAME DIRECTION FEEDER CONDUITS FOR THE SWITCH SHALL ONLY BE INSTALLED IN POSITIONS 1, 2, 3 OR 4 UNDER THE SWITCH

(I) APPLY SILICONE GREASE TO THE PENTAHEAD BOLTS WHEN SECURING THE COVERS TO REDUCE REMOVAL OR INSTALLATION DIFFICULTIES TIGHTEN DOWN BOLTS WITH TORQUE WRENCH TO 30 FT/LBS MIN., 40 FT/LBS. MAX.

(J) WHOEVER INSTALLS PAD SHALL INSTALL SEALANT BETWEEN PAD SECTION AND COVER SECTION.

REFERENCE:

K SEE STANDARD 3211 FOR INSTALLATION OF IDENTIFICATION TAG

L. SEE STANDARD 3306 FOR INSTALLATION OF PLASTIC-MASTIC SEALANT

M. SEE STANDARD 3365 FOR SLURRY BACKFILL.

N SEE STANDARD 3481 FOR EQUIPMENT BARRIER PROTECTION

O IF THE SWITCH IS SUBJECT TO VEHICULAR TRAFFIC, INSTALL BARRIERS PER STANDARD 3481

P SEE STANDARD 3483 FOR MINIMUM OPERATING CLEARANCE REQUIREMENTS (PAD PLACEMENT)

Q SEE STANDARD 3484 FOR PAD INSTALLATION OF PAD-MOUNTED EQUIPMENT

R SEE STANDARD 3486 FOR RETAINING WALL REQUIREMENTS AND CLEARANCES FROM REVERSE SUBGRADE RETAINING WALLS.

S SEE STANDARD 3487 FOR RETAINING WALLS.

T SEE STANDARD 3549 FOR PAD-MOUNTED SF-6 SWITCH

U SEE STANDARD 3550 FOR CABLE AND SWITCH INSTALLATION OF SF-6 SWITCH

V. SEE STANDARD 4512 FOR EQUIPMENT GROUNDING INSTALLATION.

W. SEE STANDARD 4550 FOR GROUNDING TELCO IN HANDHOLES.

TABLE OF CONTENTS

FOR FIELD MAINTENANCE ONLY

3499.414 SUPERSEDES 3441 4 (1-1-96)	SDG&E ELECTRIC STANDARDS 3441 PAD & 3316 HANDHOLE INSTALLATION FOR PAD-MOUNTED, 12KV, 600 AMP, 3 PHASE SWITCH	DATE 1-1-96 APPD

3500 - PAD/WALL MOUNTED SECTIONALIZING EQUIPMENT

3500 - PAD/WALL MOUNTED SECTIONALIZING EQUIPMENT

MAIN TABLE OF CONTENTS

PAGE	SUBJECT
3515	THREE-PHASE FUSED SWITCHING CABINET - 12KV
3523	12KV, 200A DEADFRONT CABLE JUNCTION PEDESTAL
3525	THREE-PHASE PAD MOUNTED TERMINATING CABINET - 12KV, 600A AND 3313 HANDHOLE
3549	PAD MOUNTED SF6 GAS SWITCH 12KV, 600A, THREE-PHASE
3550	INSTALLATION OF PAD MOUNTED SWITCH & 3315 HANDHOLE 12KV, 600A, THREE-PHASE
3551	INSTALLATION OF PAD MOUNTED SWITCH & 3316 HANDHOLE & 12KV, 600A, THREE-PHASE
3553	REPLACEMENT CABINET FOR PAD MOUNTED ESCO OIL SWITCH
3555	PAD MOUNTED AIR-BREAK PMH 5 SECTIONALIZING SWITCH 12KV, 600A, THREE-PHASE
3560	EQUIPMENT COMBINATION GUIDELINES - 3316 HANDHOLE AND PAD MOUNTED SWITCH
3565	PAD MOUNTED AIR-BREAK PMH 9 & 11 FUSE/SECTIONALIZING SWITCH 12KV, 600A, THREE-PHASE
3566	INSTALLATION OF PAD MOUNTED PMH 9 & 11 FUSE/SECTIONALIZING SWITCH CABINET12KV, 600A THREE-PHASE
3577	INSTALLATION OF PAD MOUNTED AIR-BREAK PMH 3 SECTIONALIZING SWITCH 12KV, 600A, THREE-PHASE
3578	INSTALLATION OF PAD MOUNTED AIRBREAK PMH 3 SECTIONALIZING SWITCH 12KV, 600A, THREE-PHASE

© 1998 - 2022 San Diego Gas & Electric Company. All rights reserved. Removal of this copyright notice without permission is not permitted under law.

REV	CHANGE	DR	BY	DSN	APV	DATE	REV	CHANGE	DR	BY	DSN	APV	DATE
C	MOVED UG3525 TO FMO	EDM	EJA	GLW	KRG	09/07/2022	F						
B	MOVED UG3523 TO FMO	EDM	RSL	JES	CZH	12/12/2021	E						
A	ORIGINAL ISSUE	-	JS	TR	MDJ	07/25/2016	D						

FIELD MAINTENANCE ONLY

REVISION HISTORY:

7/13/2016: All versions prior to 2016 are superseded by their current version found inside the Overhead Construction Standard Manual.

TABLE OF CONTENTS

© 1998 - 2016 San Diego Gas & Electric Company. All rights reserved. Removal of this copyright notice without permission is not permitted under law.

REV	CHANGE	BY	DSGN	APPV	DATE	REV	CHANGE	BY	DSGN	APPV	DATE
C						F					
B						E					
A	ORIGINAL ISSUE	JS	IL	MDJ	7/13/2016	D					

X Indicates Latest Revision | Completely Revised | New Page | Information Removed

SHEET 1 OF 1

SDG&E ELECTRIC UNDERGROUND STANDARD

THREE-PHASE FUSED SWITCHING CABINET - 12,000 VOLT

FMO UG 3513

SCOPE: THIS STANDARD SHOWS THE PAD-MOUNTED 3Ø FUSED SWITCHING CABINET AND INSTALLATION REQUIREMENTS USED FOR FUSING 1Ø AND 3Ø LOAD IN THE UNDERGROUND SYSTEM

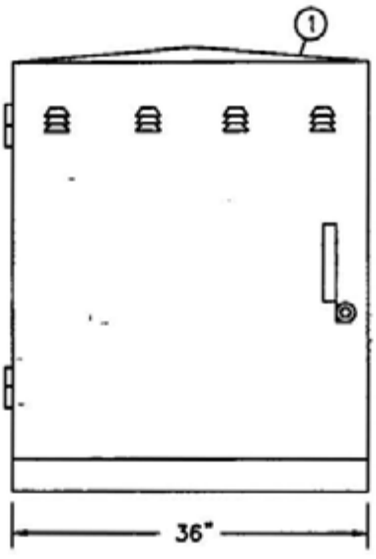

FRONT & REAR VIEW

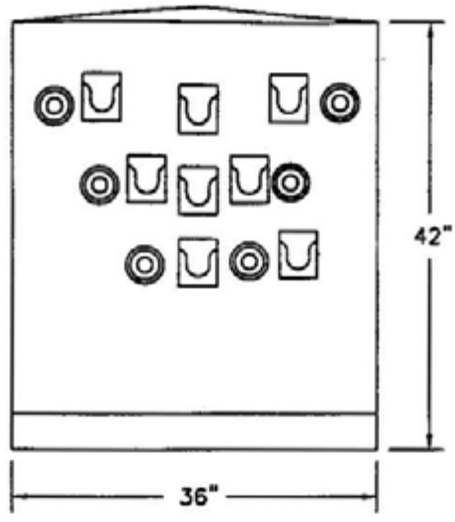

FRONT VIEW (EXPOSED)

FOR FIELD MAINTENANCE ONLY

RATINGS	
FUSE (KV)	8.3
AMPERES	200
KV-BIL	95

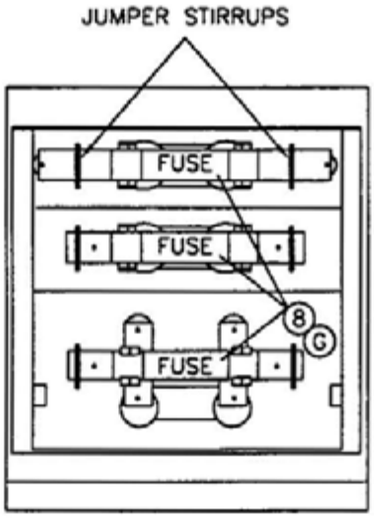

REAR VIEW (EXPOSED)

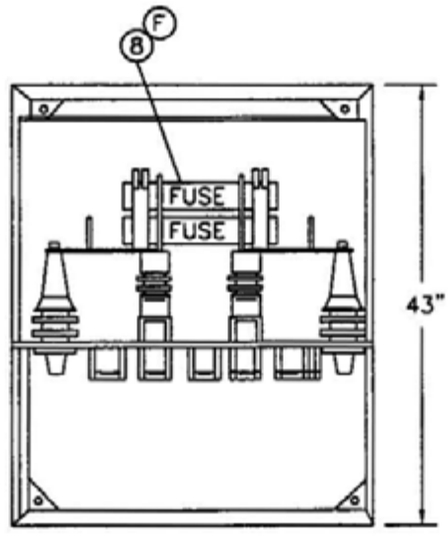

TOP VIEW (EXPOSED)

TABLE OF CONTENTS

	SDG&E ELECTRIC STANDARDS	
DATE 1-1-93 APPD JLG/BDG	THREE-PHASE FUSED SWITCHING CABINET - 12,000 VOLT	3599 113 SUPERSEDES 3513 1 (1-1-96)

HOLD-DOWN ASSEMBLY DETAIL
TYPICAL BOTH SIDES OF EQUIPMENT PAD

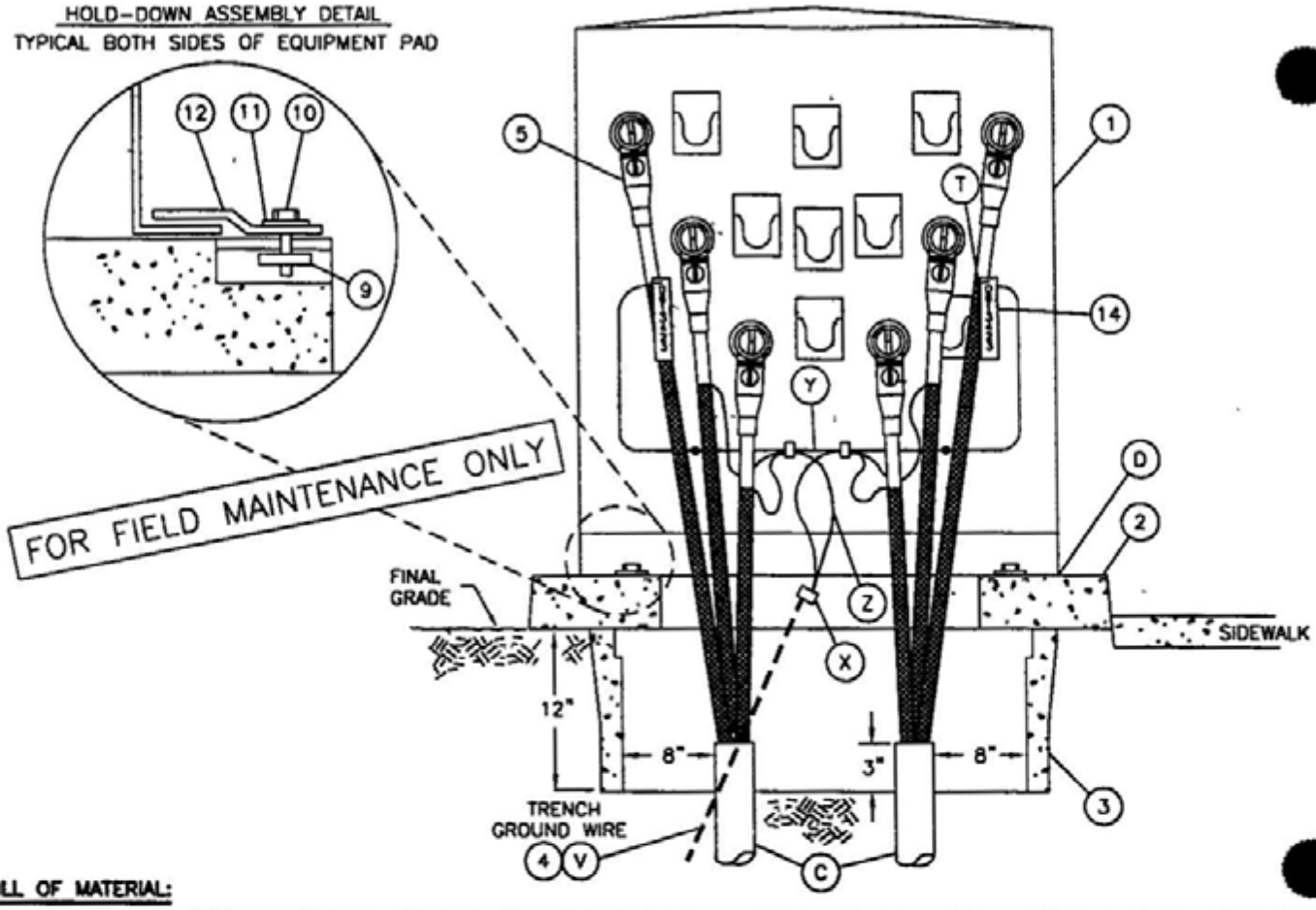

BILL OF MATERIAL:

ITEM	DESCRIPTION	QUANTITY	CONSTR STD. OR PAGE NO	STOCK NUMBER	ASSEMBLY UNITS
1	CABINET, FUSED SWITCHING, THREE-PHASE	1	- -	190560	FC-3PH
2	SINGLE-PHASE TRANSFORMER\UTILITY EQUIPMENT PAD	1	3421	514240	FC3PAD
3	HANDHOLE, 17" X 30"	1	3312	162426	3312-0
4	TRENCH GROUND WIRE (V)	AS REQ'D	4510	- -	- -
5	ELBOW, LOADBREAK 14 4KV 200 AMP	AS REQ'D	4191	- -	- -
6	INSULATING RECEPTACLE (NOT SHOWN)	AS REQ'D	4192 1	204304	- -
7	KEYLESS LOCKS (NOT SHOWN) (G)	2	- -	468010	- -
8	FUSE (F)	3	4311	- -	- -
9	NUT, CLAMPING CHANNEL, W/SPRING, 1/2"	2	- -	505520	- -
10	SCREW, HEX HEAD CAP, BRONZE 1/2" X 1-1/2"	2	- -	616192	- -
11	WASHER, STANDARD FLAT ROUND, BRONZE 1/2"	2	- -	799488	- -
12	HOLD DOWN (SUPPLIED WITH CABINET)	2	- -		- -
13	SEALING COMPOUND (NOT SHOWN) (C)	AS REQ'D	- -	442976	- -
14	CABLE IDENTIFICATION TAGS	AS REQ'D	3202	- -	- -

3599.114 SUPERSEDES 3513 2 (1-1-96)	SDG&E ELECTRIC STANDARDS	DATE 1-1-96 APPD
	THREE-PHASE FUSED SWITCHING CABINET - 12,000 VOLT	

TABLE OF CONTENTS

INSTALLATION:

A. THIS INSTALLATION IS LIMITED TO A MAXIMUM OF 2–3Ø 2/0 AL CABLES AND SMALLER

B. SET PAD AND HANDHOLE, INSTALL EQUIPMENT GROUND.

(C) TERMINATE CONDUITS AS SHOWN AND SEAL CONDUITS WITH SEALING COMPOUND (ITEM 13).

(D) BASE OF CABINET SHALL BE CAULKED WHEN NECESSARY TO PREVENT WIRE ENTRY.

(F) INSTALL SINGLE BARREL FUSE ALL THE WAY BACK IN DOUBLE BARREL FUSE CLIPS NEAREST THE INSULATOR

(G) KEYLESS LOCKS (ITEM 7) TO BE ATTACHED TO LATCHING MECHANISM ON FUSE CABINET AND PENTAHEAD BOLT TO BE THREADED IN COMPLETELY

FOR FIELD MAINTENANCE ONLY

REFERENCES:

J. SEE STANDARD 3202 FOR CABLE IDENTIFICATION

K. SEE STANDARD 3211 FOR STRUCTURE/EQUIPMENT IDENTIFICATION

L SEE STANDARD 3221 FOR HIGH VOLTAGE DECAL

M SEE STANDARD 3408 FOR WIRE ENTRY PREVENTION

N SEE STANDARD 3421 FOR PAD, HANDHOLE AND CONDUIT PLACEMENT

O SEE STANDARD 3481 FOR BARRIER PROTECTION.

P. SEE STANDARD 3483 FOR MINIMUM OPERATING AND CLEARANCE REQUIREMENTS (PAD PLACEMENT)

Q SEE STANDARD 3484 FOR INSTALLATION OF PAD–MOUNTED EQUIPMENT.

R. SEE STANDARD 3486 FOR RETAINING WALL REQUIREMENTS AND CLEARANCES FROM REVERSE SUBGRADE RETAINING WALLS.

S SEE STANDARD 3487 FOR RETAINING WALLS

(T) SEE STANDARD PAGE 4108 FOR SEALING JACKETED CABLE

U SEE STANDARD PAGES 4302 AND 4311 1,2,3 FOR FUSING

V SEE STANDARD 4510 FOR (PREFERRED I) AND (ALTERNATE) TRENCH GROUND WIRE

W SEE STANDARD PAGE 4512 1 FOR (PREFERRED II) EQUIPMENT GROUNDING INSTALLATION

(X) SEE STANDARD 4512 2 FOR EQUIPMENT GROUNDING

Y SEE STANDARD 4514 FOR GROUNDING TELCO CONDUCTOR IN PAD–MOUNTED EQUIPMENT

(Z) SEE STANDARD 4520 FOR GROUNDING PAD–MOUNTED EQUIPMENT

TABLE OF CONTENTS

UG3523 FIELD MAINTENANCE ONLY

ALL VERSIONS LISTED IN FMO ARE SUPERSEDED BY THEIR CURRENT VERSION FOUND INSIDE THE UNDERGROUND CONSTRUCTION STANDARD MANUAL.

REVISION HISTORY:

12/12/2021: MOVED TO FMO

TABLE OF CONTENTS

© 1998 - 2021 San Diego Gas & Electric Company. All rights reserved. Removal of this copyright notice without permission is not permitted under law.

REV	CHANGE	DR	BY	DSN	APV	DATE	REV	CHANGE	DR	BY	DSN	APV	DATE
C							F						
B							E						
A	ORIGINAL ISSUE	EDM	RSL	JES	CZH	12/12/2021	D						

	Indicates Latest Revision		Completely Revised	X New Page		Information Removed

SDG&E ELECTRIC UNDERGROUND FIELD MAINTENANCE ONLY STANDARDS

SHEET 1 OF 1

THREE-PHASE LOW PROFILE CABLE TERMINATING CABINET 12KV 600A

FMO UG3523

SCOPE: THIS STANDARD SHOWS THE DEADFRONT CABLE JUNCTION PEDESTAL, USED FOR TERMINATING 2/0 AND SMALLER CABLE.

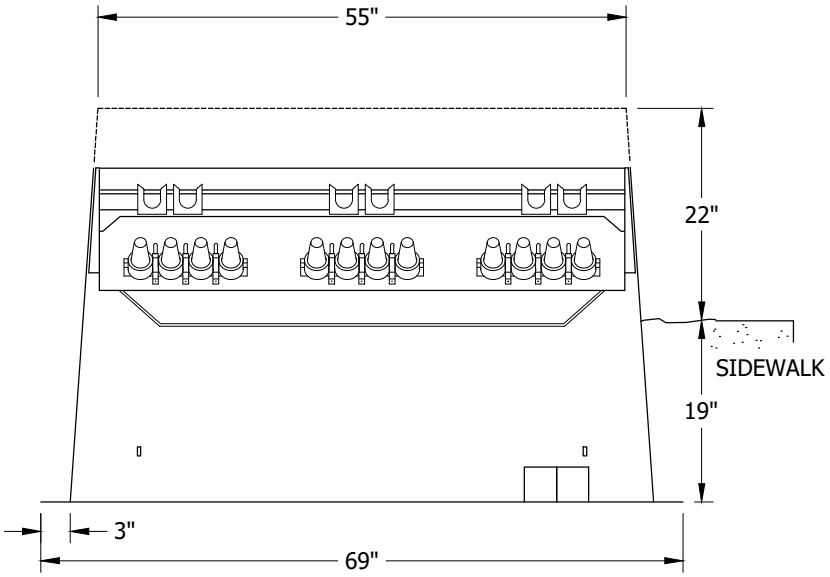

FIGURE 1
FRONT VIEW

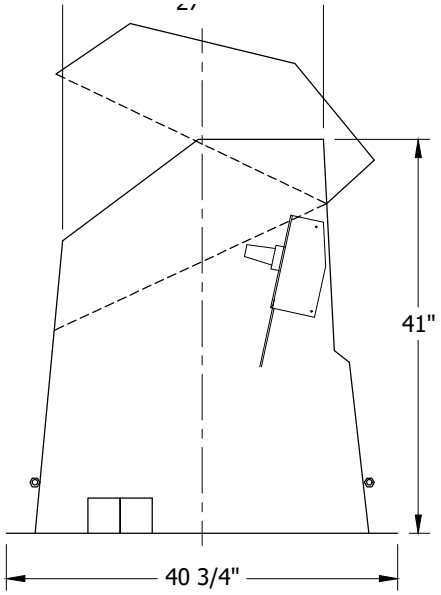

FIGURE 1
SIDE VIEW

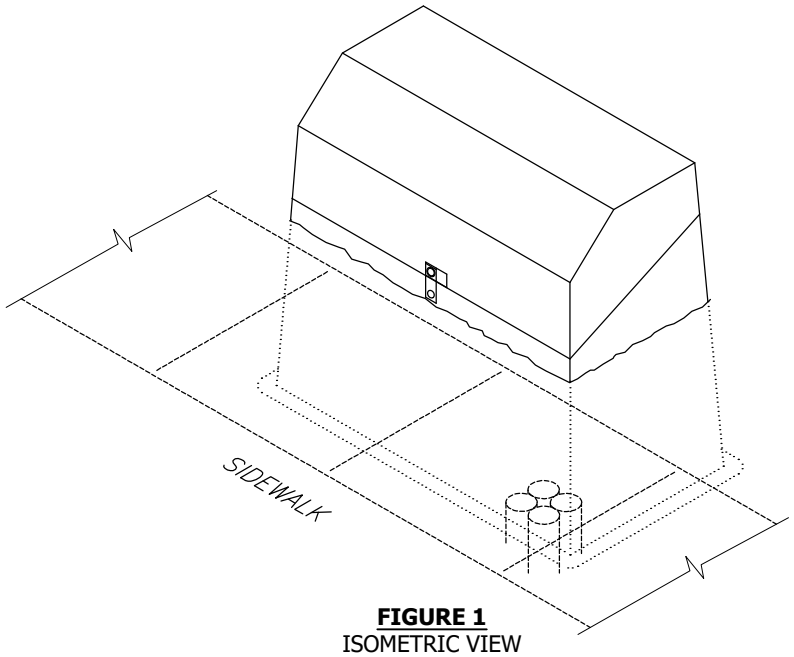

FIGURE 1
ISOMETRIC VIEW

TABLE 1

RATINGS	
KV-BIL	95
AMPERES	200
WEIGHT (LBS)	200

TABLE 2

APPROVED MANUFACTURER & PART NUMBER
PRO GLASS SE 30-41-L22415

UG MAP SYMBOL



200A TERMINATING CABINET

FIELD MAINTENANCE ONLY

TABLE OF CONTENTS

© 1998 - 2021 San Diego Gas & Electric Company. All rights reserved. Removal of this copyright notice without permission is not permitted under law.

REV	CHANGE	DR	BY	DSN	APV	DATE	REV	CHANGE	DR	BY	DSN	APV	DATE
C	MOVED TO FMO	EDM	RSL	JES	CZH	12/12/2021	F						
B	FORMATTING	EDM	JIK	-	-	05/17/2021	E						
A	EDITORIAL CHANGES	-	JS	TR	MDJ	08/11/2016	D						

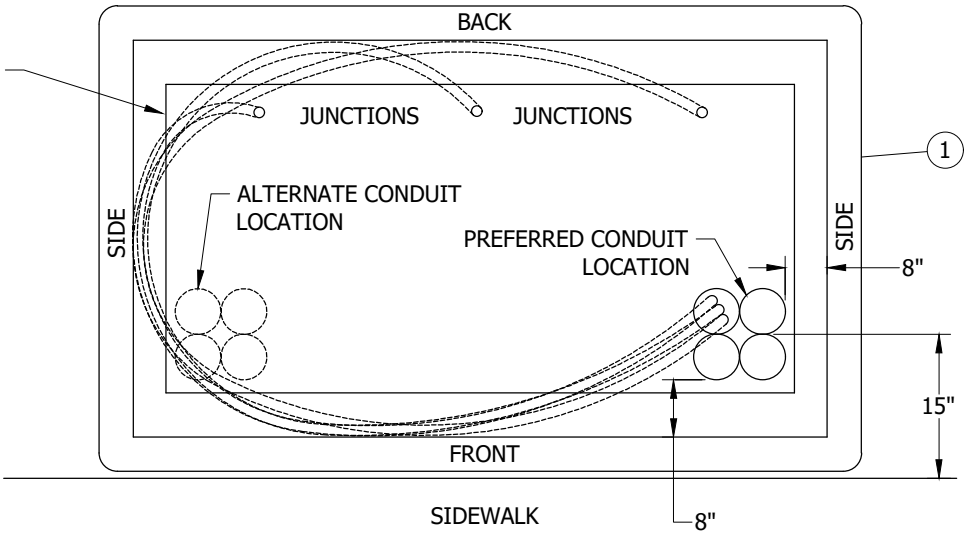

FIGURE 2
CONDUIT AND PEDESTAL INSTALLATION
TOP VIEW

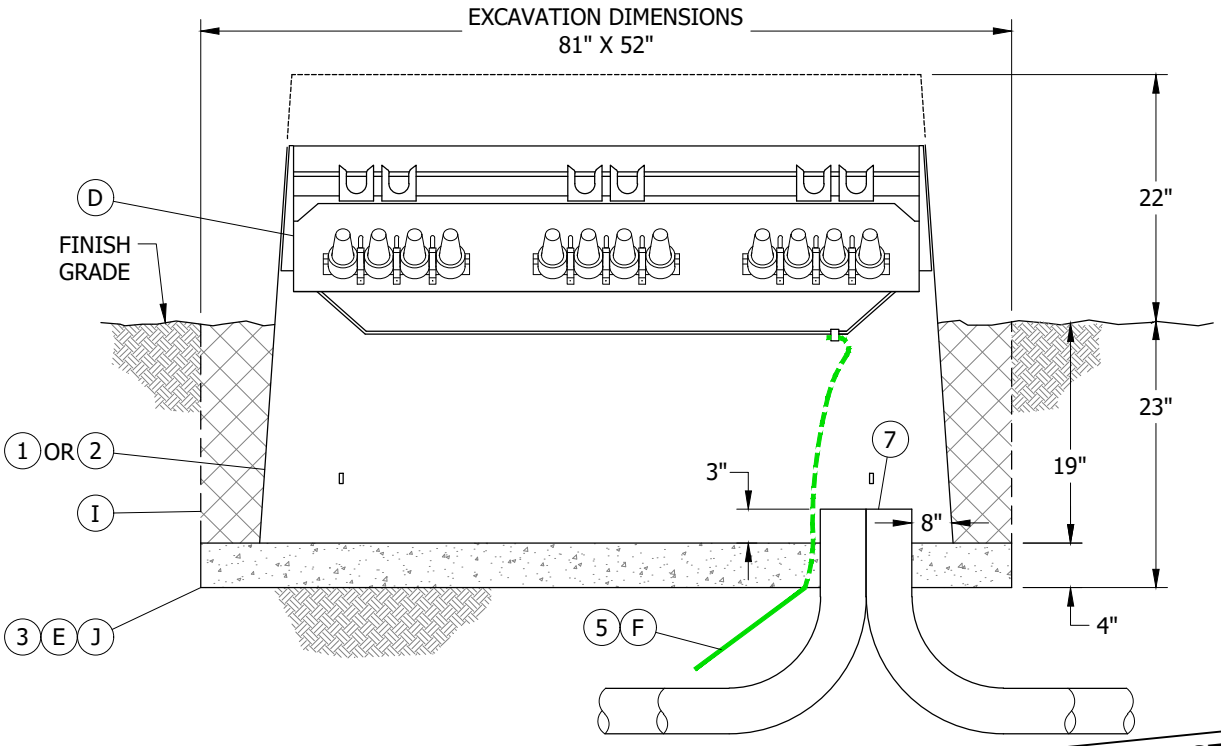

FIGURE 2
SIDE VIEW

FIELD MAINTENANCE ONLY

TABLE OF CONTENTS

© 1998 - 2021 San Diego Gas & Electric Company. All rights reserved. Removal of this copyright notice without permission is not permitted under law.

REV	CHANGE	DR	BY	DSN	APV	DATE	REV	CHANGE	DR	BY	DSN	APV	DATE
C	MOVED TO FMO	EDM	RSL	JES	CZH	12/12/2021	F						
B	FORMATTING	EDM	JIK	-	-	05/17/2021	E						
A	EDITORIAL CHANGES	-	JS	TR	MDJ	08/11/2016	D						

X Indicates Latest Revision | Completely Revised | New Page | Information Removed

SHEET 5 OF 8

SDG&E ELECTRIC UNDERGROUND FIELD MAINTENANCE ONLY STANDARDS

THREE-PHASE LOW PROFILE CABLE TERMINATING CABINET
12KV, 200A DEADFRONT CABLE JUNCTION PEDESTAL

FMO
UG3523.5

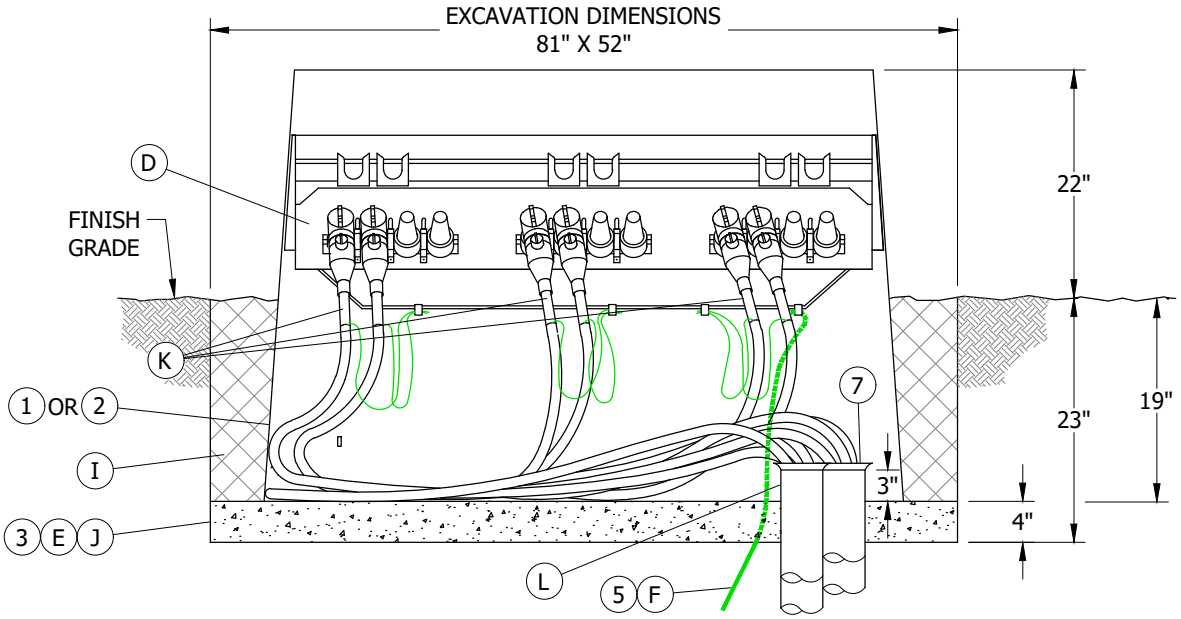

FIGURE 3
FRONT VIEW

ATTENTION:

* RETAINING WALLS ARE NOT REQUIRED WHEN THE SLOPE REMAINS SIX INCHES BELOW AND PARALLEL TO THE JOINT BETWEEN BASE AND COVER OF TERMINATOR.

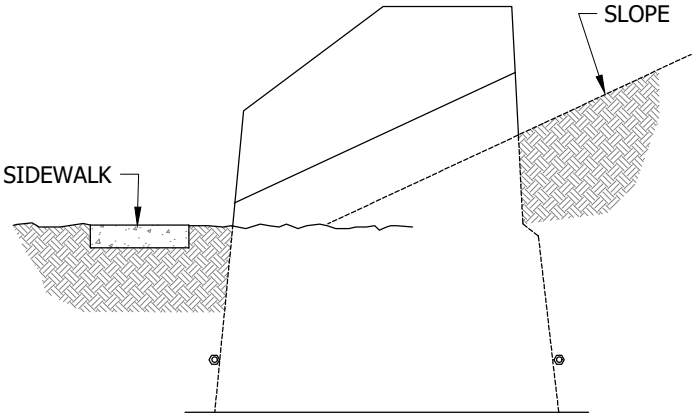

FIGURE 4
SIDE VIEW

TABLE 1

PRIMARY CONDUIT COMBINATIONS			
2 (IN)	3 (IN)	4 (IN)	TOTAL ALLOWED CONDUITS
-	-	4	4
3	-	3	6
-	3	1	4

FIELD MAINTENANCE ONLY

© 1998 - 2021 San Diego Gas & Electric Company. All rights reserved. Removal of this copyright notice without permission is not permitted under law.

REV	CHANGE	DR	BY	DSN	APV	DATE	REV	CHANGE	DR	BY	DSN	APV	DATE
C	MOVED TO FMO	EDM	RSL	JES	CZH	12/12/2021	F						
B	FORMATTING	EDM	JIK	-	-	05/17/2021	E						
A	EDITORIAL CHANGES	-	JS	TR	MDJ	08/11/2016	D						

X Indicates Latest Revision | Completely Revised | New Page | Information Removed

SDG&E ELECTRIC UNDERGROUND FIELD MAINTENANCE ONLY STANDARDS

THREE-PHASE LOW PROFILE CABLE TERMINATING CABINET
12KV, 200A DEADFRONT CABLE JUNCTION PEDESTAL

FMO
UG3523.6

TABLE OF CONTENTS

INSTALLATION:

FOR CABLE JUNCTION PEDESTAL:

A. INSTALL CONDUITS AS SHOWN.

B. THE CABLE JUNCTION PEDESTAL LOCATION IS TO BE MARKED OUT PAYING PARTICULAR ATTENTION TO FOREIGN UTILITY PLACEMENTS. RELOCATING PEDESTAL REQUIRES APPROVAL FROM SERVICE PLANNING. ONCE THE LOCATION HAS BEEN ESTABLISHED, MARK OUT DIMENSIONS FOR AN EXCAVATION OF FOUR FEET FOUR INCHES WIDE AND SIX FEET SIX INCHES LONG. THE DEPTH OF THE EXCAVATION IS TWENTY THREE INCHES ALLOWING FOUR INCHES OF COMPACTED GRAVEL ON THE BOTTOM OF EXCAVATION.

C. PLACE PRIMARY CONDUITS WITH PEDESTAL SHOWN IN FIGURE 3. TERMINATE PRIMARY CONDUITS THREE INCHES ABOVE GRAVEL BASE. DO NOT CUT INTO THE CURVE PORTION OF ELBOWS.

(D) 3-4 WAY CABLE TAPS INCLUDED WITH ITEM 1. ADD CABLE TAPS SEPARATELY WHEN INSTALLING ITEM 2.

(E) WHERE SOIL GASES ARE OF CONCERN, OMIT THE GRAVEL AND INSTALL AN EQUIPMENT PAD VAPOR BARRIER.

(F) INSTALL TRENCH GROUND PER UG4510.

G. SECONDARY CONNECTIONS ARE NOT ALLOWED EXCEPT WHEN RETRO FITTING A EXISTING CABINET OR A OPEN OR CLOSED DELTA STATION.

H. FUSED ELBOWS SHALL NOT BE INSTALLEDIN THIS CABINET.

(J) COMPACTED CLEAN NATIVE SOIL.

(K) INSTALL TAGS PER UG3202.

(L) INSTALL TAGS PER 3203.

(M) THE DEADFFRONT CABLE JUNCTION PEDESTALS PREFERRED INSTALLATION IS AS FOLLOWS.

1. GREEN BELT AND LANDSCAPED AREAS.
2. UNEVEN REAR TERRAINS THAT WILL NOT REQUIRE A RETAINING WALL.

TABLE OF CONTENTS

BILL OF MATERIALS:

ITEM	DESCRIPTION	QUANTITY	STANDARD PAGE	STOCK NUMBER	DESIGN UNITS
1	CABLE JUNCTION PEDESTAL W/ 3 CABLE TAPS	1	-	S525354	DFCJP3
2	CABLE JUNCTION PEDESTAL WITHOUT CABLE TAPS	1	-	S525356	DFCJP0
3	GRAVEL, 3/8" X 3/4"	AS REQ'D	-	S601600	-
4	CABLE TAPS (NOT NEEDED WITH ITEM 1) (II)	AS REQ'D	4195	-	-
5	WIRE, TRENCH GROUND	1	4510	-	TG-E-W
6	GROUND BAR (II)	1	-	-	-
7	PROTECTOR, CABLE	1	-	S558720	-

NOTES:

I. THE DEADFRONT JUNCTION PEDESTAL SHOULD NOT BE CONCRETE ENCASED AT THE SURFACE, FOR LEVEL CONCRETED AREAS THE THREE-PHASE LOW PROFILE CABLE TERMINATING CABINET IS RECOMMENDED. (I)

(II) NOT SHOWN ON FIGURES.

REFERENCE:

a. SEE UG3211 FOR STRUCTURE/EQUIPMENT IDENTIFICATION TAG.

b. SEE UG3479 FOR BARRIERS IF THE CABINET IS SUBJECT TO VEHICULAR TRAFFIC.

c. SEE UG3480-3483 FOR MINIMUM OPERATING CLEARANCE REQUIREMENTS.

FIELD MAINTENANCE ONLY

© 1998 - 2021 San Diego Gas & Electric Company. All rights reserved. Removal of this copyright notice without permission is not permitted under law.

REV	CHANGE	DR	BY	DSN	APV	DATE	REV	CHANGE	DR	BY	DSN	APV	DATE
C	MOVED TO FMO	EDM	RSL	JES	CZH	12/12/2021	F						
B	FORMATTING	EDM	JIK	-	-	05/17/2021	E						
A	EDITORIAL CHANGES	-	JS	TR	MDJ	08/11/2016	D						

X Indicates Latest Revision | Completely Revised | New Page | Information Removed

SDG&E ELECTRIC UNDERGROUND FIELD MAINTENANCE ONLY STANDARDS

THREE-PHASE LOW PROFILE CABLE TERMINATING CABINET
12KV, 200A DEADFRONT CABLE JUNCTION PEDESTAL

REFERENCE (CONT'D):

d. SEE UG3486-3488 FOR RETAINING WALL REQUIREMENTS AND CLEARANCES FROM REVERSE SUBGRADE RETAINING WALLS.
e. SEE UG3489 FOR RETAINING WALLS.
f. SEE UG4510 FOR (PREFERRED I) AND (ALTERNATE TRENCH GROUND WIRE).
g. SEE UG4512 FOR EQUIPMENT GROUNDING INSTALLATION.
h. SEE UG4520 (PREVIOUS # UG4520.1-.7) AND UG4521 (PREVIOUS # 4520.8-.9) FOR GROUNDING PAD MOUNTED EQUIPMENT.
i. SEE 4525 FOR GROUNDING CONCENTRIC NEUTRAL TERMINATIONS AND GROUNDING PREMOLDED CONNECTORS.
j. SEE UG3221 FOR HIGH VOLTAGE TAGS.
k. SEE UG3240 FOR WORKING SPACE TAGS.
l. SEE UG3325 FOR MANHOLE STANDARDS.
m. SEE UG3202
n. SEE UG3203

TABLE OF CONTENTS

FIELD MAINTENANCE ONLY

© 1998 - 2021 San Diego Gas & Electric Company. All rights reserved. Removal of this copyright notice without permission is not permitted under law.

REV	CHANGE	DR	BY	DSN	APV	DATE	REV	CHANGE	DR	BY	DSN	APV	DATE
C	MOVED TO FMO	EDM	RSL	JES	CZH	12/12/2021	F						
B	FORMATTING	EDM	JIK	-	-	05/17/2021	E						
A	EDITORIAL CHANGES	-	JS	TR	MDJ	08/11/2016	D						

X Indicates Latest Revision | Completely Revised | New Page | Information Removed

SHEET 8 OF 8

SDG&E ELECTRIC UNDERGROUND FIELD MAINTENANCE ONLY STANDARDS

THREE-PHASE LOW PROFILE CABLE TERMINATING CABINET
12KV, 200A DEADFRONT CABLE JUNCTION PEDESTAL

FMO
UG3523.8

UG3525 FIELD MAINTENANCE ONLY

ALL VERSIONS LISTED IN FMO ARE SUPERSEDED BY THEIR CURRENT VERSION FOUND INSIDE THE UNDERGROUND CONSTRUCTION STANDARD MANUAL.

REVISION HISTORY:

09/07/2022: MOVED TO FMO

TABLE OF CONTENTS

© 1998 - 2022 San Diego Gas & Electric Company. All rights reserved. Removal of this copyright notice without permission is not permitted under law.

REV	CHANGE	DR	BY	DSN	APV	DATE	REV	CHANGE	DR	BY	DSN	APV	DATE
C							F						
B							E						
A	ORIGINAL ISSUE	EDM	EJA	GLW	KRG	09/07/2022	D						

	Indicates Latest Revision		Completely Revised	X	New Page		Information Removed

SDG&E ELECTRIC UNDERGROUND FIELD MAINTENANCE ONLY STANDARDS

THREE-PHASE PAD MOUNTED TERMINATING CABINET
12KV, 600A AND 3313 HANDHOLE

SHEET
1 OF 1

FMO
UG3525

SCOPE: THIS STANDARD SHOWS THE PAD MOUNTED THREE-PHASE 600A TERMINATING CABINET AND INSTALLATION REQUIREMENTS USED WHEN FEEDER AND DISTRIBUTION CABLE IS TERMINATED.

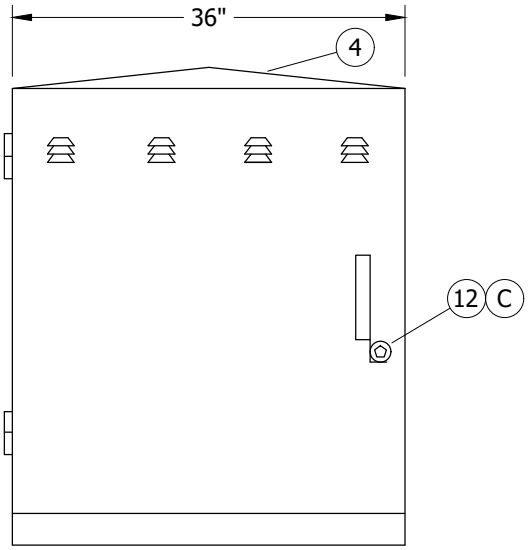

FIGURE 1
FRONT AND REAR VIEW

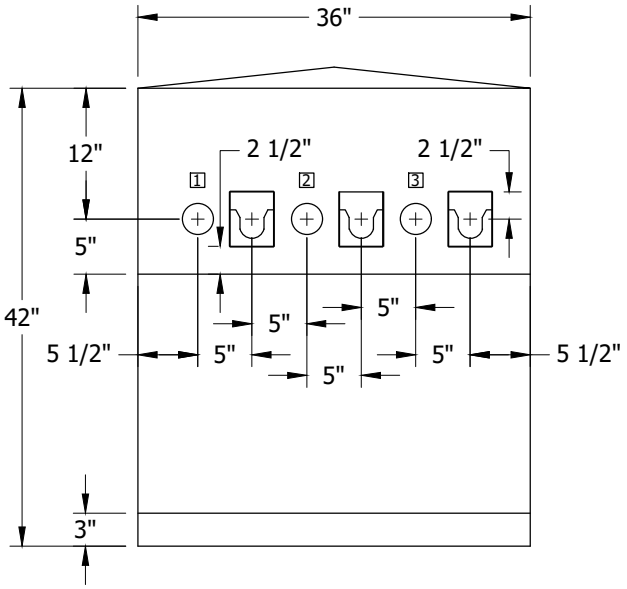

FIGURE 1
FRONT VIEW
EXPOSED

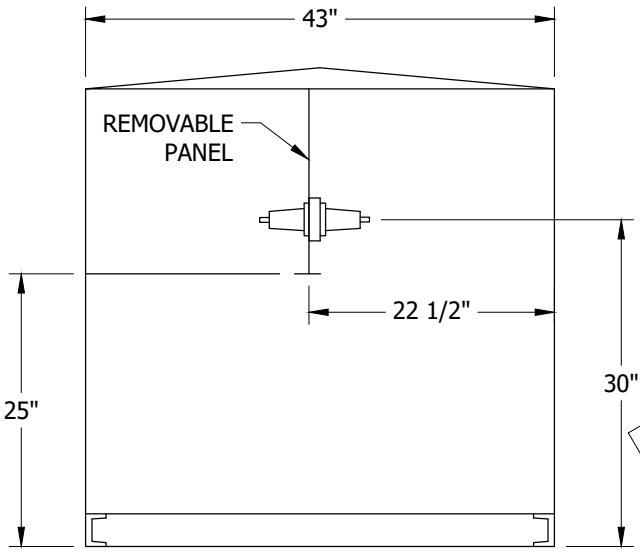

FIGURE 1
SIDE VIEW
EXPOSED

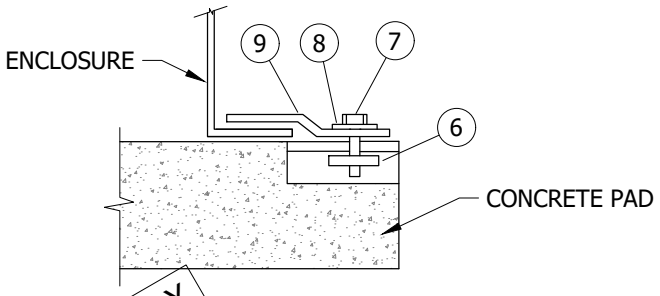

FIGURE 2
HOLD-DOWN ASSEMBLY DETAIL
TYPICAL BOTH SIDES OF EQUIPMENT PAD

FIELD MAINTENANCE ONLY

TABLE 1

RATINGS	
AMPERES	600
KV-BIL	175

UG MAP SYMBOL



600A TERMINATING
CABINET

TABLE OF CONTENTS

© 1998 - 2022 San Diego Gas & Electric Company. All rights reserved. Removal of this copyright notice without permission is not permitted under law.

REV	CHANGE	DR	BY	DSN	APV	DATE	REV	CHANGE	DR	BY	DSN	APV	DATE
C	DRAWING UPDATE	-	JK	JS	CZH	06/01/2018	F						
B	EDITORIAL CHANGES	-	BR	BR	MDJ	03/13/2017	E	MOVED TO FMO	EDM	EJA	GLW	KRG	09/07/2022
A	EDITORIAL CHANGES	-	-	-	-	03/01/2002	D	MOVED FROM UG3582	EDM	JIK	-	-	05/17/2021

X Indicates Latest Revision | Completely Revised | New Page | Information Removed

SDG&E ELECTRIC UNDERGROUND FIELD MAINTENANCE ONLY STANDARDS

THREE-PHASE PAD MOUNTED TERMINATING CABINET
12KV, 600A AND 3313 HANDHOLE

FMO
UG3525.1

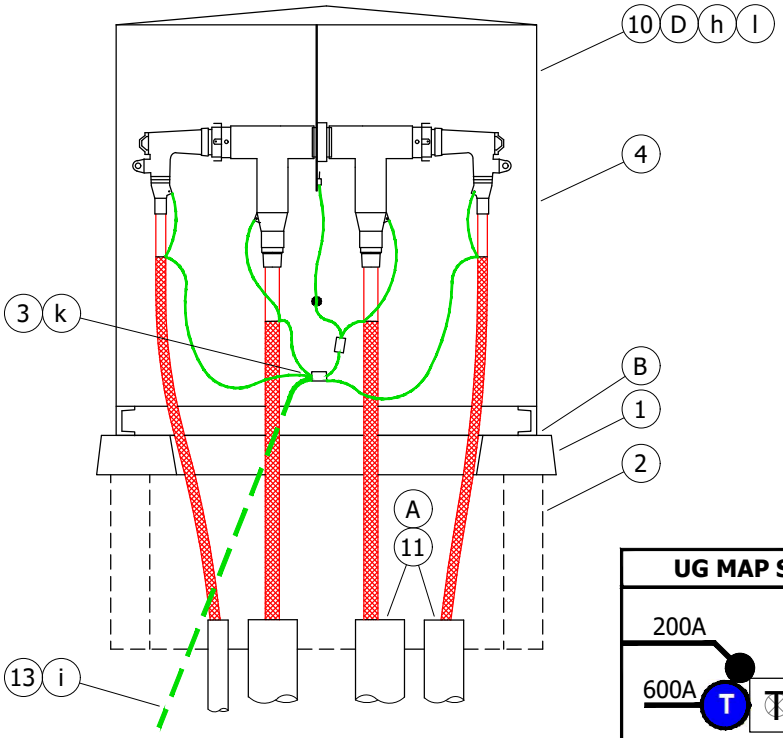

FIGURE 3
SIDE VIEW

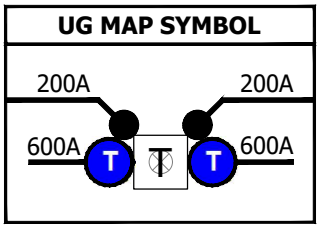

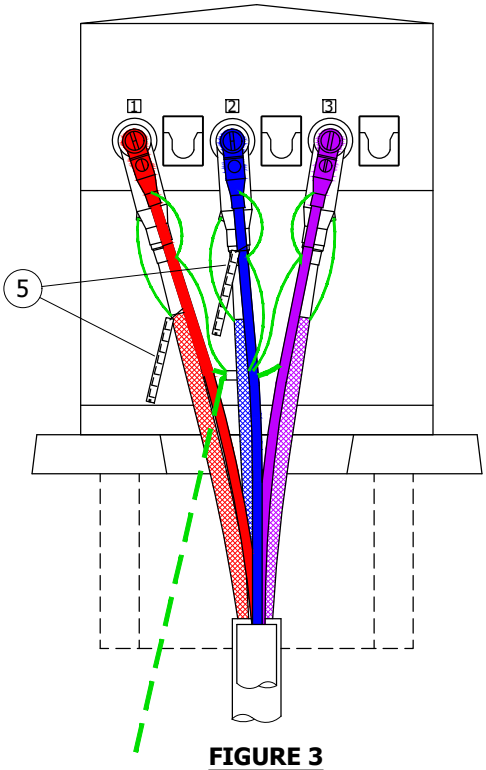

FIGURE 3
SIDE VIEW

INSTALLATION:

(A) SEAL CONDUITS WITH SEALING COMPOUND.
(B) BASE OF CABINET SHALL BE CAULKED TO PREVENT MOISTURE ENTRY AND POSSIBLE TAMPERING.
(C) SECURE BOTH DOORS WITH PENTAHEAD BOLTS KEYLESS LOCKS.
(D) FUSED ELBOWS ARE ACCEPTABLE.

FIELD MAINTENANCE ONLY

TABLE OF CONTENTS

BILL OF MATERIALS:

ITEM	DESCRIPTION	QUANTITY	STANDARD PAGE	STOCK NUMBER	DESIGN UNITS
1	PAD, 600A, TERMINATING CABINET	1	3417	S514022	3417
2	HANDHOLE, 3313 BASE SECTION	1	3313	S162664	
3	GROUNDING EQUIPMENT FOR TERMINATING CABINET	1	4520	-	-
4	CABINET, TERMINATING	1	3525	S732938	600CAB
5	TAGS, IDENTIFICATION	AS REQ'D	3202/3213-3218	-	-
6	NUT, CLAMPING CHANNEL	2	-	S503520	-
7	SCREW, HEX HEAD CAP, BRONZE 1/2" X 1 1/2"	2	-	S616192	-
8	WASHER, STANDARD FLAT ROUND, BRONZE, 1/2"	2	-	S799488	-
9	HOLD DOWN (SUPPLIED WITH CABINET)	2	-	-	-
10	12KV, 200A, LOADBREAK AND 600A CONNECTORS	AS REQ'D	4181	-	-
11	COMPOUND, SEALING	AS REQ'D	-	S442976	-
12	LOCK, KEYLESS	2	-	S468010	-
13	WIRE, TRENCH GROUND	AS REQ'D	4510	-	-

© 1998 - 2022 San Diego Gas & Electric Company. All rights reserved. Removal of this copyright notice without permission is not permitted under law.

REV	CHANGE	DR	BY	DSN	APV	DATE	REV	CHANGE	DR	BY	DSN	APV	DATE
C	DRAWING UPDATE	-	JK	JS	CZH	06/01/2018	F						
B	EDITORIAL CHANGES	-	BR	BR	MDJ	03/13/2017	E	MOVED TO FMO	EDM	EJA	GLW	KRG	09/07/2022
A	EDITORIAL CHANGES	-	-	-	-	03/01/2002	D	MOVED FROM UG3582	EDM	JIK	-	-	05/17/2021

NOTES: NONE

REFERENCE:

a. SEE UG3211 FOR STRUCTURE/EQUIPMENT IDENTIFICATION TAG.

b. SEE UG3417 FOR PAD AND HANDHOLE INSTALLATION.

c. SEE UG3479 FOR BARRIERS IF THE SWITCH IS SUBJECT TO VEHICULAR TRAFFIC.

d. SEE UG3480, UG3481, UG3482, AND UG3483 FOR MINIMUM OPERATING CLEARANCE REQUIREMENTS (PAD PLACEMENT).

e. SEE UG3484 FOR PAD INSTALLATION OF PAD MOUNTED EQUIPMENT.

f. SEE UG3486, UG3487 AND UG3488 FOR RETAINING WALL REQUIREMENTS AND CLEARANCES FROM REVERSE SUBGRADE RETAINING WALLS.

g. SEE UG3489 FOR RETAINING WALLS.

(h) SEE UG4181 FOR CONNECTOR ASSEMBLIES IDENTIFICATION CHART.

(i) SEE UG4510 FOR (PREFERRED I) AND (ALTERNATE TRENCH GROUND WIRE).

J. SEE UG4512 FOR EQUIPMENT GROUNDING INSTALLATION.

(k) SEE UG4520 AND UG4521 (PREVIOUS # UG4520) FOR GROUNDING PAD MOUNTED EQUIPMENT.

(l) SEE UG4525 FOR GROUNDING CONCENTRIC NEUTRAL TERMINATIONS AND GROUNDING PREMOLDED CONNECTORS.

TABLE OF CONTENTS

FIELD MAINTENANCE ONLY

© 1998 - 2022 San Diego Gas & Electric Company. All rights reserved. Removal of this copyright notice without permission is not permitted under law.

REV	CHANGE	DR	BY	DSN	APV	DATE	REV	CHANGE	DR	BY	DSN	APV	DATE
C	DRAWING UPDATE	-	JK	JS	CZH	06/01/2018	F						
B	EDITORIAL CHANGES	-	BR	BR	MDJ	03/13/2017	E	MOVED TO FMO	EDM	EJA	GLW	KRG	09/07/2022
A	EDITORIAL CHANGES	-	-	-	-	03/01/2002	D	MOVED FROM UG3582	EDM	JIK	-	-	05/17/2021

X Indicates Latest Revision | Completely Revised | New Page | Information Removed

SDG&E ELECTRIC UNDERGROUND FIELD MAINTENANCE ONLY STANDARDS

THREE-PHASE PAD MOUNTED TERMINATING CABINET
12KV, 600A AND 3313 HANDHOLE

FMO
UG3525.3

FIELD MAINTENANCE ONLY

REVISION HISTORY:

7/13/2016: All versions prior to 2016 are superseded by their current version found inside the Overhead Construction Standard Manual.

TABLE OF CONTENTS

© 1998 - 2016 San Diego Gas & Electric Company. All rights reserved. Removal of this copyright notice without permission is not permitted under law.

REV	CHANGE	BY	DSGN	APPV	DATE	REV	CHANGE	BY	DSGN	APPV	DATE
C						F					
B						E					
A	ORIGINAL ISSUE	JS	IL	MDJ	7/13/2016	D					

X Indicates Latest Revision | Completely Revised | New Page | Information Removed

SHEET
1 OF 1

SDG&E ELECTRIC UNDERGROUND STANDARD

PAD-MOUNTED SF6 GAS SWITCH
12 KV, 600 AMP, THREE-PHASE

FMO
UG 3549

SCOPE: THIS STANDARD SHOWS A 600 AMP SF6 GAS SWITCH TO BE USED ONLY FOR REPLACEMENT OF EXISTING SWITCHES WITH THE SAME BUSHING CONFIGURATION DO NOT USE ON NEW CONSTRUCTION

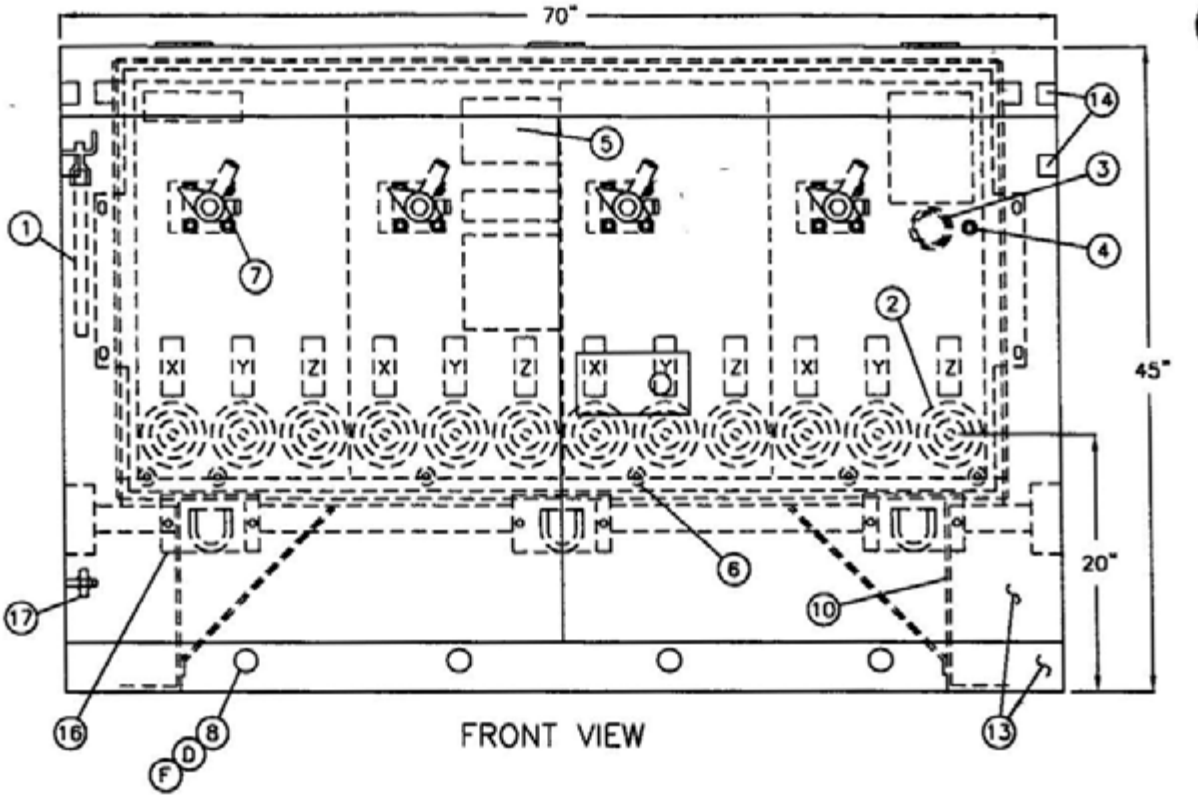

FRONT VIEW

WEIGHT· 1600#

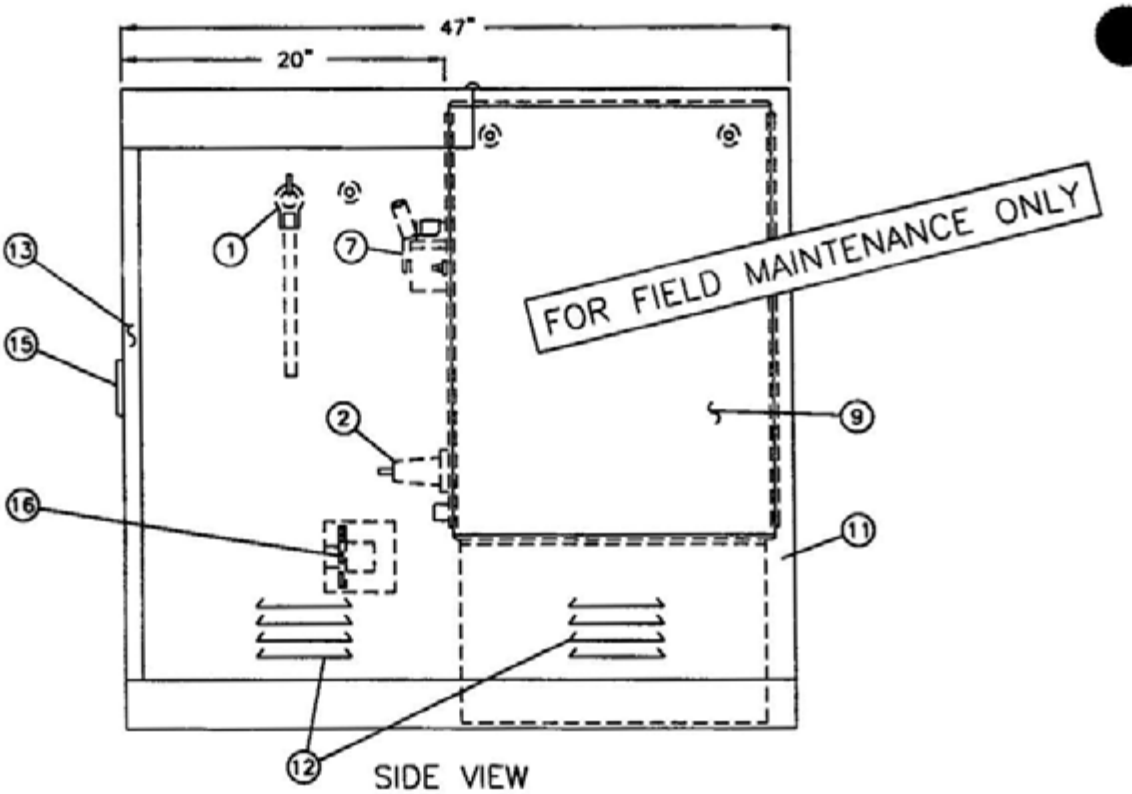

SIDE VIEW

3599.409 SUPERSEDES 3549 1 (1-1-96)	SDG&E ELECTRIC STANDARDS PAD-MOUNTED SF6 GAS SWITCH 12 KV, 600 AMP, THREE-PHASE	DATE 1-1-96 APPD

TABLE OF CONTENTS

ELECTRICAL RATINGS	
VOLTAGE	15KV
B.I.L.	110KV
CURRENT, CONTINUOUS	600 AMP
LOADMAKE AND LOADBREAK	600 AMP
MOMENTARY AND FAULT CLOSE (RMS, ASYMETRICAL) (RMS, SYMMETRICAL)	40,000 AMP 20,000 AMP

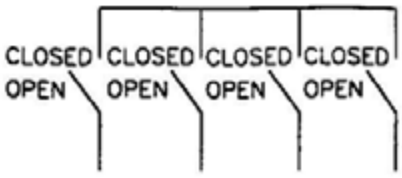

4-WAY ONE LINE DIAGRAM

SWITCH PARTS LIST

ITEM	DESCRIPTION	ITEM	DESCRIPTION
1	OPERATING HANDLE	9	SWITCH TANK
2	BUSHING	10	SWITCH LEGS
3	COLOR CODED PRESSURE GAUGE	11	SWITCH ENCLOSURE
4	FILL VALVE	12	VENTS
5	NAME PLATE & CONNECTION DIAGRAM	13	REMOVABLE FRONT SECTION
6	GROUND LUGS	14	LIFTING POSITIONS FOR ENCLOSURE
7	SWITCH HANDLE LOCKING PROVISION	15	DOOR HANDLE AND PENTAHEAD BOLT LOCKING PROVISION
8	LEXAN FAULT INDICATOR VIEWING WINDOW	16	STANDOFF BRACKET
		17	SWITCH ENCLOSURE GROUNDING POSITION

FOR FIELD MAINTENANCE ONLY

NOTES:

- PAD-MOUNTED SWITCH (STOCK NUMBER 709050) IS DELIVERED FROM THE SUPPLIER WITH ALL THE PARTS LISTED IN THE PARTS LIST
- PAD-MOUNTED SWITCH IS ONLY PURCHASED WITH FOUR SWITCH POSITIONS
- WHEN THE COLOR CODED PRESSURE GAUGE NEEDLE IS IN THE GREEN, SWITCH MAY BE OPERATED DO NOT OPERATE THE SWITCH IF THE NEEDLE IS IN THE RED

REFERENCE:

A SEE STANDARD 3212 2 FOR SWITCH IDENTIFICATION

B SEE STANDARD 3440 FOR PAD AND HANDHOLE INSTALLATION FOR PAD-MOUNTED 600 AMP, 12KV SWITCH

C SEE STANDARD 3550 OR 3551 FOR SWITCH INSTALLATION

(D) SEE STANDARD 4355 FOR FAULT INDICATOR INSTALLATION

(F) SEE DESIGN STANDARD 6113 FOR AUTOMATIC FAULT INDICATOR APPLICATION

TABLE OF CONTENTS

	SDG&E ELECTRIC STANDARDS	
ATE 1-1-96 APPD JLG/BOG	PAD-MOUNTED SF6 GAS SWITCH 12KV, 600 AMP, THREE-PHASE	3599 410 SUPERSEDES 3549 2 (1-1-96)

SCOPE: THIS STANDARD SHOWS A 600 AMP SF6 GAS SWITCH TO BE USED FOR PAD-MOUNTED APPLICATIONS

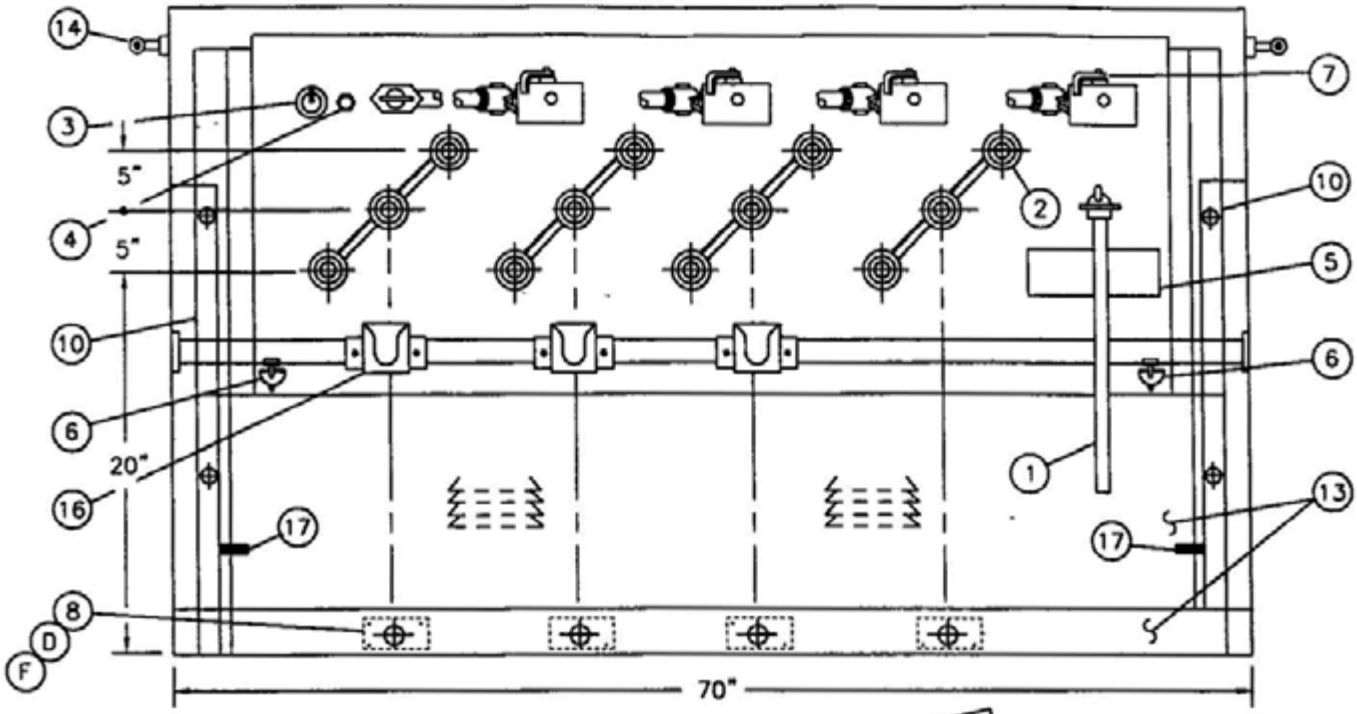

FRONT VIEW

WEIGHT· 980#

FOR FIELD MAINTENANCE ONLY

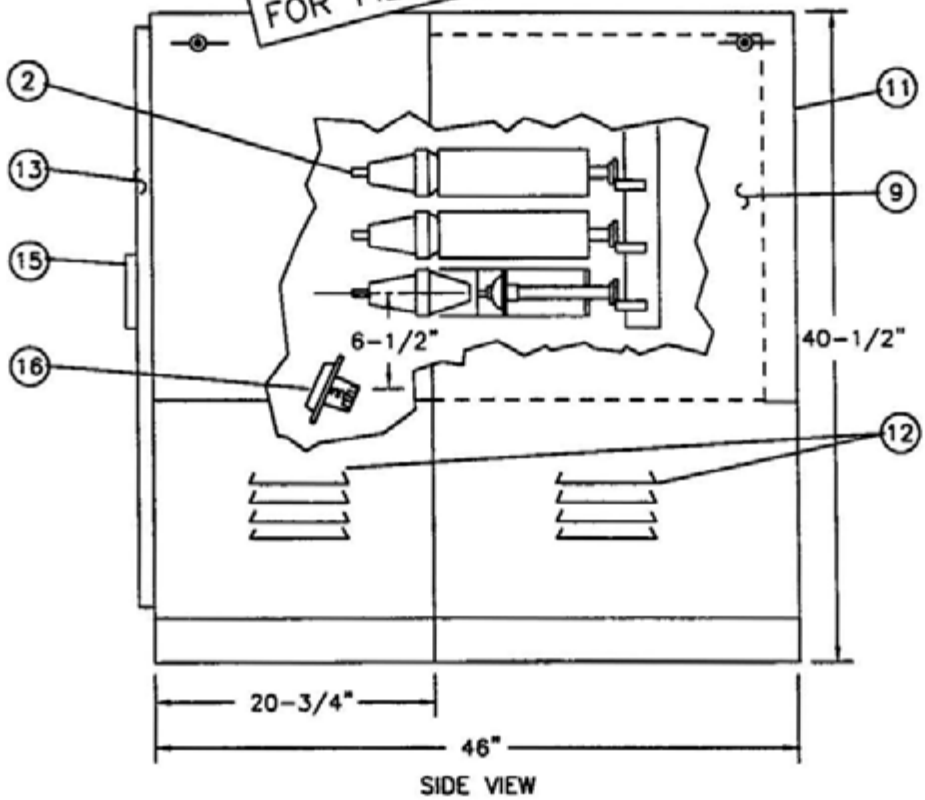

SIDE VIEW

	SDG&E ELECTRIC STANDARDS	
3599.411 SUPERSEDES 3549.3 (1-1-96)	PAD-MOUNTED SF6 GAS SWITCH 12KV, 600 AMP, THREE-PHASE	DATE 1-1-96 APPD JLG/BDG

TABLE OF CONTENTS

ELECTRICAL RATINGS	
VOLTAGE	15.5KV
B.I.L	95KV
CURRENT, CONTINUOUS	600 AMP
LOADMAKE AND LOADBREAK	600 AMP
MOMENTARY AND FAULT CLOSE (RMS, ASYMETRICAL) (RMS, SYMMETRICAL)	32,000 AMP 20,000 AMP

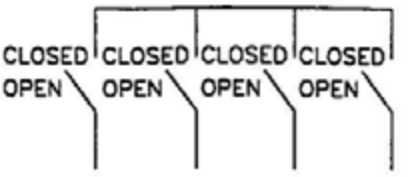

4-WAY ONE LINE DIAGRAM

SWITCH PARTS LIST

ITEM	DESCRIPTION	ITEM	DESCRIPTION
1	OPERATING HANDLE	9	SWITCH TANK
2	BUSHING	10	SWITCH LEGS
3	COLOR CODED PRESSURE GAUGE	11	SWITCH ENCLOSURE
4	FILL VALVE	12	VENTS
5	NAME PLATE & CONNECTION DIAGRAM	13	REMOVABLE FRONT SECTION
6	GROUND LUGS	14	BOSS FOR LIFTING EYES
7	SWITCH HANDLE LOCKING PROVISION	15	DOOR HANDLE AND PENTAHEAD BOLT LOCKING PROVISION
8	LEXAN FAULT INDICATOR VIEWING WINDOW	16	STANDOFF BRACKET
		17	SWITCH ENCLOSURE GROUNDING PLATE

FOR FIELD MAINTENANCE ONLY

NOTES:

- **DO NOT USE THIS SWITCH IF A FEEDER CABLE IS TO BE INSTALLED FROM A PAD-MOUNTED SWITCH TO A CABLE POLE OR FROM SWITCH TO SWITCH WITH BOTH SWITCHES OVER 3311 HANDHOLES.** (THIS IS ASSUMING THAT THE CABLE DOES NOT PASS THROUGH ANY OTHER STRUCTURE) IT MAY BE REQUIRED TO SWAP PHASES ON THE CABLE, AND DUE TO THE LACK OF SPACE IN THE 3311 HANDHOLE, THIS WOULD BE DIFFICULT IF NOT IMPOSSIBLE IF THIS SITUATION ARISES, USE THE 3440 PAD AND 3315 HANDHOLE WHICH ALLOWS ROOM FOR SWAPPING PHASES
- PAD-MOUNTED SWITCH (STOCK NUMBER 708987) IS DELIVERED FROM THE SUPPLIER WITH ALL THE PARTS LISTED IN THE PARTS LIST
- SWITCH NUMBERS ARE TO BE ISSUED BY THE ENGINEERING CLERK IN EACH DISTRICT
- PAD-MOUNTED SWITCH IS ONLY PURCHASED WITH FOUR SWITCH POSITIONS
- WHEN THE COLOR CODED PRESSURE GAUGE NEEDLE IS IN THE GREEN, SWITCH MAY BE OPERATED **DO NOT OPERATE THE SWITCH IF THE NEEDLE IS IN THE RED.**

REFERENCE:

A SEE STANDARD 3212 2 FOR SWITCH IDENTIFICATION

B SEE STANDARD 3440 FOR PAD AND HANDHOLE INSTALLATION FOR PAD-MOUNTED 600 AMP, 12KV SWITCH

C SEE STANDARD 3550 OR 3551 FOR SWITCH INSTALLATION

(D) SEE STANDARD 4355 FOR FAULT INDICATOR INSTALLATION

(F) SEE DESIGN STANDARD 6113 FOR AUTOMATIC FAULT INDICATOR APPLICATION

TABLE OF CONTENTS

FIELD MAINTENANCE ONLY

REVISION HISTORY:

7/13/2016: All versions prior to 2016 are superseded by their current version found inside the Overhead Construction Standard Manual.

TABLE OF CONTENTS

© 1998 - 2016 San Diego Gas & Electric Company. All rights reserved. Removal of this copyright notice without permission is not permitted under law.

REV	CHANGE	BY	DSGN	APPV	DATE	REV	CHANGE	BY	DSGN	APPV	DATE
C						F					
B						E					
A	ORIGINAL ISSUE	JS	IL	MDJ	7/13/2016	D					

X Indicates Latest Revision | Completely Revised | New Page | Information Removed

SHEET
1 OF 1

SDG&E ELECTRIC UNDERGROUND STANDARD

INSTALLATION OF PAD-MOUNTED SWITCH &
3315 HANDHOLE 12KV, 600 AMP, THREE-PHASE

FMO
UG 3550

SCOPE: THIS STANDARD SHOWS THE INSTALLATION REQUIREMENTS FOR A PAD-MOUNTED 12KV, 600A SWITCH OVER A 3315 HANDHOLE

POSITION #2
ALTERNATE FEED FOR 200 AMP CIRCUITS

DO NOT INSTALL 200 AMP CABLE PERMANENTLY ON POSITION #2 AND #4 UNLESS CONDITIONS DICTATE OTHERWISE

POSITIONS #1 & #3
3 PHASE, 200 AMP CIRCUITS MAXIMUM, INSTALL IN POSITIONS #1 & #3 LEAVE ENOUGH SLACK IN CABLE TO REACH POSITION #2 DUE TO POSSIBLE CIRCUIT REARRANGEMENT AT A FUTURE DATE. LEAVE ENOUGH SLACK IN THE 200 AMP CABLE TO REACH ANY 600 AMP TEES (B)

FRONT VIEW

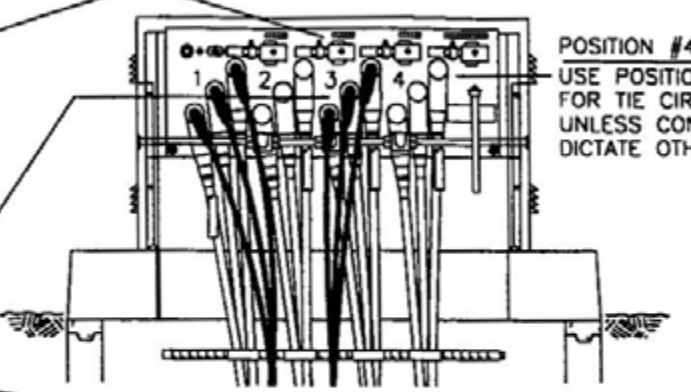

POSITION #4
USE POSITION #4 FOR TIE CIRCUITS UNLESS CONDITIONS DICTATE OTHERWISE.

FOR FIELD MAINTENANCE ONLY

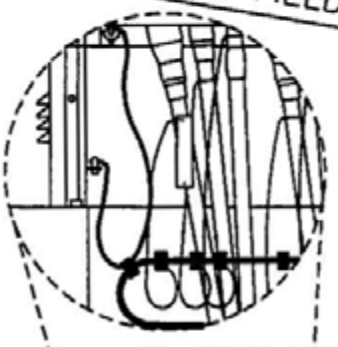

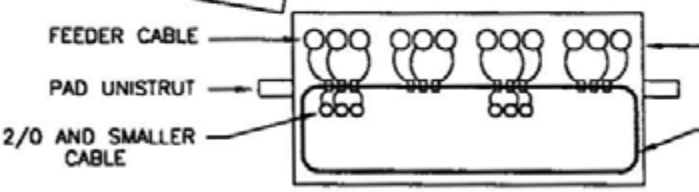

TOP VIEW

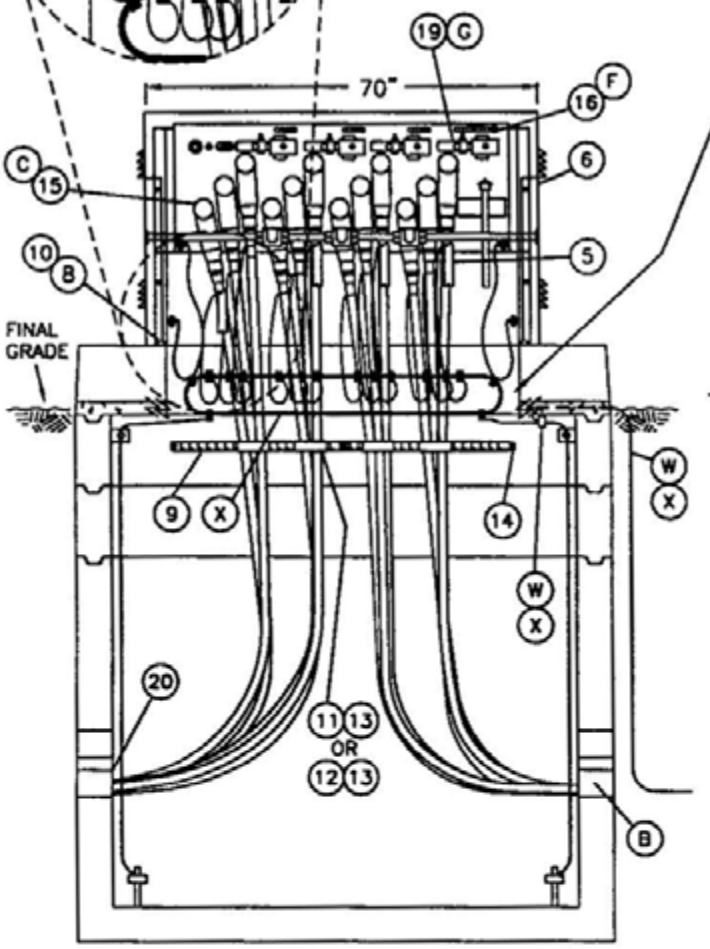

FRONT VIEW

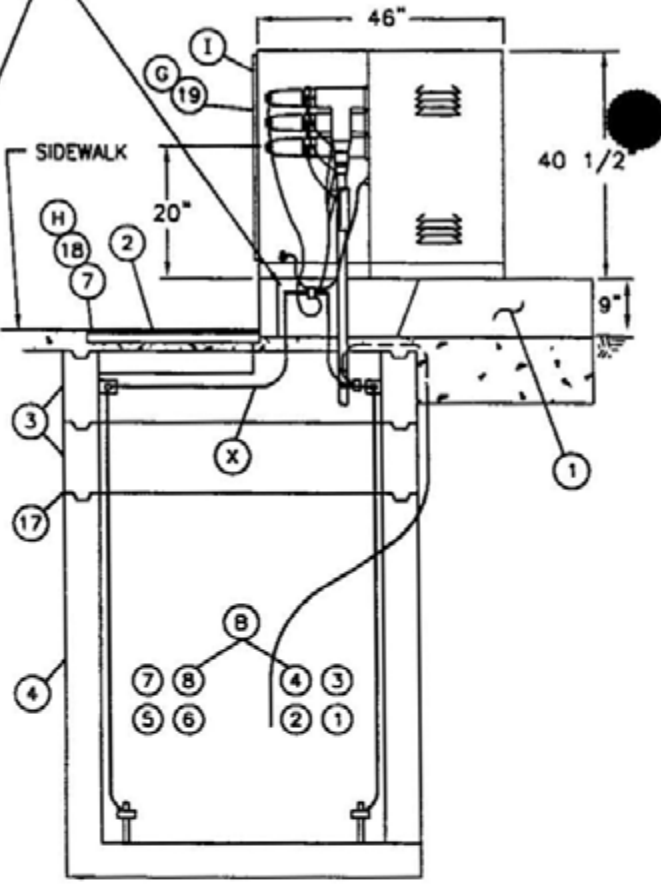

END VIEW

3599.503 SUPERSEDES 3550 1 (1-1-96)	SDG&E ELECTRIC STANDARDS INSTALLATION OF PAD-MOUNTED SWITCH & 3315 HANDHOLE 12KV, 600 AMP, THREE-PHASE	DATE 1-1-96 APPD JLG/RDS

TABLE OF CONTENTS

NOTES:

– ALL 200 AMP CONNECTORS ON THE SWITCH MUST BE LOADBREAK

BILL OF MATERIAL:

ITEM	DESCRIPTION	QUANTITY	CONST STD OR PAGE NO	STOCK NUMBER	ASSEMBLY UNITS
1	3440 PAD SECTION	1	3440	513912	COMPLETE UNIT SWI/15
2	3440 COVER SECTION & REMOVABLE SUPPORT BARS	1	3440	286806	
3	3315 EXTENSION SECTION, 12"	2	3315	336246	
4	3315 BASE ENCLOSURE, 60"	1	3315	334356	
5	CABLE IDENTIFICATION TAGS	AS REQ'D	3202	–	–
6	SWITCH, 4–WAY, 600A, 12KV	1	3549	708987	SW–P/G
7	BOLT, 1/2"X 1–1/2" PENTAHEAD, STAINLESS STEEL, W/ITEM 2	AS REQ'D	–	156004	–
8	NUT, 1/2" UNISTRUT SPRING	4	–	503520	–
9	HANGERS 30"	2	4178	564576	–
10	SCREW CAP, BRONZE, 1/2"X 1–1/2", 1 SQ & 1 LOCK WASHER	4	–	616192, 799488	–
11	CABLE HOOKS 4"	AS REQ'D	4178	415110	–
12	CABLE HOOKS 6"	AS REQ'D	4178	415112	–
13	TIE STRAP	AS REQ'D	–	738440	–
14	ANCHOR, CONCRETE STAINLESS STEEL 1/2"X 3–3/4"	3	–	107654	–
15	12KV 200A LOADBREAK AND 600A CONNECTORS	AS REQ'D	4181 18 – 21	–	–
16	DECALS	AS REQ'D	3212	–	–
17	SEALANT, PLASTIC–MASTIC	AS REQ'D	3306	631872	–
18	SILICONE GREASE	AS REQ'D	–	391424	–
19	PADLOCK, SCHLAGE ELEC SERIES	AS REQ'D	–	514848	–
20	PROTECTOR, CABLE U G	AS REQ'D	–	558720	–
21	AUTOMATIC FAULT INDICATOR(S) (V)(Z)	AS REQ'D	4352	–	–

FOR FIELD MAINTENANCE ONLY

TABLE OF CONTENTS

DATE 1–1–94
APPD JLG/RDS

SDG&E ELECTRIC STANDARDS

INSTALLATION OF PAD–MOUNTED SWITCH AND 3315 HANDHOLE 12KV, 600 AMP, THREE–PHASE

3599.504
SUPERSEDES
3550 2 (1–1–96)

INSTALLATION:

A SET THE SWITCH ON THE PAD AND BOLT IT DOWN TO THE UNISTRUT THE SWITCH HANDLES AND CABLE DOORS ARE NORMALLY INSTALLED FACING THE SIDEWALK OR STREET AN EIGHT FOOT MINIMUM CLEARANCE IS REQUIRED IN FRONT OF THE DOORS (SEE STANDARD 3483)

(B) THE ONLY 600 AMP CABLE ALLOWED IN THE SUBSTRUCTURE IS TO BE TERMINATED INTO A SWITCH POSITION THE ONLY 200 AMP CABLE ALLOWED IS TO BE TERMINATED INTO A SWITCH POSITION PLUS TWO CABLES OF 3Ø #2 OR 2/0 PULLED STRAIGHT THRU OR LOOPED AROUND THE HANDHOLE (NO TERMINATIONS) IT IS PREFERRED TO USE CONDUIT POSITIONS 5,6,7 OR 8 FOR THE 3Ø #2 OR 2/0 CABLES PULLED STRAIGHT THROUGH OR LOOPED TO AVOID GROUPING ALL THE CABLES ON ONE SIDE OF THE HOLE CABLE PULLED STRAIGHT THROUGH MUST ENTER AND EXIT THE SAME CONDUIT POSITION ON OPPOSITE ENDS OF THE HANDHOLE. DUE TO POSSIBLE CIRCUIT REARRANGEMENT AT A FUTURE DATE, LEAVE ENOUGH SLACK IN THE 200 AMP CABLE TO REACH ANY 600 AMP TEES THE 600 AMP CABLE MUST ENTER IN CONDUIT POSITIONS 1,2,3 OR 4 ON EITHER END OF THE HANDHOLE ALL FOUR 600 AMP CIRCUITS MAY COME FROM THE SAME DIRECTION THE 200 AMP CABLE MAY BE PULLED IN ANY CONDUIT NOT USED FOR 600 AMP CABLES SECONDARIES (500 KCMIL MAX) ARE ALLOWED IN THIS INSTALLATION INSTALL CABLES IN THE BOTTOM CONDUIT (CLOSEST TO THE WALL) FIRST

(C) INSTALL CABLE AND CABLE SUPPORTS, GROUNDS, ETC IN THE HANDHOLE AND ON THE SWITCH AS SHOWN IN DRAWINGS DO NOT "PIGGYBACK" 600 AMP TEES ONE ON TOP OF THE OTHER AT ANY TIME ON THE SWITCH BUSHING

D AN 18" X 48" UNOBSTRUCTED SPACE MUST BE MAINTAINED IN THE HANDHOLE

(F) INSTALL SWITCH IDENTIFICATION NUMBERS PER STANDARD 3212 AND CABLE I D TAGS PER STANDARD 3202

(G) LOCK THE SWITCH OPERATING HANDLES AND THE SWITCH DOOR WITH SCHLAGE ELEC SERIES LOCKS

(H) SECURE THE HANDHOLE COVERS WITH PENTAHEAD BOLTS AFTER HAVING APPLIED SILICONE GREASE TO REDUCE REMOVAL AND INSTALLATION DIFFICULTIES

REFERENCES:

(I) SEE STANDARD 3211 FOR ATTACHING STRUCTURE/EQUIPMENT IDENTIFICATION TAG

J. SEE STANDARD 3440 FOR PAD AND 3311 OR 3315 HANDHOLE INSTALLATION

K SEE STANDARD 3440 AND PAGE 3374 3 FOR CONDUIT PLACEMENT.

L SEE STANDARD 3481 FOR BARRIERS IF THE SWITCH IS SUBJECT TO VEHICULAR TRAFFIC.

M. SEE STANDARD 3483 FOR MINIMUM OPERATING CLEARANCE REQUIREMENTS (PAD PLACEMENT)

N. SEE STANDARD 3484 FOR PAD INSTALLATION OF PAD-MOUNTED EQUIPMENT

O SEE STANDARD 3486 FOR RETAINING WALL REQUIREMENTS AND CLEARANCES FROM REVERSE SUBGRADE RETAINING WALLS.

P SEE STANDARD 3487 FOR RETAINING WALLS

Q SEE STANDARD 3645 FOR UNOBSTRUCTED SPACE

R. SEE STANDARD 3646 FOR CABLE AND CONNECTOR PLACEMENT

S SEE STANDARD 3647 FOR EQUIPMENT DIMENSIONS AND PLACEMENT

T SEE STANDARD 3648 FOR EQUIPMENT ASSEMBLIES

U SEE PAGE 3649.10 FOR CORE BORING REQUIREMENTS

(V) SEE STANDARD 4355 FOR FAULT INDICATOR INSTALLATION

(W) SEE STANDARD 4512 FOR EQUIPMENT GROUNDING INSTALLATION

(X) SEE STANDARD 4520 FOR GROUNDING PAD MOUNTED EQUIPMENT

Y SEE STANDARD 4550 FOR GROUNDING TELCO CONDUCTOR IN HANDHOLES

(Z) SEE DESIGN STANDARD 6113 FOR AUTOMATIC FAULT INDICATOR APPLICATION.

FOR FIELD MAINTENANCE ONLY

TABLE OF CONTENTS

3599.505 SUPERSEDES 3550 3 (1-1-96)	SDG&E ELECTRIC STANDARDS INSTALLATION OF PAD-MOUNTED SWITCH & 3315 HANDHOLE 12KV, 600 AMP, THREE-PHASE	DATE 1-1-94 APPD JLB/BDB

FIELD MAINTENANCE ONLY

REVISION HISTORY:

7/13/2016: All versions prior to 2016 are superseded by their current version found inside the Overhead Construction Standard Manual.

TABLE OF CONTENTS

© 1998 - 2016 San Diego Gas & Electric Company. All rights reserved. Removal of this copyright notice without permission is not permitted under law.

REV	CHANGE	BY	DSGN	APPV	DATE	REV	CHANGE	BY	DSGN	APPV	DATE
C						F					
B						E					
A	ORIGINAL ISSUE	JS	IL	MDJ	7/13/2016	D					

X Indicates Latest Revision | Completely Revised | New Page | Information Removed

SHEET
1 OF 1

SDG&E ELECTRIC UNDERGROUND STANDARD

INSTALLATION OF PAD-MOUNTED SWITCH &
3316 HANDHOLE 12KV, 600 AMP, THREE-PHASE

FMO
UG 3551

TABLE OF CONTENTS

SCOPE: THIS STANDARD SHOWS THE INSTALLATION REQUIREMENTS FOR A PAD-MOUNTED 12KV, 600A SWITCH OVER A 3316 HANDHOLE.

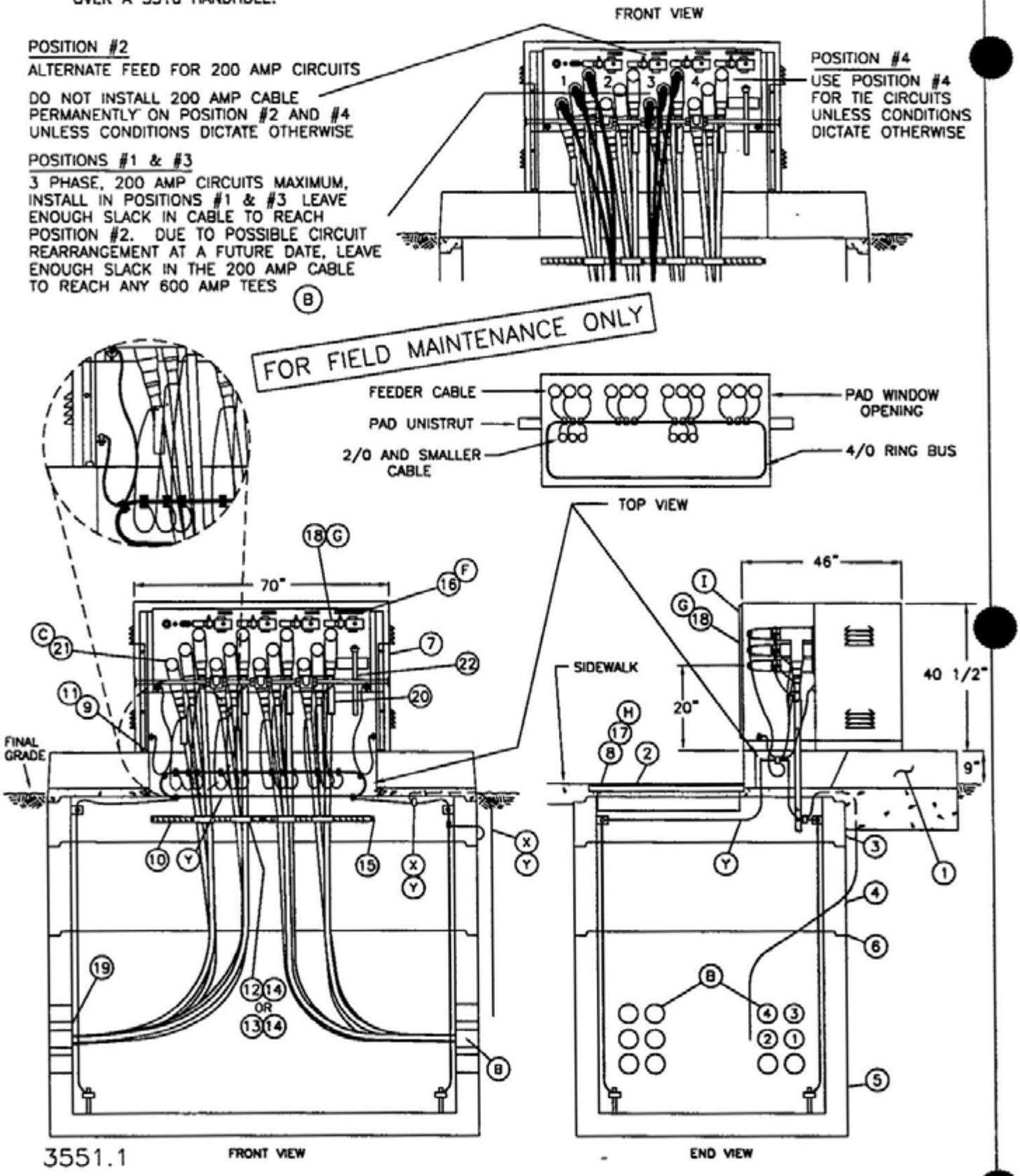

3599.506 SUPERSEDES 3551 1 (1-1-96)	SDG&E ELECTRIC STANDARDS INSTALLATION OF PAD-MOUNTED SWITCH & 3316 HANDHOLE 12KV, 600 AMP, THREE-PHASE	DATE 1-1-96 APPD JLB/RDG

NOTES:

- ALL 200 AMP CONNECTORS ON THE SWITCH MUST BE LOADBREAK

FOR FIELD MAINTENANCE ONLY

BILL OF MATERIAL:

ITEM	DESCRIPTION	QUANTITY	CONST STD OR PAGE NO	STOCK NUMBER	ASSEMBLY UNITS
1	3441 PAD SECTION	1	3441	513910	COMPLETE UNIT SWI/16
2	3441 COVER SECTION & REMOVABLE SUPPORT BARS	1	3441	286804	
3	3316 EXTENSION SECTION, 12"	1	3316	336208	
4	3316 EXTENSION SECTION, 24"	1	3316	248162	
5	3316 BASE ENCLOSURE 42"	1	3316	248160	
6	SEALANT, PLASTIC-MASTIC	AS REQ'D	3306	631872	
7	SWITCH, 4-WAY, 600A, 12KV	1	3549	708987	SW-P/G
8	BOLT, 1/2"X 1-1/2" PENTAHEAD, STAINLESS STEEL, W/ITEM 2	AS REQ'D	-	156004	-
9	NUT, 1/2" UNISTRUT SPRING	4	-	503520	-
10	HANGERS 30"	2	4178	564576	-
11	SCREW CAP, BRONZE, 1/2"X 1-1/2", 1 SQ. & 1 LOCK WASHER	4	-	616192, 799488	-
12	CABLE HOOKS 4"	AS REQ'D	4178	415110	-
13	CABLE HOOKS 6"	AS REQ'D	4178	415112	-
14	TIE STRAP	AS REQ'D	-	738440	-
15	ANCHOR, CONCRETE STAINLESS STEEL 1/2"X 3-3/4"	AS REQ'D	-	107654	-
16	DECALS	AS REQ'D	3212	-	-
17	SILICONE GREASE	AS REQ'D	-	391424	-
18	PADLOCK, SCHLAGE ELEC SERIES	AS REQ'D	-	514848	-
19	PROTECTOR, CABLE U G	AS REQ'D	-	558720	-
20	CABLE IDENTIFICATION TAGS	AS REQ'D	3202	-	-
21	12KV 200A AND 600A CONNECTORS	AS REQ'D	4181 18 -21	-	-
22	REMOVABLE OPERATING HANDLE	1	-	-	-
23	AUTOMATIC FAULT INDICATOR(S) (W)(AA)	AS REQ'D	4352	-	-

TABLE OF CONTENTS

SDG&E ELECTRIC STANDARDS

DATE 1-1-94
APPD JLB/BDG

INSTALLATION OF PAD-MOUNTED SWITCH AND 3316 HANDHOLE 12KV, 600 AMP, THREE-PHASE

3599.507
SUPERSEDES
3551 2 (1-1-96)

INSTALLATION

A SET THE SWITCH ON THE PAD AND BOLT IT DOWN TO THE UNISTRUT THE SWITCH HANDLES AND CABLE DOORS ARE NORMALLY INSTALLED FACING THE SIDEWALK OR STREET AN EIGHT FOOT MINIMUM CLEARANCE IS REQUIRED IN FRONT OF THE DOORS (SEE STANDARD 3483 3)

(B) ONLY TWO 200 AMP, 3Ø CIRCUITS ARE ALLOWED TO BE TERMINATED ONTO THE SWITCH DUE TO POSSIBLE CIRCUIT REARRANGEMENT AT A FUTURE DATE, LEAVE ENOUGH SLACK IN THE 200 AMP CABLE TO REACH ANY 600 AMP TEES. THE 600 AMP CABLE TERMINATED ONTO THE SWITCH MUST ENTER IN CONDUIT POSITIONS 1,2,3 OR 4 ON EITHER END OF THE HANDHOLE ALL FOUR 600 AMP CIRCUITS MAY COME FROM THE SAME DIRECTION THE 200 AMP CABLE MAY BE PULLED IN ANY CONDUIT NOT USED FOR 600 AMP CABLES SECONDARIES (500 KCMIL MAX) ARE ALLOWED IN THE HANDHOLE INSTALL CABLE BEING PULLED STRAIGHT THROUGH INTO THE BOTTOM CONDUITS WHEN CONDUITS ARE AVAILABLE INSTALL CABLES IN NUMERICAL SEQUENCE

(C) INSTALL CABLE AND CABLE SUPPORTS, GROUNDS, ETC IN THE HANDHOLE AND ON THE SWITCH AS SHOWN IN DRAWINGS DO NOT "PIGGYBACK" 600 AMP TEES ONE ON TOP OF THE OTHER AT ANY TIME ON THE SWITCH BUSHING.

D. A 22" X 72" UNOBSTRUCTED SPACE MUST BE MAINTAINED IN THE HANDHOLE

(F) INSTALL SWITCH IDENTIFICATION NUMBERS PER STANDARD 3212 AND CABLE I D TAGS PER STANDARD 3202.

(G) LOCK THE SWITCH OPERATING HANDLES AND THE SWITCH DOOR WITH SCHLAGE ELEC SERIES LOCK

(H) SECURE THE HANDHOLE COVERS WITH PENTAHEAD BOLTS AFTER HAVING APPLIED SILICONE GREASE TO REDUCE REMOVAL AND INSTALLATION DIFFICULTIES

FOR FIELD MAINTENANCE ONLY

REFERENCES:

(I) SEE STANDARD 3211 FOR ATTACHING STRUCTURE/EQUIPMENT TAG

J. SEE STANDARD 3441 FOR PAD AND HANDHOLE INSTALLATION

K. SEE STANDARD 3441 AND PAGE 3374 3 FOR CONDUIT PLACEMENT

L SEE STANDARD 3481 FOR BARRIERS IF THE SWITCH IS SUBJECT TO VEHICULAR TRAFFIC

M SEE STANDARD 3483 FOR MINIMUM OPERATING CLEARANCE REQUIREMENTS (PAD PLACEMENT)

N SEE STANDARD 3484 FOR PAD INSTALLATION OF PAD-MOUNTED EQUIPMENT.

O SEE STANDARD 3486 FOR RETAINING WALL REQUIREMENTS AND CLEARANCES FROM REVERSE SUBGRADE RETAINING WALLS

P SEE STANDARD 3487 FOR RETAINING WALLS

Q SEE STANDARD 3560 FOR EQUIPMENT GUIDELINES

R SEE STANDARD 3645 FOR UNOBSTRUCTED SPACE

S. SEE STANDARD 3646 FOR CABLE AND CONNECTOR PLACEMENT

T SEE STANDARD 3647 FOR EQUIPMENT DIMENSIONS AND PLACEMENT

U SEE STANDARD 3648 FOR EQUIPMENT ASSEMBLIES

V SEE PAGE 3649.10 FOR CORE BORING REQUIREMENTS

(W) SEE STANDARD 4355 FOR FAULT INDICATOR INSTALLATION

(X) SEE STANDARD 4512 FOR EQUIPMENT GROUNDING INSTALLATION

(Y) SEE STANDARD 4520 FOR GROUNDING PAD MOUNTED EQUIPMENT

Z SEE STANDARD 4550 FOR GROUNDING TELCO CONDUCTOR IN HANDHOLES.

(AA) SEE DESIGN STANDARD 6113 FOR AUTOMATIC FAULT INDICATOR APPLICATION

TABLE OF CONTENTS

3599.508 SUPERSEDES 3551 3 (1-1-96)	SDG&E ELECTRIC STANDARDS INSTALLATION OF PAD-MOUNTED SWITCH & 3316 HANDHOLE 12KV, 600 AMP, THREE-PHASE	DATE 1-1-94 APPD JLB/BDG

FIELD MAINTENANCE ONLY

REVISION HISTORY:

7/13/2016: All versions prior to 2016 are superseded by their current version found inside the Overhead Construction Standard Manual.

TABLE OF CONTENTS

© 1998 - 2016 San Diego Gas & Electric Company. All rights reserved. Removal of this copyright notice without permission is not permitted under law.

REV	CHANGE	BY	DSGN	APPV	DATE	REV	CHANGE	BY	DSGN	APPV	DATE
C						F					
B						E					
A	ORIGINAL ISSUE	JS	IL	MDJ	7/13/2016	D					

X Indicates Latest Revision | Completely Revised | New Page | Information Removed

SHEET
1 OF 1

SDG&E ELECTRIC UNDERGROUND STANDARD

REPLACEMENT CABINET FOR PAD-MOUNTED
ESCO OIL SWITCH

FMO
UG 3553

SCOPE: THIS STANDARD SHOWS THE REPLACEMENT CABINET AND INSTALLATION FOR REPLACING CORRODED ESCO PAD-MOUNTED OIL-SWITCH CABINETS.

WEIGHT 675#

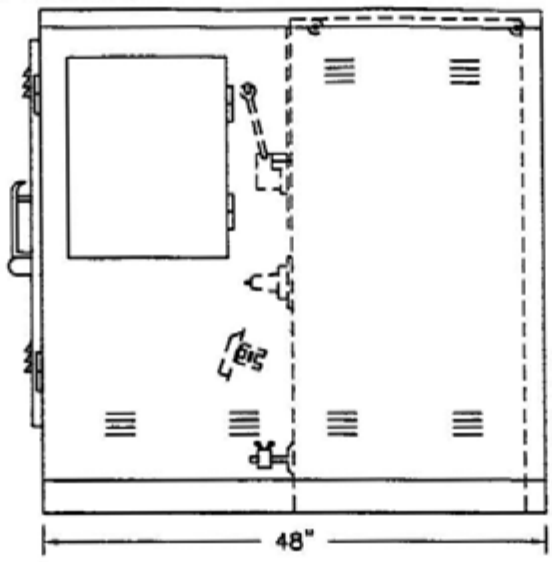

RETROFIT CABINET

STOCK NUMBER 334370
ASSEMBLY UNIT
SWICAB

SIDE

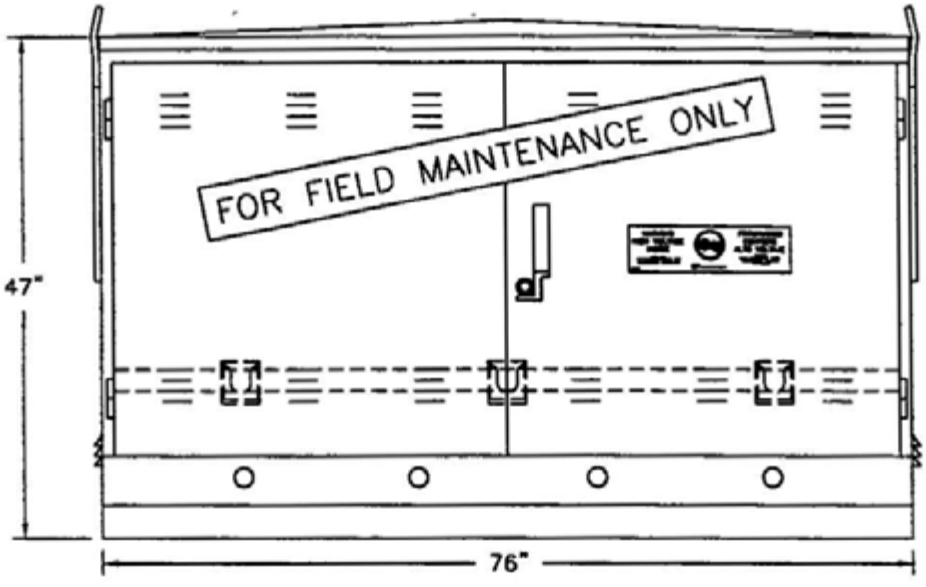

FRONT

CABINET REPLACEMENT PROCEDURE

NOTES:

- TO BE USED WHEN THE ESCO CABINET IS CORRODED BEYOND REPAIR, YET THE SWITCH TANK AND OIL ARE IN GOOD CONDITION.

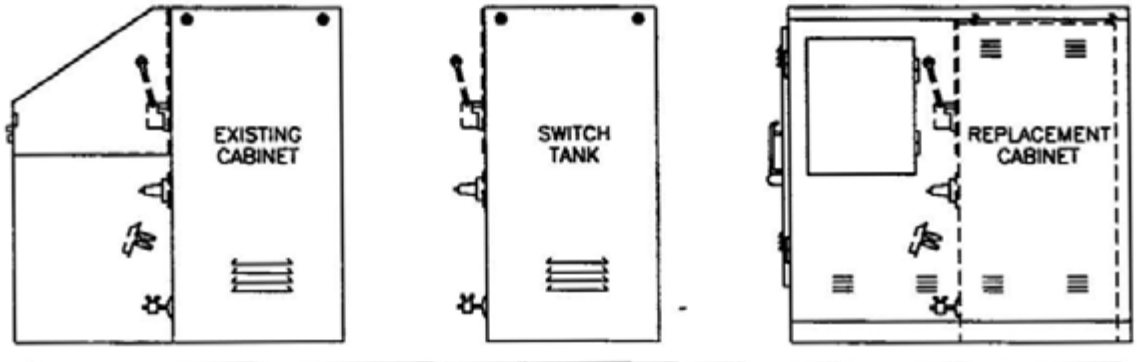

3599.509 SUPERSEDES 3553 1 (1-1-96)	SDG&E ELECTRIC STANDARDS REPLACEMENT CABINET FOR PAD-MOUNTED ESCO OIL SWITCH	DATE 1-1-94 APPD JLB/BDJ

TABLE OF CONTENTS

CABINET REPLACEMENT PROCEDURE



STEP 1

1 WITH DIE GRINDER CUT THROUGH HINGE PIN ACROSS THE TOP OF THE SWITCH & REMOVE THE FRONT PANEL OF THE SWITCH.

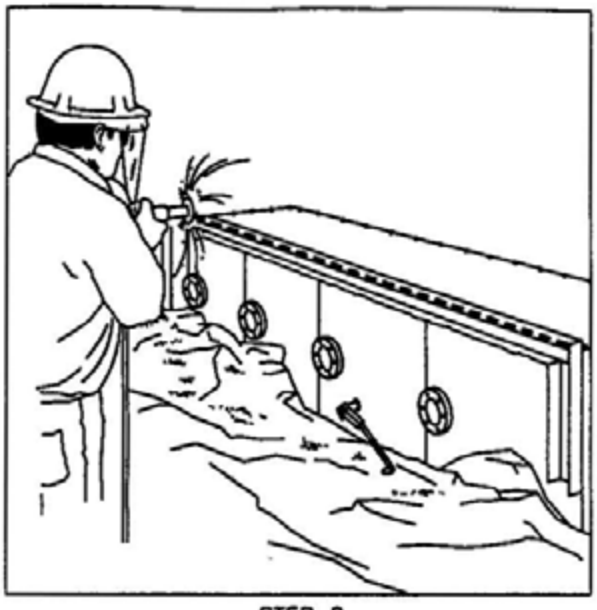

STEP 2

1 COVER TEES WITH CANVAS TO CATCH ANY LOOSE DEBRIS

2 WITH DIE GRINDER CUT OFF ANY BADLY RUSTED PORTIONS OF THE SWITCH. (WATER GUTTER IS BEING REMOVED IN THIS ILLUSTRATION)

FOR FIELD MAINTENANCE ONLY

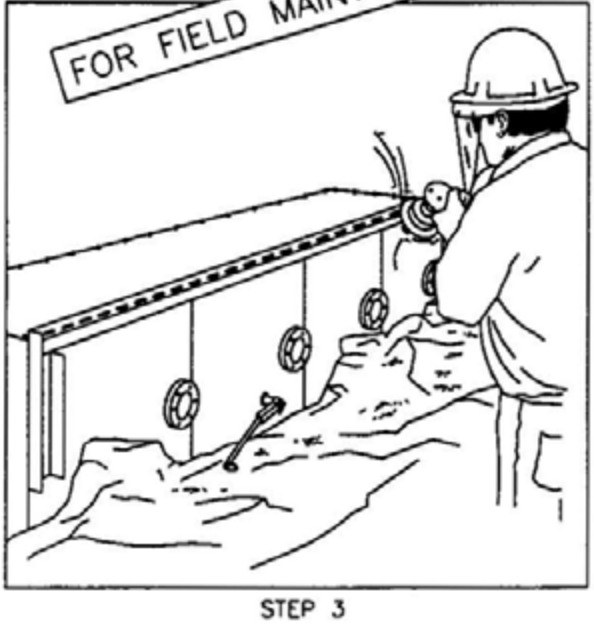

STEP 3

1 WITH WIRE BRUSH BODY GRINDER OR HAND WIRE BRUSH ETC REMOVE ALL RUST AND DIRT

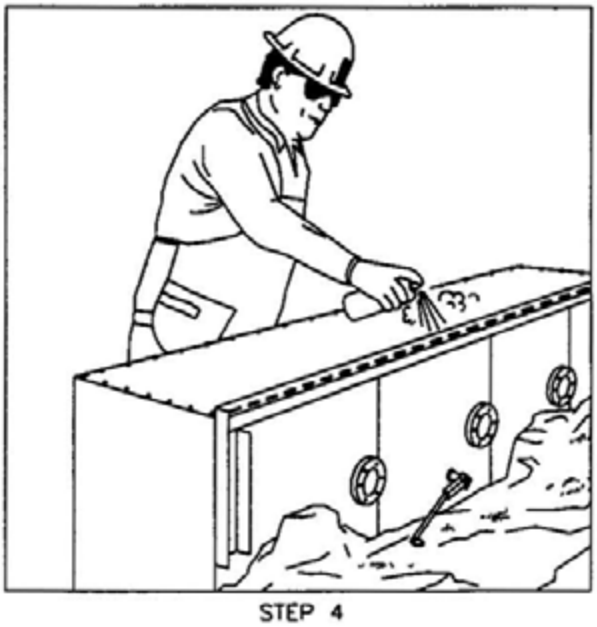

STEP 4

1 SPRAY 2 COATS OF RUST INHIBITOR PAINT ON ALL PREPARED AREAS

TABLE OF CONTENTS

DATE 1-1-94 APPD JJG/BSG	SDG&E ELECTRIC STANDARDS REPLACEMENT CABINET FOR PAD-MOUNTED ESCO OIL SWITCH	3599.510 SUPERSEDES 3553 2 (1-1-96)

TABLE OF CONTENTS

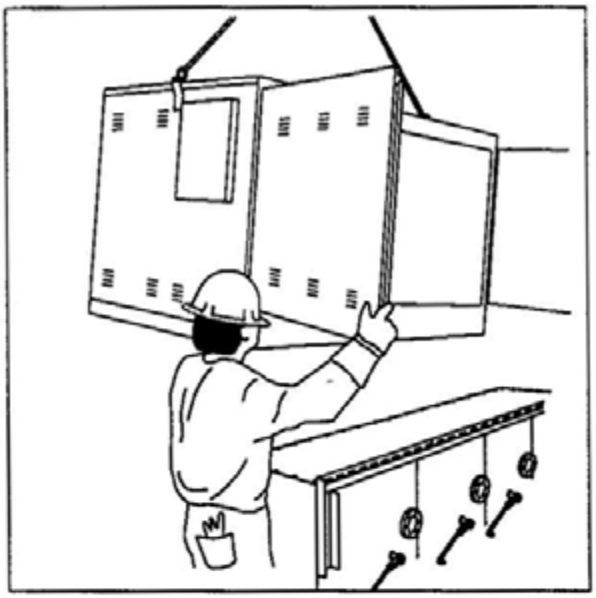

STEP 5

1 SET REPLACEMENT CABINET OVER EXISTING SWITCH

NOTE: THE NEW STAND-OFF BRACKET CHANNEL (ITEM 4 IN STEP 6) MUST BE SLID IN BEHIND THE LOADBREAK ELBOWS BEFORE THE CABINET IS LOWERED OVER THE SWITCH IF OLD BRACKET IS NOT RUSTED, LEAVE IT IN PLACE

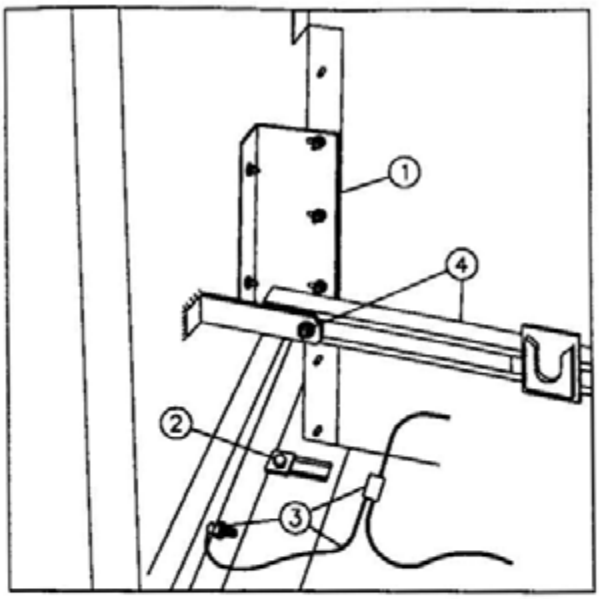

STEP 6

① BOLT THE CABINET TO THE SWITCH WITH THE BRACKET PROVIDED WITH THE CABINET

② SECURE CABINET TO PAD WITH SPRING NUT AND SQUARE WASHER ON BOTH SIDES OF PAD

③ WITH SERVICE POST CONNECTOR SN262560, #2 COPPER WIRE SN812816 AND COMPRESSION CONNECTOR SN257856 GROUND BOTH SIDES OF CABINET.

④ BOLT THE STAND-OFF BRACKET CHANNEL TO THE CABINET

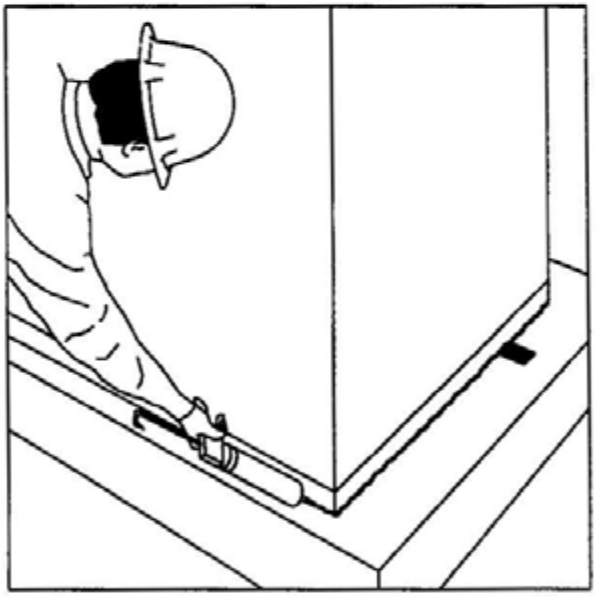

STEP 7

1 APPLY SEALANT SN631800 COMPLETELY AROUND CABINET NEXT TO CONCRETE PAD AND IN PAD UNISTRUT INSIDE AND OUSIDE THE CABINET.

FOR FIELD MAINTENANCE ONLY

3599.511 SUPERSEDES 3553 3 (1-1-96)	SDG&E ELECTRIC STANDARDS REPLACEMENT CABINET FOR PAD-MOUNTED ESCO OIL SWITCH	DATE 1-1-94 APPD JJGS/RDJ

FOR FIELD MAINTENANCE ONLY

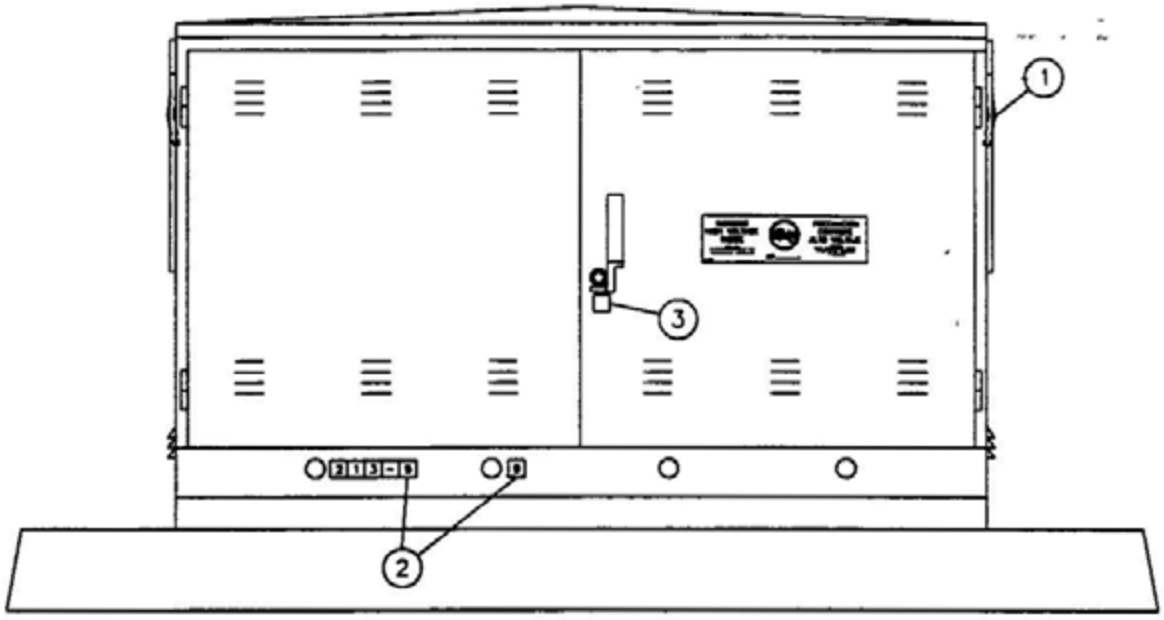

STEP 8

(1) TURN LIFTING EYES DOWNWARD

(2) TAG CABINET TO IDENTIFY FAULT INDICATORS AS SHOWN (SEE STD PG 3212.4)

(3) LOCK THE CABINET DOOR WITH A SCHLAGE ELEC SERIES LOCK (SN514848)

TABLE OF CONTENTS

DATE 1-1-94 APPD JJG/BDJ	SDG&E ELECTRIC STANDARDS REPLACEMENT CABINET FOR PAD-MOUNTED ESCO OIL SWITCH	3599.512 SUPERSEDES 3553 4 (1-1-96)

FIELD MAINTENANCE ONLY

REVISION HISTORY:

7/13/2016: All versions prior to 2016 are superseded by their current version found inside the Overhead Construction Standard Manual.

TABLE OF CONTENTS

© 1998 - 2016 San Diego Gas & Electric Company. All rights reserved. Removal of this copyright notice without permission is not permitted under law.

REV	CHANGE	BY	DSGN	APPV	DATE	REV	CHANGE	BY	DSGN	APPV	DATE
C						F					
B						E					
A	ORIGINAL ISSUE	JS	IL	MDJ	7/13/2016	D					

X Indicates Latest Revision | Completely Revised | New Page | Information Removed

SHEET
1 OF 1

SDG&E ELECTRIC UNDERGROUND STANDARD

PAD-MOUNTED AIR BREAK PMH 5
SECTIONALIZING SWITCH
12KV, 600 AMP, 3 PHASE

FMO
UG 3555

SCOPE: THIS STANDARD SHOWS A 12KV, 600 AMP AIR BREAK PMH 5 SECTIONALIZING SWITCH USED FOR ISOLATING A FAULT IN A CIRCUIT

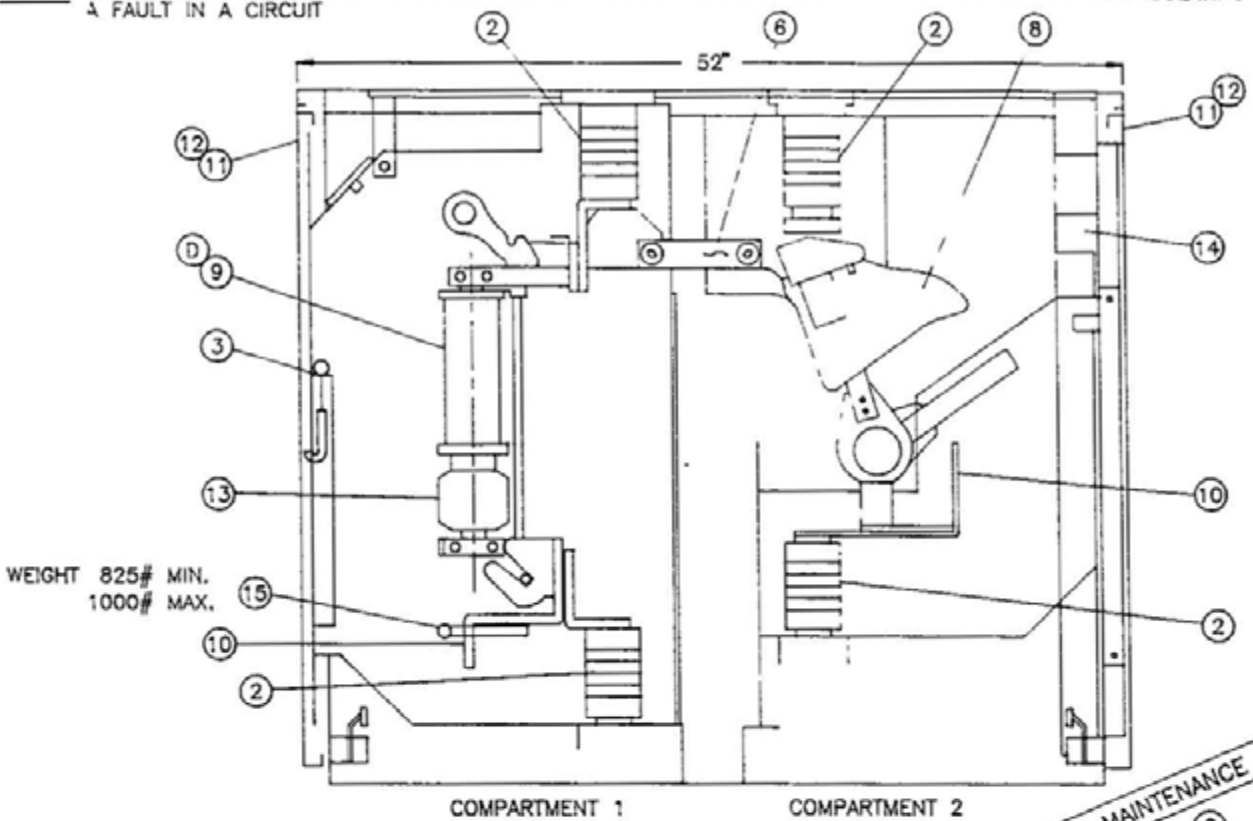

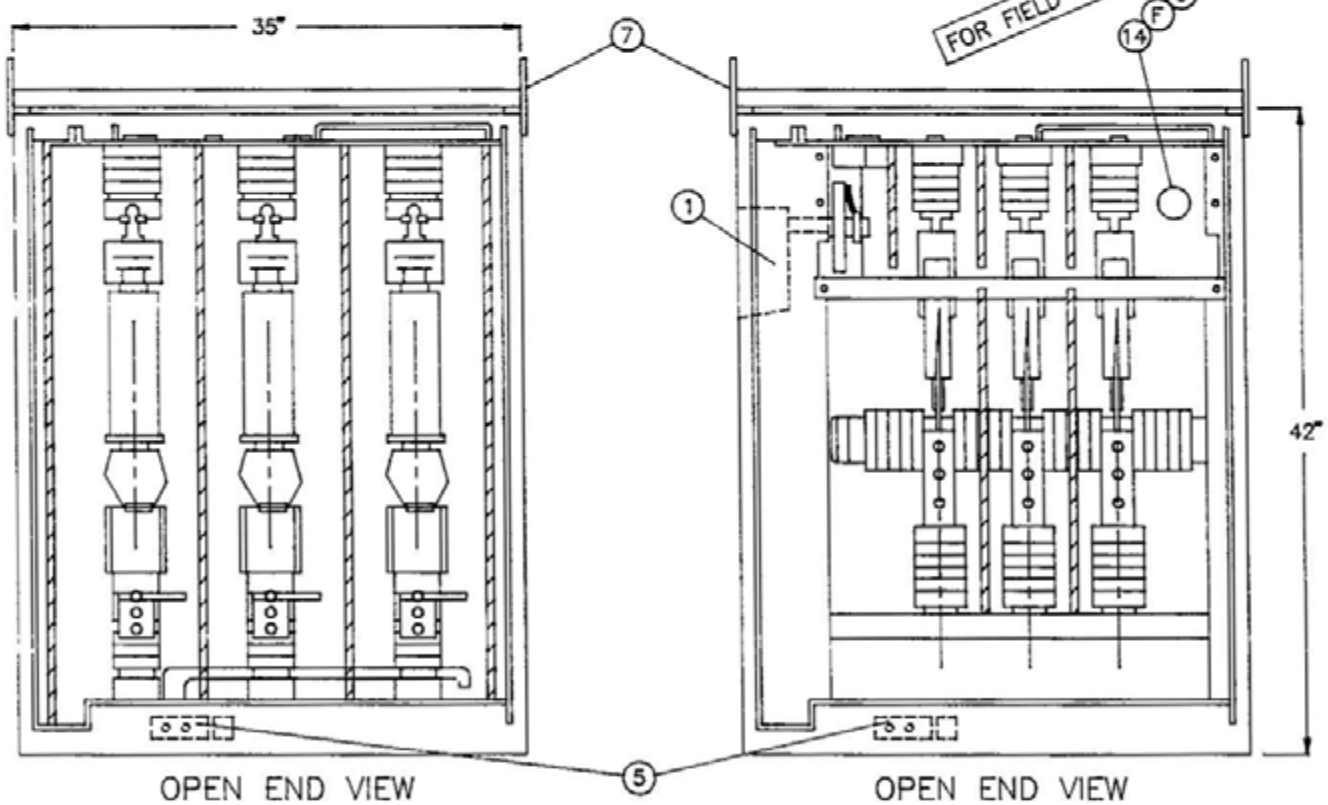

TABLE OF CONTENTS

Indicates Latest Revision	Completely Revised	X New Page	Information Removed

3599.501 SUPERCEDES 3555 1 (1-1-94)	SDG&E ELECTRIC STANDARDS PAD-MOUNTED AIR BREAK PMH 5 SECTIONALIZING SWITCH 12KV, 600 AMP, 3 PHASE	ISSUE 1994 DATE 1-1-94 APPD JLB/RBJ

ELECTRIC RATINGS	
VOLTAGE	15.5KV
B.I.L.	95KV
CURRENT, CONTINUOUS	600 AMP
LOADMAKE AND LOADBREAK	600 AMP
MOMENTARY AND FAULT CLOSE (RMS, ASYMMETRICAL) (RMS, SYMMETRICAL)	19,200 AMP 12,000 AMP

PMH 5

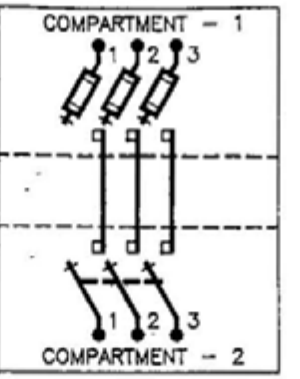

CONNECTION DIAGRAM:

FOR FIELD MAINTENANCE ONLY

PMH 5

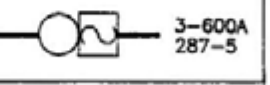

UNDERGROUND OPERATING MAP SYMBOL

SWITCH PARTS LIST

ITEM	DESCRIPTION	ITEM	DESCRIPTION
1	FOLDING SWITCH OPERATING HANDLE	9	•600 AMP FAULT–FITER ELECTRONIC FUSE (STOCK NO. 365800) (D)
2	BUSHING	10	CABLE ATTACHMENT PAD
3	FUSE HANDELING TOOL	11	SWITCH HANDLE LOCKING PROVISION
4	NAME PLATE (ON OUTSIDE OF DOOR)	12	PENTAHEAD BOLT LOCKING PROVISION
5	GROUNDING PLATE	13	ELECTRONIC CONTROL MODULE
6	600 AMP BUS	14	LEXAN FAULT INDICATOR VIEWING WINDOW
7	LIFTING TABS (REMOVE AFTER INSTALLATION AND REPLACE BOLTS, STORE INSIDE CABINET)	15	GROUNDING STUDS
8	600 AMP MINI–RUPTER SWITCH IN COMPARTMENT 2		

TABLE OF CONTENTS

NOTES:

• – PAD–MOUNTED SWITCH (STOCK NUMBER 709038) IS DELIVERED FROM THE SUPPLIER WITH ALL THE PARTS LISTED IN THE PARTS LIST INCLUDING FUSES

– SWITCH NUMBERS ARE TO BE ISSUED BY THE ENGINEERING CLERK IN THE DISTRIBUTION FACILITIES INFORMATION SECTION.

REFERENCE:

A. SEE STANDARD 3212 2 FOR SWITCH IDENTIFICATION

B SEE STANDARD 3440 OR 3441 FOR PAD AND HANDHOLE INSTALLATION FOR PAD–MOUNTED 600 AMP, 12 KV SWITCH

C SEE STANDARDS 3556 OR 3557 FOR SWITCH INSTALLATION

(D) SEE STANDARD 4302 FOR FUSE APPLICATION GUIDE

(F) SEE STANDARD 4355 FOR FAULT INDICATOR INSTALLATION

(G) SEE DESIGN STANDARD 6113 FOR AUTOMATIC FAULT INDICATOR APPLICATION

Indicates Latest Revision	Completely Revised	X	New Page	Information Removed

ISSUE 1994
DATE *–1–94
APPD YZB/RJG

SDG&E ELECTRIC STANDARDS

PAD–MOUNTED AIR BREAK PMH 5
SECTIONALIZING SWITCH
12KV, 600 AMP, 3 PHASE

3599.502
SUPERCEDES
3555 2 (*–1–94)

FIELD MAINTENANCE ONLY

REVISION HISTORY:

7/13/2016: All versions prior to 2016 are superseded by their current version found inside the Overhead Construction Standard Manual.

TABLE OF CONTENTS

© 1998 - 2016 San Diego Gas & Electric Company. All rights reserved. Removal of this copyright notice without permission is not permitted under law.

REV	CHANGE	BY	DSGN	APPV	DATE	REV	CHANGE	BY	DSGN	APPV	DATE
C						F					
B						E					
A	ORIGINAL ISSUE	JS	IL	MDJ	7/13/2016	D					

X Indicates Latest Revision | Completely Revised | New Page | Information Removed

SHEET
1 OF 1

SDG&E ELECTRIC UNDERGROUND STANDARD

EQUIPMENT COMBINATION GUIDELINES -
3316 HANDHOLE AND PAD-MOUNTED SWITCH

FMO
UG 3560

SCOPE: THIS STANDARD SHOWS THE MAXIMUM EQUIPMENT COMBINATION THAT CAN BE UTILIZED IN A 3316 SUBSTRUCTURE (HANDHOLE) UNDER A PAD-MOUNTED SWITCH

NOTES:

- FIND THE COMBINATION THAT REPRESENTS THE INSTALLATION, THEN CHECK THE LEGEND BELOW FOR SYMBOLS & REFERENCES COINCIDING TO THE FOLLOWING EQUIPMENT ASSEMBLY OR CABLE HANGER STANDARDS PAGES
- ONLY INSTALL THE THREE TEE COMBINATIONS SHOWN IN THESE STANDARDS TO FEED A SWITCHED TIE POSITION.

LEGEND

	TOP VIEW	FRONT VIEW	SIDE VIEW	DESCRIPTION	CONSTRUCTION STANDARD
200 AMP				DEADBREAK STRAIGHT SPLICE	4196 3
		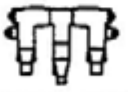		DEADBREAK ELBOW TEE	4196 1 & 4196 3
600 AMP	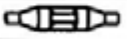			600 AMP EXTENSION SPLICE	4185
	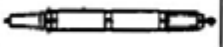	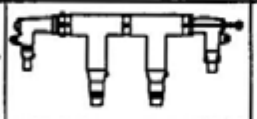		600 AMP TEES WITH LOADBREAK ELBOWS OR 200 AMP RECEP-RACLES, ALSO WITH OR WITHOUT DEADBREAK ELBOWS	4182 1
	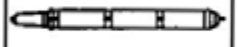	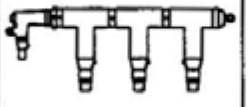		600 AMP TEES WITH LOADBREAK ELBOWS OR 200 AMP INSULATING RECEPTACLES, ALSO WITHOUT DEADBREAK ELBOWS	4182 1
200 & 600 AMP	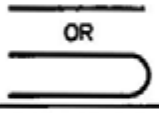 OR			SECONDARY OR PRIMARY CABLE PULLED STRAIGHT THROUGH WITHOUT ANY SPLICES	---
600 VOLT		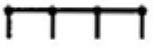	---	600 VOLT SECONDARY CONNECTOR	4173 1- 3
	---	---	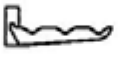	ADAPTER AND 2, 3, OR 4 WAY CABLE ARMS	4178
	---	---	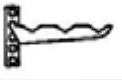	HANGER AND 2, 3 OR 4 WAY CABLE ARMS	4178
	---	---		HANGER AND SMALL CABLE HOOK	4178
	---	---		HANGER AND LARGE CABLE HOOK	4178
	---	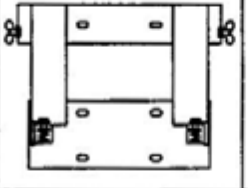	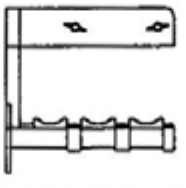	TEE BRACKET	4178
	---	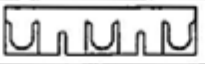	---	STAND OFF BAR	4178
	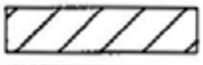	---	---	PAD-MOUNTED SWITCH AREA	3560 2- 4

FOR FIELD MAINTENANCE ONLY

TABLE OF CONTENTS

DATE 1-1-96 APPD	SDG&E ELECTRIC STANDARDS EQUIPMENT COMBINATION GUIDELINES - 3316 HANDHOLE AND PAD-MOUNTED SWITCH	3599.611 SUPERSEDES 3560 1 (1-1-96)

NOTES:

- THE COMBINATIONS SHOWN IN THIS STANDARD ARE ALLOWED IN ADDITION TO THE CABLE TERMINATED ONTO THE SWITCH
- THE ALLOWED INSTALLATIONS SHOWN ARE TYPICAL. OTHER CONFIGURATIONS MAY BE DESIGNED PROVIDED EQUIPMENT LIMITATIONS AND THE UNOBSTRUCTED SPACE REQUIREMENT IS PROVIDED TO ALLOW PERSONNEL TO PERFORM WORK SAFELY AND ALLOW ACCESS INTO THE HANDHOLE AND TO THE CONDUITS
- #2 OR 2/0 PRIMARY CABLES OR SECONDARY (500 KCMIL MAX) MAY BE PULLED IN ANY CONDUIT -- NOT USED FOR LARGER CABLES
- CABLE PULLED STRAIGHT THROUGH SHOULD BE PULLED INTO BOTTOM CONDUITS WHEN CONDUITS ARE AVAILABLE.
- THE NOT ALLOWED EQUIPMENT COMBINATION GUIDELINES SHOWN ARE DUE TO
  - A) NOT ENOUGH ROOM TO ALLOW PROPER CABLE BENDING RADIUS
  - B) NOT ENOUGH "UNOBSTRUCTED SPACE" OR "CLEAR PERSONNEL ACCESS OPENING"
  - C) TOO MANY CABLES TO ALLOW PROPER CABLE TRAINING
  - D) MORE CABLES THAN CABLE KNOCKOUTS PROVIDED
- DRAWINGS ARE NOT TO SCALE

FOR FIELD MAINTENANCE ONLY

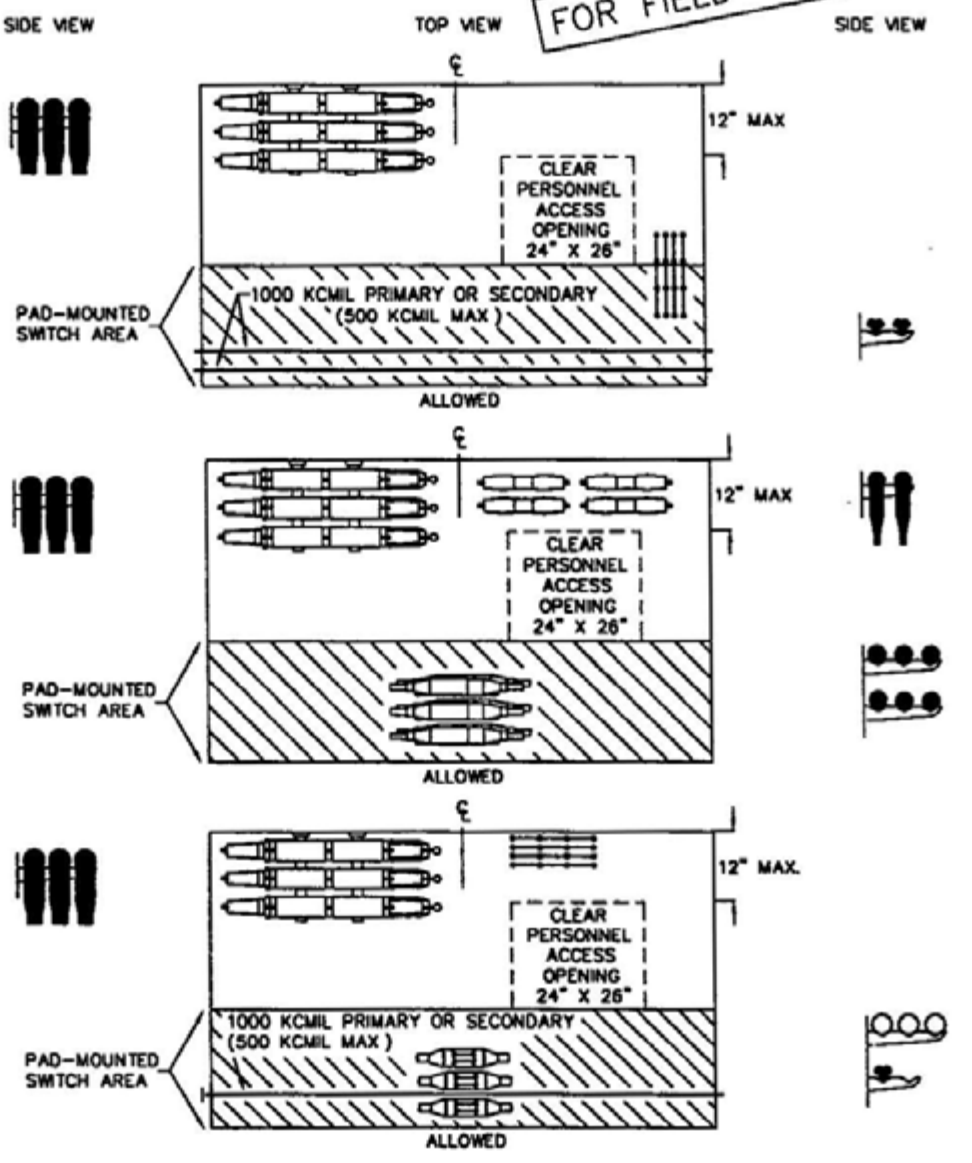

3316 HANDHOLE AND PAD-MOUNTED SWITCH

FOR ALL SIZES OF PRIMARY CABLES AND UP TO 500KCMIL SECONDARY CABLES MAXIMUM

3599.612 SUPERSEDES 3560.2 (1-1-96)	SDG&E ELECTRIC STANDARDS EQUIPMENT COMBINATION GUIDELINES– 3316 HANDHOLE AND PAD-MOUNTED SWITCH	DATE 1-1-96 APPD

TABLE OF CONTENTS

TABLE OF CONTENTS

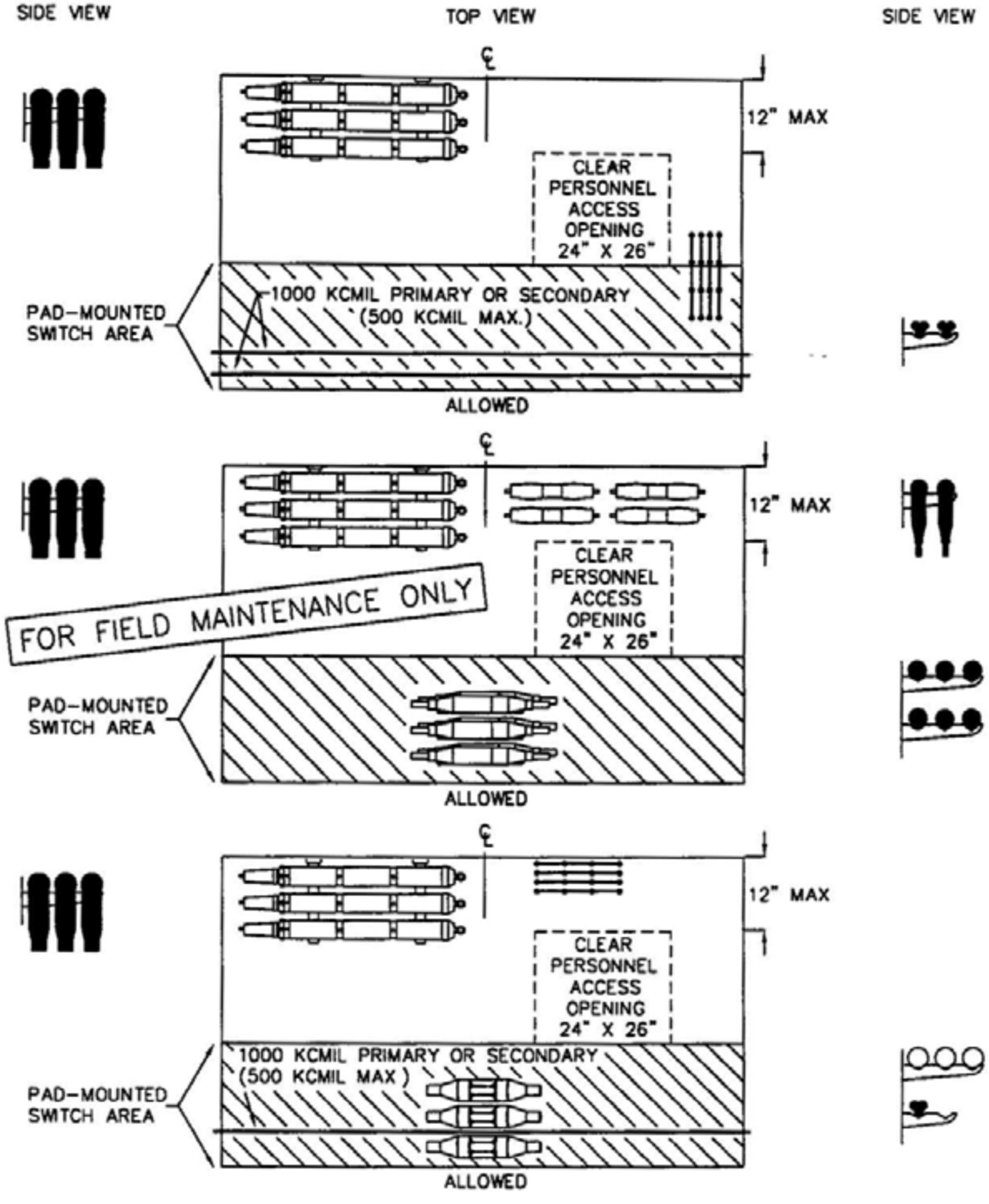

3316 HANDHOLE AND PAD-MOUNTED SWITCH

FOR ALL SIZES OF PRIMARY CABLES AND UP TO 500KCMIL SECONDARY CABLES MAXIMUM

DATE 1-1-96 APPD	SDG&E ELECTRIC STANDARDS EQUIPMENT COMBINATION GUIDELINES- 3316 HANDHOLE AND PAD-MOUNTED SWITCH	3599.613 SUPERSEDES 3560 3 (1-1-96)

TABLE OF CONTENTS

SIDE VIEW TOP VIEW SIDE VIEW

MAY USE SIDE RECESSES OR KNOCKOUTS

FOR CONDUITS ENTERING SIDE WALLS,
NO CORE BORING IS REQUIRED

PRIMARY (350 KCMIL MAX)
OR
SECONDARY (500 KCMIL MAX)

DO NOT CORE BORE HANDHOLE ENDS.

FOR FIELD MAINTENANCE ONLY

ALLOWED

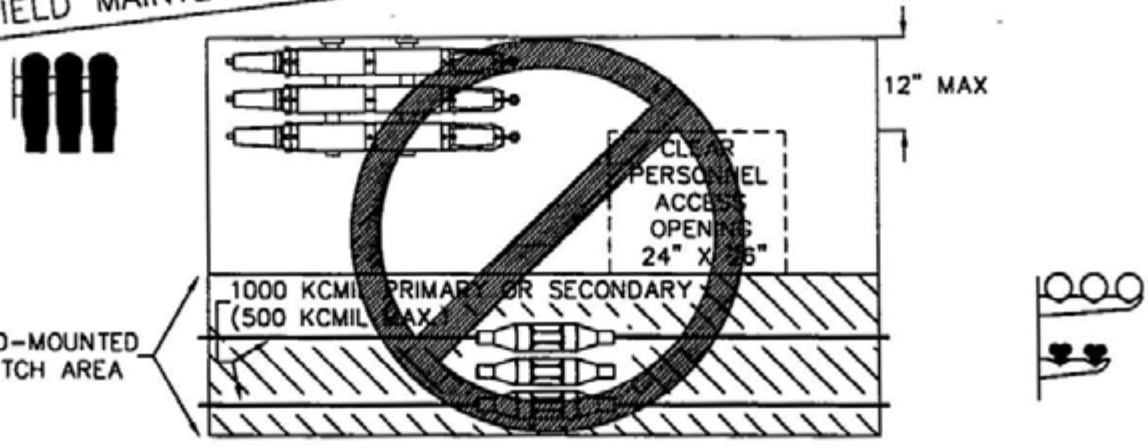

NOT ALLOWED

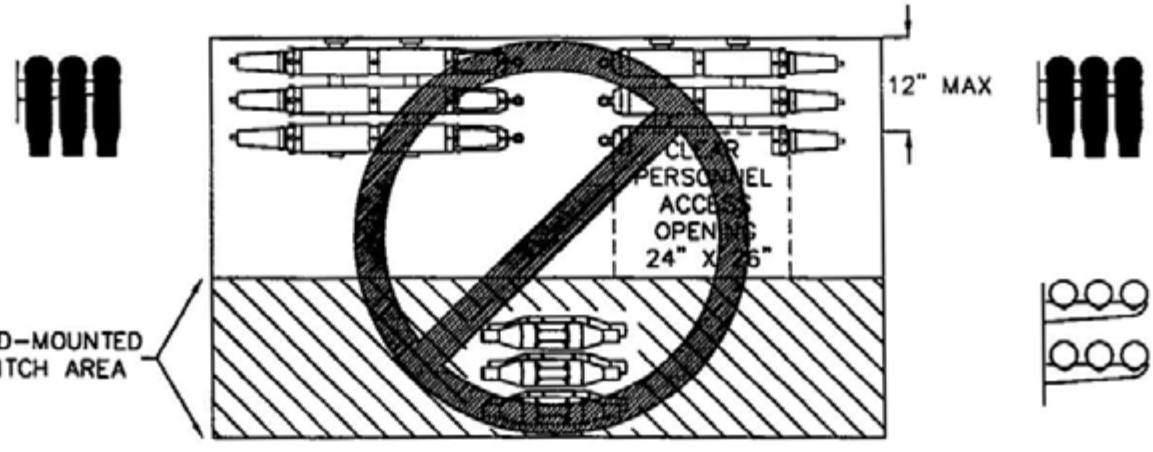

NOT ALLOWED

3316 HANDHOLE AND PAD-MOUNTED SWITCH

FOR ALL SIZES OF PRIMARY CABLES AND UP TO 500KCMIL SECONDARY CABLES MAXIMUM

3599.614 SUPERSEDES 3560 4 (1-1-96)	SDG&E ELECTRIC STANDARDS EQUIPMENT COMBINATION GUIDELINES- 3316 HANDHOLE AND PAD-MOUNTED SWITCH	DATE 1-1-96 APPD

TABLE OF CONTENTS

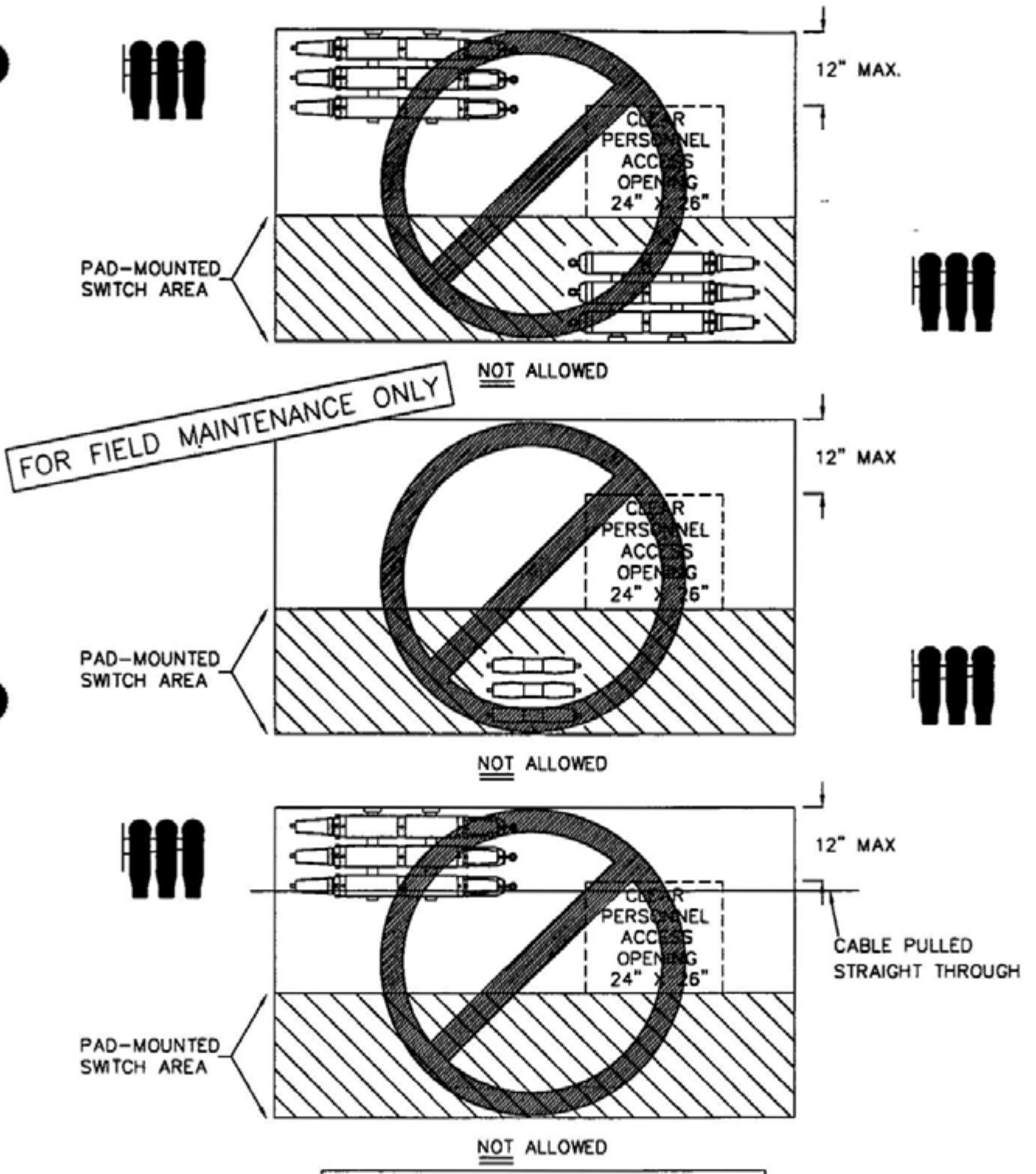

3316 HANDHOLE AND PAD-MOUNTED SWITCH

FOR ALL SIZES OF PRIMARY CABLES AND UP TO 500KCMIL SECONDARY CABLES MAXIMUM

DATE 1-1-96 APPD	SDG&E ELECTRIC STANDARDS EQUIPMENT COMBINATION GUIDELINES– 3316 HANDHOLE AND PAD-MOUNTED SWITCH	3599.615 SUPERSEDES 3560 5 (1-1-96)

FIELD MAINTENANCE ONLY

REVISION HISTORY:

7/13/2016: All versions prior to 2016 are superseded by their current version found inside the Overhead Construction Standard Manual.

TABLE OF CONTENTS

© 1998 - 2016 San Diego Gas & Electric Company. All rights reserved. Removal of this copyright notice without permission is not permitted under law.

REV	CHANGE	BY	DSGN	APPV	DATE	REV	CHANGE	BY	DSGN	APPV	DATE
C						F					
B						E					
A	ORIGINAL ISSUE	JS	IL	MDJ	7/13/2016	D					

X Indicates Latest Revision | Completely Revised | New Page | Information Removed

SHEET
1 OF 1

SDG&E ELECTRIC UNDERGROUND STANDARD

PAD-MOUNTED AIR BREAK PMH 9 & 11
FUSE/SECTIONALIZING SWITCH
12KV, 600 AMPS, THREE-PHASE

FMO
UG 3565

SCOPE: THIS STANDARD SHOWS A 12KV, 600 AMP AIR BREAK PMH 9 & 11 FUSE/SECTIONALIZING SWITCH USED FOR PAD-MOUNTED APPLICATIONS.

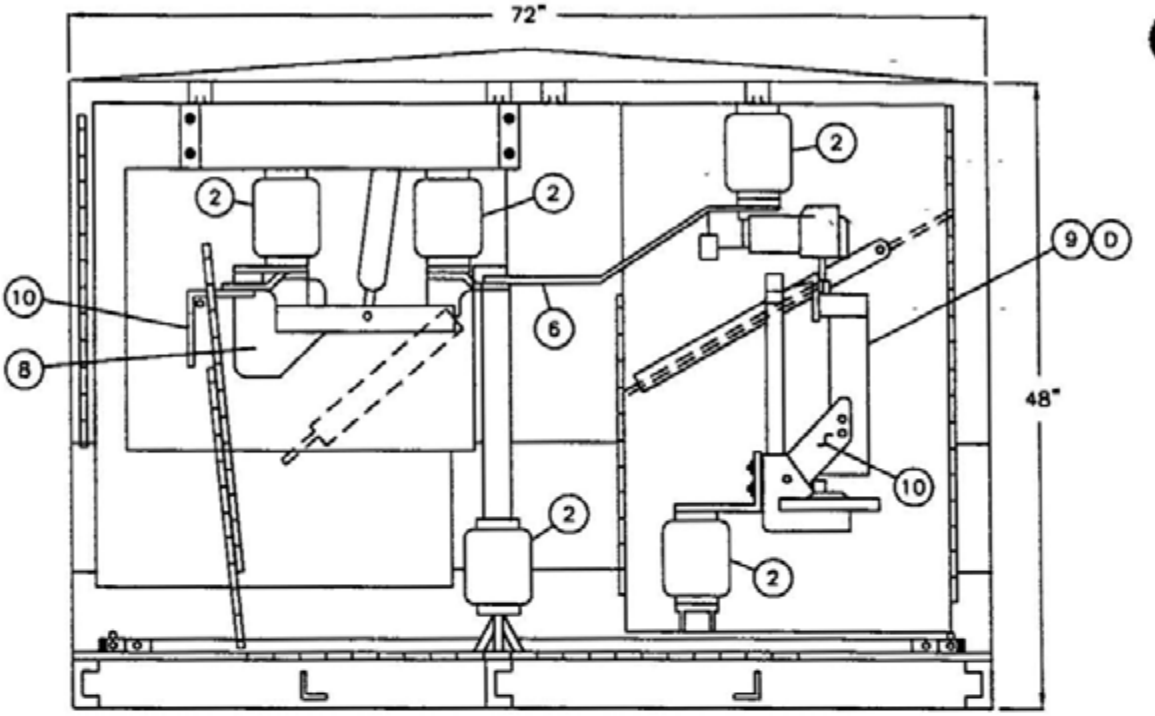

SIDE VIEW

WEIGHT:

SCOTT PMH 9 - 2245 #MAX
PMH 11 - 2355 #MAX

S&C PMH 9 - 1550 #MAX
PMH 11 - 1625 #MAX

FOR FIELD MAINTENANCE ONLY

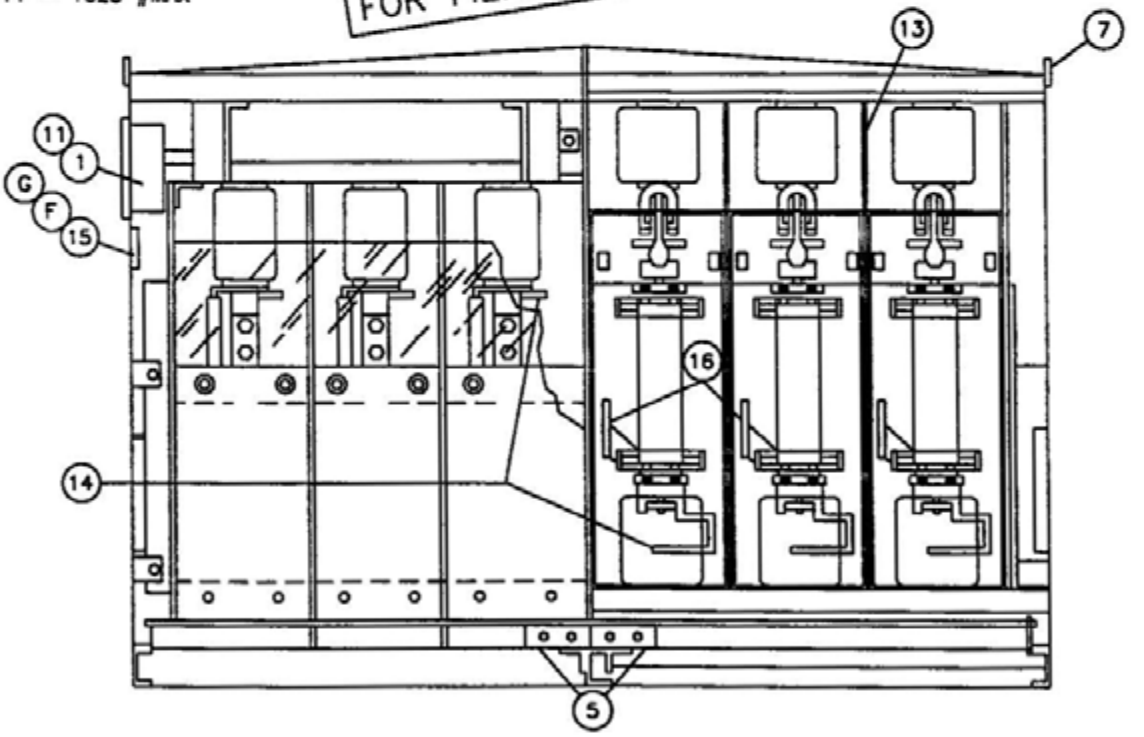

OPEN FRONT VIEW

3599.605 SUPERSEDES 3565 1 (1-1-96)	SDG&E ELECTRIC STANDARDS PAD-MOUNTED AIR BREAK PMH 9 & 11 FUSE /SECTIONALIZING SWITCH 12KV, 600 AMPS, THREE-PHASE	DATE 1-1-96 APPD

TABLE OF CONTENTS

ELECTRIC RATINGS	
VOLTAGE	15 5
B I.L	95
CURRENT, CONTINUOUS (GANG OPERATED)	600 AMP
LOADMAKE AND LOADBREAK (GANG OPERATED)	600 AMP
MOMENTARY AND FAULT CLOSE (RMS, ASYMMETRICAL) (RMS, SYMMETRICAL)	19,200 AMP 12,000 AMP

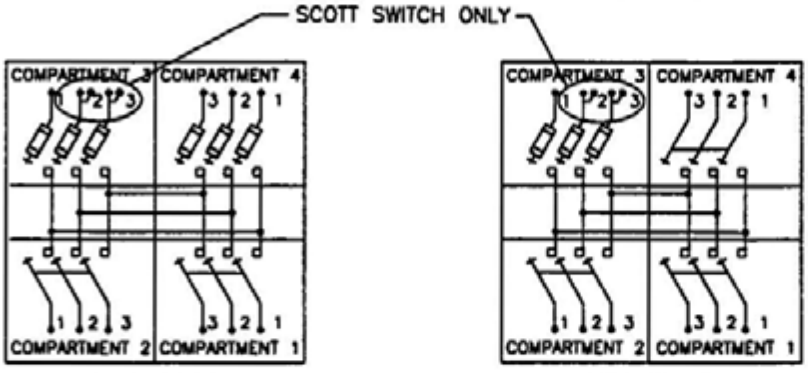

PMHSML 9 PMHSML 11

CONNECTION DIAGRAM

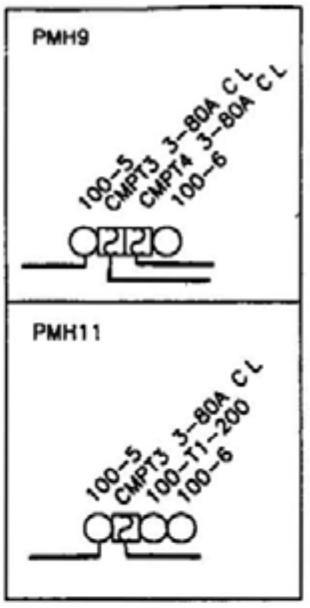

UNDERGROUND OPERATING MAP SYMBOLS

SWITCH PARTS LIST

ITEM	DESCRIPTION	ITEM	DESCRIPTION
1	FOLDING SWITCH OPERATING HANDLE	9	STANDARD 4302
2	BUSHING	10	CABLE ATTACHMENT PAD
3	FUSE HANDLING TOOL (NOT SHOWN)	11	SWITCH HANDLE LOCKING PROVISION
4	NAME PLATE (ON INSIDE OF DOOR)	12	PENTAHEAD BOLT LOCKING PROVISION (NOT SHOWN)
5	GROUNDING PLATE	13	INSULATING BARRIERS
6	600 AMP BUS	14	GROUND STUD
7	LIFTING TABS (REMOVE AFTER INSTALLATION AND REPLACE BOLTS, STORE INSIDE CABINET)	15	LEXAN FAULT INDICATOR VIEWING WINDOW
8	600 AMP MINI-RUPTER SWITCH	16	SINGLE-PHASE LANDING PLATES (SCOTT SWITCH ONLY)

NOTES:

- PAD-MOUNTED SWITCH (STOCK NUMBERS PMH 9 #709040, PMH 11 #709042) ARE DELIVERED FROM THE SUPPLIER WITH ALL THE PARTS LISTED IN THE PARTS LIST EXCEPT FUSES
- SWITCH NUMBERS ARE TO BE ISSUED BY THE ENGINEERING CLERK IN THE DISTRIBUTION FACILITIES INFORMATION SECTION

REFERENCE:

A SEE STANDARD 3212 2 FOR SWITCH IDENTIFICATION

B SEE STANDARD 3419 FOR PAD, HANDHOLE AND CONDUIT PLACEMENT

C SEE STANDARD 3566 FOR SWITCH INSTALLATION

(D) SEE STANDARD 4302 FOR FUSE APPLICATION GUIDE

(F) SEE STANDARD 4355 FOR FAULT INDICATOR INSTALLATION

(G) SEE DESIGN STANDARD 6113 FOR AUTOMATIC FAULT INDICATOR APPLICATION

FOR FIELD MAINTENANCE ONLY

TABLE OF CONTENTS

DATE 1-1-96
APPD

SDG&E ELECTRIC STANDARDS

PAD-MOUNTED AIR BREAK PMH 9 & 11
FUSE /SECTIONALIZING SWITCH
12KV, 600 AMPS, THREE-PHASE

3599.606
SUPERSEDES
3565 2 (1-1-96)

FIELD MAINTENANCE ONLY

REVISION HISTORY:

7/13/2016: All versions prior to 2016 are superseded by their current version found inside the Overhead Construction Standard Manual.

TABLE OF CONTENTS

© 1998 - 2016 San Diego Gas & Electric Company. All rights reserved. Removal of this copyright notice without permission is not permitted under law.

REV	CHANGE	BY	DSGN	APPV	DATE	REV	CHANGE	BY	DSGN	APPV	DATE
C						F					
B						E					
A	ORIGINAL ISSUE	JS	IL	MDJ	7/13/2016	D					

X Indicates Latest Revision | Completely Revised | New Page | Information Removed

SHEET
1 OF 1

SDG&E ELECTRIC UNDERGROUND STANDARD

INSTALLATION OF PAD-MOUNTED PMH 9 & 11
FUSE/SECTIONALIZING SWITCH CABINET, 12KV, 600 AMP,
THREE-PHASE

FMO
UG 3566

SCOPE: THIS STANDARD SHOWS THE INSTALLATION FOR PAD-MOUNTED 12KV, 600 AMP AIR BREAK PMH 9 & 11 FUSE/SECTIONALIZING SWITCH

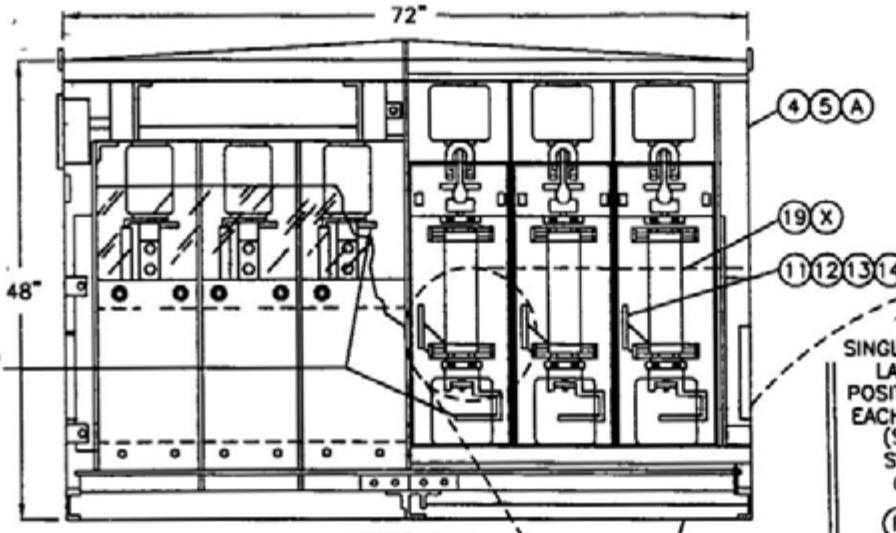

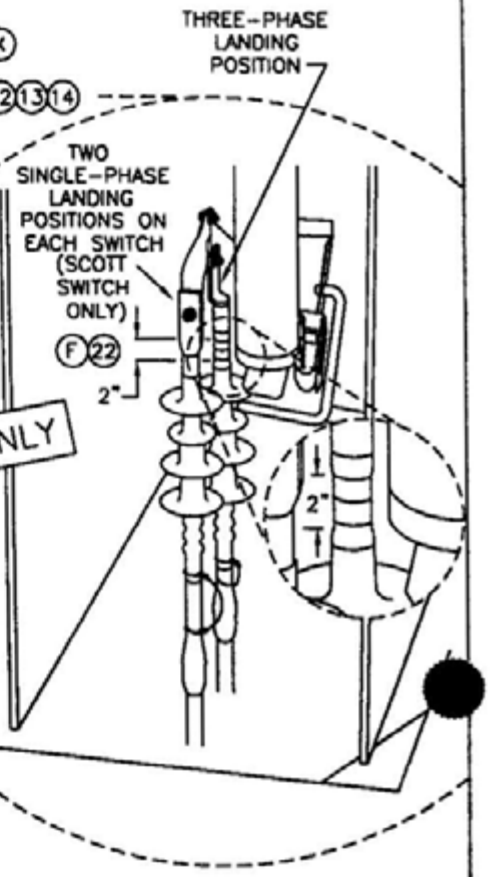

FOR FIELD MAINTENANCE ONLY

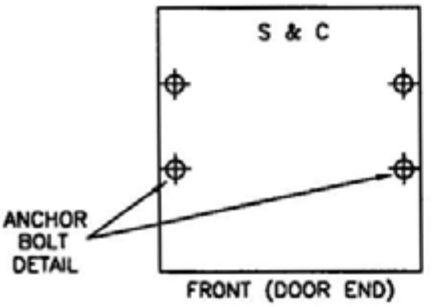

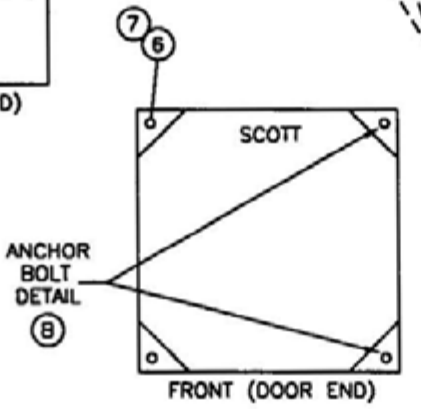

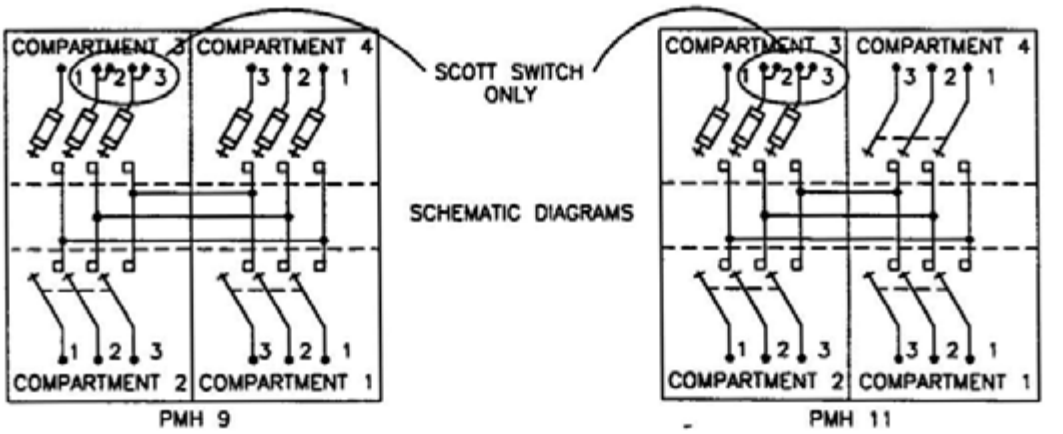

3599.607 SUPERSEDES 3566 1 (1-1-96)	SDG&E ELECTRIC STANDARDS INSTALLATION OF PAD-MOUNTED PMH 9 & 11 FUSE/SECTIONALIZING SWITCH CABINET, 12KV, 600 AMP, THREE-PHASE	DATE 1-1-96 APPD

TABLE OF CONTENTS

TABLE OF CONTENTS

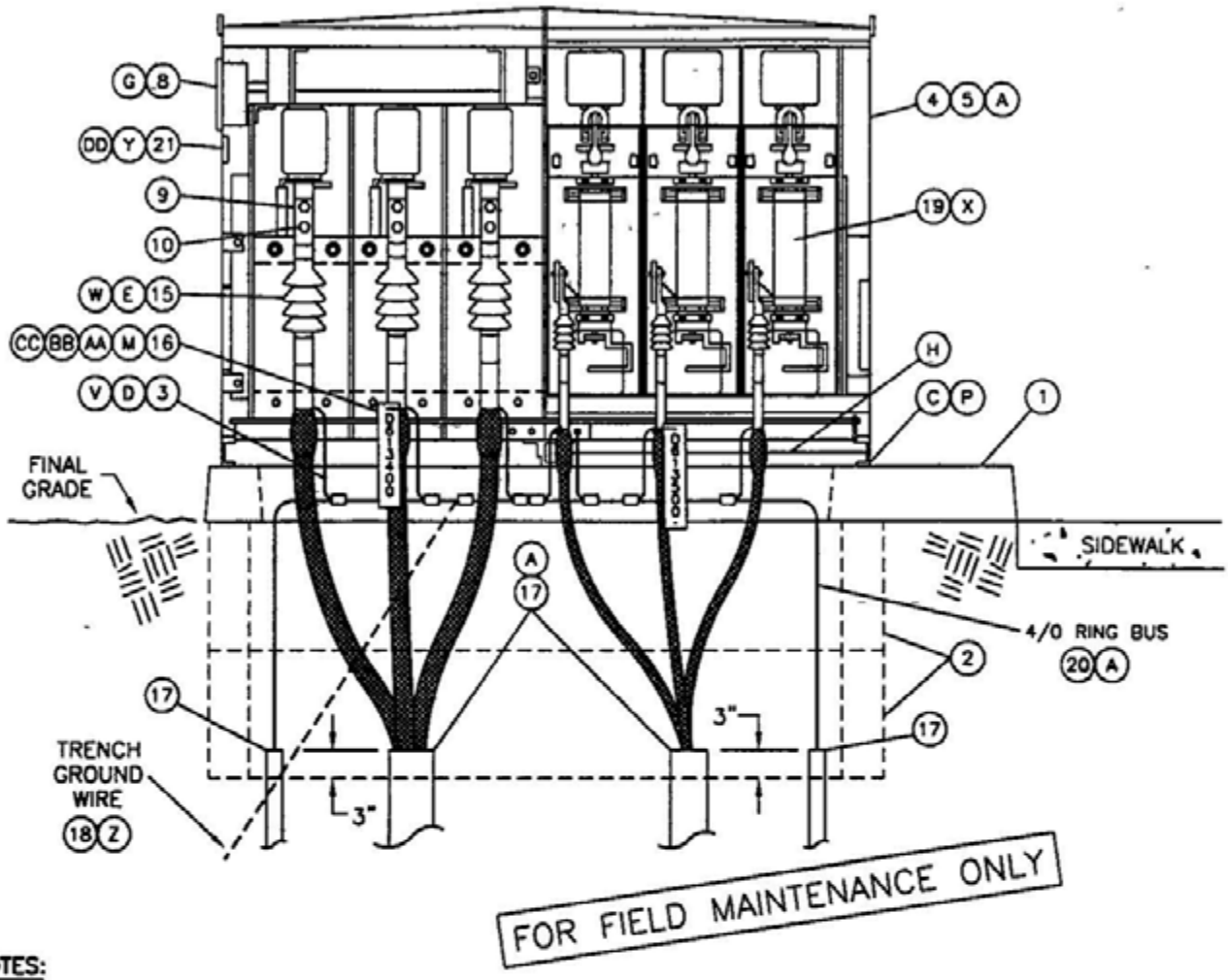

NOTES:

- PMH SWITCH/FUSE CABINETS CONTAIN AT LEAST TWO 600 AMP EXTERNAL HANDLES, GANG-OPERATED, THREE-PHASE INTERRUPTER. IN ADDITION TO THE INTERRUPTER(S), THERE MAY BE ONE OR MORE SETS OF THREE 200 AMP, SINGLE PHASE HOOKSTICK OPERATED FUSES.
- PMH SWITCH MAY BE USED AS A TIE SWITCH

DATE 1-1-96 APPD	SDG&E ELECTRIC STANDARDS INSTALLATION OF PAD-MOUNTED PMH 9 & 11 FUSE/SECTIONALIZING SWITCH CABINET, 12KV, 600 AMP, THREE-PHASE	3599.608 SUPERSEDES 3566 2 (1-1-96)

BILL OF MATERIAL:

ITEM	DESCRIPTION	QUANTITY	CONST STD OR PAGE NO	STOCK NUMBER	ASSEMBLY UNITS	
1	PMH 9 & 11 PAD	1	3419 1	514024	–	3419
2	3311 HANDHOLE, 14" X 66" X 14"	4	3311	162660	–	
3	GROUNDING EQUIPMENT (V)(D)	AS REQ'D	3520	–	–	
4	SWITCH, AIR BREAK FUSE/SECTIONALIZING, 600A, 12KV (PMH 9)	AS REQ'D	3655	709040	PMH-09	
5	SWITCH, AIR BREAK FUSE/SECTIONALIZING, 600A, 12KV (PMH 11)	AS REQ'D	3655	709042	PMH-11	
6	ANCHOR, CONCRETE STAINLESS STEEL 1/2"X 3-3/4" (A)	AS REQ'D	–	107654	–	
7	HOLD DOWN (SUPPLIED WITH CABINET)	4	–	–	–	
8	PADLOCK, SCHLAGE ELEC SERIES (G)	AS REQ'D	–	514848	–	
9	COMPRESSION TERMINALS	AS REQ'D	4121	–	–	
10	BOLT 1/2" X 2" BOLT ASSEMBLY, STAINLESS STEEL	AS REQ'D	–	148800	–	
11	WASHER, 3/8", SPRING LOCK, CADMIUM PLATED	AS REQ'D	–	798620	–	
12	WASHER, 3/8", FLAT, CADMIUM PLATED.	AS REQ'D	–	800160	–	
13	NUT, 3/8", HEX, MACHINE THREAD, CADMIUM PLATED	AS REQ'D	–	505020	–	
14	BOLT, 3/8" X 1 1/2", HEX HEAD MACHINE THREAD, CADMIUM PLATED	AS REQ'D	–	616106	–	
15	OUTDOOR CABLE TERMINALS (COLD SHRINK) (E)(W)	AS REQ'D	4111	–	–	
16	CABLE IDENTIFICATION TAGS (M)	AS REQ'D	3202	–	–	
17	SEALING COMPOUND	AS REQ'D	–	442976	–	
18	TRENCH GROUND WIRE	AS REQ'D	4510	–	–	
19	FUSES, 200 AMP (X)	AS REQ'D	4302	–	–	
20	WIRE, BARE COPPER #4/0 STR SOFT DRAWN	AS REQ'D	–	812764	–	
21	AUTOMATIC FAULT INDICATOR(S) (Y)(DD)	AS REQ'D	4355	–	–	
22	TAPE, SILICONE (F)	AS REQ'D	–	720384	–	
23	SERVICE POST CONNECTOR	AS REQ'D	–	262560	–	

FOR FIELD MAINTENANCE ONLY

TABLE OF CONTENTS

INSTALLATION:

(A) SEAL CONDUITS WITH SEALING COMPOUND

(B) SET SWITCH ON THE PAD AND BOLT IT DOWN AS SHOWN IN ANCHOR BOLT DETAIL.

(C) BASE OF CABINET SHALL BE CAULKED TO PREVENT MOISTURE ENTRY AND POSSIBLE TAMPERING

D REFER TO STANDARDS 4520, 4525 & 4530 FOR GROUNDING.

(E) INSTALL OUTDOOR CABLE TERMINALS ON ALL 200 AMP AND 600 AMP CABLES TERMINATED ONTO THE SWITCH.

F ON THREE-PHASE 200 AMP CABLE, LEAVE 2 INCHES OF CABLE BETWEEN THE BOTTOM OF THE LUG AND THE COLD SHRINK TERMINAL TAPE THIS AREA WITH SILICONE TAPE FOR SINGLE PHASE CABLE, TERMINATE THE COLD SHRINK TERMINAL ON THE LUG AS SHOWN

(G) LOCK SECURE THE SWITCH DOORS WITH PENTAHEAD BOLTS AND THE SWITCH DOORS AND THE OPERATING HANDLE COVERS WITH SCHLAGE ELECTRIC SERIES LOCKS.

(H) REMOVE THE FIBER MOISTURE BARRIER IF INSTALLED, BEFORE SETTING PMH 9 OR 11 SWITCH CABINET ON PAD

REFERENCE:

(M) SEE STANDARD 3202 FOR CABLE IDENTIFICATION.

N. SEE STANDARD 3211 FOR ATTACHING STRUCTURE/EQUIPMENT IDENTIFICATION TAG.

O. SEE STANDARD 3221 FOR HIGH VOLTAGE DECAL.

(P) SEE STANDARD 3408 FOR WIRE ENTRY PREVENTION AND MOISTURE ENTRY.

Q. SEE STANDARD 3419 FOR PAD, HANDHOLE AND CONDUIT PLACEMENT.

R SEE STANDARD 3481 FOR BARRIERS IF THE SWITCH IS SUBJECT TO VEHICULAR TRAFFIC.

S. SEE STANDARD 3483 FOR MINIMUM OPERATING CLEARANCE REQUIREMENTS.

T SEE STANDARD 3486 FOR RETAINING WALL REQUIREMENTS AND CLEARANCES FROM REVERSE SUBGRADE RETAINING WALLS

U SEE STANDARD 3487 FOR RETAINING WALLS

(V) SEE STANDARD 4002 FOR WIRE INFORMATION

(W) SEE STANDARD 4111 FOR OUTDOOR CABLE TERMINALS

(X) SEE STANDARD 4302 FOR FUSE APPLICATION GUIDE

FOR FIELD MAINTENANCE ONLY

(Y) SEE STANDARD 4355 FOR FAULT INDICATOR INSTALLATION

(Z) SEE STANDARD 4510 FOR (PREFERRED I) AND (ALTERNATE TRENCH GROUND WIRE)

(AA) SEE STANDARD 4520 FOR EQUIPMENT GROUNDING

(BB) SEE STANDARD 4525 FOR GROUNDING PREMOLDED CONNECTORS

(CC) SEE STANDARD 4530 FOR NEUTRAL AND GROUND WIRE SCHEMATIC DIAGRAM

(DD) SEE DESIGN STANDARD 6113 FOR AUTOMATIC FAULT INDICATOR APPLICATION

TABLE OF CONTENTS

DATE 1-1-96 APPD [signature]	SDG&E ELECTRIC STANDARDS INSTALLATION OF PAD-MOUNTED PMH 9 & 11 FUSE/SECTIONALIZING SWITCH CABINET, 12KV, 600 AMP, THREE-PHASE	3599.610 SUPERSEDES 3566 4 (1-1-96)

FIELD MAINTENANCE ONLY

REVISION HISTORY:

7/13/2016: All versions prior to 2016 are superseded by their current version found inside the Overhead Construction Standard Manual.

TABLE OF CONTENTS

© 1998 - 2016 San Diego Gas & Electric Company. All rights reserved. Removal of this copyright notice without permission is not permitted under law.

REV	CHANGE	BY	DSGN	APPV	DATE	REV	CHANGE	BY	DSGN	APPV	DATE
C						F					
B						E					
A	ORIGINAL ISSUE	JS	IL	MDJ	7/13/2016	D					

X Indicates Latest Revision | Completely Revised | New Page | Information Removed

SHEET 1 OF 1

SDG&E ELECTRIC UNDERGROUND STANDARD

PAD-MOUNTED AIR BREAK PMH 3 SECTIONALIZING SWITCH
12KV, 600 AMP, THREE-PHASE

FMO
UG 3577

SCOPE: THIS STANDARD SHOWS A 12KV, 600 AMP AIR BREAK PMH 3 SECTIONALIZING SWITCH USED FOR ISOLATING A FAULT IN A CIRCUIT

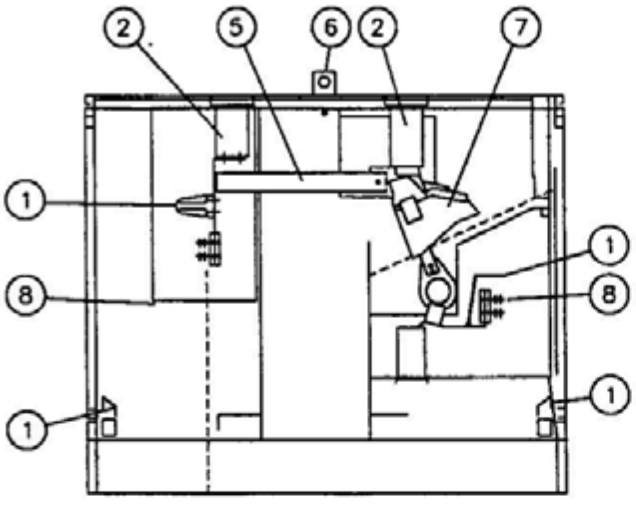

COMPARTMENT 2 COMPARTMENT 1

SIDE VIEW

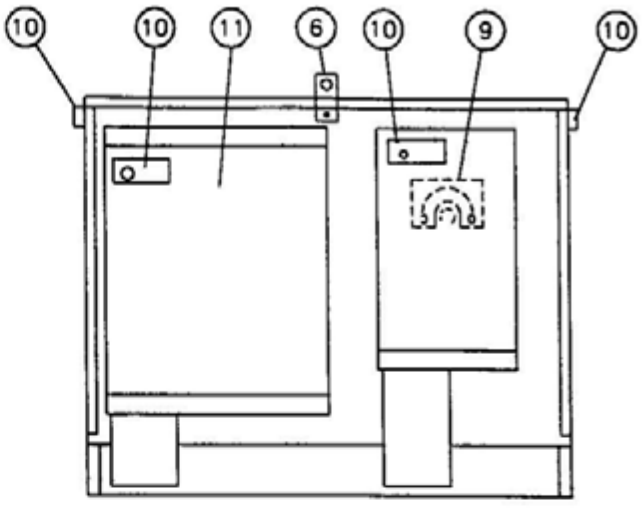

COMPARTMENT 2 COMPARTMENT 1

SIDE VIEW

WEIGHT 1040# MAX

FOR FIELD MAINTENANCE ONLY

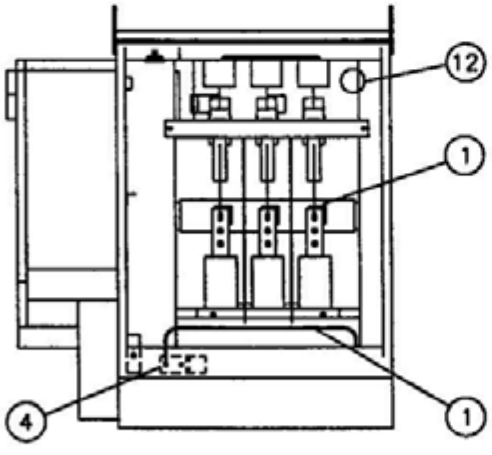

COMPARTMENT 1

OPEN END VIEW

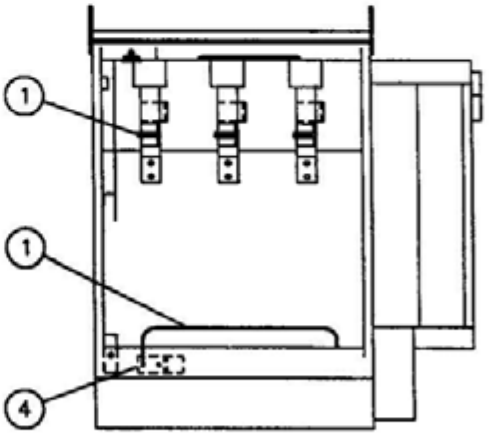

COMPARTMENT 2

OPEN END VIEW

3599.701 SUPERSEDES 3577 1 (1-1-96)	SDG&E ELECTRIC STANDARDS PAD-MOUNTED AIR BREAK PMH 3 SECTIONALIZING SWITCH 12KV, 600 AMP, THREE-PHASE	DATE 1-1-96 APPD

TABLE OF CONTENTS

ELECTRIC RATINGS	
VOLTAGE	14 4KV
B I L	95KV
CURRENT, CONTINUOUS	600 AMP
LOADMAKE AND LOADBREAK	600 AMP
MOMENTARY AND FAULT CLOSE (RMS, ASYMMETRICAL) (RMS, SYMMETRICAL)	22,400 AMP 14,000 AMP

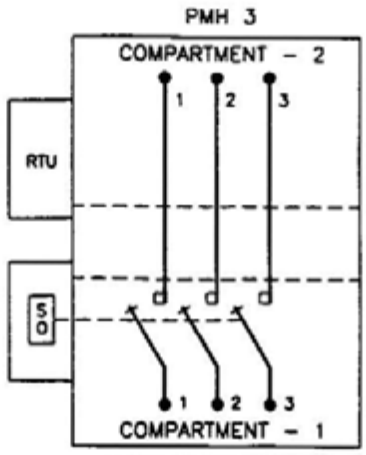

CONNECTION DIAGRAM

FOR FIELD MAINTENANCE ONLY

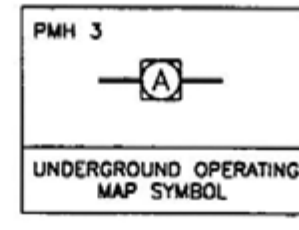

SWITCH PARTS LIST

ITEM	DESCRIPTION	ITEM	DESCRIPTION
1	GROUND RODS	7	600 AMP MINI-RUPTER SWITCH IN COMPARTMENT 1
2	BUSHING	8	CABLE ATTACHMENT PAD WITH 1/2" BOLT ASSEMBLIES
3	NAME PLATE (ON OUTSIDE OF DOOR)	9	MOTOR ACTUATOR (SWITCH OPERATOR)
4	GROUNDING PLATE	10	PENTAHEAD LATCH LOCKING PROVISION
5	600 AMP BUS	11	RTU
6	LIFTING TABS (REMOVE AFTER INSTALLATION AND REPLACE BOLTS, STORE INSIDE CABINET)	12	LEXAN FAULT INDICATOR VIEWING WINDOW

NOTES:

* – PAD-MOUNTED SWITCH IS DELIVERED FROM THE SUPPLIER WITH ALL THE PARTS LISTED IN THE PARTS LIST.

REFERENCE:

A SEE STANDARD 3212.2 FOR SWITCH IDENTIFICATION.

B SEE STANDARD 3420 FOR PAD AND HANDHOLE INSTALLATION FOR PAD-MOUNTED 600 AMP, 12 KV SWITCH.

C. SEE STANDARDS 3578 FOR SWITCH INSTALLATION

D SEE STANDARD 4355 FOR FAULT INDICATOR INSTALLATION.

E SEE DESIGN STANDARD 6113 FOR AUTOMATIC FAULT INDICATOR APPLICATION

DATE 1-1-96 APPD PSW/RDG	SDG&E ELECTRIC STANDARDS PAD-MOUNTED AIR BREAK PMH 3 SECTIONALIZING SWITCH 12KV, 600 AMP, THREE-PHASE	3599.702 SUPERSEDES 3577 2 (1-1-96)

TABLE OF CONTENTS

FIELD MAINTENANCE ONLY

REVISION HISTORY:

7/13/2016: All versions prior to 2016 are superseded by their current version found inside the Overhead Construction Standard Manual.

TABLE OF CONTENTS

© 1998 - 2016 San Diego Gas & Electric Company. All rights reserved. Removal of this copyright notice without permission is not permitted under law.

REV	CHANGE	BY	DSGN	APPV	DATE	REV	CHANGE	BY	DSGN	APPV	DATE
C						F					
B						E					
A	ORIGINAL ISSUE	JS	IL	MDJ	7/13/2016	D					

X Indicates Latest Revision | Completely Revised | New Page | Information Removed

SHEET 1 OF 1

SDG&E ELECTRIC UNDERGROUND STANDARD

INSTALLATION OF PAD-MOUNTED AIR BREAK PMH 3 SECTIONALIZING SWITCH 12KV, 600 AMP, THREE-PHASE

FMO UG 3578

SCOPE: THIS STANDARD SHOWS THE INSTALLATION FOR PAD-MOUNTED AIR BREAK 12KV, 600A PMH 3 SECTIONALIZING SWITCH

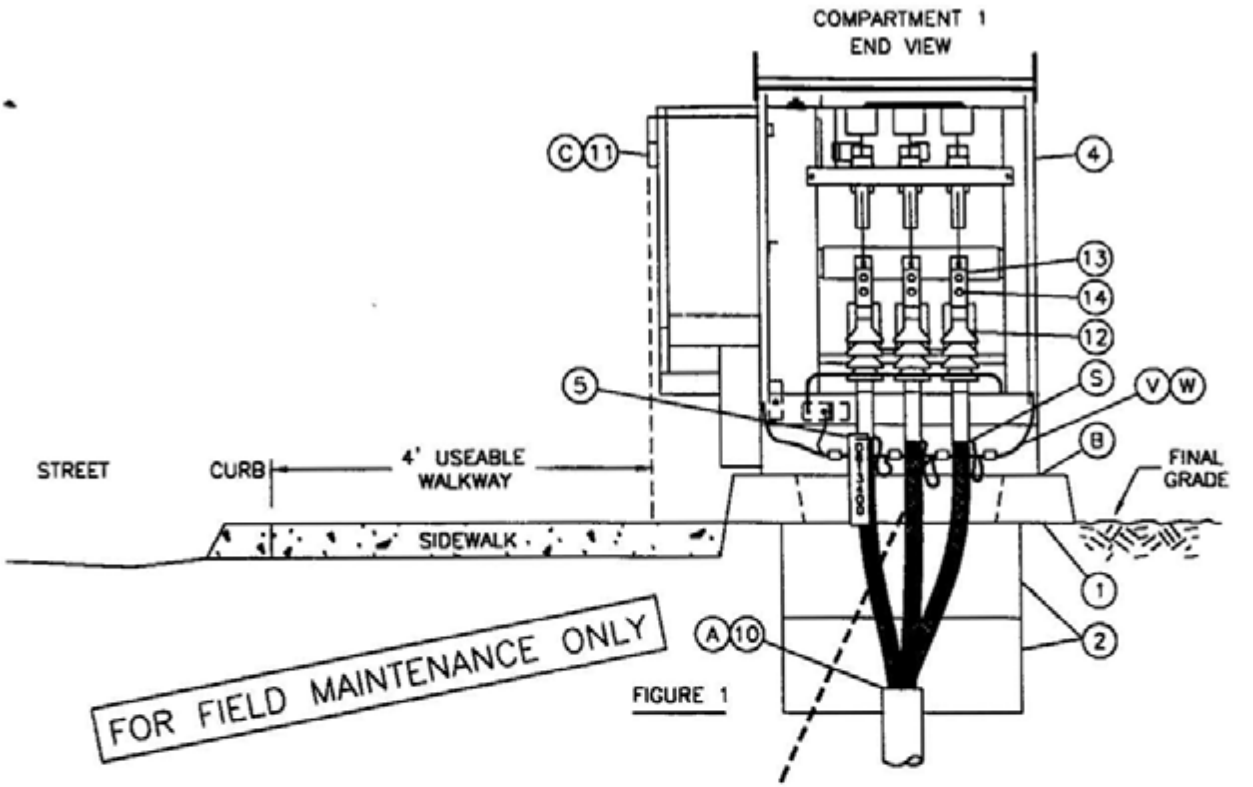

FOR FIELD MAINTENANCE ONLY

FIGURE 1

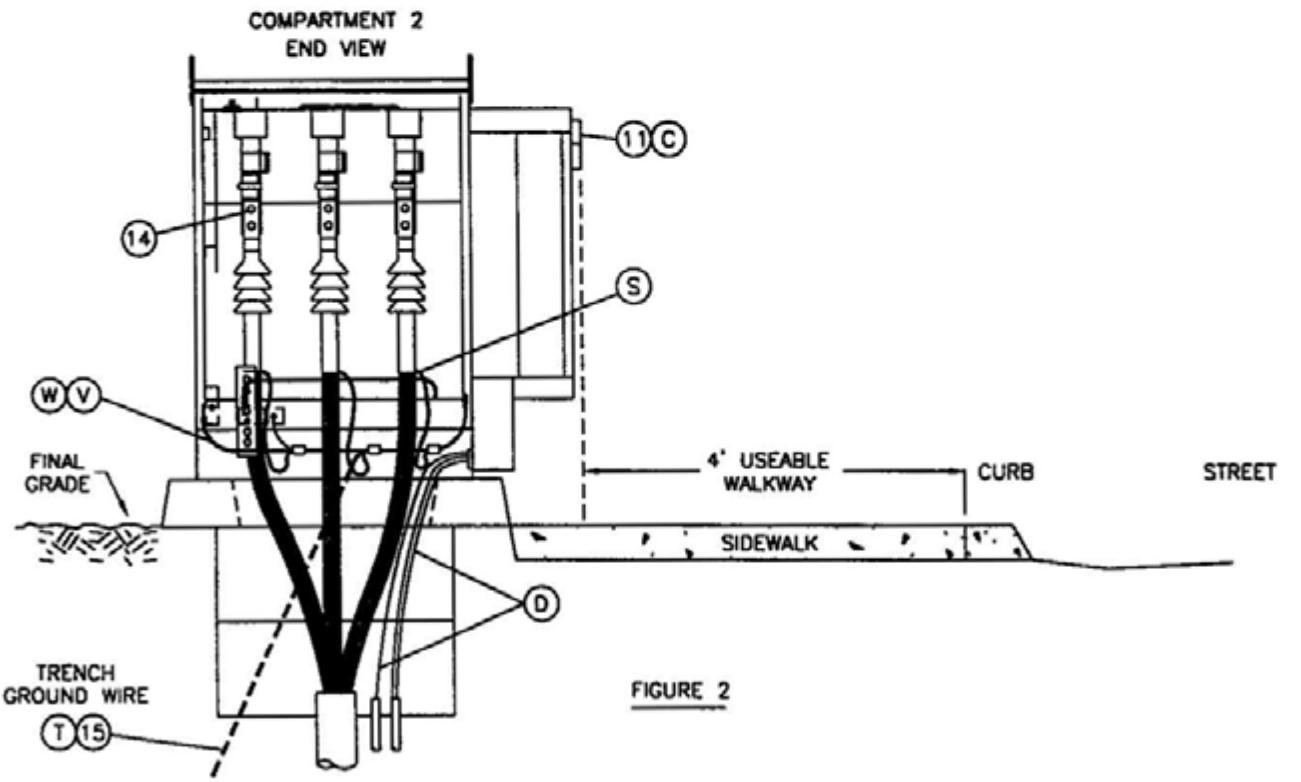

FIGURE 2

TABLE OF CONTENTS

3599.703 SUPERSEDES 3578 1 (1-1-96)	SDG&E ELECTRIC STANDARDS INSTALLATION OF PAD-MOUNTED AIR BREAK PMH 3 SECTIONALIZING SWITCH 12KV, 600 AMP, THREE-PHASE	DATE 1-1-96 APPD

HOLD-DOWN ASSEMBLY DETAIL

TYPICAL BOTH SIDES OF EQUIPMENT PAD

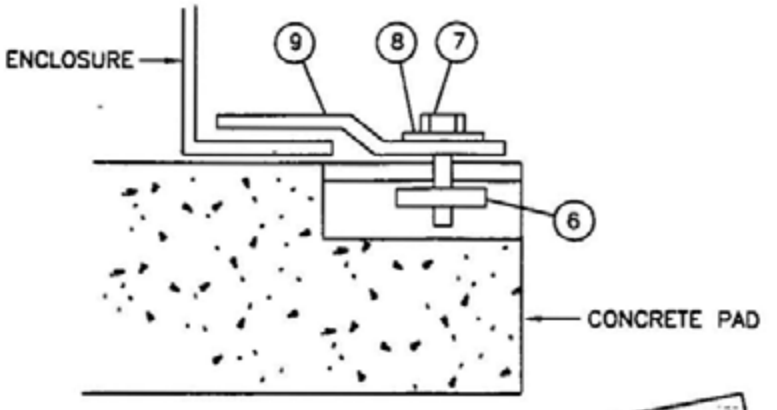

FOR FIELD MAINTENANCE ONLY

BILL OF MATERIAL:

ITEM	DESCRIPTION	QUANTITY	CONST STD OR PAGE NO	STOCK NUMBER	ASSEMBLY UNITS
1	PAD, PMH 3 SWITCH	1	3420	513424	3420
2	HANDHOLE, 3312	4	3312	162426	–
3	GROUNDING EQUIPMENT (V)	1	4520	–	–
4	PMH 3 SWITCH	1	3577	*	PMH-03
5	IDENTIFICATION TAGS	AS REQ'D	3202/3212	–	–
6	NUT, CLAMPING CHANNEL	4	–	503520	–
7	SCREW, HEX HEAD CAP, BRONZE 1/2" X 1-1/2"	4	–	616192	–
8	WASHER, STANDARD FLAT ROUND, BRONZE 1/2"	4	–	799488	–
9	HOLD DOWN (SUPPLIED WITH CABINET)	4	–	–	–
10	SEALING COMPOUND (A)	AS REQ'D	–	442976	–
11	PADLOCK, SCHLAGE ELEC SERIES (C)	4	–	514848	–
12	OUTDOOR CABLE TERMINALS (COLD SHRINK)	6	4111	–	–
13	COMPRESSION TERMINALS	6	4121	–	–
14	1/2" BOLT ASSEMBLY (SUPPLIED WITH CABINET)	12	–	–	–
15	TRENCH GROUND WIRE (T)	AS REQ'D	4510	–	–

INSTALLATION:

(A) SEAL CONDUITS WITH SEALING COMPOUND.

(B) BASE OF CABINET SHALL BE CAULKED TO PREVENT MOISTURE ENTRY AND POSSIBLE TAMPERING

(C) SECURE ALL OF THE SWITCH DOORS WITH PENTAHEAD BOLTS AND SCHLAGE ELEC SERIES LOCKS

(D) SECONDARY REQUIRES 2-#8 CABLES 120V ONLY. SUPERVISORY OR ANTENNA CABLE REQUIRED FOR SCADA

E. INSTALL CURRENT SENSORS IN COMPARTMENT 1 AND FAULT INDICATORS IN COMPARTMENT 2 IN THE SWITCH

* CONTACT MIKE COLBURN FOR ORDERING INFORMATION EXT. 8248

TABLE OF CONTENTS

REFERENCES:

I SEE STANDARD 3211 FOR STRUCTURE/EQUIPMENT IDENTIFICATION TAG

J SEE STANDARD 3212 FOR SWITCH IDENTIFICATION

K SEE STANDARD 3408 FOR WIRE ENTRY PREVENTION AND MOISTURE ENTRY

L. SEE STANDARD 3420 FOR PAD AND HANDHOLE INSTALLATION

M SEE STANDARD 3481 FOR BARRIERS IF THE SWITCH IS SUBJECT TO VEHICULAR TRAFFIC

N SEE STANDARD 3483 FOR MINIMUM OPERATING CLEARANCE REQUIREMENTS (PAD PLACEMENT)

O SEE STANDARD 3484 FOR PAD INSTALLATION OF PAD-MOUNTED EQUIPMENT

P SEE STANDARD 3486 FOR RETAINING WALL REQUIREMENTS AND CLEARANCES FROM REVERSE SUBGRADE RETAINING WALLS

Q SEE STANDARD 3487 FOR RETAINING WALLS.

R SEE STANDARD 3577 FOR PAD-MOUNTED PMH 3 SECTIONALIZING SWITCH

(S) SEE STANDARD 4108 FOR INSTRUCTIONS TO SEAL JACKETED CABLE.

(T) SEE STANDARD 4510 FOR (PREFERRED 1) AND (ALTERNATE TRENCH GROUND WIRE)

(U) SEE STANDARD 4512 FOR EQUIPMENT GROUNDING INSTALLATION

(V) SEE STANDARD 4520 FOR GROUNDING PAD-MOUNTED EQUIPMENT

(W) SEE STANDARD 4525 FOR CONCENTRIC NEUTRAL TERMINATIONS AND GROUNDING PREMOLDED CONNECTORS.

FOR FIELD MAINTENANCE ONLY

TABLE OF CONTENTS

3600 - SUBSURFACE SECTIONALIZING EQUIPMENT

3600 - SUBSURFACE SECTIONALIZING EQUIPMENT

PAGES	SUBJECT
3605	SUBSTRUCTURE USE AND LIMITATIONS REFERENCE SHEET
3649	EQUIPMENT COMBINATION GUIDELINES
3670	SUBSURFACE OIL SWITCH 600 AMP, 12KV, 3Ø
3671	SUBSURFACE/SURFACE OPERABLE SF-6 GAS SWITCH 12KV, 600 AMP, 3 PHASE

MAIN TABLE OF CONTENTS

© 1998 - 2016 San Diego Gas & Electric Company. All rights reserved. Removal of this copyright notice without permission is not permitted under law.

REV	CHANGE	BY	DSGN	APPV	DATE	REV	CHANGE	BY	DSGN	APPV	DATE
C						F					
B						E					
A	ORIGINAL ISSUE	JS	TR	MDJ	7/25/2016	D					

X Indicates Latest Revision | Completely Revised | New Page | Information Removed

SDG&E UNDERGROUND CONSTRUCTION STANDARD

SHEET 1 OF 1

SUBSURFACE SECTIONALIZING EQUIPMENT FMO
TABLE OF CONTENTS

FMO
OH 3601

FIELD MAINTENANCE ONLY

REVISION HISTORY:

7/13/2016: All versions prior to 2016 are superseded by their current version found inside the Overhead Construction Standard Manual.

TABLE OF CONTENTS

© 1998 - 2016 San Diego Gas & Electric Company. All rights reserved. Removal of this copyright notice without permission is not permitted under law.

REV	CHANGE	BY	DSGN	APPV	DATE	REV	CHANGE	BY	DSGN	APPV	DATE
C						F					
B						E					
A	ORIGINAL ISSUE	JS	IL	MDJ	7/13/2016	D					

X Indicates Latest Revision | Completely Revised | New Page | Information Removed

SHEET 1 OF 1

SDG&E ELECTRIC UNDERGROUND STANDARD

SUBSTRUCTURE USE AND LIMITATIONS REFERENCE SHEET

FMO UG 3605

NOTES.

- SWITCHES SHOWN ARE THE MAXIMUM ALLOWED IN THE 3324 MANHOLE.
- PLACE SWITCHES ON WALL OPPOSITE THE MANHOLE OPENING.
- ALL CABLES TERMINATED ON A SWITCH MUST EXIT OR ENTER THE CONDUITS ON THE WALL OPPOSITE THE SWITCH (THE WALL UNDER THE MANHOLE OPENING OR IN CONDUITS INSTALLED IN RECESSES IN THE SIDES OF THE MANHOLE.)
- #2 OR 2/0 PRIMARY CABLES AND SECONDARY CABLES UP TO 500 KCMIL MAXIMUM MAY BE PULLED IN ANY CONDUIT NOT USED OR INTENDED FOR LARGER CABLES EXCEPT AS NOTED OTHERWISE.
- INSTALL PRIMARY CABLES IN THE LOWER CONDUITS AND SECONDARY ABOVE THE PRIMARY. FOR THE PRIMARY, USE THE LOWER CONDUIT CLOSEST TO THE WALL FIRST.
- PRIMARY OR SECONDARY CABLES PULLED STRAIGHT THROUGH MUST ENTER AND EXIT THE SAME CONDUIT POSITION ON OPPOSITE ENDS.
- NEVER INSTALL CABLE OR CONNECTORS LESS THAN 1 FOOT FROM THE FLOOR.
- 4-WAY SWITCHES ARE STAINLESS STEEL AND SHALL BE BOLTED AGAINST THE WALL USING THE 30 INCH SINGLE SUPPORT LEG (STOCK NUMBER 457166). EXCEPTIONS WOULD BE WHENEVER A SWITCH CANNOT BE PLACED AGAINST A WALL BECAUSE OF CABLE TRAINING OR SPACE LIMITATIONS. IN THESE CASES 4-54 INCH LEGS (OLD STYLE), WILL BE REQUIRED.

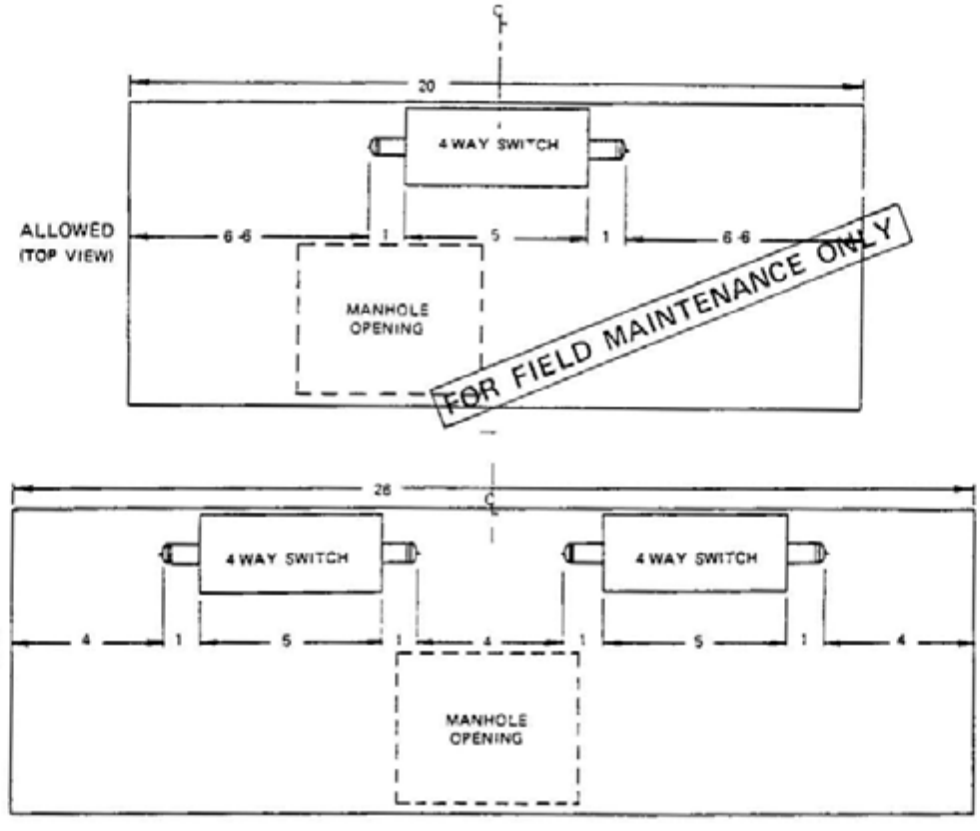

3324

FOR ALL SIZES OF PRIMARY CABLES AND UP TO 500 KCMIL SECONDARY CABLES MAXIMUM

ISSUE 1990 DATE 1-1-90 APPD	SDG&E ELECTRIC STANDARDS EQUIPMENT COMBINATION GUIDELINES	3699.416 SUPERCEDES 3649.28 (1-1-90)

SUBSTRUCTURES	MAJOR USE LIMITATION
3322 6' X 10' X 7' MANHOLE (PRIMARY & SECONDARY)	MAXIMUM INSTALLATION CONSISTS OF 4-350 KCMIL OR LARGER THREE-PHASE PRIMARY CIRCUITS WITH NO MORE THAN TWO OF THESE CIRCUITS WITH STRAIGHT SPLICES OR 600 AMP TEE'S. ONLY ONE 2-WAY 600 AMP SWITCH IS PERMITTED. OTHER SIZES OF PRIMARY AND SECONDARIES UP TO 500 KCMIL MAXIMUM ALSO PERMITTED. NO CABLE TAPS ALLOWED. ALWAYS MAINTAIN AN UNOBSTRUCTED SPACE TO ALLOW ACCESSIBILITY TO CABLE, EQUIPMENT AND CONDUIT. SEE STANDARD 4004 FOR MINIMUM BENDING RADII.

FOR FIELD MAINTENANCE ONLY

DATE 3-9-83 APPD JWT/DRH	SDG&E ELECTRIC STANDARDS SUBSTRUCTURE USE AND LIMITATIONS REFERENCE SHEET	3699 501 SUPERSEDES 3606 2 (3-9-83)

TABLE OF CONTENTS

SUBSTRUCTURE	MAJOR USE LIMITATION
3312 17"X 30"X 12" HANDHOLE–1 BODY SINGLE–PHASE ONLY (SECONDARY)	ONE BODY ALLOWS A MAXIMUM OF THREE CONNECTORS WITH 7 TERMINAL POSITIONS EACH. THE 7 RUNS SHALL NOT EXCEED TWO RUNS OF 3/0, PLUS WIRE PLUS STREET LIGHT RUNS. FOUR RUNS OF 1/0 THE SEVENTH TERMINAL POSITION SHOULD ONLY BE USED FOR STREET LIGHT RUNS. **NO 350 KCMIL OR ABOVE ALLOWED.**
3312 17"X 30"X 24" HANDHOLE–2 BODIES SINGLE–PHASE (SECONDARY)	TWO BODIES SINGLE–PHASE ALLOWS A MAXIMUM OF THREE CONNECTORS WITH 7 TERMINAL POSITIONS EACH. THE 7 RUNS SHALL NOT EXCEED TWO RUNS OF 350 KCMIL, PLUS FOUR RUNS OF 3/0 PLUS STREET LIGHT RUNS. THE SEVENTH TERMINAL POSITION SHOULD ONLY BE USED FOR STREET LIGHT RUNS.
3312 17"X 30"X 24" HANDHOLE–2 BODIES THREE–PHASE (SECONDARY)	TWO BODIES THREE–PHASE ALLOWS A MAXIMUM OF FOUR CONNECTORS WITH 7 TERMINAL POSITIONS EACH. THE 7 RUNS SHALL NOT EXCEED FIVE RUNS OF 3/0 WIRE PLUS STREET LIGHT RUNS. THE SIXTH AND SEVENTH TERMINAL POSITION SHOULD ONLY BE USED FOR STREET LIGHT RUNS. **NO 350 KCMIL OR ABOVE ALLOWED.**

FOR FIELD MAINTENANCE ONLY

TABLE OF CONTENTS

FIELD MAINTENANCE ONLY

REVISION HISTORY:

7/13/2016: All versions prior to 2016 are superseded by their current version found inside the Overhead Construction Standard Manual.

TABLE OF CONTENTS

© 1998 - 2016 San Diego Gas & Electric Company. All rights reserved. Removal of this copyright notice without permission is not permitted under law.

REV	CHANGE	BY	DSGN	APPV	DATE	REV	CHANGE	BY	DSGN	APPV	DATE
C						F					
B						E					
A	ORIGINAL ISSUE	JS	IL	MDJ	7/13/2016	D					

X Indicates Latest Revision | Completely Revised | New Page | Information Removed

SHEET 1 OF 1

SDG&E ELECTRIC UNDERGROUND STANDARD

EQUIPMENT COMBINATION GUIDELINES

FMO UG 3649

NOTES:

- ALL 350, 750 AND 1000 KCMIL CABLES MUST BE UNTRIPLEXED WHENEVER THEY ARE TRAINED AROUND THE CORNER (90° ANGLE) OF THE HANDHOLE SEE STANDARD 3671 FOR UNTRIPLEXING CRITERIA AND DETAILED SWITCH INSTALLATION DRAWINGS

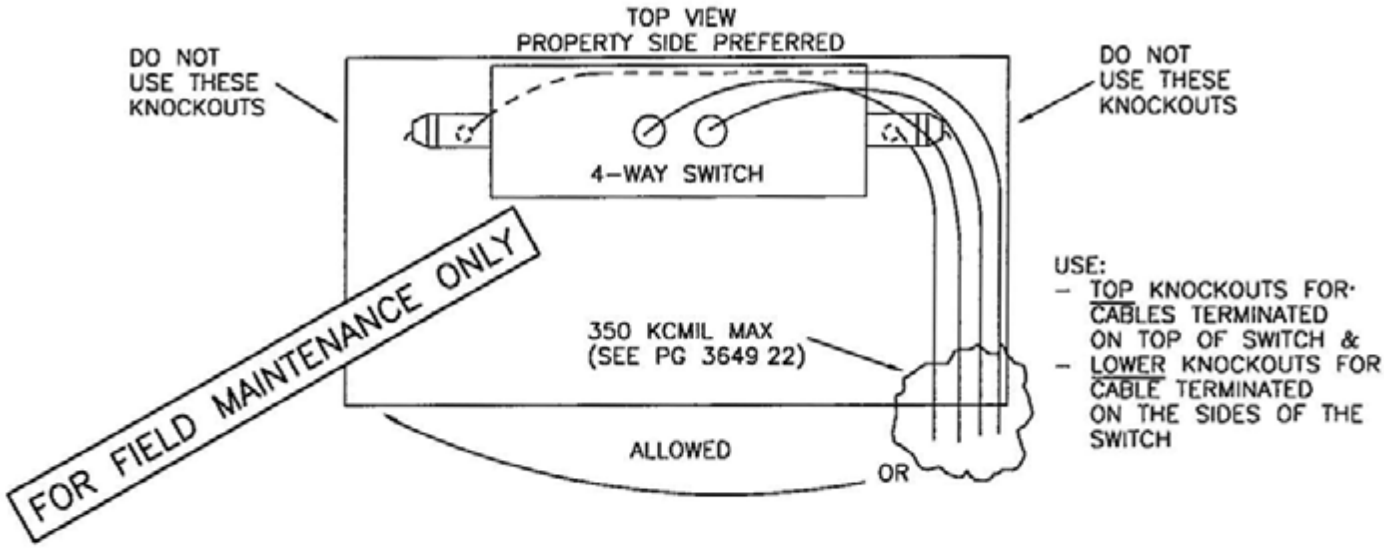

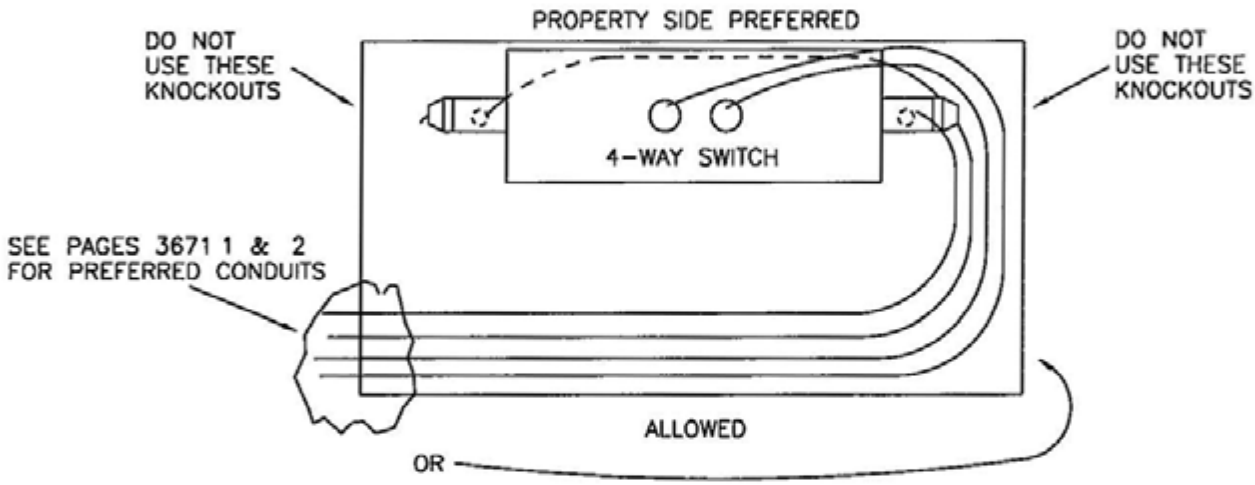

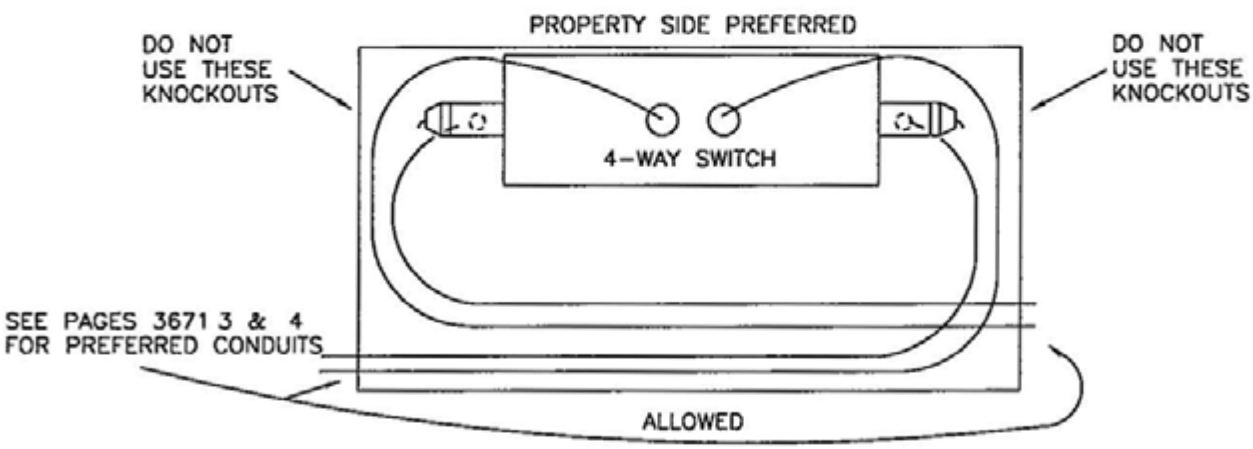

3316 WITH SUBSURFACE/SURFACE OPERABLE SWITCH

FOR ALL SIZES OF PRIMARY AND NO SECONDARY OTHER THAN FEED TO SUMP PUMP

DATE 1-1-89 APPD JLB/RDJ	SDG&E ELECTRIC STANDARDS EQUIPMENT COMBINATION GUIDELINES	3699.416 SUPERSEDES 3649 24 (1-1-98)

TABLE OF CONTENTS

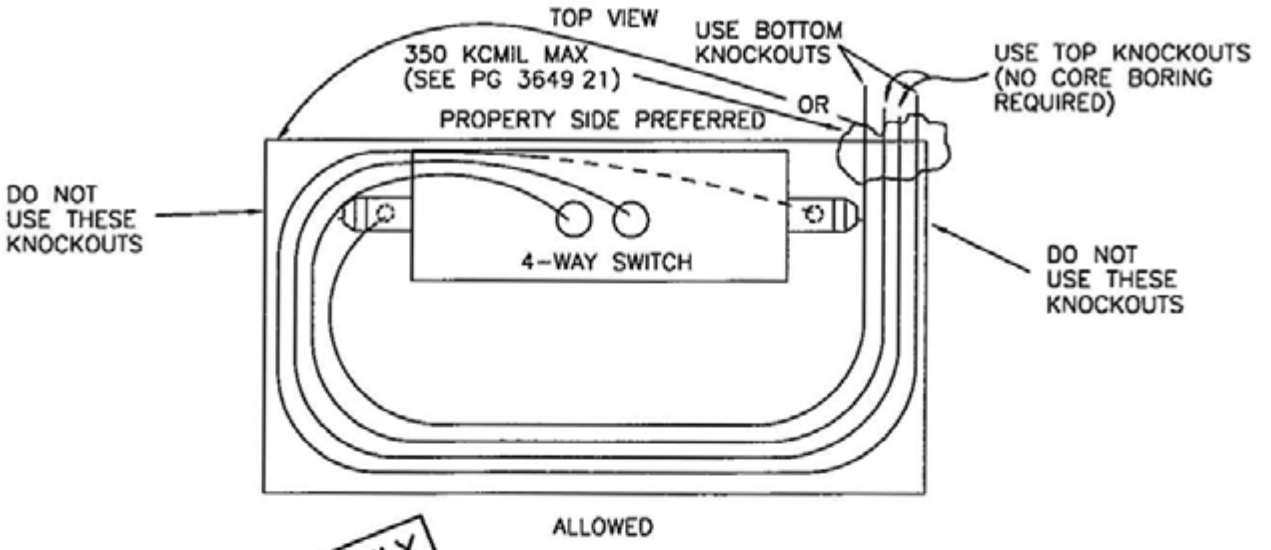

ALLOWED

FOR FIELD MAINTENANCE ONLY

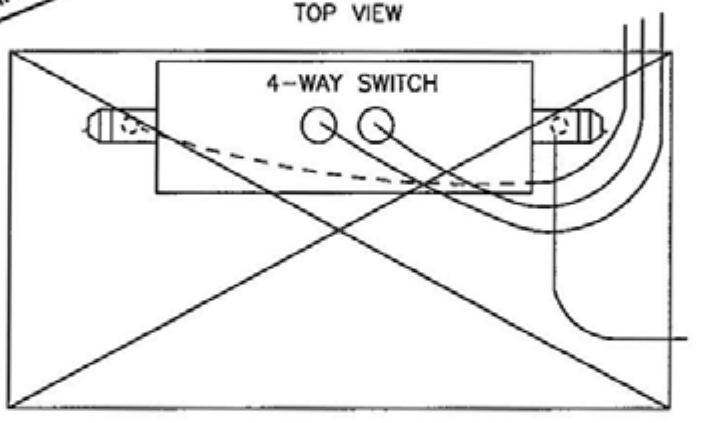

NOT ALLOWED

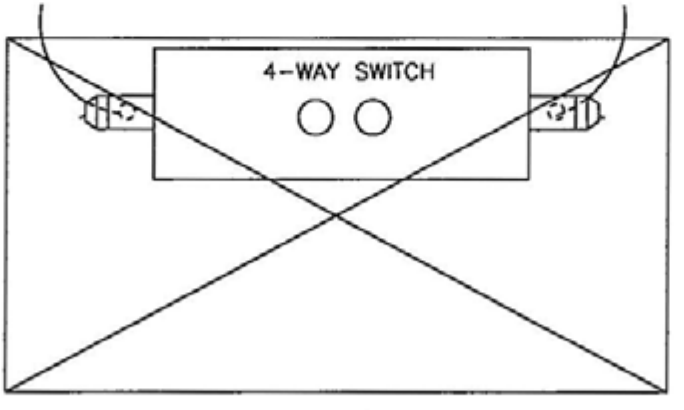

NOT ALLOWED

3316 WITH SUBSURFACE/SURFACE OPERABLE SWITCH

FOR ALL SIZES OF PRIMARY AND NO SECONDARY OTHER THAN FEED TO SUMP PUMP

TABLE OF CONTENTS

3699.417 SUPERSEDES 3649 25 (1-1-98)	SDG&E ELECTRIC STANDARDS EQUIPMENT COMBINATION GUIDELINES	DATE 7-31-84 APPD RES / DRH

TABLE OF CONTENTS

NOTES:

- SWITCHES SHOWN ARE THE MAXIMUM ALLOWED IN THE 3325 AND 3326 MANHOLES
- PLACE SWITCHES ON WALL OPPOSITE THE MANHOLE OPENING
- ALL CABLES TERMINATED ON A SWITCH MUST EXIT OR ENTER THE CONDUITS ON THE WALL OPPOSITE THE SWITCH (THE WALL UNDER THE MANHOLE OPENING OR IN CONDUITS INSTALLED IN RECESSES IN THE SIDES OF THE MANHOLE)
- #2 OR 2/0 PRIMARY CABLES AND SECONDARY CABLES UP TO 500 KCMIL MAXIMUM MAY BE PULLED IN ANY CONDUIT NOT USED OR INTENDED FOR LARGER CABLES EXCEPT AS NOTED OTHERWISE
- INSTALL PRIMARY CABLES IN THE LOWER CONDUITS AND SECONDARY ABOVE THE PRIMARY FOR THE PRIMARY, USE THE LOWER CONDUIT CLOSEST TO THE WALL FIRST
- PRIMARY OR SECONDARY CABLES PULLED STRAIGHT THROUGH MUST ENTER AND EXIT THE SAME CONDUIT POSITION ON OPPOSITE ENDS
- NEVER INSTALL CABLE OR CONNECTORS LESS THAN 1 FOOT ABOVE THE FLOOR
- 4-WAY SWITCHES ARE STAINLESS STEEL AND SHALL BE BOLTED AGAINST THE WALL AND SUPPORTED USING 4-54 INCH STAINLESS STEEL LEGS (STOCK NUMBER 457168) AND 8 -5/8" X 3-1/2" STAINLESS STEEL BOLTS (STOCK NUMBER 156750)

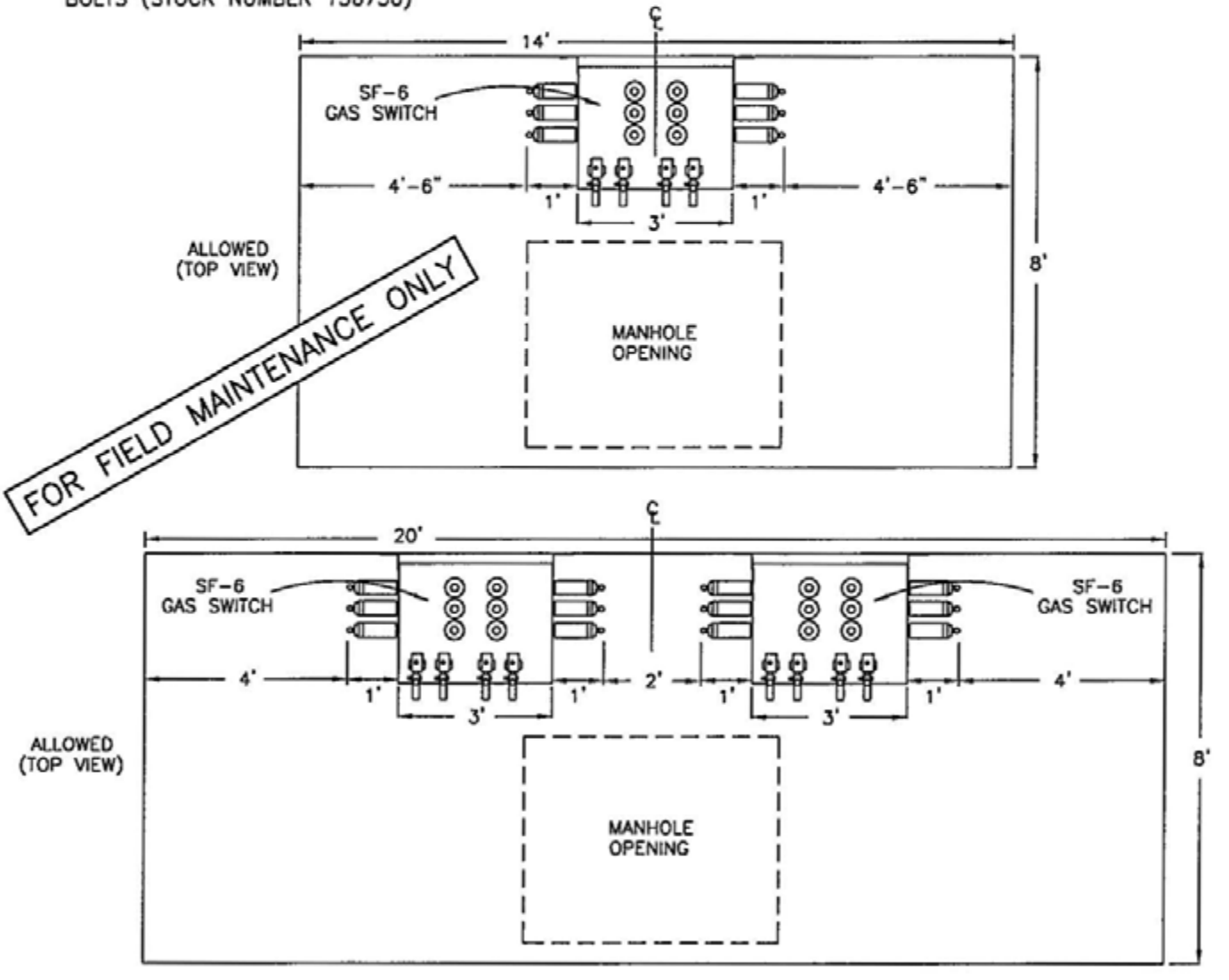

3325/3326

FOR ALL SIZES OF PRIMARY CABLES AND UP TO 500 KCMIL SECONDARY CABLES MAXIMUM

DATE 1-1-96 APPD	SDG&E ELECTRIC STANDARDS EQUIPMENT COMBINATION GUIDELINES	3699.418 SUPERSEDES 3649 28 (1-1-98)

NOTES:

- WHEN CABLE ENTERS THE MANHOLE AND MAKES AN IMMEDIATE 90° BEND AS SHOWN IN THE DRAWING, IT MUST BE UNTRIPLEXED AND INSTALLED IN THE THREE OUTSIDE POSITIONS NEAREST THE END OF A OF A 4-WAY STEP (SEE DETAIL BELOW)

FOR FIELD MAINTENANCE ONLY

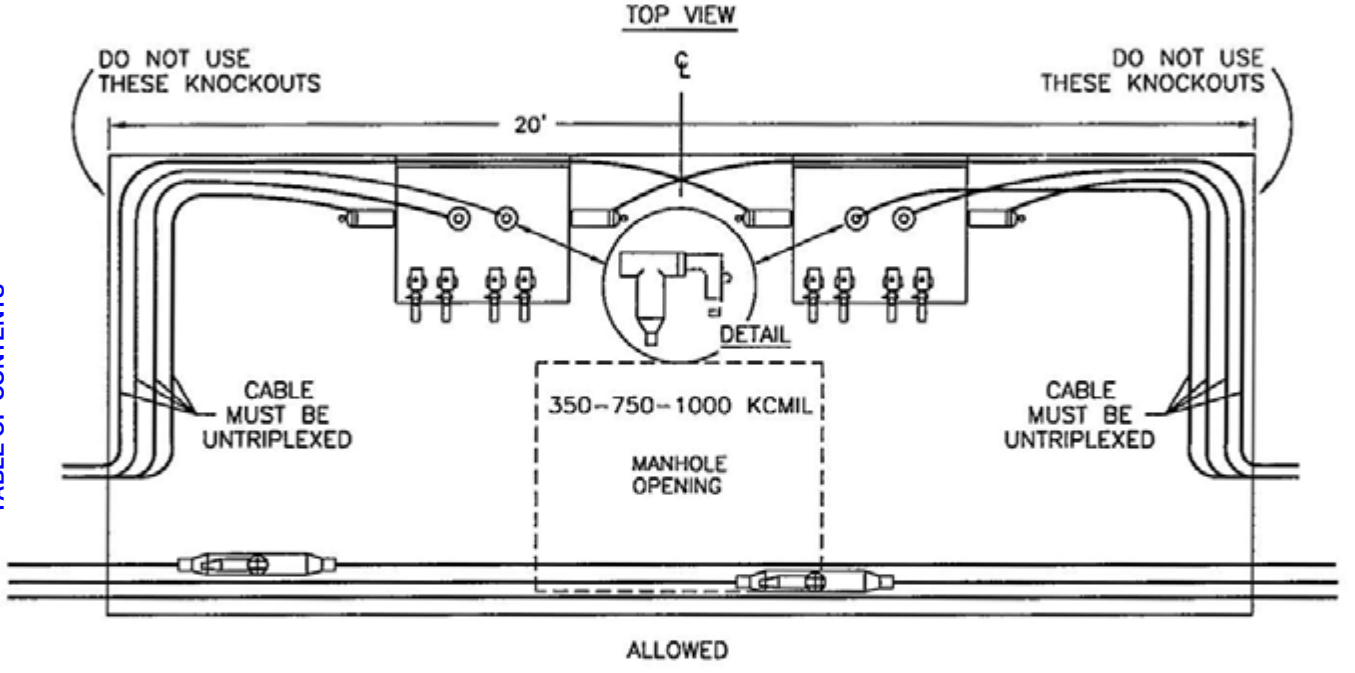

TABLE OF CONTENTS

3699.419 SUPERSEDES 3649 29 (1-1-98)	SDG&E ELECTRIC STANDARDS EQUIPMENT COMBINATION GUIDELINES	DATE 1-1-96 APPD

NOTES.

- SWITCHES SHOWN ARE THE MAXIMUM ALLOWED IN THE 3324 MANHOLE.
- PLACE SWITCHES ON WALL OPPOSITE THE MANHOLE OPENING.
- ALL CABLES TERMINATED ON A SWITCH MUST EXIT OR ENTER THE CONDUITS ON THE WALL OPPOSITE THE SWITCH (THE WALL UNDER THE MANHOLE OPENING OR IN CONDUITS INSTALLED IN RECESSES IN THE SIDES OF THE MANHOLE.)
- #2 OR 2/0 PRIMARY CABLES AND SECONDARY CABLES UP TO 500 KCMIL MAXIMUM MAY BE PULLED IN ANY CONDUIT NOT USED OR INTENDED FOR LARGER CABLES EXCEPT AS NOTED OTHERWISE.
- INSTALL PRIMARY CABLES IN THE LOWER CONDUITS AND SECONDARY ABOVE THE PRIMARY. FOR THE PRIMARY, USE THE LOWER CONDUIT CLOSEST TO THE WALL FIRST.
- PRIMARY OR SECONDARY CABLES PULLED STRAIGHT THROUGH MUST ENTER AND EXIT THE SAME CONDUIT POSITION ON OPPOSITE ENDS.
- NEVER INSTALL CABLE OR CONNECTORS LESS THAN 1 FOOT FROM THE FLOOR.
- 4-WAY SWITCHES ARE STAINLESS STEEL AND SHALL BE BOLTED AGAINST THE WALL USING THE 30 INCH SINGLE SUPPORT LEG (STOCK NUMBER 457166). EXCEPTIONS WOULD BE WHENEVER A SWITCH CANNOT BE PLACED AGAINST A WALL BECAUSE OF CABLE TRAINING OR SPACE LIMITATIONS. IN THESE CASES 4-54 INCH LEGS (OLD STYLE), WILL BE REQUIRED.

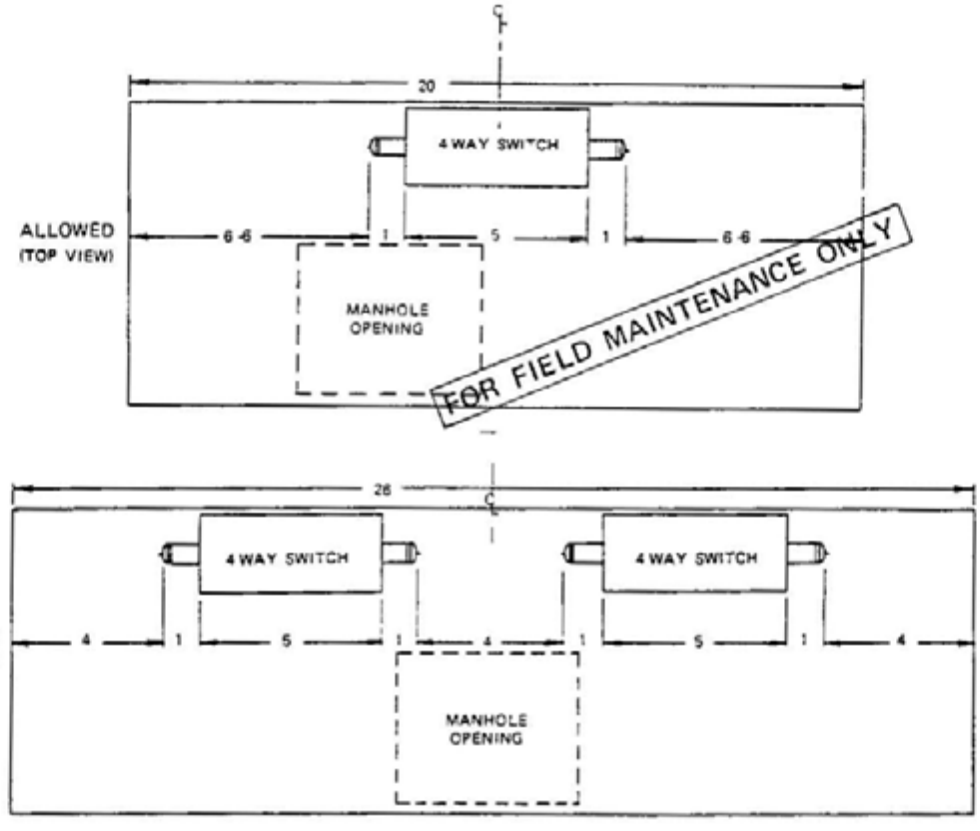

3324

FOR ALL SIZES OF PRIMARY CABLES AND UP TO 500 KCMIL SECONDARY CABLES MAXIMUM

ISSUE 1990 DATE 1-1-90 APPD	SDG&E ELECTRIC STANDARDS EQUIPMENT COMBINATION GUIDELINES	3699.416 SUPERCEDES 3649.28 (1-1-90)

SUBSTRUCTURES	MAJOR USE LIMITATION
3322 6' X 10' X 7' MANHOLE (PRIMARY & SECONDARY)	MAXIMUM INSTALLATION CONSISTS OF 4-350 KCMIL OR LARGER THREE-PHASE PRIMARY CIRCUITS WITH NO MORE THAN TWO OF THESE CIRCUITS WITH STRAIGHT SPLICES OR 600 AMP TEE'S. ONLY ONE 2-WAY 600 AMP SWITCH IS PERMITTED. OTHER SIZES OF PRIMARY AND SECONDARIES UP TO 500 KCMIL MAXIMUM ALSO PERMITTED. NO CABLE TAPS ALLOWED. ALWAYS MAINTAIN AN UNOBSTRUCTED SPACE TO ALLOW ACCESSIBILITY TO CABLE, EQUIPMENT AND CONDUIT. SEE STANDARD 4004 FOR MINIMUM BENDING RADII.

FOR FIELD MAINTENANCE ONLY

DATE 3-9-83 APPD JWT/DRH	SDG&E ELECTRIC STANDARDS SUBSTRUCTURE USE AND LIMITATIONS REFERENCE SHEET	3699 501 SUPERSEDES 3606 2 (3-9-83)

TABLE OF CONTENTS

FIELD MAINTENANCE ONLY

REVISION HISTORY:

7/13/2016: All versions prior to 2016 are superseded by their current version found inside the Overhead Construction Standard Manual.

TABLE OF CONTENTS

© 1998 - 2016 San Diego Gas & Electric Company. All rights reserved. Removal of this copyright notice without permission is not permitted under law.

REV	CHANGE	BY	DSGN	APPV	DATE	REV	CHANGE	BY	DSGN	APPV	DATE
C						F					
B						E					
A	ORIGINAL ISSUE	JS	IL	MDJ	7/13/2016	D					

X Indicates Latest Revision | Completely Revised | New Page | Information Removed

SHEET
1 OF 1

SDG&E ELECTRIC UNDERGROUND STANDARD

SUBSURFACE OIL SWITCH
600 AMP, 12KV, 3Ø

FMO
UG 3670

SCOPE: THIS STANDARD SHOWS A SUBSURFACE/SURFACE OPERABLE 600 AMP SF-6 GAS SWITCH.

ON-OFF SWITCH

WEIGHT: 140#

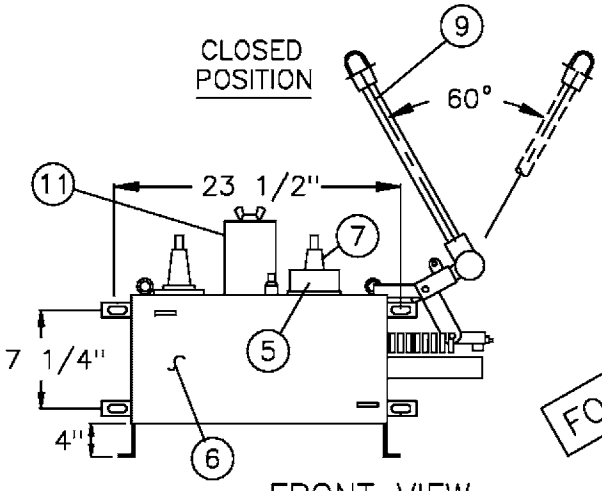

FOR FIELD MAINTENANCE ONLY

FRONT VIEW

DEVIATION REQUEST IS NOT REQUIRED FOR NEW INSTALLATION OF ON-OFF SWITCH

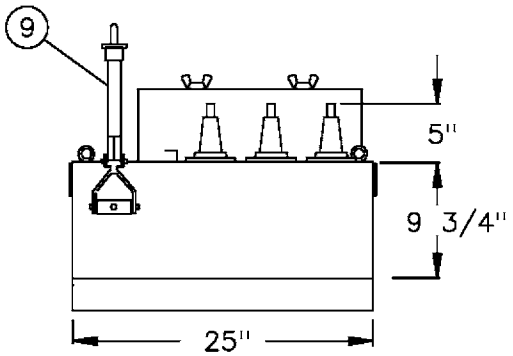

END VIEW

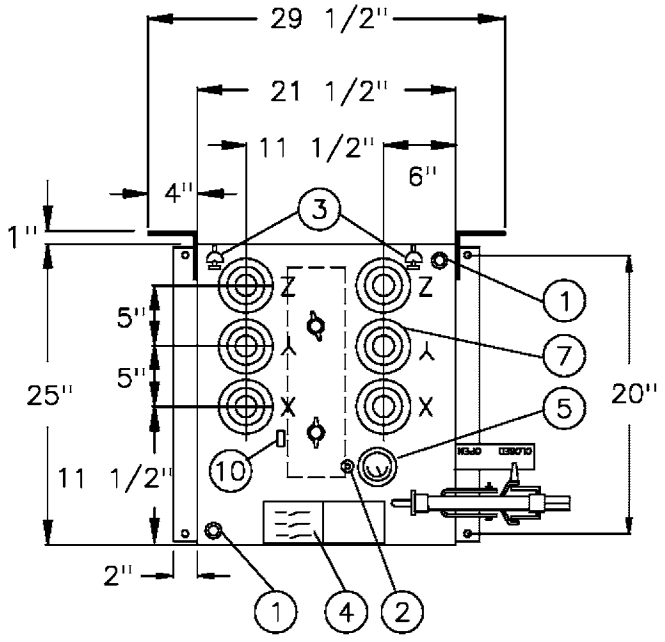

TOP VIEW

3699.709 SUPERSEDES 3670.1 (1-1-98)	SDG&E ELECTRIC STANDARDS SUBSURFACE/SURFACE OPERABLE SF-6 GAS SWITCH 12KV, 600 AMP, THREE-PHASE	DATE 1-1-91 APPD JJG/RDJ

TABLE OF CONTENTS

ELECTRICAL RATINGS	
VOLTAGE	15.5 KV
BIL	95 KV
CURRENT, CONTINUOUS	600 AMP
LOADMAKE AND LOADBREAK	600 AMP
MOMENTARY AND FAULT CLOSE (RMS, ASYMMETRICAL) (RMS, SYMMETRICAL)	32,000 AMP 20,000 AMP

600 AMP	UNIT STOCK NUMBER	ASSEMBLY UNIT
ON–OFF (STAINLESS STEEL)	708982 (A)(B)	SW–0/0

FOR FIELD MAINTENANCE ONLY

TYPICAL ONE LINE DIAGRAM

OPEN / CLOSED —

ON–OFF ONE LINE DIAGRAM

SWITCH PARTS LIST

ITEM	DESCRIPTION	ITEM	DESCRIPTION
1	LIFTING EYES	6	SWITCH TANK
2	SF–6 FILL VALVE	7	600 AMP BUSHING ASSEMBLY
3	GROUND LUG	8	MOUNTING ANGLES
4	NAME PLATE AND CONNECTION DIAGRAM	9	REMOVABLE OPERATING HANDLE
5	COLOR CODED PRESSURE GAUGE	10	HANDLE HANGER
		11	STAND OFF BRACKET

NOTES:

- SWITCH MEASUREMENTS MAY VARY WITH DIFFERENT SUPPLIERS.
- SWITCHES ARE DELIVERED FROM THE SUPPLIERS WITH ALL THE PARTS LISTED IN THE PARTS LISTED.
- SWITCH NUMBERS ARE ISSUED BY THE ENGINEERING CLERK IN EACH DISTRICT.
- THE SWITCHES SHALL BE USED WITH POLYETHYLENE CABLES AND 600 AMP ELBOW TEES.

INSTALLATION:

(A) DEVIATION REQUEST IS **NOT REQUIRED** FOR INSTALLATION OF ON–OFF SWITCH.

(B) ON–OFF SWITCHES ARE STAINLESS STEEL AND SHALL BE BOLTED TO THE WALL.

REFERENCE:

G. SEE STANDARD 3213 FOR SWITCH IDENTIFICATION.

H. SEE STANDARD 3649 FOR EQUIPMENT COMBINATION GUIDELINES FOR SWITCHES IN MANHOLES.

I. SEE STANDARD 3671 FOR SWITCH INSTALLATION IN A 3316 HANDHOLE.

J. SEE STANDARD 4181 FOR SUBSURFACE/SURFACE OPERABLE SWITCH CONNECTIONS.

K. SEE DESIGN STANDARD 6111 FOR SWITCH APPLICATION.

TABLE OF CONTENTS

SCOPE: THIS STANDARD SHOWS A SUBSURFACE/SURFACE OPERABLE 600 AMP SF-6 GAS SWITCH.

FOR FIELD MAINTENANCE ONLY

4-WAY SWITCH

WEIGHT: 350#

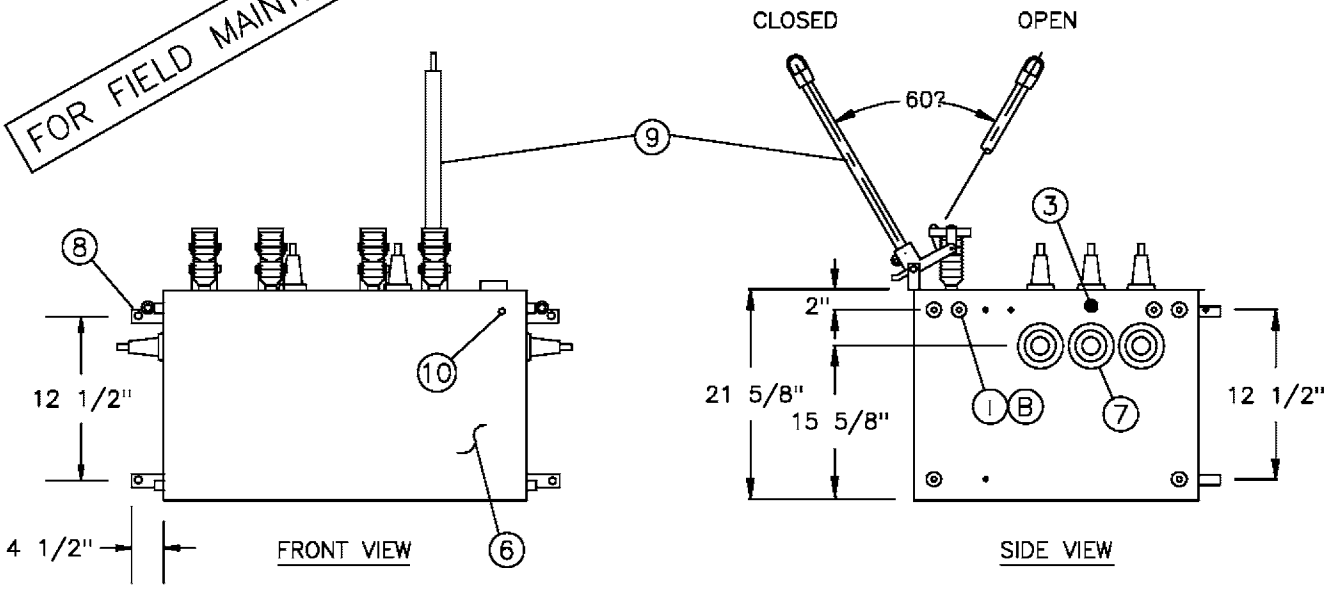

DEVIATION REQUEST IS REQUIRED FOR NEW INSTALLATION OF 4-WAY SWITCH

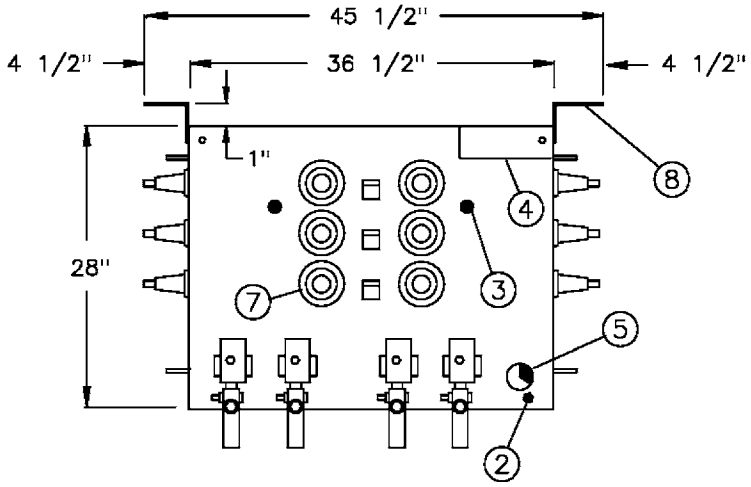

TOP VIEW

TABLE OF CONTENTS

3699.711 SUPERSEDES 3670.3 (1-1-98)	SDG&E ELECTRIC STANDARDS SUBSURFACE/SURFACE OPERABLE SF-6 GAS SWITCH 12KV, 600 AMP, THREE-PHASE	DATE 1-1-98 APPD

ELECTRICAL RATINGS	
VOLTAGE	15.5 KV
BIL	95 KV
CURRENT, CONTINUOUS	600 AMP
LOADMAKE AND LOADBREAK	600 AMP
MOMENTARY AND FAULT CLOSE (RMS, ASYMMETRICAL) (RMS, SYMMETRICAL)	32,000 AMP 20,000 AMP

600 AMP	UNIT STOCK NUMBER	ASSEMBLY UNIT
4-WAY (STAINLESS STEEL)	708770 Ⓒ	SW-4WY

FOR FIELD MAINTENANCE ONLY

TYPICAL ONE LINE DIAGRAM

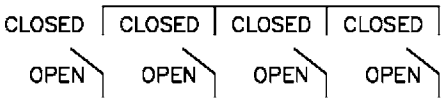

4-WAY ONE LINE DIAGRAM

SWITCH PARTS LIST

ITEM	DESCRIPTION	ITEM	DESCRIPTION
1	LIFTING EYES, REMOVABLE	6	SWITCH TANK
2	SF-6 FILL VALVE	7	600 AMP BUSHING ASSEMBLY
3	GROUND LUG	8	MOUNTING ANGLES
4	NAME PLATE AND CONNECTION DIAGRAM	9	REMOVABLE OPERATING HANDLE
5	COLOR CODED PRESSURE GAUGE	10	HANDLE HANGER

NOTES:

- SWITCH MEASUREMENTS MAY VARY WITH DIFFERENT SUPPLIERS.
- SWITCHES ARE DELIVERED FROM THE SUPPLIERS WITH ALL THE PARTS LISTED IN THE PARTS LISTED.
- SWITCH NUMBERS ARE ISSUED BY THE ENGINEERING CLERK IN EACH DISTRICT.
- THE SWITCHES SHALL BE USED WITH POLYETHYLENE CABLES AND 600 AMP ELBOW TEES.
- FOR REPLACEMENT OF AN EXISTING 18 INCH SWITCH LEG, USE STOCK NUMBER 457162.

INSTALLATION:

A. 4-WAY SWITCHES ARE STAINLESS STEEL AND SHALL BE BOLTED AGAINST THE WALL. USE THE 30 INCH STAINLESS STEEL SINGLE SUPPORT LEG (STOCK NUMBER 457166) FOR THE 3316 HANDHOLE INSTALLATION. FOR MANHOLE OR VAULT INSTALLATIONS, USE 4-54 INCH STAINLESS STEEL LEGS (STOCK NUMBER 457168), AND 8-5/8" X 3-1/2" STAINLESS STEEL BOLTS (STOCK NUMBER 156750).

Ⓑ LIFTING EYES ARE NOT STAINLESS STEEL AND SHOULD BE REMOVED AFTER THE SWITCH IS INSTALLED.

Ⓒ A DEVIATION REQUEST IS REQUIRED FOR THE NEW INSTALLATION OF A 4-WAY SWITCH. RETROFITS OF EXISTING SWITCHES DO NOT REQUIRE A DEVIATIONS REQUEST (SEE STANDARD 3005 FOR DEVIATION REQUEST FORM AND PROCEDURE).

REFERENCE:

G. SEE STANDARD 3213 FOR SWITCH IDENTIFICATION.
H. SEE STANDARD 3649 FOR EQUIPMENT COMBINATION GUIDELINES FOR SWITCHES IN MANHOLES.
I. SEE STANDARD 3671 FOR SWITCH INSTALLATION IN A 3316 HANDHOLE.
J. SEE STANDARD 4181.3 FOR SUBSURFACE/SURFACE OPERABLE SWITCH CONNECTIONS.
K. SEE DESIGN STANDARD 6111 FOR SWITCH APPLICATION.

	SDG&E ELECTRIC STANDARDS	
DATE 1-1-98 APPD [signature] / CAK	SUBSURFACE/SURFACE OPERABLE SF-6 GAS SWITCH 12KV, 600 AMP, THREE-PHASE	3699.712 SUPERSEDES 3670.4 (1-1-98)

TABLE OF CONTENTS

TABLE OF CONTENTS

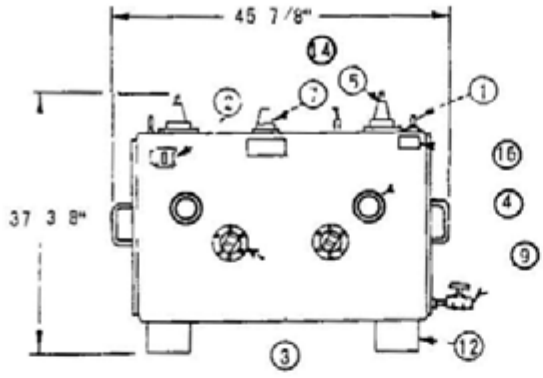

SIDE VIEW - 2 WAY
(ESCO)

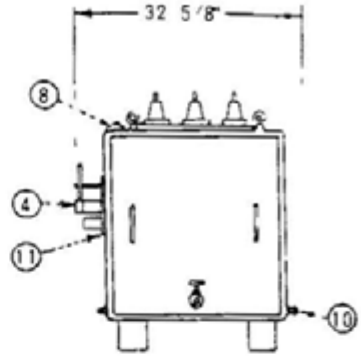

END VIEW

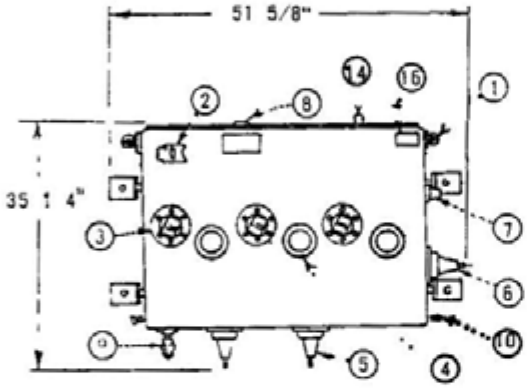

SIDE VIEW - 3 WAY
(ESCO)

FOR FIELD MAINTENANCE ONLY

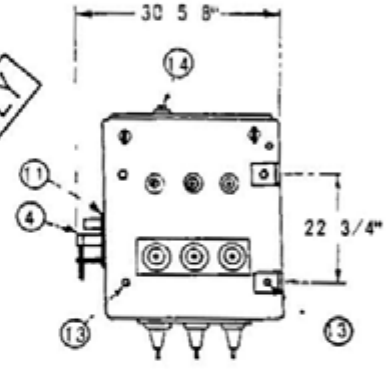

END VIEW

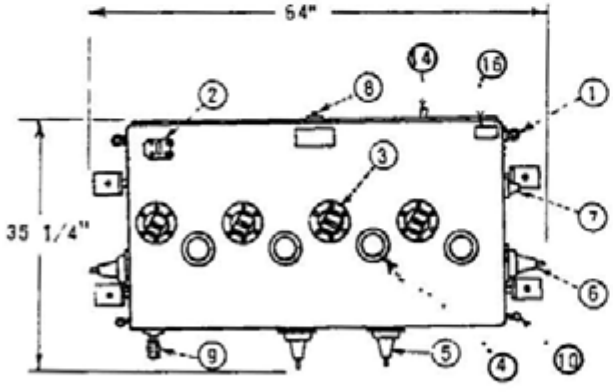

SIDE VIEW - 4 WAY
(ESCO)

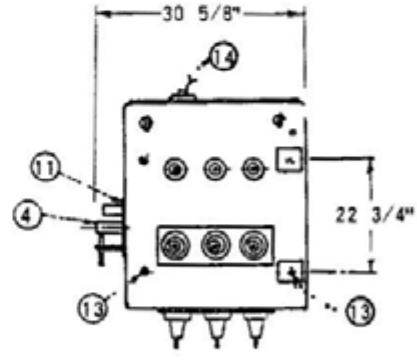

END VIEW

DATE 7/31/84 APPD. SRL / SRH	SDG&E ELECTRIC STANDARDS SUBSURFACE OIL SWITCH 600 AMP, 12KV, 3Ø	3699.701 SUPERCEDES 3670.1 (3-15-82)

TABLE OF CONTENTS

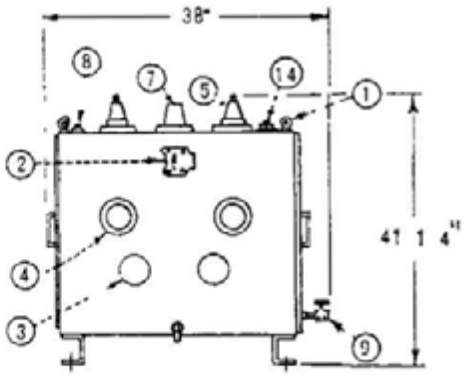

SIDE VIEW - 2 WAY
(G & W)

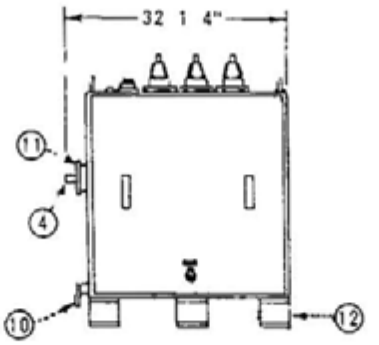

END VIEW

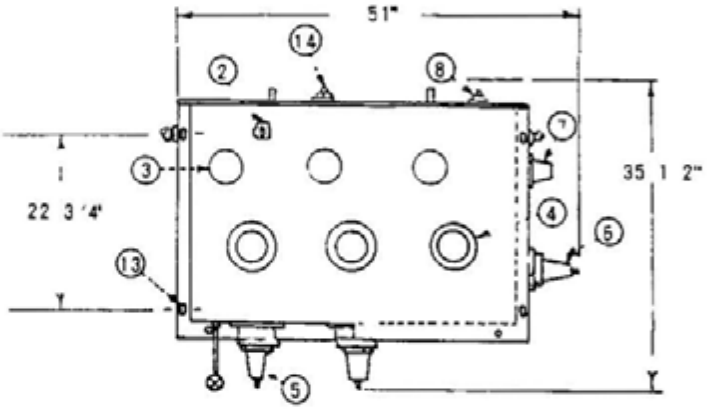

SIDE VIEW - 3 WAY
(G & W)

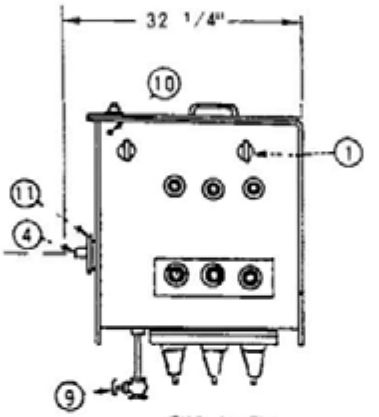

END VIEW

FOR FIELD MAINTENANCE ONLY

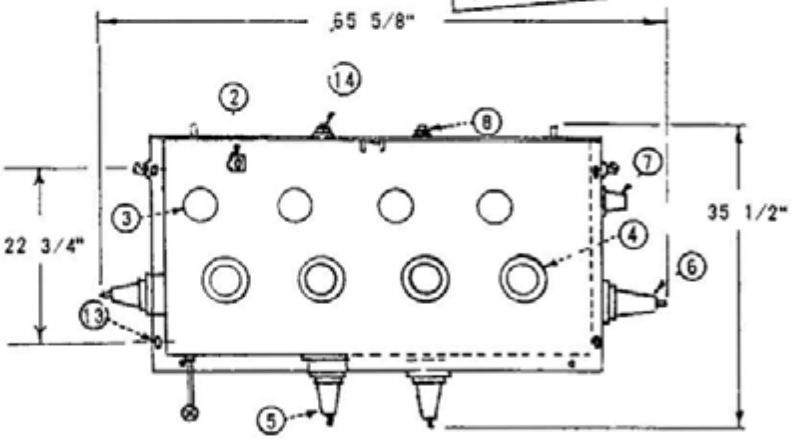

SIDE VIEW - 4 WAY
(G & W)

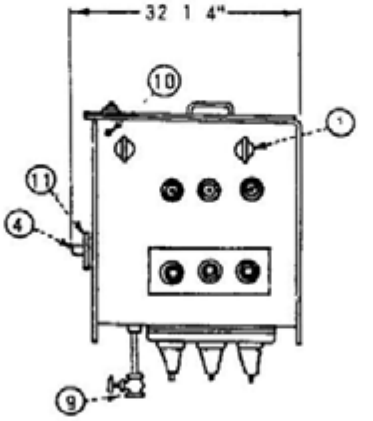

END VIEW

3699.702 SUPERCEDES 3670.2 (3-15-82)	SDG&E ELECTRIC STANDARDS SUBSURFACE OIL SWITCH 600 AMP, 12KV, 3Ø	DATE 7/31/84 APPD

(11)

SWITCH POSITION

SWITCH POSITIONS	
1	CLOSED
2	OPEN
3	TEST (C)

ELECTRICAL RATINGS:	
VOLTAGE	15KV
BIL	110KV
CURRENT, CONTINUOUS	600 AMP
LOADMAKE AND LOADBREAK	600 AMP
MOMENTARY AND FAULT CLOSE (RMS ASYMMETRICAL)	40 000 AMP
(RMS, SYMMETRICAL)	25,000 AMP

FOR FIELD MAINTENANCE ONLY

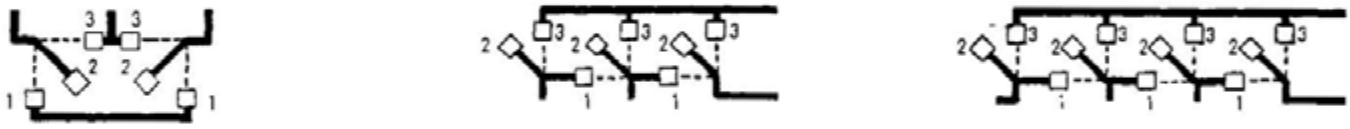

2 WAY ONE LINE DIAGRAM

3 WAY ONE LINE DIAGRAM

4 WAY ONE LINE DIAGRAM

TYPICAL ONE LINE DIAGRAMS

ATTENTION:

WAY WITH OPEN CONTACTS CAN STILL BE ENERGIZED DUE TO CONNECTION TO ADJACENT WAY.

NOTES:

A MAJOR USE SECTIONALIZING.

B THIS SWITCH SHALL BE USED WITH POLYETHYLENE CABLES AND 600 AMPERE ELBOW T'S (4182).

(C) 200 AMPERE TEST BUSHINGS ARE FOR TEMPORARY GROUNDING-TO MEET OSHA REQUIREMENTS-NOT FOR LOAD

ITEM	DESCRIPTION	ITEM	DESCRIPTION	600 AMP	UNIT STOCK NUMBER
1	LIFTING EYES (REMOVABLE)	12	MOUNTING BRACKETS	2 WAY	708986
2	OIL LEVEL GAUGE	13	LEG MOUNTING HOLES	3 WAY	708979
3	LINK VIEWING WINDOWS	14	PRESSURE TEST VALVE	4 WAY	708977
4	OPERATING HANDLE ASSEMBLY	15	OPERATING HANDLE, ANTI-REVERSIBLE (NOT SHOWN)	-	-
5	BUSHINGS (600 AMP) ESNA 600				
6	BUSHINGS (600 AMP) ESNA 600	16	NAMEPLATE	-	-
7	BUSHINGS (200 AMP) GE SUREMAKE (LB)(C)	-			
8	FILL PLUG	-			
9	DRAIN VALVE	-			
10	GROUND LUGS (2)	-			
11	POSITION LABELS (SEE SWITCH POSITION TABLE)	-			

SDG&E ELECTRIC STANDARDS

DATE 7/31/84

APPD

SUBSURFACE OIL SWITCH
600 AMP, 12KV, 3Ø

3699.703

SUPERCEDES
3670.3 (3-15-82)

TABLE OF CONTENTS

MAJOR USE SECTIONALIZING

ELECTRICAL RATINGS*	
VOLTAGE	15KV
BIL	110KV
CURRENT, CONTINUOUS	600 AMP
LOADMAKE AND LOADBREAK	600 AMP
MOMENTARY AND FAULT CLOSE (RMS ASYMMETRICAL)	40,000 AMP
(RMS, SYMMETRICAL)	25 000 AMP

600 AMP	UNIT STOCK NUMBER
ON-OFF	708982
3 WAY	708983
4 WAY	708984

SWITCH POSITION

SWITCH POSITIONS	
1	CLOSED
2	OPEN

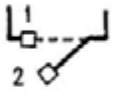

ON-OFF ONE LINE DIAGRAM

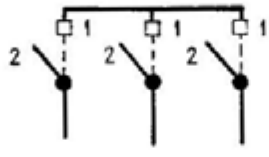

3 WAY ONE LINE DIAGRAM

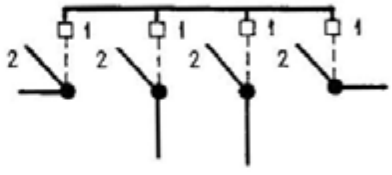

4 WAY ONE LINE DIAGRAM

TYPICAL ONE LINE DIAGRAMS

NOTES:

A. THIS SWITCH SHALL BE USED WITH POLYETHYLENE CABLES AND 600 AMPERE ELBOW T'S (4182).

B. SWITCH NUMBER TO BE ASSIGNED BY ELECTRIC DISTRIBUTION ENGINEERING.

FOR FIELD MAINTENANCE ONLY

TABLE OF CONTENTS

3699.704 SUPERCEDES 3670.4 (3-15-82)	SDG&E ELECTRIC STANDARDS SUBSURFACE OIL SWITCH 600 AMP, 12KV, 3Ø	DATE 7/31/84 APPD RL / DRH

SCOPE: THIS STANDARD SHOWS SUBSURFACE/SURFACE OPERABLE 600 AMP SWITCHES.

ON–OFF OIL SWITCH

WEIGHT W/O OIL 355#
W/ OIL 700#

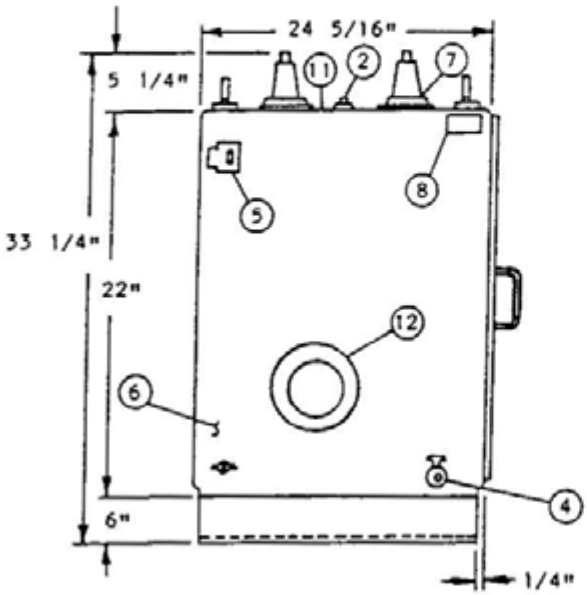

FRONT VIEW

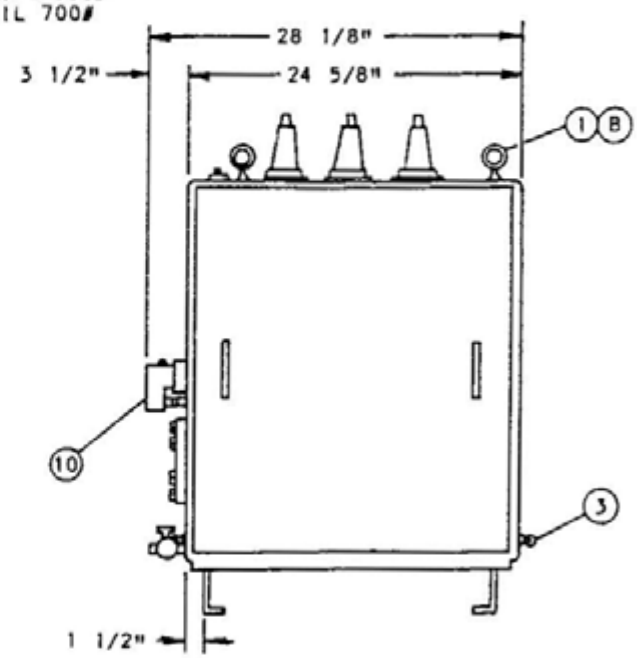

END VIEW

FOR FIELD MAINTENANCE ONLY

4–WAY OIL SWITCH

WEIGHT: W/O OIL 575#
W/ OIL 1400#

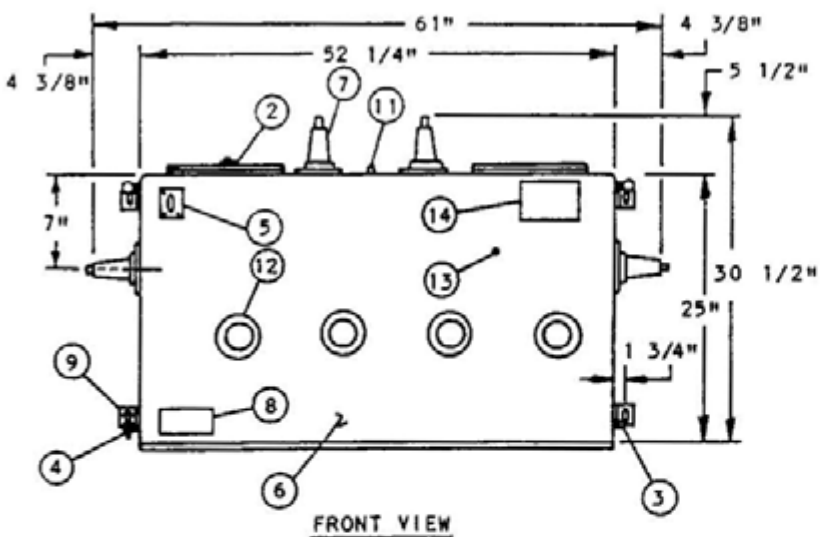

FRONT VIEW

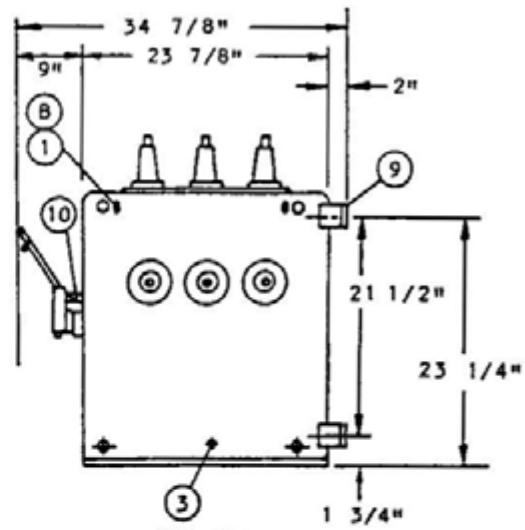

END VIEW

TABLE OF CONTENTS

DATE 1-1-90 APPD	SDG&E ELECTRIC STANDARDS SUBSURFACE/SURFACE OPERABLE OIL SWITCH 12KV, 600 AMP, 3Ø	3699.705 SUPERCEDES 3670.1 (1-1-90)

ELECTRICAL RATINGS	
VOLTAGE	15.0 KV
BIL	110 KV
CURRENT, CONTINUOUS	600 AMP
LOADMAKE AND LOADBREAK	600 AMP
MOMENTARY AND FAULT CLOSE (RMS, ASYMMETRICAL) (RMS, SYMMETRICAL)	19,200 AMP 12,000 AMP

600 AMP	UNIT STOCK NUMBER
ON-OFF	708982
4-WAY (STAINLESS STEEL)	708770

TYPICAL ONE LINE DIAGRAMS

FOR FIELD MAINTENANCE ONLY

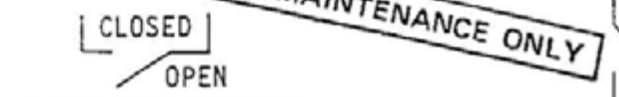

ON-OFF LINE DIAGRAM

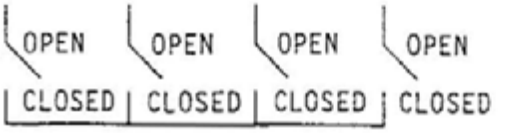

4-WAY ONE LINE DIAGRAM

SWITCH PARTS LIST

ITEM	DESCRIPTION	ITEM	DESCRIPTION
1	LIFTING EYES, REMOVABLE	8	NAME PLATE
2	FILL PLUG	9	MOUNTING ANGLES
3	GROUND LUG	10	OPERATOR HANDLE ASSEMBLY (WITH INTERNAL SPRINGS)
4	DRAIN VALVE	11	AIR CHECK VALVE
5	OIL LEVEL GAUGE	12	VIEWING WINDOW
6	SWITCH TANK	13	HANDLE HANGER (4-WAY SWITCH ONLY)
7	600 AMP BUSHING ASSEMBLY	14	CONNECTION DIAGRAM (4-WAY SWITCH ONLY)

NOTES:

- SWITCH MEASUREMENTS MAY VARY WITH DIFFERENT SUPPLIERS.
- SWITCHES ARE DELIVERED FROM THE SUPPLIERS WITH ALL THE PARTS LISTED IN THE PARTS LISTED.
- SWITCH NUMBERS ARE ISSUED BY THE ENGINEERING CLERK IN EACH DISTRICT.
- THE SWITCHES SHALL BE USED WITH POLYETHYLENE CABLES AND 600 AMP ELBOW TEES.
- FOR REPLACEMENT OF AN EXISTING 18 INCH SWITCH LEG, USE STOCK NUMBER 457162.

INSTALLATION:

A. 4-WAY SWITCHES ARE STAINLESS STEEL AND SHALL BE BOLTED AGAINST THE WALL. USE THE 30 INCH STAINLESS STEEL SINGLE SUPPORT LEG (STOCK NUMBER 457166) FOR THE 3316 HANDHOLE INSTALLATION. FOR MANHOLE OR VAULT INSTALLATIONS, USE 4-54 INCH STAINLESS STEEL LEGS (STOCK NUMBER 457168), 8-5/8" X 3-1/2" STAINLESS STEEL BOLTS (STOCK NUMBER 156750(E)) AND 8 GALVANIZED WASHERS (STOCK NUMBER 800256).

(B) LIFTING EYES ARE NOT STAINLESS STEEL AND SHOULD BE REMOVED AFTER THE SWITCH IS INSTALLED.

C. USE THE CORBIN #27 LOCK (STOCK NUMBER 514848(E)) TO LOCK SWITCH POSITIONS.

D. OIL SWITCHES MUST BE LEVEL. THE LEVELING REQUIREMENT IS A TOLERANCE OF 1/2 INCH FROM THE FRONT TO THE BACK OR 1/2 INCH END TO END.

(E) EXEMPT MATERIAL.

(F) DEVIATION REQUEST REQUIRED FOR INSTALLATION OF ON-OFF SWITCH OR 4-WAY SWITCH. (SEE STANDARD 3005 FOR DEVIATION REQUEST FORM AND PROCEDURE).

REFERENCE:

G. SEE STANDARD 3212 FOR SWITCH IDENTIFICATION.

H. SEE STANDARD 3649 FOR EQUIPMENT COMBINATION GUIDELINES FOR SWITCHES IN MANHOLES.

I. SEE STANDARD 3671 FOR SWITCH INSTALLATION IN A 3316 HANDHOLE.

J. SEE STANDARD 4181.3 FOR SUBSURFACE/SURFACE OPERABLE SWITCH CONNECTIONS.

TABLE OF CONTENTS

FIELD MAINTENANCE ONLY

REVISION HISTORY:

7/13/2016: All versions prior to 2016 are superseded by their current version found inside the Overhead Construction Standard Manual.

TABLE OF CONTENTS

© 1998 - 2016 San Diego Gas & Electric Company. All rights reserved. Removal of this copyright notice without permission is not permitted under law.

REV	CHANGE	BY	DSGN	APPV	DATE	REV	CHANGE	BY	DSGN	APPV	DATE
C						F					
B						E					
A	ORIGINAL ISSUE	JS	IL	MDJ	7/13/2016	D					

X Indicates Latest Revision | Completely Revised | New Page | Information Removed

SHEET
1 OF 1

SDG&E ELECTRIC UNDERGROUND STANDARD

SUBSURFACE/SURFACE OPERABLE SF-6 GAS SWITCH
12KV, 600 AMP, 3 PHASE

FMO
UG 3671

SCOPE: THIS STANDARD SHOWS THE MATERIAL AND INSTALLATION REQUIREMENTS FOR INSTALLING A ON–OFF SUBSURFACE/SURFACE OPERABLE SWITCH IN A 3316 HANDHOLE.

ON–OFF SWITCH IN A 3316 HANDHOLE INSTALLATION

FIGURE 3

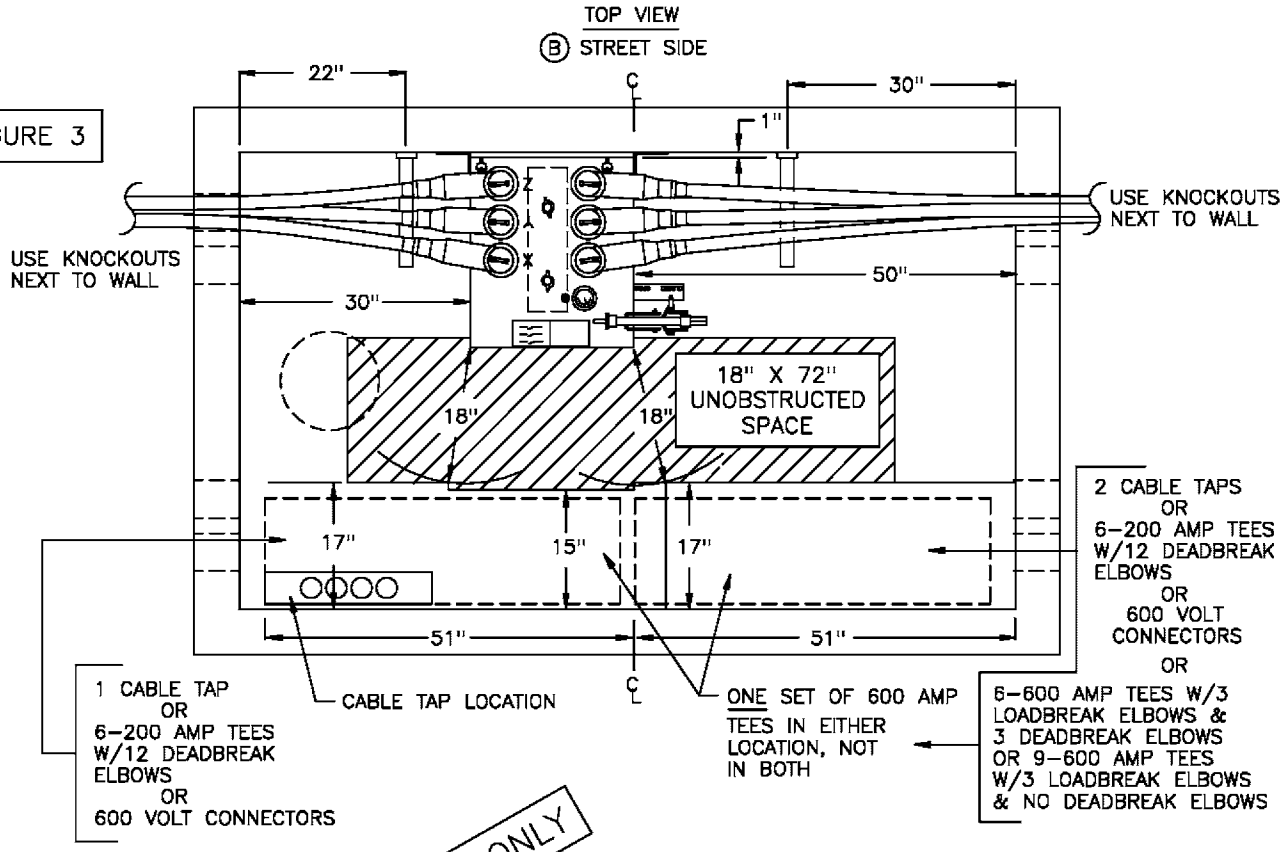

FIGURE 4

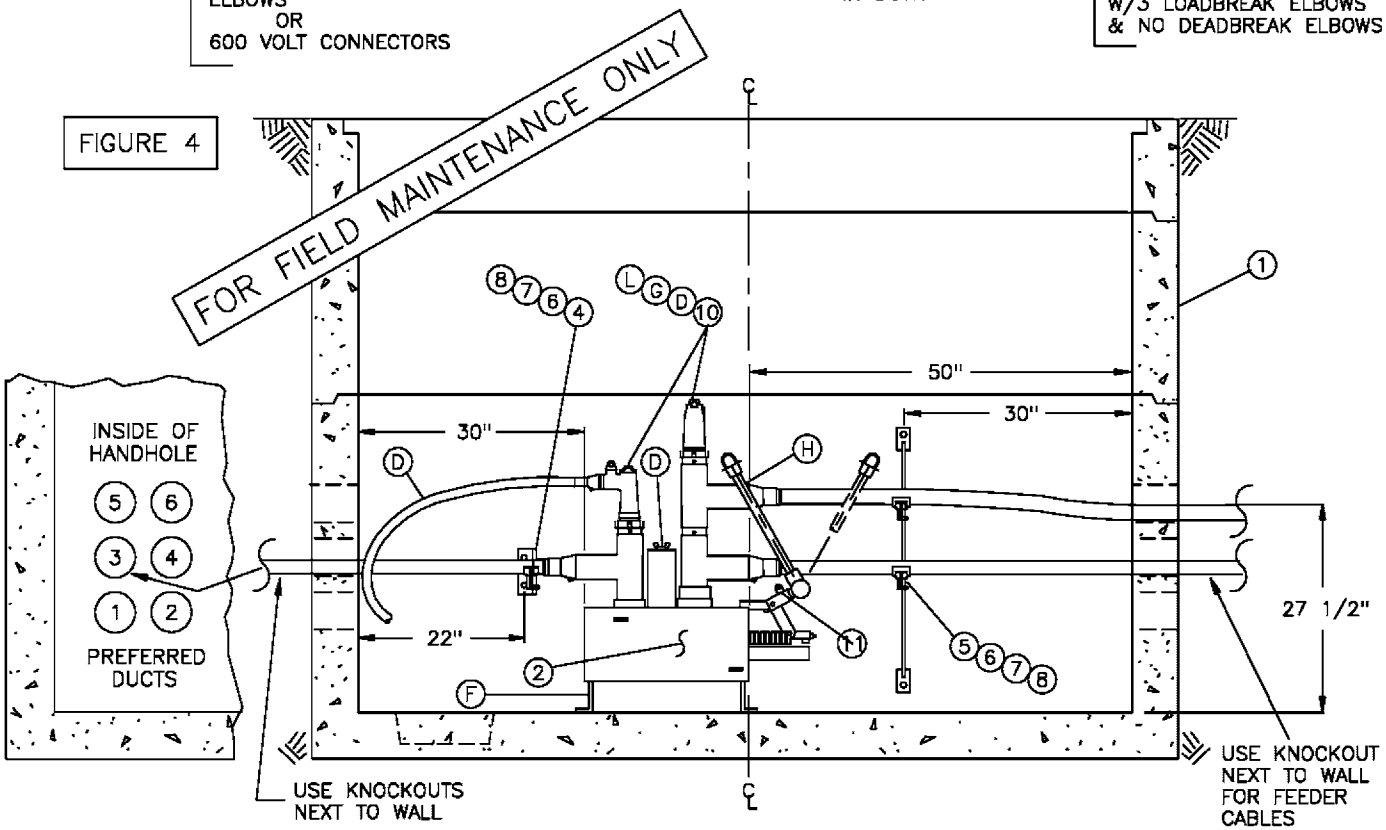

TABLE OF CONTENTS

3699.713 SUPERSEDES 3671.1 (1–1–98)	SDG&E ELECTRIC STANDARDS SUBSURFACE/SURFACE OPERABLE SF–6 GAS SWITCH 12KV, 600 AMP, THREE–PHASE	DATE 1–1–94 APPD JLB/RDJ

NOTES:

- "PIGGYBACK" TEES SHOWN IN THIS STANDARD SHALL ONLY BE USED TO FEED A SWITCHED TIE POSITION.
- OTHER CONFIGURATIONS MAY BE DESIGNED PROVIDED EQUIPMENT LIMITIONS AND THE PROPER UNOBSTRUCTED SPACE ARE PROVIDED TO ALLOW PERSONNEL TO PERFORM THEIR WORK SAFELY AND ALLOW ACCESS TO THE CONDUITS.

BILL OF MATERIAL:

ITEM	DESCRIPTION	QUANTITY	CONST STD. OR PAGE NO.	STOCK NUMBER
1	HANDHOLE (PARKWAY OR TRAFFIC) (A)	AS REQ'D	3316	–
2	12KV SUBSURFACE/SURFACE OPERABLE SWITCH, 600A, ON–OFF	1	3670	708982
3	PROTECTOR, CABLE U.G.	AS REQ'D	–	558720
4	ADAPTER, CABLE ARM	AS REQ'D	4178	102016
5	HANGER, CABLE ARM, 34"/36"	AS REQ'D	4178	564480
6	CABLE ARM, 15" (3 WAY)	AS REQ'D	4178	110528
7	CABLE INSULATOR	AS REQ'D	4178	430592
8	TIE STRAP	AS REQ'D	4178	738440
9	ANCHOR, CONCRETE STAINLESS STEEL, 1/2" X 3–3/4"	AS REQ'D	4178	107654
10	12KV, 200A (LOADBREAK) & 600A CONNECTORS (D)	AS REQ'D	4181	–
11	PADLOCK, SCHLAGE ELECT SERIES	1	–	514848
12	AUTOMATIC FAULT INDICATOR (O)	AS REQ'D	4352	–

FOR FIELD MAINTENANCE ONLY

INSTALLATION:

(A) A STANDARD 3316 HANDHOLE IS REQUIRED FOR THE ON–OFF SWITCH. THE NUMBER OF CABLES AND CONNECTORS REQUIRED WILL DETERMINE WHICH HANDHOLE TO USE.

(B) THE SWITCH BOLTED TO THE STREET SIDE WALL IS PREFERRED. THIS ALLOWS CABLE TAPS TO BE OPERATED FROM THE STREET OR SIDEWALK SIDE.

C. INSTALL CABLE AND CABLE SUPPORTS, ETC. IN THE HANDHOLE AND ON THE SWITCH AS SHOWN IN THE INSTALLATION DRAWINGS.

(D) ON THE 200 AMP CABLE, LOOP THE HOLE LEAVING ENOUGH SLACK TO REACH BOTH SETS OF 600 AMP TEES. A STAND OFF BAR, STOCK NUMBER 677240 WILL BE REQUIRED TO ATTACH TO THE STAND OFF BRACKET WHEN TEMPORARLY LANDING LOADBREAK ELBOWS. ALL 200 AMP CONNECTORS ON THE SWITCH SHALL BE LOADBREAK.

(F) LEVELING OF THE SF–6 GAS SWITCH IS NOT REQUIRED. **DO NOT INSTALL SWITCH ANY HIGHER OFF THE** FLOOR THAN SHOWN IN THE INSTALLATION DRAWING DUE TO CABLE ARRANGEMENT.

(G) DO NOT INSTALL LOADBREAK ELBOWS ON PIGGYBACK TEES FOR A PERMANENT INSTALLATION.

(H) THE REMOVABLE OPERATING HANDLE IS TO REMAIN PERMANENTLY ATTACHED TO THE SWITCH.

REFERENCE:

I. SEE STANDARD 3200 FOR SWITCH IDENTIFICATION NUMBERS AND CABLE ID TAGS.

J. SEE STANDARD 3670 FOR SUBSURFACE SWITCH.

K. SEE PAGE 3374.3 FOR CONDUIT INSTALLATION PRACTICES.

(L) SEE STANDARD 4181 FOR 12KV 200 AND 600 AMP CONNECTOR ASSEMBLIES.

M. SEE STANDARD 4530 FOR NEUTRAL AND GROUND WIRE DIAGRAM.

N. SEE DESIGN STANDARD 6111 FOR SWITCH APPLICATION.

(O) SEE DESIGN STANDARD 6113 FOR AUTOMATIC FAULT INDICATOR APPLICATION.

DATE 1–1–94 APPD JLB/RDJ	SDG&E ELECTRIC STANDARDS SUBSURFACE/SURFACE OPERABLE SF–6 GAS SWITCH 12KV, 600 AMP, THREE–PHASE	3699.714 SUPERSEDES 3671.2 (1–1–98)

TABLE OF CONTENTS

SCOPE: THIS STANDARD SHOWS THE MATERIAL AND INSTALLATION REQUIREMENTS FOR INSTALLING A 4-WAY SUBSURFACE/SURFACE OPERABLE SWITCH IN A 3316 HANDHOLE.

DEVIATION REQUEST IS REQUIRED FOR NEW INSTALLATION OF 4-WAY SWITCH

TYPICAL INSTALLATION DRAWINGS

IN A 3316 HANDHOLE

ALL FOUR FEEDERS FROM ONE DIRECTION (FIGURES 1, 2 & 3)

FIGURE 1

SECTION VIEW – SWITCH WALL

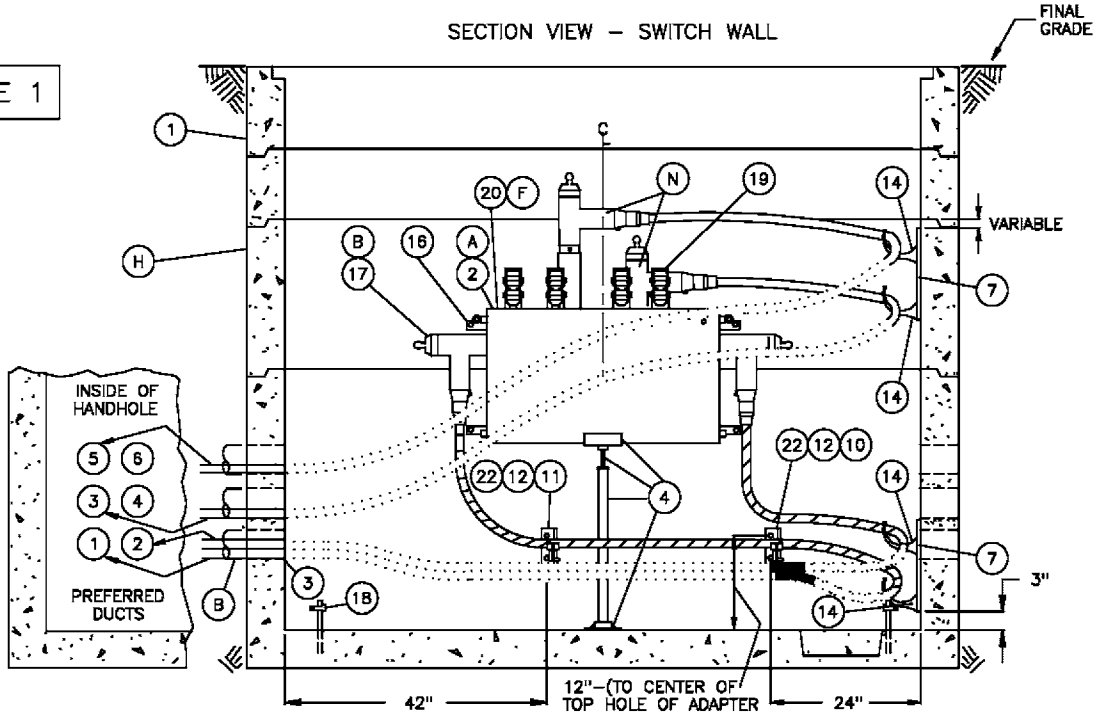

FIGURE 2

SECTION VIEW – WALL OPPOSITE SWITCH

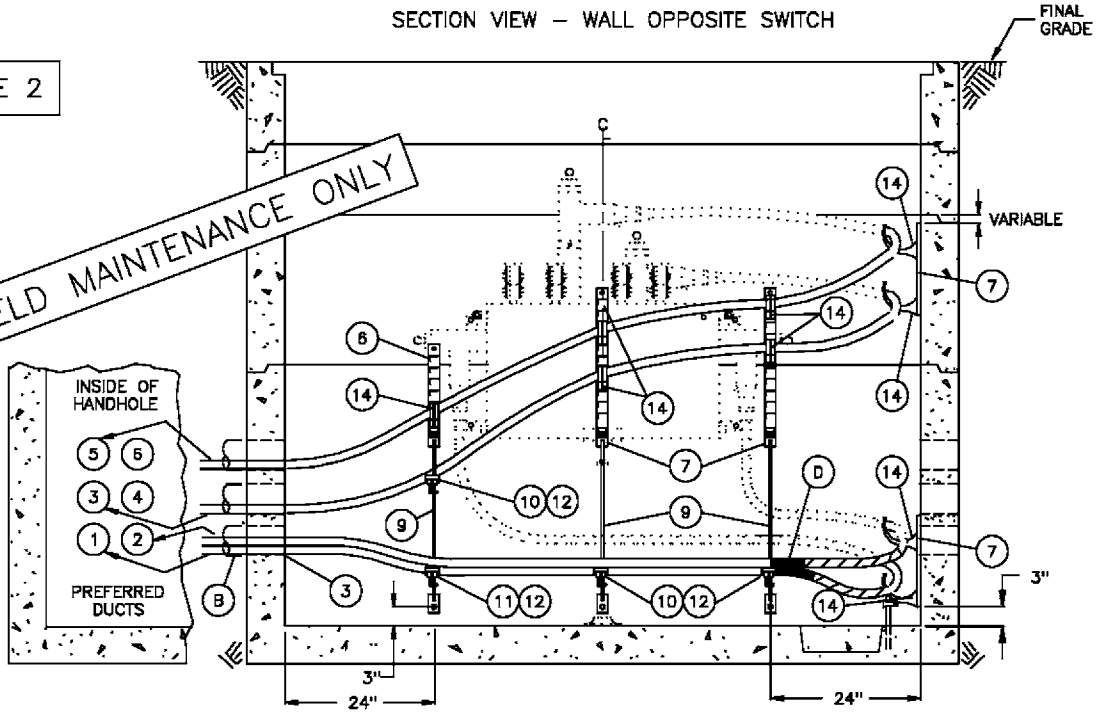

FOR FIELD MAINTENANCE ONLY

TABLE OF CONTENTS

3699.715 SUPERSEDES 3671.3 (1-1-98)	SDG&E ELECTRIC STANDARDS INSTALLATION OF SUBSURFACE/SURFACE OPERABLE SWITCH IN A 3316 HANDHOLE	DATE 1-1-94 APPD JLB/RDJ

FIGURE 3

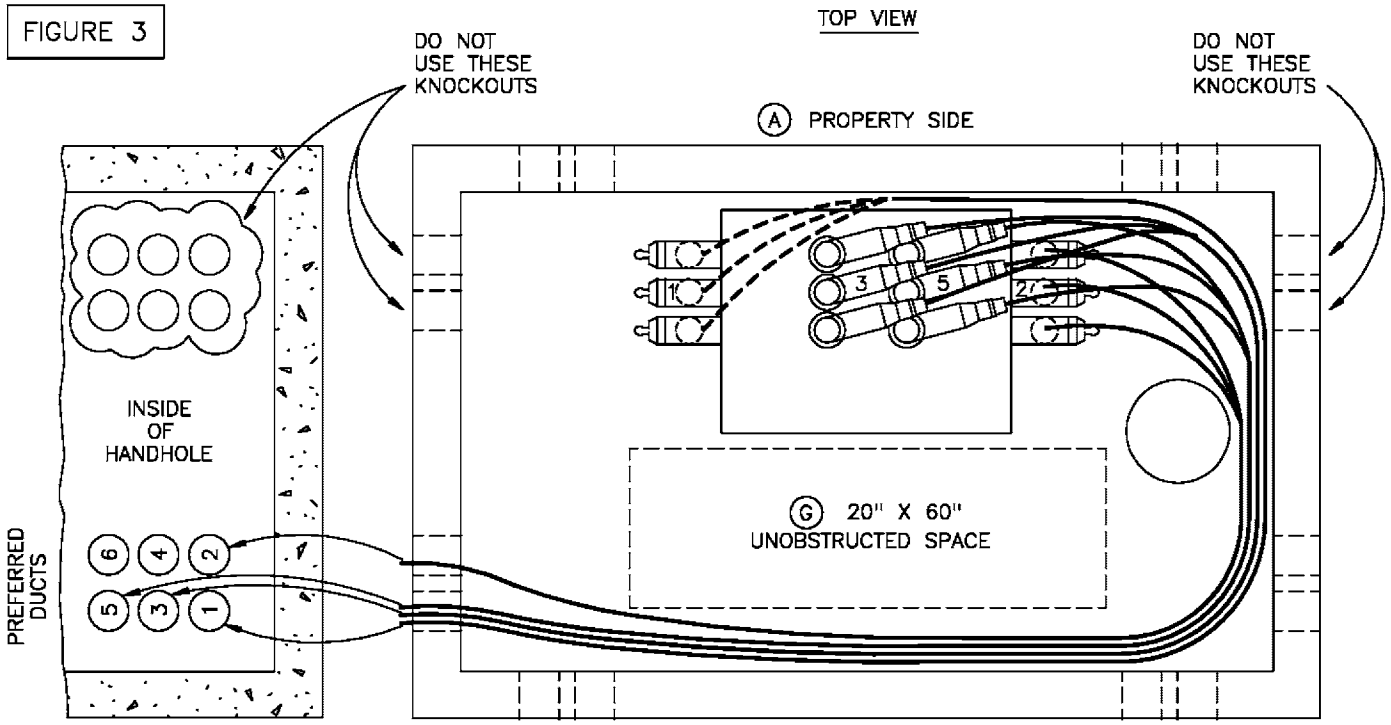

FOR FIELD MAINTENANCE ONLY

TABLE OF CONTENTS

DATE 7-31-84 APPD JLG/RDJ	SDG&E ELECTRIC STANDARDS INSTALLATION OF SUBSURFACE/SURFACE OPERABLE SWITCH IN A 3316 HANDHOLE	3699.716 SUPERSEDES 3671.4 (1-1-98)

TYPICAL INSTALLATION DRAWINGS

SUBSURFACE/SURFACE OPERABLE SWITCH IN A 3316 HANDHOLE FOUR FEEDERS TWO FROM TWO DIRECTIONS (FIGURES 4, 5, & 6)

FIGURE 4

SECTION VIEW – SWITCH WALL

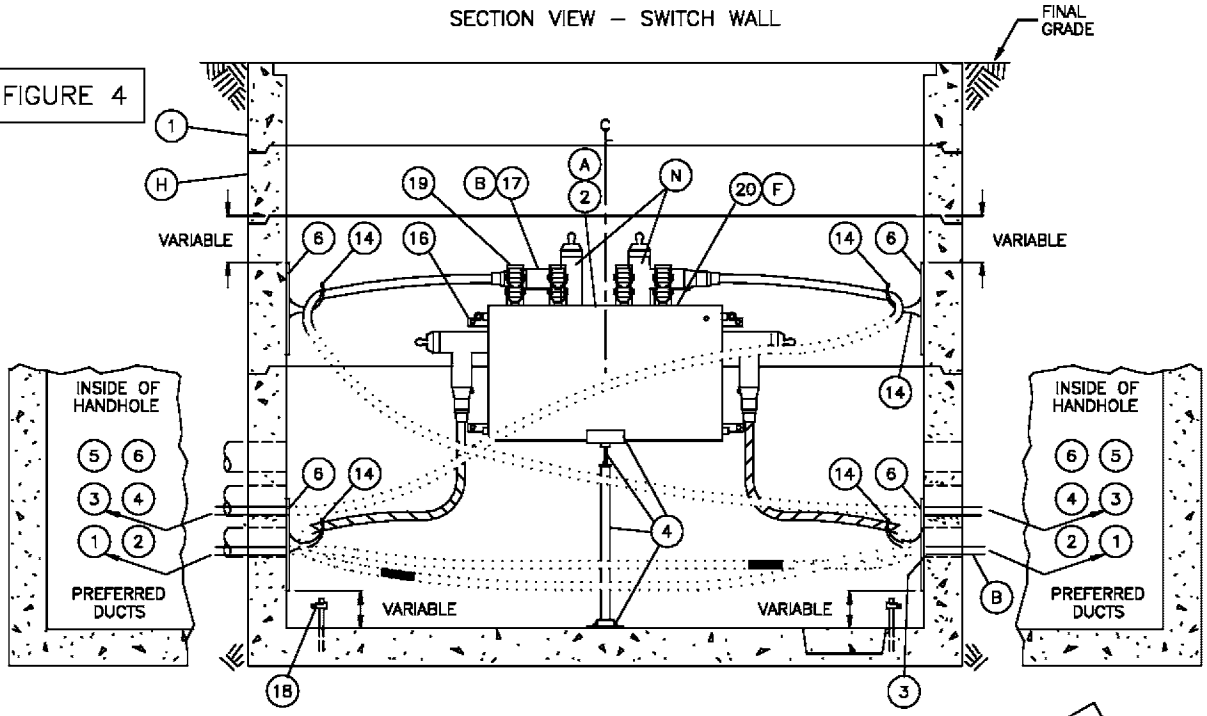

FIGURE 5

SECTION VIEW – WALL OPPOSITE SWITCH

FOR FIELD MAINTENANCE ONLY

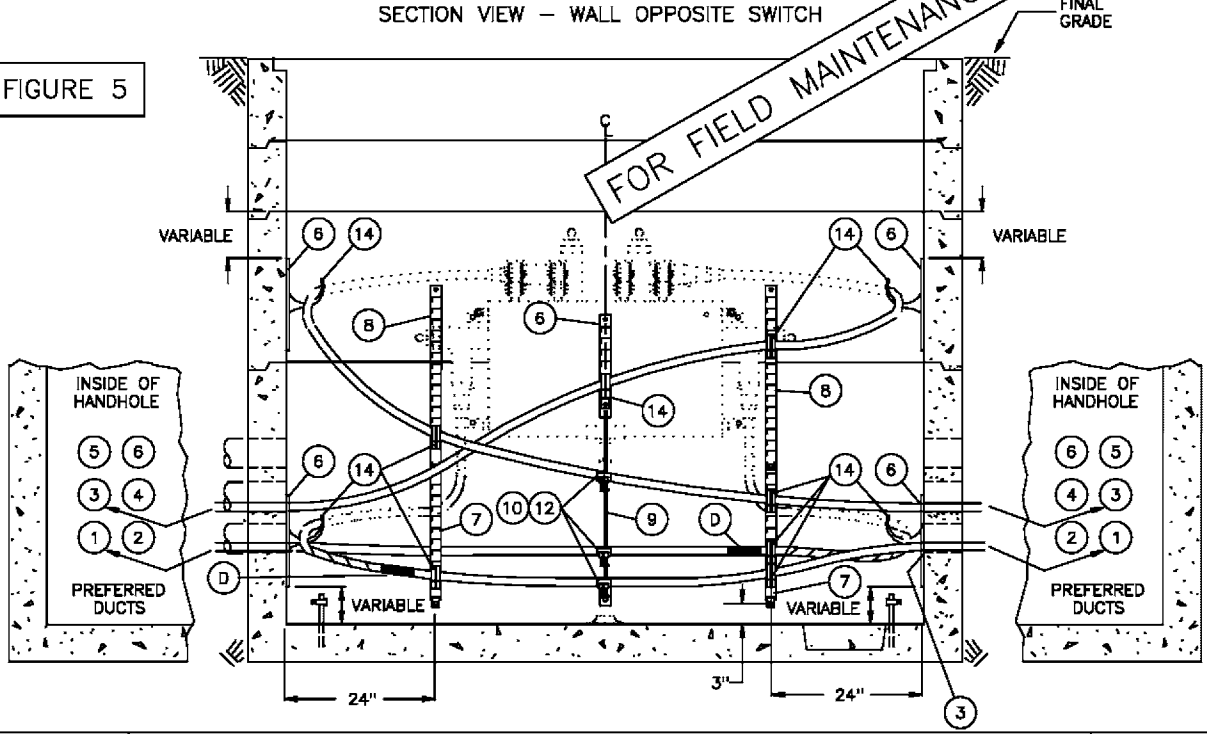

3699.717 SUPERSEDES 3671.5 (1–1–98)	SDG&E ELECTRIC STANDARDS INSTALLATION OF SUBSURFACE/SURFACE OPERABLE SWITCH IN A 3316 HANDHOLE	DATE 1–1–90 APPD JLB/BDG

TABLE OF CONTENTS

FIGURE 6

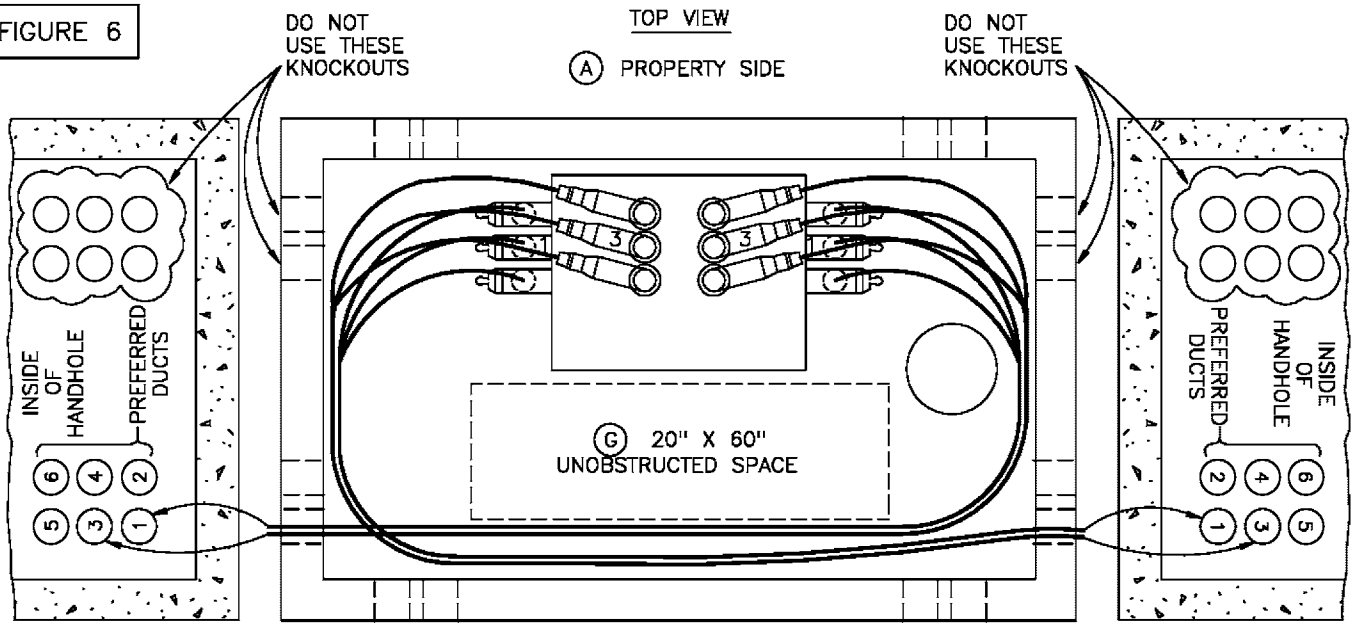

NOTES:

– OTHER CONFIGURATIONS MAY BE DESIGNED PROVIDED EQUIPMENT LIMITIONS AND THE PROPER UNOBSTRUCTED SPACE ARE PROVIDED TO ALLOW PERSONNEL TO PERFORM THEIR WORK SAFELY AND ALLOW ACCESS TO THE CONDUITS.

– FOR REPLACEMENT OF AN EXISTING 18 INCH SWITCH LEG, USE (STOCK NUMBER 457162).

BILL OF MATERIAL: (FOR FIGURES 1 THROUGH 6)

ITEM	DESCRIPTION	QUANTITY	CONST STD. OR PAGE NO.	STOCK NUMBER	ASSEMBLY UNIT
1	HANDHOLE, 5' X 8'–6" (PARKWAY OR TRAFFIC COVER)	1 (H)	3316 (H)	–	–
2	12KV SUBSURFACE/SURFACE OPERABLE SWITCH, 600A, 4–WAY	1	3670	708770	SW–4WY
3	PROTECTOR, CABLE U.G.	1	–	558720	–
4	SWITCH LEG, 1–1/2", 30"	1	–	457166	–
	SWITCH LEG HARDWARE	AS REQ'D	–		
5	AUTOMATIC FAULT INDICATOR	AS REQ'D	4352	–	–
6	HANGER, 15"	AS REQ'D	4178	564512	–
7	HANGER, 24"	AS REQ'D	4178	564544	–
8	HANGER, 30"	AS REQ'D	4178	564576	–
9	HANGER, CABLE ARM, 34"/36"	AS REQ'D	4178	564480	–
10	CABLE ARM, 10" (2 WAY)	AS REQ'D	4178	110496	–
11	CABLE ARM, 15" (3 WAY)	AS REQ'D	4178	110528	–
12	CABLE INSULATOR	AS REQ'D	4178	430592	–
14	CABLE HOOKS, 6"	AS REQ'D	4178	415112	–
15	TIE STRAP	AS REQ'D	4178	738440	–
16	ANCHOR, CONCRETE STAINLESS STEEL, 1/2" X 3–3/4"	AS REQ'D	4178	107654	–
17	12KV, 200A AND 600A CONNECTORS	AS REQ'D	4181	–	–
18	CLAMPS, GROUND ROD	AS REQ'D	–	230016	–
19	PADLOCK, SCHLAGE ELECT SERIES	AS REQ'D	–	514848	–
20	DECALS	AS REQ'D	3212	–	–
21	INHIBITOR (NOT SHOWN)	AS REQ'D	–	247200	–
22	ADAPTER FOR CABLE ARMS	AS REQ'D	4178	102016	–
23	CONNECTOR, COMPRESSION	AS REQ'D	4172	–	–

FOR FIELD MAINTENANCE ONLY

TABLE OF CONTENTS

DATE 1–1–94 APPD JLG/RDJ	SDG&E ELECTRIC STANDARDS INSTALLATION OF SUBSURFACE/SURFACE OPERABLE SWITCH IN A 3316 HANDHOLE	3699.718 SUPERSEDES 3671.6 (1–1–98)

INSTALLATION:

Ⓐ BOLT THE SWITCH TO THE WALL (PROPERTY SIDE IS PREFERRED). OIL SWITCH LEVELING REQUIREMENT IS A TOLERANCE OF 1/2 INCH FROM THE FRONT TO THE BACK OR 1/2 INCH END TO END. LEVELING OF THE SF-6 GAS SWITCH IS NOT REQUIRED. INSTALL THE SWITCH LEG USING THE MEASUREMENTS SHOWN IN THE DRAWING.

Ⓑ NO SECONDARY ALLOWED IN THIS INSTALLATION OTHER THAN THE FEED TO THE SUMP PUMP. THE ONLY 200 AMP AND 600 AMP CABLE ALLOWED IN THIS INSTALLATION IS CABLE TERMINATED ONTO THE SWITCH. THE 200 AMP CABLES MAY BE PULLED IN ANY CONDUIT OTHER THAN THOSE DESIGNATED (DO NOT USE) OR THE ONES USED FOR 600 AMP CABLES. DO NOT TERMINATE #2 OR 2/0 ONTO A BUSHING REQUIRING A BUSHING EXTENSION DUE TO HANDHOLE COVER CLEARANCE.

C. INSTALL CABLE AND CABLE SUPPORTS, ETC. IN THE HANDHOLE AND ON THE SWITCH AS SHOWN IN THE INSTALLATION DRAWINGS. ALL 350, 750 AND 1000 KCMIL CABLES MUST BE UNTRIPLEXED WHENEVER IT IS TRAINED AROUND THE CORNER (90° ANGLE) ON THE HANDHOLE. DO NOT "PIGGYBACK" 600 AMP TEES (ONE ON TOP OF THE OTHER) AT ANY TIME ON THE SWITCH BUSHING.

Ⓓ REMOVE THE JACKETING AS SHOWN (APPROXIMATELY 6 FEET) ON THE 750 AND 1000 KCMIL CABLE WHICH TERMINATES ON THE SIDE SWITCH BUSHINGS. INSTALL ONE LAYER OF SEALING COMPOUND UNDER AND OVER THE CONCENTRIC NEUTRAL BUTTING IT AGAINST THE CABLE JACKETING. INSTALL A HEAT SHRINK TUBE OVER THE SEALING COMPOUND AND JACKETING AND APPLY HEAT. MAKE SURE THE HEAT SHRINK TUBE SHRINKS ON THE SEALING COMPOUND AND CABLE JACKETING AND NOT ON THE CABLE SEMICONDUCTING MATERIALS.

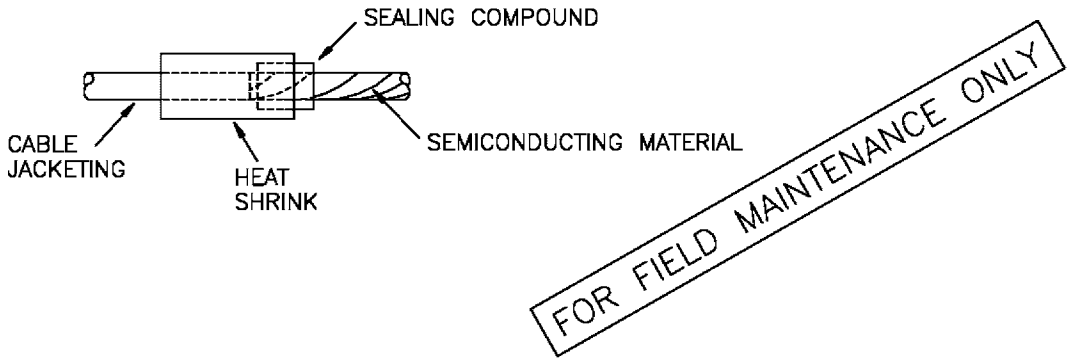

TABLE OF CONTENTS

Ⓕ INSTALL SWITCH IDENTIFICATION NUMBER AND CABLE I.D. TAGS AS SHOWN IN STANDARD 3200.

Ⓖ A 20" X 60" UNOBSTRUCTED SPACE MUST BE MAINTAINED IN THE HANDHOLE.

Ⓗ INSTALL A 12 INCH EXTENSION SECTION (STOCK NUMBER 336208) BETWEEN THE TOP NECK SECTION AND THE 24 INCH EXTENSION SECTION.

REFERENCE:

J. SEE STANDARD 3670 FOR SUBSURFACE SWITCH.

K. SEE STANDARD 3213 FOR INSTALLING SWITCH IDENTIFICATION NUMBERS AND STANDARD 3202 FOR INSTALLING CABLE I.D. TAGS.

L. SEE PAGE 3374.3 FOR CONDUIT INSTALLATION PRACTICES.

M. SEE STANDARD 3362 FOR SUMP PUMP INSTALLATION.

Ⓝ SEE STANDARD 4181 FOR 12KV 200 AND 600 AMP CONNECTOR ASSEMBLIES.

O. SEE STANDARD 4530 FOR NEUTRAL AND GROUND WIRE DIAGRAM.

P. SEE DESIGN STANDARD 6111 FOR SWITCH APPLICATION.

R. SEE DESIGN STANDARD 6113 FOR AUTOMATIC FAULT INDICATOR APPLICATION.

3699.719 SUPERSEDES 3671.7 (1-1-98)	SDG&E ELECTRIC STANDARDS INSTALLATION OF SUBSURFACE/SURFACE OPERABLE SWITCH IN A 3316 HANDHOLE	DATE 1-1-91 APPD JLG/RDG

SCOPE: THIS STANDARD SHOWS THE MATERIAL AN INSTALLATION REQUIREMENTS FOR INSTALLING A ON-OFF SUBSURFACE/ SURFACE OPERABLE SWITCH IN A 3315 HANDHOLE

ON-OFF SWITCH IN A 3315 HANDHOLE INSTALLATION

FIGURE 1

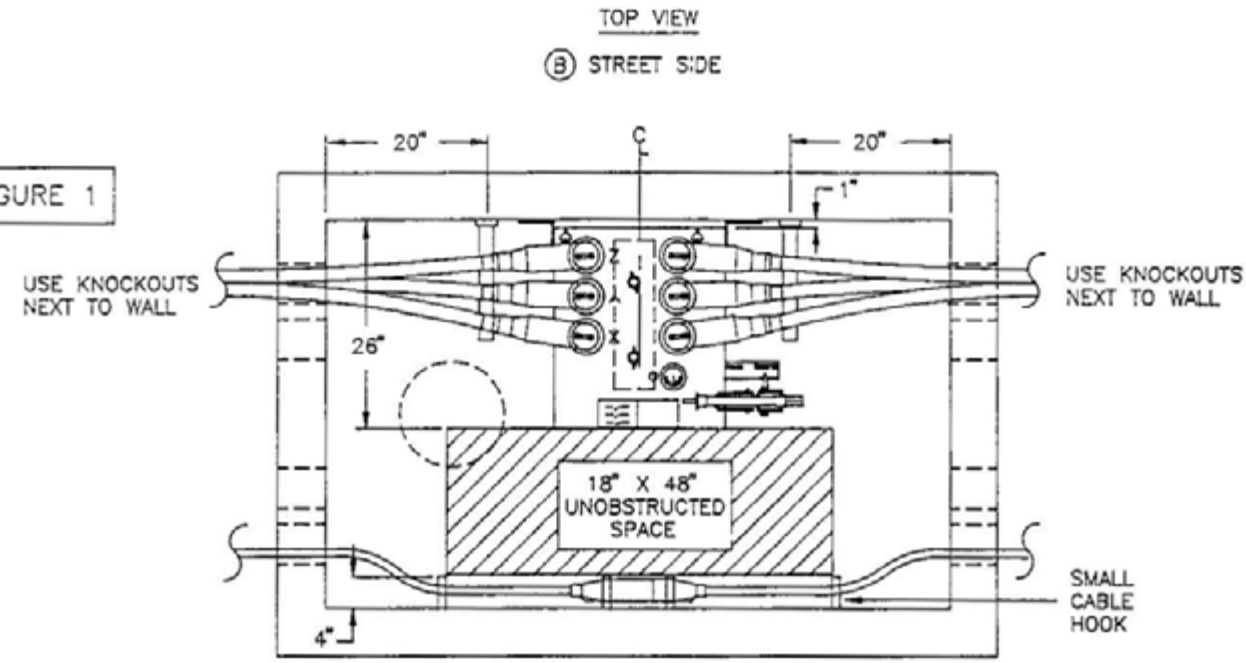

FOR FIELD MAINTENANCE ONLY

FIGURE 2

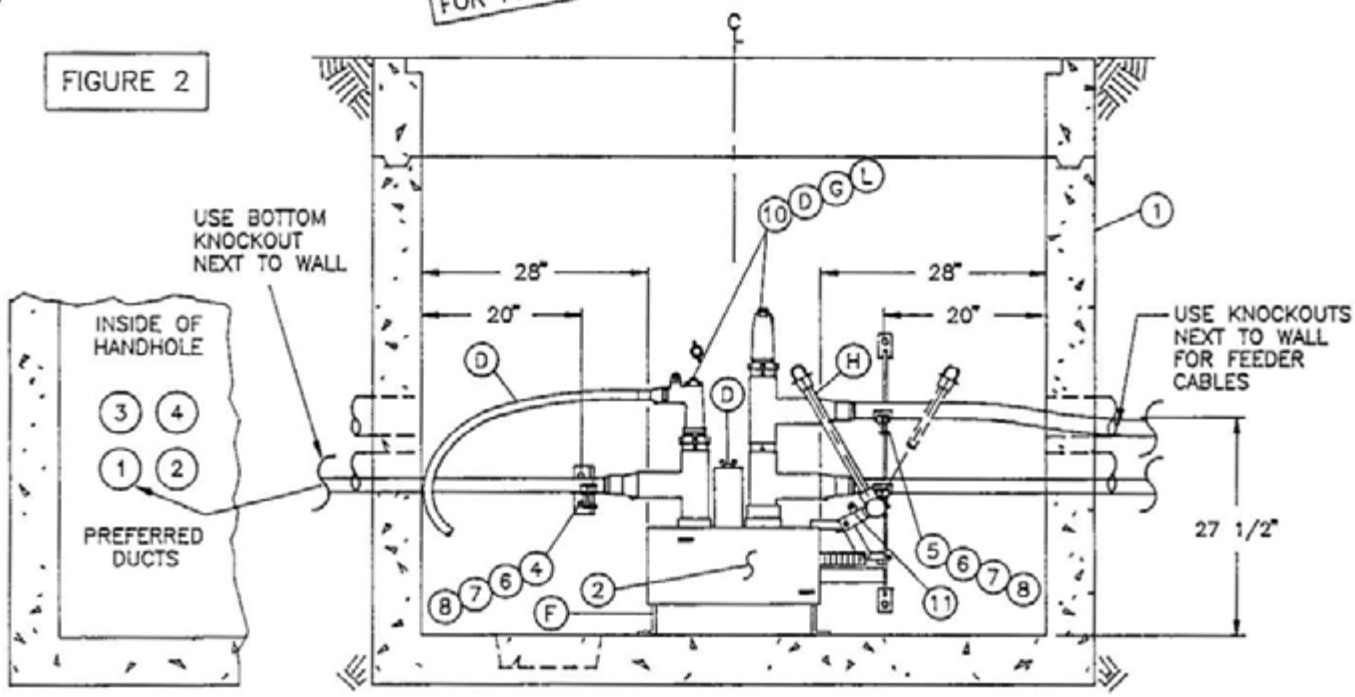

TABLE OF CONTENTS

DATE 1-1-94 APPD JVB/RBK	SDG&E ELECTRIC STANDARDS SUBSURFACE/SURFACE OPERABLE SF-6 GAS SWITCH 12KV, 600 AMP, 3 PHASE	3699.707 SUPERCEDES 3671.1 (1-1-94)

NOTES

- "PIGGYBACK" TEES SHOWN IN THIS STANDARD SHALL ONLY BE USED TO FEED A SWITCHED TIE POSITION
- OTHER CONFIGURATIONS MAY BE DESIGNED PROVIDED EQUIPMENT LIMITIONS AND THE PROPER UNOBSTRUCTED SPACE IS PROVIDED TO ALLOW PERSONNEL TO PERFORM THEIR WORK SAFELY AND ALLOW ACCESS TO THE CONDUITS

BILL OF MATERIAL

ITEM	DESCRIPTION	QUANTITY	CONST STD OR PAGE NO	STOCK NUMBER
1	HANDHOLE (PARKWAY OR TRAFFIC) (A)	AS REQ'D	3315	–
2	12KV SUBSURFACE/SURFACE OPERABLE SWITCH, 600A, ON-OFF	1	3670	708982
3	PROTECTOR, CABLE U G	AS REQ'D	–	558720
4	ADAPTER, CABLE ARM	AS REQ'D	4178	102016
5	HANGER, CABLE ARM, 34"/36"	AS REQ'D	4178	564480
6	CABLE ARM, 15" (3 WAY)	AS REQ'D	4178	110528
7	CABLE INSULATOR	AS REQ'D	4178	430592
8	TIE STRAP	AS REQ'D	4178	738440
9	ANCHOR, CONCRETE STAINLESS STEEL, 1/2" X 3-3/4"	AS REQ'D	4178	107654
10	12KV, 200A (LOADBREAK) & 600A CONNECTORS (D)	AS REQ'D	4181	–
11	PADLOCK, (SCHLAGE ELECT SERIES)	1	–	514848
12	AUTOMATIC FAULT INDICATOR (O)	AS REQ'D	4352	–

FOR FIELD MAINTENANCE ONLY

INSTALLATION:

(A) A STANDARD 3315 HANDHOLE IS REQUIRED FOR THE ON-OFF SWITCH THE NUMBER OF CABLES AND CONNECTORS REQUIRED WILL DETERMINE WHICH HANDHOLE TO USE

(B) THE SWITCH BOLTED TO THE STREET SIDE WALL IS PREFERRED THIS ALLOWS CABLE TAPS TO BE OPERATED FROM THE STREET OR SIDEWALK SIDE

C INSTALL CABLE AND CABLE SUPPORTS, ETC IN THE HANDHOLE AND ON THE SWITCH AS SHOWN IN THE INSTALLATION DRAWINGS

(D) ON THE 200 AMP CABLE, LOOP THE HOLE LEAVING ENOUGH SLACK TO REACH BOTH SETS OF 600 AMP TEES A STAND OFF BAR, STOCK NUMBER 677240 WILL BE REQUIRED TO ATTACH TO THE STAND OFF BRACKET WHEN TEMPORARLY LANDING LOADBREAK ELBOWS ALL 200 AMP CONNECTORS ON THE SWITCH SHALL BE LOADBREAK.

(F) LEVELING OF THE SF-6 GAS SWITCH IS NOT REQUIRED **DO NOT INSTALL SWITCH ANY HIGHER OFF THE FLOOR THAN SHOWN IN THE INSTALLATION DRAWING DUE TO CABLE ARRANGEMENT.**

(G) DO NOT INSTALL LOADBREAK ELBOWS ON PIGGYBACK TEES FOR A PERMANENT INSTALLATION

(H) THE REMOVABLE OPERATING HANDLE IS TO REMAIN PERMANENTLY ATTACHED TO THE SWITCH

REFERENCE:

I SEE STANDARD 3200 FOR SWITCH IDENTIFICATION NUMBERS AND CABLE ID TAGS

J SEE STANDARD 3670 FOR SUBSURFACE SWITCH

K SEE PAGE 3374 3 FOR CONDUIT INSTALLATION PRACTICES

(L) SEE STANDARD 4181 FOR 12KV 200 AND 600 AMP CONNECTOR ASSEMBLIES

M SEE STANDARD 4530 FOR NEUTRAL AND GROUND WIRE DIAGRAM

N SEE DESIGN STANDARD 6111 FOR SWITCH APPLICATION

(O) SEE DESIGN STANDARD 6113 FOR AUTOMATIC FAULT INDICATOR APPLICATION

TABLE OF CONTENTS

3699.708 SUPERCEDES 3671 3 (1-1-94)	SDG&E ELECTRIC STANDARDS SUBSURFACE/SURFACE OPERABLE SF-6 GAS SWITCH 12KV, 600 AMP, 3 PHASE	DATE 1-1-94 APPD JLB/RM

3700 - TRANSFORMERS

3700 - TRANSFORMERS

PAGE	SUBJECT
3702	TRANSFORMER PREFIXES
3703	DISTRIBUTION TRANSFORMER APPLICATIONS
3720	12KV PAD MOUNTED GROUNDING BANK
3752	THREE-PHASE, 12KV, TYPE "PZR", "HZR" OR "HZR" RADIAL FEED, DEAD FRONT, PAD-MOUNTED TRANSFORMER INSTALLATION.
3756	THREE-PHASE STEP-DOWN, TYPE "HPP", RADIAL/LOOP, LIVE FRONT, PAD-MOUNTED TRANSFORMER INSTALLATION.

MAIN TABLE OF CONTENTS

© 1998 - 2021 San Diego Gas & Electric Company. All rights reserved. Removal of this copyright notice without permission is not permitted under law.

REV	CHANGE	DR	BY	DSN	APV	DATE	REV	CHANGE	DR	BY	DSN	APV	DATE
C	EDITORIAL CHANGES	PEI	VMV	FRC	CZH	08/27/2020	F						
B	ADDITION OF 3702.1	-	KR	JS	MDJ	03/31/2017	E						
A	ORIGINAL ISSUE	-	JS	TR	MDJ	07/25/2016	D	EDITORIAL CHANGES	EDM	EJA	GLW	CZH	06/14/2021

X Indicates Latest Revision | Completely Revised | New Page | Information Removed

SDG&E ELECTRIC UNDERGROUND FIELD MAINTENANCE ONLY STANDARDS

TRANSFORMERS FMO
TABLE OF CONTENTS

FIELD MAINTENANCE ONLY

REVISION HISTORY:

3/31/2017: All versions prior to 2017 are superseded by their current version found inside the Overhead Construction Standard Manual.

TABLE OF CONTENTS

© 1998 - 2016 San Diego Gas & Electric Company. All rights reserved. Removal of this copyright notice without permission is not permitted under law.

REV	CHANGE	BY	DSGN	APPV	DATE	REV	CHANGE	BY	DSGN	APPV	DATE
C						F					
B						E					
A	ORIGINAL ISSUE	KR	JS	MDJ	3/31/2017	D					

Indicates Latest Revision | Completely Revised | X | New Page | Information Removed

SHEET 1 OF 1

SDG&E ELECTRIC UNDERGROUND CONSTRUCTION STANDARD

TRANSFORMER PREFIXES

FMO UG 3702.1

THREE-PHASE PAD-MOUNTED STAINLESS STEEL DEAD FRONT:

ITEM	VOLTAGE		DESCRIPTION	KVA	TAPS	STOCK NO.	ASSEMBLY UNITS
	PRIMARY	SECONDARY					
(C) HZS	12000	208Y/120 THREE-PHASE 4 WIRE	MAY STILL BE INSTALLED SEE NOTE (I) D.E.W.L. BAY-O-NET FUSES AND PROTECTIVE LINKS, RADIAL/LOOP (b)	75	--	S761345	HZS-75
				150	--	S761298	HZS150
				225	--	S761311	HZS225
(C) HMS	12000	480Y/277 THREE-PHASE 3 OR 4 WIRE	MAY STILL BE INSTALLED SEE NOTE (I) D.E.W.L. BAY-O-NET FUSES AND PROTECTIVE LINKS, RADIAL/LOOP (b)	75	--	S761342	HMS-75
				150	--	S761296	HMS150
				225	--	S761308	HMS225
				300	--	S761322	HMS300
(C) HKS	12000	240/120 THREE-WIRE 4 WIRE	MAY STILL BE INSTALLED SEE NOTE (I) D.E.W.L. BAY-O-NET FUSES AND PROTECTIVE LINKS, RADIAL/LOOP (b)	150	--	S761294	HKS150

SINGLE-PHASE PAD-MOUNTED STAINLESS STEEL DEAD FRONT:

PREFIX	VOLTAGE		DESCRIPTION	KVA	TAPS	STOCK NO.	ASSEMBLY UNITS
	PRIMARY	SECONDARY					
(C) NDS	12000 GRDY/6930	240/120	MAY STILL BE INSTALLED SEE NOTE (II) BAY-O-NET FUSE ASSEMBLY WITH ISOLATION LINK STAINLESS STEEL	25	--	S761426	NDS-25
				50	--	S761428	NDS-50
				75	--	S761430	NDS-75
				100	--	S761432	NDS100
(C) HDS	12000	240/120	MAY STILL BE INSTALLED SEE NOTE (II) BAY-O-NET FUSE ASSEMBLY WITH ISOLATION LINK STAINLESS STEEL	25	--	S751862	HDS-25
				50	--	S751864	HDS-50
				75	--	S751866	HDS-75
				100	--	S751868	HDS100
				167	--	S751870	HDS167

INSTALLATION:

(C) NDS AND HDS SINGLE-PHASE TRANSFORMERS AND HZS, HMS AND HKS THREE-PHASE TRANSFORMERS ARE FITTED WITH BUSHING WELLS THAT REQUIRE SEPARATELY INSTALLED BUSHINGS PLUGS OR FEED-THRU INSERTS. (SEE STANDARDS 3712, 3713, 3751, 3755, AND 3756). BUSHINGS PLUGS OR FEED-THRU INSERTS ARE NOT SUPPLIED WITH TRANSFORMER.

NOTES:

(I) ALL HZS, HMS, AND 150kVA HKS TRANSFORMERS ARE BEING REFURBISHED AND MAY STILL BE INSTALLED FOR CHANGE OUT OF LEAKING TRANSFORMER, CMP CHANGE OUTS AND OTHER APPLICATIONS. CHECK STORE ROOMS AND KEARNY FOR AVAILABILITY.

(II) ALL NDS, AND 50 KVA AND 167 KVA HDS TRANSFORMERS ARE BEING REFURBISHED AND MAY STILL BE INSTALLED FOR CHANGE OUT OF LEAKING TRANSFORMERS, CMP CHANGE OUTS AND OTHER APPLICATIONS. **CHECK STOREROOMS AND KEARNY FOR AVAILABILITY**.

REFERENCE:

b. SEE STANDARD 4311 FOR FUSING.

© 1998 - 2016 San Diego Gas & Electric Company. All rights reserved. Removal of this copyright notice without permission is not permitted under law.

REV	CHANGE	BY	DSGN	APPV	DATE	REV	CHANGE	BY	DSGN	APPV	DATE
C						F					
B						E					
A	ORIGINAL ISSUE	KR	JS	MDJ	3/31/2017	D					

TABLE OF CONTENTS

UG3703 FIELD MAINTENANCE ONLY

ALL VERSIONS LISTED IN FMO ARE SUPERSEDED BY THEIR CURRENT VERSION FOUND INSIDE THE OVERHEAD CONSTRUCTION STANDARD MANUAL.

REVISION HISTORY:

06/14/2021: MOVED TO FMO

TABLE OF CONTENTS

© 1998 - 2021 San Diego Gas & Electric Company. All rights reserved. Removal of this copyright notice without permission is not permitted under law.

REV	CHANGE	DR	BY	DSN	APV	DATE	REV	CHANGE	DR	BY	DSN	APV	DATE
C							F						
B							E						
A	ORIGINAL ISSUE	EDM	EJA	GLW	CZH	06/14/2021	D						

Indicates Latest Revision | Completely Revised | X New Page | Information Removed

SDG&E ELECTRIC UNDERGROUND FIELD MAINTENANCE ONLY STANDARDS

DISTRIBUTION TRANSFORMER APPLICATIONS

FMO UG3703

SCOPE: THIS STANDARD IS A GUIDE FOR SELECTING TRANSFORMER(S), BY PREFIX, FOR REPLACEMENT OF EXISTING UNITS IN FIELD, AND DETERMINING THOSE THAT ARE OBSOLETE.

TABLE 1

SINGLE-PHASE INSTALLATIONS (PADMOUNT)				
VOLTAGE		EXISTING FIELD UNITS	REPLACEMENT UNITS (C)	NOT TO BE USED OR REORDERED
PRIMARY	SECONDARY			
2,400	240/120	SDD, SDS, SID, WDD, WEP, WEQ	WEP	-
7,200	240/120	YDP, YDQ, YEP, YTP	NTS, NCS (B)	YDP, YDQ, YEP, YTP, YP, NEP
SINGLE-PHASE INSTALLATIONS (SUBSURFACE)				
7,200	240/120	YES, YIS, YSV	NES (B)	YES, YIS, YSV

INSTALLATION:

(B) 6930V 'N' TYPE SINGLE-PHASE TRANSFORMERS, WITH SECONDARY TAPS, CAN BE USED TO REPLACE 7200V 'Y' TYPE SINGLE-PHASE TRANSFORMERS ON 7200V SYSTEMS. WE STILL HAVE A FEW 7200V BRANCH LINES IN THE SYSTEM. 7200V SYSTEMS CAN BE IDENTIFIED BY THE UPSTREAM BOOSTER STATION. BOOSTER STATIONS ARE CODED WITH A 'B' SUFFIX, I.E. 275-472B. 'Y' TYPE 7200V TRANSFORMERS (YEP, YDP, ETC.) WERE THE PREFERRED TRANSFORMER FOR 7200V SYSTEMS. HOWEVER, WE NO LONGER STOCK, OR INSTALL, 'Y' TYPE SINGLE-PHASE TRANSFORMERS. WHEN REPLACING SINGLE-PHASE 'Y' TRANSFORMERS FIRST DETERMINE IF YOU'RE ON A 7200V SYSTEM OR A 6930V SYSTEM. IF YOU'RE ON A 7200V SYSTEM, INSTALL AN 'N' TYPE TRANSFORMER WITH SECONDARY TAPS (NTS, NCS). THE FIELD CREW CAN TAP DOWN THE SECONDARY VOLTAGE, AS NEEDED, TO COMPENSATE FOR ANY SECONDARY VOLTAGE BOOST. IF YOU'RE ON A 6930V SYSTEM (NO BOOSTER STATION) REPLACE A 'Y' TRANSFORMER WITH AN 'N' TYPE TRANSFORMER (NTS) - SECONDARY TAPS ARE NOT NEEDED.

(C) WHEN REPLACING LIVE FRONT TRANSFORMERS EVERY EFFORT SHOULD BE MADE TO UPGRADE TO DEADFRONT. EACH SITUATION SHOULD BE EVALUATED INDEPENDENTLY. WHEN IN DOUBT CONTACT YOUR LOCAL ELECTRIC CONSTRUCTION SUPERVISOR (ECS) IN THE DISTRICT. THE ECS WILL LET YOU KNOW IF CONVERTING IS FEASIBLE AND TELL YOU PRECISELY WHAT ADDITIONAL AND/OR SPECIAL MATERIAL WILL BE NEEDED.

TABLE OF CONTENTS

FIELD MAINTENANCE ONLY

© 1998 - 2021 San Diego Gas & Electric Company. All rights reserved. Removal of this copyright notice without permission is not permitted under law.

REV	CHANGE	DR	BY	DSN	APV	DATE	REV	CHANGE	DR	BY	DSN	APV	DATE
C	EDITORIAL CHANGES	-	AW	JS	CZH	07/03/2018	F						
B	EDITORIAL CHANGES	-	KR	JS	MDJ	09/28/2017	E						
A	ORIGINAL ISSUE	-	JS	TR	MDJ	05/23/2016	D	INFORMATION MOVED TO FMO	EDM	EJA	GLW	CZH	06/14/2021

UG3720 FIELD MAINTENANCE ONLY

ALL VERSIONS LISTED IN FMO AND UNDERGROUND ARE SUPERSEDED BY THEIR CURRENT VERSION FOUND INSIDE THE OVERHEAD CONSTRUCTION STANDARD MANUAL.

REVISION HISTORY:

08/27/2020: MOVED TO FMO

TABLE OF CONTENTS

© 1998 - 2020 San Diego Gas & Electric Company. All rights reserved. Removal of this copyright notice without permission is not permitted under law.

REV	CHANGE	DR	BY	DSN	APV	DATE	REV	CHANGE	DR	BY	DSN	APV	DATE
C							F						
B							E						
A	ORIGINAL ISSUE	PEI	VMV	FRC	CZH	08/27/2020	D						

	Indicates Latest Revision		Completely Revised	X	New Page	Information Removed

SHEET 1 OF 1

SDG&E ELECTRIC UNDERGROUND FIELD MAINTENANCE ONLY STANDARDS

12KV PAD-MOUNTED GROUNDING BANK

FMO UG3720

SCOPE: THIS STANDARD SHOWS THE CONSTRUCTION THAT SHALL BE USED FOR INSTALLING THREE SINGLE-PHASE, DEAD FRONT NTS TRANSFORMERS FOR A GROUNDING BANK.

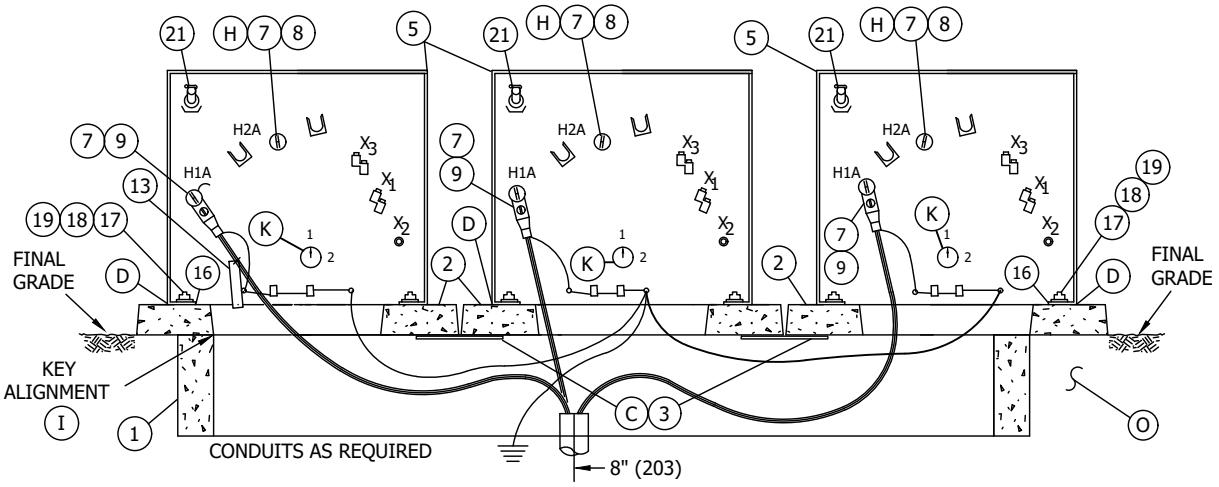

PRIMARY INSTALLATION

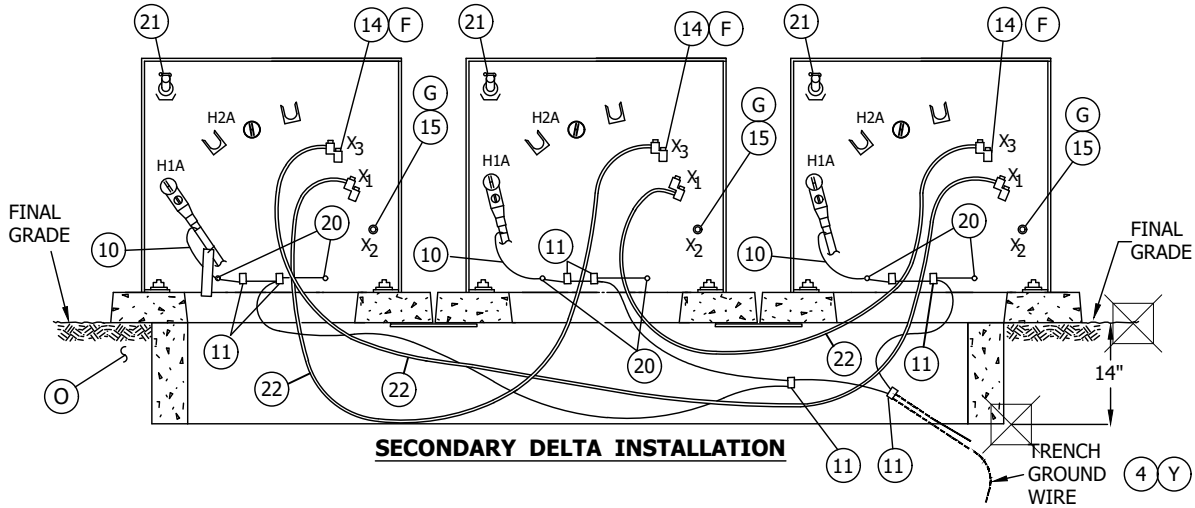

SECONDARY DELTA INSTALLATION

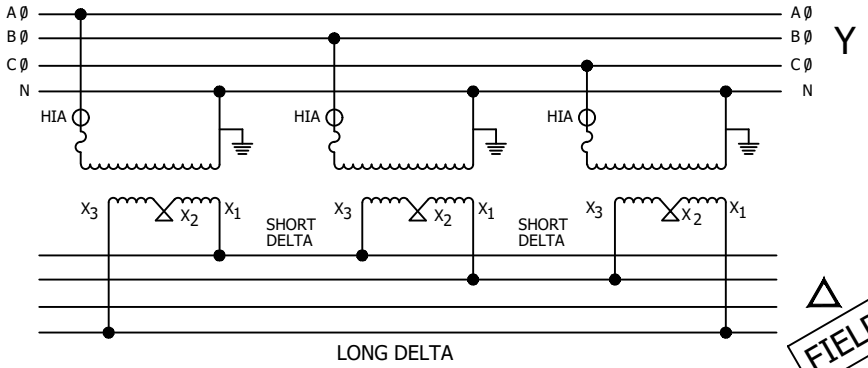

FIELD MAINTENANCE ONLY

TABLE OF CONTENTS

© 1998 - 2020 San Diego Gas & Electric Company. All rights reserved. Removal of this copyright notice without permission is not permitted under law.

REV	CHANGE	DR	BY	DSN	APV	DATE	REV	CHANGE	DR	BY	DSN	APV	DATE
C							F						
B	MOVED TO FMO	PEI	VMV	FRC	CZH	08/27/2020	E						
A	ORIGINAL ISSUE	-	TR	-	MJC	01/02/2013	D						

X Indicates Latest Revision | Completely Revised | New Page | Information Removed

SDG&E ELECTRIC UNDERGROUND FIELD MAINTENANCE ONLY STANDARDS

SHEET 1 OF 3

12KV PAD-MOUNTED GROUNDING BANK

FMO UG3720.1

BILL OF MATERIAL:

ITEM	DESCRIPTION	QUANTITY	CONST STD. OR PAGE NO.	STOCK NUMBER	ASSEMBLY UNITS
1	HANDHOLE, 14" X 108" X 14"	1	3311	S162662	
2	PAD, TRANSFORMER	3	3421	S514240	3421-1
3	PLATE, FLOOR, 3/8" GALV, 12" X 24"	2	-	MACHINE SHOP	
4	TRENCH GROUND WIRE (Y)	AS REQ'D	4510	-	
5	TRANSFORMERS, NTS (H)	3	3702	S764236	NTS100
6	SEALING COMPOUND (B) (X)	AS REQ'D	-	S442976	
7	BUSHING PLUG	1	-	S544676	
8	INSULATING CAP	3	4180.0	S204304	INSREC
9	ELBOW, LOADBREAK, 12KV (WITH WHITE-BLACK-WHITE BAND)	6	4191	-	
10	CONCENTRIC NEUTRAL TAILS	AS REQ'D	-	-	
11	CONNECTOR, COMPRESSION	AS REQ'D	4172	-	
12	KEYLESS LOCK (NOT SHOWN ABOVE) (A)	3	-	S468101	
13	CABLE IDENTIFICATION	AS REQ'D	3202	-	
14	SLIP-FIT CONNECTOR Z BAR (F)	6	4167	S207294	350-8L
15	NEUTRAL GROUND STRAP (REM0VE) (G)	3	-	-	
16	HOLD DOWN DEVICE (SUPPLIED WITH TRANSFORMER)	6	-	-	
17	NUT, CLAMPING CHANNEL	6	-	S503520	
18	SCREW, HEX HEAD CAP, BRONZE, 1/2" X 1-1/2"	6	-	S616192	
19	WASHER, STANDARD FLAT ROUND, BRONZE, 1/2"	6	-	S799488	
20	SERVICE POST CONNECTOR	6	-	S262560	
21	BAY-O-NET FUSE	3	4311.5	S363536	B69-25
22	CABLE SECONDARY DELTA 350 MCM	40'	4002.1	S197594	U3P350

TABLE OF CONTENTS

INSTALLATION:

(A) KEYLESS LOCK, ITEM 12, TO BE ATTACHED TO LATCHING MECHANISM ON TRANSFORMERS AND PENTAHEAD BOLTS THREADED IN COMPLETELY.

(B) TERMINATE PRIMARY CONDUITS AS SHOWN ON PAGE 3714.1. SEAL PRIMARY CONDUITS WITH SEALING COMPOUND OR EQUIVALENT.

(C) INSERT ITEM 3 (FLOOR PLATES), PRIOR TO SETTING PADS.

(D) BASE SHALL BE CAULKED WHEN NECESSARY TO PREVENT WIRE ENTRY (SEE STANDARD 3408).

(F) SLIP-FIT CONNECTORS ARE NOT PROVIDED WITH TRANSFORMERS, SEE STANDARD 4167 FOR INSTALLATION AND STOCK NUMBERS. ALWAYS MAKE CERTAIN ALL CONNECTIONS ARE TIGHT BEFORE ENERGIZED TRANSFORMER.

(G) X2 BUSHING REMOVE SECONDARY GROUND STRAPS, NO Z BAR IS REQUIRED ON NEUTRAL.

(H) THIS INSTALLATION USES THREE-PHASE #2 OR #2/0 PRIMARY CABLES.

(I) MAKE SURE THE INSIDE WINDOW OPENING ON THE LEFT POWER TRANSFORMER IS STRAIGHT IN LINE WITH THE INSIDE OF THE HANDHOLE OPENING TO ALLOW ROOM FOR CABLE PULLING & TRAINING.

(J) CHECK TRANSFORMER NAME PLATE FOR POLARITY.

(K) CHECK TRANSFORMER TAPS ON POSITION (3)

FIELD MAINTENANCE ONLY

© 1998 - 2020 San Diego Gas & Electric Company. All rights reserved. Removal of this copyright notice without permission is not permitted under law.

REV	CHANGE	DR	BY	DSN	APV	DATE	REV	CHANGE	DR	BY	DSN	APV	DATE
C							F						
B	MOVED TO FMO	PEI	VMV	FRC	CZH	08/27/2020	E						
A	ORIGINAL ISSUE	-	TR	-	DW	03/14/2014	D						

X Indicates Latest Revision | Completely Revised | New Page | Information Removed

SDG&E ELECTRIC UNDERGROUND FIELD MAINTENANCE ONLY STANDARDS

12KV PAD-MOUNTED GROUNDING BANK

FMO UG3720.2

REFERENCE:

M SEE STANDARD 3202 FOR CABLE IDENTIFICATION.

N SEE STANDARD 3212 FOR TRANSFORMER IDENTIFICATION.

Ⓞ SEE STANDARD 3365 FOR SLURRY BACKFILL.

Ⓟ SEE STANDARD 3421 FOR PAD AND CONDUIT REQUIREMENTS.

Q SEE STANDARD 3481 FOR TRANSFORMER BARRIER PROTECTION.

R SEE STANDARD 3483 FOR MINIMUM OPERATING CLEARANCE REQUIREMENTS.

S SEE STANDARD 3484 FOR PAD INSTALLATION OF PAD-MOUNTED EQUIPMENT.

T SEE STANDARD 3486 FOR RETAINING WALL REQUIREMENTS AND CLEARANCES FROM REVERSE SUBGRADE RETAINING WALLS.

U SEE STANDARD 3487 FOR RETAINING WALLS.

V SEE STANDARD 3702 FOR TRANSFORMER RATING AND SIZE. SEE THE WORK ORDER FOR TRANSFORMER PREFIXES.

W SEE STANDARD 3703 FOR TRANSFORMER APPLICATIONS.

Ⓧ SEE STANDARD 3948 FOR SEALING SERVICE LATERAL CONDUITS.

Ⓨ SEE STANDARD 4510 FOR (PREFERRED I) AND (ALTERNATE) TRENCH GROUND WIRE.

Z SEE STANDARD PAGE 4512.1 FOR (PREFERRED II) EQUIPMENT GROUNDING INSTALLATION.

TABLE OF CONTENTS

FIELD MAINTENANCE ONLY

© 1998 - 2020 San Diego Gas & Electric Company. All rights reserved. Removal of this copyright notice without permission is not permitted under law.

REV	CHANGE	DR	BY	DSN	APV	DATE	REV	CHANGE	DR	BY	DSN	APV	DATE
C							F						
B	MOVED TO FMO	PEI	VMV	FRC	CZH	08/27/2020	E						
A	ORIGINAL ISSUE	-	TR	-	MJC	12/05/2012	D						

X Indicates Latest Revision | Completely Revised | New Page | Information Removed

SDG&E ELECTRIC UNDERGROUND FIELD MAINTENANCE ONLY STANDARDS

12KV PAD-MOUNTED GROUNDING BANK

FMO UG3720.3

FIELD MAINTENANCE ONLY

REVISION HISTORY:

7/13/2016: All versions prior to 2016 are superseded by their current version found inside the Overhead Construction Standard Manual.

TABLE OF CONTENTS

© 1998 - 2016 San Diego Gas & Electric Company. All rights reserved. Removal of this copyright notice without permission is not permitted under law.

REV	CHANGE	BY	DSGN	APPV	DATE	REV	CHANGE	BY	DSGN	APPV	DATE
C						F					
B						E					
A	ORIGINAL ISSUE	JS	IL	MDJ	7/13/2016	D					

X Indicates Latest Revision | Completely Revised | New Page | Information Removed

SHEET 1 OF 1

SDG&E ELECTRIC UNDERGROUND STANDARD

THREE-PHASE, 12KV, TYPE "PZR", "HZR" OR "HKR"
RADIAL FEED, DEAD FRONT, PAD-MOUNTED TRANSFORMER INSTALLATION

FMO
UG 3752

SCOPE: THIS STANDARD SHOWS THE CONNECTION USED FOR INSTALLING THREE-PHASE, 12KV RADIAL FEED DEAD FRONT PAD-MOUNTED TRANSFORMERS.

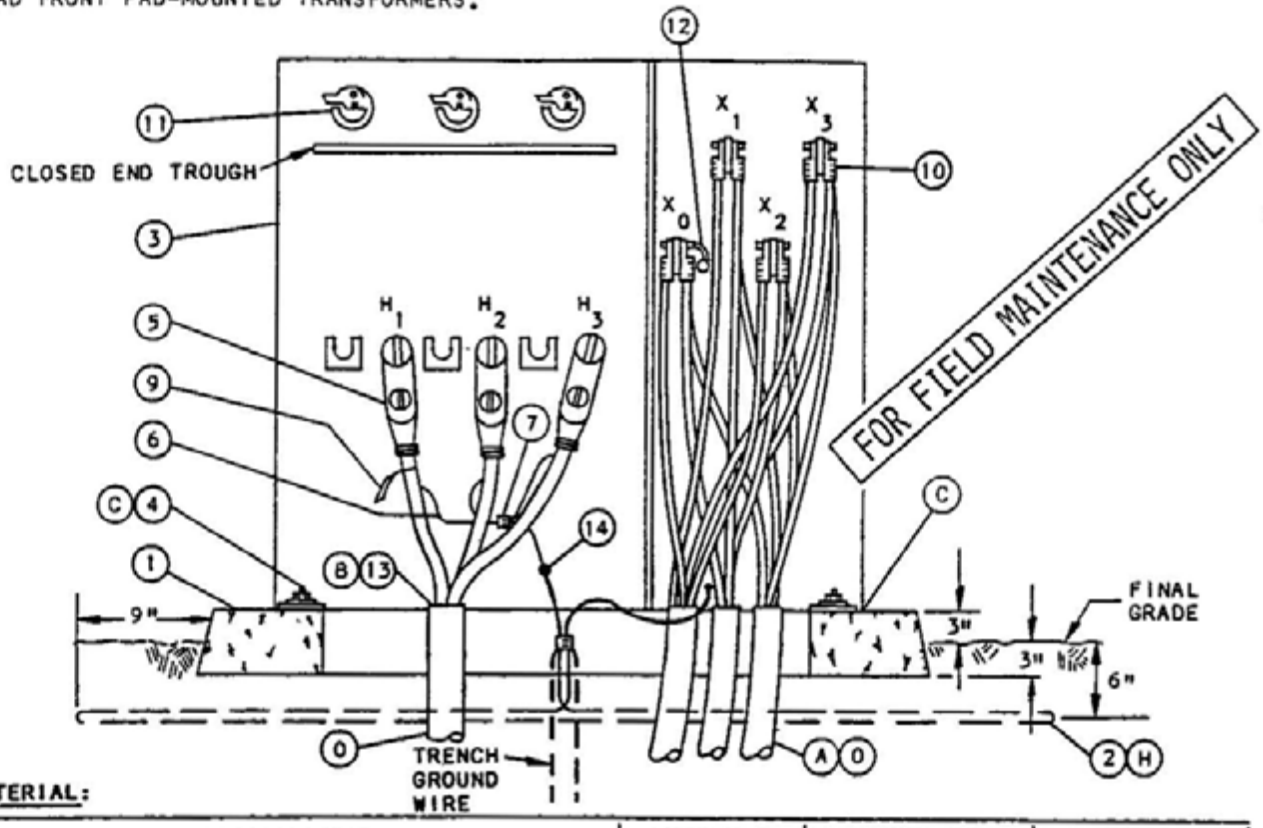

BILL OF MATERIAL:

ITEM	DESCRIPTION	QUANTITY	CONST STD OR PG NO	STOCK NUMBER
1	PAD, TRANSFORMER, 3Ø	1	3425,3426,3427	-
2	PAD GROUNDING EQUIPMENT (H)	1	3407	-
3	TRANSFORMER, (THRU 1000 KVA) (F)	1	3702	-
4	HOLD DOWN DEVICE - (SUPPLIED WITH CABINET	2	-	-
5	ELBOW, LOADBREAK, 12KV (WITH WHITE-BLACK-WHITE BAND)	3	4191	-
6	CONCENTRIC NEUTRAL TAILS	3	-	-
7	CONNECTOR, COMPRESSION	AS REQ'D	4172	-
8	KEYLESS LOCK, (NOT SHOWN ABOVE) (G)	1	-	468010 (E)
9	CABLE IDENTIFICATION TAGS	AS REQ'D	3202	-
10	SECONDARY CONNECTIONS	AS REQ'D	4171	-
11	FUSE, "BAY-O-NET" (T)	3	4311	-
12	NEUTRAL GROUND STRAP (ON TRANSFORMER)	1	-	-
13	AQUA-SEAL OR EQUIVALENT	AS REQ'D	-	442976 (E)
14	SERVICE POST CONNECTOR	2	-	262560 (E)

INSTALLATION:

(A) THIS INSTALLATION USES 3 SINGLE PHASE #2 OR 2/0 PRIMARY CABLES.

(B) TERMINATE PRIMARY AND SECONDARY CONDUITS FLUSH WITH TOP OF PAD. SEAL SECONDARY AND PRIMARY CONDUITS WITH AQUA-SEAL OR EQUIVALENT. SEAL SERVICE LATERAL CONDUITS PER STANDARD 3948 (G.O. 128 RULE 31.6).

TABLE OF CONTENTS

	SDG&E ELECTRIC STANDARDS	
DATE 1-1-87 APPD JJB/RDT	THREE-PHASE, 12KV, TYPE "PZR", "HZR" OR HKR" RADIAL FEED, DEAD FRONT, PAD-MOUNTED TRANSFORMER INSTALLATION	3799.503 supercedes 3752.1 (1-1-86)

(C) TRANSFORMER SHALL BE SOLIDLY SECURED TO PAD TO PREVENT UNAUTHORIZED MOVEMENT OR ENTRY. THE BASE SHALL BE CHECKED AND WHEN NECESSARY CAULK TO PREVENT WIRE ENTRY.

(E) EXEMPT MATERIAL.

(F) TRANSFORMER RATING AND SIZE PER WORK ORDER.

(G) KEYLESS LOCK (ITEM 8) TO BE ATTACHED TO LATCHING MECHANISM ON TRANSFORMER AFTER PENTAHEAD BOLT IS THREADED IN COMPLETELY.

(H) USE PREFERRED GROUNDING SHOWN IN SKETCH WHEN A SYSTEM NEUTRAL FROM A SUBSTATION OR GROUNDING BANK IS PRESENT. OTHERWISE USE PREFERRED II GROUNDING METHOD SHOWN ON PAGE 4512.1.

REFERENCE:

I. SEE STANDARD 3202 FOR CABLE IDENTIFICATION.

J. SEE STANDARD 3211 FOR PAD IDENTIFICATION.

K. SEE STANDARD 3212 FOR TRANSFORMER IDENTIFICATION.

L. SEE STANDARD 3221 FOR HIGH VOLTAGE DECAL.

M. SEE STANDARD 3407 FOR PAD GROUNDING OR GROUNDING TELCO CONDUCTORS.

N. SEE STANDARD 3408 FOR WIRE ENTRY PREVENTION.

(O) SEE STANDARD 3425, 3426 OR 3427 FOR PAD, HANDHOLE AND CONDUIT PLACEMENT.

P. SEE STANDARD 3481 FOR BARRIER PROTECTION.

Q. SEE STANDARD 3483 FOR MINIMUM OPERATING AND CLEARANCE REQUIREMENTS (PAD PLACEMENT).

R. SEE STANDARD 3487 FOR RETAINING WALL REQUIREMENTS.

S. SEE STANDARD 3702 FOR TRANSFORMER PREFIXES.

(T) SEE STANDARD 3704 FOR "BAY-O-NET" FUSE OPERATING INSTRUCTIONS.

U. SEE STANDARD 3948 FOR SEALING SERVICE LATERAL CONDUITS.

FOR FIELD MAINTENANCE ONLY

TABLE OF CONTENTS

3799.504 SUPERCEDES 3752.2 (1-1-86)	SDG&E ELECTRIC STANDARDS THREE-PHASE, 12KV, TYPE "PZR", "HZR" OR HKR" RADIAL FEED, DEAD FRONT, PAD-MOUNTED TRANSFORMER INSTALLATION	DATE 1-1-87 APPD [illegible]

FIELD MAINTENANCE ONLY

REVISION HISTORY:

7/13/2016: All versions prior to 2016 are superseded by their current version found inside the Overhead Construction Standard Manual.

TABLE OF CONTENTS

© 1998 - 2016 San Diego Gas & Electric Company. All rights reserved. Removal of this copyright notice without permission is not permitted under law.

REV	CHANGE	BY	DSGN	APPV	DATE	REV	CHANGE	BY	DSGN	APPV	DATE
C						F					
B						E					
A	ORIGINAL ISSUE	JS	IL	MDJ	7/13/2016	D					

X Indicates Latest Revision | Completely Revised | New Page | Information Removed

SHEET 1 OF 1

SDG&E ELECTRIC UNDERGROUND STANDARD

THREE-PHASE STEP-DOWN, TYPE "HPP", RADIAL/LOOP, LIVE FRONT, PAD-MOUNTED TRANSFORMER INSTALLATION

FMO UG 3756

SCOPE: THIS STANDARD SHOWS THE METHOD OF INSTALLING A THREE-PHASE, STEP-DOWN TYPE "HPP" RADIAL/LOOP FEED LIVE FRONT PAD-MOUNTED TRANSFORMER.

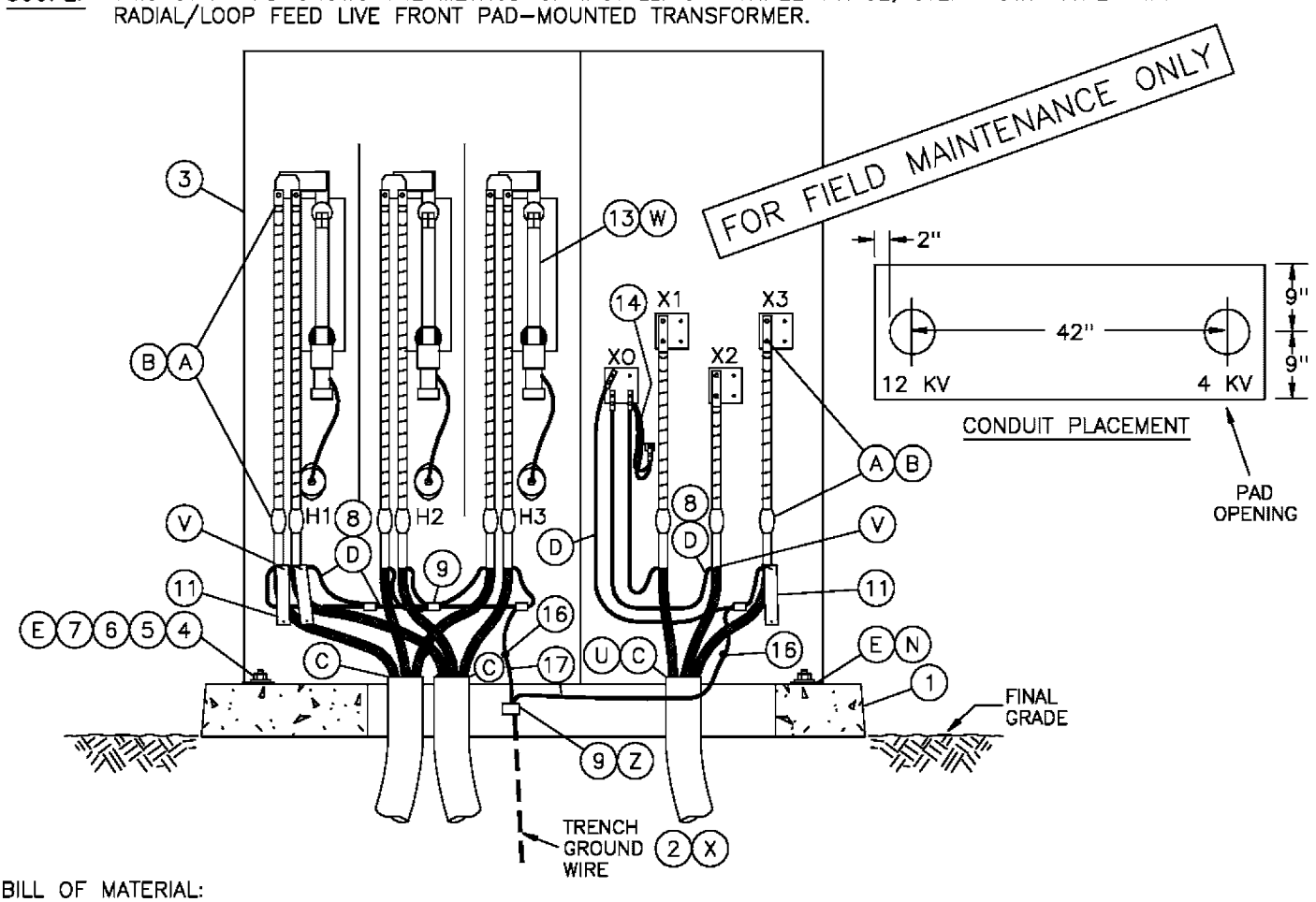

BILL OF MATERIAL:

ITEM	DESCRIPTION	QUANTITY	CONST STD. OR PG NO	STOCK NUMBER	ASSEMBLY UNITS
1	PAD, TRANSFORMER, THREE-PHASE	1	3427	514012	3427BO
2	TRENCH GROUNDING WIRE (X)	AS REQ'D	4510	–	GP-T/W
3	TRANSFORMER, (1500 THRU 2500 KVA) (F)(T)	1	3702	–	–
4	HOLD DOWN DEVICE – (SUPPLIED WITH CABINET)	2	–	–	–
5	NUT, CLAMPING CHANNEL	2	–	503520	–
6	SCREW, HEX HEAD CAP, BRONZE, 1/2"	2	–	616192	–
7	WASHER, FLAT, ROUND, BRONZE, 1/2"	2	–	799488	–
8	CONCENTRIC NEUTRAL TAILS (D)	–	4172.1	–	–
9	CONNECTOR, COMPRESSION	AS REQ'D	4172	–	–
10	KEYLESS LOCK (NOT SHOWN) (G)	1	–	468010	–
11	CABLE IDENTIFICATION TAGS	AS REQ'D	3202	–	–
12	PRIMARY CONNECTIONS (B)	–	4121	–	–
13	FUSE, SML-4 (SUPPLIED WITH TRANS) (W)	3	4311	–	–
14	NEUTRAL GROUND STRAP (ON TRANSFORMER)	1	–	–	–
15	SEALING COMPOUND (C)	AS REQ'D	–	442976	–
16	SERVICE POST CONNECTOR	2	–	262560	–
17	WIRE, BARE STRANDED COPPER, #2	AS REQ'D	–	812816	GDWIRE

DATE 8-5-99
APPD

SDG&E ELECTRIC STANDARDS

THREE-PHASE STEP-DOWN, TYPE "HPP", RADIAL/LOOP, LIVE FRONT, PAD-MOUNTED TRANSFORMER INSTALLATION

3799.505
SUPERSEDES
3756.1 (1-1-98)

TABLE OF CONTENTS

INSTALLATION:

(A) THIS INSTALLATION USES FROM 3 TO 6 SINGLE-PHASE CONDUCTOR #2 OR 2/0 PRIMARY CABLES FOR THE 12KV SIDE AND 350, 750 OR 1000 KCMIL FOR THE 4KV SIDE.

(B) TERMINATE PRIMARY CABLE AS SHOWN ON STD. 4121, INCREASE THE 14 INCH MEASUREMENT SHOWN ON STD. 4121 AS REQUIRED. THE PORTION OF CABLE DOWN TO AND INCLUDING THE STRESS RELIEF KIT SHOULD BE AS STRAIGHT AS POSSIBLE TO PREVENT ANY CONTAMINATION THAT MAY BUILD UP ON THE SHOCABLE.

(C) TERMINATE CONDUITS FLUSH WITH TOP OF PAD. SEAL 12KV AND 4KV CONDUITS WITH SEALING COMPOUND SEAL SERVICE LATERAL CONDUITS PER STANDARD 3948 (G.O. 128 RULE 31.6).

(D) CONCENTRIC NEUTRAL WIRE OR #2 PER PHASE FOR #2, #2/0 OR 350 KCMIL CABLE. CONCENTRIC NEUTRAL WIRE OR #1/0 PER PHASE FOR 750 OR 1000 KCMIL CABLE.

(E) TRANSFORMER SHALL BE SOLIDLY SECURED TO PAD TO PREVENT UNAUTHORIZED MOVEMENT OR ENTRY. THE BASE SHALL BE CAULKED TO PREVENT MOISTURE AND WIRE ENTRY.

(F) TRANSFORMER RATING AND SIZE PER WORK ORDER.

(G) KEYLESS LOCK TO BE ATTACHED TO LATCHING MECHANISM ON TRANSFORMER AFTER PENTAHEAD BOLT IS THREADED IN COMPLETELY.

REFERENCE:

K. SEE STANDARD 3202 FOR CABLE IDENTIFICATION.

L. SEE STANDARD 3212 FOR TRANSFORMER IDENTIFICATION.

M. SEE STANDARD 3221 FOR HIGH VOLTAGE DECAL.

FOR FIELD MAINTENANCE ONLY

(N) SEE STANDARD 3408 FOR MOISTURE AND WIRE ENTRY PREVENTION.

O. SEE STANDARD 3481 FOR BARRIER PROTECTION.

P. SEE STANDARD 3483 FOR MINIMUM OPERATING AND CLEARANCE REQUIREMENTS (PAD PLACEMENT).

Q. SEE STANDARD 3484 FOR PAD INSTALLATION OF PAD-MOUNTED EQUIPMENT.

R. SEE STANDARD 3486 FOR RETAINING WALL REQUIREMENTS AND CLEARANCES FROM REVERSE SUBGRADE RETAINING WALLS.

S. SEE STANDARD 3487 FOR RETAINING WALLS.

(T) SEE STANDARD 3702 FOR TRANSFORMER PREFIXES.

(U) SEE STANDARD 3948 FOR SEALING SERVICE LATERAL CONDUITS.

(V) SEE STANDARD 4108 FOR CABLE TERMINATION INSTRUCTIONS.

(W) SEE STANDARD 4311.5 FOR TRANSFORMER FUSING TABLES.

(X) SEE STANDARD 4510 FOR (PREFERRED I) AND (ALTERNATE) TRENCH GROUND WIRE.

Y. SEE STANDARD PAGE 4512.1 FOR (PREFERRED II) EQUIPMENT GROUNDING INSTALLATION.

(Z) SEE STANDARD 4512.2 FOR EQUIPMENT GROUNDING.

AA. SEE STANDARD 4514 FOR GROUNDING TELCO CONDUCTOR IN PAD-MOUNTED EQUIPMENT.

TABLE OF CONTENTS

3799.506 SUPERSEDES 3756.2 (1-1-98)	SDG&E ELECTRIC STANDARDS THREE-PHASE STEP-DOWN, TYPE "HPP", RADIAL/LOOP, LIVE FRONT, PAD-MOUNTED TRANSFORMER INSTALLATION	DATE 8-5-99 APPD JLB/RDJ

PAGES	SUBJECT
3802	CAPACITOR MARKING INSTRUCTIONS DECALS AND TAGS

MAIN TABLE OF CONTENTS

© 1998 - 2016 San Diego Gas & Electric Company. All rights reserved. Removal of this copyright notice without permission is not permitted under law.

REV	CHANGE	BY	DSGN	APPV	DATE	REV	CHANGE	BY	DSGN	APPV	DATE
C						F					
B						E					
A	ORIGINAL ISSUE	JS	TR	MDJ	7/25/2016	D					

X Indicates Latest Revision | Completely Revised | New Page | Information Removed

SDG&E UNDERGROUND CONSTRUCTION STANDARD

CAPACITORS FMO
TABLE OF CONTENTS

FMO
OH 3801

FIELD MAINTENANCE ONLY

REVISION HISTORY:

7/13/2016: All versions prior to 2016 are superseded by their current version found inside the Overhead Construction Standard Manual.

TABLE OF CONTENTS

© 1998 - 2016 San Diego Gas & Electric Company. All rights reserved. Removal of this copyright notice without permission is not permitted under law.

REV	CHANGE	BY	DSGN	APPV	DATE	REV	CHANGE	BY	DSGN	APPV	DATE
C						F					
B						E					
A	ORIGINAL ISSUE	JS	IL	MDJ	7/13/2016	D					

X Indicates Latest Revision | Completely Revised | New Page | Information Removed

SHEET
1 OF 1

SDG&E ELECTRIC UNDERGROUND STANDARD

CAPACITOR MARKING INSTRUCTIONS
DECALS AND TAGS

FMO
UG 3802

SCOPE: THIS STANDARD DESCRIBES CAPACITOR MARKING AND HANDLING PROCEDURES.

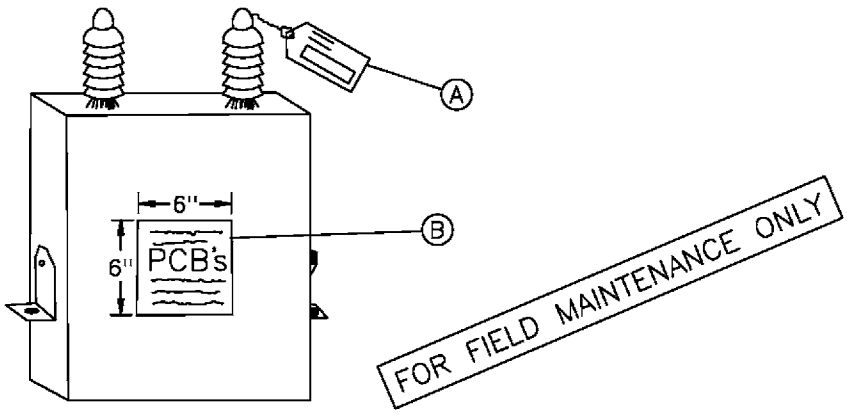

(A) CAPACITOR TAGS

THIS IDENTIFICATION TAG (SDG&E FORM 120–7240, STK. NO. 043450) IS USED FOR TRACKING THE CAPACITOR DURING REMOVAL/RETIREMENT AND INSTALLATION. IT SHALL BE USED ON ALL CAPACITORS, PCB UNITS AND NON–PCB UNITS.

EACH CAPACITOR UNIT IN STOCK WILL BE AFFIXED WITH A CAPACITOR IDENTIFICATION TAG BEFORE IT IS REMOVED FROM STOCK. THIS TAG IS TO BE COMPLETED BY THE FIELD PERSONNEL WHO EITHER REMOVES OR INSTALLS A CAPACITOR UNIT. ONE SIDE OF THIS TAG IS USED FOR REMOVAL AND THE OTHER FOR INSTALLATION.

TABLE OF CONTENTS

1. INSTALLATION

   THE DISTRICT STOCKKEEPER SHALL COMPLETE AS MUCH OF THE CAPACITOR TAG(S) AS POSSIBLE ON THE INSTALLATION SIDE OF THE TAG AND ATTACH TO THE SPECIFIC UNIT. WHEN THE INSTALLATION IS COMPLETED, THE CREW FOREMAN SHALL REMOVE THE TAG AND COMPLETE THE REQUESTED INFORMATION.

2. REPLACEMENT

   WHEN A CAPACITOR UNIT IS REPLACING ONE THAT IS BEING REMOVED, THE FOREMAN SHALL FILL OUT BOTH SIDES OF THE TAG.

   IF REMOVAL AND REPLACEMENT IS NOT COMPLETED WITHIN TWO CONSECUTIVE WORKDAYS, TWO FORMS ARE TO BE COMPLETED, ONE FOR A REMOVAL, AND ANOTHER FOR INSTALLATION.

   IF REPLACEMENT IS DUE TO FAILURE OF ONE OR MORE UNITS, AN EQUIPMENT FAILURE REPORT IS REQUIRED.

3. REMOVAL

   WHEN A CAPACITOR UNIT IS REMOVED, THE CREW FOREMAN SHALL COMPLETE THE REMOVAL PORTION ONLY. IF TAGS ARE NOT STORED ON THE TRUCKS, THE DISPATCHER SHALL PROVIDE THE CREW WITH SUFFICENT TAGS FOR EACH CAPACITOR UNIT TO BE REMOVED.

~~OH 1399.001~~ UG 3899.001 SUPERSEDES 3802.1 (1–1–86)	SDG&E ELECTRIC STANDARDS CAPACITOR MARKING INSTRUCTIONS DECALS AND TAGS	DATE 1–1–2000 APPD PSA/BSG

4. RETIREMENT

WHEN A CAPACITOR UNIT IS RETIRED, THE RETIRED PORTION OF THE CAPACITOR TAG MUST BE FILLED OUT BY THE PERSONNEL RETIRING THE UNIT.

5. DISPOSITION

IT SHALL BE THE DISPATCHER'S RESPONSIBILITY TO SEE THAT THE COMPLETED TAGS ARE SENT TO THE DISTRICT'S RECORDS SECTION, ATTENTION OF THE ENGINEERING CLERK, WITHIN ONE WORKING DAY AFTER THE CAPACITOR UNITS HAVE BEEN INSTALLED OR REMOVED.

(B) DECAL

THIS DECAL (STOCK NO. 301880) IS TO BE PLACED ON ALL CAPACITOR UNITS WHICH CONTAIN PCB'S.

FIELD PERSONNEL AND STOCKKEEPERS SHOULD MAKE EVERY EFFORT TO INSURE THAT ALL PCB UNITS HAVE A DECAL, AND THAT ALL WORN, WEATHERED DECALS BE REPLACED WITH NEW DECALS. THE DECAL IS BLACK PRINT ON EITHER YELLOW OR WHITE BACKGROUND.

1. MARKING

EVERY CAPACITOR IN SERVICE OR IN STORAGE, WHICH USES AN INSULATING FLUID CONTAINING PCB'S, SHALL BE LABELED WITH THE DECAL (STOCK NO. 301880).

EVERY PCB CAPACITOR WHICH IS REMOVED FROM SERVICE AND DOES NOT HAVE THE DECAL (STOCK NO. 301880) SHALL HAVE THE DECAL PUT ON IT AT THE TIME IT IS REMOVED FROM SERVICE. THIS SHALL BE DONE BY THE WORK CREW THAT REMOVES THE UNIT. IF A PCB UNIT ARRIVES AT A STOREYARD WITH NO PCB DECAL, THE STOCKKEEPER SHALL PUT A DECAL ON.

NOTE: ALL CAPACITOR UNITS PURCHASED BEFORE 1977 USED AN INSULATING FLUID WHICH CONTAINED PCB'S. THE UNITS WITH THE PCB FLUIDS CAN BE IDENTIFIED BY THE WORDS "NON-FLAMMABLE LIQUID" ON NAMEPLATE OR BY THE MANUFACTURER'S TRADE NAMES WHICH ARE:

G.E. – PYRANOL
WESTINGHOUSE – INERTEEN
MCGRAW-EDISON – ELEMEX
CORNEL DUBILIER OR FEDERAL PACIFIC – DYKANOL
SANGAMO – DIACHLOR
ALLIS CHALMERS – CHLOREXTOL

FOR FIELD MAINTENANCE ONLY

ALL OF THE CAPACITOR UNITS RECEIVED THAT DO NOT CONTAIN PCB INSULATING FLUIDS HAVE THE WORDS "CONTAINS A NON-PCB INSULATING FLUID" ON THE NAMEPLATE OR ON A BLUE TANK DECAL.

2. HANDLING CAPACITORS CONTAINING POLYCHLORINATED BIPHENYLS (PCB)

CAPACITORS CONTAINING PCB SHALL BE HANDLED AS SPECIFIED IN THE PCB HANDLING AND PERSONAL SAFETY PROCEDURES. (SEE CONSTRUCTION MANAGEMENT STANDARD PRACTICE 107).

3. RETIRING RUPTURED OR DAMAGED UNITS

WHENEVER TRANSPORTATION OR KEARNY MAINTENANCE RETIRES A CAPACITOR AND DISPOSES OF IT, SPECIFIC DATA (I.E. SERIAL NUMBER, PCB OR NON-PCB, MANUFACTURER, SIZE, ETC.) MUST BE RECORDED ON THE CAPACITOR TAG AND SENT TO THE DISTRICT'S RECORDS SECTION, ATTENTION OF THE ENGINEERING CLERK.

TABLE OF CONTENTS

C. PRECAUTIONARY MEASURES – DAMAGED CAPACITOR UNITS

DAMAGED CAPACITOR UNITS WITH BULGED CASES MAY HAVE EXCESSIVE PRESSURE INSIDE. THE UNITS MAY RUPTURE WHEN HANDLED OR BUMPED. SINCE THE INSULATING LIQUID IN THE UNITS IS TOXIC, CARE SHALL BE EXERCISED WHEN WORKING WITH BULGED OR OTHERWISE DAMAGED UNITS. UNITS WITH BULGED OR DAMAGED CASES SHALL NOT BE RE–ENERGIZED.

D. CAPACITOR NAMEPLATES

THE CAPACITOR NAMEPLATE AND UNIT SHALL REMAIN INTACT. UNDER NO CIRCUMSTANCES SHALL THE NAMEPLATE BE REMOVED FROM THE CAPACITOR UNIT.

F. SERIES STREET LIGHTING TRANSFORMERS

THE TROUBLEMAN AND/OR CREW SHALL CHECK THE NAMEPLATE OF ANY RUPTURED 2400 VOLT, CONSTANT CURRENT STREET LIGHTING TRANSFORMER TO DETERMINE IF IT CONTAINS AN INTERNAL CAPACITOR. IF NO CAPACITOR IS SHOWN ON THE NAMEPLATE, THE TRANSFORMER IS TO BE TREATED AS ANY OTHER TRANSFORMER ON THE SYSTEM, NO SPECIAL HANDLING OR DISPOSAL IS REQUIRED. IF IT DOES, IT SHALL BE TREATED AS ANY PCB CONTAINING DEVICE UNTIL IT REACHES KEARNY MAINTENANCE. (SEE CONSTRUCTION MANAGEMENT STANDARD PRACTICE 107).

KEARNY SHALL REMOVE THE INTERNAL CAPACITOR IMMEDIATELY AND CHECK TO SEE IF IT HAS LEAKED. IF IT HAS NOT LEAKED, THE CAPACITOR SHALL BE DISPOSED OF IN ACCORDANCE WITH THE EPA REGULATIONS. THE TRANSFORMER MAY THEN RE–ENTER THE SYSTEM AS AN RO UNIT OR BE SCRAPPED.

IF PCB CONTAMINATION OF THE TRANSFORMER OIL IS SUSPECTED, KEARNY MAINTENANCE SHALL HAVE THE BEST LAB VERIFY THE LEVEL OF CONTAMINATION. IF IT IS 500PPM OR GREATER, THE OIL AND THE TRANSFORMER SHALL BE DISPOSED OF ACCORDING TO EPA REGULATIONS.

TABLE OF CONTENTS

FOR FIELD MAINTENANCE ONLY

PAGES	SUBJECT
3943	CABLE-IN-CONDUIT (SIDA) SERVICE

MAIN TABLE OF CONTENTS

© 1998 - 2016 San Diego Gas & Electric Company. All rights reserved. Removal of this copyright notice without permission is not permitted under law.

REV	CHANGE	BY	DSGN	APPV	DATE	REV	CHANGE	BY	DSGN	APPV	DATE
C						F					
B						E					
A	ORIGINAL ISSUE	JS	TR	MDJ	7/25/2016	D					

X Indicates Latest Revision | Completely Revised | New Page | Information Removed

SDG&E UNDERGROUND CONSTRUCTION STANDARD

SECONDARY/SERVICES FMO
TABLE OF CONTENTS

FMO
OH 3901

FIELD MAINTENANCE ONLY

REVISION HISTORY:

7/13/2016: All versions prior to 2016 are superseded by their current version found inside the Overhead Construction Standard Manual.

TABLE OF CONTENTS

© 1998 - 2016 San Diego Gas & Electric Company. All rights reserved. Removal of this copyright notice without permission is not permitted under law.

REV	CHANGE	BY	DSGN	APPV	DATE	REV	CHANGE	BY	DSGN	APPV	DATE
C						F					
B						E					
A	ORIGINAL ISSUE	JS	IL	MDJ	7/13/2016	D					

X Indicates Latest Revision | Completely Revised | New Page | Information Removed

SHEET 1 OF 1

SDG&E ELECTRIC UNDERGROUND STANDARD

CABLE-IN-CONDUIT (SIDA) SERVICE

FMO UG 3943

SCOPE: THIS STANDARD SHOWS CABLE-IN-CONDUIT (SIDA) TERMINATION AT THE CUSTOMERS CONDUIT RISER.

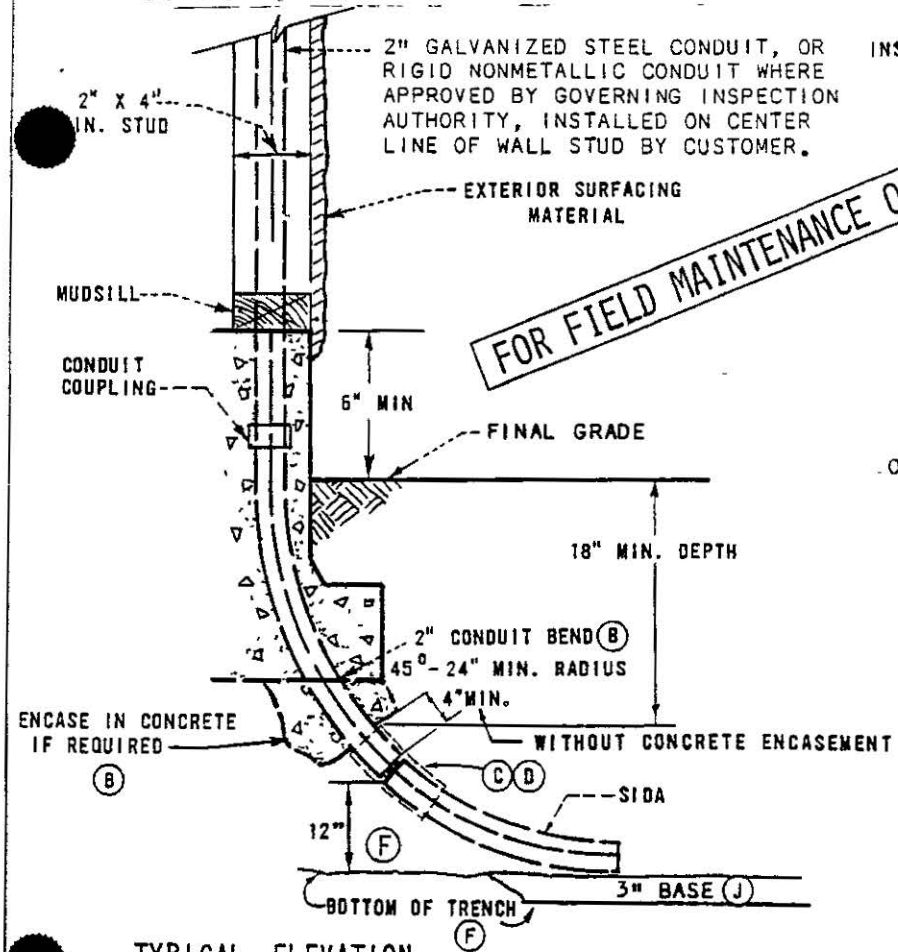

TYPICAL ELEVATION

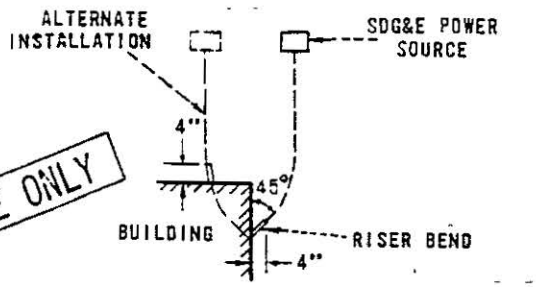

TYPICAL PLAN

FOR FIELD MAINTENANCE ONLY

POINT CONDUIT STUB IN DIRECTION OF SUPPLY SOURCE NORMALLY AT 45° ANGLE FROM OUTER FACE OF BUILDING WALL

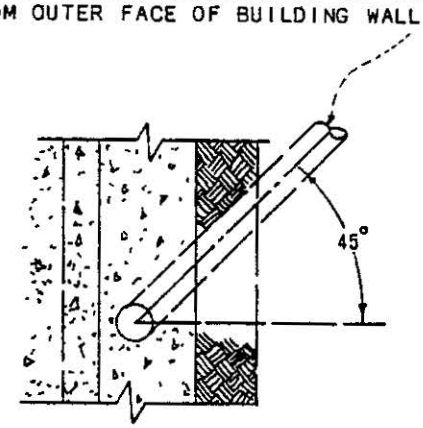

PLAN

INSTALLATION:

A. VERIFY METER AND SERVICE LOCATION WITH SDG&E BEFORE INSTALLATION.

(B) G.O. 128 RULE 33.4D REQUIRES ONE OF THE FOLLOWING DOWN TO AN 18 INCH DEPTH ON PRIVATE PROPERTY: (A) STEEL CONDUIT, OR (B) SCHEDULE 40 PVC OR SCHEDULE 80 PVC CONDUIT WITH A MINIMUM WALL THICKNESS OF 0.15 INCHES, OR (C) AT LEAST A 3 INCH LAYER OF CONCRETE ABOVE AND 2 INCHES ON EACH SIDE OF THE CONDUIT.

(C) IF A 2-3/0, 1-1/0 SIDA SERVICE (196928) IS REQUIRED THE SIDA CONDUIT WILL BE CUT BACK TO ALLOW THE CABLE TO BE INSERTED INTO THE CONDUIT BEND THE REQUIRED AMOUNT. A 2 INCH COUPLING (279872 (E)) WITH TWO LAYERS OF GRAY TAPE (721120 (E)) OVER THE COUPLING SHALL BE INSTALLED BY SDG&E TO SEAL THE JUNCTION BETWEEN THE BEND AND THE SIDA. FILL WITH SOIL AND COMPACT UNDER THE COUPLING BEFORE BACKFILLING THE TRENCH.

(D) WHEN A COUPLING IS NOT USED, TERMINATE CONDUIT OF SIDA A MINIMUM OF ONE FOOT INSIDE CONDUIT BEND. WHERE DUCT ENTERS THE CONDUIT BEND, SDG&E CREW WILL SEAL WITH ONE LAYER OF AQUASEAL (442976 (E)) OR EQUIVALENT AND TWO LAYERS OF GRAY INSULATING TAPE (721120 (E)) TO PREVENT DUCT FROM PULLING OUT OF RISER BEND AND ALSO TO PREVENT WATER AND DIRT ENTRY.

(E) EXEMPT MATERIAL.

(F) FIRST 3 FEET OF TRENCH AT BUILDING MUST BE A MINIMUM OF 24 INCHES AND 12 INCHES BELOW THE BOTTOM OF CONDUIT BEND. A SLOPE OF 1 FOOT OF THE TRENCH WALL BUTTED AGAINST THE BUILDING AT THE SERVICE ENTRANCE FOR EVERY 1 FOOT DEPTH OF TRENCH SHALL BE MAINTAINED IF UNDERMINING IS POSSIBLE AT THE BUILDING.

REFERENCE:

J SEE STANDARD 3370 FOR TRENCH DEPTHS, BASE SHADING AND BACKFILL REQUIREMENTS.
K. SEE STANDARD 3941 FOR CABLE IN CONDUIT SERVICE LATERAL.
L. SEE STANDARD 3948 FOR SEALING CONDUITS.

APPD 1-1-87 ISSUE	SDG&E ELECTRIC STANDARDS CABLE-IN-CONDUIT (SIDA) SERVICE	3999.401 SUPERCEDES 3943 (1-1-86)

TABLE OF CONTENTS

PAGES	SUBJECT

MAIN TABLE OF CONTENTS

No FMO content available at this time.

© 1998 - 2016 San Diego Gas & Electric Company. All rights reserved. Removal of this copyright notice without permission is not permitted under law.

REV	CHANGE	BY	DSGN	APPV	DATE	REV	CHANGE	BY	DSGN	APPV	DATE
C						F					
B						E					
A	ORIGINAL ISSUE	JS	TR	MDJ	7/25/2016	D					

X Indicates Latest Revision | Completely Revised | New Page | Information Removed

SDG&E UNDERGROUND CONSTRUCTION STANDARD

SHEET 1 OF 1

CABLES FMO
TABLE OF CONTENTS

FMO
OH 4001

MAIN TABLE OF CONTENTS

PAGE	SUBJECT
4105	COMPATIBILITY CHART, FOR 200 AMP CLASS URD SYSTEMS, LOADBREAK
4110	DEADENDS AND SPLICES FOR 5KV AND 600 VOLT LEAD AND POLYETHYLENE CABLES
4111	OUTDOOR CABLE TERMINALS FOR POLYETHYLENE CABLES
4112	3/C POTHEADS (G&W)
4113	LIVEFRONT TO LOADBREAK ELBOW CONVERSION RE-SHIELDING OF CABLE.
4122	INDOOR CABLE TERMINATIONS, POLYETHYLENE CABLES
4123	TERMINAL ADAPTER PLATE EXTENSION
4145	SPLICE FOR 15KV MULTI-CONDUCTOR CABLES FOR PAPER OR VARNISHED CAMBRIC, LEAD SHEATHED CABLES
4147	15KV CABLE TRANSITION MODULE
4151	200 AMP DEADBREAK CONNECTORS, 12KV
4168	ALUMINUM TERMINATION SECONDARY (600V) AT TRANSFORMER OR BUS
4171	TRANSFORMER TERMINAL & BUS COMPRESSION TERMINALS FOR ALUMINUM CONDUCTORS
4173	0-600 VOLT CONNECTIONS FOR #8 THROUGH 350 KCMIL ALUMINUM CONDUCTORS
4178	CABLE HANGERS AND ACCESSORIES
4181	12KV, 200 AND 600 AMP CONNECTOR ASSEMBLIES IDENTIFICATION CHART
4183	600AMP JUNCTION CONNECTOR WITH TEST AND GROUNDING POINT
4191	LOADBREAK ELBOW CONNECTOR, 6930 VOLTS AND BELOW
4192	LOADBREAK ACCESSORIES, 12KV AND/OR 6.9KV
4198	N-JUNCTION CLEER 600A 25KV

© 1998 - 2022 San Diego Gas & Electric Company. All rights reserved. Removal of this copyright notice without permission is not permitted under law.

REV	CHANGE	DR	BY	DSN	APV	DATE	REV	CHANGE	DR	BY	DSN	APV	DATE
D	EDITORIAL CHANGES	EDM	EJA	GLW	CZH	06/02/2020	G	UG4113 MOVED TO FMO	EDM	EJA	GLW	FRC	02/14/2022
C	EDITORIAL CHANGES	EDM	EJA	GLW	CZH	12/09/2019	F	UG4122 & UG4183 MOVED TO FMO	EDM	EJA	GLW	CZH	12/12/2021
----	ADDED 4123	-	DG	JS	CZH	12/01/2018	E	UG4111 MOVED TO FMO	EDM	EJA	GLW	CZH	10/09/2020

FIELD MAINTENANCE ONLY

REVISION HISTORY:

7/13/2016: All versions prior to 2016 are superseded by their current version found inside the Overhead Construction Standard Manual.

TABLE OF CONTENTS

© 1998 - 2016 San Diego Gas & Electric Company. All rights reserved. Removal of this copyright notice without permission is not permitted under law.

REV	CHANGE	BY	DSGN	APPV	DATE	REV	CHANGE	BY	DSGN	APPV	DATE
C						F					
B						E					
A	ORIGINAL ISSUE	JS	IL	MDJ	7/13/2016	D					

X Indicates Latest Revision | Completely Revised | New Page | Information Removed

SHEET 1 OF 1

SDG&E ELECTRIC UNDERGROUND STANDARD

COMPATIBILITY CHART, FOR 200 AMP CLASS URD SYSTEMS, LOADBREAK

FMO UG 4105

SCOPE: THIS STANDARD SHOWS COMPATIBILITY, IDENTIFICATION, CONNECTORS, AND ACCESSORIES FOR 200 AMP LOADBREAK ASSEMBLIES.

• LOADBREAK DEVICE STANDARDS REFERENCE • STOCK NUMBER			INSULATING RECEPTICLE	STAND-OFF PLUG	BUSHING PLUG	FEED-THRU INSERT	FEED-THRU BUSHING	3-WAY CABLE TAP	4-WAY CABLE TAP		FUSED ELBOW	ELBOW			
INSULATING RECEPT. 4192 204304			–	X	X	X	X	X	X		–	–			
STAND-OFF PLUG 4192 547312			X	–	–	–	–	–	–		X	X			
BUSHING PLUG 4192 544676			X	–	–	–	–		–		X	X			
FEED-THRU INSERT 4192 544678			X	–	–	–		–	–		X	X			
FEED-THRU BUSHING 4192 182016			X	–	–		–	X	X		X	X			
3-WAY CABLE TAP 4192 718312			X	–		–	–	–	–		X	X			
4-WAY CABLE TAP 4192 718328			X		–	–	–	–	–		X	X			
FUSED ELBOW 4191 VARIOUS			–	X	X	X	X	X	X		–	–			
ELBOW 4191 VARIOUS			–	X	X	X	X	X	X		–	–			

FOR FIELD MAINTENANCE ONLY

NOTE: X DENOTES UNIT COMPATIBILITY

TABLE OF CONTENTS

DATE 1-1-87 APPD JLB/RDF	SDG&E ELECTRIC STANDARDS COMPATIBILITY CHART, FOR 200 AMP CLASS URD SYSTEMS, LOADBREAK	4199.001 SUPERCEDES 4105.1 (6-3-83)

SCOPE: THIS PAGE PROVIDES THE COMPATIBILITY CHART FOR 200 AMP CLASS DEADBREAK EQUIPMENT.

DEADBREAK DEVICE STANDARDS REFERENCE STOCK NUMBER	T CONNECTOR	STRAIGHT RECEPTACLE	STRAIGHT PLUG	DEAD END RECEPTACLE	DEAD END PLUG	GROUNDING PLUG	STAND OFF PLUG	BUSHING PLUG	BAILING ASSEMBLY PLUG/RECEPTACLE	BAILING ASSEMBLY DEADBREAK BUSHING	BAILING ASSEMBLY DEAD END PLUG	ELBOW	BAIL CONNECTOR
T CONNECTOR 4196 256112 	-	-	X	X	X	X	X	X	-	X	X	X	X
STRAIGHT RECEPTACLE 4196 	X	-	X	-	X	X	X	X	X	-	-	-	-
STRAIGHT PLUG 4196 	X	X	-	X	-	-	-	-	X	-	-	X	-
DEAD END RECEPTACLE 4197 570304 	X	-	X	-	-	X	X	-	-	-	-	-	-
DEAD END PLUG 4197 544864 	X	X	-	-	-	-	-	-	-	-	X	X	-
GROUNDING PLUG 4197 544844 	X	X	-	X	-	-	-	-	-	-	-	X	-
STAND OFF PLUG 4197 547304 	X	X	-	-	-	-	-	-	-	-	-	X	-
BUSHING PLUG 4197 544684 	X	X	-	-	-	-	-	-	-	-	-	X	-
BAILING ASSEMBLY 4196 120384 (E) 	X	X	X	-	-	-	-	-	-	-	-	-	-
BAILING ASSEMBLY 4196 120416 	X	-	-	-	-	-	-	-	-	-	-	X	-
BAILING ASSEMBLY 4196 120352 (E) 	X	-	-	-	X	-	-	-	-	-	-	-	-
ELBOW 4196 	X	-	X	-	X	X	X	X	-	-	-	-	X
BAIL CONNECTOR 4196 120448 (E) 	X	-	-	-	-	-	-	-	-	-	-	X	-

FOR FIELD MAINTENANCE ONLY

NOTES:

- "X" DENOTES UNIT CAP COMPATIBILITY.

INSTALLATION:

(E) EXEMPT MATERIAL.

TABLE OF CONTENTS

4199.002 SUPERCEDES 4105.2 (1-1-85)	SDG&E ELECTRIC STANDARDS COMPATIBILTY CHART FOR 200 AMP CLASS URD SYSTEMS, DEADBREAK	DATE 1-1-87 APPD JLBIRDG

UG4110 FIELD MAINTENANCE ONLY

ALL VERSIONS LISTED IN FMO ARE SUPERSEDED BY THEIR CURRENT VERSION FOUND INSIDE THE UNDERGROUND CONSTRUCTION STANDARD MANUAL.

REVISION HISTORY:

06/02/2020: MOVED TO FMO

TABLE OF CONTENTS

© 1998 - 2020 San Diego Gas & Electric Company. All rights reserved. Removal of this copyright notice without permission is not permitted under law.

REV	CHANGE	DR	BY	DSN	APV	DATE	REV	CHANGE	DR	BY	DSN	APV	DATE
C							F						
B							E						
A	ORIGINAL ISSUE	EDM	EJA	GLW	CZH	6/2/2020	D						

Indicates Latest Revision | Completely Revised | X New Page | Information Removed

SDG&E ELECTRIC UNDERGROUND FIELD MAINTENANCE ONLY STANDARDS

DEADENDS AND SPLICES FOR 5KV AND 600 VOLT LEAD AND POLYETHYLENE CABLES

SCOPE: THIS STANDARD SHOWS SINGLE-PHASE TERMINATION DEADENDS AND SPLICES FOR 5KV AND 600 VOLT LEAD AND POLYETHYLENE CABLES.

FIELD MAINTENANCE ONLY

OIL STOP SPLICE FOR 5KV CU PILC TO XLPECN CABLE

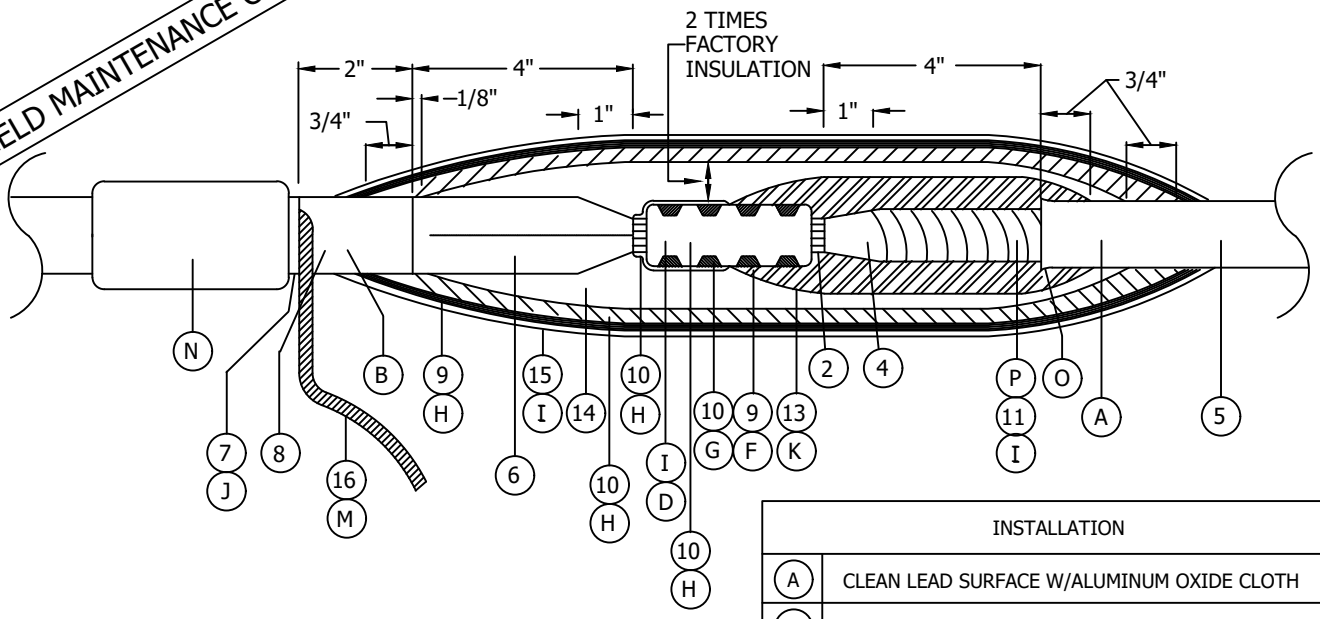

ITEM	DESCRIPTION	CONST STD.	STOCK NUMBER
1	CONNECTOR (INSULINK)	4172.3	--
2	CU. CONDUCTOR	--	--
3	AL/CU CONDUCTOR	4002	--
4	FACTORY PAPER INSULATION	--	--
5	LEAD SHEATH	--	--
6	FACTORY XLPE INSULATION	--	--
7	GLASS TAPE, 1/2"	--	720256
8	SEMI-CON PE JACKET	--	--
9	CU. BRAID	--	168864
10	SEMI-CON TAPE, 3/4"	--	720352
11	VARNISHED CAMBRIC TAPE, 1/2"	--	720992
12	VARNISH CAMBRIC TAPE, 3/4"	--	721024
13	SILICONE TAPE, 1"	--	720384
14	H.V. INSULATING TAPE	--	720480
15	VINYL PLASTIC TAPE, 3/4"	--	720580
16	CONCENTRIC NEUTRAL	--	--

INSTALLATION	
A	CLEAN LEAD SURFACE W/ALUMINUM OXIDE CLOTH
B	CLEAN SEMI-CON SURFACE W/SOLVENT
C	CLEAN SURFACE W/SOLVENT
D	REMOVE PLASTIC COVER FROM INSULINK AFTER CRIMPING
F	FILL CRIMPS WITH BRAID
G	FILL CRIMPS WITH SEMI-CON TAPE
H	ONE HALF-LAPPED LAYER
I	TWO HALF-LAPPED LAYERS
J	THREE HALF-LAPPED LAYERS
K	SIX HALF-LAPPED LAYERS
L	SIX LAYERS OVER END AND SIDES OF CABLE/4 LAYERS FOR SECONDARY CABLE
M	CONNECT TO GROUND
N	SEE STANDARD 4108 FOR SEALING JACKETED CABLE
O	FLAIR LEAD TO ALLOW 1/2" CAMBRIC TAPE TO GO UNDER THE FLAIR
P	REMOVE TWO LAYERS OF FACTORY PAPER INSULATION BEFORE APPLYING 1/2" CAMBRIC TAPE

TABLE OF CONTENTS

© 1998 - 2020 San Diego Gas & Electric Company. All rights reserved. Removal of this copyright notice without permission is not permitted under law.

REV	CHANGE	DR	BY	DSN	APV	DATE	REV	CHANGE	DR	BY	DSN	APV	DATE
C							F						
B	MOVED TO FMO	EDM	EJA	GLW	CZH	6/2/2020	E						
A	REVISION	--	--	--	JLB/RDJ	1/1/1993	D						

X Indicates Latest Revision | Completely Revised | New Page | Information Removed

SDG&E ELECTRIC UNDERGROUND FIELD MAINTENANCE ONLY STANDARDS

DEADENDS AND SPLICES FOR 5KV AND 600 VOLT LEAD AND POLYETHYLENE CABLES

FMO UG4110.1

OIL STOP SPLICE FOR SECONDARY CU PILC TO
600 VOLT AL CROSS-LINK POLYETHYLENE

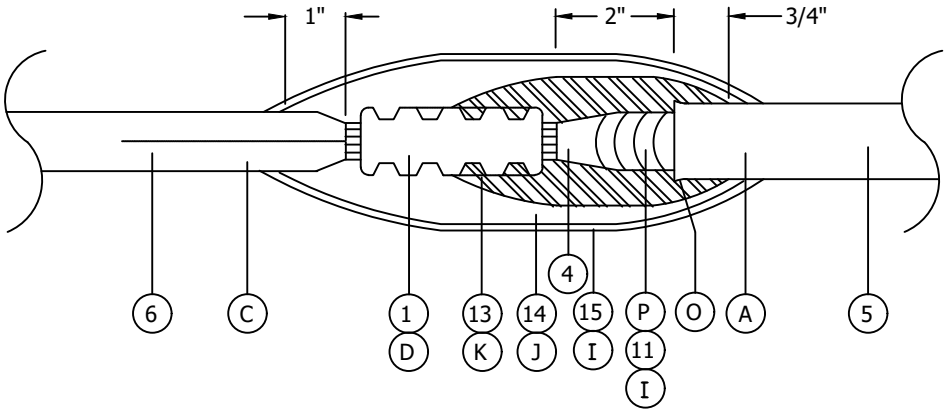

OIL STOP DEADEND FOR 5KV CU PILC CABLE

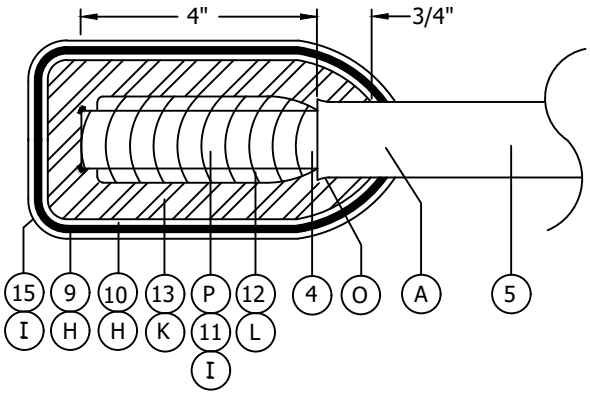

OIL STOP DEADEND FOR 600 VOLT CU PILC CABLE

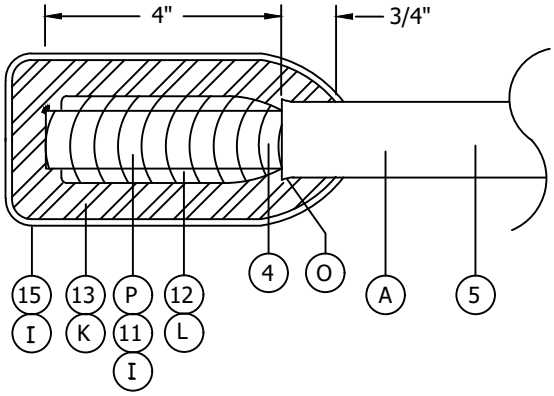

FIELD MAINTENANCE ONLY

TABLE OF CONTENTS

© 1998 - 2020 San Diego Gas & Electric Company. All rights reserved. Removal of this copyright notice without permission is not permitted under law.

REV	CHANGE	DR	BY	DSN	APV	DATE	REV	CHANGE	DR	BY	DSN	APV	DATE
C							F						
B	MOVED TO FMO	EDM	EJA	GLW	CZH	6/2/2020	E						
A	REVISION	--	--	--	JLB/RDJ	1/1/1993	D						

X Indicates Latest Revision | Completely Revised | New Page | Information Removed

SDG&E ELECTRIC UNDERGROUND FIELD MAINTENANCE ONLY STANDARDS

DEADENDS AND SPLICES FOR 5KV AND 600 VOLT
LEAD AND POLYETHYLENE CABLES

SHEET
2 OF 2

FMO
UG4110.2

UG4111 FIELD MAINTENANCE ONLY

ALL VERSIONS LISTED IN FMO ARE SUPERSEDED BY THEIR CURRENT VERSION FOUND INSIDE THE OVERHEAD AND UNDERGROUND CONSTRUCTION STANDARD MANUAL.

REVISION HISTORY:

10/09/2020: MOVED TO FMO

TABLE OF CONTENTS

© 1998 - 2020 San Diego Gas & Electric Company. All rights reserved. Removal of this copyright notice without permission is not permitted under law.

REV	CHANGE	DR	BY	DSN	APV	DATE	REV	CHANGE	DR	BY	DSN	APV	DATE
C							F						
B							E						
A	ORIGINAL ISSUE	EDM	EJA	GLW	CZH	10/09/2020	D						

SCOPE: THIS STANDARD SHOWS CABLE TERMINALS USED FOR OUTDOOR PRIMARY CABLE TERMINATIONS.

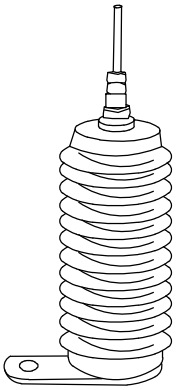

FIGURE 1
G&W

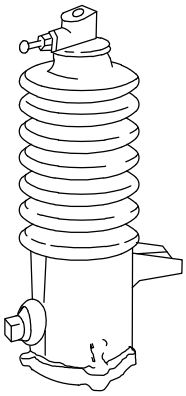

FIGURE 2
G&W

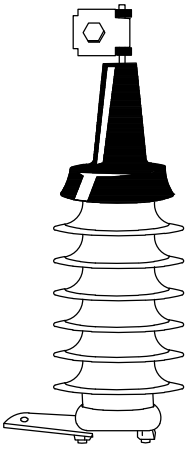

FIGURE 3
JOSLYN

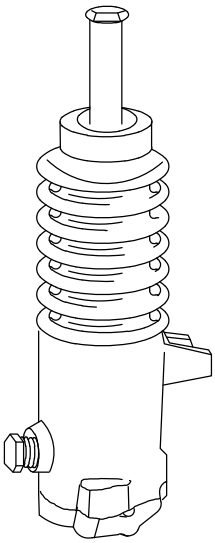

FIGURE 4
G&W

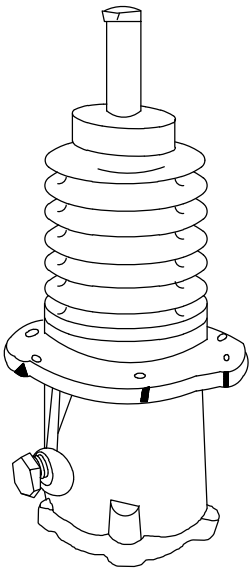

FIGURE 5
G&W

FIELD MAINTENANCE ONLY

TABLE OF CONTENTS

© 1998 - 2020 San Diego Gas & Electric Company. All rights reserved. Removal of this copyright notice without permission is not permitted under law.

REV	CHANGE	DR	BY	DSN	APV	DATE	REV	CHANGE	DR	BY	DSN	APV	DATE
C	REVISION	-	-	-	TR/JJ	07/14/2005	F						
B	REVISION	-	-	-	TR/JJ	06/28/2005	E						
A	REVISION	-	-	-	JCE/VCR	03/01/2002	D	MOVED TO FMO	EDM	EJA	GLW	CZH	10/09/2020

X Indicates Latest Revision | Completely Revised | New Page | Information Removed

SDG&E ELECTRIC UNDERGROUND FIELD MAINTENANCE ONLY STANDARDS

OUTDOOR CABLE TERMINALS FOR POLYETHYLENE

FMO UG4111.1

BILL OF MATERIALS:

CABLE POLYETHYLENE	TERMINAL		FIGURE NUMBER	AERIAL LUG CATALOG NUMBER/ STOCK NUMBER	COMPRESSION CONNECTOR		COMPRESSION DIE	ASSEMBLY UNITS
	CATALOG NUMBER	STOCK NUMBER			CATALOG NUMBER	STOCK NUMBER		
2 SOL AL	PATT 1801	727504	2	- (E)	A5088-23-3D10	- (A)	BG	CP-#2A
	E5202-BG		3	PG3 (A)	002D	- (A)	W-163	
2/0 AL	PATT 1801	727512	2	- (E)	A5088-26-3D10	- (A)	U-28ART	CP2/0A
	E5202-BM		3	PG3 (A)	2/OS	- (A)	BG	
350 KCMIL AL	PAT 1872 CH	727634 (C)	4	A5076-190 (A)	A5088-4	- (A)	U31ART	CP350A
2 CU	LCT 126-1701-BA	727520 (B)	1	261856	87XCU	- (A)	W162	CP-#2C
4 CU	5641	732918 (D)	6	- (E)	8898-6	729930	BG	CP-#2N
	JPT15J1							
	TFT-151E							
4/0 CU	PATT 1802	727584 (B)	2	3D (A)	A5087-28	- (A)	U28RT	CP4/0C
500 KCMIL CU	PAT 1872 CH	727648 (B) (C)	4	A5076-190 (A)	A5087-10	- (A)	U34RT	CP500C
750 KCMIL AL	PATR 1873 CH	727552 (C)	5	A5076-190 (A)	A5088-15	- (A)	P39ART	CP750A
	5644	727138 (D)	6	262432	PTL-750-2.5	729940	301	CP750N

TABLE OF CONTENTS

FIELD MAINTENANCE ONLY

© 1998 - 2020 San Diego Gas & Electric Company. All rights reserved. Removal of this copyright notice without permission is not permitted under law.

REV	CHANGE	DR	BY	DSN	APV	DATE	REV	CHANGE	DR	BY	DSN	APV	DATE
C	REVISION	-	-	-	TR/JJ	07/14/2005	F						
B	REVISION	-	-	-	TR/JJ	06/28/2005	E						
A	REVISION	-	-	-	JCE/VCR	03/01/2002	D	MOVED TO FMO	EDM	EJA	GLW	CZH	10/09/2020

INSTALLATION:

(A) SUPPLIED WITH CABLE TERMINAL KIT.

(B) FOR USE IN ALL CONTAMINATION DISTRICTS.

(C) DO NOT USE ON UPSWEEP BRACKETS.

(D) NON-PORCELAIN TERMINALS ARE REQUIRED IN ALL DISTRICTS, FOR SUBSTATION APPLICATION SEE FIGURE 7 PAGE 4111.1.

(E) AERIAL LUG NOT REQUIRED.

(F) FOR 350, 750 AND 1000 KCMIL CABLE POLE TERMINALS, INSTALL THE TOP PORTION OF THE COMPRESSION CONNECTOR IN THE BOTTOM POSITION OF THE 2-BOLT CONNECTOR (AERIAL LUG).

REFERENCE:

L. FOR CONTAMINATION DISTRICTS SEE STANDARD 287/3140.

M. SEE STANDARD 1407/4207 FOR CABLE TERMINAL MOUNTING INFORMATION.

TABLE OF CONTENTS

FIELD MAINTENANCE ONLY

© 1998 - 2020 San Diego Gas & Electric Company. All rights reserved. Removal of this copyright notice without permission is not permitted under law.

REV	CHANGE	DR	BY	DSN	APV	DATE	REV	CHANGE	DR	BY	DSN	APV	DATE
C	REVISION	-	-	-	TR/JJ	07/14/2005	F						
B	REVISION	-	-	-	TR/JJ	06/28/2005	E						
A	REVISION	-	-	-	JCE/VCR	03/01/2002	D	MOVED TO FMO	EDM	EJA	GLW	CZH	10/09/2020

X Indicates Latest Revision | Completely Revised | New Page | Information Removed

FIELD MAINTENANCE ONLY

REVISION HISTORY:

7/13/2016: All versions prior to 2016 are superseded by their current version found inside the Overhead Construction Standard Manual.

TABLE OF CONTENTS

© 1998 - 2016 San Diego Gas & Electric Company. All rights reserved. Removal of this copyright notice without permission is not permitted under law.

REV	CHANGE	BY	DSGN	APPV	DATE	REV	CHANGE	BY	DSGN	APPV	DATE
C						F					
B						E					
A	ORIGINAL ISSUE	JS	IL	MDJ	7/13/2016	D					

X Indicates Latest Revision | Completely Revised | New Page | Information Removed

SHEET 1 OF 1

SDG&E ELECTRIC UNDERGROUND STANDARD

3/C POTHEADS (G&W)

FMO UG 4112

TABLE OF CONTENTS

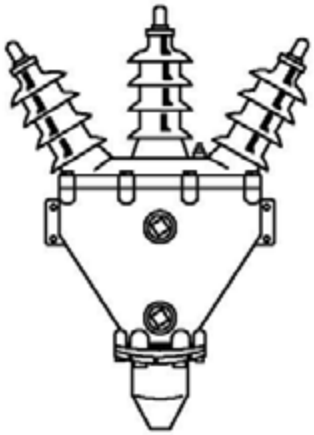

FIGURE 1
SHAPE "B"

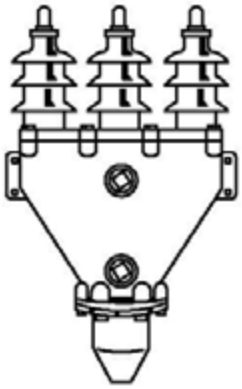

FIGURE 2
SHAPE "C"

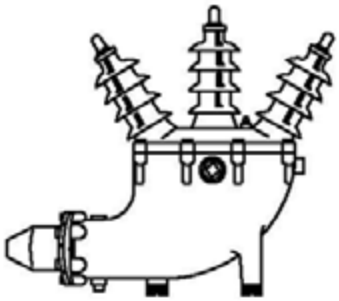

FIGURE 3
SHAPE "BK"

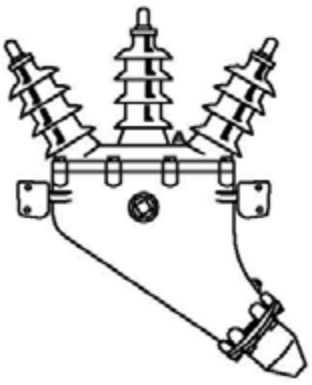

FIGURE 4
SHAPE "BL"



STYLE 8
BUS TYPE
VERTICAL SURFACE



STYLE 3-D
ADJUSTABLE CLAMP TYPE,
HORIZONTAL OR VERTICAL
TAKE-OFF

AERIAL LUGS

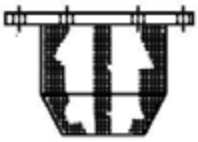

WS
WIPING SLEEVE



WSV
INVERTED WIPING
SLEEVE
Ⓑ

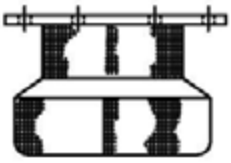

CC
CONDUIT COUPLING

FOR FIELD MAINTENANCE ONLY

NOTES:

A. SEE LATEST G&W TERMINATIONS BULLETIN FOR POTHEAD DIMENSIONS.
Ⓑ INVERTED WIPING SLEEVE USED WITH CONDUIT COUPLING.
Ⓒ CC550 ALSO REQUIRED-PIPE MOUNTED-LARGE BODY-SUBSTATION.
Ⓓ TO BE USED ONLY IN SUBSTATIONS WITH EXISTING 25KV RATED POTHEADS.

FIG. NO.	SHAPE	G&W CATALOG NUMBER	MAX COND SIZE (KCM)	APPROX COMP REQ'D (GAL)	PARTS REFERENCE								SDG&E STOCK NUMBER	MAJOR USE
					CAPNUT		POR-CELAIN	LID	LID GASKET	BODY	AERIAL LUG	WIPING SLEEVE		
					CONNECTOR	GASKET								
4KV SYSTEM VOLTAGE - POTHEAD RATED 8.7KV														
1	B	TA3554B	500	1-3/4	AT25	A1625-2	DAC	DH3BAX	A-1777	H4C	3D55	WS41	727200	CABLE POLE
2	C	UNTA3555C	500	5	AT25	A1625-2	DAD	DJ3CAX	B1625	J5C	A480-23	WS51		CUBICLE
3	BK	UTA3555BK	500	5	AT35	A1626	EAB	EJ3BAX	B1625	J5K	3D55	WS51		SUB - POLE
4	BL	UTA3555BL	500	4	AT35	A1626	EAB	EJ3BAX	B1625	J5L	3D55	WS51		POLE
12KV SYSTEM VOLTAGE - POTHEAD RATED 15KV														
1	B	JTA3755B	500	3-1/2	AT35	A1626	EAG	EJ3BAX	B1625	J5C	3D55	WS51	727136	CABLE POLE - SMALL BODY
1	B	JTA3755B	1000	3-1/2	AT38	A1626	EAG	EJ3BAX	B1625	J5C	3D88	WS51		CABLE POLE - SMALL BODY
1	B	TA3785B	1000	5-1/2	AT38	A1626	EAG	EK3BAX	B1626	K5C	3D88	WSV51		Ⓒ
2	C	NTA3755C	500	5-1/2	AT35	A1626	EAH	EK3CAX	B1626	K5C	A480-23	WS51		LARGE BODY - CUBICLE
2	C	NTA3785C	1000	5-1/2	AT38	A1626	EAH	EK3CAX	B1626	K5C	A482-23	WS51		LARGE BODY - CUBICLE
3	BK	TA3755BK	500	6-1/2	AT35	A1626	EAG	EK3BAX	B1626	K5K	3D55	WS51		SUB - POLE
3	BK	TA3785BK	1000	6-1/2	AT38	A1626	EAG	EK3BAX	B1626	K5K	3D88	WS51		SUB - POLE
4	BL	JTA3755BL	500	4	AT35	A1626	EAG	EJ3BAX	B1625	J5L	3D55	WS51		POLE
4	BL	JTA3785BL	1000	4	AT38	A1626	EAG	EJ3BAX	B1625	J5L	3D55	WS51		POLE
1	B	TA3855B	500	5-1/2	AT25	A1625-2	EAK	EK3BAX	B1626	K5C	3D55	WS51		POLE - NEAR OCEAN
3	BK	TA3855BK	500	6-1/2	AT25	A1625-2	EAK	EK3BAX	B1626	K5K	3D55	WS51		SUBSTATIONS NEAR OCEAN

© 1998 - 2006 San Diego Gas & Electric Company. All rights reserved. Removal of this copyright notice without permission is not permitted under law.

DATE 1-1-93 APPD JLG/BDG	SDG&E ELECTRIC STANDARDS 3/C POTHEADS (G&W)	4199.910 SUPERSEDES 4112 1-1-93

UG4113 FIELD MAINTENANCE ONLY

ALL VERSIONS LISTED IN FMO ARE SUPERSEDED BY THEIR CURRENT VERSION FOUND INSIDE THE UNDERGROUND CONSTRUCTION STANDARD MANUAL.

REVISION HISTORY:

02/14/2022: MOVED TO FMO

TABLE OF CONTENTS

© 1998 - 2022 San Diego Gas & Electric Company. All rights reserved. Removal of this copyright notice without permission is not permitted under law.

REV	CHANGE	DR	BY	DSN	APV	DATE	REV	CHANGE	DR	BY	DSN	APV	DATE
C							F						
B							E						
A	ORIGINAL ISSUE	EDM	EJA	GLW	FRC	02/14/2022	D						

	Indicates Latest Revision		Completely Revised	X New Page		Information Removed

SDG&E ELECTRIC UNDERGROUND FIELD MAINTENANCE ONLY STANDARDS

LIVEFRONT TO LOAD BREAK ELBOW CONVERSION
RE-SHIELDING OF CABLE

SCOPE: THIS STANDARD SHOWS THE APPLICATION OF SEMI CONDUCTIVE SHIELDING ON 15KV XLPE PECN, OR XLPE-PEJ CABLES FOR THE PURPOSE OF CONVERTING LIVEFRONT CONNECTIONS TO LOADBREAK ELBOWS.

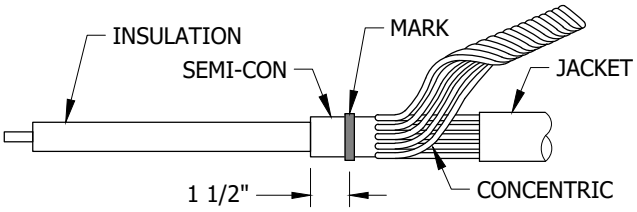

FIGURE 1 (C)

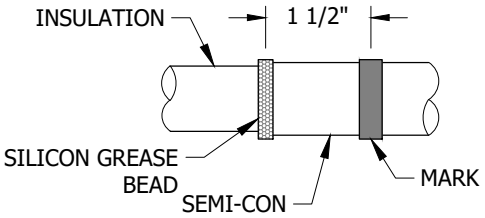

FIGURE 2 (D)

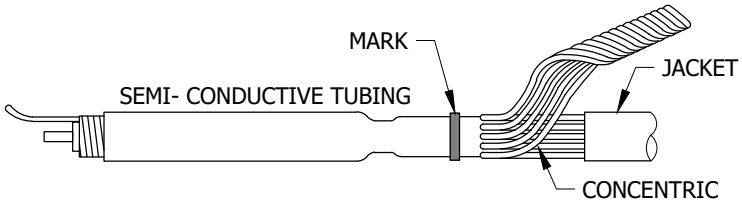

FIGURE 3

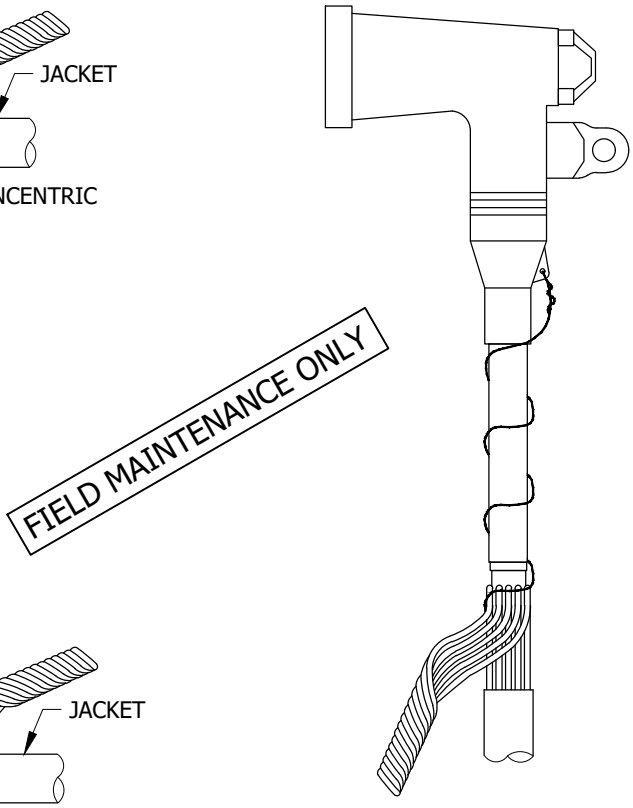

FIGURE 4 (H)

INSTALLATION:

A. REMOVE LIVE FRONT CONNECTION AND CUT CABLE TO TERMINATION LENGTH. INSTALL ELBOW LUG AND COMPRESS CONNECTION.

B. INSPECT INSULATION FOR DEGRADATION OR DAMAGE; MINOR IMPERFECTIONS CAN BE REMOVED WITH A FINE GRADE EMERY CLOTH. CLEAN INSULATION AND SEMI-CONDUCTIVE COVER WITH APPROVED CLEANER.

(C) PLACE A MARK 1 1/2" FROM THE END OF THE SEMI-CONDUCTIVE COVER.

(D) APPLY A BEAD OF SILICON GREASE AT THE END OF THE SEMI-CONDUCTIVE COVER TO FILL THE VOID WHERE THE INSULATION STARTS.

E. INSTALL SEMI-CONDUCTIVE TUBE OVER CABLE WITH THE PULL RIBBON TOWARD THE END OF THE CABLE.

F. PULL THE RIBBON AND ADJUST THE SEMI-CONDUCTIVE TUBING TO THE 1 1/2 INCH MARK ON CABLE SEMI-CONDUCTIVE COVER. UN-WIND RIBBON HOLDING THE END OF THE SEMI-CONDUCTIVE TUBING IN PLACE.

G. AFTER THE SEMI-CONDUCTIVE TUBING IS APPLIED TO THE CABLE, FOLLOW ELBOW MANUFACTURERS INSTRUCTIONS AND TRIM SEMI-CONDUCTIVE COVERING TO LENGTH AND APPLY ELBOW.

(H) SPIRAL WRAP A CONCENTRIC NEUTRAL WIRE FROM THE TURN BACK UP TO THE ELBOW AND ATTACH TO THE DRAIN/BLEED CONNECTION POINT ON THE ELBOW.

© 1998 - 2022 San Diego Gas & Electric Company. All rights reserved. Removal of this copyright notice without permission is not permitted under law.

REV	CHANGE	DR	BY	DSN	APV	DATE	REV	CHANGE	DR	BY	DSN	APV	DATE
C	UG4113 MOVED TO FMO	EDM	EJA	GLW	FRC	02/14/2022	F						
B	FORMATTING	EDM	JIK	-	-	06/02/2020	E						
A	REVISION	-	-	-	JJ/TR	09/14/2005	D						

X Indicates Latest Revision | Completely Revised | New Page | Information Removed

SHEET 1 OF 2

SDG&E ELECTRIC UNDERGROUND FIELD MAINTENANCE ONLY STANDARDS

LIVEFRONT TO LOAD BREAK ELBOW CONVERSION
RE-SHIELDING OF CABLE

FMO
UG4113.1

TABLE OF CONTENTS

BILL OF MATERIALS:

ITEM	DESCRIPTION	QUANTITY	STANDARD PAGE	STOCK NUMBER	DESIGN UNITS
1	3M SEMI-CONDUCTIVE TUBING	AS REQ'D	-	S776660	-

NOTES:

I. INSPECT QUALITY OF CABLE TO BE RE-SHIELDED. IF CONCENTRIC NEUTRALS SHOW SIGNS OF SEVERE CORROSION OR THE CABLE HAS DEGRADED INSULATION, THE CABLE SHOULD BE REPLACED AND NOT RE-SHIELDED.

II. SEMI CONDUCTIVE TUBING CAN RE-SHIELD 22 INCHES OF CABLE INSULATION AND CABLE SIZES FROM # 4 COPPER TO 2/0 ALUMINUM.

REFERENCE:

a. RE-TEST CABLE ACCORDING TO THE ELECTRIC STANDARD PRACTICE 107, 229 OR 200 CABLE TESTING STANDARDS.

TABLE OF CONTENTS

FIELD MAINTENANCE ONLY

© 1998 - 2022 San Diego Gas & Electric Company. All rights reserved. Removal of this copyright notice without permission is not permitted under law.

REV	CHANGE	DR	BY	DSN	APV	DATE	REV	CHANGE	DR	BY	DSN	APV	DATE
C	UG4113 MOVED TO FMO	EDM	EJA	GLW	FRC	02/14/2022	F						
B	FORMATTING	EDM	JIK	-	-	06/02/2020	E						
A	REVISION	-	-	-	JJ/TR	09/14/2005	D						

UG4122 FIELD MAINTENANCE ONLY

ALL VERSIONS LISTED IN FMO ARE SUPERSEDED BY THEIR CURRENT VERSION FOUND INSIDE THE UNDERGROUND CONSTRUCTION STANDARD MANUAL.

REVISION HISTORY:

12/12/2021: MOVED TO FMO

TABLE OF CONTENTS

© 1998 - 2021 San Diego Gas & Electric Company. All rights reserved. Removal of this copyright notice without permission is not permitted under law.

REV	CHANGE	DR	BY	DSN	APV	DATE	REV	CHANGE	DR	BY	DSN	APV	DATE
C							F						
B							E						
A	ORIGINAL ISSUE	EDM	EJA	GLW	CZH	12/12/2021	D						

	Indicates Latest Revision		Completely Revised	X New Page		Information Removed

SDG&E ELECTRIC UNDERGROUND FIELD MAINTENANCE ONLY STANDARDS

INDOOR CABLE TERMINATIONS, POLYETHYLENE CABLES
(EXISTING CABLES)

SCOPE: THIS STANDARD SHOWS STRESS WRAP USED ON EXISTING INSTALLATIONS FOR THE REPLACEMENT OF DAMAGED STRESS CONES.

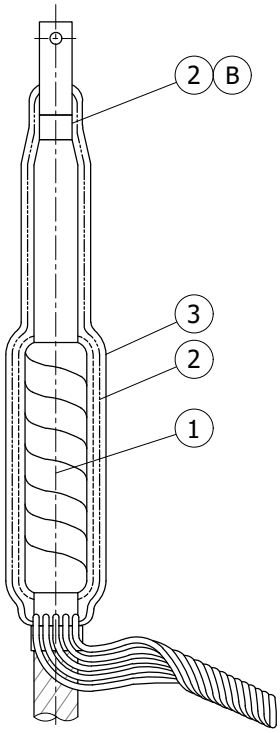

FIGURE 1

FIELD MAINTENANCE ONLY

TABLE OF CONTENTS

INSTALLATION:

A. FOLLOW MANUFACTURERS INSTRUCTIONS FOR THE APPLICATION OF STRESS WRAP, HIGH VOLTAGE INSULATING TAPE AND SILICONE TAPE. THE TAPES IN THE BILL OF MATERIAL SHALL BE USED INSTEAD OF TAPES IN MANUFACTURERS INSTRUCTIONS.

(B) ON COPPER CABLE, DO NOT TAPE OVER THE EXPOSED BARE COPPER WIRE BETWEEN THE LUG AND THE CABLE INSULATION.

BILL OF MATERIALS:

ITEM	DESCRIPTION	QUANTITY	STANDARD PAGE	STOCK NUMBER	DESIGN UNITS
1	STRESS WRAP	1	-	S247736	-
2	TAPE, HIGH VOLTAGE INSULATING	AS REQ'D	-	S720480	-
3	TAPE, SILICONE	AS REQ'D	-	S720384	-

NOTES:

I. USE STRESS WRAP WHERE IT IS NOT POSSIBLE TO SLIDE A NEW STRESS CONE OVER THE EXISTING LUG, OR TO HELP MAINTAIN CLEARANCES BETWEEN STRESS CONES AND/OR EQUIPMENT BARRIERS.

REFERENCE:

a. SEE UG4108 OR UG4121 FOR LIVEFRONT CABLE TERMINATIONS USED ON NEW CONSTRUCTION.

© 1998 - 2021 San Diego Gas & Electric Company. All rights reserved. Removal of this copyright notice without permission is not permitted under law.

REV	CHANGE	DR	BY	DSN	APV	DATE	REV	CHANGE	DR	BY	DSN	APV	DATE
C	MOVED TO FMO	EDM	EJA	GLW	CZH	12/12/2021	F						
B	FORMATTING	EDM	JIK	-	-	06/02/2020	E						
A	REVISION	-	-	-	JLB/RDJ	01/01/1986	D						

FIELD MAINTENANCE ONLY

REVISION HISTORY:

12/1/2018: All versions prior to 2018 are superseded by their current version found inside the Overhead Construction Standard Manual.

TABLE OF CONTENTS

© 1998 - 2018 San Diego Gas & Electric Company. All rights reserved. Removal of this copyright notice without permission is not permitted under law.

REV	CHANGE	BY	DSGN	APPV	DATE	REV	CHANGE	BY	DSGN	APPV	DATE
C						F					
B						E					
A	ORIGINAL ISSUE	DG	JS	CZH	12/1/2018	D					

Indicates Latest Revision | Completely Revised X | New Page | Information Removed

SHEET 1 OF 1

SDG&E ELECTRIC UNDERGROUND CONSTRCUTION STANDARD

3/C POTHEADS (G&W)

FMO UG4123

SCOPE: THIS STANDARD SHOWS PLATE EXTENSIONS USED TO EXTEND PRIMARY CABLE CONNECTIONS TO HIGHER BUSHING HEIGHTS.

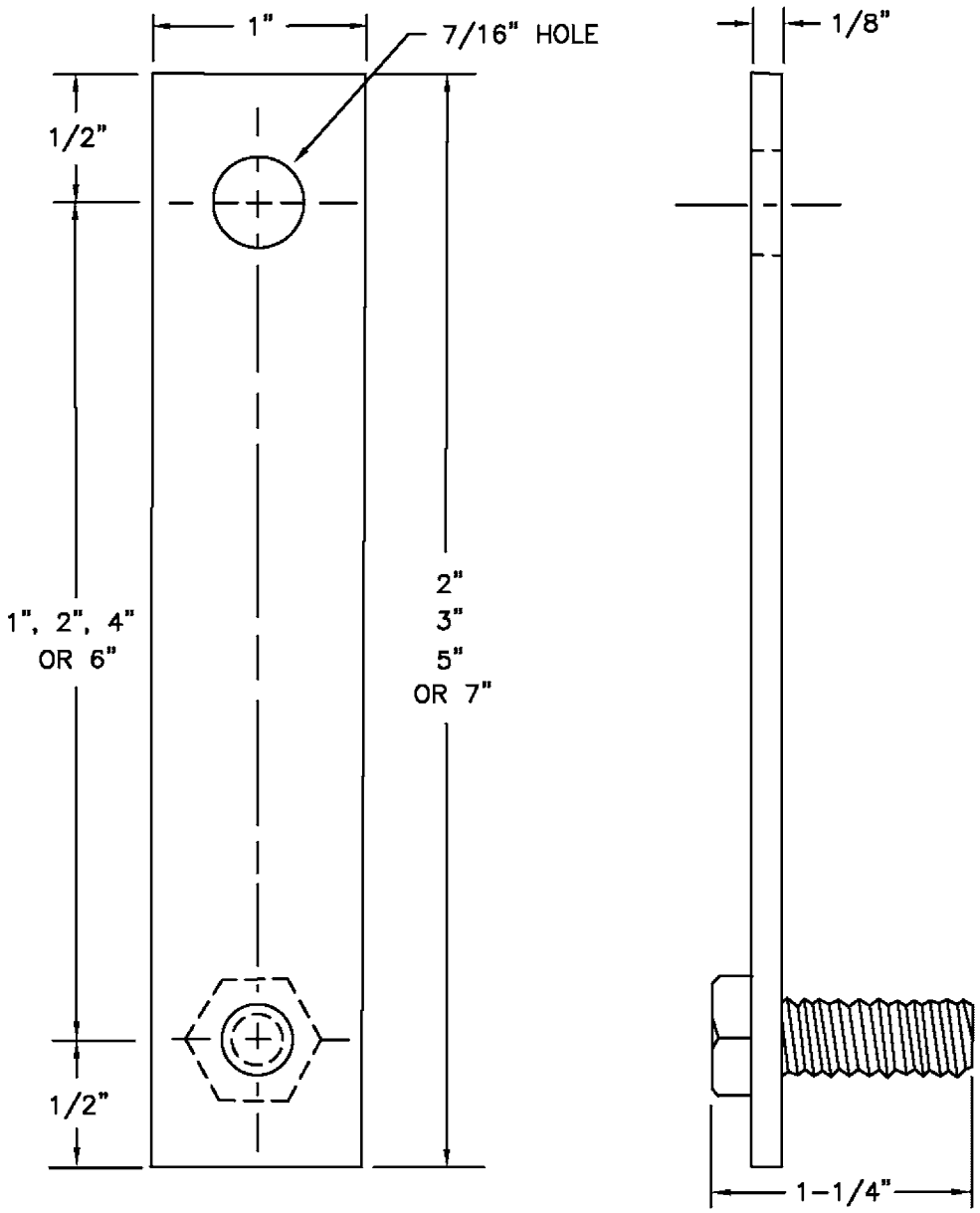

NOTES:

- ADAPTER PLATE TO BE TINNED COPPER.
- BOLT TO BE 3/8", 16 THREADS PER INCH. THREADS SHALL BE CONTINUOUS TO ADAPTER PLATE CONTACT SURFACE.
- BOLT TO BE BRAZED TO BACK OF PLATE.

STOCK NUMBERS	
1"	101904
2"	101920
4"	101952
6"	101984

© 1998 - 2005 San Diego Gas & Electric Company. All rights reserved. Removal of this copyright notice without permission is not permitted under law.

Indicates Latest Revision | Completely Revised | New Page | Information Removed

4123 SUPERCEDES 3799.902 (4-10-75)	SDG&E ELECTRIC STANDARDS TERMINAL ADAPTER PLATE EXTENSION	REVISION DATE 1-1-86 APPD JLB/RDJ

TABLE OF CONTENTS

FIELD MAINTENANCE ONLY

REVISION HISTORY:

7/13/2016: All versions prior to 2016 are superseded by their current version found inside the Overhead Construction Standard Manual.

TABLE OF CONTENTS

© 1998 - 2016 San Diego Gas & Electric Company. All rights reserved. Removal of this copyright notice without permission is not permitted under law.

REV	CHANGE	BY	DSGN	APPV	DATE	REV	CHANGE	BY	DSGN	APPV	DATE
C						F					
B						E					
A	ORIGINAL ISSUE	JS	IL	MDJ	7/13/2016	D					

X Indicates Latest Revision | Completely Revised | New Page | Information Removed

SHEET
1 OF 1

SDG&E ELECTRIC UNDERGROUND STANDARD

SPLICE FOR 15KV MULTI-CONDUCTOR CABLES
FOR PAPER OR VANISHED CAMBRIC, LEAD SHEATHED CABLES

FMO
UG 4145

FOR FIELD MAINTENANCE ONLY

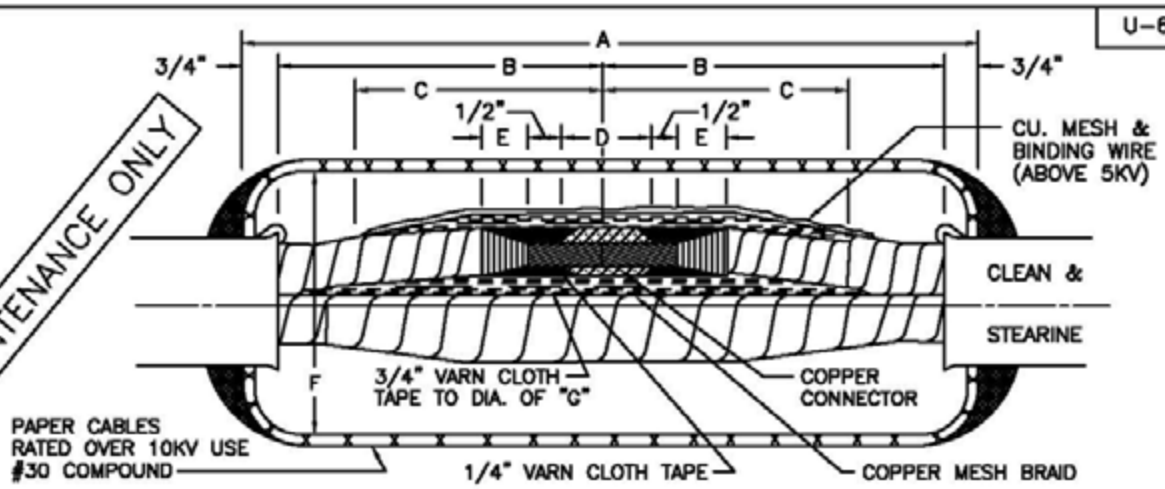

SIZE CONDUCTOR	INSULATION THICKNESS	VOLT KV	DIMENSIONS IN INCHES							SPLICE KIT STOCK NO.	ASSEMBLY UNIT
			A	B	C	D	E	F	G		
500MCM	.175	15	22	9½	7¼	3	1 1/16	5½	.35	445472	KIT500
#2	.175	5	15½	7	5	2	1 1/16	4½	.35	F.M.O.	–

NOTES:

1. TRAIN THE CABLES INTO POSITION AND CUT THE ENDS SO THAT THEY BUTT SQUARELY TOGETHER.
2. CLEAN AND SCRAPE THE ENDS OF THE LEAD SLEEVE FOR FIVE INCHES AND FLUX WITH STEARINE. SLIP THE LEAD SLEEVE OVER ONE CABLE.
3. MAKE A CIRCULAR SCORE HALF-WAY THROUGH THE LEAD SHEATHS AT A POINT (B) INCHES FROM EACH CABLE END. CLEAN AND SCRAPE THE LEAD SHEATHS FIVE INCHES BEYOND THE SCORE AND FLUX WITH STEARINE.
4. REMOVE THE LEAD SHEATHS UP TO THE SCORE PLACES TEARING THEM OFF SO THAT THE LEAD SHEATHS REMAINING ON THE CABLES ARE BELLED. REMOVE ALL BURRS AND SHARP EDGES, UNWRAP AND FOLD BACK THE METAL BINDER TAPE TO WITHIN 3/4" OF THE LEAD SHEATH.
5. REMOVE THE SHIELDING TAPE FOR A DISTANCE OF (C) INCHES FROM EACH CABLE END, AND TAIL DOWN.
6. REMOVE (D/2 + 1/2) INCHES OF INSULATION FROM EACH CONDUCTOR, FLUX CONDUCTORS AND PLACE IN CONNECTOR WITH SLOT UP BEING SURE THEY BUTT SQUARELY TOGETHER IN THE CENTER OF THE CONNECTOR AND CLAMP CONNECTOR. WRAP ROVING BETWEEN INSULATION AND CONNECTOR, A TEMPORARY LAYER OF VARNISHED CAMBRIC TAPE MAY BE WRAPPED OVER THE INSULATION ON THE CONDUCTORS TO PROTECT THEM FROM DIRT.
7. TIN AND SWEAT ON CONNECTOR LADLING SOLDER INTO THE SLOT AND OVER THE CONNECTOR. REMOVE ASBESTOS ROVING AND ALL SHARP SOLDER POINTS. CLEAN AND POLISH THE CONNECTOR.
8. PENCIL THE INSULATION ON EACH CABLE FOR (E) INCHES. USE GILLING THREAD TO TIE DOWN THE LOOSE ENDS OF TAPE. SMOOTH THE PENCILS WITH SHARP KNIFE.
9. APPLY 1/4" VARNISHED CAMBRIC TAPE ON THE CONDUCTORS BETWEEN THE INSULATION AND CONNECTOR BUILDING UP TO THE LEVEL OF THE CONNECTOR AND CARRYING TWO LAYERS ACROSS THE CONNECTOR.
10. CONTINUE THE BUILDUP WITH HALF-LAPPED 3/4" VARNISHED CAMBRIC TAPE REMOVING THE GILLING THREAD AND TEMPORARY LAYER OF VARNISHED CAMBRIC TAPE. CARRY TAPING EVENLY BACK AND FORTH ACROSS THE SPLICE BUILDING UP TO A DIAMETER OF (G) INCHES OVER THE CONNECTOR AND TAPERING TO THE ENDS. BASTE EACH LAYER OF VARNISHED CAMBRIC TAPE WITH OKO-CAL #60 COMPOUND OR EQUAL HEATED TO 250° F FOR CABLES OPERATING ABOVE 6000 VOLTS PHASE TO PHASE. FOR LOWER VOLTAGES, OMIT BASTING. APPLY A HALF-LAPPED LAYER OF COPPER MESH SHIELDING BRAID OVER EACH CONDUCTOR AND OVERLAY BINDING WIRE. SOLDER TO THE ORIGINAL SHIELDING TAPE AT EACH END AND SOLDER BETWEEN THE TURNS.
11. CENTER THE LEAD SLEEVES OVER THE SPLICE. BEAT DOWN THE ENDS OF THE LEAD SLEEVE TO FIT SNUGLY OVER THE CABLE SHEATHS.
12. WIPE THE LEAD SLEEVE TO THE LEAD SHEATHS USING PAPER PASTERS TO LIMIT THE WIPES.
13. CUT ONE VEE-HOLE IN THE TOP OF THE LEAD SLEEVE AT EACH END. FILL THE LEAD SLEEVE WITH OKO-CAL #30 COMPOUND OR EQUAL, TILTING THE SLEEVE SLIGHTLY AND POURING THROUGH THE VEE-HOLE AT THE LOWER END OF THE SLEEVE SO THAT ALL AIR WILL BE FORCED OUT THE HOLE AT THE UPPER END. THE #30 COMPOUND SHOULD BE POURED AT 275° F AND SHOULD NOT BE HEATED TO MORE THAN 375° F.
14. AFTER THE COMPOUND HAS COOLED IN THE SLEEVE, REFILL THE CONTRACTION CONES THROUGH BOTH VEE-HOLES AND SOLDER SEAL THE FILLING HOLES.
15. CONNECT THE LEAD SHEATHS TO GROUND.

© 1998 - 2006 San Diego Gas & Electric Company. All rights reserved. Removal of this copyright notice without permission is not permitted under law.

TABLE OF CONTENTS

FIELD MAINTENANCE ONLY

REVISION HISTORY:

7/13/2016: All versions prior to 2016 are superseded by their current version found inside the Overhead Construction Standard Manual.

TABLE OF CONTENTS

© 1998 - 2016 San Diego Gas & Electric Company. All rights reserved. Removal of this copyright notice without permission is not permitted under law.

REV	CHANGE	BY	DSGN	APPV	DATE	REV	CHANGE	BY	DSGN	APPV	DATE
C						F					
B						E					
A	ORIGINAL ISSUE	JS	IL	MDJ	7/13/2016	D					

X Indicates Latest Revision | Completely Revised | New Page | Information Removed

SHEET 1 OF 1

SDG&E ELECTRIC UNDERGROUND STANDARD

15KV CABLE TRANSITION MODULE

FMO UG 4147

SCOPE: THIS STANDARD SHOWS THE CABLE TRANSITION MODULE USED FOR SPLICING OR TAPPING 500 KCMIL PILC–PEJ TO 350 – 1000 KCMIL XL–PECN–PEJ. FOR MANHOLE INSTALLATIONS ONLY: (SEE STD. PG. 4147.3 FOR MAP SYMBOLS).

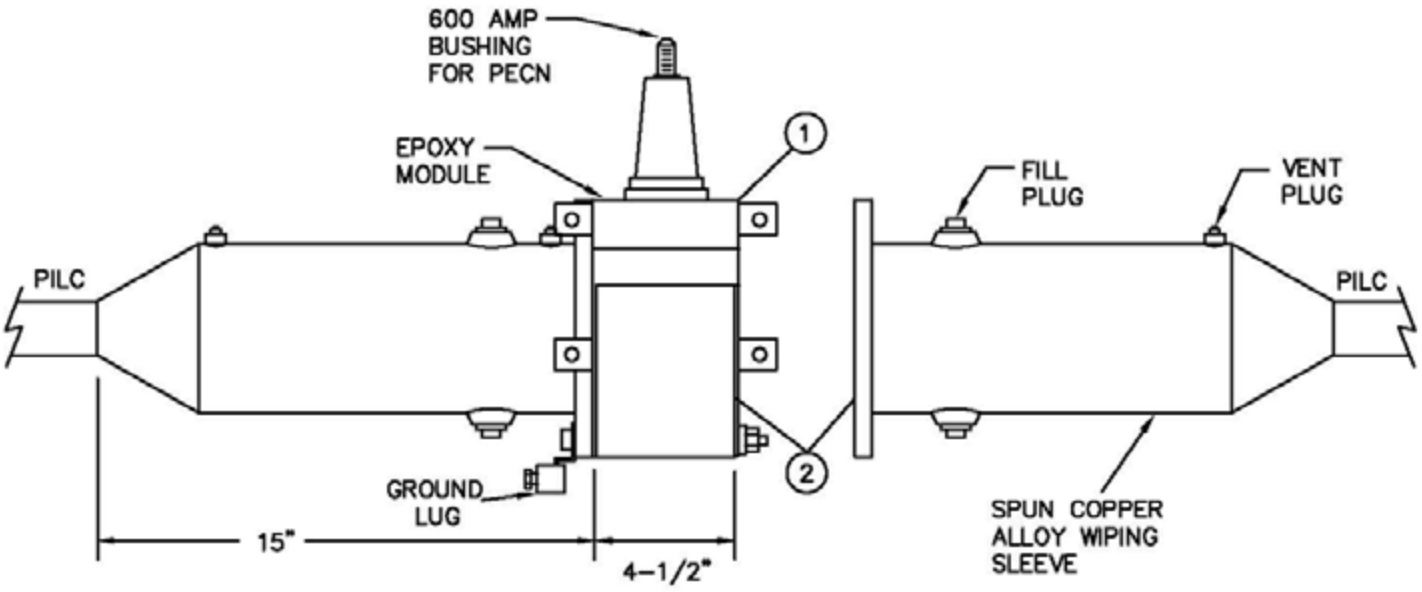

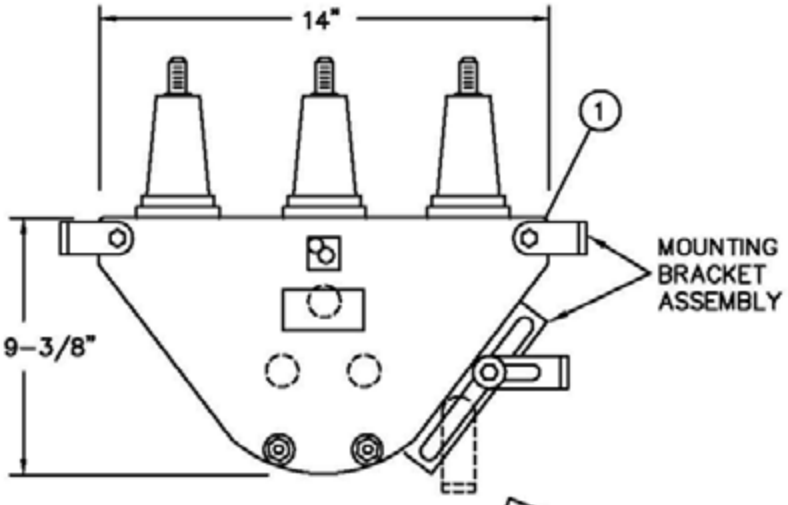

END VIEW

EPOXY MODULE (2–WAY)
W/O WIPING SLEEVE

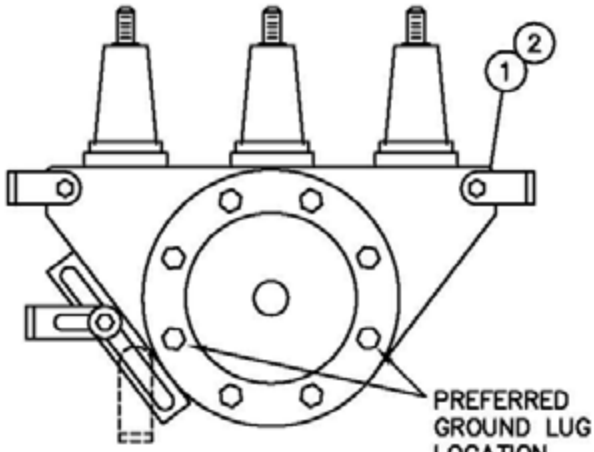

END VIEW

EPOXY MODULE (2–WAY & 3–WAY)
W/WIPING SLEEVE

FOR FIELD MAINTENANCE ONLY

NOTES:

- MAY BE INSTALLED IN 3324 MANHOLES. PROPER UNOBSTRUCTED SPACES MUST BE MAINTAINED.
- FOR INSTALLATIONS REQUIRING 200 AMP CONNECTORS, CONTACT CONSTRUCTION STANDARDS FOR COORDINATION.
- INSTALLATION INSTRUCTIONS FOR 15KV–95KVBIL AND TERMINATION SUPPLIES INCLUDED IN KIT.

©1998 - 2006 San Diego Gas & Electric Company. All rights reserved. Removal of this copyright notice without permission is not permitted under law.

4199.912 SUPERSEDES 4147.1 1–1–94	SDG&E ELECTRIC STANDARDS 15KV CABLE TRANSITION MODULE	DATE 1–1–94 APPD JLB/BDJ

TABLE OF CONTENTS

TABLE OF CONTENTS

GROUND WIRE INSTALLATION
2-WAY & 3-WAY MODULES

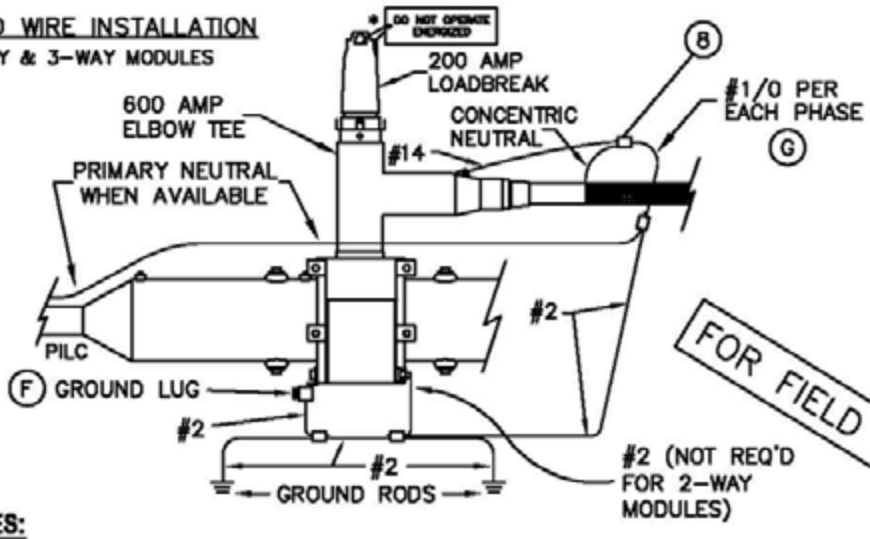

INSTALLATION EXAMPLE
WALL- MOUNTED

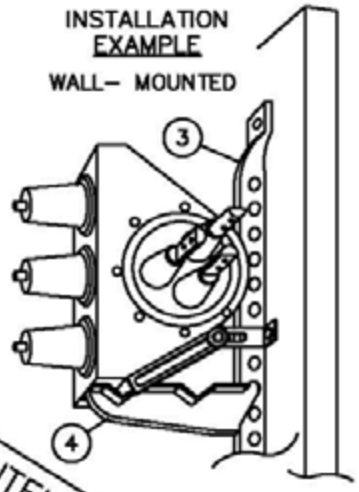

FOR FIELD MAINTENANCE ONLY

***NOTES:**

- INSTALL (DO NOT OPERATE ENERGIZED) TAG WHEN INSTALLED IN MANHOLES.

BILL OF MATERIAL:

ITEM	DESCRIPTION	QUANTITY	CONST STD. OR PAGE NO.	STOCK NUMBER	ASSEMBLY UNITS
1	KIT, CABLE SPLICING TRANSITION MODULE, 15KV-95KVBIL (2-WAY)	AS REQ'D	–	443104	CTM-11
2	KIT, CABLE SPLICING TRANSITION MODULE, 15KV-95KVBIL (3-WAY)	AS REQ'D	–	443106	CTM-09
3	HANGAR FOR CABLE ARMS	AS REQ'D	4178.2	564480	–
4	CABLE ARM, 2-WAY	AS REQ'D	4178.2	110496	–
5	WIRE, BARE COPPER, #2 STR. SOFT DRAWN	AS REQ'D	–	812816	–
7	WIRE, BARE COPPER, 1/0 STR. SOFT DRAWN	AS REQ'D	–	812752	–
8	WIRE, BARE COPPER, # 4/0 STR. SOFT DRAWN	AS REQ'D	–	812764	–
9	WIRE, BARE COPPER, #14 STR. SOFT DRAWN	AS REQ'D	–	812934	–
10	CONNECTOR, COMPRESSION (SQUEEZON)	AS REQ'D	4172.2	–	–

INSTALLATION:

A. FOLLOW INSTALLATION INSTRUCTIONS INCLUDED IN THE TRANSITION MODULE KIT. KIT INCLUDES REQUIRED TAPES, NO VOID COMPOUND, SOLDER, ETC.

B. THE CTM IS NORMALLY POSITIONED ON A BRACKET AND NOT FREE TO MOVE DURING ASSEMBLY. PROPER CABLE TRAINING SPACE FOR ALL CABLES CONNECTED TO THE CTM MUST BE INVESTIGATED PRIOR TO SELECTING THE MOUNTING POSITION.

C. SEE INSTALLATION EXAMPLE ABOVE FOR MOUNTING THE MODULE ON A SUBSTRUCTURE OR VAULT WALL. MODULE MAY BE MOUNTED IN OTHER WAYS (I.E. THE FLOOR OF A VAULT ON BRACKETS MADE FROM CABLE STRUT), IF EXISTING EQUIPMENT AND CABLE LOCATIONS DO NOT PERMIT WALL MOUNTING.

D. WHEN ATTACHING THE WIPING SLEEVE TO THE MODULE, ASSURE THE FILL PLUG AND VENT PLUG ARE ON THE TOP OF THE JOINT. ASSURE "O" RING SEAL IS IN THE PROPER POSITION.

(F) A GROUND LUG IS SUPPLIED IN THE KIT. THE PILC CABLE AND THE PECN CABLE SHIELDS MUST BE CONNECTED TOGETHER AT THIS GROUND LUG. ON THE 3-WAY MODULE (S/N 443106), BOTH PILC CABLES AND THE PECN CABLE MUST BE TIED TOGETHER. THE GROUND LUG MUST BE ATTACHED TO THE FLANGE OF THE SPUN COPPER ALLOY WIPING SLEEVE, PREFERABLY IN THE FOUR O'CLOCK OR EIGHT POSITION. SEE END VIEW DRAWING ON CONST. STD PAGE NO. 4171.1.

(G) THE WIRE BETWEEN ALL THREE PHASES OF PECN TO BE: 1) CONCENTRIC WIRE OR #2 FOR 350 KCMIL PER PHASE, OR 2) CONCENTRIC WIRE OR 1/0 FOR 500, 750, OR 1000 KCMIL PER PHASE.

© 1998 - 2006 San Diego Gas & Electric Company. All rights reserved. Removal of this copyright notice without permission is not permitted under law.

DATE 1-1-94 APPD JLB/BSJ	SDG&E ELECTRIC STANDARDS 15KV CABLE TRANSITION MODULE	4199.913 SUPERSEDES 4147.2 1-1-94

FIELD MAINTENANCE ONLY

REVISION HISTORY:

7/13/2016: All versions prior to 2016 are superseded by their current version found inside the Overhead Construction Standard Manual.

TABLE OF CONTENTS

© 1998 - 2016 San Diego Gas & Electric Company. All rights reserved. Removal of this copyright notice without permission is not permitted under law.

REV	CHANGE	BY	DSGN	APPV	DATE	REV	CHANGE	BY	DSGN	APPV	DATE
C						F					
B						E					
A	ORIGINAL ISSUE	JS	IL	MDJ	7/13/2016	D					

X Indicates Latest Revision | Completely Revised | New Page | Information Removed

SHEET 1 OF 1

SDG&E ELECTRIC UNDERGROUND STANDARD

200 AMP DEADBREAK CONNECTORS, 12KV

FMO UG 4151

200 AMP DEADBREAK CONNECTORS

"Y" SPLICE
(DELETED FROM PG. 4196.3)

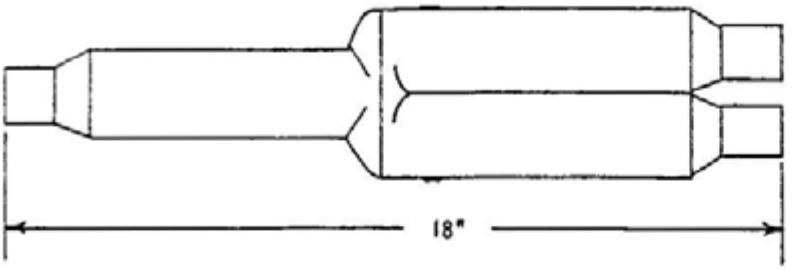

STOCK NUMBER	
#2 CU	668416
2/0 AL	668408
#2 SOL AL	668400
#2 CU-#2 CU #2 AL	668404

MAJOR USE:
USED FOR PERMANENT
SPLICE INSTALLATION

INSULATING PLUG
(DELETED FROM 4196.4)

STOCK NUMBER
#2 CU 544862

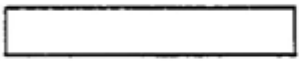

MAJOR USE: (#2 COPPER ONLY)
TO PLUG CABLE ENTRANCES
ON "Y" SPLICE. STRAIGHT
PLUG OR STRAIGHT RECEPTACLES

NOTES:
- FOR INSTALLATION PROCEDURES CONSULT INDIVIDUAL MANUFACTURERS CONTAINERS FOR CURRENT INSTRUCTIONS.

FOR FIELD MAINTENANCE ONLY

TABLE OF CONTENTS

SDG&E ELECTRIC STANDARDS

DATE 1-1-85
APPD RB / DRH

200 AMP DEADBREAK CONNECTORS, 12KV

4199.506
SUPERCEDES 4151.1
(1-22-76)

FIELD MAINTENANCE ONLY

REVISION HISTORY:

7/13/2016: All versions prior to 2016 are superseded by their current version found inside the Overhead Construction Standard Manual.

TABLE OF CONTENTS

© 1998 - 2016 San Diego Gas & Electric Company. All rights reserved. Removal of this copyright notice without permission is not permitted under law.

REV	CHANGE	BY	DSGN	APPV	DATE	REV	CHANGE	BY	DSGN	APPV	DATE
C						F					
B						E					
A	ORIGINAL ISSUE	JS	IL	MDJ	7/13/2016	D					

X Indicates Latest Revision | Completely Revised | New Page | Information Removed

SHEET
1 OF 1

SDG&E ELECTRIC UNDERGROUND STANDARD

ALUMINUM TERMINATION
SECONDARY (600V) AT TRANSFORMER OR BUS

FMO
UG 4168

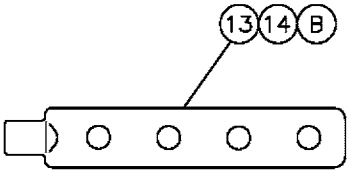

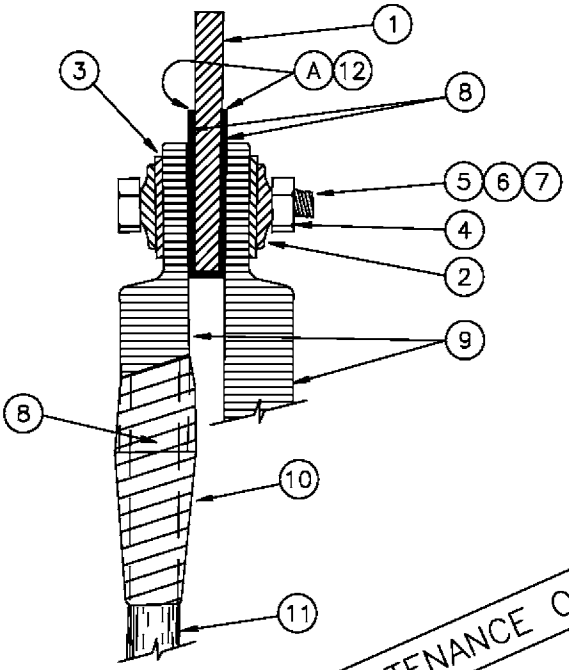

FOR FIELD MAINTENANCE ONLY

BILL OF MATERIAL:

ITEM	DESCRIPTION		CONST STD.	STOCK NUMBER
1	TRANSFORMER TERMINAL OR BUS		–	–
2	WASHER, 3/8", SPRING LOCK, CADMIUM PLATED		–	798620
3	WASHER, 3/8", FLAT, CADMIUM PLATED.		–	800160
4	NUT, 3/8", HEX, MACHINE THREAD, CADMIUM PLATED.		–	505020
5	BOLT, 3/8" X 1–1/2", HEX HEAD MACHINE THREAD, CADMIUM PLATED.		–	616106
6	BOLT, 3/8" X 2", HEX HEAD, MACHINE THREAD, CADMIUM PLATED.		–	616116
7	BOLT, 3/8" X 2–1/2", HEX HEAD, MACHINE THREAD, CADMIUM PLATED.		–	616120
8	INHIBITOR, (REFER TO 4106 FOR INSTALLATION INSTRUCTIONS)		–	247200
9	ALUMINUM LUG, (SIZE AS REQ'D)		4171	–
10	TAPE, PVC		–	720580
11	ALUMINUM CABLE		4002	–
12	TRANSITION PLATE, ALUMINUM TO COPPER	2 HOLE 1–1/2" X 3"	–	543208
		(A) 4 HOLE 3" X 3"	–	543216
		4 HOLE 4" X 4"	–	543224
13	ALUMINUM CONNECTOR, 5/8" STUD, FOR 25–75 KVA (B)		–	270280
14	ALUMINUM CONNECTOR, 1" STUD, FOR 100 & 167 KVA (B)		–	270276

INSTALLATION:

(A) TRANSITION PLATE (APPROPRIATE SIZE) TO BE USED WHEN BOLTING ALUMINUM LUG TO UN–TINNED COPPER BUS OR TRANSFORMER TERMINAL.

(B) COPPER TINNED LUGS MAY ATTACHED TO AN ALUMINUM CONNECTOR STUD, ITEMS 13 & 14.

TABLE OF CONTENTS

4199.600 SUPERSEDES 4168 (9–7–99)	SDG&E ELECTRIC STANDARDS ALUMINUM TERMINATION SECONDARY (600V) AT TRANSFORMER OR BUS	DATE 1–1–94 APPD JLB/BDG

FIELD MAINTENANCE ONLY

REVISION HISTORY:

7/13/2016: All versions prior to 2016 are superseded by their current version found inside the Overhead Construction Standard Manual.

TABLE OF CONTENTS

© 1998 - 2016 San Diego Gas & Electric Company. All rights reserved. Removal of this copyright notice without permission is not permitted under law.

REV	CHANGE	BY	DSGN	APPV	DATE	REV	CHANGE	BY	DSGN	APPV	DATE
C						F					
B						E					
A	ORIGINAL ISSUE	JS	IL	MDJ	7/13/2016	D					

X Indicates Latest Revision | Completely Revised | New Page | Information Removed

SHEET
1 OF 1

SDG&E ELECTRIC UNDERGROUND STANDARD

TRANSFORMER TERMINAL & BUS COMPRESSION TERMINALS
FOR ALUMINUM CONDUCTORS

FMO
UG 4171

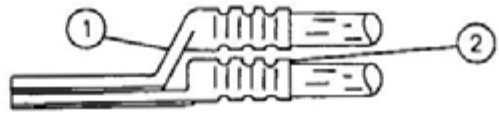

2 HOLE FOR 1/2" BOLTS (A)

ITEM	AL WIRE SIZE	BURNDY DIE SIZE	MANUFACTURER/CATALOG NUMBER		COMPRESSION TERMINAL STOCK NUMBER	ASSEMBLY UNITS
			BURNDY	HOMAC		
1	3/0	840	–	ASL3/0-NTN	729286 (KIT OF 2) 729287	3/0STK
2			–	AL3/0-NTN		
1	350	317	YAK31A-2G1	ASL350-NTN	729288 (KIT OF 2) 729289	350STK
2			YAK31A-2G2	AL350-NTN		
1	500	608	YAK34A-2G1	ASL500-NTN	729290 (KIT OF 2) 729291	500STK
2			YAK34A-2G2	AL500-NTN		

NOTES

THE MAJOR USE FOR STACKABLE LUGS ARE FOR FLAT BUS CONNECTIONS IN PULL CANS WHERE THERE ARE LESS POSITIONS ON THE LANDING TERMINAL THAN THERE ARE CABLES

INSTALLATION

(A) 2 HOLE PADS ARE DRILLED FOR 1-3/4" SPACING

B WHEN APPLYING CONNECTORS, USE INHIBITOR (STOCK NUMBER 247200) AT EACH ALUMINUM CONNECTION

(G) LUGS USED FOR PRIMARY INDOOR TERMINATIONS SHOWN ON STANDARD 4121

REFERENCE

H SEE STANDARD 4106 FOR ALUMINUM CONDUCTOR PREPARATION FOR TERMINATIONS

FOR FIELD MAINTENANCE ONLY

TABLE OF CONTENTS

4199.709 SUPERSEDES 4171 2 1-1-96	SDG&E ELECTRIC STANDARDS	DATE 1-1-96
	TRANSFORMER TERMINAL & BUS COMPRESSION TERMINALS FOR ALUMINUM CONDUCTORS	APPD

FIELD MAINTENANCE ONLY

REVISION HISTORY:

7/13/2016: All versions prior to 2016 are superseded by their current version found inside the Overhead Construction Standard Manual.

TABLE OF CONTENTS

© 1998 - 2016 San Diego Gas & Electric Company. All rights reserved. Removal of this copyright notice without permission is not permitted under law.

REV	CHANGE	BY	DSGN	APPV	DATE	REV	CHANGE	BY	DSGN	APPV	DATE
C						F					
B						E					
A	ORIGINAL ISSUE	JS	IL	MDJ	7/13/2016	D					

X Indicates Latest Revision | Completely Revised | New Page | Information Removed

SHEET
1 OF 1

SDG&E ELECTRIC UNDERGROUND STANDARD

0-600 VOLT CONNECTIONS
FOR 8 THROUGH 350 KCMIL ALUMINUM CONDUCTORS

FMO
UG 4173

SCOPE THIS STANDARD SHOWS THE EQUIPMENT AND INSTALLATION OF 600 VOLT CONNECTORS TO CONNECT SECONDARY AND SERVICE CABLE IN SUBSTRUCTURES

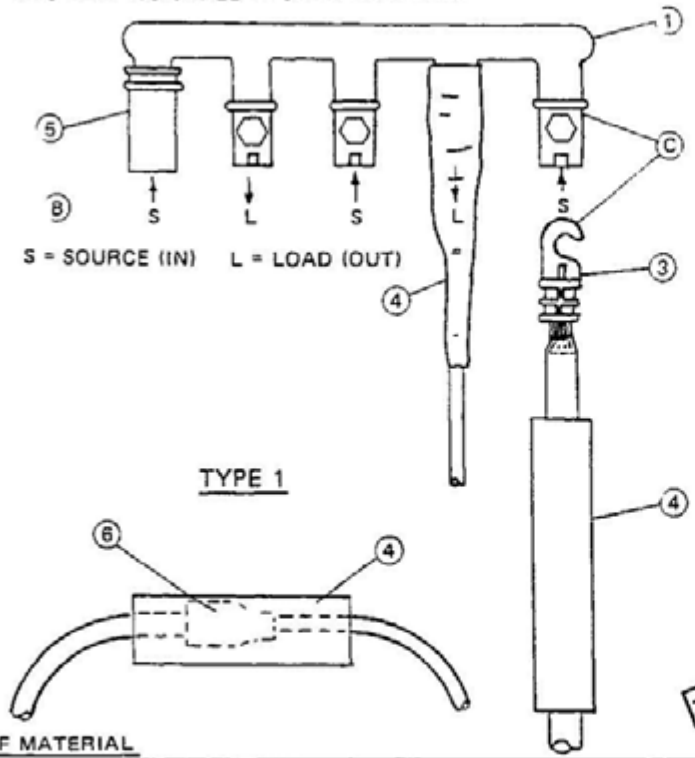

TYPE 1

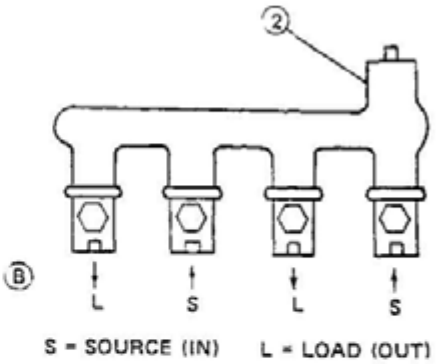

TYPE 2

THIS PAGE FOR FIELD MAINTENANCE ONLY

BILL OF MATERIAL

ITEM	DESCRIPTION			STOCK NUMBER
1	CONNECTORS		3 POSITIONS	270048 (E)
			4 POSITIONS	270064 (E)
			5 POSITIONS	270176 (E)
			6 POSITIONS	270264 (E)
2	CONNECTORS WITH STREET LIGHT TAP FOR WIRE SIZES NO 12 SOLID TO NO 4 STRANDED AWG AL & CU		3 POSITIONS	269980
			4 POSITIONS	270128 (E)
			6 POSITIONS	270274 (E)
3	LUGS, ALUMINUM (F)	DIE 840	NO. 4	269952 (E)
			NO 2	269888 (E)
			1/0	269856 (E)
			3/0	269920 (E)
		DIE 655	350 KCMIL	269972 (E)
4	SLEEVES, HEAT SHRINK	4-3/0 LUG, SIZE–1 3 EXPANDED X 6"		777984 (E)
		350 KCMIL LUG, SIZE–1.5 EXPANDED X 9"		778016 (E)
5	COVER, INSULATING TERMINAL (FOR UNUSED PORTION)			286956
6	REDUCING SLEEVE OR INSULINKS	DIE W-8G	2-4	258528 (E)
			1/0-2	258656 (E)
		DIE W-K840	3/0-1/0	651872

INSTALLATION

A USE TORCH TO SHRINK SLEEVES, FLAME SPREADER RECOMMENDED APPLY FLAME OVER SURFACE OF SLEEVE STARTING AT SHOULDER OF CONNECTOR DO NOT CONCENTRATE HEAT.

(B) IF THE SOURCE AND LOAD (IN AND OUT) CONDUCTORS ARE ALTERNATED, THE TOTAL AMPACITY WILL BE THE SUM OF THE AMPACITIES OF THE SOURCE CONDUCTORS IF THE SOURCE AND LOAD CONDUCTORS ARE NOT ALTERNATED THE MAXIMUM AMPACITY OF THE CONNECTOR WILL BE 750 AMPS FOR THIS SINGLE BOLT VERSION.

(C) APPLY INHIBITOR (STOCK NUMBER 247200) AT EACH ALUMINUM CONNECTION FOR INSTALLATION INSTRUCTIONS OF ALUMINUM CONNECTORS REFER TO STANDARD 4106

(E) EXEMPT MATERIAL.

(F) FILE SHARP EDGES AFTER CRIMPING

4199.705 SUPERSEDES 4173 1 (3-9-83)	SDG&E ELECTRIC STANDARDS 0-600 VOLT CONNECTIONS FOR #8 THROUGH 350 KCMIL ALUMINUM CONDUCTORS	DATE 3-9-83 APPD

TABLE OF CONTENTS

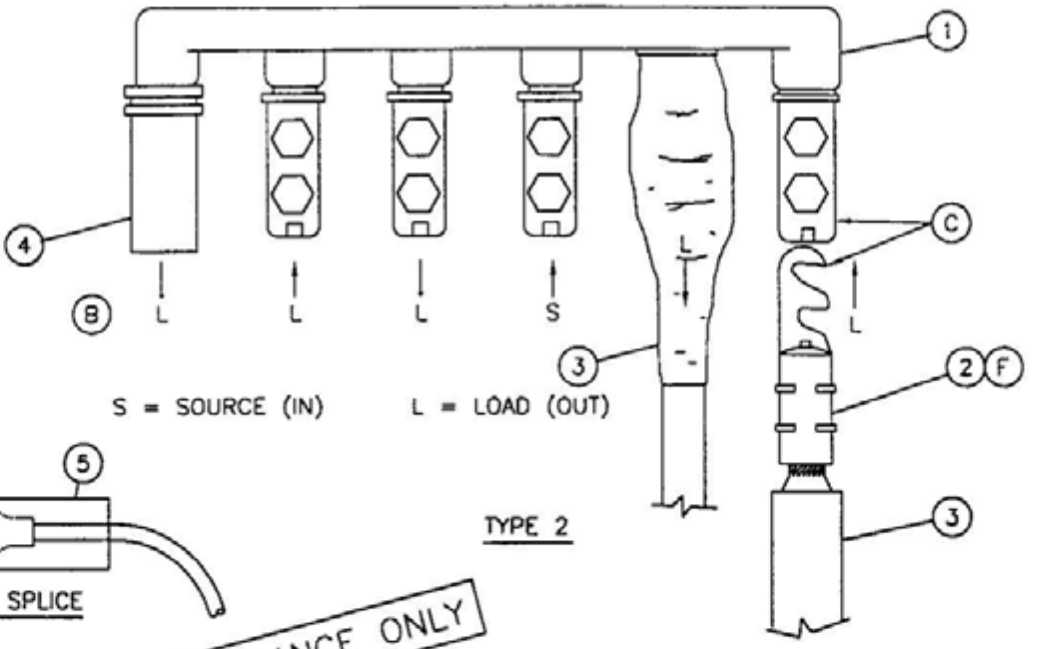

TYPE 2

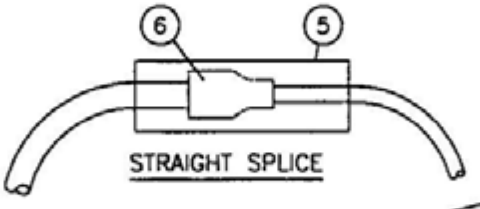

STRAIGHT SPLICE

FOR FIELD MAINTENANCE ONLY

BILL OF MATERIAL

ITEM	DESCRIPTION			STOCK NUMBER	ASSEMBLY UNITS
1	CONNECTORS, TYPE 2	2 TERMINALS		269978	2W>350
		3 TERMINALS		270040	3W>350
		6 TERMINALS		270224	6W>350
2	LUGS, ALUMINUM (F)(G)	DIE U317	350 KCMIL (SINGLE HOOK) 350 KCMIL (DOUBLE HOOK)	269972 269936	– LUG350
			500 KCMIL	269968	LUG500
3	SLEEVE, HEAT SHRINK, 2/0 THRU 500 KCMIL LUG, SLEEVE SIZE – 1 5 EXPANDED X 9"			778016	–
4	COVER, INSULATING TERMINAL (FOR UNUSED PORTION)			286950	–
5	SLEEVES, HEAT SHRINK	4-3/0 LUG, SIZE – 1 3 EXPANDED X 6"		777984	–
		350-500 KCMIL LUG, SIZE – 1 5 EXPANDED X 9"		778016	–
6	REDUCING SLEEVE OR INSULINKS	DIE W-BG	2-4	258528	–
			1/0-2	258656	–
		DIE W-K840	3/0-1/0	651872	–
7	INHIBITOR (USE AS REQUIRED)			247200	–

INSTALLATION:

A USE TORCH TO SHRINK SLEEVES (FLAME SPREADER RECOMMENDED) APPLY FLAME OVER SURFACE OF SLEEVE STARTING AT SHOULDER OF CONNECTOR DO NOT CONCENTRATE HEAT IN ONE AREA.

(B) INSTALL THE SOURCE CONDUCTOR IN A MIDDLE TERMINAL AND LOAD CABLES ON REMAINING TERMINALS. THE MAXIMUM AMPACITY OF THE CONNECTOR WILL BE 1000 AMPS FOR THIS TWO BOLT VERSION

(C) APPLY INHIBITOR AT EACH ALUMINUM CONNECTION FOR INSTALLATION INSTRUCTIONS OF ALUMINUM CONNECTORS, REFER TO STANDARD 4106

(D) FILE SHARP EDGES AFTER CRIMPING

(G) FOR CABLE SMALLER THAN 350 KCMIL, USE THE ONE HOLE LUGS SHOWN IN STANDARD 4171

TABLE OF CONTENTS

SDG&E ELECTRIC STANDARDS

DATE 1-1-92
APPD JLG/RDG

0-600 VOLT CONNECTORS
FOR #350 THROUGH 500 KCMIL ALUMINUM CONDUCTORS

4199.710
SUPERSEDES
4173 2 1-1-96

FIELD MAINTENANCE ONLY

REVISION HISTORY:

7/13/2016: All versions prior to 2016 are superseded by their current version found inside the Overhead Construction Standard Manual.

TABLE OF CONTENTS

© 1998 - 2016 San Diego Gas & Electric Company. All rights reserved. Removal of this copyright notice without permission is not permitted under law.

REV	CHANGE	BY	DSGN	APPV	DATE	REV	CHANGE	BY	DSGN	APPV	DATE
C						F					
B						E					
A	ORIGINAL ISSUE	JS	IL	MDJ	7/13/2016	D					

X Indicates Latest Revision | Completely Revised | New Page | Information Removed

SHEET 1 OF 1

SDG&E ELECTRIC UNDERGROUND STANDARD

CABLE HANGERS AND ACCESSORIES

FMO UG 4178

SCOPE: THIS STANDARD SHOWS CABLE HANGERS AND ACCESSORIES USED TO SUPPORT SECONDARY AND PRIMARY CABLES AND CONNECTORS IN SUBSTRUCTURES.

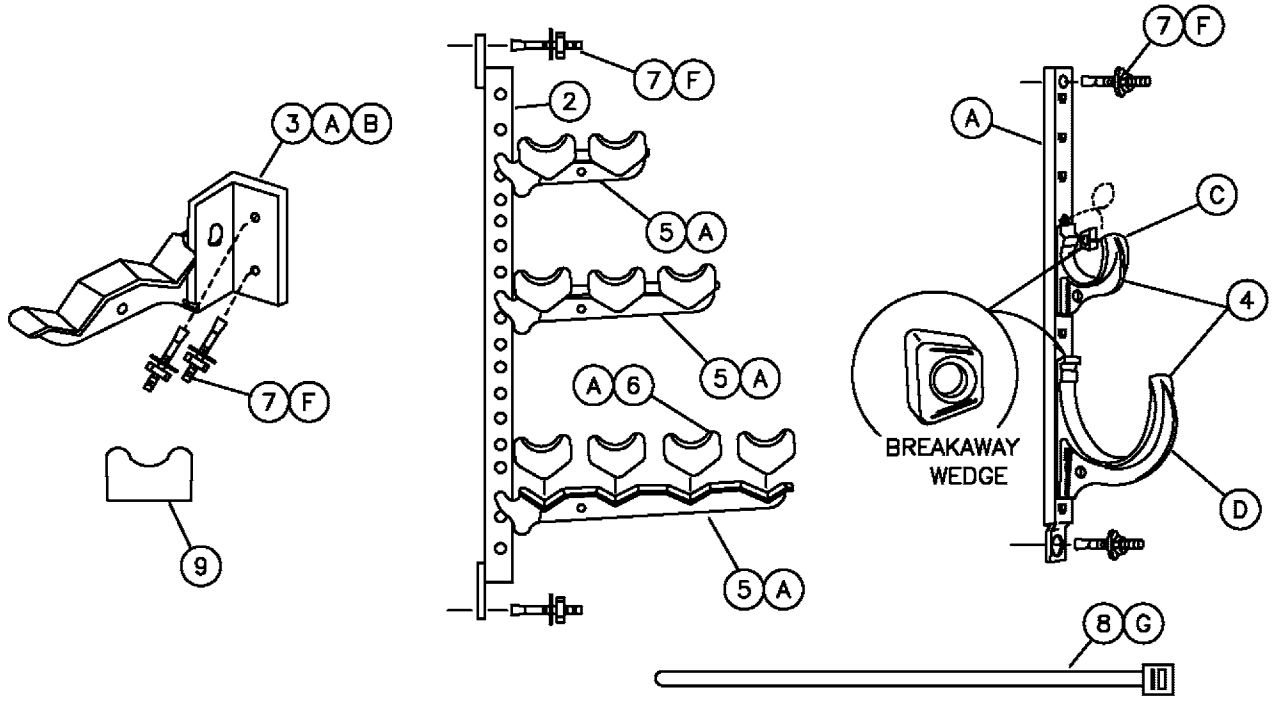

BILL OF MATERIAL:

ITEM	DESCRIPTION	LENGTH OR SIZE	NUMBER OF HOLES	EXTENSION FROM SUBSTRUCTURE WALL	NUMBER OF INSULATORS	STOCK NUMBER
1	HANGERS FOR CABLE HOOKS	15"	8	--	--	564512
		24"	14			564544
		30"	18			564576
2	HANGER FOR CABLE ARMS	34" – 36"	17 OR 20	--	--	564480
3	ADAPTOR FOR CABLE ARMS	5"	1	--	--	102016
4	CABLE HOOKS	2-1/2"	--	4"	--	415110
		5"		6"		415112
5	CABLE ARMS	--	--	10"	2	110496
				15"	3	110528
				18-1/2"	4	110560
6	CABLE INSULATOR	--	--	--	--	430592
7	ANCHOR, CONCRETE, 1/2" X 3-3/4" STAINLESS STEEL	--	--	--	--	107654
8	TIE STRAP	--	--	--	--	738440
9	CABLE INSULATORS FOR LIGHT DUTY ARMS (FIELD MAINTENANCE ONLY)	--	--	--	--	430624

© 1998 - 2005 San Diego Gas & Electric Company. All rights reserved. Removal of this copyright notice without permission is not permitted under law.

4199.914 SUPERCEDES 4178.2 (1-1-88)	SDG&E ELECTRIC STANDARDS CABLE HANGERS AND ACCESSORIES	DATE 1-1-88 APPD JLB/RDG

TABLE OF CONTENTS

INSTALLATION:

(A) USE FOR ALL SIZES OF PRIMARY OR SECONDARY CABLE.

(B) USE FOR SINGLE ARM, 2, 3, OR 4–WAY AND ALL SIZES OF PRIMARY OR SECONDARY CABLES.

(C) USE FOR 3–1/C, 2/0 PRIMARY CABLES MAXIMUM, OR 3–500 & 1–350 KCMIL SECONDARY MAXIMUM.

(D) USE FOR 3–1/C, 350, 750, OR 1000 KCMIL PRIMARY CABLES MAXIMUM OR 3–1000 & 1–500 KCMIL SECONDARY MAXIMUM.

(F) USE ANCHOR BOLT TO SECURE CABLE HANGER TO SUBSTRUCTURE.

(G) USE A TIE STRAP TO SECURE CABLE ONTO CABLE HOOK OR CABLE ARM. WHEN SECURING TIE STRAP AROUND CABLE, LEAVE APPROXIMATELY 1/4 INCH SLACK FOR CABLE EXPANSION.

REFERENCE:

H. SEE PAGE 3399.601 FOR LIGHT DUTY CABLE ARMS. (FIELD MAINTENANCE ONLY)

I. SEE PAGE 3647.2 FOR THE DISTANCE REQUIRED FROM THE WALL AND MAXIMUM CABLE SIZES.

TABLE OF CONTENTS

© 1998 - 2010 San Diego Gas & Electric Company. All rights reserved. Removal of this copyright notice without permission is not permitted under law.

DATE 1–1–88 APPD JLB/RDJ	SDG&E ELECTRIC STANDARDS CABLE HANGERS AND ACCESSORIES	4199.915 SUPERCEDES 4178.3 (1–1–88)

UG4181 FIELD MAINTENANCE ONLY

ALL VERSIONS LISTED IN FMO ARE SUPERSEDED BY THEIR CURRENT VERSION FOUND INSIDE THE UNDERGROUND CONSTRUCTION STANDARD MANUAL.

REVISION HISTORY:

12/09/2019: MOVED TO FMO

TABLE OF CONTENTS

© 1998 - 2019 San Diego Gas & Electric Company. All rights reserved. Removal of this copyright notice without permission is not permitted under law.

REV	CHANGE	DR	BY	DSN	APV	DATE	REV	CHANGE	DR	BY	DSN	APV	DATE
C													
B							E						
A	ORIGINAL ISSUE	EDM	EJA	GLW	CZH	12/09/2019	D						

Indicates Latest Revision | Completely Revised | X New Page | Information Removed

SHEET 1 OF 1

SDG&E ELECTRIC UNDERGROUND FIELD MAINTENANCE ONLY STANDARDS

12KV 200 & 600 AMP CONNECTOR ASSEMBLIES IDENTIFICATION CHART

FMO UG4181

SCOPE: THIS STANDARD SHOWS THE CONNECTIONS AND ASSEMBLY CODES USED FOR CALLING OUT 200 AND 600 AMP CONNECTOR ASSEMBLIES ON ELECTRIC CONSTRUCTION WORK ORDERS.

SUBSURFACE CONNECTOR APPLICATION CHART
3315 & 3316 HANDHOLE INSTALLATION ONLY

200 AMP LOADBREAK/DEADBREAK AND 600 AMP DEADBREAK

THIS CHART SHOWS HOW 200 AND 600 AMP CONNECTORS ARE ASSEMBLED.

ALWAYS USE THE MANUFACTURERS RECOMMENDED TORQUE SETTINGS WHEN ASSEMBLING CONNECTORS.

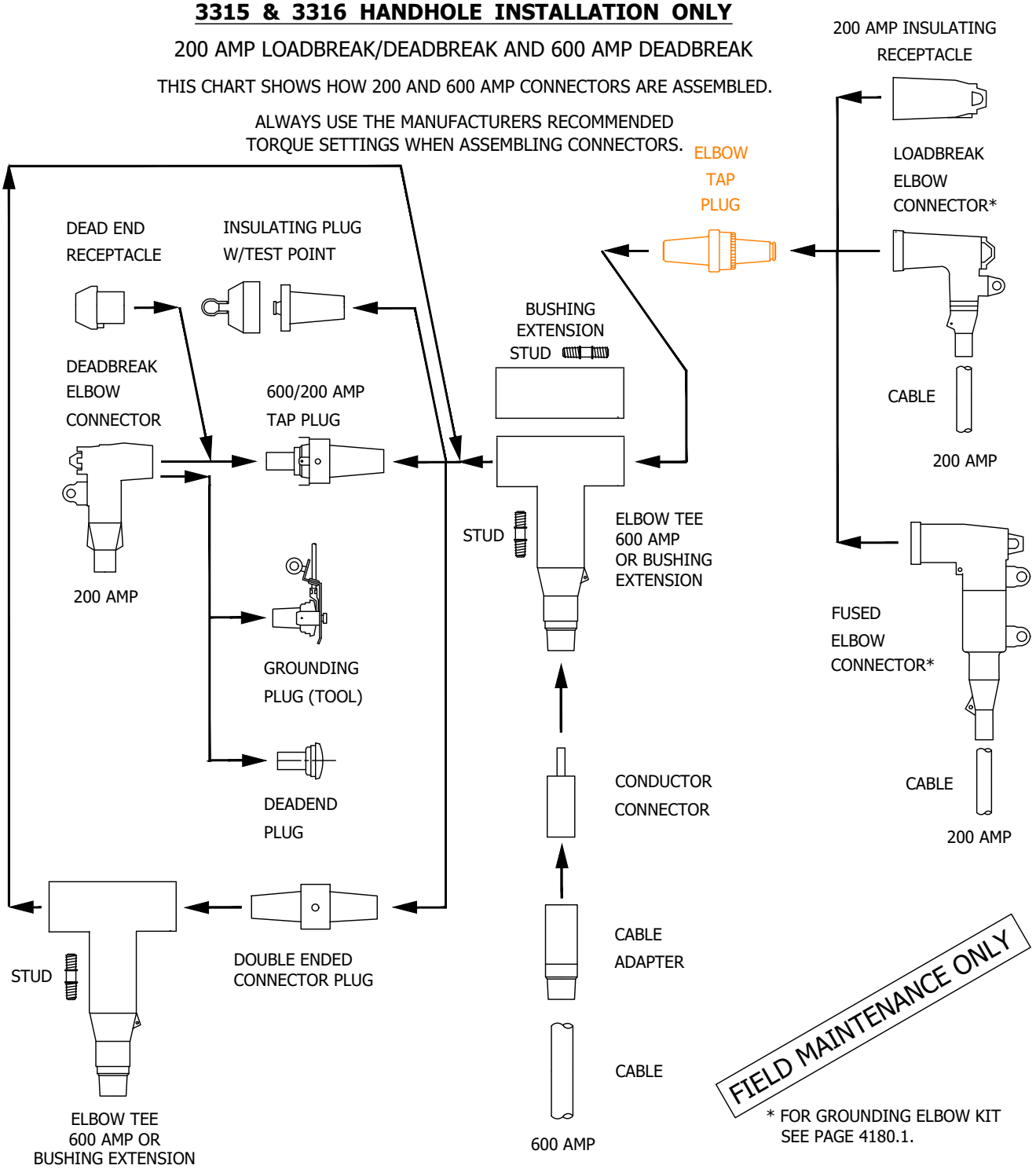

* FOR GROUNDING ELBOW KIT SEE PAGE 4180.1.

TABLE OF CONTENTS

© 1998 - 2019 San Diego Gas & Electric Company. All rights reserved. Removal of this copyright notice without permission is not permitted under law.

REV	CHANGE	DR	BY	DSN	APV	DATE	REV	CHANGE	DR	BY	DSN	APV	DATE
C	REVISION	-	-	-	TR/MJC	11/14/2011	F	MOVED TO FMO	EDM	EJA	GLW	CZH	12/09/2019
B	REVISION	-	-	-	TR/MJC	11/08/2011	E	REVISION	-	-	-	TR/MJC	10/30/2012
A	REVISION	-	-	-	TR/MJC	11/03/2011	D	REVISION	-	-	-	TR/MJC	07/24/2012

Indicates Latest Revision | Completely Revised | X New Page | Information Removed

3315 & 3316 HANDHOLE INSTALLATION ONLY

SUBSURFACE CONNECTIONS - 200 AMP LOADBREAK/DEADBREAK AND 600 AMP DEADBREAK

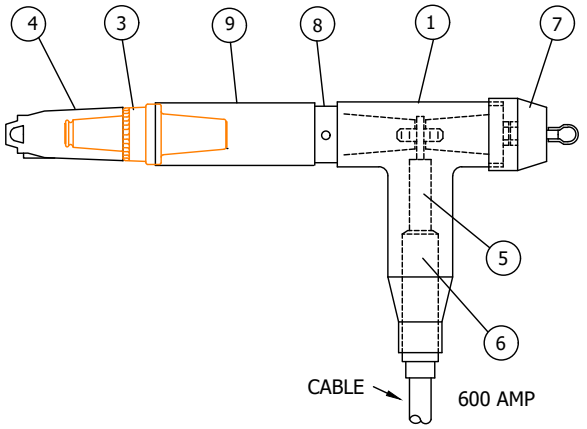

UG MAP SYMBOL

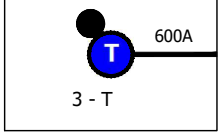

TYPICAL COMBINATIONS			
CODE CABLE SIZE	07 350 AL	08 750 AL	09 1000 AL
MACRO UNITS	CC--07	CC--08	CC--09

	EQUIPMENT	QTY.	STOCK NUMBER
1	ELBOW TEE	1	S326578
3	ELBOW TAP PLUG	1	S547328
4	200 AMP INSULATING RECEPTACLE	1	S204304
5	CONDUCTOR CONNECTOR	1	S258698 (350 AL) S258704 (750 AL) S258708 (750C AL) S258702 (1000 AL)
6	CABLE ADAPTER	1	S102027 (350 AL) S102034 (750 AL) S102051 (750C AL) SS102050 (1000 AL)
7	INSULATED PLUG W/ TEST POINT	1	S544848
8	DOUBLE ENDED CONNECTOR PLUG	1	S544832
9	BUSHING EXTENSION	1	S336204

TYPICAL COMBINATIONS						
CODE CABLE SIZE	L37 #2 AL-350 AL	L57 2/0 AL -350 AL	L38 #2 AL-750 AL	L58 2/0 AL-750 AL	L39 #2 AL-1000 AL	L59 2/0 AL-1000 AL
MACRO UNITS	CC-L37	CC-L57	CC-L38	CC-L58	CC-L39	CC-L59

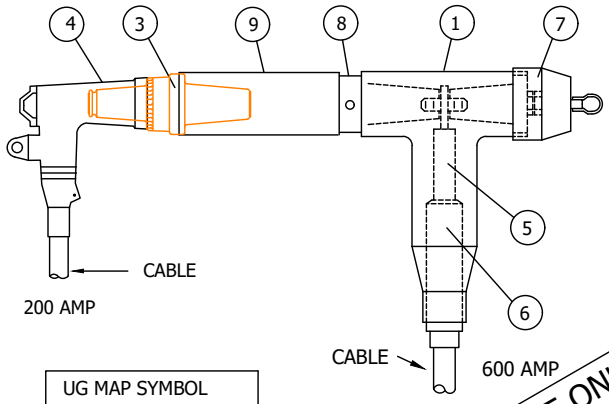

UG MAP SYMBOL

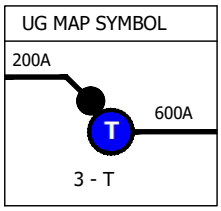

FIELD MAINTENANCE ONLY

	EQUIPMENT	QTY.	STOCK NUMBER
1	ELBOW TEE	1	S326578
3	ELBOW TAP PLUG	1	S547328
4	LOADBREAK ELBOW CONNECTOR	1	S443838 (#2 AL) S443840 (2/0 AL)
5	CONDUCTOR CONNECTOR	1	S258698 (350 AL) S258704 (750 AL) S258708 (750C AL) S258702 (1000 AL)
6	CABLE ADAPTER	1	S102027 (350 AL) S102034 (750 AL) S102051 (750C AL) S102050 (1000 AL)
7	INSULATED PLUG W/ TEST POINT	1	S544848
8	DOUBLE ENDED CONNECTOR PLUG	1	S544832
9	BUSHING EXTENSION	1	S336204

TABLE OF CONTENTS

© 1998 - 2019 San Diego Gas & Electric Company. All rights reserved. Removal of this copyright notice without permission is not permitted under law.

REV	CHANGE	DR	BY	DSN	APV	DATE	REV	CHANGE	DR	BY	DSN	APV	DATE
C	REVISION	-	-	-	TR/MJC	11/14/2011	F	MOVED TO FMO	EDM	EJA	GLW	CZH	12/09/2019
B	REVISION	-	-	-	TR/MJC	11/08/2011	E	REVISION	-	-	-	TR/MJC	10/30/2012
A	REVISION	-	-	-	TR/MJC	11/03/2011	D	REVISION	-	-	-	TR/MJC	07/24/2012

3315 & 3316 HANDHOLE INSTALLATION ONLY

SUBSURFACE CONNECTIONS - 200 AMP LOADBREAK/DEADBREAK AND 600 AMP DEADBREAK

TYPICAL COMBINATIONS

CODE CABLE SIZE	L37D5 #2 AL-350 AL- 2/0 AL	L57D5 2/0 AL-350 AL- 2/0 AL	L38D5 #2 AL-750 AL- 2/0 AL	L58D5 2/0 AL-750 AL- 2/0 AL	L39D5 #2 AL-1000 AL- 2/0 AL	L59D5 2/0 AL-1000 AL- 2/0 AL
MACRO UNITS	CL37D5	CL57D5	CL38D5	CL58D5	CL39D5	CL59D5

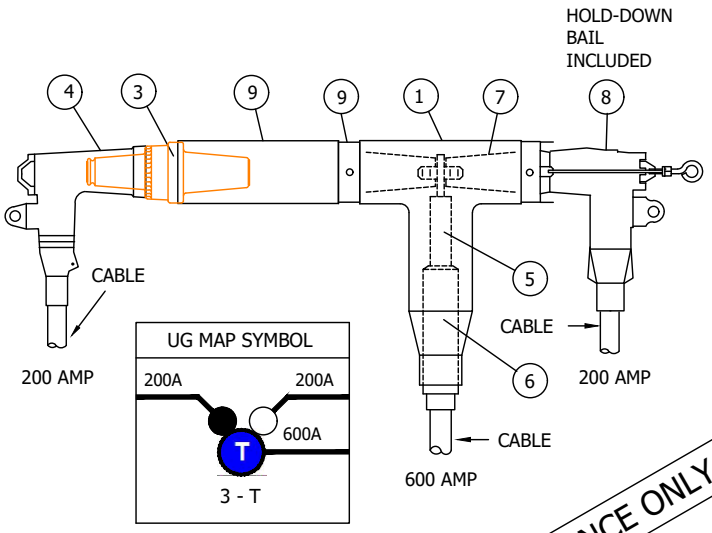

EQUIPMENT	QTY.	STOCK NUMBER
1 ELBOW TEE	1	S326578
3 ELBOW TAP PLUG	1	S547328
4 LOADBREAK ELBOW CONNECTOR	1	S443838 (#2 AL) S443840 (2/0 AL)
5 COMPRESSION CONNECTOR	1	S258698 (350 AL) S258704 (750 AL) S258708 (750C AL) S258702 (1000 AL)
6 CABLE ADAPTER	1	S102027 (350 AL) S102034 (750 AL) S102051 (750C AL) S102050 (1000 AL)
7 600/200 AMP TAP PLUG	1	S547324
8 DEADBREAK ELBOW CONNECTOR	1	S443842 (#2 AL) S443844 (2/0 AL)
9 DOUBLE ENDED CONNECTOR PLUG	1	S544832
10 BUSHING EXTENSION	1	S336204

ADDITIONAL MACRO UNITS		
C-07D5	C-08D5	C-09D5

FIELD MAINTENANCE ONLY

TYPICAL COMBINATIONS

CODE CABLE SIZE	B7 #2 AL-350 AL	C7 2/0 AL -350 AL	B8 #2 AL-750 AL	C8 2/0 AL-750 AL	B9 #2 AL-1000 AL	C9 2/0 AL-1000 AL
MACRO UNITS	CC--B7	CC--C7	CC--B8	CC--C8	CC--B9	CC--C9

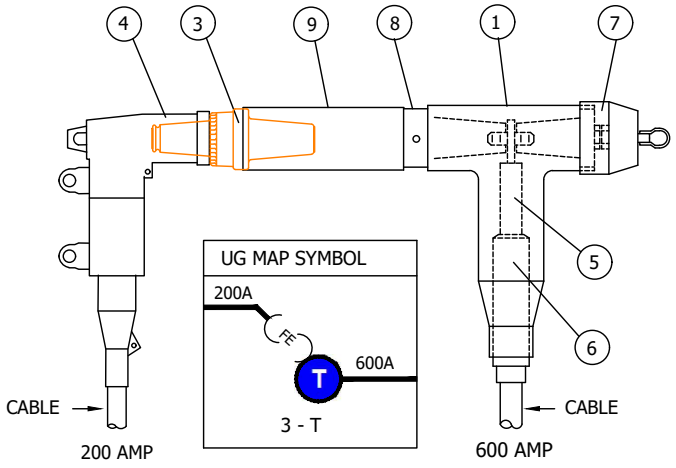

EQUIPMENT	QTY.	STOCK NUMBER
1 ELBOW TEE	1	S326578
	1	
3 ELBOW TAP PLUG	1	S547328
4 FUSED ELBOW CONNECTOR	1	S443850 (#2 AL) S443882 (2/0 AL)
5 COMPRESSION CONNECTOR	1	S258698 (350 AL) S258704 (750 AL) S258708 (750C AL) S258702 (1000 AL)
6 CABLE ADAPTER	1	S102027 (350 AL) S102034 (750 AL) S102051 (750C AL) S102050 (1000 AL)
7 INSULATED PLUG W/ TEST POINT	1	S544848
8 DOUBLE ENDED CONNECTOR PLUG	1	S544832
9 BUSHING EXTENSION	1	S336204

TABLE OF CONTENTS

© 1998 - 2019 San Diego Gas & Electric Company. All rights reserved. Removal of this copyright notice without permission is not permitted under law.

REV	CHANGE	DR	BY	DSN	APV	DATE	REV	CHANGE	DR	BY	DSN	APV	DATE
C	REVISION	-	-	-	TR/MJC	11/14/2011	F	MOVED TO FMO	EDM	EJA	GLW	CZH	12/09/2019
B	REVISION	-	-	-	TR/MJC	11/08/2011	E	REVISION	-	-	-	TR/MJC	10/30/2012
A	REVISION	-	-	-	TR/MJC	11/03/2011	D	REVISION	-	-	-	TR/MJC	07/24/2012

3315 & 3316 HANDHOLE INSTALLATION ONLY

SUBSURFACE CONNECTIONS - 200 AMP LOADBREAK/DEADBREAK AND 600 AMP DEADBREAK

TYPICAL COMBINATIONS

CODE CABLE SIZE	B7D5 #2 AL-350 AL-2/0 AL	C7D5 2/0 AL-350 AL-2/0 AL	B8D5 #2 AL-750 AL-2/0 AL	C8D5 2/0 AL-750 AL-2/0 AL	B9D5 #2 AL-1000 AL-2/0 AL	C9D5 2/0 AL-1000 AL-2/0 AL
MACRO UNITS	C-B7D5	C-C7D5	C-B8D5	C-C8D5	C-B9D5	C-C9D5

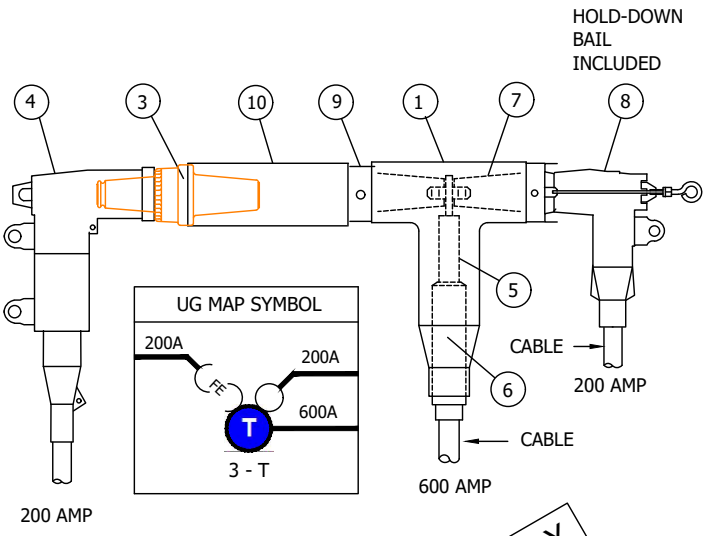

	EQUIPMENT	QTY.	STOCK NUMBER
1	ELBOW TEE	1	S326578
3	ELBOW TAP PLUG	1	S547328
4	FUSED ELBOW CONNECTOR	1	S443850 (#2 AL) S443882 (2/0 AL)
5	COMPRESSION CONNECTOR	1	S258698 (350 AL) S258704 (750 AL) S258708 (750C AL) S258702 (1000 AL)
6	CABLE ADAPTER	1	S102027 (350 AL) S102034 (750 AL) S102051 (750C AL) S102050 (1000 AL)
7	600/200 AMP TAP PLUG	1	S547324
8	DEADBREAK ELBOW CONNECTOR	1	S443842 (#2 AL) S443844 (2/0 AL)
9	DOUBLE ENDED CONNECTOR PLUG	1	S544832
10	BUSHING EXTENSION	1	S336204

FIELD MAINTENANCE ONLY

TYPICAL COMBINATIONS

CODE CABLE SIZE	077 350 AL, 350 AL	088 750 AL, 750 AL	099 1000 AL, 1000 AL
MACRO UNITS	CC-077	CC-088	CC-099

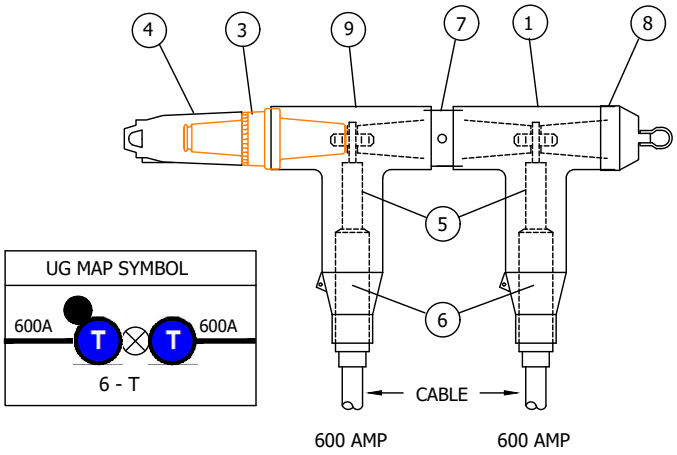

	EQUIPMENT	QTY.	STOCK NUMBER
1	ELBOW TEE	2	S326578
3	ELBOW TAP PLUG	1	S547328
4	200 AMP INSULATING RECEPTACLE	1	S204304
5	COMPRESSION CONNECTOR	2	S258698 (350 AL) S258704 (750 AL) S258708 (750C AL) S258702 (1000 AL)
6	CABLE ADAPTER	2	S102027 (350 AL) S102034 (750 AL) S102051 (750C AL) S102050 (1000 AL)
7	DOUBLE ENDED CONNECTOR PLUG	1	S544832
8	INSULATED PLUG W/ TEST POINT	1	S544848

TABLE OF CONTENTS

© 1998 - 2019 San Diego Gas & Electric Company. All rights reserved. Removal of this copyright notice without permission is not permitted under law.

REV	CHANGE	DR	BY	DSN	APV	DATE	REV	CHANGE	DR	BY	DSN	APV	DATE
C	REVISION	-	-	-	TR/MJC	11/14/2011	F	MOVED TO FMO	EDM	EJA	GLW	CZH	12/09/2019
B	REVISION	-	-	-	TR/MJC	11/08/2011	E	REVISION	-	-	-	TR/MJC	10/30/2012
A	REVISION	-	-	-	TR/MJC	11/03/2011	D	REVISION	-	-	-	TR/MJC	07/24/2012

X Indicates Latest Revision | Completely Revised | New Page | Information Removed

3315 & 3316 HANDHOLE INSTALLATION ONLY

SUBSURFACE CONNECTIONS - 200 AMP LOADBREAK/DEADBREAK AND 600 AMP DEADBREAK

TYPICAL COMBINATIONS

CODE CABLE SIZE	L377 #2 AL-350 AL-350 AL	L577 2/0 AL-350 AL 350 AL	L388 #2 AL-750 AL 750 AL	L588 2/0 AL-750 AL-750 AL	L399 #2 AL-1000 AL-1000 AL	L599 2/0 AL-1000 AL-1000 AL
MACRO UNITS	C-L377	C-L577	C-L588	C-L588	C-L399	C-L599

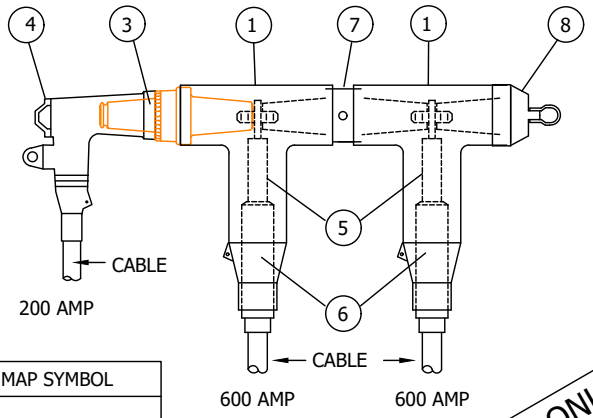

UG MAP SYMBOL
200A
600A T T 600A
6 - T

	EQUIPMENT	QTY.	STOCK NUMBER
1	ELBOW TEE	2	326578
3	ELBOW TAP PLUG	1	S547328
4	LOADBREAK ELBOW CONNECTOR	1	443838 (#2 AL) 443840 (2/0 AL)
5	COMPRESSION CONNECTOR	2	258698 (350 AL) 258704 (750 AL) 258708 (750C AL) 258702 (1000 AL)
6	CABLE ADAPTER	2	102027 (350 AL) 102034 (750 AL) 102051 (750C AL) 102050 (1000 AL)
7	DOUBLE ENDED CONNECTOR PLUG	1	544832
8	INSULATED PLUG W/ TEST POINT	1	544848

FIELD MAINTENANCE ONLY

TYPICAL COMBINATIONS

CODE CABLE SIZE	L377D5 #2 AL-350 AL-350 AL-2/0 AL	L577D5 2/0 AL-350 AL 350 AL-2/0 AL	L388D5 #2 AL-750 AL 750 AL-2/0 AL	L588D5 2/0 AL-750 AL-750 AL-2/0 AL	L399D5 #2 AL-1000 AL-1000 AL-2/0 AL	L599D5 2/0 AL-1000 AL-1000 AL-2/0 AL
MACRO UNITS	L377D3 L377D5	L577D3 L577D5	L388D3 L388D5	L588D5	L399D5	L599D5

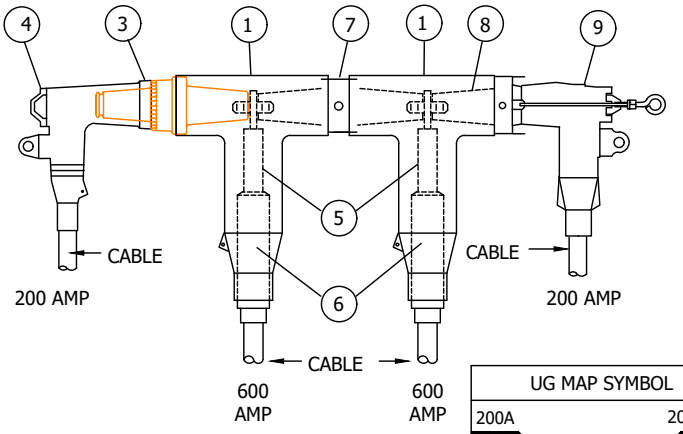

UG MAP SYMBOL	
200A	200A
600A T	T 600A
6 - T	

	EQUIPMENT	QTY.	STOCK NUMBER
1	ELBOW TEE	2	326578
3	ELBOW TAP PLUG	1	S547328
4	LOADBREAK ELBOW CONNECTOR	1	443838 (#2 AL) 443840 (2/0 AL)
5	COMPRESSION CONNECTOR	2	258698 (350 AL) 258704 (750 AL) 258708 (750C AL) 258702 (1000 AL)
6	CABLE ADAPTER	2	102027 (350 AL) 102034 (750 AL) 102051 (750C AL) 102050 (1000 AL)
7	DOUBLE ENDED CONNECTOR PLUG	1	544832
8	600/200 AMP TAP PLUG	1	547324
9	DEADBREAK ELBOW CONNECTOR	1	443842 (#2 AL) 443844 (2/0 AL)

ADDITIONAL MACRO UNIT COMBINATIONS		
CO77D5 CO77D3	CO88D5 CO88D3	C099D5 C099D3

TABLE OF CONTENTS

© 1998 - 2019 San Diego Gas & Electric Company. All rights reserved. Removal of this copyright notice without permission is not permitted under law.

REV	CHANGE	DR	BY	DSN	APV	DATE	REV	CHANGE	DR	BY	DSN	APV	DATE
C	REVISION	-	-	-	TR/MJC	11/14/2011	F	MOVED TO FMO	EDM	EJA	GLW	CZH	12/09/2019
B	REVISION	-	-	-	TR/MJC	11/08/2011	E	REVISION	-	-	-	TR/MJC	10/30/2012
A	REVISION	-	-	-	TR/MJC	11/03/2011	D	REVISION	-	-	-	TR/MJC	07/24/2012

3315 & 3316 HANDHOLE INSTALLATION ONLY

SUBSURFACE CONNECTIONS - 200 AMP LOADBREAK/DEADBREAK AND 600 AMP DEADBREAK

TYPICAL COMBINATIONS

CODE CABLE SIZE	B77 #2 AL-350 AL-350 AL	C77 2/0 AL-350 AL 350 AL	B88 #2 AL-750 AL 750 AL	C88 2/0 AL-750 AL-750 AL	B99 #2 AL-1000 AL-1000 AL	C99 2/0 AL-1000 AL-1000 AL
MACRO UNITS	CC-B77	CC-C77	CC-B88	CC-C88	CC-B99	CC-C99

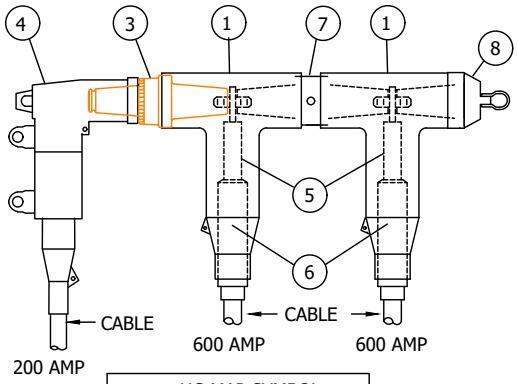

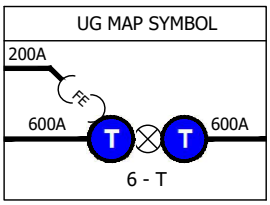

	EQUIPMENT	QTY.	STOCK NUMBER
1	ELBOW TEE	2	326578
3	ELBOW TAP PLUG	1	S547328
4	FUSED ELBOW CONNECTOR	1	443850 (#2 AL) 443882 (2/0 AL)
5	COMPRESSION CONNECTOR	2	258698 (350 AL) 258704 (750 AL) 258708 (750C AL) 258702 (1000 AL)
6	CABLE ADAPTER	2	102027 (350 AL) 102034 (750 AL) 102051 (750C AL) 102050 (1000 AL)
7	DOUBLE ENDED CONNECTOR PLUG	1	544832
8	INSULATED PLUG W/ TEST POINT	1	544848

TYPICAL COMBINATIONS

CODE CABLE SIZE	B77D5 #2 AL-350 AL-350 AL-2/0 AL	C77D5 2/0 AL-350 AL 350 AL-2/0 AL	B88D5 #2 AL-750 AL 750 AL-2/0 AL	C88D5 2/0 AL-750 AL-750 AL-2/0 AL	B99D5 #2 AL-1000 AL-1000 AL-2/0 AL	C99D5 2/0 AL-1000 AL-1000 AL-2/0 AL
MACRO UNITS	CB77D5	CC77D5	CB88D5	CC88D5	CB99D5	CC99D5

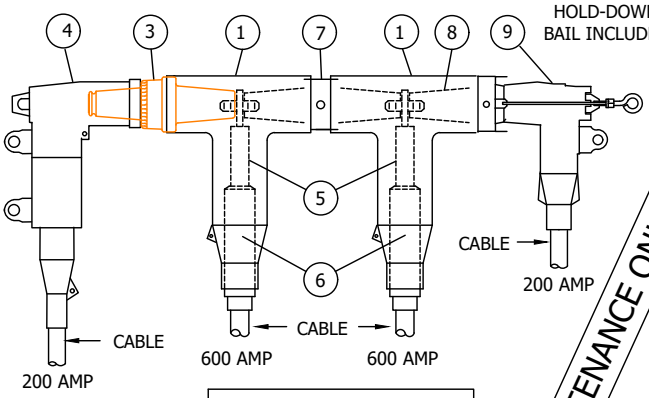

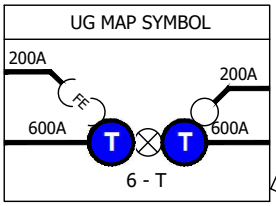

FIELD MAINTENANCE ONLY

	EQUIPMENT	QTY.	STOCK NUMBER
1	ELBOW TEE	2	326578
3	ELBOW TAP PLUG	1	S547328
4	FUSED ELBOW CONNECTOR	1	443850 (#2 AL) 443882 (2/0 AL)
5	COMPRESSION CONNECTOR	2	258698 (350 AL) 258704 (750 AL) 258708 (750C AL) 258702 (1000 AL)
6	CABLE ADAPTER	2	102027 (350 AL) 102034 (750 AL) 102051 (750C AL) 102050 (1000 AL)
7	DOUBLE ENDED CONNECTOR PLUG	1	544832
8	600/200 AMP TAP PLUG	1	547324
9	DEADBREAK ELBOW CONNECTOR	1	443842 (#2 AL) 443844 (2/0 AL)

TABLE OF CONTENTS

© 1998 - 2019 San Diego Gas & Electric Company. All rights reserved. Removal of this copyright notice without permission is not permitted under law.

REV	CHANGE	DR	BY	DSN	APV	DATE	REV	CHANGE	DR	BY	DSN	APV	DATE
C	REVISION	-	-	-	TR/MJC	11/14/2011	F	MOVED TO FMO	EDM	EJA	GLW	CZH	12/09/2019
B	REVISION	-	-	-	TR/MJC	11/08/2011	E	REVISION	-	-	-	TR/MJC	10/30/2012
A	REVISION	-	-	-	TR/MJC	11/03/2011	D	REVISION	-	-	-	TR/MJC	07/24/2012

3315 & 3316 HANDHOLE INSTALLATION ONLY

SUBSURFACE CONNECTIONS - 200 AMP LOADBREAK/DEADBREAK AND 600 AMP DEADBREAK

TYPICAL COMBINATIONS

CODE CABLE SIZE	0777 350 AL-350 AL-350 AL	0888 750 AL-750 AL 750 AL	0999 1000 AL-1000 AL-1000 AL
MACRO UNITS	C-0777	C-0888	C-0999

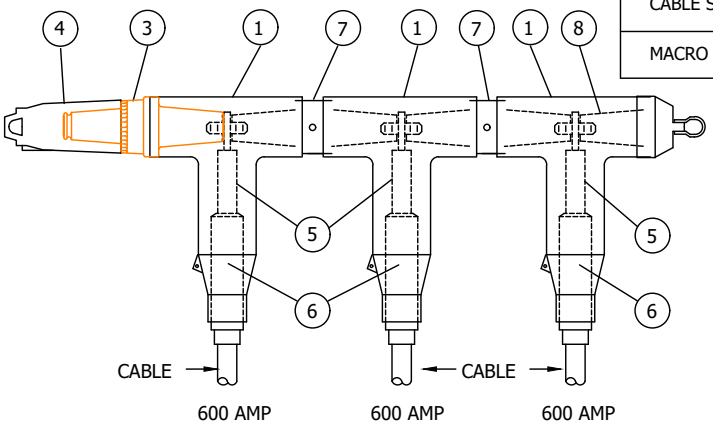

EQUIPMENT	QTY.	STOCK NUMBER
(1) ELBOW TEE	3	S326578
(3) ELBOW TAP PLUG	1	S547328
(4) 200 AMP INSULATING RECEPTACLE	1	S204304
(5) COMPRESSION CONNECTOR	3	S258698 (350 AL) S258704 (750 AL) S258708 (750C AL) S258702 (1000 AL)
(6) CABLE ADAPTER	3	S102027 (350 AL) S102034 (750 AL) S102051 (750C AL) S102050 (1000 AL)
(7) DOUBLE ENDED CONNECTOR PLUG	2	S544832
(8) INSULATED PLUG W/ TEST POINT	1	S544848

UG MAP SYMBOL

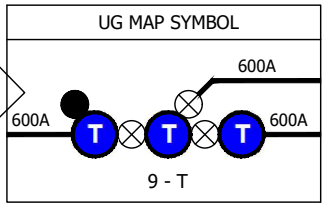

FIELD MAINTENANCE ONLY

TYPICAL COMBINATIONS

CODE CABLE SIZE	L3777 #2 AL-350 AL-350 AL-350 AL	L5777 2/0 AL-350 AL-350 AL-350 AL	L3888 #2 AL-750 AL-750 AL-750 AL	L5888 2/0 AL-750 AL-750 AL-750 AL	L3999 #2 AL-1000 AL-1000 AL-1000 AL	L5999 2/0 AL-1000 AL-1000 AL-1000 AL
MACRO UNITS	CL3777	CL5777	CL3888	CL5888	CL3999	CL5999

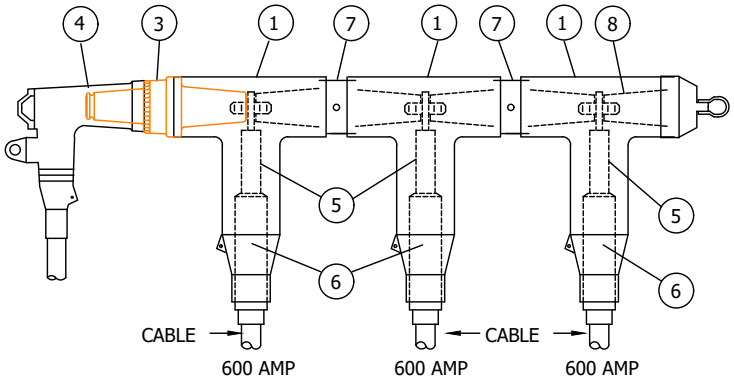

EQUIPMENT	QTY.	STOCK NUMBER
(1) ELBOW TEE	3	S326578
(3) ELBOW TAP PLUG	1	S547328
(4) LOADBREAK ELBOW CONNECTOR	1	S443838 (#2 AL) S443840 (2/0 AL)
(5) COMPRESSION CONNECTOR	3	S258698 (350 AL) S258704 (750 AL) S258708 (750C AL) S258702 (1000 AL)
(6) CABLE ADAPTER	3	S102027 (350 AL) S102034 (750 AL) S102051 (750C AL) S102050 (1000 AL)
(7) DOUBLE ENDED CONNECTOR PLUG	2	S544832
(8) INSULATED PLUG W/ TEST POINT	1	S544848

ADDITIONAL MACRO UNIT
CL5889

UG MAP SYMBOL

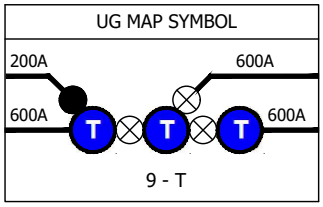

TABLE OF CONTENTS

© 1998 - 2019 San Diego Gas & Electric Company. All rights reserved. Removal of this copyright notice without permission is not permitted under law.

REV	CHANGE	DR	BY	DSN	APV	DATE	REV	CHANGE	DR	BY	DSN	APV	DATE
C	REVISION	-	-	-	TR/MJC	11/14/2011	F	MOVED TO FMO	EDM	EJA	GLW	CZH	12/09/2019
B	REVISION	-	-	-	TR/MJC	11/08/2011	E	REVISION	-	-	-	TR/MJC	10/30/2012
A	REVISION	-	-	-	TR/MJC	11/03/2011	D	REVISION	-	-	-	TR/MJC	07/24/2012

NOTES:

- THREE TEE COMBINATIONS SHOWN IN THIS STANDARD SHALL ONLY BE USED TO FEED A SWITCHED TIE POSITION.

- FOR SPECIFICATIONS AND INSTALLATION INSTRUCTIONS SEE STANDARDS 4182, 4191 AND 4196.

- BELOW ARE KEYS TO THE CODES USED IN THE TABLES ON PAGES 4181.1 - .7.

CABLES

7 = 350 AL
8 = 750 AL
9 = 1000 AL

COMPONENTS

D3 = DEADBREAK ELBOW #2 AL
D5 = DEADBREAK ELBOW 2/0 AL

L3 = LOADBREAK ELBOW #2 AL
L5 = LOADBREAK ELBOW 2/0 AL

B = #2 AL FUSED ELBOW
C = 2/0 AL FUSED ELBOW
O = 200 AMP INSULATING RECEPTACLE

TABLE OF CONTENTS

FIELD MAINTENANCE ONLY

© 1998 - 2019 San Diego Gas & Electric Company. All rights reserved. Removal of this copyright notice without permission is not permitted under law.

REV	CHANGE	DR	BY	DSN	APV	DATE	REV	CHANGE	DR	BY	DSN	APV	DATE
C	REVISION	-	-	-	TR/MJC	11/14/2011	F	MOVED TO FMO	EDM	EJA	GLW	CZH	12/09/2019
B	REVISION	-	-	-	TR/MJC	11/08/2011	E	REVISION	-	-	-	TR/MJC	10/30/2012
A	REVISION	-	-	-	TR/MJC	11/03/2011	D	REVISION	-	-	-	TR/MJC	07/24/2012

MANHOLE INSTALLATION ONLY

SUBSURFACE CONNECTOR APPLICATION CHART

200 AND 600 AMP DEADBREAK

ALWAYS USE THE MANUFACTURERS RECOMMENDED
TORQUE SETTINGS WHEN ASSEMBLING CONNECTORS.

THIS CHART SHOWS HOW 200 AND 600 AMP CONNECTORS ARE ASSEMBLED.

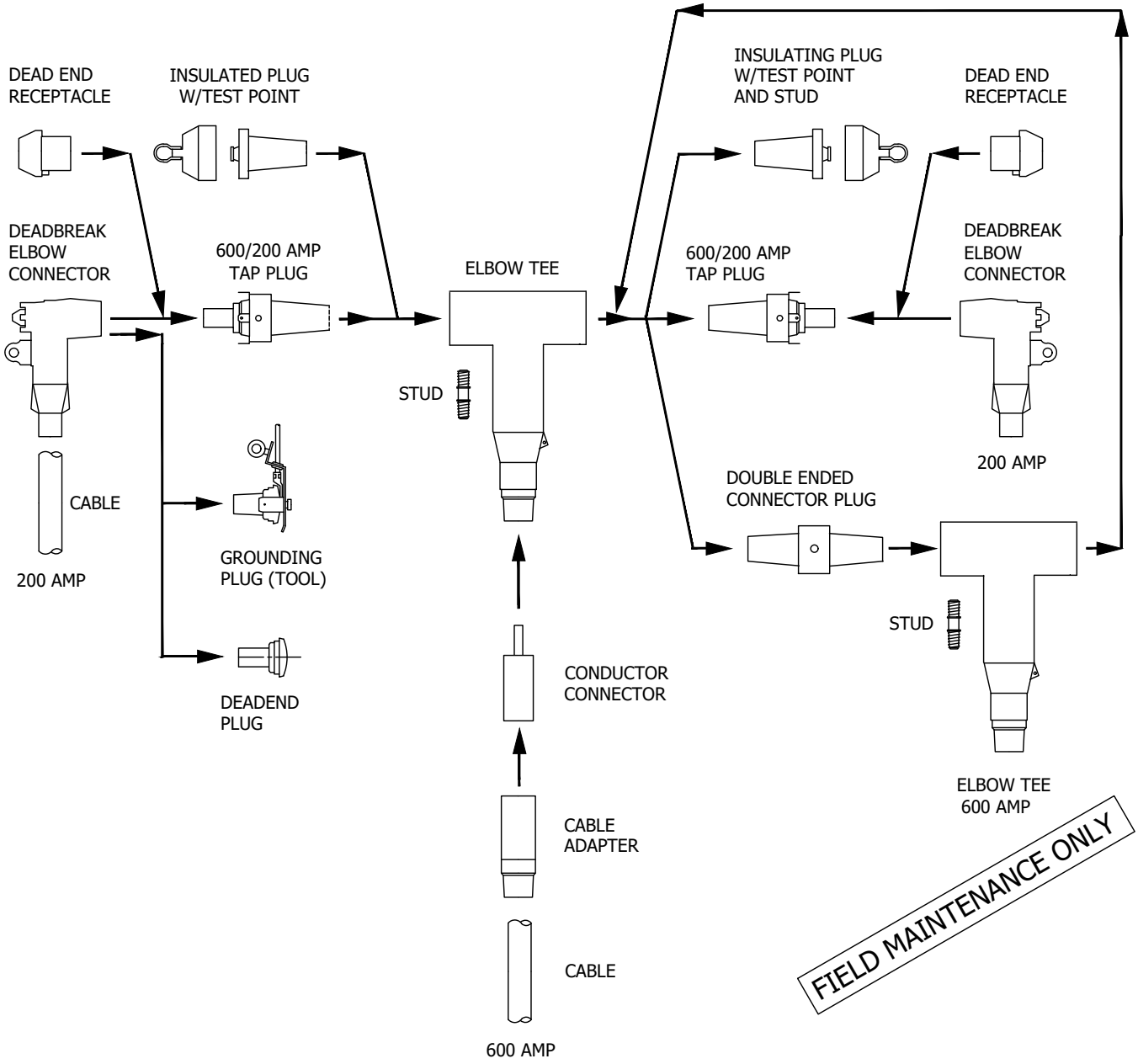

TABLE OF CONTENTS

© 1998 - 2019 San Diego Gas & Electric Company. All rights reserved. Removal of this copyright notice without permission is not permitted under law.

REV	CHANGE	DR	BY	DSN	APV	DATE	REV	CHANGE	DR	BY	DSN	APV	DATE
C	REVISION	-	-	-	TR/MJC	11/14/2011	F	MOVED TO FMO	EDM	EJA	GLW	CZH	12/09/2019
B	REVISION	-	-	-	TR/MJC	11/08/2011	E	REVISION	-	-	-	TR/MJC	10/30/2012
A	REVISION	-	-	-	TR/MJC	11/03/2011	D	REVISION	-	-	-	TR/MJC	07/24/2012

MANHOLE INSTALLATION ONLY

SUBSURFACE CONNECTIONS -- 200 AMP AND 600 AMP DEADBREAK

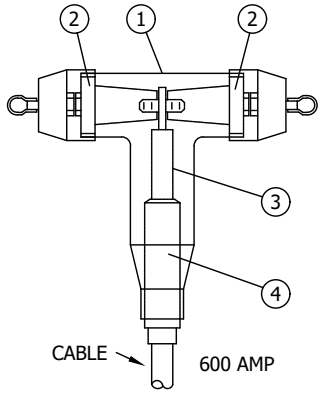

TYPICAL COMBINATIONS			
CODE CABLE SIZE	7 350 AL	8 750 AL	9 1000 AL
MACRO UNITS	CC---7	CC---8	CC---9

	EQUIPMENT	QTY.	STOCK NUMBER
1	ELBOW TEE	1	326578
2	INSULATED PLUG W/ TEST POINT	2	544848
3	CONDUCTOR CONNECTOR	1	258698 (350 AL) 258704 (750 AL) 258708 (750C AL) 258702 (1000 AL)
4	CABLE ADAPTER	1	102027 (350 AL) 102034 (750 AL) 102051 (750C AL) 102050 (1000 AL)

UG MAP SYMBOL

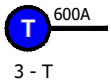

3 - T

TYPICAL COMBINATIONS						
CODE CABLE SIZE	73 350 AL-#2 AL	75 350 AL-2/0 AL	83 750 AL-#2 AL	85 750 AL-2/0 AL	93 1000 AL-#2 AL	95 1000 AL-2/0 AL
MACRO UNITS	CC--73	CC--75	CC--83	CC--85	CC--93	CC--95

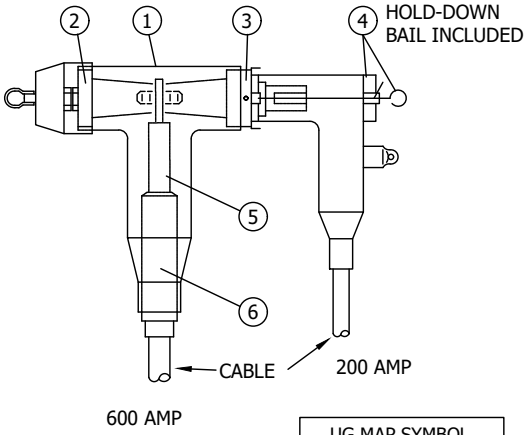

	EQUIPMENT	QTY.	STOCK NUMBER
1	ELBOW TEE	1	326578
2	INSULATED PLUG W/ TEST POINT	1	544848
3	600/200 AMP TAP PLUG	1	547324
4	DEADBREAK ELBOW CONNECTOR	1	443842 (#2 AL) 443844 (2/0 AL)
5	CONDUCTOR CONNECTOR	1	258698 (350 AL) 258704 (750 AL) 258708 (750C AL) 258702 (1000 AL)
6	CABLE ADAPTER	1	102027 (350 AL) 102034 (750 AL) 102051 (750C AL) 102050 (1000 AL)

UG MAP SYMBOL

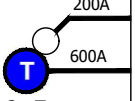

3 - T

FIELD MAINTENANCE ONLY

TABLE OF CONTENTS

© 1998 - 2019 San Diego Gas & Electric Company. All rights reserved. Removal of this copyright notice without permission is not permitted under law.

REV	CHANGE	DR	BY	DSN	APV	DATE	REV	CHANGE	DR	BY	DSN	APV	DATE
C	REVISION	-	-	-	TR/MJC	11/14/2011	F	MOVED TO FMO	EDM	EJA	GLW	CZH	12/09/2019
B	REVISION	-	-	-	TR/MJC	11/08/2011	E	REVISION	-	-	-	TR/MJC	10/30/2012
A	REVISION	-	-	-	TR/MJC	11/03/2011	D	REVISION	-	-	-	TR/MJC	07/24/2012

X Indicates Latest Revision | Completely Revised | New Page | Information Removed

MANHOLE INSTALLATION ONLY

SUBSURFACE CONNECTIONS -- 200 AMP AND 600 AMP DEADBREAK

TYPICAL COMBINATIONS

CODE CABLE SIZE	375 #2 AL-350AL- 2/0 AL	575 2/0 AL-350AL- 2/0 AL	583 2/0 AL-750AL- #2 AL	585 2/0 AL-750AL- 2/0 AL	593 2/0 AL-1000AL- #2 AL	595 2/0 AL-1000AL 2/0 AL
MACRO UNITS	CC-375	CC-575	CC-583	CC-585	CC-593	CC-595

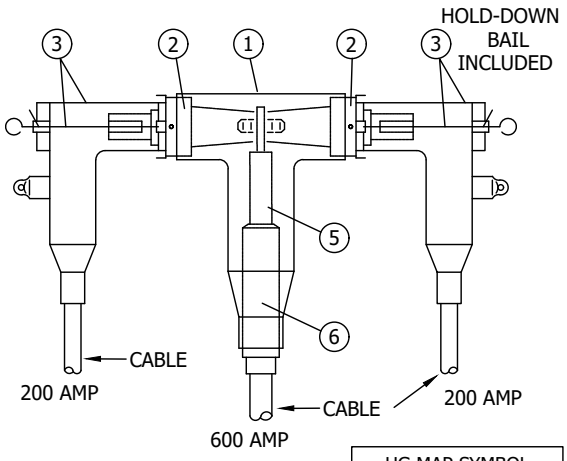

EQUIPMENT	QTY.	STOCK NUMBER
(1) ELBOW TEE	1	326578
(2) 600/200 AMP TAP PLUG	2	547324
(3) DEADBREAK ELBOW CONNECTOR	2	443842 (#2 AL) 443844 (2/0 AL)
(4) CONDUCTOR CONNECTOR	1	258698 (350 AL) 258704 (750 AL) 258708 (750C AL) 258702 (1000 AL)
(5) CABLE ADAPTER	1	102027 (350 AL) 102034 (750 AL) 102051 (750C AL) 102050 (1000 AL)

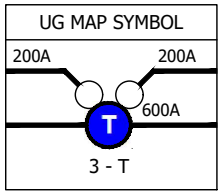

FIELD MAINTENANCE ONLY

TYPICAL COMBINATIONS

CODE CABLE SIZE	77 350AL-350 AL	87 750AL-350 AL	88 750AL-750 AL	97 1000AL-350AL	98 1000AL-750 AL	99 1000AL-1000 AL
MACRO UNITS	CC--77	CC--87	CC--88	CC--97	CC--98	CC--99

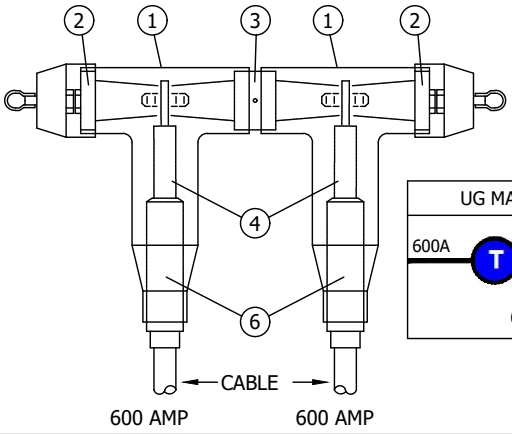

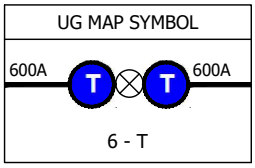

EQUIPMENT	QTY.	STOCK NUMBER
(1) ELBOW TEE	2	326578
(2) INSULATED PLUG W/ TEST POINT	2	544848
(3) DOUBLE ENDED CONNECTOR PLUG	1	544832
(4) CONDUCTOR CONNECTOR	2	258698 (350 AL) 258704 (750 AL) 258708 (750C AL) 258702 (1000 AL)
(5) CABLE ADAPTER	2	102027 (350 AL) 102051 (750C AL) 102050 (1000 AL)

© 1998 - 2019 San Diego Gas & Electric Company. All rights reserved. Removal of this copyright notice without permission is not permitted under law.

REV	CHANGE	DR	BY	DSN	APV	DATE	REV	CHANGE	DR	BY	DSN	APV	DATE
C	REVISION	-	-	-	TR/MJC	11/14/2011	F	MOVED TO FMO	EDM	EJA	GLW	CZH	12/09/2019
B	REVISION	-	-	-	TR/MJC	11/08/2011	E	REVISION	-	-	-	TR/MJC	10/30/2012
A	REVISION	-	-	-	TR/MJC	11/03/2011	D	REVISION	-	-	-	TR/MJC	07/24/2012

X Indicates Latest Revision | Completely Revised | New Page | Information Removed

TABLE OF CONTENTS

MANHOLE INSTALLATION ONLY

SUBSURFACE CONNECTIONS -- 200 AMP AND 600 AMP DEADBREAK

TYPICAL COMBINATIONS

CODE CABLE SIZE	773 350AL-350AL-#2 AL	775 350AL-350AL-2/0 AL	883 750AL-750AL-#2 AL	885 750AL-750AL-2/0 AL	993 1000AL-1000AL-#2 AL	995 1000AL-1000AL 2/0 AL
MACRO UNITS	CC-773	CC-775	CC-883	CC-885	CC-993	CC-995

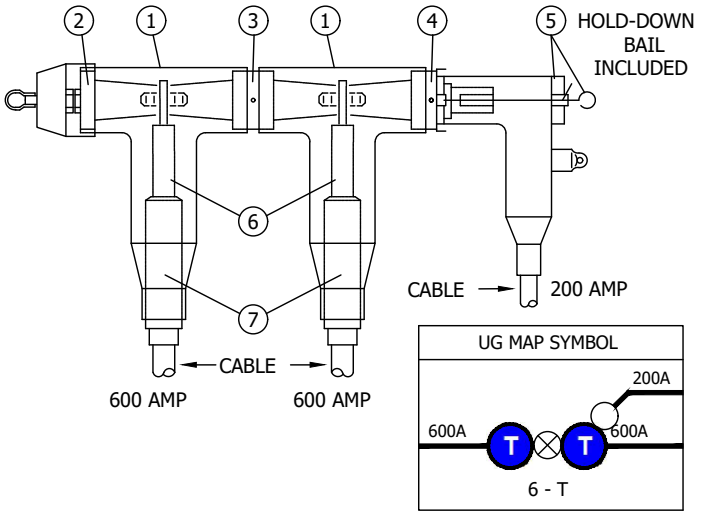

	EQUIPMENT	QTY.	STOCK NUMBER
1	ELBOW TEE	2	326578
2	INSULATED PLUG W/ TEST POINT	1	544848
3	DOUBLE ENDED CONNECTOR PLUG	1	544832
4	600/200 AMP TAP PLUG	1	547324
5	DEADBREAK ELBOW CONNECTOR	1	443842 (#2 AL) 443844 (2/0 AL)
6	CONDUCTOR CONNECTOR	2	258698 (350 AL) 258704 (750 AL) 258708 (750C AL) 258702 (1000 AL)
7	CABLE ADAPTER	2	102027 (350 AL) 102034 (750 AL) 102051 (750C AL) 102050 (1000 AL)

TYPICAL COMBINATIONS

CODE CABLE SIZE	5773 2/0AL-350AL-350AL-#2 AL	5775 2/0AL-350AL-350AL-2/0 AL	5883 2/0AL-750AL-750AL-#2 AL	5885 2/0AL-750AL-750AL-2/0 AL	5993 2/0AL-1000AL-1000AL-#2 AL	5995 2/0AL-1000AL-1000AL-2/0 AL
MACRO UNITS	CC5773	CC5775	CC5883	CC5885	CC5993	CC5995

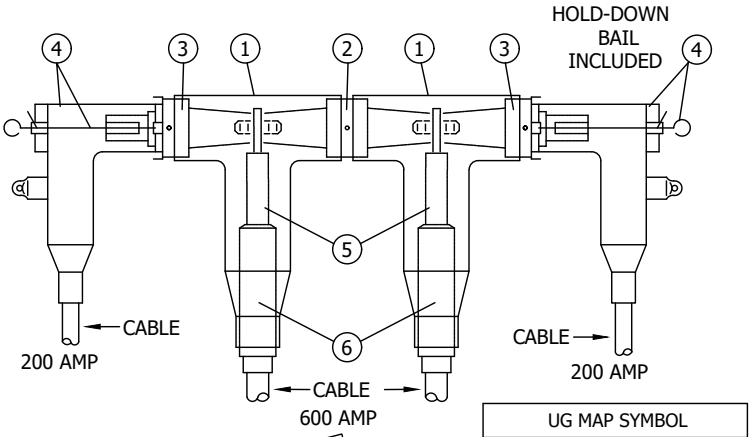

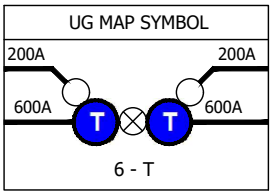

	EQUIPMENT	QTY.	STOCK NUMBER
1	ELBOW TEE	2	326578
2	DOUBLE ENDED CONNECTOR PLUG	1	544832
3	600/200 AMP TAP PLUG	2	547324
4	DEADBREAK ELBOW CONNECTOR	2	443842 (#2 AL) 443844 (2/0 AL)
5	CONDUCTOR CONNECTOR	2	258698 (350 AL) 258704 (750 AL) 258708 (750C AL) 258702 (1000 AL)
6	CABLE ADAPTER	2	102027 (350 AL) 102034 (750 AL) 102051 (750C AL) 102050 (1000 AL)

FIELD MAINTENANCE ONLY

TABLE OF CONTENTS

© 1998 - 2019 San Diego Gas & Electric Company. All rights reserved. Removal of this copyright notice without permission is not permitted under law.

REV	CHANGE	DR	BY	DSN	APV	DATE	REV	CHANGE	DR	BY	DSN	APV	DATE
C	REVISION	-	-	-	TR/MJC	11/14/2011	F	MOVED TO FMO	EDM	EJA	GLW	CZH	12/09/2019
B	REVISION	-	-	-	TR/MJC	11/08/2011	E	REVISION	-	-	-	TR/MJC	10/30/2012
A	REVISION	-	-	-	TR/MJC	11/03/2011	D	REVISION	-	-	-	TR/MJC	07/24/2012

MANHOLE INSTALLATION ONLY

SUBSURFACE CONNECTIONS - 200 AMP LOADBREAK/DEADBREAK AND 600 AMP DEADBREAK

TYPICAL COMBINATIONS

CODE CABLE SIZE	777 350AL-350AL-350AL	888 750AL-750AL-750AL	889 750AL-750AL-1000AL	999 1000AL-1000AL-1000AL
MACRO UNITS	CC-777	CC-888	CC-889	CC-999

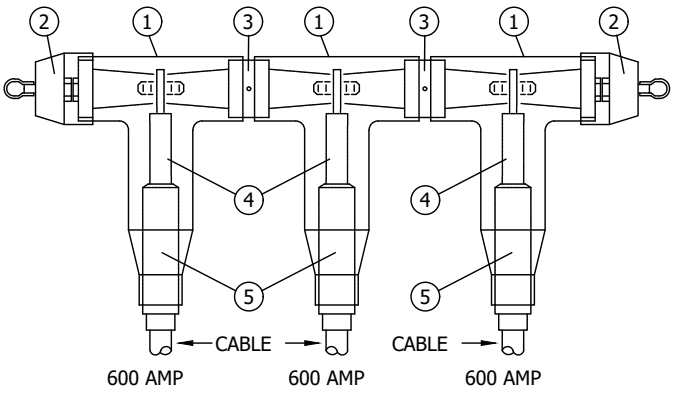

	EQUIPMENT	QTY.	STOCK NUMBER
1	ELBOW TEE	3	326578
2	INSULATED PLUG W/ TEST POINT	2	544848
3	DOUBLE ENDED CONNECTOR PLUG	2	544832
4	COMPRESSION CONNECTOR	3	258698 (350 AL) 258704 (750 AL) 258708 (750C AL) 258702 (1000 AL)
5	CABLE ADAPTER	3	102027 (350 AL) 102034 (750 AL) 102051 (750C AL) 102050 (1000 AL)

UG MAP SYMBOL

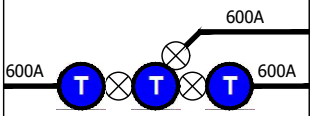

TYPICAL COMBINATIONS

CODE CABLE SIZE	7773 350AL-350AL- 350 AL-#2 AL	7775 350AL-350AL- 350 AL-2/0 AL	8883 750AL-750AL- 750 AL-#2 AL	8885 750AL-750AL- 750 AL-2/0 AL	9993 1000AL-1000AL- 1000 AL-#2 AL	9995 1000AL-1000AL- 1000 AL-2/0 AL
MACRO UNITS	CC7773	CC7775	CC8883	CC8885	CC9993	CC9995

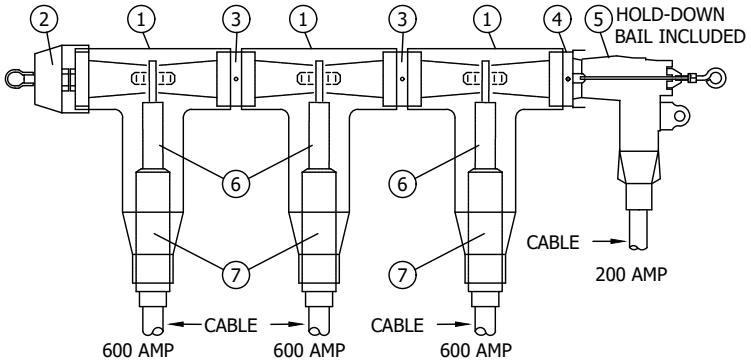

	EQUIPMENT	QTY.	STOCK NUMBER
1	ELBOW TEE	3	326578
2	INSULATED PLUG W/ TEST POINT	1	544848
3	DOUBLE ENDED CONNECTOR PLUG	2	544832
4	600/200 AMP TAP PLUG	1	547324
5	DEADBREAK ELBOW CONNECTOR	1	443842 (#2 AL) 443844 (2/0 AL)
6	COMPRESSION CONNECTOR	3	258698 (350 AL) 258704 (750 AL) 258708 (750C AL) 258702 (1000 AL)
7	CABLE ADAPTER	3	102027 (350 AL) 102034 (750 AL) 102051 (750C AL) 102050 (1000 AL)

UG MAP SYMBOL

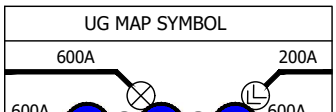

FIELD MAINTENANCE ONLY

TABLE OF CONTENTS

© 1998 - 2019 San Diego Gas & Electric Company. All rights reserved. Removal of this copyright notice without permission is not permitted under law.

REV	CHANGE	DR	BY	DSN	APV	DATE	REV	CHANGE	DR	BY	DSN	APV	DATE
C	REVISION	-	-	-	TR/MJC	11/14/2011	F	MOVED TO FMO	EDM	EJA	GLW	CZH	12/09/2019
B	REVISION	-	-	-	TR/MJC	11/08/2011	E	REVISION	-	-	-	TR/MJC	10/30/2012
A	REVISION	-	-	-	TR/MJC	11/03/2011	D	REVISION	-	-	-	TR/MJC	07/24/2012

MANHOLE INSTALLATION ONLY

NOTES:

- THREE TEE COMBINATIONS SHOWN IN THIS STANDARD SHALL ONLY BE USED TO FEED A SWITCHED TIE POSITION.

- FOR SPECIFICATIONS AND INSTALLATION INSTRUCTIONS SEE STANDARDS 4182 AND 4196.

- BELOW ARE THE KEYS TO THE CODES USED IN THE TABLES ON PAGES 4181.9 -.13

CABLES

3 = #2 AL	6 = 4/0 CU	8 = 750 AL
5 = 2/0 AL	7 = 350 AL	9 = 1000 AL

- OTHER COMBINATIONS MAY BE CODED USING THE ABOVE CODES FOR THE SAME TYPE CONNECTIONS SHOWN.

TABLE OF CONTENTS

FIELD MAINTENANCE ONLY

© 1998 - 2019 San Diego Gas & Electric Company. All rights reserved. Removal of this copyright notice without permission is not permitted under law.

REV	CHANGE	DR	BY	DSN	APV	DATE	REV	CHANGE	DR	BY	DSN	APV	DATE
C	REVISION	-	-	-	TR/MJC	11/14/2011	F	MOVED TO FMO	EDM	EJA	GLW	CZH	12/09/2019
B	REVISION	-	-	-	TR/MJC	11/08/2011	E	REVISION	-	-	-	TR/MJC	10/30/2012
A	REVISION	-	-	-	TR/MJC	11/03/2011	D	REVISION	-	-	-	TR/MJC	07/24/2012

SUBSURFACE/SURFACE OPERATE SWITCH CONNECTOR APPLICATION CHART
200 AND 600 AMP DEADBREAK

ALWAYS USE THE MANUFACTURERS RECOMMENDED
TORQUE SETTINGS WHEN ASSEMBLING CONNECTORS.

THIS CHART SHOWS HOW 200 AND 600 AMP CONNECTORS ARE ASSEMBLED.

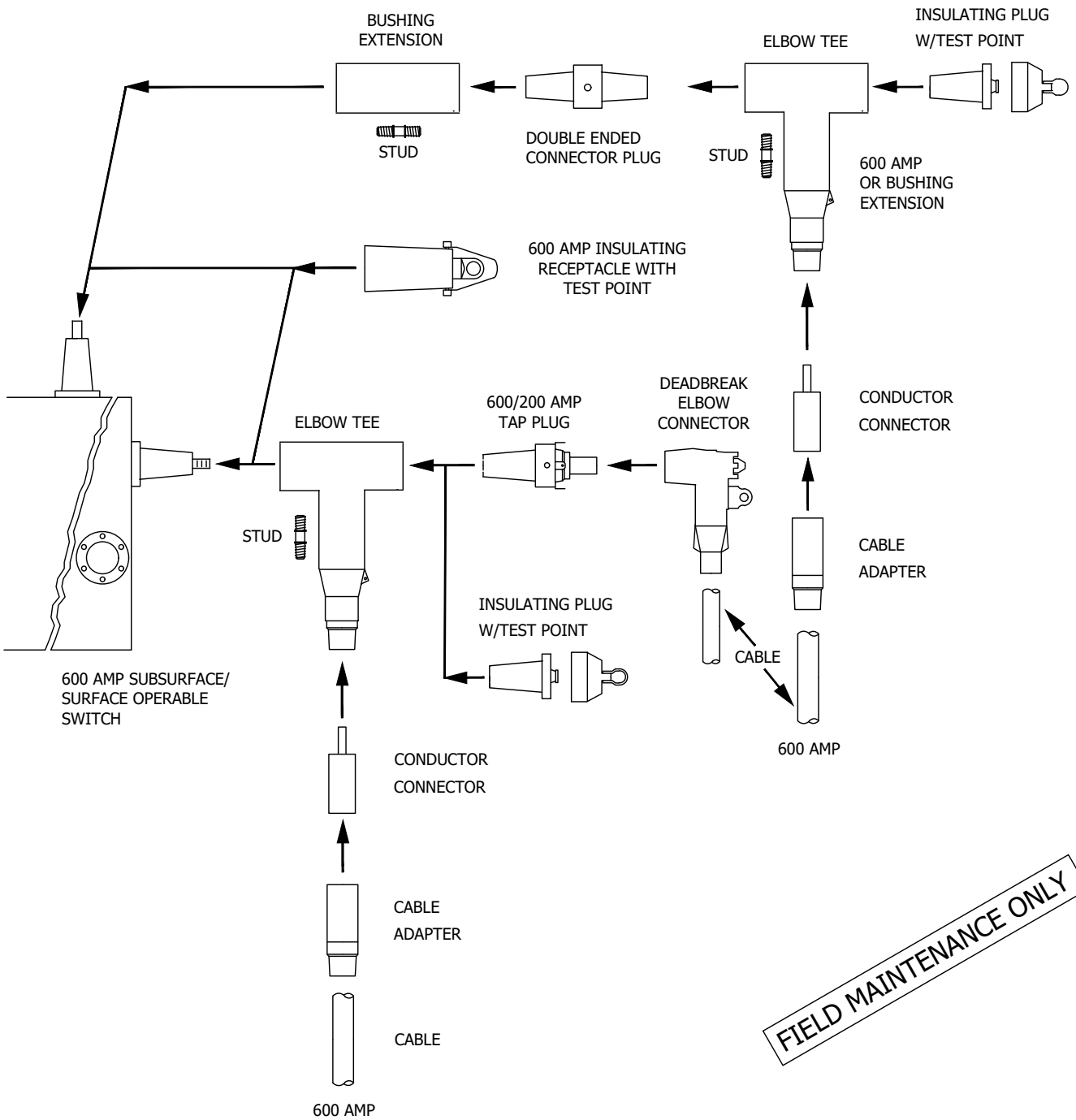

FIELD MAINTENANCE ONLY

TABLE OF CONTENTS

© 1998 - 2019 San Diego Gas & Electric Company. All rights reserved. Removal of this copyright notice without permission is not permitted under law.

REV	CHANGE	DR	BY	DSN	APV	DATE	REV	CHANGE	DR	BY	DSN	APV	DATE
C	REVISION	-	-	-	TR/MJC	11/14/2011	F	MOVED TO FMO	EDM	EJA	GLW	CZH	12/09/2019
B	REVISION	-	-	-	TR/MJC	11/08/2011	E	REVISION	-	-	-	TR/MJC	10/30/2012
A	REVISION	-	-	-	TR/MJC	11/03/2011	D	REVISION	-	-	-	TR/MJC	07/24/2012

SUBSURFACE/SURFACE OPERABLE SWITCH CONNECTIONS -- 200 AMP AND 600 AMP DEADBREAK

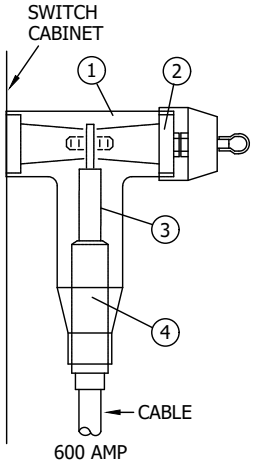

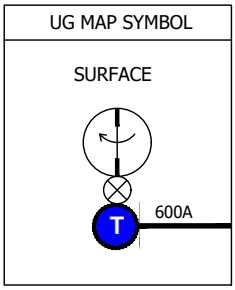

TYPICAL COMBINATIONS			
CODE CABLE SIZE	T7 350AL	T8 750 AL	T9 1000 AL
MACRO UNITS	CC--T7	CC--T8	CC--T9

EQUIPMENT	QTY.	STOCK NUMBER
(1) ELBOW TEE	1	326578
(2) INSULATED PLUG W/ TEST POINT	1	544848
(3) CONDUCTOR CONNECTOR	1	258698 (350 AL) 258704 (750 AL) 258708 (750C AL) 258702 (1000 AL)
(4) CABLE ADAPTER	1	102027 (350 AL) 102034 (750 AL) 102051 (750C AL) 102050 (1000 AL)

TYPICAL COMBINATIONS						
CODE CABLE SIZE	T73 350 AL-#2 AL	T75 350 AL-2/0 AL	T83 750 AL-#2AL	T85 750 AL-2/0 AL	T93 1000 AL-#2 AL	T95 1000 AL-2/0 AL
MACRO UNITS	CC-T73	CC-T75	CC-T83	CC-T85	CC-T93	CC-T95

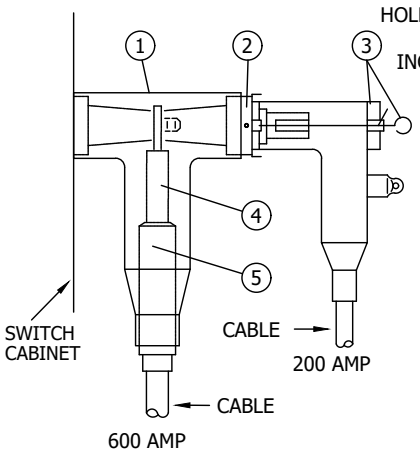

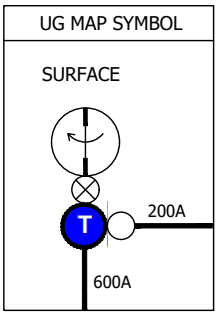

EQUIPMENT	QTY.	STOCK NUMBER
(1) ELBOW TEE	1	326578
(2) 600/200 AMP TAP PLUG	1	547324
(3) DEADBREAK ELBOW CONNECTOR	1	443842 (#2 AL) 443844 (2/0 AL)
(4) CONDUCTOR CONNECTOR	1	258698 (350 AL) 258704 (750 AL) 258708 (750C AL) 258702 (1000 AL)
(5) CABLE ADAPTER	1	102027 (350 AL) 102034 (750 AL) 102051 (750C AL) 102050 (1000 AL)

FIELD MAINTENANCE ONLY

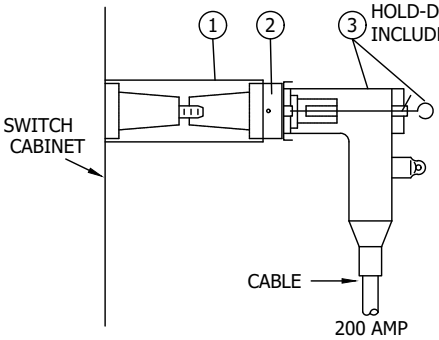

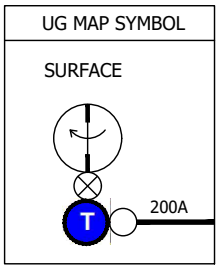

TYPICAL COMBINATIONS		
CODE CABLE SIZE	F3 #2 AL	F5 2/0 AL
MACRO UNITS	CC--F3	CC--F5

EQUIPMENT	QTY.	STOCK NUMBER
(1) BUSHING EXTENSION	1	336204
(2) 600/200 AMP TAP PLUG	1	547324
(3) DEADBREAK ELBOW CONNECTOR	1	443842 (#2 AL) 443844 (2/0 AL)

© 1998 - 2019 San Diego Gas & Electric Company. All rights reserved. Removal of this copyright notice without permission is not permitted under law.

REV	CHANGE	DR	BY	DSN	APV	DATE	REV	CHANGE	DR	BY	DSN	APV	DATE
C	REVISION	-	-	-	TR/MJC	11/14/2011	F	MOVED TO FMO	EDM	EJA	GLW	CZH	12/09/2019
B	REVISION	-	-	-	TR/MJC	11/08/2011	E	REVISION	-	-	-	TR/MJC	10/30/2012
A	REVISION	-	-	-	TR/MJC	11/03/2011	D	REVISION	-	-	-	TR/MJC	07/24/2012

X Indicates Latest Revision | Completely Revised | New Page | Information Removed

SUBSURFACE/SURFACE OPERABLE SWITCH CONNECTIONS -- 200 AMP AND 600 AMP DEADBREAK

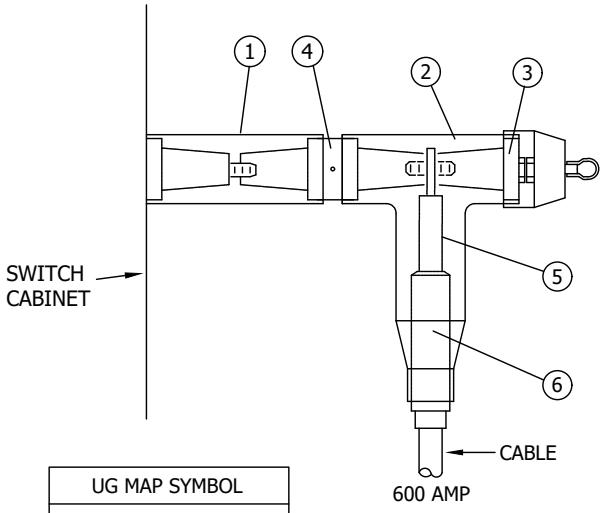

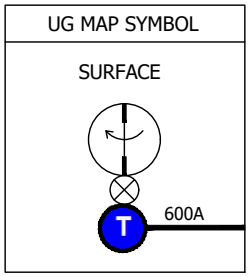

TYPICAL COMBINATIONS			
CODE CABLE SIZE	F7 350 AL	F8 750 AL	F9 1000 AL
MACRO UNITS	CC--F7	CC--F8	CC--F9

EQUIPMENT	QTY.	STOCK NUMBER
(1) BUSHING EXTENSION	1	336204
(2) ELBOW TEE	1	326578
(3) INSULATING PLUG W/ TEST POINT	1	544848
(4) DOUBLE ENDED CONNECTOR PLUG	1	544832
(5) CONDUCTOR CONNECTOR	1	258698 (350 AL) 258704 (750 AL) 258708 (750C AL) 258702 (1000 AL)
(6) CABLE ADAPTOR	1	102027 (350 AL) 102034 (750 AL) 102051 (750C AL) 102050 (1000 AL)

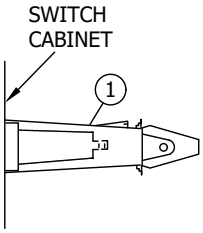

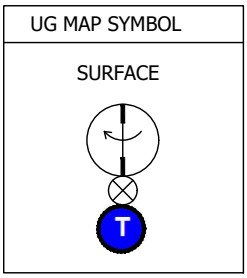

TYPICAL COMBINATIONS	
CODE	H
MACRO UNIT	CC---H

EQUIPMENT	QTY.	STOCK NUMBER
(1) 600 AMP INSULATING RECEPTACLE	1	570608

NOTES:

- DO NOT "PIGGYBACK" 600 AMP TEES ON TOP OF EACH OTHER AT ANY TIME ON THE SWITCH BUSHING.
- FOR SPECIFICATIONS AND INSTALLATION INSTRUCTIONS, REFER TO STANDARDS 4182 AND 4196.
- BELOW ARE THE KEYS TO THE CODES USED IN THE TABLES ON PAGE 4181.15 - .17.

CABLE

3 = #2 AL
5 = 2/0 AL
7 = 350 AL
8 = 750 AL
9 = 1000 AL

COMPONENTS

F = 600 AMP SUBSURFACE/SURFACE OPERABLE SWITCH BUSHING EXTENSION
H = 600 AMP SUBSURFACE/SURFACE OPERABLE SWITCH INSULATING RECEPTACLE
T = 600 AMP SUBSURFACE/SURFACE OPERABLE SWITCH TEE

FIELD MAINTENANCE ONLY

- OTHER COMBINATIONS MAY BE CODED USING THE ABOVE CODES FOR THE SAME TYPE CONNECTIONS SHOWN.

© 1998 - 2019 San Diego Gas & Electric Company. All rights reserved. Removal of this copyright notice without permission is not permitted under law.

REV	CHANGE	DR	BY	DSN	APV	DATE	REV	CHANGE	DR	BY	DSN	APV	DATE
C	REVISION	-	-	-	TR/MJC	11/14/2011	F	MOVED TO FMO	EDM	EJA	GLW	CZH	12/09/2019
B	REVISION	-	-	-	TR/MJC	11/08/2011	E	REVISION	-	-	-	TR/MJC	10/30/2012
A	REVISION	-	-	-	TR/MJC	11/03/2011	D	REVISION	-	-	-	TR/MJC	07/24/2012

PAD-MOUNTED 200/600 AMP EQUIPMENT
CONNECTOR APPLICATION CHART
200 AND LOADBREAK AND 600 AMP DEADBREAK

THIS CHART SHOWS HOW 200 AND 600 AMP CONNECTORS ARE ASSEMBLED.

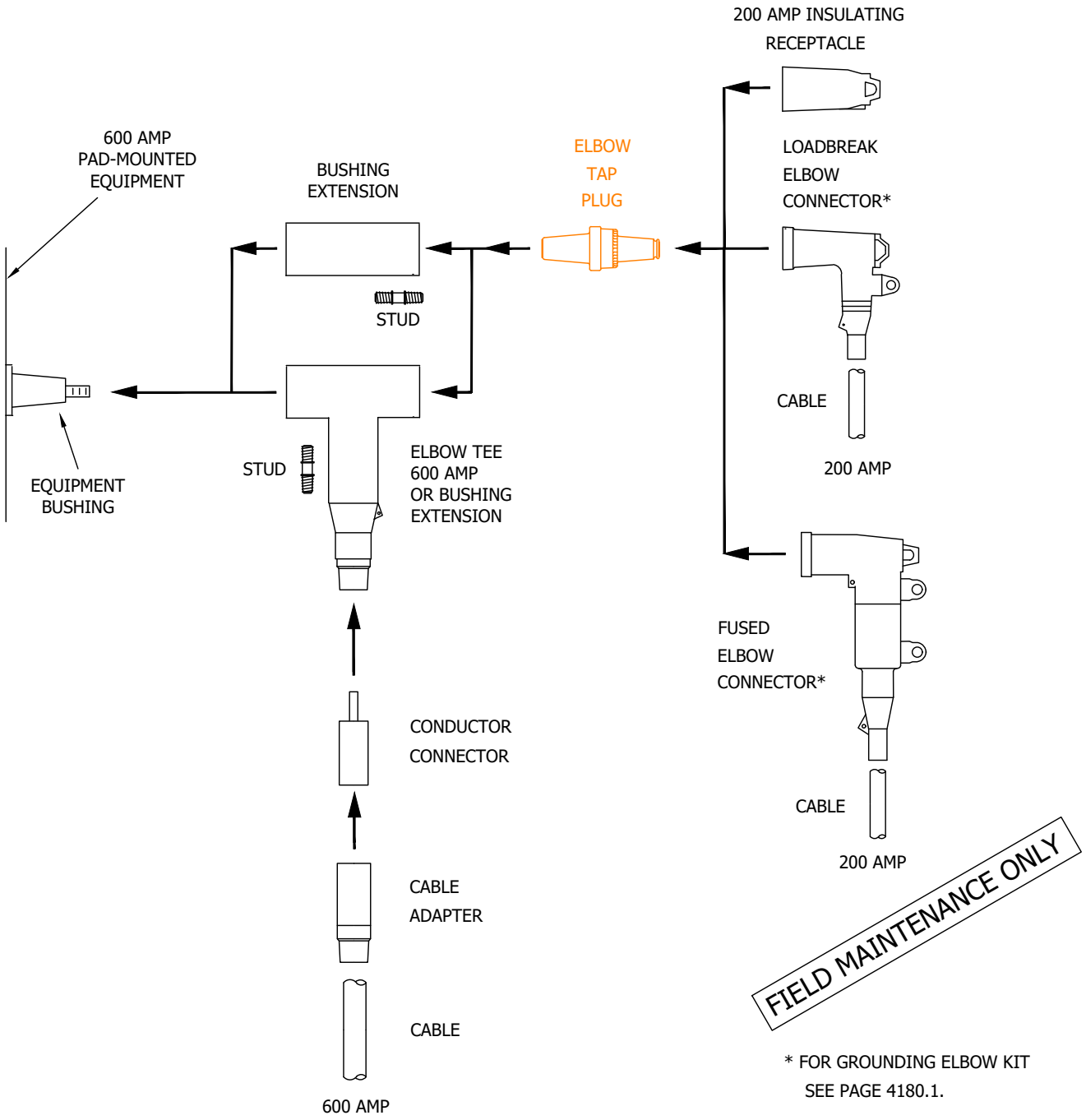

* FOR GROUNDING ELBOW KIT
SEE PAGE 4180.1.

TABLE OF CONTENTS

© 1998 - 2019 San Diego Gas & Electric Company. All rights reserved. Removal of this copyright notice without permission is not permitted under law.

REV	CHANGE	DR	BY	DSN	APV	DATE	REV	CHANGE	DR	BY	DSN	APV	DATE
C	REVISION	-	-	-	TR/MJC	11/14/2011	F	MOVED TO FMO	EDM	EJA	GLW	CZH	12/09/2019
B	REVISION	-	-	-	TR/MJC	11/08/2011	E	REVISION	-	-	-	TR/MJC	10/30/2012
A	REVISION	-	-	-	TR/MJC	11/03/2011	D	REVISION	-	-	-	TR/MJC	07/24/2012

PAD-MOUNTED 200/600 AMP EQUIPMENT CONNECTIONS -- 200 AMP LOADBREAK

TYPICAL COMBINATIONS

CODE CABLE SIZE	P73 350AL-#2 AL	P75 350 AL-2/0 AL	P83 750 AL-#2 AL	P85 750 AL-2/0 AL	P93 1000 AL-#2 AL	P95 1000 AL-2/0 AL
MACRO UNITS	CC-P73	CC-P75	CC-P83	CC-P85	CC-P93	CC-P95

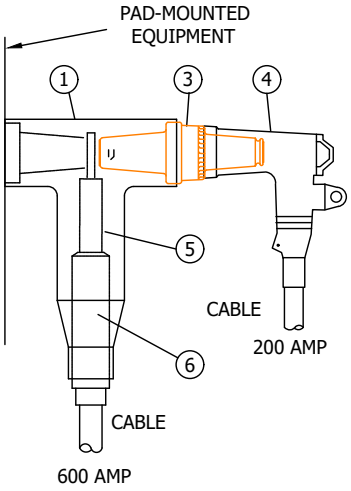

UG MAP SYMBOL

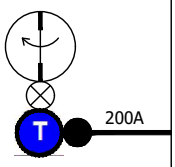

	EQUIPMENT	QTY.	STOCK NUMBER
1	ELBOW TEE	1	S326578
3	ELBOW TAP PLUG	1	S547328
4	LOADBREAK ELBOW CONNECTOR	1	S443838 (#2 AL) S443840 (2/0 AL)
5	CONDUCTOR CONNECTOR	1	S258698 (350 AL) S258704 (750 AL) S258708 (750C AL) S258702 (1000 AL)
6	CABLE ADAPTER	1	S102027 (350 AL) S102034 (750 AL) S102051 (750C AL) S102050 (1000 AL)

TYPICAL COMBINATIONS

CODE CABLE SIZE	P7B 350 AL-#2 AL	P7C 350 AL-2/0 AL	P8B 750 AL-#2 AL	P8C 750 AL-2/0 AL	P9B 1000 AL-#2 AL	P9C 1000 AL-2/0 AL
MACRO UNITS	CC-P7B	CC-P7C	CC-P8B	CC-P8C	CC-P9B	CC-P9C

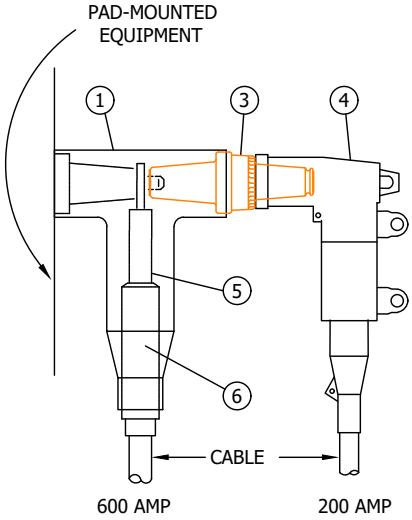

UG MAP SYMBOL

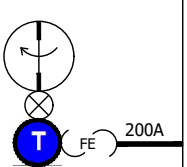

	EQUIPMENT	QTY.	STOCK NUMBER
1	ELBOW TEE	1	326578
3	ELBOW TAP PLUG	1	S547328
4	FUSED ELBOW CONNECTOR	1	S443850 (#2 AL) S443882 (2/0 AL)
5	CONDUCTOR CONNECTOR	1	S258698 (350 AL) S258704 (750 AL) S258708 (750C AL) S258702 (1000 AL)
6	CABLE ADAPTER	1	S102027 (350 AL) S102034 (750 AL) S102051 (750C AL) S102050 (1000 AL)

FIELD MAINTENANCE ONLY

TABLE OF CONTENTS

© 1998 - 2019 San Diego Gas & Electric Company. All rights reserved. Removal of this copyright notice without permission is not permitted under law.

REV	CHANGE	DR	BY	DSN	APV	DATE	REV	CHANGE	DR	BY	DSN	APV	DATE
C	REVISION	-	-	-	TR/MJC	11/14/2011	F	MOVED TO FMO	EDM	EJA	GLW	CZH	12/09/2019
B	REVISION	-	-	-	TR/MJC	11/08/2011	E	REVISION	-	-	-	TR/MJC	10/30/2012
A	REVISION	-	-	-	TR/MJC	11/03/2011	D	REVISION	-	-	-	TR/MJC	07/24/2012

X Indicates Latest Revision | Completely Revised | New Page | Information Removed

PAD-MOUNTED 200/600 AMP EQUIPMENT CONNECTIONS -- 200 AMP LOADBREAK

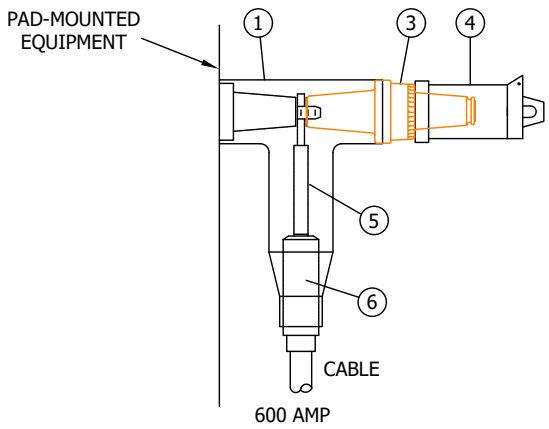

TYPICAL COMBINATIONS			
CODE CABLE SIZE	P70 350AL	P80 750 AL	P90 1000 AL
MACRO UNITS	CC-P70	CC-P80	CC-P90

	EQUIPMENT	QTY.	STOCK NUMBER
1	ELBOW TEE	1	S326578
3	ELBOW TAP PLUG	1	S547328
4	200 AMP INSULATING RECEPTACLE	1	S204304
5	CONDUCTOR CONNECTOR	1	S258698 (350 AL) S258704 (750 AL) S258708 (750C AL) S258702 (1000 AL)
6	CABLE ADAPTER	1	S102027 (350 AL) S102034 (750 AL) S102051 (750C AL) S102050 (1000 AL)

UG MAP SYMBOL

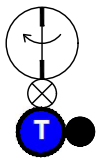

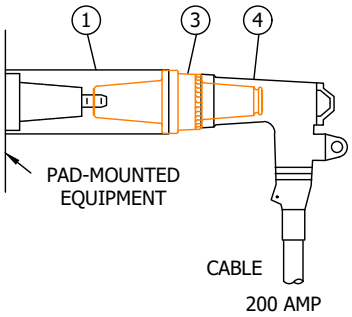

TYPICAL COMBINATIONS		
CODE CABLE SIZE	E3 #2 AL	E5 2/0 AL
MACRO UNITS	CC--E3	CC--E5

	EQUIPMENT	QTY.	STOCK NUMBER
1	BUSHING EXTENSION	1	336204
3	ELBOW TAP PLUG	1	S547328
4	LOADBREAK ELBOW CONNECTOR	1	S443838 (#2 AL) S443840 (2/0 AL)

UG MAP SYMBOL

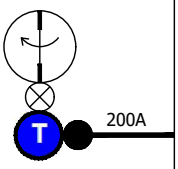

FIELD MAINTENANCE ONLY

TABLE OF CONTENTS

© 1998 - 2019 San Diego Gas & Electric Company. All rights reserved. Removal of this copyright notice without permission is not permitted under law.

REV	CHANGE	DR	BY	DSN	APV	DATE	REV	CHANGE	DR	BY	DSN	APV	DATE
C	REVISION	-	-	-	TR/MJC	11/14/2011	F	MOVED TO FMO	EDM	EJA	GLW	CZH	12/09/2019
B	REVISION	-	-	-	TR/MJC	11/08/2011	E	REVISION	-	-	-	TR/MJC	10/30/2012
A	REVISION	-	-	-	TR/MJC	11/03/2011	D	REVISION	-	-	-	TR/MJC	07/24/2012

X Indicates Latest Revision | Completely Revised | New Page | Information Removed

PAD-MOUNTED 200/600 AMP EQUIPMENT CONNECTIONS -- 200 AMP LOADBREAK

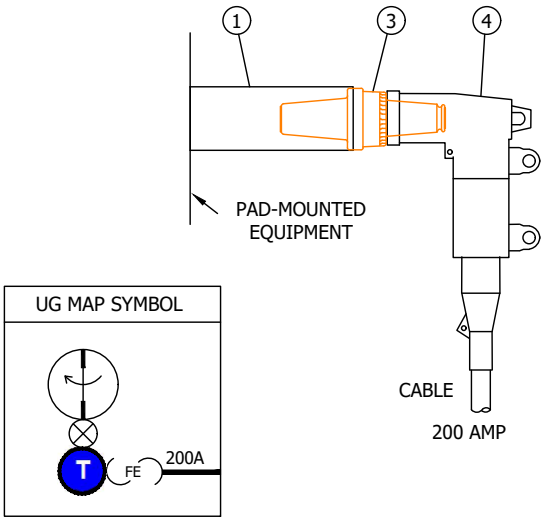

TYPICAL COMBINATIONS		
CODE CABLE SIZE	EB #2 AL	EC 2/0 AL
MACRO UNITS	CC--EB	CC--EC

	EQUIPMENT	QTY.	STOCK NUMBER
1	BUSHING EXTENSION	1	S336204
3	ELBOW TAP PLUG	1	S547328
4	FUSED ELBOW CONNECTOR	1	S443850 (#2 AL) S443882 (2/0 AL)

PAD-MOUNTED 200/600 AMP EQUIPMENT CONNECTIONS -- 200 AMP LOADBREAK

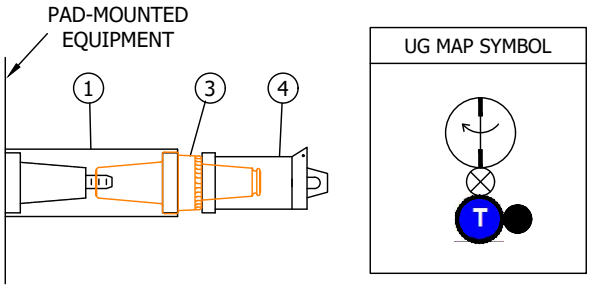

TYPICAL COMBINATIONS	
CODE	EO
MACRO UNIT	CC--EO

	EQUIPMENT	QTY.	STOCK NUMBER
1	BUSHING EXTENSION	1	S336204
3	ELBOW TAP PLUG	1	S547328
4	200 AMP INSULATING RECEPTACLE	1	S204304

NOTES:

- DO NOT "PIGGYBACK" 600 AMP TEES ON TOP OF EACH OTHER AT ANY TIME ON THE EQUIPMENT BUSHING.
- THE 200 AMP/600 AMP LOADBREAK CONFIGURATIONS ON THESE PAGES ARE ONLY TO BE USED ON PAD-MOUNTED EQUIPMENT INSTALLATIONS.
- FOR SPECIFICATIONS AND INSTALLATION INSTRUCTIONS REFER TO STANDARDS 4182, 4191 AND 4192.
- BELOW ARE THE KEYS TO THE CODES IN THE TABLES ON PAGES 4181.18 - .21.

FIELD MAINTENANCE ONLY

CODES

3 = #2 AL
5 = 2/0 AL
7 = 350 AL
8 = 750 AL
9 = 1000 AL

COMPONENTS

B = #2 AL FUSED ELBOW
C = 2/0 AL FUSED ELBOW
E = 600 AMP PAD-MOUNTED EQUIPMENT BUSHING EXTENSION
P = 600 AMP PAD-MOUNTED EQUIPMENT TEE
0 = 200 AMP INSULATING RECEPTACLE

- OTHER COMBINATIONS MAY BE CODED USING THE ABOVE CODES FOR THE SAME TYPE CONNECTIONS SHOWN.

© 1998 - 2019 San Diego Gas & Electric Company. All rights reserved. Removal of this copyright notice without permission is not permitted under law.

REV	CHANGE	DR	BY	DSN	APV	DATE	REV	CHANGE	DR	BY	DSN	APV	DATE
C	REVISION	-	-	-	TR/MJC	11/14/2011	F	MOVED TO FMO	EDM	EJA	GLW	CZH	12/09/2019
B	REVISION	-	-	-	TR/MJC	11/08/2011	E	REVISION	-	-	-	TR/MJC	10/30/2012
A	REVISION	-	-	-	TR/MJC	11/03/2011	D	REVISION	-	-	-	TR/MJC	07/24/2012

X Indicates Latest Revision | Completely Revised | New Page | Information Removed

SUBSURFACE/SURFACE OPERATE
ON-OFF SWITCH CONNECTOR APPLICATION CHART
200 AND LOADBREAK AND 600 AMP DEADBREAK

THIS CHART SHOWS HOW 200 AND 600 AMP CONNECTORS ARE ASSEMBLED.

ALWAYS USE THE MANUFACTURERS RECOMMENDED
TORQUE SETTINGS WHEN ASSEMBLING CONNECTORS.

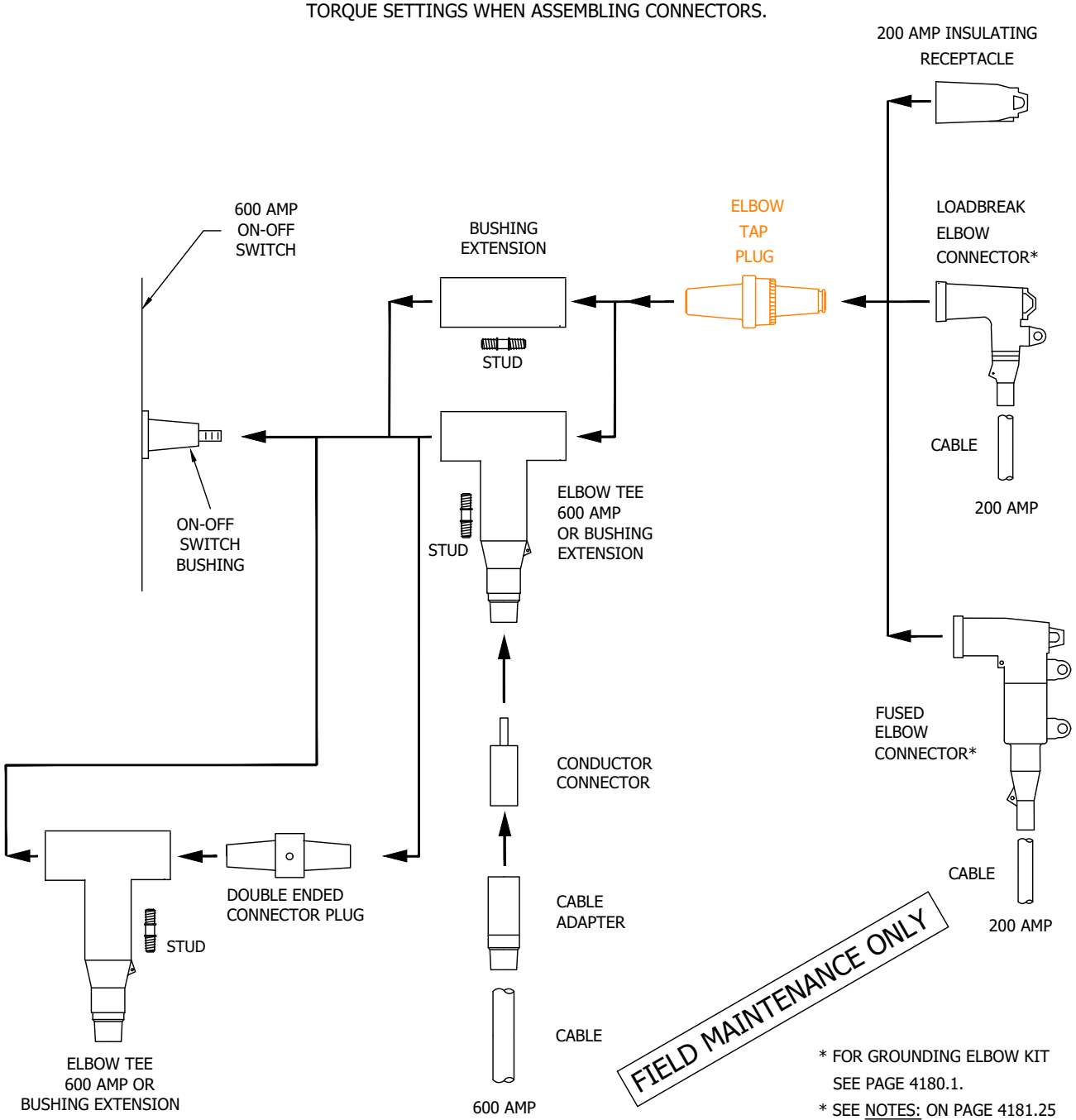

* FOR GROUNDING ELBOW KIT
SEE PAGE 4180.1.
* SEE NOTES: ON PAGE 4181.25

TABLE OF CONTENTS

© 1998 - 2019 San Diego Gas & Electric Company. All rights reserved. Removal of this copyright notice without permission is not permitted under law.

REV	CHANGE	DR	BY	DSN	APV	DATE	REV	CHANGE	DR	BY	DSN	APV	DATE
C	REVISION	-	-	-	TR/MJC	11/14/2011	F	MOVED TO FMO	EDM	EJA	GLW	CZH	12/09/2019
B	REVISION	-	-	-	TR/MJC	11/08/2011	E	REVISION	-	-	-	TR/MJC	10/30/2012
A	REVISION	-	-	-	TR/MJC	11/03/2011	D	REVISION	-	-	-	TR/MJC	07/24/2012

SUBSURFACE/SURFACE OPERABLE ON-OFF

SWITCH CONNECTIONS - 200 AMP LOADBREAK

TYPICAL COMBINATIONS

CODE CABLE SIZE	T73 350 AL-#2 AL	T75 350 AL-2/0 AL	T 83 750 AL-#2 AL	T85 750 AL-2/0 AL	T93 1000 AL-#2 AL	T95 1000 AL-2/0 AL
MACRO UNITS	C--T73	C--T75	C--T83	C--T85	C--T93	C--T95

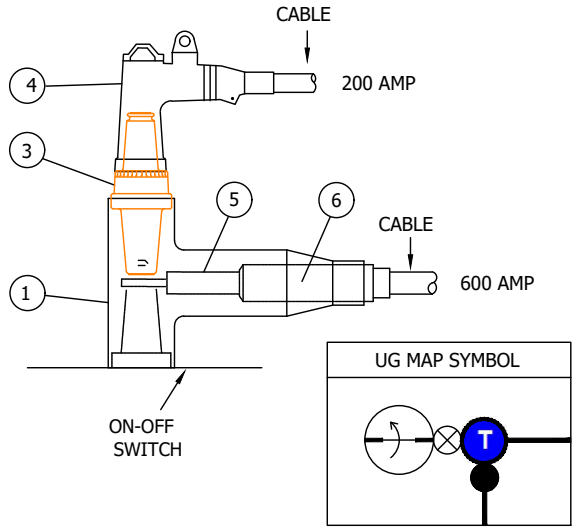

EQUIPMENT	QTY.	STOCK NUMBER
(1) ELBOW TEE	1	S326578
(3) ELBOW TAP PLUG	1	S547328
(4) LOADBREAK ELBOW CONNECTOR	1	S443838 (#2 AL) S443840 (2/0 AL)
(5) COMPRESSION CONNECTOR	1	S258698 (350 AL) S258704 (750 AL) S258708 (750C AL) S258702 (1000 AL)
(6) CABLE ADAPTER	1	S102027 (350 AL) S102034 (750 AL) S102051 (750C AL) S102050 (1000 AL)

TYPICAL COMBINATIONS

CODE CABLE SIZE	7B 350 AL-#2 AL	7C 350 AL-2/0 AL	8B 750 AL-#2 AL	8C 750 AL-2/0 AL	9B 1000 AL-#2 AL	9C 1000 AL-2/0 AL
MACRO UNITS	C--T7B	C--T7C	C--T8B	C--T8C	C--T9B	C--T9C

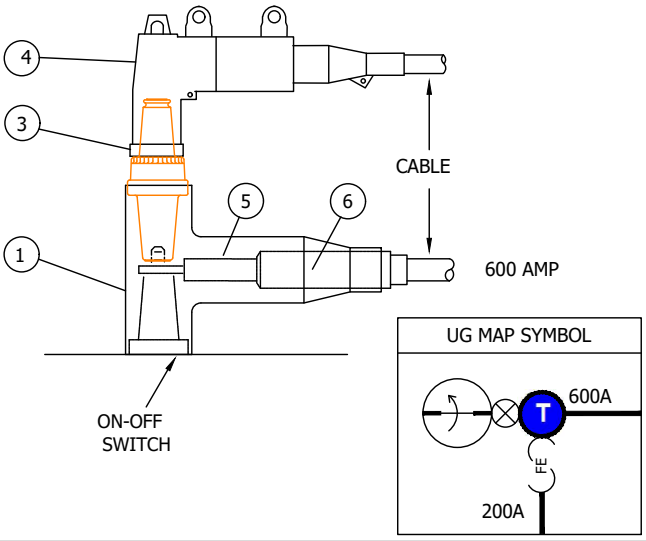

EQUIPMENT	QTY.	STOCK NUMBER
(1) ELBOW TEE	1	S326578
(3) ELBOW TAP PLUG	1	S547328
(4) FUSED ELBOW CONNECTOR	1	S443850 (#2 AL) S443882 (2/0 AL)
(5) CONDUCTOR CONNECTOR	1	S258698 (350 AL) S258704 (750 AL) S258708 (750C AL) S258702 (1000 AL)
(6) CABLE ADAPTER	1	S102027 (350 AL) S102034 (750 AL) S102051 (750C AL) S102050 (1000 AL)

FIELD MAINTENANCE ONLY

TABLE OF CONTENTS

© 1998 - 2019 San Diego Gas & Electric Company. All rights reserved. Removal of this copyright notice without permission is not permitted under law.

REV	CHANGE	DR	BY	DSN	APV	DATE	REV	CHANGE	DR	BY	DSN	APV	DATE
C	REVISION	-	-	-	TR/MJC	11/14/2011	F	MOVED TO FMO	EDM	EJA	GLW	CZH	12/09/2019
B	REVISION	-	-	-	TR/MJC	11/08/2011	E	REVISION	-	-	-	TR/MJC	10/30/2012
A	REVISION	-	-	-	TR/MJC	11/03/2011	D	REVISION	-	-	-	TR/MJC	07/24/2012

X Indicates Latest Revision | Completely Revised | New Page | Information Removed

SUBSURFACE/SURFACE OPERABLE ON-OFF SWITCH CONNECTIONS - 200 AMP LOADBREAK

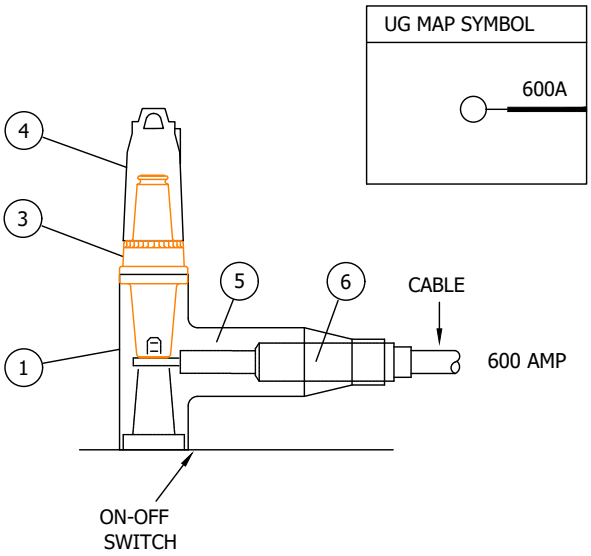

TYPICAL COMBINATIONS			
CODE CABLE SIZE	T70 350 AL	T80 750 AL	T90 1000 AL
MACRO UNITS	CC-T70	CC-T80	CC-T90

	EQUIPMENT	QTY.	STOCK NUMBER
1	ELBOW TEE	1	S326578
3	ELBOW TAP PLUG	1	S547328
4	200 AMP INSULATING RECEPTACLE	1	S204304
5	CONDUCTOR CONNECTOR	1	S258698 (350 AL) S258704 (750 AL) S258708 (750C AL) S258702 (1000 AL)
6	CABLE ADAPTER	1	S102027 (350 AL) S102034 (750 AL) S102051 (750C AL) S102050 (1000 AL)

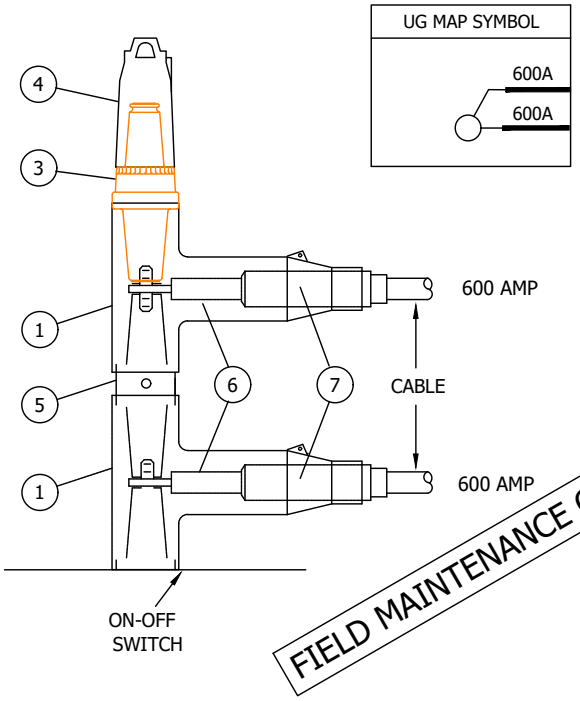

FIELD MAINTENANCE ONLY

TYPICAL COMBINATIONS			
CODE CABLE SIZE	TT70 350 AL	TT80 750 AL	TT90 1000 AL
MACRO UNITS	C-TT70	C-TT80	C-TT90

	EQUIPMENT	QTY.	STOCK NUMBER
1	ELBOW TEE	2	S326578
3	ELBOW TAP PLUG	1	S547328
4	200 AMP INSULATING RECEPTACLE	1	S204304
5	DOUBLE ENDED CONNECTOR PLUG	1	S544832
6	CONDUCTOR CONNECTOR	2	S258698 (350 AL) S258704 (750 AL) S258708 (750C AL) S258702 (1000 AL)
7	CABLE ADAPTER	2	S102027 (350 AL) S102034 (750 AL) S102051 (750C AL) S102050 (1000 AL)

TABLE OF CONTENTS

© 1998 - 2019 San Diego Gas & Electric Company. All rights reserved. Removal of this copyright notice without permission is not permitted under law.

REV	CHANGE	DR	BY	DSN	APV	DATE	REV	CHANGE	DR	BY	DSN	APV	DATE
C	REVISION	-	-	-	TR/MJC	11/14/2011	F	MOVED TO FMO	EDM	EJA	GLW	CZH	12/09/2019
B	REVISION	-	-	-	TR/MJC	11/08/2011	E	REVISION	-	-	-	TR/MJC	10/30/2012
A	REVISION	-	-	-	TR/MJC	11/03/2011	D	REVISION	-	-	-	TR/MJC	07/24/2012

X Indicates Latest Revision | Completely Revised | New Page | Information Removed

SUBSURFACE/SURFACE OPERABLE ON-OFF SWITCH CONNECTIONS - 200 AMP LOADBREAK

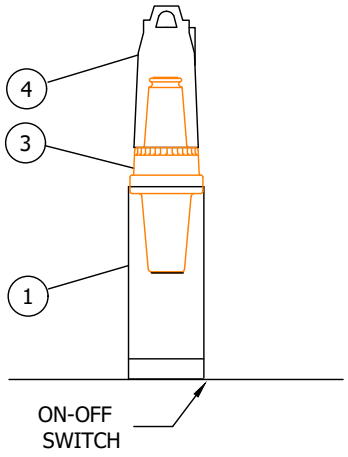

TYPICAL COMBINATIONS			
CODE	FO		
MACRO UNITS	C---FO		
EQUIPMENT		QTY.	STOCK NUMBER
(1) BUSHING EXTENSION		1	S336204
(3) ELBOW TAP PLUG		1	S547328
(4) 200 AMP INSULATING RECEPTACLE		1	S204304

NOTES:

- "PIGGYBACK" TEES SHOWN IN THIS STANDARD SHALL ONLY BE USED TO FEED A SWITCH TIE POSITION.
- DO NOT INSTALL LOADBREAK ELBOWS ON SWITCHES INSTALLED IN MANHOLES.
- DO NOT INSTALL LOADBREAK ELBOWS ON "PIGGYBACK" TEES.
- FOR SPECIFICATIONS AND INSTALLATION INSTRUCTIONS REFER TO STANDARDS 4182, 4191 AND 4192.
- BELOW ARE THE KEYS TO THE CODES IN THE TABLES ON PAGES 4181.22 - .25.

CODES

3 = #2 AL
5 = 2/0 AL
7 = 350 AL
8 = 750 AL
9 = 1000 AL

COMPONENTS

B = #2 AL FUSED ELBOW
C = 2/0 AL FUSED ELBOW
T = 600 AMP SUBSURFACE/SURFACE OPERABLE SWITCH TEE.
F = 600 AMP SUBSURFACE/SURFACE OPERABLE SWITCH BUSHING EXTENSION.

- OTHER COMBINATIONS MAY BE CODED USING THE ABOVE CODES FOR THE SAME TYPE CONNECTIONS SHOWN.

FIELD MAINTENANCE ONLY

TABLE OF CONTENTS

© 1998 - 2019 San Diego Gas & Electric Company. All rights reserved. Removal of this copyright notice without permission is not permitted under law.

REV	CHANGE	DR	BY	DSN	APV	DATE	REV	CHANGE	DR	BY	DSN	APV	DATE
C	REVISION	-	-	-	TR/MJC	11/14/2011	F	MOVED TO FMO	EDM	EJA	GLW	CZH	12/09/2019
B	REVISION	-	-	-	TR/MJC	11/08/2011	E	REVISION	-	-	-	TR/MJC	10/30/2012
A	REVISION	-	-	-	TR/MJC	11/03/2011	D	REVISION	-	-	-	TR/MJC	07/24/2012

SCOPE: THIS STANDARD SHOWS THE CONNECTIONS AND ASSEMBLY CODES USED FOR CALLING OUT 600 AMP SPLICE AND CONNECTOR ASSEMBLIES ON ELECTRIC CONSTRUCTION ORDERS.

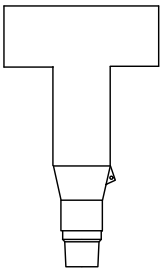

ELBOW-TEE & STUD

WIRE SIZE	STOCK NUMBER	ASSEMBLY UNIT
	S326578	ELBO-T

CABLE ADAPTER



WIRE SIZE	STOCK NUMBER	ASSEMBLY UNIT
4/0 CU	S102026	ADP4/0
350 AL	S102027	ADP350
500 CU	S102028	ADP500
750 COMP AL	S102051	AD75OC
750 AL	S102034	ADP750
1000 AL	S102050	AD1MIL

CONNECTOR

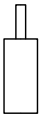

WIRE SIZE	STOCK NUMBER	ASSEMBLY UNIT
4/0 CU	S258696	SPD4/0
350 AL	S258698	SPD350
500 CU	S258700	SPD500
750 COMP AL	S258708	SP750C
750 AL	S258704	SPD750
1000 AL	S258702	SP1000

STUD	S701100	STUD

INSULATING RECEPTACLE WITH TEST POINT

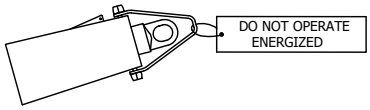

NOT TO BE OPERATED ENERGIZED

WIRE SIZE	STOCK NUMBER	ASSEMBLY UNIT
	S570608	IN-REC

EXTENSION SPLICE

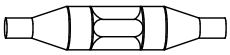

WIRE SIZE	STOCK NUMBER	ASSEMBLY UNIT
350 AL	S668434	SS-350
750 AL	S668436	SS-750
750 AL COMP	S668442	SS750C
750 AL-750 AL COMP	S668444	SS750B
1000 AL	S668438	SS1000
#4/0 CU	S668430	SS-4/0
500 CU	S668432	SS-500
1000 KCMIL CU only	S668460	SS1KCU

INSULATED PLUG W/TEST POINT

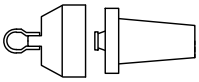

STOCK NUMBER	ASSEMBLY UNIT
S544848	PLUG-F

STOCK NUMBER	ASSEMBLY UNIT
S547324	TAP-FE

600/200 AMP TAP PLUG

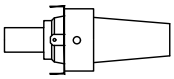

STOCK NUMBER	ASSEMBLY UNIT
S544832	PLUG-C

DOUBLE-ENDED CONNECTOR PLUG

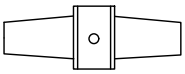

STOCK NUMBER	ASSEMBLY UNIT
S719600	REDTAP

600/200 AMP REDUCING TAP WELL

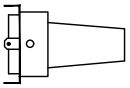

FMO

STOCK NUMBER	ASSEMBLY UNIT
S547328	ETP650

ELBOW TAP PLUG

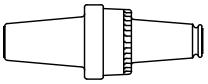

STOCK NUMBER	ASSEMBLY UNIT
S544676	BSHPLG

200 AMP LOADBREAK BUSHING PLUG

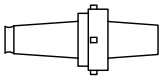

FIELD MAINTENANCE ONLY

STOCK NUMBER	ASSEMBLY UNIT
S336204	BUSH-X

BUSHING EXTENSION & STUD

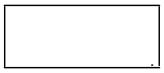

© 1998 - 2019 San Diego Gas & Electric Company. All rights reserved. Removal of this copyright notice without permission is not permitted under law.

REV	CHANGE	DR	BY	DSN	APV	DATE	REV	CHANGE	DR	BY	DSN	APV	DATE
C	REVISION	-	-	-	TR/MJC	11/14/2011	F	MOVED TO FMO	EDM	EJA	GLW	CZH	12/09/2019
B	REVISION	-	-	-	TR/MJC	11/08/2011	E	REVISION	-	-	-	TR/MJC	10/30/2012
A	REVISION	-	-	-	TR/MJC	11/03/2011	D	REVISION	-	-	-	TR/MJC	07/24/2012

X Indicates Latest Revision | Completely Revised | New Page | Information Removed

SHEET 26 OF 26

SDG&E ELECTRIC UNDERGROUND FIELD MAINTENANCE ONLY STANDARDS

12KV 200 & 600 AMP CONNECTOR ASSEMBLIES IDENTIFICATION CHART

FMO

UG4181.26

TABLE OF CONTENTS

UG4183 FIELD MAINTENANCE ONLY

ALL VERSIONS LISTED IN FMO ARE SUPERSEDED BY THEIR CURRENT VERSION FOUND INSIDE THE UNDERGROUND CONSTRUCTION STANDARDS MANUAL.

REVISION HISTORY:

12/12/2021: MOVED TO FMO

TABLE OF CONTENTS

© 1998 - 2021 San Diego Gas & Electric Company. All rights reserved. Removal of this copyright notice without permission is not permitted under law.

REV	CHANGE	DR	BY	DSN	APV	DATE	REV	CHANGE	DR	BY	DSN	APV	DATE
C							F						
B							E						
A	ORIGINAL ISSUE	EDM	ADW	GLW	CZH	12/12/2021	D						

Indicates Latest Revision		Completely Revised	X New Page	Information Removed

SDG&E ELECTRIC UNDERGROUND FIELD MAINTENANCE ONLY STANDARDS

600 AMP JUNCTION CONNECTOR WITH TEST AND GROUNDING POINT

SCOPE: THIS STANDARD SHOWS THE IDENTIFICATION CHARTS FOR 600 AMP JUNCTION CONNECTOR ASSEMBLIES WITH TEST AND GROUNDING POINTS.

ATTENTION:

* THIS CHART SHOWS HOW 200 AND 600 AMP CONNECTORS ARE ASSEMBLED.

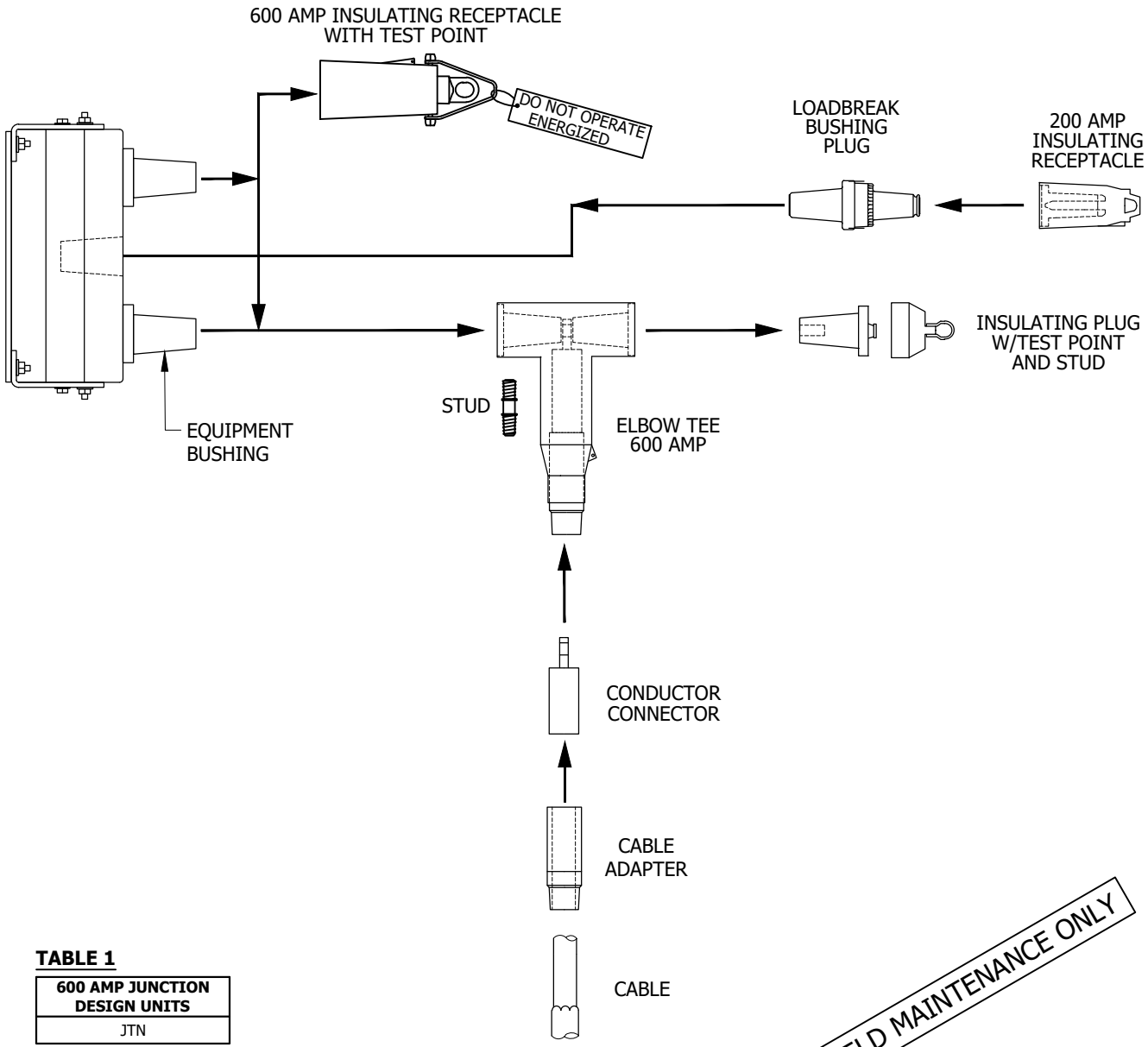

TABLE 1

600 AMP JUNCTION DESIGN UNITS
JTN

FIGURE 1
VAULT AND MANHOLE INSTALLATION ONLY
600 AMP JUNCTION SUBSURFACE CONNECTOR APPLICATION CHART
200 AND 600 AMP DEADBREAK

© 1998 - 2021 San Diego Gas & Electric Company. All rights reserved. Removal of this copyright notice without permission is not permitted under law.

REV	CHANGE	DR	BY	DSN	APV	DATE	REV	CHANGE	DR	BY	DSN	APV	DATE
C	FORMATTING	EDM	JIK	-	-	06/02/2020	F						
B	REVISION	-	-	-	TR/MJC	11/08/2011	E						
A	REVISION	-	-	-	TR/MF	06/12/2005	D	MOVED TO FMO	EDM	ADW	GLW	CZH	12/12/2021

X Indicates Latest Revision | Completely Revised | New Page | Information Removed

SDG&E ELECTRIC UNDERGROUND FIELD MAINTENANCE ONLY STANDARDS

600 AMP JUNCTION CONNECTOR WITH TEST AND GROUNDING POINT

FMO UG4183.1

TABLE OF CONTENTS

TABLE OF CONTENTS

TABLE 2

TYPICAL COMBINATIONS			
CABLE SIZE	350 AL	750 AL	1000 AL
MACRO UNITS	JTN07	JTN08	JTN09

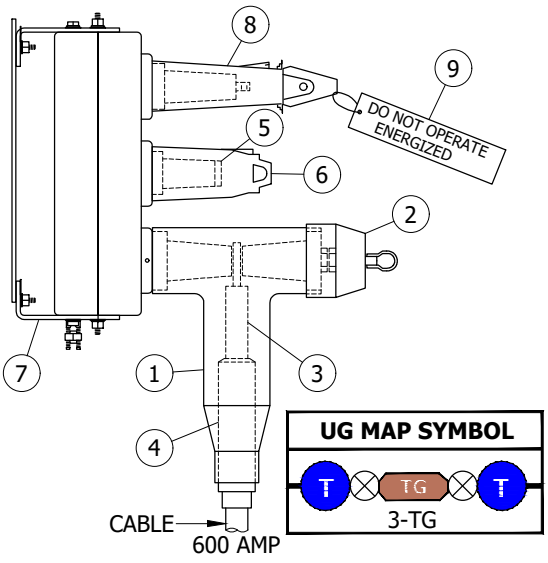

FIGURE 2
VAULT AND MANHOLE INSTALLATION ONLY
VAULT & SUBSURFACE CONNECTIONS
600 AMP DEADBREAK

BILL OF MATERIALS (FIGURE 2):

ITEM	DESCRIPTION	WIRE SIZE	QUANTITY	STANDARD PAGE	STOCK NUMBER	DESIGN UNITS
1	TEE, ELBOW	-	1	-	S326578	-
2	PLUG, INSULATED W/ TEST POINT	-	1	-	S544848	-
3	CONNECTOR, CONDUCTOR	350 AL	1	-	S258698	-
		750 AL		-	S258704	-
		750C AL		-	S258708	-
		1000 AL/CU		-	S258702	-
4	ADAPTER, CABLE	350 AL	1	-	S102027	-
		750 AL		-	S102034	-
		750C AL		-	S102051	-
		1000 AL/CU		-	S102050	-
5	PLUG, LOADBREAK BUSHING	-	1	-	S544676	-
6	RECEPTACLE, 200 AMP INSULATING	-	1	-	S204304	-
7	JUNCTION BAR	-	1	-	S484390	-
8	RECEPTACLE, 600A INSULATING	-	1	-	S570608	-
9	TAG, "DO NOT OPERATE ENERGIZED"	-	1	-	S647966	-

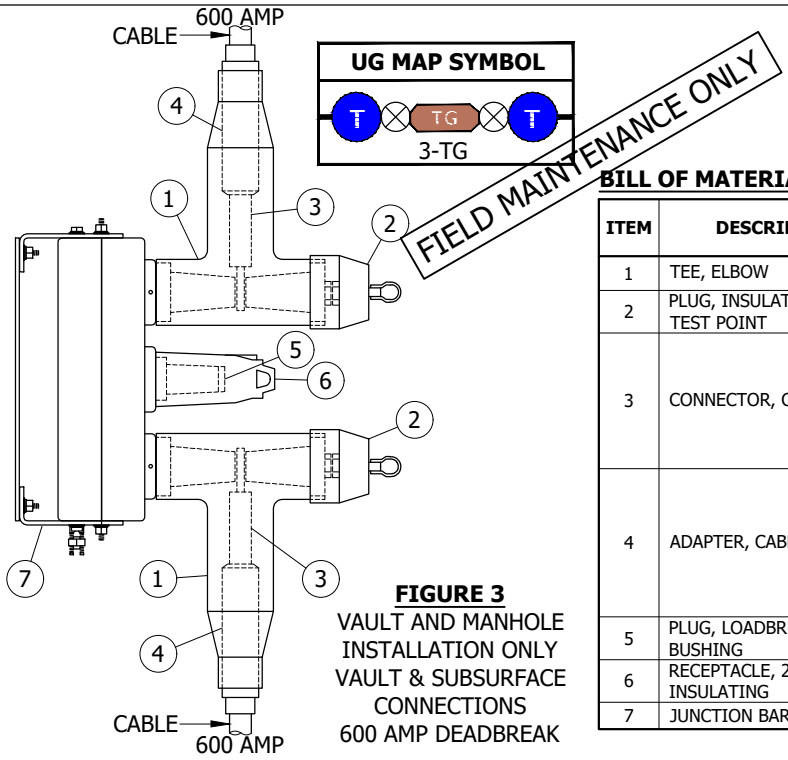

FIGURE 3
VAULT AND MANHOLE INSTALLATION ONLY
VAULT & SUBSURFACE CONNECTIONS
600 AMP DEADBREAK

TABLE 3

TYPICAL COMBINATIONS			
CABLE SIZE	350 AL	750 AL	1000 AL
MACRO UNITS	JTN707	JTN808	JTN909

BILL OF MATERIALS (FIGURE 3):

ITEM	DESCRIPTION	WIRE SIZE	QUANTITY	STANDARD PAGE	STOCK NUMBER	DESIGN UNITS
1	TEE, ELBOW	-	2	-	S326578	-
2	PLUG, INSULATED W/ TEST POINT	-	2	-	S544848	-
3	CONNECTOR, CONDUCTOR	350 AL	2	-	S258698	-
		750 AL		-	S258704	-
		750C AL		-	S258708	-
		1000 AL/CU		-	S258702	-
4	ADAPTER, CABLE	350 AL	2	-	S102027	-
		750 AL		-	S102034	-
		750C AL		-	S102051	-
		1000 AL/CU		-	S102050	-
5	PLUG, LOADBREAK BUSHING	-	1	-	S544676	-
6	RECEPTACLE, 200 AMP INSULATING	-	1	-	S204304	-
7	JUNCTION BAR	-	1	-	S484390	-

© 1998 - 2021 San Diego Gas & Electric Company. All rights reserved. Removal of this copyright notice without permission is not permitted under law.

REV	CHANGE	DR	BY	DSN	APV	DATE	REV	CHANGE	DR	BY	DSN	APV	DATE
C	FORMATTING	EDM	JIK	-	-	06/02/2020	F						
B	REVISION	-	-	-	TR/MJC	11/08/2011	E						
A	REVISION	-	-	-	TR/MF	06/12/2005	D	MOVED TO FMO	EDM	ADW	GLW	CZH	12/12/2021

X Indicates Latest Revision | Completely Revised | New Page | Information Removed

SDG&E ELECTRIC UNDERGROUND FIELD MAINTENANCE ONLY STANDARDS

600 AMP JUNCTION CONNECTOR WITH TEST AND GROUNDING POINT

FMO UG4183.2

INSTALLATION:

A. ALWAYS USE THE MANUFACTURERS RECOMMENDED TORQUE SETTINGS WHEN ASSEMBLING CONNECTORS.

BILL OF MATERIALS: INDIVIDUALLY INCLUDED WITH FIGURES

NOTES:

I. **TABLE 4**

CODES USED IN TABLES 2 & 3	
CODE	**ITEM**
CABLE	
7	350 AL
8	750 AL
9	1000 AL

REFERENCE: NONE

TABLE OF CONTENTS

FIELD MAINTENANCE ONLY

© 1998 - 2021 San Diego Gas & Electric Company. All rights reserved. Removal of this copyright notice without permission is not permitted under law.

REV	CHANGE	DR	BY	DSN	APV	DATE	REV	CHANGE	DR	BY	DSN	APV	DATE
C	FORMATTING	EDM	JIK	-	-	06/02/2020	F						
B	REVISION	-	-	-	TR/MJC	11/08/2011	E						
A	REVISION	-	-	-	TR/MF	06/12/2005	D	MOVED TO FMO	EDM	ADW	GLW	CZH	12/12/2021

X Indicates Latest Revision | Completely Revised | New Page | Information Removed

SDG&E ELECTRIC UNDERGROUND FIELD MAINTENANCE ONLY STANDARDS

600 AMP JUNCTION CONNECTOR WITH TEST AND GROUNDING POINT

FMO UG4183.3

FIELD MAINTENANCE ONLY

REVISION HISTORY:

7/13/2016: All versions prior to 2016 are superseded by their current version found inside the Overhead Construction Standard Manual.

TABLE OF CONTENTS

© 1998 - 2016 San Diego Gas & Electric Company. All rights reserved. Removal of this copyright notice without permission is not permitted under law.

REV	CHANGE	BY	DSGN	APPV	DATE	REV	CHANGE	BY	DSGN	APPV	DATE
C						F					
B						E					
A	ORIGINAL ISSUE	JS	IL	MDJ	7/13/2016	D					

X Indicates Latest Revision | Completely Revised | New Page | Information Removed

SHEET 1 OF 1

SDG&E ELECTRIC UNDERGROUND STANDARD

LOADBREAK ELBOW CONNECTOR, 6930 VOLTS AND BELOW

FMO UG 4191

MAJOR USE
USED ON SUBSURFACE, LOW PROFILE PAD-MOUNT TRANSFORMERS AND LOADBREAK CABLE TAPS (LOADBREAK ON 6.9KV AND 4.16KV SYSTEMS ONLY)

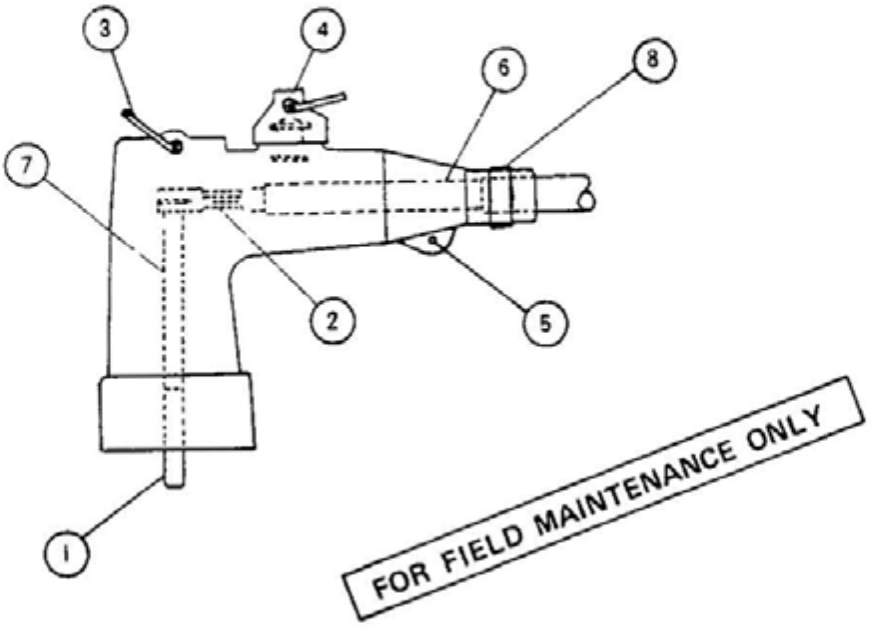

ATTENTION: THIS ELBOW IS DESIGNED FOR OPERATION AS A LOADBREAK DEVICE ON 6.9 & 4.16KV SYSTEMS ONLY. HOWEVER, IF IT IS INSTALLED ON A 12KV SYSTEM, A TAG (3232) " DO NOT OPERATE ENERGIZED" IS THEN ATTACHED.

RATINGS	
KV	8.3
AMPERES	200
KV-BIL	95
LOADBREAK OR LOADMAKE 10 OPERATIONS	200 AMPS AT 70-80 % POWER FACTOR
FAULT CLOSE RMS SYMMETRICAL AMPERES	10,000

NO.	PARTS	STOCK NO. OR CONSTR. STD
1	ARC FOLLOWER	256124 (#4 CU) OR 443416 (#2 CU)
2	COMPRESSION SOCKET TERMINAL	
3	ELBOW PULLING EYE	
4	VOLTAGE TEST POINT & COVER	
5	GROUNDING POINT(S)	
6	CABLE	
7	ELECTRICAL MALE CONTACT	
8	WHITE IDENTIFICATION BAND (D)	

NOTES:

A. ITEMS ABOVE ACCOMMODATE EITHER #2 OR #4 AWG COPPER CONDUCTORS

B. UNDER PROPER SUPERVISION THIS ELBOW MAY BE USED AS A LOADBREAK DEVICE AT 6.9KV AND BELOW.

C. FOR INSTALLATION PROCEDURES CONSULT INDIVIDUAL MANUFACTURERS CONTAINERS FOR CURRENT INSTRUCTIONS.

(D) WHITE BAND IDENTIFIES ELBOW THAT CAN ONLY BE USED FOR SWITCHING ON A 6939 VOLT (1 PHASE) SYSTEM.

SDG&E ELECTRIC STANDARDS

DATE 6-3-83
APPD [signature]

LOADBREAK ELBOW CONNECTOR, 6930 VOLTS AND BELOW

4199.908
SUPERSEDES 4191 1 (5-20-83)

TABLE OF CONTENTS

FIELD MAINTENANCE ONLY

REVISION HISTORY:

7/13/2016: All versions prior to 2016 are superseded by their current version found inside the Overhead Construction Standard Manual.

TABLE OF CONTENTS

© 1998 - 2016 San Diego Gas & Electric Company. All rights reserved. Removal of this copyright notice without permission is not permitted under law.

REV	CHANGE	BY	DSGN	APPV	DATE	REV	CHANGE	BY	DSGN	APPV	DATE
C						F					
B						E					
A	ORIGINAL ISSUE	JS	IL	MDJ	7/13/2016	D					

X Indicates Latest Revision | Completely Revised | New Page | Information Removed

SHEET 1 OF 1

SDG&E ELECTRIC UNDERGROUND STANDARD

LOADBREAK ACCESSORIES, 12KV AND/OR 6.9KV

FMO UG 4192

MAJOR USE 3-WAY – USED AS A LATERAL TAP FROM A CIRCUIT

4-WAY – USED TO ESTABLISH TWO LATERAL TAPS OR A LOOP FROM A CIRCUIT

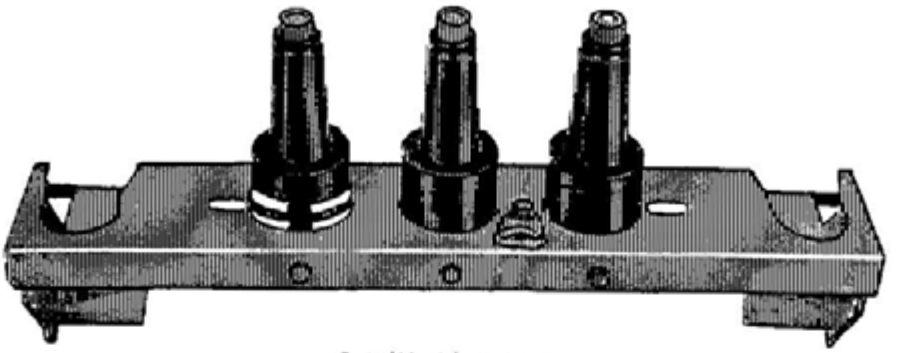

3-WAY CABLE TAP

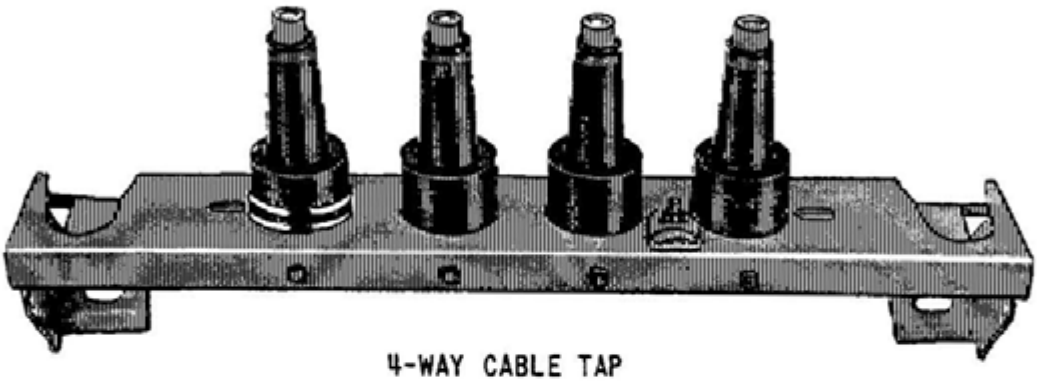

4-WAY CABLE TAP

FOR FIELD MAINTENANCE ONLY

CABLE TAP WITH BRACKET	STOCK NUMBER
3-WAY	718320 (A)
4-WAY	718336 (A)
3-WAY	718312 (B)
4-WAY	718328 (B)

CABLE TAP (D) WITHOUT BRACKET	STOCK NUMBER
3-WAY	718314 (B)
4-WAY	718338 (B)

NOTES

(A) NOT LOADBREAK RATED ON 12KV SYSTEM

(B) INSTALL ONE WHITE-BLACK-WHITE BAND ON THE LEFT BUSHING (WITH A RED MARK), TO IDENTIFY 12KV SWITCHING CAPABILITY (122495).

C CAP OFF ALL UNUSED TAPS WITH INSULATING RECEPTACLE (204304).

(D) CABLE TAPS PURCHASED WITHOUT BRACKET TO BE USED FOR REPLACEMENT PURPOSES IN CABLE TAPS WITH BRACKETS. IF NOT AVAILABLE, USE CABLE TAP WITH BRACKET AND SAVE BRACKET

4199.909 SUPERSEDES 4192 02 (5-20-83)	SDG&E ELECTRIC STANDARDS LOADBREAK ACCESSORIES, 12KV AND/OR 6.9KV	DATE 6-3-83 APPD [illegible]

TABLE OF CONTENTS

UG4198 FIELD MAINTENANCE ONLY

ALL VERSIONS LISTED IN FMO ARE SUPERSEDED BY THEIR CURRENT VERSION FOUND INSIDE THE UNDERGROUND CONSTRUCTION STANDARD MANUAL.

REVISION HISTORY:

12/09/2019: MOVED TO FMO

TABLE OF CONTENTS

© 1998 - 2019 San Diego Gas & Electric Company. All rights reserved. Removal of this copyright notice without permission is not permitted under law.

REV	CHANGE	DR	BY	DSN	APV	DATE	REV	CHANGE	DR	BY	DSN	APV	DATE
C							F						
B							E						
A	ORIGINAL ISSUE	EDM	EJA	GLW	CZH	12/09/2019	D						

Indicates Latest Revision | Completely Revised | X New Page | Information Removed

SDG&E ELECTRIC UNDERGROUND FIELD MAINTENANCE ONLY STANDARDS

N-JUNCTION CLEER 600A 25KV
SQUARE CLEER 600A 25KV

FMO UG4198

SCOPE: THIS STANDARD COVERS THE CLEER, 600 AMP, LIVE LINE TOOL OPERATED, SEPARABLE CONNECTOR.

ATTENTION: FEEDER MUST BE DE-ENERGIZED DURING ANY CONSTRUCTION AND INTERCONNECTION WITH THE COOPER CLEER.

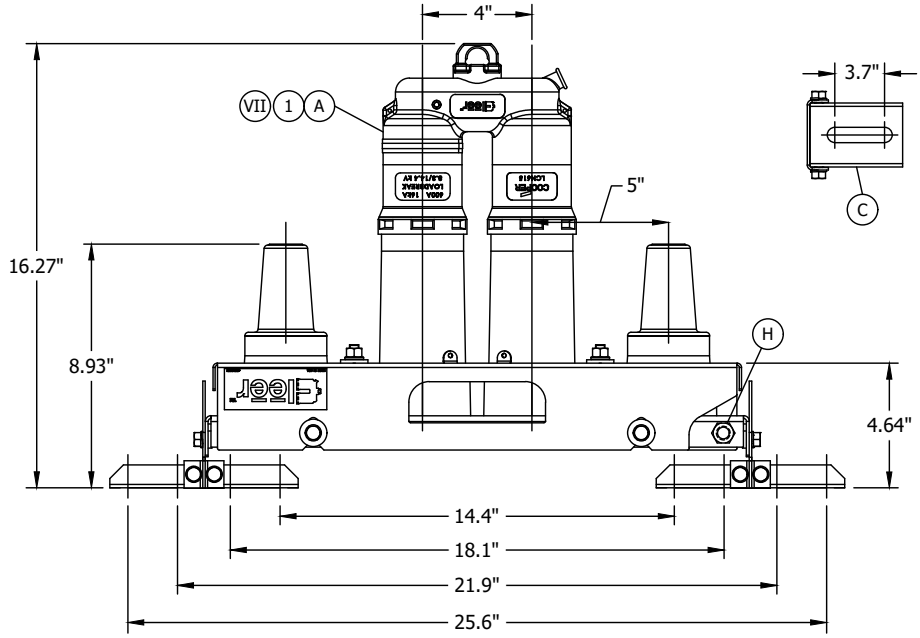

IG	ACTIVE
IG	ACTIVE TO BE REMOVED
IG	PRELIM

UG MAP SYMBOL

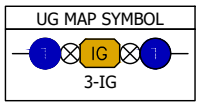

IN-LINE BRACKET

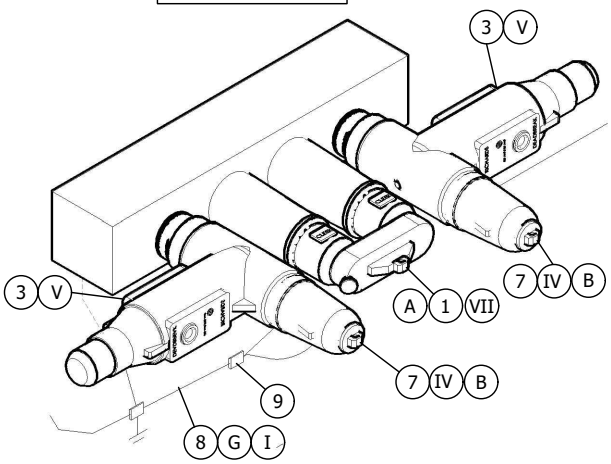

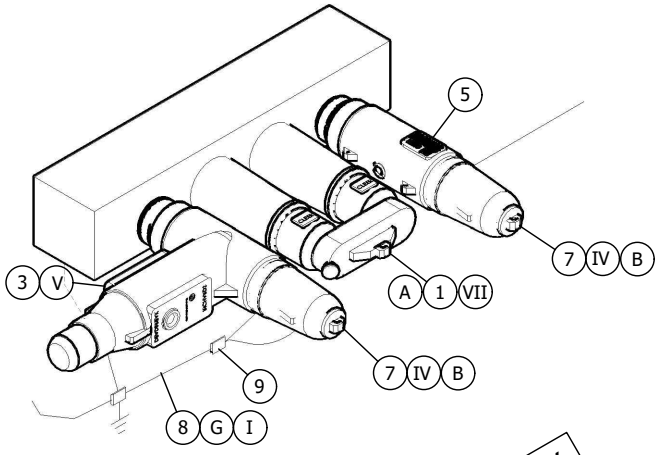

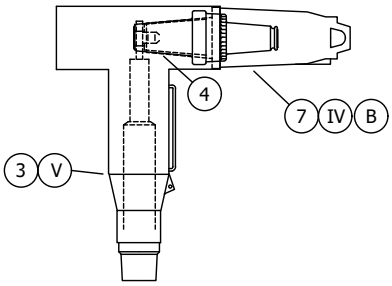

FIELD MAINTENANCE ONLY

© 1998 - 2019 San Diego Gas & Electric Company. All rights reserved. Removal of this copyright notice without permission is not permitted under law.

REV	CHANGE	DR	BY	DSN	APV	DATE	REV	CHANGE	DR	BY	DSN	APV	DATE
C	EDITORIAL CHANGES	-	DG	JS	MDJ	10/13/2017	F	MOVED TO FMO	EDM	EJA	GLW	CZH	12/09/2019
B	EDITORIAL CHANGES	-	DG	JS	MDJ	06/27/2017	E	COMPLETELY REVISED	-	DG	JS	CZH	03/18/2019
A	ORIGINAL ISSUE	-	JBH	TR	JS/MDJ	07/01/2016	D	EDITORIAL CHANGES	-	GW	JS	MDJ	03/22/2018

TABLE OF CONTENTS

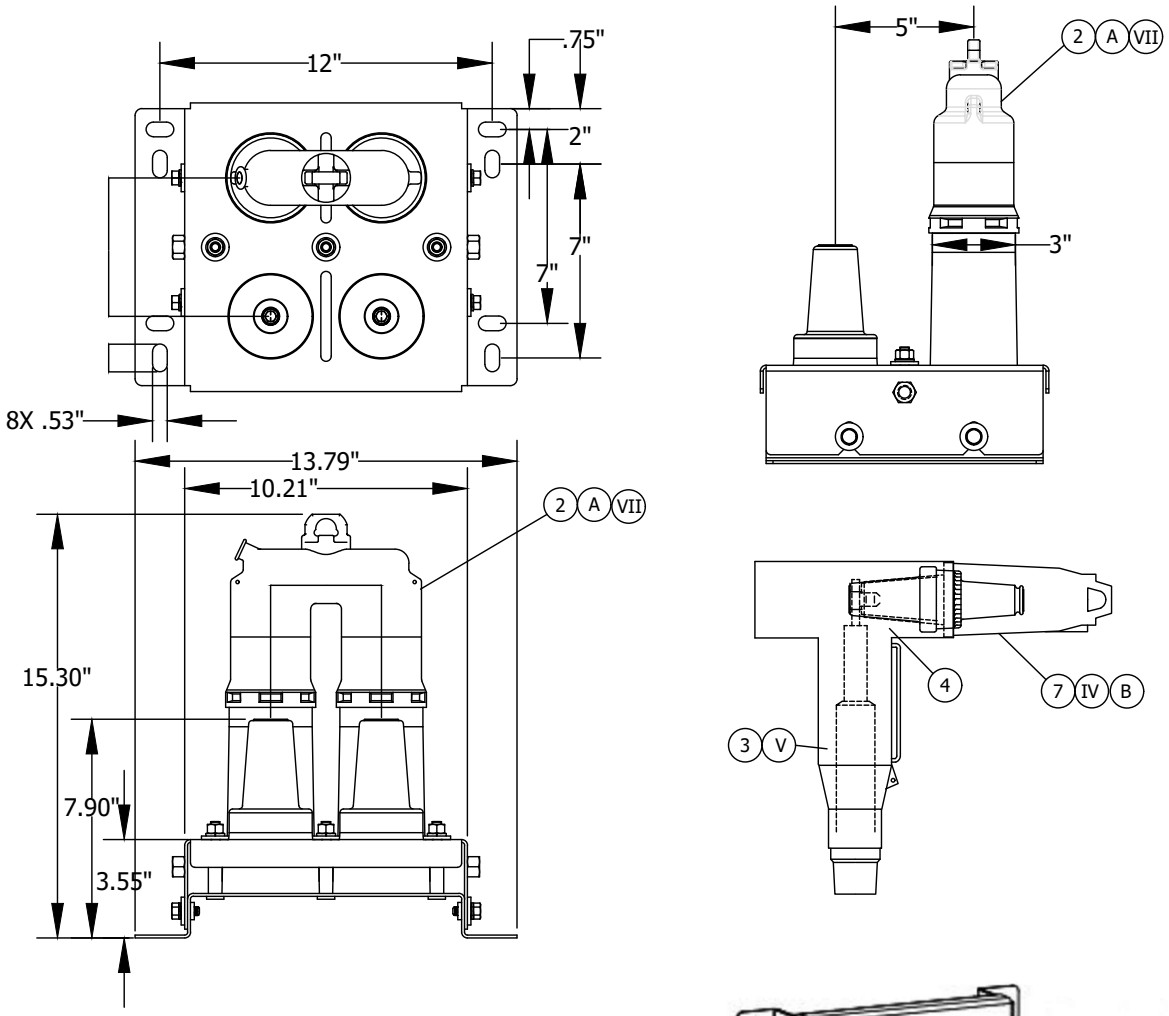

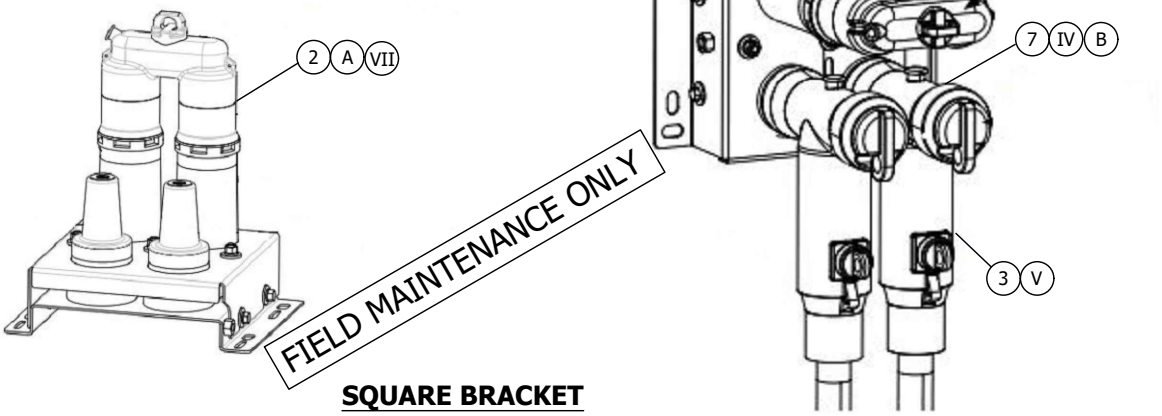

SQUARE BRACKET

© 1998 - 2019 San Diego Gas & Electric Company. All rights reserved. Removal of this copyright notice without permission is not permitted under law.

REV	CHANGE	DR	BY	DSN	APV	DATE	REV	CHANGE	DR	BY	DSN	APV	DATE
C	EDITORIAL CHANGES	-	DG	JS	MDJ	10/13/2017	F	MOVED TO FMO	EDM	EJA	GLW	CZH	12/09/2019
B	EDITORIAL CHANGES	-	DG	JS	MDJ	06/27/2017	E	COMPLETELY REVISED	-	DG	JS	CZH	03/18/2019
A	ORIGINAL ISSUE	-	JBH	TR	JS/MDJ	07/01/2016	D	EDITORIAL CHANGES	-	GW	JS	MDJ	03/22/2018



INSULATED PROTECTIVE CAP (5)(III)



GROUNDING ELBOW

(10)(I)

IN-LINE BRACKET

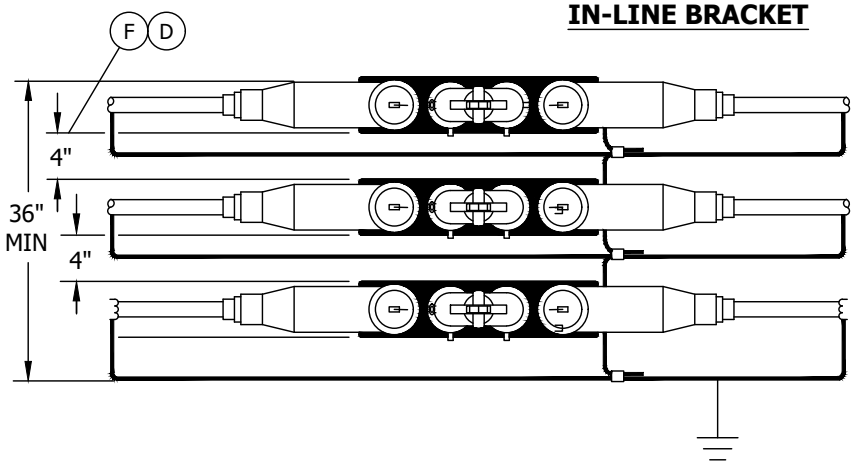

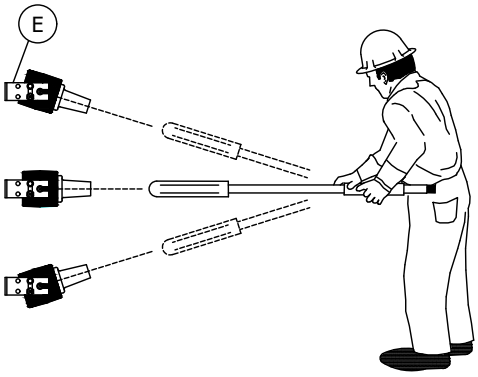

SQUARE BRACKET

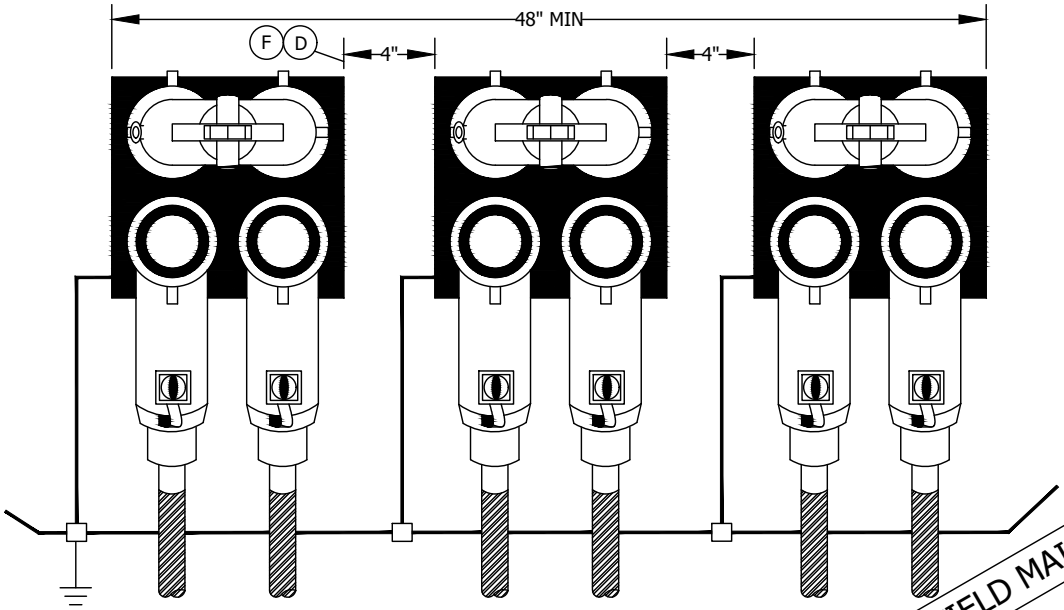

FIELD MAINTENANCE ONLY

© 1998 - 2019 San Diego Gas & Electric Company. All rights reserved. Removal of this copyright notice without permission is not permitted under law.

REV	CHANGE	DR	BY	DSN	APV	DATE	REV	CHANGE	DR	BY	DSN	APV	DATE
C	EDITORIAL CHANGES	-	DG	JS	MDJ	10/13/2017	F	MOVED TO FMO	EDM	EJA	GLW	CZH	12/09/2019
B	EDITORIAL CHANGES	-	DG	JS	MDJ	06/27/2017	E	COMPLETELY REVISED	-	DG	JS	CZH	03/18/2019
A	ORIGINAL ISSUE	-	JBH	TR	JS/MDJ	07/01/2016	D	EDITORIAL CHANGES	-	GW	JS	MDJ	03/22/2018

X Indicates Latest Revision | Completely Revised | New Page | Information Removed

SDG&E ELECTRIC UNDERGROUND FIELD MAINTENANCE ONLY STANDARDS

N-JUNCTION CLEER 600A 25KV
SQUARE CLEER 600A 25KV

FMO
UG4198.3

TABLE OF CONTENTS

INSTALLATION:

(A) N-JUNCTION CLEER PROVIDES A TEST, GROUND, AND ISOLATION POINT FOR 600 AMP TEE CONNECTIONS.

(B) N-JUNCTION CLEER INSTALLED WITH THE TEE BODY, ELBOW TAP PLUG, 200 AMP INSULATION RECEPTICLE

(C) N-JUNCTION CLEER CAN BE MOUNTED ON A CONCRETE WALL OR UNISTRUT.

(D) MOUNT UNITS AWAY FROM THE MANHOLE ENTRY AREA.

(E) N-JUNCTION CLEER CAN BE SET AT A DESIRED ANGLE FOR LIVE LINE TOOL OPERATION.

(F) MINIMUM HEIGHT NEEDED FOR STACKED 3 IN-LINE CLEER INSTALLATION IS 36 INCHES. MINIMUM VERTICAL SPACING BETWEEN ADJACENT IN-LINE CLEER BRACKET IS 4 INCHES.

(G) EACH N-JUNCTION CLEER UNIT IS TO BE CONNECTED TO THE SYSTEM GROUND.

(H) N-JUNCTION CLEER HAS GROUND ATTACHMENT POINTS AND COMES WITH TWO (2) GROUND LUGS (#8 SOL TO 2/0 STRANDED).

(I) BOND THE LOAD BREAK "C" CONNECTOR TO GROUND.

J. TORQUE TEE BODY TO MANUFACTURER'S SPECIFICATION OF 50-60 FOOT POUNDS.

K. ALL EXISTING CABLE(S) MUST BE RETERMINATED & RECRIMPED TO LAND LUG(S) PROPERLY, TO PREVENT UNNECESSARY STRESS TO CABLE(S), WHICH WILL CAUSE PREMATURE FAILURE.

TABLE OF CONTENTS

BILL OF MATERIAL:

ITEM	DESCRIPTION	QUANTITY	STANDARD PAGE	STOCK NUMBER	ASSEMBLY UNIT
1	JUNCTION BAR, 600A CLEER, 15KV, LOAD BREAK - INLINE	3	4198.2	S439870	CCL-JB
2	JUNCTION BAR, 600A CLEER, 15KV, LOAD BREAK - SQUARE	3	4198.3	S439872	CCL-SQ
3	ELBOW TEE BODY, 15KV, 600A WITH CAPACITIVE TEST POINT	6	4182	S326578	ELBO-T
4	ELBOW TAP PLUG	6	4182	S547328	LRTP
5	CAP, ISOLATION FOR JUNCTION BAR "C" MEMBER (VIII)	AS REQ'D	4198	S204300	CL6CAP
6	EXTENSION BUSHING, 600 AMP WITH LOAD TAP PLUG	AS REQ'D	4182	S336198	EXLRTP
7	INSULATION RECEPTACLE, 200 AMP	6	4180	S204304	INSREC
8	WIRE, BARE COPPER, #2, 7 STRANDED, SOFT DRAWN	AS REQ'D	4002.3	S812816	GDWIRE
9	CONNECTOR, COPPER, COMPRESSION	AS REQ'D	4172.2	-	-
10	JUMPER GROUNDING FOR JUNCTION BAR "C" MEMBER (VIII)	AS REQ'D	4198	-	-

FIELD MAINTENANCE ONLY

© 1998 - 2019 San Diego Gas & Electric Company. All rights reserved. Removal of this copyright notice without permission is not permitted under law.

REV	CHANGE	DR	BY	DSN	APV	DATE	REV	CHANGE	DR	BY	DSN	APV	DATE
C	EDITORIAL CHANGES	-	DG	JS	MDJ	10/13/2017	F	MOVED TO FMO	EDM	EJA	GLW	CZH	12/09/2019
B	EDITORIAL CHANGES	-	DG	JS	MDJ	06/27/2017	E	COMPLETELY REVISED	-	DG	JS	CZH	03/18/2019
A	ORIGINAL ISSUE	-	JBH	TR	JS/MDJ	07/01/2016	D	EDITORIAL CHANGES	-	GW	JS	MDJ	03/22/2018

NOTES:

I. GROUNDING WITH THE N-JUNCTION CLEER REQUIRES A 600 AMP LOAD BREAK GROUNDING ELBOW (S493780).

II. N-JUNCTION CLEER IS FULLY SHIELDED AND FULLY SUBMERSIBLE.

III. THE N-JUNCTION CLEER CAN BE FULLY ISOLATED USING THE 600 AMP LOAD BREAK PROTECTIVE CAP (S204300). ALL BUSHINGS OF THE CONNECTOR SYSTEM ARE THEN INSULATED AND DEADFRONT.

IV. NO LOAD SHALL BE CONNECTED TO THE 200 AMP TEST POINT.

V. NO STACKING OF TEES ALLOWED ON THE N-JUNCTION CLEER UNITS.

VI. BATTERY-OPERATED EQUIPMENT IS NOT TO BE USED WHEN TORQUING REQUIREMENTS EXIST.

VII. ALTHOUGH THIS DEVICE IS RATED AS A 600amp LOAD BREAK DEVICE, SDG&E WILL ONLY PERFORM OPERATIONS WHEN DE-ENERGIZED.

VIII. WILL NEED SIX (6) GROUNDING JUMPERS (S439780) AND SIX (6) ISOLATION CAPS (S204300) FOR EACH INSTALLATION. AS THESE ARE REUSABLE (CHECKED IN/OUT) WILL MONITOR FOR MIN/MAX NEEDS AS NEEDED.

IX. FEEDER MUST BE DE-ENERGIZED DURING ANY CONSTRUCTION AND INTERCONNECTION WITH THE COOPER CLEER. THIS CONNECTION MAY BE PLACED IN WALK-IN VAULTS AND MANHOLES TO CREATE A VISIBLE OPEN IN THE 600 AMP UNDERGROUND SYSTEM. IT CAN BE INSTALLED DURING OUTAGES TO RESTORE PARTIAL SERVICE BY OPENING TEE'S; SEPARATING TEE'S DURING OUTAGES CAN BE FOUND IN ELECTRIC STANDARD PRACTICE 222 SECTION 4.5.3 FOR PARTIAL RESTORATION. IN THE PLANNING AND DESIGN PHASE, THE CONNECTION MAY BE PLACED IN MANHOLES ON LONG, CONTINUOUS RUNS TO SUPPLY A MANUAL, STICK-OPERABLE, DISCONNECT POINT. PLACEMENT WILL ALSO INCLUDE EVERY OTHER MANHOLE AND VAULT BETWEEN SECTIONALIZING DEVICES.

XI. DESIGN SCOPE SHOULD INCLUDE VAULTS AND MANHOLES THAT HAVE SUFFICIENT SPACE AND LENGTH TO OPERATE WITHIN THE STRUCTURE. 3325, 3326, AND 3327 (TRANSMISSION SUBSTRUCTURE NEAR SUBSTATIONS GENERALLY) MANHOLES SHOULD HAVE SUFFICIENT SPACE (4198.4). 3322, 3324 (BOTH TYPES), AND 3399 MANHOLES WILL REQUIRE APPROVAL FROM EDE DEPENDING ON THE LAYOUT OF THE SUBSTRUCTURE.

TABLE OF CONTENTS

REFERENCE:

a. PARTIAL RESTORATION, SEE ELECTRIC STANDARD PRACTICE 222.

FIELD MAINTENANCE ONLY

© 1998 - 2019 San Diego Gas & Electric Company. All rights reserved. Removal of this copyright notice without permission is not permitted under law.

REV	CHANGE	DR	BY	DSN	APV	DATE	REV	CHANGE	DR	BY	DSN	APV	DATE
C	EDITORIAL CHANGES	-	DG	JS	MDJ	10/13/2017	F	MOVED TO FMO	EDM	EJA	GLW	CZH	12/09/2019
B	EDITORIAL CHANGES	-	DG	JS	MDJ	06/27/2017	E	COMPLETELY REVISED	-	DG	JS	CZH	03/18/2019
A	ORIGINAL ISSUE	-	JBH	TR	JS/MDJ	07/01/2016	D	EDITORIAL CHANGES	-	GW	JS	MDJ	03/22/2018

4200 - CABLE POLES

4200 - CABLE POLES

MAIN TABLE OF CONTENTS

PAGE	SUBJECT
4202	JOINT CABLE POLE RISERS USING WOODEN LADDER ARMS
4203	CABLE POLE RISER INSTALLATION CABLE-IN-CONDUIT
4205	INSTALLATION OF PERMANENT POLE STEPS
4207	CABLE POLE TERMINAL MOUNTING INFORMATION (PORCELAIN TERMINATIONS) (FOR CONTAMINATION DISTRICT 1)
4208	3Ø CABLE POLE RISER INSTALLATION MODIFICATION FROM SINGLE TO DOUBLE RISER FOR EXISTING CABLE POLES
4215	0-750V CUSTOMER OWNED UNDERGROUND SERVICE FROM AN OVERHEAD LINE, ONE DUCT
4219	0-750 VOLT THREE AND FOUR DUCT RISER SUPPORTS
4228	CROSSARM MOUNTED TERMINALS 4KV 4 WIRE WYE
4229	12.47KV AND BELOW 3Ø CABLE POLE 1/C PER Ø, UPSWEEP BRACKET CONSTRUCTION
4230	VOLTAGE BOOSTING TRANSFORMER STATION CABLE POLE USING NON-PORCELAIN TERMINALS, 12-12.47KV THREE-PHASE INSTALLATION
4232	12.47KV AND BELOW CABLE POLE, UPSWEEP BRACKET, THREE-PHASE 1/C PER PHASE, LINE ARM MOUNTED DISCONNECTS, NON-PORCELAIN TERMINALS
4233	12.47KV AND BELOW CABLE POLE, UPSWEEP BRACKET, 3Ø, 1/C PER PHASE, LINE ARM MOUNTED DISCONNECTS
4237	BRACKET MOUNTED TERMINALS, 12KV 3 WIRE, ARMLESS TANGENT CONSTRUCTION
4238	BRACKET MOUNTED TERMINALS, 12KV 3 WIRE, ARMLESS DEADEND CONSTRUCTION
4239	CROSSARM CABLE POLE, 3Ø, 1/C PER PHASE DEADEND CONSTRUCTION, 12.47KV AND BELOW
4241	12.47KV AND BELOW DEADEND CABLE POLE ARM, 3Ø, 1/C PER Ø, HOOKSTICK SWITCHED
4251	12.47KV AND BELOW DEADEND CABLE POLE, 6 OR 7 OH CONDUCTORS, 1 OR 2 TERMINALS PER CONDUCTOR, HOOKSTICK SWITCHED
4287	REVISED CT & PT POLETOP METERING INSTALLATION, 12 KV, OH & US SERVICES

© 1998 - 2021 San Diego Gas & Electric Company. All rights reserved. Removal of this copyright notice without permission is not permitted under law.

REV	CHANGE	DR	BY	DSN	APV	DATE	REV	CHANGE	DR	BY	DSN	APV	DATE
C	EDITIORIAL CHANGES	-	RSL	JES	CZH	4/13/2020	F						
B	ADDED 4232	-	JK	JS	CZH	3/18/2019	E	OH1192 MOVED TO FMO	EDM	MRF	GLW	CZH	07/27/2021
A	ORIGINAL ISSUE	-	JS	TR	MDJ	7/25/2016	D	EDITIORIAL CHANGES	EDM	JAC	JES	CZH	7/1/2020

X Indicates Latest Revision | Completely Revised | New Page | Information Removed

SDG&E ELECTRIC OVERHEAD FIELD MAINTENANCE ONLY STANDARDS

CABLE POLES FMO
TABLE OF CONTENTS

FIELD MAINTENANCE ONLY

REVISION HISTORY:

7/13/2016: All versions prior to 2016 are superseded by their current version found inside the Overhead Construction Standard Manual.

TABLE OF CONTENTS

© 1998 - 2016 San Diego Gas & Electric Company. All rights reserved. Removal of this copyright notice without permission is not permitted under law.

REV	CHANGE	BY	DSGN	APPV	DATE	REV	CHANGE	BY	DSGN	APPV	DATE
C						F					
B						E					
A	ORIGINAL ISSUE	JS	IL	MDJ	7/13/2016	D					

X Indicates Latest Revision | Completely Revised | New Page | Information Removed

SHEET 1 OF 1

SDG&E ELECTRIC UNDERGROUND STANDARD

JOINT CABLE POLE RISERS USING WOODEN LADDER ARMS

FMO UG 4202

SCOPE: THIS STANDARD 1) SHOWS THE STANDARD CABLE POLE RISER POSITIONS FOR SDG&E TELCO AND CATV COMPANIES IT IS FOR RISER PLACEMENT ONLY (SEE SECTION 1400/4200 FOR SPECIFIC CONSTRUCTION DETAILS)

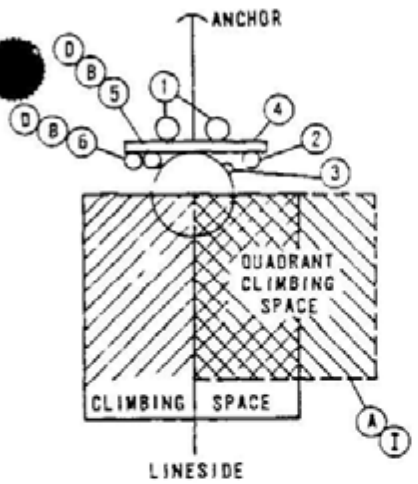

FIGURE 1

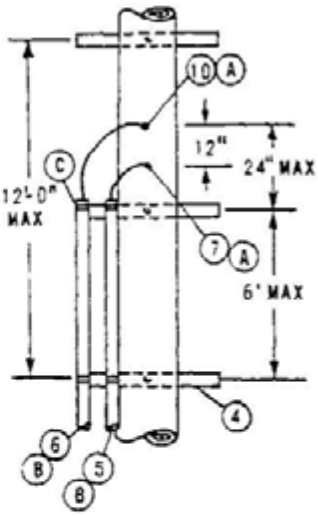

FIGURE 2

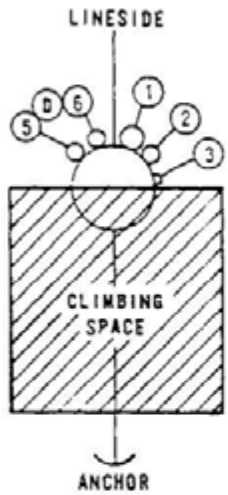

FIGURE 3

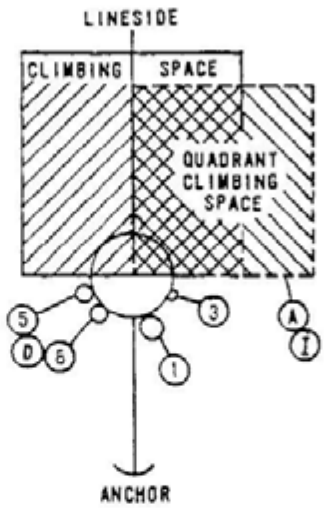

FIGURE 4

DEAD END CONSTRUCTION

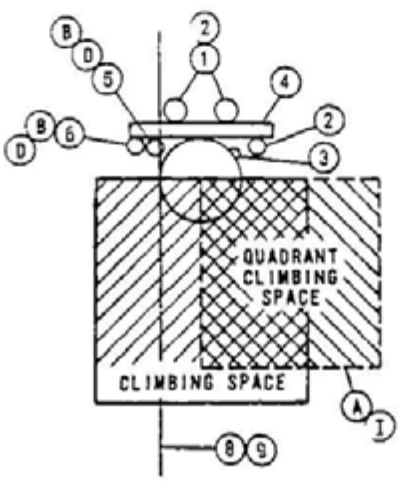

FIGURE 5

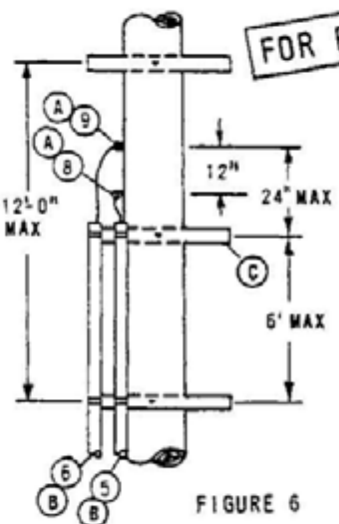

FIGURE 6

FOR FIELD MAINTENANCE ONLY

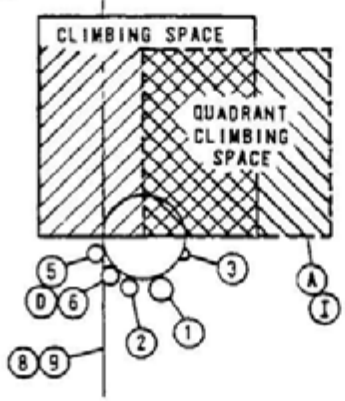

FIGURE 7

TANGENT CONSTRUCTION

INSTALLATION.

(A) QUADRANT CLIMBING SPACE PROVIDED THROUGH CATV AND TELCO AERIAL ATTACHMENT LEVELS ONLY.

(B) C.A.T.V. AND TELCO TO ATTACH CONDUIT TO BACK SIDE OF RISER LADDER ARMS

(C) C.A.T.V. OR TELCO TO PLACE RISER LADDER AP* TO HOLD TOP OF OWN CONDUIT.

(D) C A.T.V. AND TELCO TO ALWAYS BE IN SAME QUADRANT.

F. CONDUIT RISER AT BASE OF POLE NOT TO INFRINGE ON CURB OR SIDEWALK POSITIONS

REFERENCES

G. PVC RISERS ARE NOT PERMITTED WITHIN THE CLIMBING SPACE PER G O 95 RULE 22 2C.

H. G.O. 95 RULE 91.3-A1C REQUIRES POLE STEPS ON ALL JOINTLY USED CABLE POLES (SEE STANDARD 363)

I. SEE SECTION 200 FOR ALLOWABLE G O. 95 CLIMBING SPACE OBSTRUCTIONS.

J. NO CATV OR TELCO JUMPERS ALLOWED IN QUADRANT CLIMBING SPACE PER G.O. 95 RULE 84.7.

ITEM	DESCRIPTION	ITEM	DESCRIPTION
1	SDG&E PRIMARY RISER	6	C.A.T V. RISER POSITION
2	SDG&E SECONDARY RISER	7	TELCO DEAD END ATTACHMENT
3	SDG&E ELECTRIC GROUND	8	TELCO TANGENT (THRU) POSITION
4	RISER LADDER ARM	9	C A T V. TANGENT (THRU) POSITION
5	TELCO RISER POSITION	10	C.A.T V. DEAD END ATTACHMENT

SDG&E ELECTRIC STANDARDS

DATE 11-16-81
APPD JEY

JOINT CABLE POLE RISERS USING WOODEN LADDER ARMS

~~OH 1499.001~~
UG 4299.001
SUPERCEDES
4202.1 (3-31-81)

TABLE OF CONTENTS

FIELD MAINTENANCE ONLY

REVISION HISTORY:

7/13/2016: All versions prior to 2016 are superseded by their current version found inside the Overhead Construction Standard Manual.

TABLE OF CONTENTS

© 1998 - 2016 San Diego Gas & Electric Company. All rights reserved. Removal of this copyright notice without permission is not permitted under law.

REV	CHANGE	BY	DSGN	APPV	DATE	REV	CHANGE	BY	DSGN	APPV	DATE
C						F					
B						E					
A	ORIGINAL ISSUE	JS	IL	MDJ	7/13/2016	D					

X Indicates Latest Revision | Completely Revised | New Page | Information Removed

SHEET
1 OF 1

SDG&E ELECTRIC UNDERGROUND STANDARD

CABLE POLE RISER INSTALLATION
CABLE-IN-CONDUIT

FMO
UG 4203

SCOPE: THIS STANDARD SHOWS THE CONSTRUCTION FOR SINGLE-PHASE PRIMARY AND SECONDARY CABLE-IN-CONDUIT (CIC) INSTALLATIONS.

CABLE AND CONDUIT TABLE

RISER EXTENSION	CABLE POLE RISER	PRIMARY IN CONDUIT (PID)	SECONDARY IN CONDUIT (SIDA)
3"	3" (D)	1	1-(2-3/0, 1-1/0 & SMALLER)
4"	3"	2	1-(2-350 KCMIL, 1-1/0) (B)
5"	3"	(H)	2-(2-3/0, 1-1/0 ONLY) (C)

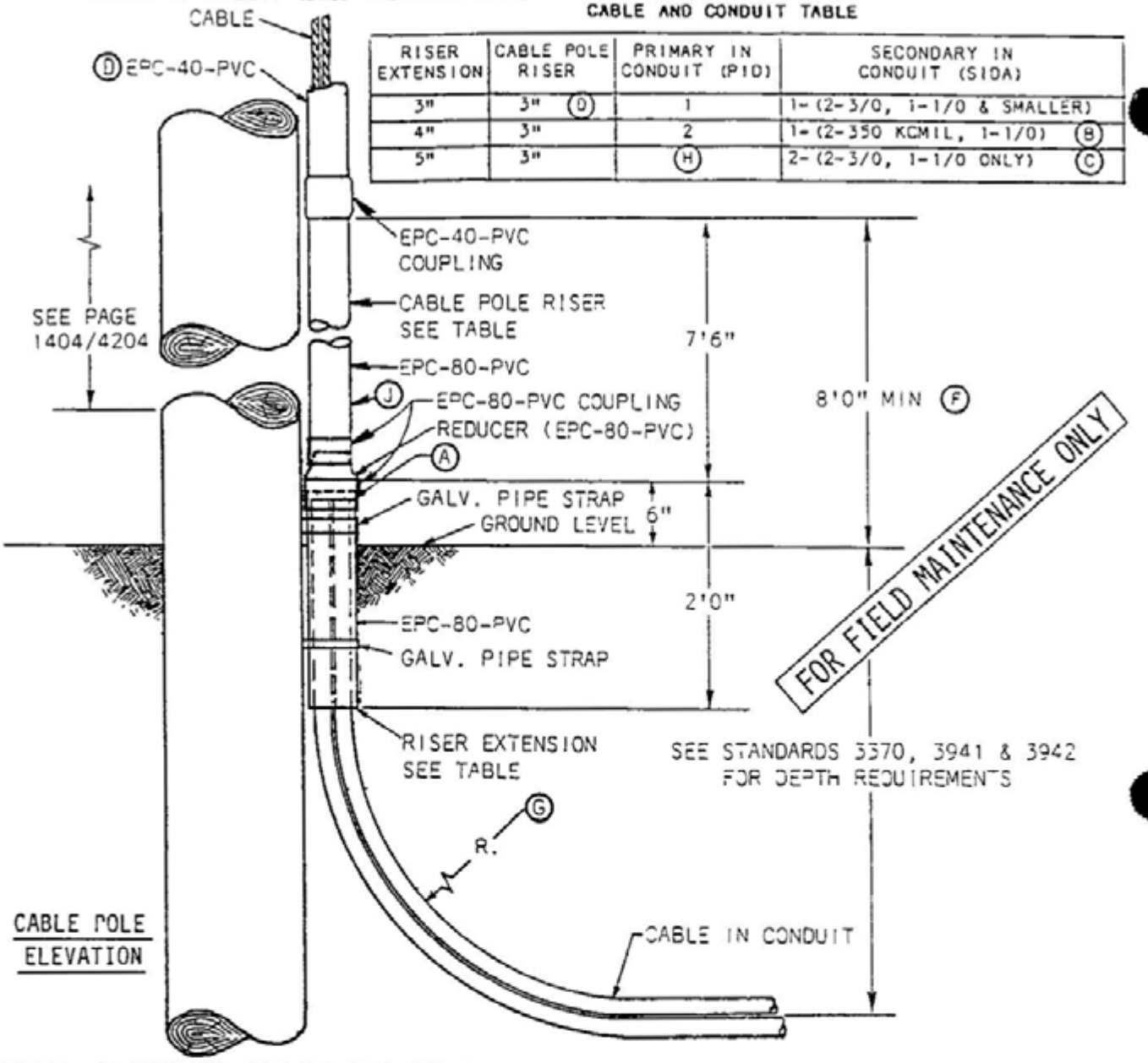

CABLE POLE ELEVATION

NOTES: NO MORE THAN TWO CIC CONDUITS FOR A RIGID CONDUIT RISER IS ALLOWED.

INSTALLATION:

(A) CUT CONDUIT FROM CABLE-IN-CONDUIT 4 INCHES ABOVE GROUND LEVEL.

(B) THE 350 KCMIL CABLE-IN-CONDUIT (SIDA) SHALL NOT BE USED FOR SERVICES. IF A SERVICE REQUIRES 350 CABLE, USA CABLE AND RIGID CONDUIT MUST BE USED.

(C) FOR 2 RUNS OF SIDA IN ONE RISER, DERATE AMPACITY 20%.

(D) FOR 3/0 AND SMALLER SIDA, REDUCE THE TOP PORTION OF THE RISER ABOVE THE 8 FOOT LEVEL TO 2 INCH CONDUIT.

REFERENCE:

(F) RISERS OF PLASTIC PIPE SHALL BE EPC-80-PVC (SCHEDULE 80) WITH A MINIMUM NOMINAL PIPE SIZE OF 3 INCHES FROM THE GROUND LINE TO A LEVEL NOT LESS THAN 8 FEET ABOVE THE GROUND LINE PER G.O. 95, RULE 54.6-E.

(H) SEE PAGES 1499.003/4299.003 THRU 1403.7/4203.7 FOR THREE-PHASE PRIMARY CABLE IN CONDUIT INSTALLATION WHICH REQUIRES 'U' SHAPED MOULDING.

(I) SEE PAGE 1404.1/4204.2 FOR CABLE POLE RISER BILL OF MATERIAL.

(J) SEE PAGES 1499.009/4299.009 THRU 1405.3/4205.3 FOR MULTIPLE RISER INSTALLATION.

~~OH 1499.002~~ UG 4299.002 SUPERCEDES 4203.1 (3-2-84)	SDG&E ELECTRIC STANDARDS	DATE 1-1-87 APPD
	CABLE POLE RISER INSTALLATION CABLE-IN-CONDUIT	

TABLE OF CONTENTS

SCOPE: THIS STANDARD SHOWS THE MATERIALS AND PROCEDURES FOR TERMINATING THREE PREASSEMBLED CABLE-IN-CONDUIT ON RISER POLE.

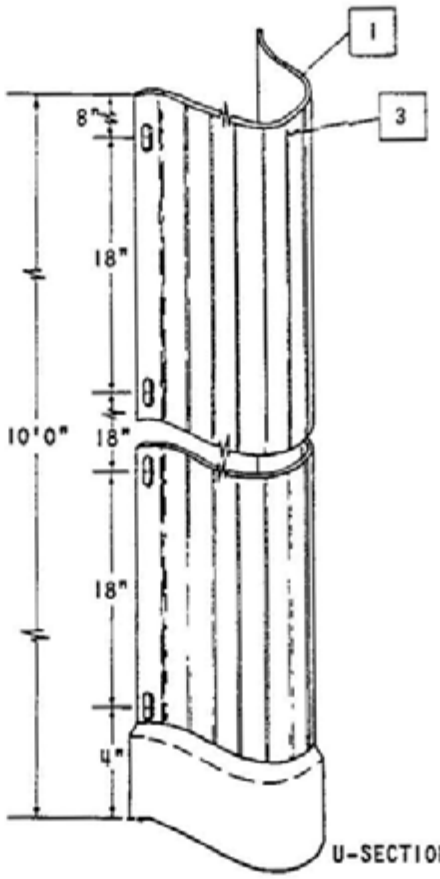

U-SECTION

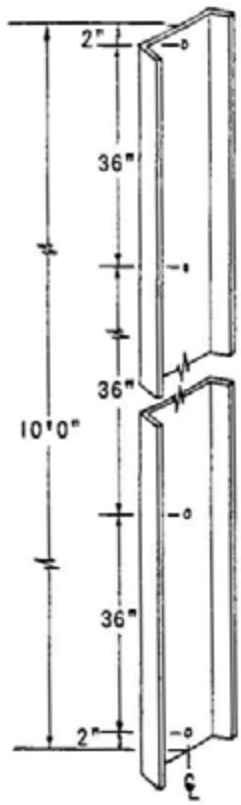

BACKUP PLATE

FOR FIELD MAINTENANCE ONLY

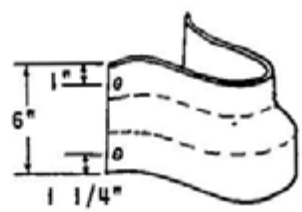

REDUCER BOOT

NOTE: DIMENSIONS A,B,& C HAVE A TOLERANCE OF ± 13".

BILL OF MATERIAL:

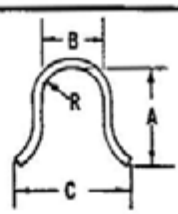

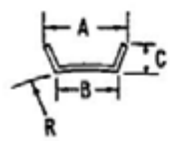

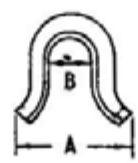

	U-SECTION MOLDING			BACKUP PLATE		REDUCER BOOT		
SIZE	3"	3"	4"	3"	4"	3" TO 4"		
SCHEDULE	80	30	40	N/A	N/A	N/A		
LENGTH	10'0"	10'0"	10'0"	10'0"	10'0"	6"		
M & S NO.	600064	600032	600096	542992	542994	160608		
A	3 3/8"	3 3/8"	4 1/8"	3 1/4"	4 1/4"	8 1/4"		
B	3"	3"	4"	2 5/8"	3 5/8"	2 5/8"		
C	6 1/4"	6 1/4"	7 1/4"	7/8"	1"	--		
R	1 7/16"	1 19/32"	2"	5"	5"	--		
WALL THICKNESS	.300"	.150"	.237"	.063"	.063"	.150"		
TOLERANCE	-.0" +.036"	-.0" +.020"	-.0" +.020"	±.015"	±.015"	-.0" +.015"		

SDG&E ELECTRIC STANDARDS

DATE 1-1-87
APPD JAB/RDS

3Ø CABLE POLE RISER INSTALLATION CABLE-IN-CONDUIT

~~OH 1499.003~~
UG 4299.003
SUPERCEDES 4203.2
(1-4-80)

TABLE OF CONTENTS

SEQUENCE FOR INSPECTION

SEQ	DESCRIPTION/DIMENSIONS	TOLERANCE
1	WALL THICKNESS	
	U-Sections 3" Sch. 80 .300	-.0" + .036"
	3" Sch. 30 .150"	-.0" + .020"
	4" Sch. 40 .237"	-.0" + .020"
	Above wall thicknesses are in accordance with G.O. 95 Rule 54.6D2.	
2	GENERAL APPEARANCE ALL SURFACES	
	U-Sections, Backup Plates and Reducer Boot	Free from warpage, cuts, blemishes and protrusions.
3	SCRIBE MARK	
	Scribe mark indicating minimum overlap distance should be visible 1" from the plain end of the U-Section.	

FOR FIELD MAINTENANCE ONLY

BILL OF MATERIAL:

ITEM	*QUANTITY REQUIRED	DESCRIPTION	USE BELOW 8 FT.	USE ABOVE 8 FT.	STOCK NO. OR CONST. STDS.
1	3'	Riser, U-Section 4"x10' Sch. 40	yes	no	600096
2	1	Riser, U-Section 3"x10' Sch. 80	yes	no**	600064
3	2	Riser, U-Section 3"x10' Sch. 40	no	yes	600032
4	1	Boot, Reducer 4" to 3"	yes	no	160608
5	3	Plate, Backup 3"x10'	yes	yes	542992
6	3'	Plate, Backup 4"x10'	yes	no	542994
7	1	Screw, Lag, Sq. Head 1/2'x4" (E)	no	yes	621568
8	42	Screw, Lag, Sq. Head 1/4"x 2 1/2" (E)	yes	yes	621856
9	42	Washer, Std. Flat Round 1/4" (E)	yes	yes	799520
10	46	6d Galvanized Nails (E)	yes	yes	—
11	3	Grip, Cable 5 1/4"x12"	no	yes	394336

(E) Exempt Material

* This quantity is a typical 40' riser installation, if pole height varies from this distance adjust appropriate material accordingly.

** Only excess portion of 1 - 10 ft. 3" Sch. 80 U-Section is allowed above the 8 ft. level.

TABLE OF CONTENTS

~~OH 1499.004~~ UG 4299.004 SUPERCEDES 4203.3 (11-16-81)	SDG&E ELECTRIC STANDARDS 3Ø CABLE POLE RISER INSTALLATION CABLE-IN-CONDUIT	DATE 1-1-87 APPD JLG/RDT

INSTALLATIO. INSTRUCTIONS

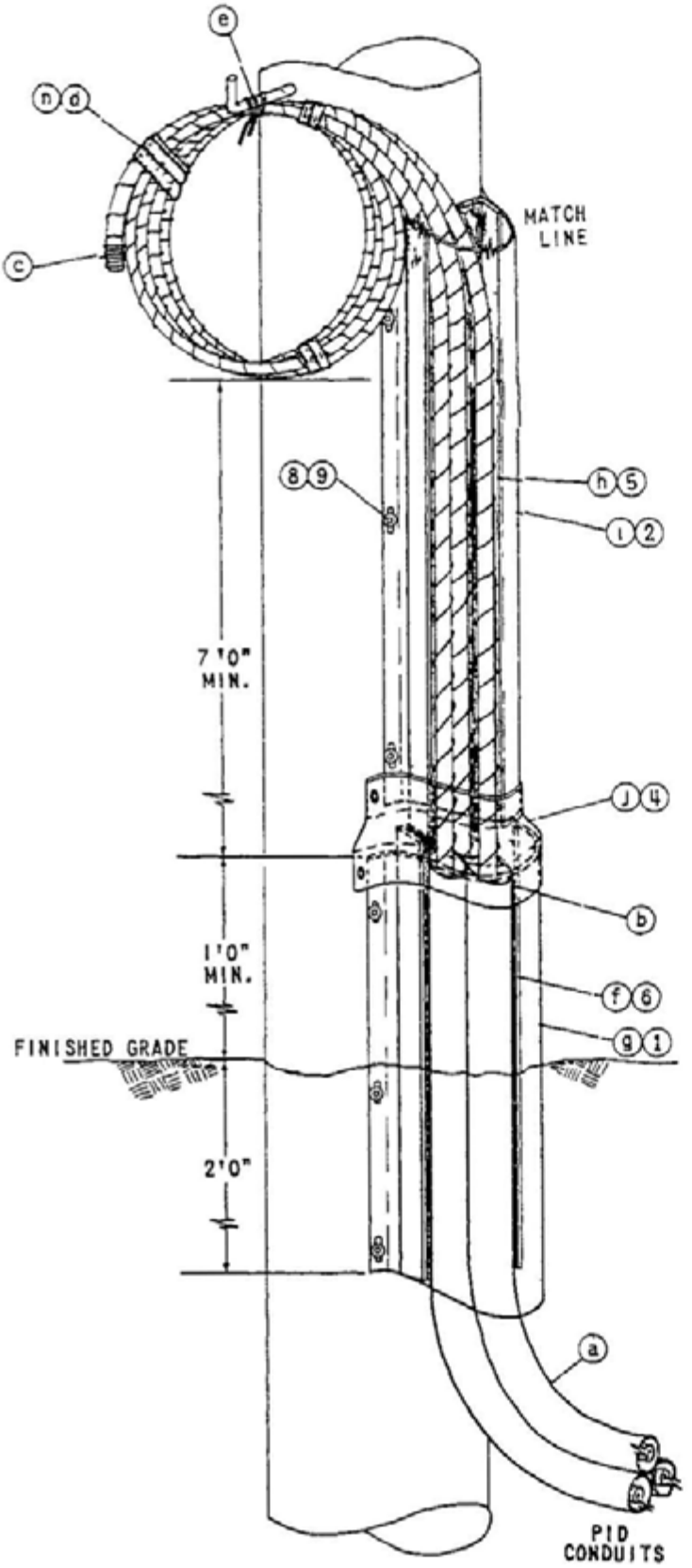

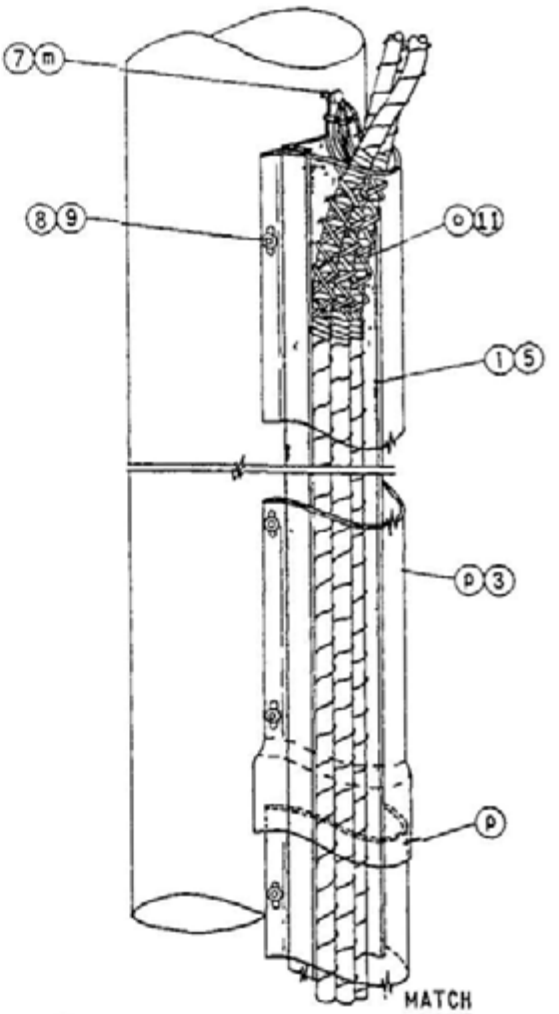

NOTE: Care must be taken not to spike conductors with linemans hooks while performing installation, ascending or descending a riser pole.

FOR FIELD MAINTENANCE ONLY

TABLE OF CONTENTS

DATE 1-1-87 APPD JLB/RBT	SDG&E ELECTRIC STANDARDS 30 CABLE POLE RISER INSTALLATION CABLE-IN-CONDUIT	~~OH 1499.005~~ UG 4299.005 SUPERCEDES 4203.4 (1-23-80)

FOR FIELD MAINTENANCE ONLY

U-SECTION MOLDING LOCATION

Verify that the quadrant selected by Designer/Planner for the cable pole riser meets the following requirements. If the following requirements cannot be met, contact the Designer or Planner who requested the installation:

Clearances

The U-section molding shall not enter climbing space per G.O. 95 Rule 22.2D. See O.H. Standard page 251 for allowable working and climbing space requirements.

Location of U-section molding in relation to TELCO and CATV (per Overhead Standards page 1402).

U-SECTION MOLDING INSTALLATION

Material Installation Sequence

Note: If installation can be completed sequencially, steps c, d and n, can be eliminated.

(a) Terminate PID at cable pole by forming a 36" minimum radius bend with the cable-in-conduit at the base of the pole. Provide sufficient cable-in-conduit needed to terminate cable with drip loop at terminal level before cutting cable-in-conduit from cable reel.

(b) Cut and remove excess pvc conduit from the PID run so the remaining conduit terminates 1' above finished grade. When removing excess pvc conduit, carefully slide excess conduit away from primary conductors.

(c) To prevent moisture from entering exposed conductors, always seal exposed ends of conductors with "Aquaseal" and pvc tape.

(d) Individually coil each primary conductor making sure coil is not less than 2' in diameter. Secure each coil in several places with a gray gas wrap tape to prevent conductors from uncoiling.

(e) Secure coils to the bottom of the pole step with rope to prevent conductors from damage when the pole is climbed. If pole steps are not available, install lag screws (M&S 621856) in place of pole steps. Bottom of each coil must be 8' above existing grade to prevent vandalism.

(f) Install a 3' section of 4" backup plate with 2' extended below finished grade and 1' extended above finished grade. Temporarily push conductors to one side of the riser quadrant and secure 4" backup plate to pole with 6d galvanized nails at each end and in the middle. Because holes are not provided nails must be driven through backup plate.

TABLE OF CONTENTS

TABLE OF CONTENTS

(g) Install a 3' section of 4" U-section molding over the previously installed backup plate (step f) encasing the conduits. Nail 4" U-section molding to pole every 18" using lag screws and washers, (items 8 and 9 from bill of materials).

(h) Install a 10' section of 3" backup plate behind primary conductors and mate to previously installed backup plate. Temporarily push conductors to one side of the riser quadrant to prevent damage to conductors. Use 6d galvanized nails to attach backup plate to pole starting and ending at each end.

(i) Install a 10' section of 3" U-section molding schedule 80, over previously installed backup plate (step h) encasing primary conductors. To permit thermal expansion, do not drive lag screws tight and leave approximately 1/4" gap between the 3" and 4" U-section moldings. Secure U-section molding to pole every 18" with lag screw and washers (item 8 and 9 from bill of materials).

(j) Install reducer boot over 3" and 4" U-section molding using 6d galvanized nails. Make sure reducer boot fits securely over each section.

FOR FIELD MAINTENANCE ONLY

k) When the contractor provides trench, the area around the riser bend at base of pole must be backfilled and compacted to 90% and a distance equal to the depth of the trench by the crew to prevent damage to conductors.

(l) Install remaining backup plate from termination point in (step h) to elevation of pole where U-section molding will terminate. Refer to Overhead Standards page 1406 for elevation of U-section molding termination. Nail backup plate to pole with 6d galvanized nails every 18".

(m) Install lag screw (item 7 from bill of materials) 2" beyond termination of U-section molding for cable grip support.

(n) Remove each conductor coil from pole step, and remove binding tape. Uncoil each conductor carefully to prevent bending conductor.

(o) Install one cable grip approximately 2' from the end of each conductor, (item 11 from bill of materials). Hoist each conductor and hang cable grip on lag screw installed by (step m) . Adjust cable grips to determine optimum support positions, tie cables temporarily to pole and slide cable grip below final position. Tape over concentric neutral at final position where grip will seat with half lapped layers of glass tape (720256) and vinyl plastic (720580) over glass tape to assure positive grip. Position cable grip over taped area and attach cable grip to lag screw installed in (step m).

(p) Install required amount of 3" U-section schedule 30 sections needed to cover backup plate and encase conductors to the termination point of the riser installation. Install belled end of U-section molding over a plain end of previously installed U-section molding. Line up edge of belled end with scribe mark 1" from plain end to ensure that sufficient spacing is provided between U-sections for thermal expansion. Nail U-section molding to pole with lag screws and washers (item 8 and 9 from bill of materials) every 36". Lag screws should be snug but not tight, this is also to allow thermal expansion of U-section. Additional lag screws may be needed at 18" intervals if U-section molding separates more than 1/16" away from pole.

MAINTENANCE REQUIREMENTS

Inspection

The U-section molding installation shall be inspected periodically for the following:

Warpage of U-Section Exposing Conductors

For Separation of U-Section Molding From Pole More than 1/16"

Cracks or Damage in U-Sections Which Expose Conductors

FOR FIELD MAINTENANCE ONLY

TABLE OF CONTENTS

OH363 UG4205 FIELD MAINTENANCE ONLY

ALL VERSIONS LISTED IN FMO ARE SUPERSEDED BY THEIR CURRENT VERSION FOUND INSIDE THE OVERHEAD AND UNDERGROUND CONSTRUCTION STANDARD MANUAL.

REVISION HISTORY:

07/1/2020: MOVED TO FMO

TABLE OF CONTENTS

© 1998 - 2020 San Diego Gas & Electric Company. All rights reserved. Removal of this copyright notice without permission is not permitted under law.

REV	CHANGE	DR	BY	DSN	APV	DATE	REV	CHANGE	DR	BY	DSN	APV	DATE
C							F						
B							E						
A	ORIGINAL ISSUE	EDM	JAC	GLW	CZH	7/1/2020	D						

Indicates Latest Revision | Completely Revised [X] | New Page | Information Removed

SHEET 1 OF 1

SDG&E ELECTRIC OVERHEAD AND UNDERGROUND FIELD MAINTENANCE ONLY STANDARDS

INSTALLATION OF PERMANENT POLE STEPS

FMO OH363 UG4205

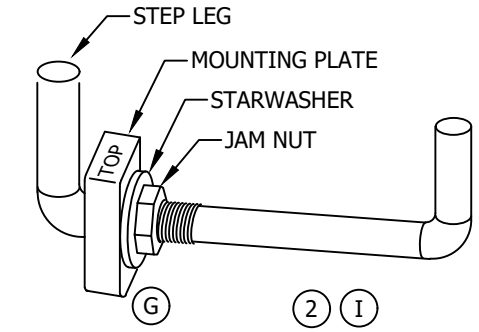

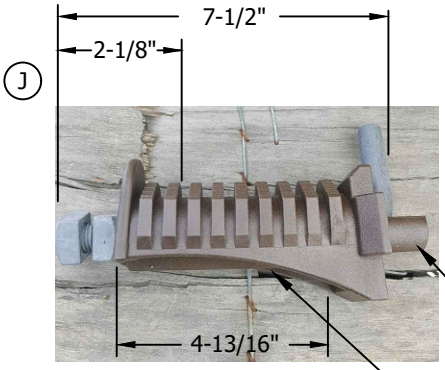

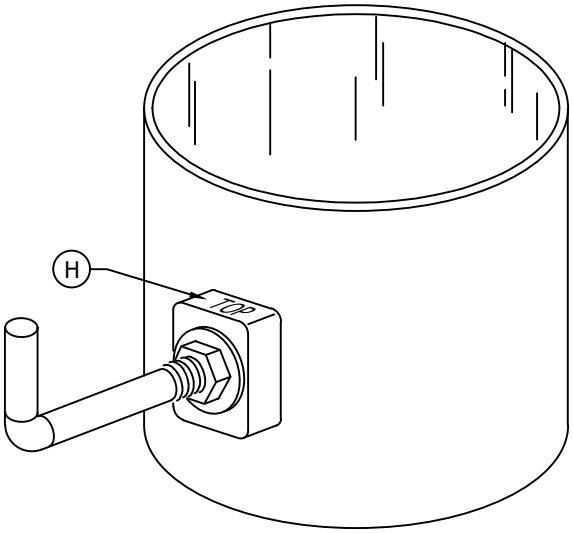

STEP BOLT COLLAR

CURVED FOR ROUND HOLES

3

FIELD MAINTENANCE ONLY

BILL OF MATERIALS:

ITEM	DESCRIPTION	STOCK NUMBER	A.U
1	STEP, POLE, DRIVING TYPE (WOOD)	S692992	STEP
2	STEP, POLE, BOLTED (STEEL OR FIBERGLASS)	S692300	STEP-S
3	STEP, POLE, COMPOSITE, BROWN, (STEEL OR FIBERGLASS)	S692990	STEP-C

INSTALLATION: (Cont'd)

(H) ENSURE THAT STEP MOUNTING PLATE IS POSITIONED WITH THE SIDE STAMPED "TOP" FACING UP.

(I) INSTALL STEP BY INSERTING LEG OF STEP INTO POLE STEP HOLE. SLIDE MOUNTING PLATE OVER SQUARE KEY AT BASE OF STEP UNTIL FLUSH AGAINST POLE. SLIDE STAR WASHER OVER STEP THREADS AND FLUSH AGAINST MOUNTING PLATE. RUN JAM NUT DOWN OVER THREADS BY HAND UNTIL FLUSH AGAINST STAR WASHER AND HAND TIGHTEN. USING WRENCH, SNUG JAM NUT AN ADDITIONAL 1/4 TURN ONLY.

(J) INSTALL COMPOSITE STEP BY REMOVING THE OUTER NUT AND SPIN THE INNER NUT OUT TO THE END OF THE THREADED BOLT. INSERT THE LEG OF STEP INTO THE POLE STEP HOLE. DO NOT BREAK OFF THE STEP BOLT COLLAR. SPIN THE INNER NUT AGAINST THE STEP AND HAND TIGHTEN. USING WRENCH, SNUG JAM NUT AN ADDITIONAL 1/4 TURN ONLY.

NOTE:

II. POLE STEP MOUNTING HOLE DIAMETER 13/16 INCHES TO 1-1/8 INCHES.

© 1998 - 2020 San Diego Gas & Electric Company. All rights reserved. Removal of this copyright notice without permission is not permitted under law.

REV	CHANGE	DR	BY	DSN	APV	DATE	REV	CHANGE	DR	BY	DSN	APV	DATE
C	EDITORIAL CHANGES	-	JS	JS	MDJ	6/26/2017	F						
B	EDITORIAL CHANGES	-	JS	IL	MDJ	6/23/2016	E	MOVED TO FMO	EDM	JAC	GLW	CZH	7/1/2020
A	UPDATED INSTALLATION NOTES	-	JC	-	-	12/16/2014	D	NOTES UPDATE	-	JC	JS	MDJ	1/17/2018

X Indicates Latest Revision | Completely Revised | New Page | Information Removed

SHEET 1 OF 1

SDG&E ELECTRIC OVERHEAD AND UNDERGROUND FIELD MAINTENANCE ONLY STANDARDS

INSTALLATION OF PERMANENT POLE STEPS

FMO
OH363.1
UG4205.1

TABLE OF CONTENTS

FIELD MAINTENANCE ONLY

REVISION HISTORY:

7/13/2016: All versions prior to 2016 are superseded by their current version found inside the Overhead Construction Standard Manual.

TABLE OF CONTENTS

© 1998 - 2016 San Diego Gas & Electric Company. All rights reserved. Removal of this copyright notice without permission is not permitted under law.

REV	CHANGE	BY	DSGN	APPV	DATE	REV	CHANGE	BY	DSGN	APPV	DATE
C						F					
B						E					
A	ORIGINAL ISSUE	JS	IL	MDJ	7/13/2016	D					

X Indicates Latest Revision | Completely Revised | New Page | Information Removed

SHEET
1 OF 1

SDG&E ELECTRIC UNDERGROUND STANDARD

CABLE POLE TERMINAL MOUNTING INFORMATION
(PORCELAIN TERMINATIONS)
(FOR CONTAMINATION DISTRICT 1)

FMO
UG 4207

TABLE OF CONTENTS

SCOPE. THIS STANDARD SHOWS VARIOUS METHODS OF CABLE TERMINATION BRACKETS USED TO CONNECT UNDERGROUND CABLES TO OVERHEAD CONDUCTORS.

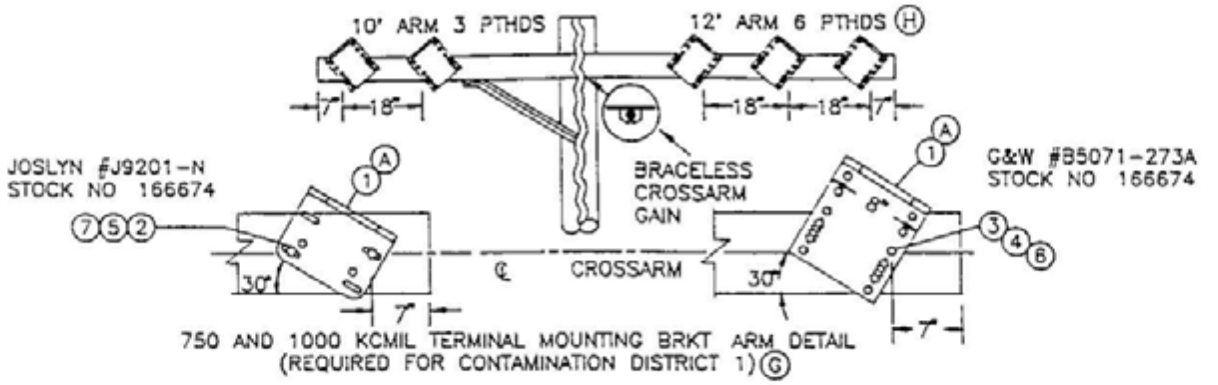

750 AND 1000 KCMIL TERMINAL MOUNTING BRKT ARM DETAIL
(REQUIRED FOR CONTAMINATION DISTRICT 1) (G)

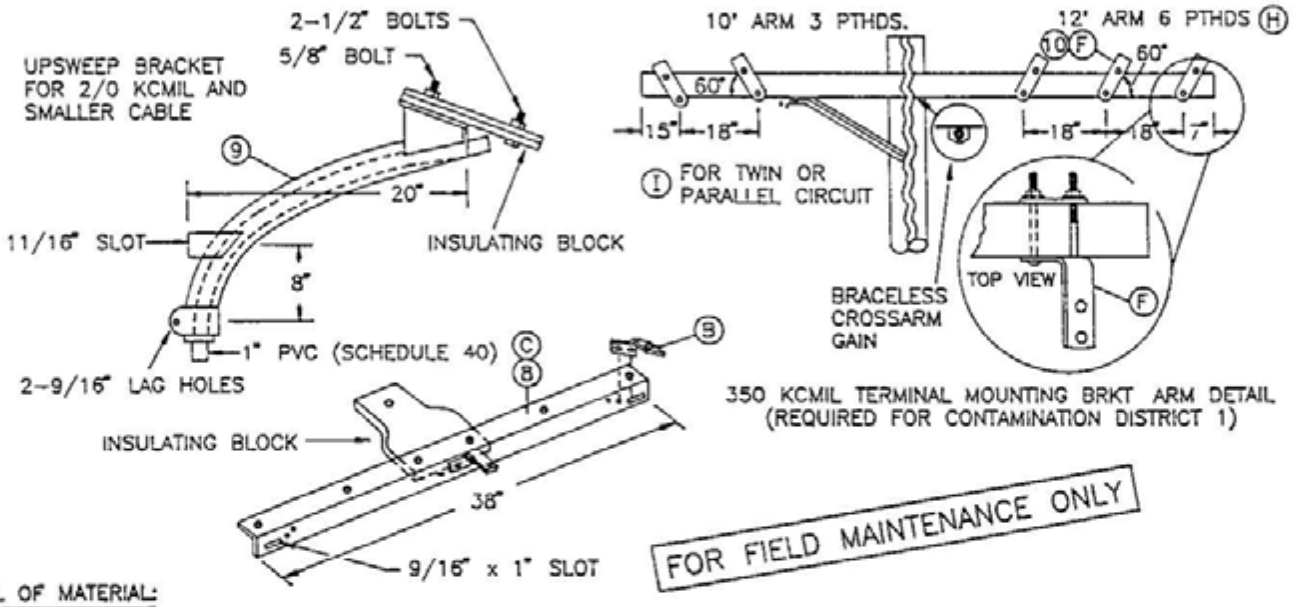

350 KCMIL TERMINAL MOUNTING BRKT ARM DETAIL
(REQUIRED FOR CONTAMINATION DISTRICT 1)

FOR FIELD MAINTENANCE ONLY

BILL OF MATERIAL:

ITEM	DESCRIPTION	QUANTITY	STOCK NO OR CONSTR STD	ASSEMBLY UNITS
1	BRACKET, POTHEAD MOUNTING	3 OR 6	166674	P-X-BK
2	BOLT, MACHINE, GALV 1/2" x 5" (E)	2	153024	–
3	BOLT, MACHINE, GALV. 3/8" x 5" (E)	2	154368	–
4	WASHER, 3/8" ROUND (E)	4	800288	–
5	WASHER, 1/2" ROUND (E)	4	800192	–
6	WASHER, 3/8" DBL COIL (E)	2	798528	–
7	WASHER, 1/2" DBL COIL (E)	2	798464	–
8	BRACKET TRIPLE TERMINAL (C)	1	166676	(OVERHEAD) TTB
9	BRACKET GALV. TERMINAL, UPSWEEP	1	166856	(OVERHEAD) USB
10	BRACKET, CROSSARM TERMINAL	3 OR 6	166060	–

INSTALLATION:

(A) HOLES IN ARM FOR POTHEAD MOUNTING BRACKETS ARE DRILLED BY OVERHEAD CREWS.
(B) THREE OF THESE BRACKETS ARE SUPPLIED WITH THE TRIPLE TERMINAL BRACKET (ITEM 8).
(C) THIS CONSTRUCTION TO BE USED ONLY FOR CABLE SIZES 2/0 AND BELOW.
(E) EXEMPT MATERIAL.
(F) TURN TOP OF BRACKET OUTWARD TO OBTAIN APPROX. 60° ANGLE.

REFERENCE:

(G) FOR CONSTRUCTION IN CONTAMINATION DISTRICTS 2 AND 3, SEE STANDARD 1407.2/4207.2.
(H) SEE STANDARD 1407.2/4207.2 FOR TERMINAL AND LIGHTNING ARRESTER DETAIL.
(I) SEE STANDARD 1442.1/4242.1 FOR 3-350 KCMIL POTHEADS ON A 10 FOOT CROSSARM

~~OH 1499.010~~ UG 4299.010 SUPERCEDES 4207.1 (1-1-93)	SDG&E ELECTRIC STANDARDS CABLE POLE TERMINAL MOUNTING INFORMATION (PORCELAIN TERMINATIONS) (FOR CONTAMINATION DISTRICT 1)	DATE 1-1-93 APPD JLG/RD

12' ARM 6 PTHS AND 6 ARRESTORS

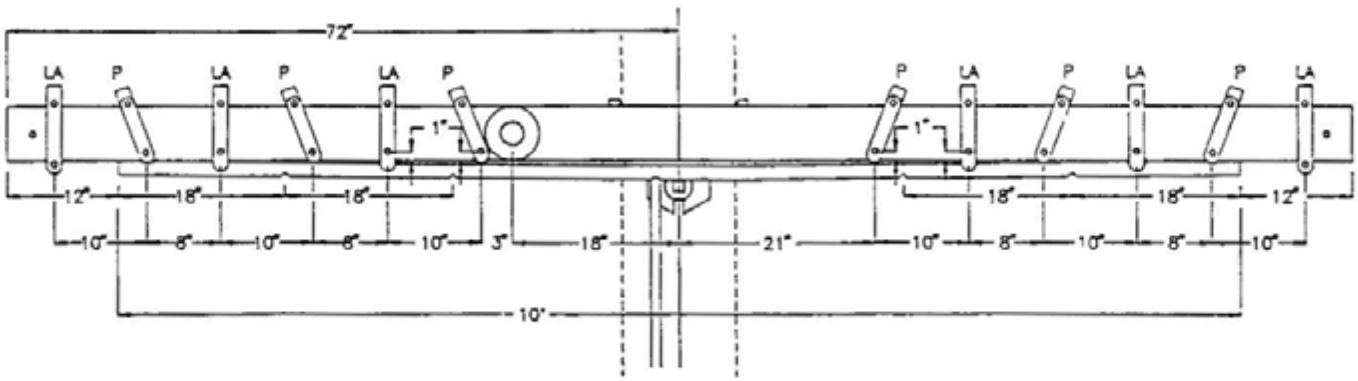

350 KCMIL TERMINAL AND LIGHTNING ARRESTER BRACKETS MOUNTING DETAIL

P=POTHEAD BRACKET

LA=LIGHTNING ARRESTER BRACKET

FOR FIELD MAINTENANCE ONLY

12' ARM 6 PTHS AND 6 ARRESTORS

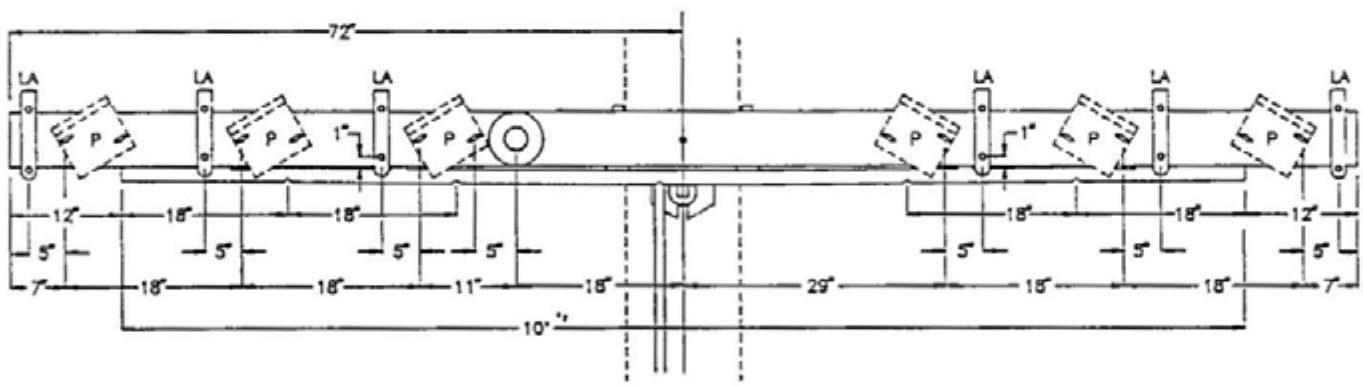

750 AND 1000 KCMIL TERMINAL AND LIGHTNING ARRESTER BRACKETS MOUNTING DETAIL

TABLE OF CONTENTS

DATE 1-1-93 APPD JGS/RPS	SDG&E ELECTRIC STANDARDS CABLE POLE TERMINAL MOUNTING INFORMATION (PORCELAIN TERMINATIONS) (FOR CONTAMINATION DISTRICT 1)	~~OH 1499.011~~ UG 4299.011 SUPERCEDES 4207.2 (1-1-93)

UG4208 FIELD MAINTENANCE ONLY

ALL VERSIONS LISTED IN FMO ARE SUPERSEDED BY THEIR CURRENT VERSION FOUND INSIDE THE OVERHEAD AND UNDERGROUND CONSTRUCTION STANDARD MANUAL.

REVISION HISTORY:

07/1/2020: MOVED FROM FMO UG4205
07/13/2016: MOVED TO FMO

TABLE OF CONTENTS

© 1998 - 2020 San Diego Gas & Electric Company. All rights reserved. Removal of this copyright notice without permission is not permitted under law.

REV	CHANGE	DR	BY	DSN	APV	DATE	REV	CHANGE	DR	BY	DSN	APV	DATE
C							F						
B	MOVED FROM FMO UG4205	EDM	JAC	GLW	CZH	7/1/2020	E						
A	ORIGINAL ISSUE	-	JS	IL	MDJ	7/13/2016	D						

X Indicates Latest Revision | Completely Revised | New Page | Information Removed

SDG&E ELECTRIC UNDERGROUND FIELD MAINTENANCE ONLY STANDARDS

INSTALLATION OF PERMANENT POLE STEPS

SCOPE THIS STANDARD SHOWS THE CONSTRUCTION USED WHEN MODIFYING AN EXISTING SINGLE RISER CABLE POLE WHERE A SECOND RISER IS ADDED.

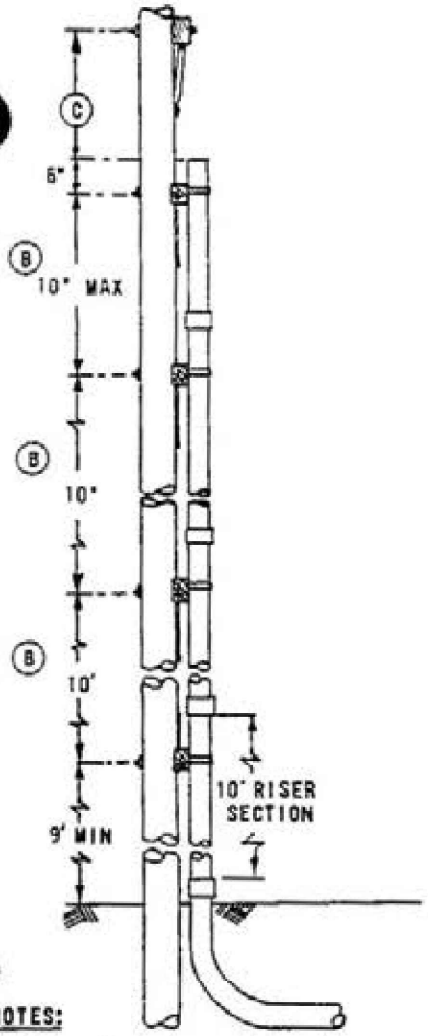

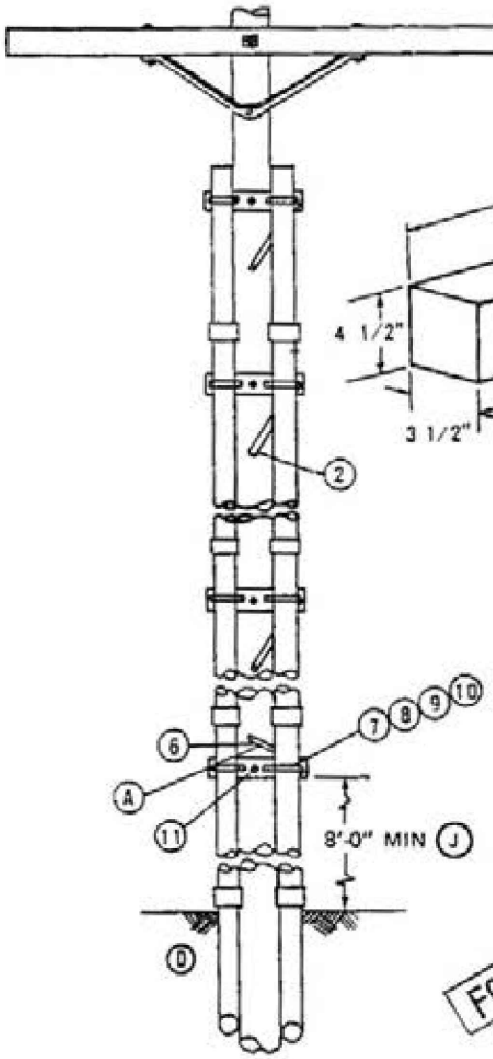

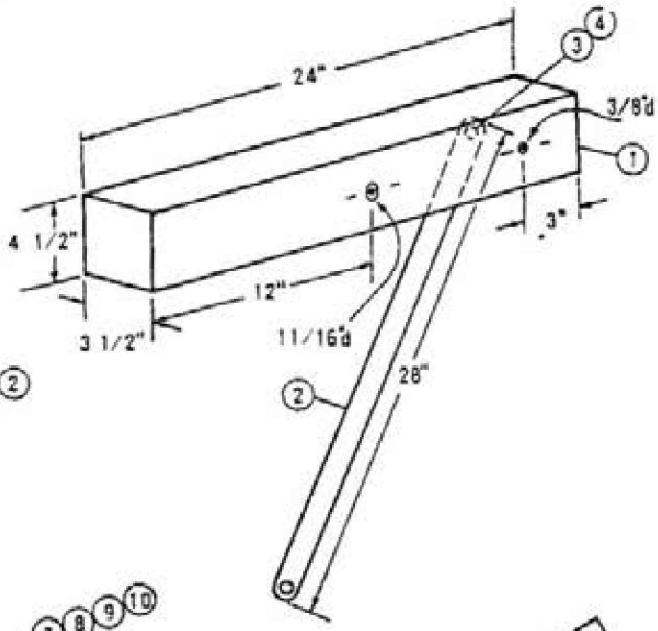

FOR FIELD MAINTENANCE ONLY

NOTES:

- THIS CONSTRUCTION IS RESTRICTED TO A MAXIMUM OF TWO SDG&E RISERS, (PRIMARY OR SECONDARY)
- WHENEVER POSSIBLE RISERS SHOULD BE INSTALLED ON THE SIDE OF THE POLE OPPOSITE TRAFFIC FLOW.
- SPARE DUCT SHALL BE CAPPED JUST ABOVE GROUND LEVEL TO PREVENT MOISTURE ENTRY AND NOT TO BE CONSIDERED AS A RISER

BILL OF MATERIAL;

	ITEM	DESCRIPTION	QUANTITY	STOCK NO OR CONST. STDS.		ITEM	DESCRIPTION	QUANITY	STOCK NO. OR CONST STDS
P T & F	1	CROSSARM 3-1/2"x 4-1/2"x 2'-0"	AS REQ'D.	380.05 IT.1	P T & F	8	STRAP PIPE, 2 HOLE, GALV., 4"	AS REQ'D	697952 (E)
	2	BRACE FLAT 28"	AS REQ'D.	164192		9	STRAP, PIPE, 2 HOLE, GALV., 5"	AS REQ'D.	697984 (E)
	3	BOLT, WASHER HEAD 3/8"X 4 1/2"	AS REQ'D.	158528 (E)		10	NAILS FLATHEAD STEEL GALV. 16D	AS REQ'D.	491424 (E)
	4	WASHER, 3/8" SPRING LOCK	AS REQ'D.	796832 (E)		11	BOLT, MACH, GALV., 5/8"X (LENGTH AS REQ'D), 2-SQ. WASH 1-08L COIL WASH	AS REQ'D.	PG. 392.1 (E) 392.2
	5								
	6	SCREW LAG 1/2"X 4"	AS REQ'D	621568 (E)					
	7	STRAP, PIPE, 2 HOLE, GALV., 3"	AS REQ'D	697920 (E)					

INSTALLATION:

(A) LADDER ARMS TO BE INSTALLED BY U.G. CREWS. MOUNT LOWEST ARM NO LOWER THAN 9 FEET AND INSTALL THE FLAT BRACE ABOVE THE FIRST ARM AS SHOWN.

(B) INSTALL AT LEAST ONE BRACKET FOR EACH JOINT OF CONDUIT.

(C) 48 INCHES MINIMUM FOR 350 OR LARGER UG CABLE, 30 INCHES MINIMUM FOR 2/0 AND SMALLER CABLE. THIS DIMENSION APPLIES TO THE TRIPLE TERMINATOR BRACKET AS WELL AS CROSSARMS.

(D) EXCAVATION MIGHT BE REQUIRED AROUND EXISTING RISER TO FACILITATE THE INSTALLATION OF LADDER ARMS.

(E) EXEMPT MATERIAL.

REFERENCE:

F. SEE PAGE 1402.1/4202 FOR POSITION OF RISERS INVOLVING MORE THAN ONE UTILITY.

G. POLES ARE TO BE STEPPED PER STANDARD 363.

H. SEE PAGE 1404.1 FOR INSTALLATION OF ONE CABLE RISER.

I. PVC RISERS ARE NOT PERMITTED WITHIN THE CLIMBING SPACE PER G.O. 95 RULE-22.2C.

(J) RISERS OF PLASTIC PIPE SHALL BE EPC-80-PVC SCHEDULE 80, WITH A MINIMUM NORMAL PIPE SIZE OF 2-1/2 INCHES, FROM THE GROUND LINE TO A LEVEL NOT LESS THAN 8 FEET ABOVE THE GROUND LINE PER G.O. 95 RULE 54-6-E.

SDG&E ELECTRIC STANDARDS

3Ø CABLE POLE RISER INSTALLATION MODIFICATION FROM SINGLE TO DOUBLE RISER FOR EXISTING CABLE POLES

DATE 1-1-87
APPD JAB/RDT

~~OH 1499.009~~
UG 4299.009
SUPERCEDES 4205.1 (6-14-83)

TABLE OF CONTENTS

FIELD MAINTENANCE ONLY

REVISION HISTORY:

7/13/2016: All versions prior to 2016 are superseded by their current version found inside the Overhead Construction Standard Manual.

TABLE OF CONTENTS

© 1998 - 2016 San Diego Gas & Electric Company. All rights reserved. Removal of this copyright notice without permission is not permitted under law.

REV	CHANGE	BY	DSGN	APPV	DATE	REV	CHANGE	BY	DSGN	APPV	DATE
C						F					
B						E					
A	ORIGINAL ISSUE	JS	IL	MDJ	7/13/2016	D					

X Indicates Latest Revision | Completely Revised | New Page | Information Removed

SHEET 1 OF 1

SDG&E ELECTRIC UNDERGROUND STANDARD

0-750V CUSTOMER OWNED UNDERGROUND SERVICE FROM AN OVERHEAD LINE, ONE DUCT

FMO UG 4215

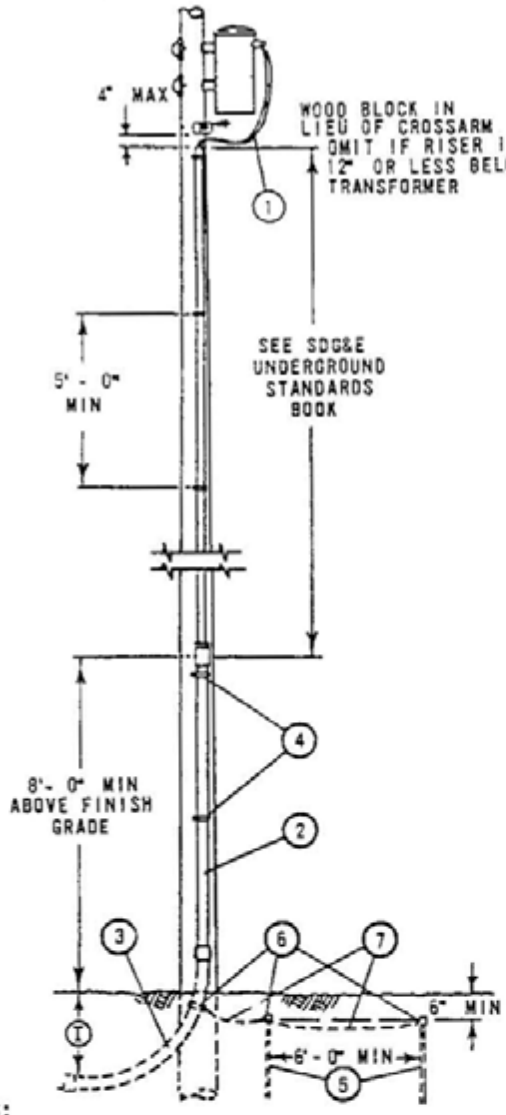

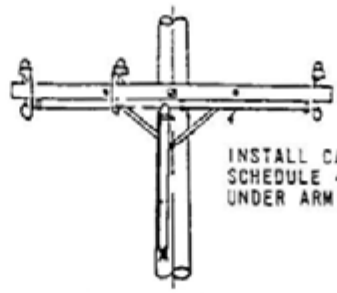

CROSSARM CONSTRUCTION



RACK CONSTRUCTION

FOR FIELD MAINTENANCE ONLY

NOTES:

(A) SEE PAGE 1404 /4204 FOR RISER CONSTRUCTION.

(B) CUSTOMER'S SERVICE ENTRANCE CONDUCTORS SHALL RUN CONTINUOUSLY WITHOUT SPLICES FROM SERVICE EQUIPMENT TO SECONDARY OR TRANSFORMER TERMINALS AND SHALL BE OF A LENGTH SUFFICIENT TO FORM DRIP LOOPS AT THE TOP OF THE RISER CONTRACTOR SHALL IDENTIFY SERVICE ENTRANCE CONDUCTORS WITH CODING OR TAGGING FOR PURPOSE OF PARALLELING PHASES AND NEUTRALS. MAXIMUM SIZE OF EACH CONDUCTOR. SINGLE OR PARALLELED RUNS. SHALL NOT EXCEED 500 KCM.

(C) WHEN ITEMS 2 AND 3 ARE SCHEDULE 80 PVC OMIT ITEMS 5. 6. AND 7. (SEE SDG&E UNDERGROUND STANDARDS BOOK)

(D) OMIT ITEMS 5. 6 AND 7 WHERE CUSTOMER'S UNDERGROUND CONDUIT RUN IS AN APPROVED METALLIC CONDUIT.

(F) OMIT ITEM 5. AND 7 WHERE #6 BARE COPPER BONDING WIRE IS INSTALLED BETWEEN ITEMS 3 AND CUSTOMER'S SERVICE. ENTRANCE EQUIPMENT

(G) USE TWO ROD GROUND SPACED A MINIMUM OF 6 FEET APART.

H APPROVED METALLIC CONDUIT OR #6 BARE COPPER BONDING WIRE SHALL BE GROUNDED AT THE SERVICE ENTRANCE IN ACCORDANCE WITH REQUIREMENTS OF THE LOCAL INSPECTION AUTHORITY.

(T) 18" MIN DEPTH ON PRIVATE AND PUBLIC PROPERTY OTHER THAN STREETS AND ALLEYS. 24" MIN DEPTH ACROSS STREETS AND ALLEYS 24" MIN TO BE MAINTAINED CONTINUOUSLY WHERE DUCTS TRAVERSE BOTH STREETS (AND ALLEYS) AND PRIVATE PROPERTY. 24" MIN DEPTH FOR NON-METALLIC CONDUITS.

MATERIAL FURNISHED AND INSTALLED BY CUSTOMER

ITEM	DESCRIPTION (A)	
1	CUSTOMER'S SERVICE ENTRANCE CONDUCTORS	(B)
2	CONDUIT GALV IRON RIGID RISER	(C)
3	CONDUIT, GALV IRON BEND, 90°, 36" RADIUS	(C)
4	STRAP, PIPE GALV, 2-100 GALV NAILS	
5	RODS, 5 8" X 8' - 0" COPPERCLAD STEEL GROUND	(D) (F) (G)
6	CLAMPS, APPROVED TYPE GROUNDING	(D)
7	WIRE, #6 BARE STRANDED COPPER	(D) (F)

~~OH 1499.101~~
UG 4299.101
SUPERCEDES
4215 (10-2-78)

SDG&E ELECTRIC STANDARDS

0-750V CUSTOMER OWNED UNDERGROUND SERVICE FROM AN OVERHEAD LINE, ONE DUCT

DATE 11-16-81
APPD JEY

TABLE OF CONTENTS

FIELD MAINTENANCE ONLY

REVISION HISTORY:

7/13/2016: All versions prior to 2016 are superseded by their current version found inside the Overhead Construction Standard Manual.

TABLE OF CONTENTS

© 1998 - 2016 San Diego Gas & Electric Company. All rights reserved. Removal of this copyright notice without permission is not permitted under law.

REV	CHANGE	BY	DSGN	APPV	DATE	REV	CHANGE	BY	DSGN	APPV	DATE
C						F					
B						E					
A	ORIGINAL ISSUE	JS	IL	MDJ	7/13/2016	D					

X Indicates Latest Revision | Completely Revised | New Page | Information Removed

SHEET 1 OF 1

SDG&E ELECTRIC UNDERGROUND STANDARD

0-750 VOLT THREE AND FOUR DUCT RISER SUPPORTS

FMO UG 4219

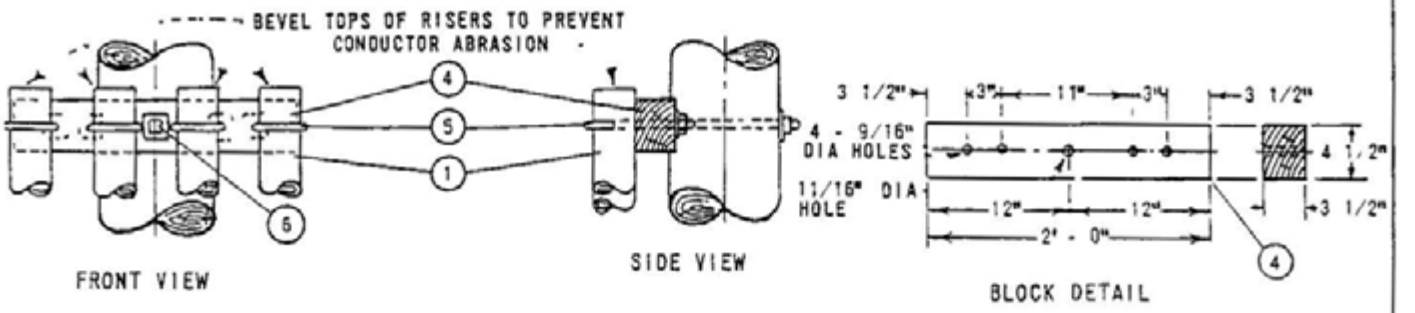

FIGURE 1
PLASTIC PIPE RISER SUPPORT DETAILS

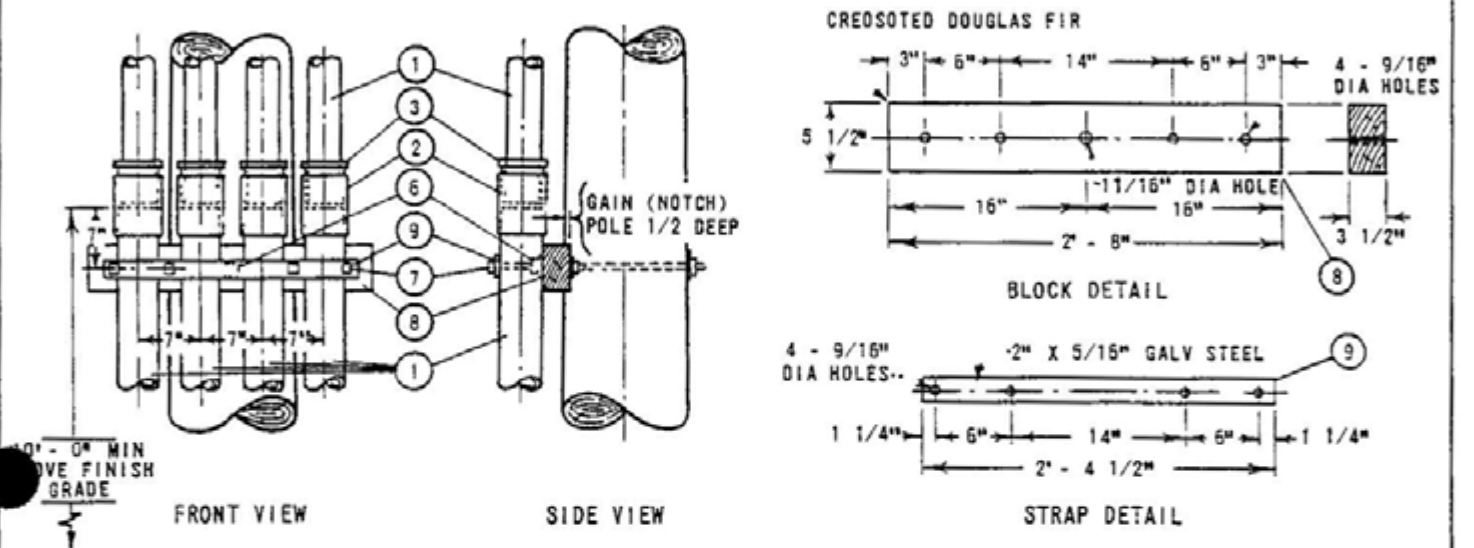

FIGURE 2
GALVANIZED PIPE RISER SUPPORT DETAIL

FOR FIELD MAINTENANCE ONLY

NOTES:

A. SEE UNDERGROUND STANDARDS BOOK FOR CABLE, CONDUIT SIZING INFORMATION.

(E) EXEMPT MATERIALS.

ITEM	DESCRIPTION	QUANTITY NUMBER OF RISERS 3"	QUANTITY NUMBER OF RISERS 4"	STOCK NO. OR CONSTR STD
1	CONDUIT, PVC SIZE AS REQUIRED	AS REQ'D		3" - 251552 4" - 251584
2	COUPLINGS, PLASTIC SIZE AS REQ'D	AS REQ'D		3" - 280448, 4" - 280480
3	BUSHINGS, PLASTIC REDUCER 3 1/2" OR 4" X 3"	3	4	3½" - 181024, 4" - 573408
4	BLOCKS, RISER SUPPORT (SEE FIGURE 1)	1	1	-
5	BOLT, "J" 1 SQ WASH	3	4	PGS 140, 144
6	BOLT, MACH 5/8" X __", 2 - 2" SQ WASH (E)	1	1	PGS 139, 140
7	BOLT MACH 1/2" X 9", 1 RD WASH (E)	3	4	153184, 800192
8	BLOCK, SPACER (SEE FIGURE 2)	1	1	-
9	STRAP, GALV STEEL (SEE FIGURE 2)	1	1	-

DATE 1-1-87 APPD	SDG&E ELECTRIC STANDARDS 0-750 VOLT THREE AND FOUR DUCT RISER SUPPORTS	~~OH 1499.104~~ UG 4299.104 SUPERCEDES 4219 (5-22-75)

TABLE OF CONTENTS

FIELD MAINTENANCE ONLY

REVISION HISTORY:

7/13/2016: All versions prior to 2016 are superseded by their current version found inside the Overhead Construction Standard Manual.

TABLE OF CONTENTS

© 1998 - 2016 San Diego Gas & Electric Company. All rights reserved. Removal of this copyright notice without permission is not permitted under law.

REV	CHANGE	BY	DSGN	APPV	DATE	REV	CHANGE	BY	DSGN	APPV	DATE
C						F					
B						E					
A	ORIGINAL ISSUE	JS	IL	MDJ	7/13/2016	D					

X Indicates Latest Revision | Completely Revised | New Page | Information Removed

SHEET 1 OF 1

SDG&E ELECTRIC UNDERGROUND STANDARD

CROSSARM MOUNTED TERMINALS 4KV 4 WIRE WYE

FMO UG 4228

TABLE OF CONTENTS

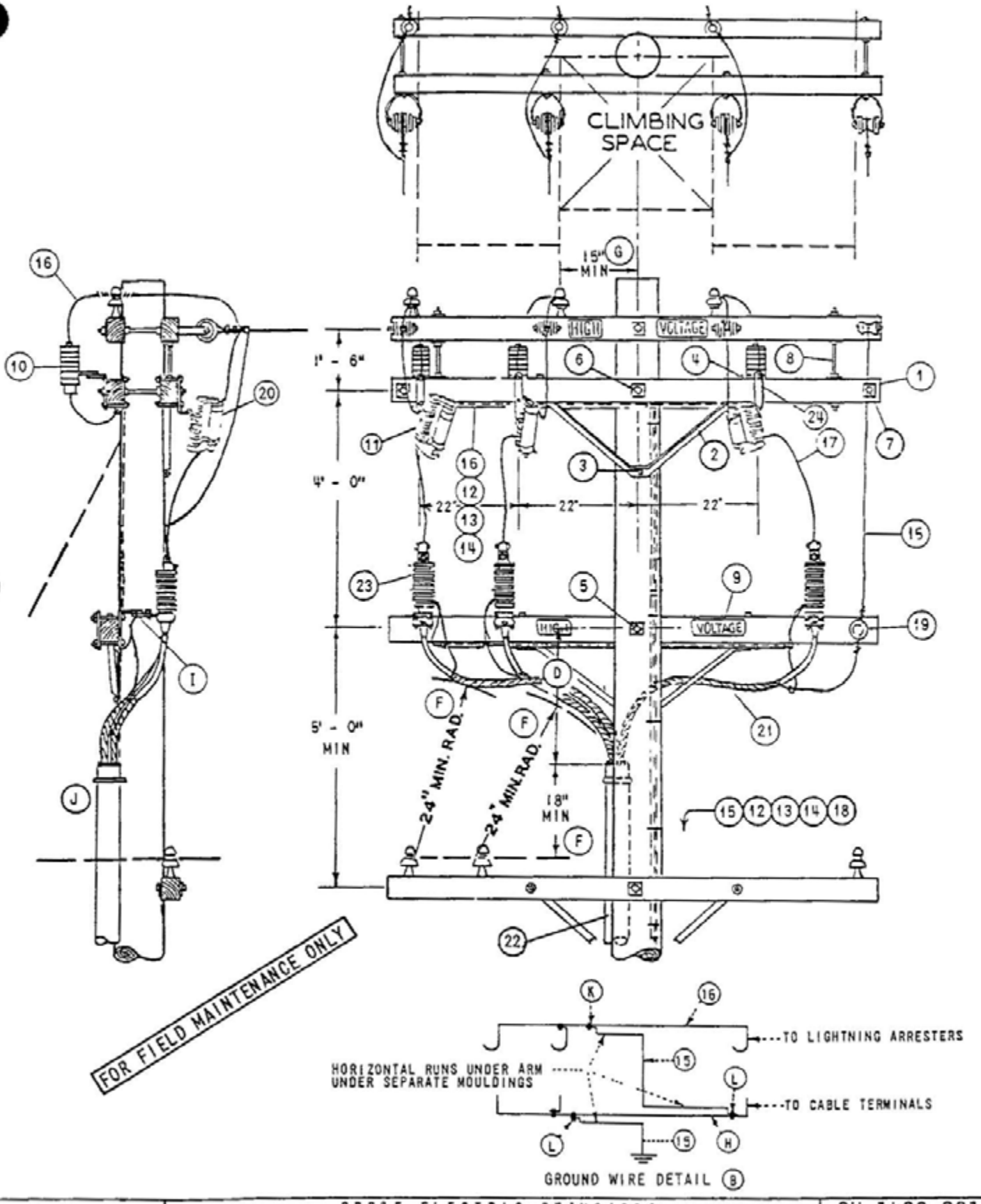

DATE 8-27-82 APPD DRH	SDG&E ELECTRIC STANDARDS CROSSARM MOUNTED TERMINALS 4KV 4 WIRE WYE	~~OH 1499.201~~ UG 4299.201 SUPERCEDES 4228.1 (2-27-80)

NOTES:

(A) UNIT GROUND COMPLETE ORDER 603120 WITH GRAY MOULDING 603135 WITH PLAIN MOULDING

(B) INTERCONNECT ARRESTER GROUND LEAD DISCONNECTS WITH #6 BARE COPPER AND GROUND IT WITH #2 BARE COPPER NEAR CENTER ARRESTER.

(C) USE TWO GROUND RODS SPACED A MINIMUM OF 6' APART

(D) 3 FOOT MINIMUM DIMENSION 4 FOOT DIMENSION PREFERRED FOR 750 KCM AND LARGER 15KV CABLE

(E) EXEMPT MATERIAL

(F) G O 95 MINIMUM DIMENSION

(G) G O 95 MINIMUM DIMENSION FOR 4KV USE 18" MIN IF BUILT WITH 15KV CABLE

(H) USE #2 BARE STRANDED COPPER OR LARGER AS REQUIRED

(I) CONNECT NEUTRAL, TERMINAL AND SHIELDED CABLE GROUNDS TO LIGHTNING ARRESTER GROUND

(J) INSTALL RISER ON FACE OF POLE OPPOSITE CLIMBING SPACE AND IN A POSITION NEAREST THE END OF ARM ON WHICH THE TWO 4KV PHASES ARE LOCATED.

(K) CONNECT #2 BARE STRANDED COPPER CONDUCTOR TO #6 BARE STRANDED COPPER CONDUCTOR AT POINT NEAR CENTER LIGHTNING ARRESTER

(L) CONNECT #2 BARE STRANDED COPPER CONDUCTOR TO REQUIRED CONDUCTOR AT POINT NEAR CENTER TERMINAL AND END TERMINAL

FOR FIELD MAINTENANCE ONLY

ITEM		DESCRIPTION	QUANTITY	STOCK NO. OR CONSTR STDS
PTF	1	CROSSARM 3 3 4" X 5 3/4" X 10' - 0"	3	300 SECTION
	2	BRACE ANGLE CROSSARM 4' - 0"	2	164032
	3	SCREW LAG GALV. 5/8" X 5" (E)	2	621600
	4	BOLT MACH GALV 1.2" X 7" 1 RD WASH & 1 DBL COIL WASH (E)	4	PGS 139 140
	5	BOLT MACH GALV 5.8" X 14" 2 - 3" SQ WASH & 1 DBL COIL WASH (E)	1	PGS 139 140
	6	BOLT, MACH GALV 5.8" X 20" 2 - 3" SQ WASH. & 1 DBL COIL WASH (E)	1	PGS 139 140
	7	BOLT SPACE GALV. 5/8" X 20" 4 SQ WASH & 4 DBL COIL WASH. (E)	2	PGS 139 140
	8	BOLT, SPACE GALV. 5/8" X 28", 4 SQ WASH. & 4 DBL COIL WASH. (E)	2	PGS 139 140
	9	SIGN, HIGH VOLTAGE & 8 ROOFING NAILS (E)	1	647648 492224
UCD	10	ARRESTER, LIGHTNING 3KV	3	113216
	11	CUTOUT, FOR CURRENT-LIMITING FUSE	3	1200 SECTION
	12	STAPLES, FENCE GALV. 1 1/4" (A) (E)	25	678528
	13	MOULDING, HARDWOOD 1" (A)	55'	487200
	14	STAPLES, MOULDING GALV. 3" X 1 1/16" X 1/4" (A) (E)	25	678560
	15	WIRE, #2 BARE STRANDED COPPER (B)	44'	813664
	16	WIRE, #6 BARE STRANDED COPPER (B)	18'	813536
	17	WIRE COPPER SIZED PER U G CABLE AMPACITY	9'	81
	18	ROD & CLAMP GROUND (A) (C)	2	603072, 230016
	19	INSULATOR, 4KV WIRE HOLDER	1	413792
	20	FUSE, CURRENT-LIMITING SIZE AS SPECIFIED ON WORK ORDER	3	1200 SECTION
	21	CABLE, POLYETHYLENE CONCENTRIC NEUTRAL PRIMARY	AS REQ'D	SEE UG STDS
	22	RISER CONSTRUCTION	AS REQ'D	1400/4200 SECTION
	23	TERMINAL CABLE	3	UG BOOK
	24	BRACKET CUTOUT / ARRESTER CROSSARM MOUNTING (E)	3	166070
	25			

~~OH 1499.202~~
UG 4299.202
SUPERCEDES
4228.2 (2-27-80)

SDG&E ELECTRIC STANDARDS

CROSSARM MOUNTED TERMINALS 4KV 4 WIRE WYE

DATE 8-27-82
APPD LDR

FIELD MAINTENANCE ONLY

REVISION HISTORY:

7/13/2016: All versions prior to 2016 are superseded by their current version found inside the Overhead Construction Standard Manual.

TABLE OF CONTENTS

© 1998 - 2016 San Diego Gas & Electric Company. All rights reserved. Removal of this copyright notice without permission is not permitted under law.

REV	CHANGE	BY	DSGN	APPV	DATE	REV	CHANGE	BY	DSGN	APPV	DATE
C						F					
B						E					
A	ORIGINAL ISSUE	JS	IL	MDJ	7/13/2016	D					

X Indicates Latest Revision | Completely Revised | New Page | Information Removed

SHEET
1 OF 1

SDG&E ELECTRIC UNDERGROUND STANDARD

12.47KV AND BELOW 3Ø CABLE POLE 1/C PER Ø,
UPSWEEP BRACKET CONSTRUCTION

FMO
UG 4229

SCOPE THIS STANDARD SHOWS TANGENT LINE (FIG 1) AND DEAD-END CONSTRUCTION (FIG 2) FOR 12 47 KV AND BELOW, 3Ø CABLE POLE WITH UPSWEEP BRACKET MOUNTED TERMINALS FOR #2/0 AND SMALLER UG CABLE

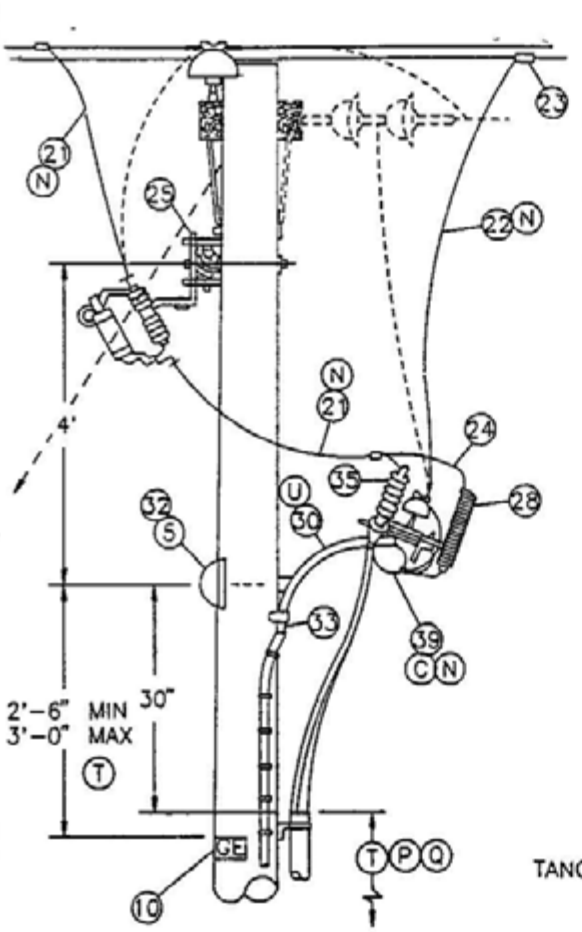

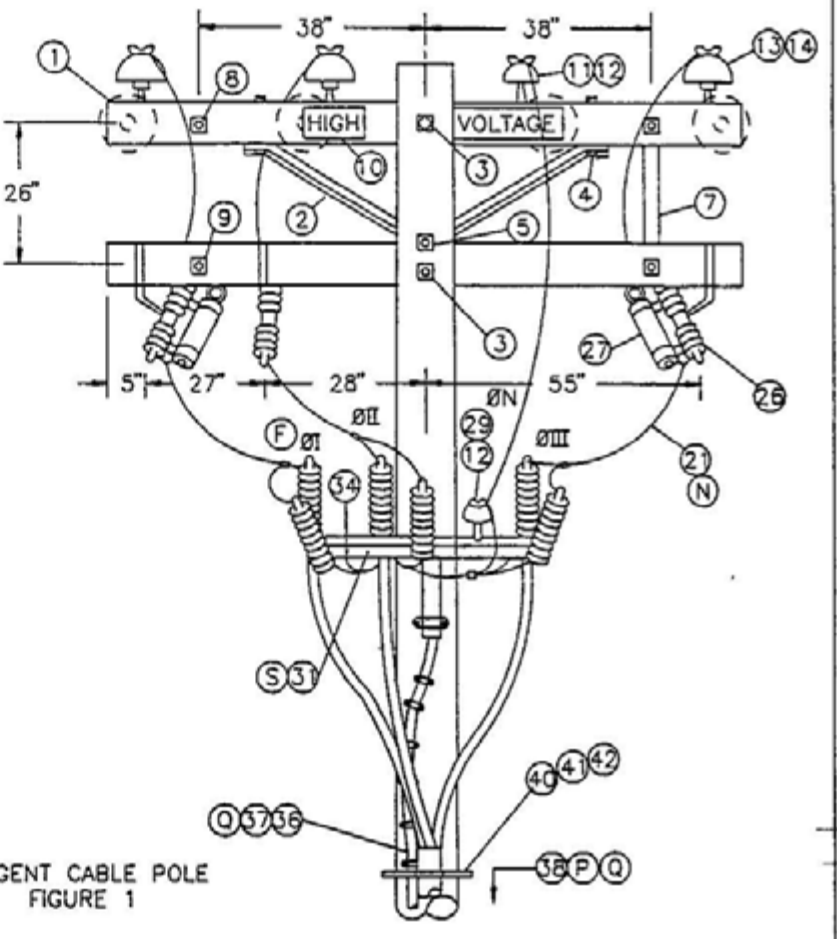

TANGENT CABLE POLE
FIGURE 1

NOTE

- TANGENT CABLE POLE (FIG 1) OR DEAD-END CABLE POLE (DOTTED LINE) IS TO BE USED WHEN FURTHER LINE EXTENSION IS EXPECTED
- DO NOT USE THIS UPSWEEP BRACKET CONSTRUCTION FOR 4KV, 3Ø CABLE POLE. INSTEAD, USE STANDARD 1439/4239

FOR FIELD MAINTENANCE ONLY

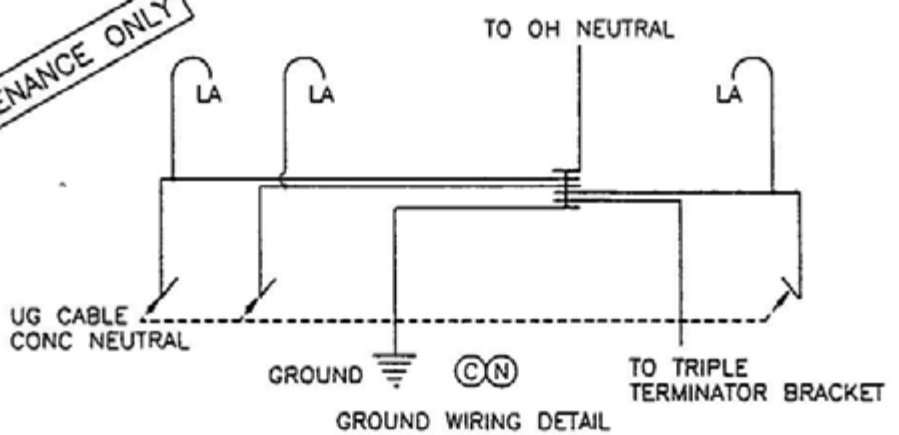

GROUND WIRING DETAIL

DATE 1-1-93 APPD JLG/	SDG&E ELECTRIC STANDARDS 12.47KV AND BELOW 3Ø CABLE POLE 1/C PER Ø, UPSWEEP BRACKET CONSTRUCTION	~~OH 1499.203~~ UG 4299.203 SUPERCEDES 4229.1 (1-1-93)

TABLE OF CONTENTS

TABLE OF CONTENTS

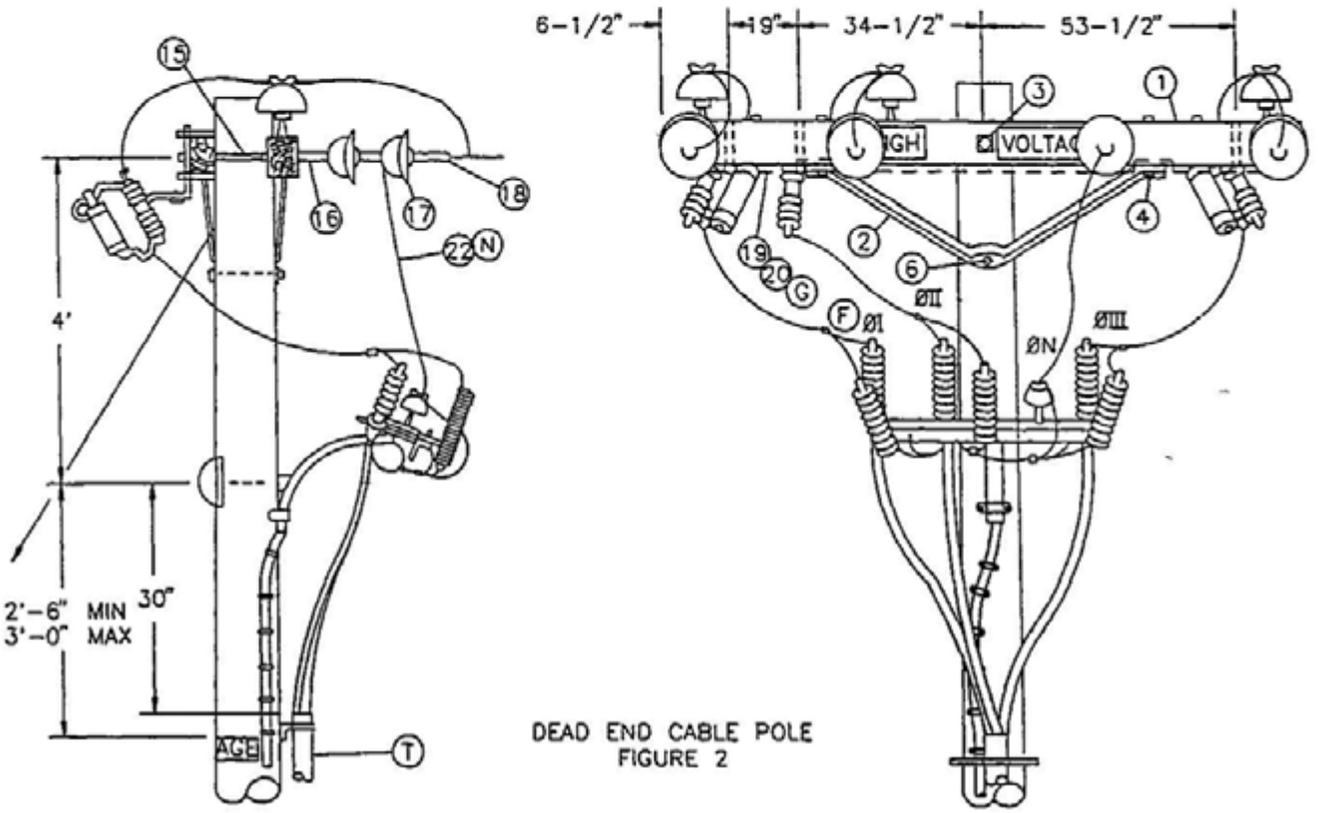

DEAD END CABLE POLE
FIGURE 2

NOTE

– DEAD END CABLE POLE (FIG.2) IS TO BE USED ONLY WHEN NO FURTHER LINE EXTENSION OR NO RECONDUCTORING IS EXPECTED.

FOR FIELD MAINTENANCE ONLY

~~OH 1499.204~~ UG 4299.204 SUPERCEDES 4229.2 (1-1-93)	SDG&E ELECTRIC STANDARDS 12.47KV AND BELOW 3Ø CABLE POLE 1/C PER Ø UPSWEEP BRACKET CONSTRUCTION	DATE 1-1-93 APPD JVB/BDG

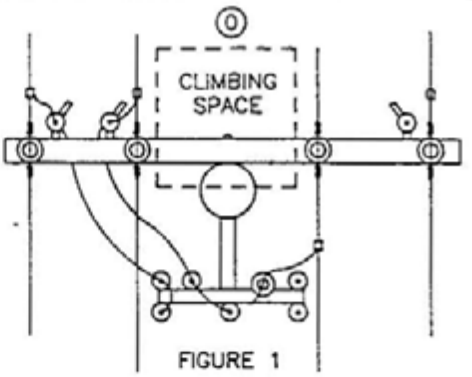

FIGURE 1

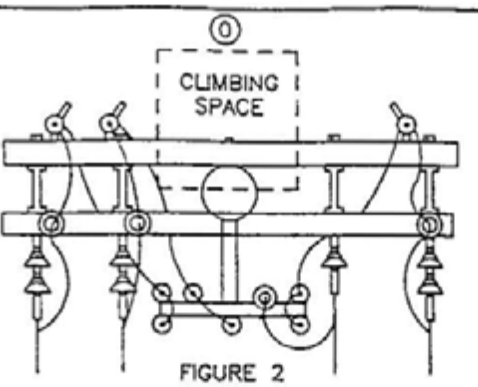

FIGURE 2

CLIMBING SPACE

BILL OF MATERIAL:

FOR FIELD MAINTENANCE ONLY

ITEM	DESCRIPTION		QUANTITY FIG 1	QUANTITY FIG.2	CONST STD OR PAGE NO	STOCK NUMBER
1	CROSSARM, 3-3/4" X 5-3/4" X 10'-0"		2	2	–	294128
2	BRACE, ANGLE, CROSSARM, 5'		1	2	–	164128
3	BOLT, MACH, GALV, 5/8" X (LENGTH AS REQ'D), 2 SQUARE & 1 DOUBLE COIL SPRING WASHER	(E)	2	1	392	–
4	BOLT, MACH, GALV, 1/2" X 7", 1 ROUND & 1 DOUBLE COIL SPRING WASHER	(E)	2	4	392	–
5	BOLT, MACH, GALV, 5/8" X (LENGTH AS REQ'D), 1 SQUARE & 1 DOUBLE COIL SPRING WASHER	(E)	2	1	392	–
6	BOLT, MACH, GALV, 5/8" X (LENGTH AS REQ'D), 1 DOUBLE COIL SPRING WASHER	(E)	–	1	392	–
7	BRACE, FLAT, CROSSARM, 28"	(E)	2	–	–	164192
8	BOLT, MACH, GALV, 3/8" X (LENGTH AS REQ'D), 1 ROUND & 1 SPRING WASHER	(E)	2	–	392	–
9	BOLT, MACH, GALV, 1/2" X (LENGTH AS REQ'D), 1 ROUND & 1 DOUBLE COIL SPRING WASHER	(E)	2	–	392	–
10	SIGN, HIGH VOLTAGE AND	(E)	3	3	–	647648
	9 ROOFING NAILS, GALV	(E)	AS REQ'D		–	492224
11	PIN, INSULATOR, STRAIGHT, 12KV, 1" LEAD THREAD	(D) (E)	1	–	–	532704
12	INSULATOR, LINE, 12KV, NEUTRAL	(D) (E)	2	1	–	429216
13	PIN, INSULATOR, STRAIGHT, 12KV, 1" OR	(E)	3	3	–	532704
	1-3/8" LEAD THREAD	(E)	3	3	–	532448
14	INSULATOR, LINE, 12KV, 1" OR 1-3/8" PIN	(E)	3	3	750	–
15	BOLT, SPACE, 5/8" X (LENGTH AS REQ'D) 3 SQ, 2 RD, 2 DOUBLE COIL SPRING WASHERS & 1 NUT	(D) (E)	–	4	392	–
16	CLEVIS, DEAD END, 5/8" BOLT, STEEL	(D) (E)	–	4	–	235712
17	INSULATOR, SUSPENSION, 12KV, CLEVIS	(D)	–	7	750	–
18	CLAMP, STRAIGHT LINE, D.E.	(D) (E)	–	4	741	–
19	WIRE, #8, BARE SOLID ANNEALED COPPER		10'	10'	–	812928
20	STAPLES, FENCE, GALV, 1-1/4"	(E)	AS REQ'D		–	678528
21	WIRE, BARE STRANDED COPPER (OH JUMPER)	(N)	21'	25'	715-716	–
22	WIRE, BARE STRANDED CU OR AL (OH NEUT JUMPER)	(N)	9'	7'	711-716	–
23	CONNECTOR, WIRE COMPRESSION (SIZE AS REQ'D)	(D) (E)	AS REQ'D		785-787	–

CABLE SIZE	UG MACRO UNIT PORCELAIN	
	W/O LADDER ARMS	W/LADDER ARMS
3C-#2 AL	CP-3#2	CP3#2L
3C-#2/0	CP#2/0	CP2/0L

DATE 1-1-93 APPD JLB/RB	SDG&E ELECTRIC STANDARDS 12.47KV AND BELOW 3Ø CABLE POLE 1/C PER Ø UPSWEEP BRACKET CONSTRUCTION	~~OH 1499.205~~ UG 4299.205 SUPERCEDES 4229 3 (1-1-93)

TABLE OF CONTENTS

BILL OF MATERIAL: (CONTINUED)

ITEM	DESCRIPTION	QUANTITY FIG. 1	QUANTITY FIG. 2	CONSTR. STD OR PAGE NO.	STOCK NUMBER
24	WIRE, #6, BARE STRANDED COPPER	9'	9'	–	813536
25	BRACKET, CUTOUT/ARRESTER, FOR CROSSARM MOUNTING (E)	3	3	–	166070
26	CUTOUT BODY FOR CURRENT LIMITING FUSE	3	3	–	297952
27	FUSE, CURRENT-LIMITING, SIZE AS REQ'D	3	3	1206	–
28	ARRESTER, LIGHTNING	3	3	1247	–
29	PIN, SHORT SHANK, 1" LEAD THREAD (D) (E)	1	1	–	534426
30	BRACKET, GALV, TERMINAL, UPSWEEP	1	1	–	166856
31	BRACKET, TRIPLE TERMINATOR (S)	1	1	–	166676
32	COVER, BOLT, PLASTIC & (E)	1	1	–	285696
	6 – 10D NAILS, GALV (E)	–	–	–	491392
33	SCREW, LAG, GALV, 1/2" X 4" (E)	2	2	–	621568
34	BOLT, MACH, GALV, 5/8" X 1 1/2", 1 ROUND AND 1 LOCK WASHER (E)	1	1	392	–
35	TERMINALS AND UNDERGROUND CABLE	3	3	4111	–
36	WIRE, #4, BARE STRANDED COPPER	50'	45'	–	813760
37	UNIT GROUND, COMPLETE (Q)	1	1	–	603136
38	RISER CONSTRUCTION	–	–	1400/4200	–
39	WIRE, COPPER BARE STRANDED (CABLE POLE NEUTRAL) (N)	5'	5'	715/716	–
40	BRACKET, LADDER ARM (E)	AS REQ'D		1404/4204	167184
41	NUT, CLAMPING CHANNEL, W/SPRING, 1/2" (E)	AS REQ'D		1404/4204	503488
42	CHANNEL, DOUBLE GALV, 24" (E)	AS REQ'D		1404/4204	216700

INSTALLATION:

A. NEW CABLE POLES SHALL HAVE A STANDARD DEPTH OF 9'. IN MOST CASES THIS WILL REQUIRE A 5' TALLER POLE.

B. THIS CONSTRUCTION TO BE USED WITH 2/0 AND SMALLER UNDERGROUND CABLE.

(C) CONNECT OVERHEAD NEUTRAL, TRIPLE TERMINAL BRACKET, AND CONCENTRIC CABLE NEUTRAL CONDUCTOR TO LIGHTNING ARRESTER GROUND.

(D) REDUCE QUANTITIES AS REQUIRED WHEN NOT USING NEUTRAL.

(E) EXEMPT MATERIAL.

(F) OMIT PHASE II AND PHASE N FOR SINGLE PHASE 12KV CABLE POLE; OMIT PHASE I AND PHASE II FOR SINGLE PHASE 6.9 KV CABLE POLE.

(G) INTERCONNECT CUTOUTS AND DEADEND BONDS PER G.O. 95 RULE 52.7D. BONDING SHOULD BE DONE IN ACCORDANCE WITH RULE 53.4.

(N)

UG CABLE SIZE AWG OR KCMIL, AL	OH JUMPER COND SIZE, AWG OR KCMIL, CU	OH NEUT JUMPER SIZE CU	OH NEUT JUMPER SIZE AL	OH NEUT JUMPER SIZE	CABLE POLE NEUT SIZE (CU) UNDER POTHEAD ARM OR TRIPLE TERM BRKT
2	4	6	2	–	#6 PER PHASE
2/0	4	6	2	–	#6 PER PHASE
350	4/0	1/0	3/0	–	#2 PER PHASE
750	500	4/0	336.4	OR SAME SIZE AS O.H. NEUT CONDUCTOR	1/0 PER PHASE
1000	500	4/0	336.4		1/0 PER PHASE

REFERENCE:

(O) ALLOWABLE WORKING AND CLIMBING SPACE – SEE STANDARD 251.

(P) POLE STEPPING – SEE STANDARD 363/4205.

(Q) GROUNDING METHODS – SEE PAGE 1002.5.

R. SEE STANDARD SECTION 1200/4300 FOR FUSING.

S. RISER POSITIONS – SEE STANDARD 1402/4202.

(T) MINIMUM VERTICAL SEPARATION AS PER G.O. 95 – SEE STANDARD 1406/4206.

(U) SEE STANDARD 1407/4207 FOR PORCELAIN AND NON-PORCELAIN TERMINAL MOUNTING BRACKET INSTALLATIONS AND MATERIALS.

FOR FIELD MAINTENANCE ONLY

TABLE OF CONTENTS

~~OH 1499.206~~ UG 4299.206 SUPERCEDES 4229.4 (1-1-93)	SDG&E ELECTRIC STANDARDS 12.47KV AND BELOW 3 PHASE, CABLE POLE, 1/C PER PHASE, UPSWEEP BRACKET CONSTRUCTION	DATE 1-1-93 APPD JJG/RAS

OH1192 UG4230 FIELD MAINTENANCE ONLY

ALL VERSIONS LISTED IN FMO ARE SUPERSEDED BY THEIR CURRENT VERSION FOUND INSIDE THE OVERHEAD AND UNDERGROUND CONSTRUCTION STANDARD MANUALS.

REVISION HISTORY:

07/27/2021: MOVED TO FMO

TABLE OF CONTENTS

© 1998 - 2021 San Diego Gas & Electric Company. All rights reserved. Removal of this copyright notice without permission is not permitted under law.

REV	CHANGE	DR	BY	DSN	APV	DATE	REV	CHANGE	DR	BY	DSN	APV	DATE
C							F						
B							E						
A	ORIGINAL ISSUE	EDM	JIK	JES	CZH	07/27/2021	D						

X Indicates Latest Revision | Completely Revised | New Page | Information Removed

SHEET 1 OF 1

SDG&E ELECTRIC OVERHEAD AND UNDERGROUND FIELD MAINTENANCE ONLY STANDARDS

VOLTAGE BOOSTING TRANSFORMER STATION CABLE POLE
USING NON-PORCELAIN TERMINALS,
12-12.47KV THREE-PHASE INSTALLATION

FMO
OH1192
UG4230

SCOPE: THIS STANDARD SHOWS THE METHOD OF INSTALLING A 12-12.47KV VOLTAGE BOOSTING TRANSFORMER STATION ON A CABLE POLE USING NON-PORCELAIN TERMINALS.

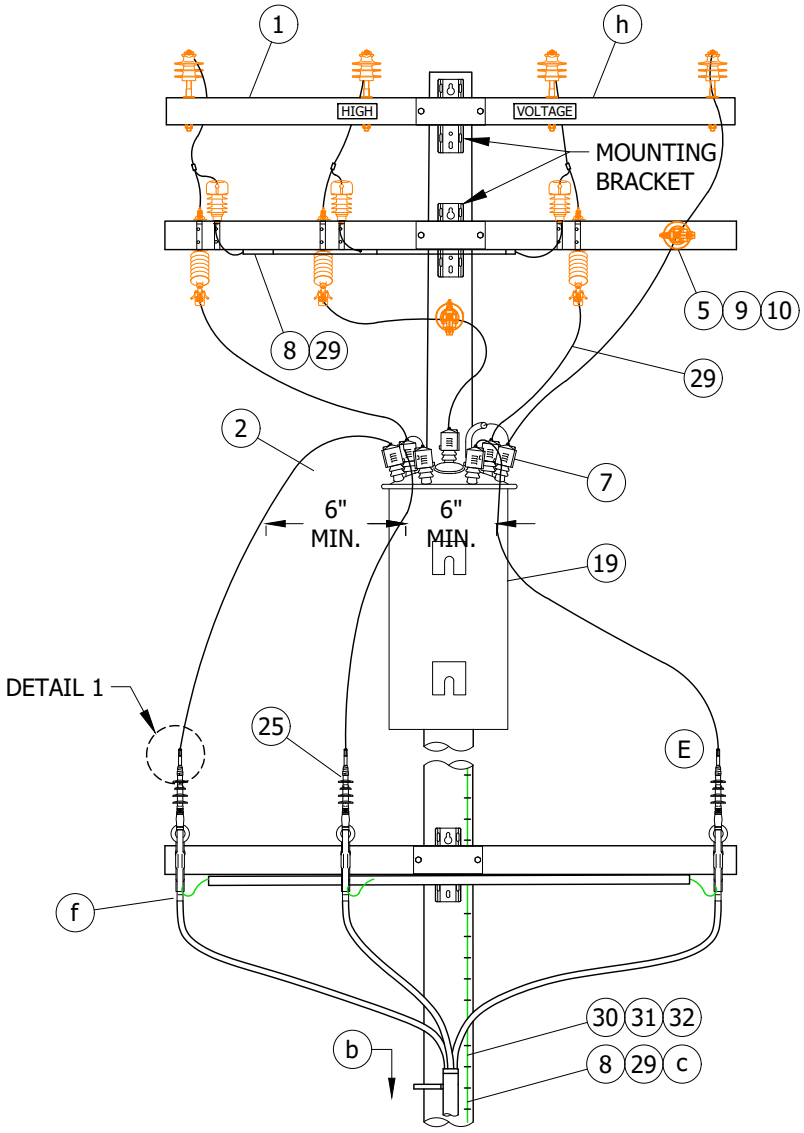

FIGURE 1
FRONT VIEW C

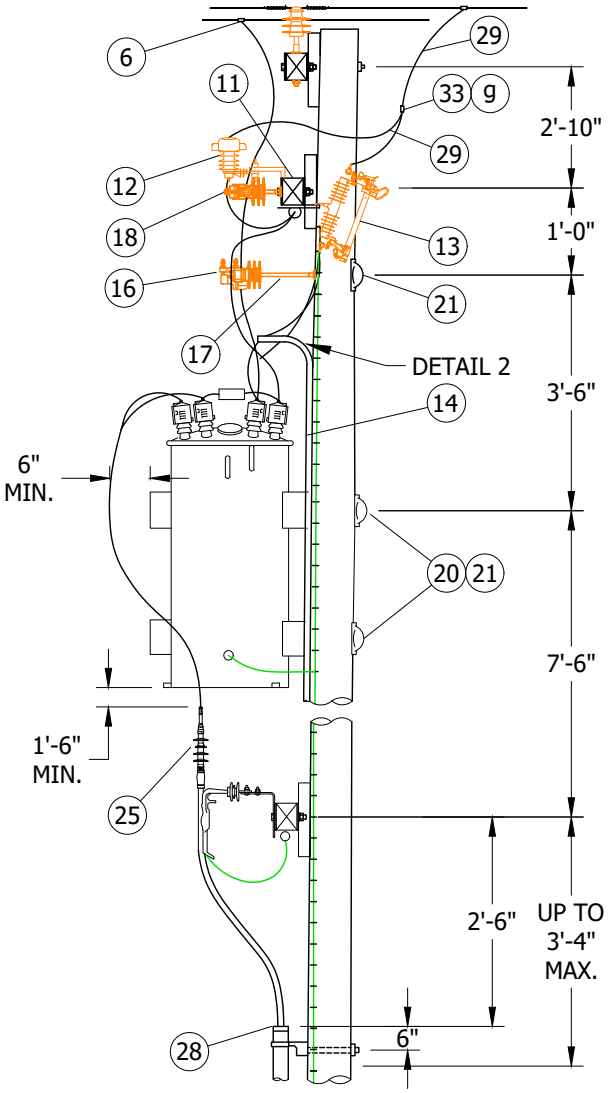

FIGURE 1
SIDE VIEW C

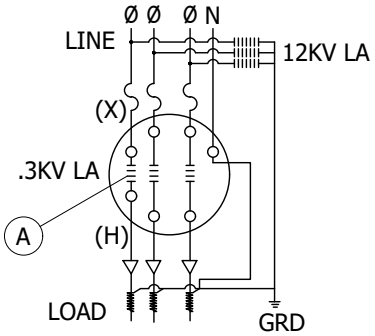

FIELD MAINTENANCE ONLY

FIGURE 2

TABLE OF CONTENTS

© 1998 - 2021 San Diego Gas & Electric Company. All rights reserved. Removal of this copyright notice without permission is not permitted under law.

REV	CHANGE	DR	BY	DSN	APV	DATE	REV	CHANGE	DR	BY	DSN	APV	DATE
C	MOVED TO FMO	EDM	JIK	JES	CZH	07/27/2021	F						
B	EDITORIAL CHANGES	-	JS	JS	CZH	10/01/2018	E						
A	ORIGINAL ISSUE	-	-	TQ	DW	07/10/2013	D						

X Indicates Latest Revision | Completely Revised | New Page | Information Removed

SDG&E ELECTRIC OVERHEAD AND UNDERGROUND FIELD MAINTENANCE ONLY STANDARDS

VOLTAGE BOOSTING TRANSFORMER STATION CABLE POLE USING NON-PORCELAIN TERMINALS, 12-12.47KV THREE-PHASE INSTALLATION

SHEET 1 OF 4

FMO
OH1192.1
UG4230.1

CAUTION:

* CONTINUITY OF NEUTRAL FROM OVERHEAD THROUGH BOOSTER TO UNDERGROUND SYSTEM MUST BE UNINTERRUPTED WHILE BOOSTER IS IN SERVICE.

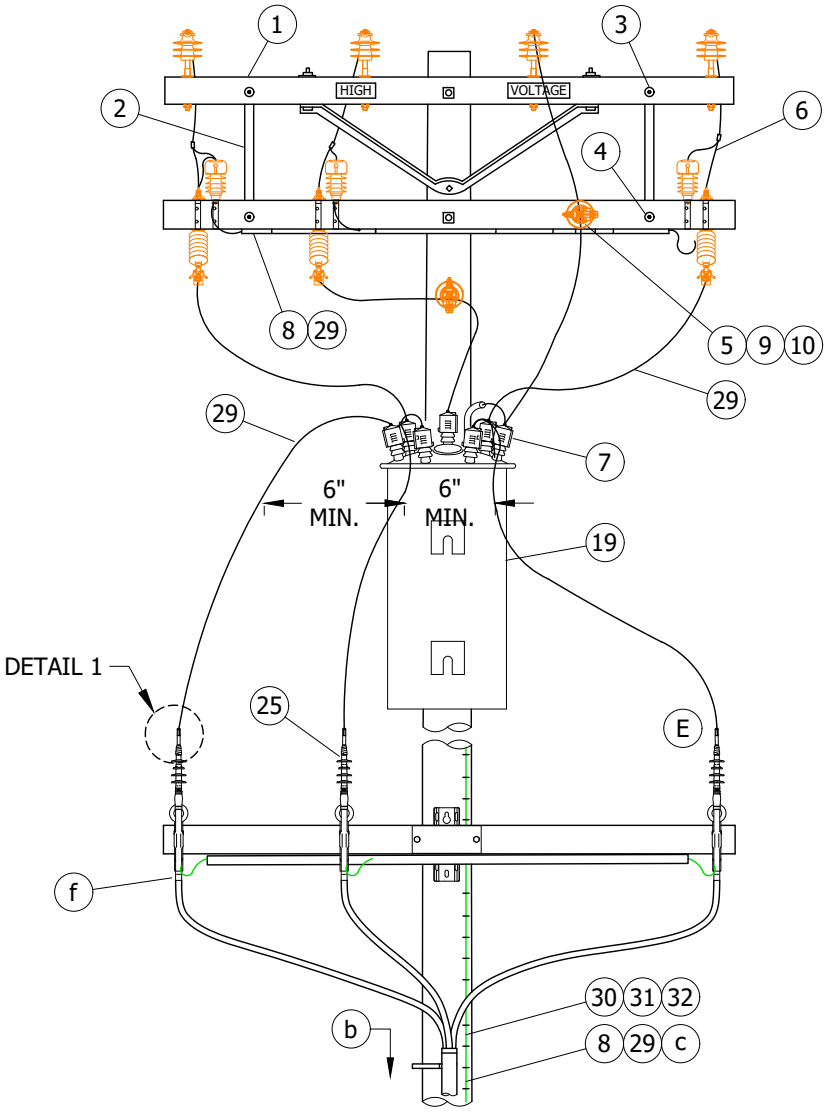

FIGURE 3 (D)
FRONT VIEW

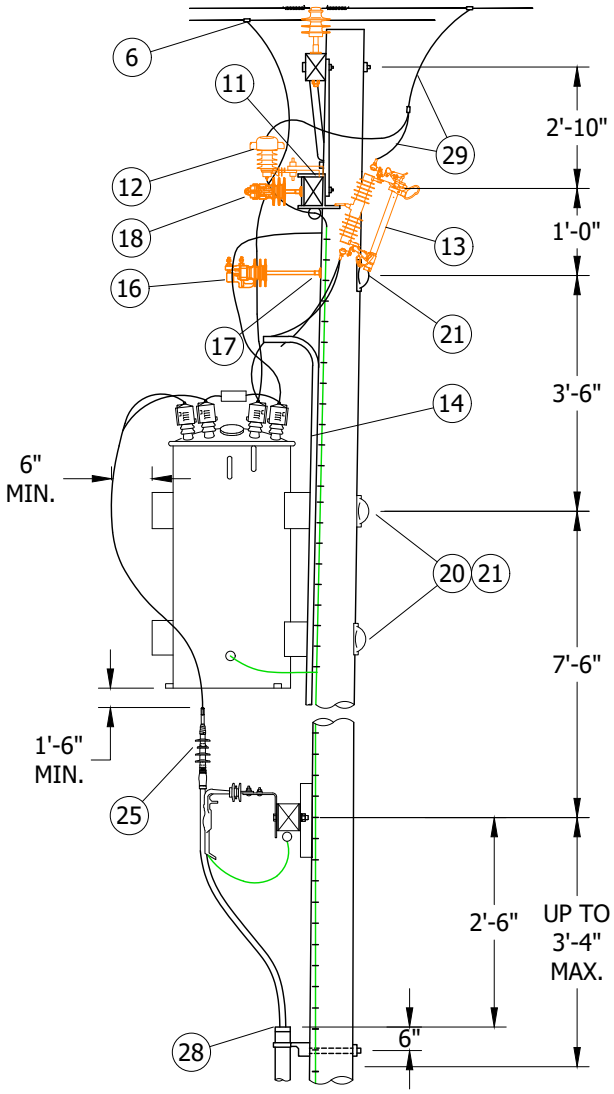

FIGURE 3 (D)
SIDE VIEW

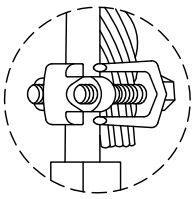

DETAIL 1

FIELD MAINTENANCE ONLY

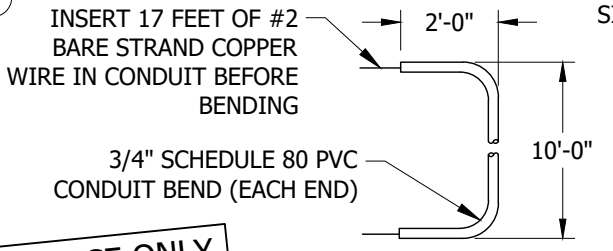

DETAIL 2 (D)
CONDUIT BEND ASSEMBLY

© 1998 - 2021 San Diego Gas & Electric Company. All rights reserved. Removal of this copyright notice without permission is not permitted under law.

REV	CHANGE	DR	BY	DSN	APV	DATE	REV	CHANGE	DR	BY	DSN	APV	DATE
C	MOVED TO FMO	EDM	JIK	JES	CZH	07/27/2021	F						
B	EDITORIAL CHANGES	-	JS	JS	CZH	10/01/2018	E						
A	ORIGINAL ISSUE	-	-	TQ	DW	07/10/2013	D						

TABLE OF CONTENTS

INSTALLATION:

(A) THE 3KV LIGHTNING ARRESTERS SHOWN ON THE HHT COME AS PART OF THE TRANSFORMER. IF THEY ARE NOT VISIBLE, CHECK THE NAME PLATE TO SEE IF THEY ARE INTERNALLY INSTALLED.

(B) CONNECT ONE STRAND OF CONCENTRIC NEUTRAL TO TERMINAL MOUNTING BOLT WITH DOUBLE NUT.

(C) USE FIGURE 1 FOR ALL **NEW** CONSTRUCTION AND WHEN ADDING TO EXISTING CONSTRUCTION WITH NEUTRAL ON OUTSIDE PIN POSITION.

(D) USE FIGURE 3 ON EXISTING CONSTRUCTION WITH NEUTRAL ON INSIDE PIN POSITION.

(E) INSTALL TERMINATION PER MANUFACTURERS INSTRUCTIONS.

FIELD MAINTENANCE ONLY

BILL OF MATERIALS:

ITEM	DESCRIPTION	QUANTITY	STANDARD PAGE	STOCK NUMBER	DESIGN UNITS
1	CROSSARM, 3 3/4" X 5 3/4" X 10'-0"	1	-	S294128	-
2	BRACE, FLAT, GALV., 3'-0"	2	-	S164224	-
3	BOLT, MACH., GALV., 3/8" X 5", 1 ROUND & 1 SPRING WASHER	2	390	-	-
4	BOLT, MACH., GALV., 1/2" X 5", 1 RD & 1 DBL COIL SPRING WASHER	2	390	-	-
5	BOLT, MACH, GALV., 5/8" X (LENGTH AS REQ'D), 2 SQUARE & 1 DOUBLE COIL SPRING WASHER	2	390	-	-
6	CONNECTOR, WIRE, COMPRESSION, CU OR AL, (SIZE AS REQ'D)	AS REQ'D	784-785	-	-
7	BUSHING COVER, TRANSFORMER	7	-	S289188 (X)	-
8	GALVANIZED STAPLES FOR PVC COVERED GROUND WIRE	AS REQ'D	-	S678564 (X)	-
9	PIN, TRANSFORMER LEAD ADAPTER, 1"	1	-	S529248	-
10	INSULATOR, 12KV, NEUTRAL	1	-	S429216	-
11	BRACKET, CUTOUT/ARRESTER, CROSSARM MOUNTING	6	-	S166070	1
12	ARRESTER, LIGHTNING, 12KV W/ 48 #6 COVERED LEAD WIRE	3	-	S113256	LA12
13	CUTOUT, 12KV, WITH LOADBUSTER HOOKS, ALUMIFORM	3	-	S298020	-
14	CONDUIT, PVC, SCHEDULE 80, 3/4"	24	-	S251520	-
15	STRAPS, PIPE, GALV., 3/4" & 2 - 6D NAILS, GALV. (I)	AS REQ'D	-	S697888	-
		-	-	S491552	-
16	INSULATOR, 12KV (CLASS AS REQ'D)	1	750	-	-
17	BRACKET, INSULATOR, 1" OR 1 3/8" LEAD THREAD	1	-	S166176	-
		1	-	S166176	-
18	FLEXIBLE ARRESTER GROUND STRAP	AS REQ'D	-	S698754	-
19	AUTOTRANSFORMER, TYPE 'HHT', 3-PHASE, 12-12.47KV, (COMPLETE WITH 3 - 3KV LIGHTNING ARRESTERS)	1	-	-	-
		1	1121	-	-
20	BOLT, MACH, GALV., 3/4" X (LENGTH AS REQ'D), 1 SQUARE CURVED RIBBED & 1 DOUBLE COIL SPRING WASHER	-	-	-	-
		2	390	-	-
21	COVER, BOLT, PLASTIC & 6-10D NAILS, GALV.	4	-	S285696	-
		-	-	S491456	-
22	BOLT, MACH, GALV., 5/8" X (LENGTH AS REQ'D); 1 SQUARE CURVED RIB & 1 DBL COIL SPRING WASHER	-	-	-	-
		1	390	-	-
23	BRACKET, POTHEAD UPSWEEP WITH PVC LINER	1	-	S166856	-
24	XARM, LENGTH AS REQ'D	1	-	-	-
25	TERMINALS, UNDERGROUND CABLE	1	4111	-	-

TABLE OF CONTENTS

© 1998 - 2021 San Diego Gas & Electric Company. All rights reserved. Removal of this copyright notice without permission is not permitted under law.

REV	CHANGE	DR	BY	DSN	APV	DATE	REV	CHANGE	DR	BY	DSN	APV	DATE
C	MOVED TO FMO	EDM	JIK	JES	CZH	07/27/2021	F						
B	EDITORIAL CHANGES	-	JS	JS	CZH	10/01/2018	E						
A	ORIGINAL ISSUE	-	-	TQ	DW	07/10/2013	D						

X Indicates Latest Revision | Completely Revised | New Page | Information Removed

SDG&E ELECTRIC OVERHEAD AND UNDERGROUND FIELD MAINTENANCE ONLY STANDARDS

VOLTAGE BOOSTING TRANSFORMER STATION CABLE POLE
USING NON-PORCELAIN TERMINALS,
12-12.47KV THREE-PHASE INSTALLATION

FMO
OH1192.3
UG4230.3

BILL OF MATERIALS (CONT'D):

ITEM	DESCRIPTION		QUANTITY	STANDARD PAGE	STOCK NUMBER	DESIGN UNITS
26	SCREW, LAG, GALV., 5/8" X 5"		3	-	S621602 (X)	-
27	CONDUIT, PLASTIC, PVC, 2"		2	-	S251296	-
28	CABLE RISER PROTECTION		1'-0"	1404/4204	-	-
29	GROUNDING, #4 PVC GROUND WIRE, RODS & CONNECTORS	STEEL POLE	1	1002	-	GNDPSP
		WOOD POLE			-	GNDPVC
30	BRACKET, LADDER ARM		AS REQ'D	-	S167186	-
31	NUT, CLAMPING CHANNEL, W/SPRING, 1/2"		AS REQ'D	-	S503488 (X)	-
32	CHANNEL, DOUBLE GALV., 2'-0"		AS REQ'D	-	S216702	-
33	CLAMP, HOT LINE		3	-	S227680	-

TABLE 1

CABLE SIZE	UG MACRO UNITS			
	WITH LADDER ARMS		WITHOUT LADDER ARMS	
	PORCELAIN	NON-PORCELAIN	PORCELAIN	NON-PORCELAIN
3C #2/0 AL	CP2/0L	NP2/0L	CP#2/0	NP-2/0
3C-3-#2 AL	CP3#2L	NP3#2L	CP-3#2	NP-3#2

NOTES:

(I) NOT SHOWN ON FIGURES.

(X) THIS ITEM IS EXEMPT.

REFERENCE:

a. BOND ALL CUTOUTS IN HEAVY CONTAMINATION DISTRICTS AS IDENTIFIED ON OH287.

(b) SEE OH363UG4205 FOR POLE STEPPING.

(c) SEE OH1002 FOR GROUNDING METHODS.

d. SEE OH1200UG4300 FOR FUSING.

e. SEE OH1247 FOR LIGHTNING ARRESTER REQUIREMENTS.

(f) SEE UG4207 FOR NON-PORCELAIN TERMINAL MOUNTING BRACKET INSTRUCTIONS AND MATERIALS.

(g) SEE OH788 FOR HOT LINE CLAMP CONNECTION.

(h) SEE OH379 FOR FIBERGLASS CROSSARMS.

FIELD MAINTENANCE ONLY

TABLE OF CONTENTS

© 1998 - 2021 San Diego Gas & Electric Company. All rights reserved. Removal of this copyright notice without permission is not permitted under law.

REV	CHANGE	DR	BY	DSN	APV	DATE	REV	CHANGE	DR	BY	DSN	APV	DATE
C	MOVED TO FMO	EDM	JIK	JES	CZH	07/27/2021	F						
B	EDITORIAL CHANGES	-	JS	JS	CZH	10/01/2018	E						
A	ORIGINAL ISSUE	-	-	TQ	DW	07/10/2013	D						

X Indicates Latest Revision | Completely Revised | New Page | Information Removed

SDG&E ELECTRIC OVERHEAD AND UNDERGROUND FIELD MAINTENANCE ONLY STANDARDS

VOLTAGE BOOSTING TRANSFORMER STATION CABLE POLE
USING NON-PORCELAIN TERMINALS,
12-12.47KV THREE-PHASE INSTALLATION

FMO
OH1192.4
UG4230.4

OH 1432 FIELD MAINTENANCE ONLY

All versions listed in FMO are superseded by their current version found inside the Overhead Construction Standard Manual.

REVISION HISTORY:

3/18/2019: Newer Version moved to FMO

2/20/2019: Install S706680 in place of old style Disconnect Switch.

7/13/2016: OH1432 moved to FMO

TABLE OF CONTENTS

© 1998 - 2019 San Diego Gas & Electric Company. All rights reserved. Removal of this copyright notice without permission is not permitted under law.

REV	CHANGE	BY	DSGN	APPV	DATE	REV	CHANGE	BY	DSGN	APPV	DATE
C	EDITORIAL CHANGES	JK	JS	CZH	3/18/2019	F					
B	EDITORIAL CHANGES	JK	JS	CZH	2/20/2019	E					
A	ORIGINAL ISSUE	JS	IL	MDJ	7/13/2016	D					

SHEET 1 OF 1	X Indicates Latest Revision	Completely Revised	New Page	Information Removed
	SDG&E ELECTRIC UNDERGROUND STANDARDS			
	12.47KV AND BELOW CABLE POLE, UPSWEEP BRACKET, THREE-PHASE, 1/C PER PHASE, LINE ARM MOUNTED DISCONNECTS, NON-PORCELAIN TERMINALS			
				FMO UG4232

SCOPE: THIS STANDARD SHOWS THREE-PHASE CABLE POLE CONSTRUCTION USING NON-PORCELAIN TERMINALS FOR 350 KCMIL AND LARGER UG CABLE.

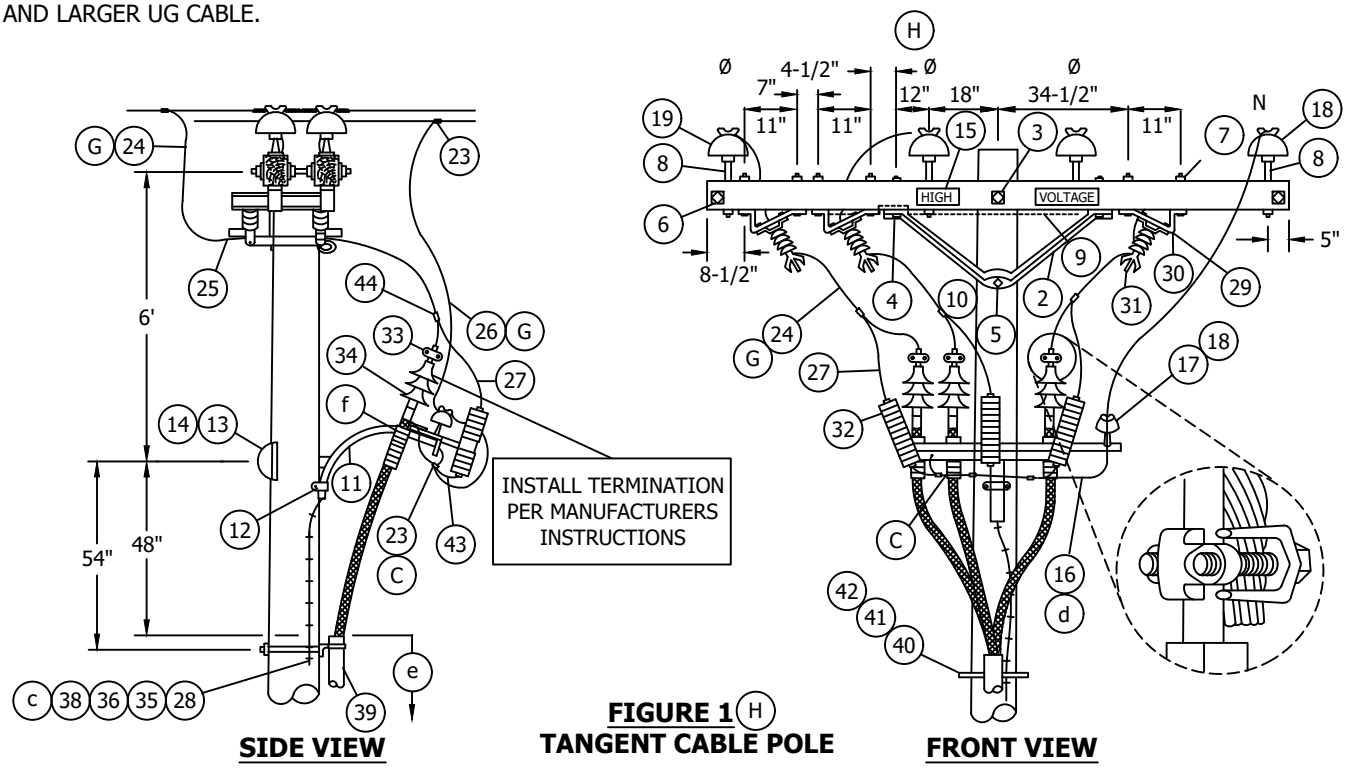

SIDE VIEW **FRONT VIEW**

FIGURE 1 (H)
TANGENT CABLE POLE

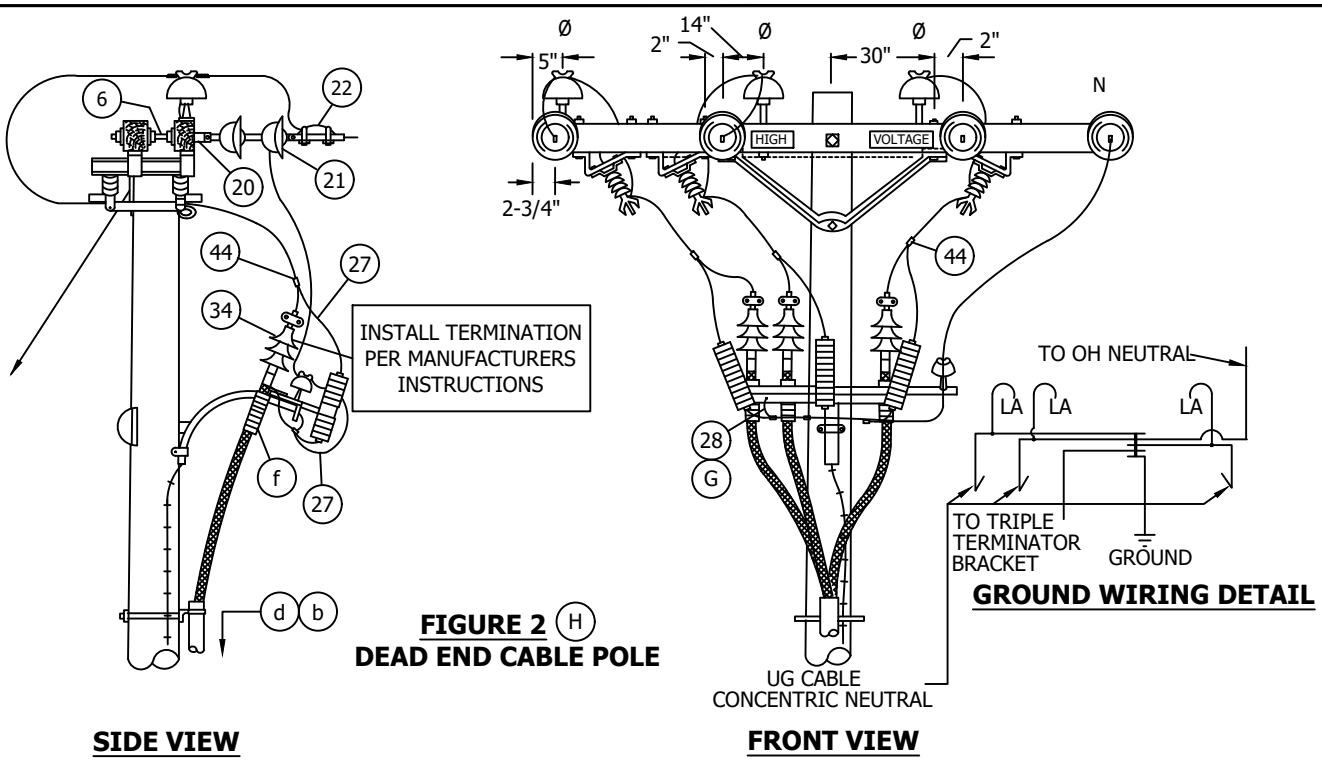

SIDE VIEW **FRONT VIEW**

GROUND WIRING DETAIL

FIGURE 2 (H)
DEAD END CABLE POLE

TABLE OF CONTENTS

© 1998 - 2019 San Diego Gas & Electric Company. All rights reserved. Removal of this copyright notice without permission is not permitted under law.

REV	CHANGE	BY	DSGN	APPV	DATE	REV	CHANGE	BY	DSGN	APPV	DATE
C	DRAWING UPDATE	PEI	-	-	02/18/2019	F					
B	EDITORIAL CHANGES	GW	JS	MDJ	04/01/2018	E					
A	REVISION	-	PEA	JJ	10/20/2005	D	MOVED TO FMO	JK	JS	CZH	3/18/2019

X Indicates Latest Revision | Completely Revised | New Page | Information Removed

SDG&E ELECTRIC OVERHEAD AND UNDERGROUND STANDARDS

12.47KV AND BELOW CABLE POLE, UPSWEEP BRACKET, THREE-PHASE, 1/C PER PHASE, LINE ARM MOUNTED DISCONNECTS, NON-PORCELAIN TERMINALS

OH1432.1
UG4232.1

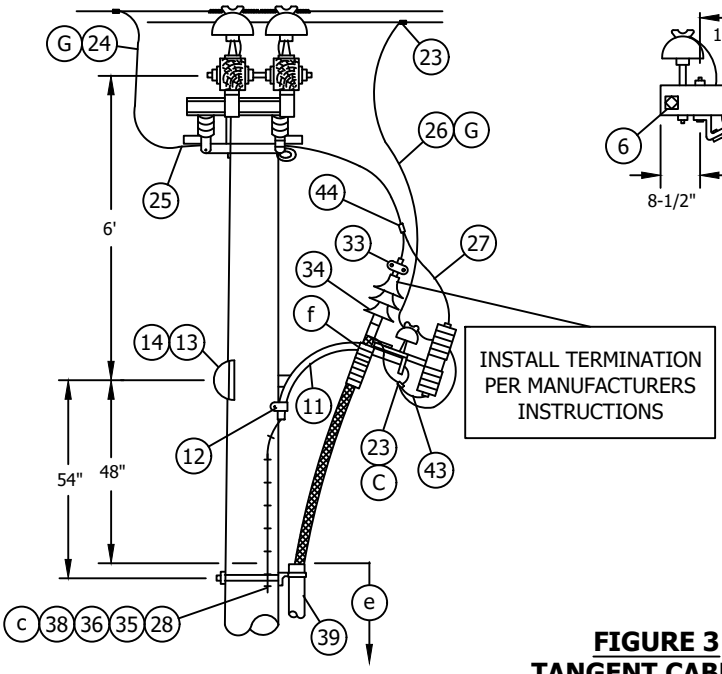

SIDE VIEW

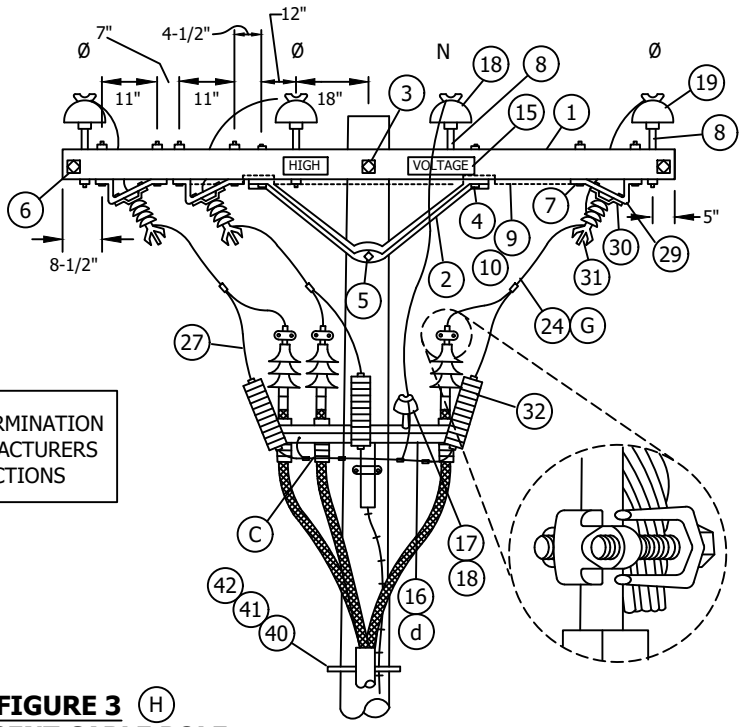

FRONT VIEW

FIGURE 3 (H)
TANGENT CABLE POLE

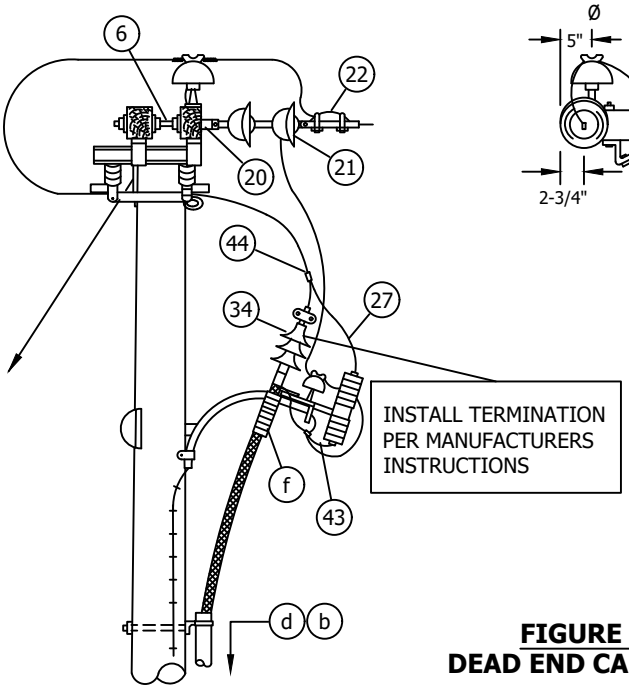

SIDE VIEW

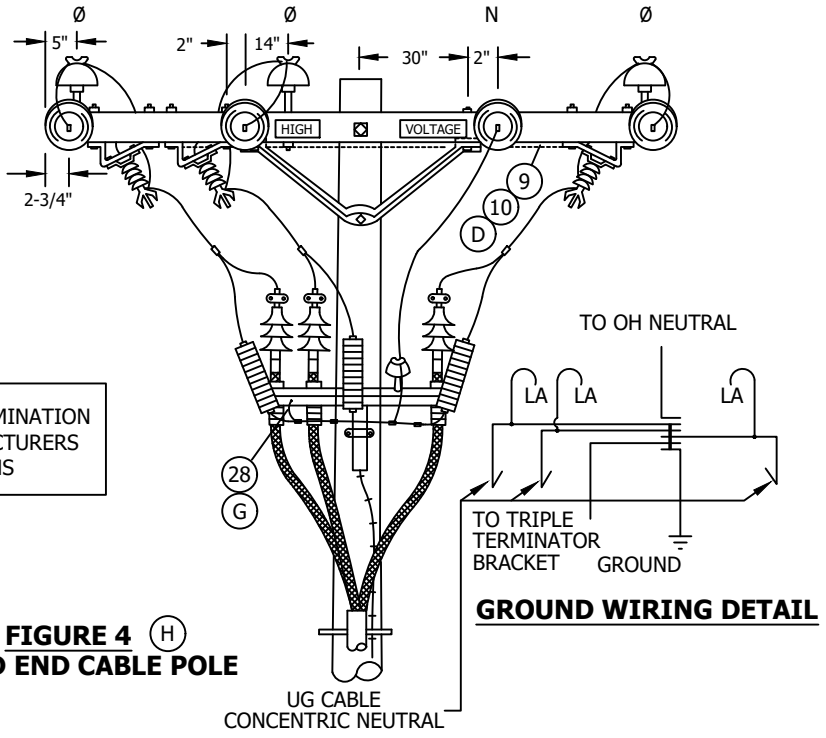

GROUND WIRING DETAIL

FRONT VIEW

FIGURE 4 (H)
DEAD END CABLE POLE

© 1998 - 2019 San Diego Gas & Electric Company. All rights reserved. Removal of this copyright notice without permission is not permitted under law.

REV	CHANGE	BY	DSGN	APPV	DATE	REV	CHANGE	BY	DSGN	APPV	DATE
C	DRAWING UPDATE	PEI	-	-	02/18/2019	F					
B	EDITORIAL CHANGES	GW	JS	MDJ	04/01/2018	E					
A	REVISION	-	PEA	JJ	10/20/2005	D	MOVED TO FMO	JK	JS	CZH	3/18/2019

X Indicates Latest Revision | Completely Revised | New Page | Information Removed

SDG&E ELECTRIC OVERHEAD AND UNDERGROUND STANDARDS

12.47KV AND BELOW CABLE POLE, UPSWEEP BRACKET, THREE-PHASE, 1/C PER PHASE, LINE ARM MOUNTED DISCONNECTS, NON-PORCELAIN TERMINALS

OH1432.2
UG4232.2

TABLE OF CONTENTS

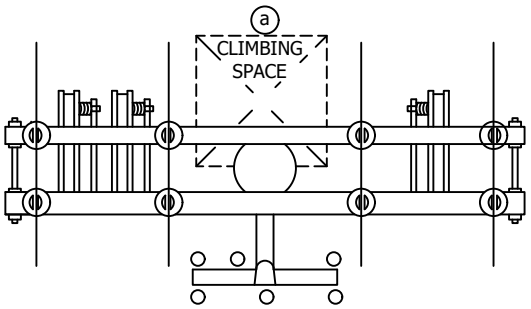

FIGURE 1

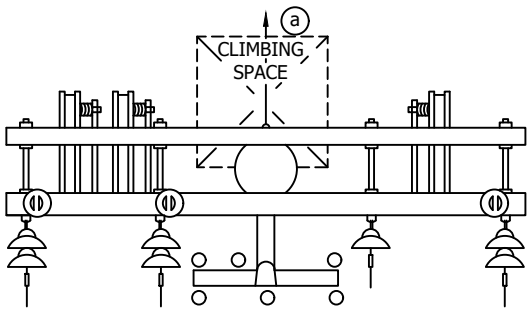

FIGURE 2

INSTALLATION:

A. NEW CABLE POLES SHALL HAVE A STANDARD DEPTH OF 9'. IN MOST CASES, THIS WILL REQUIRE A 5' TALLER POLE.

B. THIS CONSTRUCTION TO BE USED WITH 350 KCMIL AND LARGER UNDERGROUND CABLE.

(C) INTERCONNECT OVERHEAD NEUTRAL, TRIPLE TERMINAL BRACKET AND CONCENTRIC CABLE NEUTRAL TO LIGHTNING ARRESTER GROUND.

(D) INTERCONNECT SWITCH AND DEAD END BONDS PER G.O. 95 RULE 52.7 D.

(E) REDUCE QUANTITIES AS REQUIRED WHEN NOT USING NEUTRAL.

(F) WHEN ADDING THIS CONSTRUCTION TO AN EXISTING POLE WITH A 10' LINE ARM, AND SUFFICIENT POLE HEIGHT EXISTS, INSTALL 10' SWITCH ARMS AND ASSOCIATED HARDWARE BELOW THE LINE ARM TO AVOID CHANGING LINE ARM FROM 10' TO 12' (SEE O.H. STANDARD 1222. FIG. 1-B).

(G)

UG CABLE SIZE AWG OR KCMIL, AL	OH JUMPER COND SIZE, AWG OR KCMIL, CU	OH NEUT JUMPER SIZE			CABLE POLE NEUT SIZE (CU) UNDER POTHEAD ARM OR TRIPLE TERM BRKT
		CU	AL	-	
350	4/0	1/0	3/0	-	#2 PER PHASE
750	500	4/0	336.4	OR SAME SIZE AS OH NEUT CONDUCTOR	-
1000	500	4/0	336.4		1/0 PER PHASE
BECAUSE THE PROPER SIZE CONNECTOR IS NOT ALWAYS AVAILABLE, THE JUMPER FROM THE OVERHEAD LINE CONDUCTOR TO THE HOOKSTICK SWITCH CAN BE THE SAME SIZE AS, OR LARGER THAN THAT OF THE OVERHEAD CONDUCTOR.					

(H) USE FIGURE ONE AND TWO FOR ALL **NEW** CONSTRUCTION AND WHEN ADDING TO EXISTING CONSTRUCTION WITH NEUTRAL ON OUTSIDE PIN POSITION. SEE DESIGN MANUAL PAGE 5124.2.
USE FIGURE THREE AND FOUR ON EXISTING CONSTRUCTION WITH NEUTRAL ON INSIDE PIN POSITION.

TABLE OF CONTENTS

© 1998 - 2019 San Diego Gas & Electric Company. All rights reserved. Removal of this copyright notice without permission is not permitted under law.

REV	CHANGE	BY	DSGN	APPV	DATE	REV	CHANGE	BY	DSGN	APPV	DATE
C	DRAWING UPDATE	PEI	-	-	02/18/2019	F					
B	EDITORIAL CHANGES	GW	JS	MDJ	04/01/2018	E					
A	REVISION	-	PEA	JJ	01/01/1998	D	MOVED TO FMO	JK	JS	CZH	3/18/2019

BILL OF MATERIALS:

ITEM	DESCRIPTION	QUANTITY		CONSTR STANDARD	STOCK NUMBER	ASSEMBLY UNIT
		FIG 1	FIG 2			
1	CROSSARM, 3-3/4" X 5-3/4" X 12'-0" (F)	2	2	-	S294160	-
2	BRACE, ANGLE, CROSSARM, 5'	2	2	-	S164128	-
3	BOLT, MACH.M GALV, 5/8" X (LENGTH AS REQ'D), 2 SQUARE AND 1 DOUBLE COIL SPRING WASHERS	1	1	392	-	-
4	BOLT, MACH, GALV, 1/2" X 7", 1 RD, 1 DBL COIL SPR WASH	4	4	392	-	-
5	BOLT, MACH.M GALV, 5/8" X (LENGTH AS REQ'D), AND 1 DOUBLE COIL SPRING WASHERS	1	1	392	-	-
6	BOLT, SPACE, GALV, 5/8" X (LENGTH AS REQ'D), 4 SQUARE, 2 ROUND AND 2 DOUBLE COIL SPRING WASHERS (E)	2	4	392	-	-
7	BOLT, MACH, GALV, 1/2" X 8", 1 ROUND AND 1 DOUBLE COIL SPRING WASHER	12	12	392	-	-
8	PIN, INSULATOR, STRAIGHT, 12KV, 1" OR (E)	8	3	-	S532704	-
	1-3/8" (E)	8	3	-	S532448	-
9	WIRE, #8, BARE SOLID ANNEALED COPPER	15'	15'	-	S812928	-
10	STAPLES, FENCE, GALV, 1-1/4"	AS REQ'D		-	S678528	-
11	BRACKET, GALV, TERMINAL UPSWEEP (C)	1	1	-	S166856	-
12	SCREW, LAG, GALV, 4"	2	2	-	S621568	-
13	BOLT, SPACE, GALV, 5/8" X (LENGTH AS REQ'D), 1 SQUARE AND 1 DOUBLE COIL SPRING WASHER	1	1	392	-	-
14	COVER, BOLT, PLASTIC, AND 6 - 100 NAILS, GALV	1	1	-	S285696 S491392	-
15	SIGN, HIGH VOLTAGE, AND 9 ROOFING NAILS, GALV	2	2	-	S647648 S492224	-
16	BRACKET, TRIPLE TERMINATOR	1	1	-	S166676	-
17	PIN, SHORT SHANK, 1" LEAD THREAD (E)	1	1	-	S532426	-
18	INSULATOR, 12KV, NEUTRAL (E)	3	1	-	S429216	-
19	INSULATOR, LINE, 12KV, 1" OR 1-3/8" PIN	6	3	750	-	-
20	CLEVIS, DEAD END, 5/8" BOLT, STEEL (E)	-	4	-	S235715	-
21	INSULATOR, SUSPENSION, 12KV, CLEVIS (E)	-	7	750	-	-
22	CLAMP, STRAIGHT LINE, D.E. (E)	-	4	741	-	-
23	CONNECTOR, WIRE COMPRESSION, (SIZE AS REQ'D)	AS REQ'D		783-786	-	-
24	WIRE, BARE STRANDED COPPER, (OH JUMPER) (G)	21'	30'	715	-	-
25	TERMINAL, COMPRESSION (SIZE AS REQ'D)	6	6	794-795	-	-
26	WIRE, BARE STRANDED COPPER, (OH NEUT JUMPER) (G)	9'	9'	715	-	-
27	WIRE, #6, BARE STRANDED COPPER	12'	12'	-	S813536	-
28	#4 CU SOLID GROUND WIRE, PVC COVERED	50'	50'	-	S812490	GNDPVC
29	BRACKET, DISCONNECT, ANGLE MOUNTING	6	6	-	S166542	-
30	BOLT, MACH, GALV, 3/8" X 3", 2 RD WASH & 1 LOCK WASH	6	6	392	-	-
31	SWITCH, HOOKSTICK DISCONNECT, 14.4KV, 600 A OR 1200 A	3	3	1222	-	-
32	ARRESTER, LIGHTNING W/48" COVERED LEAD WIRE	3	3	1247	S113256	10KVTA
33	CONNECTOR, TWO BOLT, BRONZE (SIZE AS REQ'D)	3	3	4111	-	-
34	TERMINALS, UNDERGROUND CABLE (f)	3	3	4111	-	-
35	GROUND ROD, 5/8" X 8', COPPERWELD	1	1	-	S603072	GNDPVC

TABLE OF CONTENTS

© 1998 - 2019 San Diego Gas & Electric Company. All rights reserved. Removal of this copyright notice without permission is not permitted under law.

REV	CHANGE	BY	DSGN	APPV	DATE	REV	CHANGE	BY	DSGN	APPV	DATE
C	DRAWING UPDATE	PEI	-	-	02/18/2019	F					
B	EDITORIAL CHANGES	GW	JS	MDJ	04/01/2018	E					
A	REVISION	-	DW	TQ	03/20/2014	D	MOVED TO FMO	JK	JS	CZH	3/18/2019

X Indicates Latest Revision | Completely Revised | New Page | Information Removed

SDG&E ELECTRIC OVERHEAD AND UNDERGROUND STANDARDS

12.47KV AND BELOW CABLE POLE, UPSWEEP BRACKET, THREE-PHASE, 1/C PER PHASE, LINE ARM MOUNTED DISCONNECTS, NON-PORCELAIN TERMINALS

OH1432.4
UG4232.4

BILL OF MATERIALS (CONT'D):

ITEM	DESCRIPTION	QUANTITY		CONSTR STANDARD	STOCK NUMBER	ASSEMBLY UNIT
		FIG 1	FIG 2			
36	COPPER BONDED GROUND CONNECTOR	1	1	-	S259010	-
37	-	-	-	-	-	-
38	GALVANIZED STAPLES FOR PVC COVERED GROUND WIRE	AS REQ'D		-	S678562	-
39	RISER CONSTRUCTION	AS REQ'D		1400/4200	-	-
40	BRACKET, LADDER ARM	AS REQ'D		1404/4204	S167184	-
41	NUT, CLAMPING CHANNEL, W/SPRING, 1/2"	AS REQ'D		1404/4204	S503488	-
42	CHANNEL, DOUBLE GALV., 24"	AS REQ'D		1404/4204	S216700	-
43	FLEXIBLE ARRESTER GROUND STRAP	AS REQ'D		-	S698754	-
44	HOT LINE CLAMP	3	3	788	S227680	-

OVERHEAD MACRO UNIT 3NS-B

NOTES: NONE

REFERENCE:

(a) ALLOWABLE WORKING AND CLIMBING SPACE - SEE STD. 251

(b) POLE STEPPING - SEE STD. 363.

(c) GROUNDING METHODS - SEE PAGE 1002.5.

(d) RISER POSITIONS - SEE STANDARD 1402/4202.

(e) MINIMUM VERTICAL SEPARATION AS PER G.O. 95 SEE STD. 1406/4206.

(f) SEE STANDARD 1407/4207 FOR NON PORCELAIN TERMINAL MOUNTING INSTRUCTIONS AND MATERIALS.

TABLE OF CONTENTS

© 1998 - 2019 San Diego Gas & Electric Company. All rights reserved. Removal of this copyright notice without permission is not permitted under law.

REV	CHANGE	BY	DSGN	APPV	DATE	REV	CHANGE	BY	DSGN	APPV	DATE
C	DRAWING UPDATE	PEI	-	-	02/18/2019	F					
B	EDITORIAL CHANGES	GW	JS	MDJ	04/01/2018	E					
A	REVISION	-	DW	TQ	03/20/2014	D	MOVED TO FMO	JK	JS	CZH	3/18/2019

FIELD MAINTENANCE ONLY

REVISION HISTORY:

7/13/2016: All versions prior to 2016 are superseded by their current version found inside the Overhead Construction Standard Manual.

TABLE OF CONTENTS

© 1998 - 2016 San Diego Gas & Electric Company. All rights reserved. Removal of this copyright notice without permission is not permitted under law.

REV	CHANGE	BY	DSGN	APPV	DATE	REV	CHANGE	BY	DSGN	APPV	DATE
C						F					
B						E					
A	ORIGINAL ISSUE	JS	IL	MDJ	7/13/2016	D					

X Indicates Latest Revision | Completely Revised | New Page | Information Removed

SHEET 1 OF 1

SDG&E ELECTRIC UNDERGROUND STANDARD

12.47KV AND BELOW CABLE POLE, UPSWEEP BRACKET, 3Ø, 1/C PER PHASE, LINE ARM MOUNTED DISCONNECTS

FMO UG 4233

TABLE OF CONTENTS

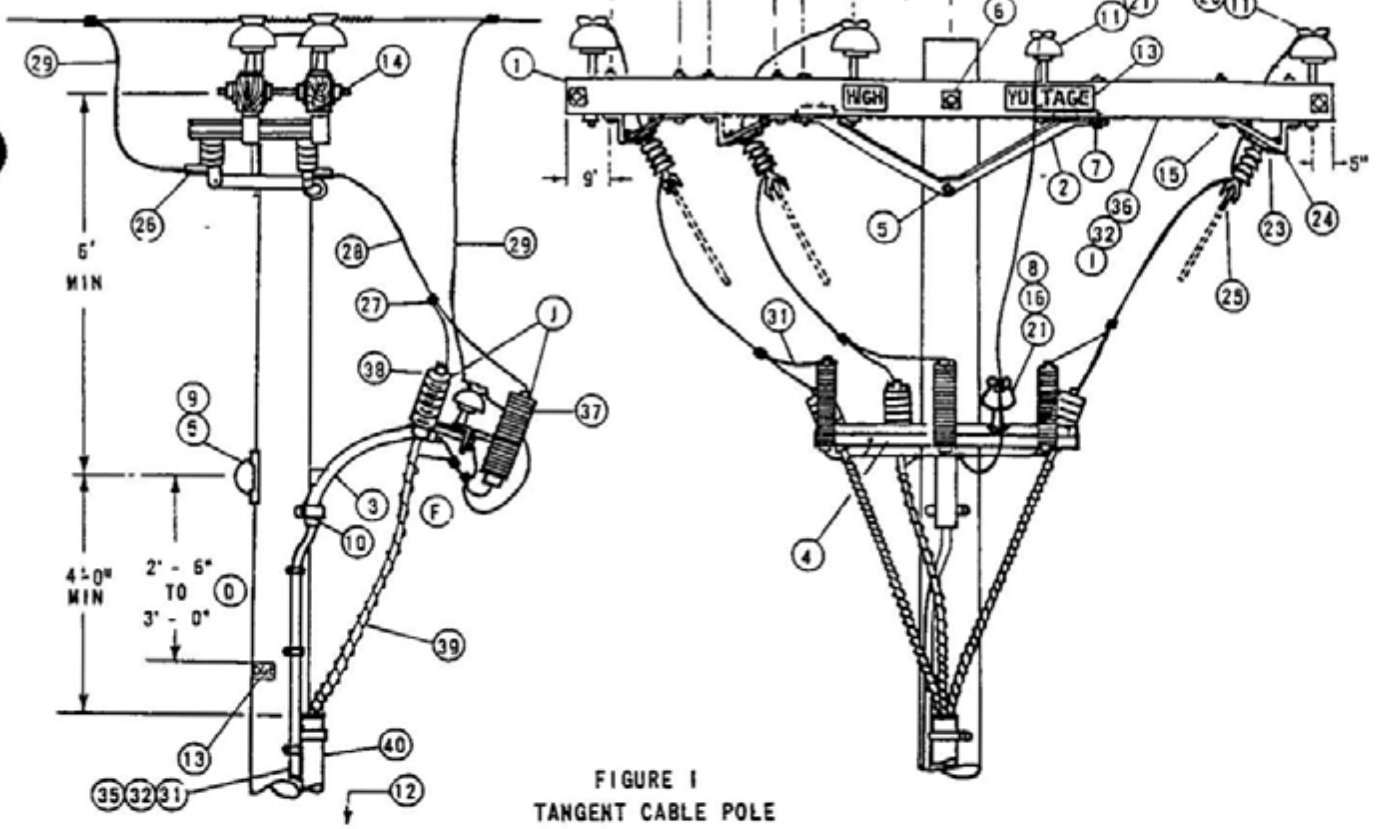

FIGURE 1
TANGENT CABLE POLE

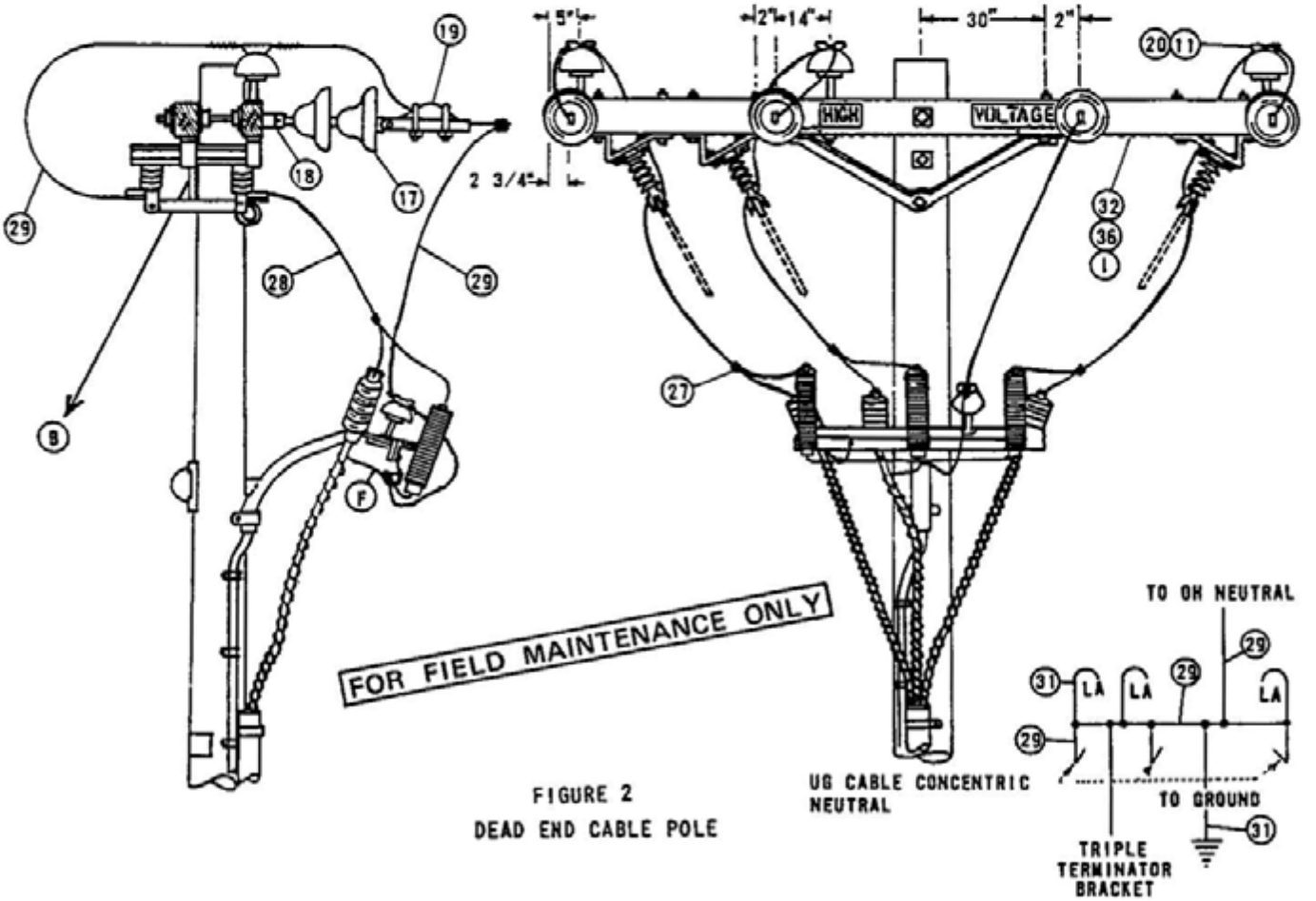

FIGURE 2
DEAD END CABLE POLE

	Indicates Latest Revision ☐ Completely Revised ☐ New Page	
ISSUE 1993 DATE 3-9-83 APPD JHT/DRH	SDG&E ELECTRIC STANDARDS 12.47KV AND BELOW CABLE POLE, UPSWEEP BRACKET, 3Ø, 1/C PER PHASE, LINE ARM MOUNTED DISCONNECTS	~~OH 1499.305~~ UG 4299.305 SUPERSEDES 4233 1 (3-9-83)

FIGURE 1

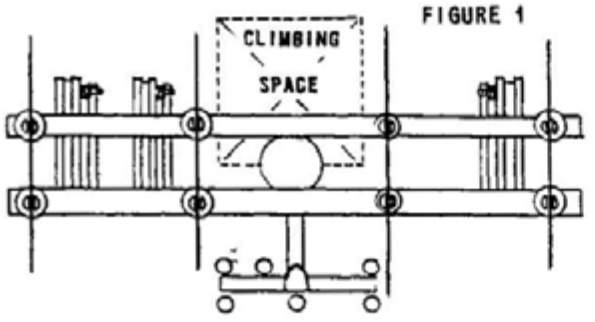

FIGURE 2

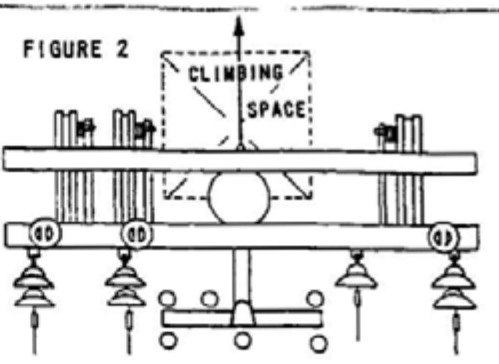

NOTES:

A. SEE PAGE 1406/4206 FOR G.O. 95 MINIMUM VERTICAL SEPARATION BETWEEN TOP OF RISER PROTECTION AND NEXT LOWER CONDUCTOR LEVEL.

(B) SEE PAGE 251 FOR ALLOWABLE CLIMBING SPACE OBSTRUCTIONS.

(C) USE TWO GROUND RODS SPACED A MINIMUM OF 6' APART.

(D) G.O. 95 DIMENSION.

(E) EXEMPT MATERIAL.

(F) INTERCONNECT TRIPLE TERMINAL BRACKET, LIGHTNING ARRESTER GROUND, CONCENTRIC NEUTRAL, AND OVERHEAD NEUTRAL.

(G) REDUCE QUANTITIES AS REQUIRED WHEN NOT USING NEUTRAL.

H. THIS CONSTRUCTION TO BE USED WITH 350 KCMIL AND LARGER UNDERGROUND CABLE.

(I) INTERCONNECT SWITCH AND DEAD END BONDS PER G.O. 95 RULE 52 7 D

(J) ARRESTER AND CABLE TERMINAL POSITIONS MAY BE INTERCHANGED AT THE DISCRETION OF DISTRICT OPERATIONS PERSONNEL.

FOR FIELD MAINTENANCE ONLY

	ITEM	DESCRIPTION	QUANTITY FIG 1	QUANTITY FIG 2	STOCK NO. OR CONSTR STDS
PTF	1	CROSSARM, 3 3/4" X 5 3/4" X 12' - 0"	2	2	300 SECTION
	2	BRACE, ANGLE, CROSSARM, 5'	2	2	164128
	3	BRACKET, GALV, TERMINAL UPSWEEP, WITH PVC LINER, COMPLETE	1	1	166856
	4	BRACKET, TRIPLE TERMINAL	1	1	166676
	5	BOLT, MACH, GALV, 5/8" X (LENGTH AS REQ'D), 1 SQ WASH., 1 DBL COIL WASH. (E)	1	1	100 SECTION
	6	BOLT, MACH, GALV, 5/8" X (LENGTH AS REQ'D), 2-SQ WASH., 1 DBL COIL WASH. (E)	1	1	100 SECTION
	7	BOLT, MACH, GALV, 1/2" X 7", 1 RD WASH., 1 DBL COIL WASH (E)	4	4	100 SECTION
	8	BOLT, MACH, GALV, 5/8" X (LENGTH AS REQ'D), 1 LOCK WASH (G) (E)	1	1	100 SECTION
	9	COVER, BOLT, PLASTIC, & 6-100 NAILS (E)	1	1	285696
	10	SCREW, LAG, GALV, 4" (E)	2	2	621568
	11	PIN INSULATOR STRAIGHT 12KV (AS REQ'D BY ITEM 21) (G)	8	3	532704, 532448
	12	STEPS, POLE (E)	16	16	692992
	13	SIGN, HIGH VOLTAGE, & 8 ROOFING NAILS	3	3	647648, 492224
	14	BOLT, SPACE, GALV, 5/8" X (LENGTH AS REQ'D) 4- SQ WASH., 2 DBL COIL WASH. (G) (E)	2	4	100 SECTION
	15	BOLT, MACH, GALV, 1/2" X 8", 1 RD WASH., 1 DBL COIL WASH (E)	12	12	100 SECTION
	16	PIN, TRANSFORMER ADAPTER, 1" LEAD THREAD (G)	1	1	529248
OCD	17	INSULATOR, SUSPENSION, 12KV, CLEVIS (G)	-	7	700 SECTION
	18	CLEVIS, DEAD END, 5/8" BOLT STEEL (G) (E)	-	4	235712
	19	CLAMP, STRAIGHT LINE, D.E. (G)	-	4	700 SECTION
	20	INSULATOR, LINE, 12KV	6	3	700 SECTION
	21	INSULATOR, 12KV, NEUTRAL (G) (E)	3	1	429216
UCD	22				
	23	BOLT MACH, GALV, 1/2" X 3", 1-LOCK WASH (E)	12	12	100 SECTION
	24	BRACKET, DISCONNECT ANGLE MOUNTING, 1/4" X 3" MILD STEEL	6	6	166542
	25	SWITCH, HOOKSTICK DISCONNECT, 14.4KV, 400 A, 600 A	3	3	1200 SECTION
	26	TERMINAL, COMPRESSION	6	6	700 SECTION
	27	CONNECTOR WIRE COMPRESSION (SIZE AS REQ'D) (E)	13	9	700 SECTION
	28	WIRE, COPPER W.P., SIZE PER UG CABLE AMPACITY	15'	15'	700 SECTION
	29	WIRE, BARE STRANDED COPPER, SIZE PER UG CABLE AMPACITY	22'	31'	700 SECTION
	30				
	31	WIRE, #6, BARE STRANDED COPPER	40'	40'	813536
	32	STAPLES, FENCE, GALV, 1 1/4" (E)	40	40	678528
	33				
	34				
	35	UNIT GROUND, COMPLETE (WITH GRAY MLDG, WITH PLAIN MLDG) (C)	1	1	603120, 603136
	36	WIRE, #8, BARE SOLID ANNEALED COPPER	1 LB	1 LB	812928
	37	ARRESTER, LIGHTNING	3	3	1200 SECTION
	38	TERMINALS UG CABLE	3	3	SEE UG STDS
	39	CABLE PRIMARY	AS REQ'D		SEE UG STDS
	40	RISER CONSTRUCTION	AS REQ'D		1400/4200 SECTION

~~OH 1499.306~~
UG 4299.306
SUPERSEDES
4233 2 (3-9-83)

SDG&E ELECTRIC STANDARDS

12.47KV AND BELOW CABLE POLE, UPSWEEP BRACKET, 3Φ, 1/C PER PHASE, LINE ARM MOUNTED DISCONNECTS

DATE 3-9-83
APPD SAT/WLR

TABLE OF CONTENTS

FIELD MAINTENANCE ONLY

REVISION HISTORY:

7/13/2016: All versions prior to 2016 are superseded by their current version found inside the Overhead Construction Standard Manual.

© 1998 - 2016 San Diego Gas & Electric Company. All rights reserved. Removal of this copyright notice without permission is not permitted under law.

REV	CHANGE	BY	DSGN	APPV	DATE	REV	CHANGE	BY	DSGN	APPV	DATE
C						F					
B						E					
A	ORIGINAL ISSUE	JS	IL	MDJ	7/13/2016	D					

X Indicates Latest Revision | Completely Revised | New Page | Information Removed

SHEET
1 OF 1

SDG&E ELECTRIC UNDERGROUND STANDARD

BRACKET MOUNTED TERMINALS,
12KV 3 WIRE ARMLESS TANGENT CONSTRUCTION

FMO
UG 4237

TABLE OF CONTENTS

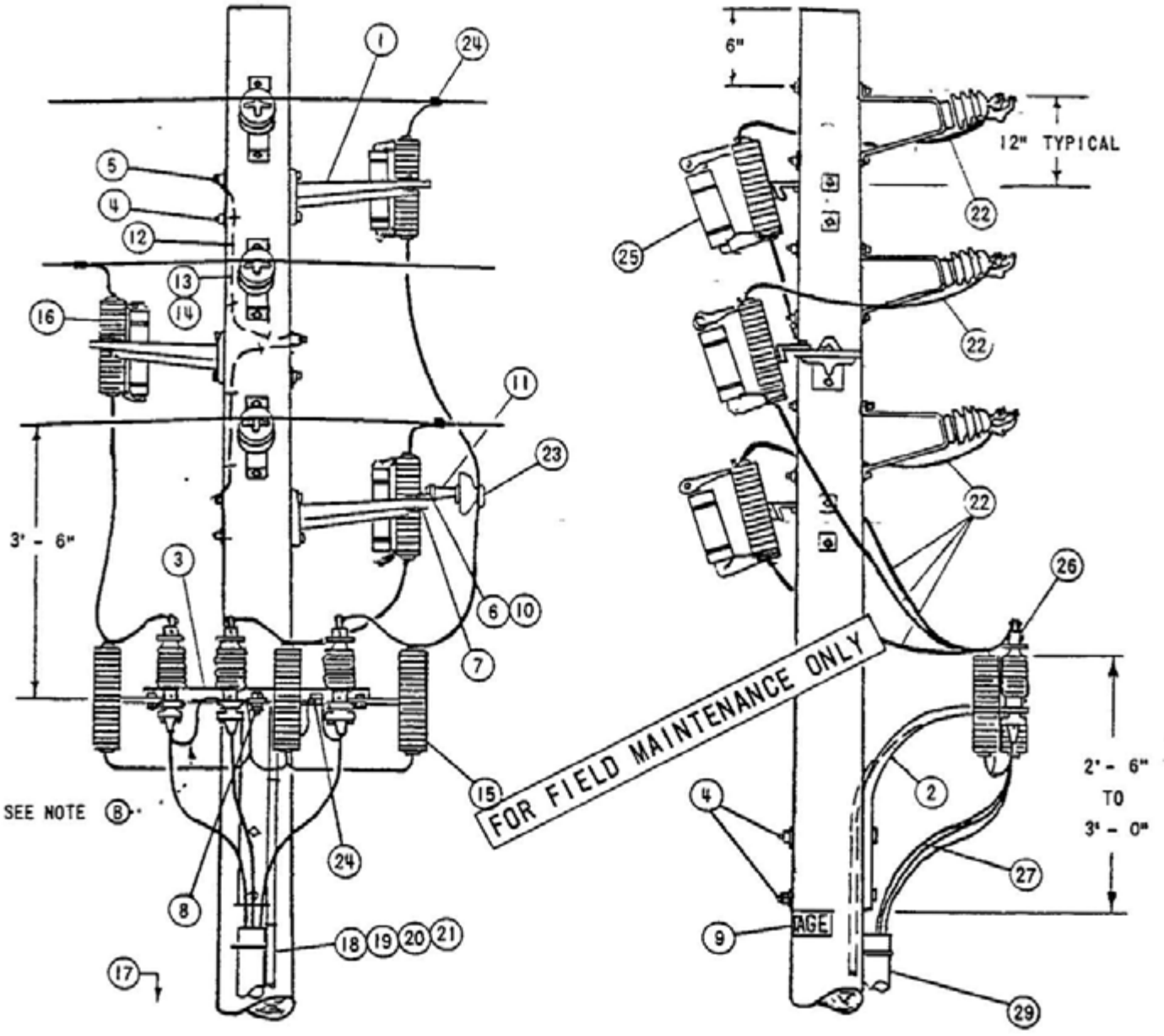

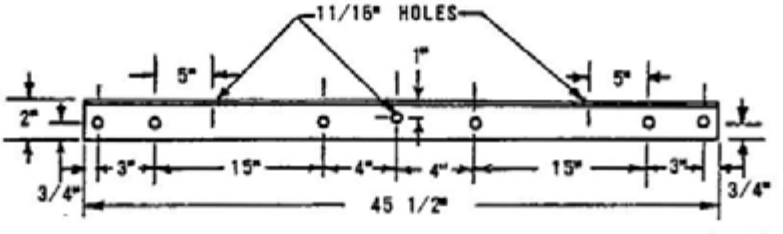

ALL HOLES 9/16" EXCEPT AS NOTED

FABRICATE FROM 2" X 2" X 3/16" STEEL ANGLE
HOT DIP GALVANIZE AFTER FABRICATION

ARMLESS TERMINAL MOUNTING BRACKET

DATE 8-27-82 APPD ORH	SDG&E ELECTRIC STANDARDS BRACKET MOUNTED TERMINALS, 12KV 3 WIRE ARMLESS TANGENT CONSTRUCTION	~~OH 1499.301~~ UG 4299.301 SUPERCEDES 4237.1 (10-2-78)

NOTES:

(A) UNIT GROUND, COMPLETE, ORDER 603120 WITH GRAY MOULDING, 603136 WITH PLAIN MOULDING

(B) THE FIBERGLASS UPSWEEP TERMINAL BRACKET IS TO BE USED FOR UNDERGROUND CONDUCTORS 4/0 OR SMALLER DO NOT USE FOR 500 KCM AND LARGER CONDUCTORS.

(C) USE TWO-ROD GROUND SPACED A MINIMUM OF 6 FEET APART.

D. CONNECT ONE STRAND OF CONCENTRIC NEUTRAL TO TERMINAL BOLT WITH DOUBLE NUT

(E) EXEMPT MATERIAL

FOR FIELD MAINTENANCE ONLY

ITEM			DESCRIPTION	QUANTITY	STOCK NO. OR CONSTR STD
INSTALLED BY OH CREWS	PTF	1	BRACKET, GALV., 4-HOLE, MOUNTING	3	166240
		2	BRACKET, FIBERGLASS, TERMINAL, UPSWEEP SEE NOTE (F)	1	166864
		3	BRACKET, ARMLESS, TERMINAL MOUNTING, SEE DETAIL PAGE 1437.1	1	166872
		4	MACH. BOLT, GALV., 5/8" X LENGTH AS REQ'D., 1-SQ. CURV. WASH., 1-DBL. COIL SPR. WASH. & 1-NUT (E)	5	PGS 139, 140
		5	MACH. BOLT, GALV., 5/8" X LENGTH AS REQ'D., 1-SQ., CURV. WASH., 1-DBL. COIL SPR. WASH., 2-FLAT RD. WASH. & 2-NUTS (E)	3	PGS 139, 140
		6	MACH. BOLT, GALV., 5/8" X 1 1/2", 1-LOCK WASH. (E)	1	PGS 139, 140
		7	MACH BOLT, GALV., 1/2" X 1 1/2", 1-LOCK WASH & 1-NUT (E)	1	PGS 139, 140
		8	MACH. BOLT, GALV., 5/8" X 2 1/2", 1-LOCK, 2-RD. WASH. & 2-NUTS (E)	1	PGS 139, 140
		9	HIGH VOLTAGE SIGN & 8-ROOFING NAILS, GALV. (E)	2	647648, 492224
		10	BRACKET, INSULATOR, MOUNTING ANGLE	1	166208
		11	PIN, INSULATOR, 12KV, 1" OR 1 3/8" LEAD THREAD	1	529248-529216
		12	WIRE, BOND, BARE SOLID ANNEALED, #8	6'	812928
		13	HARDWOOD MOULDING, 1" (OTHER THAN TOP CIRCUIT ON POLE)	8'	487200
		14	MOULDING STAPLES, GALV., 3" X 1 1/16" X 1/4" (OTHER THAN TOP CIRCUIT ON POLE)	6	678560
	UCD	15	LIGHTNING ARRESTER, 12KV	3	113248
		16	CUTOUT, FOR CURRENT-LIMITING FUSE	3	1200 SECTION
		17	GROUND ROD & CLAMP (A) (C)	2	603072-230016 (E)
		18	HARDWOOD MOULDING, 1" (A)	36'	487200
		19	STAPLES, MOULDING, GALV., 3" X 1 1/16" X 1/4" (A) (E)	24	678560
		20	STAPLES, FENCE, GALV., 1 1/4" (A) (E)	1/3#	678528
		21	WIRE, BARE STRANDED COPPER, #2 (B)	50'	813664
		22	WIRE, BARE STRANDED, COPPER, (SIZE AS REQ'D)	25'	
		23	INSULATOR, 12KV, PIN TYPE (CLASS AS REQ'D)	1	429056-429152
		24	CONNECTOR, WIRE, COMPRESSION (SIZE AS REQ'D)	4	
		25	FUSE, CURRENT-LIMITING SIZE AS SPECIFIED ON WORK ORDER	3	1200 SECTION
UG CREWS		26	CABLE TERMINAL	3	SEE UG STDS
		27	CABLE, PRIMARY	AS REQ'D	SEE UG STDS
		28			
		29	RISER CONSTRUCTION	AS REQ'D	1400/4200 SECTION

~~OH 1499.302~~
UG 4299.302
SUPERCEDES
4237.2 (2-27-80)

SDG&E ELECTRIC STANDARDS

BRACKET MOUNTED TERMINALS,
12KV 3 WIRE ARMLESS TANGENT CONSTRUCTION

DATE 8-27-82
APPD

TABLE OF CONTENTS

FIELD MAINTENANCE ONLY

REVISION HISTORY:

7/13/2016: All versions prior to 2016 are superseded by their current version found inside the Overhead Construction Standard Manual.

TABLE OF CONTENTS

© 1998 - 2016 San Diego Gas & Electric Company. All rights reserved. Removal of this copyright notice without permission is not permitted under law.

REV	CHANGE	BY	DSGN	APPV	DATE	REV	CHANGE	BY	DSGN	APPV	DATE
C						F					
B						E					
A	ORIGINAL ISSUE	JS	IL	MDJ	7/13/2016	D					

X Indicates Latest Revision | Completely Revised | New Page | Information Removed

SHEET 1 OF 1

SDG&E ELECTRIC UNDERGROUND STANDARD

BRACKET MOUNTED TERMINALS, 12KV 3 WIRE, ARMLESS DEAD END CONSTRUCTION

FMO UG 4238

TABLE OF CONTENTS

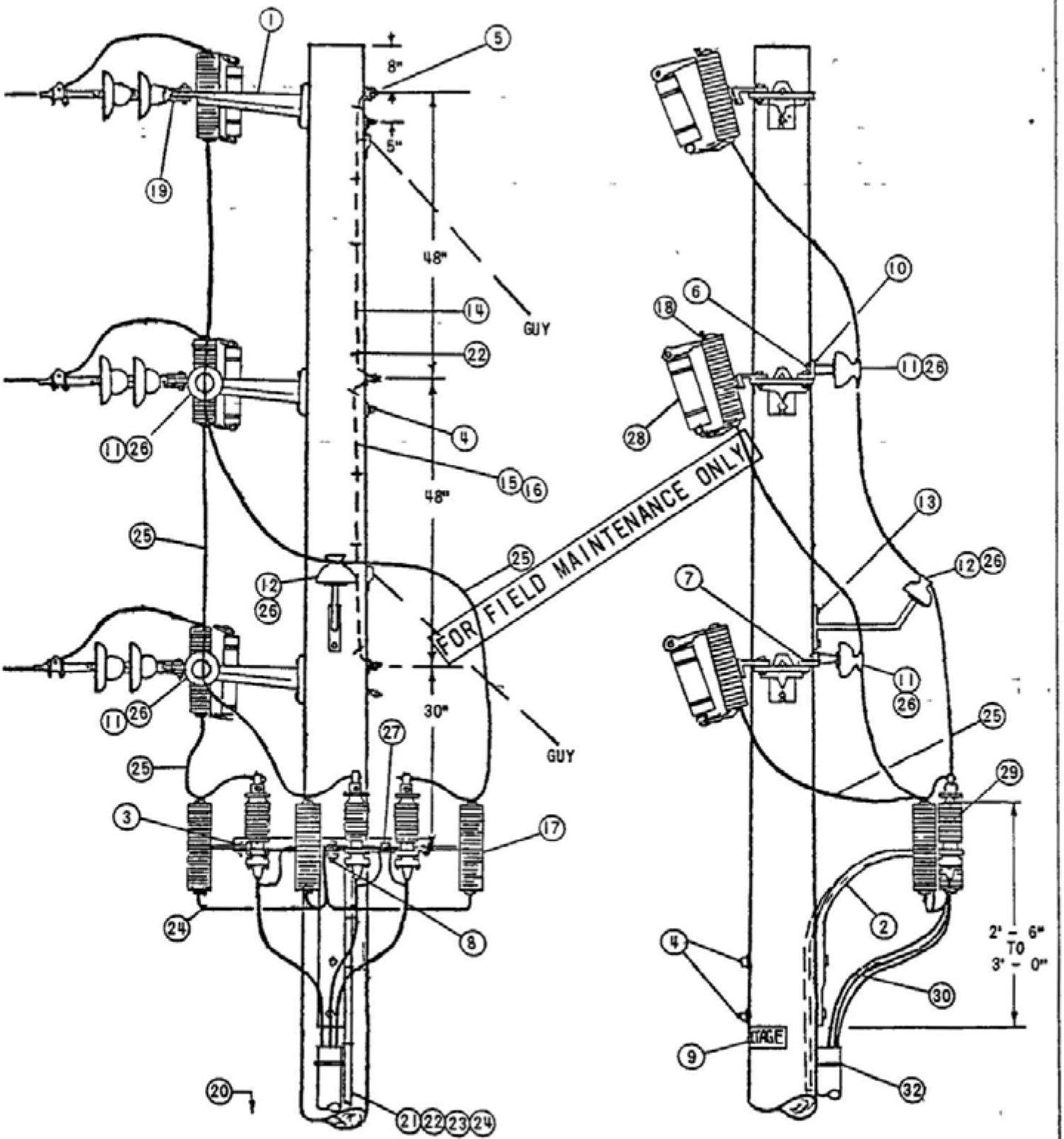

DATE 8-27-82 APPD	SDG&E ELECTRIC STANDARDS BRACKET MOUNTED TERMINALS, 12KV 3 WIRE, ARMLESS DEAD END CONSTRUCTION	~~OH 1499.303~~ UG 4299.303 SUPERCEDES 4238.1 (2-27-80)

NOTES:

(A) UNIT GROUND COMPLETE ORDER 603120 WITH GRAY MOULDING 603136 WITH PLAIN MOULDING

B UNTWIST SUFFICIENT LENGTH OF #2 STRANDED WIRE TO CONNECT EACH ARRESTER AND POTHEAD (TERMINAL) GROUND WITH A SINGLE STRAND.

(C) USE TWO-ROD GROUND SPACED A MINIMUM OF 6 FEET APART

D THIS CONFIGURATION NOT TO BE USED WHERE A FUTURE EXTENSION IS ANTICIPATED

(E) EXEMPT MATERIALS.

F THIS INSTALLATION DOES NOT INCLUDE GUYING MATERIAL

(G) THE FIBERGLASS UPSWEEP TERMINAL BRACKET IS TO BE USED FOR UNDERGROUND CONDUCTORS 4/0 OR SMALLER. DO NOT USE FOR 500 KCM AND LARGER CONDUCTORS

FOR FIELD MAINTENANCE ONLY

ITEM			DESCRIPTION	QUANT	STOCK NO. OR CONSTR STDS
OH CREWS	PT&F	1	BRACKET GALV. 4-HOLE, MOUNTING SEE NOTE (G)	3	166240
		2	BRACKET, FIBERGLASS TERMINAL, UPSWEEP	1	166864
		3	BRACKET, ARMLESS, TERMINAL MOUNTING (SEE DETAIL PG. 1437.1)	1	166672
		4	MACH BOLT, GALV., 5/8" X LENGTH AS REQ'D, 1-SQ CURV WASH., 1-DBL COIL SPR. WASH & 1-NUT (E)	5	PGS 139, 140
		5	MACH BOLT, GALV. 5/8" X LENGTH AS REQ'D,, 1-SQ CURV WASH, 1-DBL COIL SPR. WASH, 2-FLAT RD WASH, & 2-NUTS (E)	3	PGS 139, 140
		6	MACH BOLT, GALV. 5/8" X 1 1/2" (E)	2	PGS 139, 140
		7	MACH BOLT, GALV. 1/2" X 1 1/2" (E)	2	PGS 139, 140
		8	MACH BOLT, GALV. 5/8" X 2 1/2" 1-LOCK, 2-rd. WASH. & 2-NUTS (E)	1	PGS 139, 140
		9	HIGH VOLTAGE SIGN & 8-ROOFING NAILS, GALV (E)	2	647648, 492192
		10	BRACKET, INSULATOR MOUNTING ANGLE	2	PG 151
		11	PIN, INSULATOR, 12KV, 1" OR 1 3/8" LEAD THREAD	2	529248-529216
		12	BRACKET, INSULATOR, 1" OR 1 3/8" LEAD THREAD	1	166144-166176
		13	SCREW LAG, GALV., 1/2" X 4" (E)	2	621568
		14	WIRE BOND, BARE SOLID ANNEALED #8	10'	812928
		15	HARDWOOD MOULDING, 1", (OTHER THAN TOP CIRCUIT ON POLE)	10'	487200
		16	MOULDING STAPLES, GALV., 3" X 1 1/16" X 1/4" (OTHER THAN TOP CIRCUIT ON POLE) (E)	8	678560
	U C & D	17	LIGHTNING ARRESTER, 12KV	3	113248
		18	CUTOUT, FOR CURRENT-LIMITING FUSE	3	1200 SECTION
		19	CLEVIS	3	235776
		20	GROUND ROD & CLAMP (C)	2	603072, 230016 (A)(E)
		21	HARDWOOD MOULDING, 1"	36'	487200 (A)
		22	STAPLES, MOULDING, GALV., 3" X 1 1/16" X 1/4" (E)	24	678560 (A)
		23	STAPLES, FENCE, GALV., 1 1/4" (E)	32	678528 (A)
		24	WIRE, BARE STRANDED, COPPER, #2	50'	813664
		25	WIRE BARE STRANDED, COPPER, (SIZE AS REQ'D)	25'	PGS 715-717
		26	INSULATOR, 12KV, PIN TYPE, (CLASS 55-5 OR 56-1)	3	429056-429152
		27	CONNECTOR, WIRE, COMPRESSION, (SIZE AS REQ'D)	1	PGS 783-787
		28	FUSE, CURRENT-LIMITING AS SPECIFIED ON WORK ORDER	3	1200 SECTION
UG CREWS		29	CABLE TERMINAL	3	SEE UG STDS
		30	CABLE, PRIMARY	AS REQ'D	SEE UG STDS
		31			
		32	RISER CONSTRUCTION	AS REQ'D	1400/4200 SECTION

~~OH 1499.304~~
UG 4299.304
SUPERCEDES
4238.2 (2-27-80)

SDG&E ELECTRIC STANDARDS

BRACKET MOUNTED TERMINALS, 12KV 3 WIRE, ARMLESS DEAD END CONSTRUCTION

DATE 8-27-82
APPD LRH

TABLE OF CONTENTS

FIELD MAINTENANCE ONLY

REVISION HISTORY:

7/13/2016: All versions prior to 2016 are superseded by their current version found inside the Overhead Construction Standard Manual.

TABLE OF CONTENTS

© 1998 - 2016 San Diego Gas & Electric Company. All rights reserved. Removal of this copyright notice without permission is not permitted under law.

REV	CHANGE	BY	DSGN	APPV	DATE	REV	CHANGE	BY	DSGN	APPV	DATE
C						F					
B						E					
A	ORIGINAL ISSUE	JS	IL	MDJ	7/13/2016	D					

X Indicates Latest Revision | Completely Revised | New Page | Information Removed

SHEET
1 OF 1

SDG&E ELECTRIC UNDERGROUND STANDARD

CROSSARM CABLE POLE, 3Ø, 1/C PER PHASE
DEADEND CONSTRUCTION, 12.47KV AND BELOW

FMO
UG 4239

SCOPE THIS STANDARD SHOWS DEADEND CONSTRUCTION FOR 12.47KV AND BELOW, 3 PHASE CABLE POLE WITH CROSSARM MOUNTED TERMINALS FOR #2/0 AND SMALLER U G CABLE THIS CONSTRUCTION IS TO BE USED IN CONTAMINATION DISTRICT 1 ONLY

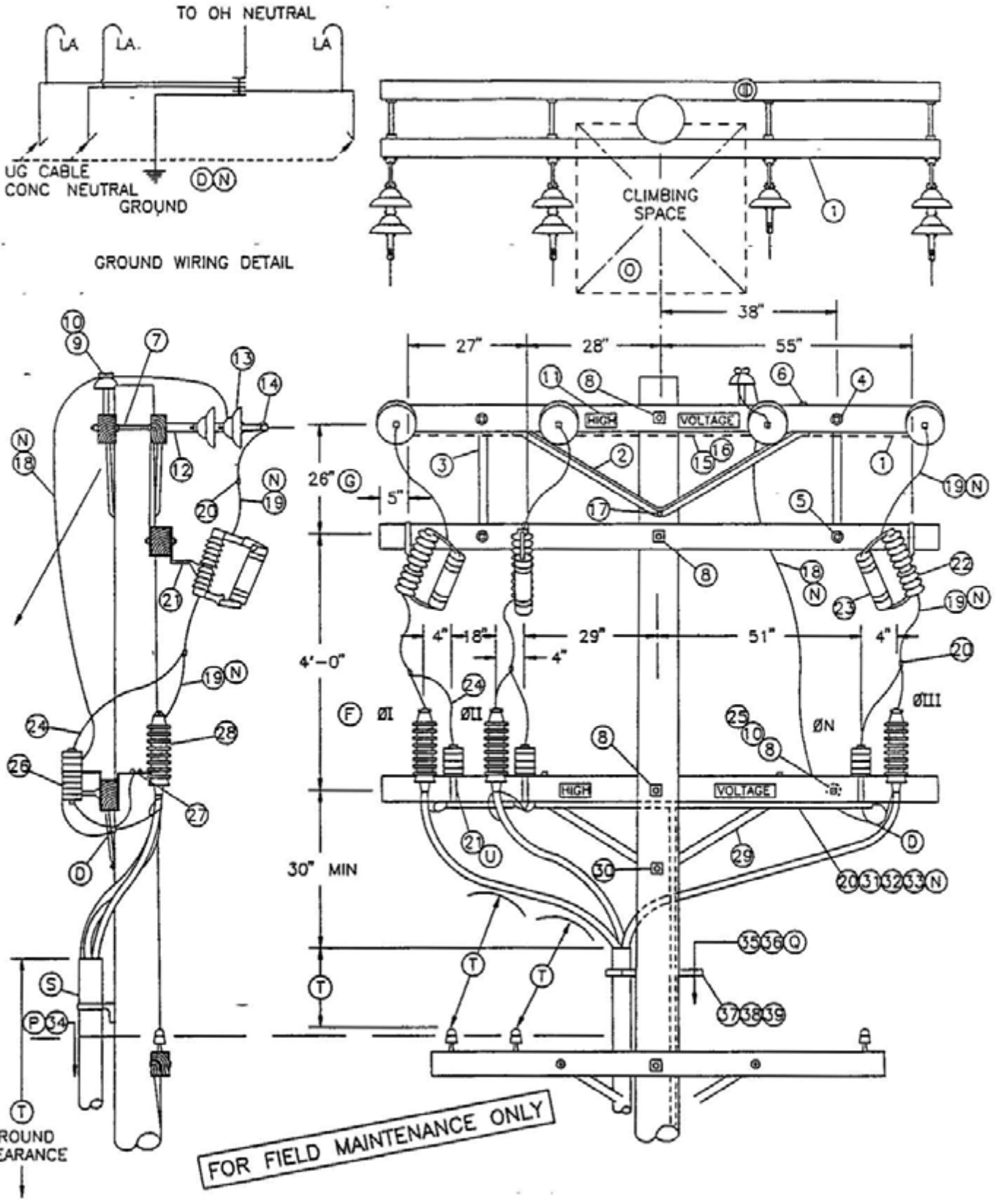

TABLE OF CONTENTS

ISSUE 1994 DATE 1-1-93 APPD JJG/RS	SDG&E ELECTRIC STANDARDS CROSSARM CABLE POLE, 3Ø, 1/C PER PHASE DEADEND CONSTRUCTION, 12.47KV AND BELOW	~~OH 1499.307~~ UG 4299.307 SUPERCEDES 4239.1 (1-1-93)

BILL OF MATERIAL:

ITEM	DESCRIPTION		QUANTITY	CONST STD OR PAGE NO	STOCK NUMBER
1	CROSSARM, 3-3/4" X 5-3/4" X 10' - 0"		4	–	294128
2	BRACE, ANGLE, CROSSARM, 5' - 0"		2	–	164128
3	BRACE, FLAT, CROSSARM, 28"	(E)	2	–	164192
4	BOLT, WASHERHEAD, GALV, 3/8" X 4-1/2", 1 ROUND & 1 SPRING WASHER	(E)	2	392	–
5	BOLT, MACH, GALV, 1/2-1 X 5", 1 ROUND & 1 DOUBLE COIL, SPRING WASHER	(E)	2	392	–
6	BOLT, MACH, GALV, 1/2" X 7", 1 ROUND & 1 DOUBLE COIL SPRING WASHER	(E)	6	392	–
7	BOLT, SPACE, GALV, 5/8" X (LENGTH AS REQ'D), 2 ROUND, 4 SQUARE & 2 DOUBLE COIL SPRING WASHERS	(B) (E)	4	392	–
8	BOLT, MACH, GALV, 5/8" X (LENGTH AS REQ'D), 2 SQUARE & 1 DOUBLE COIL SPRING WASHER	(B) (E)	4	392	–
9	PIN, INSULATOR, STRAIGHT, 12KV, 1"	(B) (E)	1	–	532704
10	INSULATOR, LINE, 12KV NEUTRAL	(B) (E)	2	–	429216
11	SIGN, HIGH VOLTAGE & 9 ROOFING NAILS, GALV	(E) (E)	4 --	– –	647648 492224
12	CLEVIS, DEAD END, 5/8" BOLT STEEL	(B) (E)	4	–	235712
13	INSULATOR, SUSPENSION, 12KV, CLEVIS	(B)	7	750	–
14	CLAMP, STRAIGHT LINE, D.E.	(B)	4	741	–
15	WIRE, #8, BARE SOLID ANNEALED COPPER		10'	–	812928
16	STAPLES, FENCE, GALV, 1-1/4"	(E)	AS REQ'D	–	678528
17	BOLT, MACH, GALV, 5/3" X (LENGTH AS REQ'D) & 1 DOUBLE COIL SPRING WASHER	(E)	1	392	–
18	WIRE, COPPER, BARE STRANDED OR ACSR/AW BARE (OH NEUTRAL JUMPER)	(B) (N)	10'	711-715	–
19	WIRE, COPPER, BARE STRANDED (OH JUMPERS)	(N)	18'	715	–
20	CONNECTOR, WIRE, COMPRESSION (SIZE AS REQ'D)	(E)	AS REQ'D	783-787	–
21	BRACKET, CUTOUT/ARRESTER, FOR CROSSARM MOUNTING	(E)	6	–	166070
22	CUTOUT, FOR CURRENT-LIMITING FUSE		3	1212	–
23	FUSE, CURRENT-LIMITING (SIZE AS SPECIFIED ON WORK ORDER)		3	1207	–
24	WIRE, BARE STRANDED COPPER, #6		14'	–	813536
25	PIN, TRANSFORMER ADAPTER, 1" LEAD THREAD	(B) (E)	1	–	529248
26	ARRESTER, LIGHTNING		3	1247	–
27	BRACKET, CROSSARM, TERM (FOR #2 & #2/0 AL CABLE ONLY)	(E)	3	–	166060
28	TERMINALS, UNDERGROUND CABLE		3	4111	–
29	BRACE, ANGLE, CROSSARM, 4' - 0"		1	–	164032
30	BOLT, MACH, GALV, 5/8" X (LENGTH AS REQ'D), 1 SQUARE & 1 DOUBLE COIL SPRING WASHER	(E)	1	392	–
31	WIRE, BARE STRANDED COPPER (UNDER POTHEAD ARM) (CABLE POLE NEUTRAL)	(N)	10'	715	–
32	CONDUIT, PVC TYPE 2, SCHEDULE 40, 1"	(E)	10'	–	251200
33	STRAPS, PIPE, GALV, 1" & 2 - 6D NAILS, GALV	(E) (E)	AS REQ'D	– –	697792 491552
34	RISER CONSTRUCTION		AS REQ'D	1400/4200	–
35	WIRE, #4, BARE STRANDED COPPER		45'	–	813760
36	UNIT GROUND, COMPLETE	(S)	1		603136
37	BRACKET, LADDER ARM	(E)	AS REQ'D	1404/4204	167184
38	NUT, CLAMPING CHANNEL, W/SPRING, 1/2"	(E)	AS REQ'D	1404/4204	503488
39	CHANNEL, DOUBLE GALV, 24"	(E)	AS REQ'D	1404/4204	216700

FOR FIELD MAINTENANCE ONLY

CABLE SIZE	UG MACRO UNIT	
	PORCELAIN	
	W/LADDER ARMS	W/O LADDER ARMS
3C #2/0 AL	CP2/0L	CP#2/0
3C-3#2 AL	CP3#2L	CP-3#2

TABLE OF CONTENTS

~~OH 1499.308~~
UG 4299.308
SUPERCEDES
4239.2 (1-1-93)

SDG&E ELECTRIC STANDARDS

CROSSARM CABLE POLE, 3Ø, 1/c PER PHASE
DEADEND CONSTRUCTION, 12.47KV AND BELOW

DATE 1-1-93
APPD JJG/RRS

TABLE OF CONTENTS

INSTALLATION:

A NEW CABLE POLES SHALL HAVE A STANDARD DEPTH OF 9' IN MOST CASES THIS WILL REQUIRE A 5' TALLER POLE.

(B) REDUCE QUANTITIES AS REQUIRED WHEN NOT USING NEUTRAL.

C USE THIS CONSTRUCTION FOR 2/0 AND SMALLER UNDERGROUND CABLE.

(D) INTERCONNECT OVERHEAD NEUTRAL, TERMINAL BASE, AND CONCENTRIC CABLE NEUTRAL CONDUCTOR TO LIGHTNING ARRESTER GROUND.

(E) EXEMPT MATERIAL.

(F) OMIT Ø II AND Ø N FOR SINGLE Ø 12KV CABLE POLE, OMIT Ø I AND ØII FOR SINGLE Ø 6 9KV CABLE POLE.

(N)

UG CABLE SIZE AWG OR KCMIL, AL	OH JUMPER COND SIZE, AWG OR KCMIL, CU	OH NEUT JUMPER SIZE			CABLE POLE NEUT SIZE (CU) UNDER POTHEAD ARM OR TRIPLE TERM BRKT
		CU	AL		
2	4	6	2	–	#6 PER PHASE
2/0	4	6	2	–	#6 PER PHASE
350	4/0	1/0	3/0	–	#2 PER PHASE
750	500	4/0	336 4	OR SAME SIZE AS O H. NEUT CONDUCTOR	1/0 PER PHASE
1000	500	4/0	336 4		1/0 PER PHASE

EFERENCE:

(O) ALLOWABLE WORKING AND CLIMBING SPACE – SEE STD. 251.

(P) POLE STEPPING – SEE STD. 363/4205.

(Q) GROUNDING METHODS – SEE PAGE 1002 5

R SEE STANDARD SECTION 1200/4300 FOR FUSING.

(S) RISER POSITIONS – SEE STANDARD 1402/4202.

(T) MINIMUM VERTICAL SEPARATION AS PER G O. 95 – SEE STD. 1406/4206.

(U) SEE STANDARD 1407/4207 FOR PORCELAIN TERMINAL MOUNTING BRACKET INSTRUCTIONS AND MATERIALS.

FOR FIELD MAINTENANCE ONLY

DATE 1-1-93 APPD JLB/RJ	SDG&E ELECTRIC STANDARDS CROSSARM CABLE POLE, 3Ø, 1/C PER PHASE DEADEND CONSTRUCTION, 12.47KV AND BELOW	~~OH 1499.309~~ UG 4299.309 SUPERCEDES 4239.3 (1-1-93)

FIELD MAINTENANCE ONLY

REVISION HISTORY:

7/13/2016: All versions prior to 2016 are superseded by their current version found inside the Overhead Construction Standard Manual.

TABLE OF CONTENTS

© 1998 - 2016 San Diego Gas & Electric Company. All rights reserved. Removal of this copyright notice without permission is not permitted under law.

REV	CHANGE	BY	DSGN	APPV	DATE	REV	CHANGE	BY	DSGN	APPV	DATE
C						F					
B						E					
A	ORIGINAL ISSUE	JS	IL	MDJ	7/13/2016	D					

X Indicates Latest Revision | Completely Revised | New Page | Information Removed

SHEET
1 OF 1

SDG&E ELECTRIC UNDERGROUND STANDARD

12.47 KV AND BELOW DEAD END CABLE POLE
ARM, 3Ø, 1/C PER Ø, HOOKSTICK SWITCHED

FMO
UG 4241

TABLE OF CONTENTS

SCOPE: THIS STANDARD SHOWS CABLE POLE CONSTRUCTION USING PORCELAIN TERMINATIONS FOR 750 AND LARGER UNDERGROUND CABLE. (SEE STANDARD 1407/4207 FOR 350 KCMIL TERMINAL MOUNTING INFORMATION).

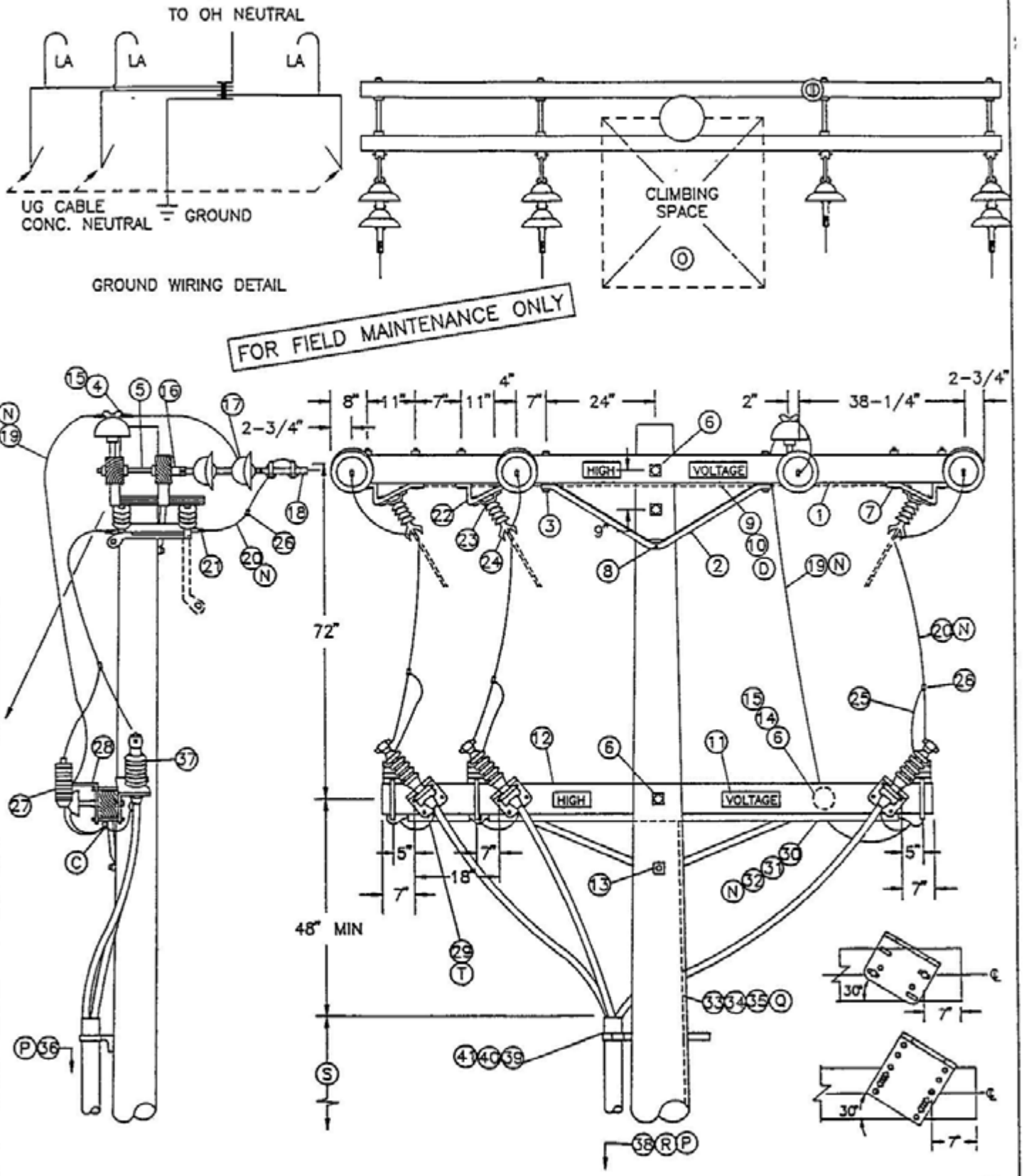

DATE 1-1-93 APPD JGB/RDS	SDG&E ELECTRIC STANDARDS 12.47 KV AND BELOW DEAD END CABLE POLE ARM, 3Ø, 1/C PER Ø, HOOKSTICK SWITCHED	~~OH 1499.401~~ UG 4299.401 SUPERCEDES 4241.1 (1-1-93)

BILL OF MATERIAL:

ITEM	DESCRIPTION		QUANTITY	CONSTR STANDARD	STOCK NUMBER
1	CROSSARM, 3-3/4" X 5-3/4" X 12'- 0"	(G)	2	–	294160
2	BRACE, ANGLE, CROSSARM, 4'- 0"		3	–	164032
3	BOLT, MACH, GALV, 1/2" X 7", 1 ROUND AND 1 DOUBLE COIL SPRING WASHER	(E)	6	392	–
4	PIN, INSULATOR, STRAIGHT, 12KV, 1" LEAD THREAD	(F)(E)	1	–	532704
5	BOLT, SPACE, GALV, 5/8" X (LENGTH AS REQ'D), 3 SQUARE, 2 ROUND AND 2 DOUBLE COIL SPRING WASHERS	(F)(E)	4	392	–
6	BOLT, MACH, GALV, 5/8" X (LENGTH AS REQ'D), 2 SQUARE AND 1 DOUBLE COIL SPRING WASHERS	(F)(E)	3	392	–
7	BOLT, MACH, GALV, 1/2" X 8", 1 ROUND AND 1 DOUBLE COIL SPRING WASHER	(E)	12	392	–
8	BOLT, MACH, GALV, 5/8" X (LENGTH AS REQ'D) AND 1 DOUBLE COIL SPRING WASHER	(E)	1	392	–
9	WIRE, #8, BARE SOLID ANNEALED COPPER		15'	–	812928
10	STAPLES, FENCE, GALV, 1-1/4"	(E)	AS REQ'D	–	678528
11	SIGN, HIGH VOLTAGE AND 9 ROOFING NAILS, GALV	(E)	4	–	647648 492224
12	CROSSARM, 3-3/4" X 5-3/4 X 10'- 0"		1	–	294128
13	BOLT, MACH, GALV, 5/8" X (LENGTH AS REQ'D), 1 SQUARE AND 1 DOUBLE COIL SPRING WASHER	(E)	1	392	–
14	PIN, TRANSFORMER LEAD ADAPTER, 1"	(F)(E)	1	–	529248
15	INSULATOR, 12KV, NEUTRAL	(F)(E)	2	–	429216
16	CLEVIS, DEAD END, 5/8" BOLT STEEL	(F)(E)	4	–	235712
17	INSULATOR, SUSPENSION, 12KV, CLEVIS	(F)	7	750	–
18	CLAMP, STRAIGHT LINE, D.E.	(F)	4	741	–
19	WIRE, BARE STRANDED CU OR AL (OH NEUT JUMPER)	(N)(F)	12'	711-715	–
20	WIRE, BARE STRANDED COPPER (OH JUMPER)	(N)	25'	715	–
21	TERMINAL, COMPRESSION	(E)	6	794-795	–
22	BRACKET, DISCONNECT, ANGLE MOUNTING		6	–	166542
23	BOLT, MACH, GALV, 3/8" X 3", 2 ROUND & 1 LOCK WASHER	(E)	6	392	–
24	SWITCH, HOOKSTICK DISCONNECT, 14.4KV, 600 A OR 1200 A		3	1222	–
25	WIRE, #6, BARE STRANDED COPPER		12'	–	813536
26	CONNECTOR, WIRE, COMPRESSION (SIZE AS REQ'D)	(E)	AS REQ'D	783-787	–
27	ARRESTER, LIGHTNING	(N)	3	–	113248
28	BRACKET, CUTOUT/ARRESTER	(E)	3	–	166070
29	BRACKET, TERMINAL MOUNTING		3	–	166674
30	CONDUIT, PVC TYPE 2, SCHEDULE 40, 1"	(E)	10'	–	251200
31	STRAPS, PIPE, GALV, 1" AND 2 – 6D NAILS , GALV	(E)	AS REQ'D	–	697792 491552
32	WIRE, BARE STRANDED COPPER (CP NEUT-UNDER POTHEAD ARM)	(N)	15'	715	–
33	WIRE, #4, BARE STRANDED COPPER		45'	–	813760
34	STAPLES, FENCE, GALV, 1-1/4"	(E)	AS REQ'D	–	678528
35	UNIT GROUND, COMPLETE	(Q)	1	–	603136
36	TAGS, SWITCH NUMBER	(E)	2	–	720704
37	TERMINALS, UNDERGROUND CABLE		3	4111	–
38	RISER CONSTRUCTION		AS REQ'D	1400/4200	–
39	BRACKET, LADDER ARM	(E)	AS REQ'D	1404/4204	167184
40	NUT, CLAMPING CHANNEL, W/SPRING, 1/2"	(E)	AS REQ'D	1404/4204	503488
41	CHANNEL, DOUBLE GALV, 24"	(E)	AS REQ'D	1404/4204	216700

FOR FIELD MAINTENANCE ONLY

CABLE SIZE	UG MACRO UNIT W/LADDER ARMS
3C-#350	CP350L
3C-#750	CP750L
3C-#1000	CP-1KL

TABLE OF CONTENTS

~~OH 1499.402~~
UG 4299.402
SUPERCEDES
4241.2 (1-1-93)

SDG&E ELECTRIC STANDARDS

12.47KV AND BELOW DEAD END CABLE POLE ARM, 3Φ, 1/C PER Φ, HOTSTICK SWITCHED

DATE 1-1-93
APPD JLB/KHG

INSTALLATION:

A NEW CABLE POLES SHALL HAVE A STANDARD SETTING DEPTH OF 9' IN MOST CASES THIS WILL REQUIRE A 5' TALLER POLE.

B THIS CONSTRUCTION TO BE USED WITH 350 KCMIL AND LARGER UNDERGROUND CABLE

(C) INTERCONNECT OVERHEAD NEUTRAL, TERMINAL BASE, AND CONCENTRIC CABLE NEUTRAL CONDUCTOR TO LIGHTNING ARRESTER GROUND

(D) INTERCONNECT SWITCH AND DEADEND BONDS PER G O. 95 RULE 52 7D BONDING SHOULD BE DONE IN ACCORDANCE WITH RULE 53.4

(E) EXEMPT MATERIAL.

(F) REDUCE QUANTITIES AS REQUIRED WHEN NOT USING NEUTRAL.

(G) WHEN ADDING THIS CONSTRUCTION TO AN EXISTING POLE WITH A 10' LINE ARM. AND SUFFICIENT POLE HEIGHT EXISTS, INSTALL 10' SWITCH ARMS AND ASSOCIATED HARDWARE BELOW THE LINE ARM TO AVOID CHANGING LINE ARM FROM 10' TO 12' (SEE O H STANDARD 1222, FIG 1-B)

(N)

UG CABLE SIZE AWG OR KCMIL, AL	OH JUMPER COND SIZE, AWG OR KCMIL, CU	OH NEUT JUMPER SIZE			CABLE POLE NEUT SIZE (CU) UNDER POTHEAD ARM OR TRIPLE TERM BRKT
		CU	AL		
2	4	6	2	–	#6 PER PHASE
2/0	4	6	2	–	#6 PER PHASE
350	4/0	1/0	3/0	–	#2 PER PHASE
750	500	4/0	336 4	OR SAME SIZE AS O.H NEUT CONDUCTOR	1/0 PER PHASE
1000	500	4/0	336 4		1/0 PER PHASE

REFERENCE:

(O) ALLOWABLE WORKING AND CLIMBING SPACE – SEE STANDARD 251.

(P) POLE STEPPING – SEE STANDARD 363.

(Q) GROUNDING METHODS – SEE STANDARD 1002.

(R) PISER POSITIONS – SEE STANDARD 1402/4202.

(S) MINIMUM VERTICAL SEPARATION AS PER G O. 95 – SEE STANDARD 1406/4206

(T) SEE STANDARD 1407/4207 FOR PORCELAIN AND NON PORCELAIN TERMINAL MOUNTING BRACKET INSTRUCTIONS AND MATERIALS

FOR FIELD MAINTENANCE ONLY

TABLE OF CONTENTS

SDG&E ELECTRIC STANDARDS

DATE 1-1-93
APPD JLG/RLS

12.47KV AND BELOW DEAD END CABLE POLE ARM, 3Ø. 1/C PER Ø, HOOKSTICK SWITCHED

~~OH 1499.403~~
UG 4299.403
SUPERCEDES 4241.3 (1-1-93)

FIELD MAINTENANCE ONLY

REVISION HISTORY:

7/13/2016: All versions prior to 2016 are superseded by their current version found inside the Overhead Construction Standard Manual.

TABLE OF CONTENTS

© 1998 - 2016 San Diego Gas & Electric Company. All rights reserved. Removal of this copyright notice without permission is not permitted under law.

REV	CHANGE	BY	DSGN	APPV	DATE	REV	CHANGE	BY	DSGN	APPV	DATE
C						F					
B						E					
A	ORIGINAL ISSUE	JS	IL	MDJ	7/13/2016	D					

X Indicates Latest Revision | Completely Revised | New Page | Information Removed

SHEET 1 OF 1

SDG&E ELECTRIC UNDERGROUND STANDARD

12.47KV AND BELOW DEAD END CABLE POLE, 6 OR 7 OH CONDUCTORS, 1 OR 2 TERMINALS PER CONDUCTOR, HOOKSTICK SWITCHED

FMO UG 4251

SCOPE: THIS STANDARD SHOWS 6 OR 7 CONDUCTOR DEAD END CABLE POLE WITH HOOKSTICK SWITCHES FOR 750 KCMIL AND LARGER U.G. CABLE. (SEE STANDARD 1407/4207 FOR 350 KCMIL TERMINAL MOUNTING INFORMATION).

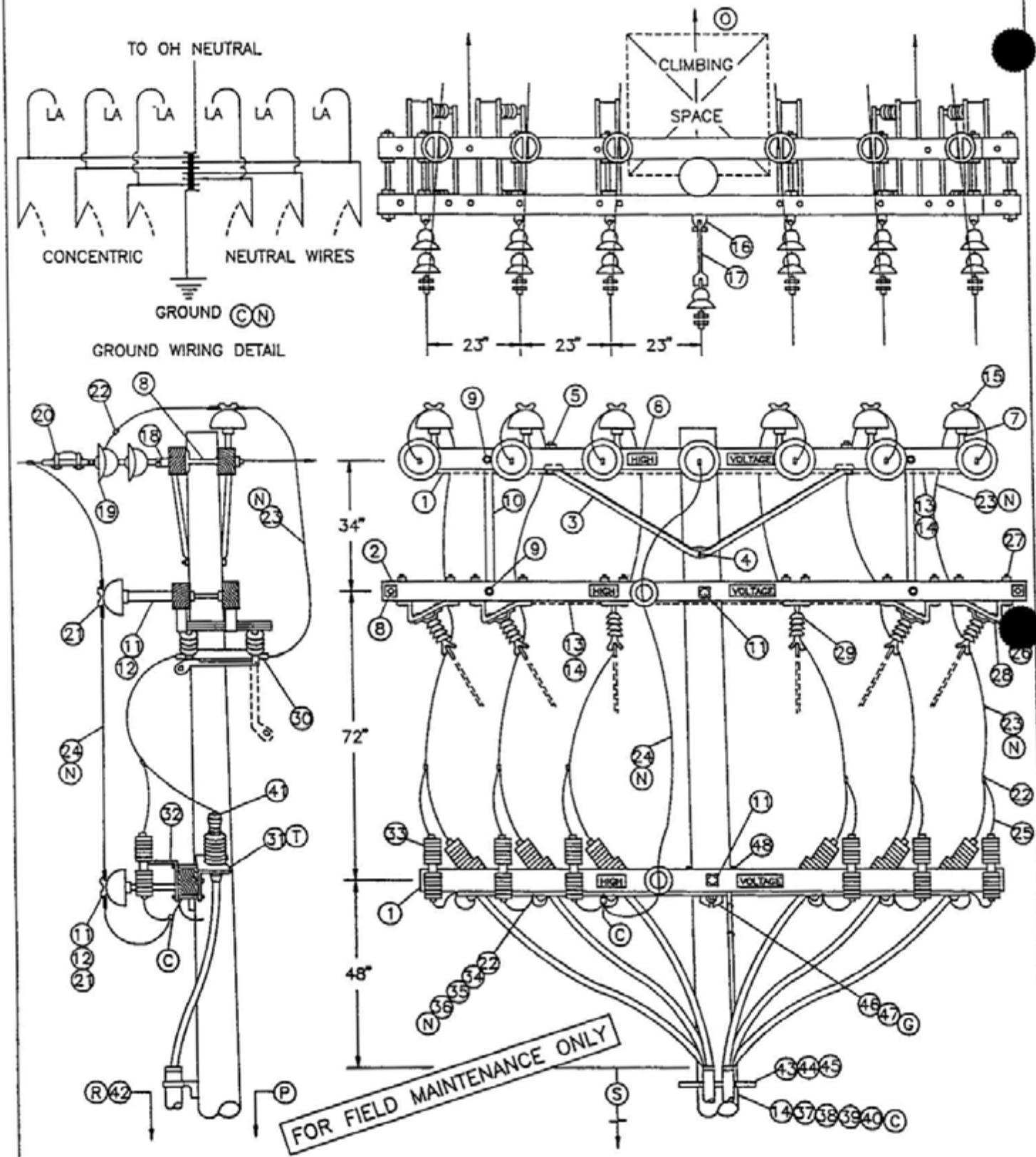

~~OH 1499.504~~ UG 4299.504 SUPERCEDES 4251.1 (1-1-93)	SDG&E ELECTRIC STANDARDS 12.47KV AND BELOW DEAD END CABLE POLE, 6 OR 7 OH CONDUCTORS, 1 OR 2 TERMINALS PER CONDUCTOR, HOOKSTICK SWITCHED	DATE 1-1-93 APPD

TABLE OF CONTENTS

BILL OF MATERIAL:

ITEM	DESCRIPTION		QUANTITY	CONST STD OR PG NO	STOCK NUMBER
1	CROSSARM, 3-3/4" X 5-3/4" X 12'-0"		3	–	294160
2	CROSSARM, 3-3/4" X 5-3/4" X 13'-6"		2	–	294368
3	BRACE, ANGLE, CROSSARM, 6'		3	–	164160
4	BOLT, MACH, GALV, 5/8" X (LENGTH AS REQ'D), 1 DBL COIL WASH	(E)	1	392.1&.2	–
5	BOLT, MACH, GALV, 1/2" X 7", 1 RD & 1 DBL COIL WASH	(E)	4	392.1&.2	–
6	SIGN, HIGH VOLTAGE & 8 ROOFING NAILS	(E)	6	–	647648 492224
7	PIN, INSULATOR, STRAIGHT, 12KV, 1" OR 1 3/8"	(E)	6	–	532704 532448
8	BOLT, SPACE, 5/8" X (LENGTH AS REQ'D), 3 SQ WASH & 2 DBL COIL WASH	(E)	8	392.1&.2	–
9	BOLT, MACH, GALV, 5/8" X (LENGTH AS REQ'D), 1 RD WASH & 1 DBL COIL WASH	(E)	8	392.1&.2	–
10	BRACE, VERTICAL, 36"	(E)	4	–	164224
11	BOLT, MACH, GALV, 5/8" X (LENGTH AS REQ'D), 2 SQ FLAT WASH & 1 DBL COIL WASH	(E)	5	392.1&.2	–
12	PIN, TRANSFORMER ADAPTER, 1" LEAD THREAD	(D) (E)	2	–	529248
13	WIRE, #8, BARE SOLID ANNEALED COPPER		2 LB	–	812928
14	STAPLES, FENCE, GALV, 1-1/4"	(D) (E)	AS REQ'D	–	678528
15	INSULATOR, LINE, 12KV, 1" OR 1-3/8" PIN		6	750	–
16	CLEVIS, DEAD END, 3/4" BOLT, STEEL (OPEN TYPE)	(D) (E)	1	–	235618
17	LINK, EXTENSION, 1/2" X 1-1/2" X 12"	(D)	1	–	466240
18	CLEVIS, DEAD END, 5/8" BOLT, STEEL (CLOSED TYPE)	(E)	6	–	235712
19	INSULATOR, SUSPENSION, 12KV	(D)	13	750	–
20	CLAMP, STRAIGHT LINE, D E.	(D)	7	742-743	–
21	INSULATOR, LINE, 12KV, NEUTRAL	(D) (E)	2	–	429216
22	CONNECTOR, WIRE, (SIZE & TYPE AS REQ'D)	(E)	AS REQ'D	783-787	–
23	WIRE, BARE STRANDED COPPER, (OH JUMPER)	(N)	72'	715-716	–
24	WIRE, BARE STRANDED CU OR AL, (OH NEUT JUMPER)	(N)	12'	711-716	–
25	WIRE, #6, BARE STRANDED COPPER		25'	–	813536
26	BRACKET, DISCONNECT, ANGLE MOUNTING, 1/4" X 3"		8	–	166542
27	BOLT, MACH, GALV, 1/2" X 8", 1 RD & 1 DBL COIL WASH	(D)	24	392.1&.2	–
28	BOLT, MACH, GALV, 3/8" X 3"	(E)	8	392.1&.2	–
29	SWITCH, DISCONNECT, 14.4KV, 600 A OR 1200 A		6	1205	–
30	COMPRESSION TERMINALS, CU, 2 HOLE (SIZE AS REQ'D)		12	794-795	–
31	BRACKET, POTHEAD MOUNTING		6	1400/4200	–
32	BRACKET, CUTOUT/ARRESTER, FOR CROSSARM MOUNTING	(E)	6	–	166070
33	ARRESTER, LIGHTNING		6	1247	–
34	CONDUIT, PVC, SCHEDULE 40, 1-1/2"	(E)	10'	–	251232
35	STRAPS, PIPE, GALV, 1" & 6D NAILS, GALV	(E)	AS REQ'D	–	697792 491552
36	WIRE, BARE STRANDED CU, (C.P. NEUTRAL SIZE)	(N)	35'	715-716	–
37	WIRE, #4, BARE STRANDED COPPER		45'	–	813760
38	STAPLES, MOULDING, GALV, 3" X 1-1/16" X 1/4"	(D) (E)	AS REQ'D	–	678560
39	UNIT GROUND, COMPLETE	(Q)	1	–	603136
40	CLAMP, 5/8", GROUND ROD	(E)	2	–	230016
41	TERMINALS, UNDERGROUND CABLE		6	4111	–
42	RISER CONSTRUCTION		AS REQ'D	1400/4200	–
43	BRACKET, LADDER ARM	(E)	AS REQ'D	1404/4204	167184
44	NUT, CLAMPING CHANNEL, W/SPRING, 1/2"	(E)	AS REQ'D	1404/4204	503488
45	CHANNEL, DOUBLE GALV, 24"	(E)	AS REQ'D	1404/4204	216700
46	BOLT, MACH, GALV, 5/8" X (LENGTH AS REQ'D), 1 SQUARE, 1 ROUND & 1 DOUBLE COIL SPRING WASHER	(E)	1	392	–
47	GAIN, CROSSARM, BRACELESS	(G)	1	–	369598
48	BOLT, MACH, GALV, 5/8" X 7", 1 ROUND & 1 DOUBLE COIL SPRING WASHER	(E)	2	392	–

FOR FIELD MAINTENANCE ONLY

CABLE SIZE	UG MACRO UNIT PORCELAIN W/LADDER ARMS
3C-#750 AL TWO RUNS	2R750L
3C-#1000 AL TWO RUNS	2R-1KL

TABLE OF CONTENTS

DATE 1-1-93 APPD JLB/ [illegible]	SDG&E ELECTRIC STANDARDS 12.47KV AND BELOW DEAD END CABLE POLE, 6 OR 7 OH CONDUCTORS 1 OR 2 TERMINALS PER CONDUCTOR, HOOKSTICK SWITCHED	~~OH 1499.505~~ UG 4299.505 SUPERCEDES 4251.2 (1-1-93)

INSTALLATION:

A. NEW CABLE POLES SHALL HAVE A STANDARD DEPTH OF 9' IN MOST CASES THIS WILL REQUIRE A 5' TALLER POLE.

B. THIS CONSTRUCTION TO BE USED WITH 350 KCMIL AND LARGER UNDERGROUND CABLE.

Ⓒ INTERCONNECT OVERHEAD NEUTRAL, TERMINAL BASE, AND CONCENTRIC CABLE NEUTRAL CONDUCTOR TO LIGHTNING ARRESTER GROUND.

Ⓓ REDUCE QUANTITIES AS REQUIRED WHEN NOT USING NEUTRAL .

Ⓔ EXEMPT MATERIAL.

Ⓕ INSTRUCTIONS TO INSTALL POTHEAD MOUNTING BRACKETS AND LIGHTNING ARRESTER BRACKETS

Ⓖ DO NOT CUT GAINS IN THE POLE WHEN INSTALLING THE VERTICALLY MOUNTED SECTIONALIZING SWITCH ARMS. THE GAIN HARDWARE USED HERE MAKE CUT GAINS UNNECESSARY.

Ⓝ

UG CABLE SIZE AWG OR KCMIL, AL	OH JUMPER COND SIZE, AWG OR KCMIL, CU	OH NEUTRAL JUMPER SIZE CU OR AL	CABLE POLE NEUT SIZE (CU) UNDER POTHEAD ARM OR TRIPLE TERM BRKT
350	4/0	SAME SIZE	#2 PER PHASE
750	500	AS O.H. NEUT	1/0 PER PHASE
1000	500	CONDUCTOR	1/0 PER PHASE

REFERENCE:

Ⓞ ALLOWABLE WORKING AND CLIMBING SPACE – SEE STD. 251.

Ⓟ POLE STEPPING – SEE STD. 363.

Ⓠ GROUNDING METHODS – SEE PAGE 1002.5.

Ⓡ RISER POSITIONS – SEE STANDARD 1402/4202.

Ⓢ MINIMUM VERTICAL SEPARATION AS PER G.O. 95 – SEE STD. 1406/4206.

Ⓣ SEE STANDARD 1407/4207 FOR PORCELAIN AND NON PORCELAIN TERMINAL MOUNTING BRACKET INSTRUCTIONS AND MATERIALS.

FOR FIELD MAINTENANCE ONLY

TABLE OF CONTENTS

~~OH 1499.506~~ UG 4299.506 SUPERCEDES 4251 3 (1-1-93)	SDG&E ELECTRIC STANDARDS 12.47KV AND BELOW DEAD END CABLE POLE, 6 OR 7 OH CONDUCTORS 1 OR 2 TERMINALS PER CONDUCTOR, HOOKSTICK SWITCHED	DATE 1-1-93 APPD JJB/RSE

OH1487/UG4287 FIELD MAINTENANCE ONLY

ALL VERSIONS IN FMO ARE SUPERSEDED BY THEIR CURRENT VERSION FOUND INSIDE THE OVERHEAD CONSTRUCTION STANDARD MANUAL.

REVISION HISTORY:

04/13/2020: CREATED IN FMO

TABLE OF CONTENTS

© 1998 - 2020 San Diego Gas & Electric Company. All rights reserved. Removal of this copyright notice without permission is not permitted under law.

REV	CHANGE	BY	DSGN	APPV	DATE	REV	CHANGE	BY	DSGN	APPV	DATE
C						F					
B						E					
A	ORIGINAL ISSUE	RSL	JES	CZH	04/13/2020	D					

Indicates Latest Revision | Completely Revised | X | New Page | Information Removed

SHEET 1 OF 1

SDG&E ELECTRIC OVERHEAD AND UNDERGROUND FIELD MAINTENANCE ONLY STANDARDS

REVISED CT & PT POLETOP METERING INSTALLATION, 12KV, O.H. & U.G. SERVICES

FMO OH1487 UG4287

SCOPE: PRIMARY METERED DISTRIBUTION POLE: THIS STANDARD ILLISTRATES A PRIMARY METERED OVERHEAD AND UNDERGROUND DISTRIBUTION POLE AND HARDWARE.

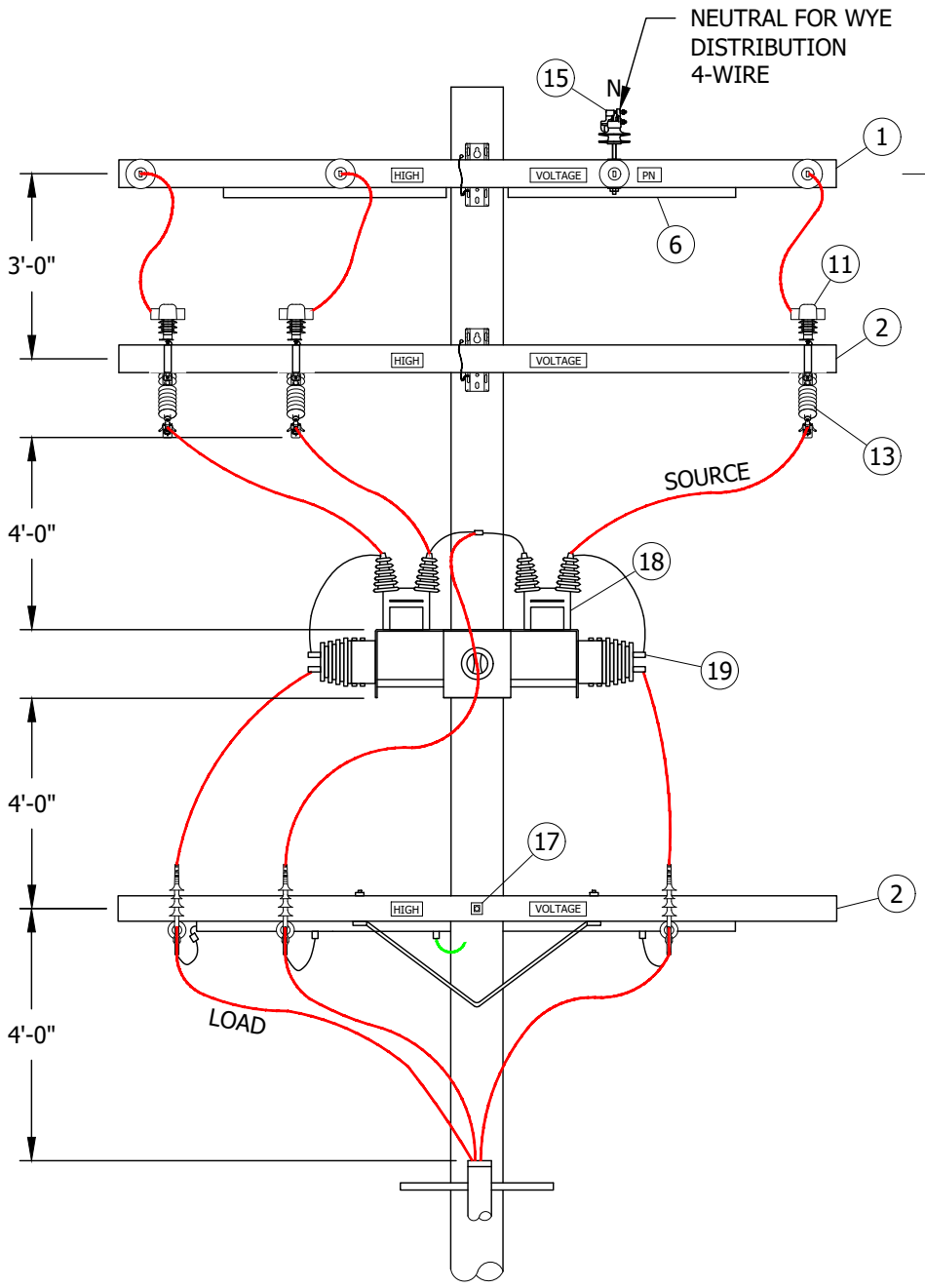

FIGURE 1
PRIMARY METERED UNDERGROUND CABLE POLE

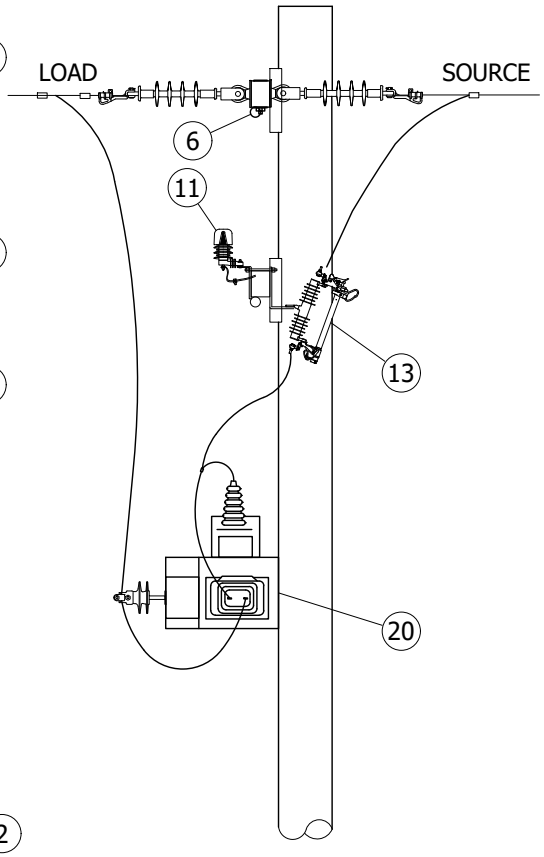

FIGURE 2
PRIMARY METERED OVERHEAD

FIELD MAINTENANCE ONLY

INSTALLATION: NONE

© 1998 - 2020 San Diego Gas & Electric Company. All rights reserved. Removal of this copyright notice without permission is not permitted under law.

REV	CHANGE	BY	DSGN	APPV	DATE	REV	CHANGE	BY	DSGN	APPV	DATE
C						F					
B						E					
A	ORIGINAL ISSUE	RSL	JES	CZH	04/13/2020	D					

X Indicates Latest Revision | Completely Revised | New Page | Information Removed

SDG&E ELECTRIC OVERHEAD AND UNDERGROUND FIELD MAINTENANCE ONLY STANDARDS

REVISED CT & PT POLETOP METERING INSTALLATION,
12KV, O.H. & U.G. SERVICES

FMO
OH1487.1
UG4287.1

TABLE OF CONTENTS

BILL OF MATERIALS:

ITEM	DESCRIPTION (a)		QUANTITY	STANDARD PAGE	STOCK NUMBER	DESIGN UNITS
1	CROSSARM, FG, DEADEND		AS REQ'D	-	AS REQ'D	-
2	CROSSARM, FG, TANGENT, EQUIPMENT		AS REQ'D	-	AS REQ'D	-
3	DBL ARRESTOR/CUTOUT BRACKET		3	-	S165422	-
4	28" STRAP BRACE		2	-	S164192	-
5	LIGHTNING ARRESTOR GROUND STRAP		3	-	S698754	-
6	1" PVC		AS REQ'D	-	S251200	-
7	#6 BS		AS REQ'D	-	S813536	-
8	#4 BS		AS REQ'D	-	S813764	-
9	#4 PVC COVERED GROUND WIRE		AS REQ'D	-	S812480	-
10	GROUND WIRE STAPLES		AS REQ'D	-	S678562	-
11	12KV LIGHTNING ARRESTER		3	1247	S113248	LA12
12	CUTOUT, INTERCHANGEABLE, NON-PORC	ZONE 1 ZONE 2	3	-	AS-REQ'D	-
13	FUSE HOLDER, SMU, FOR SMD30 CUTOUT BODY (100A)		3	-	S368674	-
14	STAND - OFF PIN, 1"		AS REQ'D	-	S529248	-
15	INSULATOR, VICE-TOP		1	-	S429060	IPCN1
16	FUSE (SIZE AS REQ'D)		AS REQ'D	-	AS REQ'D	-
17	SPACE BOLTS 5/8" X 26", SQUARE WASHERS & NUTS		AS REQ'D	392	-	-
18	12KV POTENTIAL TRANSFORMER		AS REQ'D	-	-	-
19	12KV CURRENT TRANSFORMER		AS REQ'D	-	-	-
20	P.T./C.T. BRACKET		1	-	S165380	-
21	C/O / LADDER BRACKET		AS-REQ'D	-	S166070	-
22	INDICATOR, CUTOUT, FIREFLY		3	-	S423606	-
23	COVER, CUTOUT, AVIAN PROTECTION		3	-	S298682	-

TABLE OF CONTENTS

NOTES:

I. DISTRIBUTION CONSTRUCTION CREW TO INSTALL ALL HIGH SIDE CONNECTORS, JUMPERS AND EQUIPMENT. AMO TO INSTALL LOW SIDE CONNECTORS AND CONDUCTORS.

II. MAXIMUM WEIGHT FOR PT AND CT TRANSFORMERS IS 85 LBS. EACH.

REFERENCE:

(a) THE ITEMS CONTAINED IN THE BILL OF MATERIALS REPRESENT WOOD CONSTRUCTION STANDARD, FOR STEEL CONSTRUCTION SEE CURRENT STANDARD.

b. FOR GROUNDING SEE STANDARD 1002.

c. CONTACT EMO FOR FUSING CORDINATION AND PT CT SELECTION.

FIELD MAINTENANCE ONLY

© 1998 - 2020 San Diego Gas & Electric Company. All rights reserved. Removal of this copyright notice without permission is not permitted under law.

REV	CHANGE	BY	DSGN	APPV	DATE	REV	CHANGE	BY	DSGN	APPV	DATE
C						F					
B						E					
A	ORIGINAL ISSUE	RSL	JES	CZH	04/13/2020	D					

X Indicates Latest Revision | Completely Revised | New Page | Information Removed

SDG&E ELECTRIC OVERHEAD AND UNDERGROUND FIELD MAINTENANCE ONLY STANDARDS

REVISED CT & PT POLETOP METERING INSTALLATION, 12KV, O.H. & U.G. SERVICES

FMO
OH1487.2
UG4287.2

4300 - FUSES, FAULT INDICATORS

4300 - FUSES, FAULT INDICATORS

MAIN TABLE OF CONTENTS

PAGE	SUBJECT
4303	SECONDARY CURRENT-LIMITING FUSES
4305	4KV, 12KV CUTOUT ASSEMBLY AND FUSE INSTALLATION
4307	FUSES USED IN OVERHEAD CONSTRUCTION
4308	ELECTRONIC SECTIONALIZER

© 1998 - 2021 San Diego Gas & Electric Company. All rights reserved. Removal of this copyright notice without permission is not permitted under law.

REV	CHANGE	DR	BY	DSN	APV	DATE	REV	CHANGE	DR	BY	DSN	APV	DATE
C	4308 MOVED TO FMO	GLC	RSL	JES	CZH	12/12/2021	F						
B	EDITORIAL CHANGES	-	JCE	JES	CZH	04/21/2019	E						
A	ORIGINAL ISSUE	-	JS	TR	MDJ	07/25/2016	D						

X Indicates Latest Revision | Completely Revised | New Page | Information Removed

SDG&E ELECTRIC UNDERGROUND FIELD MAINTENANCE ONLY STANDARDS

FUSES, FAULT INDICATORS FMO
TABLE OF CONTENTS

FMO
UG4301.1

FIELD MAINTENANCE ONLY

REVISION HISTORY:

7/13/2016: All versions prior to 2016 are superseded by their current version found inside the Overhead Construction Standard Manual.

TABLE OF CONTENTS

© 1998 - 2016 San Diego Gas & Electric Company. All rights reserved. Removal of this copyright notice without permission is not permitted under law.

REV	CHANGE	BY	DSGN	APPV	DATE	REV	CHANGE	BY	DSGN	APPV	DATE
C						F					
B						E					
A	ORIGINAL ISSUE	JS	IL	MDJ	7/13/2016	D					

X Indicates Latest Revision | Completely Revised | New Page | Information Removed

SHEET 1 OF 1

SDG&E ELECTRIC UNDERGROUND STANDARD

SECONDARY CURRENT-LIMITING FUSES

FMO UG 4303

SCOPE: THIS STANDARD DESCRIBES THE APPLICATION OF SECONDARY CURRENT-LIMITING FUSE PROTECTION.

SECONDARY CURRENT-LIMITING FUSES, SUCH AS THOSE HOUSED IN THE EKSTROM LIMITER ADAPTOR, ARE TO BE APPLIED TO RESIDENTIAL TYPE SERVICES WHENEVER THE AVAILABLE FAULT CURRENT EXCEEDS THE INTERRUPTING RATING OF THE SERVICE ENTRANCE EQUIPMENT THE EKSTROM ADAPTOR IN STOCK NUMBER 463402 MAY BE INSTALLED ON 120/240 VOLT, SINGLE-PHASE SERVICES UP THROUGH 125 AMPERES. IT PLUGS IN BETWEEN THE CUSTOMER'S METER SOCKET AND THE COMPANY'S METER CONTACT THE PROTECTION ENGINEER FOR LARGER SERVICES OR OTHER VOLTAGE REQUIREMENTS CHECK ALL ELECTRICAL CONNECTIONS ON ADAPTOR FOR TIGHTNESS DURING INSTALLATION.

THESE SECONDARY CURRENT-LIMITING FUSES ARE TO BE INSTALLED BY THE LINE CREWS ON SCHEDULED WORK IF THE TRANSFORMER IS CHANGED OUT DUE TO TROUBLE, THE SECONDARY CURRENT-LIMITING FUSES SHALL BE ADDED THE FOLLOWING WORKING DAY.

CHANGEOUT OF EXISTING STATIONS

THE FOLLOWING GUIDELINES APPLY TO CHANGEOUTS OF EXISTING TRANSFORMERS, BASED UPON CUSTOMER'S EQUIPMENT WHICH MAY HAVE A MAXIMUM INTERRUPTING CAPABILITY OF 5000 AMPS.

1 SINGLE-FAMILY RESIDENTIAL AND DUPLEX APPLICATIONS.

ALL SERVICES CONNECTED DIRECTLY TO THE SECONDARY TERMINALS OF TRANSFORMERS RATED OTHER THAN 6 9KV SHALL HAVE CURRENT-LIMITING FUSES APPLIED AT EACH METER SOCKET WHENEVER THE TRANSFORMER AT AN EXISTING INSTALLATION IS INCREASED IN SIZE TO 50, 75, OR 100 KVA. SEE NOTE 1

2 INDIVIDUALLY METERED MOBILE HOMES·

ALL SERVICES·CONNECTED DIRECTLY TO THE SECONDARY TERMINALS OF TRANSFORMERS RATED OTHER THAN 6 9KV SHALL HAVE CURRENT-LIMITING FUSES APPLIED AT EACH METER SOCKET

NEW INSTALLATIONS

THE FOLLOWING GUIDELINES APPLY TO NEW INSTALLATIONS, BASED UPON CUSTOMER'S EQUIPMENT WHICH SHOULD HAVE A MINIMUM INTERRUPTING CAPABILITY OF 10,000 AMPS. THE TABLE BELOW SPECIFIES THE MINIMUM CONDUCTOR LENGTH REQUIRED TO LIMIT THE SHORT CIRCUIT CURRENTS TO LESS THAN 10,000 AMPS FOR VARIOUS SINGLE-PHASE TRANSFORMERS. THE LIMITER ADAPTOR SHALL BE APPLIED TO THOSE SERVICES WHICH DO NOT MEET THIS REQUIREMENT

CONDUCTOR SIZE BASED ON	STOCK NUMBER	MINIMUM CONDUCTOR LENGTH TO LIMIT ISC TO 10,000 AMPS			
		TRANSFORMER SIZE			
		25 KVA	50 KVA	75 KVA	100 KVA
UNDERGROUND CABLE #2	197504, 196832	0	10	26	32
UNDERGROUND CABLE 1/0	197472, 196768	0	17	40	50
UNDERGROUND CABLE 3/0	197536, 196928	0	23	60	74
UNDERGROUND CABLE 350	197568	0	35	94	119
UNDERGROUND CABLE 500	-	0	55	135	173

NOTES:

- INSTALLATIONS WHICH ARE DIFFICULT TO PROTECT SHOULD BE REFERRED TO DISTRICT ENGINEERING. CURRENT-LIMITING FUSES MAY NOT BE REQUIRED IF SUFFICIENT SECONDARY CABLE LIMITS THE FAULT DUTY TO SERVICE EQUIPMENT CAPABILITY.
- REPLACEMENT LIMITERS (FUSES) ARE STOCK NUMBER 365643.

CURRENT-LIMITING FUSES

FOR FIELD MAINTENANCE ONLY

EKSTROM ADAPTOR

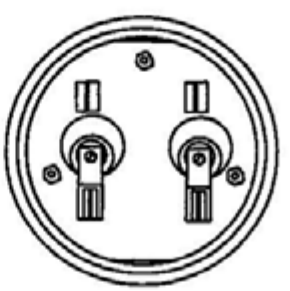

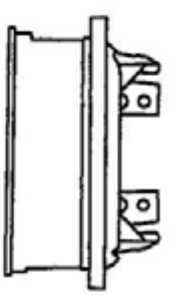

TABLE OF CONTENTS

	SDG&E ELECTRIC STANDARDS	
DATE 9-1-83 APPD JEL / DRH	SECONDARY CURRENT-LIMITING FUSES	4399.001 SUPERSEDES 4303 (1-1-97)

OH1212 UG4305 FIELD MAINTENANCE ONLY

ALL VERSIONS LISTED IN FMO ARE SUPERSEDED BY THEIR CURRENT VERSION FOUND INSIDE THE OVERHEAD AND UNDERGROUND CONSTRUCTION STANDARD MANUAL.

REVISION HISTORY:

12/12/2021: NUMBER CHANGE FROM UG4306 TO UG4305

04/21/2019: MOVED TO FMO

TABLE OF CONTENTS

© 1998 - 2021 San Diego Gas & Electric Company. All rights reserved. Removal of this copyright notice without permission is not permitted under law.

REV	CHANGE	DR	BY	DSN	APV	DATE	REV	CHANGE	DR	BY	DSN	APV	DATE
C							F						
B	EDITORIAL CHANGES	GLC	RSL	JES	CZH	12/12/2021	E						
A	ORIGINAL ISSUE	-	JCE	JS	CZH	04/21/2019	D						

X Indicates Latest Revision | Completely Revised | New Page | Information Removed

SDG&E ELECTRIC OVERHEAD AND UNDERGROUND FIELD MAINTENANCE ONLY STANDARDS

4KV, 12KV CUTOUT ASSEMBLY AND FUSE INSTALLATION

FMO
OH1212
UG4305

SCOPE: THIS STANDARD SHOWS THE FAULT TAMER FUSE TUBE AND BACK-UP LIMITER, AND IT'S APPLICATION.

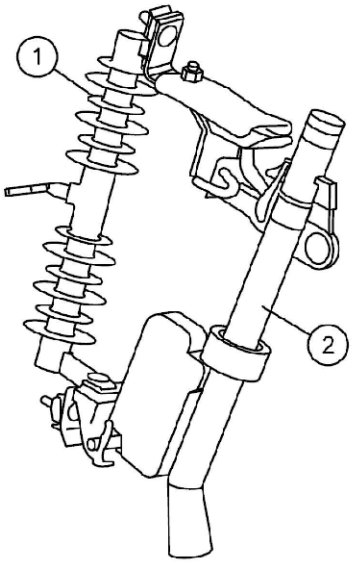

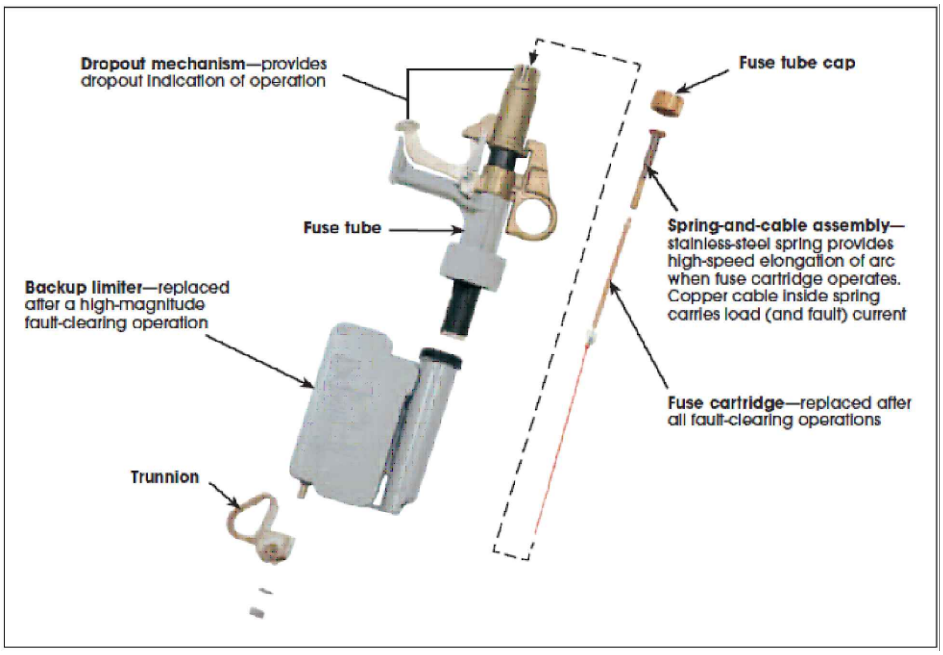

BILL OF MATERIALS:

ITEM	CURRENT RANGE	DESCRIPTION	STOCK NUMBER	ASSEMBLY UNITS UG	ASSEMBLY UNITS OH
1	0 - 300A	INTERCHANGEABLE CUTOUT BODY, WITHOUT FUSEHOLDER (III)	S298020	--	NPCO
2	FUSE 5 THRU 20A	FAULT TAMER, INCLUDES FUSE TUBE & BACK-UP LIMITER (I)	S365820	--	FTAMER

NOTES:

(I) SEE TABLE 1 FOR FUSES.

II. CUTOUTS SHALL BE BONDED IF INSTALLED IN CONTAMINATION DISTRICT 1 AS SHOWN IN OH STANDARD 287.

(III) CROSS ARM MOUNTING BRACKET ARE INCLUDED WITH THE MATERIALS SUPPLIED BY THE OH ASSEMBLY UNITS (USED ON "DESIGN BY LOCATION" JOBS). BRACKETS MUST BE ORDERED SEPARATELY ON MANUALLY PREPARED FIELD MEMO JOBS.

- DOUBLE CUTOUT & ARRESTER MOUNTING BRACKET, USE S165442.
- CUTOUT OR ARRESTER MOUNTING BRACKET, USE S166070.

IV. USE ON 6.9KV - 12KV ONLY.

REFERENCE:

e. SEE ELECTRIC STANDARD PRACTICE 321 S&C FAULT TAMER® FUSE LIMITER.

f. SEE S&C FAULT TAMER INSTALLATION INSTRUCTIONS 451-500.

FIELD MAINTENANCE ONLY

TABLE OF CONTENTS

© 1998 - 2021 San Diego Gas & Electric Company. All rights reserved. Removal of this copyright notice without permission is not permitted under law.

REV	CHANGE	DR	BY	DSN	APV	DATE	REV	CHANGE	DR	BY	DSN	APV	DATE
C	EDITORIAL CHANGES	GLC	RSL	JES	CZH	12/12/2021	F						
B	MOVED TO FMO	-	JCE	JES	CZH	04/21/2019	E						
A	ORIGINAL ISSUE	-	GW	JS	MDJ	04/01/2018	D						

X Indicates Latest Revision | Completely Revised | New Page | Information Removed

SDG&E ELECTRIC OVERHEAD AND UNDERGROUND FIELD MAINTENANCE ONLY STANDARDS

4KV, 12KV CUTOUT ASSEMBLY AND FUSE INSTALLATION

FMO
OH1212.1
UG4305.1

OH1207 UG4307 FIELD MAINTENANCE ONLY

ALL VERSIONS LISTED IN FMO ARE SUPERSEDED BY THEIR CURRENT VERSION FOUND INSIDE THE OVERHEAD AND UNDERGROUND CONSTRUCTION STANDARD MANUAL.

REVISION HISTORY:

12/12/2021: NUMBER CHANGE FROM UG4308 TO UG4307.

04/21/2020: MOVED TO FMO

TABLE OF CONTENTS

© 1998 - 2021 San Diego Gas & Electric Company. All rights reserved. Removal of this copyright notice without permission is not permitted under law.

REV	CHANGE	DR	BY	DSN	APV	DATE	REV	CHANGE	DR	BY	DSN	APV	DATE
C							F						
B	EDITORIAL CHANGES	GLC	RSL	JES	CZH	12/12/2021	E						
A	ORIGINAL ISSUE	-	JCE	JS	CZH	04/21/2019	D						

X Indicates Latest Revision | Completely Revised | New Page | Information Removed

SDG&E ELECTRIC OVERHEAD AND UNDERGROUND FIELD MAINTENANCE ONLY STANDARDS

FUSES USED IN OVERHEAD CONSTRUCTION

FMO
OH1207
UG4307

TABLE 6

FAULT TAMER FUSE LIMITERS TCC 123-8			
SIZE (AMPS)	**TYPE**	**STOCK NUMBER**	**ASSEMBLY UNIT**
5	FAULT TAMER	S365810	FT5
10	FAULT TAMER	S365811	FT10
15	FAULT TAMER	S365812	FT15
20	FAULT TAMER	S365813	FT20
N/A	FAULT TAMER BACK-UP LIMITER	S365822	FTBL

TABLE OF CONTENTS

NOTES:

I. THESE FUSES ARE CAL-FIRE EXEMPT. THEY WILL BE USED IN TIER 2 & TIER 3 AREAS.

FIELD MAINTENANCE ONLY

© 1998 - 2021 San Diego Gas & Electric Company. All rights reserved. Removal of this copyright notice without permission is not permitted under law.

REV	CHANGE	DR	BY	DSN	APV	DATE	REV	CHANGE	DR	BY	DSN	APV	DATE
C	MOVED TO FMO	-	JCE	JES	CZH	04/21/2019	F						
B	EDITORIAL CHANGES	-	KN	JS	MDJ	07/25/2017	E						
A	UPDATED MATERIALS	-	DS	JS	MDJ	01/25/2017	D	EDITORIAL CHANGES	GLC	RSL	JES	CZH	12/12/2021

OH1215 UG4308 FIELD MAINTENANCE ONLY

ALL VERSIONS LISTED IN FMO ARE SUPERSEDED BY THEIR CURRENT VERSION FOUND INSIDE THE OVERHEAD AND UNDERGROUND CONSTRUCTION STANDARD MANUAL.

REVISION HISTORY:

12/12/2021: MOVED TO FMO

TABLE OF CONTENTS

© 1998 - 2021 San Diego Gas & Electric Company. All rights reserved. Removal of this copyright notice without permission is not permitted under law.

REV	CHANGE	DR	BY	DSN	APV	DATE	REV	CHANGE	DR	BY	DSN	APV	DATE
C							F						
B							E						
A	ORIGINAL ISSUE	GLC	RSL	JES	CZH	12/12/2021	D						

	Indicates Latest Revision	Completely Revised	X New Page	Information Removed

SCOPE: THIS STANDARD SHOWS VARIOUS ELECTRONIC SECTIONALIZERS AND THEIR GENERAL APPLICATION.

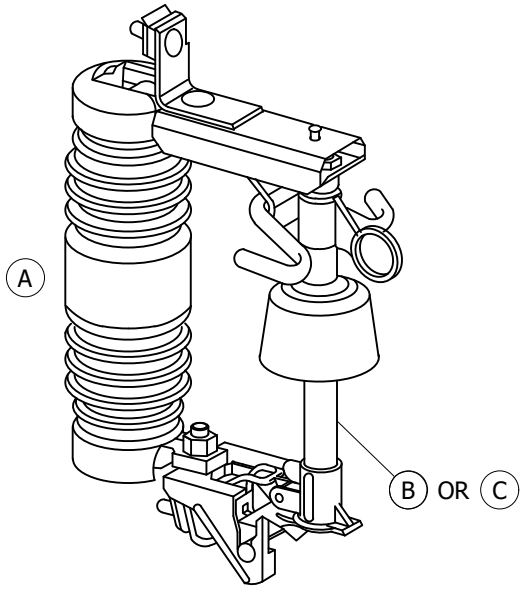

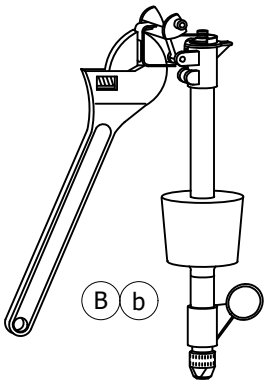

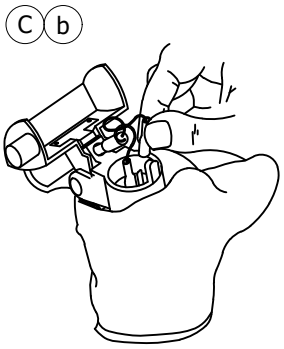

INSTALLATION:

(A) THE ELECTRONIC SECTIONALIZERS ONLY FIT THE INTERCHANGEABLE CUTOUTS, EITHER STANDARD LEAKAGE OR HIGH LEAKAGE - SEE STANDARD 1212/4306.

(B) THE RESETTABLE ELECTRONIC SECTIONALIZER IS THE ONLY TYPE CURRENTLY BEING PURCHASED. SEE TABLE 1 FOR DETAILS.

(C) THE NON-RESETTABLE ELECTRONIC SECTIONALIZER IS NO LONGER PURCHASED. A REPLACEMENT ACTUATOR IS AVAILABLE FOR MAINTENANCE OF THOSE SECTIONALIZERS IN THE FIELD - SEE TABLE 2. IF A NON-RESETTABLE ELECTRONIC SECTIONALIZER BECOMES DAMAGED OR IS NO LONGER USABLE, IT SHOULD BE REPLACED WITH A RESETTABLE TYPE.

TABLE OF CONTENTS

TABLE 1 RESETTABLE ELECTRONIC SECTIONALIZER (B)(a)

SIZE (AMPS)	COUNTS	MANUFACTURER	CATALOG NUMBER	STOCK NUMBER	ASSEMBLY UNITS OVERHEAD	ASSEMBLY UNITS UNDERGROUND
100	2	A.B. CHANCE	C740-272T	S634100	ES100	100ES
140	2	A.B. CHANCE	C740-282T	S634102	ES140	140ES
200	2	A.B. CHANCE	C740-292T	S634104	ES200	200ES

TABLE 2 NON-RESETTABLE ELECTRONIC SECTIONALIZER (REPLACEMENT ACTUATOR (C)(a)

SIZE (AMPS)	MANUFACTURER	CATALOG NUMBER	STOCK NUMBER
100 - 200	A.B. CHANCE	C700-1729	S101522

NOTES: NONE

REFERENCE:

(a) FOR APPLICATION OF ELECTRONIC SECTIONALIZERS - SEE DESIGN MANUAL PAGE 6205.3.

(b) FOR OPERATIONAL INFORMATION - SEE ELECTRIC STANDARD PRACTICE 318.

FIELD MAINTENANCE ONLY

© 1998 - 2021 San Diego Gas & Electric Company. All rights reserved. Removal of this copyright notice without permission is not permitted under law.

REV	CHANGE	DR	BY	DSN	APV	DATE	REV	CHANGE	DR	BY	DSN	APV	DATE
C	MOVED TO FMO	GLC	RSL	JES	CZH	12/12/2021	F						
B	DRAWING UPDATE	-	PEI	-	-	02/18/2019	E						
A	ORIGINAL ISSUE	-	-	PTA	MC	10/08/2010	D						

PAGE	SUBJECT
4410	HIGH INTENSITY DISCHARGE LAMPS
4411	REPLACEMENT REFRACTORS
4420	MERCURY VAPOR CONVENTIONAL LUMINAIRES AND REPLACEMENT REFRACTORS
4421	HIGH PRESSURE AND LOW PRESSURE SODIUM VAPOR LUMINAIRE, REPLACEMENT BALLAST AND STARTER

MAIN TABLE OF CONTENTS

© 1998 - 2023 San Diego Gas & Electric Company. All rights reserved. Removal of this copyright notice without permission is not permitted under law.

REV	CHANGE	DR	BY	DSN	APV	DATE	REV	CHANGE	DR	BY	DSN	APV	DATE
C	REFORMAT (ADDED UG4421)	EDM	JIK	-	-	01/18/2022	F						
B	EDITORIAL CHANGES	GLC	JIK	GLW	CZH	06/08/2020	E						
A	ORIGINAL ISSUE	-	JS	TR	MDJ	07/25/2016	D	UG4410 MOVED TO FMO	GLC	MRF	MRF	KRG	07/20/2023

OH1510 UG4410 FIELD MAINTENANCE ONLY

ALL VERSIONS LISTED IN FMO ARE SUPERSEDED BY THEIR CURRENT VERSION FOUND INSIDE THE OVERHEAD AND UNDERGROUND CONSTRUCTION STANDARDS MANUALS.

REVISION HISTORY:

07/20/2023: MOVED TO FMO

TABLE OF CONTENTS

© 1998 - 2023 San Diego Gas & Electric Company. All rights reserved. Removal of this copyright notice without permission is not permitted under law.

REV	CHANGE	DR	BY	DSN	APV	DATE	REV	CHANGE	DR	BY	DSN	APV	DATE
C							F						
B							E						
A	ORIGINAL ISSUE	GLC	MRF	MRF	KRG	07/20/2023	D						

SCOPE: THIS STANDARD DESCRIBES ALL THE NECESSARY INFORMATION WHEN ORDERING LAMPS FOR MERCURY VAPOR, HIGH PRESSURE AND LOW PRESSURE SODIUM LUMINARIES.

INSTALLATION:

(A) CLEAR MERCURY VAPOR LAMPS.

(B) DELUXE WHITE OR PHOSPHOR COATED LAMPS, IDENTIFIED BY 'DX'.

C. RATING BASED ON 16,000 HOURS ON LAMPS.

(D) LAMPS NOW BEING PURCHASED WILL WORK IN EITHER BASE UP OR BASE DOWN CONFIGURATION.

(E) LPSV LAMPS MUST BE INSTALLED HORIZONTAL OR BASE UP, AS SHOWN ON THE FOLLOWING FIGURES:

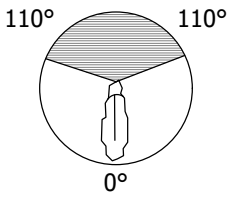

FIGURE 1
FOR 35 AND 55W (E)

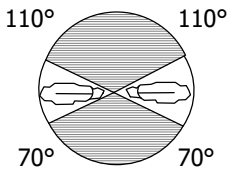

FIGURE 2
FOR 90, 135 AND 180W (E)

F. INSTALLER IS TO SCRIBE A VERTICAL LINE UNDER THE MONTH AND LAST DIGIT OF THE CURRENT YEAR WHEN INSTALLING LAMPS.

BILL OF MATERIALS: NONE

TABLE 1

HIGH PRESSURE SODIUM VAPOR (HPSV) (D)									
LAMP SIZE (WATTS)	MANUFACTURER			ANSI LAMP DESIGNATION	LENGTH (IN)	APPROXIMATE LUMENS		STOCK NUMBER	DESIGN UNITS
	GE LUCALUX	SYLVANIA LUMALUX	N.A. PHILIPS CERAMALUX			INITIAL	MEAN		
50	LU-50	LU-50	C-50S68	S68MS-50	7 3/4	4,000	3,600	S452578	LH50
70	LU-70	LU-70	C-70S62	S62ME-70	7 3/4	5,800	5,220	S452580	LH70
100	LU-100	LU-100	C-100S54	S54SB-100	7 3/4	9,500	8,550	S452582	LH100
150	LU-150/55	LU-150/55	C-150S55	S55SC-150	7 3/4	16,000	14,400	S452584	LH150
200	LU-200	LU-200	C-200S66	S66MN-200	9 3/4	22,000	19,800	S452587	LH200
250	LU-250	LU-250	C-250S50/S	S50VA-250/S	9 3/4	30,000	27,000	S452588	LH250
310	LU-310	LU-310	C-310S67	S67MR-310	9 3/4	37,000	33,000	S452591	LH310
400	LU-400	LU-400	C-400S51	S51WA-400	9 3/4	50,000	45,000	S452592	LH400
1000	LU-1000	LU-1000	C-1000S52	S52XB-1000	15 1/16	140,000	126,000	S452594	LH1000

FIELD MAINTENANCE ONLY

© 1998 - 2023 San Diego Gas & Electric Company. All rights reserved. Removal of this copyright notice without permission is not permitted under law.

REV	CHANGE	DR	BY	DSN	APV	DATE	REV	CHANGE	DR	BY	DSN	APV	DATE
C	FORMATTING	EDM	JIK	-	-	01/18/2022	F						
B	DRAWING UPDATE	PEI	-	-	-	02/04/2019	E						
A	ORIGINAL ISSUE	-	-	PTA	RDG	01/01/1996	D	MOVED TO FMO	GLC	MRF	MRF	KRG	07/20/2023

TABLE 2

MERCURY VAPOR (MV) (D) (NO LONGER USED IN NEW INSTALLATION)							
LAMP SIZE (WATTS)	MANUFACTURER		ANSI LAMP DESIGNATION	LENGTH (IN)	APPROXIMATE LUMENS		STOCK NUMBER
	GE CATALOG NUMBER	SYLVANIA & N.A. PHILIPS CATALOG NUMBERS			INITIAL	MEAN (B)	
175	H175A39-22	H39KB-175	H39KB-175	8 1/4	7,950	7,470	S452352 (A)
	H175DX39-22	H39KC-175/DX	H39KC-175/DX		8,600	7,650	S452580 (B)
250	H25OA37-5	H37KB-250	H37KB-250	8 1/4	11,200	10,300	S452384 (A)
	H25ODX37-5	H37KC-250/DX	H37KC-250/DX		12,100	10,400	S452400 (B)
400	H40OA33-1	H33CD-400	H33CD-400	11 5/16	21,000	19,100	S452416 (A)
	H40ODX33-1	H33GL-400/DX	H33GL-400/DX		22,500	19,100	S452448 (B)
700	H70ODX35-18	H35ND-700/DX	H35ND-700/DX	14 5/16	42,000	33,600	S452576 (B)

TABLE 3

LOW PRESSURE SODIUM VAPOR (LPSV) (E)					
LAMP SIZE (WATTS)	ANSI LAMP DESIGNATION	LENGTH (IN)	APPROXIMATE LUMENS	STOCK NUMBER	DESIGN UNITS
35	L70RB-35	12.2	4,800	S452270	LL35
55	L71RC-55	16.7	8,000	S452280	LL55
90	L72RD-90	20.8	13,500	S452282	L90
135	L73RE-135	30.5	22,500	S452284	LL135
180	L74RF-180	44.1	33,000	S452286	LL180

NOTES:

(I) ALL LAMPS MUST BE DATE CODED WHEN INSTALLED. SCRIBE A VERTICAL LINE BELOW THE MONTH AND YEAR LOCATED ON THE BASE OF LAMPS. SINCE LAMPS ARE GROUP REPLACED, ONLY THE LAST DIGIT OF THE YEAR IS USED. THEY SHOULD NEVER BE OLDER THAN TEN YEARS. THE FOLLOWING EXAMPLE INDICATES A JUNE 1985 INSTALLATION:



FIGURE 3 (I)

REFERENCE:

a. FOR G.O. 95 MINIMUM CLEARANCE, SEE OH1509.

FIELD MAINTENANCE ONLY

© 1998 - 2023 San Diego Gas & Electric Company. All rights reserved. Removal of this copyright notice without permission is not permitted under law.

REV	CHANGE	DR	BY	DSN	APV	DATE	REV	CHANGE	DR	BY	DSN	APV	DATE
C	FORMATTING	EDM	JIK	-	-	01/18/2022	F						
B	DRAWING UPDATE	PEI	-	-	-	02/04/2019	E						
A	ORIGINAL ISSUE	-	-	PTA	RDG	01/01/1996	D	MOVED TO FMO	GLC	MRF	MRF	KRG	07/20/2023

TABLE OF CONTENTS

OH1511 UG4411 FIELD MAINTENANCE ONLY

ALL VERSIONS LISTED IN FMO ARE SUPERSEDED BY THEIR CURRENT VERSION FOUND INSIDE THE OVERHEAD AND UNDERGROUND CONSTRUCTION STANDARD MANUAL.

REVISION HISTORY:

6/8/2020**:** MOVED TO FMO

TABLE OF CONTENTS

© 1998 - 2020 San Diego Gas & Electric Company. All rights reserved. Removal of this copyright notice without permission is not permitted under law.

REV	CHANGE	DR	BY	DSN	APV	DATE	REV	CHANGE	DR	BY	DSN	APV	DATE
C							F						
B							E						
A	ORIGINAL ISSUE	GLC	JIK	GLW	CZH	6/8/2020	D						

SHEET 1 OF 1	Indicates Latest Revision	Completely Revised	X New Page	Information Removed
	SDG&E ELECTRIC OVERHEAD AND UNDERGROUND FIELD MAINTENANCE ONLY STANDARDS			
	REPLACEMENT REFRACTORS			
				FMO OH1511 UG4411

SCOPE: NONE

INSTALLATION:

(A) A GLASS OR LEXAN REFRACTOR MAY BE USED ON THESE LUMINAIRES.

B. LEXAN REFRACTORS TO BE USED IN HIGH VANDALISM AREAS ONLY.

BILL OF MATERIALS:

TABLE 1. REPLACEMENT REFRACTORS FOR LUMINAIRES ON PAGES 1521/4421

CONVENTIONAL LUMINAIRES		LAMP TYPE	LAMP WATTAGE	REPLACEMENT REFRACTOR		
MANUFACTURER	TYPE			TYPE	CATALOG NUMBER	STOCK NUMBER
GENERAL ELECTRIC	M250R2	HPSV	70, 100, 150	GLASS	35-962560-21	S579104
GENERAL ELECTRIC	M400R2	HPSV	200, 250, 400	GLASS	35-962620-05	S579102
GENERAL ELECTRIC	M1000	HPSV	1000	GLASS	35-130170R02	S579100
AMERICAN ELECTRIC	SERIES 113	HPSV	70, 100, 150	GLASS	13-2-A	S579110
AMERICAN ELECTRIC	SERIES 125	HPSV	200, 250, 400	GLASS	25-3-A	S579108
AMERICAN ELECTRIC	SERIES 327	HPSV	1000	GLASS	27-3-A	S79106

TABLE 1. REPLACEMENT REFRACTORS FOR LUMINAIRES ON PAGES 4422

DECORATIVE LUMINAIRES		LAMP TYPE	LAMP WATTAGE	REPLACEMENT REFRACTOR		
MANUFACTURER	TYPE			TYPE	CATALOG NUMBER	STOCK NUMBER
GENERAL ELECTRIC	MISSION BELL (A)	HPSV	70, 100, 150	GLASS	35-130583R01	S579264
				LEXAN	35-130707R01	S579248
		HPSV	250, 400	GLASS	35-2311374R1	S579296
				LEXAN	35-130015R02	S579312
GENERAL ELECTRIC	DECASHIELD	HPSV	250, 400	GLASS	35-962880-23	S578702
MCGRAW EDISON	CONCOURSE STYLE A	HPSV	70, 100, 150	GLASS	LO-340X1	S578694
			250, 400	GLASS	LO-340X2	S578696
GARDCO	FORM 10P	HPSV	70, 100, 150	GLASS	P1413	S578698
			250, 400	GLASS	P1913	S578700
GARDCO	FORM 10P	HPSV	250, 400	GLASS	P1913	S578700
KIM	SQUARE	HPSV	70, 200	GLASS	84044	S578730
BIEBER	SQUARE	HPSV	70	GLASS	BH-HP-GLASS	S578730

FIELD MAINTENANCE ONLY

TABLE OF CONTENTS

© 1998 - 2020 San Diego Gas & Electric Company. All rights reserved. Removal of this copyright notice without permission is not permitted under law.

REV	CHANGE	DR	BY	DSN	APV	DATE	REV	CHANGE	DR	BY	DSN	APV	DATE
C	MOVED TO FMO	GLC	JIK	GLW	CZH	6/8/2020	F						
B	DRAWING UPDATE	PEI	-	-	-	02/04/2019	E						
A	ORIGINAL ISSUE	-	-	RDW	CAK	01/01/1998	D						

X Indicates Latest Revision | Completely Revised | New Page | Information Removed

SDG&E ELECTRIC OVERHEAD AND UNDERGROUND FIELD MAINTENANCE ONLY STANDARDS

REPLACEMENT REFRACTORS

FMO
OH1511.1
UG4411.1

BILL OF MATERIALS CONT'D:

TABLE 3. REPLACEMENT REFRACTORS FOR LUMINAIRES ON PAGES 4423 AND 4424

POST TOP & DW LUMINAIRES		LAMP TYPE	LAMP WATTAGE	REPLACEMENT REFRACTOR		
MANUFACTURER	TYPE			TYPE	CATALOG NUMBER	STOCK NUMBER
MCGRAW EDISON	LAWNAIRE	HPSV	50, 70, 100, 150	ACRYLIC	LO-307X1	S77920
MCGRAW EDISON	TRADITIONAL TYPE III	HPSV	100, 150	ACRYLIC	LT-144X11	S579232 (I)
				ACRYLIC	LT-148X11	S579220 (II)
				ACRYLIC	LT-144X12	S579228 (III)
				ACRYLIC	LT-144X13	S579224 (IV)
MCGRAW EDISON	TRADITIONAL TYPE V	HPSV	50, 70	ACRYLIC	LT-144X11	S577920 (V)
GENERAL ELECTRIC	TC-100R AND TC-100R MANSARD	HPSV	70, 150	ACRYLIC	35-963160-01	S579204 (VI)
HOLOPHANE	RSL-350	HPSV	100, 150	GLASS	3313	S578728
AMERON	VICTORIAN TYPE III	HPSV	70,200	GLASS	80645E	S578720

TABLE 4. REPLACEMENT REFRACTORS FOR LUMINAIRES ON PAGES 1533

FLOOD LIGHT LUMINAIRES	LAMP TYPE	LAMP WATTAGE	REPLACEMENT REFRACTOR		
MANUFACTURER			TYPE	CATALOG NUMBER	STOCK NUMBER
GENERAL ELECTRIC	HPSV	250, 400, 1000	GLASS	35-964960-21	S78712

TABLE OF CONTENTS

NOTES:

(I) REFRACTOR PANEL TO BE INSTALLED ON STREET SIDE.

(II) REFRACTOR PANEL TO BE INSTALLED ON HOUSE SIDE.

(III) REFRACTOR PANEL TO BE INSTALLED ON RIGHT SIDE.

(IV) REFRACTOR PANEL TO BE INSTALLED ON LEFT SIDE.

(V) REFRACTOR PANEL TO BE INSTALLED ON ALL FOUR SIDES.

(VI) REFRACTOR PANEL TO BE INSTALLED PER DESIGNATED SIDE.

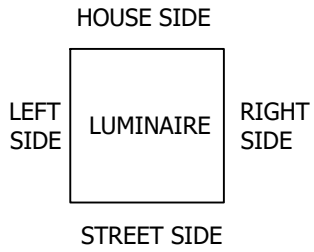

REFERENCE: NONE

FIELD MAINTENANCE ONLY

© 1998 - 2020 San Diego Gas & Electric Company. All rights reserved. Removal of this copyright notice without permission is not permitted under law.

REV	CHANGE	DR	BY	DSN	APV	DATE	REV	CHANGE	DR	BY	DSN	APV	DATE
C	MOVED TO FMO	GLC	JIK	GLW	CZH	6/8/2020	F						
B	DRAWING UPDATE	PEI	-	-	-	02/04/2019	E						
A	ORIGINAL ISSUE	-	-	RDW	CAK	01/01/1998	D						

FIELD MAINTENANCE ONLY

REVISION HISTORY:

7/13/2016: All versions prior to 2016 are superseded by their current version found inside the Overhead Construction Standard Manual.

TABLE OF CONTENTS

© 1998 - 2016 San Diego Gas & Electric Company. All rights reserved. Removal of this copyright notice without permission is not permitted under law.

REV	CHANGE	BY	DSGN	APPV	DATE	REV	CHANGE	BY	DSGN	APPV	DATE
C						F					
B						E					
A	ORIGINAL ISSUE	JS	IL	MDJ	7/13/2016	D					

X Indicates Latest Revision | Completely Revised | New Page | Information Removed

SHEET 1 OF 1

SDG&E ELECTRIC UNDERGROUND STANDARD

MERCURY VAPOR CONVENTIONAL LUMINAIRES AND REPLACEMENT REFRACTORS

FMO UG 4420

SCOPE: THIS STANDARD SHOWS MERCURY VAPOR LUMINAIRES USED TO PROVIDE ROADWAY AND DUSK TO DAWN LIGHTING, AND REPLACEMENT REFRACTORS.

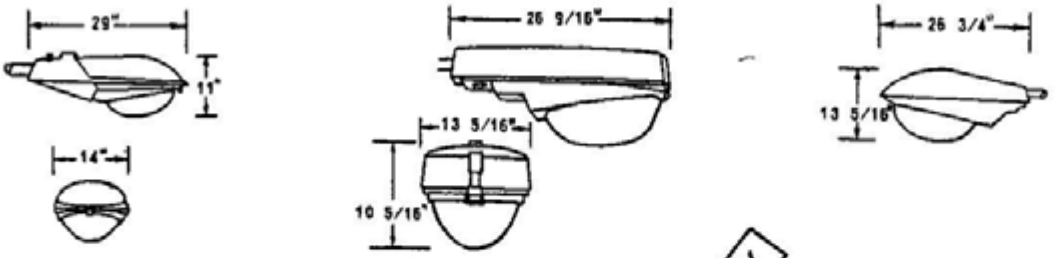

GENERAL ELECTRIC M-250A POWR/DOOR

MCGRAW EDISON UNIDOR 250

WESTINGHOUSE OV-15

FIGURE 1



FOR FIELD MAINTENANCE ONLY

GENERAL ELECTRIC M-400A POWR/DOOR

WESTINGHOUSE OV-25

FIGURE 2

BILL OF MATERIAL:

FIG. NO.	STOCK NUMBER	LAMP SIZE WATTS	BALLAST		MANUFACTURER AND CATALOG NUMBER							
			TYPE	SOURCE VOLTAGE	GENERAL ELECTRIC		MCGRAW EDISON		WESTINGHOUSE		UNICORN ELECTRIC	
					TYPE	CAT. NO.	TYPE	CAT. NO.	TYPE	CAT. NO.	TYPE	CAT. NO.
1	473920	175	REGULATOR	120/240 (A)	M-250A POWR/DOOR	C727G002 (B)	UNIDOR 250	UU1104-120R	OV-15	811A208G04		
	474048		REACTOR NPF	240		C727G014 (B)		UU-1154R		811A208G20		
	473910		SERIES	6.6 AMPS	M-250-R2	M2AR17CCSIGMS31036					-	UCM-A66-175
2	474208	400	REGULATOR	120/240 (A)	M-400A POWR/DOOR	C723G001 (B)			OV-25	858A303G04		
	473912		SERIES	6.6 AMPS	M-250-R2	M4AR40CCSIGMN32043					-	UCM-A66-400

REPLACEMENT REFRACTORS FOR MERCURY VAPOR LUMINAIRES						
CONVENTIONAL LUMINAIRES		LAMP TYPE	LAMP WATTAGE	REPLACEMENT REFRACTOR		
MANUFACTURER	TYPE			TYPE	CATALOG NUMBER	STOCK NUMBER
GENERAL ELECTRIC	M-250A (C)	MV	175,250	GLASS	35-130583-01	579264
GENERAL ELECTRIC	M-400A (C)	MV	400	GLASS	35-231137-01	579296
				LEXAN	35-130015-02	579312
AMERICAN ELECTRIC	23 SERIES (C)	MV	175,250	GLASS	23-002	579264
AMERICAN ELECTRIC	25 SERIES (C)	MV	400	GLASS	25-003	579928 (F)
				LEXAN	25-003-6	- (F)
AMERICAN ELECTRIC	327 SERIES	MV	1000	GLASS	27-003	579936 (F)
WESTINGHOUSE	OV-15	MV	175,250	GLASS	484-D067-H01	579976 (F)
WESTINGHOUSE	OV-25 (C)	MV	400	GLASS	484-D336-H02	579040
				LEXAN	6716-D13-H01	579056 (F)

INSTALLATION:

(A) FACTORY WIRED FOR 120 VOLTS. DO NOT WIRE FOR 240 VOLTS ON NEW INSTALLATIONS.

(B) ASTRODOME UNITS ARE EQUIPPED WITH BUILT-IN PHOTOELECTRIC CELL. FOR REPLACEMENT SEE PAGE 1512/4412.

(C) A GLASS OR A LEXAN REFRACTOR MAY BE USED ON THESE LUMINAIRES.

D. LEXAN REFRACTORS TO BE USED IN HIGH VANDALISM AREAS ONLY.

(F) ITEM IS NO LONGER PURCHASED.

TABLE OF CONTENTS

SDG&E ELECTRIC STANDARDS

DATE 1-1-89
APPD PA/DE

MERCURY VAPOR CONVENTIONAL LUMINAIRES AND REPLACEMENT REFRACTORS

~~OH 1599.201~~
UG 4499.201
SUPERCEDES 4420.1 (6-1-76)

OH1521 UG4421 FIELD MAINTENANCE ONLY

ALL VERSIONS LISTED IN FMO ARE SUPERSEDED BY THEIR CURRENT VERSION FOUND INSIDE THE OVERHEAD AND UNDERGROUND CONSTRUCTION STANDARD MANUAL.

REVISION HISTORY:

10/03/2016: MOVED TO FMO

TABLE OF CONTENTS

© 1998 - 2016 San Diego Gas & Electric Company. All rights reserved. Removal of this copyright notice without permission is not permitted under law.

REV	CHANGE	DR	BY	DSN	APV	DATE	REV	CHANGE	DR	BY	DSN	APV	DATE
C							F						
B							E						
A	ORIGINAL ISSUE	-	JS	JS	MDJ	10/03/2016	D						

	Indicates Latest Revision		Completely Revised	X New Page		Information Removed

SDG&E ELECTRIC OVERHEAD AND UNDERGROUND FIELD MAINTENANCE ONLY STANDARDS

HIGH PRESSURE AND LOW PRESSURE SODIUM VAPOR
LUMINAIRE, REPLACEMENT BALLAST AND STARTER

FMO
OH1521
UG4421

SCOPE: THIS STANDARD SHOWS HIGH PRESSURE AND LOW PRESSURE SODIUM VAPOR LUMINAIRES USED TO PROVIDE ROADWAY AND DUSK TO DAWN LIGHTING, AND STARTER.

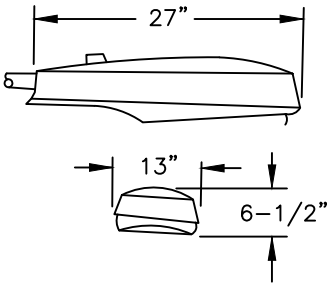

AMERICAN ELECTRIC
SERIES 115 CUTOFF
NON-POWER/PAD

FIGURE

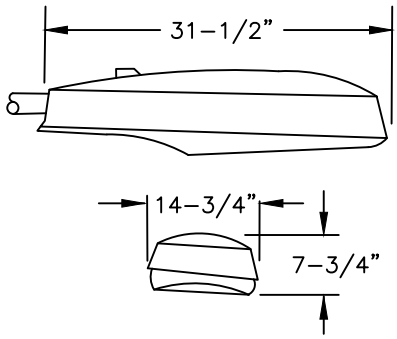

AMERICAN ELECTRIC
SERIES 125

FIGURE

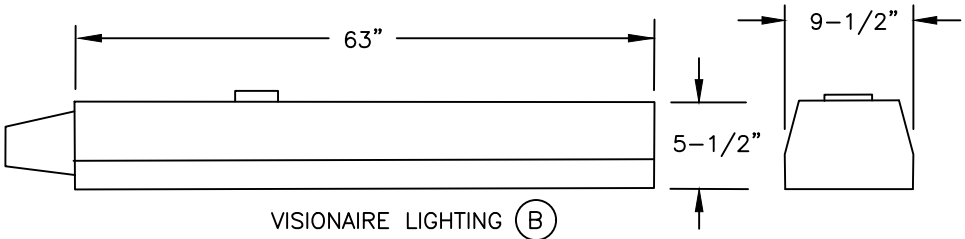

VISIONAIRE LIGHTING (B)
ROADWAY RDW-3 (135, 180W SHOWN)

FIGURE

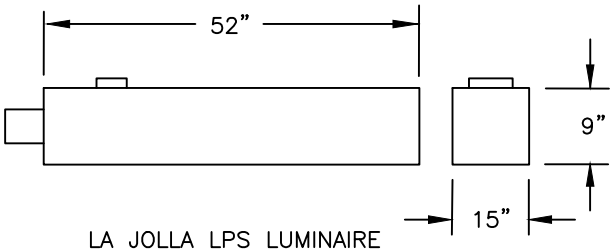

LA JOLLA LPS LUMINAIRE
(180W SHOWN)

FIGURE

© 1998 - 2006 San Diego Gas & Electric Company. All rights reserved. Removal of this copyright notice without permission is not permitted under law.

	Indicates Latest Revision	X	Completely Revised		New Page	X	Information Removed

	SDG&E ELECTRIC STANDARDS	REVISION
OH 1521.1 UG 4421.1	HIGH PRESSURE AND LOW PRESSURE SODIUM VAPOR LUMINAIRE, REPLACEMENT BALLAST AND STARTER	DATE 2-3-06 APPD PA / JJ

TABLE OF CONTENTS

(D) TABLE □□ □I□□ PRESS□RE SO□I□M □APOR □□PS□□L□MINAIRES □COMPLETE ASSEMBL□ □E□CL□□IN□ LAMP□					
FIG. NO.	MANUFACTURER TYPE	LAMP SIZE WATTS	BALLAST TYPE	BALLAST SOURCE VOLTAGE	STOCK NUMBER
1	SERIES 115	70	REACTOR–NPF	120	473400
	SERIES 115	100			473402
	SERIES 115	150			473404
2	SERIES 125	200	HIGH REACTANCE–NPF		473406
		250	HIGH REACTANCE–NPF		473408
		400	CWA		473410

TABLE □□ REPLACEMENT STARTER ONL□ FOR □I□□ PRESS□RE SO□I□M □APOR □□PS□□L□MINAIRES					
FIGURE NUMBER	MANUFACTURER	TYPE	LAMP SIZE WATTS	SOURCE VOLTAGE	STOCK NUMBER
1	AMERICAN ELECTRIC	SERIES 115	50–150	120	679142
2	AMERICAN ELECTRIC	SERIES 125	200–400	120	679144

TABLE OF CONTENTS

© 1998 - 2010 San Diego Gas & Electric Company. All rights reserved. Removal of this copyright notice without permission is not permitted under law.

Indicates Latest Revision | Completely Revised | New Page | Information Removed

REVISION
DATE 2–3–06
APPD PSA / JJ

SDG&E ELECTRIC STANDARDS

HIGH PRESSURE AND LOW PRESSURE SODIUM VAPOR LUMINAIRE, REPLACEMENT BALLAST AND STARTER

OH 1521.2
UG 4421.2

TABLE □□ LO□ PRESS□RE SO□I□M □APOR □LPS□□L□MINAIRES □COMPLETE ASSEMBL□ □E□CL□□IN□ LAMP□					
FIG. NO.	MAX. LENGTH (IN INCHES)	LAMP SIZE (WATTS)	BALLAST		STOCK NUMBER
			TYPE	SOURCE VOLTAGE	
3 & 4	34	55	H P F REACTOR	120	473800
	39	90	H P F REACTOR	120	473802
	63	135	H P F REACTOR	120	473804
	63	180	H P F REACTOR	120	473806

INSTALLATION:

A. ALL LUMINAIRES ARE TO BE WIRED FOR 120 VOLTS ONLY. APPLICATION OF 240 VOLTS TO THESE UNITS WILL CAUSE SEVERE BALLAST DAMAGE.

(B) THE VISIONAIRE LUMINAIRE WILL ACCEPT BOTH 35 WATT AND 55 WATT LAMPS.

C. CUTOFF LUMINAIRES SHALL BE INSTALLED WITH THE OPTICAL ASSEMBLY (GLASSWARE) HORIZONTAL.

(D) STOCK NUMBERS IN TABLES 1 AND 3 ARE FOR COMPLETE LUMINAIRE UNITS.

REFERENCE:

J. SEE STANDARD 1512/4412 FOR PHOTOELECTRIC CONTROL.

K. SEE PAGE 1511.1/4411.1 FOR REPLACEMENT REFRACTORS.

L. SEE STANDARD 1514/4414 FOR IDENTIFICATION DECAL.

TABLE OF CONTENTS

©1998 - 2010 San Diego Gas & Electric Company. All rights reserved. Removal of this copyright notice without permission is not permitted under law.

Indicates Latest Revision | Completely Revised | New Page | Information Removed

REVISION
DATE 2-3-06
APPD PBA / JJ

SDG&E ELECTRIC STANDARDS

HIGH PRESSURE AND LOW PRESSURE SODIUM VAPOR LUMINAIRE, REPLACEMENT BALLAST AND STARTER

OH 1521.3
UG 4421.3

PAGES	SUBJECT
4512	EQUIPMENT GROUNDING INSTALLATION
4520	GROUNDING PAD-MOUNTED EQUIPMENT

MAIN TABLE OF CONTENTS

© 1998 - 2016 San Diego Gas & Electric Company. All rights reserved. Removal of this copyright notice without permission is not permitted under law.

REV	CHANGE	BY	DSGN	APPV	DATE	REV	CHANGE	BY	DSGN	APPV	DATE
C						F					
B						E					
A	ORIGINAL ISSUE	JS	TR	MDJ	7/25/2016	D					

X Indicates Latest Revision | Completely Revised | New Page | Information Removed

SHEET 1 OF 1

SDG&E UNDERGROUND CONSTRUCTION STANDARD

GROUNDING FMO
TABLE OF CONTENTS

FMO
OH 4501

FIELD MAINTENANCE ONLY

REVISION HISTORY:

7/13/2016: All versions prior to 2016 are superseded by their current version found inside the Overhead Construction Standard Manual.

TABLE OF CONTENTS

© 1998 - 2016 San Diego Gas & Electric Company. All rights reserved. Removal of this copyright notice without permission is not permitted under law.

REV	CHANGE	BY	DSGN	APPV	DATE	REV	CHANGE	BY	DSGN	APPV	DATE
C						F					
B						E					
A	ORIGINAL ISSUE	JS	IL	MDJ	7/13/2016	D					

X Indicates Latest Revision | Completely Revised | New Page | Information Removed

SHEET 1 OF 1

SDG&E ELECTRIC UNDERGROUND STANDARD

EQUIPMENT GROUNDING INSTALLATION

FMO UG 4512

SCOPE: THIS STANDARD SHOWS EQUIPMENT GROUNDING INSTALLATION USED WHEN (PREFERRED I) AND (ALTERNATE) TRENCH GROUND WIRE IS INSTALLED, STANDARD 4510 SUBSTITUTE GROUND RODS SHOWN ON STANDARD PAGE 4512 1 FOR TRENCH GROUND WIRE IF (PREFERRED I) OR (ALTERNATE) INSTALLATIONS DO NOT APPLY

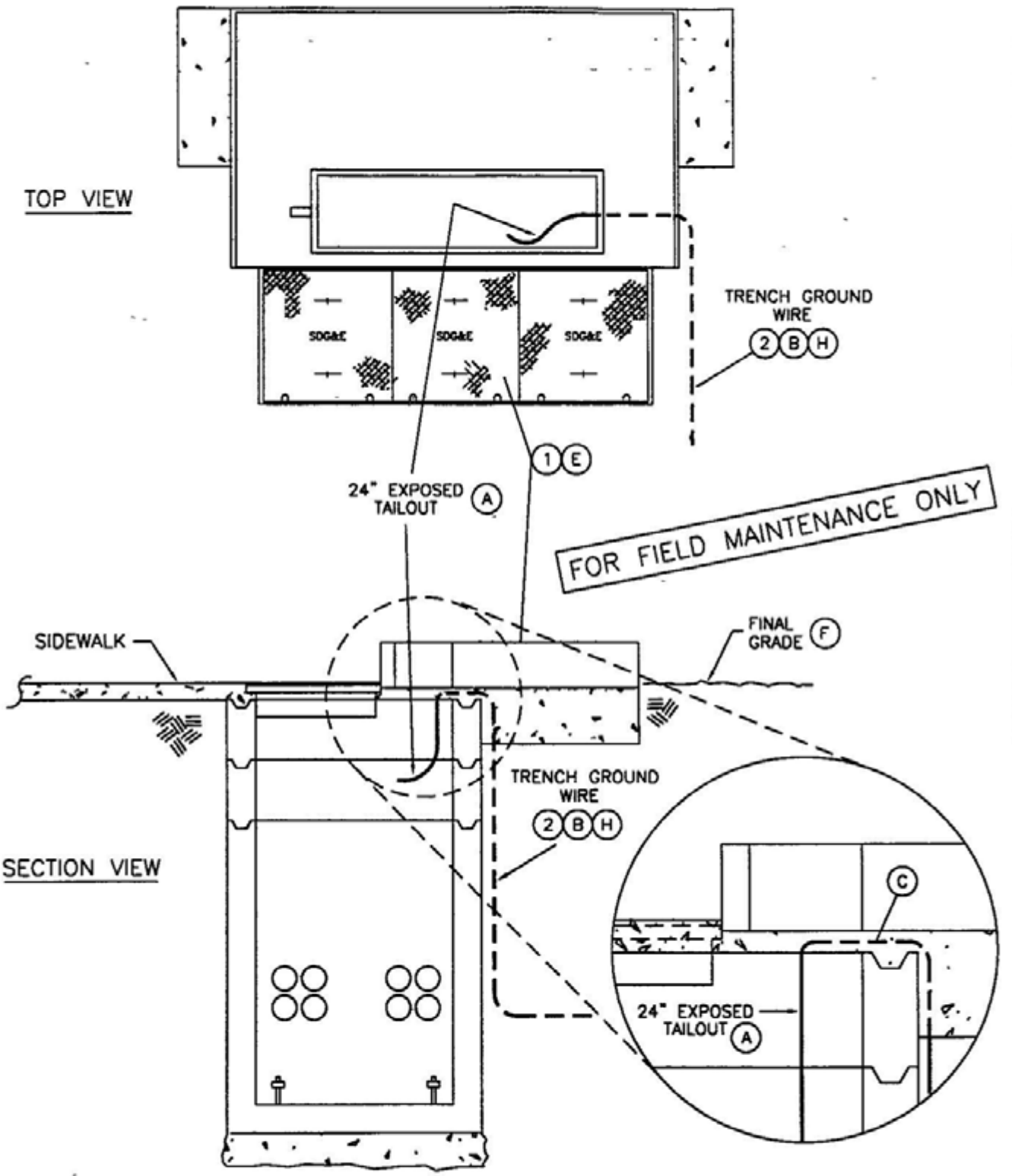

TABLE OF CONTENTS

DATE 1-1-96 APPD	SDG&E ELECTRIC STANDARDS EQUIPMENT GROUNDING INSTALLATION	4599.101 SUPERSEDES 4512 6 (1-1-96)

BILL OF MATERIAL:

ITEM	DESCRIPTION	QUANTITY	STOCK NUMBER	ASSEMBLY UNITS
1	PAD & COVER SECTION	1 EA	REFER TO WORK ORDER	-
2	WIRE, BARE COPPER, #2, 7 STR SOFT DRAWN	AS REQ'D	812816 (G)	GDWIRE

INSTALLATION:

(A) LEAVE A 24" TAILOUT INSIDE THE HANDHOLE

(B) (PREFERRED I) OR (ALTERNATE) TRENCH GROUND WIRE IS REQUIRED WHEN PREFERRED II EQUIPMENT GROUNDING INSTALLATION IS NOT INSTALLED

(C) INSERT GROUND WIRE TAIL(S) BETWEEN PAD AND TOP SECTION OF HANDHOLE THROUGH THE GROUT OR PLASTIC MASTIC SEALANT

REFERENCE:

(E) SEE STANDARD 3440 & 3441 FOR PAD-MOUNTED SWITCH PAD INSTALLATION

(F) SEE STANDARD 3484 1 FOR PAD INSTALLATION USED FOR MOUNTING PAD-MOUNTED EQUIPMENT.

(G) SEE STANDARD 4002.2 FOR WIRE INFORMATION.

(H) SEE STANDARD 4510 FOR (PREFERRED I) AND (ALTERNATE) TRENCH GROUND WIRE INSTALLATION

I SEE STANDARD PAGE 4512 1 FOR (PREFERRED II) EQUIPMENT GROUNDING INSTALLATION

J. SEE STANDARD 4514 FOR GROUNDING TELCO CONDUCTOR IN PAD-MOUNTED EQUIPMENT

K. SEE STANDARD 4520 FOR GROUNDING PAD-MOUNTED EQUIPMENT

FOR FIELD MAINTENANCE ONLY

TABLE OF CONTENTS

4599.102 SUPERSEDES 4512.7 (1-1-96)	SDG&E ELECTRIC STANDARDS EQUIPMENT GROUNDING INSTALLATION	DATE 1-1-96 APPD

FIELD MAINTENANCE ONLY

REVISION HISTORY:

7/13/2016: All versions prior to 2016 are superseded by their current version found inside the Overhead Construction Standard Manual.

TABLE OF CONTENTS

© 1998 - 2016 San Diego Gas & Electric Company. All rights reserved. Removal of this copyright notice without permission is not permitted under law.

REV	CHANGE	BY	DSGN	APPV	DATE	REV	CHANGE	BY	DSGN	APPV	DATE
C						F					
B						E					
A	ORIGINAL ISSUE	JS	IL	MDJ	7/13/2016	D					

X Indicates Latest Revision | Completely Revised | New Page | Information Removed

SHEET 1 OF 1

SDG&E ELECTRIC UNDERGROUND STANDARD

GROUNDING PAD-MOUNTED EQUIPMENT

FMO UG 4520

TABLE OF CONTENTS

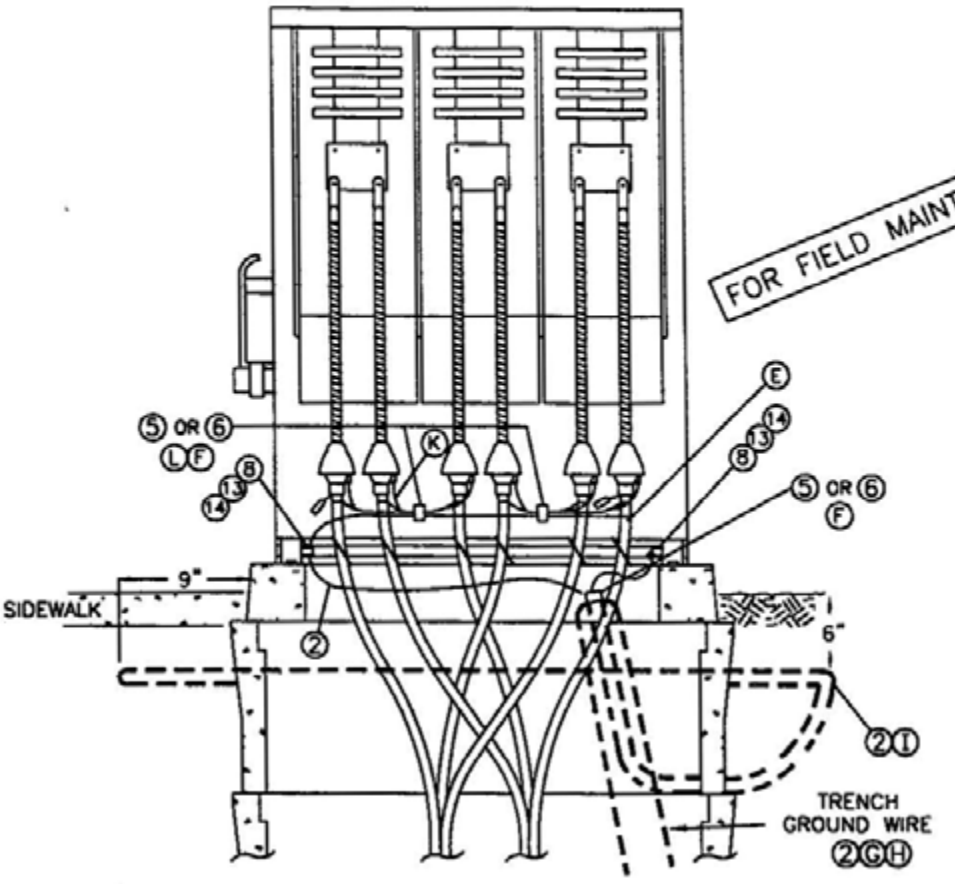

3520/3521 THREE-PHASE TERMINATING ENCLOSURE

GROUNDING DETAILS

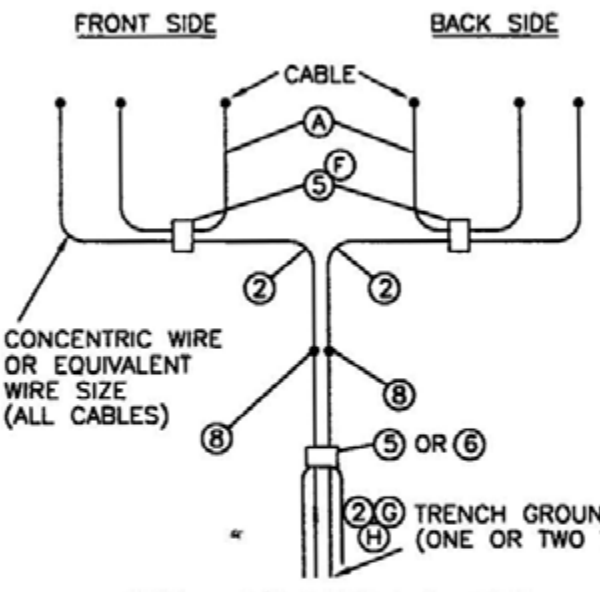

3521 - 2/0 CABLE & SMALLER

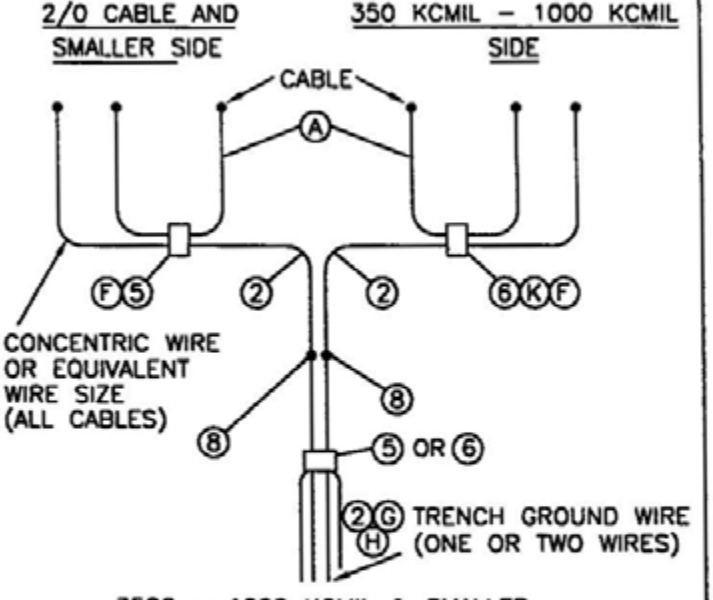

3520 - 1000 KCMIL & SMALLER

4599.201 SUPERCEDES 4520.3 1-1-94	SDG&E ELECTRIC STANDARDS GROUNDING PAD-MOUNTED EQUIPMENT	DATE 1-1-94 APPD JJG/RDJ

BILL OF MATERIAL:

ITEM	DESCRIPTION	QUANTITY	STOCK NUMBER	ASSEMBLY UNITS
1	#14 SOLID CU OR A SURPLUS STRAND OF CONCENTRIC NEUTRAL	AS REQ'D	–	–
2	WIRE, BARE COPPER, #2, 7 STR. SOFT DRAWN	AS REQ'D	812816 (M)	GDWIRE
3	WIRE, BARE COPPER 1/0 STR. SOFT DRAWN	AS REQ'D	812752 (M)	–
4	WIRE, BARE COPPER 4/0 STR SOFT DRAWN	AS REQ'D	812764 (M)	4/0–SD
5	CONNECTOR, COMPRESSION 1/0 – 1/0	AS REQ'D	257760	–
6	CONNECTOR, COMPRESSION 4/0 – 1/0	AS REQ'D	257856	–
7	CONNECTOR, COMPRESSION 4/0 – 4/0	AS REQ'D	257824	–
8	SERVICE POST CONNECTOR	AS REQ'D	262560	–
9	GROUND CONNECTOR PROVIDED WITH EQUIPMENT	–	–	–
10	GROUND ROD CLAMP	2	230016	–
11	UNISTRUT, CHANNEL FITTING, 1 7/8" X 2"	AS REQ'D	348960	–
12	ANCHOR, CONCRETE STAINLESS STEEL, 1/2" X 3 3/4"	AS REQ'D	107654	–
13	NUT, HEXAGON BRONZE, 1/2"	2	506112	–
14	WASHER, STANDARD FLAT ROUND, BRONZE 1/2"	2	799488	–

INSTALLATION:

(A) CONCENTRIC NEUTRAL TAILS OR EQUIVALENT WIRE SIZE PER PHASE (SEE STANDARD 4172 FOR EQUIVALENT WIRE SIZE).

REFERENCE:

(E) SEE STANDARD 4108 FOR SEALING JACKETED CABLE.

(F) SEE STANDARD 4172 FOR CONCENTRIC NEUTRAL/COMPRESSION CONNECTOR APPLICATION CHART AND COPPER COMPRESSION CONNECTORS.

(G) SEE STANDARD 4510 FOR (PREFERRED I) AND (ALTERNATE) TRENCH GROUND WIRE INSTALLATION.

(H) SEE STANDARD PAGE 4512.1 FOR (PREFERRED II) PAD GROUNDING INSTALLATION.

(I) SEE STANDARD 4512 FOR PAD GROUNDING INSTALLATION.

J. SEE STANDARD 4514 FOR GROUNDING TELCO CONDUCTOR IN PAD–MOUNTED EQUIPMENT.

(K) SEE STANDARD 4525 FOR CONCENTRIC NEUTRAL TERMINATIONS AND GROUNDING PREMOLDED CONNECTORS.

(L) SEE STANDARD 4530 FOR NEUTRAL AND GROUND WIRE SCHEMATIC DIAGRAM.

(M) SEE STANDARD 4002.2 FOR WIRE INFORMATION.

FOR FIELD MAINTENANCE ONLY

TABLE OF CONTENTS

TABLE OF CONTENTS

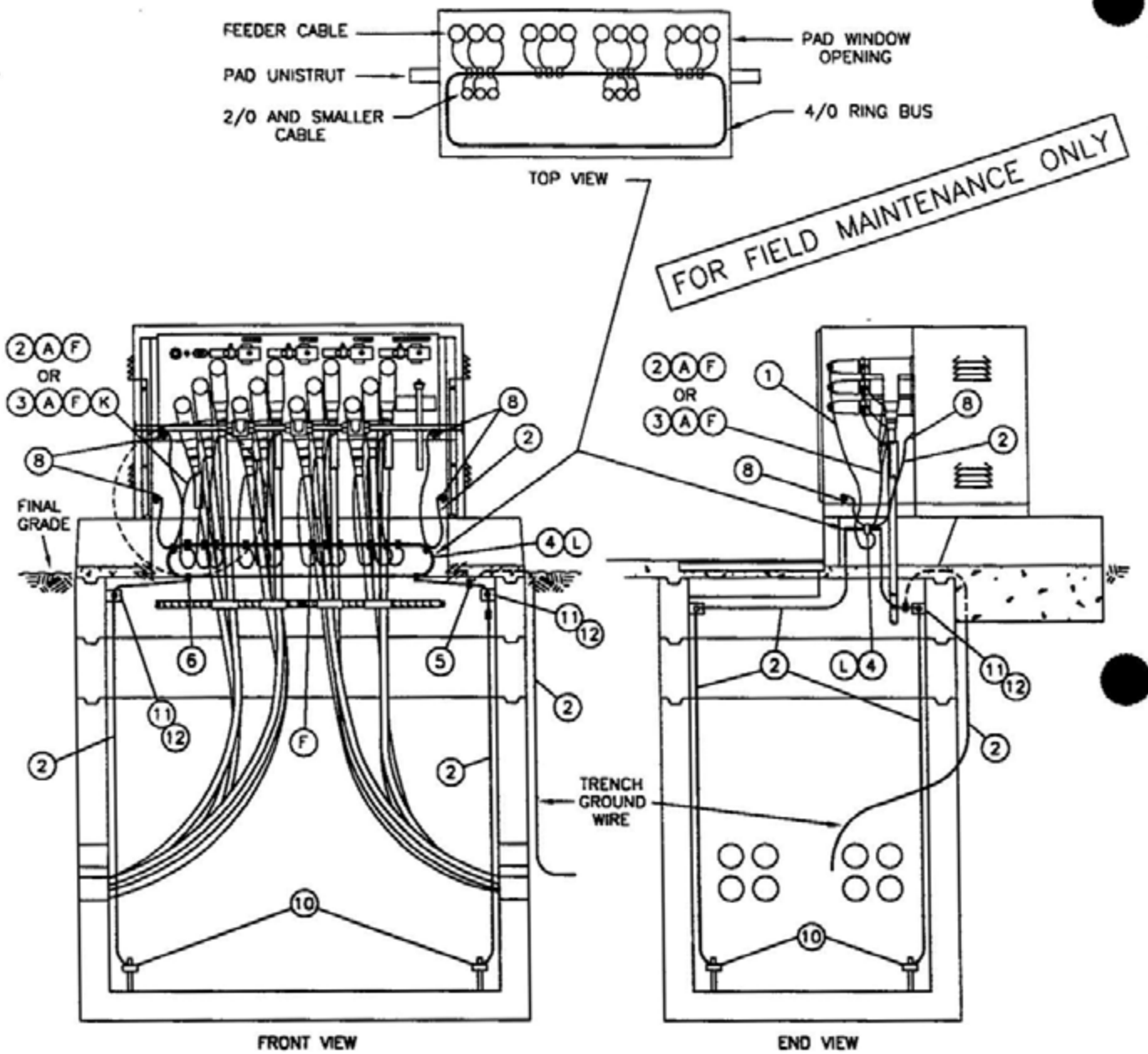

3550/3551 THREE-PHASE PAD MOUNTED SWITCH

(NEW TAGS)

4599.205 SUPERSEDES 4520 4 (1-1-96)	SDG&E ELECTRIC STANDARDS GROUNDING PAD-MOUNTED EQUIPMENT	DATE 1-1-96 APPD JLG/RDS

BILL OF MATERIAL:

ITEM	DESCRIPTION	QUANTITY	STOCK NUMBER	ASSEMBLY UNITS
1	#14 SOLID CU OR A SURPLUS STRAND OF CONCENTRIC NEUTRAL	AS REQ'D	–	–
2	WIRE, BARE COPPER, #2, 7 STR. SOFT DRAWN	AS REQ'D	812816 (M)	GDWIRE
3	WIRE, BARE COPPER 1/0 STR. SOFT DRAWN	AS REQ'D	812752 (M)	–
4	WIRE, BARE COPPER 4/0 STR. SOFT DRAWN	AS REQ'D	812764 (M)	4/0-SD
5	CONNECTOR, COMPRESSION 1/0 – 1/0	AS REQ'D	257760	–
6	CONNECTOR, COMPRESSION 4/0 – 1/0	AS REQ'D	257856	–
7	CONNECTOR, COMPRESSION 4/0 – 4/0	AS REQ'D	257824	–
8	SERVICE POST CONNECTOR	AS REQ'D	262560	–
9	GROUND CONNECTOR PROVIDED WITH EQUIPMENT	–	–	–
10	GROUND ROD CLAMP	2	230016	–
11	UNISTRUT, CHANNEL FITTING, 1 7/8" X 2"	AS REQ'D	348960	–
12	ANCHOR, CONCRETE STAINLESS STEEL, 1/2" X 3 3/4"	AS REQ'D	107654	–
13	NUT, HEXAGON BRONZE, 1/2"	2	506112	–
14	WASHER, STANDARD FLAT ROUND, BRONZE 1/2"	2	799488	–

INSTALLATION:

(A) CONCENTRIC NEUTRAL TAILS OR EQUIVALENT WIRE SIZE PER PHASE (SEE STANDARD 4172 FOR EQUIVALENT WIRE SIZE).

FOR FIELD MAINTENANCE ONLY

REFERENCE:

(E) SEE STANDARD 4108 FOR SEALING JACKETED CABLE

(F) SEE STANDARD 4172 FOR CONCENTRIC NEUTRAL/COMPRESSION CONNECTOR APPLICATION CHART AND COPPER COMPRESSION CONNECTORS

(G) SEE STANDARD 4510 FOR (PREFERRED I) AND (ALTERNATE) TRENCH GROUND WIRE INSTALLATION.

H. SEE STANDARD PAGE 4512.1 FOR (PREFERRED II) EQUIPMENT GROUNDING INSTALLATION.

(I) SEE STANDARD 4512.2 FOR EQUIPMENT GROUNDING INSTALLATION.

J. SEE STANDARD 4514 FOR GROUNDING TELCO CONDUCTOR IN PAD-MOUNTED EQUIPMENT.

(K) SEE STANDARD 4525 FOR CONCENTRIC NEUTRAL TERMINATIONS AND GROUNDING PREMOLDED CONNECTORS.

(L) SEE STANDARD 4530 FOR NEUTRAL AND GROUND WIRE SCHEMATIC DIAGRAM.

(M) SEE STANDARD 4002.2 FOR WIRE INFORMATION.

TABLE OF CONTENTS

4600 - TELECOM, SCADA

4600 - TELECOM, SCADA

PAGE	SUBJECT
4620.1	TELECOMMUNICATIONS SPLICING PEDESTAL
4620.2	TELECOMMUNICATIONS SPLICING PEDESTAL INSTALLATION
4620.5	TELECOMMUNICATIONS PULLING GRIPS
4641.3	SCADA INSTALLATION FOR PAD MOUNTED SWITCHES
4650	DRY VAULT SCADA INSTALLATION
4653	UNMETERED ELECTRIC SERVICE FOR WIRELESS COMMUNICATIONS PROVIDE
4655	WIRING DIAGRAM FOR SCADA INSTALLATION IN A DRY VAULT

MAIN TABLE OF CONTENTS

THIS SECTION HAS BEEN REMOVED FROM THE EXTERNAL VERSION. DUE TO CONFIDENTIAL INFORMATION.

© 1998 - 2023 San Diego Gas & Electric Company. All rights reserved. Removal of this copyright notice without permission is not permitted under law.

REV	CHANGE	DR	BY	DSN	APV	DATE	REV	CHANGE	DR	BY	DSN	APV	DATE
C	ADDED 4620.1, .2, & .5	-	JS	JS	MDJ	09/13/2017	F	-	-	-	-	-	-
B	ADDED 4645	-	SL	JS	MDJ	01/25/2017	E	-	-	-	-	-	-
A	ORIGINAL ISSUE	-	JS	TR	MDJ	07/25/2016	D	ADDED 4641.3	ARC	ADW	GLW	KRG	02/16/2023

4700 - PRIMARY METER/ REGULATOR/ BOOSTER STATION

4700 - PRIMARY METER/ REGULATOR/ BOOSTER STATION

PAGE	SUBJECT
4702	200 & 600 AMP DEAD FRONT PRIMARY METERING STATION SDG&E OWNED ALUMINUM POWDER COATED GREEN

MAIN TABLE OF CONTENTS

© 1998 - 2023 San Diego Gas & Electric Company. All rights reserved. Removal of this copyright notice without permission is not permitted under law.

REV	CHANGE	DR	BY	DSN	APV	DATE	REV	CHANGE	DR	BY	DSN	APV	DATE
C							F						
B	UG4702 MOVED TO FMO	GLC	RSL	JAS	KRG	03/10/2023	E						
A	ORIGINAL ISSUE	GLC	JIK	JES	CZH	05/23/2019	D						

X Indicates Latest Revision | Completely Revised | New Page | Information Removed

SDG&E ELECTRIC UNDERGROUND FIELD MAINTENANCE ONLY STANDARDS

SHEET 1 OF 1

PRIMARY METER/REGULATOR/BOOSTER STATION
TABLE OF CONTENTS

FMO
UG4701.1

UG4702 FIELD MAINTENANCE ONLY

ALL VERSIONS LISTED IN FMO ARE SUPERSEDED BY THEIR CURRENT VERSION FOUND INSIDE THE UNDERGROUND CONSTRUCTION STANDARDS MANUAL.

REVISION HISTORY:

03/10/2023: MOVED TO FMO

TABLE OF CONTENTS

© 1998 - 2023 San Diego Gas & Electric Company. All rights reserved. Removal of this copyright notice without permission is not permitted under law.

REV	CHANGE	DR	BY	DSN	APV	DATE	REV	CHANGE	DR	BY	DSN	APV	DATE
C							F						
B	MOVED TO FMO	GLC	RSL	JAS	KRG	03/10/2023	E						
A	ORIGINAL ISSUE	-	-	TR	MF	06/06/2006	D						

X	Indicates Latest Revision		Completely Revised	X New Page		Information Removed

SHEET 1 OF 1

SDG&E ELECTRIC UNDERGROUND FIELD MAINTENANCE ONLY STANDARDS

200 & 600 AMP DEAD FRONT PRIMARY METERING STATION
SDG&E OWNED ALUMINUM POWDER COATED GREEN

FMO UG4702

SCOPE: THIS STANDARD SHOWS THE INSTALLATION AND MATERIAL REQUIREMENTS FOR AN SDG&E OWNED PAD-MOUNT PRIMARY METERING CABINET. THIS CABINET CAN BE USED FOR EITHER 4KV OR 12KV AND IS SPECIAL ORDERED FOR EACH JOB. LEAD TIME IS 16 WEEKS.

FRONT VIEW
DOORS REMOVED

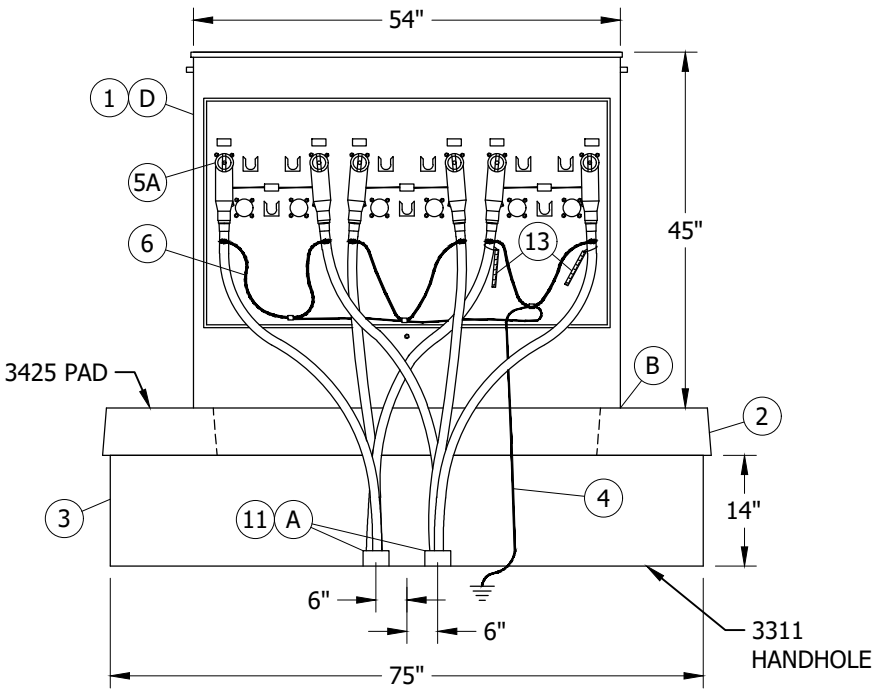

UG MAP SYMBOL
PRIMARY METER CABINET

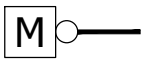

FIELD MAINTENANCE ONLY

SIDE VIEW

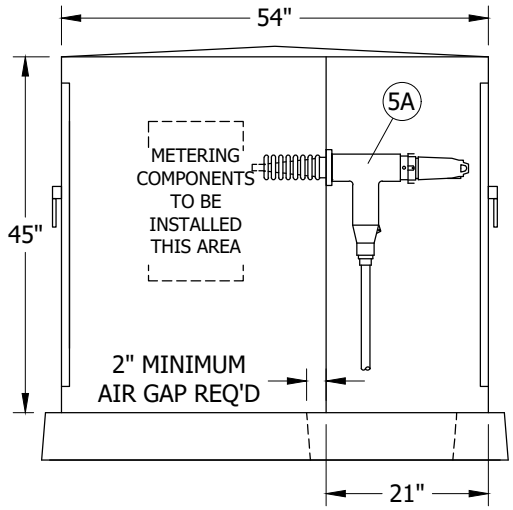

HOLD-DOWN ASSEMBLY DETAIL
TYPICAL BOTH SIDES OF EQUIPMENT PAD
(HILTI DRIVE-IN CAN ALSO BE USED)

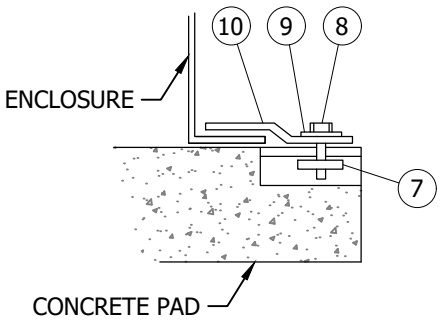

TABLE OF CONTENTS

© 1998 - 2023 San Diego Gas & Electric Company. All rights reserved. Removal of this copyright notice without permission is not permitted under law.

REV	CHANGE	DR	BY	DSN	APV	DATE	REV	CHANGE	DR	BY	DSN	APV	DATE
C							F						
B	MOVED TO FMO	GLC	RSL	JAS	KRG	03/10/2023	E						
A	ORIGINAL ISSUE	-	-	TR	MF	06/06/2006	D						

X Indicates Latest Revision | Completely Revised | New Page | Information Removed

SDG&E ELECTRIC UNDERGROUND FIELD MAINTENANCE ONLY STANDARDS

600 AMP DEAD FRONT PRIMARY METERING STATION
SDG&E OWNED ALUMINUM POWDER COATED GREEN

FMO
UG4702.1

SCOPE: THIS STANDARD SHOWS THE INSTALLATION AND MATERIAL REQUIREMENTS FOR AN SDG&E OWNED PAD-MOUNT PRIMARY METERING CABINET. THIS CABINET CAN BE USED FOR EITHER 4KV OR 12KV AND IS SPECIAL ORDERED FOR EACH JOB. LEAD TIME IS 16 WEEKS.

FRONT VIEW
DOORS REMOVED

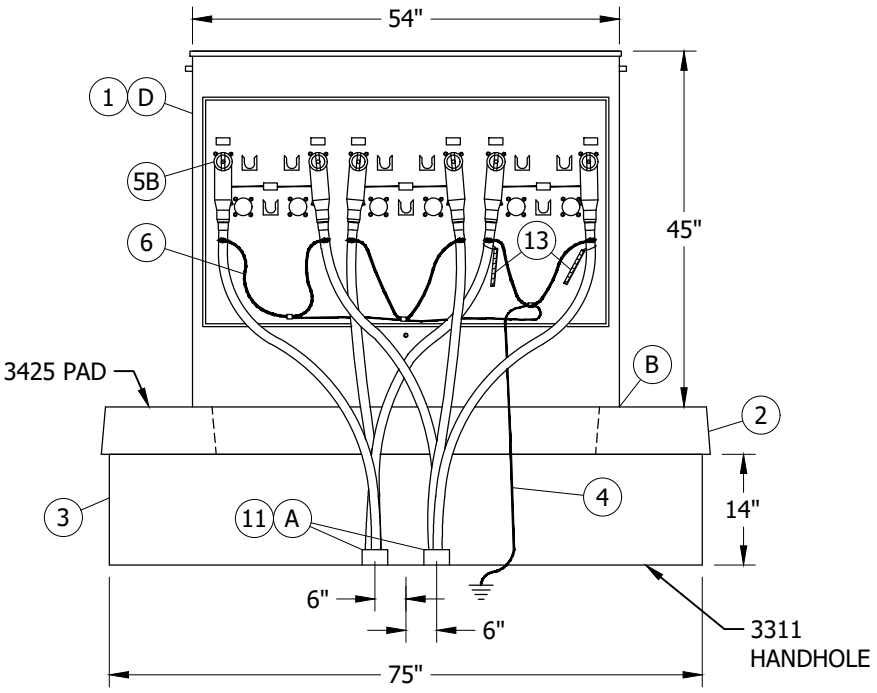

UG MAP SYMBOL
PRIMARY METER CABINET

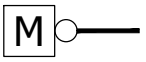

FIELD MAINTENANCE ONLY

SIDE VIEW

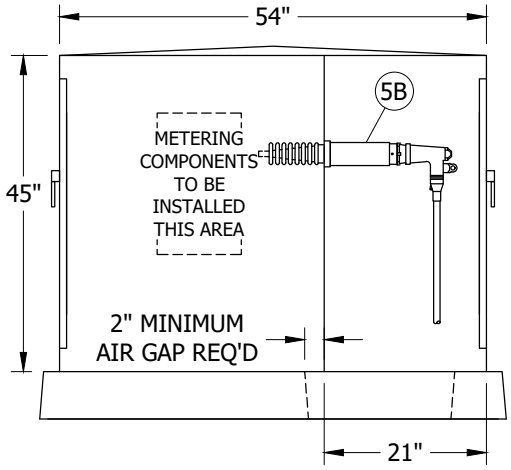

HOLD-DOWN ASSEMBLY DETAIL
TYPICAL BOTH SIDES OF EQUIPMENT PAD
(HILTI DRIVE-IN CAN ALSO BE USED)

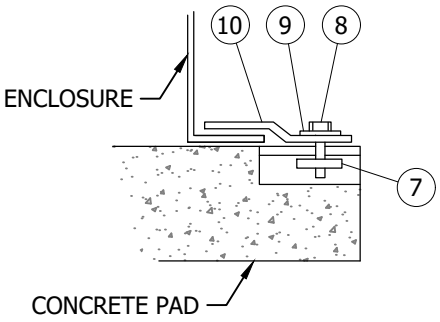

TABLE OF CONTENTS

© 1998 - 2023 San Diego Gas & Electric Company. All rights reserved. Removal of this copyright notice without permission is not permitted under law.

REV	CHANGE	DR	BY	DSN	APV	DATE	REV	CHANGE	DR	BY	DSN	APV	DATE
C							F						
B	MOVED TO FMO	GLC	RSL	JAS	KRG	03/10/2023	E						
A	ORIGINAL ISSUE	-	-	TR	MF	06/06/2006	D						

X Indicates Latest Revision | Completely Revised | New Page | Information Removed

SDG&E ELECTRIC UNDERGROUND FIELD MAINTENANCE ONLY STANDARDS

200 AMP DEAD FRONT PRIMARY METERING STATION
SDG&E OWNED ALUMINUM POWDER COATED GREEN

FMO
UG4702.2

BILL OF MATERIALS:

ITEM	DESCRIPTION	QUANTITY	CONSTR. STD. OR PAGE NO.	STOCK NUMBER	ASSEMBLY/MACRO UNITS
1	PRIMARY METER CABINET	1	--	482100	4KCAB, 12KCAB
2	PAD, 3425	1	--	--	3425.3
3	3311 HANDHOLE, 75" X 23" X 14"	1	3311	162660	3311-S
4	TRENCH GROUND WIRE (S)	AS REQ'D	4510	--	CC-970, CC-P80, CC-P90
5A	600A CONNECTORS	AS REQ'D	4181.20	--	CC--E3, CC--E5
5B	200A CONNECTORS	AS REQ'D	4181.20	--	--
6	GROUNDING PAD-MOUNTED EQUIPMENT	--	4520.6, 4530.1 - .2	--	--
7	NUT, CLAMPING CHANNEL, W/SPRING, 1/2"	2	--	505520	--
8	SCREW, HEX HEAD CAP, BRONZE 1/2" X 1-1/2"	2	--	616192	--
9	WASHER, STANDARD FLAT ROUND, BRONZE 1/2"	2	--	799488	--
10	HOLD DOWN (SUPPLIED WITH CABINET)	2	--	--	--
11	SEALING COMPOUND (A)	AS REQ'D	--	442976	--
12	KEYLESS LOCK (NOT SHOWN) (D)	1	--	468010	--
13	CABLE IDENTIFICATION TAGS	AS REQ'D	3202	--	--

INSTALLATION:

A. SEAL CONDUITS WITH SEALING COMPOUND.

(B) BASE OF CABINET SHALL BE CAULKED ONLY TO PREVENT POSSIBLE WIRE ENTRY.

(D) KEYLESS LOCK TO BE ATTACHED TO LATCHING MECHANISM ON CABINET AND PENTAHEAD BOLT TO BE THREADED IN COMPLETELY.

REFERENCE:

J. SEE STANDARD 3211 FOR STRUCTURE/EQUIPMENT IDENTIFICATION TAG.

K. SEE STANDARD 3408 FOR WIRE ENTRY PREVENTION AND MOISTURE ENTRY.

L. SEE STANDARD 3425 FOR PAD AND HANDHOLE INSTALLATION.

M. SEE STANDARD 3481 FOR BARRIERS IF THE PAD IS SUBJECT TO VEHICULAR TRAFFIC.

N. SEE STANDARD 3483 FOR MINIMUM OPERATING CLEARANCE REQUIREMENTS (PAD PLACEMENT).

O. SEE STANDARD 3484 FOR PAD INSTALLATION OF PAD-MOUNTED EQUIPMENT.

P. SEE STANDARD 3486 FOR RETAINING WALL REQUIREMENTS AND CLEARANCES FROM REVERSE SUBGRADE RETAINING WALLS.

Q. SEE STANDARD 3487 FOR RETAINING WALLS.

R. SEE STANDARD 4510 FOR (PREFERRED I) AND (ALTERNATE TRENCH GROUND WIRE).

(S) SEE STANDARD PAGE 4512 FOR EQUIPMENT GROUNDING INSTALLATION.

T. SEE STANDARD 4520 FOR GROUNDING PAD-MOUNTED EQUIPMENT.

U. SEE STANDARD 4525 FOR GROUNDING CONCENTRIC NEUTRAL TERMINATIONS AND GROUNDING PREMOLDED CONNECTORS.

FIELD MAINTENANCE ONLY

TABLE OF CONTENTS

© 1998 - 2023 San Diego Gas & Electric Company. All rights reserved. Removal of this copyright notice without permission is not permitted under law.

REV	CHANGE	DR	BY	DSN	APV	DATE	REV	CHANGE	DR	BY	DSN	APV	DATE
C							F						
B	MOVED TO FMO	GLC	RSL	JAS	KRG	03/10/2023	E						
A	ORIGINAL ISSUE	-	-	TR	MF	06/06/2006	D						

X Indicates Latest Revision | Completely Revised | New Page | Information Removed

SDG&E ELECTRIC UNDERGROUND FIELD MAINTENANCE ONLY STANDARDS

200 & 600 AMP DEAD FRONT PRIMARY METERING STATION
SDG&E OWNED ALUMINUM POWDER COATED GREEN

FMO
UG4702.3

4800 -
VAULT STANDARDS

4800 - VAULT STANDARDS

PAGE	SUBJECT

MAIN TABLE OF CONTENTS

No FMO content available at this time.

© 1998 - 2019 San Diego Gas & Electric Company. All rights reserved. Removal of this copyright notice without permission is not permitted under law.

REV	CHANGE	BY	DSGN	APPV	DATE	REV	CHANGE	BY	DSGN	APPV	DATE
C						F					
B						E					
A	ORIGINAL ISSUE	JIK	JES	CZH	5/23/2019	D					

Indicates Latest Revision | Completely Revised X | New Page | Information Removed

SHEET 1 OF 1

SDG&E ELECTRIC UNDERGROUND FIELD MAINTENANCE ONLY STANDARDS

VAULT STANDARDS
TABLE OF CONTENTS

FMO
UG4800

5000 - TRENCHLESS CONSTRUCTION

5000 - TRENCHLESS CONSTRUCTION

PAGE	SUBJECT

MAIN TABLE OF CONTENTS

No FMO content available at this time.

© 1998 - 2020 San Diego Gas & Electric Company. All rights reserved. Removal of this copyright notice without permission is not permitted under law.

REV	CHANGE	BY	DSGN	APPV	DATE	REV	CHANGE	BY	DSGN	APPV	DATE
C						F					
B						E					
A						D					

Indicates Latest Revision | Completely Revised | X | New Page | Information Removed

LEGACY UNDERGROUND FIELD MAINTENANCE ONLY

PAGES	SUBJECT
3100-3300	IDENTIFICATION, SUBSTRUCTURES, CONDUITS
3400-3500	PADS, RETAINING WALLS, CLEARANCES, PAD-MOUNTED SECTIONALIZING EQUIPMENT
3600	SUBSURFACE SECTIONALIZING EQUIPMENT
3700-4000	TRANSFORMERS, CAPACITORS, CABLES
4100	TERMINATIONS, SPLICING CONNECTIONS
4200-4500	CABLE POLES, FUSES, FAULT INDICATORS, LIGHTING, GROUNDING

FMO MAIN TABLE OF CONTENTS

© 1998 - 2019 San Diego Gas & Electric Company. All rights reserved. Removal of this copyright notice without permission is not permitted under law.

REV	CHANGE	BY	DSGN	APPV	DATE	REV	CHANGE	BY	DSGN	APPV	DATE
C						F					
B						E					
A	ORIGINAL ISSUE	JIK	JES	CZH	10/20/2019	D					

Indicates Latest Revision | Completely Revised X | New Page | Information Removed

SHEET 1 OF 1

SDG&E ELECTRIC UNDERGROUND FIELD MAINTENANCE ONLY STANDARDS

LEGACY UNDERGROUND FIELD MAINTENANCE
MAIN TABLE OF CONTENTS

UG LEGACY
UGL3000.1

PAGE	SUBJECT
3199.001-.002	DISTRIBUTION STATION NUMBERING
3299.001	CABLE IDENTIFICATION - CALIFORNIA GRID COORDINATE (CAL-GRID)
3299.002	CABLE IDENTIFICATION
3299.101	TRANSFORMER AND FUSE IDENTIFICATION
3299.201	LINE FAULT INDICATOR TAGS, LOCATION IDENTIFICATION
3299.301	DEADBREAK ELBOW IDENTIFICATION - TAGS
3399.001	COUNTERBALANCED FIRE DAMPER ASSEMBLY
3399.002	SUBSTRUCTURE APPLICATIONS/USE & LIMITATIONS REFERENCE SHEET
3399.101	HANDHOLE - 30" X 48" X 42"
3399.102	HANDHOLE AND SUBSURFACE EQUIPMENT ENCLOSURE - 4'-0" X 6'-6"
3399.103	HANDHOLE AND SUBSURFACE EQUIPMENT ENCLOSURE - 4'-0" X 6'-6" (TOP SECTION)
3399.104	HANDHOLE TRAFFIC COVER & BASE ENCLOSURE, 3' X 6'
3399.105-.106	3314 HANDHOLE REPAIR - "OLD STYLE" PARKWAY COVER
3399.107	HANDHOLE BASE ENCLOSURE AND BOTTOM SECTION (INSIDE DIMENSIONS 4' X 6'-6")
3399.108	HANDHOLE TWO-PIECE BASE ENCLOSURE (INSIDE DIMENSIONS 5' X 8'-6")
3399.109-.110	3313 & 3314 STEEL PARKWAY COVERS
3399.111	HANDHOLE EQUIPMENT ENCLOSURE (INSIDE DIMENSIONS - 4' X 6'-6")
3399.112	MANHOLE EQUIPMENT ENCLOSURE (INSIDE DIMENSIONS - 10'-6" X 5')
3399.113	MANHOLE EQUIPMENT ENCLOSURE (INSIDE DIMENSIONS - 10'-6" X 5')
3399.201-.202	MANHOLE - 6' X 10' X 7'
3399.203-.204	MANHOLE - 8' X 14' X 9'-4"
3399.205-.206	MANHOLE - 6' X 10' X 7'
3399.207	MANHOLE - 6' X 10' X 9'-4"
3399.208-.210	MANHOLE - 8' X 14' X 9'-4" OR 8' X 20' X 9'-4"
3399.301	35 INCH MANHOLE FRAME AND COVER - TRAFFIC BEARING
3399.302	42 INCH MANHOLE FRAME AND COVER - TRAFFIC BEARING
3399.303-.304	42 INCH MANHOLE FRAME AND COVER - NON-TRAFFIC BEARING
3399.305	48" X 48" MANHOLE NECK AND COVER - TRAFFIC BEARING
3399.306	27 INCH MANHOLE NECK AND COVER - TRAFFIC BEARING FOR 36 INCH OPENING
3399.307	MANHOLE COVERS, 36 INCH ROUND OPENING
3399.401	SUBSURFACE TRANSFORMER ENCLOSURE
3399.402-.404	SUBSURFACE EQUIPMENT ENCLOSURE
3399.501	MANHOLE BAYS - CONSTRUCTION
3399.502	MANHOLE ANGLE RECESSES - CONSTRUCTION
3399.503	ACCESS DOOR FOR TRANSFORMER VAULTS
3399.601	CABLE RACKS
3399.701	CONDUIT SIZING FOR UNDERGROUND CABLES
3399.702	6" CONDUIT/CONDUIT FITTINGS AND CONDUIT SPACERS
3399.703-.714	CONDUIT INSTALLATIONS IN SLAB & CELL BRIDGES

MAIN TABLE OF CONTENTS

© 1998 - 2019 San Diego Gas & Electric Company. All rights reserved. Removal of this copyright notice without permission is not permitted under law.

REV	CHANGE	BY	DSGN	APPV	DATE	REV	CHANGE	BY	DSGN	APPV	DATE
C						F					
B	COMPLETELY REVISED	JK	JS	CZH	10/16/2019	E					
A	ORIGINAL ISSUE	JK	JS	CZH	6/13/2019	D					

Indicates Latest Revision | X Completely Revised | New Page | Information Removed

SDG&E ELECTRIC UNDERGROUND FIELD MAINTENANCE ONLY STANDARDS

LEGACY UNDERGROUND FIELD MAINTENANCE
TABLE OF CONTENTS
IDENTIFICATION, SUBSTRUCTURES, CONDUITS

I. STATION NUMBERS GIVE A UNIQUE NUMBER TO, AND BRIEFLY DESCRIBE, DISTRIBUTION STATIONS. ALL STATION NUMBERS ARE ASSIGNED BY THE TRANSFORMER CLERK (EXT 1217 OR MICROWAVE 02167).

II. THE STATION NUMBER IS BROKEN UP INTO THREE PARTS: CIRCUIT; NUMBER; AND SUFFIX. [40 – 118 – MRO (CIRCUIT NUMBER SUFFIX)]

CIRCUIT – THE CIRCUIT DESIGNATION DESCRIBES THE VOLTAGE THAT FEEDS THE STATION. IF IT IS ONLY NUMERIC CHARACTERS, THEN THE CIRCUIT ORIGINATING AT THE SUBSTATION IS 12KV. IF IT HAS ALPHABETIC CHARACTERS IN IT, THEN THE CIRCUIT VOLTAGE IS 4 OR 2.4KV. (SEE NOTE F).

EXAMPLES:

40 – CIRCUIT 40 IS 12KV

NO1 – NORTH OTAY ONE IS 4KV

NUMBER – CONTAINS ONLY NUMERIC CHARACTERS. THIS PART IS ARBITRARY.

EXAMPLES:

118 – NUMBER SELECTED BY TRANSFORMER CLERK

908 – NUMBER SELECTED BY TRANSFORMER CLERK

SUFFIX – THE SUFFIX IS DESCRIPTIVE OF THE STATION, (SEE NOTE C) HIERARCHY (ARRANGEMENT IN SERIES) FOR COMBINING SUFFIXES IS:

I. NUMERIC CHARACTERS (1–99) (SEE NOTE D)
II. M, V, B, BU, G, R, L, SW, UP, N
III. RO, RC, SL
IV. Y, X, C
V. S

FOR FIELD MAINTENANCE ONLY

EXAMPLES:

C – CAPACITOR STATION
M – 12KV PRIMARY METERED STATION
MRO – METERED STREET LIGHT STATION
D – 4 OR 2.4KV STATION THAT IS FED FROM A STEPDOWN STATION SERVING ONLY 1 CUSTOMER OR ONLY PRIMARY METERED CUSTOMER(S)
1M – 4 OR 2.4KV PRIMARY METERED STATION FED FROM A STEPDOWN STATION

III. THESE PARTS ARE BROUGHT TOGETHER AS FOLLOWS:

A. WHEN WRITING THE STATION NUMBERS ON OTHER THAN FORMS FOR KEYPUNCH USE, EACH PART OF THE STATION NUMBER IS SEPARATED BY A DASH.

EXAMPLES:

40–118	12KV TRANSFORMER STATION
40–216–C	12KV CAPACITOR STATION
NO1–118	4 OR 2.4KV TRANSFORMER STATION
NO1–216–MRO	4 OR 2.4KV METERED STREET LIGHT STATION
40–908–D	12 TO 4KV OR 12 TO 2.4KV STEPDOWN STATION (INDICATED BY D) (SEE NOTES A, B & F)
40–118–2G	12KV REGULATOR STATION, 2ND POLE OF 3–1Ø REGULATORS ON 3 POLES.

B. THE FOLLOWING FORMS WILL BE USED FOR KEYPUNCHING AND THE STATION NUMBER IS REQUIRED ON THEM:

1. APARTMENT LIST	101–4145A	7. NEW SERVICE INPUT DOCUMENT	124–10152
2. CIS MASTER STATION UPDATE	124–13152	8. STATION FILE CUTOVERS	111–391
3. CUSTOMER NEW SERVICE REQUEST	124–6201	9. TRANSFORMER TAG	120–5240A
4. ELECTRIC CONSTRUCTION ORDER	(NO FILE NUMBER)	10. TRANSFORMER STATION FILE PUNCH FORM	110–591/21A
5. ELECTRIC SERVICE ORDER	107–212L	11. TAG NOTICE TO ELECTRIC TROUBLEMAN	(TEMPORARY FORM)
6. GAS/ELECTRIC SET ORDER	124–610	12. CURRENT STATION/CUSTOMER TIE	(COMPUTER LISTING)

DATE 1–1–89 APPD	SDG&E ELECTRIC STANDARDS DISTRIBUTION STATION NUMBERING	~~OH 299.001~~ UG 3199.001 SUPERSEDES 3103.1 (1–1–93)

TABLE OF CONTENTS

C. THE RULES FOR FILLING IN THE STATION NUMBER ON THESE FORMS ARE AS FOLLOWS:

1. ALL ALPHABETIC CHARACTER O'S ARE TO BE WRITTEN WITH A SLANT MARK; i.e., Ø. THIS IS TO AVOID CONFUSION WITH THE NUMERIC CHARACTER ZERO.

2. INSTRUCTIONS FOR FILLING IN FORMS.

   a. THE CIRCUIT FIELD (COLUMN). SEE TABLE 1 BELOW.
   ALPHABETIC CHARACTERS ARE TO BE LEFT JUSTIFIED AND THE NUMERIC CHARACTERS RIGHT JUSTIFIED (SEE NOTE E). IN MOST CASES, THERE WILL BE BLANK COLUMNS IN THIS FIELD.

   b. THE NUMBER FIELD (COLUMN). SEE TABLE 1 BELOW.
   THE NUMERIC CHARACTERS ARE RIGHT JUSTIFIED AND ZEROS ARE ADDED TO COMPLETE FIELD.

   c. THE SUFFIX FIELD (COLUMN). SEE TABLE 1 BELOW.
   IF STATION NUMBER HAS NO SUFFIX, LEAVE THIS BLANK.
   THE ENTIRE PROPERLY FORMED SUFFIX IS LEFT JUSTIFIED AND ZEROS ARE ADDED TO COMPLETE FIELD.

EXAMPLES OF STATION NUMBERS WRITTEN ON FORMS:

TABLE 1

	CIRCUIT				NUMBER				SUFFIX				
	0	0	4	0	0	1	1	8		.			
	0	0	4	0	0	2	1	6	C	0	0	0	
*	N	Ø	0	1	0	1	1	8					
*	N	Ø	0	1	0	2	1	6	M	R	Ø	0	*
	0	0	4	0	0	9	0	8	D	0	0	0	
	0	0	4	0	0	9	0	8	3	1	0	0	

FOR FIELD MAINTENANCE ONLY

NOTES:

(A) REFER TO THE DISTRIBUTION ENGINEER BEFORE ADDING LOAD TO THESE AREAS TO ENSURE THAT THE STEPDOWN STATION IS NOT OVERLOADED.

(B) INDICATES A 2.4 OR 4KV STEPDOWN STATION SERVING ONLY ONE CUSTOMER OR ONLY PRIMARY METERED CUSTOMER(S).

(C) SEE PAGE 299.126 OVERHEAD OR 3199.126 UNDERGROUND – ABBREVIATIONS & CODES, STATION SUFFIX FOR SUFFIX MEANINGS.

(D) NUMERIC CHARACTERS 1 – 9 ARE RESERVED FOR STATIONS WITH ADDITIONAL SUFFIXES.

(E) RIGHT AND LEFT JUSTIFICATION MAY BE A NEW TERM FOR MOST PEOPLE. RIGHT JUSTIFIED MEANS TO START WITH THE RIGHT MOST CHARACTER OF THE GROUP AND PUT IT INTO THE RIGHT MOST COLUMN, WORKING LEFT UNTIL ALL CHARACTERS ARE USED UP AND IN ALL REMAINING BLOCKS AND ZEROS. SIMILARLY FOR LEFT JUSTIFIED, ONLY WORK FROM LEFT TO RIGHT AND ADD ZEROS TO FILL UNUSED BLOCKS.

EXAMPLE: RIGHT JUSTIFY: 198

STEP 1				8	
STEP 2			9	8	
STEP 3		1	9	8	
FINAL STEP 4	0	1	9	8	ADD ZERO IN REMAINING BLOCK(S)

LEFT JUSTIFY ALPHABETIC CHARACTERS, RIGHT JUSTIFY NUMERIC CHARACTERS: NO1

STEP 1		N			
STEP 2	*	N	Ø		ALPHABETIC CHARACTERS LEFT JUSTIFIED
STEP 3	*	N	Ø	1	NUMERIC CHARACTER RIGHT JUSTIFIED
FINAL STEP 4		N	Ø	0	1 ADD ZERO IN REMAINING BLOCK(S)

(F) STEPDOWN STATIONS WILL BE GIVEN NAME EXCEPT FOR THOSE SERVING ONLY ONE CUSTOMER OR ONLY PRIMARY METERED CUSTOMER(S)

* SEE III, C, 1.

TABLE OF CONTENTS

TABLE OF CONTENTS

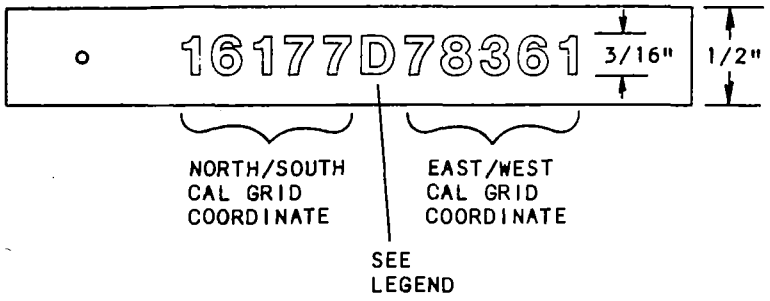

LEGEND

FACILITY CODES FOR CAL GRID	
B	HANDHOLE WITH PAD (FOR FIELD MAINTENANCE ONLY)
D	PADS
E	ENCLOSURES (GATES)
H	HANDHOLES (PRIMARY ONLY)
M	MANHOLES
S	SUBSURFACE ENCLOSURE
U	VAULTS

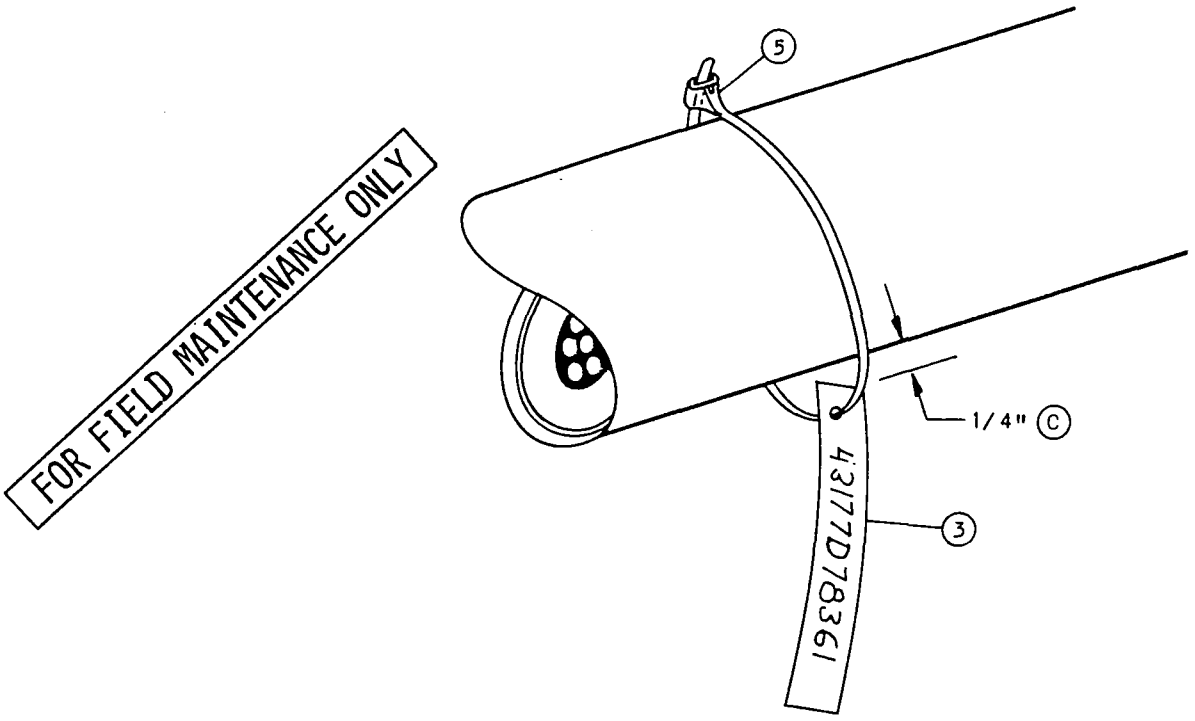

BILL OF MATERIAL:

ITEM	DESCRIPTION	QUANTITY	STOCK NO.
3	MONEL TAPE	AS REQ'D	720160 (E)
5	TIE STRAP 8"	AS REQ'D	739400 (E)

INSTALLATION:

A. TAGS SHALL BE MADE USING TAPEWRITER TOOL, MONEL METAL TAPE AND TIE STRAP.

(B) TO MAKE THE MONEL TAG FOLLOW TAPEWRITER OPERATING INSTRUCTIONS.

(C) WHEN CAL GRID COORDINATE TAG IS COMPLETE, THREAD THE TIE STRAP THROUGH THE PUNCHED HOLE AND WRAP THE TIE STRAP AROUND THE CABLE. SECURE TIE STRAP TAKING UP THE EXCESS UNTIL THERE IS 1/4 INCH BETWEEN THE TAG AND THE EXTERIOR OF THE CABLE.

(E) EXEMPT MATERIAL.

SDG&E ELECTRIC STANDARDS		
DATE 1-1-87 APPD JLG/BSK	CABLE IDENTIFICATION CALIFORNIA GRID COORDINATE (CAL GRID)	3299.001

TABLE OF CONTENTS

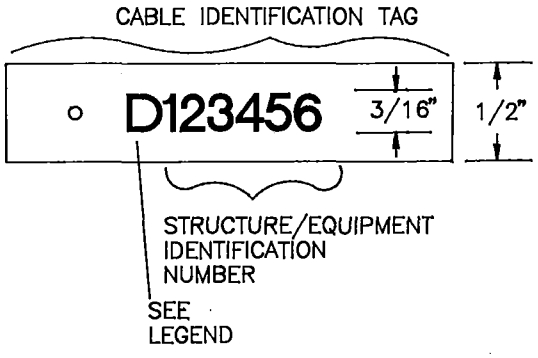

LEGEND

FACILITY CODES FOR TAG	
B	HANDHOLE WITH PAD (FOR FIELD MAINTENANCE ONLY)
D	PAD–MOUNTED FACILITY
E	EQUIPMENT ENCLOSURE (GATES)
H	PRIMARY HANDHOLE
M	MANHOLE
S	SUBSURFACE ENCLOSURE (FOR FIELD MAINTENANCE ONLY)
U	VAULT
W	PAD W/COMPLETE PRIMARY HANDHOLE (PAD–MOUNTED SWITCH ONLY)
Y	PAD W/COMPLETE PRIMARY MANHOLE (PAD–MOUNTED SWITCH ONLY)

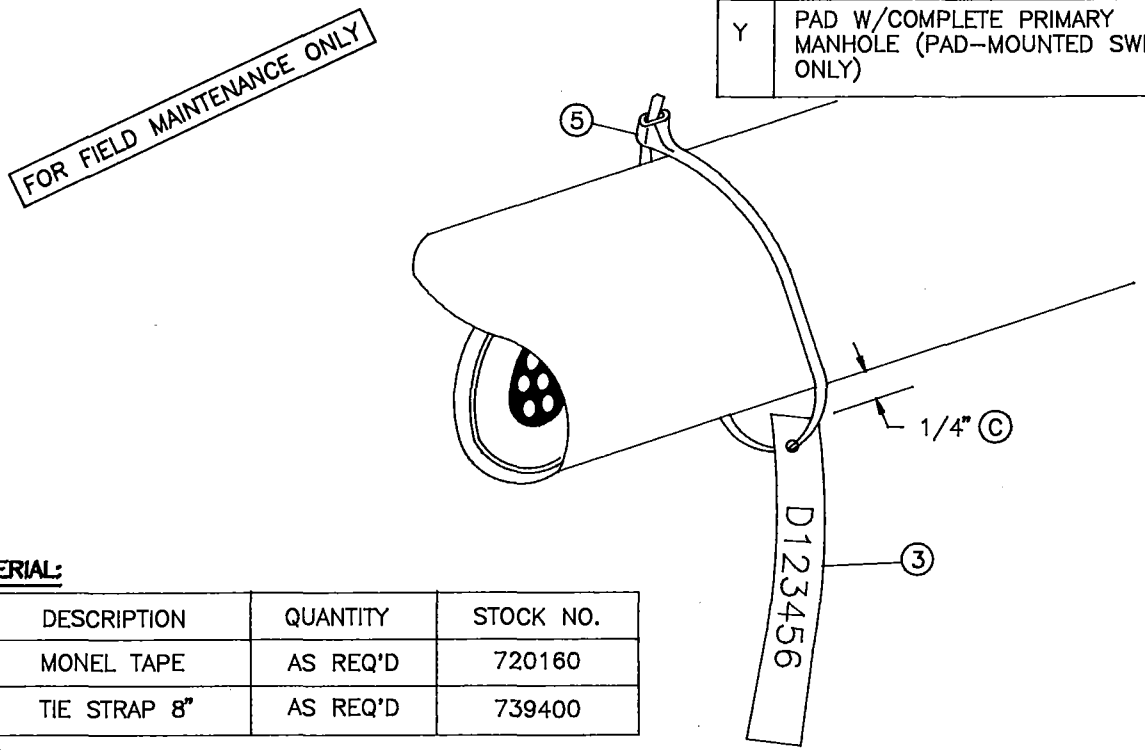

BILL OF MATERIAL:

ITEM	DESCRIPTION	QUANTITY	STOCK NO.
3	MONEL TAPE	AS REQ'D	720160
5	TIE STRAP 8"	AS REQ'D	739400

INSTALLATION

A. TAGS SHALL BE MADE USING TAPEWRITER TOLL, MONEL METAL TAPE AND TIE STRAP.

(B) TO MAKE THE MONEL TAG FOLLOW TAPEWRITER OPERATING INSTRUCTIONS.

(C) WHEN CABLE IDENTIFICATION TAG IS COMPLETE, THREAD THE TIE STRAP THROUGH THE PUNCHED HOLE AND WRAP THE TIE STRAP AROUND THE CABLE. SECURE TIE STRAP TAKING UP THE EXCESS UNTIL THERE IS 1/4 INCH BETWEEN THE TAG AND THE EXTERIOR OF THE CABLE.

REFERENCE:

F. SEE "FIELD MAINTENANCE ONLY" STANDARD 4499.101 FOR EXISTING CAL–GRID OR POLE NUMBERING DISTRICT TAG INFORMATION.

G. SEE STANDARD 3211 FOR STRUCTURE IDENTIFICATION.

	SDG&E ELECTRIC STANDARDS	
DATE 1–1–94 APPD JLG/RJS	CABLE IDENTIFICATION	3299.002

SCOPE: THIS STANDARD SHOWS THE INSTALLATION AND IDENTIFICATION OF STATION NUMBERS, FUSE SIZES, SWITCH NUMBERS AND THE LOCATION OF FAULT INDICATORS.

DECAL EXAMPLE

CIRCUIT NUMBER — STATION NUMBER

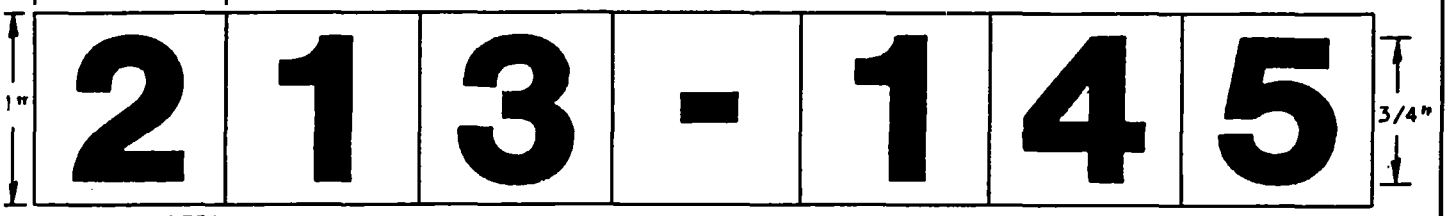

(ACTUAL SIZE)

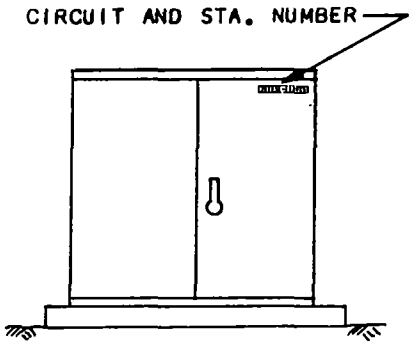

3Ø PAD-MOUNTED

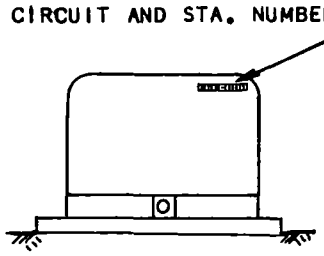

1Ø PAD-MOUNTED

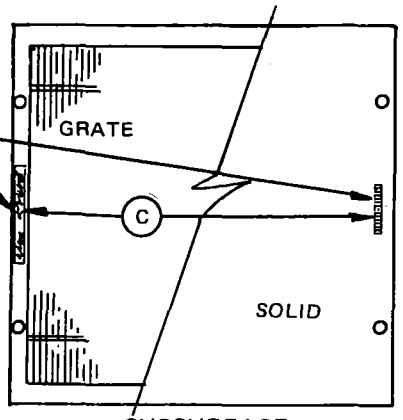

SUBSURFACE
(FIELD MAINTENANCE ONLY)
SOLID COVER OR GRATE COVER

FOR FIELD MAINTENANCE ONLY

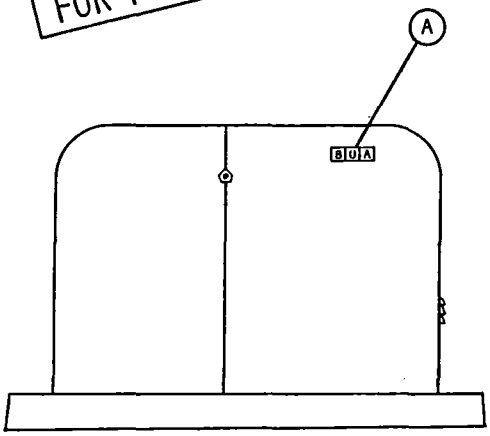

1Ø FUSED SWITCHING CABINET

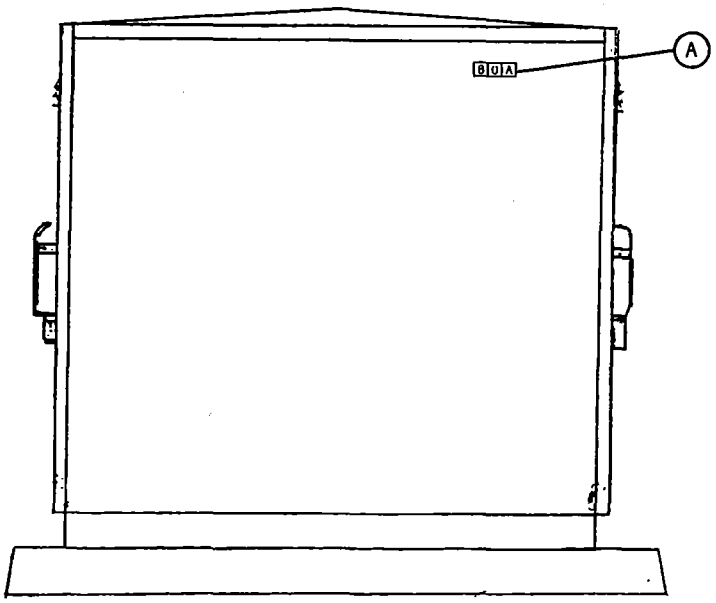

3Ø FUSED SWITCHING CABINET

INSTALLATION:

(A) ON 1Ø AND 3Ø FUSED SWITCHING CABINETS, INSTALL DECALS INDICATING FUSE OR SOLID BLADE SIZE ON THE SIDE OF THE CABINET (VISIBLE FROM THE STREET) TOWARD THE FUSED END OF THE CABINET.

B. SEE WORK ORDER FOR CIRCUIT AND STATION NUMBER.

(C) MONEL TAPE (STOCK NUMBER (720160 (E))
EPOXY PASTE (STOCK NUMBER (213244 (E))

(E) EXEMPT MATERIAL.

3299.101 SUPERCEDES 3212.1 (1-1-87)	SDG&E ELECTRIC STANDARDS TRANSFORMER AND FUSE IDENTIFICATION	DATE 1-1-89 APPD JLB DTB

TABLE OF CONTENTS

TOP PORTION OF THIS
PAGE TAKEN FROM
PAGE 3212.4 ON 1-1-94

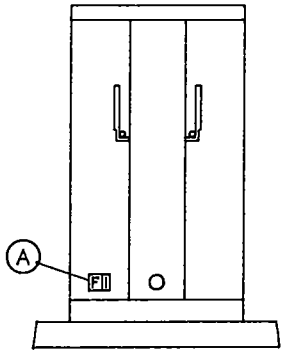

3599.203 3 PHASE TERMINATOR

FOR FIELD MAINTENANCE ONLY

INSTALLATION:

(A) FAULT INDICATORS LOCATED IN 3 PHASE TERMINATORS SHALL BE IDENTIFIED BY INSTALLING DECAL LETTERS "F I" ON THE EQUIPMENT DOOR (TOWARD THE FEEDER CABLES) AS SHOWN IN SKETCH.

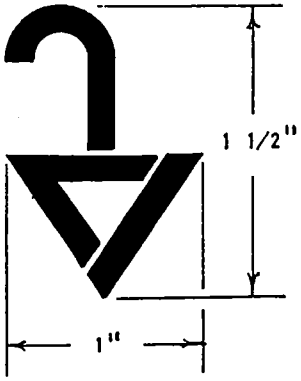

STENCIL
STOCK NO. 692800

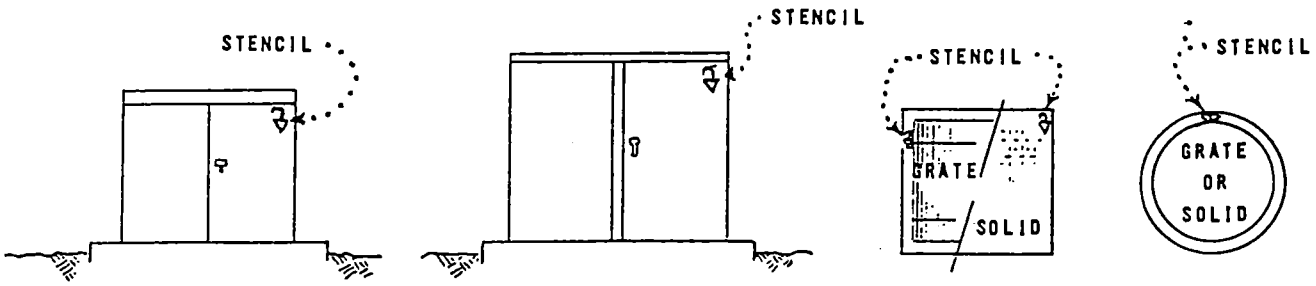

LOW PROFILE | PADMOUNT | SUBSURFACE

FRONT ELEVATION | PLAN VIEW

INSTALLATION:

A. STENCIL (IN FIELD TO BE PAINTED IN YELLOW ENAMEL. STOCK NUMBER 517120

B. STENCIL TO A CLEAN SURFACE, JUST BELOW TRANSFORMER IDENTIFICATION (3212) STENCIL.

C. WHEN REMOVING INDICATORS, STENCIL IS TO BE PAINTED OVER SAME COLOR AS TRANSFORMER, GRATE OR SOLID COVER.

DATE 1-1-87 APPD JLG/RT	SDG&E ELECTRIC STANDARDS LINE FAULT INDICATOR TAGS LOCATION IDENTIFICATION	3299.201 SUPERCEDES 3222 (1-1-86)

TABLE OF CONTENTS

MAJOR USE: NONE PRESENTLY-PREVIOUSLY WAS INSTALLED ON ALL NON-LOAD BREAK ELBOWS FOR IDENTIFICATION PURPOSES. SEE NOTE AT BOTTOM.

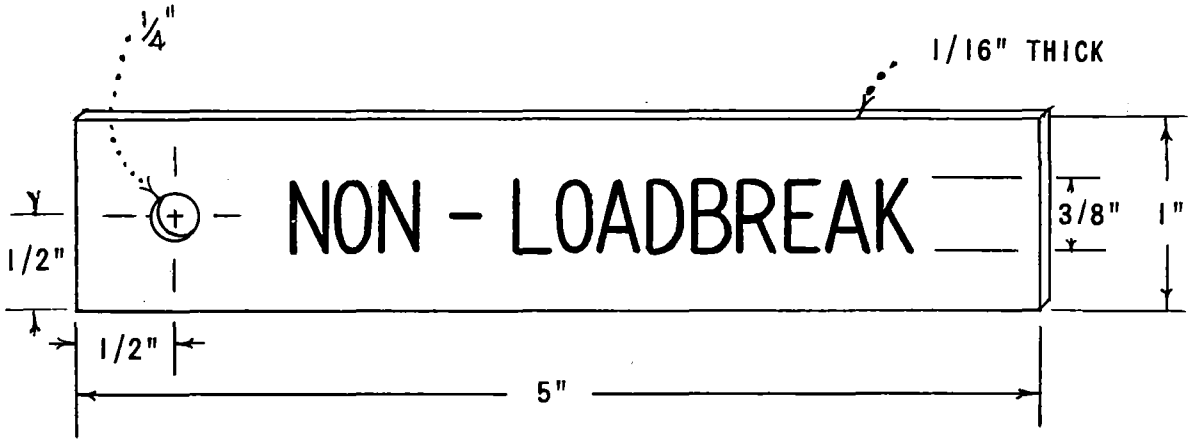

ITEM I

STOCK NUMBER
716736

NOTE:

1. TAGS TO BE ATTACHED TO ALL NON-LOAD BREAK ELBOWS PER SHEET 4196.
2. TAG TO BE LAMINATED PLASTIC, WHITE WITH BLACK LETTERS, SIZE AS PER ABOVE ILLUSTRATION.

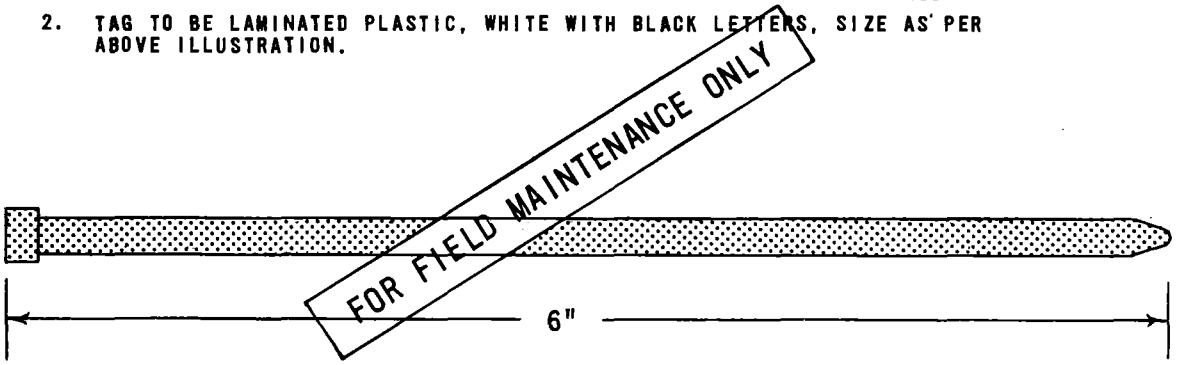

ITEM II

STOCK NUMBER
739200 -BLACK

NOTE:

1. NYLON STRAPS, SIZE AS PER ABOVE ILLUSTATION, TO BE ATTACHED TO ALL TAGS FOR INSTALLATION ON ALL NON-LOADBREAK ELBOWS PER SHEET 4196.

WHEN WORKING ON INSTALLATIONS WITH ELBOWS HAVING THIS TAG - REPLACE TAG WITH 3232. (DO NOT OPERATE ENERGIZED) TAG AND STRAP.

3299.301	SAN DIEGO GAS & ELECTRIC COMPANY UNDERGROUND STANDARDS DEAD BREAK ELBOW IDENTIFICATION TAGS	DATE 2-12-76 APPD

TABLE OF CONTENTS

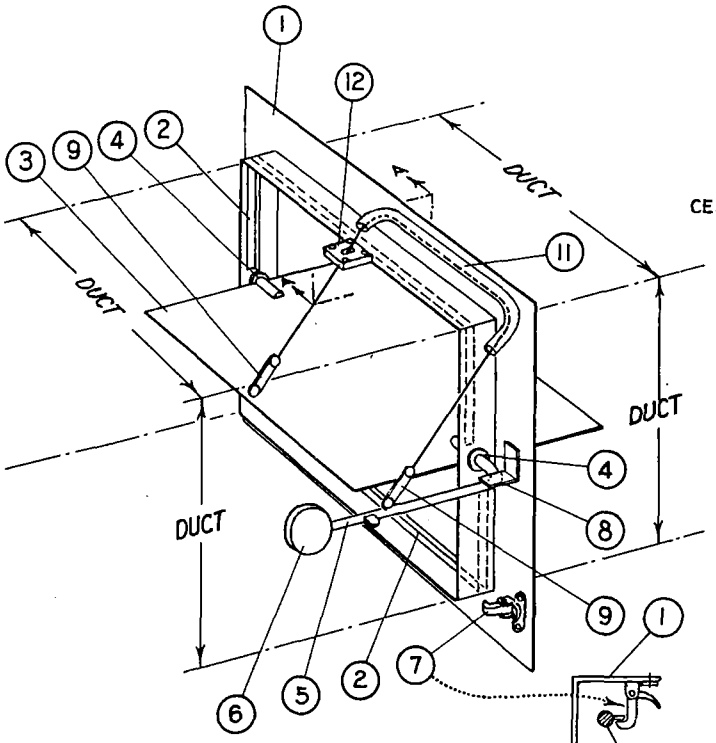

WALL ASSEMBLY

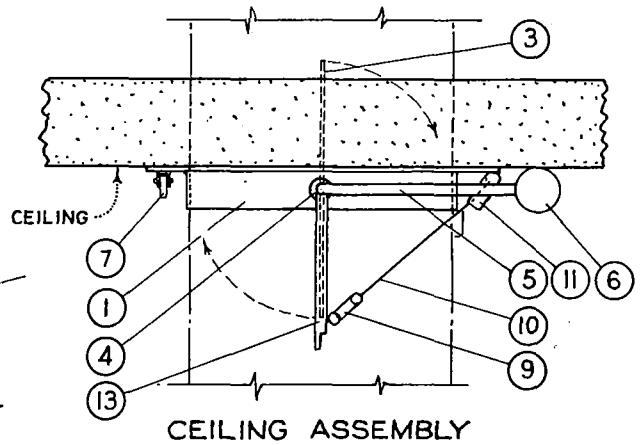

CEILING ASSEMBLY

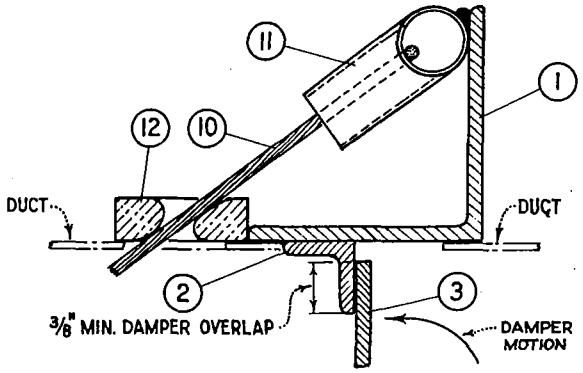

SECTION A-A
SHOWN WITH DAMPER IN CLOSED POSITION

FOR FIELD MAINTENANCE ONLY

NOTES

A. Assembly to be installed on interior walls or ceiling of transformer vaults.

B. Assembly shall meet the requirements of bulletin 90A of the national fire protection association.

C. Fusible links shall be mounted so that rupture of either link will provide positive closing action of the damper.

D. A 6" x 6" handhole shall be located as required for inspection of the damper and the fusible link in the duct.

E. Assembly size as required up to a maximum duct diameter or width of 36 inches.

F. For duct diameter or greatest width up to 18" use 5 lb counterweight. For duct diameter or greatest width from 18 inches to 36 inches use 10 lb counterweight.

G. All welded construction except as noted.

H. Two coats of aluminum paint shall be applied to all steel parts after completion of fabrication.

1. Frame, 2"x 2"x 1/8" angle iron.
2. Damper stops, 5/8"x 5/8" angle iron
3. Damper, #10 gage minimum sheet metal
4. Bushing, 1/2" diameter x 1/2", oil impregnated, loose fit between shaft and bushing
5. 1/2" diameter steel bar, corrosion resistant
6. Counterweight (see note F.)
7. Elbow catch
8. Stop
9. Fusible metal links, 212°F. (see notes C & D)
10. 1/8" diameter stranded cable, corrosion resistant.
11. 1/2" diameter steel tube, corrosion resistant, smooth finish inside
12. Aluminum guide, 3/8" thick, attached with sheet metal screws
13. 1/2" diameter steel bar, corrosion resistant, welded perpendicular to item No. 5, for ceiling assembly only.

REFERENCE, CITY OF SAN DIEGO STANDARDS DRAWING M-1-60T.

	SDG&E ELECTRIC STANDARDS	
DATE 1-23-80 APPD TAF	COUNTERBALANCED FIRE DAMPER ASSEMBLY	3399.001

TABLE OF CONTENTS

SUBSTRUCTURE APPLICATIONS	
(3399.112, 113) 3320 5' X 10'-7-1/2" X 8' MANHOLE	MANHOLE IS TO BE USED ONLY FOR PMH 9 OR PMH 11 SWITCH INSTALLATION. MANHOLE CAN BE USED IN SINGLE-FAMILY RESIDENTIAL, MULTI-FAMILY AND COMMERCIAL DEVELOPMENTS FOR TERMINATION AND CONNECTION OF SINGLE-PHASE AND THREE-PHASE PRIMARY LOCAL DISTRIBUTION, THREE-PHASE PRIMARY FEEDERS, SECONDARIES AND SERVICES. MANHOLES MUST BE INSTALLED IN AREAS THAT REQUIRE TRUCK ACCESS FOR INSTALLATION AND MAINTENANCE.
(3399.208-210) 3324 8' X 14' X 9'-4" 8' X 20' X 9'-4" 8' X 26' X 9'-4" MANHOLE	MANHOLE CAN BE USED IN SINGLE-FAMILY RESIDENTIAL, MULTI-FAMILY AND COMMERCIAL DEVELOPMENTS FOR TERMINATION AND CONNECTION OF LOCAL PRIMARY DISTRIBUTION THREE-PHASE PRIMARY FEEDERS, SECONDARIES AND SERVICES AND ON-OFF OR 4 WAY SWITCHES. MANHOLE CAN BE INSTALLED IN NON-TRAFFIC OR STREET LOCATIONS. REQUIRES TRUCK ACCESS FOR INSTALLATION AND MAINTENANCE. SEE PAGE 3605.2 FOR 4 WAY SWITCH MANHOLE REQUIREMENTS.

3302

FOR FIELD MAINTENANCE ONLY

TABLE OF CONTENTS

DATE 1-1-96 APPD	SDG&E ELECTRIC STANDARDS SUBSTRUCTURE APPLICATIONS	3399.002

MAJOR USE: CABLE SPLICING UP TO A MAXIMUM OF 4/0 AWG 15KV CABLE.

U-21.5

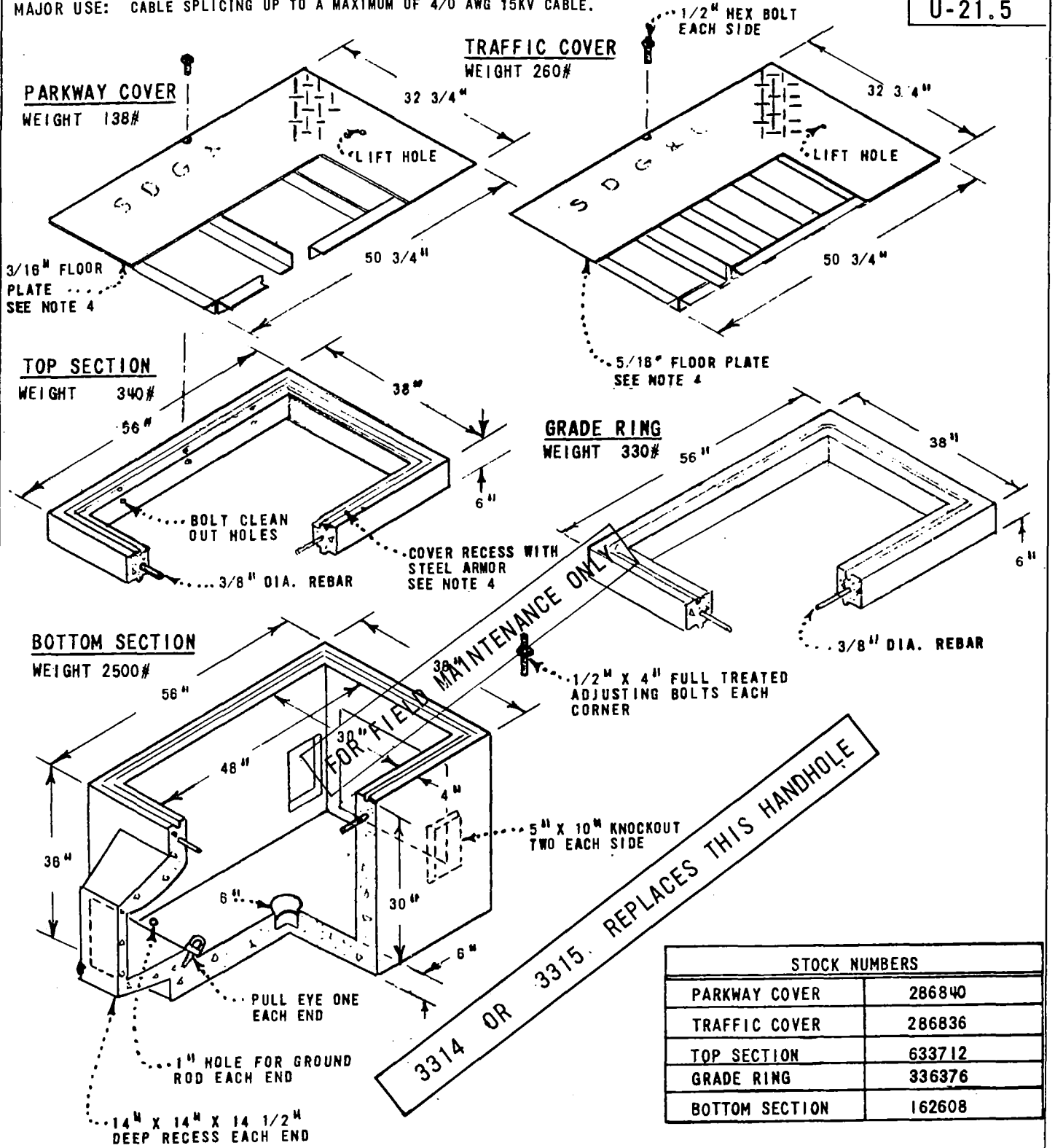

STOCK NUMBERS	
PARKWAY COVER	286840
TRAFFIC COVER	286836
TOP SECTION	633712
GRADE RING	336376
BOTTOM SECTION	162608

NOTES:

1. THIS INSTALLATION IS LIMITED TO A MAXIMUM OF 2 - 4" CONDUITS.
2. AN EXCAVATION, 9'-0" X 4'-0" X 4'-6" DEEP IS REQUIRED FOR INSTALLATION OF THIS HANDHOLE.
3. FOR LARGER CABLE THAN 4/0 AWG USE HANDHOLE 3314
4. PARKWAY AND TRAFFIC COVERS TO HAVE ONE COAT DU-PONT PRIMER NUMBER 67-800 AND ONE COAT DU-PONT DULUX NUMBER RP25051 OR EQUAL.

3399.101	SAN DIEGO GAS & ELECTRIC COMPANY UNDERGROUND STANDARDS	DATE 4-15-71 SDG&E
	HANDHOLE - 30" X 48" X 42"	

TABLE OF CONTENTS

SCOPE: THIS STANDARD SHOWS OBSOLETE PARKWAY AND TRAFFIC COVERS USED FOR THE 3315 TRAFFIC COVER. IF AN EXISTING TRAFFIC COVER CAN NOT BE REPAIRED USING PAGE 3399.103 WHEN DAMAGED, REPLACE IT WITH THE NEW TRAFFIC COVER, STANDARD 3315.

FOR FIELD MAINTENANCE ONLY

PARKWAY COVER FOR EQUIPMENT ENCLOSURE

TOP SECTION W/FRAME
WEIGHT 2200#
STOCK NUMBER: PAINTED 286974
EPOXY 286978

MANUFACTURER'S IDENTIFICATION PAINTED 'QUIKSET' OR 'BROOKS' (INSIDE TOP SECTION ON END)

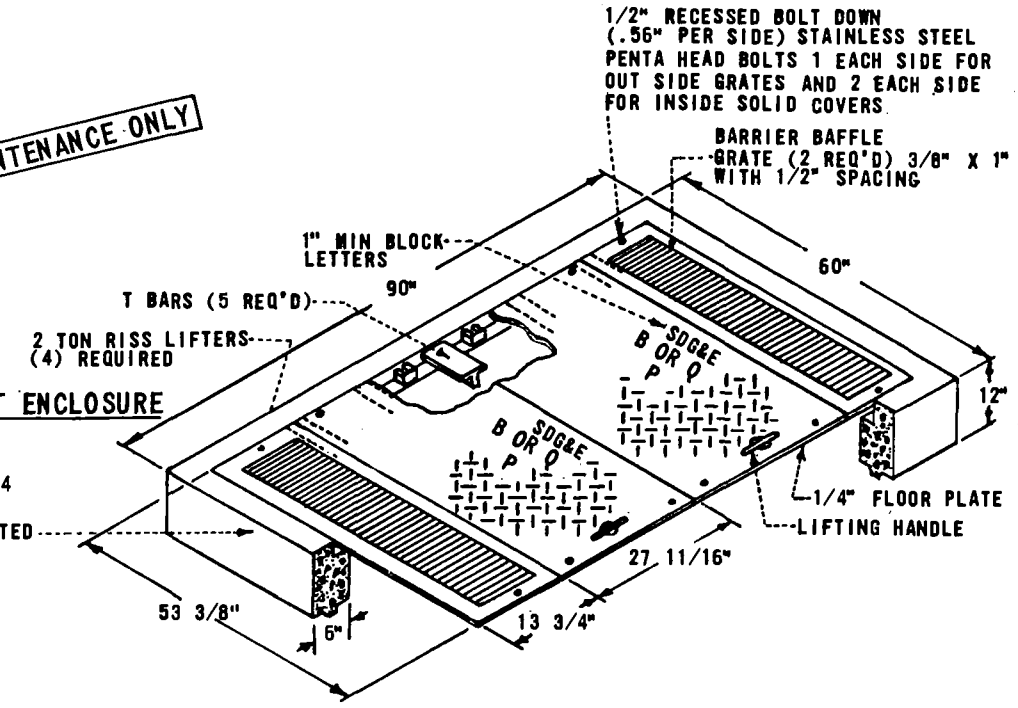

TRAFFIC COVER FOR HANDHOLE

TOP SECTION W/FRAME
WEIGHT 1800# H-20 LOADING

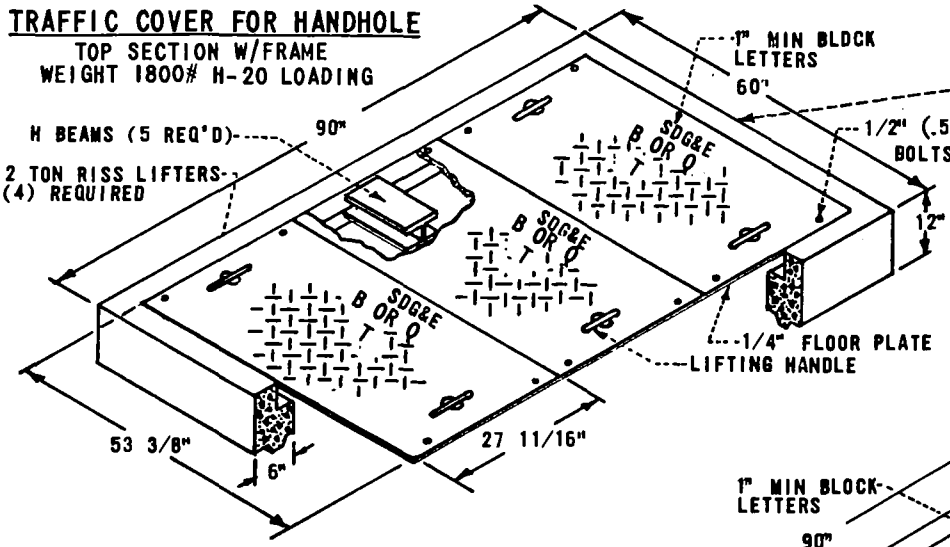

MANUFACTURER'S IDENTIFICATION PAINTED 'QUIKSET' OR 'BROOKS' (INSIDE TOP SECTION ON END)

1/2" (.56" PER SIDE) STAINLESS STEEL PENTA HEAD BOLTS RECESSED (4 REQ'D EACH PIECE)

RECESSED BOLT DOWN 1/2" (.56" PER SIDE) STAINLESS STEEL PENTA HEAD BOLTS 1 EACH SIDE FOR OUTSIDE GRATES AND 2 EACH SIDE FOR INSIDE SOLID COVERS

TRAFFIC COVER FOR EQUIPMENT ENCLOSURE

TOP SECTION W/FRAME
WEIGHT 2200# H-20 LOADING

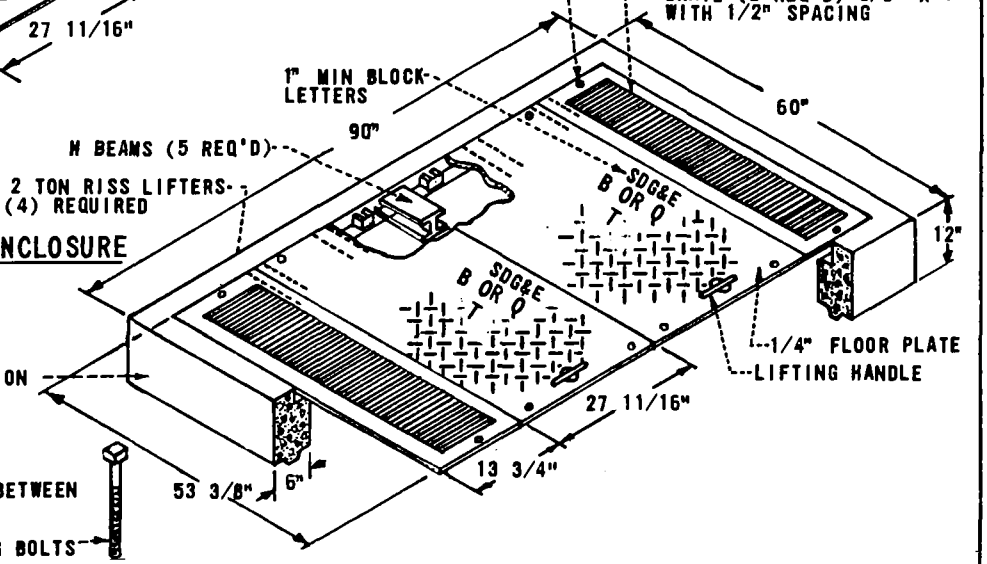

MANUFACTURER'S IDENTIFICATION PAINTED 'QUIKSET' OR 'BROOKS' (INSIDE TOP SECTION ON END)

TYPICAL
IF GRADE ADJUSTMENT IS REQUIRED GROUT BETWEEN TOP SECTION AND EXTENSION

4-5/8" OR 3/4" COIL THREAD 6" ADJUSTING BOLTS

DATE 2-26-81 APPD J.E.Y	SDG&E ELECTRIC STANDARDS HANDHOLE AND SUBSURFACE EQUIPMENT ENCLOSURE 4'-0" X 6'-6"	3399.102

TABLE OF CONTENTS

MAINTENANCE FOR EXISTING TRAFFIC COVERS THAT CREATE A SAFETY HAZARD

AND/OR ARE A SOURCE OF NOISE COMPLAINTS

THE FOLLOWING SKETCHES ILLUSTRATE A WELD FIX THAT WILL MINIMIZE DAMAGE TO THE UNISTRUTS BY PROVIDING IMPACT SUPPORT AND ALSO PROVIDES FOR CONTINUOUS BOLT TENSION ON PROPERLY TIGHTENED BOLTS SUBJECT TO CYCLIC LOADING AND UNLOADING OF TRAFFIC; THEREBY, REDUCING THE TENDENCY OF THE BOLTS TO VIBRATE LOOSE. IF THIS METHOD DOES NOT WORK, REPLACE TRAFFIC COVER WITH NEW STYLE TRAFFIC COVER, STANDARD 3315.

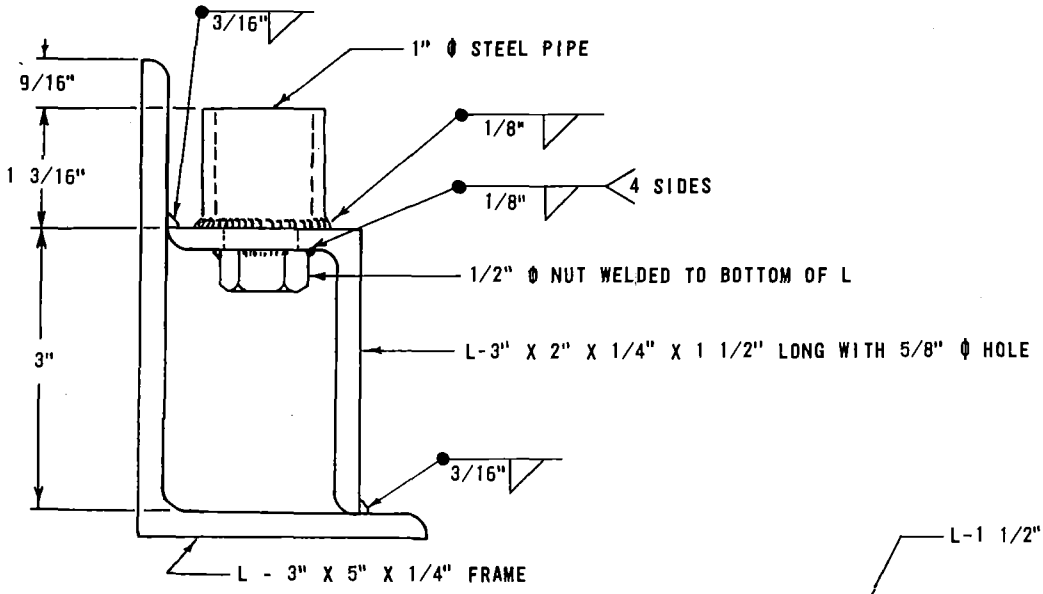

QUIKSET

FOR FIELD MAINTENANCE ONLY

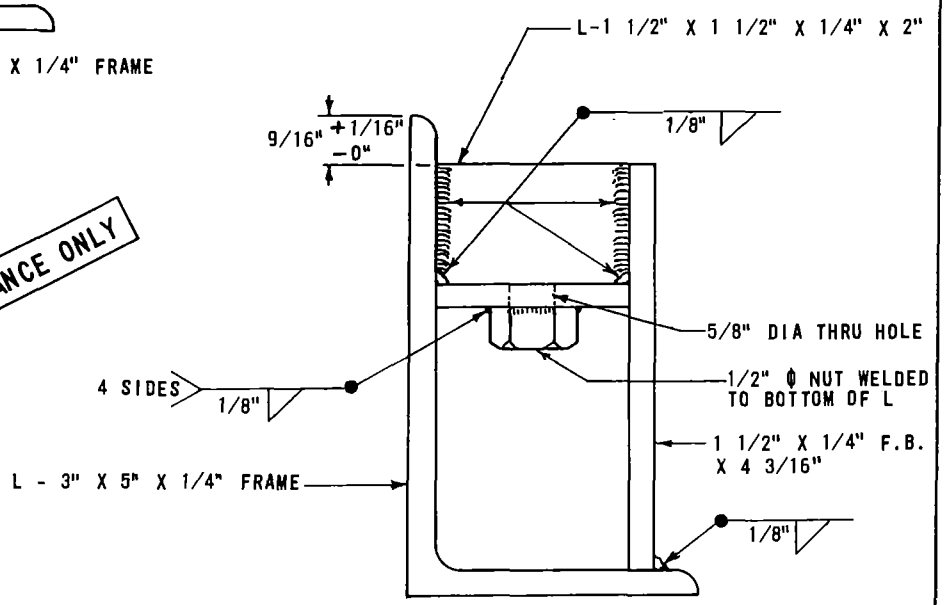

BROOKS

3399.103	SDG&E ELECTRIC STANDARDS HANDHOLE AND SUBSURFACE EQUIPMENT ENCLOSURE 4'-0" X 6'-6" (TOP SECTION)	DATE 2-26-81 APPD

TABLE OF CONTENTS

SCOPE: THIS STANDARD SHOWS THE OBSOLETE COVER AND BASE ENCLOSURE FOR A 3314 HANDHOLE. IF AN EXISTING COVER IS DAMAGED, REPLACE IT WITH THE NEW CAST IRON TRAFFIC COVER PER STANDARD 3314.

FOR FIELD MAINTENANCE ONLY

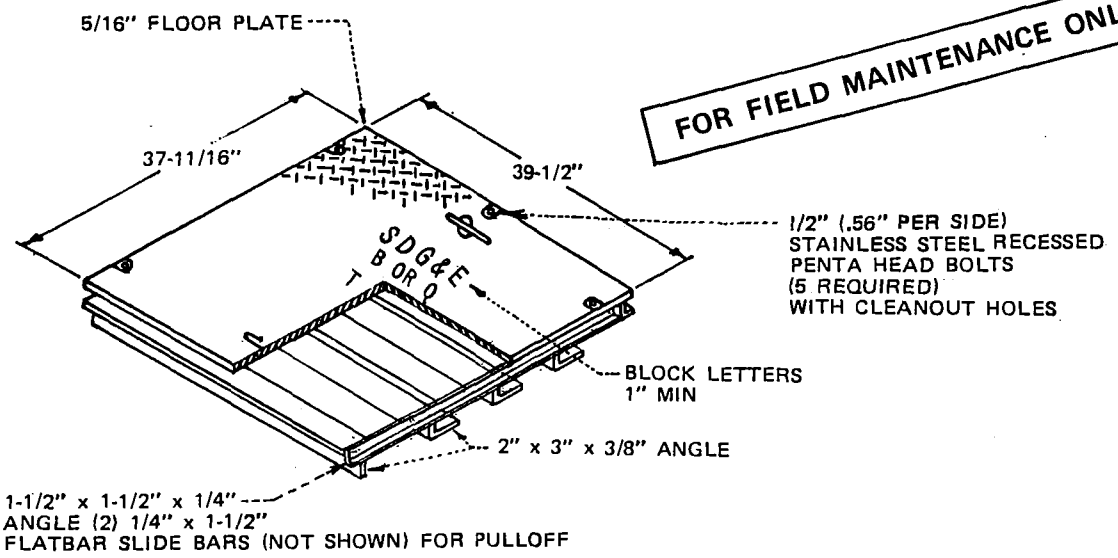

28" OR 29"
BASE ENCLOSURE
WEIGHT: 28"-3500#
29"-2920#
STOCK NUMBER 162672

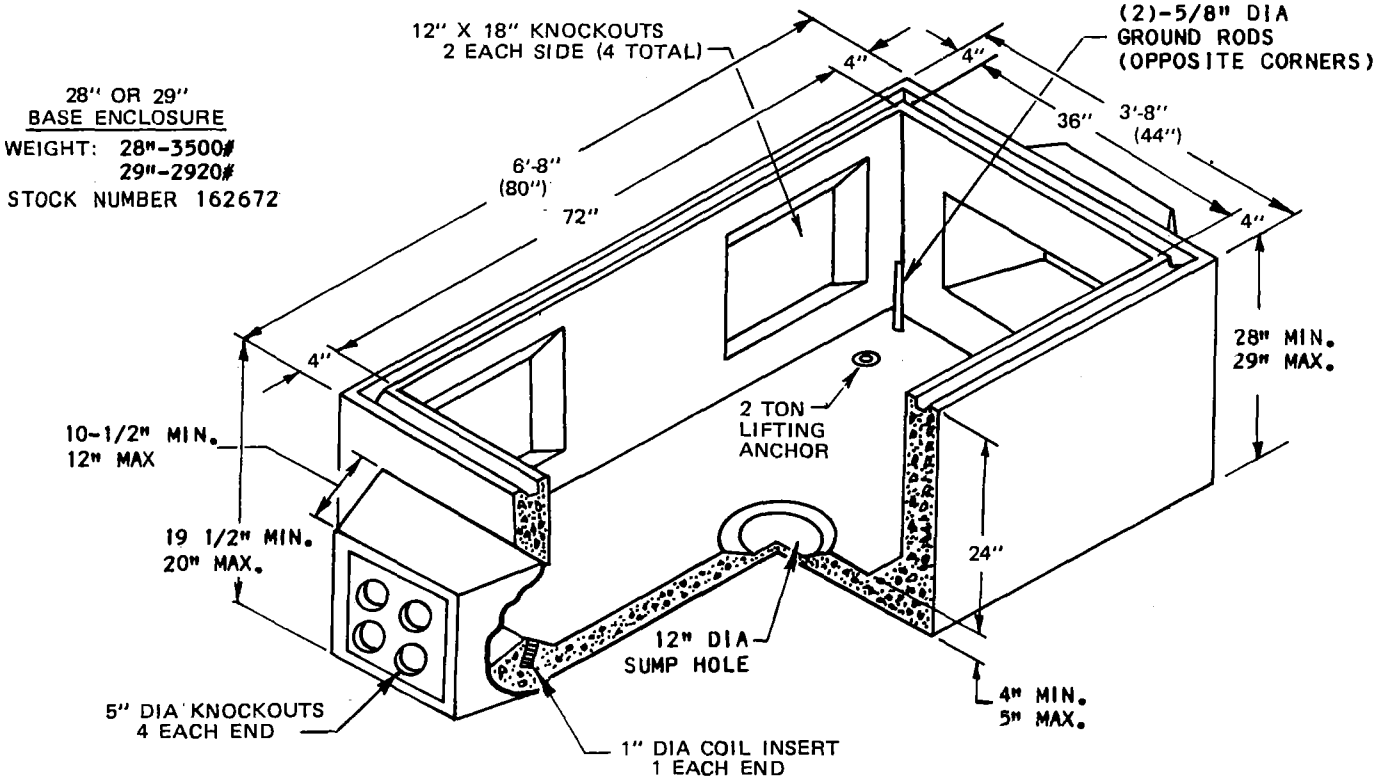

TABLE OF CONTENTS

DATE 1-1-88 APPD JGB/RDS	SDG&E ELECTRIC STANDARDS HANDHOLE TRAFFIC COVER AND BASE ENCLOSURE 3' X 6'	3399.104

SCOPE: THIS STANDARD SHOWS HOW TO REPAIR DAMAGED "OLD STYLE" 3314 HANDHOLES WITH PARKWAY COVERS.

"OLD STYLE" 3314 HANDHOLE REPAIR DRAWINGS

SIDE VIEWS

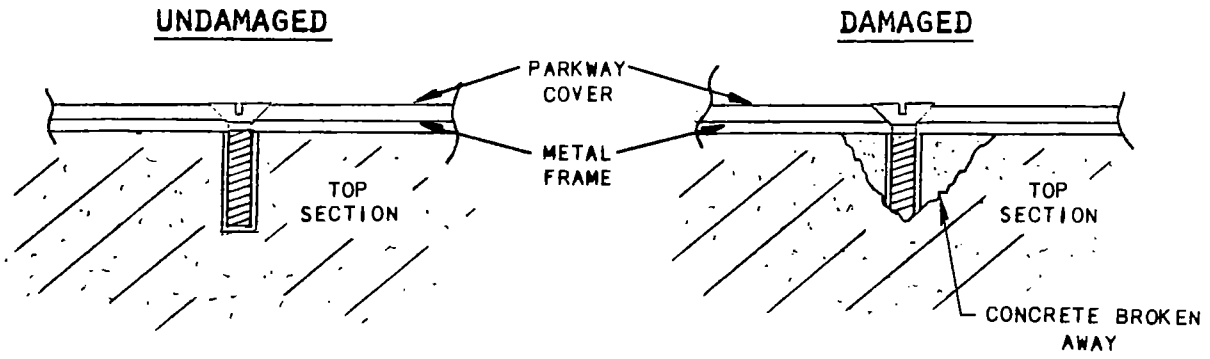

FOR FIELD MAINTENANCE ONLY

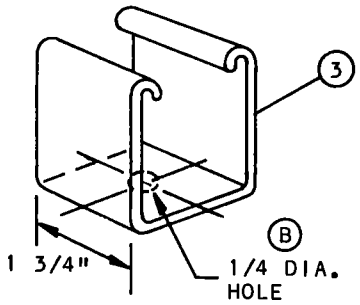

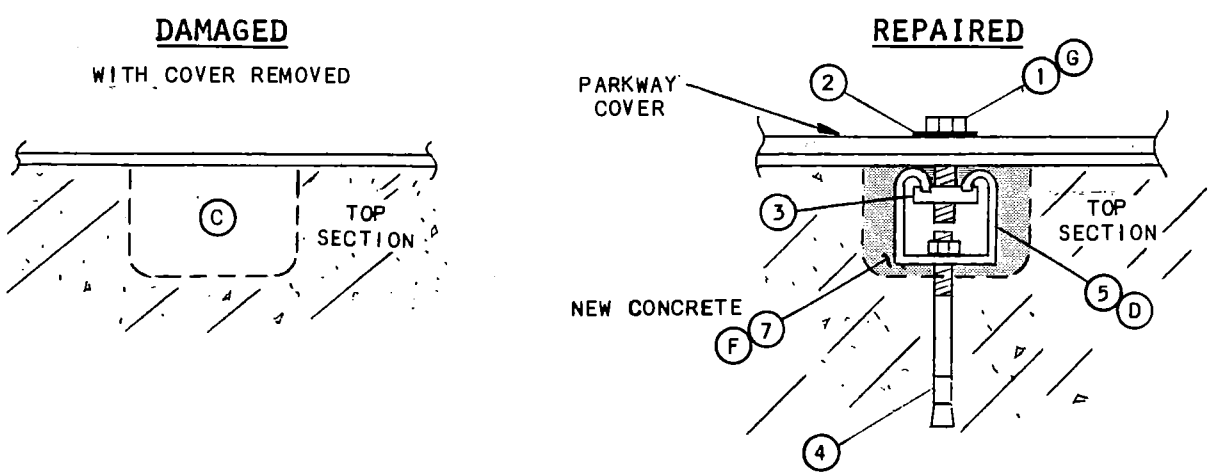

NOTES:

-USE THE REPAIR METHOD SHOWN IN THIS STANDARD FOR REPAIRING OLD STYLE 3314 HANDHOLES WITH PARKWAY COVERS WHERE THE BOLTS SECURING THE LIDS HAVE PULLED OUT OF THE CONCRETE . THIS METHOD ELIMINATES THE NEED TO REPLACE THE ENTIRE TOP SECTION OF HANDHOLE.

3399.105	SDG&E ELECTRIC STANDARDS 3314 HANDHOLE REPAIR - "OLD STYLE" PARKWAY COVER	DATE 1-1-87 APPD JYB RDK

TABLE OF CONTENTS

BILL OF MATERIAL:

ITEM	DESCRIPTION	QUANTITY	STOCK NUMBER
1	SCREW, CAP HEX. HEAD, BRONZE, 3/8" X 1 1/2"	AS REQ'D	616800 (E)
2	WASHER, FLAT ROUND, BRONZE, 3/8"	AS REQ'D	799584 (E)
3	NUT, CLAMPING UNISTRUT CHANNEL, GALV. W/ SPRING, 3/8"	AS REQ'D	503616
4	ANCHOR, CONCRETE STAINLESS STEEL, 1/4" X 3"	AS REQ'D	107666 (E)
5	UNISTRUT, CHANNEL, GALV., 12 GA., 1 5/8" X 1 5/8"	AS REQ'D	216896 (E)
6	PAINT, GALVANOX COATING	AS REQ'D	576064
7	MORTOR MIX	AS REQ,D	--
8	SILICONE GREASE (NOT SHOWN)	AS REQ'D	391424 (E)

INSTALLATION:

A. REMOVE BOLTS AND PARKWAY COVER.

(B) CUT A 1 3/4 INCH PIECE OF UNISTRUT AND DRILL A 1/4 INCH DIAMETER HOLE IN THE CENTER. PAINT CUT ENDS AND INSIDE EDGE OF DRILLED HOLE WITH GALVANOX.

(C) CHIP AWAY CONCRETE IN DAMAGED AREA ENOUGH TO MAKE ROOM FOR THE 1 3/4 INCH PIECE OF UNISTRUT.

(D) PLACE UNISTRUT IN CHIPPED AWAY AREA AND BOLT IN PLACE WITH ANCHOR BOLT. ASSURE UNISTRUT WILL BE CENTERED BELOW LOCATION OF BOLT HOLE ON COVER WHEN COVER IS ON.

(E) EXEMPT MATERIAL.

(F) PLACE MORTOR MIX IN CHIPPED AWAY AREA AROUND UNISTRUT.

(G) AFTER MORTOR SETS, POSITION CLAMPING CHANNEL NUT AND REPLACE OLD PARKWAY COVER. APPLY SILICONE GREASE TO BOLTS WHEN SECURING THE COVER TO REDUCE REMOVAL OR INSTALLATION DIFFICULTIES.

FOR FIELD MAINTENANCE ONLY

TABLE OF CONTENTS

DATE 1-1-87 APPD JYB/RDB	SDG&E ELECTRIC STANDARDS 3314 HANDHOLE REPAIR - "OLD STYLE" PARKWAY COVER	3399.106

SCOPE: THIS STANDARD SHOWS THE OBSOLETE BASE ENCLOSURE AND BOTTOM SECTION FOR THE 3315 HANDHOLE.

3315 HANDHOLE

FOR FIELD MAINTENANCE ONLY

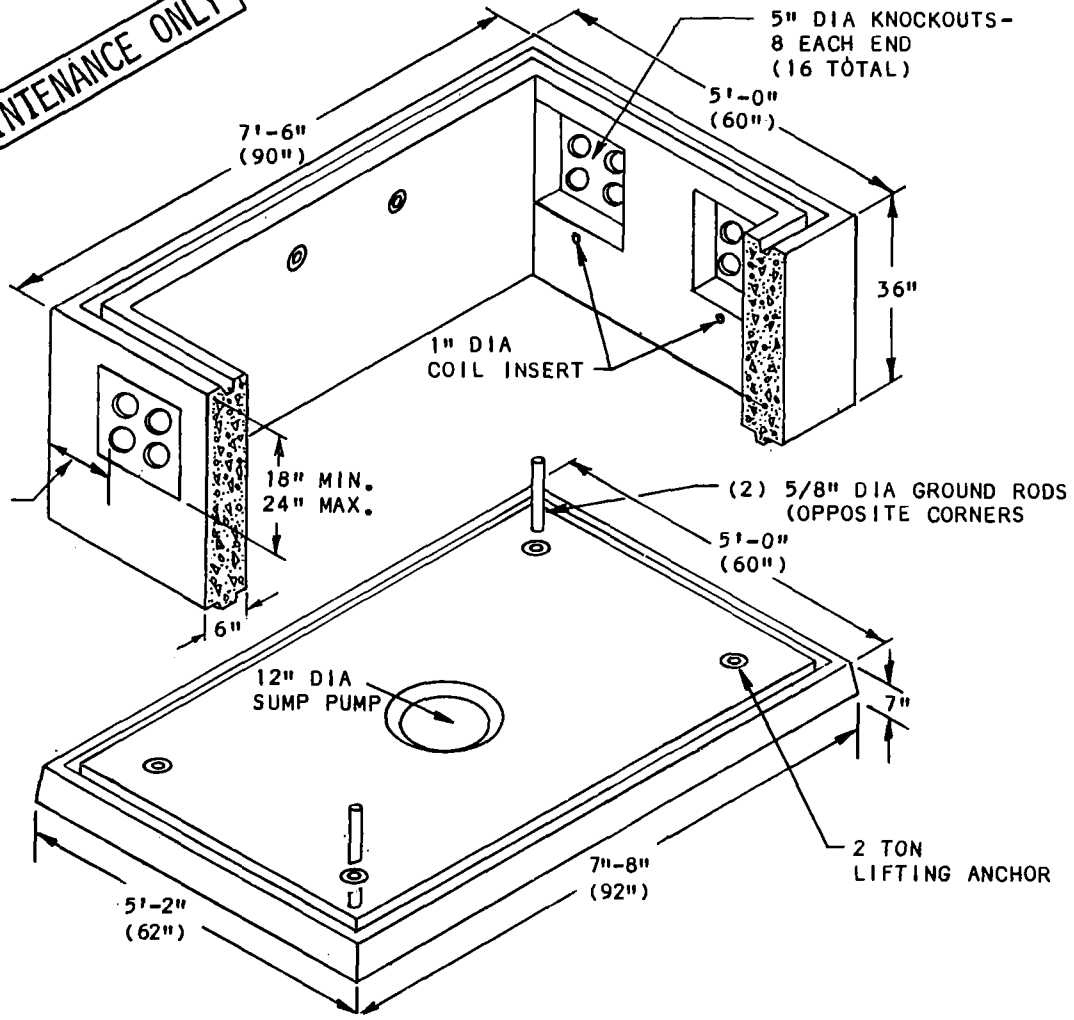

36" BASE ENCLOSURE

WEIGHT: 4836# MIN.
5200# MAX.

STOCK NUMBER 334359

7" BOTTOM SECTION

WEIGHT: 3200# MIN.
3300# MAX.

STOCK NUMBER 125372

TABLE OF CONTENTS

3399.107	SDG&E ELECTRIC STANDARDS HANDHOLE BASE ENCLOSURE AND BOTTOM SECTION (INSIDE DIMENSIONS - 4'X6'-6")	DATE 1-1-88 APPD JAB/RDD

SCOPE: THIS STANDARD SHOWS THE OBSOLETE TWO-PIECE BASE SECTION FOR THE 3316 HANDHOLE.

FOR FIELD MAINTENANCE ONLY

3316 HANDHOLE

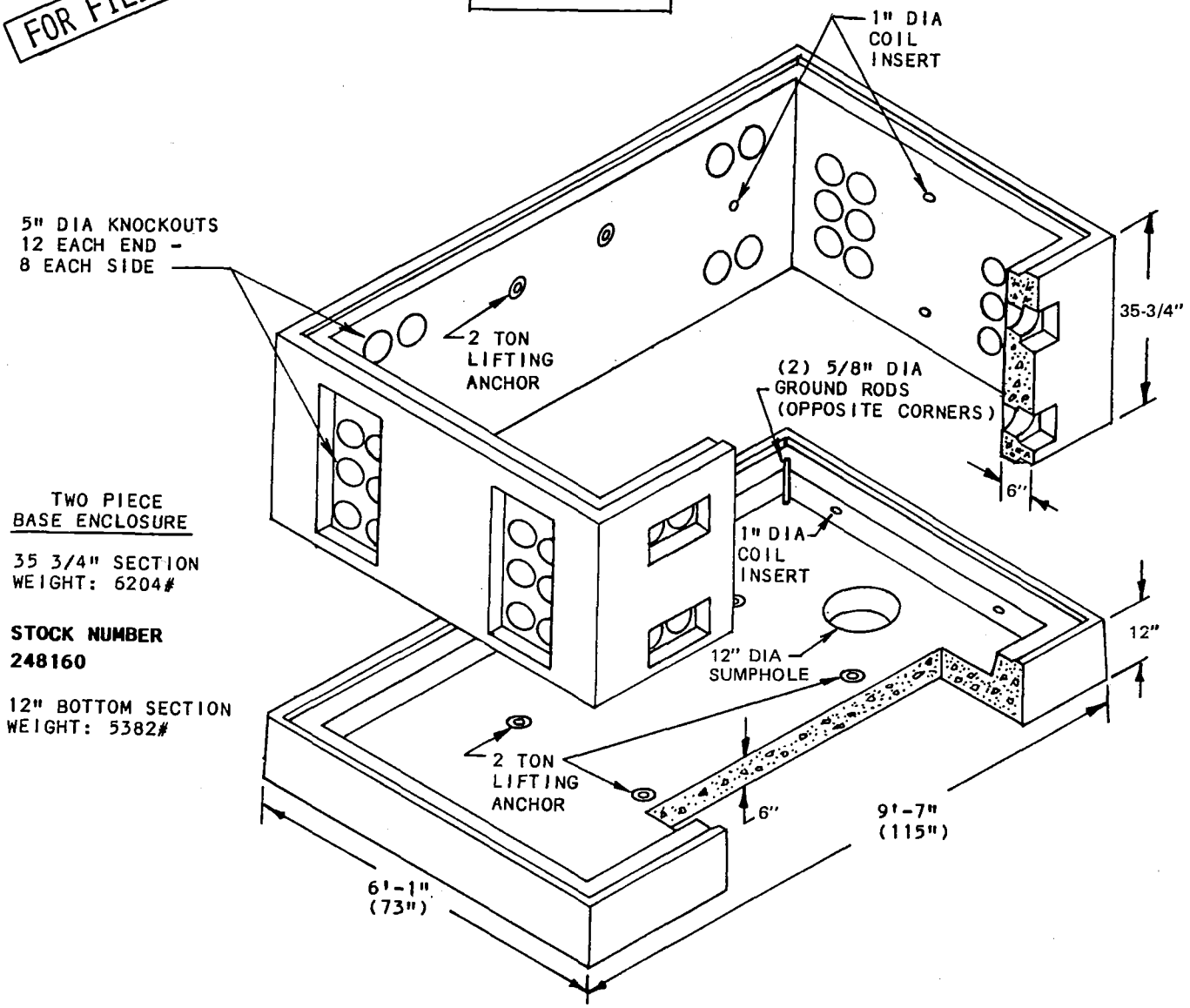

TWO PIECE BASE ENCLOSURE

35 3/4" SECTION
WEIGHT: 6204#

STOCK NUMBER
248160

12" BOTTOM SECTION
WEIGHT: 5382#

	SDG&E ELECTRIC STANDARDS	
DATE 1-1-88 APPD JYB/RD	HANDHOLE TWO-PIECE BASE ENCLOSURE (INSIDE DIMENSIONS - 5' X 8'-6")	3399.108

TABLE OF CONTENTS

SCOPE: THIS STANDARD SHOWS 3313 & 3314 HANDHOLE PARKWAY COVERS.

3313 STEEL
PARKWAY COVER
WEIGHT: 124.1# MAX.

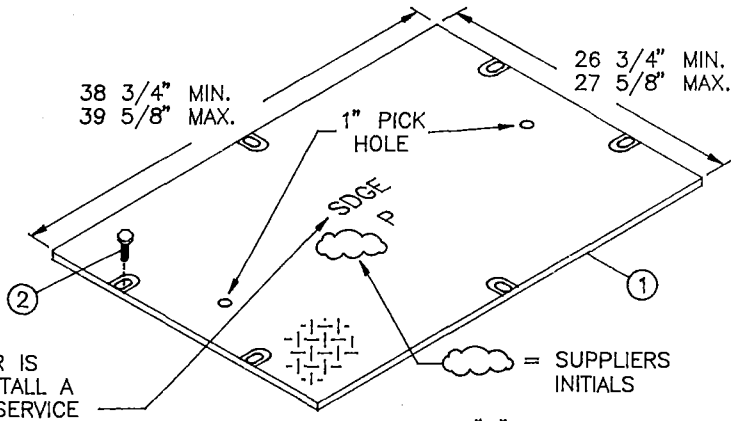

"ELECTRIC"
IF THE CUSTOMER IS REQUIRED TO INSTALL A HANDHOLE IN A SERVICE LATERAL THE LID SHALL BE MARKED "ELECTRIC" NOT SDG&E.

FOR FIELD MAINTENANCE ONLY

NOTES:

– HANDHOLE SECTIONS AND COVERS FROM DIFFERENT SUPPLIERS ARE NOT INTERCHANGEABLE.

BILL OF MATERIAL:

ITEM	DESCRIPTION	QUANTITY	STOCK NUMBER
1	COVER, PARKWAY	1	286834
2	BOLT, PENTAHEAD 1/2" X 1–1/2"	6	156004

3314 STEEL
PARKWAY COVERS
WEIGHT: 378# MAX.

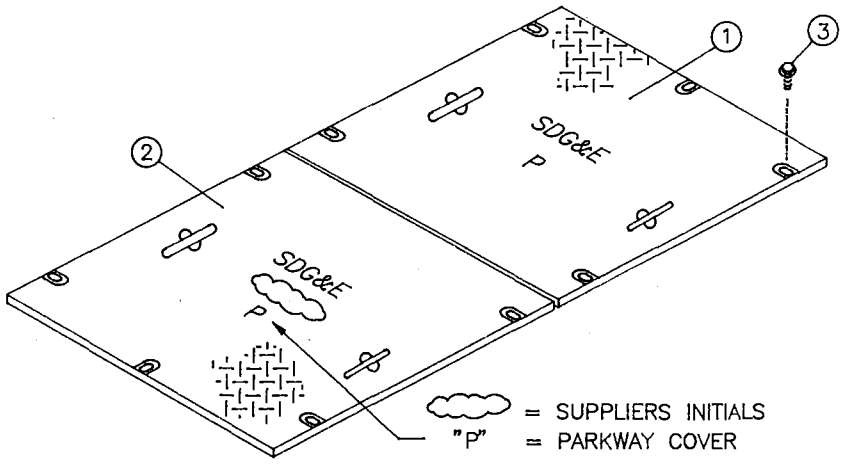

NOTES:

– HANDHOLE SECTIONS AND PARKWAY COVERS FROM DIFFERENT SUPPLIERS ARE NOT INTERCHANGEABLE.

BILL OF MATERIAL:

ITEM	DESCRIPTION	QUANTITY	STOCK NUMBER
1	COVER, PARKWAY (2 PC)	1	286842
2	COVER, HALF W/LIP, PARKWAY (FOR USE IN TRANSFORMER INSTALLATIONS)	1	286843
3	BOLT, PENTAHEAD 1/2" X 2–1/2"	12"	156012
	WASHER, 1/2", FLAT ROUND STAINLESS STEEL	12"	799680

DATE 1-1-96
APPD

SDG&E ELECTRIC STANDARDS

3313 & 3314 STEEL PARKWAY COVERS

3399.109

TABLE OF CONTENTS

SCOPE: THIS STANDARD SHOWS 3315 & 3316 HANDHOLE PARKWAY COVERS.

3315 STEEL PARKWAY COVERS

STEEL COVERS INC. (2)
REMOVABLE SUPPORT BARS
WEIGHT: 438# TOTAL MAX.

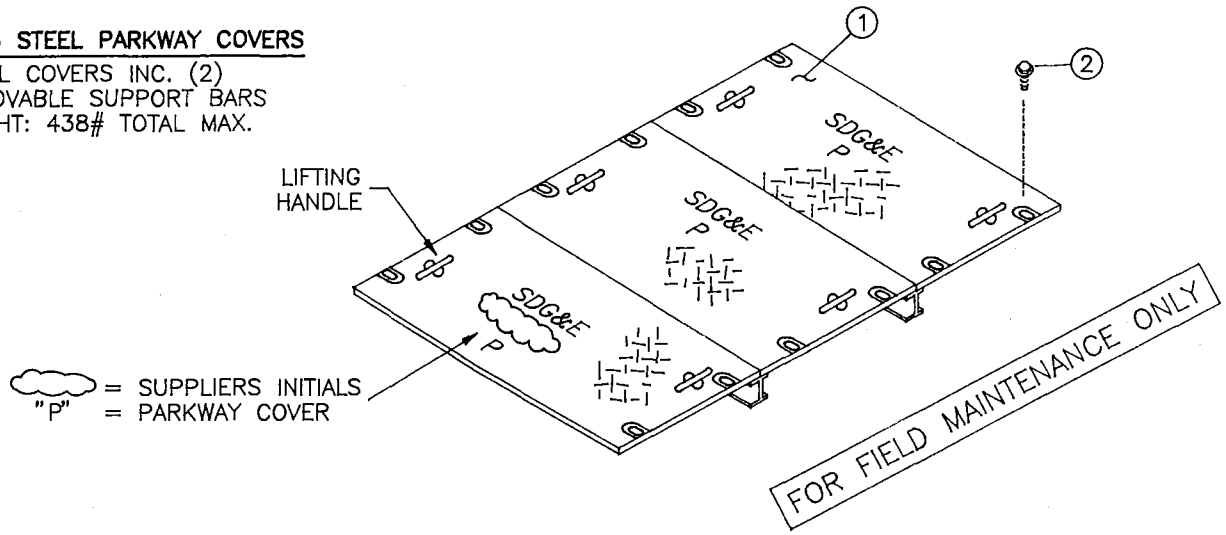

NOTES:

– HANDHOLE SECTIONS AND PARKWAY COVERS FROM DIFFERENT SUPPLIERS ARE NOT INTERCHANGEABLE.

BILL OF MATERIAL FOR PARKWAY 3315 HANDHOLE:

ITEM	DESCRIPTION	QUANTITY	STOCK NUMBER
1	COVER, PARKWAY STEEL PAINTED (3 PC.)	1	286980
2	BOLT, PENTAHEAD 1/2" X 2–1/2"	12	156012

3316 STEEL PARKWAY COVERS

STEEL COVERS INC. (3)
REMOVABLE SUPPORT BARS
WEIGHT: 622# TOTAL

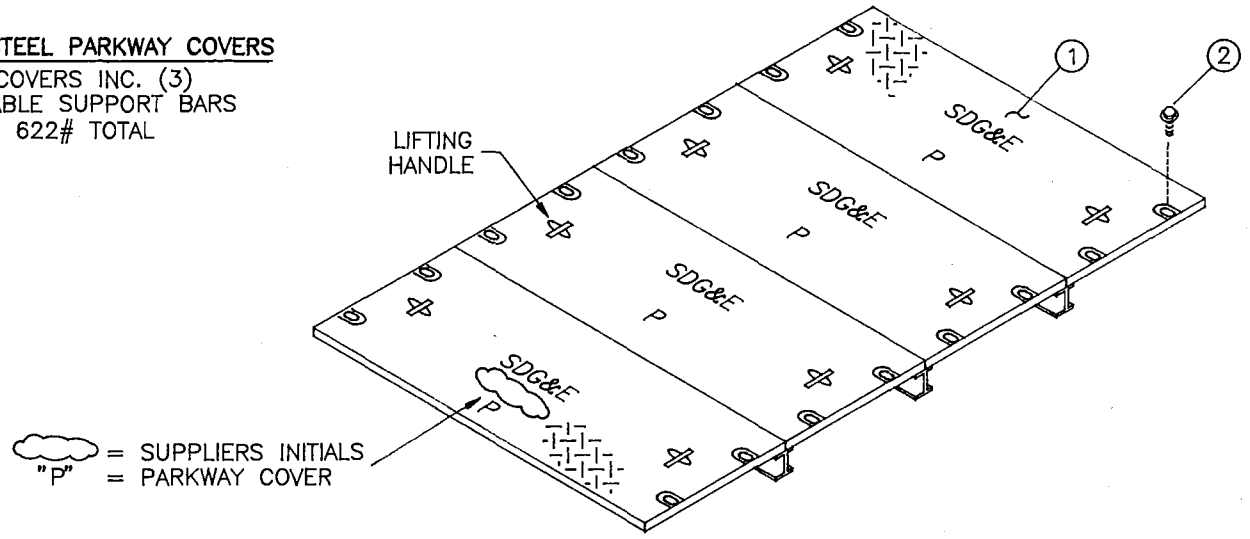

NOTES:

– HANDHOLE SECTIONS AND COVERS FROM DIFFERENT SUPPLIERS ARE NOT INTERCHANGEABLE.

BILL OF MATERIAL FOR PARKWAY 3316 HANDHOLE:

ITEM	DESCRIPTION	QUANTITY	STOCK NUMBER
1	COVER, PARKWAY STEEL (4 PC.)	1	248164
2	BOLT, PENTAHEAD 1/2" X 2–1/2"	16	156012

	SDG&E ELECTRIC STANDARDS	
DATE 1-1-96 APPD	3315 & 3316 STEEL PARKWAY COVERS	3399.110

TABLE OF CONTENTS

SCOPE: THIS STANDARD SHOWS THE OBSOLETE BASE ENCLOSURE FOR THE 3315 HANDHOLE.

FOR FIELD MAINTENANCE ONLY

60" BASE ENCLOSURE
WEIGHT: 11,320# MAX.
STOCK NUMBER 334356

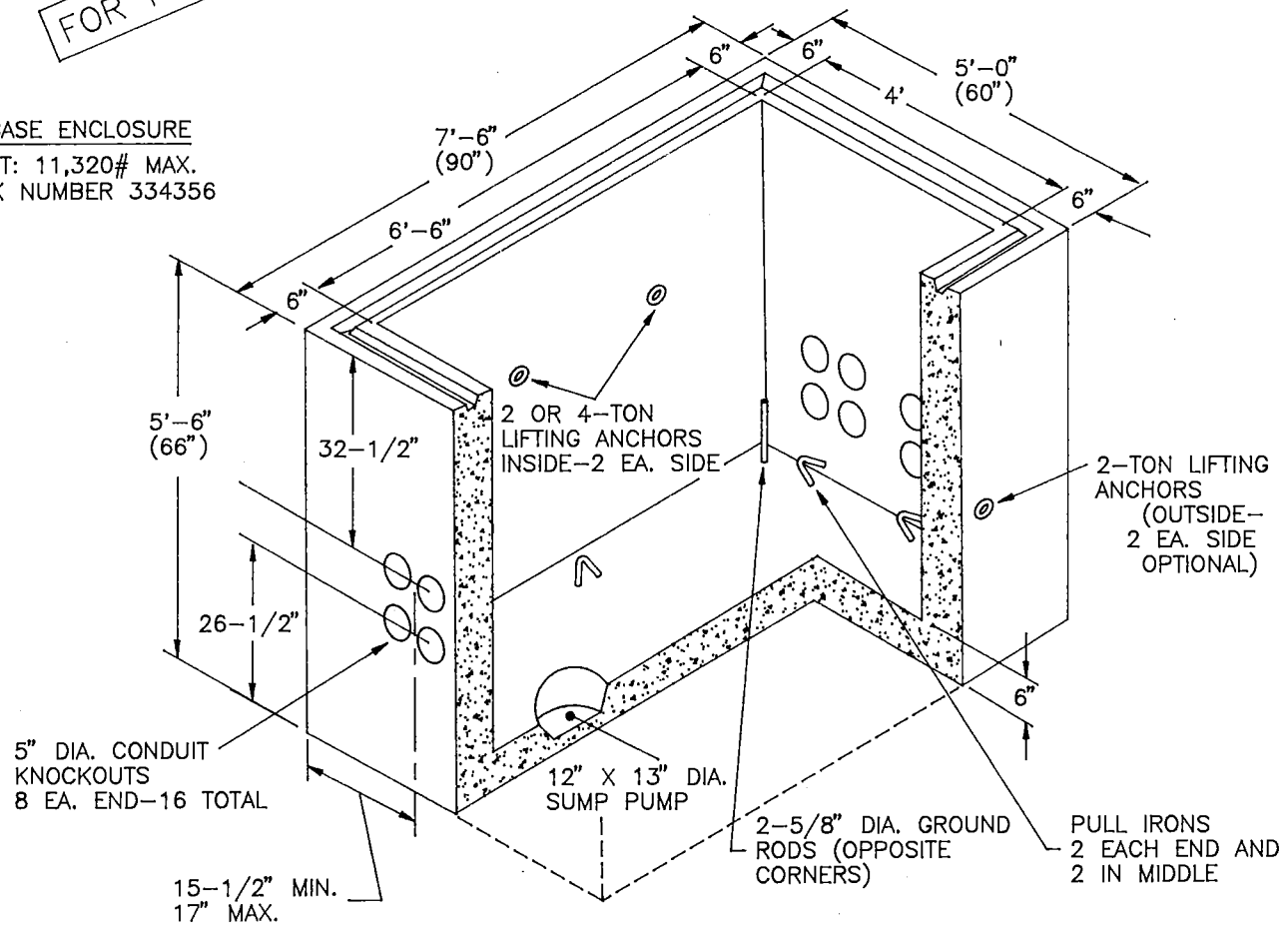

TABLE OF CONTENTS

DATE 1–1–96 APPD	SDG&E ELECTRIC STANDARDS HANDHOLE EQUIPMENT ENCLOSURE (INSIDE DIMENSIONS – 4' x 6'–6")	3399.111

SCOPE: THIS STANDARD SHOWS THE INSTALLATION AND MATERIAL FOR A 3320 MANHOLE. (MANHOLE IS TO BE USED ONLY FOR A PMH 9 OR PMH 11 SWITCH INSTALLATION).

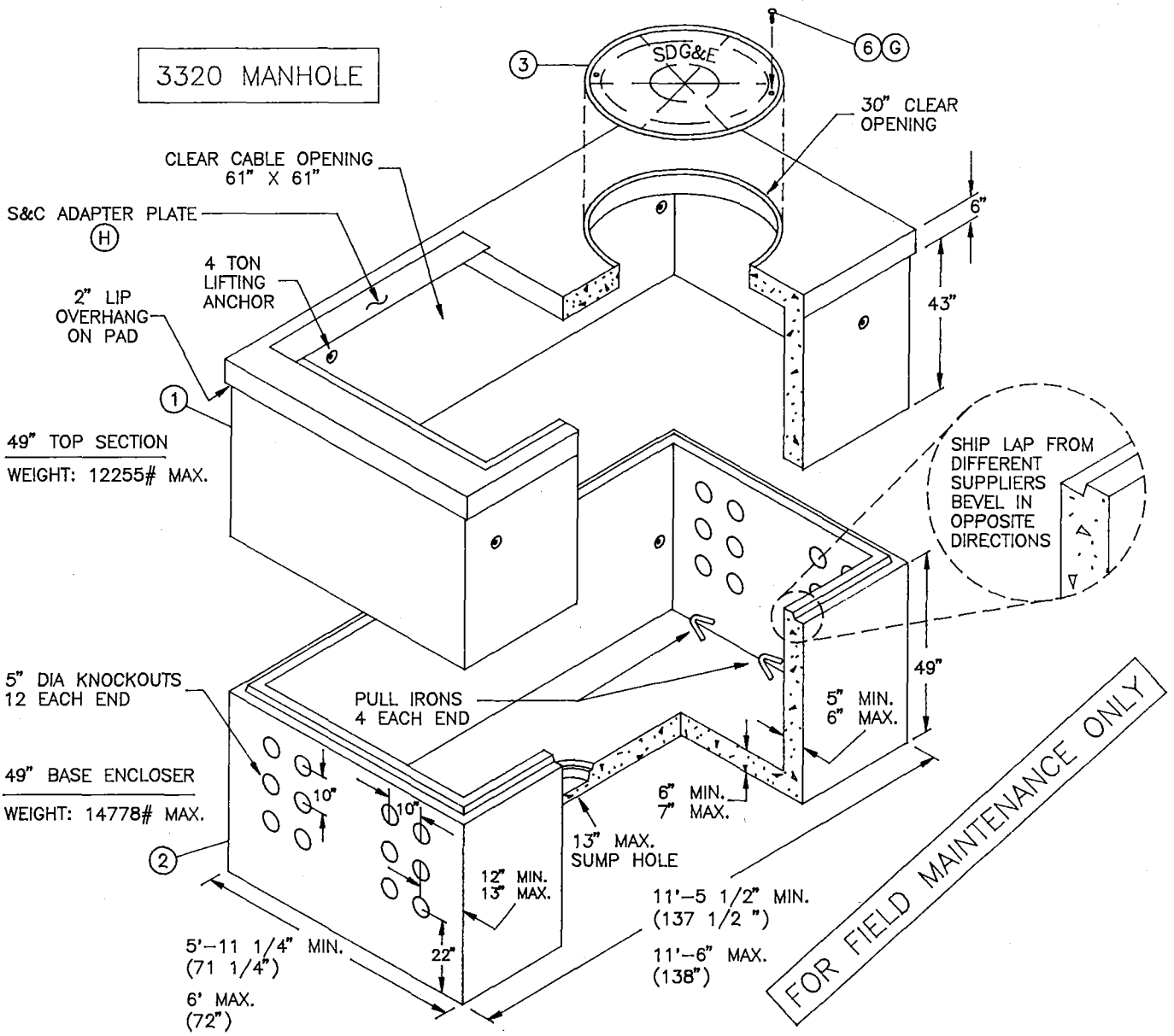

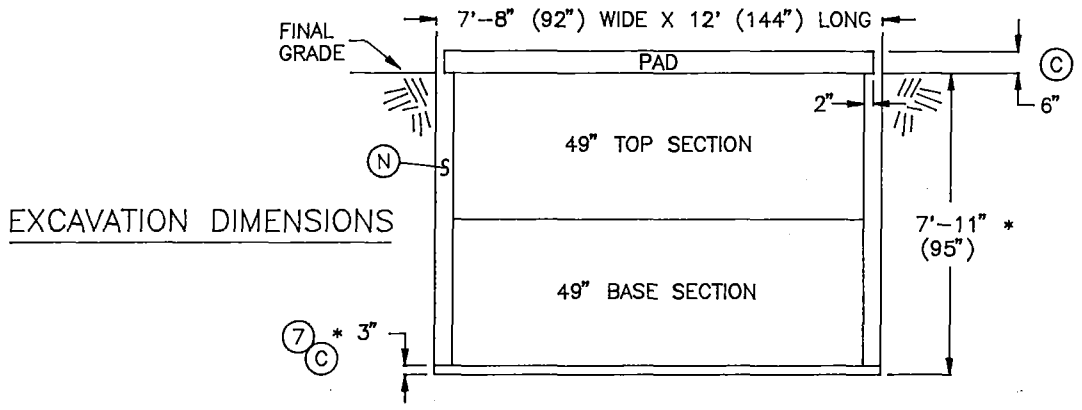

EXCAVATION DIMENSIONS

* EXCAVATION DEPTH ALLOWS AN ADDITIONAL 3" FOR PLACEMENT OF GRAVEL AS BASE SUPPORT.

DATE 1-1-96 APPD	SDG&E ELECTRIC STANDARDS MANHOLE EQUIPMENT ENCLOSURE (INSIDE DIMENSIONS – 10'-6" X 5')	3399.112

TABLE OF CONTENTS

NOTES:

- MANHOLE SECTIONS AND COVERS FROM DIFFERENT SUPPLIERS ARE NOT INTERCHANGEABLE.
- THE PREFERRED LOCATION FOR A 3320 MANHOLE IS IN NON-VEHICULAR TRAFFIC AREAS (BEHIND SIDEWALK).
- LIFTING ANCHORS ARE NOT TO BE USED FOR CABLE PULLING.
- 3320 MANHOLES ARE DELIVERED BY THE SUPPLIER TO JOB SITE.

BILL OF MATERIAL:

ITEM	DESCRIPTION	QUANTITY	CONSTR. STD OR PAGE NO.	STOCK NUMBER	STOCK NUMBER	ASSEMBLY UNITS
1	TOP SECTION 49"	1	3320	633674	COMPLETE MANHOLE 475900	20-TOP
2	BASE ENCLOSURE 49"	1	3320	125758		20BASE
3	30" MANHOLE COVER, CAST IRON	1	3320	287020		IRNCOV
4	SEALANT, PLASTIC MASTIC	AS REQ'D	3320	631872		COMPLETE MANHOLE 3320MH
5	SILICONE GREASE	AS REQ'D	–	319424		
6	BOLT 5/8" X 1-1/2"	4	3306	156758		
7	GRAVEL 3/8" X 3/4"	AS REQ'D	–			

INSTALLATION:

A. ESTABLISH THE MANHOLE LOCATION PAYING PARTICULAR ATTENTION TO FOREIGN UTILITY PLACEMENTS. RELOCATING THE MANHOLE TO ANOTHER LOCATION REQUIRES APPROVAL FROM SERVICE PLANNING.

B. AFTER THE LOCATION IS ESTABLISHED, MARK OUT DIMENSIONS FOR THE EXCAVATION WIDTH, LENGTH AND DEPTH PER DRAWING. THE WIDTH AND LENGTH DIMENSIONS GIVEN, ALLOW AN EXTRA 8 INCHES FOR SETTING THE SUBSTRUCTURE.

(C) EXCAVATION IS NOW PREPARED FOR INSTALLATION OF SUBSTRUCTURE SECTIONS. PLACE BASE ENCLOSURE ON 3 INCHES OF GRAVEL. PLACE PLASTIC-MASTIC SEALANT BETWEEN SECTIONS. USE DOUBLE SEAL IF FIELD CONDITIONS INDICATE THAT WATER WILL PENETRATE THE JOINTS. ASSURE THE SUBSTRUCTURE WALLS ARE STRAIGHT AND THE FLOOR AND PAD (TOP SECTION) IS LEVEL. SET THE PAD PORTION OF THE TOP SECTION 6 INCHES ABOVE FINAL GRADE.

D. TO DETERMINE FINAL GRADE, ONE OF TWO FOLLOWING METHODS MAY BE USED: 1) WHEN CURB OR GRADE LEVEL IS ESTABLISHED, MEASURE FROM THE TOP OF CURB OR GRADE OR 2) HAVE THE FIELD ENGINEER SET THE GRADE STAKES. AFTER GRADE LEVEL IS ESTABLISHED, SET A STRING LINE FOR CHECKING GRADE LEVEL.

F. INSTALL CONDUITS USING THE BOTTOM OUTSIDE (CLOSEST TO THE WALL) KNOCKOUTS FIRST.

(G) APPLY SILICONE GREASE TO THE PENTAHEAD BOLTS WHEN SECURING THE COVERS TO REDUCE REMOVAL OR INSTALLATION DIFFICULTIES. TIGHTEN DOWN BOLTS WITH TORQUE WRENCH TO 30 FT/LBS. MIN., 40 FT/LBS. MAX.

(H) THE S&C ADAPTOR PLATE, REQUIRED WITH S&C SWITCH IS INCLUDED WITH EVERY MANHOLE. WHEN INSTALLING A SCOTT SWITCH, REMOVE THE PLATE AND STORE IN THE MANHOLE.

REFERENCE:

K. SEE STANDARD 3399.002 FOR SUBSTRUCTURE APPLICATIONS.

L. SEE STANDARD 3305 WHEN SETTING MANHOLE ON A SLOPING GRADE.

M. SEE STANDARD 3306 FOR INSTALLATION OF PLASTIC-MASTIC SEALANT.

(N) SEE STANDARD 3365 FOR SLURRY BACKFILL.

O. SEE STANDARD 3484 FOR PAD INSTALLATION OF PADMOUNTED EQUIPMENT.

P. SEE STANDARD 3483 FOR MINIMUM OPERATING AND CLEARANCE REQUIREMENTS.

Q. SEE STANDARD 3486 FOR RETAINING WALL REQUIREMENTS AND CLEARANCES FROM REVERSE SUBGRADE RETAINING WALLS.

R. SEE STANDARD 3566 FOR PAD AND MANHOLE GROUNDING.

S. SEE STANDARD 3699.001 FOR SUBSTRUCTURE USE AND LIMITATIONS REFERENCE SHEET (MAXIMUM NUMBER OF CABLES, CONNECTORS AND CONDUITS).

FOR FIELD MAINTENANCE ONLY

TABLE OF CONTENTS

DATE 1-1-96 APPD	SDG&E ELECTRIC STANDARDS MANHOLE EQUIPMENT ENCLOSURE (INSIDE DIMENSIONS – 10'-6" X 5')	3399.113

U-27.1

MAJOR USE:

USED FOR SPLICING 15KV CABLES.

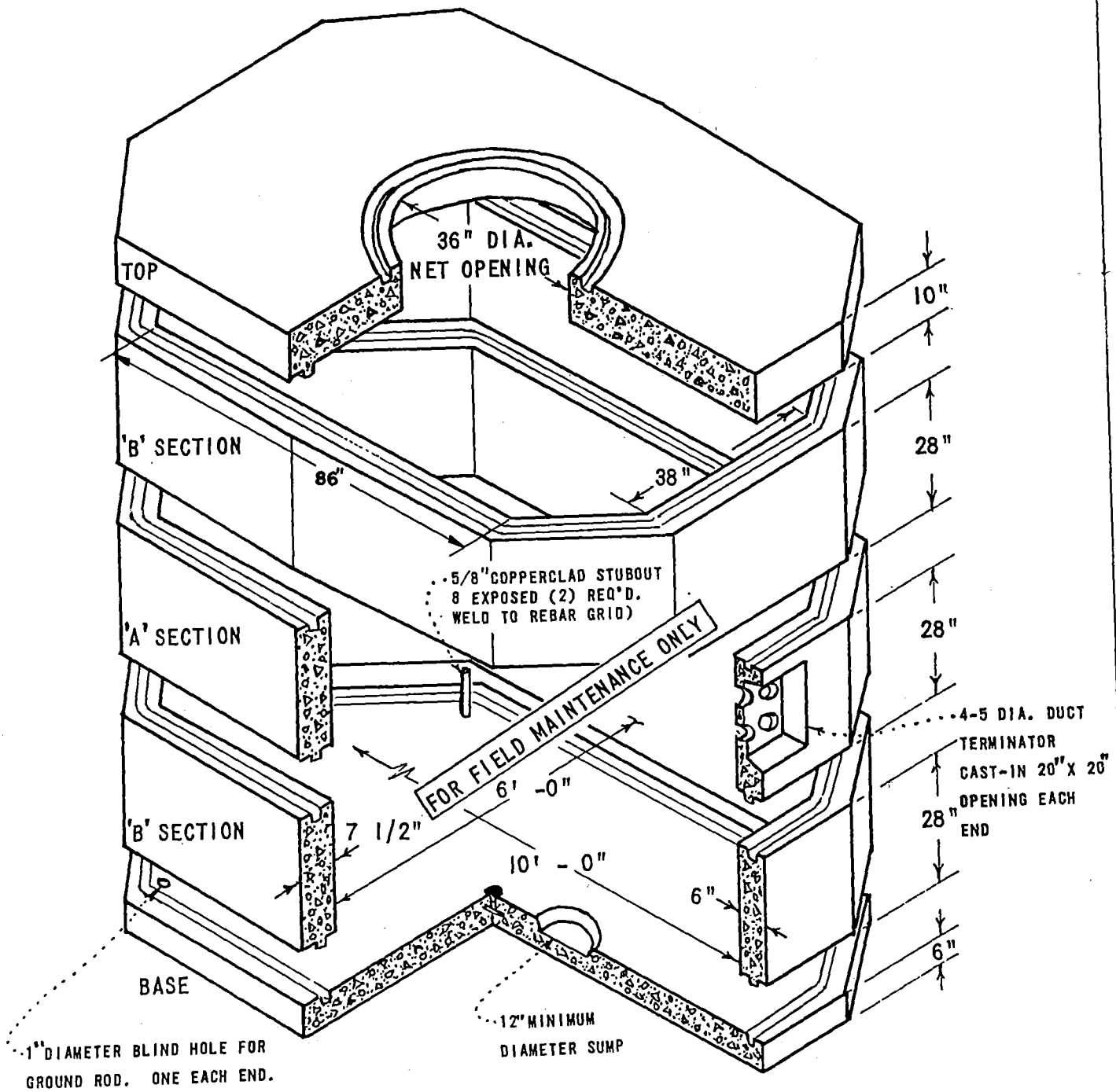

TABLE OF CONTENTS

SDG&E ELECTRIC STANDARDS

MANHOLE – 6' X 10' X 7'

3399.201

DATE 1-1-93

APPD

STOCK NUMBERS	
TOP	287112
A SECTION	336260
B SECTION	336264
BASE	125736

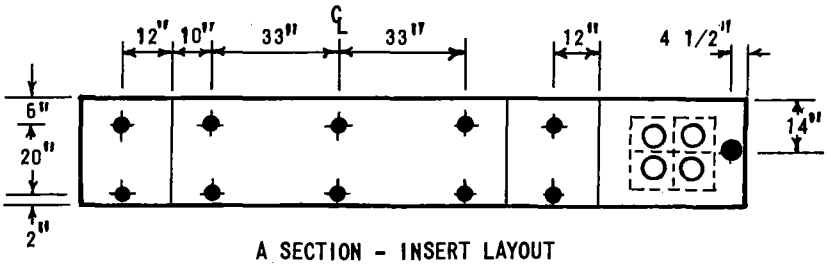

A SECTION - INSERT LAYOUT
(1/2 SECTION SHOWN)

LEGEND:

- ■ = GROUNDING REBAR
- O = 1" GROUND ROD BLIND HOLE
- ✚ = 1/2" INSERT
- ✚ = 1" INSERT
- ✚ = 12" DIAMETER SUMP
- ▭ = KNOCKOUT

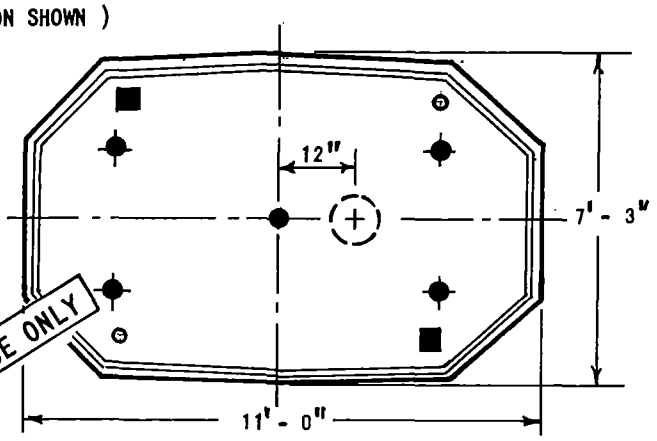

BASE LAYOUT

FOR FIELD MAINTENANCE ONLY

SECTION DETAILS					
SECTION	1/2" INSERT	1" INSERT	MISC.	POSITION	WEIGHT LBS.
TOP	-	-	36" DIA. OPENING	TOP	6850
A	20	2	4-5" DUCT TERMINATORS 1 EACH END	1 OR 2	5675
B	28	-	SAME AS 'A' WITH NO DUCT TERMINATORS	1, 2 OR 3	5675
BASE	-	1	SEE BASE LAYOUT ABOVE	BASE	5050

NOTES:

A. LOCATE 12" SUMP UNDER OPENING IN TOP SECTION.

B. USE MASTIC SEALING COMPOUND (631872) BETWEEN ALL SECTIONS.

C. AN EXCAVATION, 9' - 6" X 13' - 0" X 10' - 8", IS REQUIRED FOR INSTALLATION OF THE MANHOLE TOP AT AN ELEVATION 2' BELOW GRADE, DEPTH TO BE 10' - 8" MAXIMUM.

D. FOR 36" MANHOLE NECK AND COVER SEE (3399.306).

E. THIS INSTALLATION IS LIMITED TO A MAXIMUM OF 6 - 5" CONDUITS.

F. USE SOFT DRAWN #1/0 BARE COPPER WIRE (812752) FOR MANHOLE GROUNDING, WITH GROUND ROD CLAMP (M&S 230015).

TABLE OF CONTENTS

3399.202	SAN DIEGO GAS & ELECTRIC COMPANY UNDERGROUND STANDARDS	DATE 6-30-78
	MANHOLE, 6' X 10' X 7'	APPD TAF

MAJOR USE:

USED AS A MAJOR EQUIPMENT INSTALLATION AND LIMITED CABLE SPLICING.

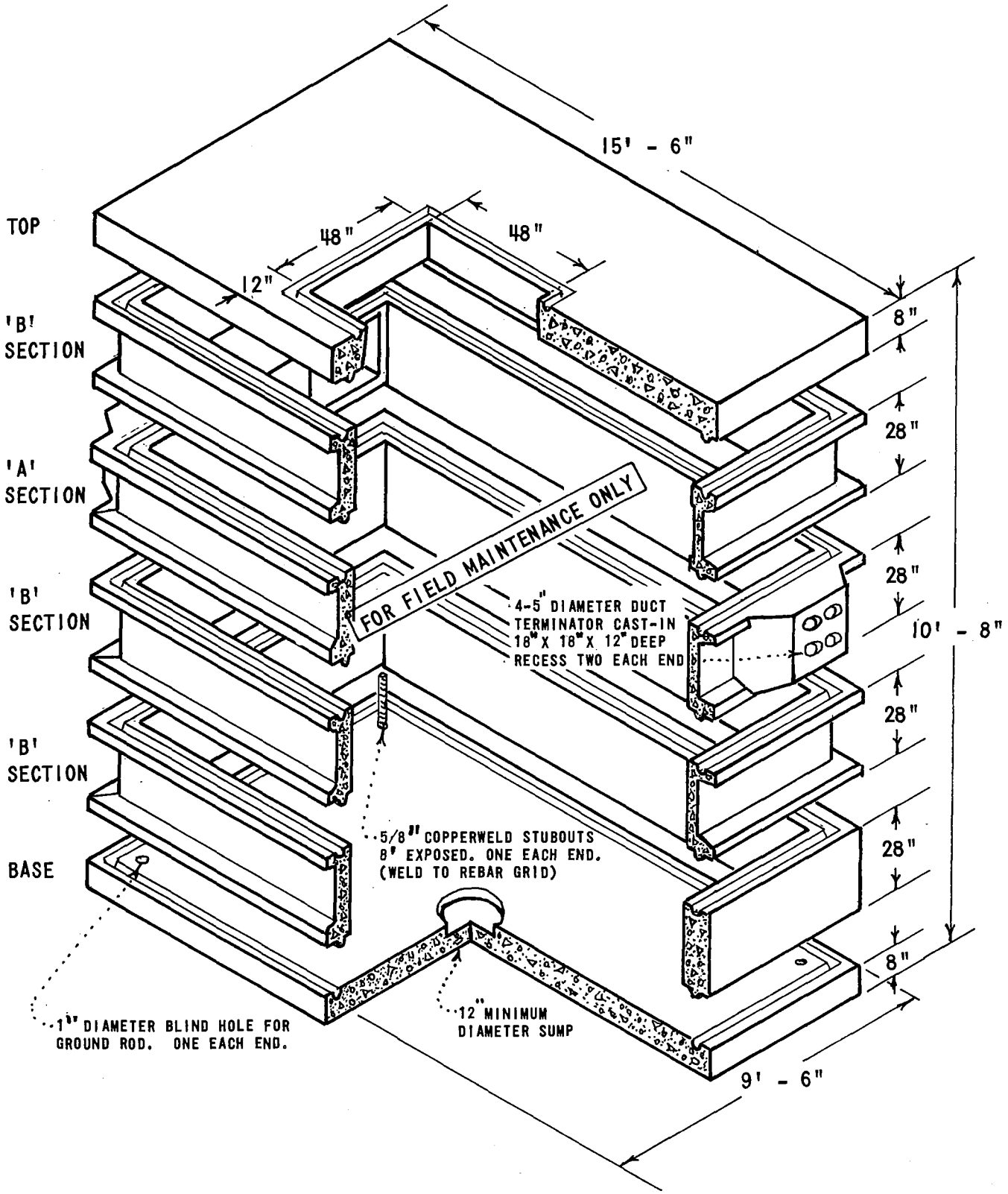

TABLE OF CONTENTS

DATE 4-10-75 APPD	SAN DIEGO GAS & ELECTRIC COMPANY UNDERGROUND STANDARDS MANHOLE, 8' X 14' X 9' - 4"	3399.203

STOCK NUMBERS	
TOP	287128
'A' SECTION	336280
'B' SECTION	336284
BASE	125752

NOTES:

A. AN EXCAVATION, 13'-6"X 18'-8"X 13'-6" IS REQUIRED FOR INSTALLATION OF THE MANHOLE WITH THE TOP AT AN ELEVATION 2'-0"BELOW GRADE. DEPTH IS TO BE 13'-6"MAXIMUM.

B. USE MASTIC SEALING COMPOUND (631872) BETWEEN ALL SECTIONS SEE (3306).

C. FOR 48"X 48"MANHOLE NECK AND COVER SEE (3332).

D. THIS MANHOLE REQUIRES THE USE OF A 30 TON MINIMUM CRANE FOR LIFTING SECTIONS.

E. USE SOFT DRAWN #1/0 BARE COPPER WIRE (812752) FOR MANHOLE GROUNDING.

F. LOCATE 12"SUMP DIRECTLY UNDER CENTER OF OPENING.

G. PROVIDE A 1"INSERT OPPOSITE EACH DUCT RECESS IN AN 'A' SECTION.

H. IN 'A' SECTION, OMIT 2-1/2"INSERTS AT EACH LOCATION A DUCT RECESS IS PROVIDED.

I. WHEN A MAXIMUM OF 8-5"CONDUITS ARE TO BE INSTALLED USE TWO ADJOINING 'A' SECTIONS FOR CONDUIT ENTRANCE.

J. ALL UNCOATED METAL TO BE HOT DIPPED GALVANIZED FOR CORROSION PROTECTION.

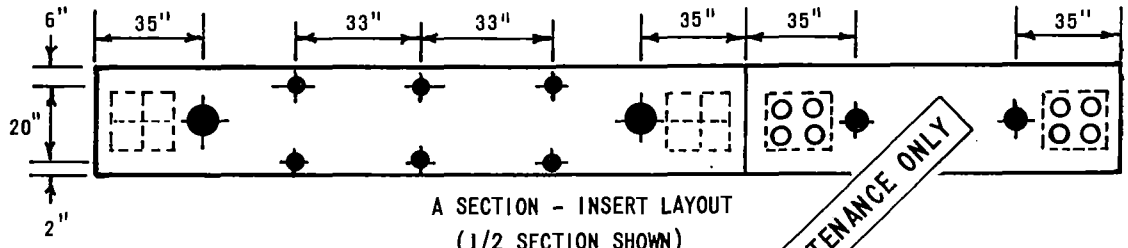

A SECTION - INSERT LAYOUT
(1/2 SECTION SHOWN)

DUCT RECESS:

ALL THE DUCT RECESSES WILL BE FURNISHED ON THE 'A' SECTION.

THE END RECESSES WILL BE COMPLETE WITH 4-5"DUCT TERMINATORS.

ALL SIDE RECESSES WILL BE KNOCKOUTS.

LEGEND:

- GROUNDING REBAR
- 1"GROUND ROD BLIND HOLE
- 1/2"INSERT
- 1"INSERT
- 12"DIAMETER SUMP
- DUCT RECESS
- 8 TON RISS LIFTER

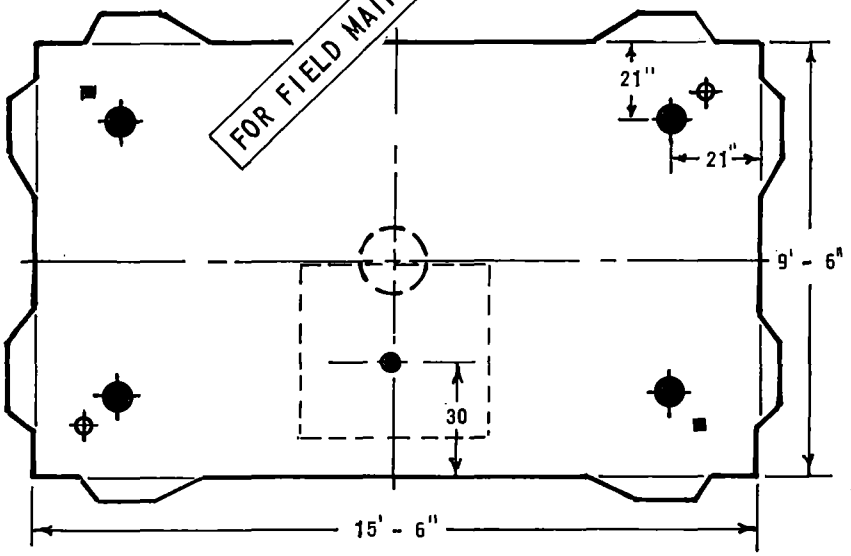

BASE LAYOUT - DUCT RECESSES/KNOCKOUTS

SECTION DETAILS

SECTION	1/2" INSERT	1" INSERT	MISC.	POSITION	WEIGHT	LIFTER
TOP	-	-	48 X 48 OPENING	TOP	9100	4
A	24 MAX.	8 MAX.	4-5 DUCT TERMINATORS, 2 EACH END	1 OR 2	5900	4
B	32	-	SAME AS 'A', WITHOUT DUCT TERM'S.	1,2,3 OR 4	5900	4
BASE	-	1	SEE BASE LAYOUT ABOVE	BASE	9550	4

3399.204	SAN DIEGO GAS & ELECTRIC COMPANY UNDERGROUND STANDARDS MANHOLE, 8' - X 14' - X 9' - 4"	DATE 4-10-75 APPD

TABLE OF CONTENTS

SCOPE: THIS STANDARD SHOWS THE MATERIALS AND INSTALLATION INSTRUCTIONS FOR THE 3322 MANHOLE. (OLD U28.4)

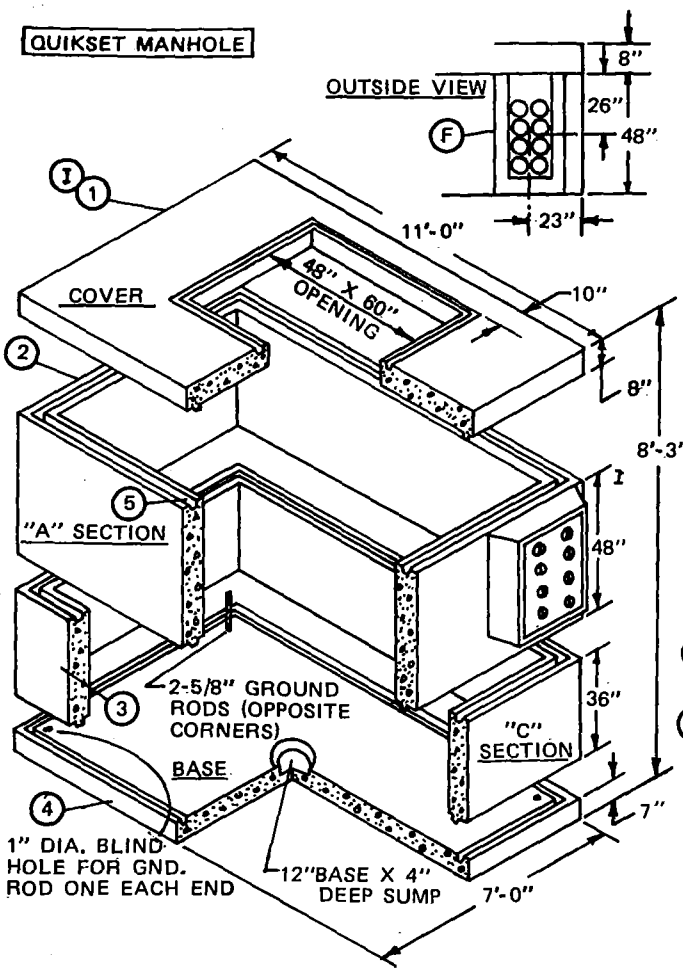

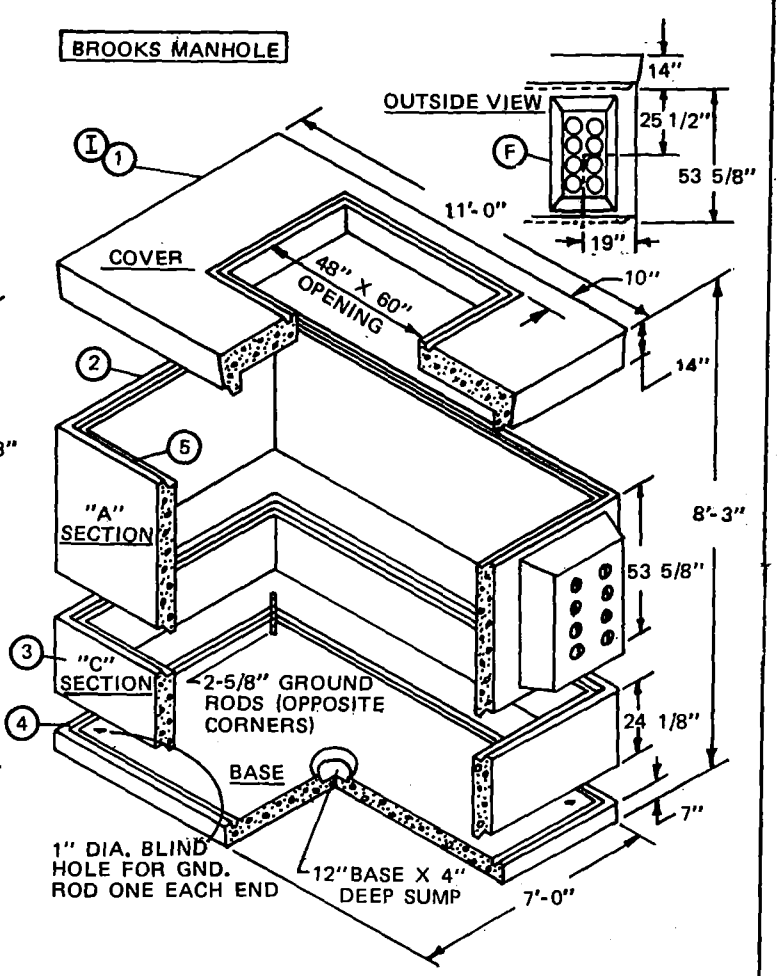

NOTES :

- MANUFACTURERS IDENTIFICATION PAINTED INSIDE "A" SECTION ON END.

THIS PAGE FOR FIELD MAINTENANCE ONLY

BILL OF MATERIAL :

ITEM	DESCRIPTION	ORDER OF INSTALLATION	1 INCH INSERT	WEIGHT (LBS.)		RISS LIFTER	CONSTR. STD.	STOCK NUMBER
				QUICK-SET	BROOKS			
1	COVER, CONCRETE MANHOLE	TOP	-	5800	7000	4	-	287120
2	EXTENSION, CONCRETE MANHOLE, "A"SECTION	BELOW TOP	2 BESIDE TERMS.	7800	9400	4	-	336268
3	EXTENSION, CONCRETE MANHOLE, "C"SECTION	BELOW "A" SECTION	-	7600	4465	4	-	336276
4	BASE, CONCRETE MANHOLE	BASE	2	5000	6875	4	-	125744
5	SEALANT, JOINT, PLASTIC- MASTIC	-	-	-	-	-	3306	631872
6	CLAMP, GROUND ROD, 5/8"	-	-	-	-	-	-	230016

DATE 1-1-92
APPD JLG/RDJ

SDG&E ELECTRIC STANDARDS

MANHOLE - 6' X 10' X 7'

3399.205

SUPERSEDES 3322.1 (3-9-83)

TABLE OF CONTENTS

INSTALLATION:

A. USE MASTIC SEALANT (STOCK NUMBER 631872) BETWEEN ALL SECTIONS, (SEE STANDARD 3306). USE DOUBLE SEAL WHEN FIELD CONDITIONS INDICATE THAT WATER WILL PENETRATE THE MANHOLE THROUGH THE JOINTS.

B. AN EXCAVATION: 9'-0" X 14'-0" X 10'-7" MINIMUM IS REQUIRED FOR INSTALLATION OF THE MANHOLE AT AN ELEVATION 2 FEET BELOW GRADE. DEPTH TO BE 10'-7" MAXIMUM.

C. USE #2 AWG BARE COPPER WIRE FOR GROUNDS. CONNECT TO GROUND RODS WITH GROUND ROD CLAMPS (STOCK NUMBER 230016).

D. WHEN INSTALLING CONDUITS, USE LOWER SET OF CONDUIT KNOCKOUTS FIRST.

(F) DUCT KNOCKOUT - 18" X 35" X 12" DEEP (QUICKSET), 18" X 36" X 12" DEEP (BROOKS).

REFERENCE:

(I) FOR 48" X 60" MANHOLE NECK AND COVER, SEE STANDARD 3332.

THIS PAGE FOR FIELD MAINTENANCE ONLY

TABLE OF CONTENTS

3399.206 SUPERSEDES 3322.2 (3-9-83)	SDG&E ELECTRIC STANDARDS **MANHOLE – 6' x 10' x 7'**	DATE 3-9-83 APPD JWT/KDRH

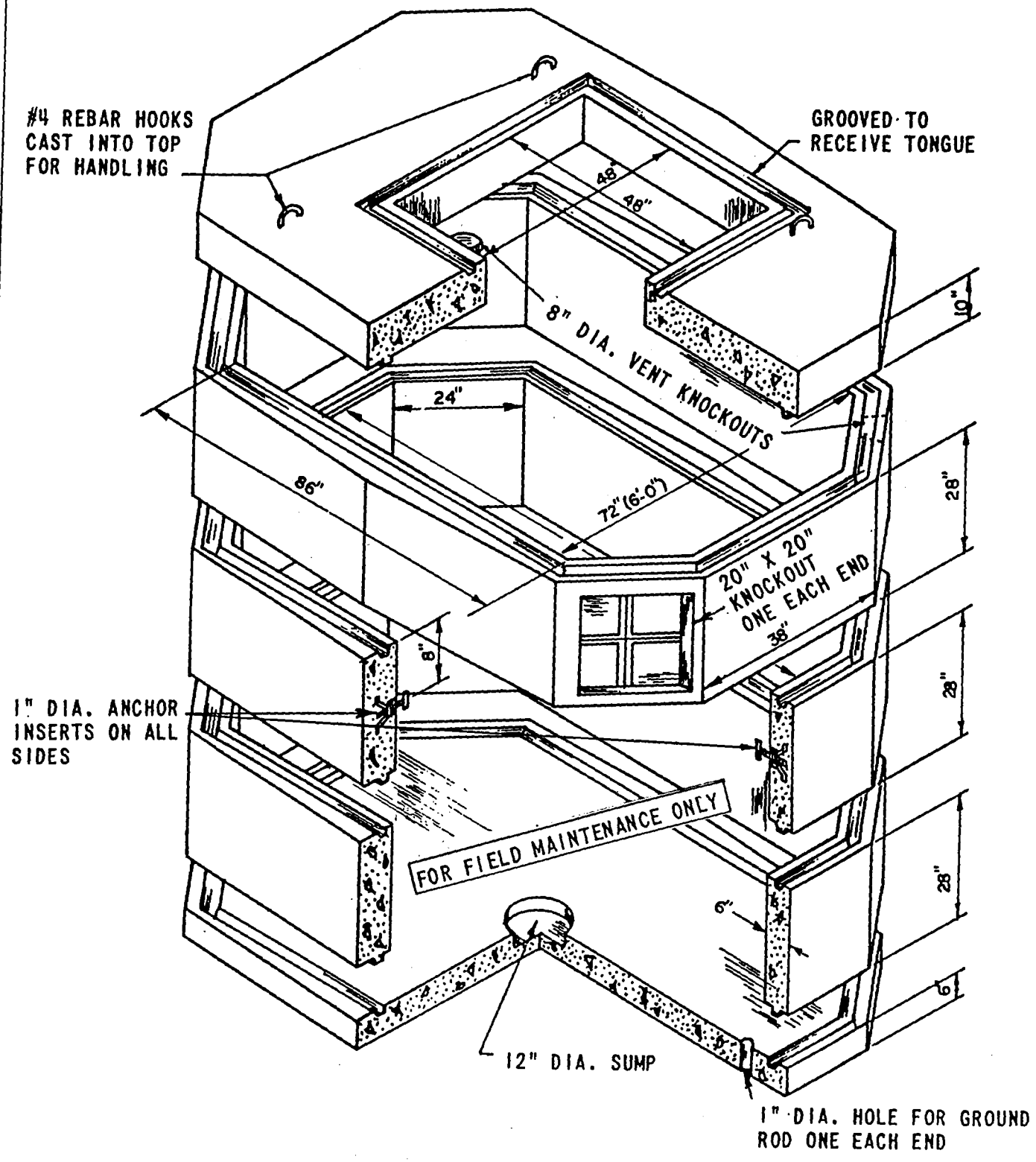

DATE 1-1-93 APPD JLG/RDS	SDG&E ELECTRIC STANDARDS MANHOLE – 6' X 10' X 9'-4" WITH 48" X 48" OPENING OFFSET IN TOP	3399.207

TABLE OF CONTENTS

TABLE OF CONTENTS

3324 MANHOLE TYPE 1

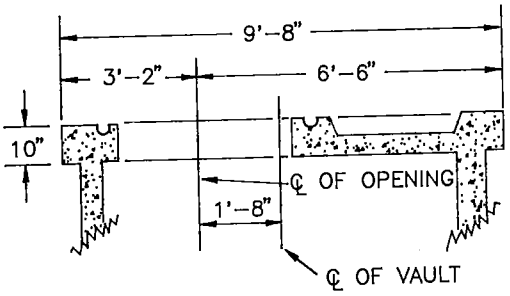

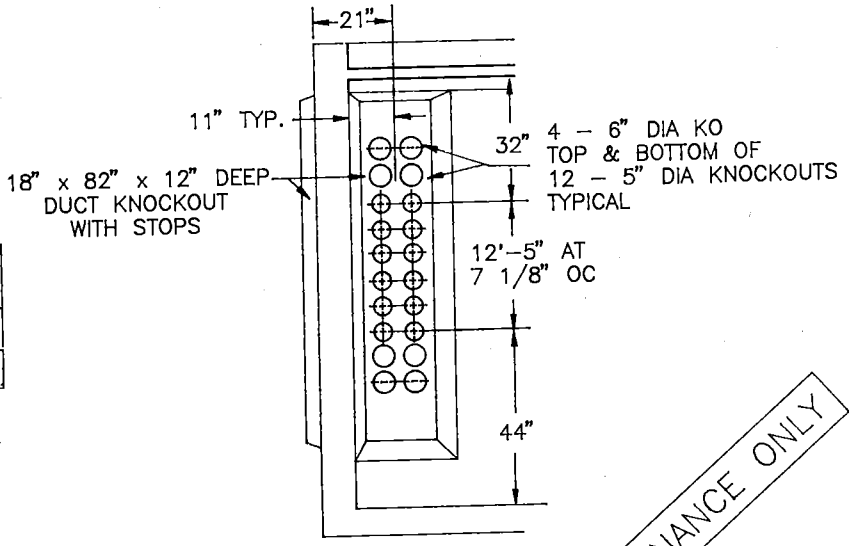

FOR FIELD MAINTENANCE ONLY

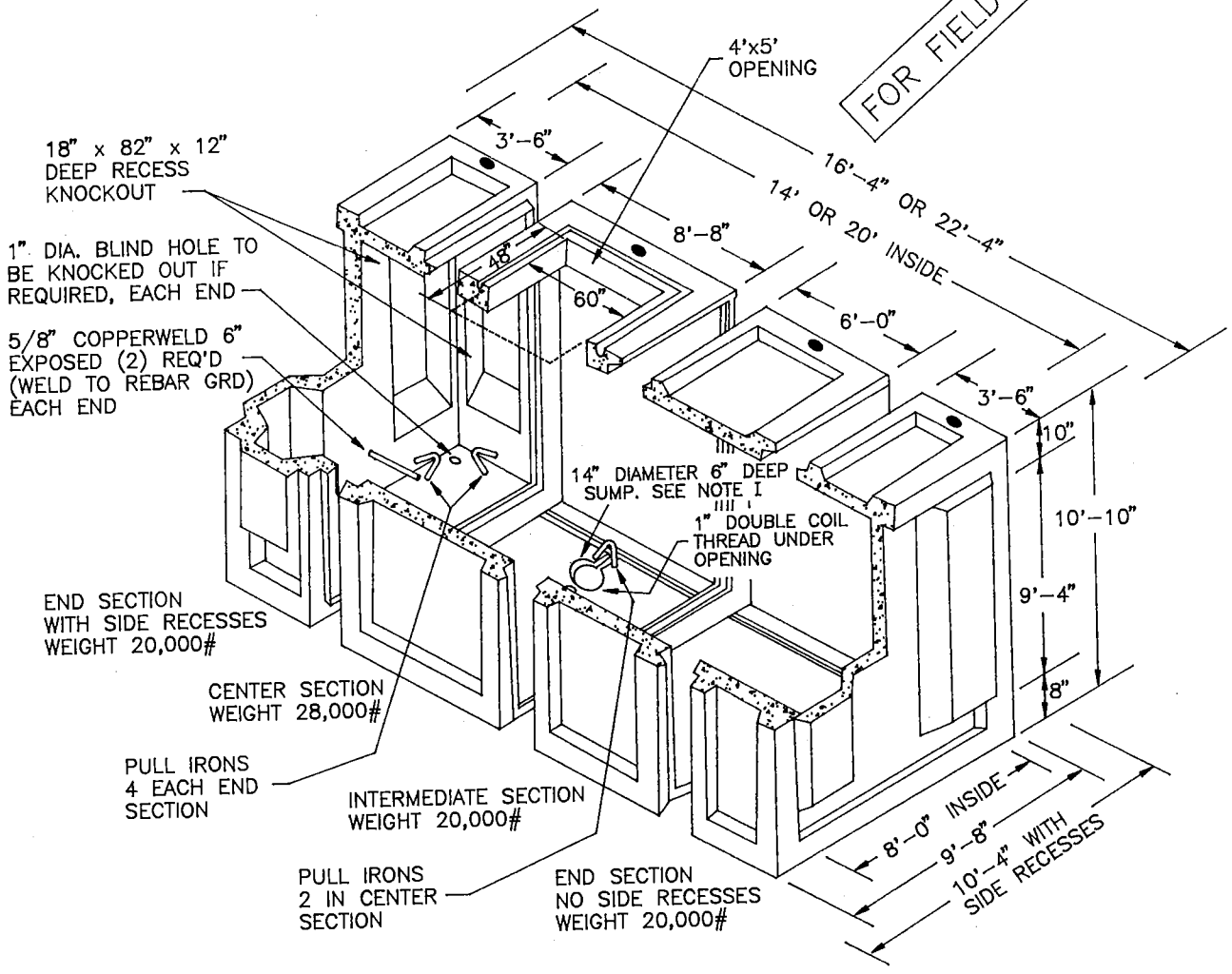

MANUFACTURER'S IDENTIFICATION PAINTED INSIDE CENTER SECTION ON SIDE.

DATE 1-1-96 APPD	SDG&E ELECTRIC STANDARDS MANHOLE, 8' x 14' x 9'-4" OR 8' x 20' x 9'-4"	3399.208

TABLE OF CONTENTS

3324 MANHOLE TYPE 2

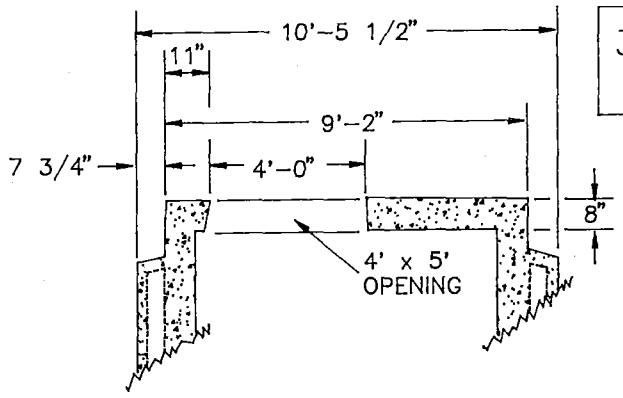

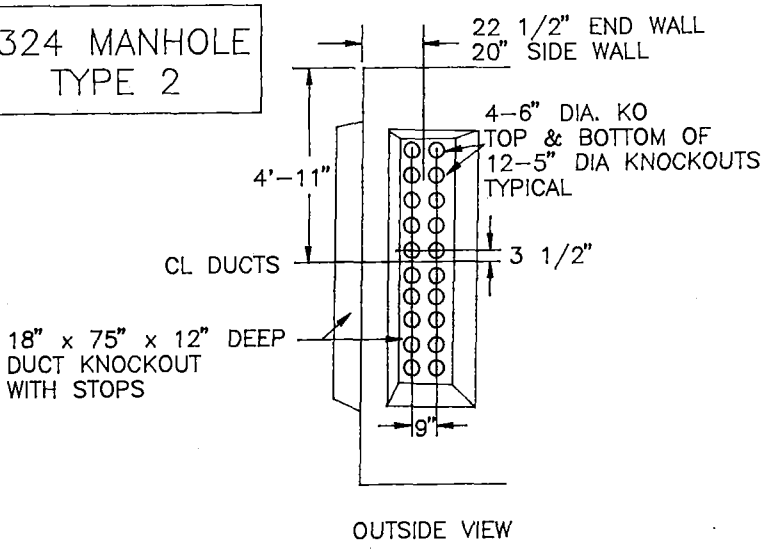

FOR FIELD MAINTENANCE ONLY

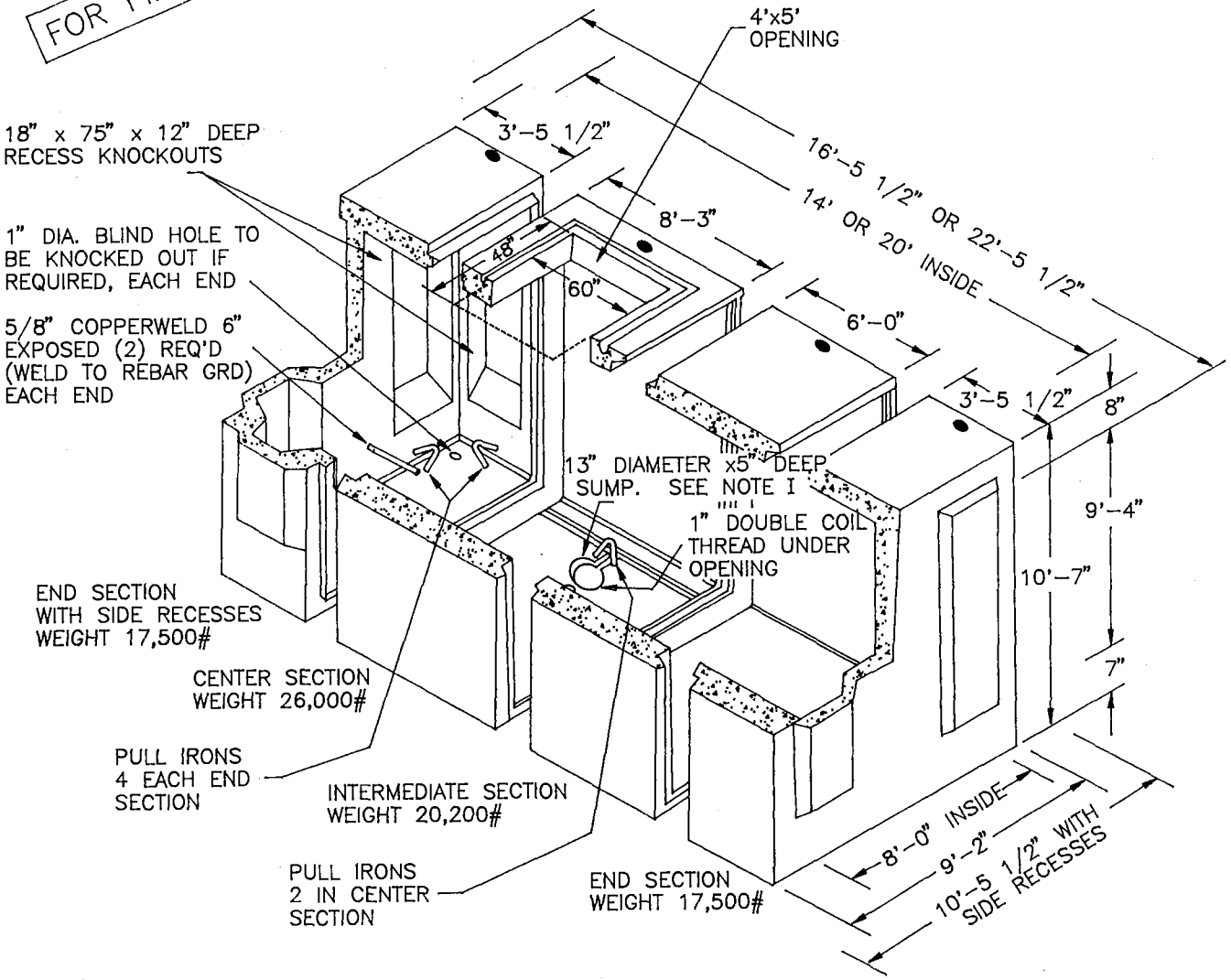

MANUFACTURER'S IDENTIFICATION PAINTED INSIDE CENTER SECTION ON SIDE.

DATE 1-1-96 APPD	SDG&E ELECTRIC STANDARDS MANHOLE, 8' x 14' x 9'-4" OR 8' x 14' x 9'-4"	3399.209

DESCRIPTION	STOCK NUMBER	ASSEMBLY UNITS		MANHOLE SIZE	MACRO UNITS
END SECTION W/SIDE RECESSES	633672	–	COMPLETE MANHOLES W/O GRADE	–	COMPLETE MANHOLES W/GRADE
6' INTERMEDIATE SECTION	336286	24MH06			
8' CENTER SECTION	633668	–	24MH14	14 FEET	M24–14
END SECTION NO SIDE RECESSES	633676	–	24MH20	20 FEET	M24–20

INSTALLATION:

A. AN EXCAVATION, 11'–8" X 19'–0" X 13'–4" DEEP FOR 14' LONG MANHOLE WITH NO SIDE RECESSES OR 12'–4" X 19'–0" X 13'–4" DEEP FOR 14' LONG MANHOLE WITH SIDE RECESSES IS REQ'D. AN EXCAVATION 11'–8" X 25'–0" X 13'–4" DEEP FOR 20' LONG MANHOLE WITH NO SIDE RECESSES OR 12'–4" X 25'–0" X 13'–4" DEEP EXCAVATION TO BE 13'–4" MAXIMUM BELOW FINAL GRADE. PLACE 6" CRUSHED ROCK ON EXCAVATION BOTTOM WITH 1/2" SLOPE TO FLOW CHANNEL.
B. USE MASTIC SEALING COMPOUND (STOCK NUMBER 631872) IN ALL SECTIONS (SEE STANDARD 3306). THEN TAKE UP ON TIGHTENING BOLTS. USE DOUBLE SEAL IF WATER IS A PROBLEM.
C. FOR 48" X 60" MANHOLE NECK AND COVER, SEE STANDARD 3332.
D. ON INITIAL CABLE INSTALLATION, OCCUPY LOWEST DUCT OPENINGS FIRST.
F. THIS MANHOLE REQUIRES THE USE OF A 30 TON MINIMUM CRANE FOR LIFTING SECTIONS.
G. USE #2 AWG BARE COPPER (STOCK NUMBER 812816) FOR GROUNDS WITH CLAMP (STOCK NUMBER 230016).
H. ALL UNCOATED METAL EXCEPT REBAR TO BE HOT DIPPED GALVANIZED OR CADMIUM PLATED FOR CORROSION PROTECTION.
I. LOCATE SUMP DIRECTLY UNDER CENTER OF OPENING.
J. CREWS SHALL INSTALL QUIK BOLTS AS NECESSARY.
K. WHEN INSTALLING CONDUIT, USE LOWER SET OF KNOCKOUTS FIRST.

FOR FIELD MAINTENANCE ONLY

REFERENCE:

Ⓜ SEE STANDARD 3365 FOR SLURRY BACKFILL.

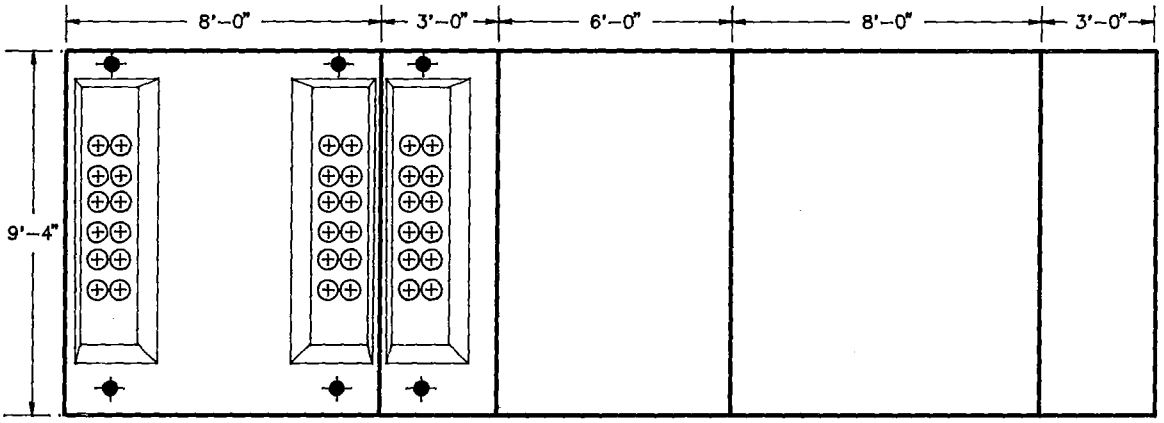

END SECTION–FOLDED OUT 1/2 SECTION LAYOUT ELEVATION

LEGEND:

- 1" INSERT (DOUBLE COIL)
- 1" GROUND ROD KNOCKOUTS (IN BASE)
- 5" DUCT TERMINATOR (CAST–IN)
- 8" TON RISS LIFTER (1 EACH SIDE IN EACH SECTION)

SECTION DETAILS					
SECTION	1" INSERTS	MISC.	WEIGHT (LBS)		RISS LIFTERS
			TYPE 1	TYPE 2	
END W/SIDE RECESS	8	(4) 12–5" DIA. DUCT TERM. (CAST–IN)	20,000	17,500	2
6' INTERMEDIATE	–	–	20,000	20,200	2
8' CENTER	8	SUMP, 48" X 60" OPENING	28,000	26,000	2
END NO SIDE RECESSES	4	(2) 12–5" DIA. DUCT TERM. (CAST–IN)	20,000	17,500	2

SDG&E ELECTRIC STANDARDS

DATE 1–1–96
APPD

MANHOLE, 8' X 14' X 9'–4" OR 8' X 20' X 9'–4"

3399.210

TABLE OF CONTENTS

TABLE OF CONTENTS

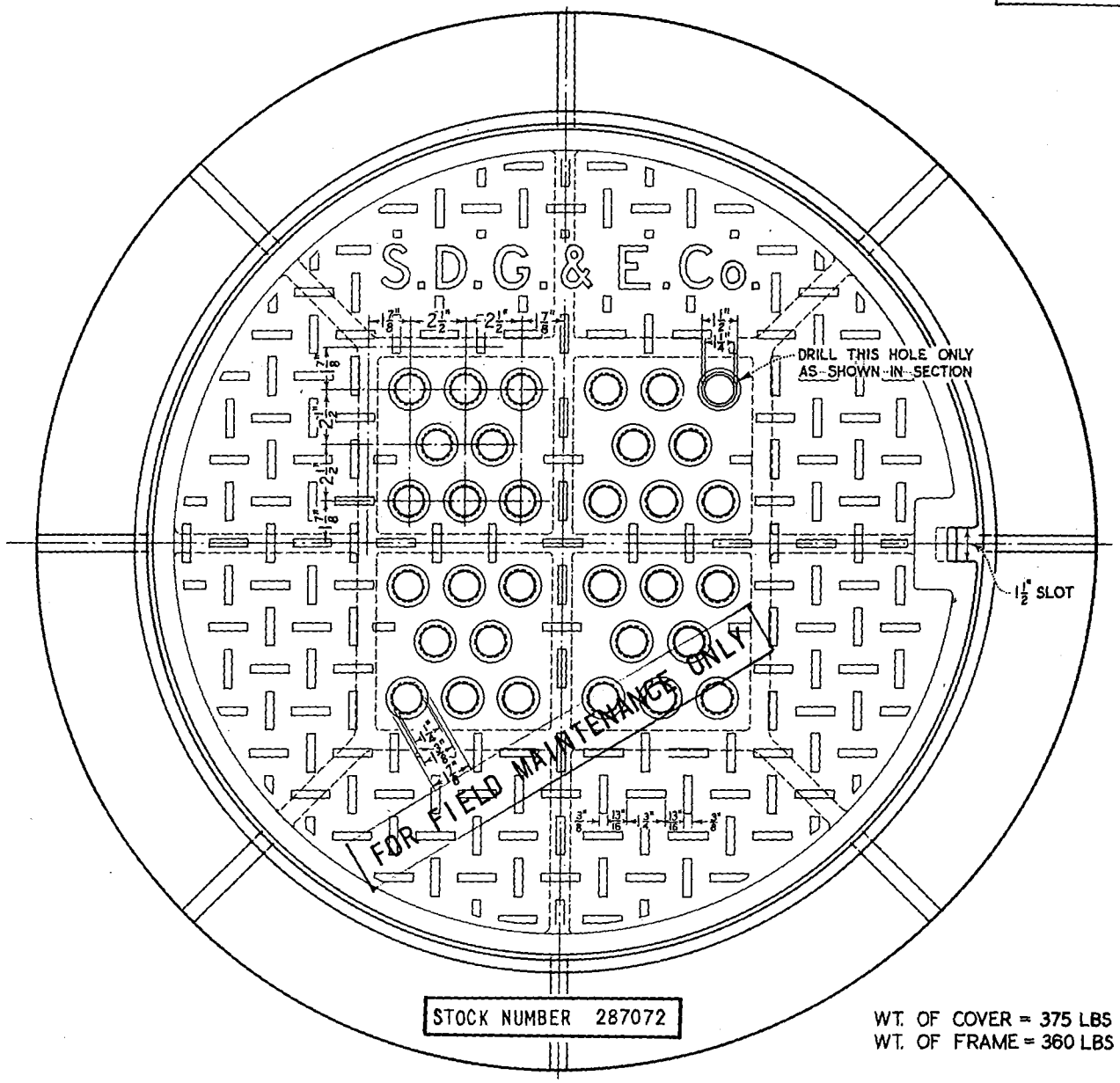

STOCK NUMBER 287072

WT. OF COVER = 375 LBS
WT. OF FRAME = 360 LBS

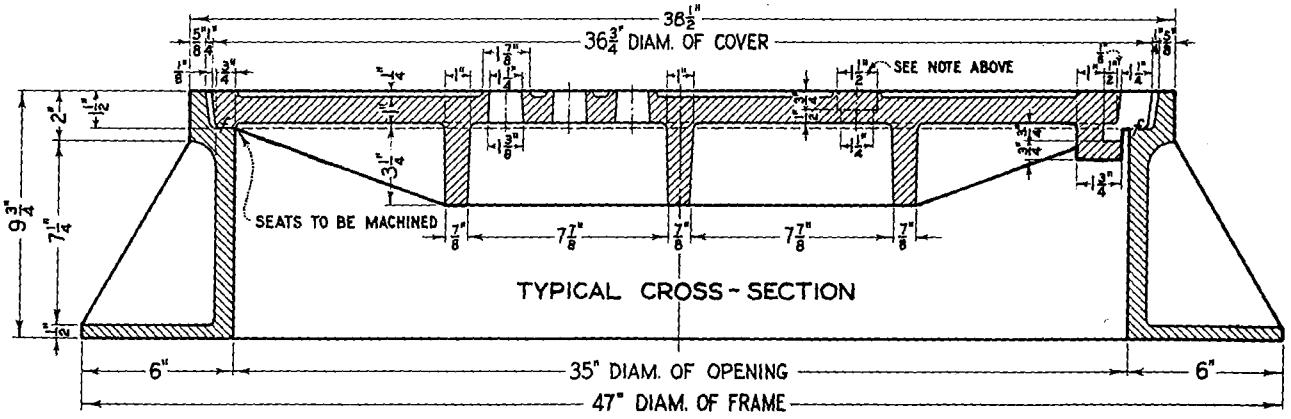

STOCK NUMBER 361856

NOTE:

MATERIAL TO BE GRAY CAST IRON PER ASTM A-48, CLASS 40

DATE 6-9-70 SDG&E	SAN DIEGO GAS & ELECTRIC COMPANY UNDERGROUND STANDARDS 35 INCH MANHOLE FRAME & COVER TRAFFIC BEARING	3399.30

U-23.5

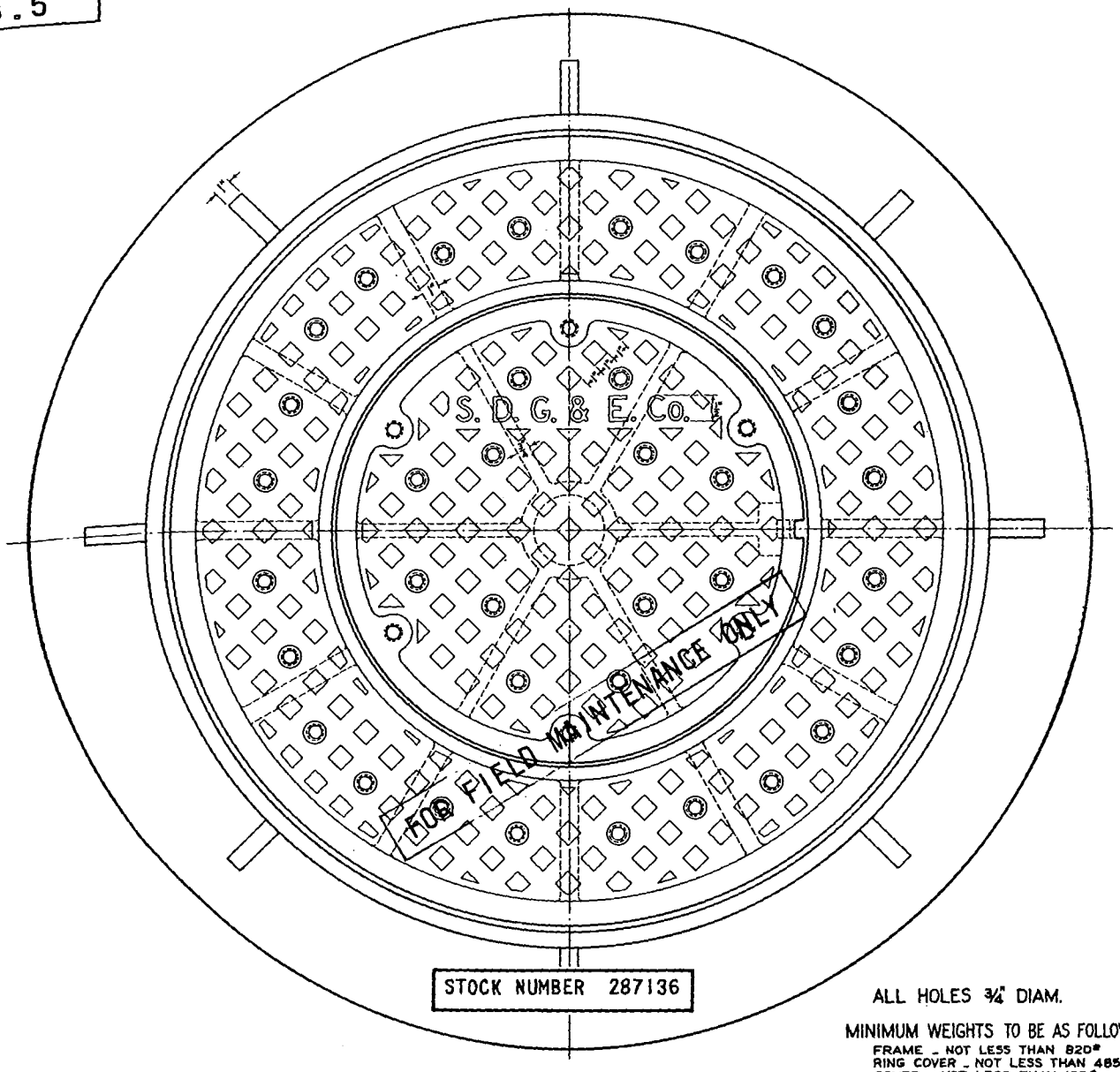

STOCK NUMBER 287136

ALL HOLES ¾" DIAM.

MINIMUM WEIGHTS TO BE AS FOLLOWS:
FRAME - NOT LESS THAN 820#
RING COVER - NOT LESS THAN 485#
COVER - NOT LESS THAN 160#

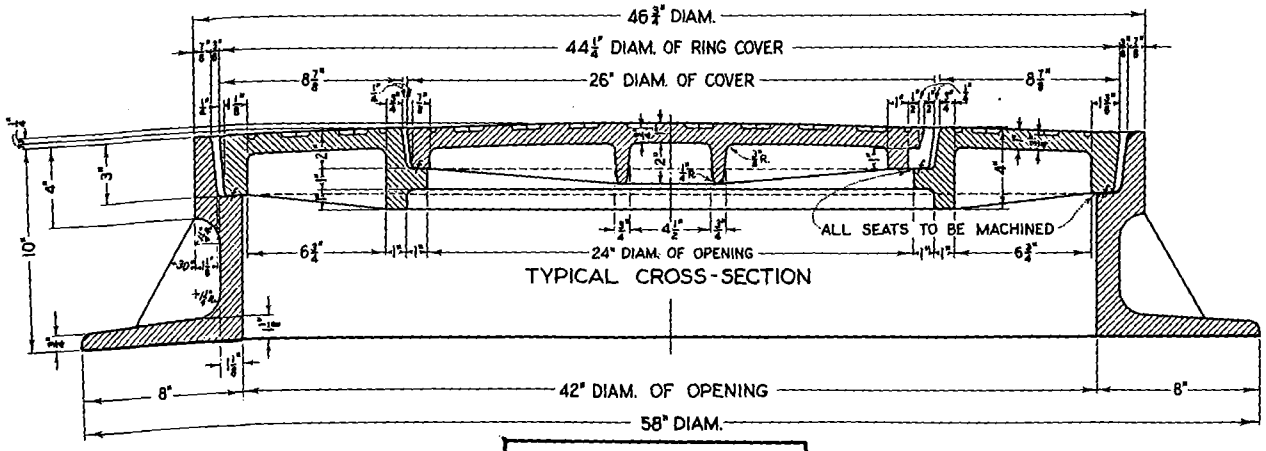

TYPICAL CROSS-SECTION

STOCK NUMBER 361888

NOTE:

MATERIAL TO BE GRAY CAST IRON PER ASTM A-48, CLASS 40

1399.302	SAN DIEGO GAS & ELECTRIC COMPANY UNDERGROUND STANDARDS 42 INCH MANHOLE FRAME & COVER TRAFFIC BEARING	DATE 6-9-70 SDG&E

TABLE OF CONTENTS

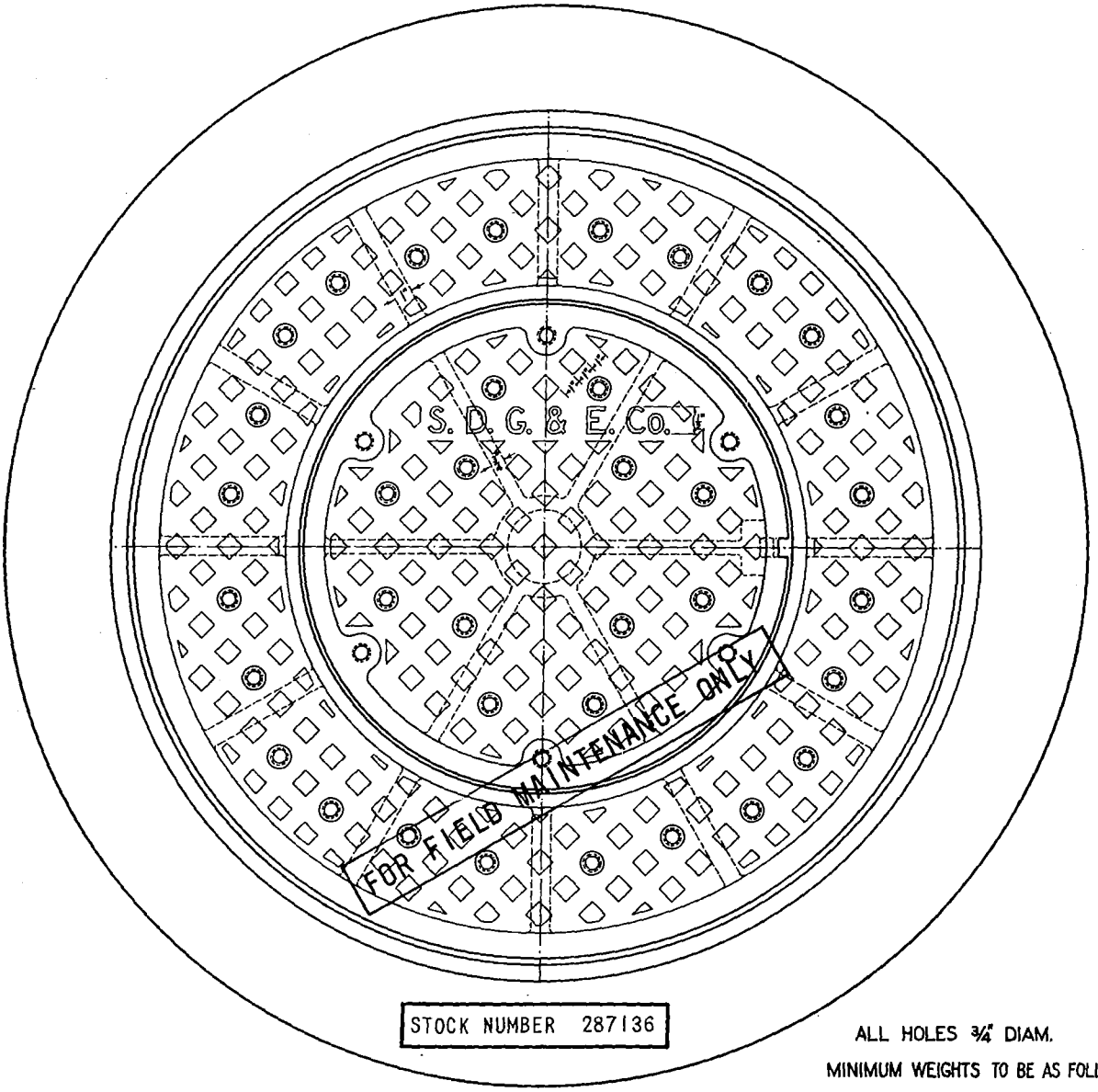

STOCK NUMBER 287136

ALL HOLES ¾" DIAM.

MINIMUM WEIGHTS TO BE AS FOLLOWS:

RING COVER - NOT LESS THAN 485#
COVER - NOT LESS THAN 160#

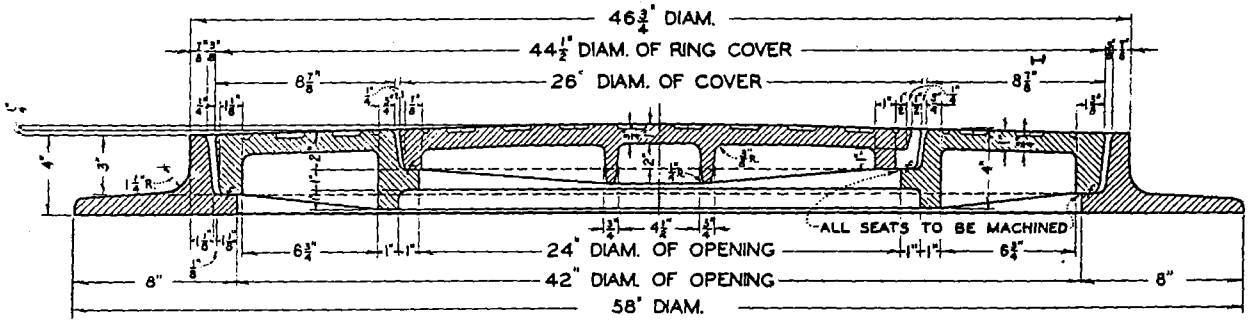

TYPICAL CROSS SECTION

STOCK NUMBER -

NOTE:

MATERIAL TO BE GRAY CAST IRON PER ASTM A-48, CLASS 40

DATE 6-9-70 SDG&E	SAN DIEGO GAS & ELECTRIC COMPANY UNDERGROUND STANDARDS 42 INCH MANHOLE FRAME & COVER NON-TRAFFIC BEARING	3399.303

TABLE OF CONTENTS

U-23.52

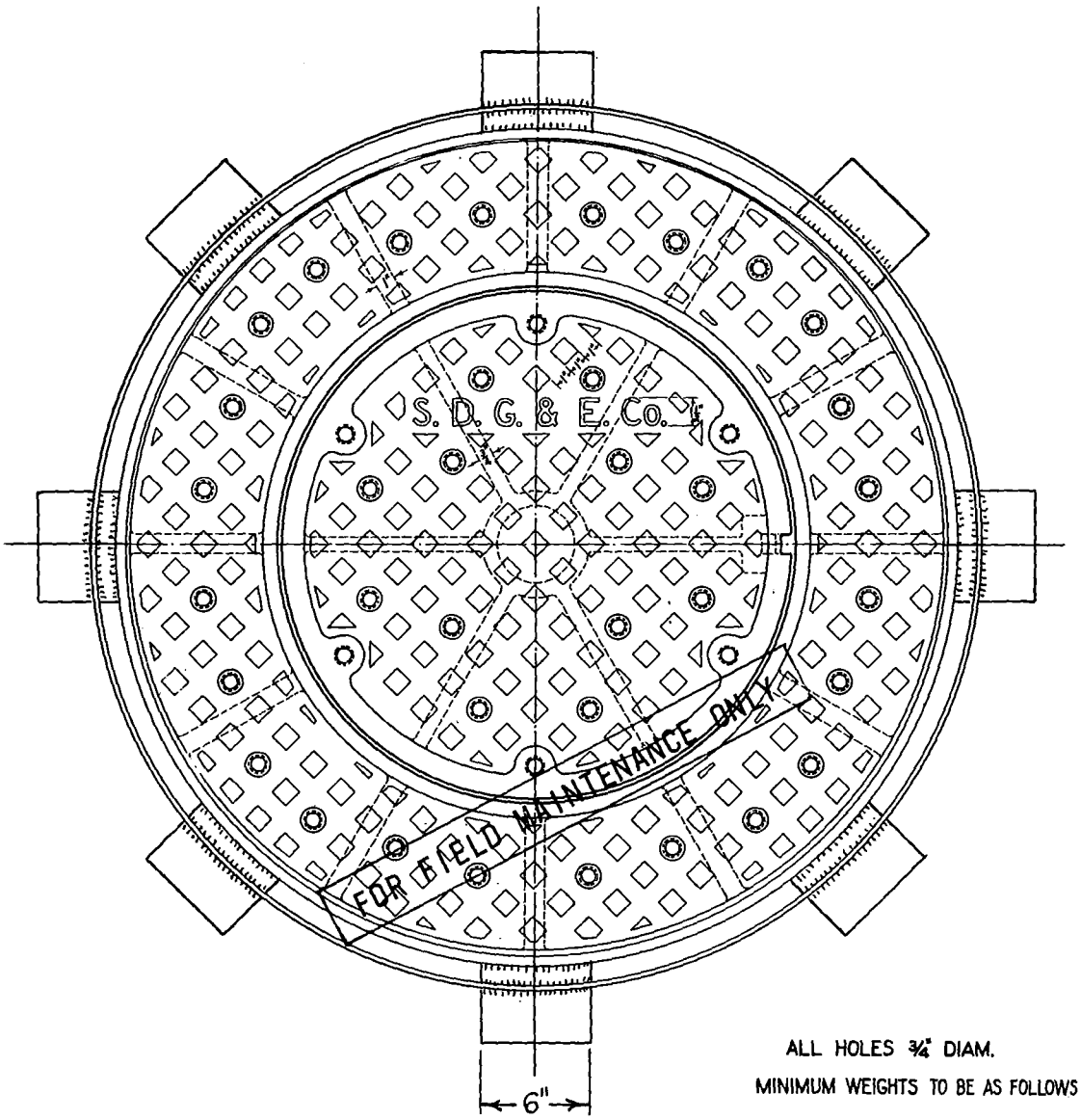

STOCK NUMBER 287136

ALL HOLES 3/4" DIAM.

MINIMUM WEIGHTS TO BE AS FOLLOWS:

COVER - NOT LESS THAN 160#

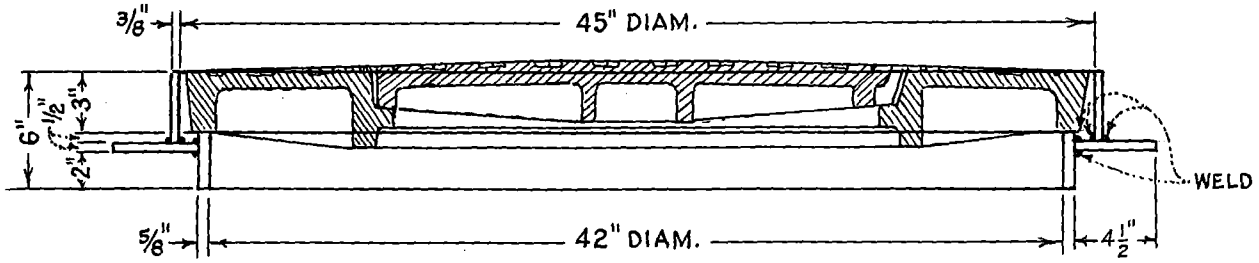

TYPICAL CROSS-SECTION

STOCK NUMBER -

NOTE:

MATERIAL TO BE GRAY CAST IRON PER ASTM A-48, CLASS 40

3399.304	SAN DIEGO GAS & ELECTRIC COMPANY UNDERGROUND STANDARDS 42 INCH MANHOLE FRAME & COVER NON-TRAFFIC BEARING	DATE 6-9-70 SDG&E

TABLE OF CONTENTS

INTER COVER

WEIGHT 235#
H-20 LOADING

MAJOR USE: FOR ACCESS TO MANHOLES WHERE MAN AND EQUIPMENT ENTRY IS REQUIRED.

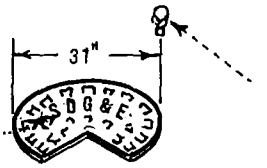

COVER

WEIGHT 1200#
H-20 LOADING

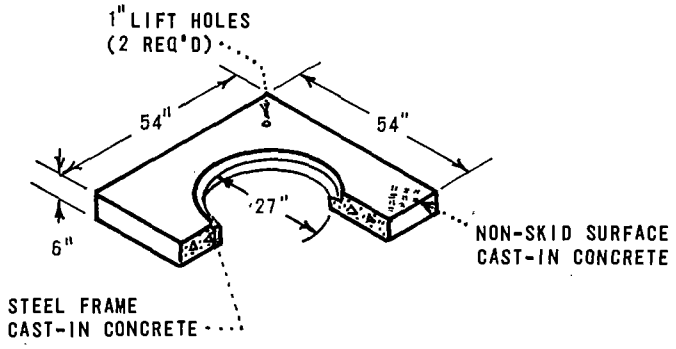

RING SECTION

WEIGHT 1344#

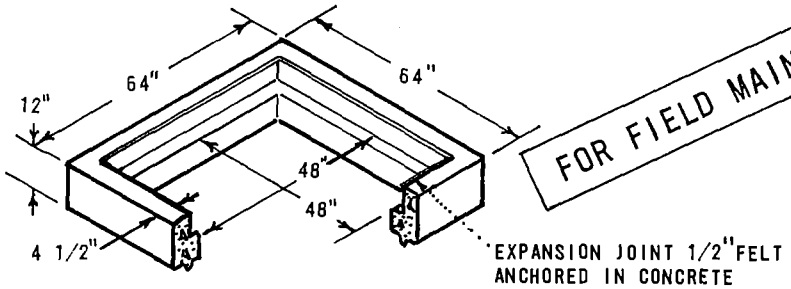

FOR FIELD MAINTENANCE ONLY

NECK EXTENSION SECTION

WEIGHT 12" - 1548#
9" - 1161#
6" - 771#

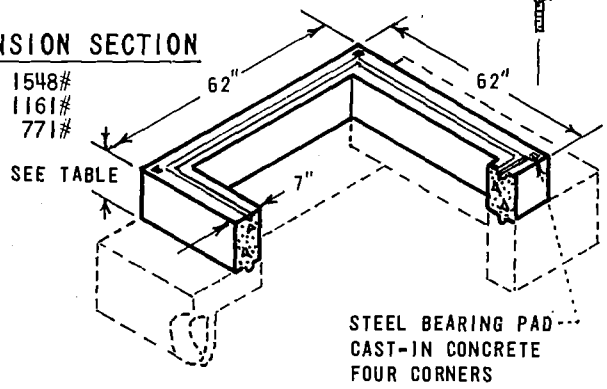

ITEM		STOCK NUMBER
INTER COVER		287056
COVER		287108
RING SECTION		597296
NECK EXTENSION SECTION	12"	493488
	9"	493560
	6"	493544

NOTES:

A. THIS STANDARD REQUIRED WITH USE OF PG 3399.203, 3399.204, AND 3324.
B. USE MASTIC SEAL (631872) BETWEEN ALL JOINTS, REFER TO PG 3306.
C. REFER TO PG 3485 WHEN GRADE ADJUSTMENT IS REQUIRED.
D. DEPTH OF MANHOLE ROOF BELOW GRADE: WITH
0" EXTENSION - 1'-2" 6" EXTENSION - 1'-8" 12" EXTENSION - 2'-2"
3" EXTENSION - 1'-5" 9" EXTENSION - 1'-11"

DATE 6-30-78
APPD TAF

SAN DIEGO GAS & ELECTRIC COMPANY UNDERGROUND STANDARDS

48" X 48" MANHOLE NECK AND COVER, TRAFFIC BEARING

3399.305

TABLE OF CONTENTS

TRAFFIC COVER AND FRAME

WEIGHT 235#

H-20 LOADING

MAJOR USE: FOR ACCESS TO MANHOLES WHERE MAN ENTRY ONLY IS REQUIRED

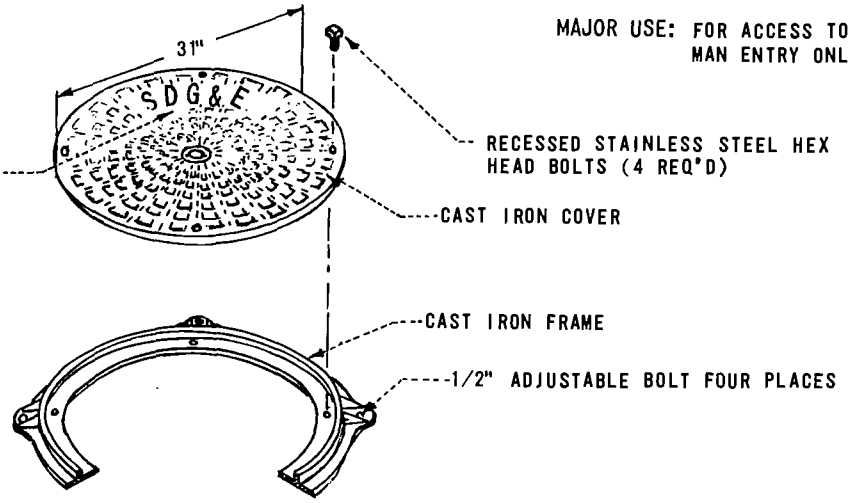

NECK SECTION

WEIGHT 750#

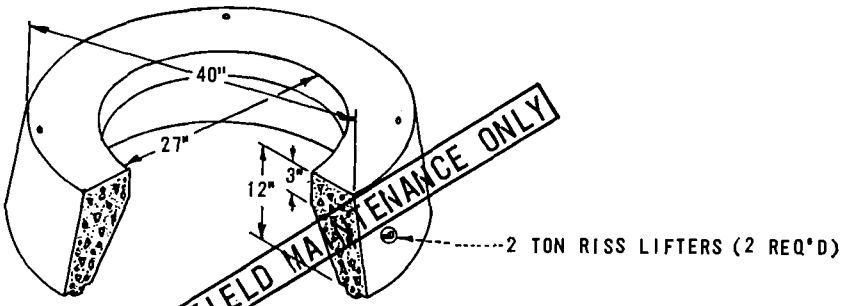

NECK EXTENSION SECTION

MAX WEIGHT 12"- 824#

6"- 412#

3"- 206#

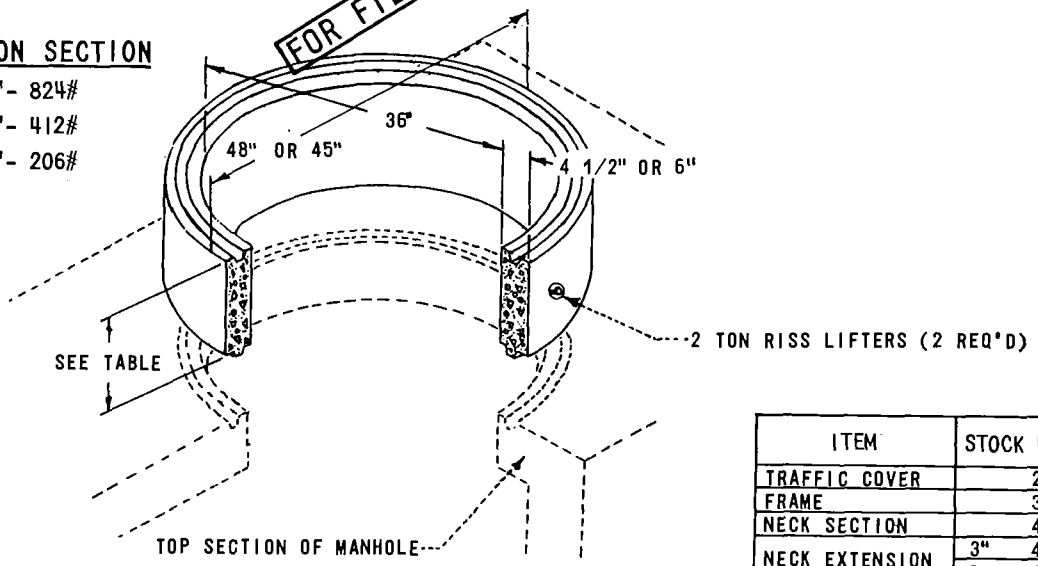

ITEM	STOCK NUMBER	
TRAFFIC COVER		287056
FRAME		361920
NECK SECTION		493568
NECK EXTENSION SECTION	3"	493504
	6"	493536
	12"	493472

QUIKSET AND BROOKS NOT INTERCHANGEABLE

NOTES:

A. THIS STANDARD MAY BE USED WITH PG 3399.205, 6' X 10' X 7' MANHOLE.

B. USE MASTIC SEAL (631872) BETWEEN ALL JOINTS, REFER TO (PG 3306).

C. REFER TO PG 3485 WHEN GRADE ADJUSTMENT IS REQUIRED.

D. DEPTH OF MANHOLE ROOF BELOW GRADE: WITH

0" EXTENSION 1' - 2" 6" EXTENSION 1' - 8"
3" EXTENSION 1' - 5" 12" EXTENSION 2' - 2"

E. WHEN GROUTING LEAVE CLEANOUT FOR BOLT HOLE.

TABLE OF CONTENTS

3399.306	SAN DIEGO GAS & ELECTRIC COMPANY UNDERGROUND STANDARDS 27" MANHOLE NECK AND COVER, TRAFFIC BEARING FOR 36" OPENING	DATE 6-30-78 APPD TAF

SCOPE : THIS STANDARD SHOWS THE OLD STYLE 36 INCH ROUND OPENING MANHOLE COVER FOR A 3322 MANHOLE.

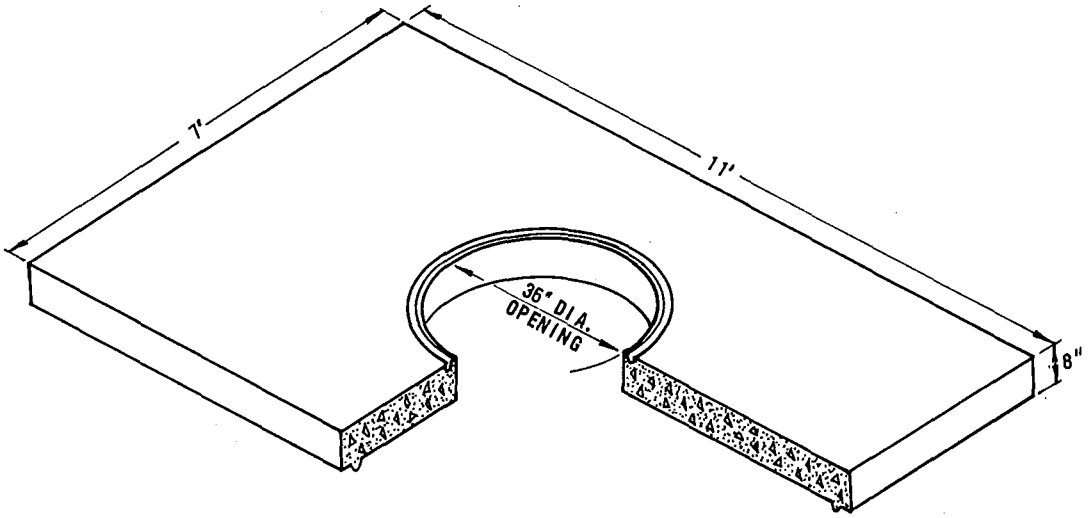

QUIKSET MANHOLE
STOCK NUMBER 633760

THIS PAGE FOR FIELD MAINTENANCE ONLY

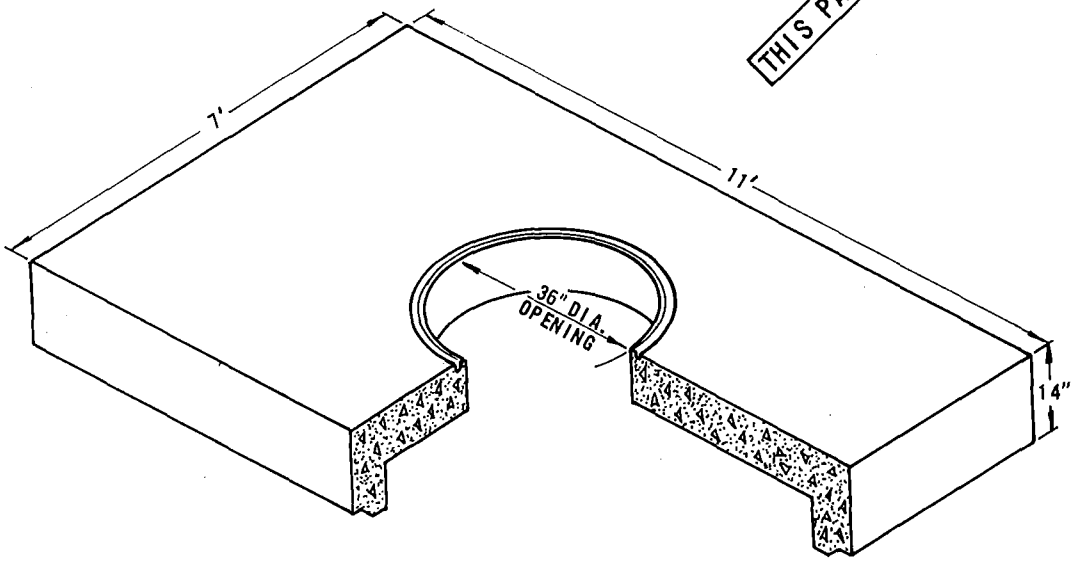

BROOKS MANHOLE
STOCK NUMBER 633760

TABLE OF CONTENTS

DATE 9-30-82 APPD JHT	SDG&E ELECTRIC STANDARDS MANHOLE COVERS, 36 INCH ROUND OPENING	3399.307

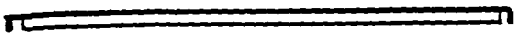

GRATE OR SOLID COVER

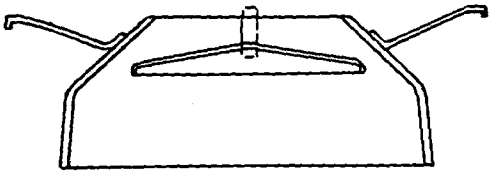

TRANSFORMER SHIELD

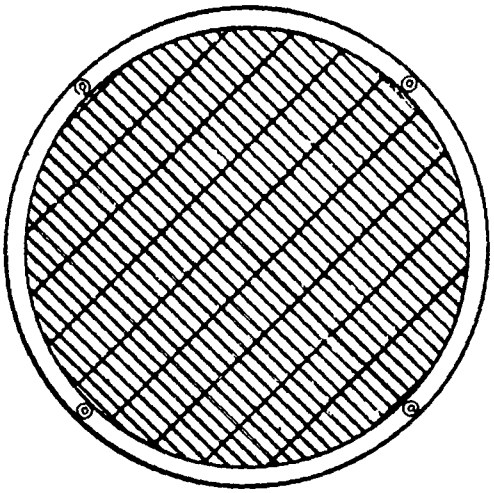

GRATING
PLAN

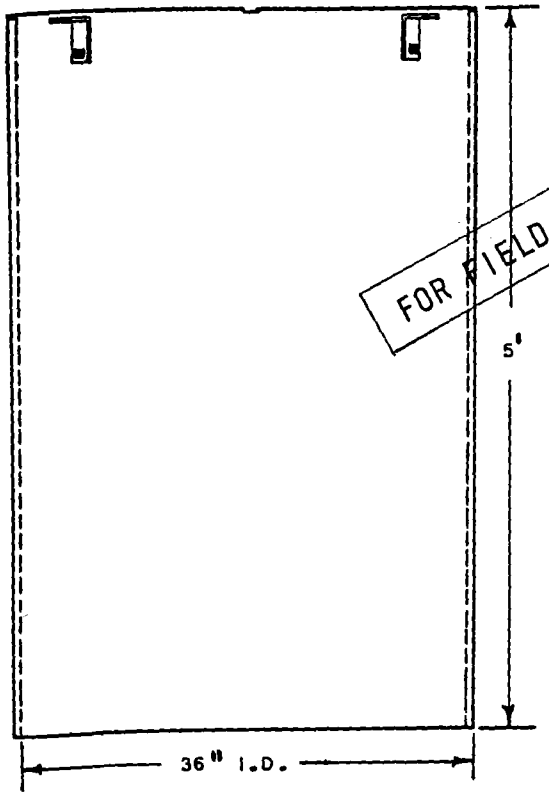

BITUMINOUS FIBRE TUBE

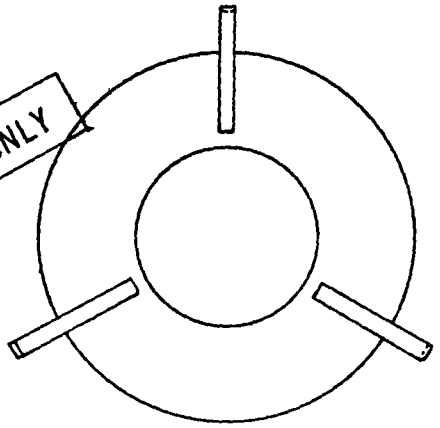

SHIELD
PLAN

STOCK NUMBERS	
GRATE COVER	390064
SOLID COVER	286968
TRANSFORMER SHIELD	643024
BITUMINOUS FIBRE TUBE	334384

NOTES:

A. FOR INSTALLATION DETAILS SEE 3799.402, 3799.403, 3799.404, AND 4199.504.

B. WHEN SOLID COVER IS USED, TRANSFORMER SHIELD IS NOT REQUIRED.

C. ENCLOSURE NUMBERING SEE 3211.

D. GRATE AND SOLID COVER TO HAVE ONE COAT DU-PONT NUMBER 67-800 PRIMER AND ONE COAT BLACK DU-PONT DULUX NUMBER RP25051 OR EQUAL.

TABLE OF CONTENTS

3399.401	SDG&E ELECTRIC STANDARDS SUBSURFACE TRANSFORMER ENCLOSURE	DATE 6-30-78 APPD TAF

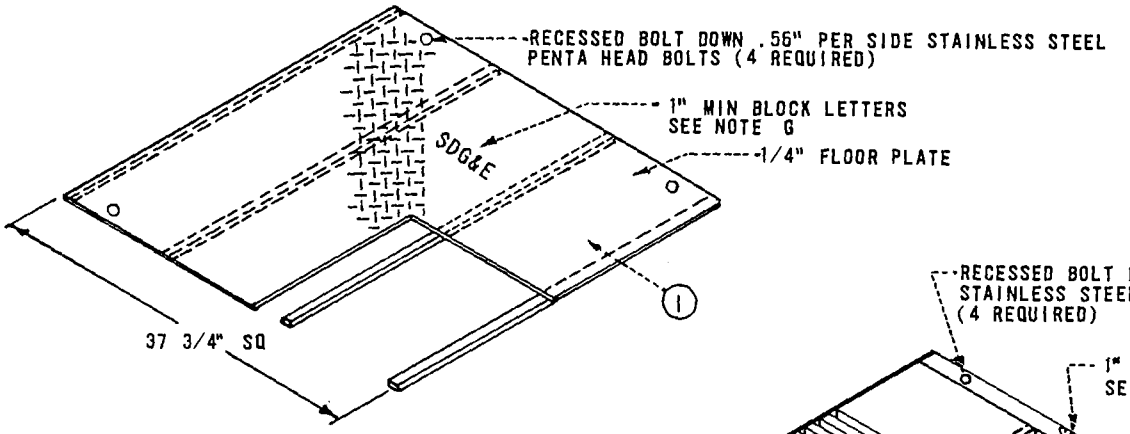

PARKWAY OR TRAFFIC SWITCH COVER

WEIGHT 88#
H-20 LOADING

MAY BE USED AS TRANSFORMER COVER WITH APPROVAL FROM DISTRIBUTION ENGINEER.

USE EPOXY COVER IN CONCRETE AREAS.

USE PAINTED COVERS IN NON-CONCRETE AREAS.

1 REQUIRED WHEN USED EITHER AS TRAFFIC OR PARKWAY SWITCH COVER.

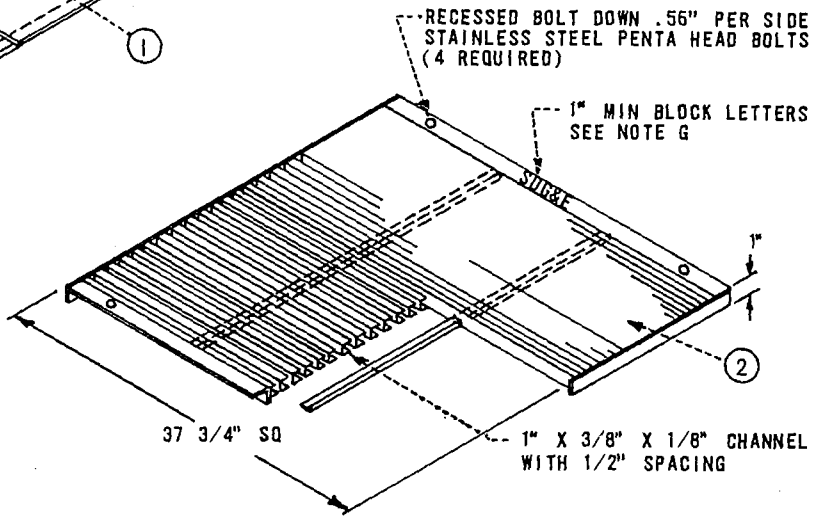

TRAFFIC GRATE

WEIGHT 103#
H-20 LOADING
1 REQUIRED WHEN USED WITH TRAFFIC FRAME.

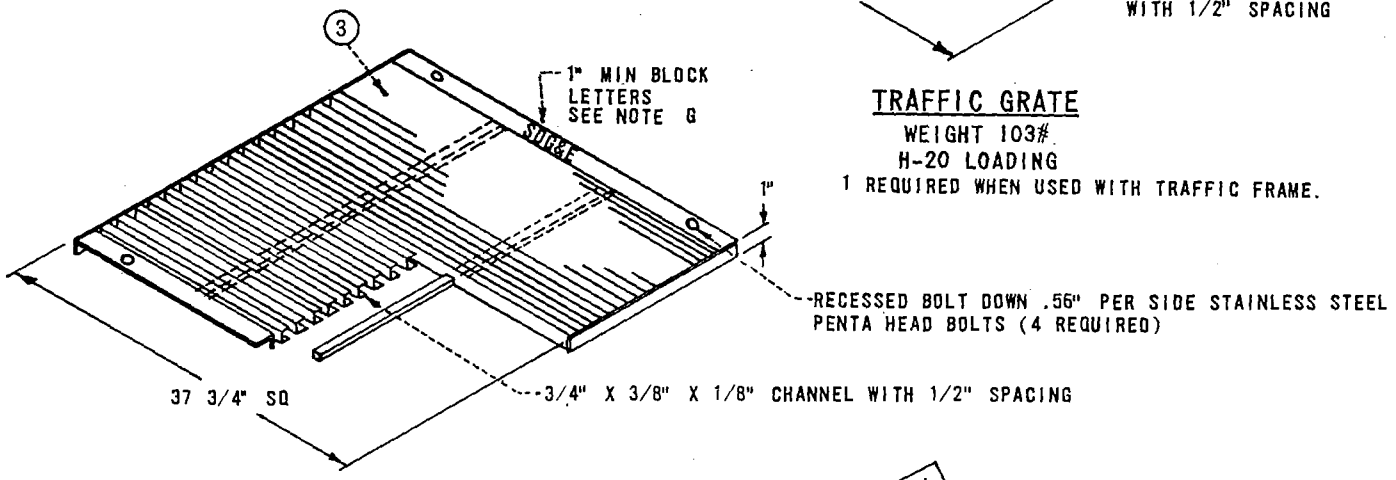

PARKWAY GRATE

WEIGHT 70#
250 PSF LOADING
1 REQUIRED WHEN USED WITH PARKWAY FRAME.

FOR FIELD MAINTENANCE ONLY

ITEM	DESCRIPTION		STOCK NUMBER	ITEM	DESCRIPTION	STOCK NUMBER
1	PARKWAY OR TRAFFIC SWITCH COVER	EPOXY	287730			
		PAINTED	287732			
2	TRAFFIC GRATE		390408			
3	PARKWAY GRATE		390344			

DATE 6-30-78 APPD TAF	SDG&E ELECTRIC STANDARDS SUBSURFACE EQUIPMENT ENCLOSURE	3399.402

TABLE OF CONTENTS

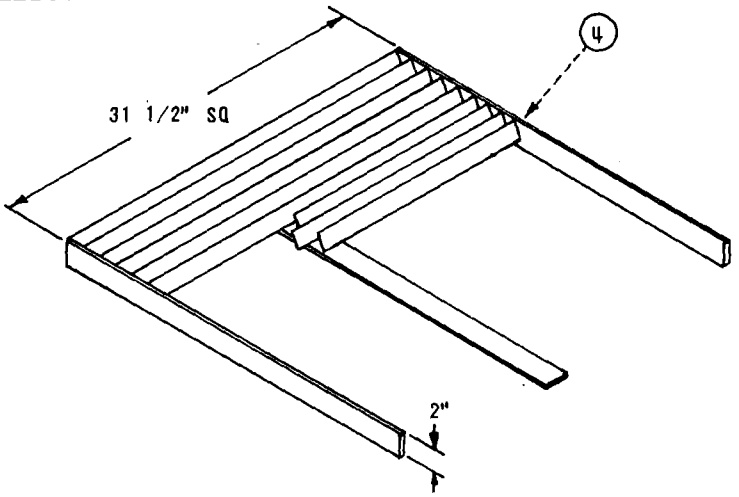

BAFFLE

WEIGHT 70#

1 REQUIRED WHEN INSTALLATION TO HAVE GRATE TOP (SEATS IN CONCRETE TOP CAP).

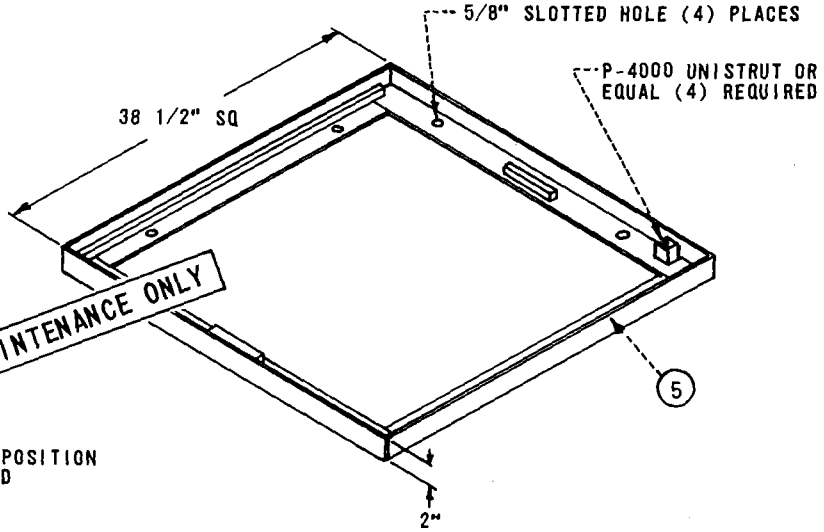

PARKWAY FRAME

WEIGHT 45#

1 REQUIRED WHEN IN PARKWAY AREAS.

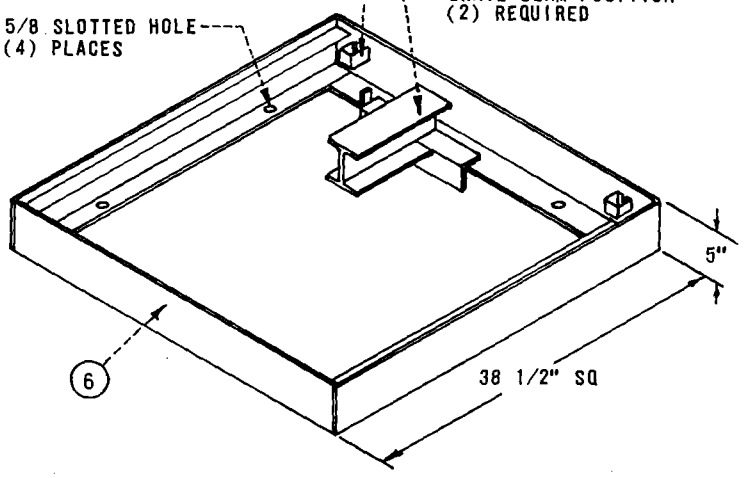

TRAFFIC FRAME

WEIGHT 117#

1 REQUIRED WHEN SUBJECT TO VEHICULAR TRAFFIC AND GRATE OR SOLID COVER IS TO BE USED.

ITEM	DESCRIPTION	STOCK NUMBER	ITEM	DESCRIPTION	STOCK NUMBER
4	BAFFLE	119264			
5	PARKWAY FRAME	362376			
6	TRAFFIC FRAME	362408			

3399.403	SDG&E ELECTRIC STANDARDS SUBSURFACE EQUIPMENT ENCLOSURE	DATE 6-30-78 APPD TAF

TABLE OF CONTENTS

TABLE OF CONTENTS

2 TON RISS LIFTERS (2) REQUIRED

4- ADJUSTING SCREWS IN TOP CAP SHALL BE USED TO LEVEL UNIT TO GRADE. GROUT OPEN JOINTS

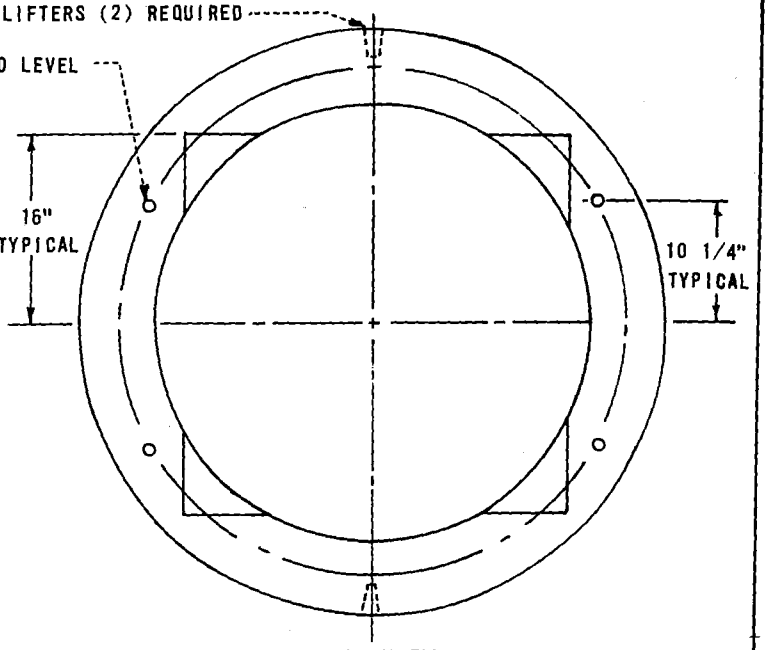

PLAN VIEW

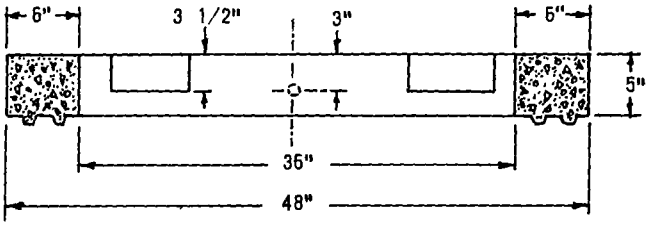

SHAFT

WEIGHT 180#

1 REQUIRED FOR EITHER TRANSFORMER OR SWITCH INSTALLATION

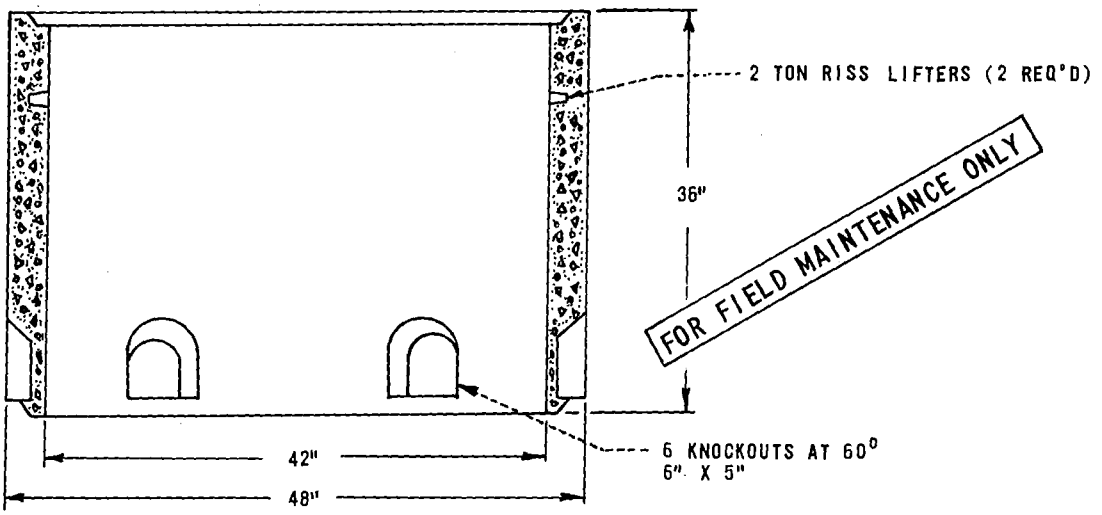

TOP CAP

WEIGHT 1320#

2 REQUIRED FOR TRANSFORMER INSTALLATION.
1 REQUIRED FOR SWITCH INSTALLATION.

NOTES:

A. FOR INSTALLATION DETAILS SEE PAGES 3799.401, 3799.402 AND 3799.403.

B. CALIFORNIA GRID COORDINATES TO BE STENCILLED TO FLAT SURFACE OF TOP CAP AT TIME OF INSTALLATION PER CONSTRUCTION ORDER.

C. STATION NUMBER TO BE STENCILLED TO FLAT SURFACE OF THE TOP CAP AT TIME OF INSTALLATION SEE PAGE 3212.

D. USE MASTIC SEAL (631872) BETWEEN JOINTS SEE PAGE 3306.

E. PARKWAY FRAME (362376) AND TRAFFIC FRAME (362408) WILL BE DELIVERED ATTACHED TO TOP CAP (206228).

F. SWITCH COVER, TRAFFIC AND PARKWAY GRATES TO HAVE ONE COAT DU-PONT PRIMER NUMBER 67/800 AND ONE COAT DU-PONT DULUX RP 25051 OR EQUAL.

(G) 'SDG&E' TO BE ARC WELDED OR EQUIVALENT.

H. ALL METAL TO BE HOT DIPPED GALVANIZED OR CADMIUM PLATED FOR CORROSION PROTECTION.

ITEM	DESCRIPTION	STOCK NUMBER	ITEM	DESCRIPTION	STOCK NUMBER
7	TOP CAP	206228			
8	SHAFT	334358			

DATE 6-30-78 APPD TAF	SDG&E ELECTRIC STANDARDS SUBSURFACE EQUIPMENT ENCLOSURE	3399.404

MAJOR USE: ADDITIONAL LENGTH FOR CABLE TRAINING.

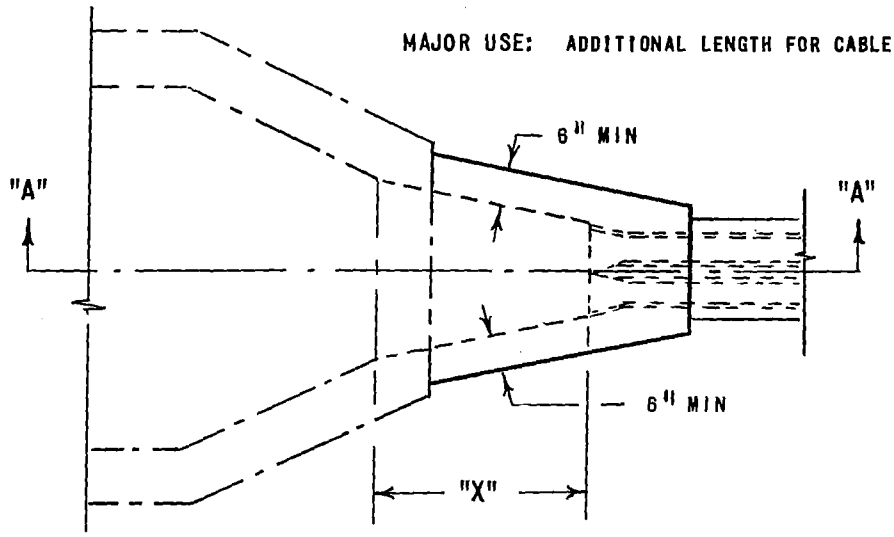

PLAN VIEW

FOR FIELD MAINTENANCE ONLY

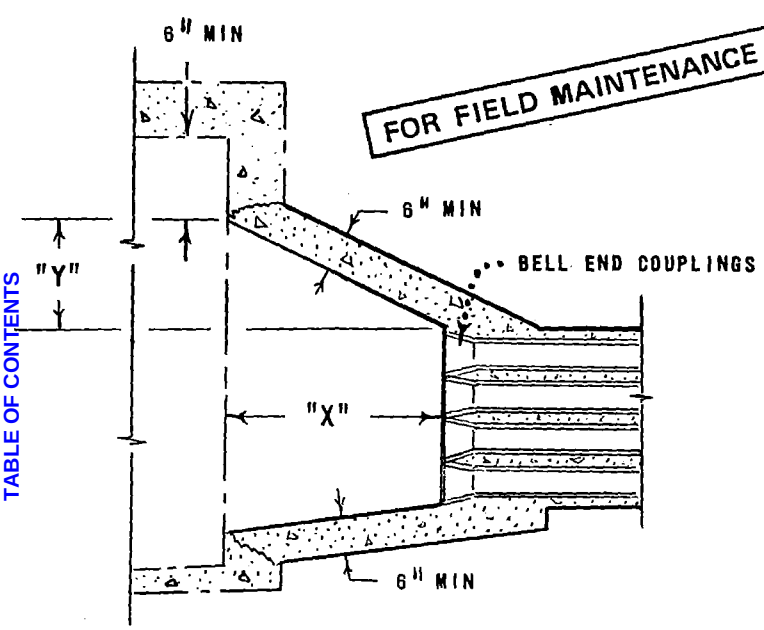

SECTION "A" - "A"
LOW DUCT ENTRY

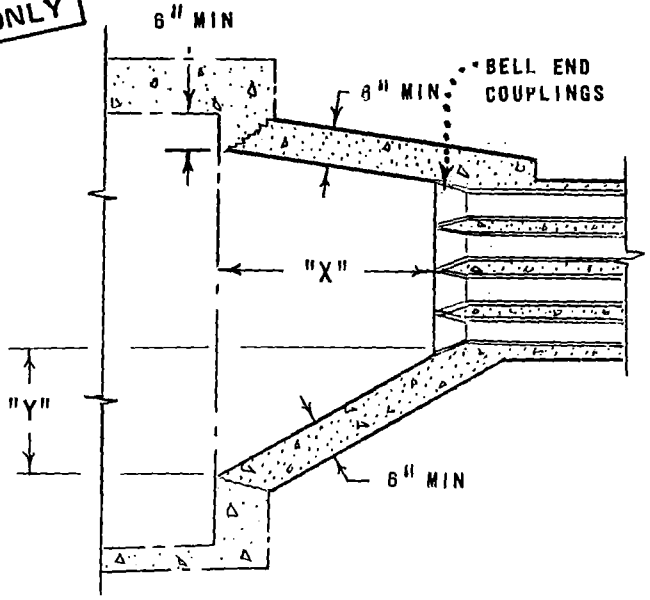

SECTION "A" - "A"
HIGH DUCT ENTRY

DIFFERENCE IN ELEVATION (FT)	DIMENSION "X"	DIMENSION "Y"	CONCRETE REQUIRED (CUBIC YARDS)
2 TO 3	30"	14"	1
3 TO 4	36"	18"	1 1/4
4 & UP	42"	21"	1 1/2

NOTES:

A. WHERE THE DIFFERENCE IN DUCT ELEVATION ENTERING AND LEAVING THE MANHOLE IS IN EXCESS OF TWO FEET, MEASURED FROM THE CENTER OF EITHER THE TOP OR BOTTOM DUCTS ON BOTH ENDS OF THE MANHOLE, THE MANHOLE SHALL BE ELONGATED AS TABLE ABOVE.

B. USE RECESSES WITH MANHOLES WHEN REQUIRED.

C. BAYS (WHEN REQUIRED) TO BE FORMED IN FIELD.

D. CONCRETE TO BE CLASS 'A', 5 1/2 SACK MIX.

TABLE OF CONTENTS

	SDG&E ELECTRIC STANDARDS	
3399.501	MANHOLE BAYS CONSTRUCTION	DATE 7-22-77 APPD TAF

MAJOR USE: ADDITIONAL LENGTH FOR ANGLE CABLE TRAINING

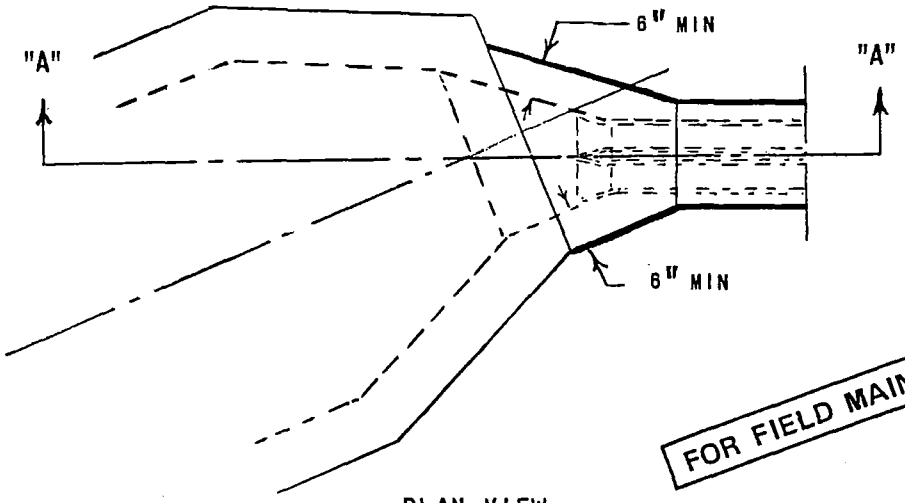

FOR FIELD MAINTENANCE ONLY

PLAN VIEW

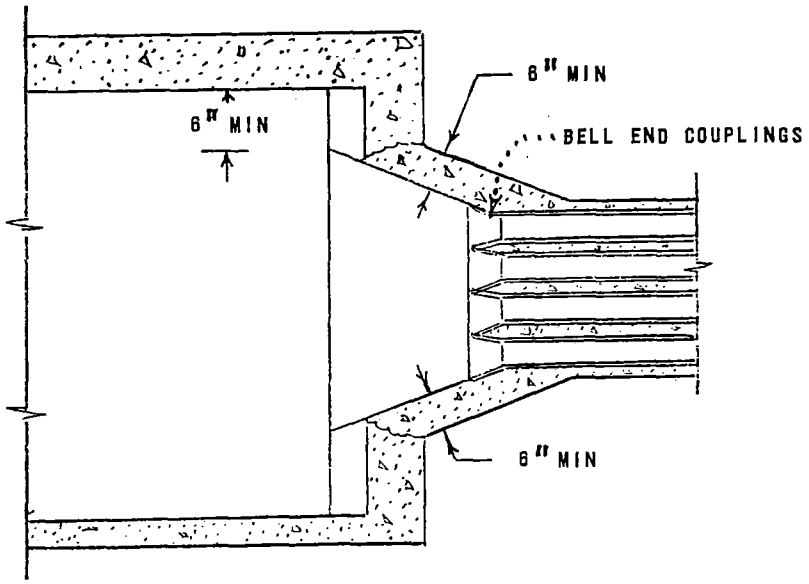

SECTION "A" - "A"
LOW OR HIGH DUCT ENTRY

NOTES:

A. USE ANGLE RECESSES WITH MANHOLES WHEN REQUIRED.
B. ANGLE RECESSES WHEN REQUIRED) TO BEFORMED IN FIELD.
C. CONCRETE TO BE CLASS "A", 5 1/2 SACK MIX.
D. ELEVATION OF ANGLE RECESS IS VARIABLE.

TABLE OF CONTENTS

DATE 7-22-77 APPD TAF	SDG&E ELECTRIC STANDARDS MANHOLE ANGLE RECESSES CONSTRUCTION	3399.502

TABLE OF CONTENTS

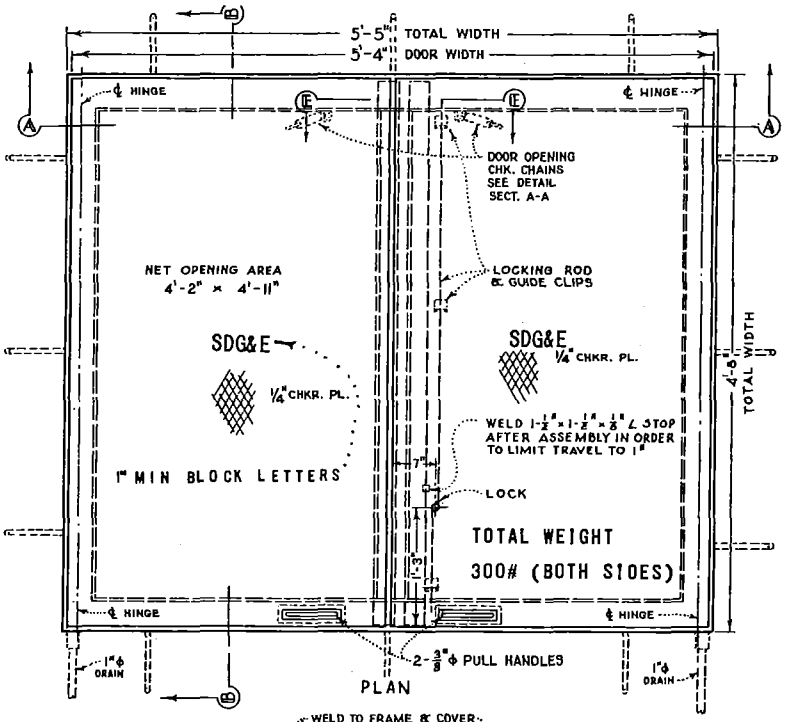

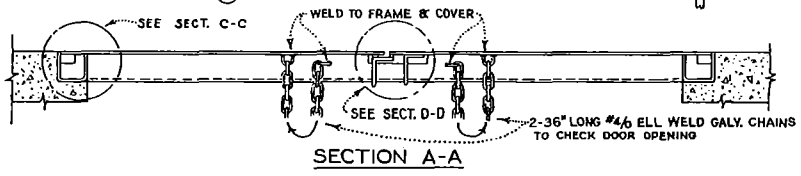

SECTION A-A

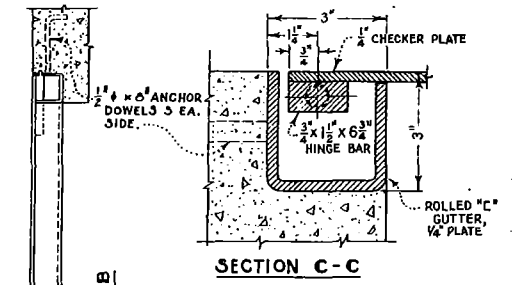

SECTION C-C

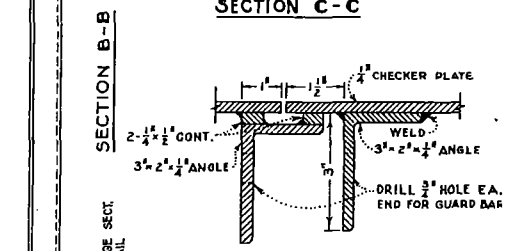

SECTION D-D

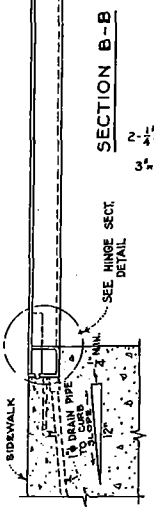

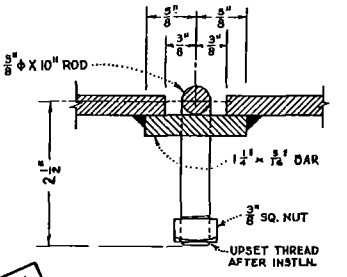

HANDLE DETAIL

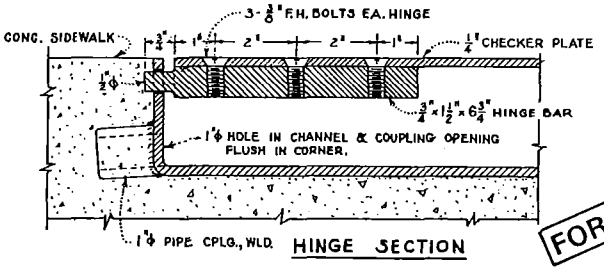

HINGE SECTION

FOR FIELD MAINTENANCE ONLY

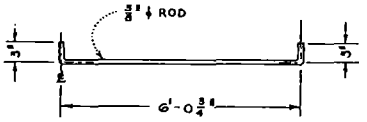

GUARD BARS
(2 REQUIRED)

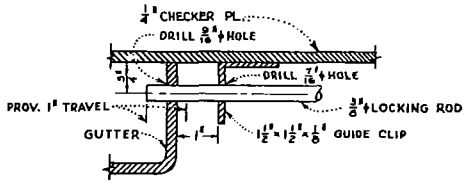

LOCKING ROD DETAIL

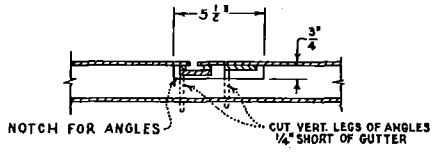

SECTION E-E

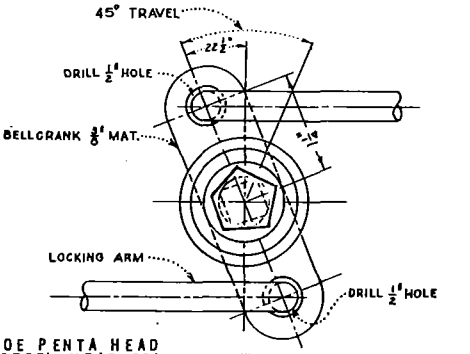

LOCKING DETAILS

NOTE:

A. 'SDG&E' TO BE ARC WELDED OR EQUIVALENT.

STOCK NUMBER —

3399.503	SDG&E ELECTRIC STANDARDS ACCESS DOOR FOR TRANSFORMER VAULTS	DATE 6-3-83 APPD

SCOPE: CABLE RACKS ARE USED TO SUPPORT SECONDARY AND PRIMARY CABLE IN SUBSTRUCTURES. THIS PAGE IS FOR FIELD MAINTENANCE ONLY.

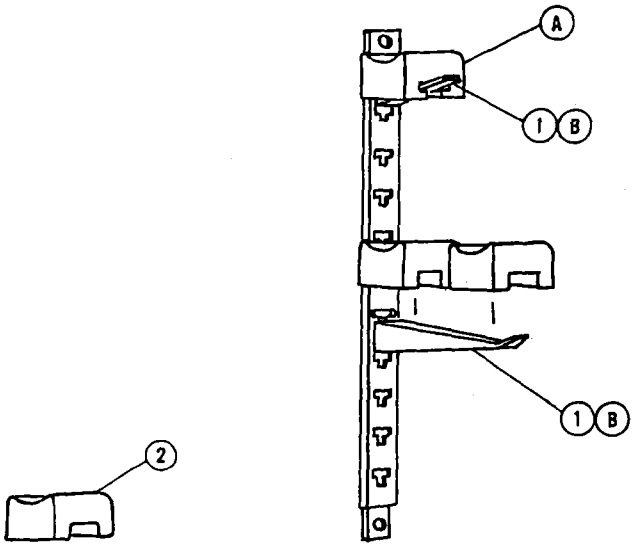

FOR FIELD MAINTENANCE ONLY

INSTALLATION:

(A) REPLACE CABLE INSULATOR AS NEEDED.
(B) WHEN REPLACMENT OF LIGHT DUTY ARM IS REQUIRED REFER TO ITEM 4 UG STDS. 4178.

ITEM	DESCRIPTION	LENGTH	NUMBER OF HOLES	EXTENSION FROM FACE OF RACK	NUMBER OF INSULATORS	LENGTH ALONG ARM	RADIUS	STOCK NUMBER
1	ARMS, LIGHT DUTY	-	-	4"	1	-	-	415392
		-	-	7 1/2"	2	-	-	415424
		-	-	10"	3	-	-	415456
		-	-	-	-	-	-	-
2	CABLE INSULATOR	-	-	-	-	-	-	430624

DATE 2-13-81 APPD JEY	SDG&E ELECTRIC STANDARDS CABLE RACKS	3399.601

SCOPE: THIS STANDARD LISTS THE MINIMUM CONDUIT SIZE REQUIRED FOR THE INSTALLATION OF PRIMARY AND SECONDARY CABLES.

NOTES:

- IF FUTURE LOAD GROWTH REQUIRES LARGER CABLE THAN INITIAL REQUIREMENTS, SIZE CONDUIT FOR FUTURE NEEDS. SERVICE PLANNING SUPERVISOR'S APPROVAL IS REQUIRED.

FOR FIELD MAINTENANCE ONLY

CONDUIT SIZING CHARTS

PRIMARY				
CABLE TYPE	CONDUCTOR SIZE AWG OR KCMIL	MINIMUM CONDUIT SIZE (INCHES)		
		1/C	2-1/C	3-1/C OR PARALLEL
PECN	2 CU	2"	3" (B)	3" (D)
PECN	2 SOL AL	2"	3" (C)	3" (D)
PECN	2/0 AL	--	--	3" (A)
PECN	4/0 CU	--	--	5" (A) (F)
PECN OR PECN-PEJ	500 CU	--	--	5" (A) (F)
XLPECN	750 AL	--	--	5" (A)
XLPECN	1000 AL	--	--	5" (A)

TABLE OF CONTENTS

INSTALLATION:

(A) 2/0 THROUGH 1000 KCMIL PRIMARY CABLES ARE ONLY PURCHASED IN TRIPLEXED CONFIGURATION.

(B) 2-1/C #2 CU PECN CABLES MAY BE PARALLELED IN A 3 INCH CONDUIT FOR SINGLE-PHASE, 12 KV LOAD.

(C) 2-1/C #2 SOL PECN CABLES MAY BE PARALLELED IN A 3 INCH CONDUIT FOR SINGLE-PHASE, 12 KV LOAD.

(D) 3-1/C CABLES MAY BE PARALLELED IN A 3 INCH CONDUIT FOR THREE-PHASE LOAD.

(F) MAY BE INSTALLED IN EXISTING 4 INCH CONDUITS.

SCOPE: THIS STANDARD SHOWS 6" CONDUIT/CONDUIT FITTINGS AND CONDUIT SPACERS.

CONDUIT STRAIGHT SECTIONS

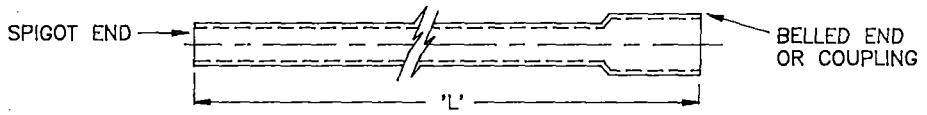

CONDUIT SIZE	TYPE	LENGTH 'L'	STOCK NUMBER	ASSEMBLY UNITS		
				CONCRETE ENCASE	PRIMARY	SEC/SERV
* 6"	EB	20'	249930	2EB6IN	–	–

* NOMINAL CONDUIT SIZE	DEGREE OF CURVATURE	RADIUS OF CURVATURE	TYPE OF CONDUIT	STOCK NUMBER	ASSEMBLY UNITS		
					CONCRETE ENCASE	PRIMARY	SEC/SERV
6"	22–1/2°	25'–0"	DB	321872	1EB6–S	–	–
	45°	48"	DB	322160	1EB6–B	–	–
	90°	48"	DB	322162	1EB6–B	–	–

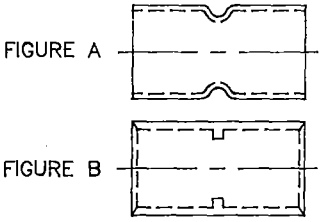

FIGURES A & B	
COUPLING CONDUIT SIZE	DB OR EB STOCK NUMBER
6"	280070

CONDUIT PLUG

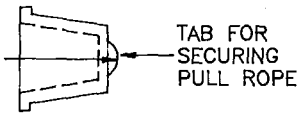

CONDUIT SIZE	STOCK NUMBER	ASSEMBLY UNIT
6"	544816	PLUG–6

CONDUIT BELL REDUCER

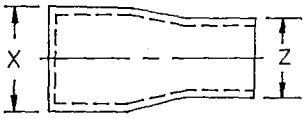

CONDUIT SIZE X TO Z	STOCK NUMBER	ASSEMBLY UNIT
6"–5"	573388	RED6–5

FOR FIELD MAINTENANCE ONLY

INTERMEDIATE SPACER

CONDUIT SIZE	DESCRIPTION	QUANTITY	STOCK NUMBER
6"	INTERMEDIATE SPACER	AS REQ'D	663526

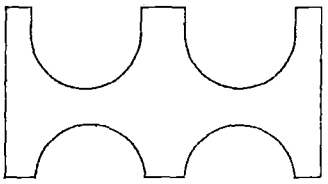

DATE 1–1–96 APPD	SDG&E ELECTRIC STANDARDS 6" CONDUIT/CONDUIT FITTINGS AND CONDUIT SPACERS	3399.702

TABLE OF CONTENTS

SCOPE: THIS STANDARD (3378.1 TO 3378.6) SHOWS THE INSTALLATION OF CONDUITS IN CLOSED CELL BRIDGE CONSTRUCTION.

INSTALLATION:

Ⓐ THE CONDUIT SPACERS SHALL BE SECURELY STRAPPED TO THE CONDUIT SPACER SUPPORT (ITEM 1 THRU 7) WITH #14 GALVANIZED WIRE (ITEM 8), FOR EIGHT CONDUITS. WHEN 6 OR LESS CONDUIT RUNS ARE INSTALLED, EXTRA ROD LENGTH MAY BE CUT OR FOLDED OVER TOP OF CONDUITS TOWARD EACH OTHER INSTEAD OF USING THE GALVANIZED WIRE.

Ⓑ THE FIRST SLIDING SUPPORT INSIDE THE CELL MUST BE PLACED 6" (152) FROM FACE OF EACH END DIAPHRAGM. THE FIRST THREE SLIDING SUPPORTS (ITEM 3) SHALL BE SPACED AT 6 FEET (152) AND FOLLOWED BY TWO FIXED SUPPORTS (ITEM 1) SPACED AT 2 FEET (610). THE REST OF THE SUPPORTS (ITEM 1) SHALL BE PLACED 6 FEET (1828) APART IN THE BRIDGE CELLS.

Ⓒ TOTAL WEIGHT INCLUDES CONDUIT, CONDUIT SPACERS, CONDUIT SUPPORTS AND CONDUCTORS. CONDUCTORS ARE 1000 KCMIL JACKETED AL. SEE TABLE 1, PG. 3378.2.

Ⓓ CONDUIT 12 INCHES (305) EXPANSION SLEEVE (ITEM 12 OR 14), SHALL BE INSTALLED BETWEEN THE FIRST AND SECOND SUPPORTS.

Ⓔ CONDUIT 3 INCHES (76) EXPANSION SLEEVE (ITEM 11 OR 13) SHALL BE INSTALLED A MAXIMUM DISTANCE OF 100 FEET (30480) THROUGHOUT THE RUN.

Ⓕ BRIDGE OPENINGS REQUIRE AN 18 INCH (457) WIDE STEEL SHEAR PLATE (ITEM 17). THE LENGTH OF THE PLATE SHALL BE 15 FEET (4572). USE STOCK ITEM 543110 THE STEEL SHEAR PLATE IS TO BE PLACED FROM THE BRIDGE ABUTMENT WALL EXTENDING 14'-4" (4369) OUTSIDE THE ABUTMENT TO SUPPORT AND PROTECT THE CONDUITS AGAINST SHEAR FROM EMBANKMENT SETTLEMENT, AND REDUCE THE UPLIFT FORCES ON THE SOIL THAT WOULD BE GENERATED FROM THE BRIDGE BACK WALL IMPACTING THE SOIL DURING A LARGE SEISMIC EVENT.

Ⓗ THE CONCRETE CONDUIT BASE SUPPORT (ITEM 1 & 4) SHALL BE SECURELY ATTACHED TO THE BRIDGE SLAB WITH EPOXY BINDER (ITEM 9). THE CONCRETE SURFACE SHALL BE LEVELED AND THOROUGHLY CLEANED PRIOR TO APPLICATION OF THE EPOXY.

Ⓘ THE EPOXY BINDER (CALTRANS APPROVED) IS A 2 COMPONENT ADHESIVE. APPROXIMATELY 1 GAL. OF MIXED EPOXY WILL BE NEEDED FOR EVERY 15 SUPPORTS. "CAREFULLY" FOLLOW MANUFACTURERS INSTRUCTIONS FOR APPLICATION OF EPOXY.

Ⓙ THE SPACE BETWEEN THE CONDUIT AND THE BRIDGE ABUTMENT OPENING SHALL BE SEALED. TIGHTLY WRAP 1 INCH (25) POLYFORM AROUND CONDUITS, THROUGH THE CELL OPENING AND SEAL WITH MORTAR WITH A MINIMUM THICKNESS OF 4 INCHES (102).

Ⓚ FOR CELL OPENING SIZE, SEE 3378.5, FOR POSITIONING OF CELL OPENING WITHIN THE BRIDGE, SEE THE CUSTOMER PROJECT PLANNER.

Ⓛ CONSULT BRIDGE DESIGN ENGINEER FOR LONGITUDINAL & TRANSVERSE DISPLACEMENTS AT SOIL TO ABUTMENT INTERFACE AND ABUTMENT TO BRIDGE INTERFACE.

Ⓜ CONSULT CIVIL/STRUCTURAL ENGINEERING IF THE BRIDGE DESIGN HAS **ANY ONE OF** THE FOLLOWING PARAMETERS:

a. LONGITUDINAL DISPLACEMENT BETWEEN ABUTMENT AND BRIDGE GREATER THAN 12 INCHES (305).
b. TRANSVERSE DISPLACEMENT BETWEEN ABUTMENT AND BRIDGE GREATER THAN 5 INCHES (127).
c. TRANSVERSE DISPLACEMENT BETWEEN SOIL AND ABUTMENT GREATER THAN 1 INCH (25.4).
d. TRANSVERSE MOVEMENT BETWEEN ABUTMENT BACK-WALL AND SOIL GREATER THAN 1".
e. DISPLACEMENT THAT CAUSES CONFLICT WITH INSTALLATION.
f. BRIDGE LENGTH GREATER THAN 300 FEET (91440).
g. BRIDGE WIDTH SMALLER THAN 50 FEET (15240).
h. BRIDGE DEPTH GREATER THAN 8 FEET (2438).
i. ARCHED FLOOR SLAB (WHERE CONDUIT SUPPORTS ARE ATTACHED).
j. HORIZONTALLY CURVED BRIDGE WITH RADIUS LESS THAN 800 FEET (243840).
k. BRIDGE CONTAIN EXPANSION JOINTS OTHER THAN THOSE AT THE END OF THE BRIDGE AT THE ABUTMENT.
l. ABUTMENT CONFIGURATIONS DIFFERENT THAN SHOWN IN THE STANDARDS.
m. DUCT CONFIGURATIONS NOT SHOWN.

FOR FIELD MAINTENANCE ONLY

TABLE OF CONTENTS

DATE 1-1-2000 APPD [signature] / CMC	SDG&E ELECTRIC STANDARDS CONDUIT INSTALLATION IN CELL BRIDGES	3399.703 SUPERSEDES 3378.0 (1-1-99)

BILL OF MATERIAL:

ITEM	DESCRIPTION	QUANTITY	CONST STD OR PAGE NO.	STOCK NUMBER	ASSEMBLY UNIT
1	FIXED SUPPORT, TYPE A, CONCRETE CONDUIT SUPPORT, 24" X 6" X 6" (610x152x152)W/ HOT DIPPED GALV. STEEL STEEL REINFORCING BAR, 3/8"(0.375) DIA., ASTM A-615 GR 60.	AS REQ'D	--	703520	BR-FIX
2	FIXED SUPPORT, TYPE B, DIRECT EMBEDDED, H.D. GALV. #4 REBAR ASTM A-615 GR. 60, " ⊔ " SHAPE	AS REQ'D	--	124020	U-SUPP
3	SLIDING SUPPORT, HOT DIP GALVANIZED 3/8"(10) THICK PLATE, 24" x 6"(610 x 152) WITH TWO 3/8" DIA. x 35" (10 x 889) BAR AND TWO 5/8" x 20" (16 x 394) SLOTS	AS REQ'D	3378	703524	BR-SLI ITEM 3 & 4
4	SLIDING SUPPORT TYPE C, CONCRETE CONDUIT SUPPORT, 24" X 6" X 6" (610 x 152 x 152) WITH 1/2" DIA. X 5"(128 x 127) S.S. (304) ANCHOR BOLT WITH 1"(25) LEG. TWO S.S. NUTS AND ONE S.S. FLAT WASHER ON EACH BOLT.	AS REQ'D	3378	703522	
5	SLIDING SUPPORT, TYPE D, HOT DIP GALVANIZED 3/8" (10) THICK STEEL PLATE 24" x 6" (610 x 152) WITH FOUR BOLTS AND TWO BENT RODS.		3378	703560	BR-SLD 3 & 5
6	SPACER, CONDUIT BASE	AS REQ'D	3375	663008	BSPACE
7	SPACER, CONDUIT INTERMEDIATE	AS REQ'D	3375	663528	SPACER
8	WIRE, IRON, #14 GALVANIZED (A)	AS REQ'D	--	815648	--
9	EPOXY BINDER (CAL-TRANS APPROVED) (I)	AS REQ'D	--	213242	--
10	CONDUIT, PVC, SCHEDULE 40, 5"	AS REQ'D	3378	251408	S40-5"
11	SLEEVE, 3"(76) EXPANSION CAPACITY, CONDUIT PLASTIC, 5"(127)	AS REQ'D	3378	650128	5"-EXP
12	JOINT SEISMIC, 12"(305) EXPANSION CAPACITY, CONDUIT PLASTIC, 5"(127)	AS REQ'D	3378	438700	SEJ-5"
13	SLEEVE, 3"(76) EXPANSION CAPACITY, CONDUIT PLASTIC, 4"(102)	AS REQ'D	3378	650126	4"-EXP
14	JOINT SEISMIC, 12"(305) EXPANSION CAPACITY, CONDUIT 4" (102)	AS REQ'D	3378	438698	SEJ-4"
15	POLYFOAM WRAP, 1" (25) THICK	AS REQ'D	--	--	--
16	3/4"(19), DIAMETER HVA ADHESIVE ANCHOR ROD SYSTEM W/HAS SUPER SS58-758 ANCHOR ROD BY HILTI, INC. (1-800-879-8000) (J)	AS REQ'D	--	--	--
17	PLATE, SHEAR LARGE (LIGHT GRAY EPOXY COATED, ALL SIDES) SEE 3378.5 FOR DIMENSIONS (F)	AS REQ'D	3378	543110	SHEAR
18	PLATE, SHEAR SHORT (LIGHT GRAY EPOXY COATED, ALL SIDES) SEE 3378.5 FOR DIMENSIONS (F)	AS REQ'D	3378	543112	SSHEAR
19	FOAM ARCHITECTURAL FOR 4" EXPANSION JOINTS 6' LONG	AS REQ'D	3378.8	359804	4"FOAM
20	FOAM ARCHITECTURAL FOR 5" EXPANSION JOINTS 6' LONG	AS REQ'D	3378.8	359800	5"FOAM
21	CONDUIT, PVC, SCHEDULE 40, 4"	AS REQ'D	3378	251392	S40-4"

FOR FIELD MAINTENANCE ONLY

TABLE OF CONTENTS

TABLE 1:

ULTIMATE TOTAL WT. PER 100'(2540) (C)		
4 CONDUIT	6 CONDUIT	8 CONDUIT
4542	6463	8384

REFERENCE:

(N) SEE STANDARD PAGES 3370.3/3371.3 FOR TRENCH SHADING REQUIREMENTS.

(O) SEE STANDARD 3375 FOR CONDUIT SPACER DATA.

(P) SEE STANDARD 3376 FOR CONCRETE ENCASED MULTI-CONDUIT INSTALLATION.

Q. CONSULT DESIGN STANDARDS FOR CABLE AMPACITY AND GROUNDING REQUIREMENTS FOR STEEL CONDUITS.

3399.704 SUPERSEDES 3378.1 (1-1-97)	SDG&E ELECTRIC STANDARDS CONDUIT INSTALLATION IN CELL BRIDGES	DATE 1-1-2000 APPD [signature] / CMC

TABLE OF CONTENTS

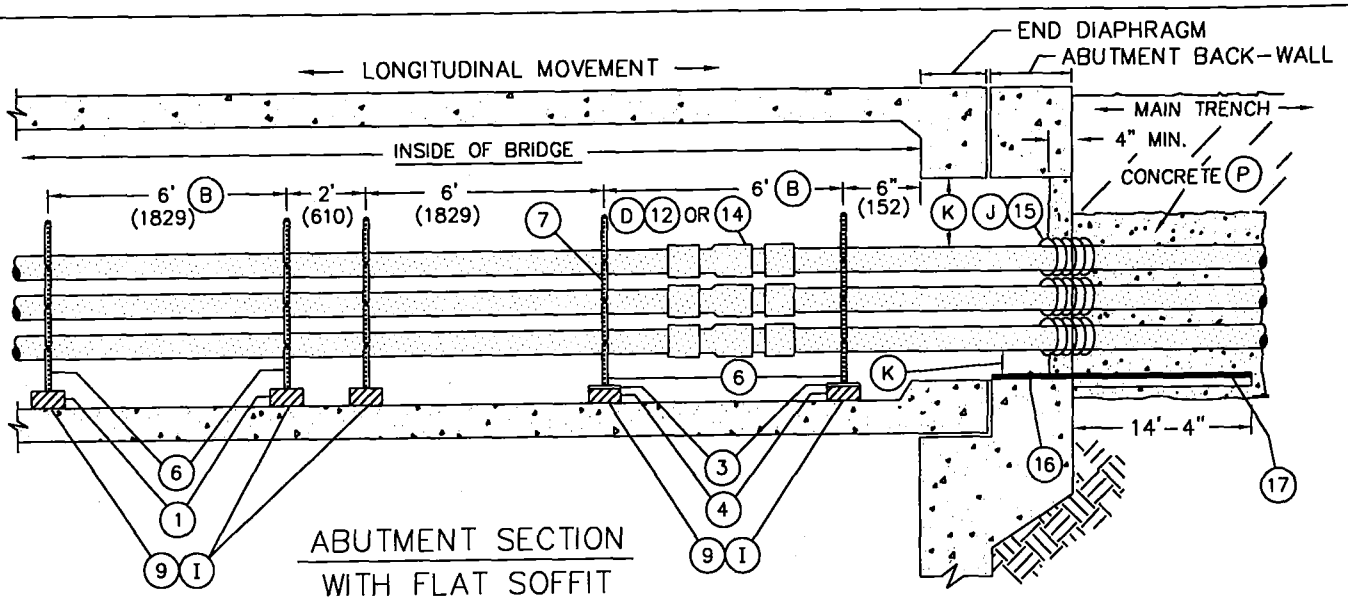

ABUTMENT SECTION
WITH FLAT SOFFIT

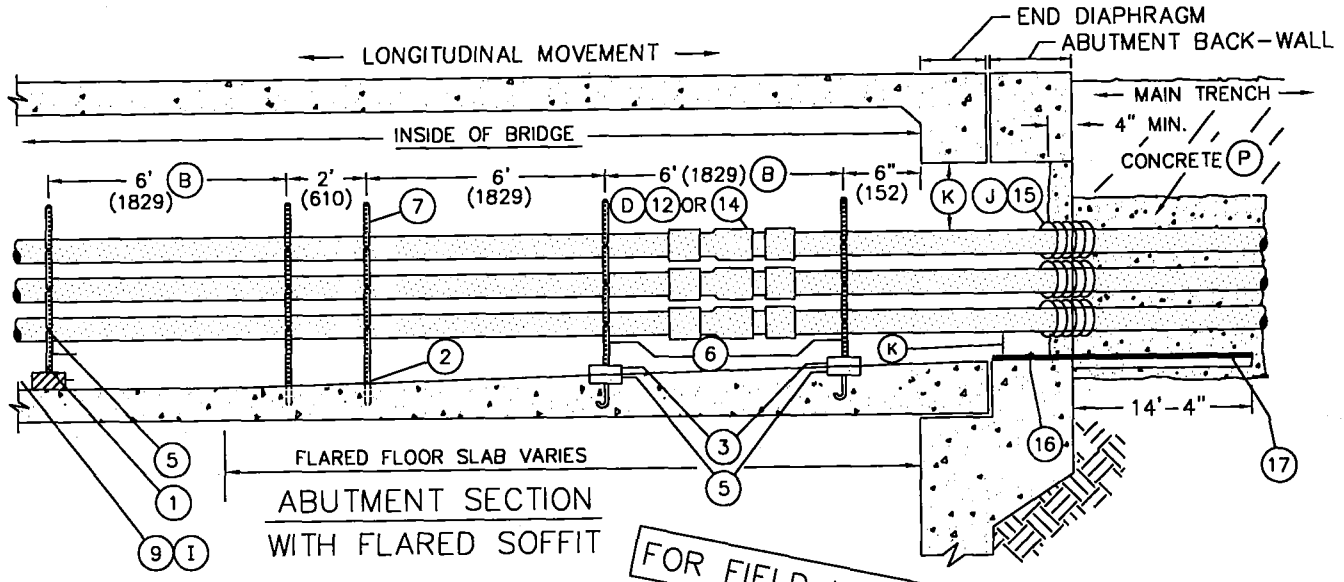

ABUTMENT SECTION
WITH FLARED SOFFIT

FOR FIELD MAINTENANCE ONLY

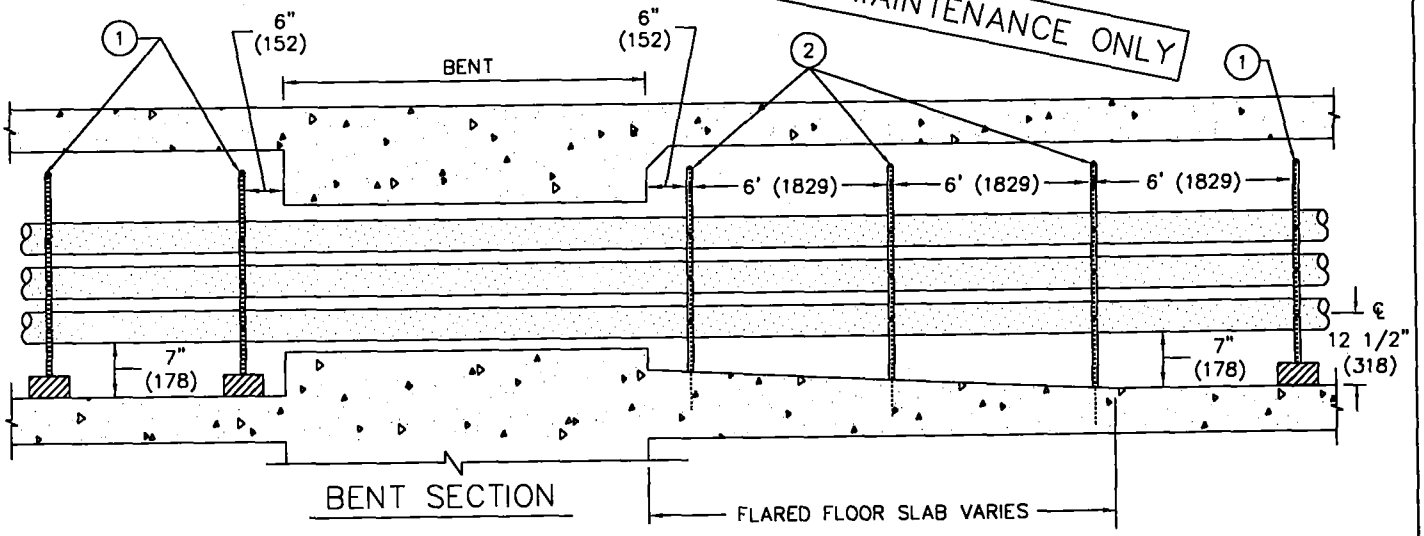

BENT SECTION

DATE 1-1-2000 APPD	SDG&E ELECTRIC STANDARDS CONDUIT INSTALLATION IN CELL BRIDGES	3399.705 SUPERSEDES 3378.2 (1-1-97)

TABLE OF CONTENTS

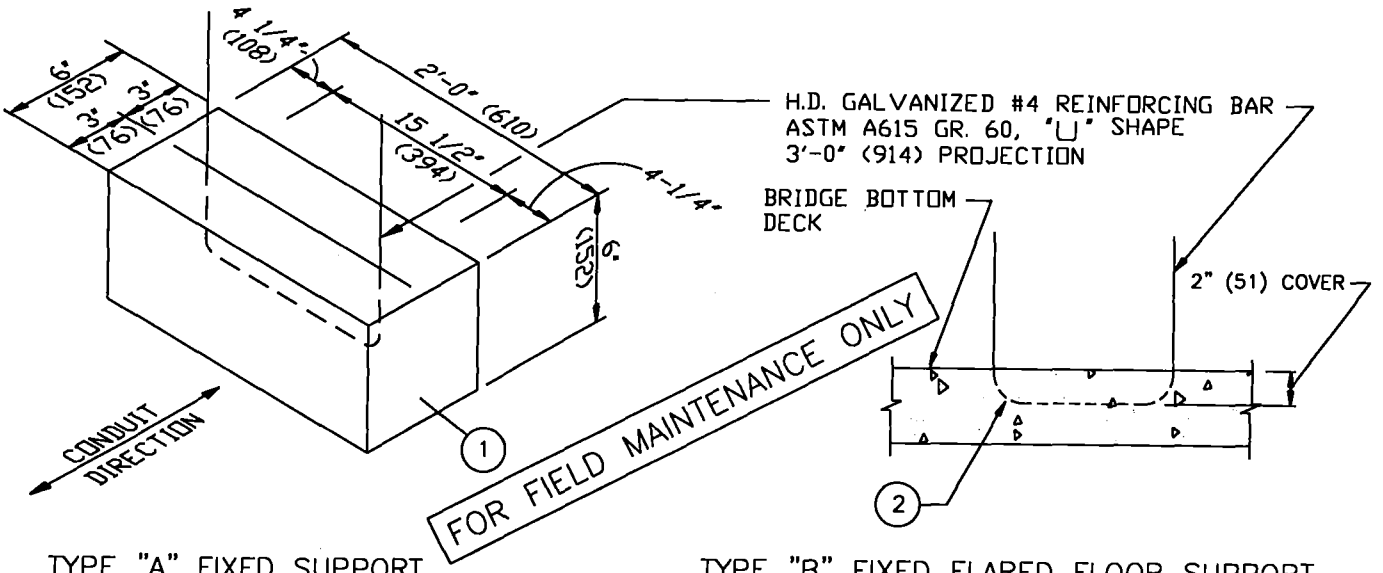

TYPE "A" FIXED SUPPORT

NOT TO SCALE

TYPE "B" FIXED FLARED FLOOR SUPPORT

NOT TO SCALE

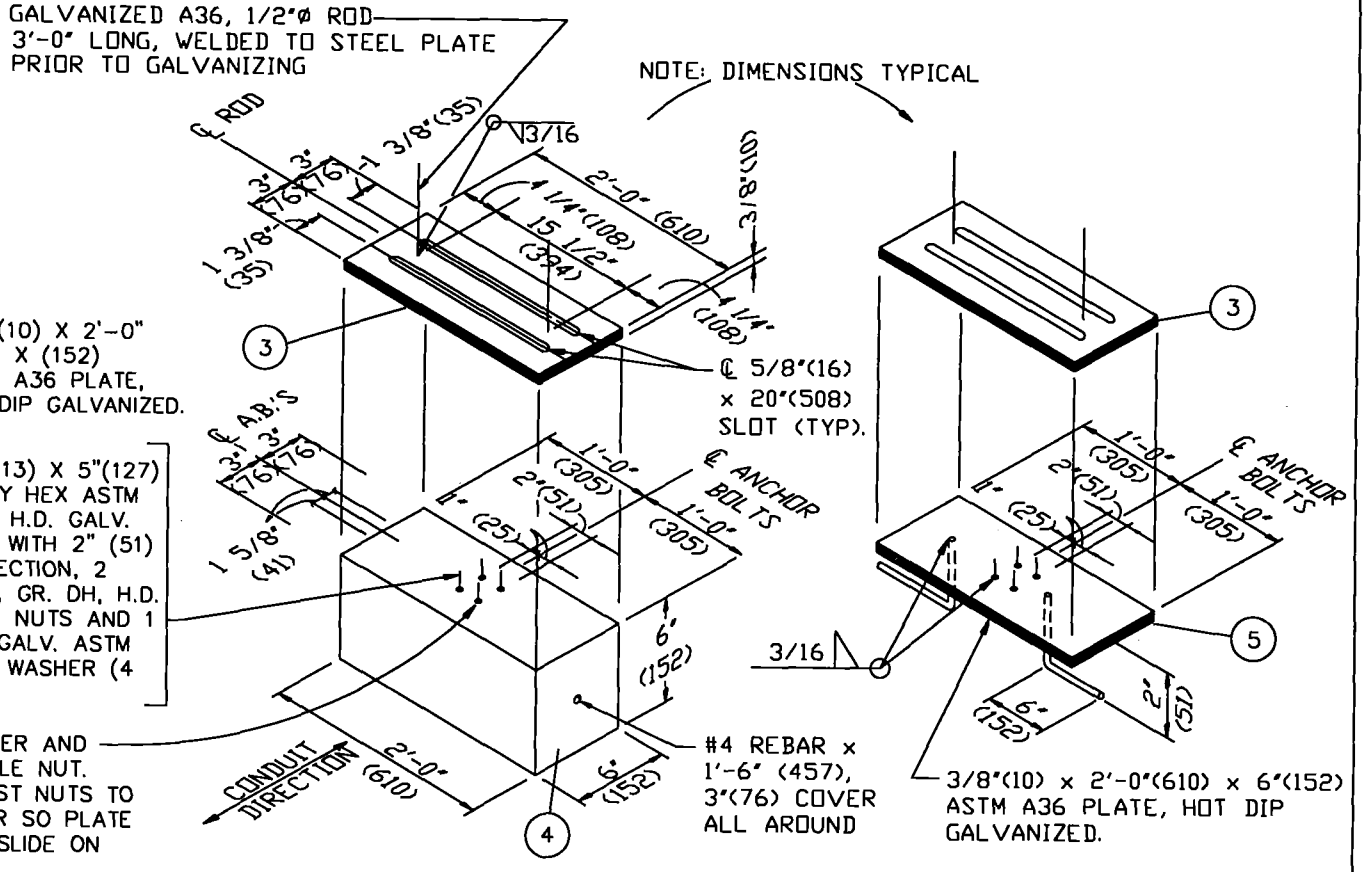

TYPE "C" SLIDING SUPPORT

(NOTE: 5 1/4" LATERAL MOVEMENT)
NOT TO SCALE

TYPE "D" SLIDING FLARED FLOOR SUPPORT

(NOTE: 5 1/4" LATERAL MOVEMENT)
NOT TO SCALE

3399.706 SUPERSEDES 3378.3 (1-1-97)	SDG&E ELECTRIC STANDARDS CONDUIT INSTALLATION IN CELL BRIDGES	DATE 1-1-2000 APPD RBT/CMK

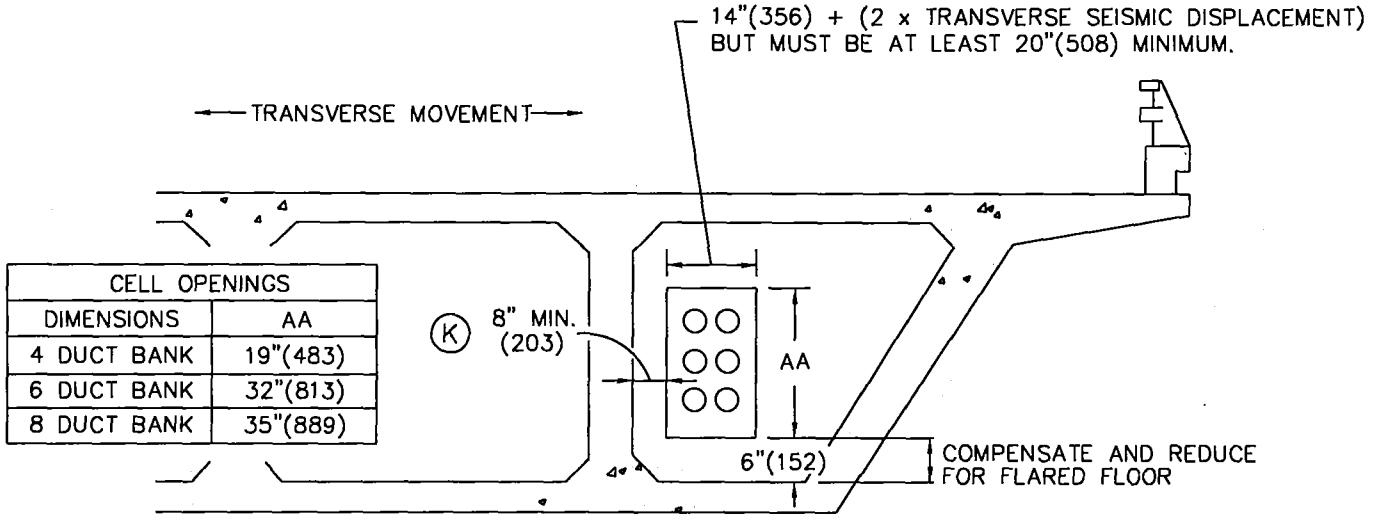

ABUTMENT BACK-WALL AND END DIAPHRAGM OPENING

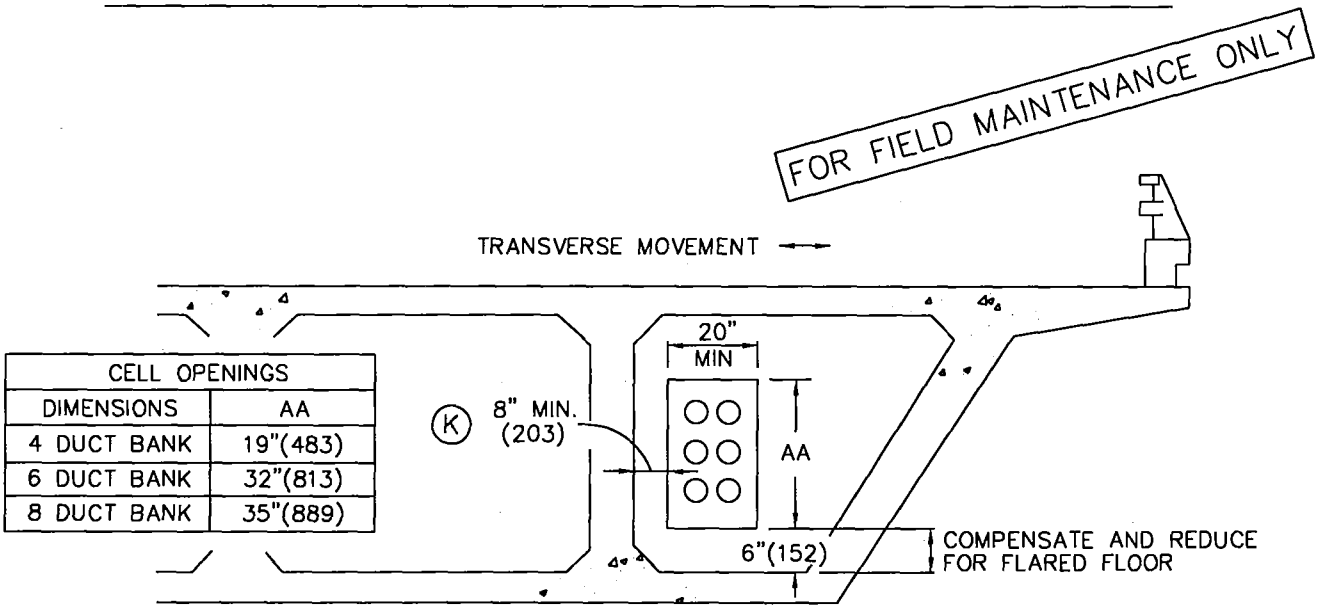

BENT OPENING

DATE 1-1-2000 APPD [signature]	SDG&E ELECTRIC STANDARDS CONDUIT INSTALLATION IN CELL BRIDGES	3399.707 SUPERSEDES 3378.4 (1-1-97)

TABLE OF CONTENTS

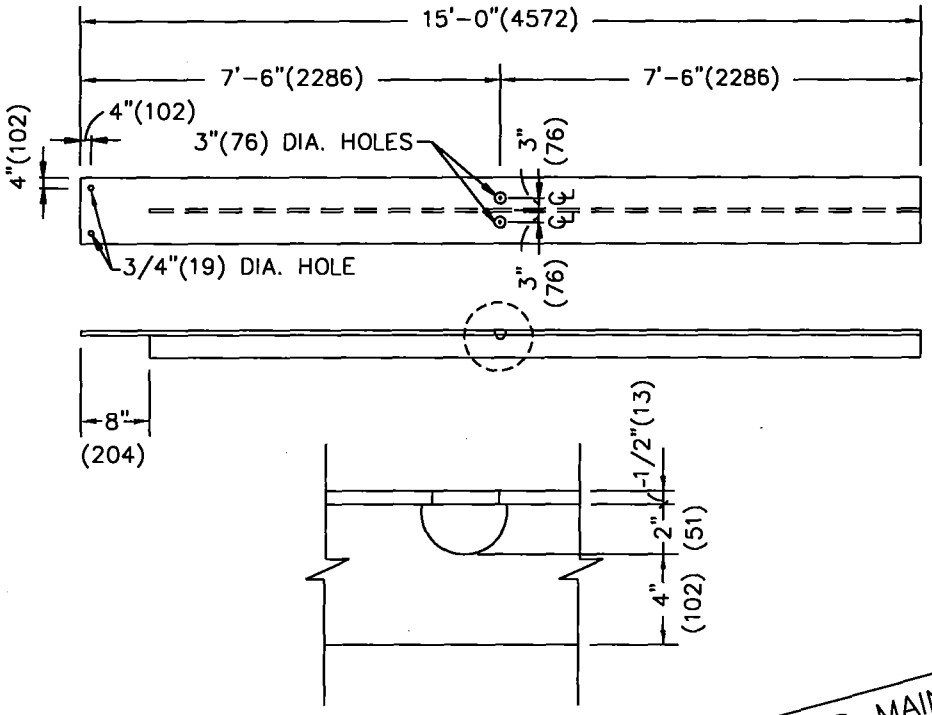

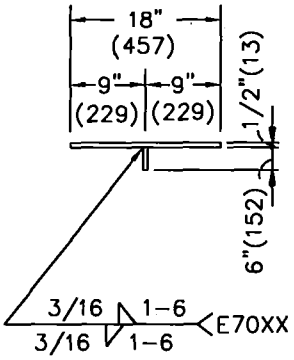

DETAIL 1

FOR FIELD MAINTENANCE ONLY

LARGE SHEAR PLATE

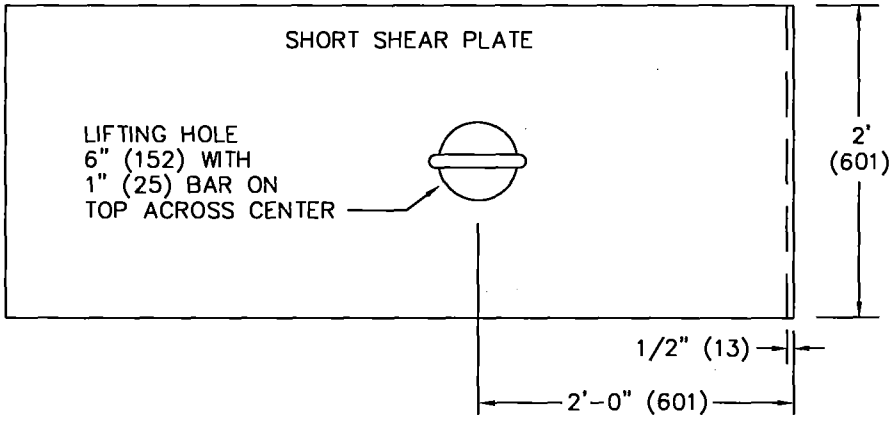

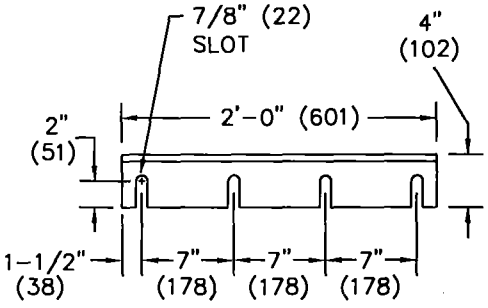

SHORT SHEAR PLATE

3399.708 SUPERSEDES 3378.5 (1-1-97)	SDG&E ELECTRIC STANDARDS SHEAR PLATES	DATE 1-1-2000 APPD

TABLE OF CONTENTS

SCOPE: THIS STANDARD (3378.7 & 3378.8) SHOWS THE INSTALLATION OF SCHEDULE 40, 4 INCH (102) OR 5 INCH (127) PVC CONDUIT IN A BRIDGE SIDEWALK OR BRIDGE SLAB FOR SLAB BRIDGE INSTALLATIONS.

INSTALLATION:

(R) CONDUIT EXPANSION SLEEVE SHALL BE INSTALLED AT EACH BRIDGE EXPANSION JOINT. IT SHALL BE INSTALLED TO ALLOW SLEEVE MOVEMENT AS BRIDGE EXPANDS AND CONTRACTS.

(S) THE EDGE OF THE OUTER SLEEVE (FEMALE SECTION) MUST LINE UP WITH THE EDGE OF THE BRIDGE EXPANSION JOINT.

(T) A 1/2 INCH (13) EPOXY COATED SHEAR PLATE IS BE REQUIRED IF THE APPROACH SLAB IS NOT SUPPORTED . A SHEAR PLATE CAN PROTECT THE CONDUITS AGAINST SHEAR AS A RESULT OF DIFFERENTIAL SETTLEMENT.

(U) CONDUITS IN THE SIDEWALK MUST BE SCHEDULE 40 PVC AND HAVE A MINIMUM OF 2 INCH CONCRETE COVERAGE.

(V) CONTACT STANDARDS FOR NON-STANDARD MATERIAL SPECIFICATION.

(W) CONSULT BRIDGE DESIGN ENGINEER FOR LONGITUDINAL & TRANSVERSE DISPLACEMENT AT SOIL TO ABUTMENT INTERFACE AND ABUTMENT TO BRIDGE INTERFACE.

(X) CONSULT CIVIL/STRUCTURAL IF THE BRIDGE DESIGN HAS ANY OF THE FOLLOWING PARAMETERS:

1. LONGITUDINAL DISPLACEMENT GREATER THAN 3 INCHES.
2. TRANSVERSE DISPLACEMENT GREATER THAN 1 INCH.
3. DISPLACEMENT THAT CAUSES CONFLICT WITH INSTALLATION.
4. BRIDGE HAVING EXPANSION JOINTS OTHER THAN THOSE AT THE END OF THE BRIDGE AT THE ABUTMENT.
5. ABUTMENT CONFIGURATIONS DIFFERENT THAN SHOWN IN THESE STANDARDS.
6. DUCT CONFIGURATIONS NOT SHOWN.

(Y) USE SHORT SHEAR PLATE IF THERE IS NO APPROACH SLAB OR APPROACH SLAB IS NOT SUPPORTED BY ABUTMENT.

FOR FIELD MAINTENANCE ONLY

TABLE OF CONTENTS

DATE 1-1-2000 APPD [illegible]	SDG&E ELECTRIC STANDARDS CONDUIT INSTALLATION IN SLAB BRIDGES	3399.709 SUPERSEDES 3378.6 (1-1-97)

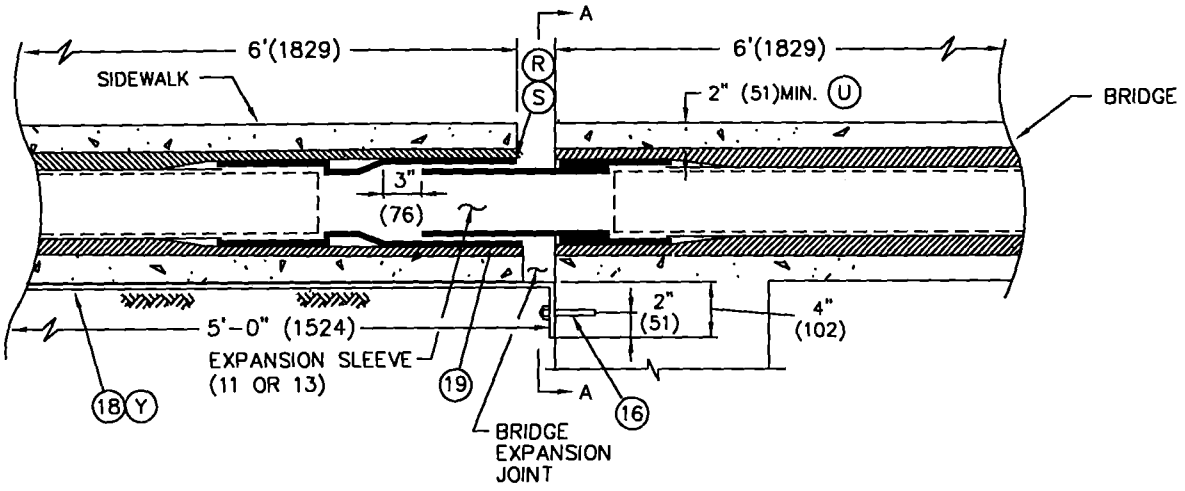

NOTES: IN AN EFFORT TO IMPROVE RESISTANCE TO EARTHQUAKE DAMAGE, 4 INCH CONDUIT IS THE MAXIMUM SIZE PERMITTED BY CALTRANS IN A CALTRANS BRIDGE SIDEWALK.

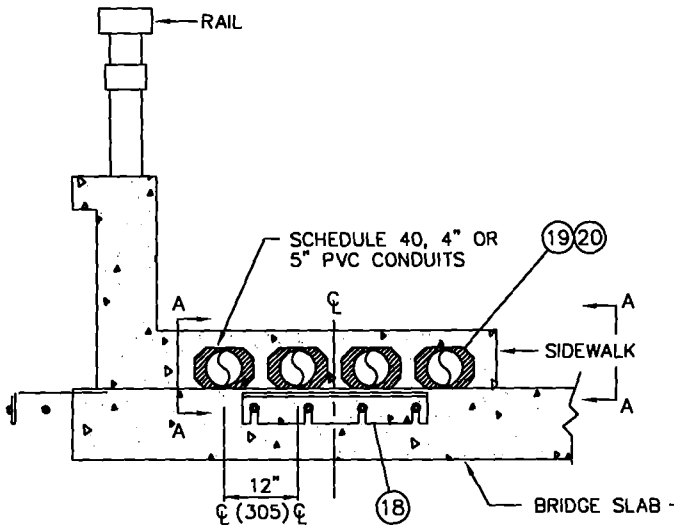

SIDEWALK INSTALLATION, SECTION A-A

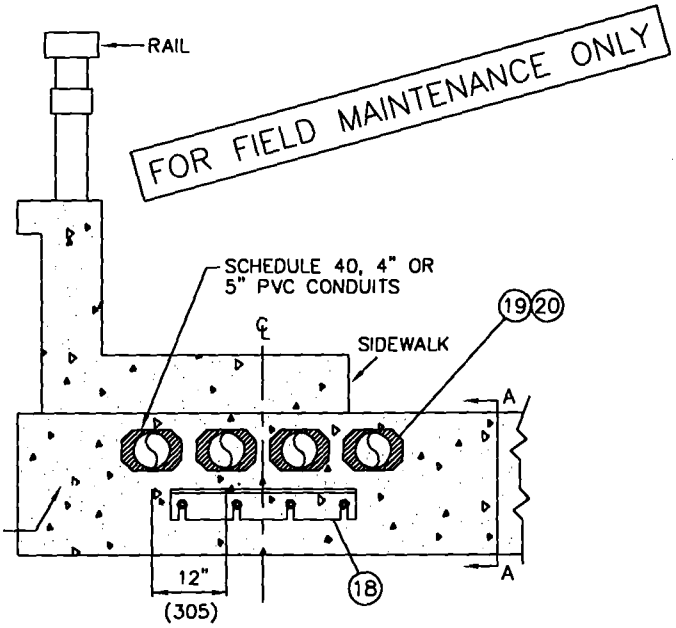

SLAB INSTALLATION, SECTION A-A

EXPANSION SECTION A-A

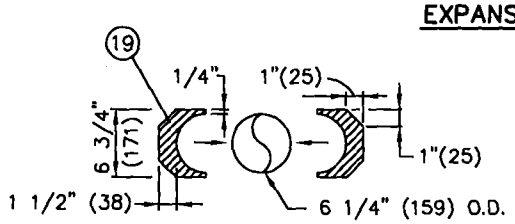

STYROFOAM CASING
FOR 5" (127)ø CONDUIT

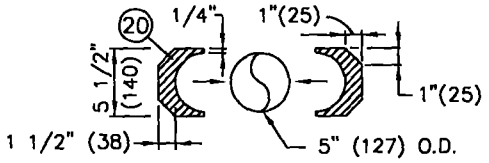

STYROFOAM CASING
FOR 4" (102)ø CONDUIT

NOTES:

1. MATERIAL SHALL BE NON-DENSE STYROFOAM
2. SEAL ALL JOINTS WITH DUCT TAPE TO PREVENT CONCRETE ENTRY.

3399.710 SUPERSEDES 3378.7 (1-1-97)	SDG&E ELECTRIC STANDARDS CONDUIT INSTALLATION IN SLAB BRIDGES	DATE 1-1-2000 APPD

TABLE OF CONTENTS

SCOPE: THIS STANDARD SHOWS THE INSTALLATION OF 5 INCH CONDUITS IN CLOSED CELL BRIDGE CONSTRUCTION.

CONDUIT INSTALLATIONS IN CELL BRIDGES

TYPE 1 BRIDGE ABUTMENT

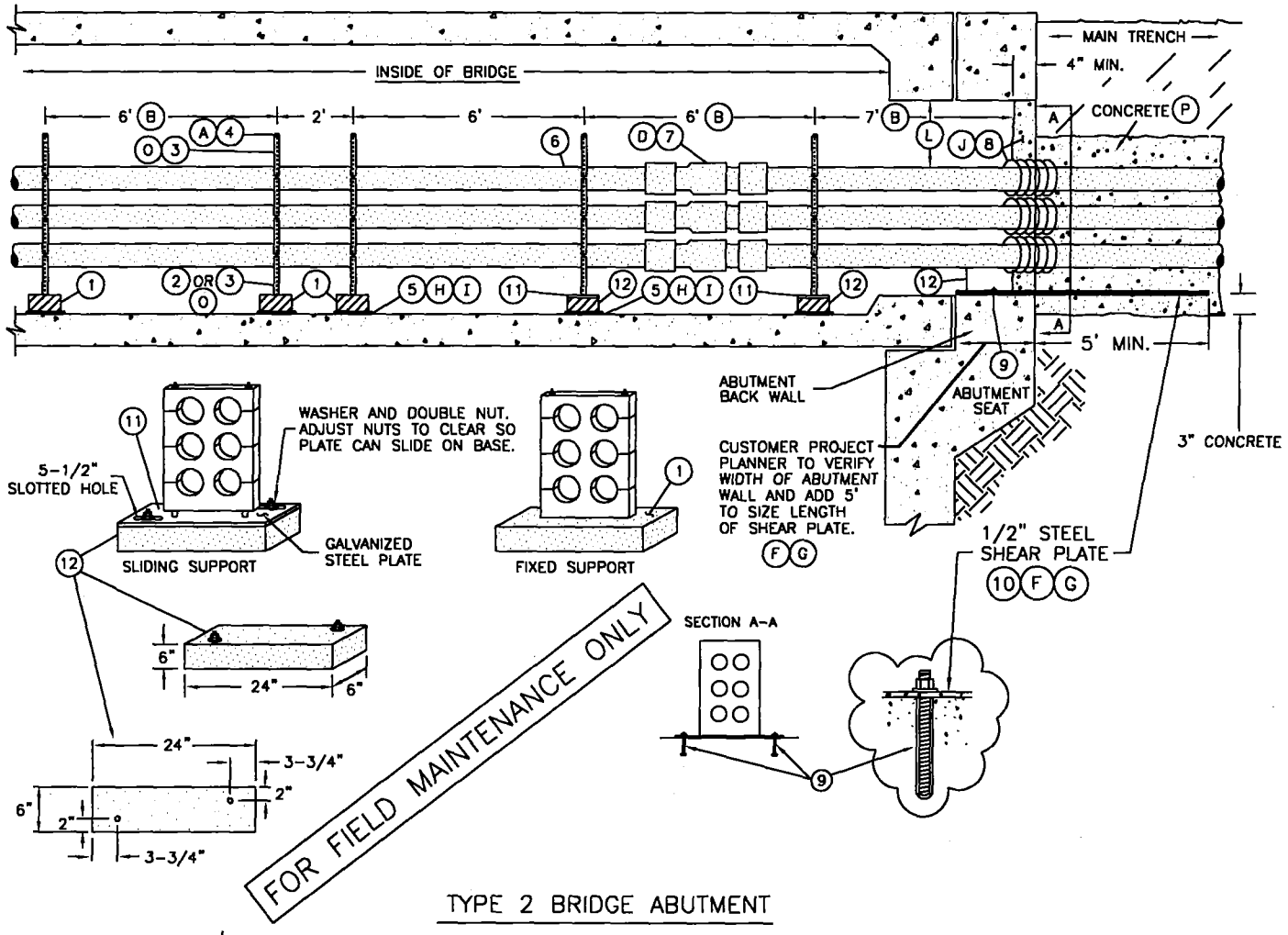

FOR FIELD MAINTENANCE ONLY

TYPE 2 BRIDGE ABUTMENT

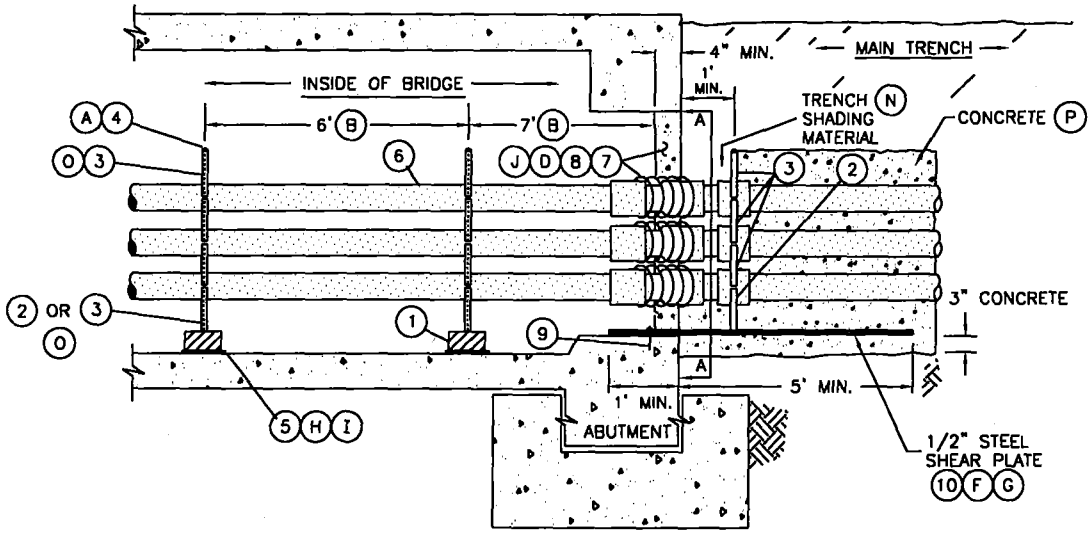

DATE 1-1-98 APPD	SDG&E ELECTRIC STANDARDS CONDUIT INSTALLATION IN CELL BRIDGES	3399.711 SUPERSEDES 3378.1 (1-1-98)

TABLE OF CONTENTS

TABLE 1

CELL OPENINGS (K)				
DIMENSIONS	AA	BB	CC	DD
4 DUCT BANK	20"	19"	6"	8"
6 DUCT BANK	20"	27"	6"	8"
8 DUCT BANK	20"	35"	6"	8"

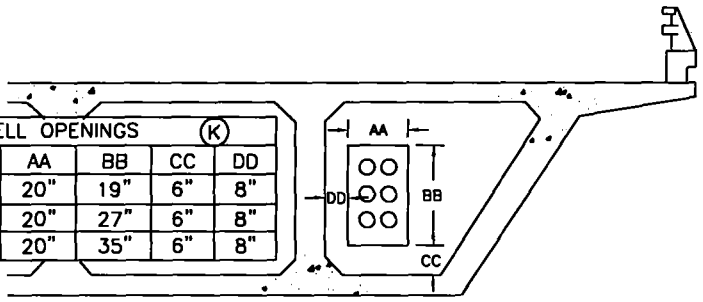

TABLE 2

ULTIMATE TOTAL WT. PER 100' (C)		
4 CONDUIT	6 CONDUIT	8 CONDUIT
4542	6463	8384

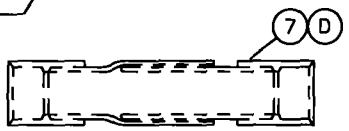

5" EXPANSION SLEEVE

FOR FIELD MAINTENANCE ONLY

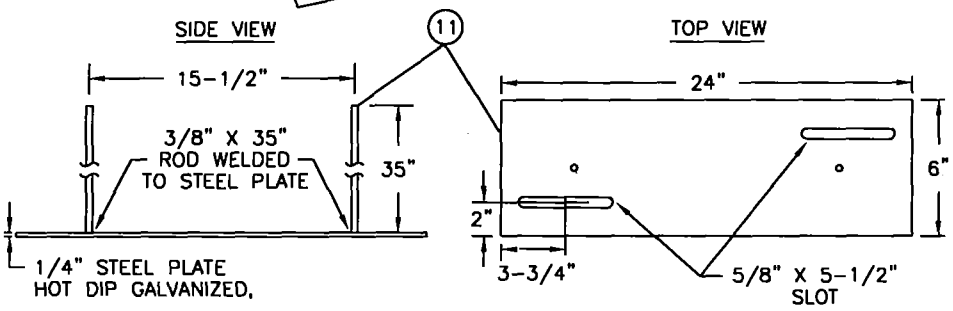

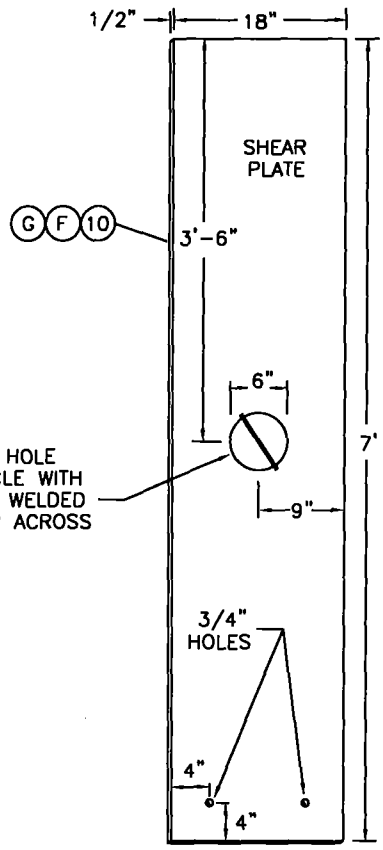

NOTES:

– IN AN EFFORT TO IMPROVE RESISTANCE TO EARTHQUAKE DAMAGE, 4 INCH CONDUIT IS THE MAXIMUM SIZE PERMITTED BY CAL–TRANS IN A BRIDGE SIDEWALK.

BILL OF MATERIAL:

ITEM	DESCRIPTION	QUANTITY	CONST STD OR PAGE NO.	STOCK NUMBER	ASSEMBLY UNIT
1	FIXED SUPPORT, CONCRETE CONDUIT SPACER, 24" X 6" X 6" W/GALV. STEEL STEEL REINFORCING ROD, 3/8"	AS REQ'D	--	703520	BR-FIX
2	SPACER, CONDUIT BASE	AS REQ'D	3375	663008	--
3	SPACER, CONDUIT INTERMEDIATE	AS REQ'D	3375	663528	
4	WIRE, IRON, #14 GALVANIZED (A)	AS REQ'D	--	815648	
5	EPOXY BINDER (CAL–TRANS APPROVED)	AS REQ'D	--	213242	
6	CONDUIT, PVC, SCHEDULE 40, 5"	AS REQ'D	3378	251408	S40-5"
7	SLEEVE, EXPANSION, CONDUIT PLASTIC, 5"	AS REQ'D	3378	650128	--
8	PAPER, BUILDING 15# (ROOFING PAPER)	AS REQ'D	--	--	
9	5/8" HVA ADHESIVE ANCHOR ROD SYSTEM W/HAS SUPER SS58-758 ANCHOR ROD BY HILTI, INC. (1-800-879-8000)	AS REQ'D	--	--	
10	PLATE, SHEAR (LIGHT GREY EPOXY COATED, ALL SIDES) 18" X 7' X 1/2" (F) (G)	AS REQ'D	3378	543110	SHEAR

3399.712 SUPERSEDES 3378.2 (1-1-98)	SDG&E ELECTRIC STANDARDS	DATE 1-1-98 APPD
	CONDUIT INSTALLATION IN CELL BRIDGES	

TABLE OF CONTENTS

BILL OF MATERIAL:

ITEM	DESCRIPTION	QUANTITY	CONST STD OR PAGE NO.	STOCK NUMBER	ASSEMBLY UNIT
11	SLIDING SUPPORT, HOT DIP GALVANIZED STEEL PLATE, 24" X 6" X 1/4" WITH TWO 3/8" X 35" RODS, TWO 5/8" X 5-1/2" SLOTS.	AS REQ'D	3378	703524	BR-SLI
12	SLIDING SUPPORT CONDUIT CONCRETE BASE, 24" X 6" X 6" WITH 1/2" X 5" S.S. (304) ANCHOR BOLT WITH 1" LEG. 2-S.S. NUTS AND 1-S.S. FLAT WASHER ON EACH BOLT.	AS REQ'D	3378	703522	

INSTALLATION:

(A) THE CONDUITS SHALL BE SECURELY STRAPPED TO THE CONDUIT SPACER SUPPORT (ITEM 1 & 11) WITH #14 GALVANIZED WIRE (ITEM 4), FOR EIGHT CONDUITS. WHEN 6 OR LESS CONDUIT RUNS ARE INSTALLED, EXTRA ROD LENGTH MAY BE CUT OR FOLDED OVER TOP OF CONDUITS TOWARD EACH OTHER INSTEAD OF USING THE GALVANIZED WIRE.

(B) THE FIRST SUPPORT INSIDE THE CELL MUST BE PLACED AT 7 FEET TO ALLOW MAXIMUM DEFLECTION. THE FIRST TWO SLIDING SUPPORTS (ITEM 11) SHALL BE SPACED AT 6 FEET AND FOLLOWED BY TWO FIXED SUPPORTS (ITEM 1) SPACED AT 2 FEET. THE REST OF THE SUPPORTS (ITEM 1) SHALL BE PLACED 6 FEET APART IN THE BRIDGE CELLS.

(C) TOTAL WEIGHT INCLUDES CONDUIT, CONDUIT SPACERS, CONDUIT SUPPORTS AND CONDUCTORS. CONDUCTORS ARE 1000 KCMIL JACKETED AL. SEE TABLE 2.

(D) CONDUIT EXPANSION SLEEVE (ITEM 7), SHALL BE INSTALLED AT EACH BRIDGE EXPANSION JOINT AND/OR AT A MAXIMUM DISTANCE BETWEEN EXPANSION JOINTS OF EVERY 100 FEET THROUGHOUT THE RUN.

(F) A 1/2 INCH STEEL SHEER PLATE IS TO BE PLACED FROM THE BRIDGE ABUTMENT WALL EXTENDING 5 FEET MIN. OUTSIDE THE ABUTMENT TO SUPPORT AND PROTECT THE CONDUITS AGAINST SHEAR FROM EMBANKMENT SETTLEMENT.

(G) NEW BRIDGES

TYPE 1 BRIDGE OPENINGS REQUIRE AN 18 INCH WIDE STEEL SHEAR PLATE. THE LENGTH OF THE PLATE SHALL BE 5 FEET MIN. OUTSIDE THE ABUTMENT, PLUS THE WIDTH OF THE ABUTMENT WALL, USE STOCK ITEM 543110. IF A SPECIAL SIZE SHEAR PLATE IS REQUIRED, THE CUSTOMER PROJECT PLANNER IS TO FILL OUT A MACHINE SHOP ORDER FORM, AND SEND IT TO THE MACHINE SHOP.

TYPE 2 BRIDGE OPENINGS REQUIRE AN 18 INCH WIDE STEEL SHEAR PLATE. INSTALL WITH 1 FOOT MIN. OF THE PLATE ON THE BRIDGE ABUTMENT AND 5 FEET MIN. OUTSIDE THE ABUTMENT, USE STOCK ITEM 543110. THE CUSTOMER PROJECT PLANNER IS TO FILL OUT A MACHINE SHOP ORDER FORM IF A SPECIAL SIZE SHEAR PLATE IS REQUIRED AND SEND IT TO THE MACHINE SHOP.

FOR OTHER TYPE BRIDGES, CONSULT DISTRIBUTION STANDARDS ENGINEER FOR INSTALLATION STANDARDS.

(H) THE CONDUIT SPACER SUPPORT (ITEM 1 & 11) SHALL BE SECURELY ATTACHED TO THE BRIDGE SLAB WITH EPOXY BINDER (ITEM 5). THE CONCRETE SURFACE SHALL BE LEVELED AND THOROUGHLY CLEANED PRIOR TO APPLICATION OF THE EPOXY.

(I) THE EPOXY BINDER (CAL-TRANS APPROVED) IS A 2 COMPONENT ADHESIVE. APPROXIMATELY 1 GAL. OF MIXED EPOXY WILL BE NEEDED FOR EVERY 15 SUPPORTS. READ "CAREFULLY" MANUFACTURERS INSTRUCTIONS FOR APPLICATION OF EPOXY.

(J) THE SPACE BETWEEN THE CONDUIT AND THE BRIDGE ABUTMENT OPENING SHALL BE SEALED. TIGHTLY WRAP 2 LAYERS OF #15 BUILDING PAPER AROUND CONDUITS OR EXPANSION SLEEVE, THRU THE CELL OPENING AND SEAL WITH MORTAR AT A MINIMUM THICKNESS OF 4 INCHES.

(K) FOR POSITIONING OF CELL OPENING WITHIN THE BRIDGE, SEE THE CUSTOMER PROJECT PLANNER.

(L) CONSULT BRIDGE DESIGN ENGINEER FOR SEISMIC MOVEMENT REQUIREMENTS. THEN CONSULT CIVIL/STRUCTURAL AND ELECTRIC DISTRIBUTION ANALYST FOR APPROPRIATE SEISMIC DESIGN AND CONSTRUCTION MATERIAL.

M. CONSULT CIVIL/STRUCTURAL ENGINEERING FOR ATTACHMENTS OF CONDUITS TO EXISTING OR SLAB BRIDGES.

FOR FIELD MAINTENANCE ONLY

REFERENCE:

(N) SEE STANDARD PAGES 3370.3/3371.3 FOR TRENCH SHADING REQUIREMENTS.

(O) SEE STANDARD 3375 FOR CONDUIT SPACER DATA.

(P) SEE STANDARD 3376 FOR CONCRETE ENCASED MULTI-CONDUIT INSTALLATION.

Q. CONSULT DESIGN STANDARDS FOR CABLE AMPACITY AND GROUNDING REQUIREMENTS FOR STEEL CONDUITS.

TABLE OF CONTENTS

DATE 1-1-98 APPD [signature] 1/1998	SDG&E ELECTRIC STANDARDS CONDUIT INSTALLATION IN CELL BRIDGES	3399.713 SUPERSEDES 3378.3 (1-1-98)

SCOPE: THIS STANDARD SHOWS THE INSTALLATION OF SCHEDULE 40, 5 INCH PVC CONDUITS IN A BRIDGE SIDEWALK OR BRIDGE SLAB FOR SLAB BRIDGE INSTALLATIONS.

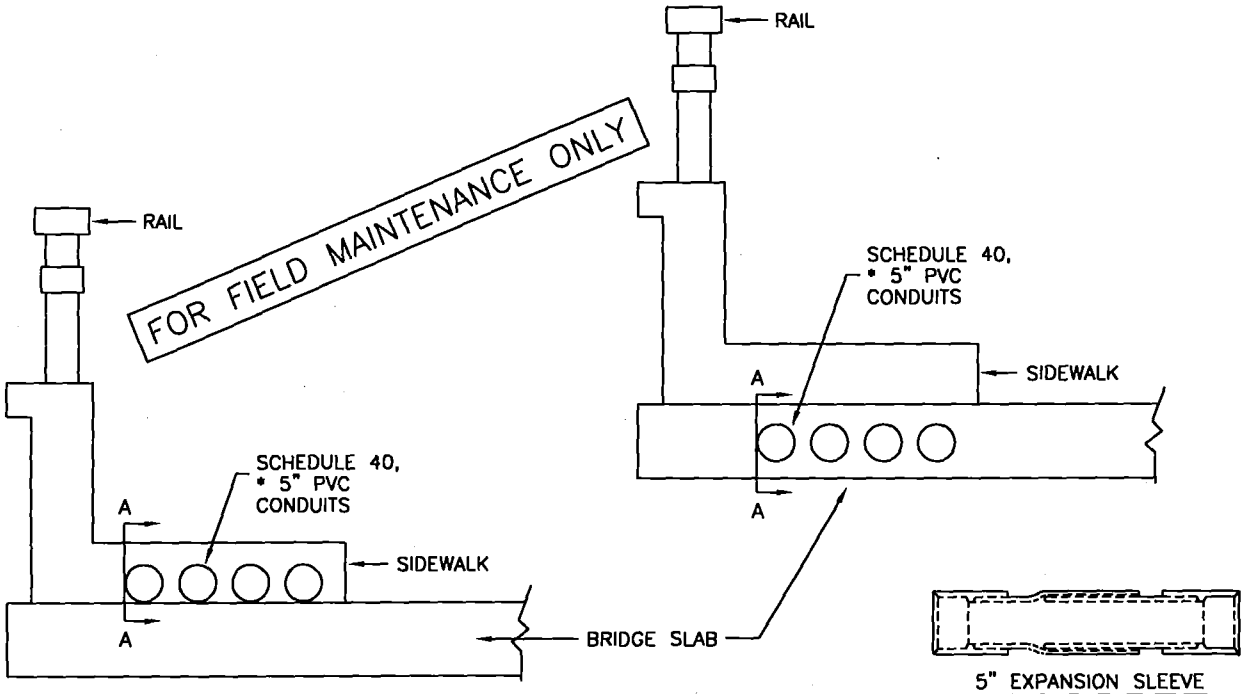

5" EXPANSION SLEEVE

STOCK NUMBER
650128

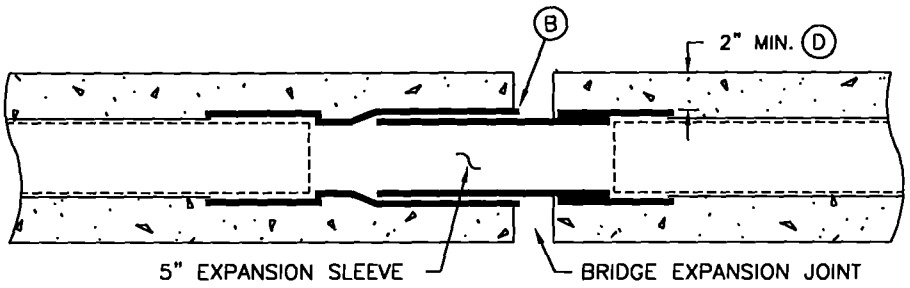

SECTION A–A

* **NOTES:**

– IN AN EFFORT TO IMPROVE RESISTANCE TO EARTHQUAKE DAMAGE, 4 INCH CONDUIT IS THE MAXIMUM SIZE PERMITTED BY CAL–TRANS IN A CALTRANS BRIDGE SIDEWALK.

INSTALLATION:

A. CONDUIT EXPANSION SLEEVE SHALL BE INSTALLED AT EACH BRIDGE EXPANSION JOINT. IT SHALL BE INSTALLED TO ALLOW SLEEVE MOVEMENT AS CONCRETE EXPANDS AND CONTRACTS.

(B) THE EDGE OF THE OUTER SLEEVE (FEMALE SECTION) MUST LINE UP WITH THE EDGE OF THE EXPANSION JOINT.

C. A 1/2 INCH COAL–TAR EPOXY COATED SHEAR PLATE MAY BE REQUIRED AT THE JUNCTION OF BRIDGE ABUTMENT AND APPROACHING SLAB. A SHEAR PLATE CAN PROTECT THE CONDUITS AGAINST SHEAR AS A RESULT OF DIFFERENTIAL SETTLEMENT. CONTACT CIVIL ENGINEERING FOR REQUIREMENTS. (SEE PG. 3378.2 FOR SHEAR PLATE)

(D) CONDUITS IN THE SIDEWALK MUST BE SCHEDULE 40 PVC AND HAVE A MINIMUM OF 2 INCH CONCRETE COVERAGE.

E. A SET OF PLANS MUST BE SUBMITTED TO CIVIL ENGINEERING FOR REVIEW AND APPROVAL.

F. CONTACT STANDARDS ENGINEER FOR NON–STANDARD MATERIAL SPECIFICATION.

3399.714 SUPERSEDES 3378.4 (1–1–98)	SDG&E ELECTRIC STANDARDS CONDUIT INSTALLATION IN SLAB BRIDGES	DATE 1–1–98 APPD JLB/BDJ

TABLE OF CONTENTS

3400-3500 PADS, RETAINING WALLS, CLEARANCES, PAD-MOUNTED SECTIONALIZING EQUIPMENT

3400-3500 PADS, RETAINING WALLS, CLEARANCES, PAD-MOUNTED SECTIONALIZING EQUIPMENT

PAGE	SUBJECT
3499.101	TERMINATOR PAD INSTALLATION
3499.102	SWITCHING PAD
3499.103	FUSE SWITCH PAD INSTALLATION
3499.104-.105	TERMINATOR PAD
3499.106-.109	EQUIPMENT PAD
3499.201-.202	THREE-PHASE TRANSFORMER PAD INSTALLATION
3499.203-.204	THREE-PHASE TRANSFORMER PAD INSTALLATION - 75 THROUGH 500 KVA
3499.205	ALTERNATE THREE-PHASE TRANSFORMER PAD INSTALLATION WITH 7 INCH APRON EXTENSION - 750 AND 1000 KVA
3499.206	THREE-PHASE TRANSFORMER PAD INSTALLATION - 75 THROUGH 500 KVA
3499.207	THREE-PHASE TRANSFORMER PAD INSTALLATION - 750 AND 1000 KVA
3499.210	SINGLE-PHASE TRANSFORMER PLASTIC PAD - 5-3", 4-4" OR 3-5" SECONDARY CONDUITS MAXIMUM
3499.211-.212	FUSED SWITCHING PAD
3499.214-.216	AIR BREAK PMH-3 SECTIONALIZING SWITCH PAD
3499.401	3440 & 3441 PADS FOR PAD-MOUNTED 12KV, 600 AMP, THREE-PHASE SWITCH
3499.402	3440A & 3441A PADS FOR PAD PMH-5 12KV, 600 AMP, THREE-PHASE SWITCH
3599.001	CAPPED SPLICE TERMINATION - 12KV AND BELOW
3599.002	SWITCH BLADES - ARC STRANGLER
3599.003	CONTAMINATION PREVENTION INSTALLATION PROCEDURES
3599.101	PAD-MOUNT SWITCHING CABINET
3599.102	PAD-MOUNT LOW PROFILE FUSED SWITCHING CABINET
3599.103	THREE-PHASE PAD-MOUNT FUSE SWITCH
3599.104	LOW-PROFILE FUSED SECTIONALIZING CABINET - SINGLE-PHASE 7200 VOLTS
3599.105	IN LINE FUSE SWITCH CABINET - INSTALLATION UNDER 200 AMPS
3599.106	THREE-PHASE, 200 AMP PAD-MOUNT LOW PROFILE FUSED SWITCHING CABINET - INSTALLATION
3599.107	LOW PROFILE FUSED SECTIONALIZING CABINET - INSTALLATION
3599.108	THREE-PHASE 200 AMP, PAD-MOUNT FUSE SWITCH INSTALLATION
3599.109-.110	FUSE - SECTIONALIZING COMPARTMENT - INSTALLATION UNDER 200 AMPS
3599.111	THREE-PHASE PAD-MOUNT FUSED SWITCHING CABINET
3599.112	THREE-PHASE, 200 AMP PAD-MOUNT FUSE SWITCH INSTALLATION
3599.201	TWO WAY HIGH VOLTAGE TERMINATOR INSTALLATION
3599.202-.204	THREE-PHASE TERMINATING ENCLOSURE, 12,000 VOLT, 350, 750 OR 1000 KCMIL CABLE
3599.205-.208	THREE-PHASE TERMINATING ENCLOSURE, 12,000 VOLT, 2/0 CABLE AND ABOVE
3599.209-.212	SINGLE-PHASE LOW PROFILE CABLE TERMINATOR, 6930 VOLTS
3599.407-.408	PAD-MOUNTED OIL SWITCH 12KV, 600 AMP, THREE PHASE

MAIN TABLE OF CONTENTS

© 1998 - 2019 San Diego Gas & Electric Company. All rights reserved. Removal of this copyright notice without permission is not permitted under law.

REV	CHANGE	BY	DSGN	APPV	DATE	REV	CHANGE	BY	DSGN	APPV	DATE
C						F					
B	COMPLETELY REVISED	JK	JS	CZH	10/16/2019	E					
A	ORIGINAL ISSUE	JK	JS	CZH	6/13/2019	D					

Indicates Latest Revision | X | Completely Revised | | New Page | | Information Removed

SDG&E ELECTRIC UNDERGROUND FIELD MAINTENANCE ONLY STANDARDS

LEGACY UNDERGROUND FIELD MAINTENANCE
TABLE OF CONTENTS
PADS, RETAINING WALLS, CLEARANCES, PAD-MOUNTED SECTIONALIZING EQUIPMENT

MAJOR USE: SUPPORT TERMINATOR

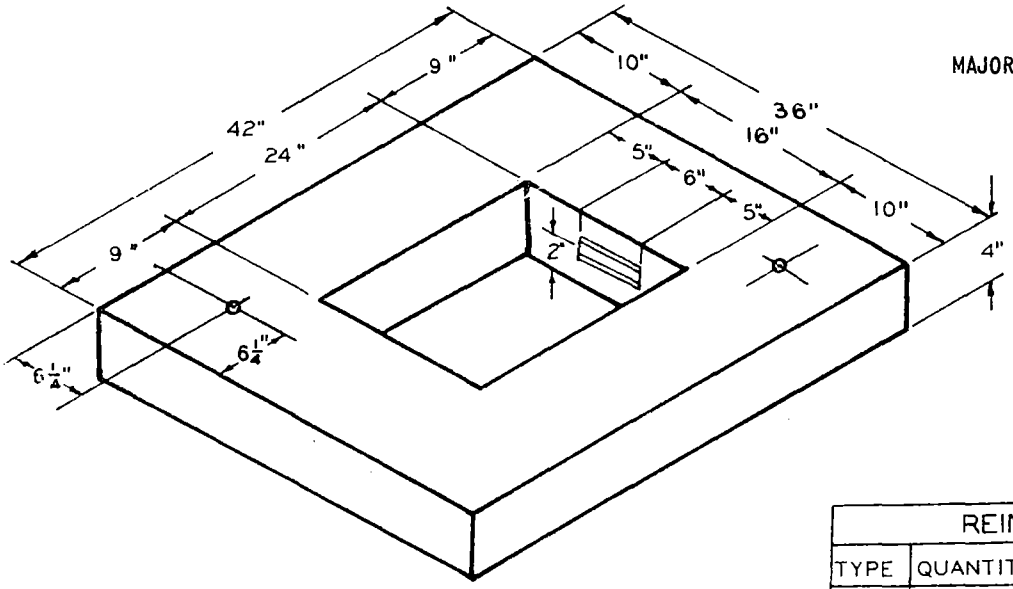

REINFORCING IRON			
TYPE	QUANTITY	DESCRIPTION	STOCK NO OR CONSTR STD
R1	2	⅜" x 3'-0"	685280
R2	2	⅜" x 2'-6"	

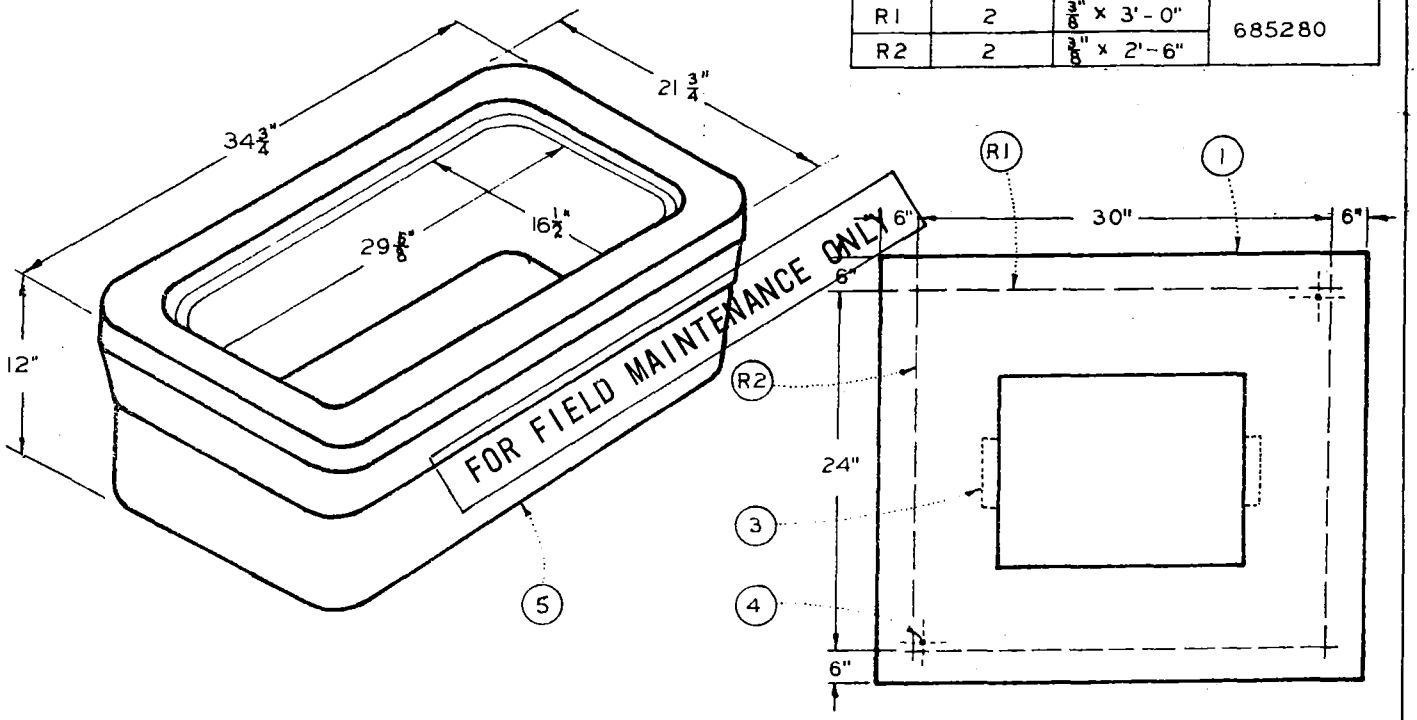

ITEM	QUANTITY	DESCRIPTION	STOCK NO. OR CONSTR. STD	PRECAST PAD STOCK NO.
1	2.61 CU. FT.	CONCRETE CLASS "A" 5½ SACK MIX	—	514272
2	4.1 LBS.	REINFORCING ROD (SEE TABLE ABOVE)	685280	
3	2	CHANNEL, CONCRETE INSERT 6"x1⅝"x⅞" UNISTRUT, CANESTRUT OR EQUAL	426280	
4	2	HANDLING INSERT, ½" THREADED GI.	—	
5	1	17" x 30" HANDHOLE BODY	3312	162426

NOTES:

A. THIS PAD MAY BE PRECAST OR POURED IN PLACE, IF POURED IN PLACE OMIT ITEM 4.
B. ITEM 3, STOCKED IN 12 INCH LENGTHS, TO BE CUT IN FIELD.
C. FOR EQUIPMENT BARRIER PROTECTION AND CLEARANCE SEE 3481
D. STACK TWO BOXES WHEN INSTALLING 500 KCMIL OR LARGER CABLES AND WHEN INSTALLING 5" DUCTS.
E. FOR EQUIPMENT PAD GROUND INSTALLATION SEE 3407.
F. FOR TERMINATOR PAD NUMBERING SEE 3211

TABLE OF CONTENTS

DATE 11-13-73 APPD	SAN DIEGO GAS & ELECTRIC COMPANY UNDERGROUND STANDARDS TERMINATOR PAD INSTALLATION	3499.101

MAJOR USE: TO SUPPORT SWITCHING CABINET.

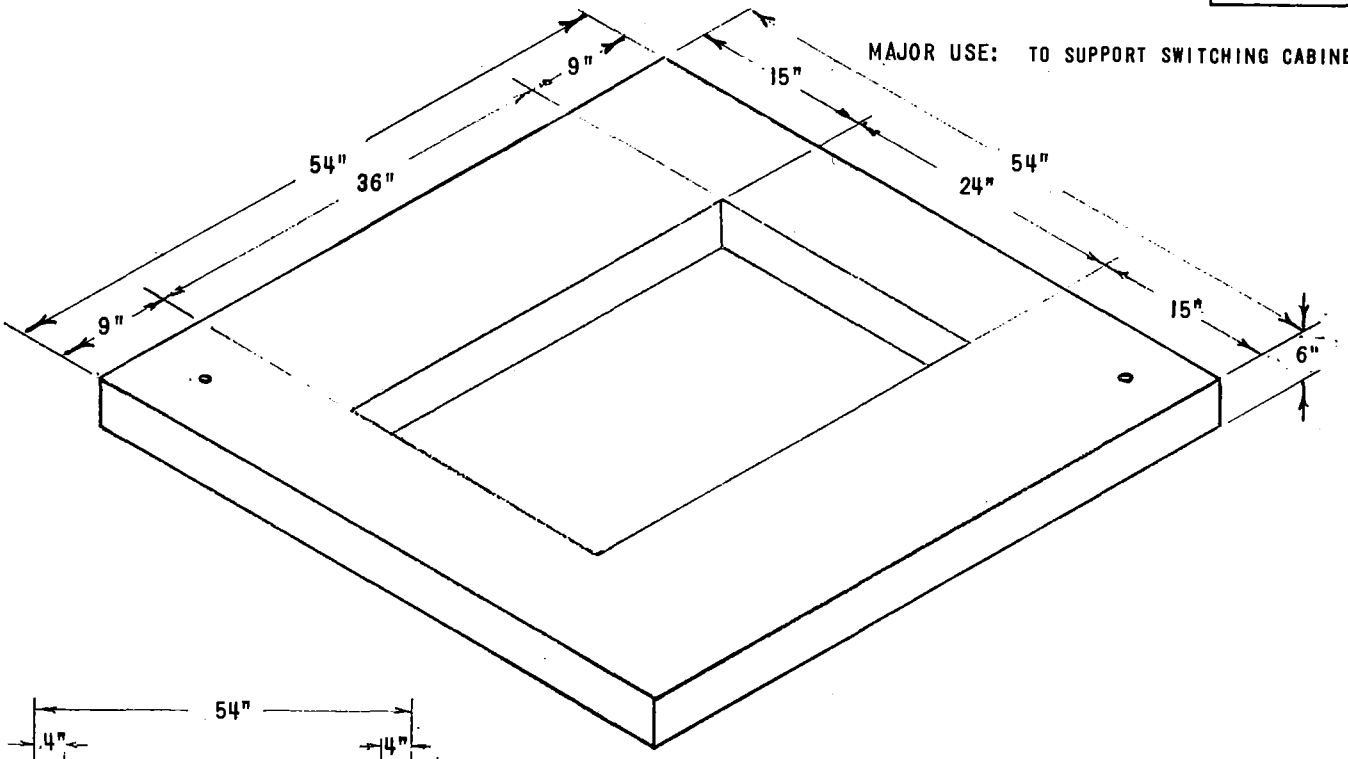

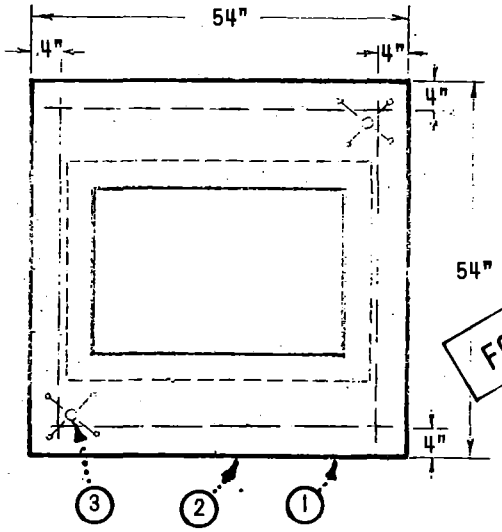

FOR FIELD MAINTENANCE ONLY

ITEM	QUANTITY	DESCRIPTION	STOCK NO. OR CONSTR. STD.	PRECAST PAD STOCK NO.
1	5.50 CU. FT.	CONCRETE, CLASS "A", 5 1/2 SACK MIX	-	513392
2	6.0 LBS.	REINFORCING ROD, 3/8" X 4'0" (4)	685280	
3	2	HANDLING INSERT, 1" THREADED G.I.	426288	

NOTES:

A. CABINET TO BE ANCHORED AT 4 CORNERS, SEE 3599.101.
B. THIS PAD MAY BE PRECAST OR POURED IN PLACE, IF POURED IN PLACE OMIT ITEM 3.
C. FOR SWITCH CABINET PAD INSTALLATION SEE 3599.105.
D. FOR FUSE SECTIONALIZING COMPARTMENT SEE 3599.109.
E. FOR FUSE SECTIONALIZING COMPARTMENT SEE 3599.110.
F. FOR SWITCH CABINET PAD NUMBERING SEE 3211.
G. FOR SWITCHING CABINET PAD GROUNDING SEE 3407.
H. FOR SWITCH CABINET BARRIER PROTECTION AND CLEARANCE SEE 3481.

TABLE OF CONTENTS

3499.102	SDG&E ELECTRIC STANDARDS SWITCHING PAD	DATE 1-18-74 APPD

MAJOR USE: TO SUPPORT SWITCHED FUSED CABINETS.

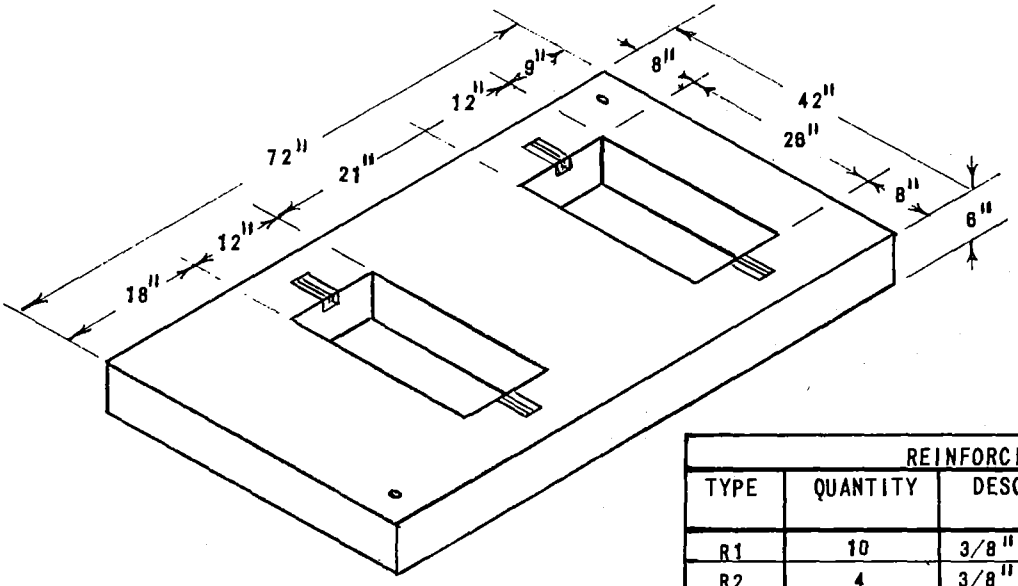

REINFORCING IRON			
TYPE	QUANTITY	DESCRIPTION	STOCK NO. OR CONSTR. STD.
R1	10	3/8" X 3'-2"	685280
R2	4	3/8" X 5'-7"	

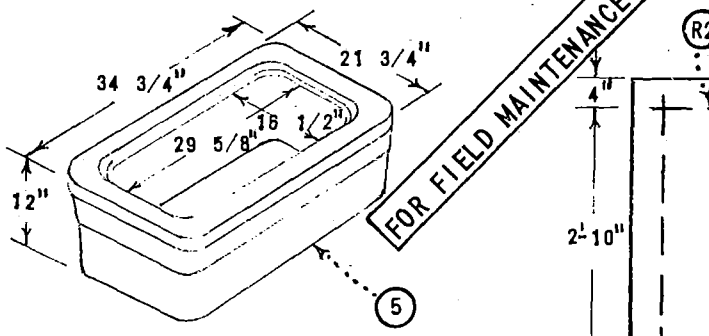

FOR FIELD MAINTENANCE ONLY

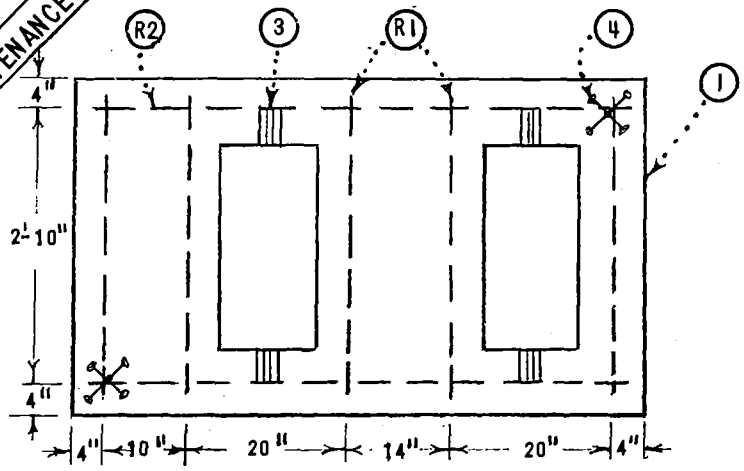

ITEM	QUANTITY	DESCRIPTION	STOCK NO. OR CONSTR. STD.	PRECAST PAD OR STOCK NO.
1	8.5 CU.FT.	CONCRETE, CLASS A, 5 1/2 SACK MIX	-	513424
2	9.1/18.2 LBS	REINFORCING RODS, SEE TABLE	685280	
3	4	CHANNEL, CONCRETE INSERT 4" X 1 5/8" X 7/8"	426280	
4	2	HANDLING INSERT, 1/2" THREADED G.I.	-	
5	2	HANDHOLE BODY, 17" X 30"	3312	162426

NOTES:

A. THIS PAD MAY BE PRECAST OR POURED IN PLACE, IF POURED IN PLACE OMIT ITEM 4, AND DECREASE REINFORCING RODS QUANTITY IN HALF.

B. ITEM 3, STOCKED IN 12 INCH LENGTHS, TO BE CUT IN FIELD.

C. FOR FUSED SWITCH CABINET INSTALLATION SEE FMO 3599.102, 3599.108 & 3599.112.

D. FOR FUSED SWITCH CABINET PAD NUMBERING SEE 3211.

E. FOR FUSED SWITCH CABINET BARRIER PROTECTION SEE 3481.

F. FOR FUSED SWITCH CABINET GROUNDING SEE 3407.

SDG&E ELECTRIC STANDARDS

DATE 6-1-75
APPD JWK

FUSE-SWITCH PAD INSTALLATION

3499.103

TABLE OF CONTENTS

SCOPE: THIS STANDARD SHOWS THE EQUIPMENT PAD, HANDHOLE AND CONDUIT PLACEMENT USED WITH THE 30 CABLE TERMINATING ENCLOSURE, 350 KCMIL AND LARGER (STANDARD 3520).

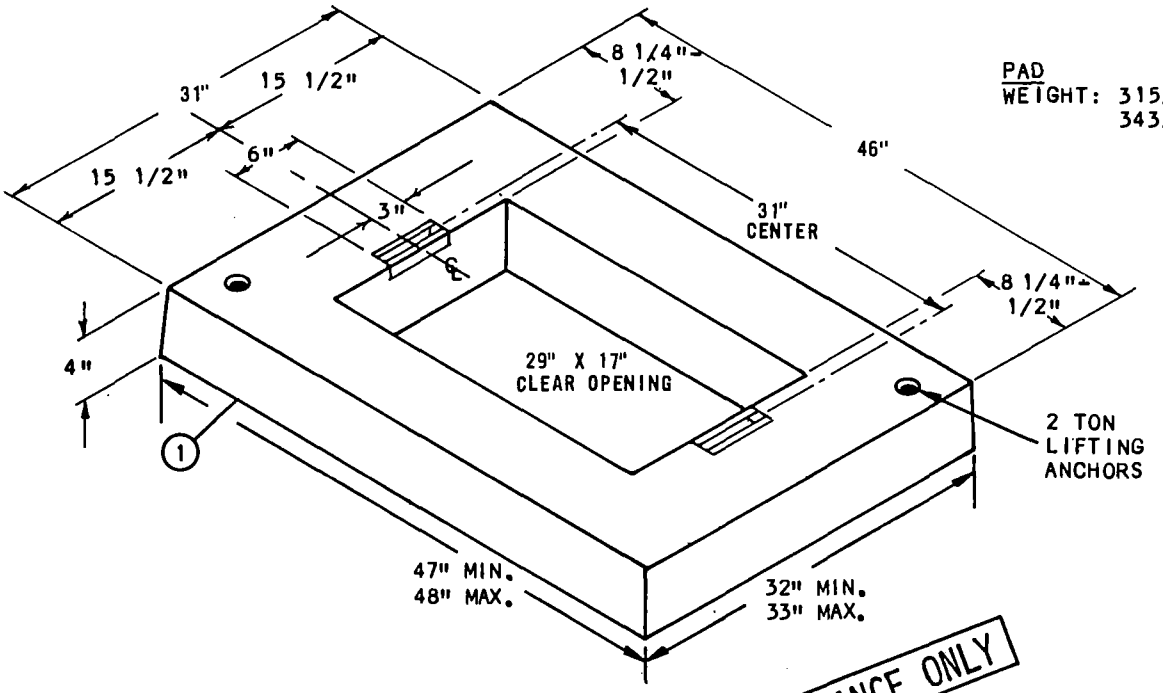

PAD
WEIGHT: 315# MIN.
343# MAX.

FOR FIELD MAINTENANCE ONLY

3312 HANDHOLE
WEIGHT: 160# MIN.
185# MAX.

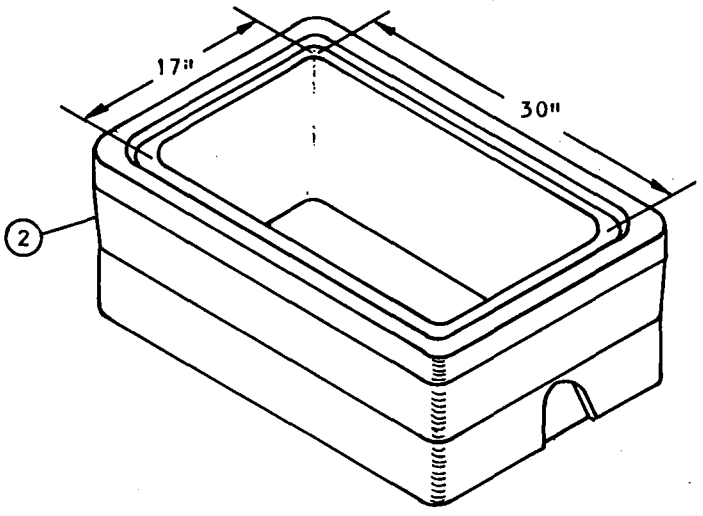

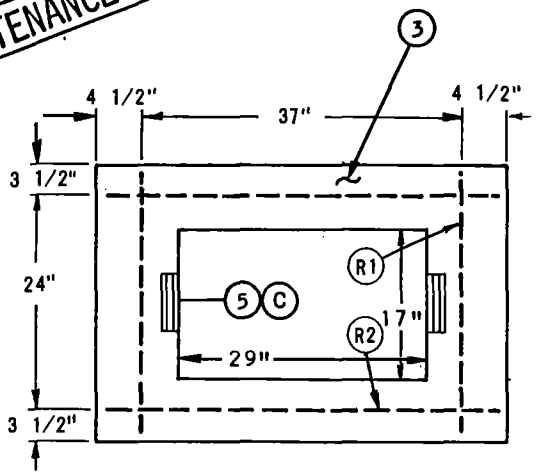

- STEEL DETAIL FOR POURED IN PLACE
- CENTER STEEL IN CONCRETE POUR.

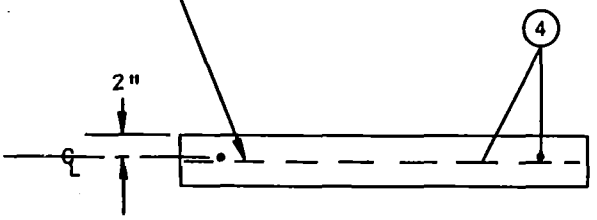

3499.104 SUPERCEDES 3413 (1-1-91)	SDG&E ELECTRIC STANDARDS TERMINATOR PAD	DATE 1-1-91 APPD

3520 INSTALLATION

TOP VIEW
3 PHASE CABLE TERMINATING ENCLOSURE
(350, 750 OR 1000 KCMIL CABLE)

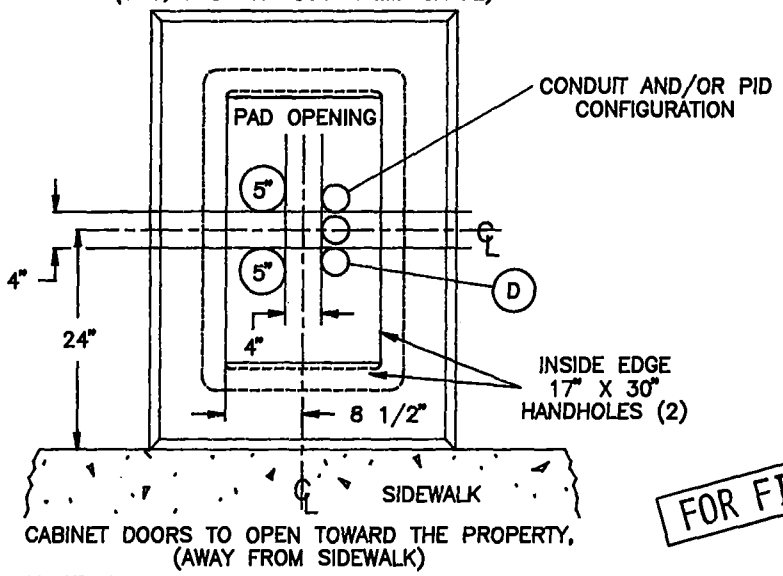

CABINET DOORS TO OPEN TOWARD THE PROPERTY,
(AWAY FROM SIDEWALK)

REINFORCING RODS (4)		
TYPE	QUANTITY	DESCRIPTION
R1	2	1/2" X 28"
R2	2	1/2" X 43"

FOR FIELD MAINTENANCE ONLY

BILL OF MATERIAL:

ITEM	DESCRIPTION	QUANTITY	CONSTR. STD OR PAGE NO.	STOCK NUMBER
1	EQUIPMENT PAD	1	3413	514220
2	HANDHOLE, 17" X 30"	2	3312	162426
3	CONCRETE CLASS 'A' 5 1/2" SACK MIX	3.24 CU. FT.	–	–
4	#4 REINFORCING RODS 1/2" (SEE TABLE ABOVE)	11'–10"	–	685152
5	CHANNEL, CONCRETE INSERTS, 6" X 1 5/8" X 7/8", UNISTRUT OR EQUAL (C)	2	–	426288
6	GALVANIZED PAINT (C)	AS REQ'D	–	516064

INSTALLATION:

A. THIS PAD MAY BE PRECAST OR POURED IN PLACE. TOP OF PAD MUST BE FINISHED FLAT.

B. WHEN PAD IS POURED IN PLACE, CONDUIT OPENINGS SHALL BE FORMED SO THAT THE CONDUIT STUBS ARE NOT CONCRETE ENCASED.

(C) IF POURED IN PLACE, ITEM 5 TO BE CUT IN FIELD. APPLY GALVANIZED PAINT TO EXPOSED ENDS.

(D) TERMINATE CONDUITS 3" ABOVE THE BOTTOM OF THE HANDHOLE.

REFERENCE:

H. SEE STANDARD 3211 FOR PAD IDENTIFICATION.
I. SEE STANDARD 3481 FOR BARRIER PROTECTION AND CLEARANCE.
J. SEE STANDARD 3483 FOR MINIMUM OPERATING AND CLEARANCE REQUIREMENTS (PAD PLACEMENT).
K. SEE STANDARD 3484 FOR PAD INSTALLATION OF PAD–MOUNTED EQUIPMENT.
L. SEE STANDARD 3486 FOR RETAINING WALL REQUIREMENTS AND CLEARANCES FROM REVERSE SUBGRADE RETAINING WALLS.
M. SEE STANDARD 3487 FOR RETAINING WALLS.
N. SEE STANDARD 3520 FOR EQUIPMENT OR INSTALLATION DETAILS.
O. SEE STANDARD 4512 FOR PAD GROUNDING.
P. SEE STANDARD 4514 FOR GROUNDING TELCO CONDUCTOR IN PAD–MOUNTED EQUIPMENT.

	SDG&E ELECTRIC STANDARDS	
DATE 1–1–91 APPD JLG/RM	TERMINATOR PAD	3499.105

TABLE OF CONTENTS

SCOPE: THIS STANDARD SHOWS THE EQUIPMENT PAD, HANDHOLE AND CONDUIT PLACEMENT USED WITH THE 3Ø CABLE TERMINATING ENCLOSURE, (2/0 AND SMALLER).

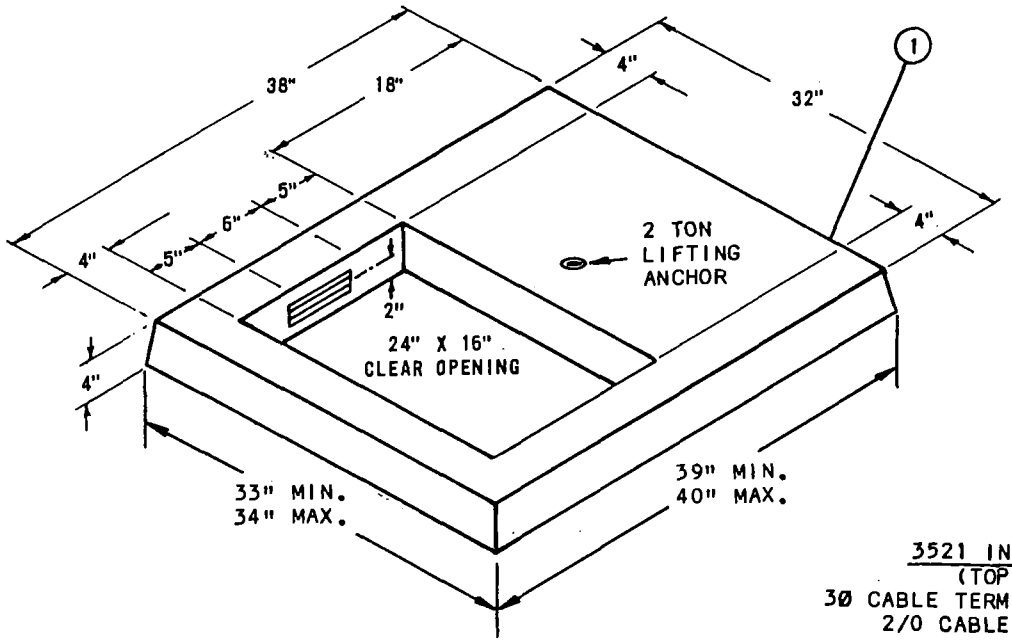

PAD
WEIGHT: 325# MAX.

3521 INSTALLATION
(TOP VIEW)
3Ø CABLE TERMINATING ENCLOSURE
2/0 CABLE AND SMALLER

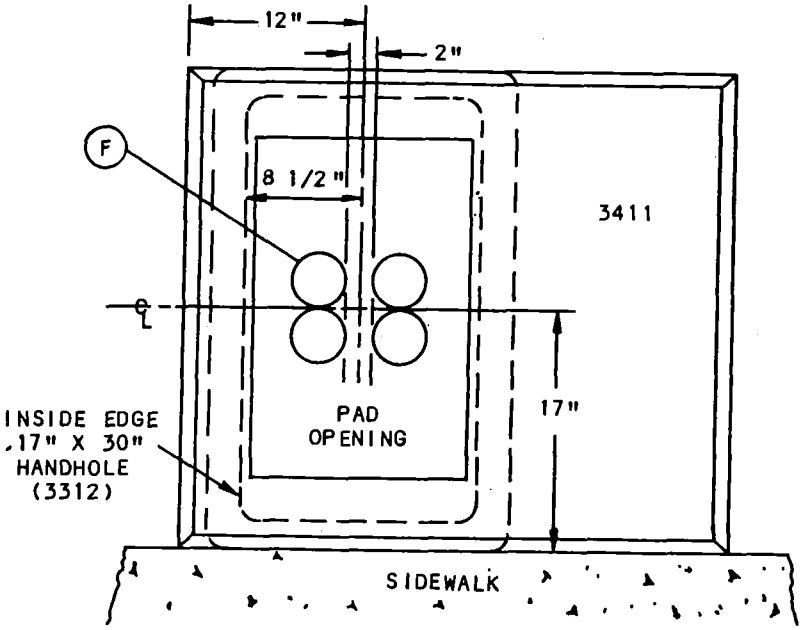

CABINET DOORS TO OPEN TOWARDS THE PROPERTY
(AWAY FROM SIDEWALK)

FOR FIELD MAINTENANCE ONLY

TABLE OF CONTENTS

BILL OF MATERIAL:

ITEM	DESCRIPTION	QUANTITY	CONST STD	STOCK NUMBER
1	EQUIPMENT PAD	1	3411	514274
2	HANDHOLE, 17" X 30"	1	3312	162426

3499.106	SDG&E ELECTRIC STANDARDS EQUIPMENT PAD	DATE 1-1-91 APPD

SCOPE: THIS STANDARD SHOWS THE EQUIPMENT PAD, HANDHOLE AND CONDUIT PLACEMENT USED WITH THE SINGLE-PHASE FUSED SWITCHING CABINET AND SINGLE-PHASE CABLE TERMINATOR.

3411.1

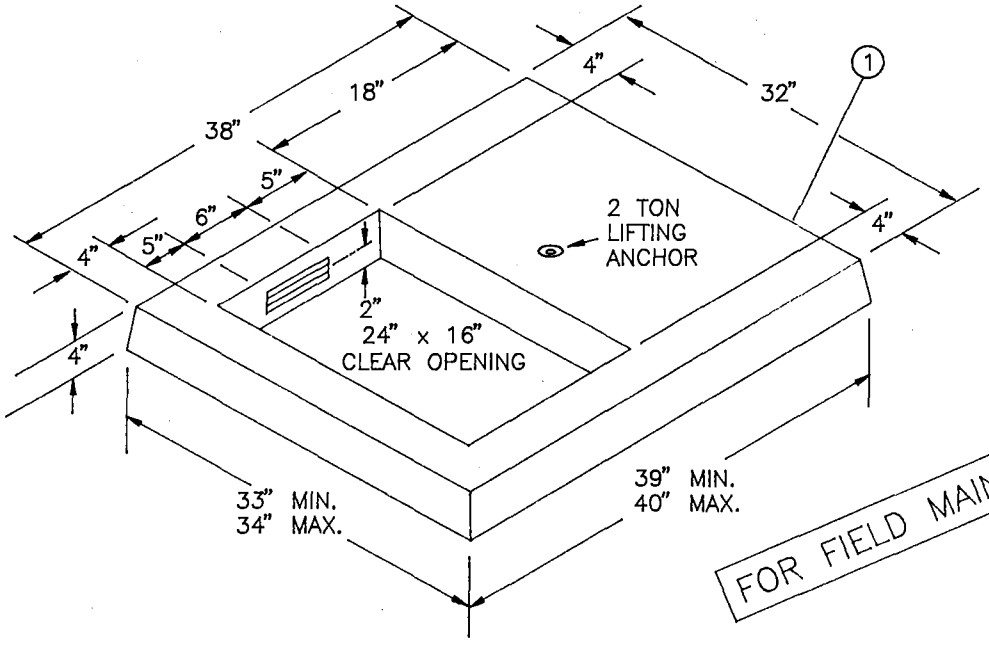

PAD

WEIGHT: 325# MAX.

FOR FIELD MAINTENANCE ONLY

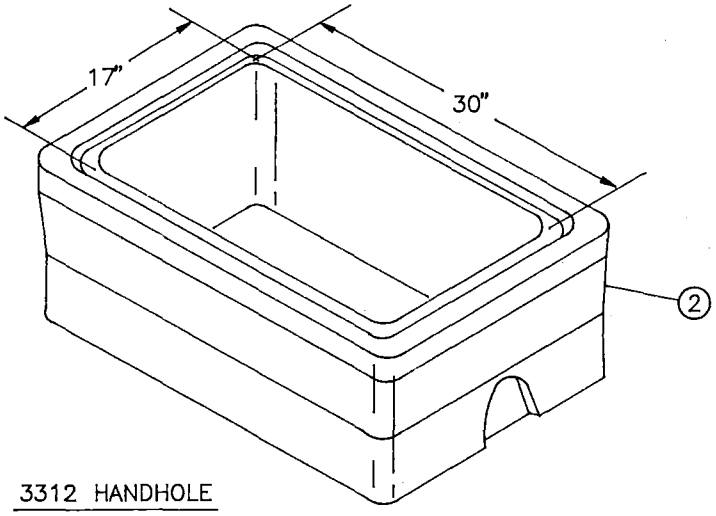

3312 HANDHOLE

WEIGHT: 160# MIN.
185# MAX.

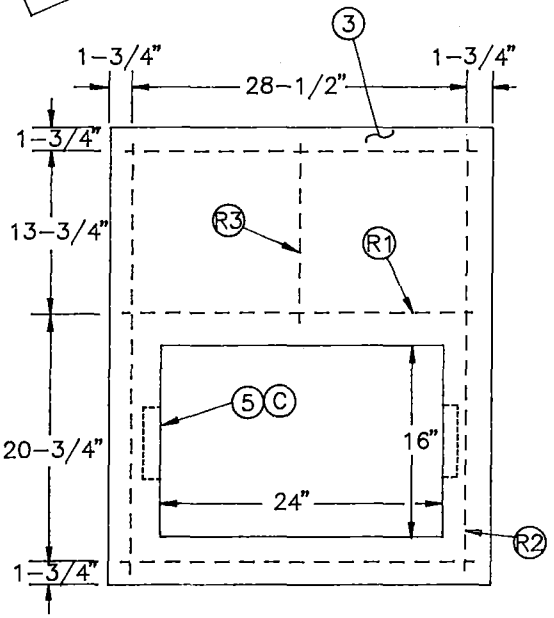

– STEEL DETAIL FOR POURED-IN-PLACE. CENTER STEEL IN CONCRETE POUR.

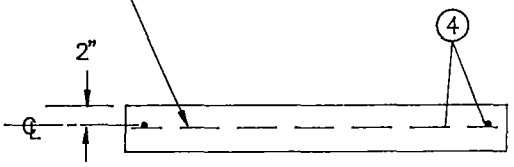

DATE 1-1-96 APPD	SDG&E ELECTRIC STANDARDS EQUIPMENT PAD	3499.107

3512 INSTALLATION
(TOP VIEW)
1Ø FUSED SWITCHING
CABINET

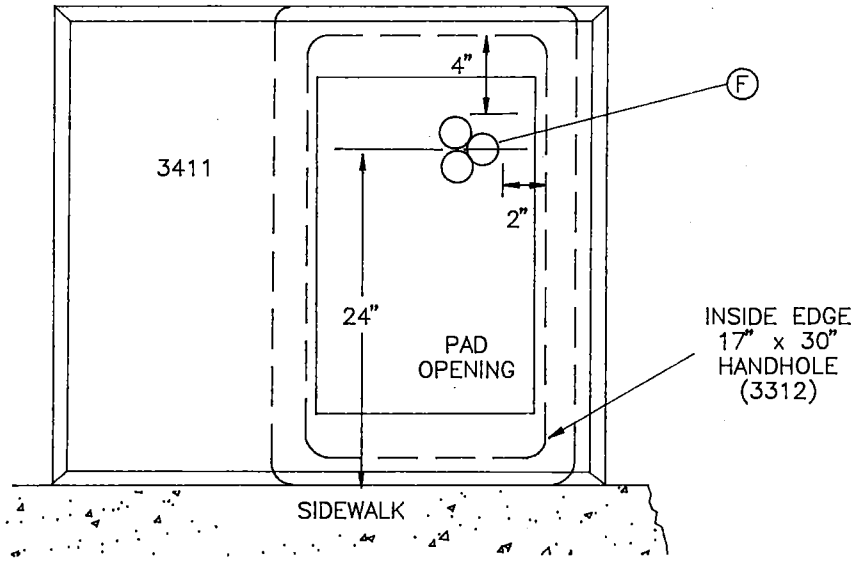

FOR FIELD MAINTENANCE ONLY

3522 INSTALLATION
(TOP VIEW)
1Ø CABLE TERMINATOR
WITH CABLE TAP

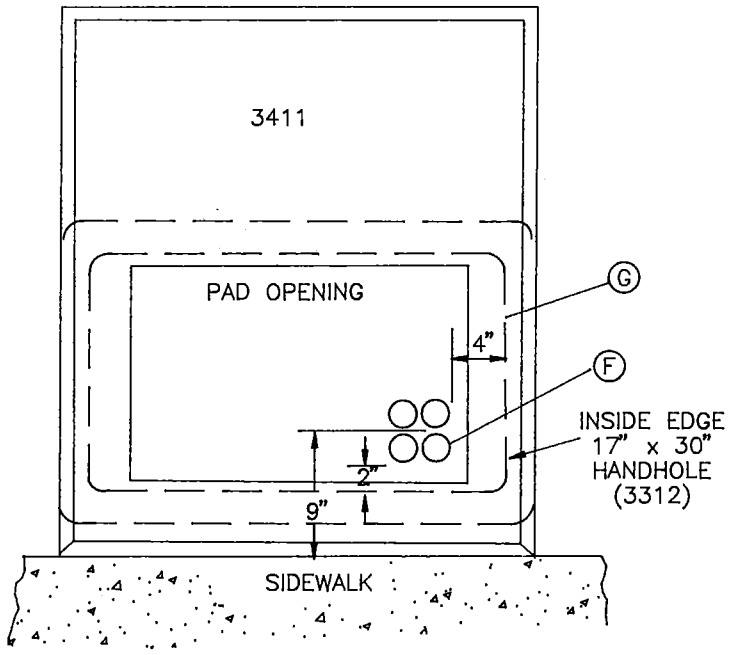

TABLE OF CONTENTS

DATE 1-1-96 APPD	SDG&E ELECTRIC STANDARDS EQUIPMENT PAD	3499.108

REINFORCING RODS (C)			
TYPE	QUANTITY	DESCRIPTION	STOCK NO.
R1	3	3/8" X 30"	685280
R2	2	3/8" X 36"	
R3	1	3/8" X 15"	

BILL OF MATERIAL:

ITEM	DESCRIPTION	QUANTITY	CONSTR. STD OR PAGE NO.	STOCK NUMBER	ASSEMBLY UNITS
1	EQUIPMENT PAD	1	3411	514274	FC1PAD
2	HANDHOLE, 17" X 30"	1	3312	162426	TERM-T
3	CONCRETE CLASS 'A' 5 1/2" SACK MIX	1.93 CU. FT.	–	–	–
4	#3 REINFORCING RODS 3/8" (SEE TABLE ABOVE)	13.5 FT.	–	685280	
5	CHANNEL, CONCRETE INSERT, 6" X 1 5/8" X 7/8", UNISTRUT OR EQUAL (C)	2	–	426288	
6	GALVANIZED PAINT (C)	AS REQ'D	–	516064	

INSTALLATION:

A. THIS PAD MAY BE PRECAST OR POURED IN PLACE. TOP OF PAD MUST BE FINISHED FLAT.

B. WHEN PAD IS POURED IN PLACE, CONDUIT OPENINGS SHALL BE FORMED SO THAT THE CONDUIT STUBS ARE NOT CONCRETE ENCASED.

(C) IF POURED IN PLACE, ITEM 5 TO BE CUT IN FIELD AND APPLY GALVANIZED PAINT TO EXPOSED ENDS.

(D) TERMINATE CONDUITS FLUSH WITH THE TOP OF PAD (WITHOUT HANDHOLE).

(F) TERMINATE CONDUITS 3" ABOVE BOTTOM OF HANDHOLE (PAD WITH HANDHOLE).

FOR FIELD MAINTENANCE ONLY

REFERENCE:

H. SEE STANDARD 3211 FOR PAD IDENTIFICATION.

I. SEE STANDARD 3481 FOR BARRIER PROTECTION AND CLEARANCE.

J. SEE STANDARD 3483 FOR MINIMUM OPERATING AND CLEARANCE REQUIREMENTS (PAD PLACEMENT).

K. SEE STANDARD 3484 OR 3487 RETAINING WALL REQUIREMENTS.

L. SEE STANDARD 3486 FOR RETAINING WALL REQUIREMENTS AND CLEARANCES FROM REVERSE SUBGRADE RETAINING WALLS.

M. SEE STANDARD 3512, 3521, OR 3522 FOR EQUIPMENT OR INSTALLATION DETAILS.

N. SEE STANDARD 4510 FOR PREFERRED OR ALTERNATE TRENCH GROUND WIRE.

O. SEE STANDARD 4512 FOR EQUIPMENT GROUNDING INSTALLATION.

P. SEE STANDARD 4514 FOR GROUNDING TELCO CONDUCTOR IN PAD-MOUNTED EQUIPMENT.

TABLE OF CONTENTS

MAJOR USE: TO SUPPORT LIVE FRONT 75, 150, 225, 300 & 500KVA THREE PHASE PADMOUNTED TRANSFORMERS ON PAGE 3702.

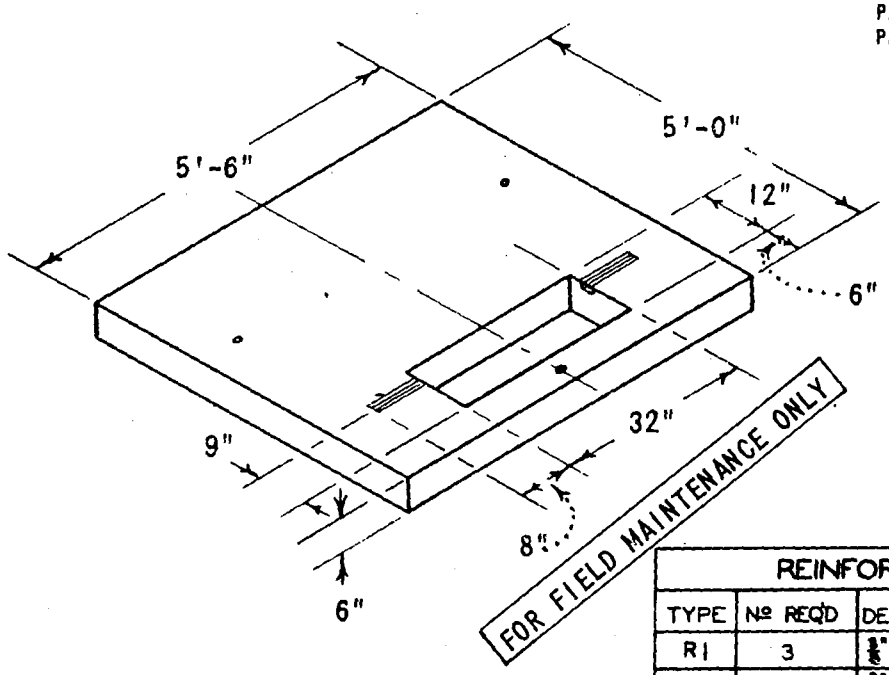

REINFORCING IRON			
TYPE	Nº REQ'D	DESCRIPTION	STOCK Nº OR CONSTR. STD.
R1	3	⅜" x 5'-0"	685280
R2	2	⅜" x 4'-6"	
R3	1	⅜" x 3'-0"	

WEIGHT

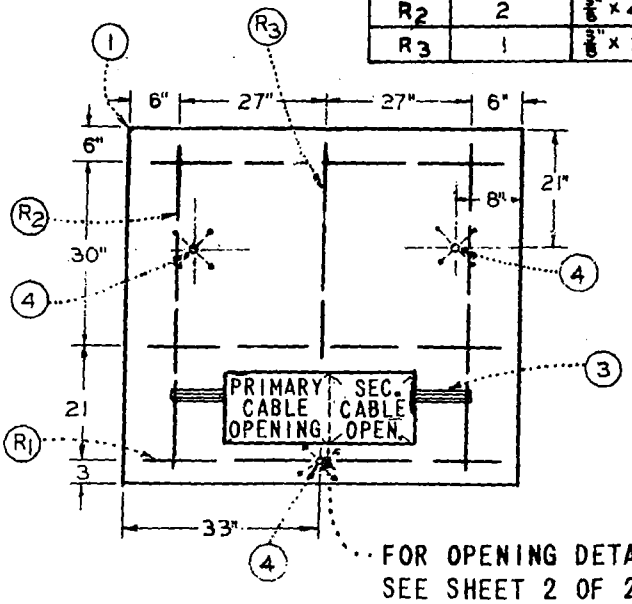

ITEM	QUANTITY	DESCRIPTION	STOCK Nº OR CONSTR. STD.	STOCK NO. PRE-CAST PAD
1	12.5 CU. FT.	CONCRETE, CLASS "A", 5½ SACK MIX	—	513996
2	10.2 LBS.	REINFORCING RODS SEE TABLE ABOVE	685280	
3	2	CHANNEL CONCRETE INSERT 8"x1⅝"x⅜" UNISTRUT CANESTRUT OR EQUAL	426288	
4	3	HANDLING INSERTS, 1" THREADED G.I.	—	

NOTES:

A. ABOVE PAD MAY BE PRECAST OR POURED IN PLACE. IF POURED IN PLACE OMIT ITEM 4.
B. CONDUIT OPENINGS TO BE FORMED SO THAT RISER STUBS ARE NOT CONCRETE ENCASED.
C. FOR TRANSFORMER PAD GROUNDING INSTALLATION SEE 3407.
D. FOR TRANSFORMER PAD NUMBERING SEE 3211.
E. FOR TRANSFORMER BARRIER PROTECTION SEE 3481.

DATE 6-1-75 APPD	SDG&E ELECTRIC STANDARDS THREE PHASE TRANSFORMER PAD INSTALLATION	3499.201

TABLE OF CONTENTS

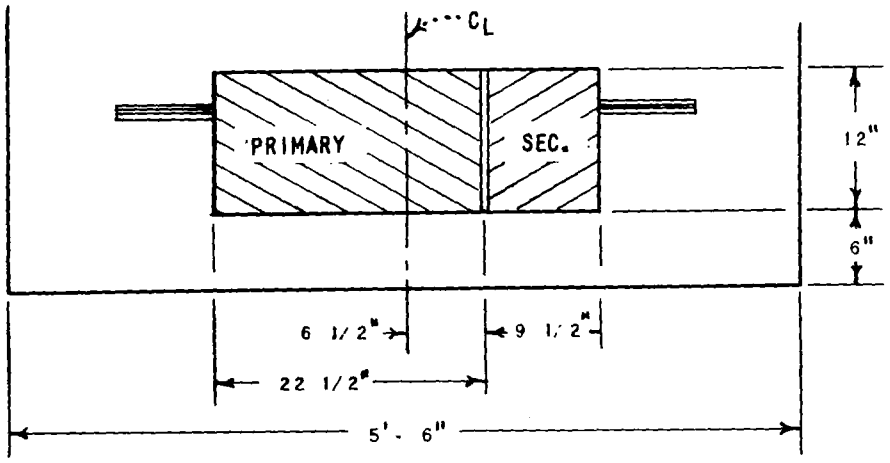

PLAN VIEW OPENINGS

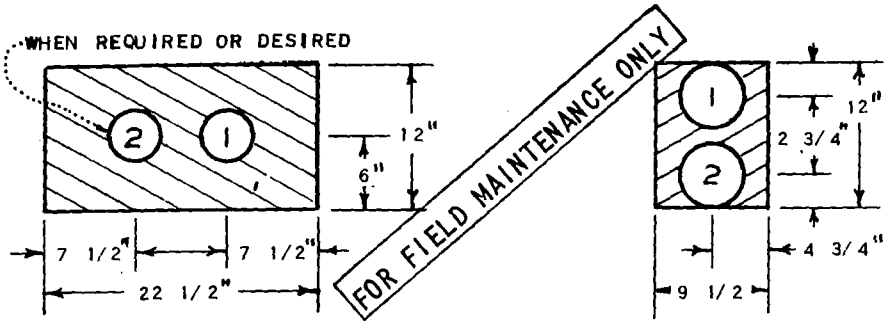

2 - 4"CONDUITS, 4 1/2"O.D. WITH 2"SPACING

PRIMARY OPENING

2 - 5"CONDUITS, 5 1/2"O.D. WITH 1"SPACING

SECONDARY OPENING

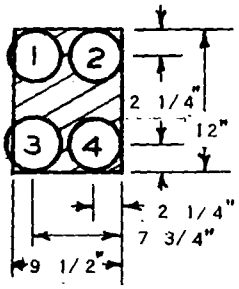

4 - 4"CONDUITS, 4 1/2"O.D. WITH 1"SPACING AND 1/2"OVERHANG INTO PRIMARY SIDE

SECONDARY OPENING

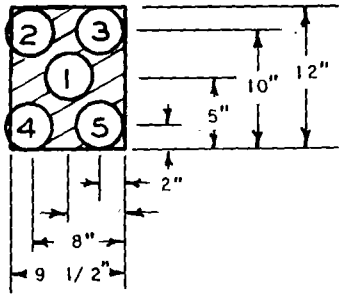

5 - 3 1/2"CONDUITS, 4"O.D. WITH 1"SPACING AND 1/2"OVERHANG INTO PRIMARY SIDE

SECONDARY OPENING

NOTES:

1. PRIMARY AND SECONDARY OPENINGS WITH MAXIMUM SIZE AND NUMBER OF SECONDARY CONDUITS ILLUSTRATED.
2. CONDUIT OPENINGS TO BE FORMED SO THAT RISER STUBS ARE NOT CONCRETE ENCASED.
3. WHEN NUMBER OF REQUIRED CONDUITS IS LESS THAN MAXIMUM SHOWN ON SKETCHES. INSTALL CONDUITS IN NUMBERED SEQUENCE AS SHOWN.

3499.202	SDG&E ELECTRIC STANDARDS THREE PHASE TRANSFORMER PAD INSTALLATION	DATE 6-1-75 APPD JWK

TABLE OF CONTENTS

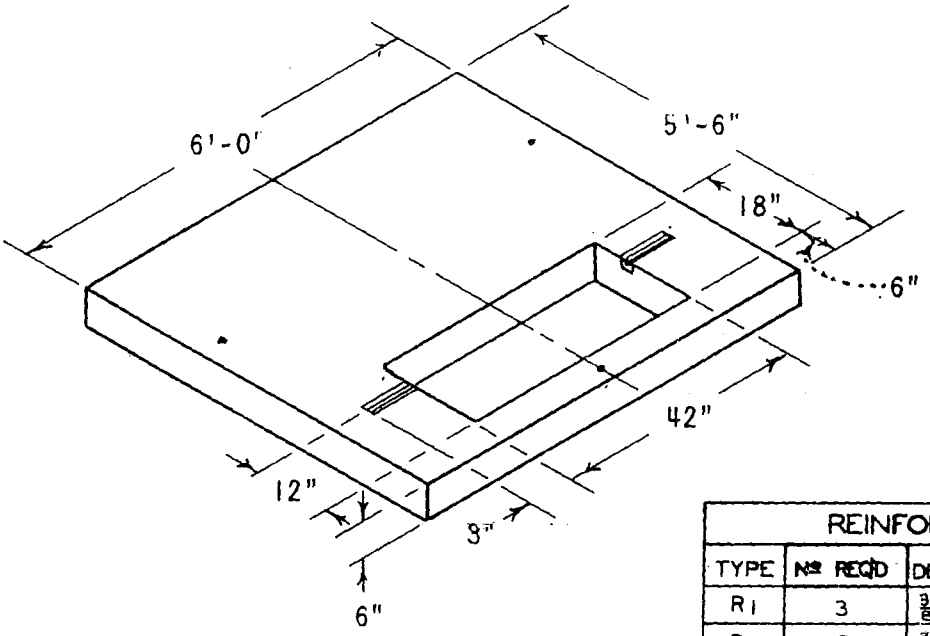

WEIGHT
2100#

REINFORCING IRON			
TYPE	№ REQ'D	DESCRIPTION	STOCK № OR CONSTR. STD.
R1	3	$\frac{3}{8}$" x 5'-6"	685280
R2	2	$\frac{3}{8}$" x 5'-0"	
R3	1	$\frac{3}{8}$" x 3'-0"	

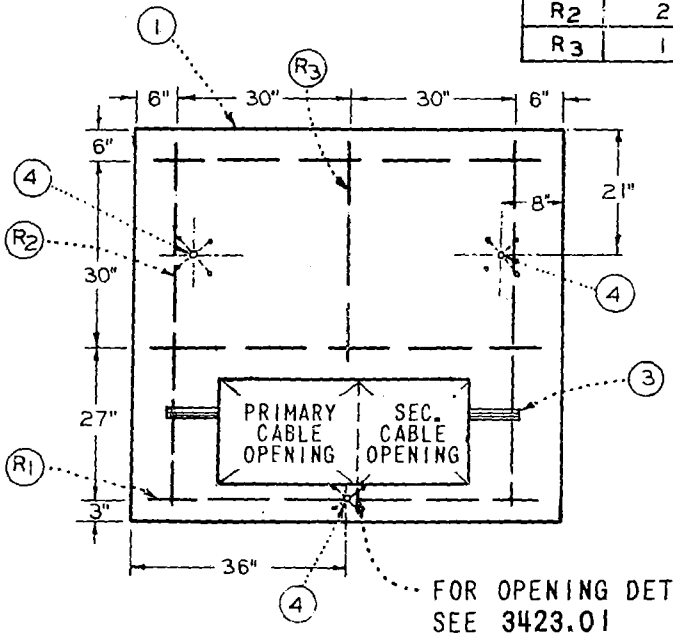

FOR FIELD MAINTENANCE ONLY

ITEM	QUANTITY	DESCRIPTION	STOCK № OR CONSTR. STD.	STOCK NO. PRE-CAST PAD
1	14 CU. FT.	CONCRETE, CLASS "A", 5½ SACK MIX	—	514000
2	LBS	REINFORCING RODS SEE TABLE ABOVE	685280	
3	2	CHANNEL CONCRETE INSERT 8"x1⅝"x⅜" UNISTRUT CANESTRUT OR EQUAL	426288	
4	3	HANDLING INSERTS, 1" THREADED G.I.	—	

NOTES:

A. ABOVE PAD MAY BE PRECAST OR POURED IN PLACE, IF POURED IN PLACE OMIT ITEM 4.
B. CONDUIT OPENINGS TO BE FORMED SO THAT RISER STUBS ARE NOT CONCRETE ENCASED.
C. FOR TRANSFORMER PAD GROUNDING INSTALLATION SEE 3407.
D. FOR TRANSFORMER PAD NUMBERING SEE 3211.
E. FOR TRANSFORMER BARRIER PROTECTION SEE 3481.
F. FOR PAD CLEARANCES SEE PAGE 3483.

SDG&E ELECTRIC STANDARDS

DATE 10-10-75
APPD JWK

THREE PHASE TRANSFORMER PAD INSTALLATION
75 THRU 500 KVA

3499.203

TABLE OF CONTENTS

PREFERRED

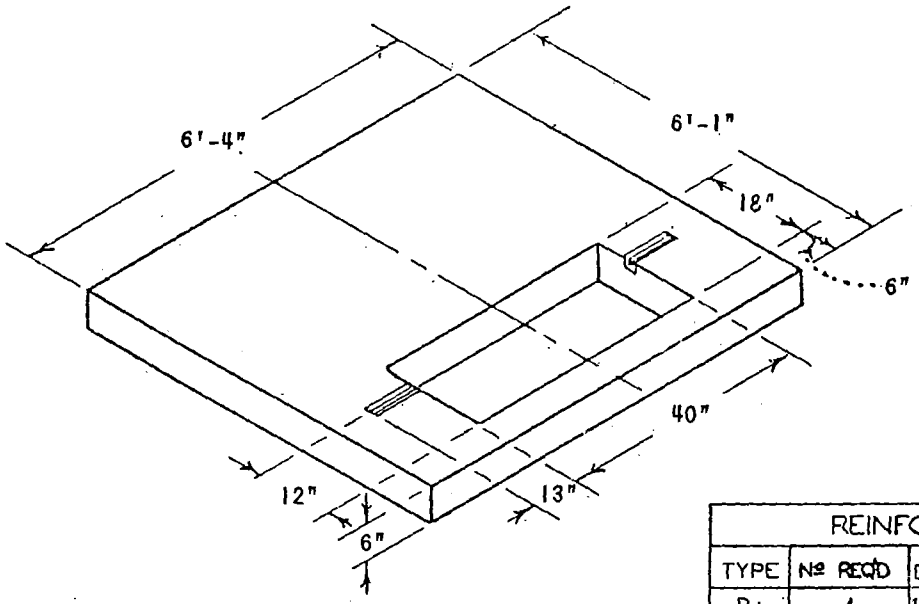

REINFORCING IRON			
TYPE	Nº REQ'D	DESCRIPTION	STOCK Nº OR CONSTR. STD.
R1	4	1/2" X 5' - 10"	685152
R2	2	1/2" X 5' - 5"	
R3	2	1/2" X 3' - 7"	

WEIGHT
2430#

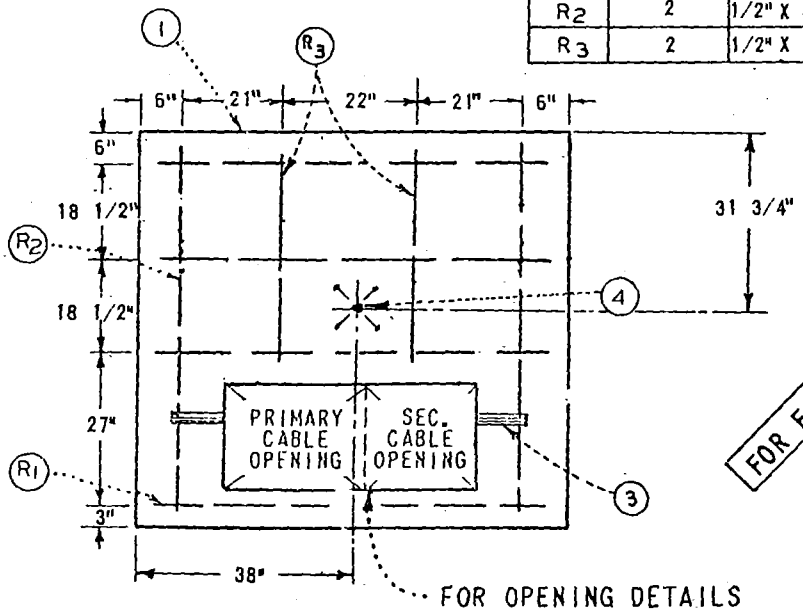

FOR FIELD MAINTENANCE ONLY

FOR OPENING DETAILS
SEE 3423.02

ITEM	QUANTITY	DESCRIPTION	STOCK Nº OR CONSTR. STD.	STOCK NO. PRE-CAST PAD
1	17 CU. FT.	CONCRETE, CLASS "A", 5½ SACK MIX	—	—
2	27.6 LBS	REINFORCING RODS SEE TABLE ABOVE	685152	
3	2	CHANNEL CONCRETE INSERT 13"x1⅝"x⅞" UNISTRUT CANESTRUT OR EQUAL	426288	
4	1	2 TON RISS LIFTER	—	

NOTES:

A. ABOVE PAD MAY BE PRECAST OR POURED IN PLACE, IF POURED IN PLACE OMIT ITEM 4.
B. CONDUIT OPENINGS TO BE FORMED SO THAT RISER STUBS ARE NOT CONCRETE ENCASED.
C. FOR TRANSFORMER PAD GROUNDING INSTALLATION SEE 3407.
D. FOR TRANSFORMER PAD NUMBERING SEE 3211.
E. FOR TRANSFORMER BARRIER PROTECTION SEE 3481.
F. FOR PAD CLEARANCES SEE PAGE 3483.

3499.204	SDG&E ELECTRIC STANDARDS PREFERRED 3Ø TRANSFORMER PAD INSTALLATION 750 AND 1000 KVA	DATE 10-10-75 APPD

TABLE OF CONTENTS

TABLE OF CONTENTS

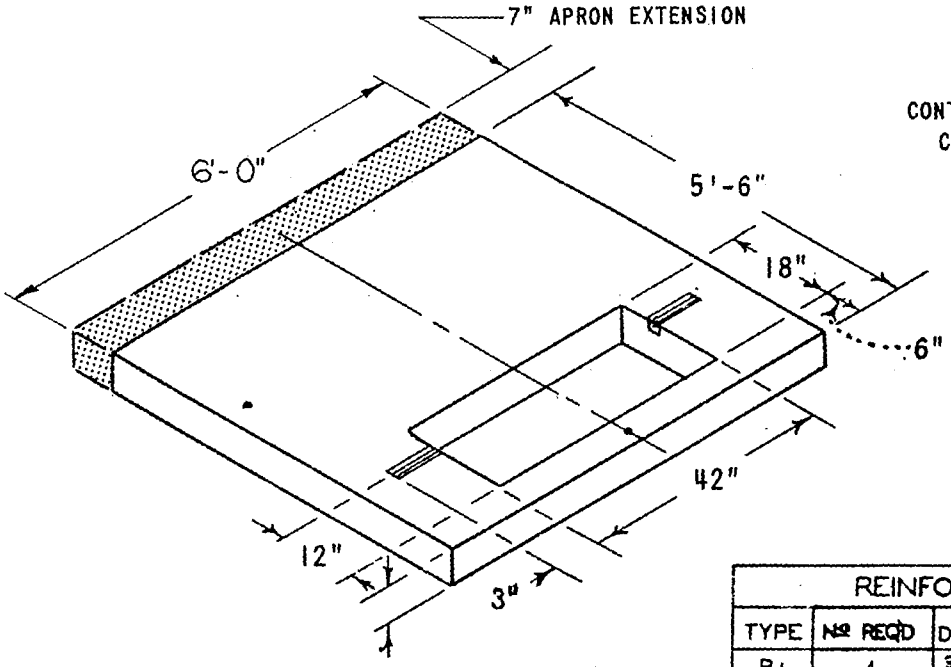

ALTERNATE

FOR APRON EXTENSION

CONTACT AREA IS TO BE THROUGHLY CLEANED BEFORE POURING.

WEIGHT
2100#

REINFORCING IRON			
TYPE	№ REQ'D	DESCRIPTION	STOCK № OR CONSTR. STD.
R1	4	⅜" x 5'-6"	685280
R2	2	⅜" x 5'-0"	
R3	1	⅜" x 3'-0"	

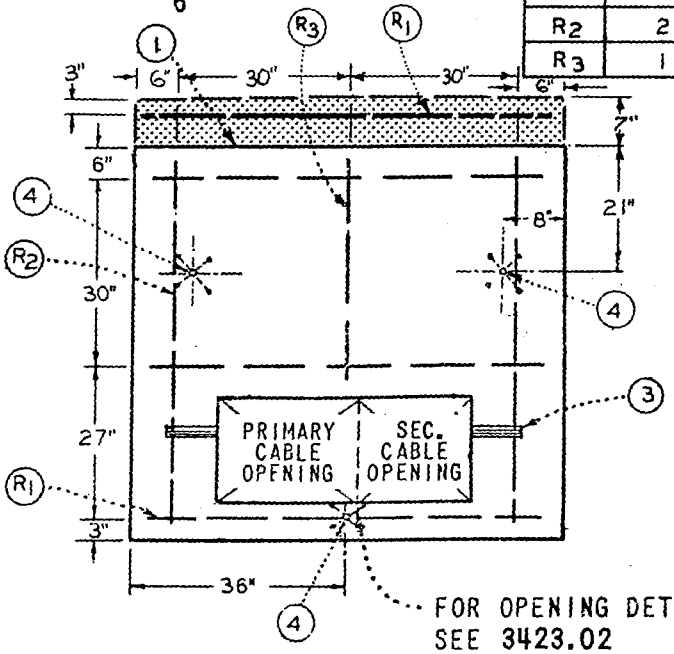

FOR FIELD MAINTENANCE ONLY

FOR OPENING DETAILS SEE 3423.02

ITEM	QUANTITY	DESCRIPTION	STOCK № OR CONSTR. STD.	STOCK NO. PRE-CAST PAD
1	14 CU. FT.	CONCRETE, CLASS "A", 5½ SACK MIX	—	514000
2	LBS	REINFORCING RODS SEE TABLE ABOVE	685280	
3	2	CHANNEL CONCRETE INSERT 8"x1⅝"x3" UNISTRUT CANESTRUT OR EQUAL	426288	
4	3	HANDLING INSERTS, 1" THREADED G.I.	—	

NOTES:

A. IF PAD IS TO BE POURED INPLACE SEE 'PREFERRED THREE PHASE TRANSFORMER PAD INSTALLATION'
B. CONDUIT OPENINGS TO BE FORMED SO THAT RISER STUBS ARE NOT CONCRETE ENCASED.
C. FOR TRANSFORMER PAD GROUNDING INSTALLATION SEE 3407.
D. FOR TRANSFORMER PAD NUMBERING SEE 3211.
E. FOR TRANSFORMER BARRIER PROTECTION SEE 3481.
F. THIS PAGE IS TO BE USED ONLY IF A 6'-0" X 5'-6" (AS SHOWN ABOVE) PRECAST PAD IS USED.
G. FOR PAD CLEARANCES SEE PAGE 3483.

	SDG&E ELECTRIC STANDARDS	
DATE 10-10-75 APPD	ALTERNATE 3Ø TRANSFORMER PAD INSTALLATION WITH 7" APRON EXTENSION 750 AND 1000 KVA	3499.

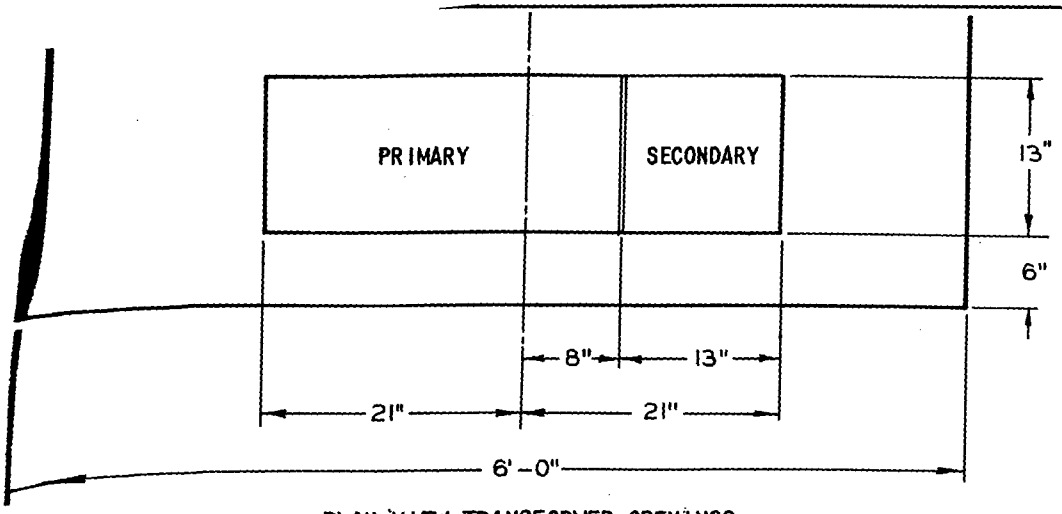

PLAN VIEW TRANSFORMER OPENINGS

WHEN REQUIRED OR DESIRED

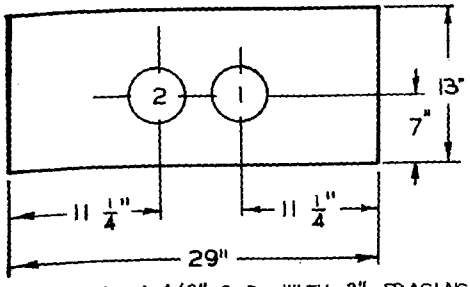

2-4" CONDUITS, 4 1/2" O.D. WITH 2" SPACING

PRIMARY TRANSFORMER OPENING

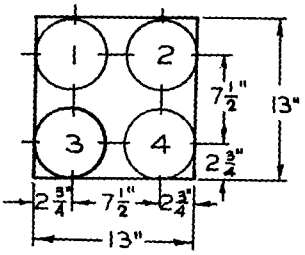

4-5" CONDUITS 5 1/2"O.D.

SECONDARY TRANSFORMER OPENING

FOR FIELD MAINTENANCE ONLY

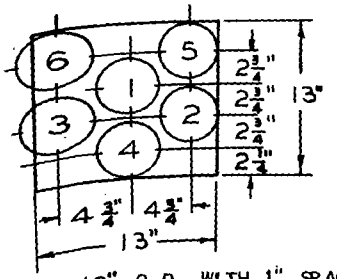

" CONDUITS 4 1/2" O.D. WITH 1" SPACING
AND 1" OVERHANG INTO PRIMARY SIDE

SECONDARY TRANSFORMER OPENING

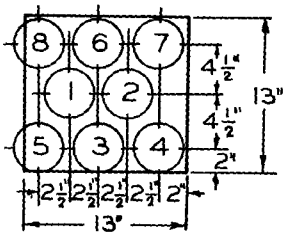

8-3 1/2" CONDUITS 4" O.D. WITH 1" SPACINGS
AND 1" OVERHANG INTO PRIMARY SIDE

SECONDARY TRANSFORMER OPENING

NOTES:

1. PRIMARY AND SECONDARY OPENINGS WITH MAXIMUM SIZE AND NUMBER OF SECONDARY CONDUITS ILLUSTRATED.
2. CONDUIT OPENINGS TO BE FORMED SO THAT RISER STUBS ARE NOT CONCRETE ENCASED.
3. WHEN NUMBER OF REQUIRED CONDUITS IS LESS THAN MAXIMUM SHOWN ON SKETCHES, INSTALL CONDUITS IN NUMBERED SEQUENCE AS SHOWN.

SDG&E ELECTRIC STANDARDS

9.206

THREE PHASE TRANSFORMER PAD INSTALLATION
75 THRU 500 KVA

DATE 10-10-75
APPD JWK

TABLE OF CONTENTS

TABLE OF CONTENTS

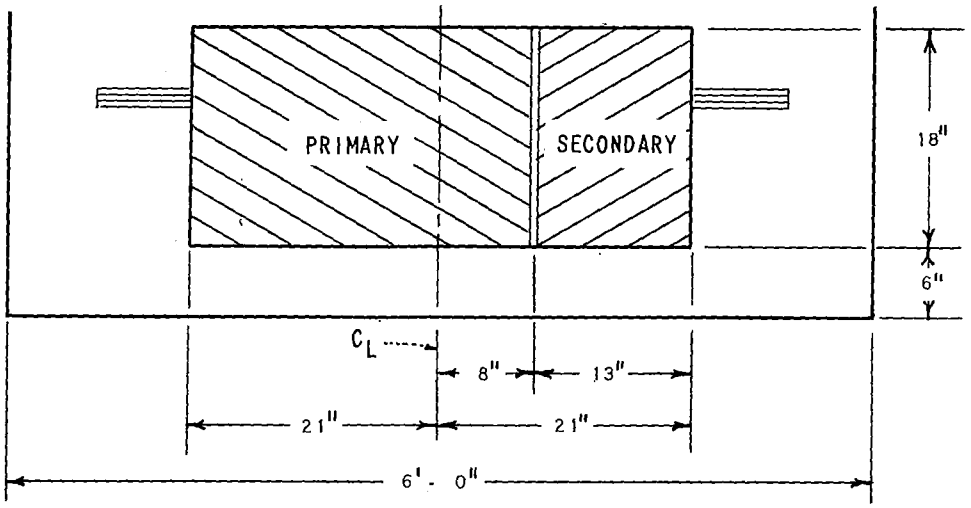

PLAN VIEW OPENINGS

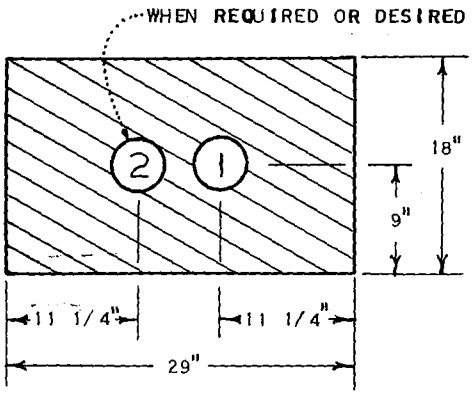

2 - 4" CONDUITS, 4 1/2" O.D. WITH 2" SPACING

PRIMARY OPENING

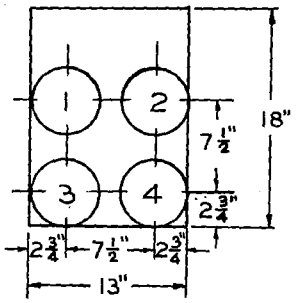

4-5 CONDUITS 5½ O.D.

SECONDARY OPENING

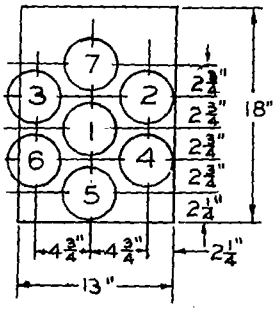

7-4" CONDUITS 4½" O.D. WITH 1" SPACING
AND 1" OVERHANG INTO PRIMARY SIDE

SECONDARY OPENING

FOR FIELD MAINTENANCE ONLY

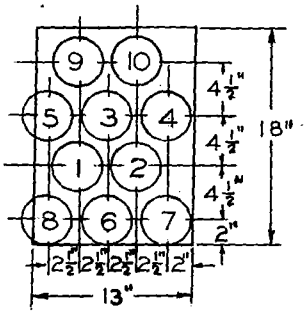

10-3½" CONDUITS 4" O.D. WITH 1" SPACINGS
AND 1" OVERHANG INTO PRIMARY SIDE

SECONDARY OPENING

NOTES:

1. PRIMARY AND SECONDARY OPENINGS WITH MAXIMUM SIZE AND NUMBER OF SECONDARY CONDUITS ILLUSTRATED.
2. CONDUIT OPENINGS TO BE FORMED SO THAT RISER STUB ARE NOT CONCRETE ENCASED.
3. WHEN NUMBER OF REQUIRED CONDUITS IS LESS THAN MAXIMUM SHOWN ON SKETCHES, INSTALL CONDUITS IN NUMBERED SEQUENCE AS SHOWN.

	SDG&E ELECTRIC STANDARDS	
DATE 10-10-75 APPD G.W.K.	THREE PHASE TRANSFORMER PAD INSTALLATION 750 AND 1000 KVA	3498.207

MAJOR USE: SUPPORT 1Ø TRANSFORMER

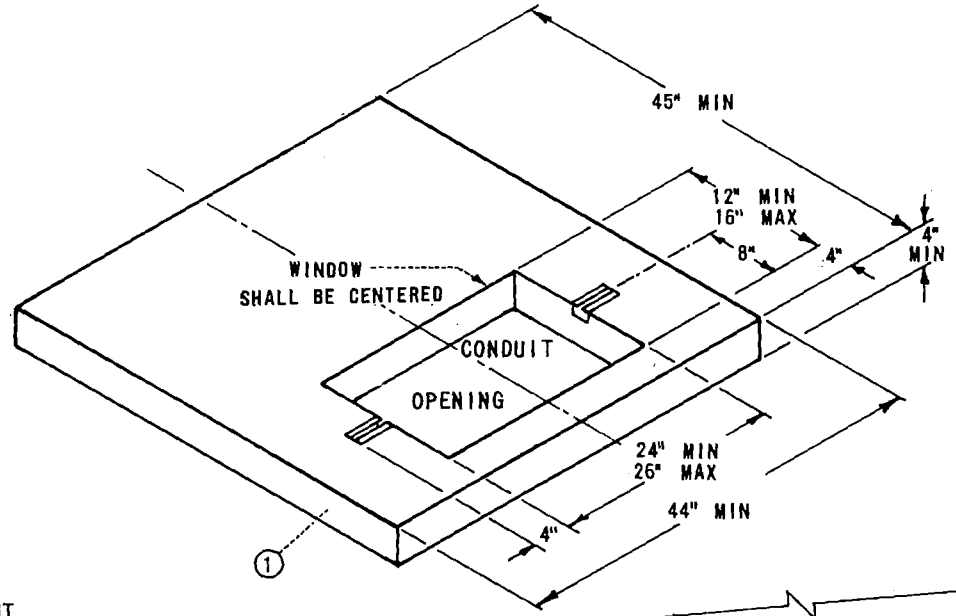

PAD WEIGHT
40#

THIS PAGE FIELD MAINTENANCE ONLY

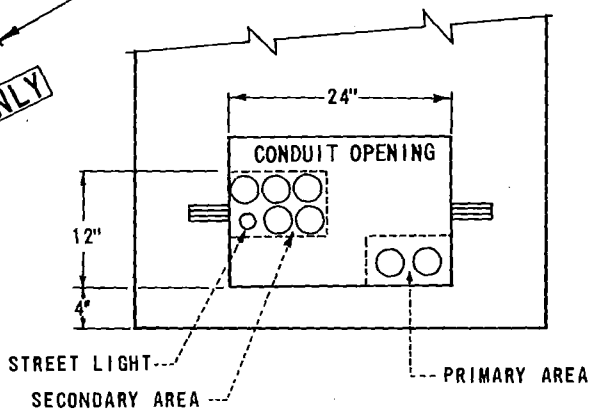

NOTES:

A. FOR TRANSFORMER INSTALLATION SEE 3700 SECTION.
(B) FOR CONCRETE PAD SEE PAGE 3421.1.
C. ALL PLASTIC PADS PER SDG&E SPECIFICATION 133 (LATEST REVISION).

ITEM	QUANTITY	DESCRIPTION	STOCK NO. OR CONSTR STD
1	1	PLASTIC PAD	514240 (B)

	SDG&E ELECTRIC STANDARDS	
3499.210	1Ø TRANSFORMER PLASTIC PAD 5 - 3", 4 - 4", OR 3 - 5" SECONDARY CONDUITS MAXIMUM	DATE 5-5-78 APPD TAF

SCOPE: THIS STANDARD SHOWS THE 3Ø FUSED SWITCHING PAD, HANDHOLE AND CONDUIT PLACEMENT USED WITH THE 3Ø FUSED SWITCHING CABINET (STANDARD 3513).

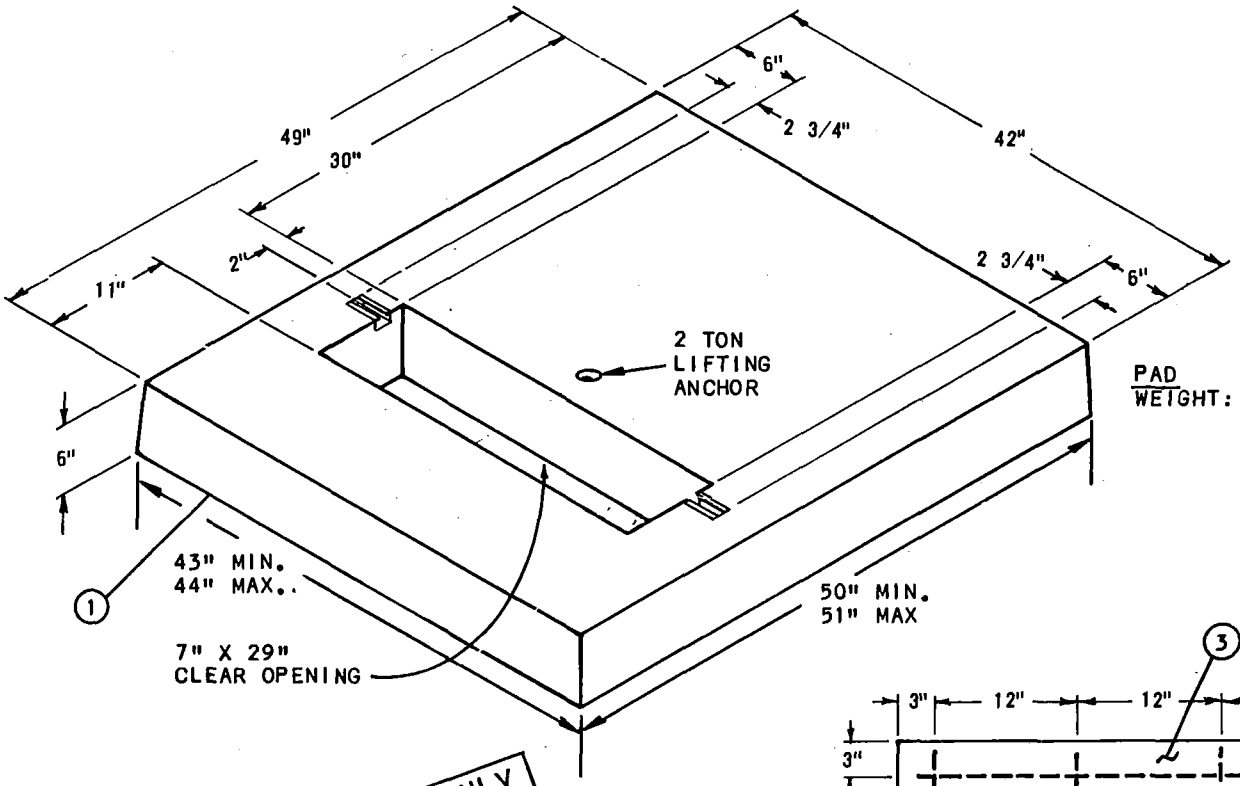

PAD
WEIGHT: 900# MIN.
1005# MAX.

FOR FIELD MAINTENANCE ONLY

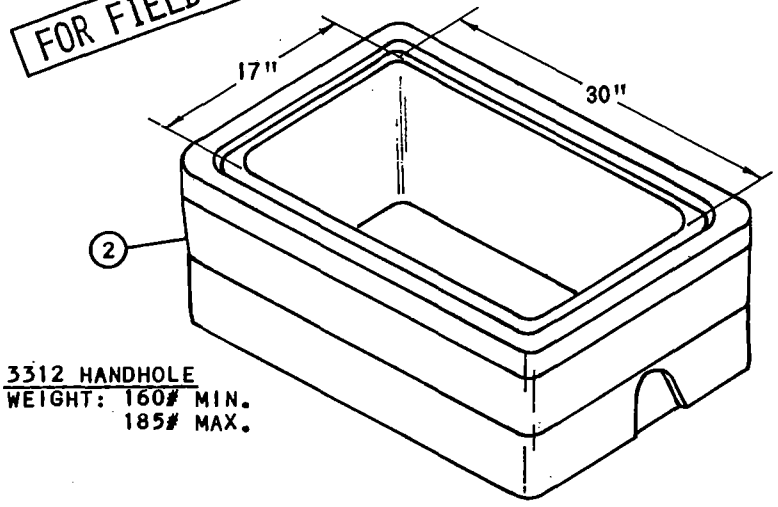

3312 HANDHOLE
WEIGHT: 160# MIN.
185# MAX.

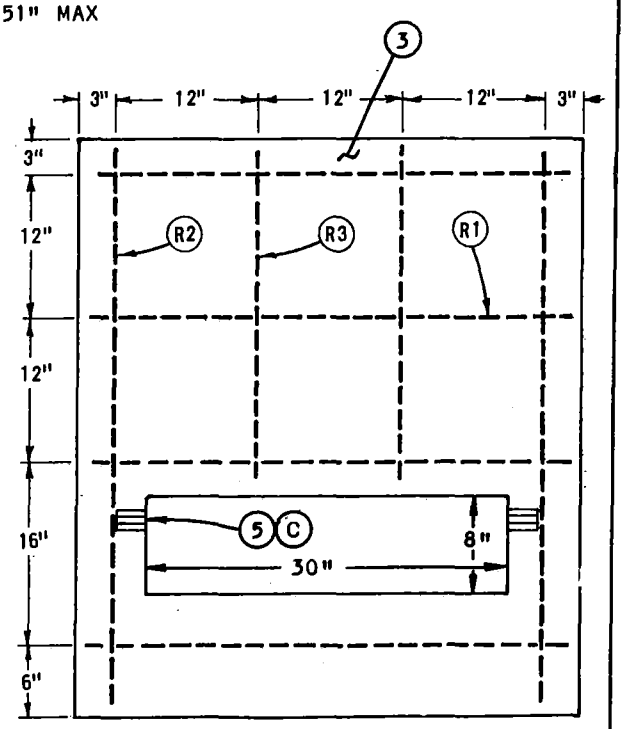

- STEEL DETAIL FOR POURED-IN-PLACE.
CENTER STEEL IN CONCRETE POUR.

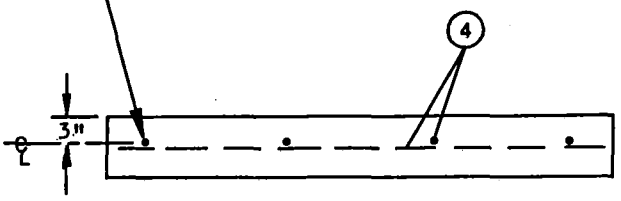

TABLE OF CONTENTS

DATE 1-1-89 APPD SLC/DTE	SDG&E ELECTRIC STANDARDS FUSED SWITCHING PAD	3499.211 (supercedes 3412.1 1-1-86)

3513 INSTALLATION
(TOP VIEW)
3Ø FUSED SWITCHING CABINET

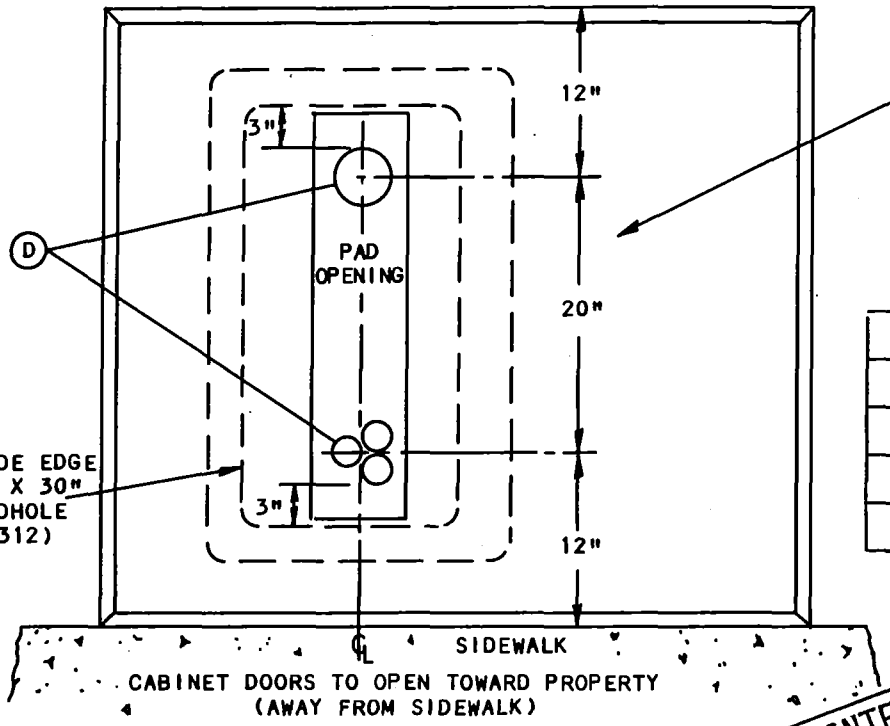

REINFORCING RODS (4)		
TYPE	QUANTITY	DESCRIPTION
R1	4	3/8" X 39"
R2	2	3/8" X 46"
R3	2	3/8" X 27"

FOR FIELD MAINTENANCE ONLY

BILL OF MATERIAL:

ITEM	DESCRIPTION	QUANTITY	CONST STD	STOCK NUMBER
1	FUSED SWITCHING PAD	1	--	513426
2	HANDHOLE, 17" X 30"	1	3312	162426
3	CONCRETE CLASS 'A', 5 1/2 SACK MIX	6.32 CU.FT.	--	--
4	#3 REINFORCING RODS, 3/8" (SEE TABLE ABOVE)	25'-2"	--	685280
5	CHANNEL, CONCRETE INSERTS, 2 3/4" X 1 5/8" X 7/8" UNISTRUT OR EQUAL (C)	2	--	426288
6	GALVANIZED PAINT (C)	AS REQ'D	--	516064

INSTALLATION:

A. THIS PAD MAY BE PRECAST OR POURED IN PLACE. TOP OF PAD MUST BE FINISHED FLAT.
B. WHEN PAD IS POURED IN PLACE, CONDUIT OPENINGS SHALL BE FORMED SO THAT THE CONDUIT STUBS ARE NOT CONCRETE ENCASED.
(C) IF POURED IN PLACE, ITEM 5 TO BE CUT IN FIELD . APPLY GALVANIZED PAINT TO EXPOSED ENDS.
(D) TERMINATE CONDUITS 3" ABOVE THE BOTTOM OF THE HANDHOLE.

REFERENCE:

H. SEE STANDARD 3211 FOR PAD IDENTIFICATION.
I. SEE STANDARD 3481 FOR BARRIER PROTECTION AND CLEARANCE.
J. SEE STANDARD 3483 FOR MINIMUM OPERATING AND CLEARANCE REQUIREMENTS (PAD PLACEMENT).
K. SEE STANDARD 3487 FOR RETAINING WALL REQUIREMENTS.
L. SEE STANDARD 3513 FOR EQUIPMENT OR INSTALLATION DETAILS.
M. SEE STANDARD 4512 FOR PAD GROUNDING.
N. SEE STANDARD 4514 FOR GROUNDING TELCO CONDUCTOR IN PAD-MOUNTED EQUIPMENT.

3499.212 (supercedes 3412.2 1-1-86)	SDG&E ELECTRIC STANDARDS	DATE 1-1-89
	FUSED SWITCHING PAD	APPD SLC/DTE

TABLE OF CONTENTS

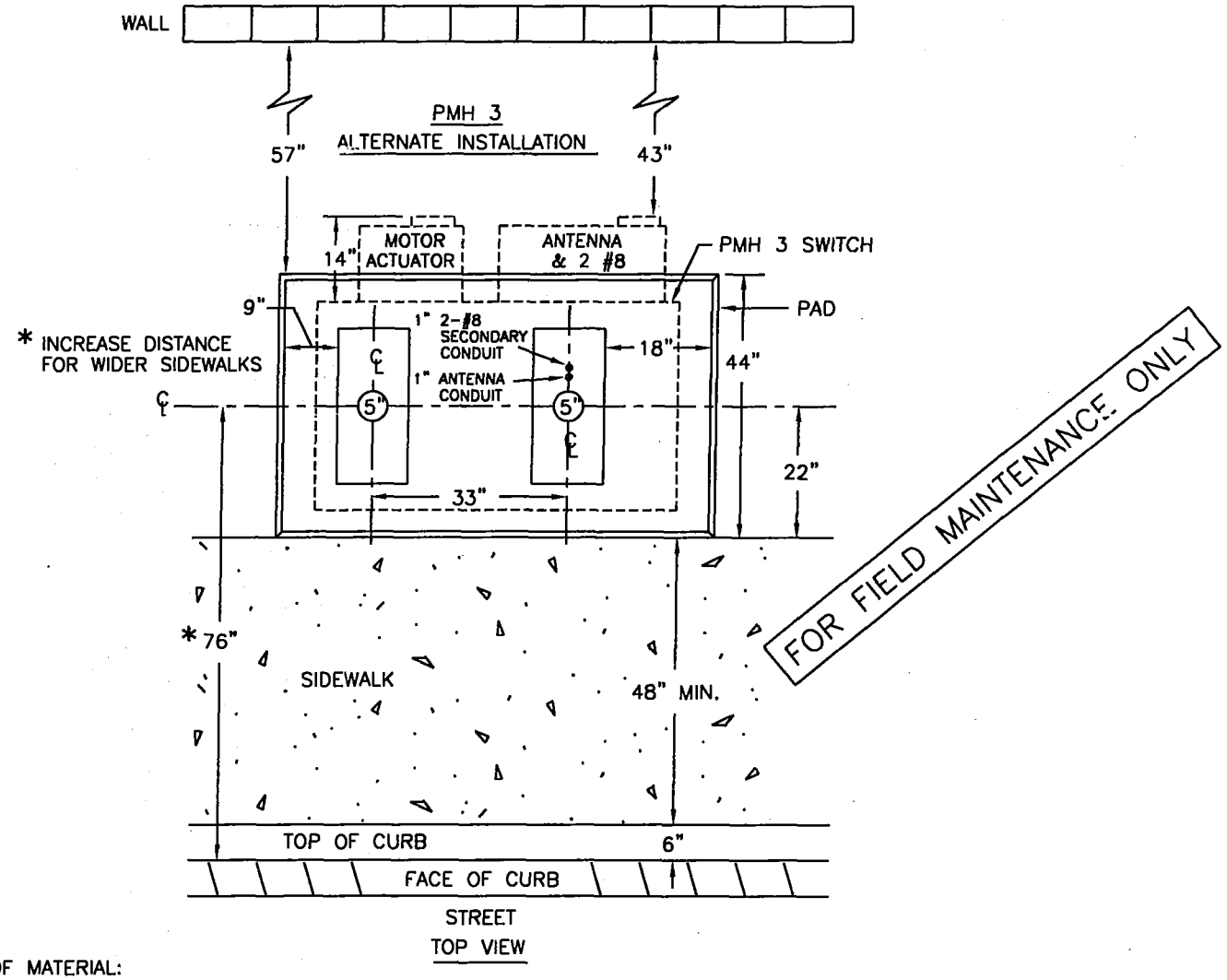

BILL OF MATERIAL:

ITEM	DESCRIPTION	QUANTITY	CONSTR. STD OR PAGE NO.	STOCK NUMBER	ASSEMBLY UNIT
1	PAD, PMH 3 SWITCH	1	3420	513424	3420
2	HANDHOLE, 17" X 30"	4	3312	162426	

INSTALLATION:

A. SET PAD LEVEL TO FINAL GRADE AND INSTALL EQUIPMENT GROUND.
(B) TERMINATE CONDUITS 3 INCHES ABOVE THE BOTTOM OF THE 3312 HANDHOLES.

REFERENCE:

E. SEE STANDARD 3481 FOR BARRIER PROTECTION AND CLEARANCE.
F. SEE STANDARD 3483 FOR MINIMUM OPERATING AND CLEARANCE REQUIREMENTS (PAD PLACEMENT).
G. SEE STANDARD 3484 FOR PAD INSTALLATION OF PAD-MOUNTED EQUIPMENT.
H. SEE STANDARD 3486 FOR RETAINING WALL REQUIREMENTS AND CLEARANCES FROM REVERSE SUBGRADE RETAINING WALLS.
I. SEE STANDARD 3487 FOR RETAINING WALLS.
J. SEE STANDARD 3577 FOR PAD-MOUNTED PMH 3 AIR BREAK SWITCH.
K. SEE STANDARD 3578 FOR INSTALLATION REQUIREMENTS FOR PAD-MOUNTED PMH 3 AIR BREAK SWITCH.
L. SEE STANDARD 4512 FOR EQUIPMENT GROUNDING INSTALLATION.

	SDG&E ELECTRIC STANDARDS	
DATE 1-1-96 APPD	AIR BREAK PMH 3 SECTIONALIZING SWITCH PAD	3499.214 SUPERSEDES 3420.2 (1-1-96)

TABLE OF CONTENTS

SCOPE: THIS STANDARD SHOWS THE PAD AND HANDHOLE USED WITH THE PAD-MOUNTED 600 AMP AIR BREAK PME 3 SECTIONALIZING SWITCH. CONDUIT PLACEMENT IS ALSO SHOWN.

PAD

WEIGHT: 2000 LBS.

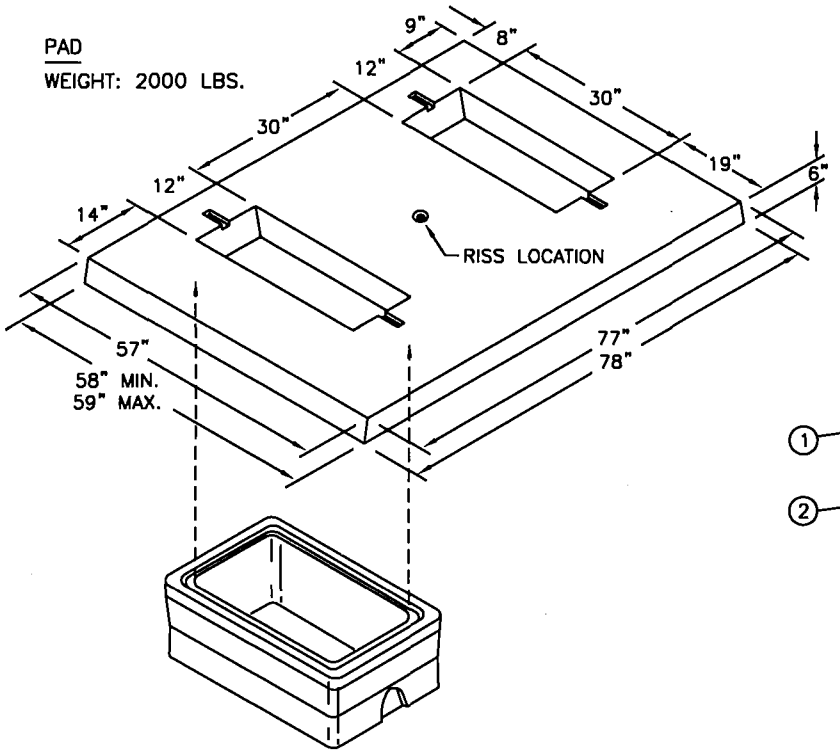

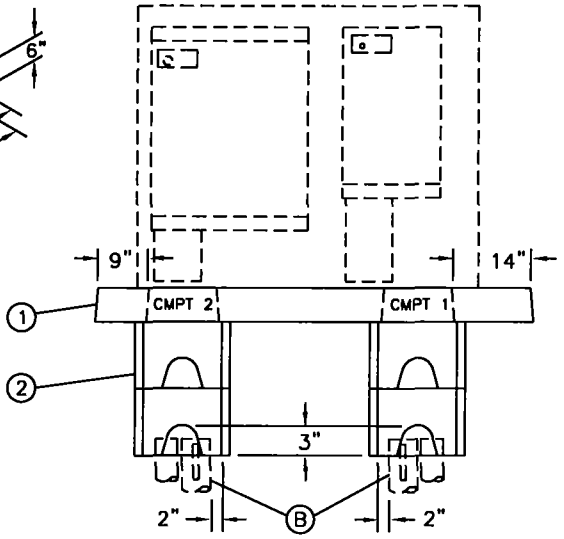

SIDE VIEW

FOR FIELD MAINTENANCE ONLY

PME 3
INSTALLATION

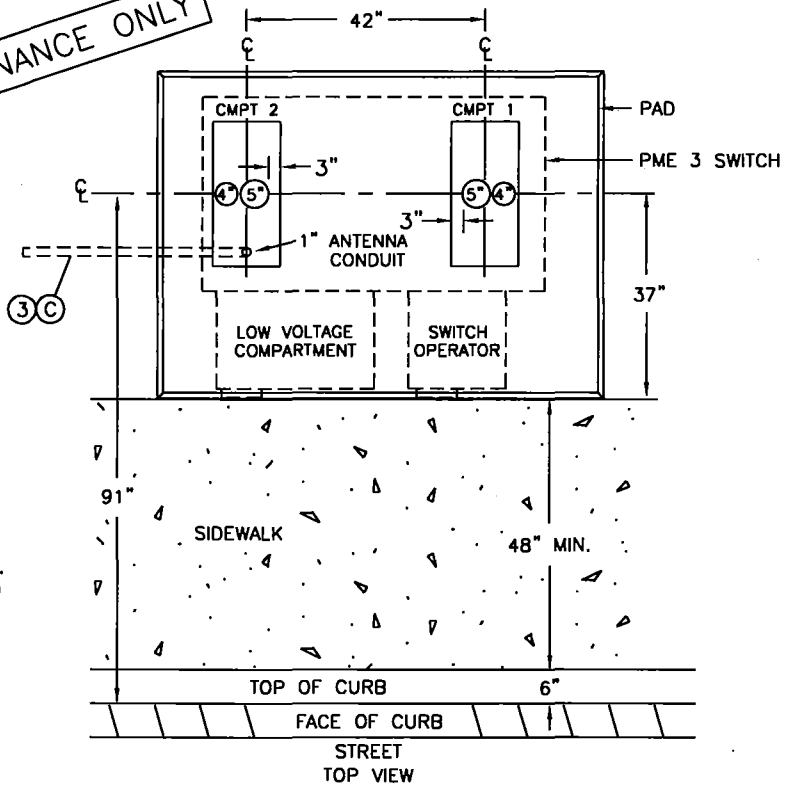

TOP VIEW

NOTES:

- PAD MAY NOT BE POURED IN PLACE. USE PRECAST PAD ONLY.

3499.215 SUPERSEDES 3422.1 (1-1-98)	SDG&E ELECTRIC STANDARDS AIR BREAK PME 3 SECTIONALIZING SWITCH PAD	DATE 7-28-99 APPD

TABLE OF CONTENTS

BILL OF MATERIAL:

ITEM	DESCRIPTION	QUANTITY	CONSTR. STD OR PAGE NO.	STOCK NUMBER	ASSEMBLY UNIT
1	PAD, PME 3 SWITCH	1	3422	514030	3422
2	HANDHOLE, 17" X 30"	4	3312	162426	
3	1" POLYETHYLENE CONDUIT	10 FT	3373	249630	1" PE

INSTALLATION:

A. SET PAD LEVEL TO FINAL GRADE AND INSTALL EQUIPMENT GROUND.

(B) TERMINATE CONDUITS 3 INCHES ABOVE THE BOTTOM OF THE 3312 HANDHOLES.

(C) STUB OUT 1-1" POLY CONDUIT 4' FROM EDGE OF PAD.

REFERENCE:

E. SEE STANDARD 3481 FOR BARRIER PROTECTION AND CLEARANCE.

F. SEE STANDARD 3483 FOR MINIMUM OPERATING AND CLEARANCE REQUIREMENTS (PAD PLACEMENT).

G. SEE STANDARD 3484 FOR PAD INSTALLATION OF PAD-MOUNTED EQUIPMENT.

H. SEE STANDARD 3486 FOR RETAINING WALL REQUIREMENTS AND CLEARANCES FROM REVERSE SUBGRADE RETAINING WALLS.

I. SEE STANDARD 3487 FOR RETAINING WALLS.

J. SEE STANDARD 3583 FOR PAD-MOUNTED PME 3 AIR BREAK SWITCH.

K. SEE STANDARD 3584 FOR INSTALLATION REQUIREMENTS FOR PAD-MOUNTED PME 3 AIR BREAK SWITCH.

L. SEE STANDARD 4512 FOR EQUIPMENT GROUNDING INSTALLATION.

TABLE OF CONTENTS

FOR FIELD MAINTENANCE ONLY

DATE 1-1-98 APPD BBJ / CMK	SDG&E ELECTRIC STANDARDS AIR BREAK PME 3 SECTIONALIZING SWITCH PAD	3499.216 SUPERSEDES 3422.2 (1-1-98)

SCOPE: THIS STANDARD SHOWS 3440 & 3441 PADS FOR A PAD MOUNTED 12KV, 600 AMP, 3Ø SWITCH.

3440

STOCK NUMBER
513900

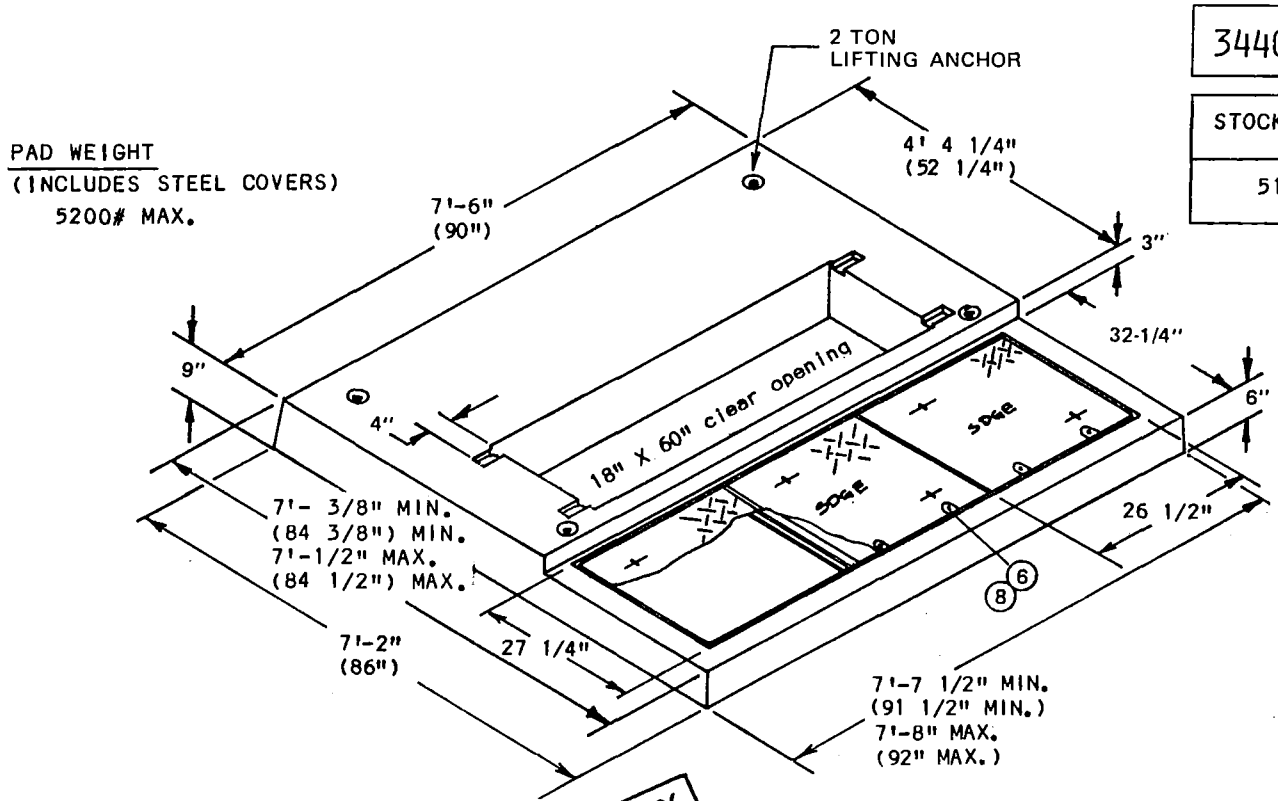

FOR FIELD MAINTENANCE ONLY

3441

STOCK NUMBER
514276

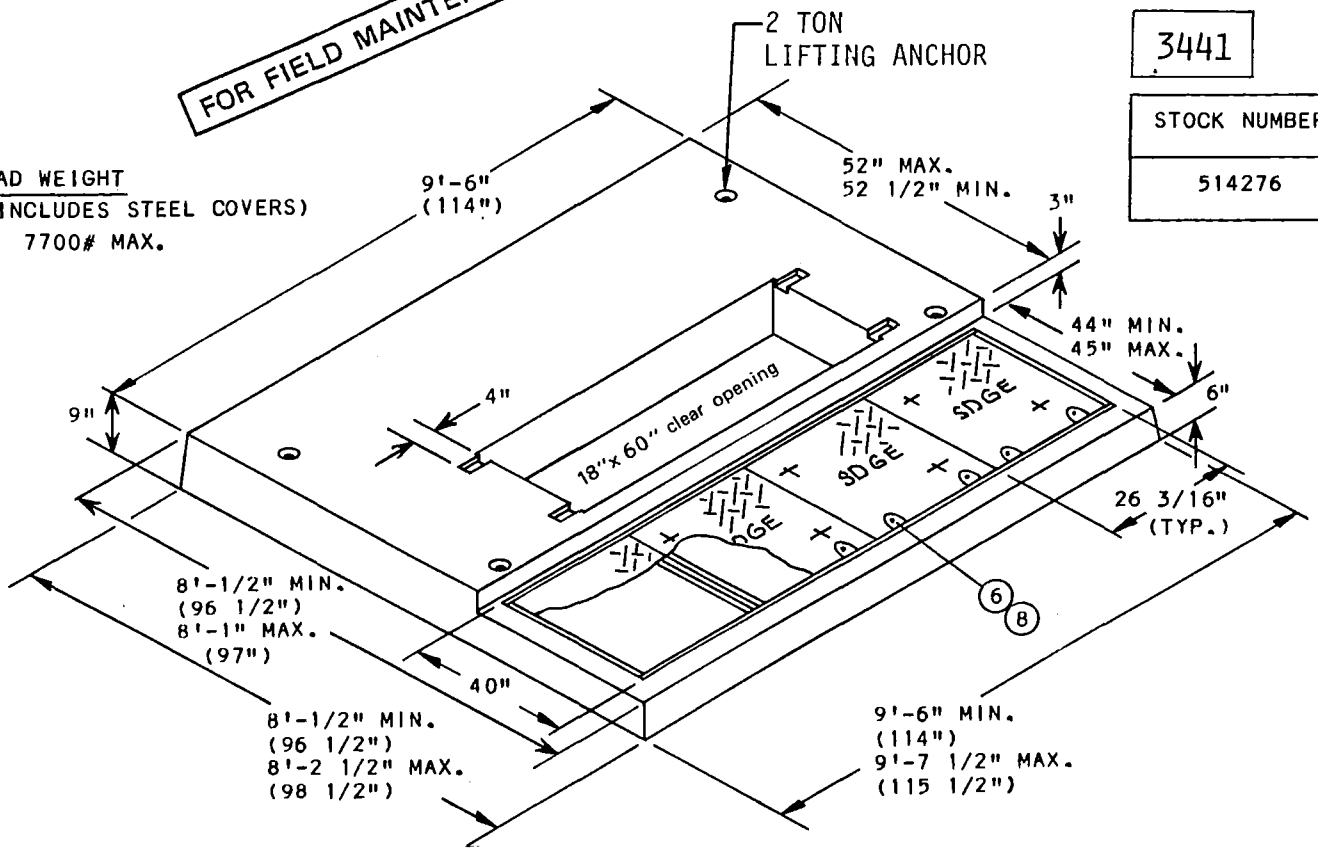

ISSUE 1994	SDG&E ELECTRIC STANDARDS	
DATE 1-1-88	3440 & 3441 PADS FOR PAD-MOUNTED 12KV, 600 AMP, 3Ø SWITCH	3499.401
APPD JLB/RD		

TABLE OF CONTENTS

SCOPE: THIS STANDARD SHOWS THE INSTALLATION REQUIREMENTS OF A TYPICAL 3440A OR 3441A PAD AND 3315 OR 3316 HANDHOLE FOR A PAD-MOUNTED 12KV, 600 AMP, 3 PHASE SWITCH.

PAD SECTION
WEIGHT 3000# MAX.

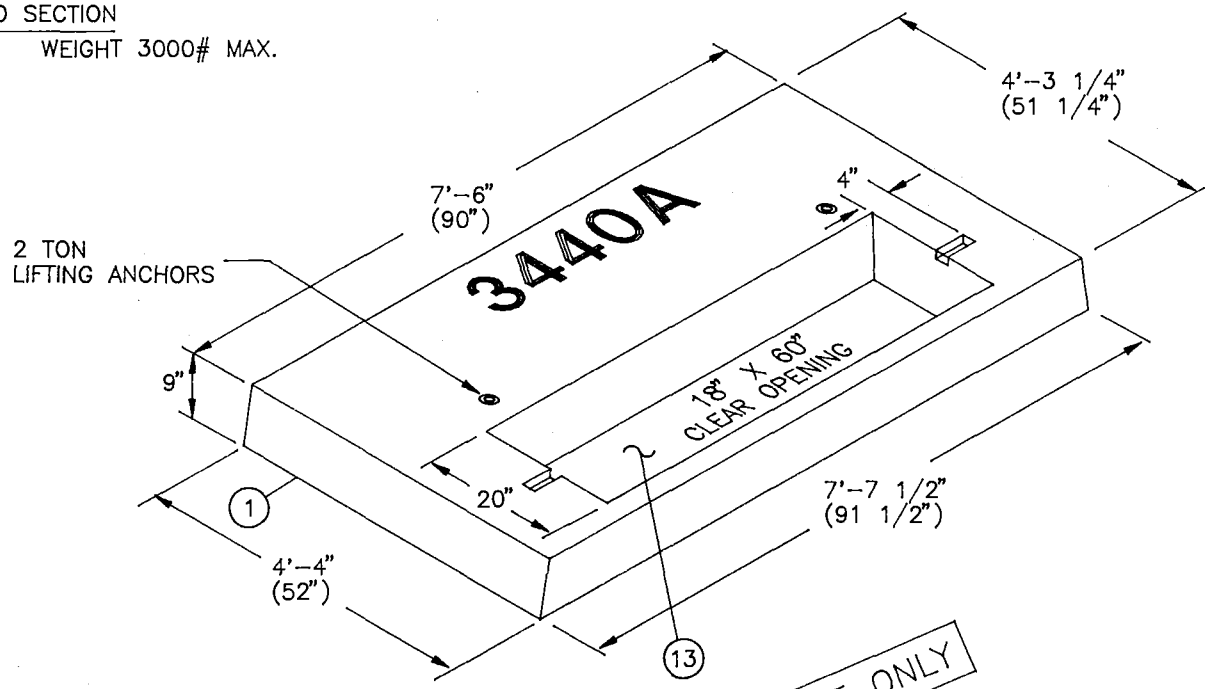

FOR FIELD MAINTENANCE ONLY

PAD SECTION
WEIGHT 4050# MAX.

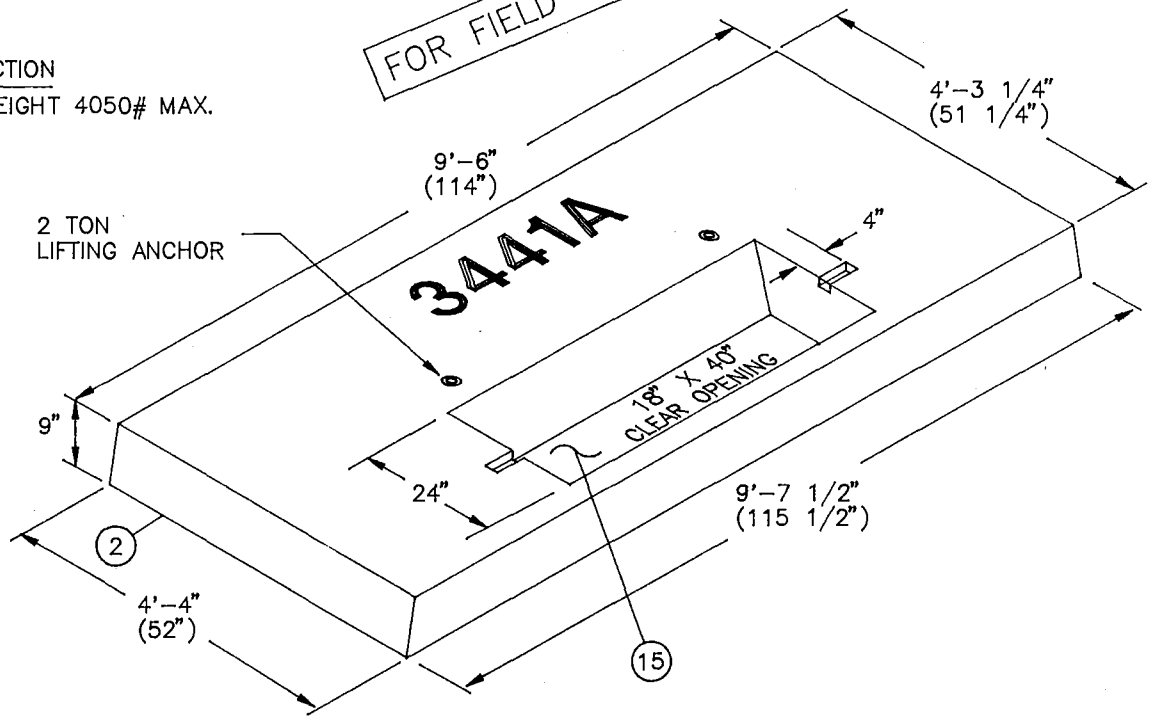

NOTES:

- PADS MAY NOT BE POURED IN PLACE. USE PRECAST PADS ONLY.

	SDG&E ELECTRIC STANDARDS	
DATE 1-1-96 APPD	3440A/3441A PAD & HANDHOLE INSTALLATIONS FOR PAD-MOUNTED 12KV, 600 AMP, PMH 5	3499.402

TABLE OF CONTENTS

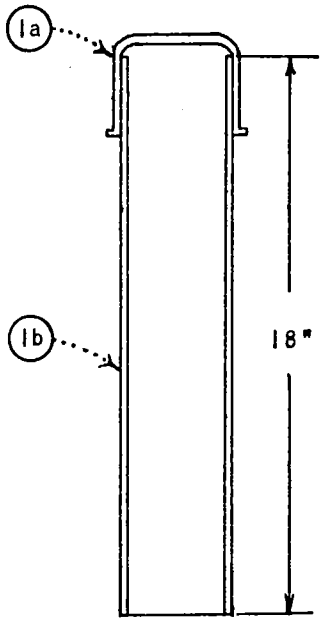

INSULATING TUBE
FIGURE 1



INSULATING GLASS, 2 OUNCE
FIGURE 2

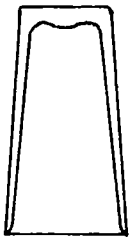

INSULATING GLASS, 11 OUNCE
FIGURE 3

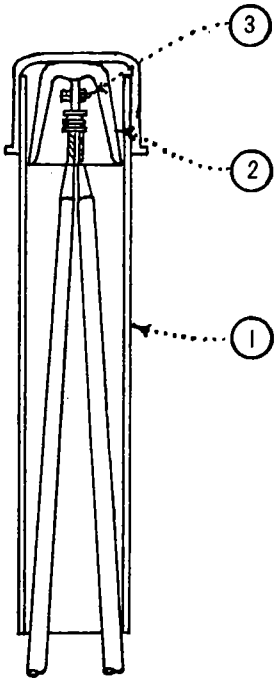

CAPPED SPLICE TERMINATION
FIGURE 4

FOR FIELD MAINTENANCE ONLY

BILL OF MATERIAL see TABLE NO. 1 for materials selection

ITEM	DESCRIPTION	QUANTITY	STOCK NO. OR CONSTR. STD.
1	INSULATING TUBE-SHOP MADE	1	
	1A ABS CAP – 2", 3", OR 4" (SECURED WITH CEMENT)	AS REQ'D.	2"-774752 3"-774784 4"-774816
	1B ABS TYPE II (DB) TUBE – 2", 3", OR 4"	AS REQ'D.	
2	INSULATING ANTI-TRACK GLASS	1	
3	EVURDUR BOLT, FLAT WASHER, LOCK WASHER, AND NUT - 3/8"	1	140

TABLE I

MATERIALS SELECTION

CABLE AWG	NUMBER OF CABLES	2" TUBE INSULATING GLASS	3" TUBE INSULATING GLASS	4" TUBE INSULATING GLASS
4 OR 2	2	X	-	-
	3	-	X	-
4/0 OR 500 MCM	2	-	X	-
	3	-	-	X

TABLE II

NOTE:

1 CAPPED SPLICE TERMINATION DESIGNED FOR USE IN TRANSFORMER HIGH VOLTAGE COMPARTMENTS AND U-41.2 TERMINATOR.

DATE 9-19-69 SDG&E	SAN DIEGO GAS & ELECTRIC COMPANY UNDERGROUND STANDARDS CAPPED SPLICE TERMINATION 12 KV AND BELOW	3599.001

TABLE OF CONTENTS

TABLE OF CONTENTS



FIGURE 1



FIGURE 2



FIGURE 3



FIGURE 4

FOR FIELD MAINTENANCE ONLY

MATERIAL DESCRIPTION				
LINE MATERIAL LOAD BREAK SWITCH BLADE-INDOOR				
NOMINAL VOLTAGE KV	RATING	FIGURE NUMBER	CATALOG NUMBER	STOCK NUMBER
8.3	200 AMPS CONTINUOUS 200 AMPS LOAD BREAK	1	FA1B1	139552
15.5		2	FA3B1	139488
WITH FAULT INDICATOR (1)				
8.3	200 AMPS CONTINUOUS 200 AMPS LOAD BREAK	3	FA1B2	139584
15.5		4	FA3B2	139520

NOTE:

(1) TRIP RANGE OF FAULT INDICATOR IS 350-500 AMPS.

3599.002	SDG&E ELECTRIC STANDARDS SWITCH BLADES - ARC STRANGLER	DATE 4-10-75 APPD JWK

TO REDUCE INTERNAL CABINET MOISTURE WHICH INCREASES CABLE INSULATION CONTAMINATION, INSULATION BARRIER DETERIORATION AND METAL CORROSION -

1. RESTRICT THE AIR FLOW FROM ADJACENT SUBSTRUCTURES AND/OR CONDUITS BY TAPING OR COVERING OVER BASE PAD WINDOW WHEN PAD IS DIRECTLY OVER A SUBSTRUCTURE (WHICH IS A DISCONTINUED PRACTICE FOR LARGER THAN STANDARD 3314 SIZE HANDHOLES) WHICH CAN CONTAIN WATER (WITH CONCRETE OR NON-DRAINING BOTTOM) AND OVER ALL CONDUIT OPENINGS TO SUBSTRUCTURES WITHIN 100 FEET. TAPE SHALL BE APPLIED SO AS NOT TO ALLOW TOUCHING OF CABLE INSULATION SHIELD AND SHALL BE BELOW STRESS CONE LEVEL. "AQUA-SEAL" MAY BE USED TO SEAL CONDUIT OPENINGS INSTEAD OF TAPING.

2. USE SILICONE TAPE ON INDOOR TERMINATIONS PER STANDARD 4121 FOR ALL CABLES.

TABLE OF CONTENTS

FOR FIELD MAINTENANCE ONLY

MAJOR USE: ABOVE GROUND SWITCHING POINT WITH PAD MOUNT TRANSFORMER INSTALLATION

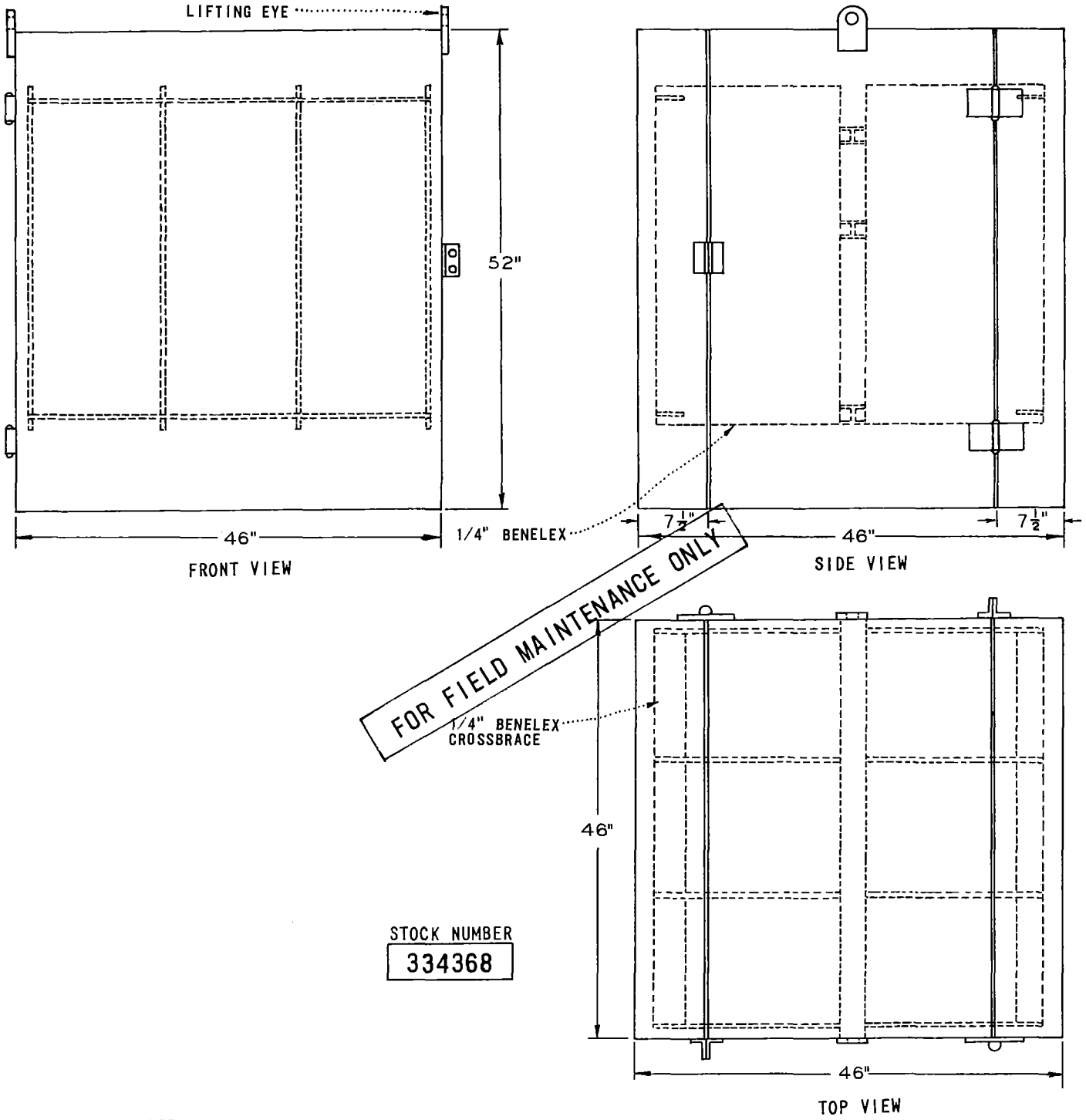

STOCK NUMBER
334368

NOTES:

A. 12KV SWITCHING CABINET.
B. SIDE PANELS TO BE MINIMUM 14 GAUGE SHEET METAL.
C. ALL STEEL PARTS TO BE HOT DIPPED GALVANIZED AFTER FABRICATION.
D. FINISH: ONE COAT PRIMER AND TWO COATS FINISH LEAF GREEN (SUBOX 524 FD OR EQUAL)
E. FOR INSTALLATION DETAILS SEE 3599.105, 3599.109, 3599.110.
F. FOR FUSES SEE 4311.

TABLE OF CONTENTS

3599.101	SDG&E ELECTRIC STANDARDS PAD MOUNT SWITCHING CABINET	DATE 12-27-73 APPD

MAJOR USE: TO FUSE UNDERGROUND TAPS WHICH EMPLOY BOTH 1$^{\phi}$ & 3$^{\phi}$ TRANSFORMERS

U-41.51

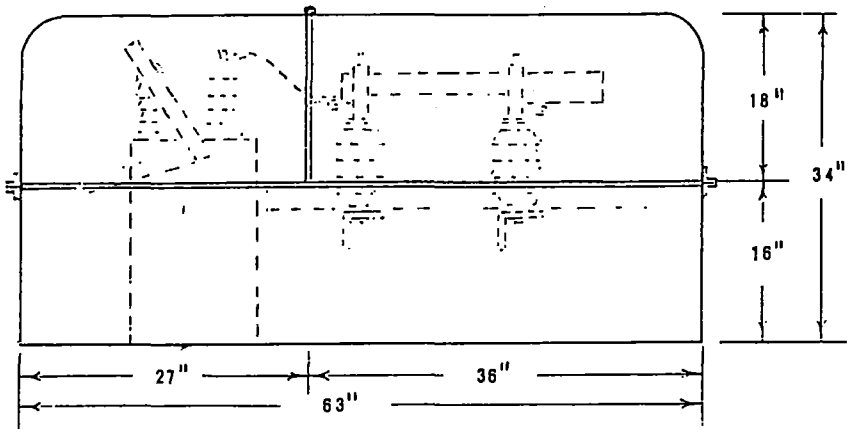

SIDE VIEW

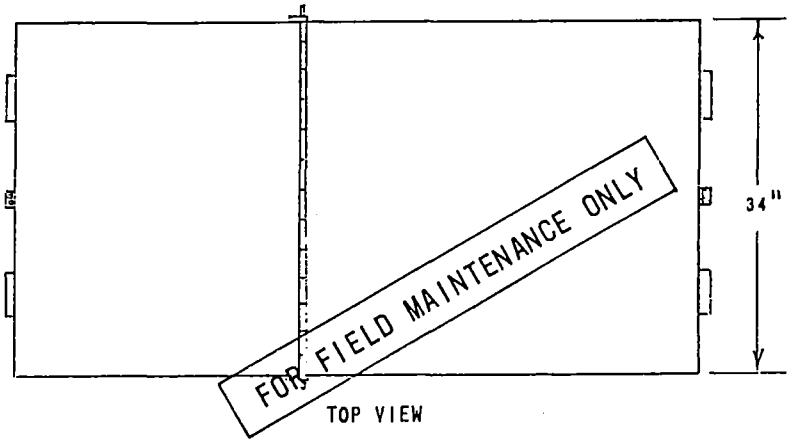

TOP VIEW

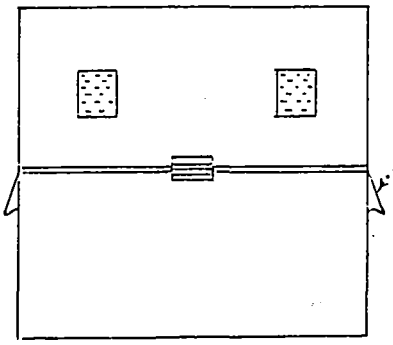

END VIEW

STOCK NUMBER
334366

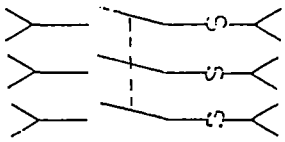

CIRCUIT DIAGRAM

RATINGS	SM-4 FUSE	VAC. SW.
KV	14.4	13.8
AMPERES	200	200
KV-BIL	95	95
INTERRUPTING AMPERES (SYMMETRICAL)	12,500	2,000
MAKE AND LATCH AMPERES (SYMMETRICAL)		10,000

CAUTION

MECHANICAL INTERLOCK PROHIBITS FUSE COMPARMENT DOOR FROM OPENING UNLESS VACUUM SWITCH IS PLACED IN THE OPEN POSITION.

NOTES:

A. PANELS TO BE 14 GAUDE MINIMUM SHEET METAL.

B. ALL STEEL PARTS TO BE HOT DIPPED GALVANIZED AFTER FABRICATION.

C. FINISH; ONE COAT PRIMER AND TWO COATS FINISH LEAF GREEN (SUBOX 524 OR EQUAL).

D. ALL INTERNAL BARRIERS TO BE 1/4" BENELEX OR EQUAL.

E. FOR INSTALLATION DETAILS SEE 3599.106.

	SDG&E ELECTRIC STANDARDS	
DATE 1-1-93 APPD JLG/RPS	PADMOUNT LOW PROFILE FUSED SWITCHING CABINET	3599.102

TABLE OF CONTENTS

MAJOR USE: TO FUSE UNDERGROUND TAPS WHICH EMPLOY BOTH 1φ & 3φ TRANSFORMERS.

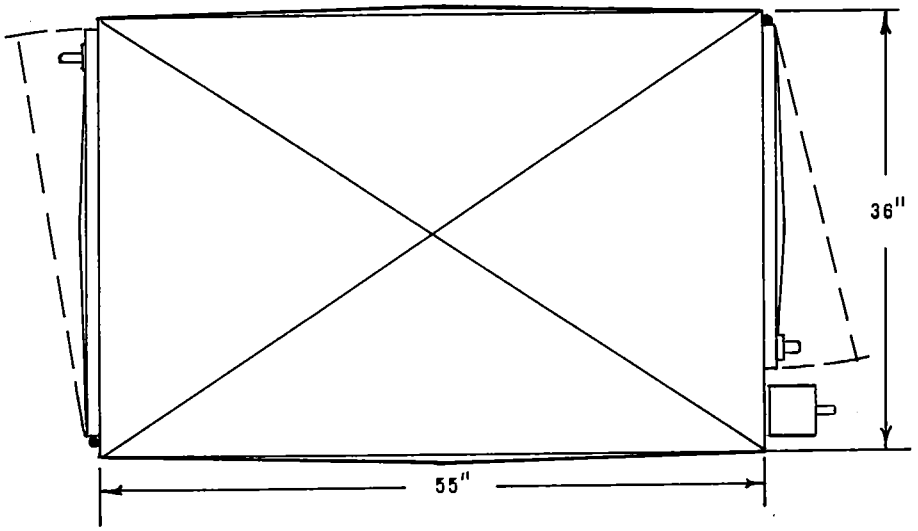

TOP VIEW

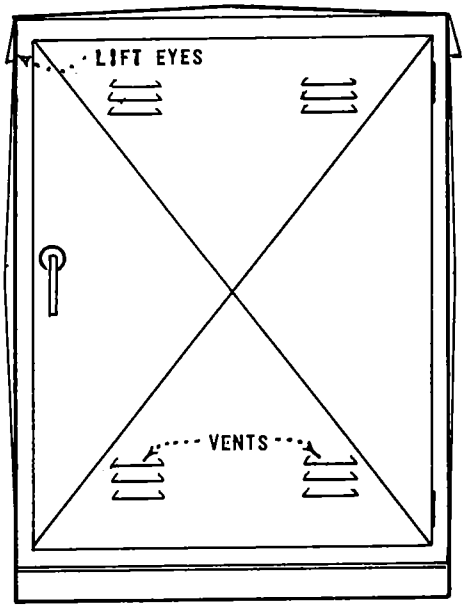

END VIEW - FUSE SIDE

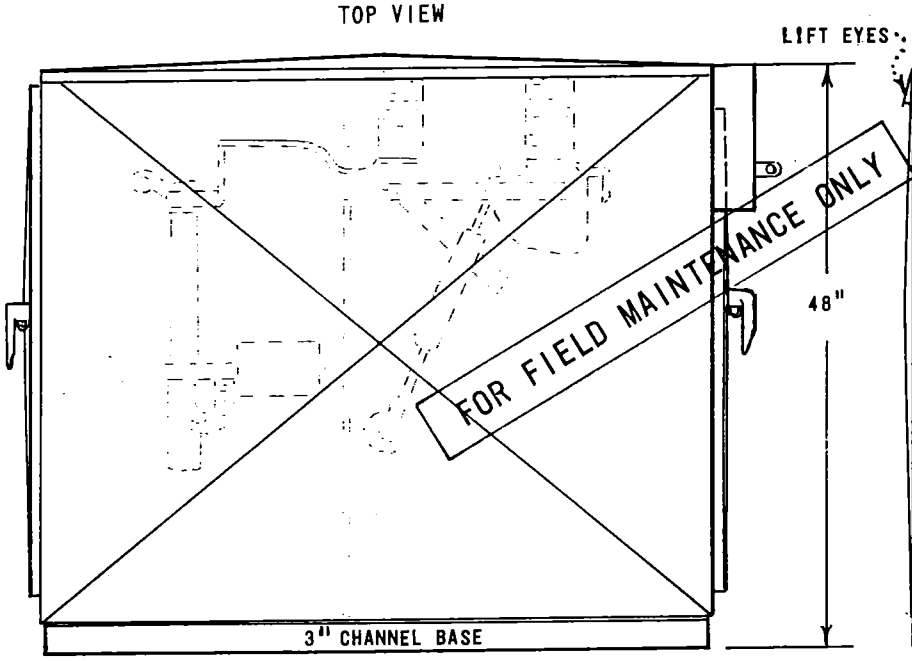

FRONT VIEW

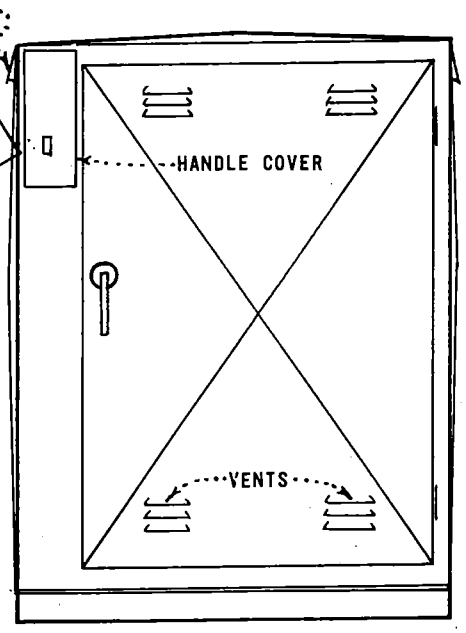

END VIEW - SWITCH SIDE

RATINGS	SM-4 FUSE	3φ SW.
KV	14.4	13.8
AMPERES	200	600
KV-BIL	95	95
INTERRUPTING AMPERES (SYMMETRICAL)	12,500	600
MAKE AND LATCH AMPERES (SYMMETRICAL)	-	25,000

STOCK NUMBER
334366

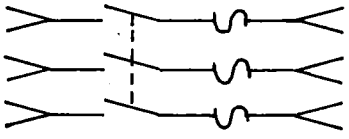

CIRCUIT DIAGRAM

NOTES:

A. PANELS TO BE 12 GAUGE MINIMUM SHEET METAL REINFORCED.
B. ALL STEEL PARTS TO BE HOT DIPPED GALV. AFTER FABRICATION.
C. FINISH: ONE COAT PRIMER AND ONE COAT FINISH FOREST GREEN.
D. ALL INTERNAL BARRIERS TO BE 3/8" BENELEX OR EQUAL.
E. FOR INSTALLATION DETAILS SEE 3599.108.

TABLE OF CONTENTS

3599.103	SDG&E ELECTRIC STANDARDS 3φ PADMOUNT FUSE-SWITCH	DATE 12-27-73 APPD

MAJOR USE: ABOVE GROUND SECTIONALIZING POINT WITH LOW PROFILE TRANSFORMER INSTALLATION

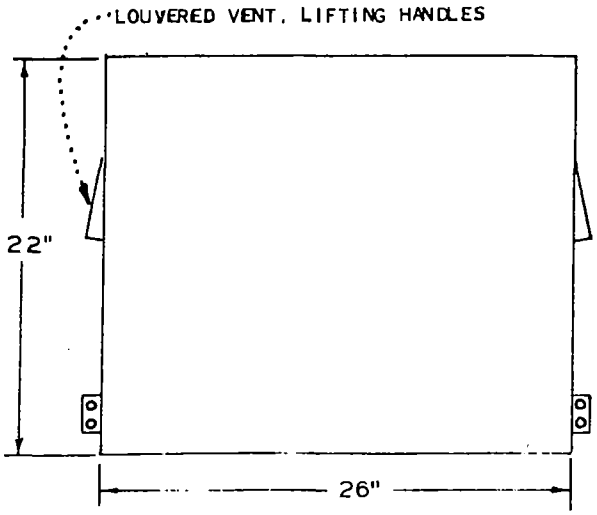

FRONT VIEW

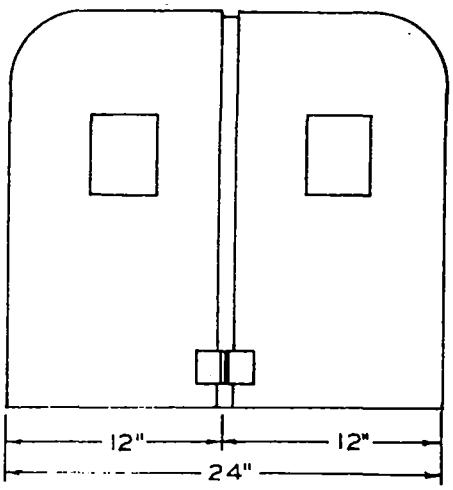

SIDE VIEW

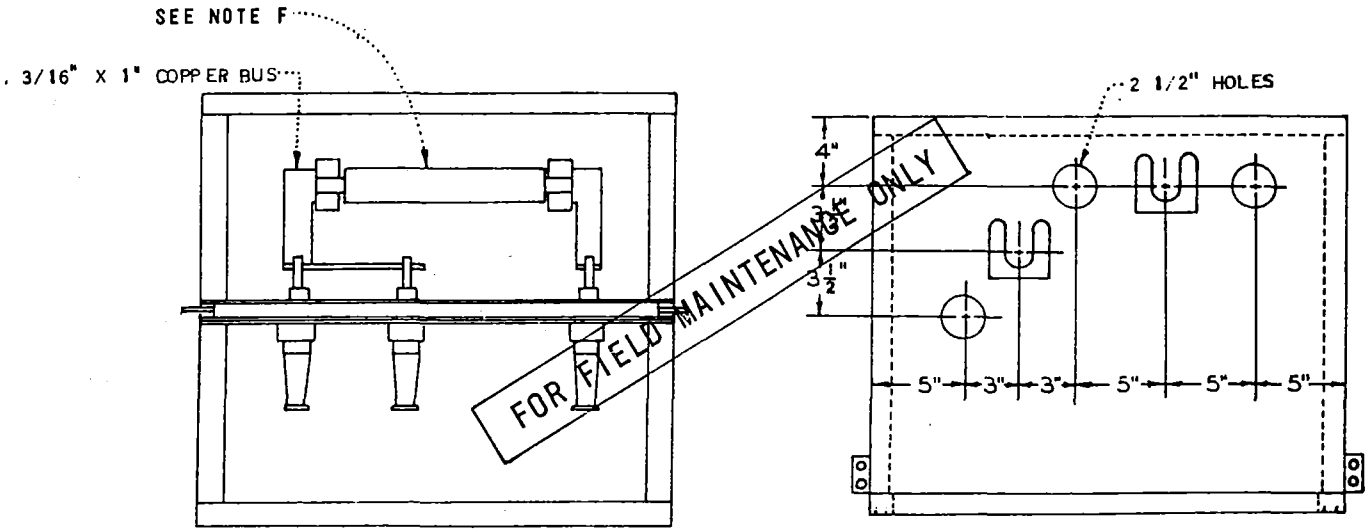

PLAN DETAIL

FRONT DETAIL

STOCK NUMBER
190432

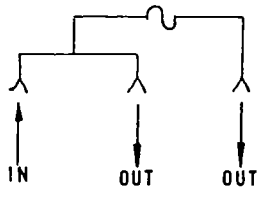

STANDARD

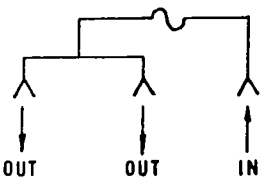

REVERSED

NOTES:

A. 1 ϕ 7200 VOLT SECTIONALIZING CABINET
B. SIDE PANELS TO BE 12 GAUGE MINIMUM SHEET METAL.
C. ALL STEEL PARTS TO BE HOT DIPPED GALV. AFTER FABRICATION.
D. FINISH: 1 COAT PRIMER AND 2 COATS FINISH LEAF GREEN (SUBOX #524 F.D.) OR EQUAL.
E. FOR INSTALLATION DETAILS SEE 3599.107.
F. FOR FUSES SEE 4302.
G. THE STANDARD OR REVERSED SCHEMATICS SHALL BE STENCILED INSIDE FUSE CABINET TO MATCH CIRCUITRY AND FEED DIRECTION.

SDG&E ELECTRIC STANDARDS

DATE 7-13-73
APPD

LOW PROFILE FUSED SECTIONALIZING CABINET

1 ϕ 7200 VOLTS

3599.104

TABLE OF CONTENTS

MAJOR USE: LINE AND LOAD SIDE LESS THAN 200 AMPS

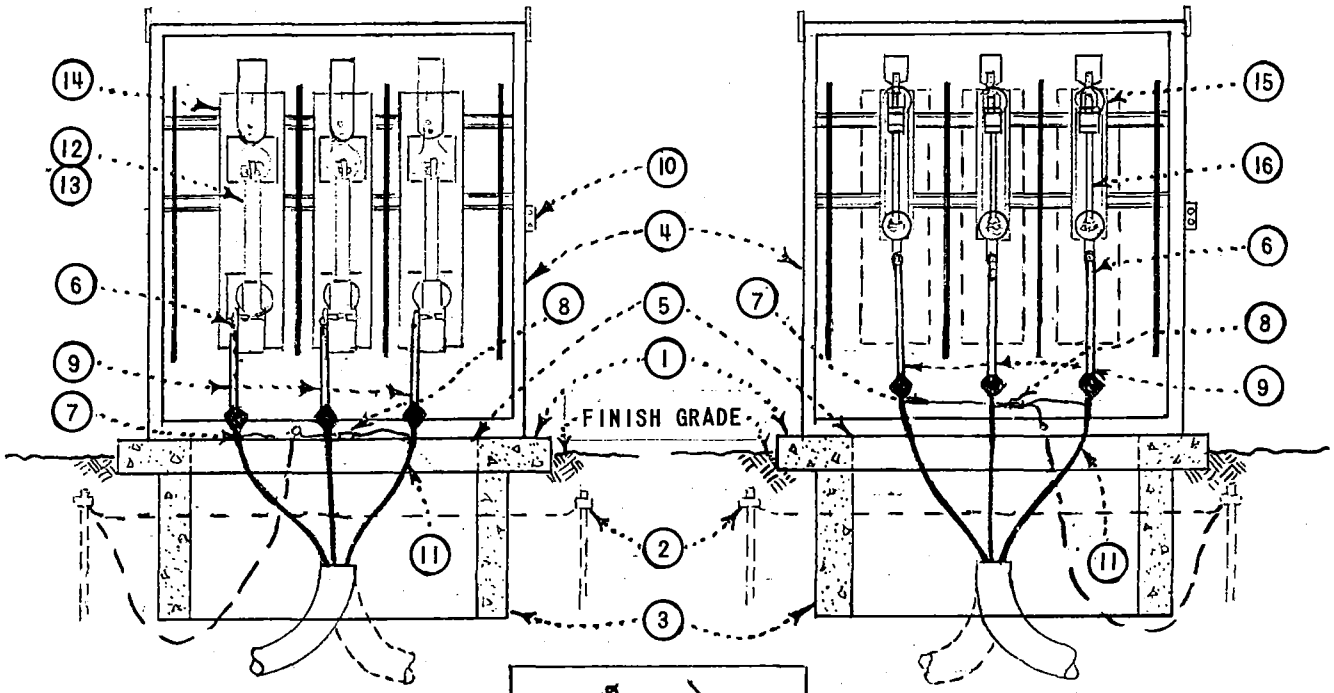

ITEM	DESCRIPTION	QUANTITY	STOCK NO. OR CONSTR. STD.
1	CONCRETE PAD	1	513392, 3499.102
2	PAD GROUNDING	1	3407
3	HANDHOLE, BOTTOM SECTION (SEE NOTE E)	1	162664, 3313
4	CABINET Ⓓ	1	334368, 3599.101
5	HOLD DOWN DEVICE, NO SP.	-	-
6	COMPRESSION CONNECTORS	6	4172
7	CONCENTRIC NEUTRAL TAIL	AS REQ'D	-
8	COMPRESSION CONNECTOR	2	257792
9	CABLE TERMINATION	6	4121
10	COMPANY LOCK, (CORBIN #27) FF KEY (NOT SHOWN)	2	514848
11	PHASE AND ROUTE TAGS	AS REQ'D	3202, 3231
12	FUSE HOLDER Ⓓ	3	413262
13	FUSE LINK (CONTACT UG DESIGN DEPT.)	3	4311
14	FUSE MOUNTING Ⓓ	3	487984
15	DISCONNECT MOUNTING Ⓓ	3	488098
16	LOAD BREAK SWITCH BLADE Ⓓ	3	139488, 3599.002

FOR FIELD MAINTENANCE ONLY

NOTES:

A. CUT CONDUIT 3" ABOVE BOTTOM OF BOX.

B. STRUCTURE IDENTIFICATION, 3211

C. CABLE TERMINATING ENCLOSURE "WARNING SIGN", 3221.

Ⓓ ITEMS 4, 12, 14, 15 AND 16 ARE CONTAINED IN A UNIT ASSEMBLY UNDER STOCK NUMBER 334364.

E. INSTALL BOX, STANDARD SHEET 3313 WITH 36" DIMENSION FACING DOOR OPENING.

DATE 6-30-78
APPD TRF

SDG&E ELECTRIC STANDARDS

IN LINE FUSE SWITCH CABINET

INSTALLATION UNDER 200 AMPS

3599.105

TABLE OF CONTENTS

MAJOR USE: TO FUSE UNDERGROUND TAPS WHICH EMPLOY BOTH 1ϕ AND 3ϕ TRANSFORMERS, ALSO TO FUSE UNDERGROUND EQUIPMENT WHEN CURRENT LIMITING FUSES WILL NOT COORDINATE WITH BACK-UP PROTECTION.

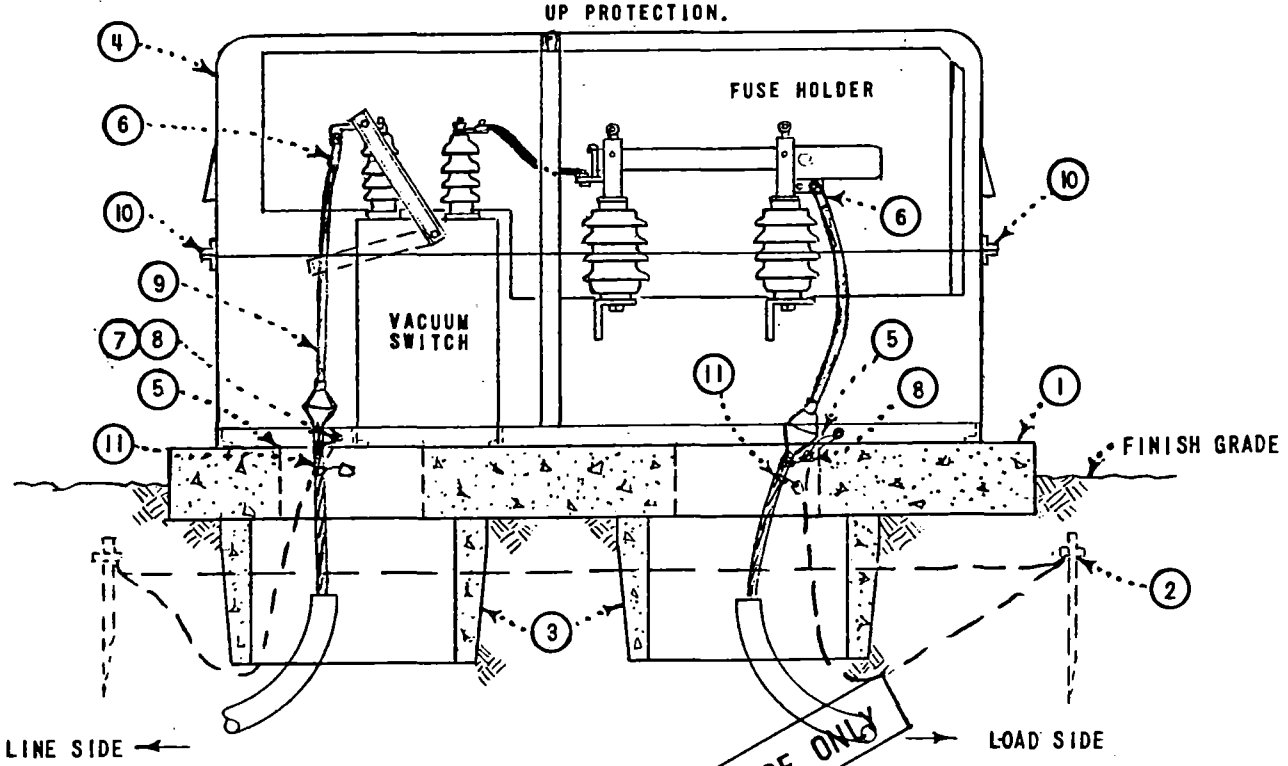

FOR FIELD MAINTENANCE ONLY

ITEM	DESCRIPTION	QUANTITY	STOCK NO. OR CONSTR. STD.
1	CONCRETE PAD	1	513424, 3499.103
2	PAD GROUNDING	1	3407
3	HANDHOLE, BOTTOM SECTION, 17" X 30"	2	162426, 3312
4	CABINET,(COMPLETE), EXCLUDING FUSE LINKS (SEE NOTE C)	1	334366, 3599.102
5	HOLD DOWN DEVICE - NO STANDARD	-	
6	COMPRESSION CONNECTORS	6	4171
7	CONCENTRIC NEUTRAL TAILS	AS REQ'D.	
8	COMPRESSION CONNECTOR	2	257792
9	CABLE TERMINATION	6	4121
10	COMPANY LOCK, (CORBIN #27) FF KEY (NOT SHOWN)	2	514848
11	PHASE AND ROUTE TAGS	AS REQ'D.	3202, 3231

CAUTION

MECHANICAL INTERLOCK PROHIBITS FUSE COMPARTMENT DOOR FROM OPENING UNLESS VACUUM SWITCH IS PLACED IN THE OPEN POSITION.

NOTES:

A. 3ϕ 12000 VOLT GANG OPERATED FUSED SWITCHING CABINET.(SCOTT ENGINEERING CO).

B. ITEM 4, INCLUDES FUSE LINK CABINET, VACUMN SWITCH, FUSE HOLDERS AND MOUNTING BRACKETS COMPLETE.

C. SM-4 FUSE LINK (3) SIZE TO BE SPECIFIED ON WORK ORDER. REFER TO 4311.

D. STRUCTURE IDENTIFICATION SEE 3211.

E. FUSE SWITCHING CABINET 'WARNING SIGN' SEE 3221.

F. THIS SWITCH IS MECHANICAL INTERLOCKED AND IS LIMITED TO MAXIMUM ONE CIRCUIT IN AND OUT.

3599.106	SDG&E ELECTRIC STANDARDS 3ϕ 200 AMP PADMOUNT LOW PROFILE FUSED SWITCHING CABINET INSTALLATION	DATE 1-1-86 APPD JLB/RDF

TABLE OF CONTENTS

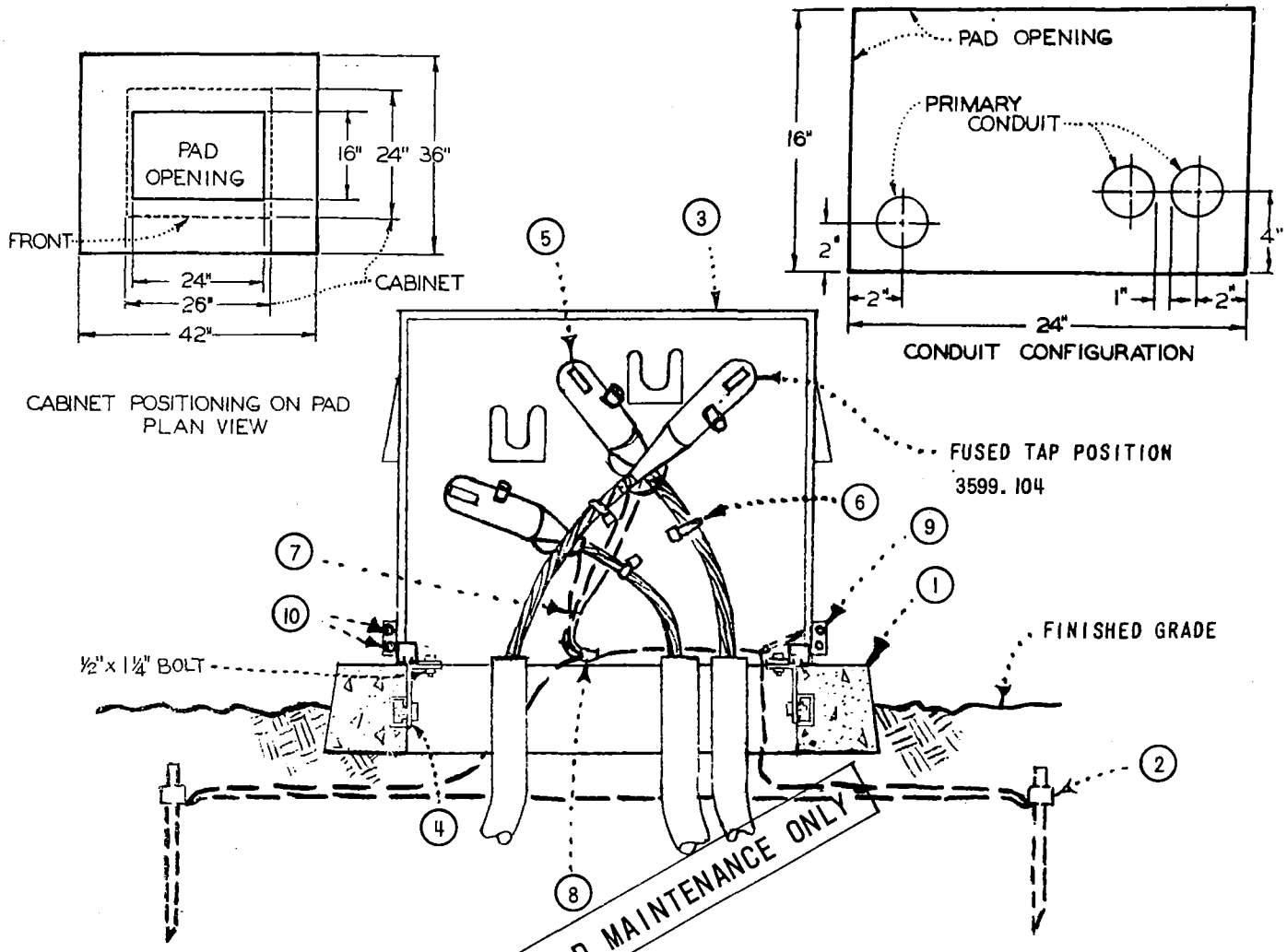

ITEM	DESCRIPTION	QUANTITY	STOCK NO. OR CONSTR. STD.
1	CONCRETE PAD	1	514272 3599.101
2	PAD GROUNDING	1	3407
3	CABINET	1	190432, 3599.104
4	HOLD DOWN DEVICE, FURNISHED WITH CABINET	2	—
5	ELBOW - LOAD BREAK, 7.2KV, 200 AMP	3	443416 4191
6	PHASE AND ROUTE IDENTIFICATION TAG,	3	3202, 3231
7	CONCENTRIC NEUTRAL TAIL	AS REQ'D	—
8	CONNECTOR, COMPRESSION	1	257792
9	COMPANY LOCK, (CORBIN #27), FF KEY, NOT SHOWN ABOVE	1	514848
10	BOLT, MACH., GALV., 1/4" X 2", 1-NUT	2	152032

NOTES:

A. THIS INSTALLATION IS LIMITED TO ONE 200 AMP PHASE IN AND OUT WITH ONE SINGLE PHASE FUSED TAP.
B. COMPANY LOCK, ITEM 10, TO BE ATTACHED TO LATCHING MECHANISM ON CABINET.
C. PAD NUMBERING, 3211
D. SECTIONALIZING CABINET 'WARNING SIGN', 3221

SDG&E ELECTRIC STANDARDS

DATE 6-30-78
APPD TAF

LOW PROFILE FUSED SECTIONALIZING CABINET INSTALLATION

3599.107

TABLE OF CONTENTS

MAJOR USE: TO FUSE UNDERGROUND TAPS WHICH EMPLOY BOTH 1ϕ & 3ϕ TRANSFORMERS. ALSO TO FUSE UNDERGROUND EQUIPMENT WHEN CURRENT LIMITING FUSES WILL NOT COORDINATE WITH BACK-UP PROTECTION.

(DO NOT USE WITHIN 2400 FEET OF A SUBSTATION WITHOUT APPROVAL FROM PROTECTION ENGINEERING.).

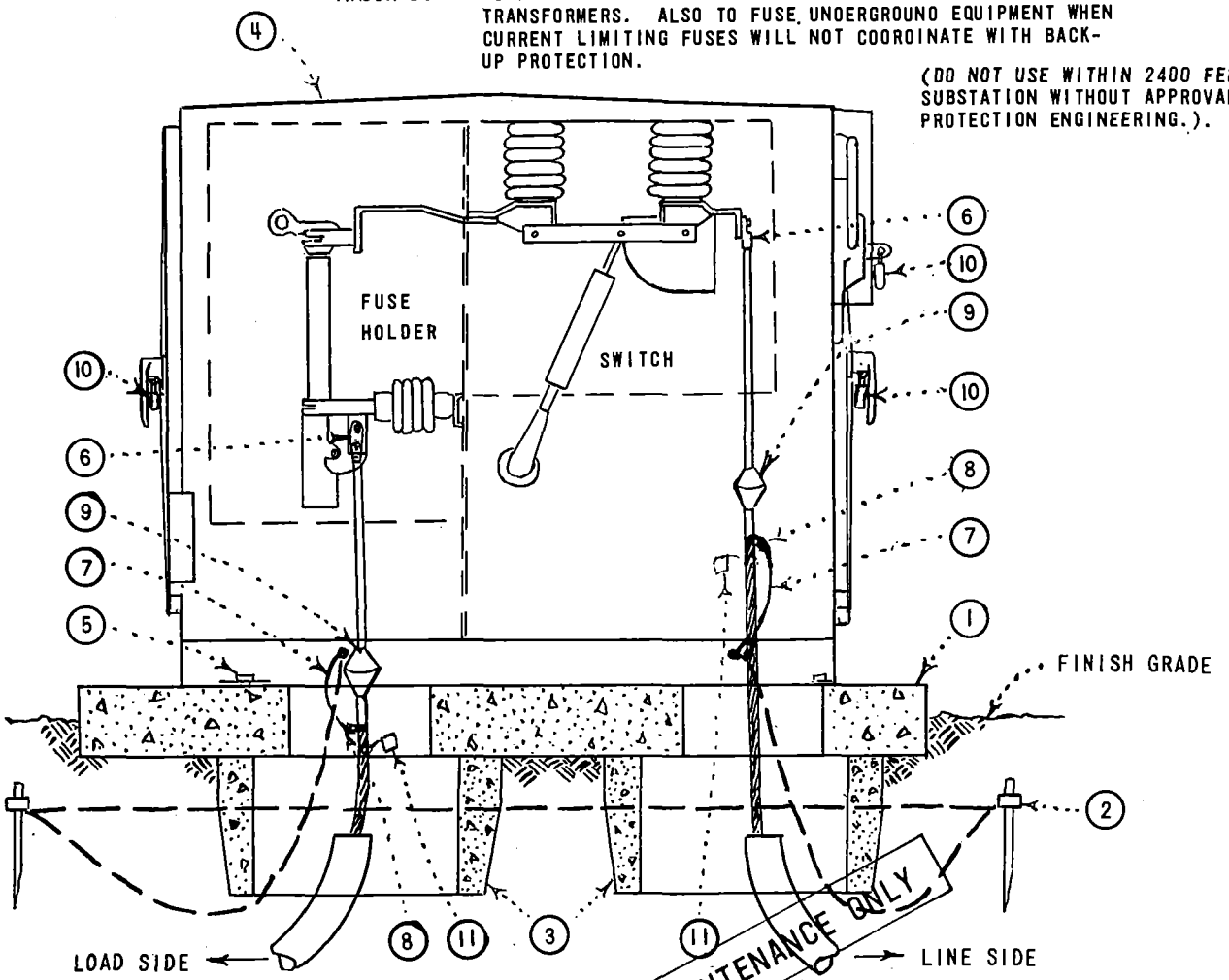

FOR FIELD MAINTENANCE ONLY

ITEM	DESCRIPTION	QUANTITY	STOCK NO. OR CONSTR. STD.
1	CONCRETE PAD	1	513424, 3499.103
2	PAD GROUNDING, UNIT	1	3407
3	HANDHOLE, BOTTOM SECTION, 17" X 30"	2	162426, 3312.
4	CABINET, (COMPLETE), EXCLUDING FUSE LINKS (SEE NOTE C)	1	334366, 3599.103
5	HOLD DOWN DEVICE, NO STANDARD	-	-
6	COMPRESSION CONNECTORS	6	4171.
7	CONCENTRIC NEUTRAL TAILS	AS REQ'D.	-
8	COMPRESSION CONNECTOR	2	257792
9	CABLE TERMINATION	6	4121
10	COMPANY LOCK, (CORBIN #27) FF KEY	3	514848
11	PHASE AND ROUTE TAGS	AS REQ'D.	3202, 3231

NOTES:

A. 3ϕ 13800 VOLT GANG OPERATED FUSED SWITCHING CABINET (SCOTT ENGR. CO.).

B. ITEM 4, INCLUDES CABINET, SWITCH, FUSE HOLDERS AND MOUNTING BRACKETS COMPLETE.

C. SM-4 FUSE LINKS (3) SIZE TO BE SPECIFIED ON WORK ORDER, REFER TO 4311

D. STRUCTURE IDENTIFICATION SEE 3211

E. FUSE SWITCHING CABINET, WARNING SIGN, SEE 3221 (APPLY TO BOTH OPENINGS).

F. THIS SWITCH IS LIMITED TO MAXIMUM OF ONE CIRCUIT IN AND OUT.

G. SWITCH NUMBER TO BE ASSIGNED BY ELECTRIC ENGINEERING.

H. SWITCH IDENTIFICATION SEE 3212 (APPLY TO BOTH OPENINGS).

TABLE OF CONTENTS

3599.108	SDG&E ELECTRIC STANDARDS 3ϕ 200 AMP PADMOUNT FUSE-SWITCH INSTALLATION	DATE 6-30-78 APPD TRF

MAJOR USE: LINE AND LOAD SIDE LESS THAN 200 AMPS IN AND OUT

U-61.396

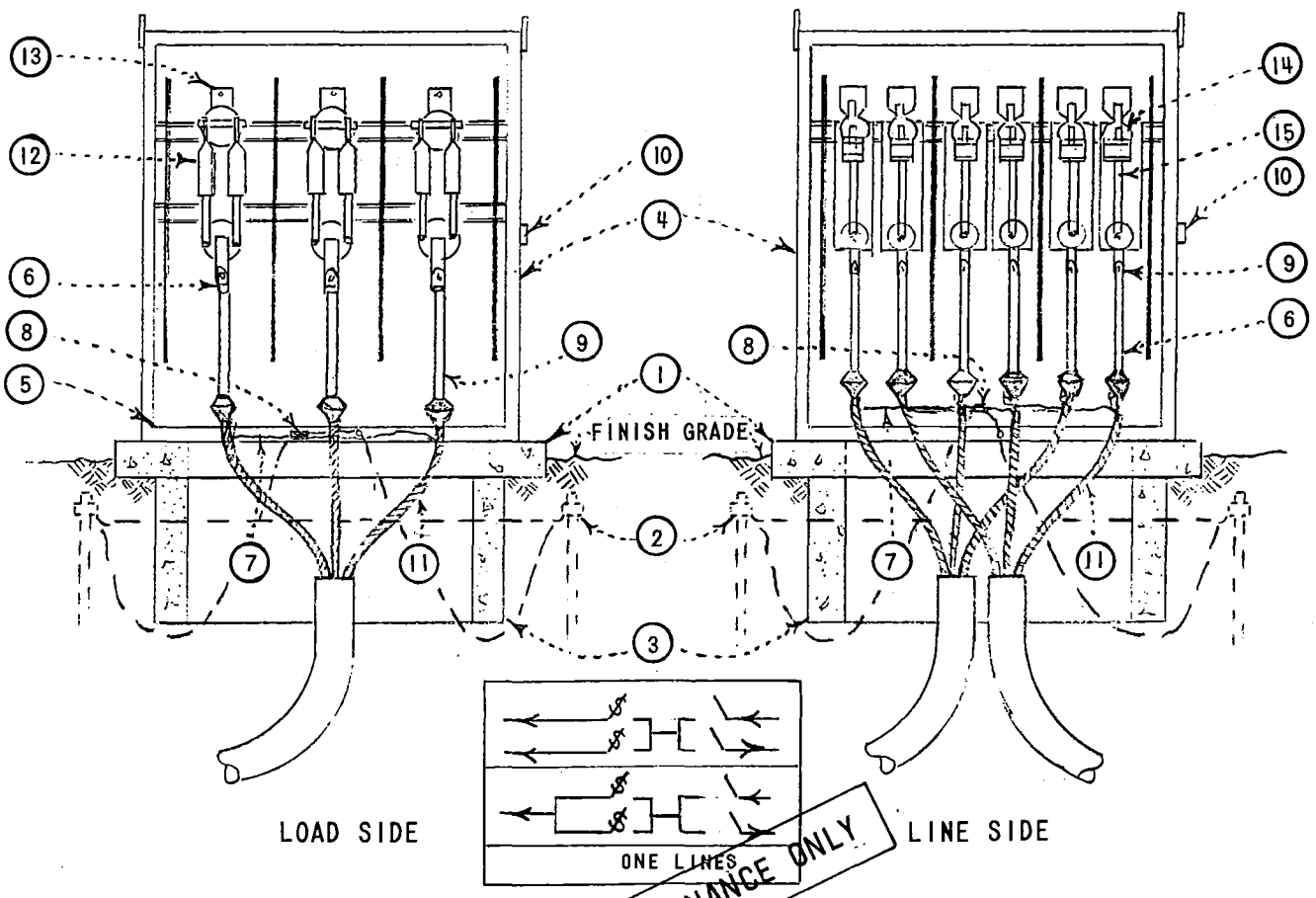

FOR FIELD MAINTENANCE ONLY

ITEM	DESCRIPTION	QUANTITY	STOCK NO. OR CONSTR. STD.
1	CONCRETE PAD	1	513392, 3499.102
2	PAD GROUNDING	1	3407
3	HANDHOLE, BOTTOM SECTION (SEE NOTE D)	1	162664, 3313
4	CABINET	1	334366, 3599.101
5	HOLDDOWN DEVICE, NO STD.	-	-
6	COMPRESSION CONNECTOR	9	4171
7	CONCENTRIC NEUTRAL TAIL	AS REQ'D	-
8	COMPRESSION CONNECTOR	2	257792
9	CABLE TERMINATION	9 OR 12	4121
10	COMPANY LOCK, (CORBIN #27) FF KEY (NOT SHOWN)	2	514848
11	PHASE AND ROUTE IDENTIFICATION	AS REQ'D	3202, 3231
12	FUSE	6	4311
13	DISCONNECT MOUNTING (DOUBLE ILLUSTRATED)	3 OR 6	487904, 488096
14	DISCONNECT MOUNTING	6	488096
15	LOADBREAK SWITCH BLADE	6	139488, 3599.002

NOTES:

A. CUT CONDUIT 3" ABOVE BOTTOM OF BOX.
B. STRUCTURE IDENTIFICATION, 3211
C. CABLE TERMINATING ENCLOSURE "WARNING SIGN", 3221
D. INSTALL BOX, STANDARD SHEET 3313 , WITH 36" DIMENSION FACING DOOR OPENING.

SDG&E ELECTRIC STANDARDS

DATE 6-30-78
APPD TRF

FUSE - SECTIONALIZING COMPARTMENT INSTALLATION UNDER 200 AMPS

3599.109

TABLE OF CONTENTS

MAJOR USE: LINE SIDE ABOVE 200 AMPS IN AND OUT
LOAD SIDE LESS THAN 200 AMPS

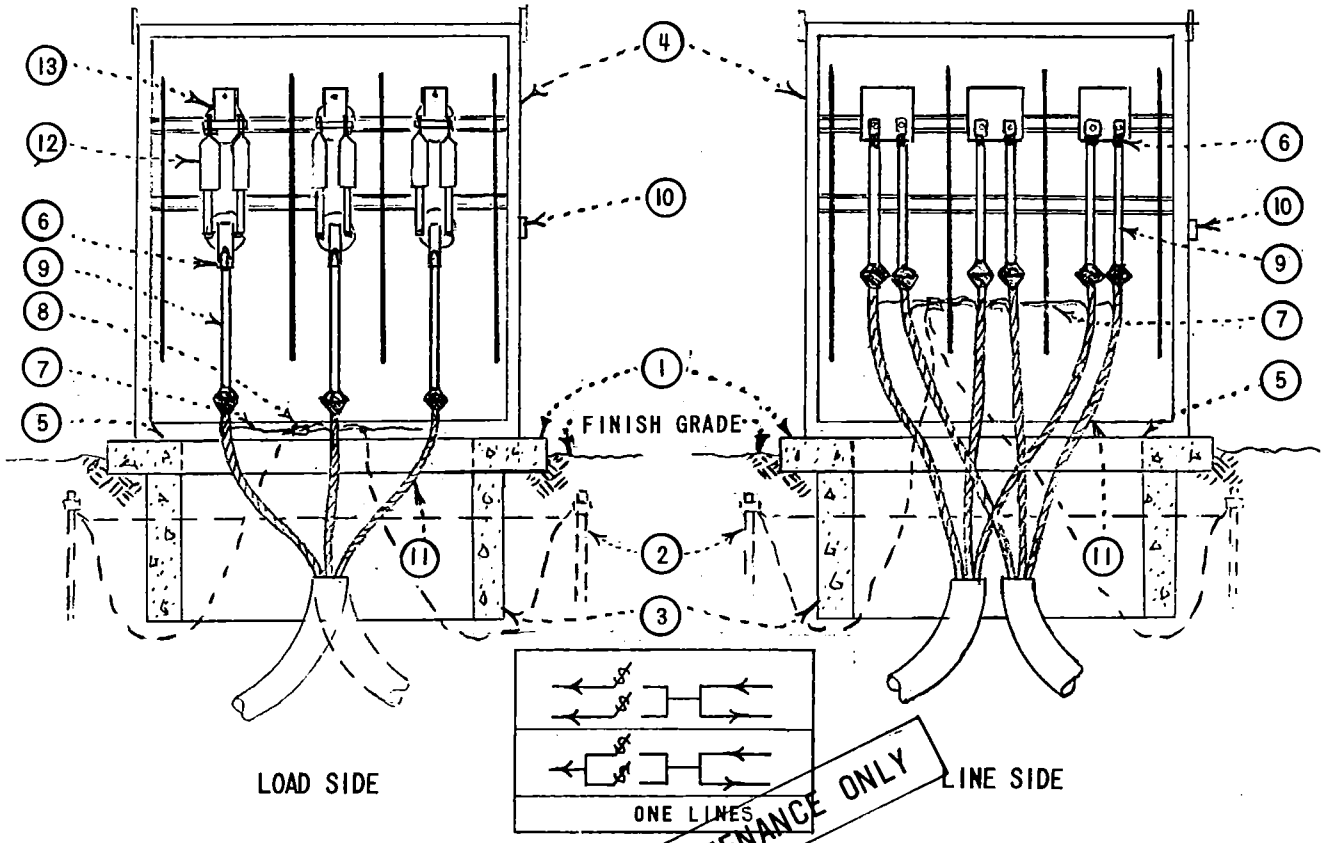

FOR FIELD MAINTENANCE ONLY

ITEM	DESCRIPTION	QUANTITY	STOCK NO. OR CONSTR. STD.
1	CONCRETE PAD	1	513392, 3499.102
2	PAD GROUNDING	1	3407
3	HANDHOLE, BOTTOM SECTION (SEE NOTE D)	1	162864, 3313
4	CABINET	1	334388, 3599.101
5	HOLD DOWN DEVICE, NO STD.	-	-
6	COMPRESSION CONNECTOR	9	4171
7	CONCENTRIC NEUTRAL TAIL	AS REQ'D	-
8	COMPRESSION CONNECTOR	2	257792
9	CABLE TERMINATION	9 OR 12	4121
10	COMPANY LOCK, (CORBIN #27) FF KEY (NOT SHOWN)	2	514848
11	PHASE AND ROUTE TAGS	AS REQ'D	3202, 3231
12	FUSE	6	4311
13	DISCONNECT MOUNTING (DOUBLE ILLUSTRATED)	3 OR 6	487804, 488098

NOTES:

A. CUT CONDUIT 3" ABOVE BOTTOM OF BOX.
B. STRUCTURE IDENTIFICATION, 3211
C. CABLE TERMINATING ENCLOSURE "WARNING SIGN", 3221
D. INSTALL BOX, STANDARD SHEET 3313 , WITH 36" DIMENSION FACING DOOR OPENING.

TABLE OF CONTENTS

SDG&E ELECTRIC STANDARDS

3599.110

FUSE - SECTIONALIZING COMPARTMENT INSTALLATION UNDER 200 AMPS

DATE 6-30-78
APPD TRF

MAJOR USE: TO FUSE UNDERGROUND TAPS WHICH EMPLOY BOTH 1$^{\phi}$ & 3$^{\phi}$ TRANSFORMERS

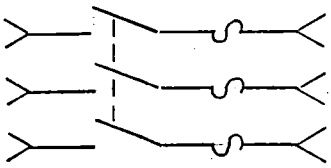

CIRCUIT DIAGRAM

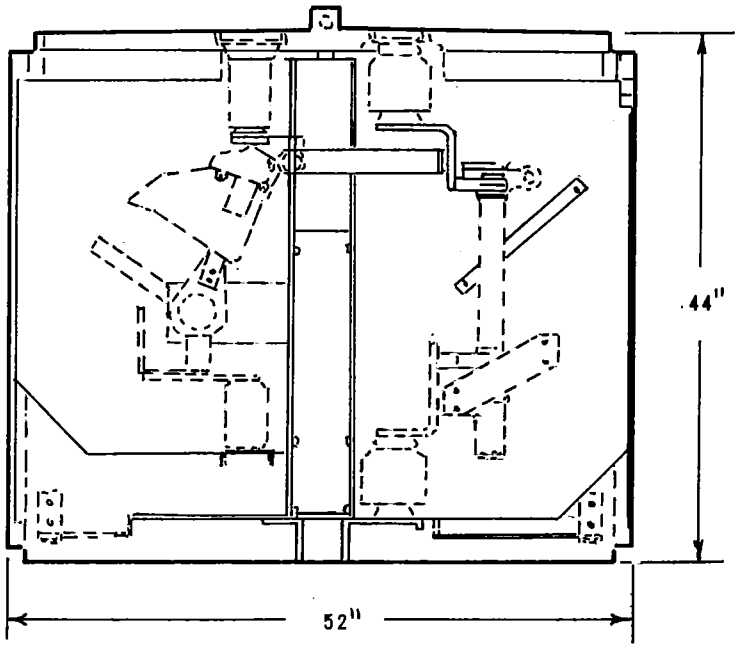

SIDE VIEW

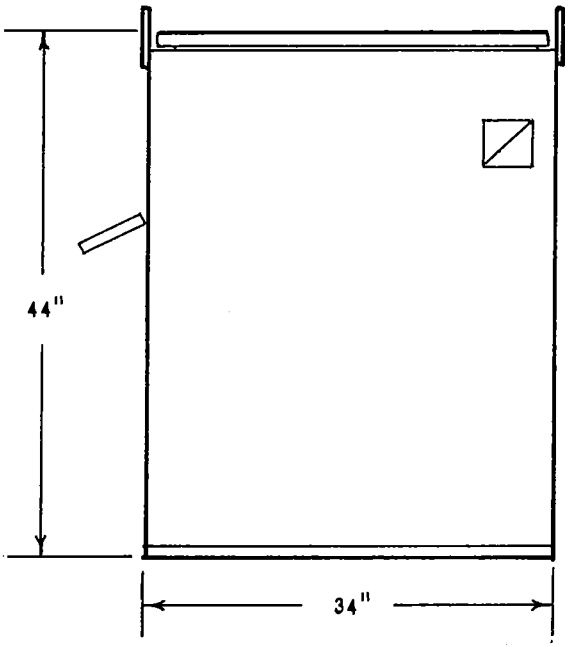

FRONT VIEW

FOR FIELD MAINTENANCE ONLY

RATINGS	SM-4 FUSE	MINI-RUPTER LINE SWITCH
KV	14.4	14.4
AMPERES	200	600
KV-BIL	95	95
INTERRUPTING AMPERES (SYMMETRICAL)	12,500	600
MAKE AND LATCH AMPERES (SYMMETRICAL)	-	12,500

STOCK NUMBER
334366

NOTES:

A. PANELS TO BE 11 GAUGE MINIMUM SHEET METAL REINFORCED.
B. ALL STEEL PARTS TO BE HOT DIPPED GALVANIZED AFTER FABRICATION.
C. FINISH: ONE COAT PRIMER AND TWO COATS FINISH LEAF GREEN (SUBOX 524 OR EQUAL).
D. ALL INTERIOR BARRIERS TO BE 1/4" BENELEX OR EQUAL.
E. FOR INSTALLATION DETAILS SEE 3599.112.

DATE 6-30-78 APPD TRF	SDG&E ELECTRIC STANDARDS 3$^{\phi}$ PADMOUNT FUSED SWITCHING CABINET	3599.111

TABLE OF CONTENTS

MAJOR USE: TO FUSE UNDERGROUND TAPS WHICH EMPLOY BOTH 1ϕ & 3ϕ TRANSFORMERS. ALSO TO FUSE UNDERGROUND EQUIPMENT WHEN CURRENT LIMITING FUSES WILL NOT COORDINATE WITH BACK-UP PROTECTION.

(DO NOT USE WITHIN 2400 FEET OF A SUBSTATION WITHOUT THE APPROVAL FROM PROTECTION ENGINEERING)

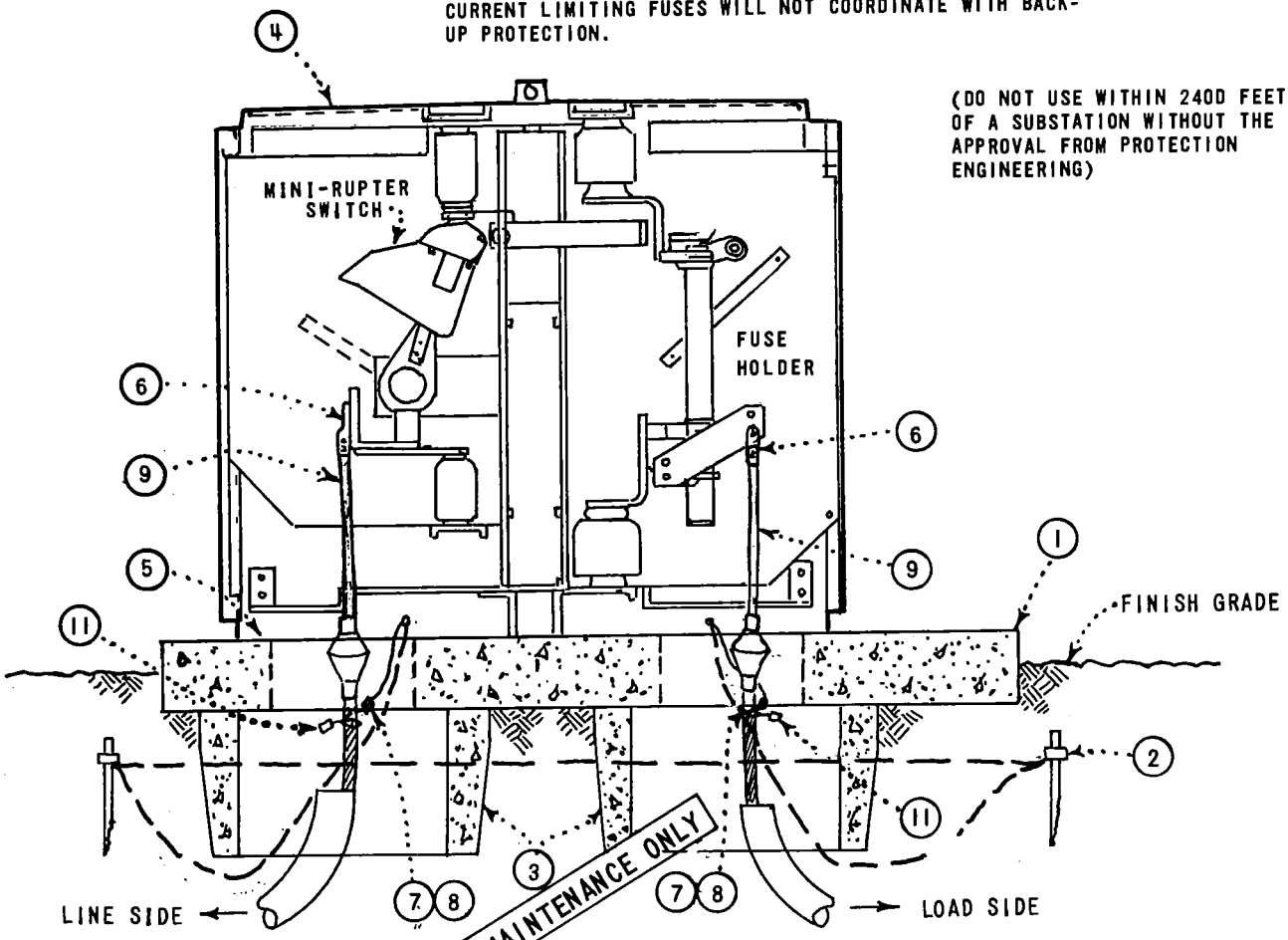

ITEM	DESCRIPTION	QUANTITY	STOCK NO. OR CONSTR. STD.
1	CONCRETE PAD	1	513424, 3499.102
2	PAD GROUNDING, UNIT	1	3407
3	HANDHOLE, BOTTOM SECTION, 17" X 30"	2	162426, 3312
4	CABINET, (COMPLETE), EXCLUDING FUSE LINKS (SEE NOTE C)	1	334366, 3511.00
5	HOLD DOWN DEVICE, NO STANDARD	-	
6	COMPRESSION CONNECTORS	6	4171
7	CONCENTRIC NEUTRAL TAILS	AS REQ'D	
8	COMPRESSION CONNECTOR	2	257792
9	CABLE TERMINATION	6	4121.
10	COMPANY LOCK, (CORBIN #27) FF KEY (NOT SHOWN)	2	514848
11	PHASE AND ROUTE TAGS	AS REQ'D.	3231.

NOTES:

A. 3ϕ 14400 VOLT GANG OPERATED FUSED SWITCHING CABINET (S&C ELECTRIC CO.).

B. ITEM 4, INCLUDES FUSE LINK CABINET, MINI-RUPTER SWITCH, FUSE HOLDERS AND MOUNTING BRACKETS COMPLETE.

C. SM-4 FUSE LINK (3) SIZE TO BE SPECIFIED ON WORK ORDER, RERER TO 4311.

D. STRUCTURE IDENTIFICATION SEE 3211.

E. FUSE SWITCHING CABINET WARNING SIGN SEE 3221. (APPLY TO BOTH OPENINGS).

F. THIS SWITCH IS MECHANICAL INTERLOCKED AND IS LIMITED TO MAXIMUM OF ONE CIRCUIT IN AND OUT.

G. SWITCH NUMBER TO BE ASSIGNED BY ELECTRIC ENGINEERING.

H. SWITCH IDENTIFICATION SEE 3212 (APPLY TO BOTH OPENINGS).

3599.112	SDG&E ELECTRIC STANDARDS 3ϕ 200 AMP PADMOUNT FUSE-SWITCH INSTALLATION	DATE 6-30-78 APPD TRF

TABLE OF CONTENTS

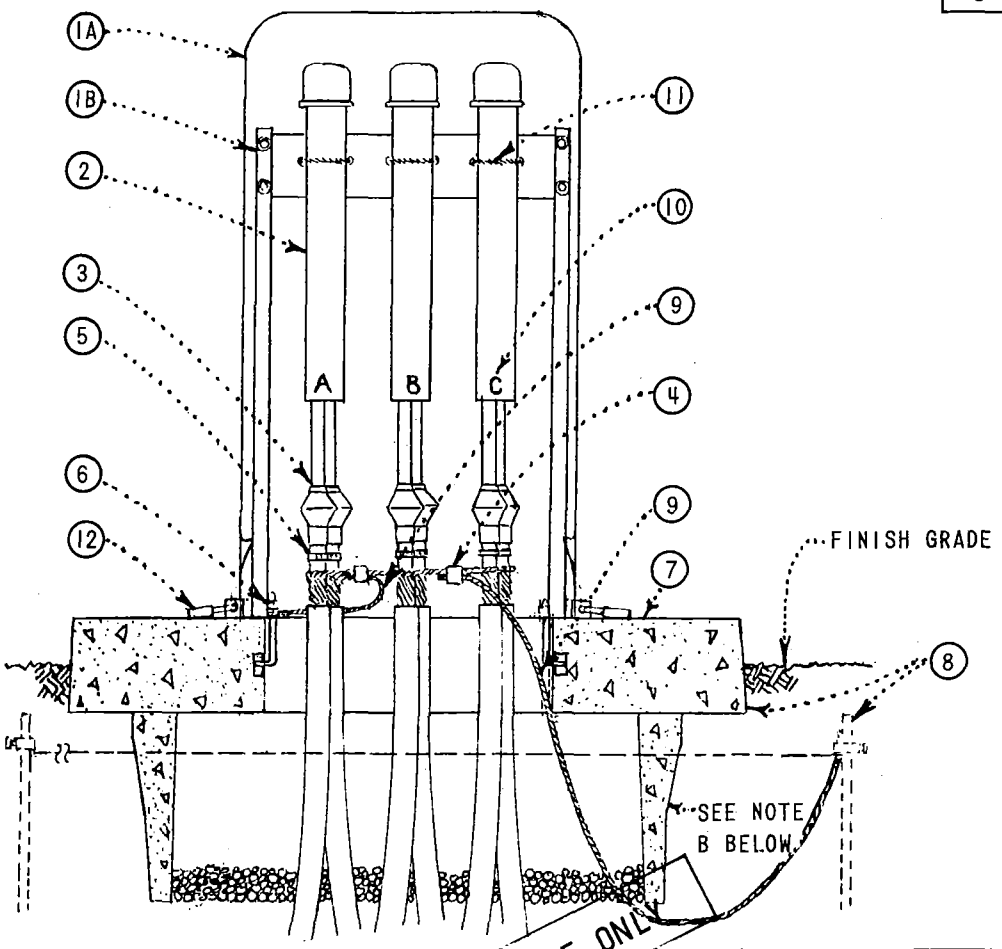

ITEM		DESCRIPTION	STOCK NO. OR CONSTR. STD.
1	A	PAD COVER BOX, ARLINGTON SHEETMETAL, LOS ANGELES	—
	B	HOLD DOWN BAND AND CABLE SUPPORT BRACKET, SHOP MADE	—
2		CAPPED SPLICE TERMINATION,	3599.001
3		INDOOR TERMINATION,	4121
4		CONNECTOR, SPLIT BOLT	—
5		PHASE AND ROUTE IDENTIFICATION TAG, "EMBOSSO" OR "DYMO"	716640 OR 716672
6		HOLD DOWN DEVICE — NO STANDARD	—
7		TERMINATOR PAD,	DWG. REFR. FILE
8		PAD AND GROUND SYSTEM,	3407
9		BARE COPPER GROUND WIRE, #2	813664
10		PHASE MARKING, FELT PEN OR GLASS TAPE AND BALL POINT	—
11		POLYPROPYLENE ROPE, 1/4"	—
12		COMPANY LOCK, (CORBIN #27) FF KEY	514848

FOR FIELD MAINTENANCE ONLY

NOTES:

A. TRANSFORMER, PAD AND CABLE PER WORK ORDER.

B. ABS CONDUIT INSTALLATION REQUIRING RECESS BOX IS ILLUSTRATED. OMIT BOX ONLY WHEN PREASSEMBLED CABLE-IN-CONDUIT, PID TYPE CABLES ARE TO BE INSTALLED.

C. TERMINATE DUCTS AND CONDUITS NOT LESS THAN 3" ABOVE FINISHED GRADE.

D. PAD NUMBERING, 3211

E. DO NOT INSTALL MORE THAN TWO CABLES PER PHASE. IF MORE THAN TWO CABLES PER PHASE, TERMINATE AND USE FOUR WAY TERMINATOR, 3521

DATE 2-20-69
SDG&E

SAN DIEGO GAS & ELECTRIC COMPANY UNDERGROUND STANDARDS

TWO WAY HIGH VOLTAGE TERMINATOR INSTALLATION

3599.201

TABLE OF CONTENTS

SCOPE: THIS STANDARD SHOWS THE PAD-MOUNTED 3Ø TERMINATING ENCLOSURE AND INSTALLATION REQUIREMENTS USED WHEN 350, 750 OR 1000 KCMIL CABLE IS TERMINATED OR PLANNED TO BE TERMINATED. (B)(C)(D)

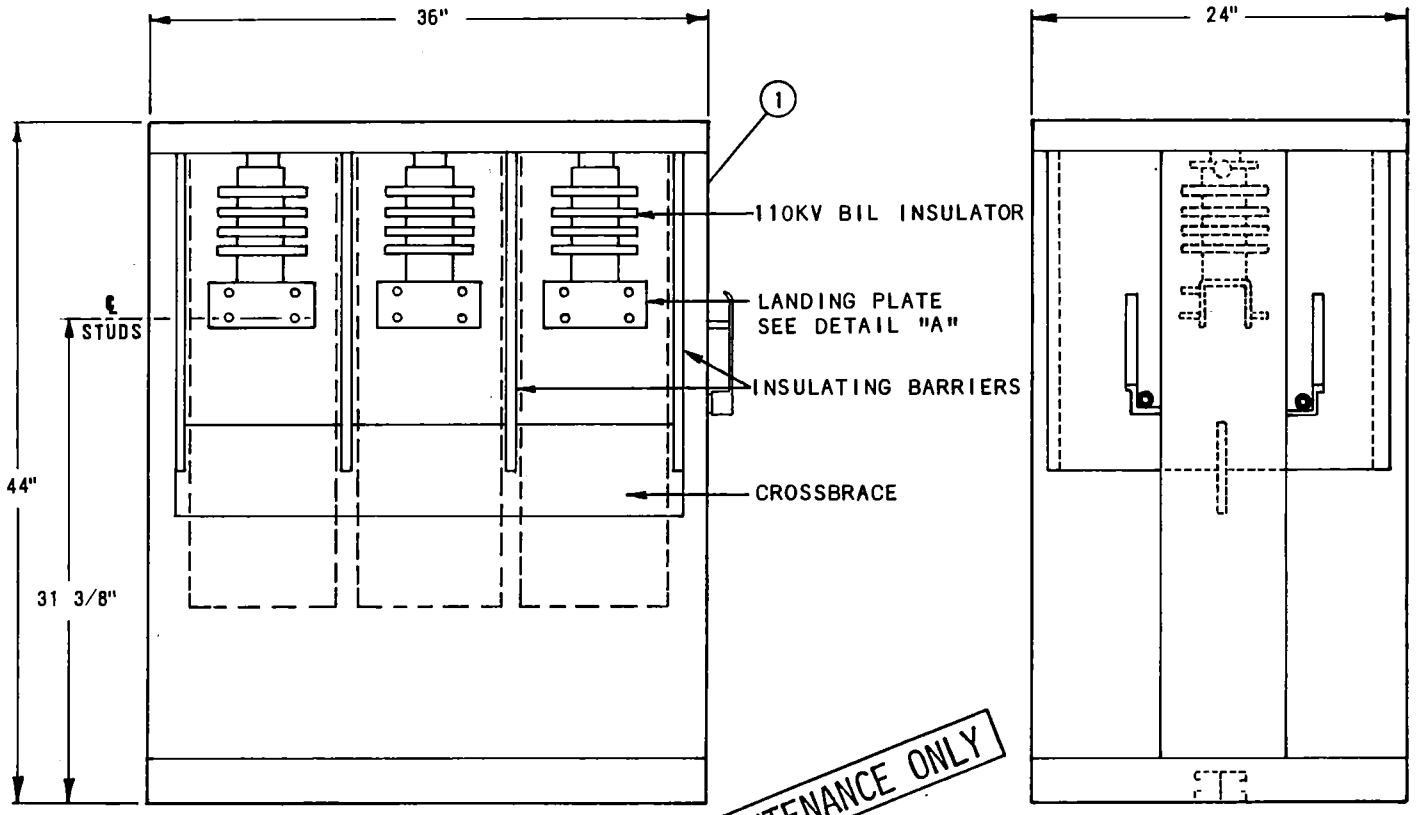

FRONT VIEW (EXPOSED)

SIDE VIEW (EXPOSED)

FOR FIELD MAINTENANCE ONLY

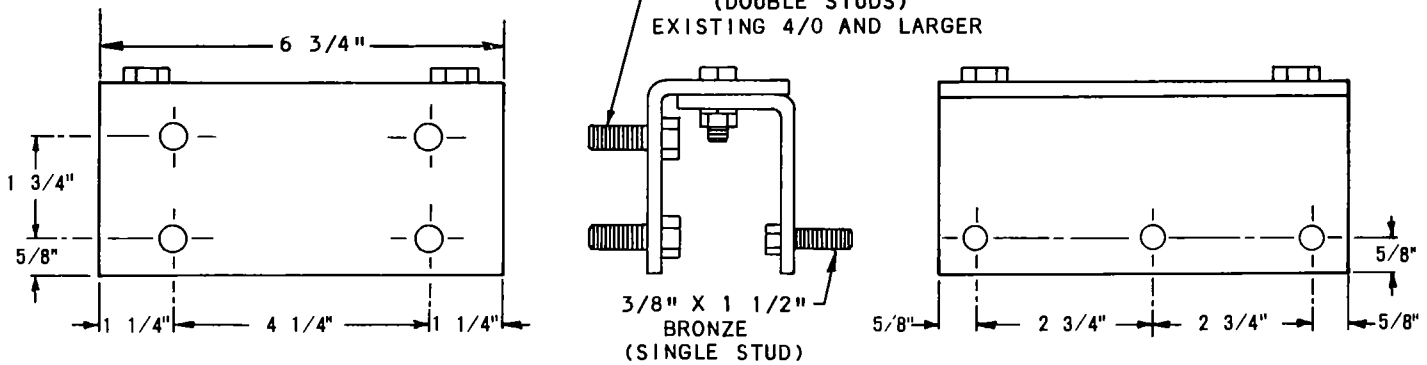

(C)(D) 4/0, 350, 750 OR 1000 KCMIL SIDE

2/0 AND SMALLER SIDE

DETAIL "A"
LANDING PLATE

TABLE OF CONTENTS

3599.202	SDG&E ELECTRIC STANDARDS THREE-PHASE TERMINATING ENCLOSURE, 12,000 VOLT, 350, 750 OR 1000 KCMIL CABLE	DATE 1-1-91 APPD

HOLD DOWN ASSEMBLY DETAIL
(TYPICAL BOTH SIDES OF EQUIPMENT PAD)

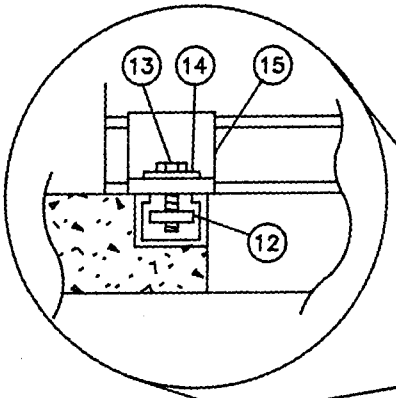

FOR FIELD MAINTENANCE ONLY

ITEM (15) DETAIL
(SUPPLIED WITH CABINET)



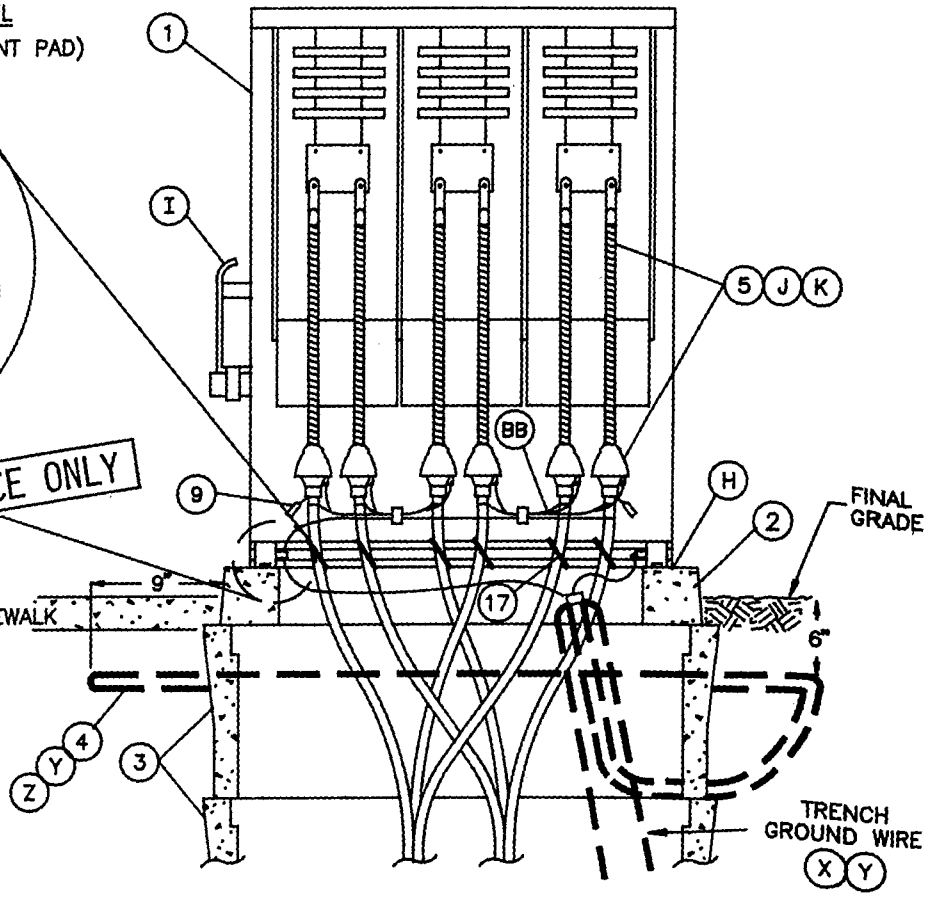

ITEM	DESCRIPTION	QUANTITY	CONST STD OR PG NO.	STOCK NUMBER
1	CABINET, TERMINATING ENCLOSURE 3 PHASE	1	---	732964
2	TERMINATOR PAD	1	3413	514220
3	HANDHOLE (G)	2	3312	162426
4	PAD GROUNDING EQUIPMENT (Z)	1	4512	---
5	INDOOR TERMINATION	AS REQ'D	4121	---
6	AUTOMATIC FAULT INDICATOR (CC)	1	4352	---
7				
8	KEYLESS LOCK (NOT SHOWN) (L)	2	---	468010 (E)
9	CABLE IDENTIFICATION TAGS	AS REQ'D	3202	---
10	CONCENTRIC NEUTRAL TAILS	AS REQ'D	---	---
11				
12	NUT, CLAMPING CHANNEL, W/SPRING, 1/2"	4	---	503520 (E
13	SCREW, HEX HEAD CAP, BRONZE 1/2" X 1-1/2"	4	---	616192 (E
14	WASHER, STANDARD FLAT ROUND, BRONZE 1/2"	4	---	799488 (
15	HOLD DOWN (SUPPLIED WITH CABINET)	4	---	---
16	AQUA – SEAL OR EQUIVALENT (NOT SHOWN) (G)	AS REQ'D	---	442976 (
17	TIE STRAP	AS REQ'D	4178	738440 (

	SDG&E ELECTRIC STANDARDS	
DATE 1-1-91 APPD	THREE-PHASE TERMINATING ENCLOSURE, 12,000 VOLT, 350, 750 OR 1000 KCMIL CABLE	3599.

TABLE OF CONTENTS

ISTALLATION IS LIMITED TO A MAXIMUM OF 2 3-PHASE FEEDER CABLE RUNS, 4/0, 350, 750 OR KCMIL AND 3 3-PHASE DISTRIBUTION CABLE RUNS, 2/0 AND SMALLER.

350. 750 OR 1000 KCMIL IS NOT ANTICIPATED, USE THE SMALLER TERMINATOR IN STANDARD 3521.

NG 4/0 CABLE IN 5 INCH CONDUIT USE THIS TERMINATOR.

NG 4/0 CABLE IN 4 INCH CONDUIT USE THE SMALLER TERMINATOR IN STANDARD 3521.

T MATERIAL.

AD AND HANDHOLE, INSTALL GROUND GRID.

NATE CONDUITS AND SEAL CONDUITS WITH AQUA-SEAL OR EQUIVALENT (ITEM 16). CONDUIT ENTER-HANDHOLE SHALL HAVE AQUA-SEAL OR EQUIVALENT AT OPPOSITE END WHEN CONNECTED TO ADJACENT HOLE OR MANHOLE TO REDUCE MOISTURE ENTRY INTO TERMINATOR.

OF CABINET SHALL BE CAULKED WHEN NECESSARY TO PREVENT WIRE ENTRY.

NET DOORS TO OPEN TOWARD THE PROPERTY AND AWAY FROM THE SIDEWALK.

AYS MAINTAIN 1 INCH CLEARANCE BETWEEN LIVE PARTS AND INSULATING BARRIER MATERIAL.

SILICONE TAPE (STANDARD 4121) FOR ALL TERMINATIONS TO ELIMINATE EFFECTS OF CONTAMINATION.

LESS LOCKS (ITEM 8) TO BE ATTACHED TO LATCHING MECHANISM ON CABINET AND PENTAHEAD BOLT TO THREADED IN COMPLETELY.

CES:

E STANDARD 3202 FOR CABLE IDENTIFICATION.

EE STANDARD 3211 FOR PAD IDENTIFICATION.

EE STANDARD 3221 FOR HIGH VOLTAGE DECAL.

EE STANDARD 3408 FOR WIRE ENTRY PREVENTION.

EE STANDARD 3413 FOR PAD, HANDHOLE AND CONDUIT PLACEMENT.

EE STANDARD 3481 FOR BARRIER PROTECTION.

SEE STANDARD 3483 FOR MINIMUM OPERATING AND CLEARANCE REQUIREMENTS (PAD PLACEMENT).

SEE STANDARD 3484 FOR INSTALLATION OF PAD-MOUNTED EQUIPMENT.

SEE STANDARD 3486 FOR RETAINING WALL REQUIREMENTS AND CLEARANCES FROM REVERSE SUBGRADE RETAINING WALLS.

SEE STANDARD 3487 FOR RETAINING WALLS.

SEE STANDARD 4121 FOR PREPARATION OF INDOOR CABLE TERMINATIONS.

SEE STANDARD 4510 FOR (PREFERRED I) AND (ALTERNATE) TRENCH GROUND WIRE.

SEE STANDARD PAGE 4512.1 FOR (PREFERRED II) PAD GROUNDING INSTALLATION.

SEE STANDARD 4512 FOR PAD GROUNDING.

SEE STANDARD 4514 FOR GROUNDING TELCO CONDUCTOR IN PAD-MOUNTED EQUIPMENT.

SEE STANDARD 4520 FOR GROUNDING PAD-MOUNTED EQUIPMENT.

) SEE STANDARD 4520 FOR GROUNDING PAD-MOUNTED EQUIPMENT.

) SEE DESIGN STANDARD 6113 FOR AUTOMATIC FAULT INDICATOR APPLICATION.

FOR FIELD MAINTENANCE ONLY

TABLE OF CONTENTS

	SDG&E ELECTRIC STANDARDS	
39.204	THREE-PHASE TERMINATING ENCLOSURE, 12,000 VOLT, 350, 750 OR 1000 KCMIL CABLE	DATE 1-1-91 APPD JJB

SCOPE: THIS STANDARD SHOWS THE PAD-MOUNTED 3Ø TERMINATING ENCLOSURE AND INSTALLATION REQUIREMENTS USED WHEN 2/0 CABLE AND SMALLER IS TERMINATED OR PLANNED TO BE TERMINATED. (B)(C)(D)

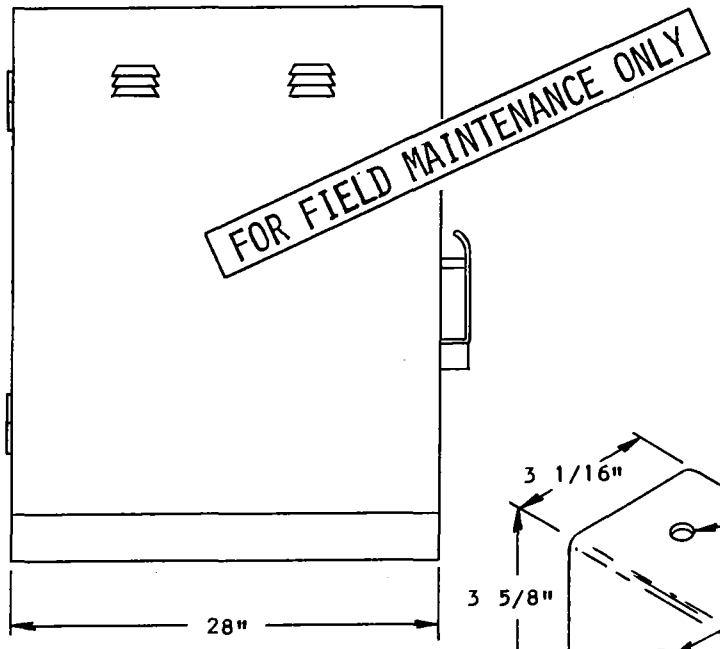

FRONT VIEW

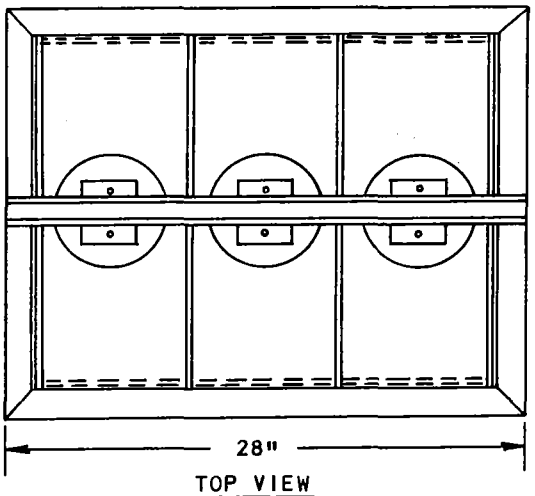

TOP VIEW
(EXPOSED)

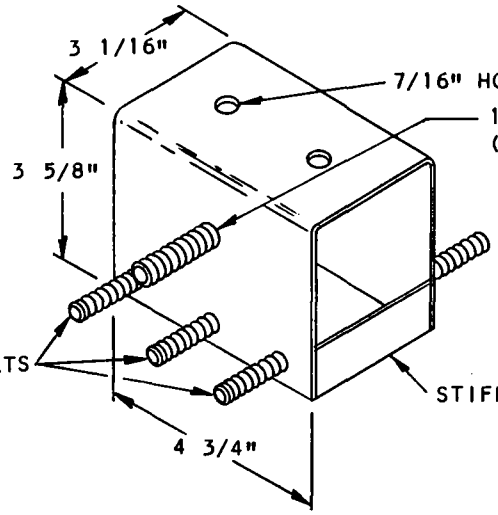

DETAIL "A"
LANDING PLATE

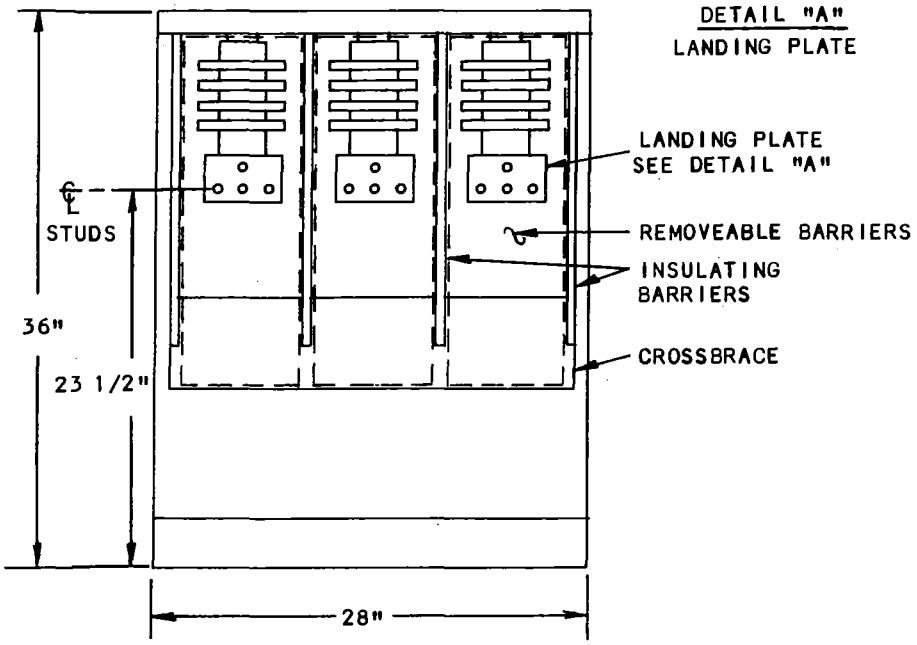

FRONT VIEW
(EXPOSED)

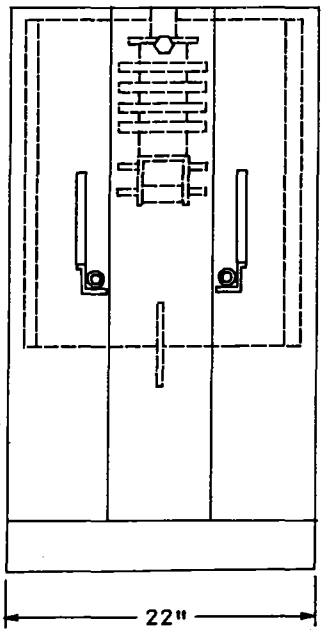

SIDE VIEW
(EXPOSED)

TABLE OF CONTENTS

DATE 1-1-91 APPD 9/23/91	SDG&E ELECTRIC STANDARDS THREE-PHASE TERMINATING ENCLOSURE 12,000 VOLT, 2/0 CABLE AND BELOW	3599.205

TABLE OF CONTENTS

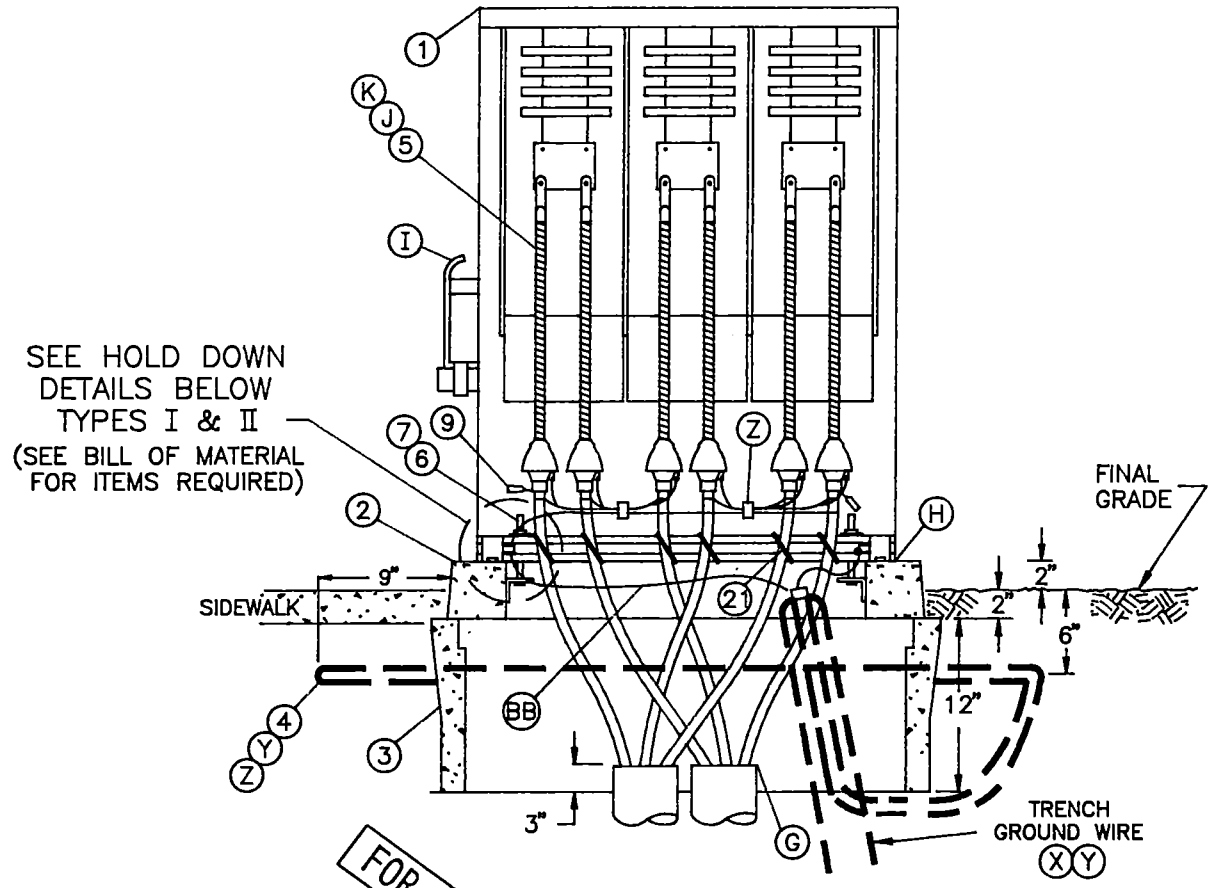

TYPE I

HOLD DOWN ASSEMBLY

(TYPICAL BOTH SIDES OF EQUIPMENT PAD)

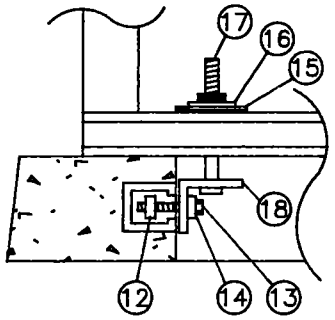

TYPE II – ALTERNATE

HOLD DOWN ASSEMBLY

(TYPICAL BOTH SIDES OF EQUIPMENT PAD)

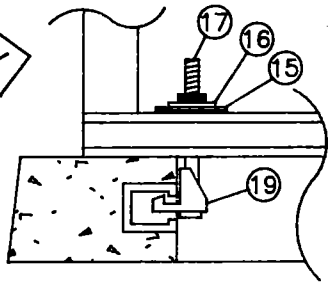

TOP VIEW

TYPES I & II

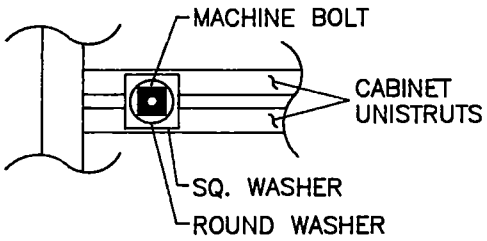

	SDG&E ELECTRIC STANDARDS	
3599.206	THREE–PHASE TERMINATING ENCLOSURE 12,000 VOLT, 2/0 CABLE AND BELOW	DATE 1–1–91 APPD

BILL OF MATERIAL

ITEM	DESCRIPTION	QUANTITY	CONST. STD.	STOCK NUMBER
1	CABINET, TERMINATING ENCLOSURE 3 PHASE	--	--	S733100
2	EQUIPMENT PAD	1	3411	514274 (E)
3	HANDHOLE (G)	1	3312	162426
4	PAD GROUNDING EQUIPMENT (Z)	1	4512	--
5	INDOOR TERMINATION	AS REQ'D	4121	--
6				
7				
8	KEYLESS LOCK (NOT SHOWN) (L)	2	--	468010 (E)
9	CABLE IDENTIFICATION TAGS	AS REQ'D	3202	--
10				
11				
12	NUT, CLAMPING CHANNEL W/SPRING, 1/2"	2 (TYPE I)	--	503520 (E)
13	SCREW, HEX HEAD CAP, BRONZE 1/2" X 1-1/2"	2 (TYPE I)	--	616192 (E)
14	WASHER, STANDARD FLAT ROUND, BRONZE 1/2"	2 (TYPE I)	--	799488 (E)
15	WASHER, SQ., FLAT GALV., 11/16" X 2-1/4" X 2-1/4"	2	--	799040
16	WASHER, STANDARD FLAT ROUND, GALV., 1/2"	4	--	800192
17	BOLT, SQ. HEAD MACHINE, GALV., 1//2" X 5"	2	--	153024
18	HOLD DOWN (SUPPLIED WITH CABINET) OR; UNISTRUT, CHANNEL FITTING, 1-7/8" X 2"	2 (TYPE I)	--	--
19	SEAT NUT, 5/8" SLOT GALV.	2 (TYPE II)	--	633945
20	AQUA-SEAL OR EQUIVALENT (NOT SHOWN)	AS REQ'D	--	442976 (E)
21	TIE STRAP	AS REQ'D	4178	738440 (E)

INSTALLATION:

(A) THIS INSTALLATION IS LIMITED TO A MAXIMUM OF 6-3 PHASE DISTRIBUTION CABLE RUNS, 2/0 AND SMALLER OR 2-3 PHASE, 4/0 FEEDER CABLE RUNS AND 4-3 PHASE DISTRIBUTION CABLE RUNS, 2/0 AND SMALLER. NEVER INSTALL MORE THAN THREE CONDUCTORS PER LANDING PLATE.

(B) WHEN 350, 750 OR 1000 KCMIL IS ANTICIPATED USE THE LARGER TERMINATOR IN STANDARD 3520.

(C) EXISTING 4/0 CABLE IN 5 INCH CONDUIT USE THE LARGER TERMINATOR IN STANDARD 3520.

(D) EXISTING 4/0 CABLE IN 4 INCH CONDUIT USE THIS TERMINATOR.

(E) EXEMPT MATERIAL.

(F) SET PAD AND HANDHOLE. INSTALL GROUND GRID.

(G) TERMINATE CONDUITS AS SHOWN AND SEAL CONDUITS WITH AQUA-SEAL OR EQUIVALENT (ITEM 20). CONDUIT ENTERING HANDHOLE SHALL HAVE AQUA-SEAL OR EQUIVALENT AT OPPOSITE END WHEN CONNECTED TO ADJACENT HANDHOLE OR MANHOLE TO REDUCE MOISTURE ENTRY INTO TERMINATOR.

(H) BASE OF CABINET SHALL BE CAULKED WHEN NECESSARY TO PREVENT WIRE ENTRY.

FIELD MAINTENANCE ONLY

TABLE OF CONTENTS

© 1998 - 2023 San Diego Gas & Electric Company. All rights reserved. Removal of this copyright notice without permission is not permitted under law.

REV	CHANGE	DR	BY	DSN	APV	DATE	REV	CHANGE	DR	BY	DSN	APV	DATE
C							F						
B	EDITORIAL CHANGES	GLC	JES	JAS	KRG	02/09/2023	E						
A	ORIGINAL ISSUE	-	-	-	JYB/RDG	1-1-91	D						

X Indicates Latest Revision | Completely Revised | New Page | Information Removed

SDG&E ELECTRIC UNDERGROUND FIELD MAINTENANCE ONLY STANDARDS

THREE-PHASE TERMINATING ENCLOSURE
12,000 VOLT, 2/0 CABLE AND BELOW

UG LEGACY
UGL3599.207

INSTALLATION, CONT'D:

(I) CABINET DOORS TO OPEN TOWARD THE PROPERTY AND AWAY FROM THE SIDEWALK.

(J) ALWAYS MAINTAIN 1 INCH CLEARANCE BETWEEN LIVE PARTS AND INSULATING BARRIER MATERIAL.

(K) USE SILICONE TAPE (STANDARD 4121) FOR ALL TERMINATIONS TO ELIMINATE EFFECTS OF CONTAMINATION.

(L) KEYLESS LOCKS (ITEM 7) TO BE ATTACHED TO LATCHING MECHANISM ON CABINET AND PENTAHEAD BOLT TO BE THREADED IN COMPLETELY.

REFERENCES:

M. SEE STANDARD 3202 FOR CABLE IDENTIFICATION.

N. SEE STANDARD 3211 FOR PAD IDENTIFICATION.

O. SEE STANDARD 3221 FOR HIGH VOLTAGE DECAL.

P. SEE STANDARD 3408 FOR WIRE ENTRY PREVENTION.

Q. SEE STANDARD 3411 FOR PAD, HANDHOLE AND CONDUIT PLACEMENT.

R. SEE STANDARD 3481 FOR BARRIER PROTECTION.

S. SEE STANDARD 3483 FOR MINIMUM OPERATING AND CLEARANCE REQUIREMENTS (PAD PLACEMENT).

T. SEE STANDARD 3484 FOR INSTALLATION OF PAD-MOUNTED EQUIPMENT.

U. SEE STANDARD 3486 FOR RETAINING WALL REQUIREMENTS AND CLEARANCES FROM REVERSE SUB-GRADE RETAINING WALLS.

V. SEE STANDARD 3487 FOR RETAINING WALLS.

W. SEE STANDARD 4121 FOR PREPARATION OF INDOOR CABLE TERMINATIONS.

(X) SEE STANDARD 4510 FOR (PREFERRED I) AND (ALTERNATE) TRENCH GROUND WIRE.

(Y) SEE STANDARD PAGE 4512.1 FOR (PREFERRED II) PAD GROUNDING INSTALLATION.

(Z) SEE STANDARD 4512 FOR PAD GROUNDING.

AA. SEE STANDARD 4514 FOR PAD GROUNDING TELCO CONDUCTOR IN PAD-MOUNTED EQUIPMENT.

(BB) SEE STANDARD 4520 FOR GROUNDING PAD-MOUNTED EQUIPMENT.

TABLE OF CONTENTS

FOR FIELD MAINTENANCE ONLY

3599.208	SDG&E ELECTRIC STANDARDS THREE-PHASE TERMINATING ENCLOSURE 12,000 VOLT, 2/0 CABLE AND BELOW	DATE 1-1-91 APPD J.Y.B.

SCOPE: THIS STANDARD SHOWS THE PAD–MOUNTED, 1 PHASE, LOW PROFILE CABLE TERMINATING ENCLOSURE INSTALLATION REQUIREMENTS USED WHEN #2 CABLE IS TERMINATED OR PLANNED TO BE TERMINATED, AND/OR WHEN A TRANSFORMER WILL REPLACE THE TERMINATOR IN THE FUTURE.

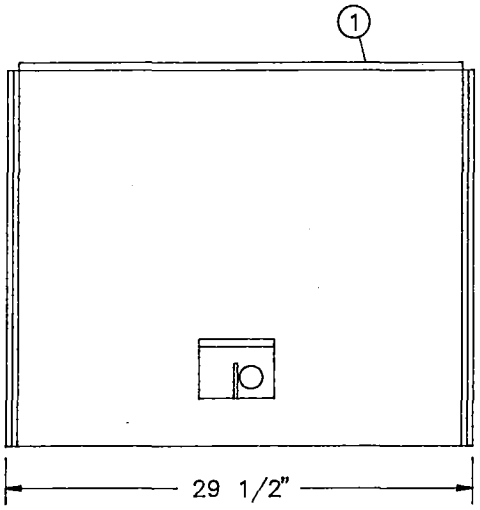

FRONT VIEW

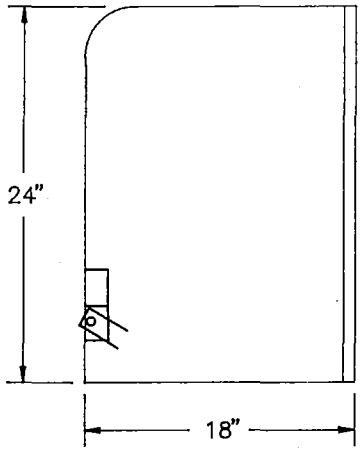

SIDE VIEW

FOR FIELD MAINTENANCE ONLY

B MOUNTING PLATE FOR FEED–THRU BUSHING OR STAND–OFF PLUG INSTALLATIONS

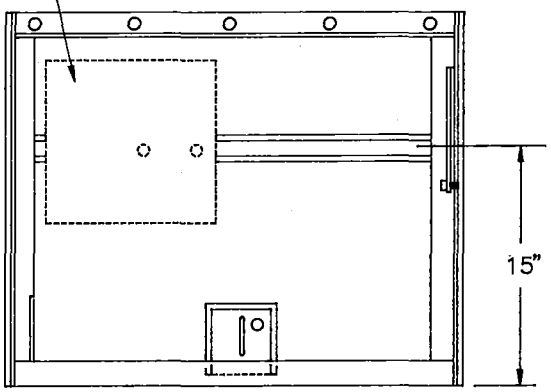

FRONT VIEW
(EXPOSED)

MOUNTING PLATE

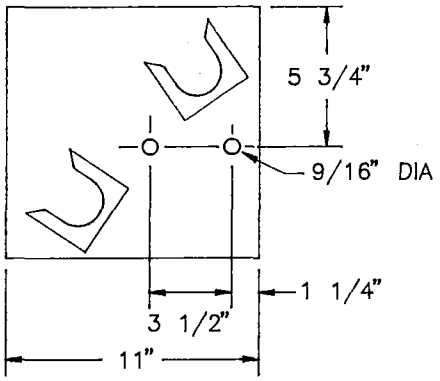

USED FOR MOUNTING FEED–THRU BUSHING OR STAND–OFF PLUG. (THIS PLATE IS SUPPLIED WITH CABINET).

NOTES:

– MOUNTING PLATE IS SUPPLIED WITH EACH CABINET WHETHER USED OR NOT. CENTER UNUSED MOUNTING PLATE ON UNISTRUT IN TERMINATOR WHEN INSTALLING 3 WAY OR 4 WAY CABLE TAPS.

– 1 PHASE TERMINATOR SHALL BE INSTALLED ON A 3421 SINGLE–PHASE TRANSFORMER PAD WHEN THE TERMINATOR WILL BE REPLACED BY A TRANSFORMER IN THE FUTURE.

	SDG&E ELECTRIC STANDARDS	
DATE 1–1–96 APPD	SINGLE–PHASE LOW PROFILE CABLE TERMINATOR, 6930 VOLTS	3599.209

TABLE OF CONTENTS

CABLE TAP INSTALLATION

(W/3411 PAD)

FOR FIELD MAINTENANCE ONLY

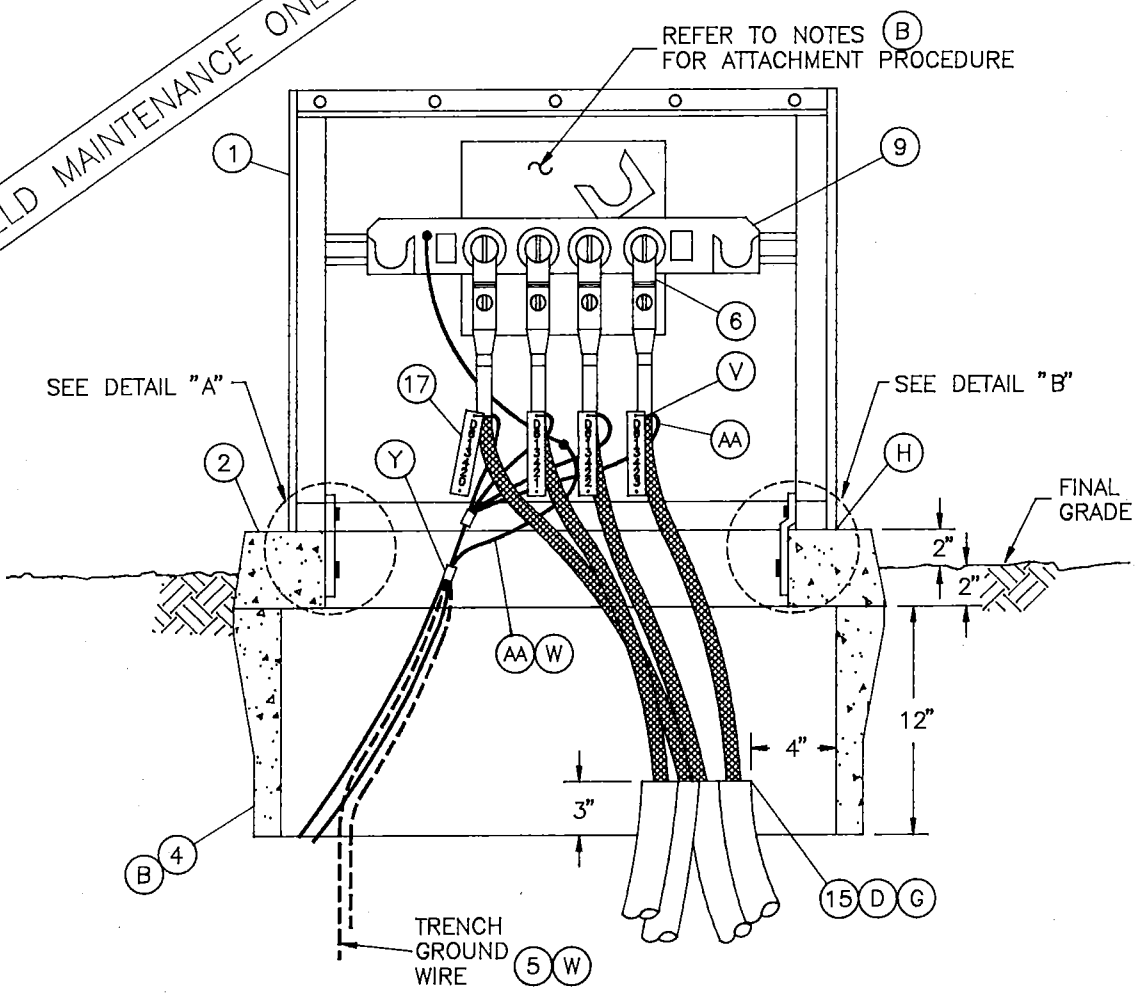

DETAIL A

HOLD DOWN ASSEMBLY
(LEFT SIDE OF EQUIPMENT PAD)

DETAIL B

HOLD DOWN ASSEMBLY
(RIGHT SIDE OF EQUIPMENT PAD)

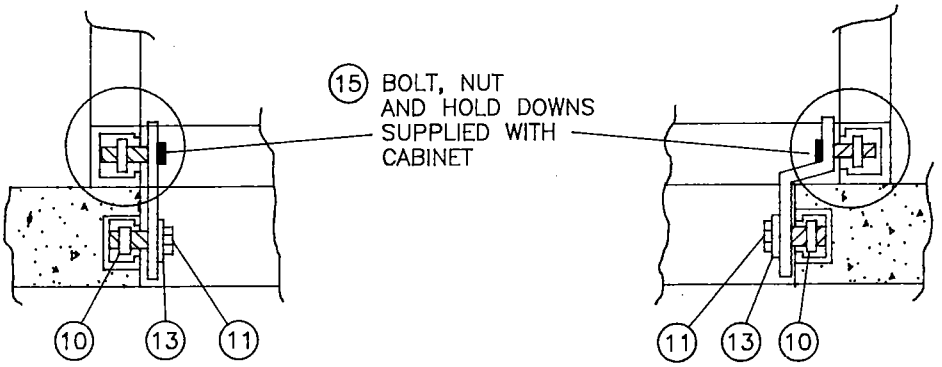

DATE 1-1-96 APPD	SDG&E ELECTRIC STANDARDS SINGLE-PHASE LOW PROFILE CABLE TERMINATOR, 6930 VOLTS	3599.210

TABLE OF CONTENTS

FEED-THRU BUSHING INSTALLATION

(W/3421 PAD FOR FUTURE TRANSFORMER INSTALLATIONS)

3522.3

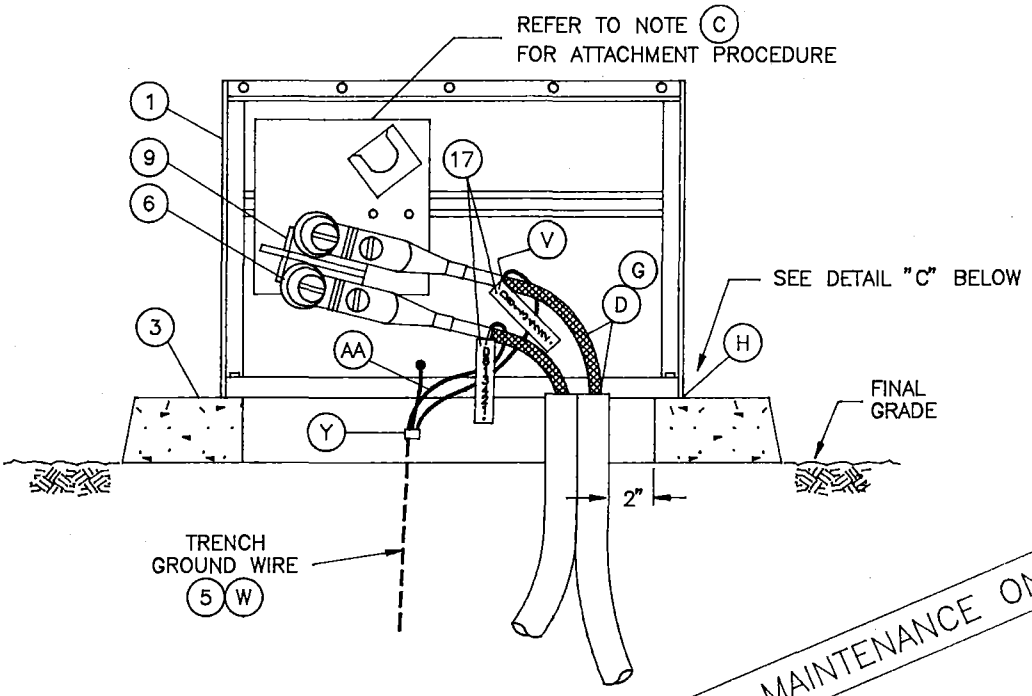

FOR FIELD MAINTENANCE ONLY

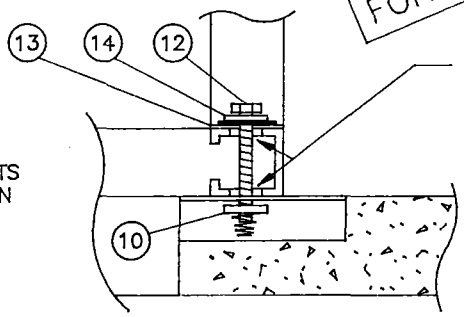

DETAIL C

HOLD DOWN ASSEMBLY. SAVE HOLD-DOWN BRACKETS INSIDE CABINET FOR USE IN FUTURE TRANSFORMER INSTALLATION).

BILL OF MATERIAL:

ITEM	DESCRIPTION	QUANTITY	CONSTR. STD OR PAGE NO.	STOCK NUMBER	ASSEMBLY UNITS
1	CABINET, LOW PROFILE CABLE TERMINATOR 1 PHASE	1	3522	732968	TERM-1
2	EQUIPMENT PAD (B)	1	3411	514274	TERM-T
3	1 PHASE TRANSFORMER/FUSE CABINET PAD	1	3421	514240	3421-1
4	HANDHOLE	1	3312	162426	–
5	TRENCH GROUND WIRE (W)	AS REQ'D	4510	–	–
6	ELBOW, LOADBREAK 14.4KV 200 AMP ELBOW, LOADBREAK FUSED 6930 200 AMP	AS REQ'D	4191	–	–
7	INSULATING RECEPTACLE (NOT SHOWN)	AS REQ'D	4192.1	204304	–
8	KEYLESS LOCK (NOT SHOWN) (I)	1	–	468010	–

CONTINUED NEXT PAGE:

DATE 1-1-96 APPD	SDG&E ELECTRIC STANDARDS SINGLE-PHASE LOW PROFILE CABLE TERMINATOR, 6930 VOLTS	3599.211

TABLE OF CONTENTS

BILL OF MATERIAL, CON'T:

ITEM	DESCRIPTION	QUANTITY	CONSTR. STD OR PAGE NO.	STOCK NUMBER	ASSEMBLY UNITS
9	CABLE TAP – 4 WAY	AS REQ'D	4192	–	TAP–4W
	CABLE TAP – 3 WAY				TAP–3W
	STAND–OFF PLUG				S/OPLG
	FEED–THRU BUSHING				FEED–B
10	NUT, CLAMPING CHANNEL W/SPRING, 1/2"	2	–	503520	–
11	SCREW, HEX HEAD CAP, BRONZE 1/2" X 1 1/2"	2	–	616192	–
12	SCREW, HEX HEAD CAP, BRONZE, 1/2" X 2 1/2" (J)	2	–	616352	–
13	WASHER, STANDARD FLAT ROUND, BRONZE 1/2" (J)	2	–	799488	–
14	WASHER, LOCK, BRONZE 1/2" (J)	2	–	796416	–
15	HOLD DOWNS (SUPPLIED WITH CABINET)	2	–	–	–
16	SEALING COMPOUND (NOT SHOWN) (G)	AS REQ'D	–	442976	–
17	CABLE IDENTIFICATION TAGS	AS REQ'D	3202	–	–

INSTALLATION:

A. THIS INSTALLATION IS LIMITED TO A MAXIMUM OF 4–1 PHASE #2 AL PRIMARY CABLES WITH ONE 3 OR 4 WAY CABLE TAP OR FEED THRU BUSHING(S) OR STAND OFF PLUG(S).

(B) WHEN INSTALLING CABLE TAP: (A) CENTER MOUNTING PLATE AND BOLT TO UNISTRUT (REFERENCE DRAWING ON PAGE 3522.2), (B) USE ONE HANDHOLE (ITEM 4).

(C) WHEN INSTALLING FEED–THRU BUSHING OR STAND OFF PLUG, USE DETAIL 'A' (PAGE 3522.1).

(D) **CAUTION:** CONDUIT AND CABLE SHOULD BE PLANNED FOR FUTURE TRANSFORMER INSTALLATION IF CABINET IS TEMPORARY (SEE STANDARD 3421 FOR CONDUIT PLACEMENT).

F. SET PAD AND HANDHOLE, INSTALL GROUNDING EQUIPMENT.

(G) TERMINATE CONDUITS AS SHOWN AND SEAL CONDUITS WITH SEALING COMPOUND (ITEM 16).

(H) BASE OF CABINET SHALL BE CAULKED TO PREVENT WIRE ENTRY.

(I) KEYLESS LOCK TO BE ATTACHED TO LATCHING MECHANISM ON CABINET AND PENTAHEAD BOLT TO BE THREADED IN COMPLETELY.

(J) A 1/2" X 2–1/2" STAINLESS STEEL PENTAHEAD BOLT (S/N 156012), A 1/2" STAINLESS STEEL LOCK WASHER (S/N 796944), AND/OR A 1/2" STAINLESS STEEL FLAT ROUND WASHER (S/N 799680) MAY BE SUBSTITUTED IN BOLT–DOWN ASSEMBLY.

REFERENCE:

K. SEE STANDARD 3202 FOR CABLE IDENTIFICATION.

L. SEE STANDARD 3211 FOR STRUCTURE/EQUIPMENT IDENTIFICATION.

M. SEE STANDARD 3221 FOR HIGH VOLTAGE DECAL.

N. SEE STANDARD 3408 FOR WIRE ENTRY PREVENTION.

FOR FIELD MAINTENANCE ONLY

O. SEE STANDARDS 3411 OR 3421 FOR PAD, HANDHOLE AND CONDUIT PLACEMENT.

P. SEE STANDARD 3481 FOR BARRIER PROTECTION.

Q. SEE STANDARD 3483 FOR MINIMUM OPERATING AND CLEARANCE REQUIREMENTS (PAD PLACEMENT).

R. SEE STANDARD 3484 FOR PAD INSTALLATION OF PAD–MOUNTED EQUIPMENT.

S. SEE STANDARD 3486 FOR RETAINING WALL REQUIREMENTS AND CLEARANCES FROM REVERSE SUBGRADE RETAINING WALLS.

T. SEE STANDARD 3487 FOR RETAINING WALLS.

U. SEE STANDARDS 3605 AND 3660 FOR 1 PHASE SUBSURFACE SECTIONALIZING.

(V) SEE STANDARD 4108 FOR SEALING JACKETED CABLE.

(W) SEE STANDARD 4510 FOR (PREFERRED I) AND (ALTERNATE) TRENCH GROUND WIRE.

X. SEE STANDARD PAGE 4512.1 FOR (PREFERRED II) EQUIPMENT GROUNDING INSTALLATION.

(Y) SEE STANDARD 4512.2 FOR EQUIPMENT GROUNDING.

Z. SEE STANDARD 4514 FOR GROUNDING TELCO CONDUCTOR IN PAD–MOUNTED EQUIPMENT.

(AA) SEE STANDARD 4520 FOR GROUNDING PAD–MOUNTED EQUIPMENT.

TABLE OF CONTENTS

DATE 1–1–96 APPD [signature]	SDG&E ELECTRIC STANDARDS SINGLE–PHASE LOW PROFILE CABLE TERMINATOR, 6930 VOLTS	3599.212

SCOPE: THIS STANDARD SHOWS A 600 AMP OIL SWITCH TO BE USED FOR PAD-MOUNTED APPLICATIONS.

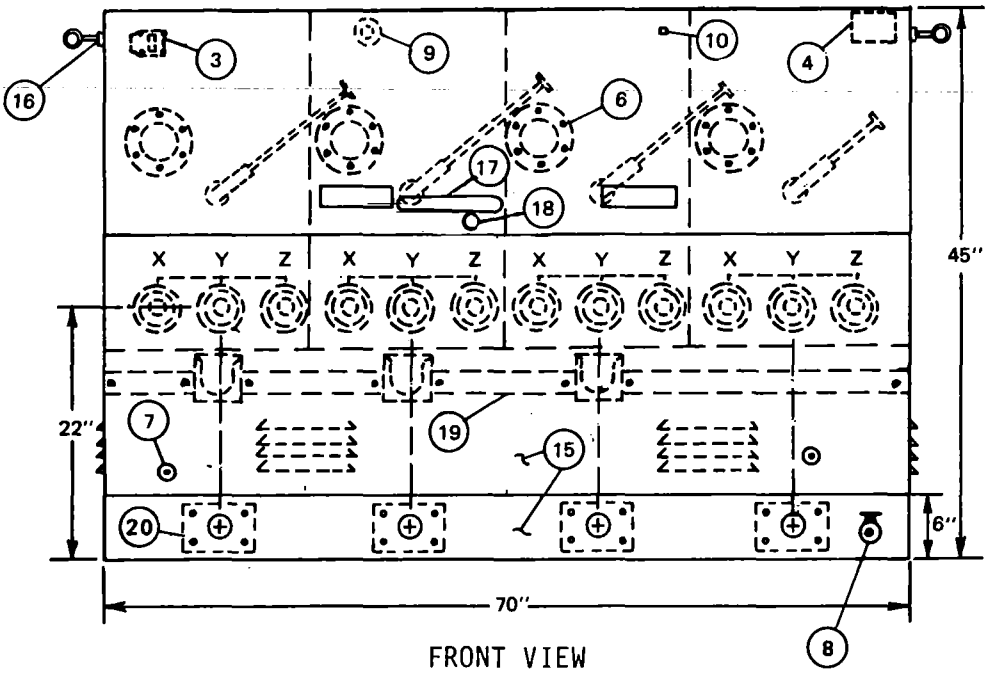

FRONT VIEW

WEIGHT: W/O OIL 1700#
W/ OIL 3125#

FOR FIELD MAINTENANCE ONLY

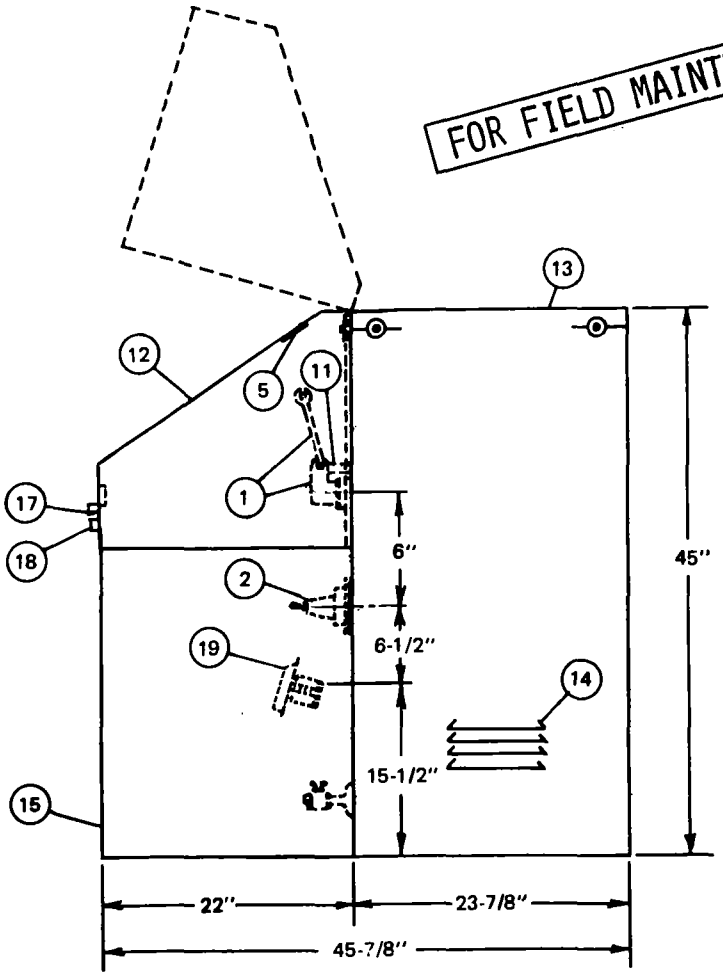

SIDE VIEW

	SDG&E ELECTRIC STANDARDS	
3599.407	PAD-MOUNTED OIL SWITCH 12KV, 600 AMP, 3Ø	DATE 1-1-91 APPD

TABLE OF CONTENTS

ELECTRICAL RATINGS:	
VOLTAGE	15.5KV
B.I.L.	95KV
CURRENT, CONTINUOUS	600 AMP
LOADMAKE AND LOADBREAK	600 AMP
MOMENTARY AND FAULT CLOSE (RMS, ASYMMETRICAL) (RMS, SYMMETRICAL)	19,200 AMP 12,000 AMP

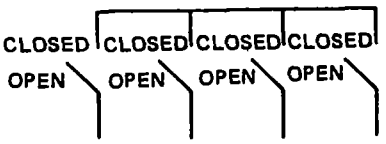

4-WAY ONE LINE DIAGRAM

FOR FIELD MAINTENANCE ONLY

SWITCH PARTS LIST

ITEM	DESCRIPTION	ITEM	DESCRIPTION
1	OPERATING HANDLE	11	SWITCH HANDLE LOCKING PROVISION
2	BUSHING	12	LIFT-UP DOOR, CLAM SHELL LID
3	OIL LEVEL GAUGE	13	SWITCH TANK
4	NAME PLATE	14	VENTS
5	CONNECTION DIAGRAM	15	REMOVABLE FRONT SECTION
6	CONTACT VIEWING WINDOW	16	BOSS FOR LIFTING EYES
7	GROUND LUGS	17	DOOR HANDLE
8	DRAIN VALVE	18	PENTAHEAD BOLT LOCKING PROVISION
9	FILL PLUG	19	STANDOFF BRACKET
10	AIR CHECK VALVE	20	LEXAN FAULT INDICATOR VIEWING WINDOW

TABLE OF CONTENTS

NOTES:

- PAD-MOUNTED SWITCH (STOCK NUMBER 708987) IS DELIVERED FROM THE SUPPLIER WITH ALL THE PARTS LISTED IN THE PARTS LIST.
- SWITCH NUMBERS ARE TO BE ISSUED BY THE ENGINEERING CLERK IN THE DISTRIBUTION FACILITIES INFORMATION SECTION.
- PAD-MOUNTED SWITCH IS ONLY PURCHASED WITH FOUR SWITCH POSITIONS.
- THE PANEL INSIDE THE CABINET IS PAINTED GREEN AND GRAY TO HELP QUICKLY IDENTIFY EACH SEPARATE CIRCUIT.

REFERENCE:

A. SEE STANDARD 3440 FOR PAD AND HANDHOLE INSTALLATION FOR PAD-MOUNTED 600 AMP, 12 KV SWITCH.

B. SEE STANDARDS 3550 OR 3551 FOR SWITCH INSTALLATION.

C. SEE STANDARD 3212.2 FOR SWITCH IDENTIFICATION .

DATE 1-1-91 APPD JRB/LRR	SDG&E ELECTRIC STANDARDS PAD-MOUNTED OIL SWITCH 12KV, 600 AMP, 3Ø	3599.408

3600 SUBSURFACE SECTIONALIZING EQUIPMENT

3600 SUBSURFACE SECTIONALIZING EQUIPMENT

PAGE	SUBJECT
3699.001	SUBSTRUCTURE USE AND LIMITATIONS REFERENCE SHEET
3699.101	400 AMP LOADBREAK OIL SWITCH - MULTIPLE POSITION WITH BUS
3699.102	400 AMP LOADBREAK OIL SWITCH - MULTIPLE POSITION WITH TIE BUSSES AND EXTERNALLY AVAILABLE MAIN BUS
3699.103	400 AMP LOADBREAK OIL SWITCH - LOOP AND TIE
3699.104	400 AMP LOADBREAK OIL SWITCH - MULTIPLE POSITION
3699.105	OIL SWITCH 12KV, THREE-PHASE, 400 & 600 AMPERE
3699.106	ON-OFF OIL SWITCH, 12KV, THREE-PHASE, 600 AMPERE
3699.107-.108	ON-OFF OIL SWITCH, 12KV, THREE-PHASE, 600 AMPERE, INSTALLATION
3699.109	ON-OFF OIL SWITCH, 12KV, THREE-PHASE, 200 AMPERE
3699.110-.111	ON-OFF OIL SWITCH, 12KV, THREE-PHASE, 200 AMPERE, INSTALLATION
3699.201	ON-OFF OIL SWITCH, 12KV, THREE-PHASE, 200 AMPERE
3699.202-.203	ON-OFF OIL SWITCH, 12KV, THREE-PHASE, 200 AMPERE, INSTALLATION
3699.400	UNOBSTRUCTED SPACE
3699.401-.405	CABLE AND CONDUIT PLACEMENT
3699.406	EQUIPMENT ASSEMBLIES
3699.408-.419	EQUIPMENT COMBINATION GUIDELINES
3699.501	SUBSTRUCTURE USE AND LIMITATIONS REFERENCE SHEET
3699.701-.704	SUBSURFACE OIL SWITCH, 600 AMP, 12KV, THREE-PHASE
3699.705-.706	SUBSURFACE/SURFACE OPERABLE OIL SWITCH 12KV, 600 AMP, THREE-PHASE
3699.707-.708	SUBSURFACE/SURFACE OPERABLE SF-6 GAS SWITCH 12KV, 600 AMP, THREE-PHASE
3699.709-.714	SUBSURFACE/SURFACE OPERABLE SF-6 GAS SWITCH 12KV, 600 AMP, THREE-PHASE
3699.715-.719	INSTALLATION OF SUBSURFACE/SURFACE OPERABLE SWITCH IN 3316 HANDHOLE

MAIN TABLE OF CONTENTS

© 1998 - 2019 San Diego Gas & Electric Company. All rights reserved. Removal of this copyright notice without permission is not permitted under law.

REV	CHANGE	BY	DSGN	APPV	DATE	REV	CHANGE	BY	DSGN	APPV	DATE
C						F					
B	COMPLETELY REVISED	JK	JS	CZH	10/16/2019	E					
A	ORIGINAL ISSUE	JK	JS	CZH	6/13/2019	D					

Indicates Latest Revision | X Completely Revised | New Page | Information Removed

SDG&E ELECTRIC UNDERGROUND FIELD MAINTENANCE ONLY STANDARDS

LEGACY UNDERGROUND FIELD MAINTENANCE
TABLE OF CONTENTS
SUBSURFACE SECTIONALIZING EQUIPMENT

SUBSTRUCTURES	MAJOR USE LIMITATION
1–1–88 3315 4'X 6'–6"X 6'–7" HANDHOLE (PRIMARY & SECONDARY)	FOR ALL SIZES OF PRIMARY AND UP TO 500 KCMIL SECONDARY CABLES MAXIMUM. AN UNOBSTRUCTED SPACE OF 18" X 48" MUST BE MAINTAINED. EXAMPLE: MAXIMUM INSTALLATION CONSISTS OF 3–350 KCMIL OR LARGER ELBOW TEE SPLICED THREE–PHASE PRIMARY CIRCUITS ON OPPOSITE WALLS, EACH ONE TAPPED WITH ONE THREE–PHASE DISTRIBUTION RUN. THE THREE TEE COMBINATION SHALL ONLY BE USED TO FEED A SWITCHED TIE POSITION. (SEE PAGE 3646.2).
1–1–88 3316 5' X 8'–6" X 7' HANDHOLE (PRIMARY & SECONDARY)	FOR ALL SIZES OF PRIMARY AND UP TO 500 KCMIL SECONDARY CABLES MAXIMUM. AN UNOBSTRUCTED SPACE OF 22" X 72" MUST BE MAINTAINED. EXAMPLE: MAXIMUM INSTALLATION CONSISTS OF 3–350 KCMIL OR LARGER ELBOW THE SPLICED THREE–PHASE PRIMARY CIRCUITS ON OPPOSITE WALKS, EACH ONE TAPPED WITH ONE THREE–PHASE DISTRIBUTION RUN. IN THE SAME HANDHOLE, 2–350 KCMIL OR LARGER ELBOW TEE SPLICED THREE–PHASE PRIMARY CIRCUITS ON OPPOSITE WALLS EACH ONE TAPPED WITH ONE THREE–PHASE RUN. THE THREE TEE COMBINATION SHALL ONLY BE USED TO FEED A SWITCHED TEE POSITION (SEE PAGE 3649.20).
1–1–96 3320 5' x 10'–7 1/2" X 8' MANHOLE (3399.112, 113)	FOR ALL SIZES OF PRIMARY AND UP TO 500 KCMIL SECONDARY CABLES MAXIMUM. AN UNOBSTRUCTED SPACE OF 22" X 72" MUST BE MAINTAINED. MAXIMUM INSTALLATION CONSISTS OF #2 SOLID AND LARGER CABLES AND CONNECTORS. NO CABLE TAPS ALLOWED.
1–1–88 3324 8' X 14' X 9'–4" 8' X 20' X 9'–4" 8' X 26' X 9'–4" MANHOLE (PRIMARY & SECONDARY)	FOR ALL SIZES OF PRIMARY AND UP TO 500 KCMIL SECONDARY CABLES MAXIMUM. AN UNOBSTRUCTED SPACE OF 36" X 10' FOR 14 FOOT MANHOLE, OR 36" x 16' FOR 20 FOOT MANHOLE OR 36" X 22' FOR 26 FOOT MANHOLE MUST BE MAINTAINED. EXAMPLE: MAXIMUM INSTALLATION CONSISTS OF ONE 4–WAY SWITCH IN A 20 FOOT LONG MANHOLE AND TWO 4–WAY SWITCHES IN A 26 FOOT LONG MANHOLE. A 26 FOOT LONG MANHOLE IS THE MAXIMUM ALLOWABLE SIZE. NO CABLE TAPS ALLOWED. ALWAYS MAINTAIN AN UNOBSTRUCTED SPACE, AS MENTIONED ABOVE, TO ALLOW ACCESSIBILITY TO CABLE, EQUIPMENT, AND CONDUIT. SEE STANDARD 3649 FOR EQUIPMENT COMBINATION GUIDE–LINES. SEE STANDARD 4004 FOR MINIMUM BENDING RADII.
1–1–96 (3399.208–210) 3324 8' X 14' X 9'–4" 8' X 20' X 9'–4" 8' X 26' X 9'–4" MANHOLE (PRIMARY & SECONDARY)	FOR ALL SIZES OF PRIMARY AND UP TO 500 KCMIL SECONDARY CABLES MAXIMUM. AN UNOBSTRUCTED SPACE OF 36" X 10' FOR 14 FOOT MANHOLE, OR 36" x 16' FOR 20 FOOT MANHOLE OR 36" X 22" FOR 26 FOOT MANHOLE MUST BE MAINTAINED. EXAMPLE: MAXIMUM INSTALLATION CONSISTS OF ONE 4–WAY SWITCH IN A 14 FOOT LONG MANHOLE AND TWO 4–WAY SWITCHES IN A 20 FOOT LONG MANHOLE. A 20 FOOT LONG MANHOLE IS THE MAXIMUM ALLOWABLE SIZE. NO CABLE TAPS ALLOWED. ALWAYS MAINTAIN AN UNOBSTRUCTED SPACE, AS MENTIONED ABOVE, TO ALLOW ACCESSIBILITY TO CABLE, EQUIPMENT, AND CONDUIT. SEE STANDARD 3649 FOR EQUIPMENT COMBINATION GUIDE–LINES. SEE STANDARD 4004 FOR MINIMUM BENDING RADII.

INSTALLATION:

A. TO AVOID CUTTING THE CONDUIT BENDS, SUBSTRUCTURES AND/OR CABLE POLES WHICH REQUIRE A 90° BEND SHALL BE LOCATED FAR ENOUGH AWAY FROM EACH OTHER TO ALLOW ROOM ENOUGH FOR THE TWO 90° BENDS. THIS WILL VARY DEPENDING ON THE SIZE OF THE 90° BEND. SEE PAGE 3380.2 FOR CIC BENDING RADII.

B. IN EACH SUBSTRUCTURE, AS MANY CONDUIT KNOCKOUTS MAY BE USED AS NEEDED, PROVIDING PROPER INSTALLATION IS FOLLOWED AND REQUIRED UNOBSTRUCTED SPACE IS MAINTAINED. INSTALL CONDUITS USING THE LOWER SET OF KNOCKOUTS FIRST, UNLESS OTHERWISE SPECIFIED ON JOB PRINT. IF ONLY ONE CONDUIT IS REQUIRED, USE THE BOTTOM OUTSIDE (CLOSEST TO THE WALL) KNOCKOUT.

C. 'ONE RUN' = CABLE IN CONDUIT FROM ONE LOCATION TO ANOTHER LOCATION.

FOR FIELD MAINTENANCE ONLY

EXAMPLE:

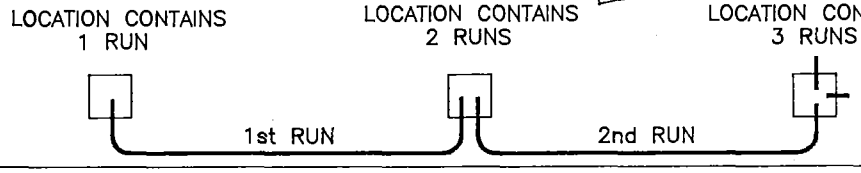

DATE 1–1–96 APPD	SDG&E ELECTRIC STANDARDS SUBSTRUCTURE USE AND LIMITATIONS REFERENCE SHEET	3699.001

TABLE OF CONTENTS

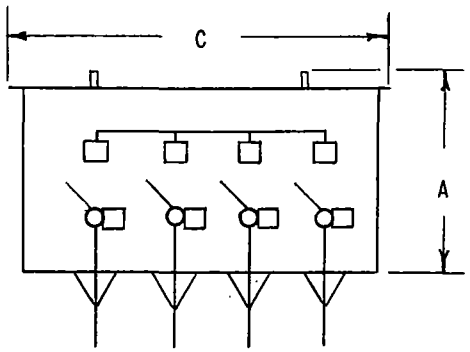

FRONT VIEW

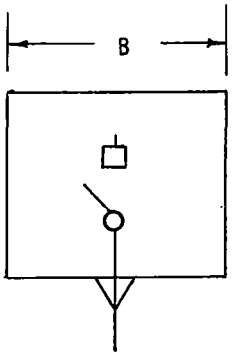

SIDE VIEW

G&W				ESCO			APPROXIMATE DIMENSIONS-INCHES			STOCK NUMBER
KV	CATALOG NUMBER	OIL REQ'D (GALLONS)	DRY WEIGHT	CATALOG NUMBER	OIL REQ'D (GALLONS)	DRY WEIGHT	A	B	C	
THREE WAY										
7.5	RAC3354M	47	700	RLD3753T						704288
15	RAC3374M	80	900	RLD3853T	110	836	30	30	46	704224
FOUR WAY										
7.5	RAC4354M	60	900	RLD4753T	80	800	26	28	43	704448
15	RAC4374M	100	1300	RLD4853T	130	1039	30	30	58	704352
FIVE WAY										
7.5	RAC5354M	73	1100	RLD5753T						
15	RAC5374M	128	1700	RLD5853T						

FOR FIELD MAINTENANCE ONLY

NOTES:

1. CABLE ENTRANCES ARE INCLUDED IN THE CATALOG NUMBER BUT MUST BE SPECIFIED SEPARATELY TO SUIT INDIVIDUAL INSTALLATIONS, I. E., CABLE TYPES AND SIZES.
2. NORMAL SWITCH INSTALLATION REQUIRE 36 INCHES BELOW AND 12 INCHES ABOVE THE SWITCH TANK FOR 7.5 KV. 48 INCHES BELOW AND 18 INCHES ABOVE THE SWITCH TANK FOR 15 KV, TO ALLOW FOR CABLE TRAINING AND TANK ACCESS.

REFERENCE NUMBER LOAD BREAK OIL SWITCH FOR IDENTIFICATION AND ORDERING	
3-WAY	U-46.10-3
4-WAY	U-46.10-4
5-WAY	U-46.10-5

APP'D:

SAN DIEGO GAS & ELECTRIC COMPANY UNDERGROUND STANDARDS

400 AMP LOAD BREAK OIL SWITCH

MULTIPLE POSITION WITH BUS

3699:101

TABLE OF CONTENTS

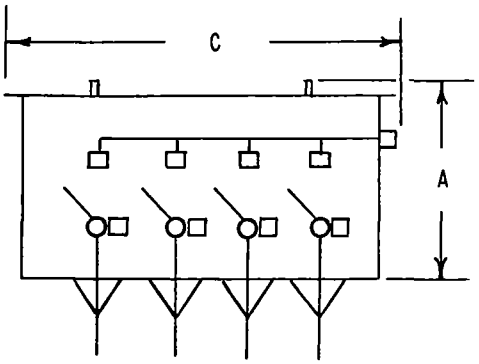

FRONT VIEW

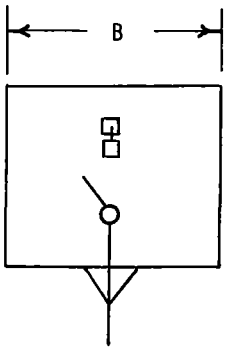

SIDE VIEW

KV	ESCO			APPROXIMATE DIMENSIONS-INCHES			STOCK NUMBER
	CATALOG NUMBER	OIL REQ'D (GALLONS)	DRY WEIGHT	A	B	C	
THREE WAY							
7.5	RLD3753T-GP						704288
15	RLD3853T-GP	110	836	33	30	54	704224
FOUR WAY							
7.5	RLD4753T-GP	90	861	32	26	59	704448
15	RLD4853T-GP	130	1039	33	30	67	704352
FIVE WAY							
7.5	RLD5753T-GP						
15	RLD5853T-GP						

FOR FIELD MAINTENANCE ONLY

NOTES:

1. CABLE ENTRANCES ARE INCLUDED IN THE CATALOG NUMBER BUT MUST BE SPECIFIED SEPARATELY TO SUIT INDIVIDUAL INSTALLATIONS, I. E., CABLE TYPES AND SIZES.
2. NORMAL SWITCH INSTALLATION REQUIRE 36 INCHES BELOW AND 12 INCHES ABOVE THE SWITCH TANK FOR 7.5 KV. 48 INCHES BELOW AND 18 INCHES ABOVE THE SWITCH TANK FOR 15 KV, TO ALLOW FOR CABLE TRAINING AND TANK ACCESS.
3. SWITCH ALSO AVAILABLE WITH EXTERNAL BUSS CONNECTION ON LEFT END.
4. TIE POSITION MUST BE BLOCKED.

REFERENCE NUMBER LOAD BREAK OIL SWITCH FOR IDENTIFICATION AND ORDERING	
3-WAY	U-46.11-3
4-WAY	U-46.11-4
5-WAY	U-46.11-5

TABLE OF CONTENTS

3699.102	SAN DIEGO GAS & ELECTRIC COMPANY UNDERGROUND STANDARDS 400 AMP LOAD BREAK OIL SWITCH MULTIPLE POSITION WITH TIE BUSSES AND EXTERNALLY AVAILABLE MAIN BUSS	APP'D: DATE 12-27-73

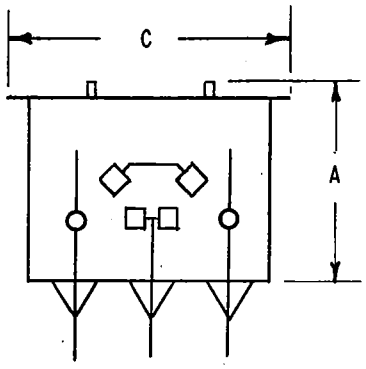

FRONT VIEW

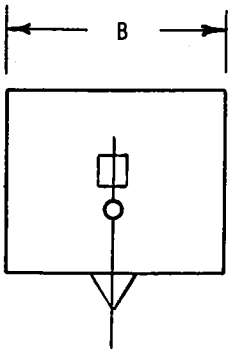

SIDE VIEW

G&W				ESCO			APPROXIMATE DIMENSIONS-INCHES			STOCK NUMBER
KV	CATALOG NUMBER	OIL REQ'D (GALLONS)	DRY WEIGHT (LBS)	CATALOG NUMBER	OIL REQ'D (GALLONS)	DRY WEIGHT (LBS)	A	B	C	
7.5	RAL354M	28	550	LA753K	44	457	25	28	23	704192
15	RAL374M	50	750	LA853K	69	594	27	31	28	

FOR FIELD MAINTENANCE ONLY

NOTES:

1. CABLE ENTRANCES ARE INCLUDED IN THE CATALOG NUMBER BUT MUST BE SPECIFIED SEPARATELY TO SUIT INDIVIDUAL INSTALLATIONS, I. E., CABLE TYPES AND SIZES.
2. NORMAL SWITCH INSTALLATION REQUIRE 36 INCHES BELOW AND 12 INCHES ABOVE THE SWITCH TANK FOR 7.5 KV. 42 INCHES BELOW AND 12 ABOVE THE SWITCH TANK FOR 15 KV, TO ALLOW FOR CABLE TRAINING AND TANK ACCESS.

TABLE OF CONTENTS

DATE 1-24-68 SDG&E	SAN DIEGO GAS & ELECTRIC COMPANY UNDERGROUND STANDARDS 400 AMP LOAD BREAK OIL SWITCH LOOP AND TIE	3699-103

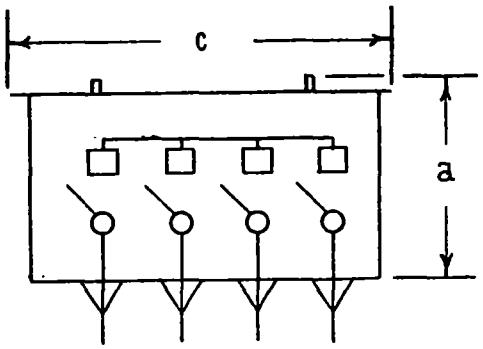

FRONT VIEW

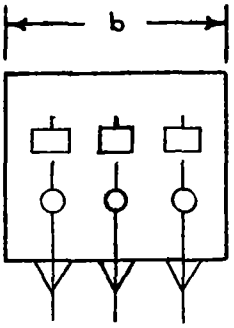

SIDE VIEW

4 WAY ILLUSTRATED

G&W				ESCO			APPROXIMATE DIMENSIONS-INCHES			STOCK NO. OR CONSTR. STD
KV	CATALOG NUMBER	OIL REQ'D (GALLONS)	DRY WEIGHT	CATALOG NUMBER	OIL REQ'D (GALLONS)	DRY WEIGHT	a	b	c	
THREE WAY										
7.5	RAM 3354	47	700	RA 3753 M	56	539	26	27	34	704320
15	RAM 3374	80	900	RA 3853 M	95	703	30	30	40	704256
FOUR WAY										
7.5	RAM 4354	60	900	RA 4753 M	72	684	26	27	42	
15	RAM 4374	100	1300	RA 4853 M	124	890	30	30	50	704336
FIVE WAY										
7.5	RAM 5354	73	1100	RA 5753 M	88	829	26	27	50	
15	RAM 5374	128	1700	RA 5853 M	151	1064	30	30	60	

FOR FIELD MAINTENANCE ONLY

TABLE OF CONTENTS

NOTES:

A. TIE POSITIONS MUST BE BLOCKED.

B. CABLE ENTRANCES ARE INCLUDED IN THE CATALOG NUMBER BUT MUST BE SPECIFIED SEPARATELY TO SUIT INDIVIDUAL INSTALLATIONS, I. E., CABLE TYPES AND SIZES.

C. NORMAL SWITCH INSTALLATION REQUIRE 36 INCHES BELOW AND 12 INCHES ABOVE THE SWITCH TANK FOR 7.5KV. 48 INCHES BELOW AND 18 INCHES ABOVE THE SWITCH TANK FOR 15KV., TO ALLOW FOR CABLE TRAINING AND TANK ACCESS.

3699.104	SAN DIEGO GAS & ELECTRIC COMPANY UNDERGROUND STANDARDS 400 AMP LOAD BREAK OIL SWITCH MULTIPLE POSITION	APP'D: DATE 12-27-73

MAJOR USE: SECTIONALIZING

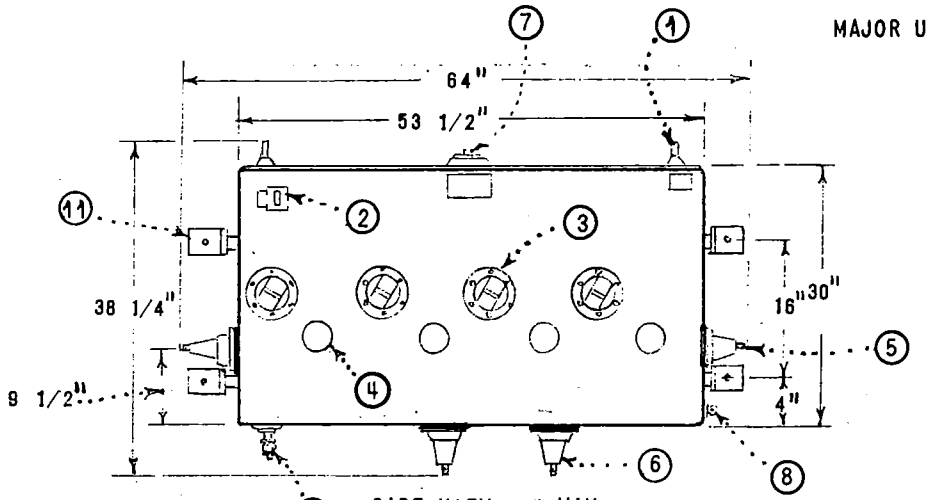

SIDE VIEW - 4 WAY

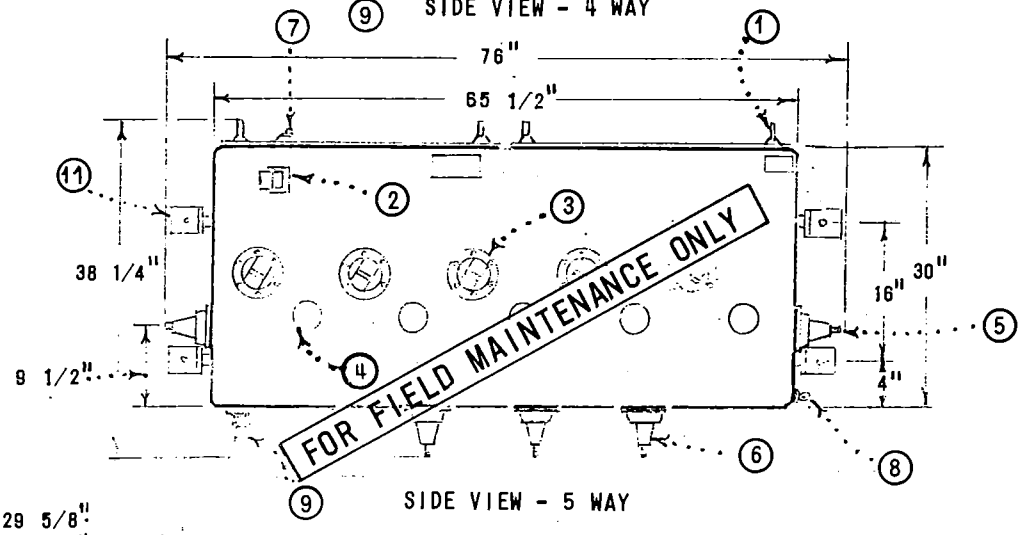

SIDE VIEW - 5 WAY

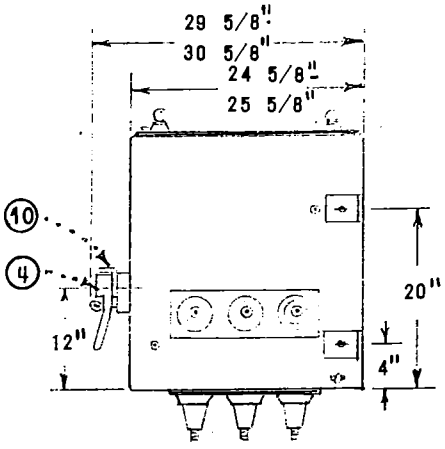

END VIEW - TYPICAL

LEGEND	
1	LIFTING EYE
2	OIL LEVEL GAUGE
3	LINK VIEWING WINDOW
4	OPERATING HANDLE ASSEMBLY
5	BUSHING (600 AMP) ESNA 800-T1
6	BUSHING (600 AMP) ESNA 600-S1
7	PLUG
8	GROUND LUG
9	DRAIN VALVE
10	POSITION LABELS,(SEE TABLE BELOW)
11	MOUNTING BRACKETS

STOCK NUMBERS			
400 AMP		600 AMP	
4 WAY	708970	4 WAY	708978
5 WAY	708972	5 WAY	708974
		6 WAY	(A)
		7 WAY	(A)

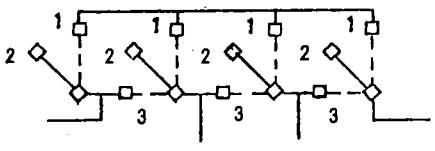

4 WAY
ONE LINE DIAGRAM

SWITCH POSITIONS	
1	CLOSED
2	OPEN
3	'ALT'-ALTERNATE

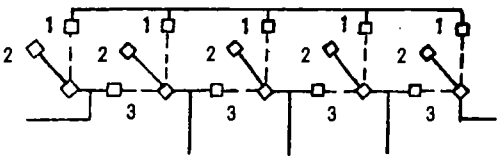

5 WAY
ONE LINE DIAGRAM

NOTE:
THIS SWITCH SHALL BE USED WITH POLYETHYLENE CABLES AND 600 AMPERE ELBOW T's (4182).
(A) SPECIAL ORDER ONLY.

APP'D	SAN DIEGO GAS & ELECTRIC COMPANY UNDERGROUND STANDARDS	
DATE 1-7-75	OIL SWITCH, 12KV, 3ϕ, 400 & 600 AMPERE	3699.105

TABLE OF CONTENTS

MAJOR USE: SECTIONALIZING

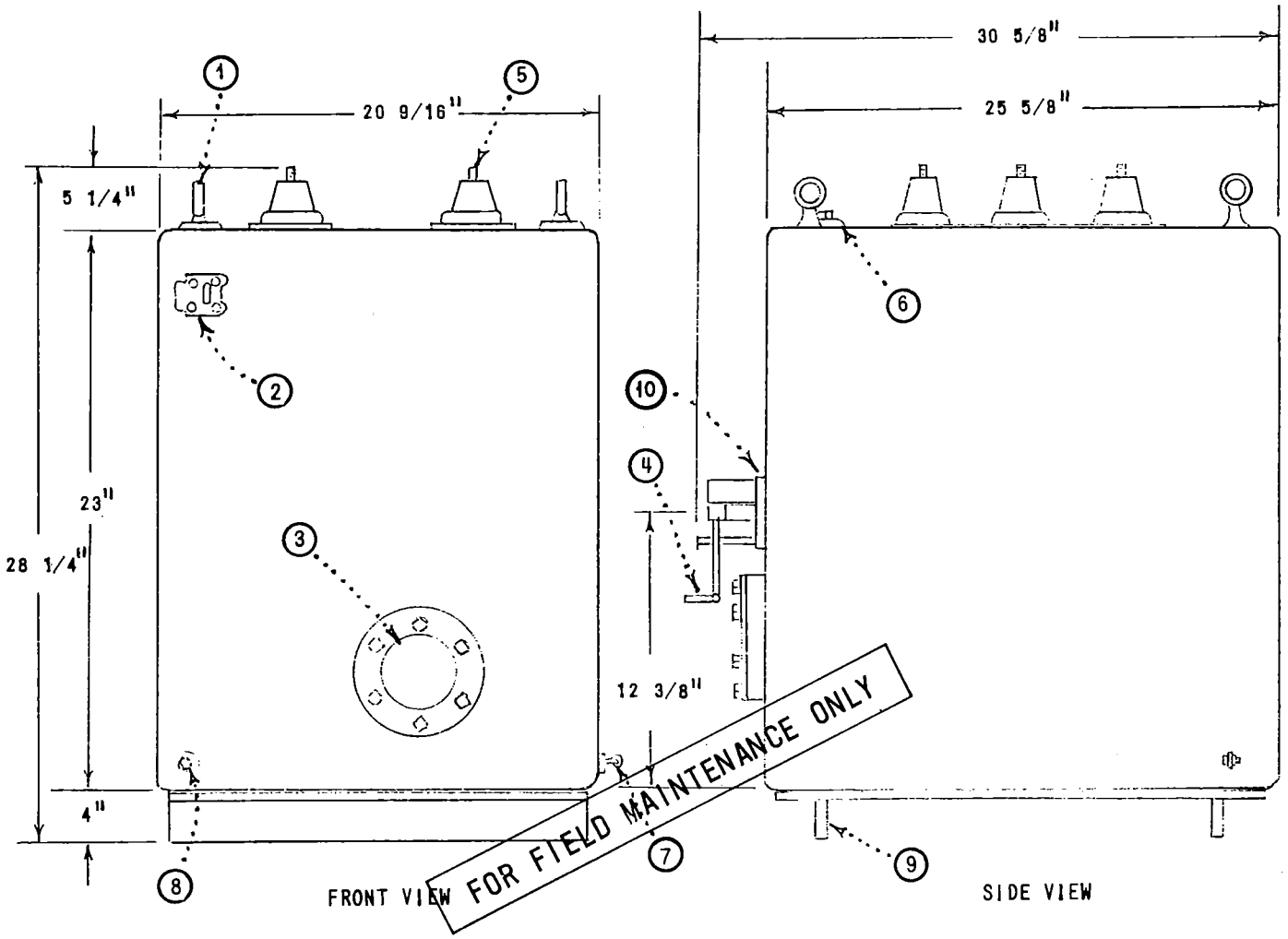

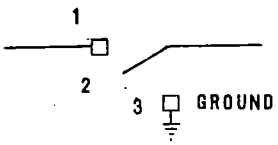

ONE LINE DIAGRAM

SWITCH POSITIONS	
1	CLOSED
2	OPEN
3	GROUND

	LEGEND
1	LIFTING EYE
2	OIL LEVEL GAUGE
3	LINK VIEWING WINDOW
4	OPERATING HANDLE ASSEMBLY
5	BUSHING (600) ESNA 600-T1
6	PLUG
7	GROUND LUG
8	DRAIN VALVE
9	MOUNTING RAILS
10	POSITION LABELS, (SEE SWITCH POSITION TABLE)

STOCK NUMBER
708988

NOTES:

A. THIS SWITCH SHALL BE USED WITH POLYETHYLENE CABLES, 4/0 AND LARGER USING ELBOW 'T' CONNECTORS, 4182.

B. FOR INSTALLATION SEE 3699.202.

3699.106	SAN DIEGO GAS & ELECTRIC COMPANY UNDERGROUND STANDARDS	APP'D J.W.K.
	ON-OFF OIL SWITCH, 12KV, 3ϕ, 600 AMPERE	DATE 1-7-75

TABLE OF CONTENTS

TABLE OF CONTENTS

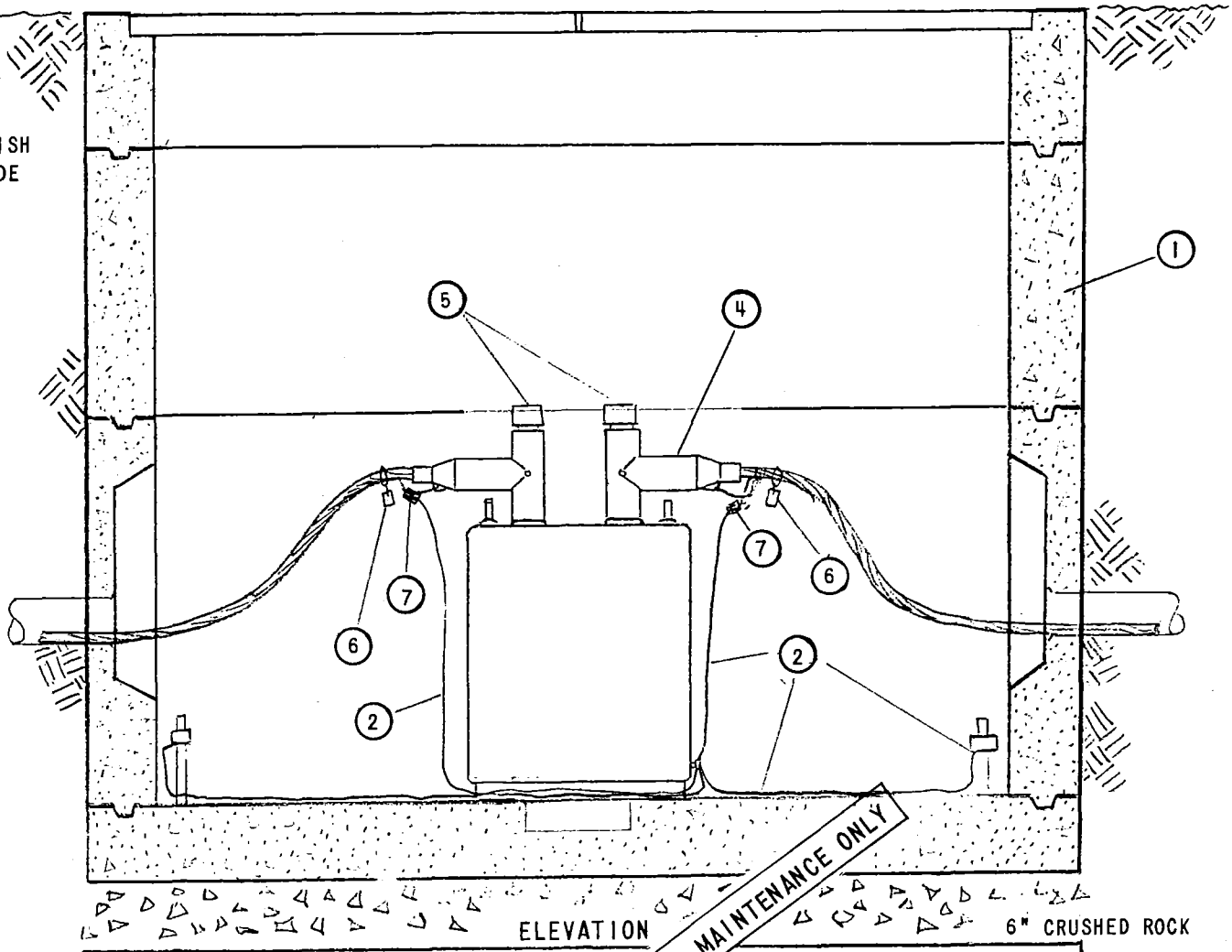

ELEVATION

FOR FIELD MAINTENANCE ONLY

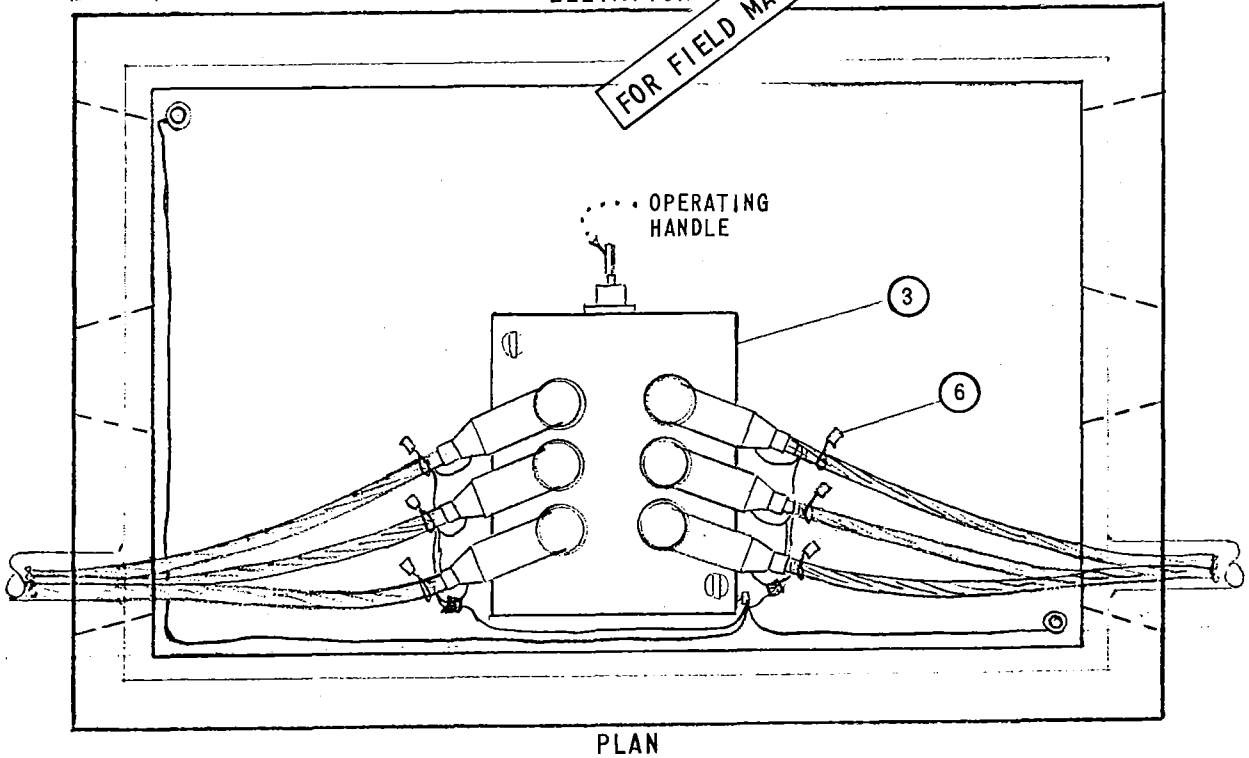

PLAN

APPD [signature] DATE 3-24-75	SDG&E ELECTRIC STANDARDS ON-OFF OIL SWITCH, 12KV, 3ϕ, 600 AMPERE, INSTALLATION	3699.107

ITEM	DESCRIPTION	QUANTITY	STOCK NO. OR STD. PAGE
1	HANDHOLE, 4' X 6'-6" X 4'	1	3315
2	GROUNDING — 2-8" STUBOUTS WELDED TO REBAR (FURNISHED WITH BOX)		
	CLAMP	2	230016
	WIRE, BARE COPPER, #1/0	20'	812752
3	SWITCH, SUBMERSIBLE, 600 AMP 3ϕ, ON-OFF (WITH BUSHINGS)	1	708988 , 3699.106
4	ELBOW, TEE, 600 AMP (SEE NOTE B)	6	326578, 4182
5	INSULATED PLUG, W/TEST POINT	6	544648, 4182
6	PHASE AND ROUTE IDENTIFICATION TAG	AS REQ'D	3231
7	CONNECTOR, COMPRESSION, (GROUND CONNECTION)	2	257792

NOTE:

A. ENCLOSURE NUMBERING, SEE 3211.

B. WHEN ITEM 4 IS NOT USED, USE 600 AMP INSULATING RECEPTACLE (570608).

C. SWITCH NUMBER TO BE ASSIGNED BY ELECTRIC ENGINEERING.

FOR FIELD MAINTENANCE ONLY

TABLE OF CONTENTS

MAJOR USE: SECTIONALIZING

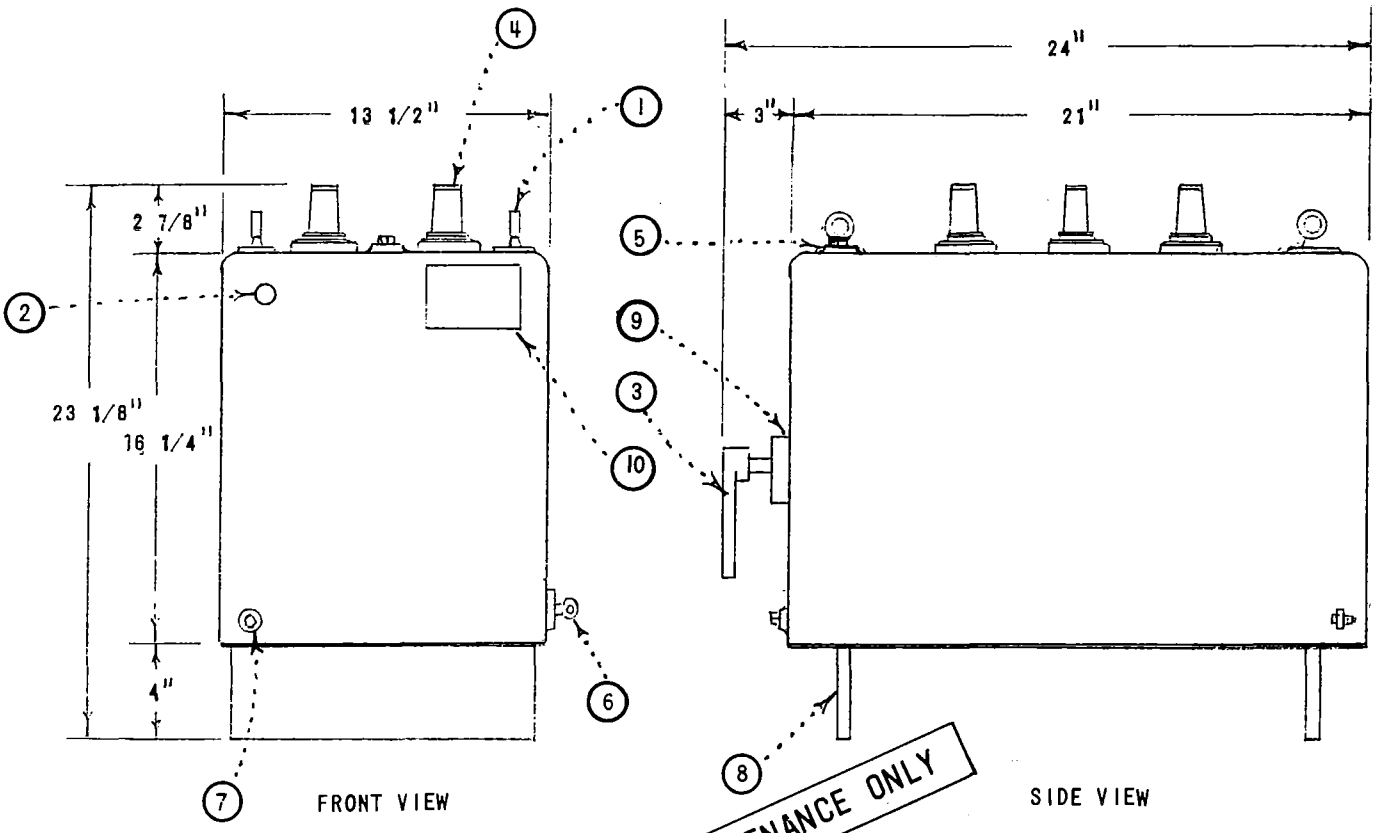

FOR FIELD MAINTENANCE ONLY

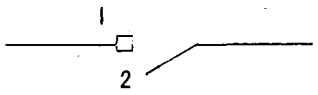

ONE LINE DIAGRAM

SWITCH POSITIONS	
1	CLOSED
2	OPEN

LEGEND	
1	LIFTING EYE
2	OIL LEVEL GAUGE
3	OPERATING HANOLE ASSEMBLY
4	BUSHING, 200 AMP, ESNA 180-T2
5	FILL PLUG
6	GROUND LUG
7	DRAIN VALVE
8	MOUNTING RAILS
9	POSITION LABELS, (SEE SWITCH POSITION TABLE)
10	NAME PLATE

STOCK NUMBER
708990

NOTES:

A. THIS SWITCH SHALL BE USED WITH POLYETHYLENE CABLES USING 200 AMP NON-LOAD BREAK ELBOWS, 4196.
B. FOR INSTALLATION SEE 3699.110 & .111.
C. ON THE ROUND TANK MODEL, ITEMS 1,2,3,4,5,9 AND 10 ARE LOCATED ON TOP OF THE SWITCH.

APP'D J.W.K. DATE 1-7-75	SAN DIEGO GAS & ELECTRIC COMPANY UNDERGROUND STANDARDS	3699.109
	ON-OFF OIL SWITCH, 12KV, 3ϕ, 200 AMPERE	

TABLE OF CONTENTS

TABLE OF CONTENTS

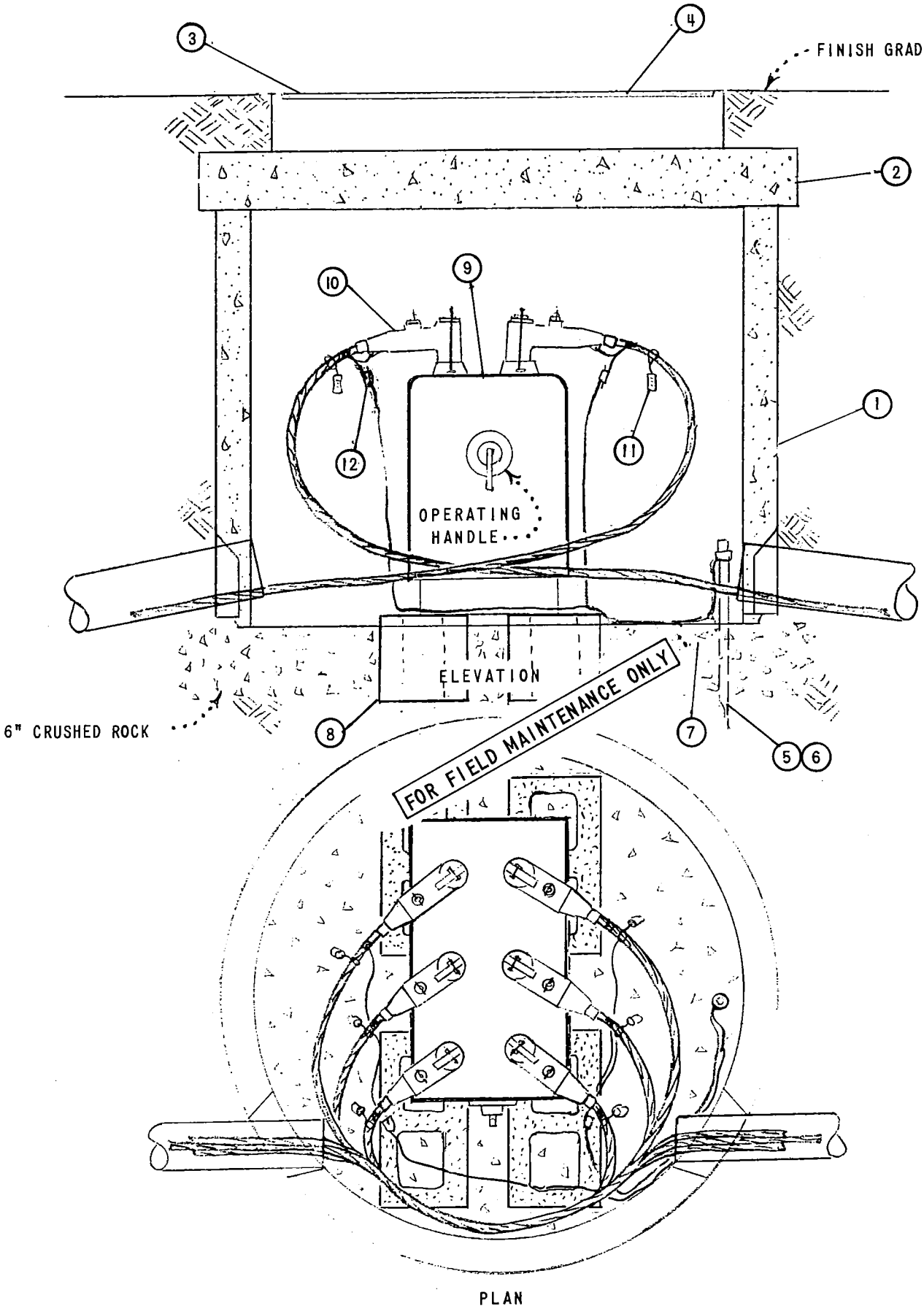

SDG&E ELECTRIC STANDARDS

APP'D JWK
DATE 3-13-75

ON-OFF OIL SWITCH, 12KV, 3ϕ, 200 AMPERE, INSTALLATION

3699.110

ITEM	DESCRIPTION	QUANTITY	STOCK NO. OR STD. PAGE
1	SHAFT, CONCRETE	1	334358, 3341
2	TOP CAP, CONCRETE	1	206228, 3341
3	FRAME, PARKWAY OR TRAFFIC	1	362378 OR 362408, 3341
4	COVER, EPOXY OR PAINTED	1	267730 OR 287732, 3341
5	GROUND ROD, 5/8" X 8'-0", COPPERWELD	1	803072
6	GROUND ROD CLAMP	1	230016
7	WIRE, BARE COPPER, #1/0	AS REQ'D	812752
8	CONCRETE BLOCK, 8X8X16	4	141856
9	SWITCH, SUBMERSIBLE, 200 AMP, 3 ϕ, ON-OFF (WITH BUSHINGS)	1	708990
10	ELBOW, NON-LOAD BREAK (SEE NOTE B)	6	443456, 4196
11	PHASE AND ROUTE IDENTIFICATION TAG	AS REQ'D	3231
12	CONNECTOR, COMPRESSION (GROUND CONNECTION)	2	257792

NOTE:

A. ENCLOSURE NUMBERING SEE 3211.

B. WHEN ITEM 10 IS NOT USED, USE 200 AMP INSULATING RECEPTACLE (204304).

C. SWITCH NUMBER TO BE ASSIGNED BY ELECTRIC ENGINEERING.

FOR FIELD MAINTENANCE ONLY

TABLE OF CONTENTS

MAJOR USE: SECTIONALIZING

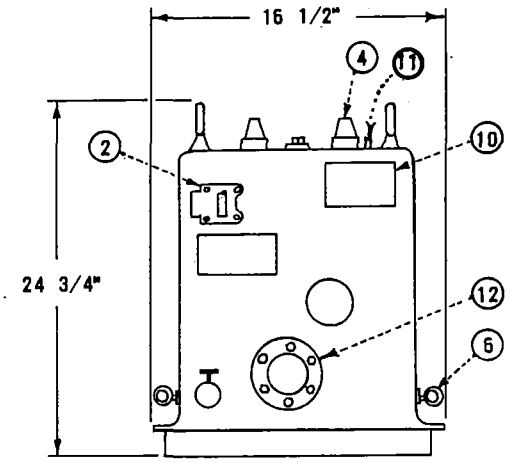

FRONT VIEW

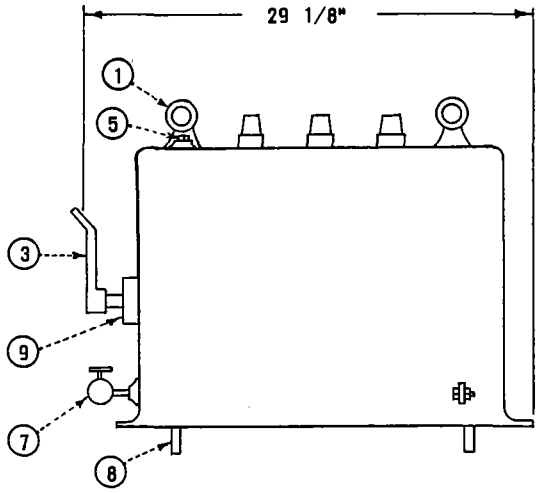

SIDE VIEW

ELECTRICAL RATINGS:	
VOLTAGE	15KV
BIL	95KV
CURRENT, CONTINUOUS	200 AMP
LOADMAKE AND LOADBREAK	200 AMP
MOMENTARY AND FAULT CLOSE (RMS, SYMMETRICAL)	12,500 AMP

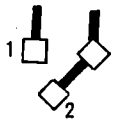

ONE LINE DIAGRAM

SWITCH POSITIONS	
1	CLOSED
2	OPEN

FOR FIELD MAINTENANCE ONLY

A. THIS SWITCH SHALL BE USED WITH POLYETHYLENE CABLES USING 200 AMP LOAD BREAK ELBOWS, PG 4196. (OLDER MODELS USE DEAD BREAK ELBOWS)

B. FOR INSTALLATION SEE PG 3621.02.

ITEM	DESCRIPTION	ITEM	DESCRIPTION	UNIT STOCK NUMBER
1	LIFTING EYE	9	POSITION LABLES, (SEE SWITCH POSITION TABLE)	708990
2	OIL LEVEL GAUGE			
3	OPERATING HANDLE ASSEMBLY	10	NAME PLATE	
4	BUSHING (200 AMP) GE SUREMAKE (LB)	11	PRESSURE TEST VALVE	
5	FILL VALVE	12	LINK VIEWING WINDOW	
6	GROUND LUGS			
7	DRAIN VALVE			
8	MOUNTING RAILS			

DATE 3-15-82
APPD

SDG&E ELECTRIC STANDARDS

ON-OFF OIL SWITCH, 12KV, 3ϕ, 200 AMPERE

3699.201

TABLE OF CONTENTS

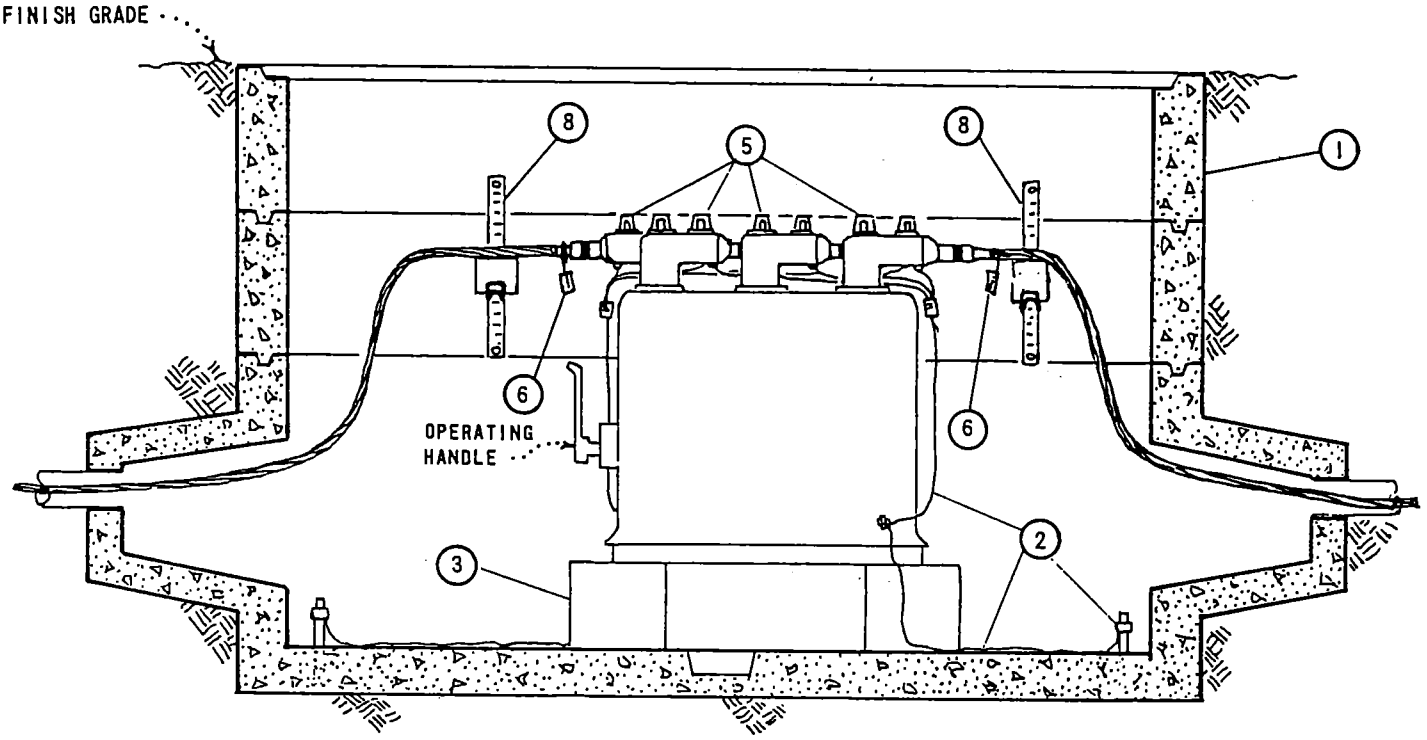

ELEVATION

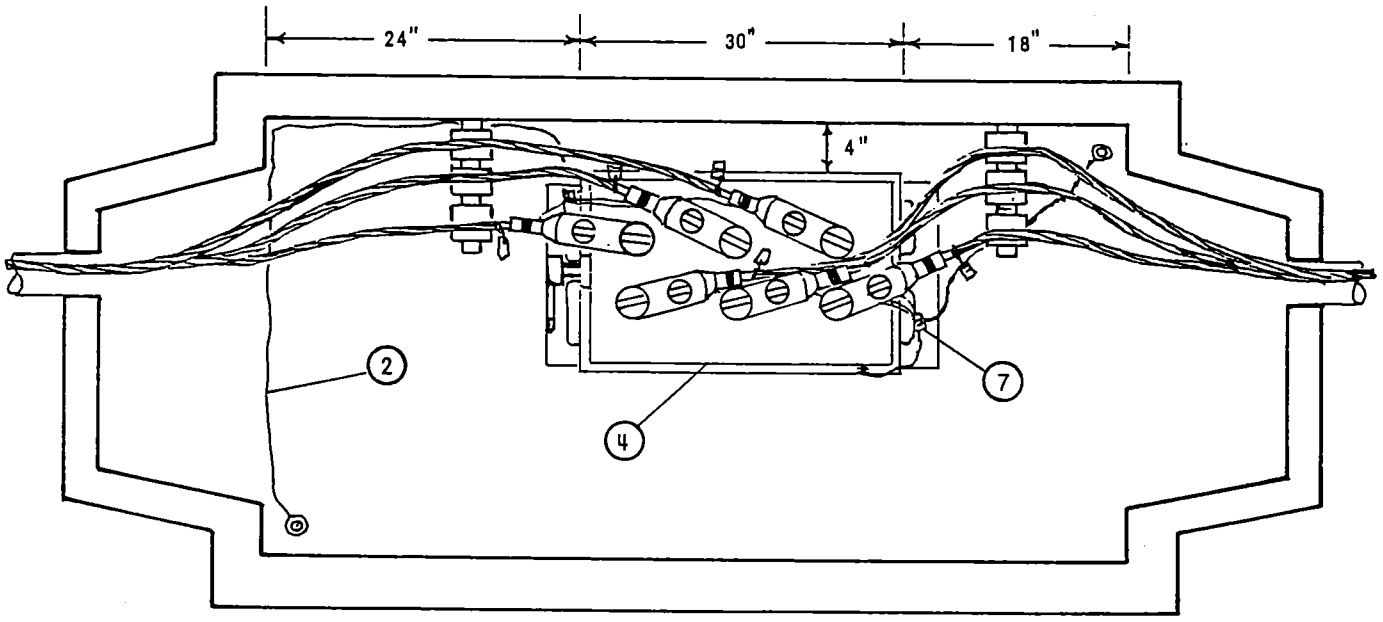

PLAN

FOR FIELD MAINTENANCE ONLY

TABLE OF CONTENTS

3699.202	SDG&E ELECTRIC STANDARDS ON-OFF OIL SWITCH, 12KV, THREE PHASE, 200 AMPERE, INSTALLATION	DATE 3-15-82 APPD

NOTES:

A. ENCLOSURE NUMBERING, 3211.

(B) WHEN ITEM 5 IS NOT USED, USE 200 AMP INSULATING RECEPTACLE (204304).

C. SWITCH NUMBER TO BE ASSIGNED BY ELECTRIC ENGINEERING.

D. NO CABLE TAPS ALLOWED IN THIS INSTALLATION.

(F) OLDER MODELS HAVE DEADBREAK BUSHINGS AND ELBOWS.

ITEM	DESCRIPTION		QUANTITY	STOCK NO. OR CONSTR. STD.
1	HANDHOLE, 36" X 72" X 48", (COMPLETE)		1	pg 3314
2	GROUNDING	2-8" STUBOUTS WELDED TO REBAR (FURNISHED WITH HANDHOLE)	-	-
		CLAMP, ROD GROUND, 5/8"	2	230016
		WIRE, BARE COPPER, #1/0	16'	812752
3	CONCRETE BLOCK, 8X8X16		2	141856
4	SWITCH, ON-OFF, 3Ø, 200 AMP (SUBMERSIBLE)		1	708990
5	ELBOW, LOADBREAK, 12KV, (WITH WHITE-BLACK-WHITE ID BAND) (B)(F)		6	pg 4191
6	PHASE AND ROUTE IDENTIFICATION TAG		AS REQ'D	pg 3231
7	CONNECTOR, COMPRESSION (GROUND CONNECTION)		2	257792
8	CABLE RACKS		AS REQ'D	pg 478

FOR FIELD MAINTENANCE ONLY

TABLE OF CONTENTS

DATE 3-15-82 APPD	SDG&E ELECTRIC STANDARDS ON-OFF OIL SWITCH, 12KV, THREE PHASE, 200 AMPERE, INSTALLATION	3699.203

SCOPE: THIS STANDARD SHOWS THE MINIMUM UNOBSTRUCTED SPACE REQUIRED INSIDE A SUBSTRUCTURE TO ALLOW PERSONNEL TO PERFORM WORK SAFELY AND FREE FROM ANY OBSTRUCTIONS.

FOR FIELD MAINTENANCE ONLY

UNOBSTRUCTED SPACE

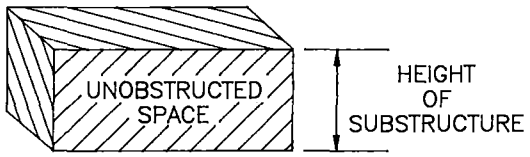

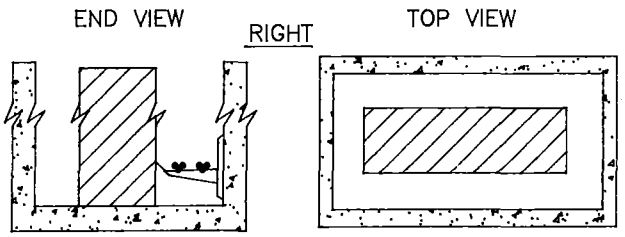

WRONG

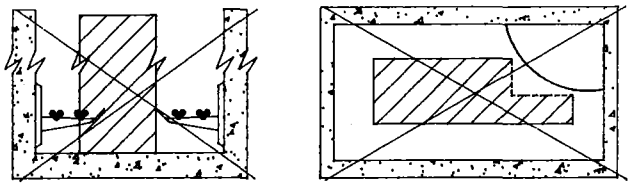

SUBSTRUCTURE	UNOBSTRUCTED SPACE
3324 – 14' LONG	36" X 10'
3324 – 20' LONG	36" X 16'
3324 – 26' LONG	36" X 22'

NOTES:

- AN UNOBSTRUCTED SPACE MUST BE MAINTAINED IN EACH SUBSTRUCTURE TO ALLOW PERSONNEL TO SAFELY ENTER OR EXIT THE SUBSTRUCTURE AND PERFORM WORK.
- AN UNOBSTRUCTED SPACE SHOULD BE IN THE CENTER OF A SUBSTRUCTURE WHENEVER POSSIBLE.
- THE UNOBSTRUCTED SPACE MAY BE REDUCED DURING CONSTRUCTION FOR PULLING, TRAINING AND TERMINATING CABLES, ETC., BUT NO PORTION OF THE FINAL UNOBSTRUCTED SPACE MAY BE REDUCED BY CABLES, CABLE RACKS, ETC.

TABLE OF CONTENTS

	SDG&E ELECTRIC STANDARDS	
DATE 1-1-96 APPD	UNOBSTRUCTED SPACE	3699.400

SCOPE: THIS STANDARD SHOWS CABLE AND CONDUIT PLACEMENT IN SUBSTRUCTURES TO ASSURE PROPER CABLE TRAINING.

3314 HANDHOLE

EXAMPLE

FIGURE 1

3314 TOP VIEW

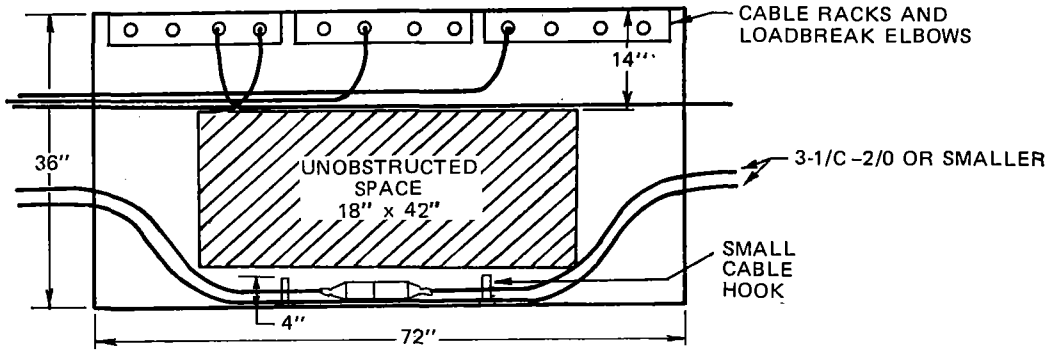

CABLE PULLED STRAIGHT THROUGH MUST ENTER AND EXIT THE SAME CONDUIT POSITION ON OPPOSITE ENDS. CABLE WITH TERMINATIONS SHOULD OCCUPY THE CONDUIT ADJACENT TO THE WALL ON WHICH THE CABLE IS TERMINATED AND RACKED. IF THIS IS NOT POSSIBLE OTHER CONDUIT POSITIONS MAY BE USED. SEE PAGE 3647.1 FOR PLACEMENT OF CABLE TAPS.

3315 HANDHOLE

FIGURE 2

3315 CONDUIT EXIT

RADIUS BENDS OR STRAIGHT CONDUIT

TOP VIEW

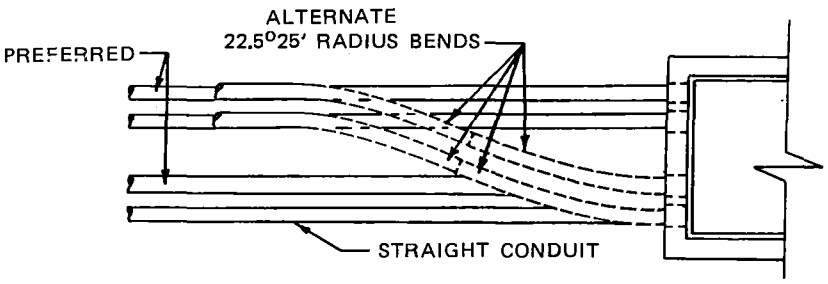

STRAIGHT CONDUIT SECTIONS WILL BEND ENOUGH TO ALLOW THEM TO JOIN IN A SINGLE TRENCH AS DESCRIBED IN STANDARD 3370.

FOR FIELD MAINTENANCE ONLY

3315 HANDHOLE

TOP VIEW

FIGURE 3

FOR CONDUIT TERMINATIONS - SEE FIGURE 2

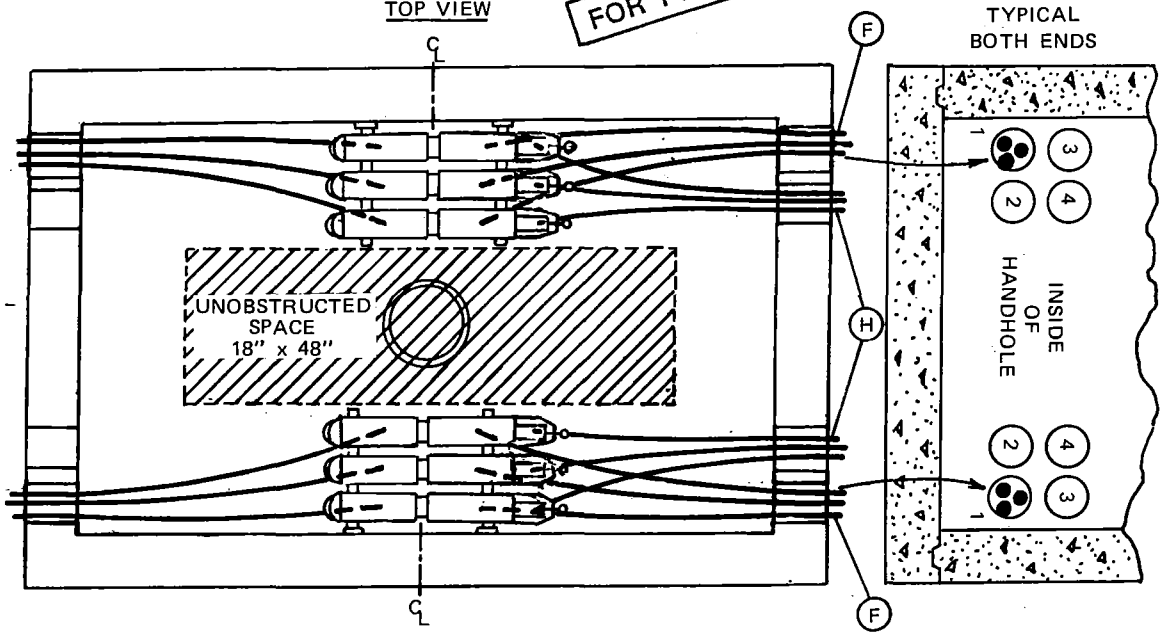

DATE 1-1-88 APPD JLG/RDH	SDG&E ELECTRIC STANDARDS CABLE AND CONDUIT PLACEMENT	3699.401

TABLE OF CONTENTS

3315 HANDHOLE

CABLE RACK AND 600 AMP "T" COMBINATION

FIGURE 4

TOP VIEW

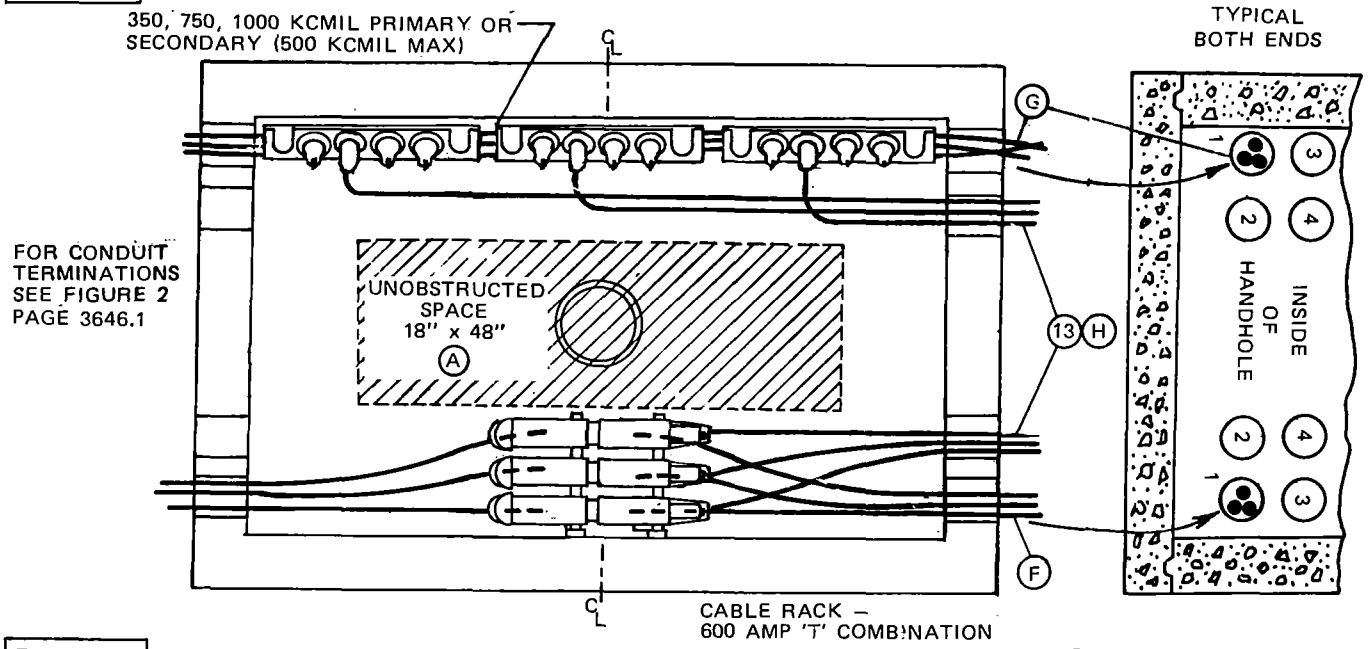

FIGURE 5

SECTION VIEW

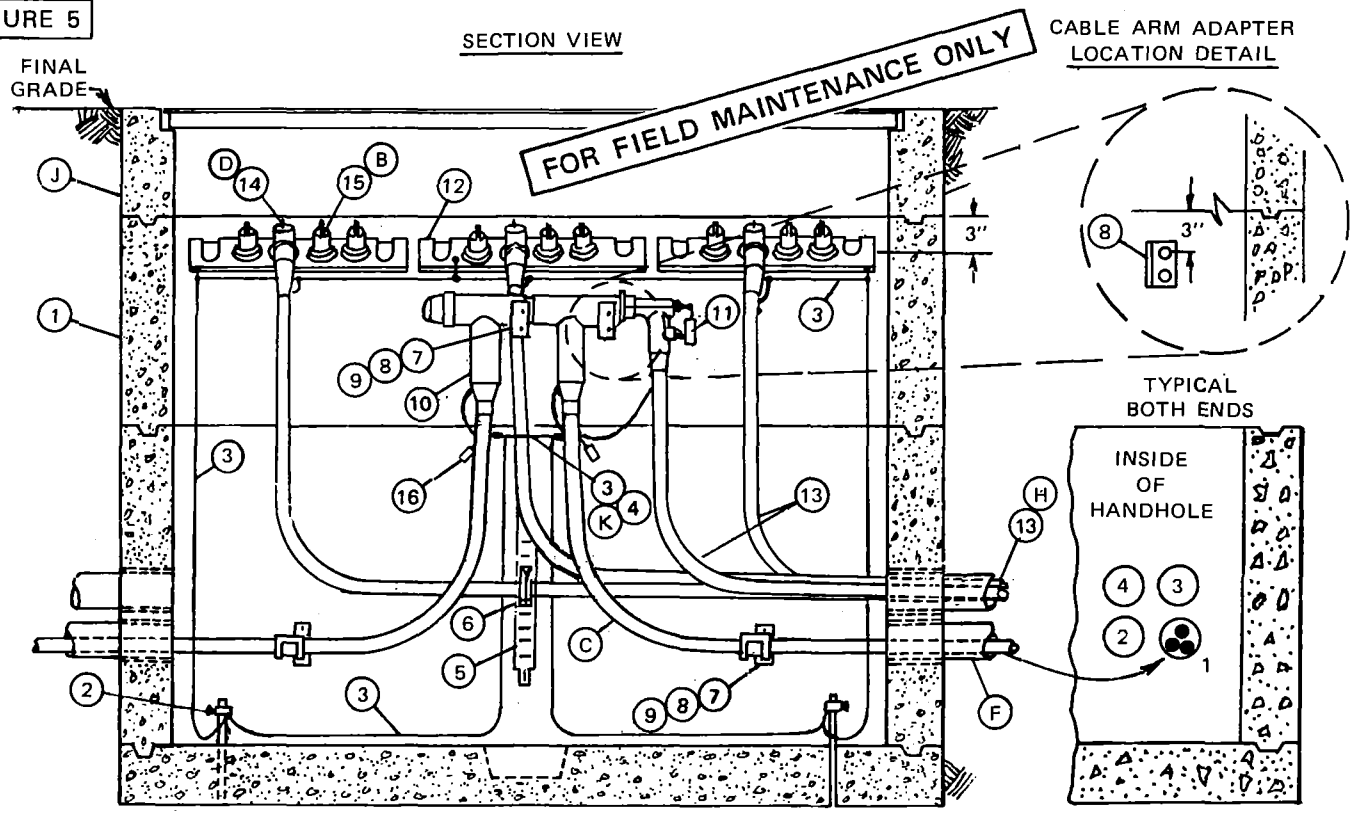

NOTES:

– BEFORE DESIGNING THE INSTALLATION OF HANDHOLES, IT IS IMPORTANT TO FIRST DETERMINE WHICH SIDE THE CABLE TAPS WILL BE PLACED, THEN INSTALL THE OTHER CABLES ACCORDINGLY. DO NOT INSTALL CABLE TAPS ON HANDHOLE ENDS. (SEE PAGE 3647.1 FOR PLACEMENT OF CABLE TAPS.)

– CABLE PULLED STRAIGHT THROUGH MUST ENTER AND EXIT THE SAME DUCT POSITION ON OPPOSITE ENDS. (SEE INSTALLATION NOTES ON PAGE 3646.3 FOR CABLE AND CONNECTOR INSTALLATION IN A 3315.)

TABLE OF CONTENTS

BILL OF MATERIAL: (FOR FIGURES 4 AND 5)

ITEM	DESCRIPTION	QUANTITY	CONST STD OR PAGE NO	STOCK NUMBER
1	HANDHOLE, 4'X 6'-6"	1	3315	-
2	CLAMP, GROUND ROD	2	-	230016 (E)
3	WIRE, BARE COPPER #2 (K)	AS REQ'D	-	812816
4	WIRE, BARE COPPER #1/0 (K)	AS REQ'D	-	812752
5	HANGER, 15"	AS REQ'D		564512 (E)
6	CABLE HOOK, 2-1/2"	AS REQ'D		415110 (E)
7	INSULATOR, CABLE	AS REQ'D		430592 (E)
8	ADAPTOR, CABLE ARM	AS REQ'D		102016 (E)
9	ARM, CABLE, 3-WAY	AS REQ'D		110528 (E)
10	CONNECTOR ASSEMBLY, 200/600 AMP	3	4181.1	-
11	TAG, DO NOT OPERATE ENERGIZED	3	3232	647966 (E)
12	CABLE TAP, 12KV, 3-WAY OR 4-WAY	3	4192.4	-
13	CABLE, #2 OR #2/0 PECN	AS REQ'D	4002.2	-
14	ELBOW, LOADBREAK, 12KV, 2/0 AL	3	4191.2	443840
15	CAP, INSULATING RECEPTACLE	9 (B)	4192.1	204304
16	CABLE IDENTIFICATION TAGS	AS REQ'D	3202	-

FOR FIELD MAINTENANCE ONLY

INSTALLATION: (FOR FIGURES 3, 4 AND 5)

(A) LEAVE AN UNOBSTRUCTED SPACE FREE OF CABLE INTRUSION BY CABLING AROUND WALLS. UNUSED CONDUITS MUST BE ACCESSIBLE FOR FUTURE CABLES. LEAVE ADEQUATE SPACE FOR BLOWING PULL ROPES IN CONDUITS AND/OR CABLE PULLING.

(B) AS TAP POSITIONS ARE USED, REDUCE QUANTITY OF ITEM 15 ACCORDINGLY.

(C) NOTE ORIENTATION OF ELBOW TEES AND CABLE LOOPS TO ALLOW FOR CABLE EXPANSION TO PREVENT DAMAGE.

(D) ELBOWS SHOULD ALWAYS BE POSITIONED VERTICALLY TO ALLOW FOR MAXIMUM ELECTRICAL GROUND CLEARANCE TO ADJACENT ELBOWS WHEN SWITCHING ENERGIZED. CABLES SHOULD BE INSERTED STRAIGHT INTO ELBOWS SO AS NOT TO ALLOW BENDING OF ELBOW ENTRANCE.

(E) EXEMPT MATERIAL.

(F) 350, 750 OR 1000 KCMIL CABLES TO BE TERMINATED WITH 600 AMP TEE CONNECTORS SHALL BE ON THE WALL OPPOSITE ANY CABLE TAPS. THIS CABLE SHALL BE IN THE BOTTOM OUTSIDE CONDUIT ENTERING AND LEAVING AND SHALL BE RACKED OR TERMINATED ON THE SAME WALL OF THE CONDUIT BANK THAT THE CABLE ENTERS AND LEAVES (POSITION 1). IF ENOUGH CONDUITS ARE AVAILABLE, LEAVE THE ADJACENT LOWER CONDUIT OPEN FOR REPLACING EXISTING CABLE TERMINATED WITH THE 600 AMP TEES (POSITION 2). USE POSITIONS 3 AND 4 FOR SMALLER CABLES (SEE FIGURES 4 AND 5 PAGE 3646).

(G) 350, 750 AND 1000 KCMIL PRIMARY OR CABLES PULLED STRAIGHT THROUGH WITHOUT ANY TERMINATIONS SHALL BE PULLED IN THE BOTTOM OUTSIDE DUCTS (POSITION 1), AND SHALL BE RACKED ON THE SAME WALL OF THE DUCT BANK THAT THE CABLE ENTERS AND LEAVES.

(H) #2 OR 2/0 PRIMARY CABLES OR SECONDARY (500 KCMIL MAX) MAY BE PULLED IN ANY CONDUIT NOT USED FOR LARGER CABLES AS DESCRIBED IN INSTALLATION NOTES 'F' AND 'G'. IF CONDUITS ARE NOT BEING USED AS DESCRIBED IN THESE NOTES, LEAVE THEM EMPTY FOR FUTURE LARGER SIZED CABLES UNLESS THERE IS NO POSSIBLE FUTURE LOAD.

I. DO NOT USE UNISTRUT FOR MOUNTING CABLE TAPS.

(J) DO NOT INSTALL EQUIPMENT ON 12 INCH TOP SECTION OF HANDHOLES AS THIS SECTION IS USED FOR FINAL GRADE ADJUSTMENTS.

(K) FOR THE NEUTRAL CONDUCTOR BETWEEN CABLES (PER PHASE) USE 1-#2 BARE COPPER WIRE WITH 350 KCMIL CABLES. USE 1-#1/0 BARE COPPER WIRE WITH 750 OR 1000 KCMIL CABLES. IF THE CONCENTRIC NEUTRAL TAILS ARE LONG ENOUGH, USE THEM INSTEAD OF THE BARE COPPER WIRE.

REFERENCE:

L. FOR STRUCTURE IDENTIFICATION, SEE STANDARD 3211.

M. FOR CONDUIT TERMINATION, SEE STANDARD 3374.

TABLE OF CONTENTS

3316 HANDHOLE
600 AMP "T" COMBINATION

FIGURE 6

TOP VIEW

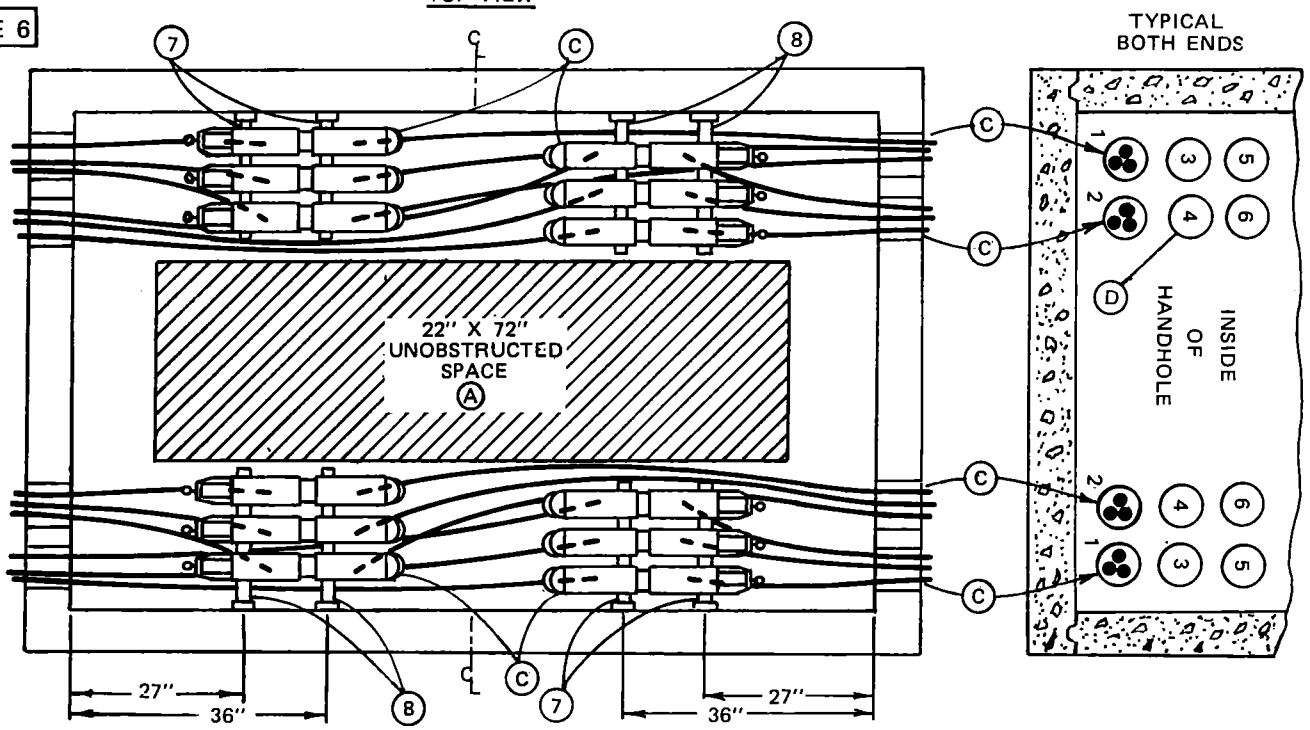

FIGURE 7

SECTION VIEW

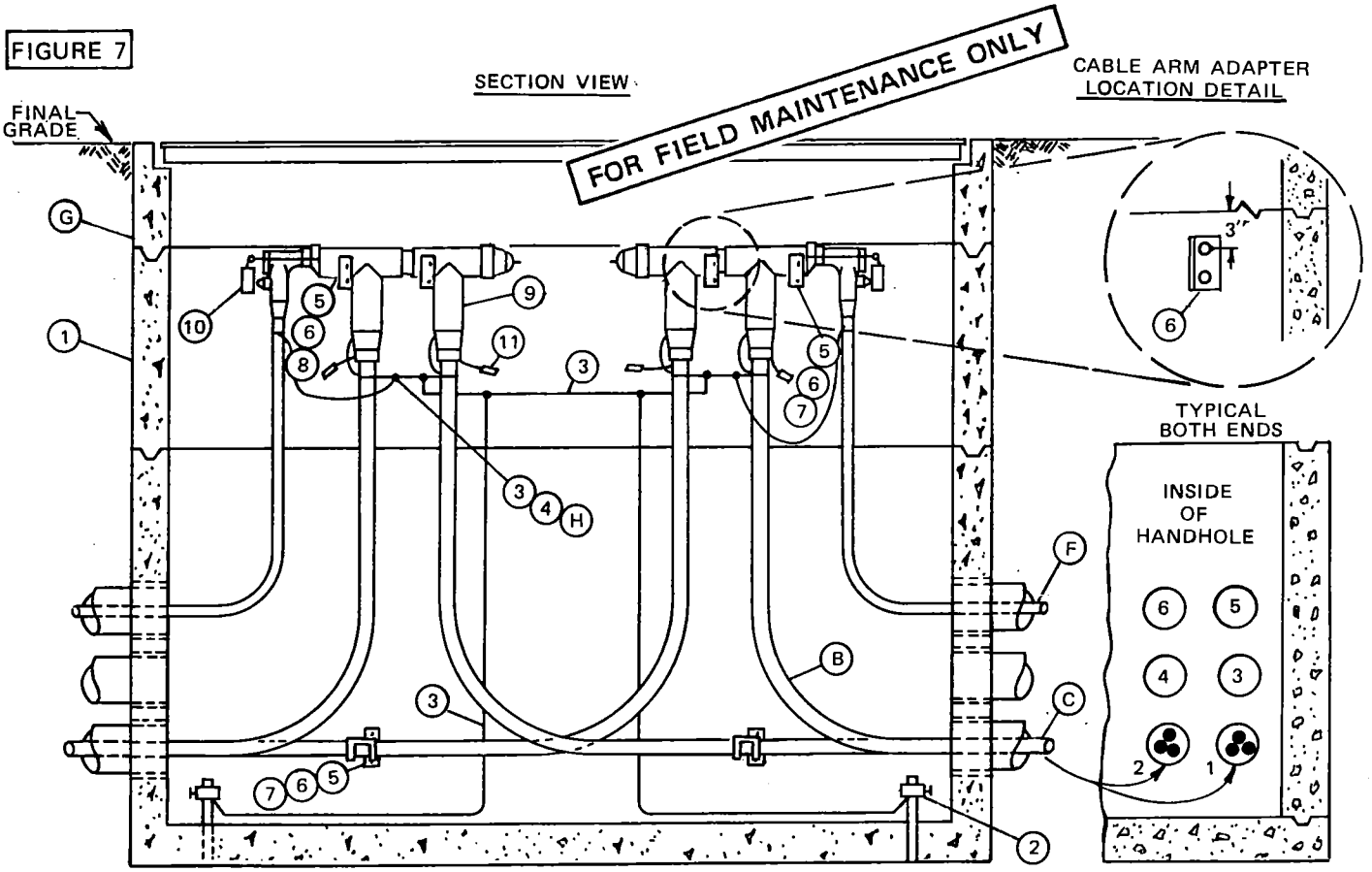

TABLE OF CONTENTS

3699.404	SDG&E ELECTRIC STANDARDS CABLE AND CONDUIT PLACEMENT	DATE 1-1-88 APPD JJG/RDH

BILL OF MATERIAL: (FOR FIGURES 6 AND 7)

ITEM	DESCRIPTION	QUANTITY	CONSTR STD OR PAGE NO	STOCK NUMBER
1	HANDHOLE, 5' X 8'-6"	1	3316	-
2	CLAMP, GROUND ROD	2	-	230016 (E)
3	WIRE, BARE COPPER #2 (H)	AS REQ'D	-	812816
4	WIRE, BARE COPPER #1/0 (H)	AS REQ'D	-	812752
5	INSULATOR, CABLE	AS REQ'D	4178	430592 (E)
6	ADAPTOR, CABLE ARM	AS REQ'D	4178	102016 (E)
7	ARM, CABLE, 3-WAY	AS REQ'D	4178	110528 (E)
8	ARM, CABLE, 4-WAY	AS REQ'D	4178	110560 (E)
9	CONNECTOR ASSEMBLY, 200/600 AMP	12	4181.1	-
10	TAG, DO NOT OPERATE ENERGIZED	12	3232	647966 (E)
11	CABLE IDENTIFICATION TAGS	AS REQ'D	3202	-

INSTALLATION: (FOR FIGURES 6 AND 7)

(A) LEAVE AN UNOBSTRUCTED SPACE FREE OF CABLE INTRUSION BY CABLING AROUND WALLS. UNUSED CONDUITS MUST BE ACCESSIBLE FOR FUTURE CABLES. LEAVE ADEQUATE SPACE FOR BLOWING PULL ROPES IN CONDUITS OR CABLE PULLING.

(B) NOTE ORIENTATION OF ELBOW TEES AND CABLE LOOPS TO ALLOW FOR CABLE EXPANSION AND TO PREVENT DAMAGE.

(C) WHEN TWO SETS OF 600 AMP TEES ARE INSTALLED ON THE SAME WALL, ONE SET MUST BE ON 3-WAY CABLE ARMS AND THE OTHER SET MUST BE ON 4-WAY CABLE ARMS. THE CABLES TERMINATED ON THE 3-WAY CABLE ARMS SHALL BE INSTALLED IN THE BOTTOM OUTSIDE CONDUIT ENTERING AND LEAVING AND SHALL BE RACKED OR TERMINATED ON THE SAME WALL OF THE CONDUIT BANK THAT THE CABLE ENTERS AND LEAVES (POSITION 1).

THE CABLES TERMINATED ON 4-WAY CABLE ARMS SHALL BE INSTALLED IN THE BOTTOM INSIDE CONDUIT ENTERING AND LEAVING AND SHALL BE RACKED OR TERMINATED ON THE SAME WALL OF THE CONDUIT BANK THAT THE CABLE ENTERS AND LEAVES (POSITION 2).

(D) USE POSITION #4 FOR SPARE FEEDER CONDUIT.

(E) EXEMPT MATERIAL.

FOR FIELD MAINTENANCE ONLY

(F) #2 OR 2/0 PRIMARY CABLES MAY BE PULLED IN ANY CONDUIT NOT USED FOR LARGER CABLES AS DESCRIBED IN INSTALLATION NOTES "C" AND "D". IF CONDUITS ARE NOT BEING USED AS DESCRIBED IN THESE NOTES, LEAVE THEM EMPTY FOR FUTURE LARGER SIZED CABLES UNLESS THERE IS NO POSSIBLE FUTURE LOAD.

(G) DO NOT INSTALL EQUIPMENT ON TOP SECTION OF HANDHOLES AS THIS IS USED FOR FINAL GRADE ADJUSTMENTS.

(H) FOR THE NEUTRAL CONDUCTOR BETWEEN CABLES (PER PHASE) USE 1-#2 BARE COPPER WIRE WITH 350 KCMIL CABLES. USE 1-#1/0 BARE COPPER WIRE WITH 750 OR 1000 KCMIL CABLES. IF THE CONCENTRIC NEUTRAL TAILS ARE LONG ENOUGH, USE THEM INSTEAD OF THE BARE COPPER WIRE.

REFERENCE:

J. FOR STRUCTURE IDENTIFICATION, SEE STANDARD 3211.

K. FOR CONDUIT TERMINATION, SEE STANDARD 3374.

TABLE OF CONTENTS

3315 & 3316 HANDHOLE OR MANHOLE INSTALLATION

3-1/C CABLE WITH 600 AMP CADWELD TAPED SPLICES INSTALLED ON ADAPTORS AND 3-WAY CABLE ARMS.

HANGERS (STOCK NUMBER 564480) MAY BE USED WHEN MORE THAN ONE LEVEL OF CABLE IS REQUIRED.

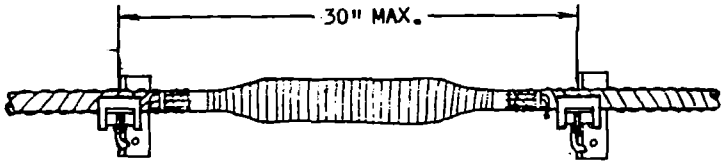

FRONT VIEW

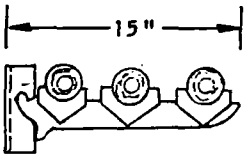

SIDE VIEW

FOR FIELD MAINTENANCE ONLY

3315 & 3316 HANDHOLE INSTALLATIONS ONLY

3-1/C 600 AMP TEE SPLICE INSTALLED ON HANGERS AND 3-WAY CABLE ARMS.

℄ OF HANDHOLE FOR 3315 HANDHOLE INSTALLATION

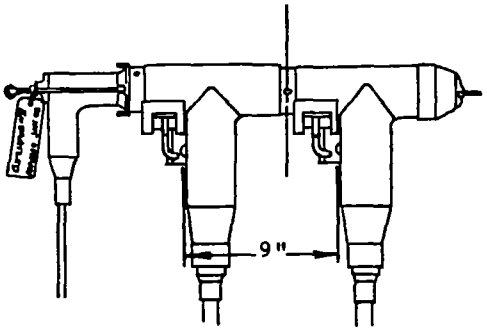

FRONT VIEW

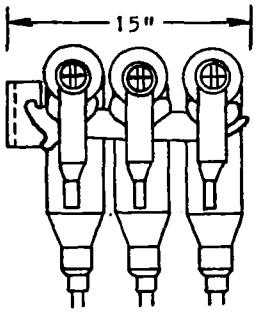

SIDE VIEW

SCOPE: THIS STANDARD SHOWS THE MAXIMUM EQUIPMENT COMBINATIONS THAT CAN BE UTILIZED IN A 3314, 3315, 3316 OR 3324 SUBSTRUCTURE.

FIND THE COMBINATION THAT REPRESENTS THE INSTALLATION, THEN CHECK THE LEGEND FOR COINCIDING SYMBOL AND REFERENCE TO THE EQUIPMENT ASSEMBLY OR CABLE HANGER STANDARDS PAGE.

LEGEND

	TOP VIEW	FRONT VIEW	SIDE VIEW	DESCRIPTION	CONSTRUCTION STANDARD
200 AMP	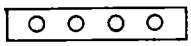	—	—		4192.4
	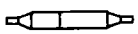	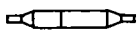		DEADBREAK STRAIGHT SPLICE	4196.3
	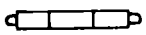	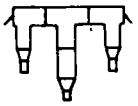		DEADBREAK ELBOW TEE	4196.1 & 4196.3
600 AMP	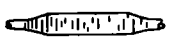	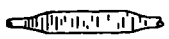		TAPED SPLICE	4141.1-.3
	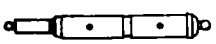	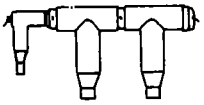		600 AMP TEES WITH OR WITHOUT DEADBREAK ELBOWS IN A HANDHOLE	4182.1
	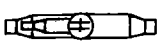	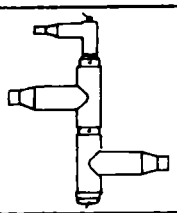	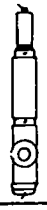	600 AMP TEES WITH OR WITHOUT DEADBREAK ELBOWS IN A MANHOLE	4182.1
		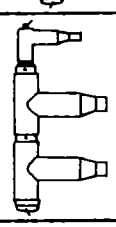		600 AMP TEES WITH OR WITHOUT DEADBREAK ELBOWS IN A MANHOLE	4182.1
200 & 600 AMP	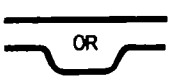			SECONDARY OR PRIMARY CABLE PULLED STRAIGHT THROUGH WITHOUT ANY SPLICES	—
600 VOLT		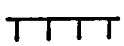	—	600 VOLT SECONDARY CONNECTOR	4173.1-.3
	—	—	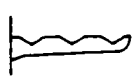	HANGER AND 2, 3 OR 4 WAY CABLE ARMS	4178
	—	—	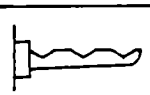	ADAPTER AND 2, 3 OR 4 WAY CABLE ARMS	4178
	—	—		HANGER AND SMALL CABLE HOOK	4178
	—	—		HANGER AND LARGE CABLE HOOK	4178

FOR FIELD MAINTENANCE ONLY

TABLE OF CONTENTS

3699.408	SDG&E ELECTRIC STANDARDS EQUIPMENT COMBINATION GUIDESLINES	DATE 1-1-88 APPD JYB/RDP

TABLE OF CONTENTS

TOP VIEW

SIDE VIEW

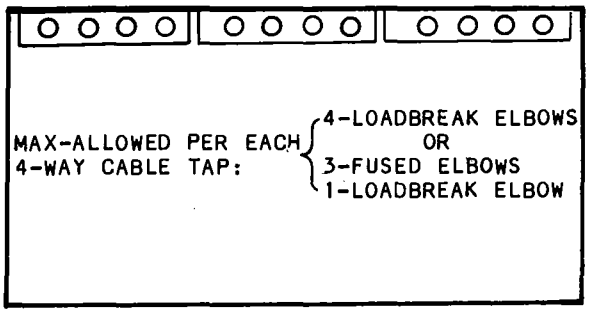

ALLOWED

TOP VIEW

SIDE VIEW

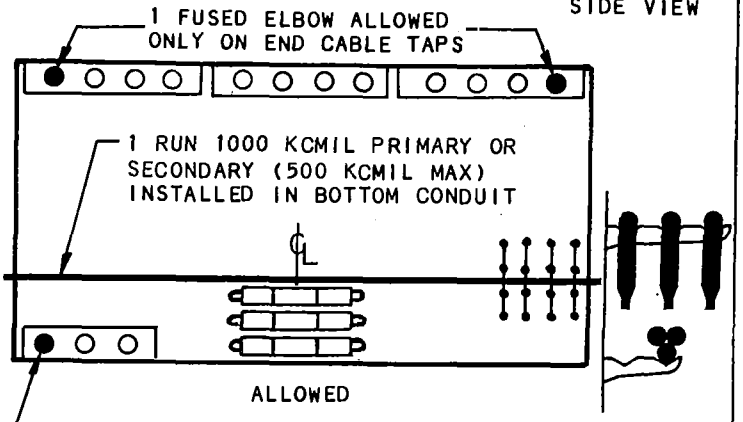

ALLOWED

4TH CABLE TAP AND FUSED ELBOW ALLOWED ONLY FOR THIRD FUSED ELBOW. (3 WAY ONLY)

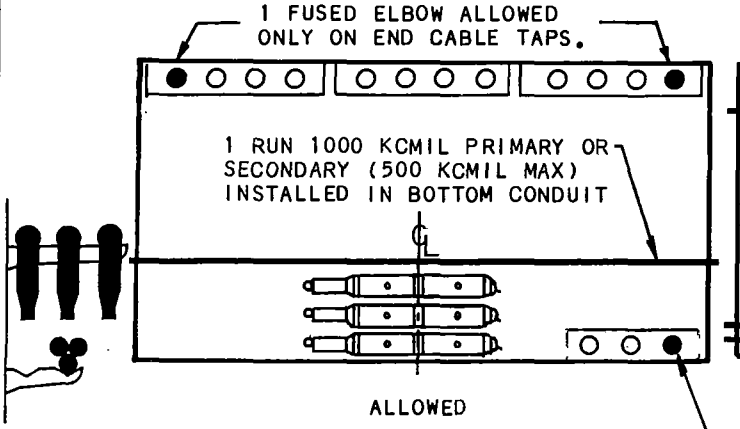

ALLOWED

4TH CABLE TAP AND FUSED ELBOW ALLOWED ONLY FOR THIRD FUSED ELBOW. (3 WAY ONLY)

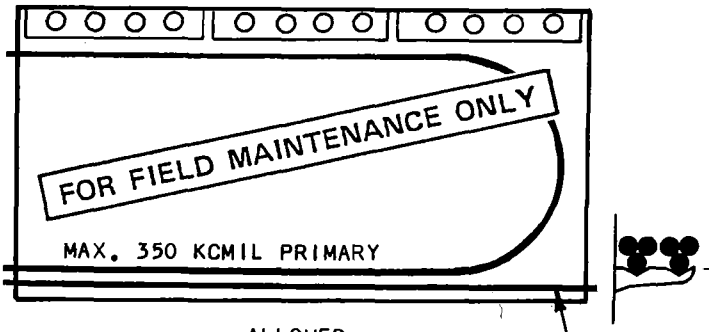

ALLOWED

1 RUN 1000 KCMIL PRIMARY OR SECONDARY (500 KCMIL MAX) INSTALLED IN BOTTOM CONDUIT

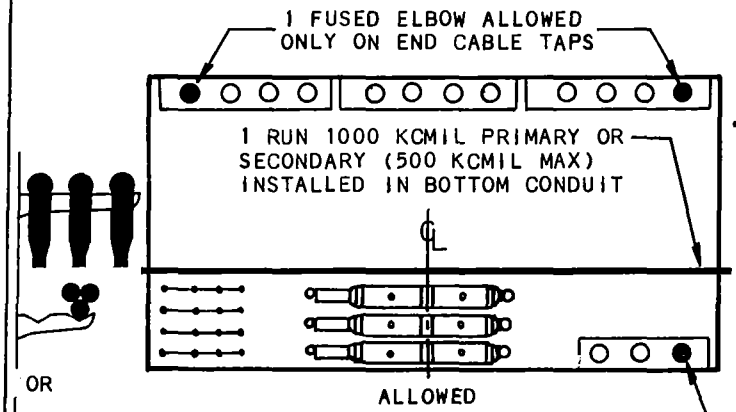

ALLOWED

4TH CABLE TAP AND FUSED ELBOW ALLOWED ONLY FOR THIRD FUSED ELBOW. (3 WAY ONLY)

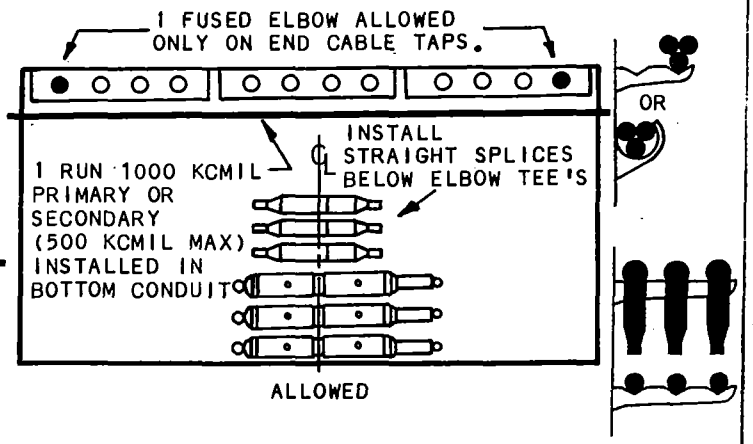

ALLOWED

3315

FOR ALL SIZES OF PRIMARY CABLES AND UP TO 500 KCMIL SECONDARY CABLES MAXIMUM.

	SDG&E ELECTRIC STANDARDS	
DATE 1-1-88 APPD JAB/RDB	EQUIPMENT COMBINATION GUIDELINES	3699.409

TABLE OF CONTENTS

TOP VIEW

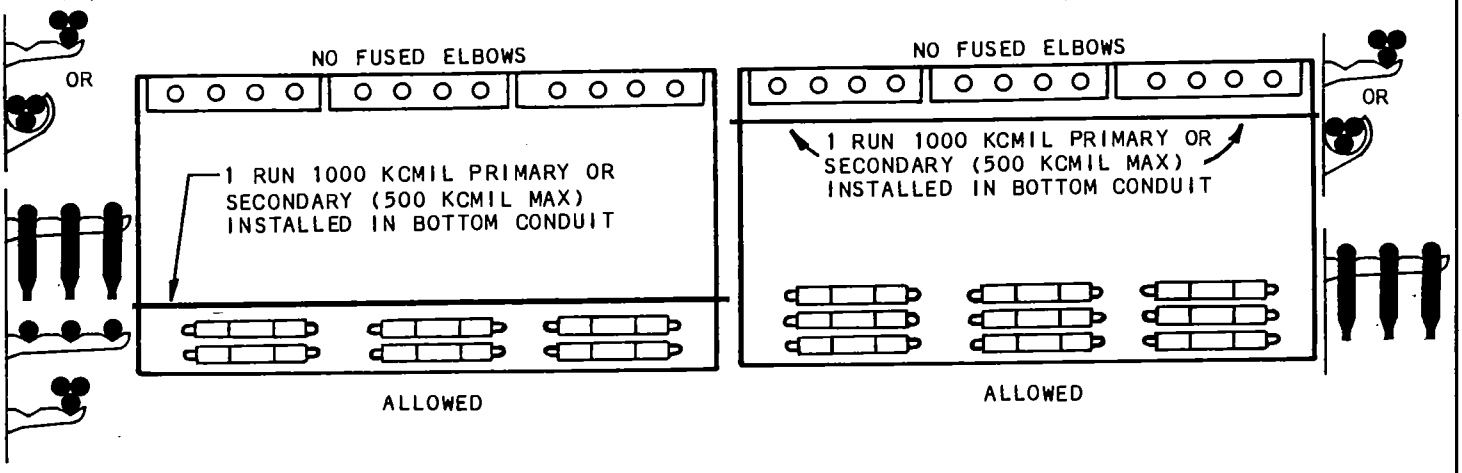

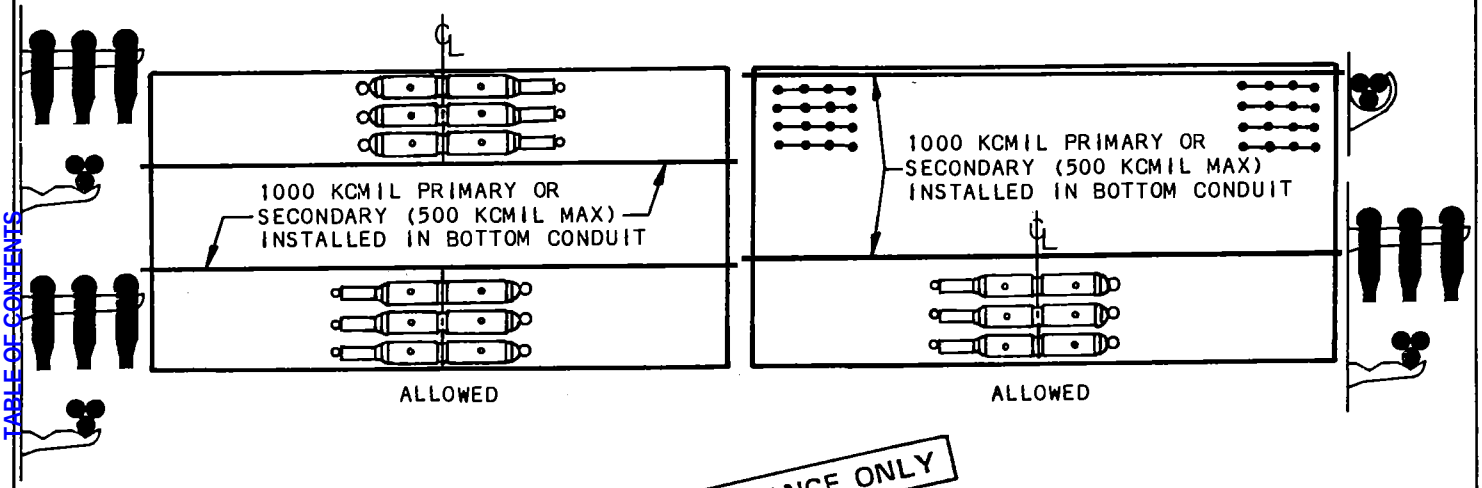

FOR FIELD MAINTENANCE ONLY

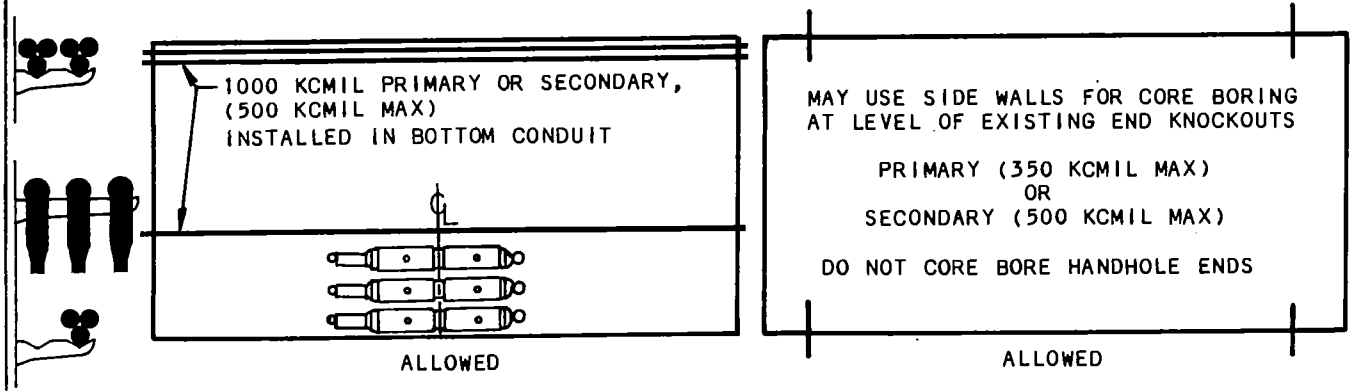

3315

FOR ALL SIZES OF PRIMARY CABLES AND UP TO 500 KCMIL SECONDARY CABLES MAXIMUM.

3699.410	SDG&E ELECTRIC STANDARDS EQUIPMENT COMBINATION GUIDELINES	DATE 1-1-88 APPD JLG/RDG

TABLE OF CONTENTS

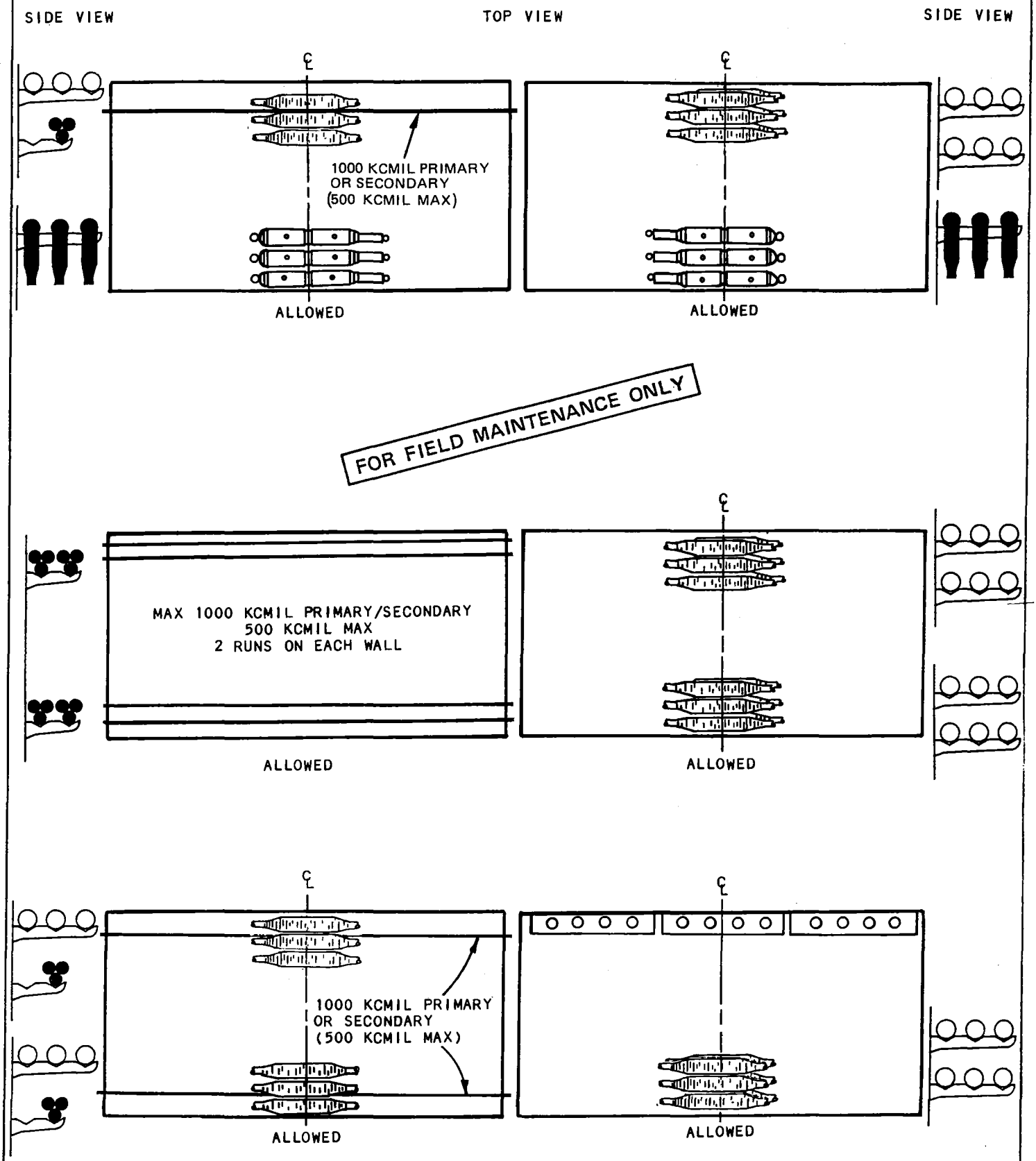

3315

FOR ALL SIZES OF PRIMARY CABLES AND UP TO 500 KCMIL SECONDARY CABLES MAXIMUM.

DATE 1-1-88 APPD JJG/RDS	SDG&E ELECTRIC STANDARDS EQUIPMENT COMBINATION GUIDELINES	3699.411

NOTE:

- **ONLY 3 CABLE TAPS ALLOWED ON EITHER WALL WHEN HANDHOLE REQUIRES A TRAFFIC COVER. TAPS MUST BE GROUPED TOGETHER AND CENTERED ON THE WALL.**
- WHEN ONLY ONE SET OF 600 AMP TEES ARE INSTALLED, USE THE BOTTOM OUTSIDE CONDUIT (CLOSEST TO THE WALL) AND INSTALL THE TEES ON THREE-WAY CABLE ARMS (STEPS).

TOP VIEW SIDE VIEW

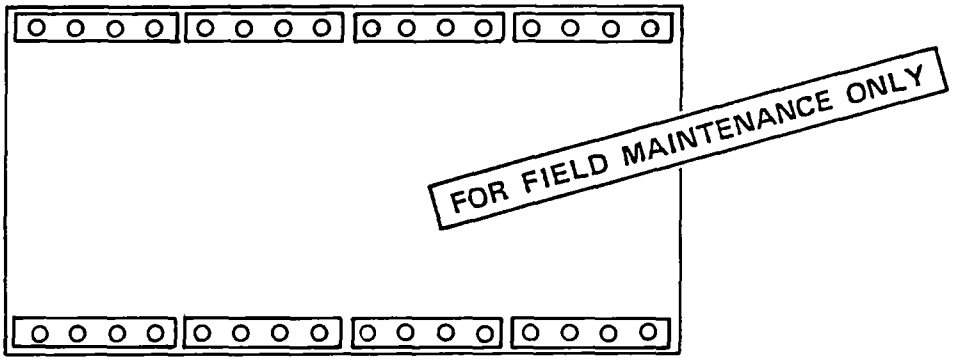

ALLOWED

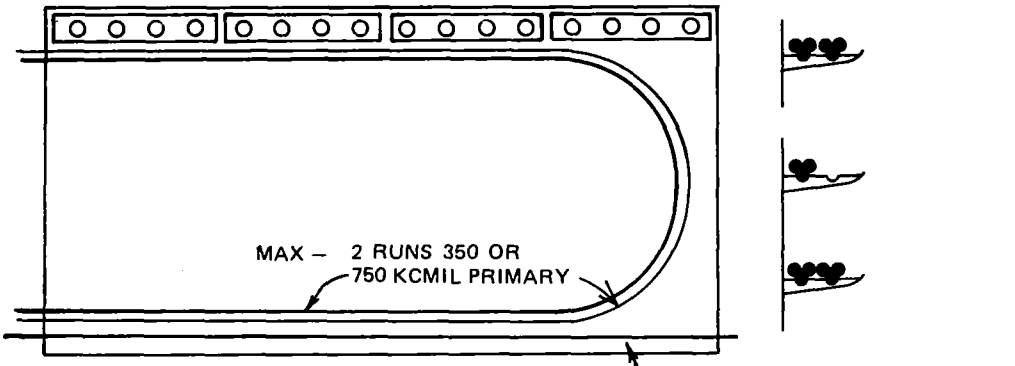

1 CABLE TAP
OR
3-200AMP DEADBREAK ELBOW TEES
OR
600 VOLT CONNECTORS

ALLOWED

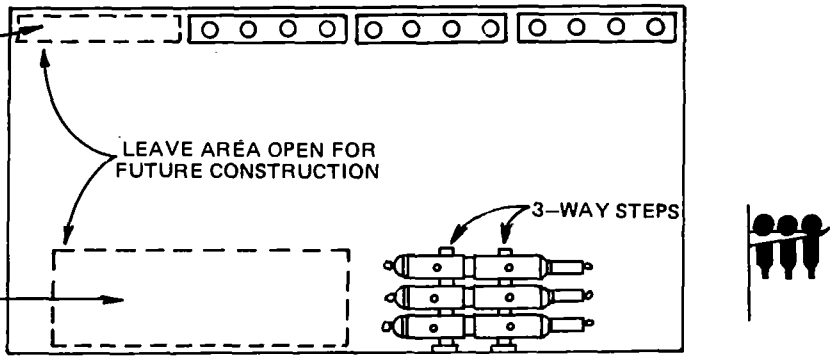

2 CABLE TAPS
OR
3-600 AMP TEES
OR
6-200 AMP DEADBREAK
ELBOWS
OR
600 VOLT CONNECTORS

ALLOWED

3316

FOR ALL SIZES OF PRIMARY CABLES AND UP TO 500 KCMIL SECONDARY CABLES MAXIMUM

3699.412	SDG&E ELECTRIC STANDARDS EQUIPMENT COMBINATION GUIDELINES	DATE 1-1-88 APPD.

TABLE OF CONTENTS

NOTE:

- **ONLY 3 CABLE TAPS ALLOWED ON EITHER WALL WHEN HANDHOLE REQUIRES A TRAFFIC COVER. TAPS MUST BE GROUPED TOGETHER AND CENTERED ON THE WALL.**
- WHEN ONLY ONE SET OF 600 AMP TEES IS INSTALLED, USE THE BOTTOM OUTSIDE CONDUITS (CLOSEST TO THE WALL) AND INSTALL THE TEES ON THREE-WAY STEPS.
- #2 OR 2/0 PRIMARY CABLES OR SECONDARY (500 KCMIL MAX) MAY BE PULLED IN ANY CONDUIT NOT USED FOR LARGER CABLES.

SIDE VIEW TOP VIEW SIDE VIEW

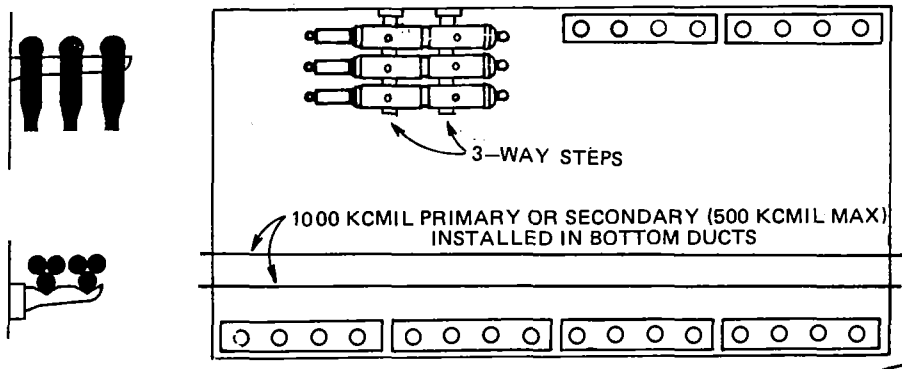

ALLOWED

FOR FIELD MAINTENANCE ONLY

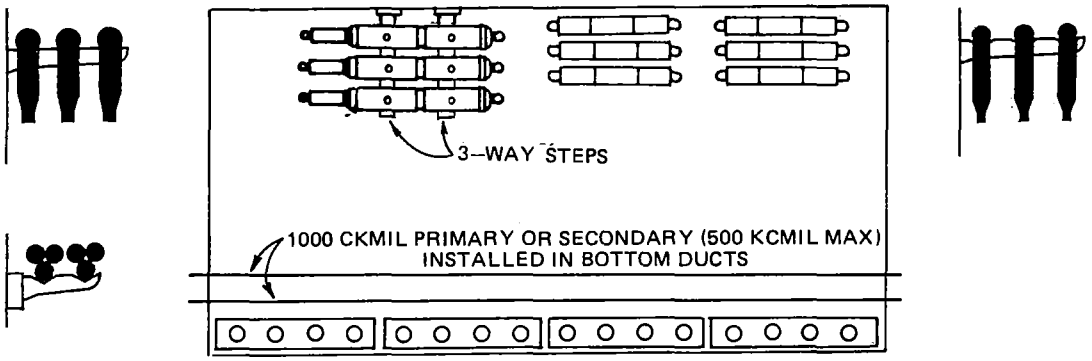

ALLOWED

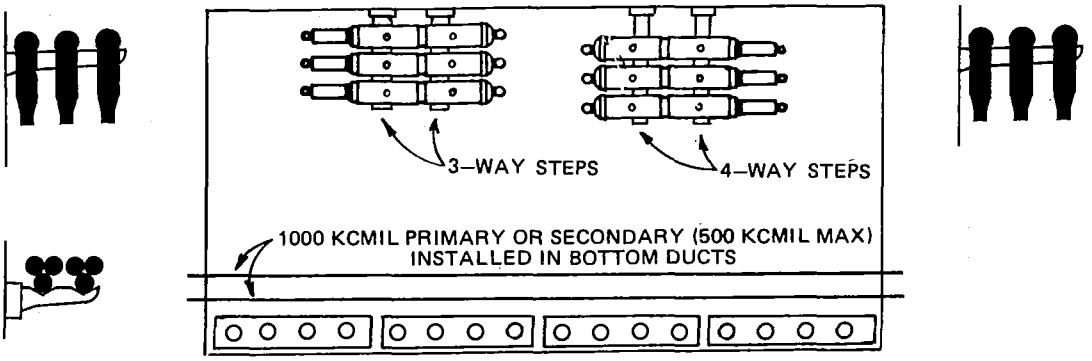

ALLOWED

3316

FOR ALL SIZES OF PRIMARY CABLES AND UP TO 500 KCMIL SECONDARY CABLES MAXIMUM

DATE 1-1-88 APPD JAB/RDS	SDG&E ELECTRIC STANDARDS EQUIPMENT COMBINATION GUIDELINES	3699.413

TABLE OF CONTENTS

NOTE:

- WHEN ONLY TWO SETS OF 600 AMP TEES ARE REQUIRED, INSTALL THEM ON ONE WALL. LEAVE THE OPPOSITE WALL OPEN FOR FUTURE CONSTRUCTION.

TOP VIEW SIDE VIEW

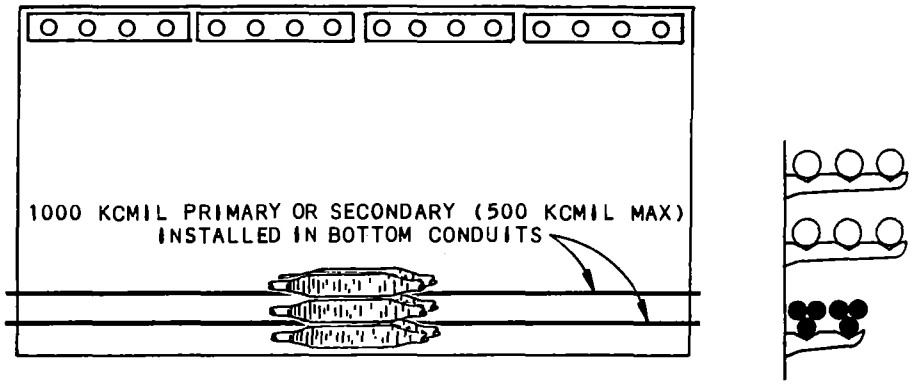

ALLOWED

FOR FIELD MAINTENANCE ONLY

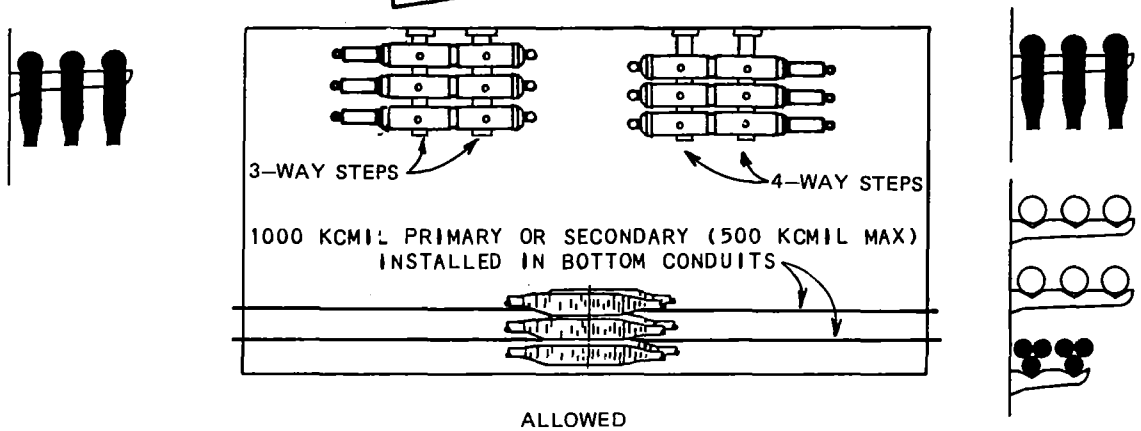

ALLOWED

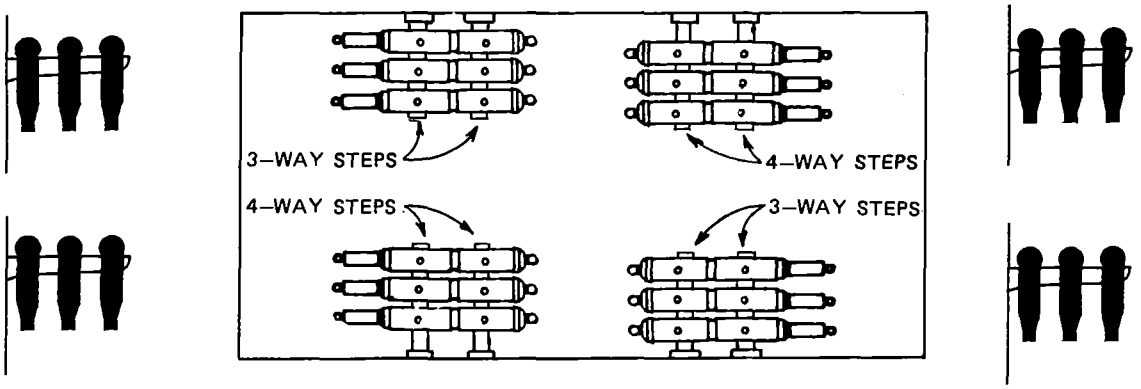

ALLOWED

3316

FOR ALL SIZES OF PRIMARY CABLES AND UP TO 500 KCMIL SECONDARY CABLES MAXIMUM

TABLE OF CONTENTS

3699.414	SDG&E ELECTRIC STANDARDS EQUIPMENT COMBINATION GUIDELINES	DATE 1-1-88 APPD JAB/RDP

SIDE VIEW TOP VIEW SIDE VIEW

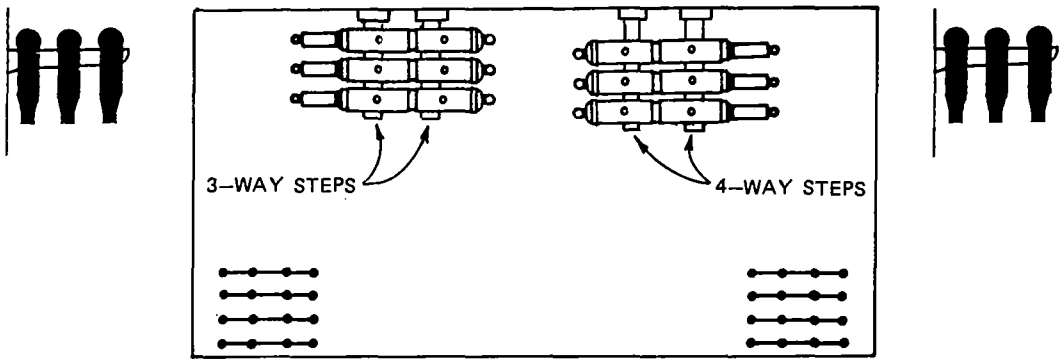

ALLOWED

FOR FIELD MAINTENANCE ONLY

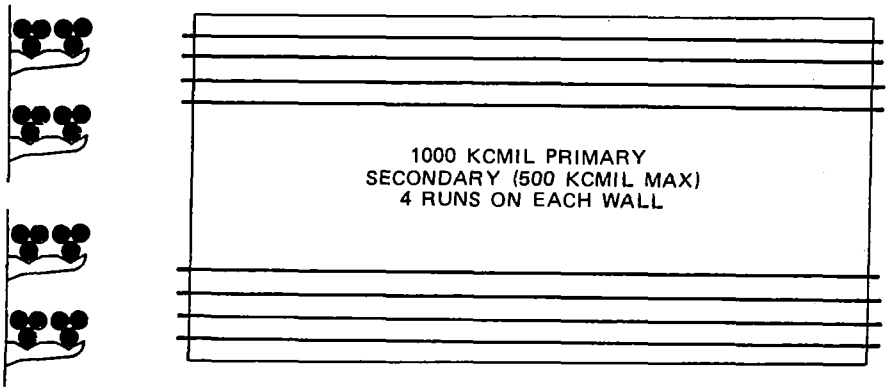

ALLOWED

MAY USE SIDE RECESSES OR KNOCKOUTS

FOR CONDUITS ENTERING SIDE WALLS,
NO CORE BORING IS REQUIRED.
(KNOCKOUTS ARE PROVIDED)

PRIMARY (350 KCMIL MAX)
OR
SECONDARY (500 KCMIL MAX)

DO NOT CORE BORE HANDHOLE ENDS.

ALLOWED

3316

FOR ALL SIZES OF PRIMARY CABLES AND UP TO 500 KCMIL SECONDARY CABLES MAXIMUM

TABLE OF CONTENTS

DATE 1-1-88 APPD JLG/RDO	SDG&E ELECTRIC STANDARDS EQUIPMENT COMBINATION GUIDELINES	3699.415

NOTES:

– ALL 350, 750 AND 1000 KCMIL CABLES MUST BE UNTRIPLEXED WHENEVER THEY ARE TRAINED AROUND THE CORNER (90° ANGLE) OF THE HANDHOLE. SEE STANDARD 3671 FOR UNTRIPLEXING CRITERIA AND DETAILED SWITCH INSTALLATION DRAWINGS.

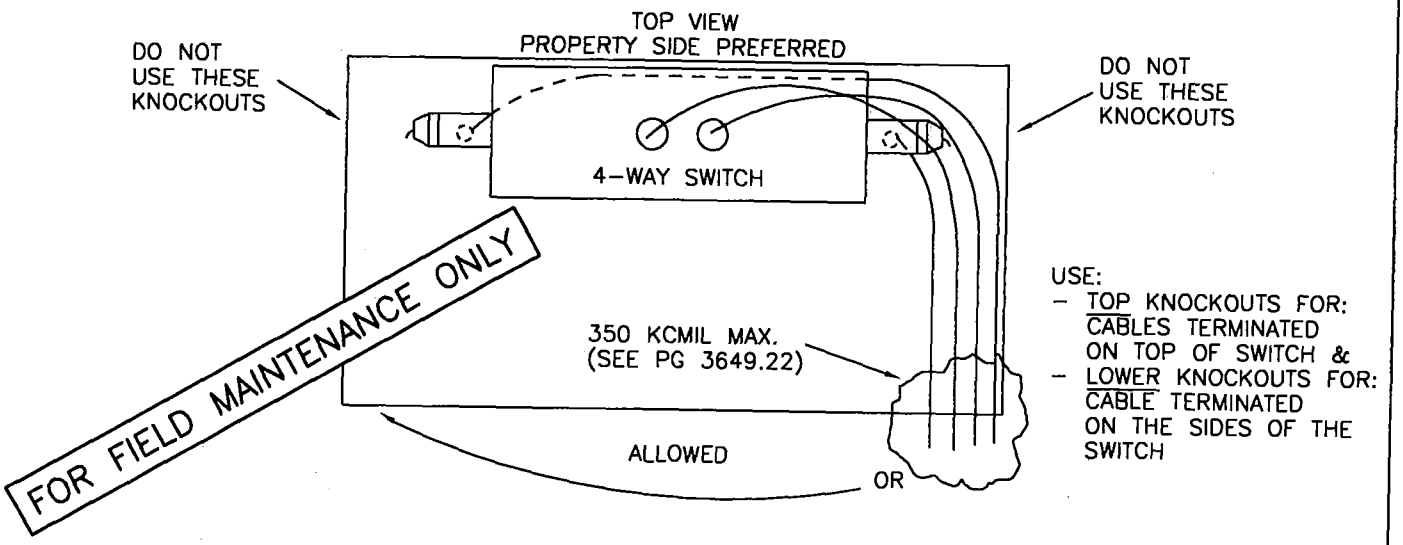

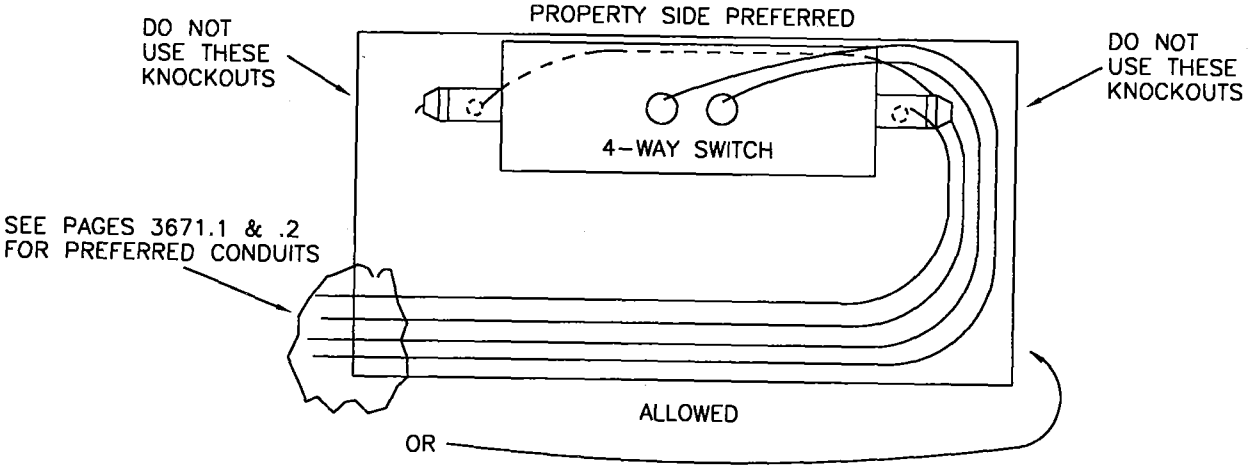

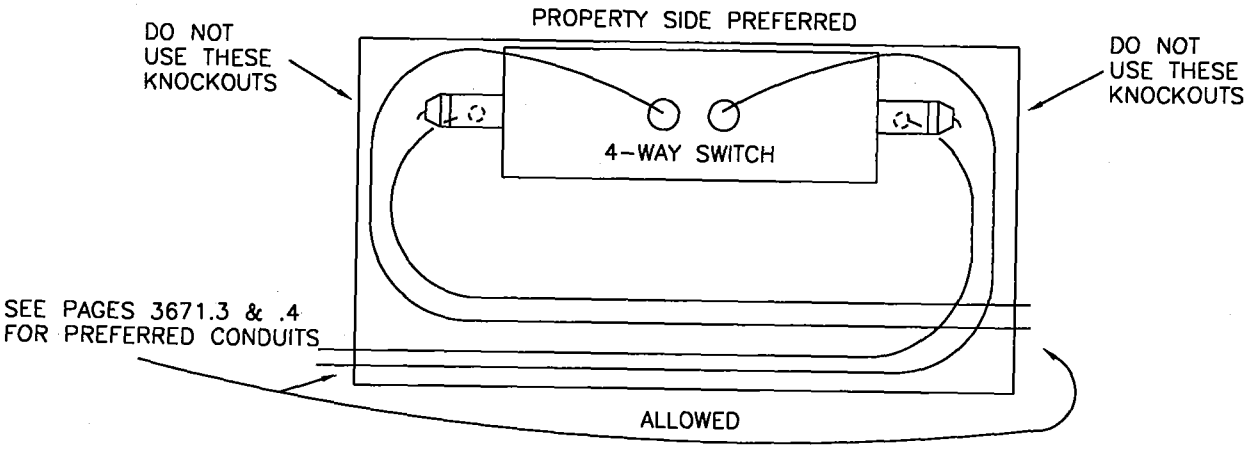

3316 WITH SUBSURFACE/SURFACE OPERABLE SWITCH

FOR ALL SIZES OF PRIMARY AND NO SECONDARY OTHER THAN FEED TO SUMP PUMP

DATE 1–1–89 APPD JLB/BDG	SDG&E ELECTRIC STANDARDS EQUIPMENT COMBINATION GUIDELINES	3699.416 SUPERSEDES 3649.24 (1–1–98)

TABLE OF CONTENTS

TABLE OF CONTENTS

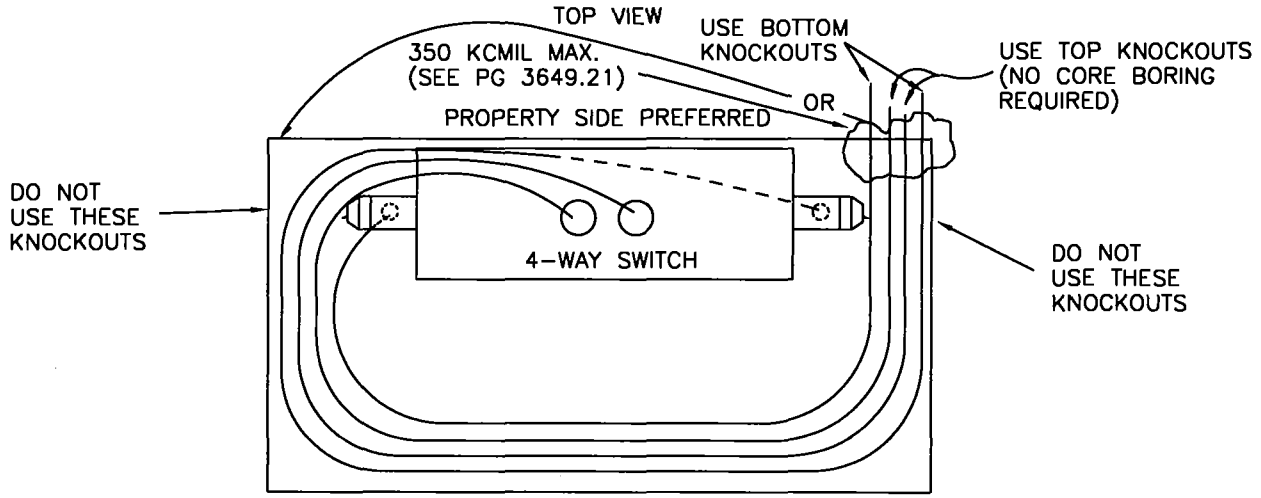

ALLOWED

FOR FIELD MAINTENANCE ONLY

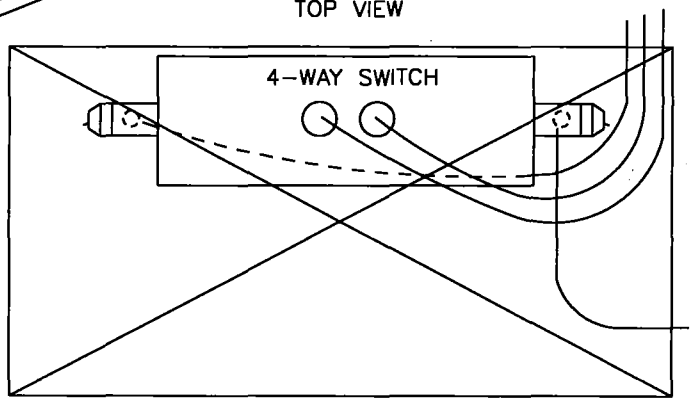

NOT ALLOWED

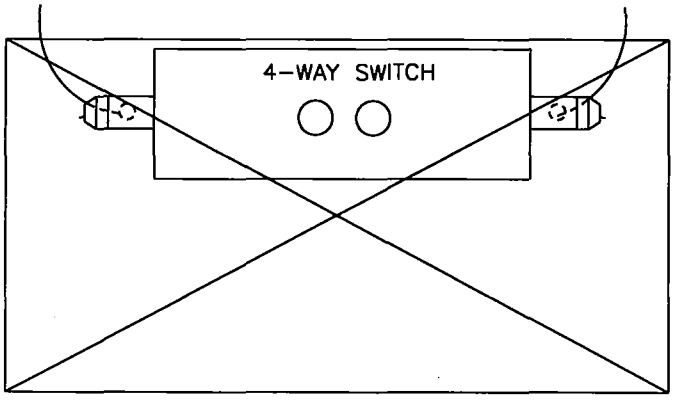

NOT ALLOWED

3316 WITH SUBSURFACE/SURFACE OPERABLE SWITCH

FOR ALL SIZES OF PRIMARY AND NO SECONDARY OTHER THAN FEED TO SUMP PUMP

3699.417 SUPERSEDES 3649.25 (1-1-98)	SDG&E ELECTRIC STANDARDS EQUIPMENT COMBINATION GUIDELINES	DATE 7-31-84 APPD RES / DRH

NOTES:

- SWITCHES SHOWN ARE THE MAXIMUM ALLOWED IN THE 3325 AND 3326 MANHOLES.
- PLACE SWITCHES ON WALL OPPOSITE THE MANHOLE OPENING.
- ALL CABLES TERMINATED ON A SWITCH MUST EXIT OR ENTER THE CONDUITS ON THE WALL OPPOSITE THE SWITCH (THE WALL UNDER THE MANHOLE OPENING OR IN CONDUITS INSTALLED IN RECESSES IN THE SIDES OF THE MANHOLE.)
- #2 OR 2/0 PRIMARY CABLES AND SECONDARY CABLES UP TO 500 KCMIL MAXIMUM MAY BE PULLED IN ANY CONDUIT NOT USED OR INTENDED FOR LARGER CABLES EXCEPT AS NOTED OTHERWISE.
- INSTALL PRIMARY CABLES IN THE LOWER CONDUITS AND SECONDARY ABOVE THE PRIMARY. FOR THE PRIMARY, USE THE LOWER CONDUIT CLOSEST TO THE WALL FIRST.
- PRIMARY OR SECONDARY CABLES PULLED STRAIGHT THROUGH MUST ENTER AND EXIT THE SAME CONDUIT POSITION ON OPPOSITE ENDS.
- NEVER INSTALL CABLE OR CONNECTORS LESS THAN 1 FOOT ABOVE THE FLOOR.
- 4-WAY SWITCHES ARE STAINLESS STEEL AND SHALL BE BOLTED AGAINST THE WALL AND SUPPORTED USING 4-54 INCH STAINLESS STEEL LEGS (STOCK NUMBER 457168) AND 8 -5/8" X 3-1/2" STAINLESS STEEL BOLTS (STOCK NUMBER 156750).

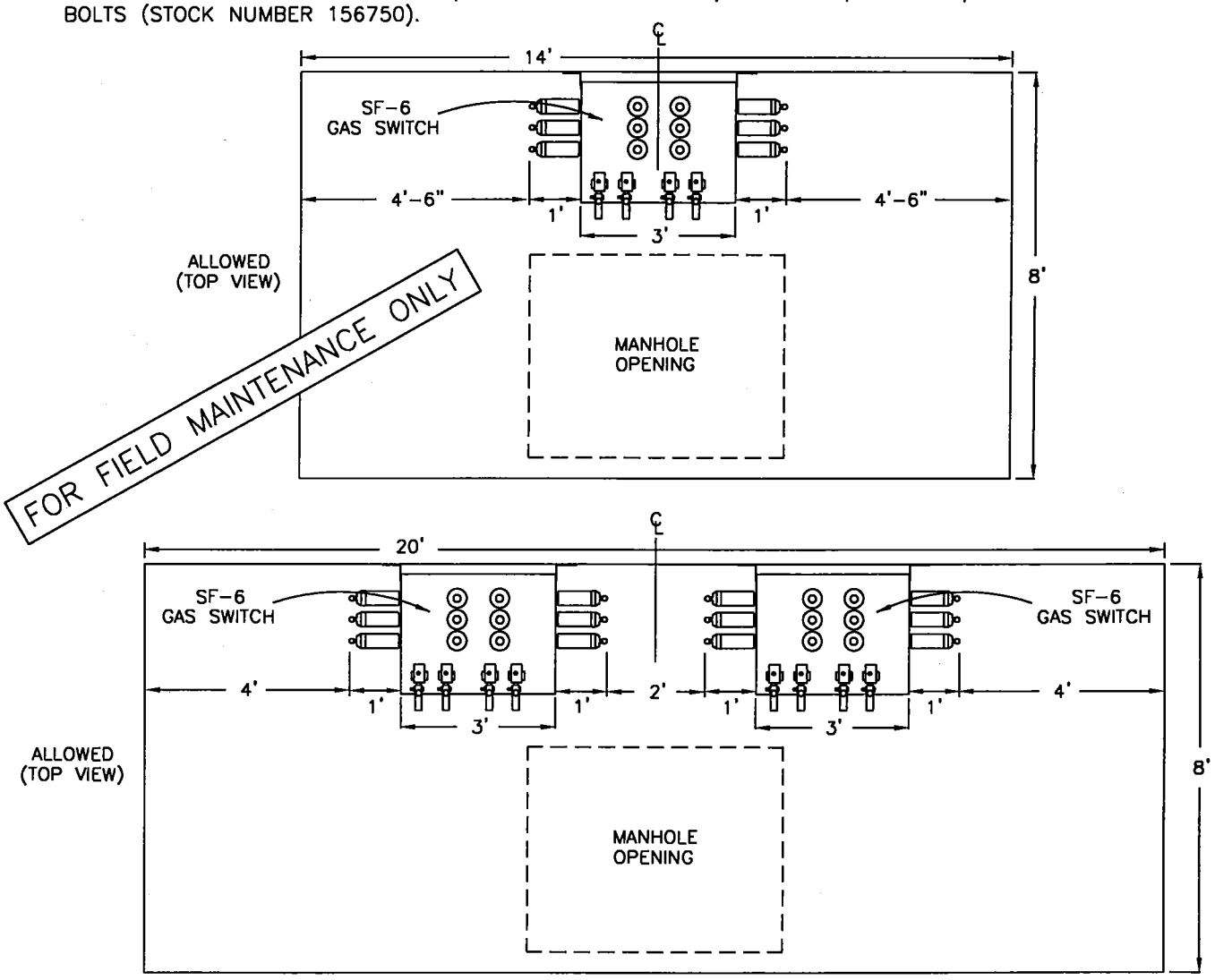

3325/3326

FOR ALL SIZES OF PRIMARY CABLES AND UP TO 500 KCMIL SECONDARY CABLES MAXIMUM.

DATE 1-1-96 APPD [signature]	SDG&E ELECTRIC STANDARDS EQUIPMENT COMBINATION GUIDELINES	3699.418 SUPERSEDES 3649.28 (1-1-98)

TABLE OF CONTENTS

NOTES:

- WHEN CABLE ENTERS THE MANHOLE AND MAKES AN IMMEDIATE 90° BEND AS SHOWN IN THE DRAWING, IT MUST BE UNTRIPLEXED AND INSTALLED IN THE THREE OUTSIDE POSITIONS NEAREST THE END OF A OF A 4-WAY STEP (SEE DETAIL BELOW).

FOR FIELD MAINTENANCE ONLY

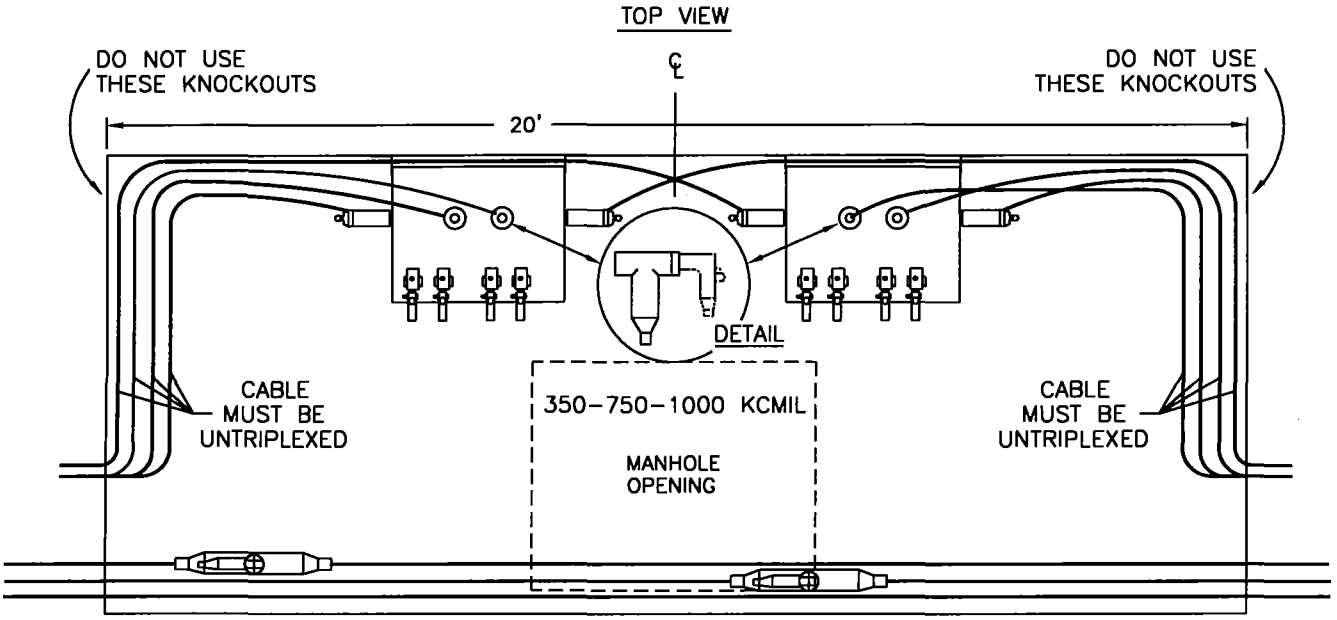

TABLE OF CONTENTS

3699.419 SUPERSEDES 3649.29 (1-1-98)	SDG&E ELECTRIC STANDARDS EQUIPMENT COMBINATION GUIDELINES	DATE 1-1-96 APPD

NOTES:

- SWITCHES SHOWN ARE THE MAXIMUM ALLOWED IN THE 3324 MANHOLE.
- PLACE SWITCHES ON WALL OPPOSITE THE MANHOLE OPENING.
- ALL CABLES TERMINATED ON A SWITCH MUST EXIT OR ENTER THE CONDUITS ON THE WALL OPPOSITE THE SWITCH (THE WALL UNDER THE MANHOLE OPENING OR IN CONDUITS INSTALLED IN RECESSES IN THE SIDES OF THE MANHOLE.)
- #2 OR 2/0 PRIMARY CABLES AND SECONDARY CABLES UP TO 500 KCMIL MAXIMUM MAY BE PULLED IN ANY CONDUIT NOT USED OR INTENDED FOR LARGER CABLES EXCEPT AS NOTED OTHERWISE.
- INSTALL PRIMARY CABLES IN THE LOWER CONDUITS AND SECONDARY ABOVE THE PRIMARY. FOR THE PRIMARY, USE THE LOWER CONDUIT CLOSEST TO THE WALL FIRST.
- PRIMARY OR SECONDARY CABLES PULLED STRAIGHT THROUGH MUST ENTER AND EXIT THE SAME CONDUIT POSITION ON OPPOSITE ENDS.
- NEVER INSTALL CABLE OR CONNECTORS LESS THAN 1 FOOT FROM THE FLOOR.
- 4-WAY SWITCHES ARE STAINLESS STEEL AND SHALL BE BOLTED AGAINST THE WALL USING THE 30 INCH SINGLE SUPPORT LEG (STOCK NUMBER 457166). EXCEPTIONS WOULD BE WHENEVER A SWITCH CANNOT BE PLACED AGAINST A WALL BECAUSE OF CABLE TRAINING OR SPACE LIMITATIONS. IN THESE CASES 4-54 INCH LEGS (OLD STYLE), WILL BE REQUIRED.

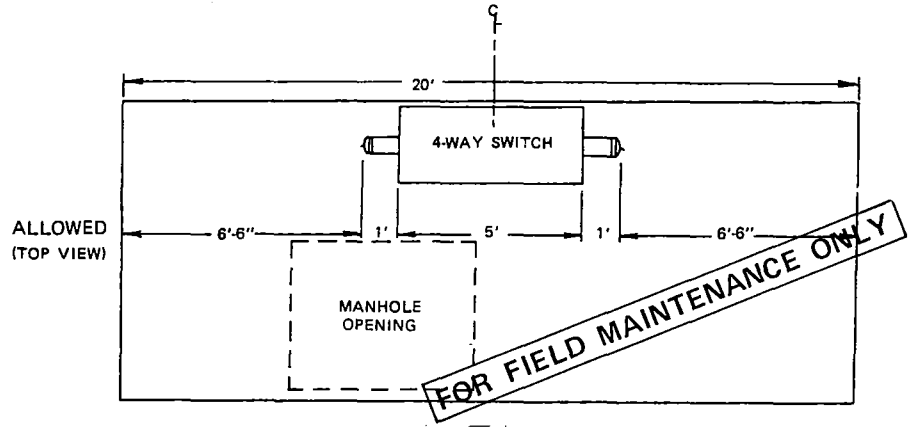

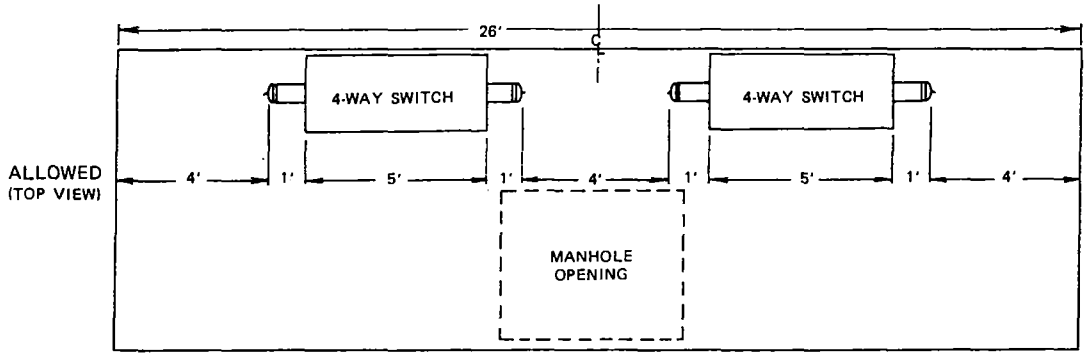

3324

FOR ALL SIZES OF PRIMARY CABLES AND UP TO 500 KCMIL SECONDARY CABLES MAXIMUM

ISSUE 1990 DATE 1-1-90 APPD	SDG&E ELECTRIC STANDARDS EQUIPMENT COMBINATION GUIDELINES	3699.416 SUPERCEDES 3649.28 (1-1-90)

SUBSTRUCTURES	MAJOR USE LIMITATION
3322 6' X 10' X 7' MANHOLE (PRIMARY & SECONDARY)	MAXIMUM INSTALLATION CONSISTS OF 4-350 KCMIL OR LARGER THREE-PHASE PRIMARY CIRCUITS WITH NO MORE THAN TWO OF THESE CIRCUITS WITH STRAIGHT SPLICES OR 600 AMP TEE'S. ONLY ONE 2-WAY 600 AMP SWITCH IS PERMITTED. OTHER SIZES OF PRIMARY AND SECONDARIES UP TO 500 KCMIL MAXIMUM ALSO PERMITTED. NO CABLE TAPS ALLOWED. ALWAYS MAINTAIN AN UNOBSTRUCTED SPACE TO ALLOW ACCESSIBILITY TO CABLE, EQUIPMENT AND CONDUIT. SEE STANDARD 4004 FOR MINIMUM BENDING RADII.

FOR FIELD MAINTENANCE ONLY

DATE 3-9-83 APPD JWT/JRH	SDG&E ELECTRIC STANDARDS SUBSTRUCTURE USE AND LIMITATIONS REFERENCE SHEET	3699.501 SUPERSEDES 3605.2 (3-9-83)

TABLE OF CONTENTS

TABLE OF CONTENTS

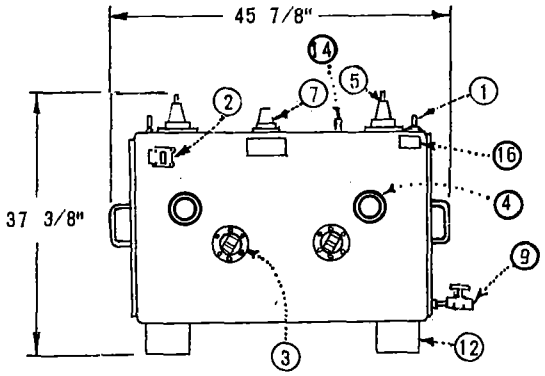

SIDE VIEW - 2 WAY
(ESCO)

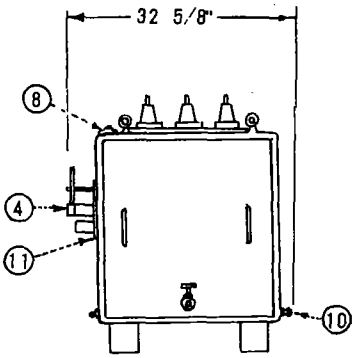

END VIEW

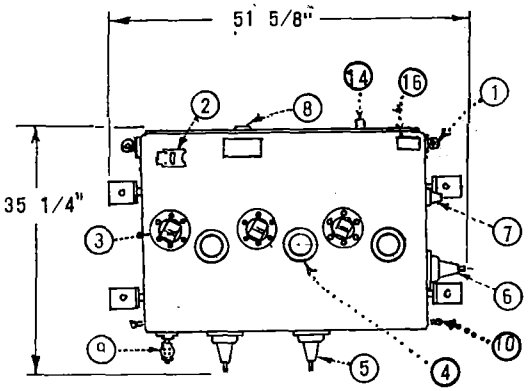

SIDE VIEW - 3 WAY
(ESCO)

FOR FIELD MAINTENANCE ONLY

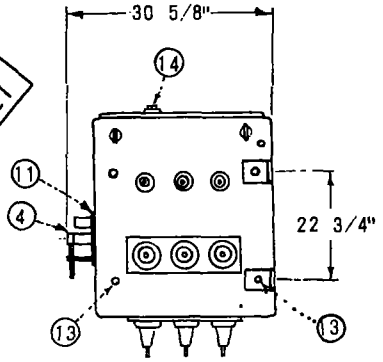

END VIEW

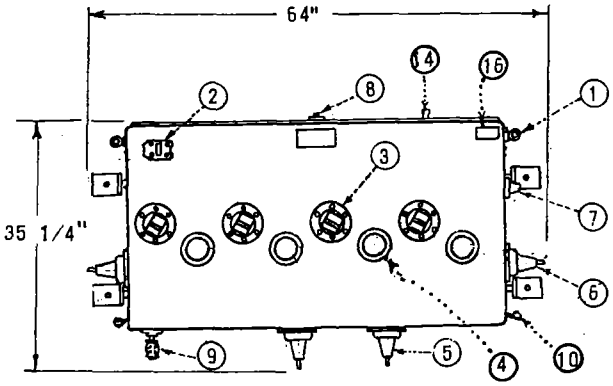

SIDE VIEW - 4 WAY
(ESCO)

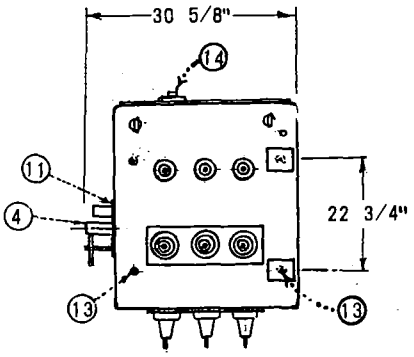

END VIEW

DATE 7/31/84 APPD. SRL/DRH	SDG&E ELECTRIC STANDARDS SUBSURFACE OIL SWITCH 600 AMP, 12KV, 3Ø	3699.701 SUPERCEDES 3670.1 (3-15-82)

TABLE OF CONTENTS

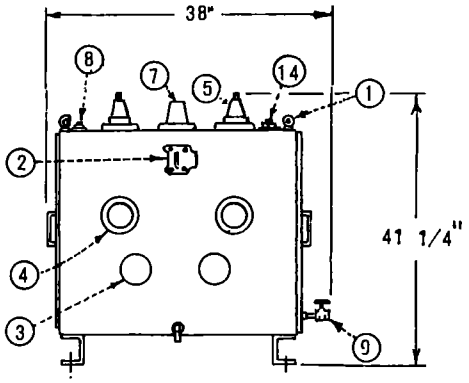

SIDE VIEW - 2 WAY
(G & W)

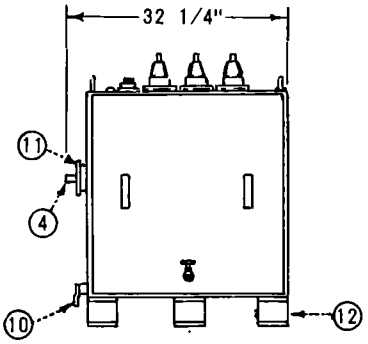

END VIEW

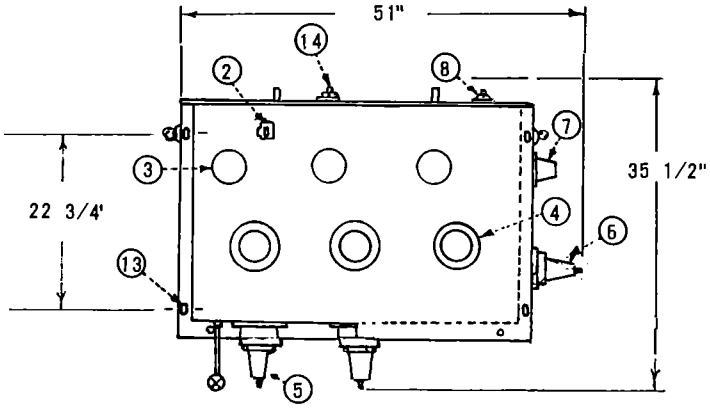

SIDE VIEW - 3 WAY
(G & W)

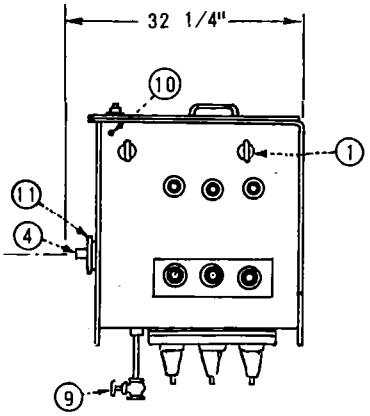

END VIEW

FOR FIELD MAINTENANCE ONLY

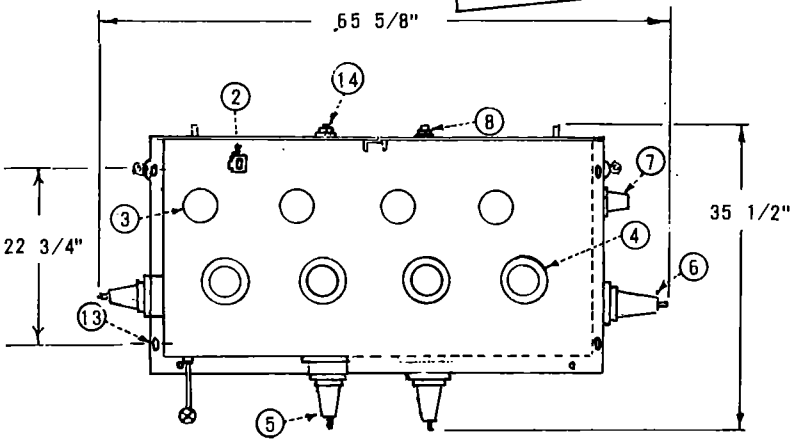

SIDE VIEW - 4 WAY
(G & W)

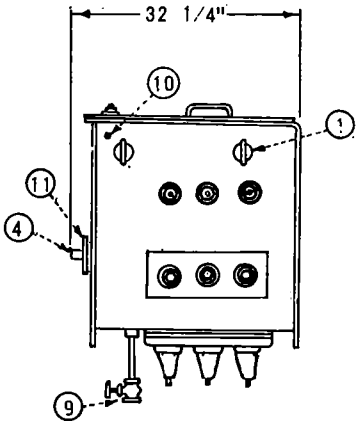

END VIEW

3699.702 SUPERCEDES 3670.2 (3-15-82)	SDG&E ELECTRIC STANDARDS SUBSURFACE OIL SWITCH 600 AMP, 12KV, 3Ø	DATE 7/31/84 APPD

(11)

SWITCH POSITION

SWITCH POSITIONS	
1	CLOSED
2	OPEN
3	TEST Ⓒ

ELECTRICAL RATINGS:	
VOLTAGE	15KV
BIL	110KV
CURRENT, CONTINUOUS	600 AMP
LOADMAKE AND LOADBREAK	600 AMP
MOMENTARY AND FAULT CLOSE (RMS, ASYMMETRICAL)	40,000 AMP
(RMS, SYMMETRICAL)	25,000 AMP

FOR FIELD MAINTENANCE ONLY

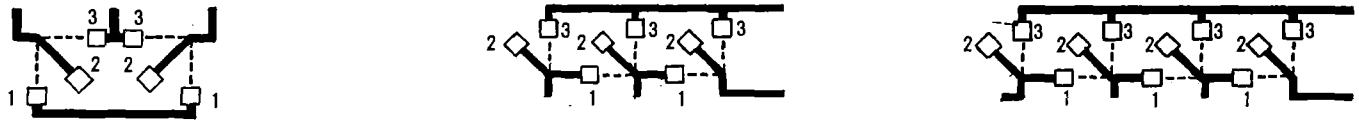

2 WAY ONE LINE DIAGRAM

3 WAY ONE LINE DIAGRAM

4 WAY ONE LINE DIAGRAM

TYPICAL ONE LINE DIAGRAMS

ATTENTION:

WAY WITH OPEN CONTACTS CAN STILL BE ENERGIZED DUE TO CONNECTION TO ADJACENT WAY.

NOTES:

A. MAJOR USE: SECTIONALIZING.

B. THIS SWITCH SHALL BE USED WITH POLYETHYLENE CABLES AND 600 AMPERE ELBOW T'S (4182).

Ⓒ 200 AMPERE TEST BUSHINGS ARE FOR TEMPORARY GROUNDING-TO MEET OSHA REQUIREMENTS-NOT FOR LOAD.

ITEM	DESCRIPTION	ITEM	DESCRIPTION	600 AMP	UNIT STOCK NUMBER
1	LIFTING EYES (REMOVABLE)	12	MOUNTING BRACKETS	2 WAY	708986
2	OIL LEVEL GAUGE	13	LEG MOUNTING HOLES	3 WAY	708979
3	LINK VIEWING WINDOWS	14	PRESSURE TEST VALVE	4 WAY	708977
4	OPERATING HANDLE ASSEMBLY	15	OPERATING HANDLE, ANTI-REVERSIBLE (NOT SHOWN)	–	–
5	BUSHINGS (600 AMP) ESNA 600				
6	BUSHINGS (600 AMP) ESNA 600	16	NAMEPLATE	–	–
7	BUSHINGS (200 AMP) GE SUREMAKE (LB) Ⓒ	–			
8	FILL PLUG	–			
9	DRAIN VALVE	–			
10	GROUND LUGS (2)	–			
11	POSITION LABELS (SEE SWITCH POSITION TABLE)	–			

SDG&E ELECTRIC STANDARDS

DATE 7/31/84
APPD [illegible]

SUBSURFACE OIL SWITCH
600 AMP, 12KV, 3Ø

3699.703
SUPERCEDES
3670.3 (3-15-82)

TABLE OF CONTENTS

MAJOR USE: SECTIONALIZING

ELECTRICAL RATINGS:	
VOLTAGE	15KV
BIL	110KV
CURRENT, CONTINUOUS	600 AMP
LOADMAKE AND LOADBREAK	600 AMP
MOMENTARY AND FAULT CLOSE (RMS, ASYMMETRICAL)	40,000 AMP
(RMS, SYMMETRICAL)	25,000 AMP

600 AMP	UNIT STOCK NUMBER
ON-OFF	708982
3 WAY	708983
4 WAY	708984

SWITCH POSITION

SWITCH POSITIONS	
1	CLOSED
2	OPEN

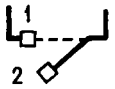

ON-OFF ONE LINE DIAGRAM

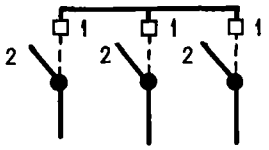

3 WAY ONE LINE DIAGRAM

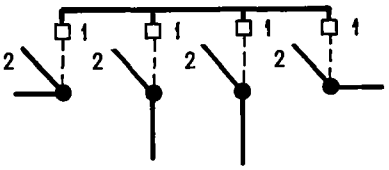

4 WAY ONE LINE DIAGRAM

TYPICAL ONE LINE DIAGRAMS

NOTES:

A. THIS SWITCH SHALL BE USED WITH POLYETHYLENE CABLES AND 600 AMPERE ELBOW T'S (4182).

B. SWITCH NUMBER TO BE ASSIGNED BY ELECTRIC DISTRIBUTION ENGINEERING.

FOR FIELD MAINTENANCE ONLY

TABLE OF CONTENTS

3699.704 SUPERCEDES 3670.4 (3-15-82)	SDG&E ELECTRIC STANDARDS SUBSURFACE OIL SWITCH 600 AMP, 12KV, 3Ø	DATE 7/31/84 APPD. RH / DRH

SCOPE: THIS STANDARD SHOWS SUBSURFACE/SURFACE OPERABLE 600 AMP SWITCHES.

ON–OFF OIL SWITCH

WEIGHT: W/O OIL 355#
W/ OIL 700#

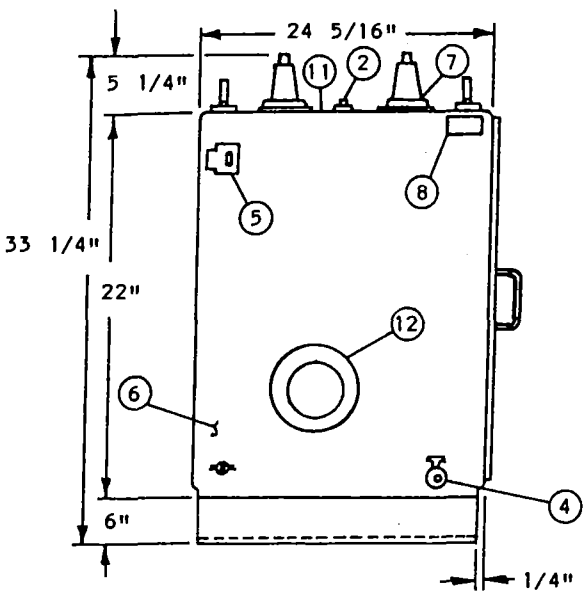

FRONT VIEW

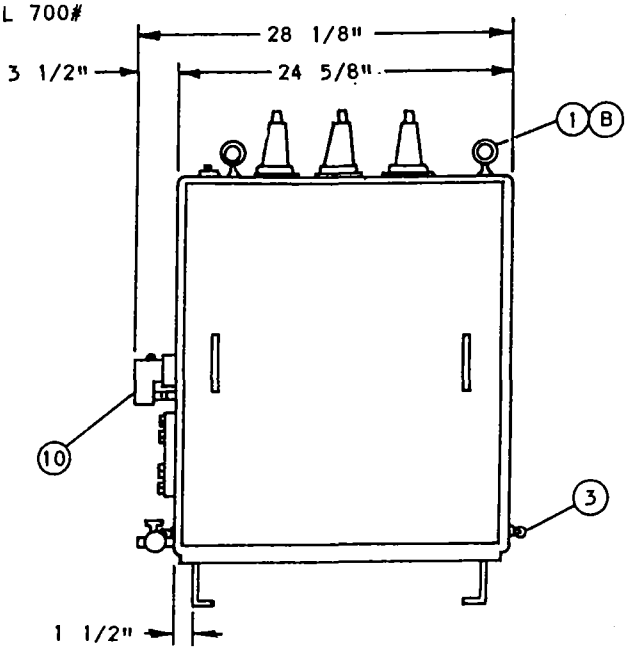

END VIEW

FOR FIELD MAINTENANCE ONLY

4–WAY OIL SWITCH

WEIGHT: W/O OIL 575#
W/ OIL 1400#

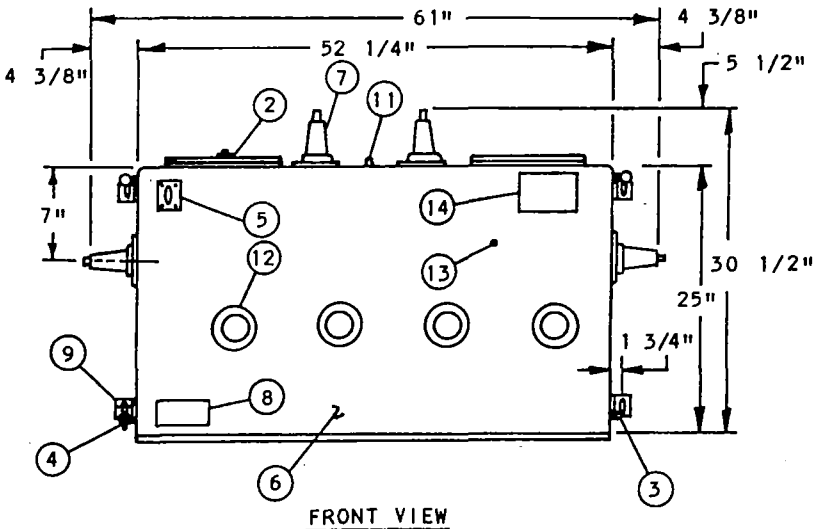

FRONT VIEW

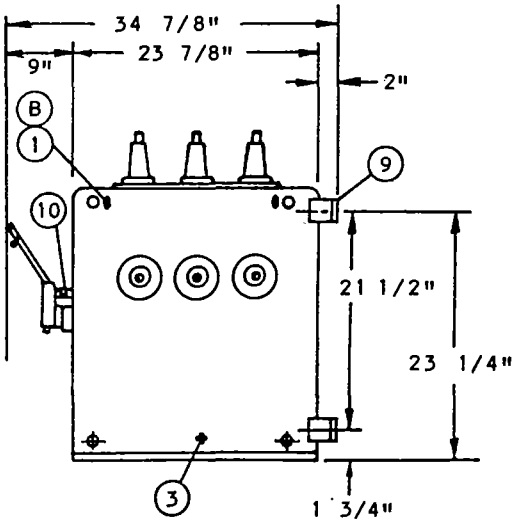

END VIEW

TABLE OF CONTENTS

DATE 1-1-90 APPD	SDG&E ELECTRIC STANDARDS SUBSURFACE/SURFACE OPERABLE OIL SWITCH 12KV, 600 AMP, 30	3699.705 SUPERCEDES 3670.1 (1-1-90)

ELECTRICAL RATINGS	
VOLTAGE	15.0 KV
BIL	110 KV
CURRENT, CONTINUOUS	600 AMP
LOADMAKE AND LOADBREAK	600 AMP
MOMENTARY AND FAULT CLOSE (RMS, ASYMMETRICAL) (RMS, SYMMETRICAL)	19,200 AMP 12,000 AMP

600 AMP	UNIT STOCK NUMBER
ON-OFF	708982
4-WAY (STAINLESS STEEL)	708770

TYPICAL ONE LINE DIAGRAMS

FOR FIELD MAINTENANCE ONLY

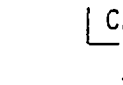

ON-OFF LINE DIAGRAM

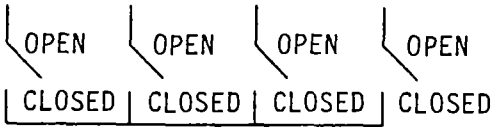

4-WAY ONE LINE DIAGRAM

SWITCH PARTS LIST

ITEM	DESCRIPTION	ITEM	DESCRIPTION
1	LIFTING EYES, REMOVABLE	8	NAME PLATE
2	FILL PLUG	9	MOUNTING ANGLES
3	GROUND LUG	10	OPERATOR HANDLE ASSEMBLY (WITH INTERNAL SPRINGS)
4	DRAIN VALVE	11	AIR CHECK VALVE
5	OIL LEVEL GAUGE	12	VIEWING WINDOW
6	SWITCH TANK	13	HANDLE HANGER (4-WAY SWITCH ONLY)
7	600 AMP BUSHING ASSEMBLY	14	CONNECTION DIAGRAM (4-WAY SWITCH ONLY)

NOTES:

- SWITCH MEASUREMENTS MAY VARY WITH DIFFERENT SUPPLIERS.
- SWITCHES ARE DELIVERED FROM THE SUPPLIERS WITH ALL THE PARTS LISTED IN THE PARTS LISTED.
- SWITCH NUMBERS ARE ISSUED BY THE ENGINEERING CLERK IN EACH DISTRICT.
- THE SWITCHES SHALL BE USED WITH POLYETHYLENE CABLES AND 600 AMP ELBOW TEES.
- FOR REPLACEMENT OF AN EXISTING 18 INCH SWITCH LEG, USE STOCK NUMBER 457162.

INSTALLATION:

A. 4-WAY SWITCHES ARE STAINLESS STEEL AND SHALL BE BOLTED AGAINST THE WALL. USE THE 30 INCH STAINLESS STEEL SINGLE SUPPORT LEG (STOCK NUMBER 457166) FOR THE 3316 HANDHOLE INSTALLATION. FOR MANHOLE OR VAULT INSTALLATIONS, USE 4-54 INCH STAINLESS STEEL LEGS (STOCK NUMBER 457168), 8-5/8" X 3-1/2" STAINLESS STEEL BOLTS (STOCK NUMBER 156750(E)) AND 8 GALVANIZED WASHERS (STOCK NUMBER 800256).

(B) LIFTING EYES ARE NOT STAINLESS STEEL AND SHOULD BE REMOVED AFTER THE SWITCH IS INSTALLED.

C. USE THE CORBIN #27 LOCK (STOCK NUMBER 514848(E)) TO LOCK SWITCH POSITIONS.

D. OIL SWITCHES MUST BE LEVEL. THE LEVELING REQUIREMENT IS A TOLERANCE OF 1/2 INCH FROM THE FRONT TO THE BACK OR 1/2 INCH END TO END.

(E) EXEMPT MATERIAL.

(F) DEVIATION REQUEST REQUIRED FOR INSTALLATION OF ON-OFF SWITCH OR 4-WAY SWITCH. (SEE STANDARD 3005 FOR DEVIATION REQUEST FORM AND PROCEDURE).

REFERENCE:

G. SEE STANDARD 3212 FOR SWITCH IDENTIFICATION.

H. SEE STANDARD 3649 FOR EQUIPMENT COMBINATION GUIDELINES FOR SWITCHES IN MANHOLES.

I. SEE STANDARD 3671 FOR SWITCH INSTALLATION IN A 3316 HANDHOLE.

J. SEE STANDARD 4181.3 FOR SUBSURFACE/SURFACE OPERABLE SWITCH CONNECTIONS.

TABLE OF CONTENTS

SCOPE: THIS STANDARD SHOWS THE MATERIAL AN INSTALLATION REQUIREMENTS FOR INSTALLING A ON-OFF SUBSUBFACE/ SURFACE OPERABLE SWITCH IN A 3315 HANDHOLE.

ON-OFF SWITCH IN A 3315 HANDHOLE INSTALLATION

FIGURE 1

TOP VIEW

(B) STREET SIDE

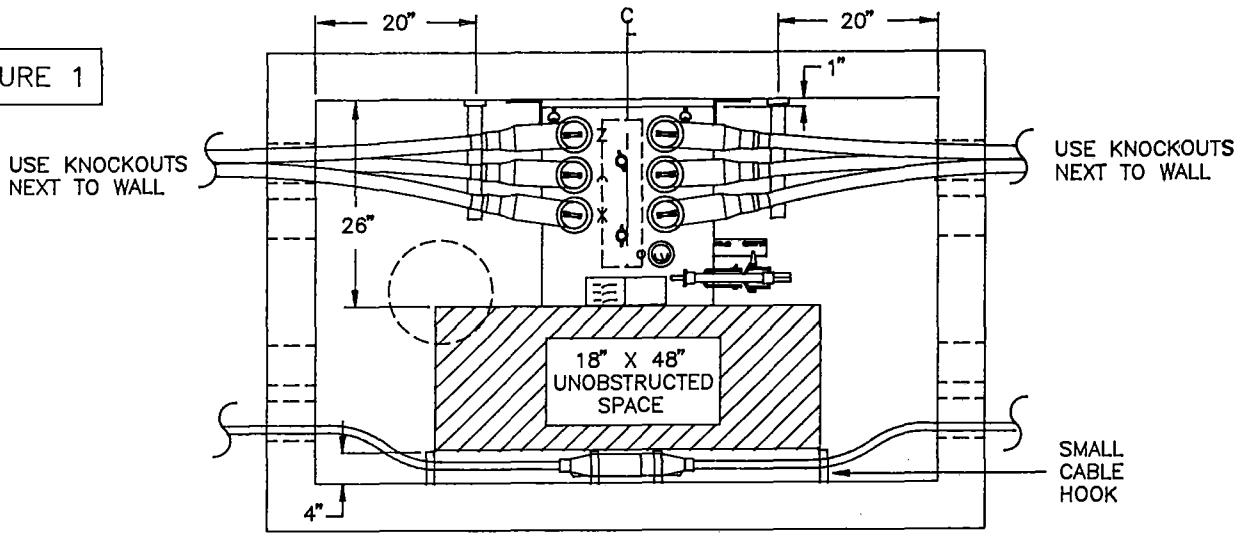

FOR FIELD MAINTENANCE ONLY

FIGURE 2

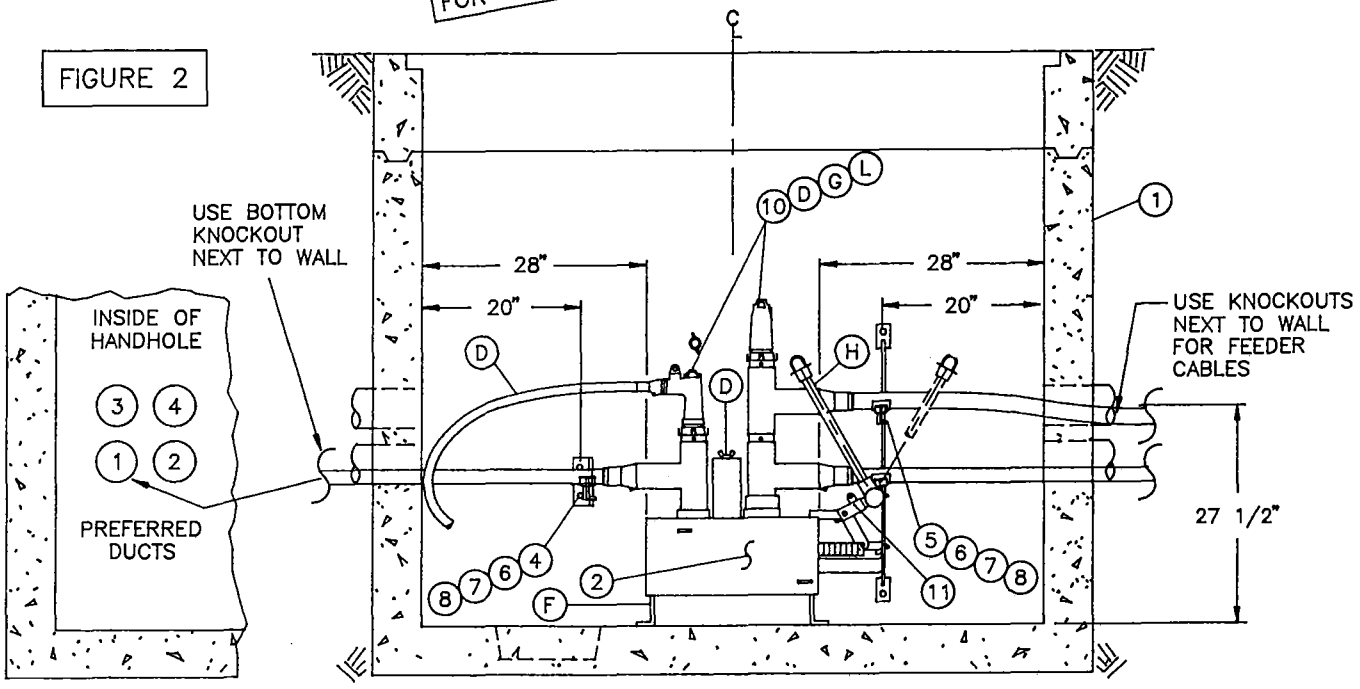

DATE 1-1-94 APPD JLB/	SDG&E ELECTRIC STANDARDS SUBSURFACE/SURFACE OPERABLE SF-6 GAS SWITCH 12KV, 600 AMP, 3 PHASE	3699.707 SUPERCEDES 3671.1 (1-1-94)

TABLE OF CONTENTS

NOTES:

- "PIGGYBACK" TEES SHOWN IN THIS STANDARD SHALL ONLY BE USED TO FEED A SWITCHED TIE POSITION.
- OTHER CONFIGURATIONS MAY BE DESIGNED PROVIDED EQUIPMENT LIMITIONS AND THE PROPER UNOBSTRUCTED SPACE ARE PROVIDED TO ALLOW PERSONNEL TO PERFORM THEIR WORK SAFELY AND ALLOW ACCESS TO THE CONDUITS.

BILL OF MATERIAL:

ITEM	DESCRIPTION	QUANTITY	CONST STD. OR PAGE NO.	STOCK NUMBER
1	HANDHOLE (PARKWAY OR TRAFFIC) (A)	AS REQ'D	3315	–
2	12KV SUBSURFACE/SURFACE OPERABLE SWITCH, 600A, ON–OFF	1	3670	708982
3	PROTECTOR, CABLE U.G.	AS REQ'D	–	558720
4	ADAPTER, CABLE ARM	AS REQ'D	4178	102016
5	HANGER, CABLE ARM, 34"/36"	AS REQ'D	4178	564480
6	CABLE ARM, 15" (3 WAY)	AS REQ'D	4178	110528
7	CABLE INSULATOR	AS REQ'D	4178	430592
8	TIE STRAP	AS REQ'D	4178	738440
9	ANCHOR, CONCRETE STAINLESS STEEL, 1/2" X 3–3/4"	AS REQ'D	4178	107654
10	12KV, 200A (LOADBREAK) & 600A CONNECTORS (D)	AS REQ'D	4181	–
11	PADLOCK, (SCHLAGE ELECT SERIES)	1	–	514848
12	AUTOMATIC FAULT INDICATOR (O)	AS REQ'D	4352	–

FOR FIELD MAINTENANCE ONLY

INSTALLATION:

(A) A STANDARD 3315 HANDHOLE IS REQUIRED FOR THE ON–OFF SWITCH. THE NUMBER OF CABLES AND CONNECTORS REQUIRED WILL DETERMINE WHICH HANDHOLE TO USE.

(B) THE SWITCH BOLTED TO THE STREET SIDE WALL IS PREFERRED. THIS ALLOWS CABLE TAPS TO BE OPERATED FROM THE STREET OR SIDEWALK SIDE.

C. INSTALL CABLE AND CABLE SUPPORTS, ETC. IN THE HANDHOLE AND ON THE SWITCH AS SHOWN IN THE INSTAL–LATION DRAWINGS.

(D) ON THE 200 AMP CABLE, LOOP THE HOLE LEAVING ENOUGH SLACK TO REACH BOTH SETS OF 600 AMP TEES. A STAND OFF BAR, STOCK NUMBER 677240 WILL BE REQUIRED TO ATTACH TO THE STAND OFF BRACKET WHEN TEMPORARLY LANDING LOADBREAK ELBOWS. ALL 200 AMP CONNECTORS ON THE SWITCH SHALL BE LOADBREAK.

(F) LEVELING OF THE SF–6 GAS SWITCH IS NOT REQUIRED. DO NOT INSTALL SWITCH ANY HIGHER OFF THE FLOOR THAN SHOWN IN THE INSTALLATION DRAWING DUE TO CABLE ARRANGEMENT.

(G) DO NOT INSTALL LOADBREAK ELBOWS ON PIGGYBACK TEES FOR A PERMANENT INSTALLATION.

(H) THE REMOVABLE OPERATING HANDLE IS TO REMAIN PERMANENTLY ATTACHED TO THE SWITCH..

REFERENCE:

I. SEE STANDARD 3200 FOR SWITCH IDENTIFICATION NUMBERS AND CABLE ID TAGS.

J. SEE STANDARD 3670 FOR SUBSURFACE SWITCH.

K. SEE PAGE 3374.3 FOR CONDUIT INSTALLATION PRACTICES.

(L) SEE STANDARD 4181 FOR 12KV 200 AND 600 AMP CONNECTOR ASSEMBLIES.

M. SEE STANDARD 4530 FOR NEUTRAL AND GROUND WIRE DIAGRAM.

N. SEE DESIGN STANDARD 6111 FOR SWITCH APPLICATION.

(O) SEE DESIGN STANDARD 6113 FOR AUTOMATIC FAULT INDICATOR APPLICATION.

TABLE OF CONTENTS

3699.708 SUPERCEDES 3671.3 (1–1–94)	SDG&E ELECTRIC STANDARDS SUBSURFACE/SURFACE OPERABLE SF–6 GAS SWITCH 12KV, 600 AMP, 3 PHASE	DATE 1–1–94 APPD JLG/RJC

SCOPE: THIS STANDARD SHOWS A SUBSURFACE/SURFACE OPERABLE 600 AMP SF-6 GAS SWITCH.

ON-OFF SWITCH

WEIGHT: 140#

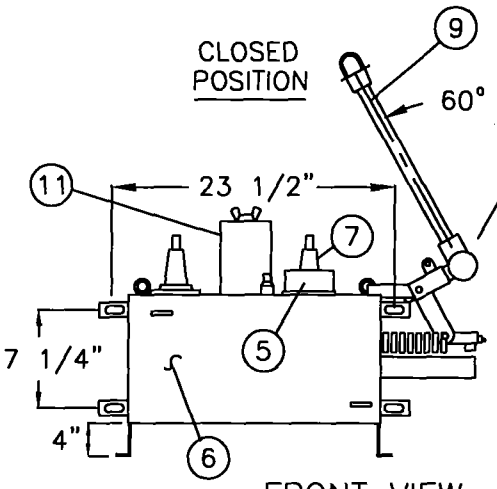

FRONT VIEW

FOR FIELD MAINTENANCE ONLY

DEVIATION REQUEST IS NOT REQUIRED
FOR NEW INSTALLATION OF ON-OFF SWITCH

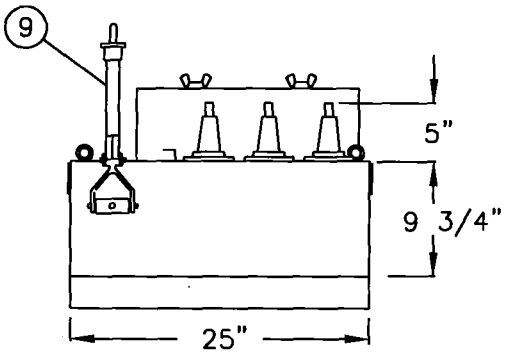

END VIEW

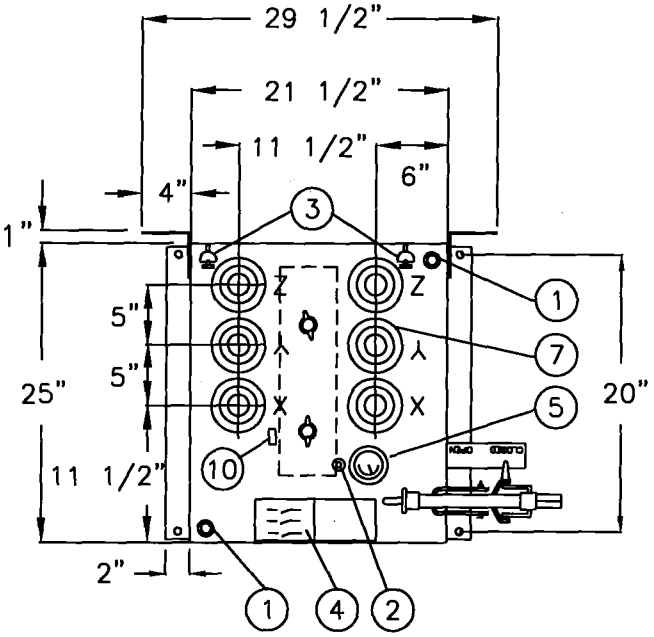

TOP VIEW

3699.709 SUPERSEDES 3670.1 (1-1-98)	SDG&E ELECTRIC STANDARDS SUBSURFACE/SURFACE OPERABLE SF-6 GAS SWITCH 12KV, 600 AMP, THREE-PHASE	DATE 1-1-91 APPD JLG/BDJ

TABLE OF CONTENTS

ELECTRICAL RATINGS	
VOLTAGE	15.5 KV
BIL	95 KV
CURRENT, CONTINUOUS	600 AMP
LOADMAKE AND LOADBREAK	600 AMP
MOMENTARY AND FAULT CLOSE (RMS, ASYMMETRICAL) (RMS, SYMMETRICAL)	32,000 AMP 20,000 AMP

600 AMP	UNIT STOCK NUMBER	ASSEMBLY UNIT
ON-OFF (STAINLESS STEEL)	708982 (A)(B)	SW-O/O

FOR FIELD MAINTENANCE ONLY

TYPICAL ONE LINE DIAGRAM

OPEN /

CLOSED —

ON-OFF ONE LINE DIAGRAM

SWITCH PARTS LIST

ITEM	DESCRIPTION	ITEM	DESCRIPTION
1	LIFTING EYES	6	SWITCH TANK
2	SF-6 FILL VALVE	7	600 AMP BUSHING ASSEMBLY
3	GROUND LUG	8	MOUNTING ANGLES
4	NAME PLATE AND CONNECTION DIAGRAM	9	REMOVABLE OPERATING HANDLE
5	COLOR CODED PRESSURE GAUGE	10	HANDLE HANGER
		11	STAND OFF BRACKET

NOTES:

- SWITCH MEASUREMENTS MAY VARY WITH DIFFERENT SUPPLIERS.
- SWITCHES ARE DELIVERED FROM THE SUPPLIERS WITH ALL THE PARTS LISTED IN THE PARTS LISTED.
- SWITCH NUMBERS ARE ISSUED BY THE ENGINEERING CLERK IN EACH DISTRICT.
- THE SWITCHES SHALL BE USED WITH POLYETHYLENE CABLES AND 600 AMP ELBOW TEES.

INSTALLATION:

(A) DEVIATION REQUEST IS **NOT REQUIRED** FOR INSTALLATION OF ON-OFF SWITCH.

(B) ON-OFF SWITCHES ARE STAINLESS STEEL AND SHALL BE BOLTED TO THE WALL.

REFERENCE:

G. SEE STANDARD 3213 FOR SWITCH IDENTIFICATION.

H. SEE STANDARD 3649 FOR EQUIPMENT COMBINATION GUIDELINES FOR SWITCHES IN MANHOLES.

I. SEE STANDARD 3671 FOR SWITCH INSTALLATION IN A 3316 HANDHOLE.

J. SEE STANDARD 4181 FOR SUBSURFACE/SURFACE OPERABLE SWITCH CONNECTIONS.

K. SEE DESIGN STANDARD 6111 FOR SWITCH APPLICATION.

TABLE OF CONTENTS

SCOPE: THIS STANDARD SHOWS A SUBSURFACE/SURFACE OPERABLE 600 AMP SF-6 GAS SWITCH.

FOR FIELD MAINTENANCE ONLY

4-WAY SWITCH

WEIGHT: 350#

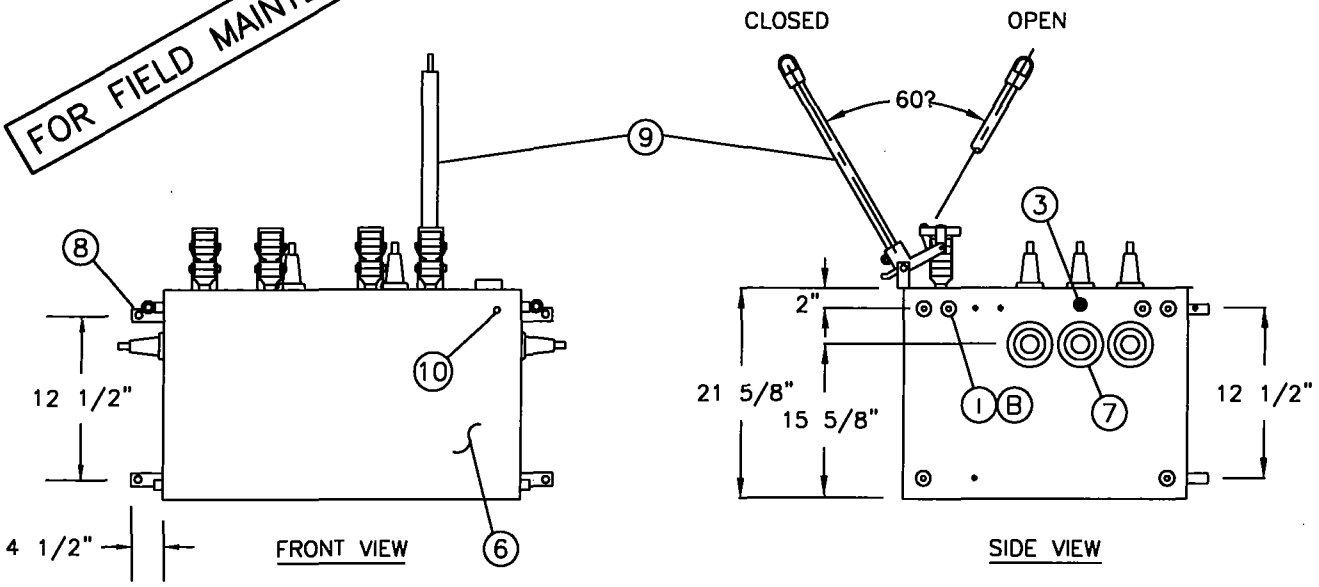

DEVIATION REQUEST IS REQUIRED FOR NEW INSTALLATION OF 4-WAY SWITCH

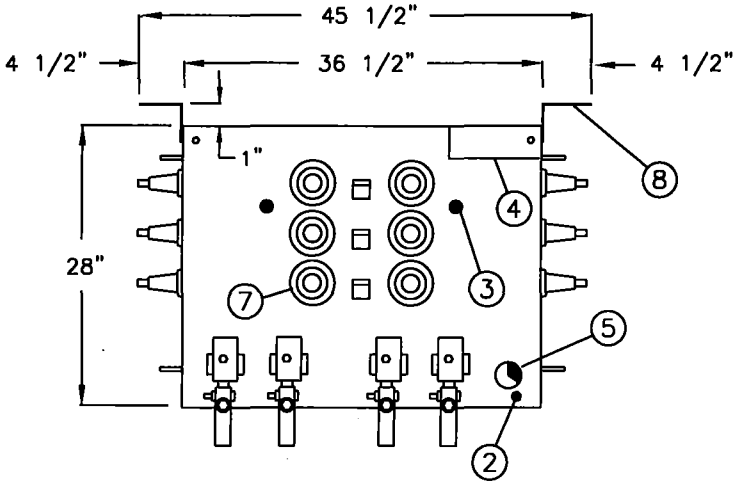

TOP VIEW

3699.711 SUPERSEDES 3670.3 (1-1-98)	SDG&E ELECTRIC STANDARDS SUBSURFACE/SURFACE OPERABLE SF-6 GAS SWITCH 12KV, 600 AMP, THREE-PHASE	DATE 1-1-98 APPD

TABLE OF CONTENTS

ELECTRICAL RATINGS	
VOLTAGE	15.5 KV
BIL	95 KV
CURRENT, CONTINUOUS	600 AMP
LOADMAKE AND LOADBREAK	600 AMP
MOMENTARY AND FAULT CLOSE (RMS, ASYMMETRICAL) (RMS, SYMMETRICAL)	32,000 AMP 20,000 AMP

600 AMP	UNIT STOCK NUMBER	ASSEMBLY UNIT
4-WAY (STAINLESS STEEL)	708770 Ⓒ	SW-4WY

FOR FIELD MAINTENANCE ONLY

TYPICAL ONE LINE DIAGRAM

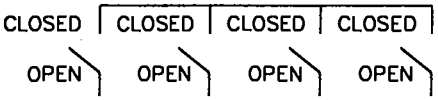

4-WAY ONE LINE DIAGRAM

SWITCH PARTS LIST

ITEM	DESCRIPTION	ITEM	DESCRIPTION
1	LIFTING EYES, REMOVABLE	6	SWITCH TANK
2	SF-6 FILL VALVE	7	600 AMP BUSHING ASSEMBLY
3	GROUND LUG	8	MOUNTING ANGLES
4	NAME PLATE AND CONNECTION DIAGRAM	9	REMOVABLE OPERATING HANDLE
5	COLOR CODED PRESSURE GAUGE	10	HANDLE HANGER

NOTES:

- SWITCH MEASUREMENTS MAY VARY WITH DIFFERENT SUPPLIERS.
- SWITCHES ARE DELIVERED FROM THE SUPPLIERS WITH ALL THE PARTS LISTED IN THE PARTS LISTED.
- SWITCH NUMBERS ARE ISSUED BY THE ENGINEERING CLERK IN EACH DISTRICT.
- THE SWITCHES SHALL BE USED WITH POLYETHYLENE CABLES AND 600 AMP ELBOW TEES.
- FOR REPLACEMENT OF AN EXISTING 18 INCH SWITCH LEG, USE STOCK NUMBER 457162.

INSTALLATION:

A. 4-WAY SWITCHES ARE STAINLESS STEEL AND SHALL BE BOLTED AGAINST THE WALL. USE THE 30 INCH STAINLESS STEEL SINGLE SUPPORT LEG (STOCK NUMBER 457166) FOR THE 3316 HANDHOLE INSTALLATION. FOR MANHOLE OR VAULT INSTALLATIONS, USE 4-54 INCH STAINLESS STEEL LEGS (STOCK NUMBER 457168), AND 8-5/8" X 3-1/2" STAINLESS STEEL BOLTS (STOCK NUMBER 156750).

Ⓑ LIFTING EYES ARE NOT STAINLESS STEEL AND SHOULD BE REMOVED AFTER THE SWITCH IS INSTALLED.

Ⓒ A DEVIATION REQUEST IS REQUIRED FOR THE NEW INSTALLATION OF A 4-WAY SWITCH. RETROFITS OF EXISTING SWITCHES DO NOT REQUIRE A DEVIATIONS REQUEST (SEE STANDARD 3005 FOR DEVIATION REQUEST FORM AND PROCEDURE).

REFERENCE:

G. SEE STANDARD 3213 FOR SWITCH IDENTIFICATION.
H. SEE STANDARD 3649 FOR EQUIPMENT COMBINATION GUIDELINES FOR SWITCHES IN MANHOLES.
I. SEE STANDARD 3671 FOR SWITCH INSTALLATION IN A 3316 HANDHOLE.
J. SEE STANDARD 4181.3 FOR SUBSURFACE/SURFACE OPERABLE SWITCH CONNECTIONS.
K. SEE DESIGN STANDARD 6111 FOR SWITCH APPLICATION.

	SDG&E ELECTRIC STANDARDS	
DATE 1-1-98 APPD [illegible] / CAK	SUBSURFACE/SURFACE OPERABLE SF-6 GAS SWITCH 12KV, 600 AMP, THREE-PHASE	3699.712 SUPERSEDES 3670.4 (1-1-98)

TABLE OF CONTENTS

SCOPE: THIS STANDARD SHOWS THE MATERIAL AND INSTALLATION REQUIREMENTS FOR INSTALLING A ON-OFF SUBSURFACE/SURFACE OPERABLE SWITCH IN A 3316 HANDHOLE.

ON-OFF SWITCH IN A 3316 HANDHOLE INSTALLATION

FIGURE 3

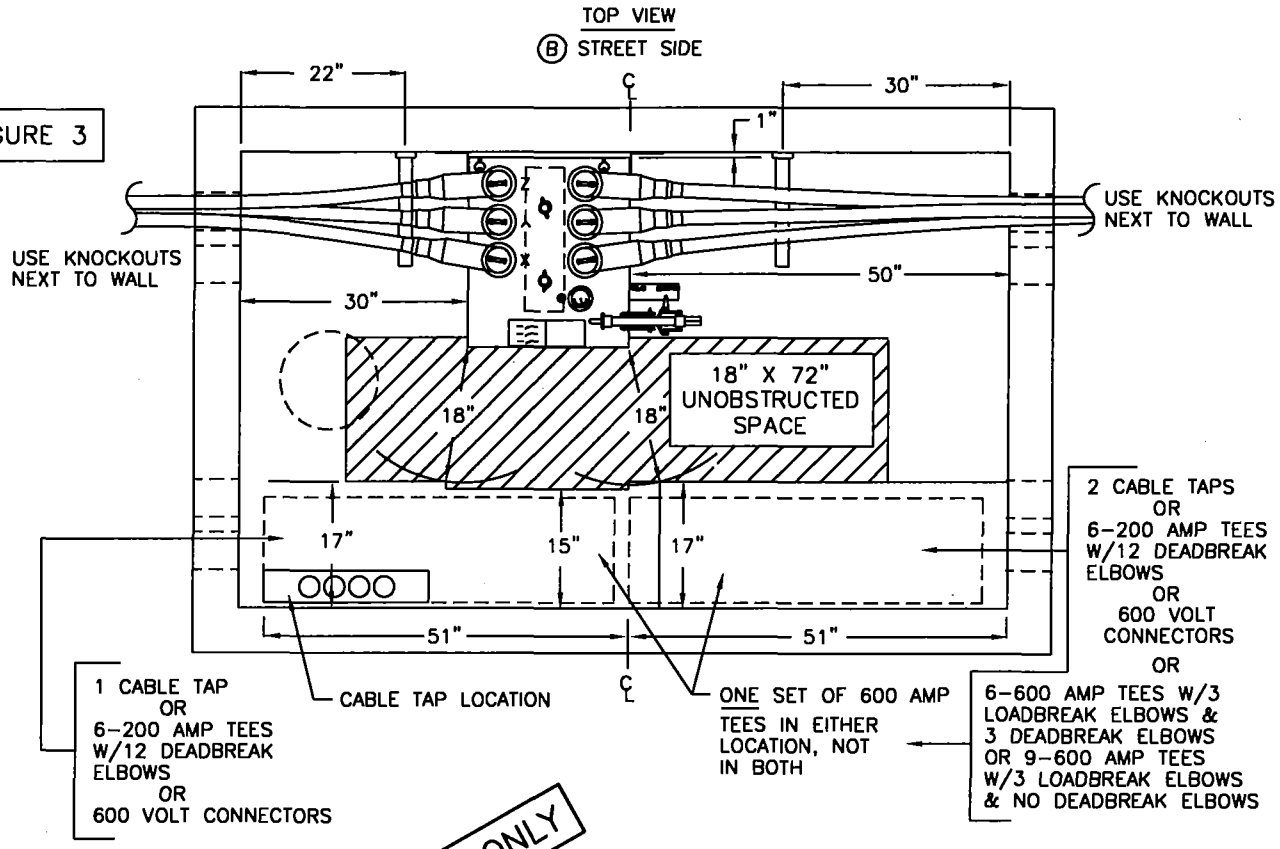

FIGURE 4

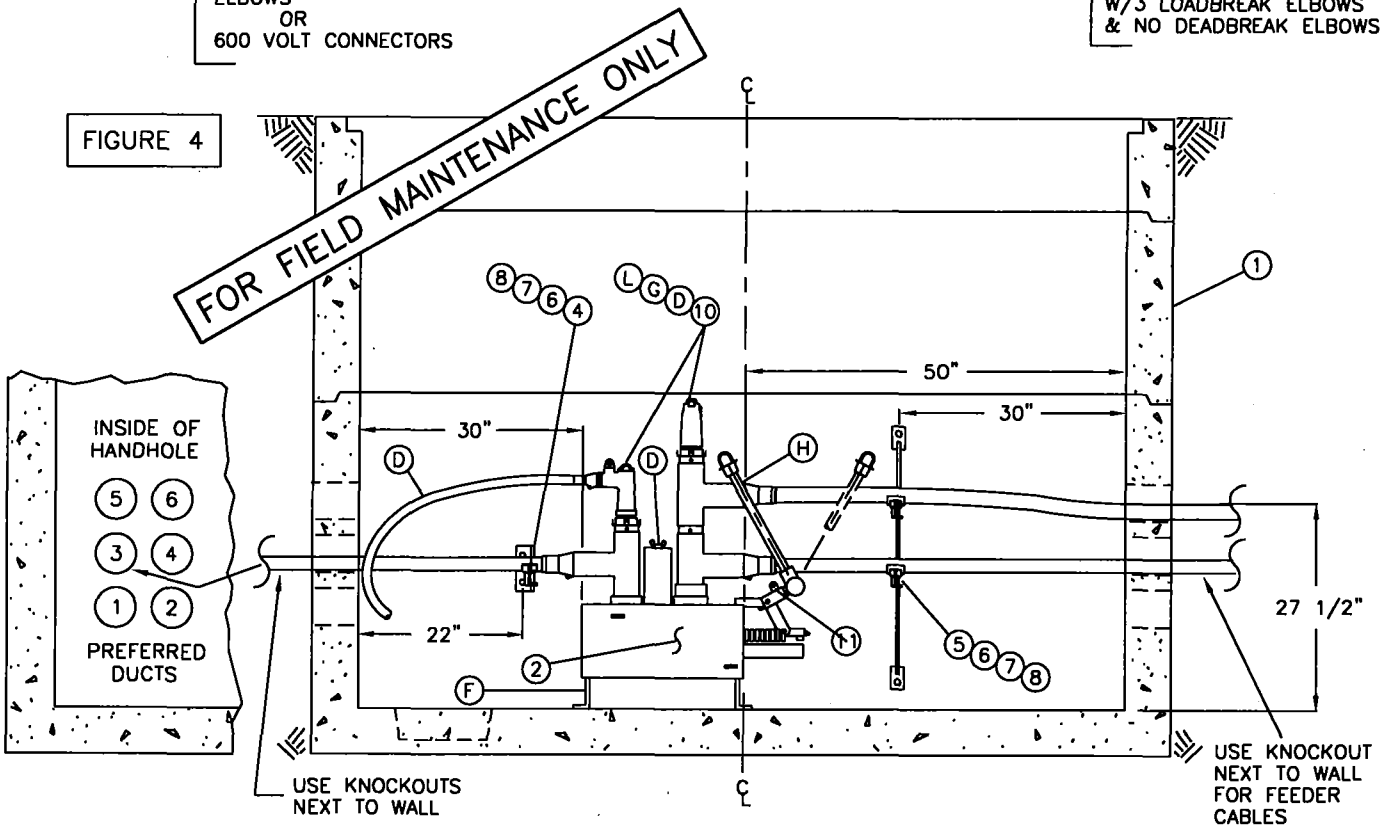

TABLE OF CONTENTS

3699.713 SUPERSEDES 3671.1 (1-1-98)	SDG&E ELECTRIC STANDARDS SUBSURFACE/SURFACE OPERABLE SF-6 GAS SWITCH 12KV, 600 AMP, THREE-PHASE	DATE 1-1-94 APPD JLG/RDG

NOTES:

- "PIGGYBACK" TEES SHOWN IN THIS STANDARD SHALL ONLY BE USED TO FEED A SWITCHED TIE POSITION.
- OTHER CONFIGURATIONS MAY BE DESIGNED PROVIDED EQUIPMENT LIMITIONS AND THE PROPER UNOBSTRUCTED SPACE ARE PROVIDED TO ALLOW PERSONNEL TO PERFORM THEIR WORK SAFELY AND ALLOW ACCESS TO THE CONDUITS.

BILL OF MATERIAL:

ITEM	DESCRIPTION	QUANTITY	CONST STD. OR PAGE NO.	STOCK NUMBER
1	HANDHOLE (PARKWAY OR TRAFFIC) (A)	AS REQ'D	3316	–
2	12KV SUBSURFACE/SURFACE OPERABLE SWITCH, 600A, ON–OFF	1	3670	708982
3	PROTECTOR, CABLE U.G.	AS REQ'D	–	558720
4	ADAPTER, CABLE ARM	AS REQ'D	4178	102016
5	HANGER, CABLE ARM, 34"/36"	AS REQ'D	4178	564480
6	CABLE ARM, 15" (3 WAY)	AS REQ'D	4178	110528
7	CABLE INSULATOR	AS REQ'D	4178	430592
8	TIE STRAP	AS REQ'D	4178	738440
9	ANCHOR, CONCRETE STAINLESS STEEL, 1/2" X 3-3/4"	AS REQ'D	4178	107654
10	12KV, 200A (LOADBREAK) & 600A CONNECTORS (D)	AS REQ'D	4181	–
11	PADLOCK, SCHLAGE ELECT SERIES	1	–	514848
12	AUTOMATIC FAULT INDICATOR (O)	AS REQ'D	4352	–

FOR FIELD MAINTENANCE ONLY

INSTALLATION:

(A) A STANDARD 3316 HANDHOLE IS REQUIRED FOR THE ON–OFF SWITCH. THE NUMBER OF CABLES AND CONNECTORS REQUIRED WILL DETERMINE WHICH HANDHOLE TO USE.

(B) THE SWITCH BOLTED TO THE STREET SIDE WALL IS PREFERRED. THIS ALLOWS CABLE TAPS TO BE OPERATED FROM THE STREET OR SIDEWALK SIDE.

C. INSTALL CABLE AND CABLE SUPPORTS, ETC. IN THE HANDHOLE AND ON THE SWITCH AS SHOWN IN THE INSTALLATION DRAWINGS.

(D) ON THE 200 AMP CABLE, LOOP THE HOLE LEAVING ENOUGH SLACK TO REACH BOTH SETS OF 600 AMP TEES. A STAND OFF BAR, STOCK NUMBER 677240 WILL BE REQUIRED TO ATTACH TO THE STAND OFF BRACKET WHEN TEMPORARLY LANDING LOADBREAK ELBOWS. ALL 200 AMP CONNECTORS ON THE SWITCH SHALL BE LOADBREAK.

(F) LEVELING OF THE SF–6 GAS SWITCH IS NOT REQUIRED. **DO NOT INSTALL SWITCH ANY HIGHER OFF THE FLOOR THAN SHOWN IN THE INSTALLATION DRAWING DUE TO CABLE ARRANGEMENT.**

(G) DO NOT INSTALL LOADBREAK ELBOWS ON PIGGYBACK TEES FOR A PERMANENT INSTALLATION.

(H) THE REMOVABLE OPERATING HANDLE IS TO REMAIN PERMANENTLY ATTACHED TO THE SWITCH.

REFERENCE:

I. SEE STANDARD 3200 FOR SWITCH IDENTIFICATION NUMBERS AND CABLE ID TAGS.

J. SEE STANDARD 3670 FOR SUBSURFACE SWITCH.

K. SEE PAGE 3374.3 FOR CONDUIT INSTALLATION PRACTICES.

(L) SEE STANDARD 4181 FOR 12KV 200 AND 600 AMP CONNECTOR ASSEMBLIES.

M. SEE STANDARD 4530 FOR NEUTRAL AND GROUND WIRE DIAGRAM.

N. SEE DESIGN STANDARD 6111 FOR SWITCH APPLICATION.

(O) SEE DESIGN STANDARD 6113 FOR AUTOMATIC FAULT INDICATOR APPLICATION.

TABLE OF CONTENTS

DATE 1-1-94 APPD JLG/BDJ	SDG&E ELECTRIC STANDARDS SUBSURFACE/SURFACE OPERABLE SF–6 GAS SWITCH 12KV, 600 AMP, THREE–PHASE	3699.714 SUPERSEDES 3671.2 (1-1-98)

SCOPE: THIS STANDARD SHOWS THE MATERIAL AND INSTALLATION REQUIREMENTS FOR INSTALLING A 4-WAY SUBSURFACE/SURFACE OPERABLE SWITCH IN A 3316 HANDHOLE.

DEVIATION REQUEST IS REQUIRED FOR NEW INSTALLATION OF 4-WAY SWITCH

TYPICAL INSTALLATION DRAWINGS

IN A 3316 HANDHOLE

ALL FOUR FEEDERS FROM ONE DIRECTION (FIGURES 1, 2 & 3)

FIGURE 1

SECTION VIEW – SWITCH WALL

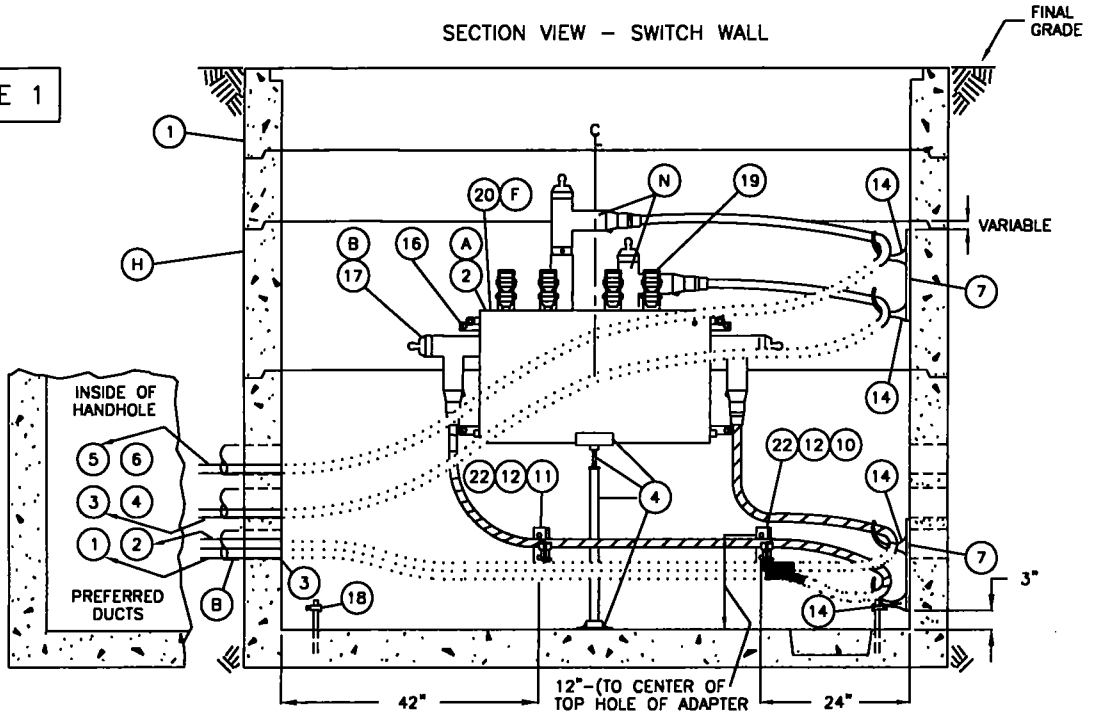

FIGURE 2

SECTION VIEW – WALL OPPOSITE SWITCH

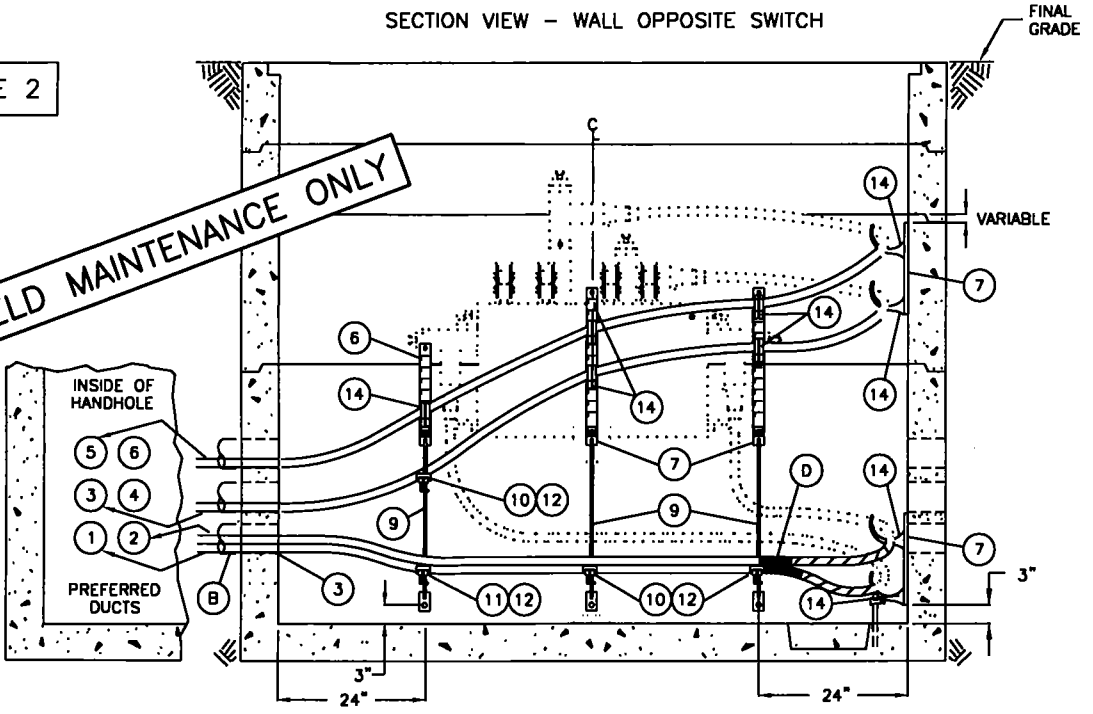

FOR FIELD MAINTENANCE ONLY

TABLE OF CONTENTS

3699.715 SUPERSEDES 3671.3 (1-1-98)	SDG&E ELECTRIC STANDARDS INSTALLATION OF SUBSURFACE/SURFACE OPERABLE SWITCH IN A 3316 HANDHOLE	DATE 1-1-94 APPD

FIGURE 3

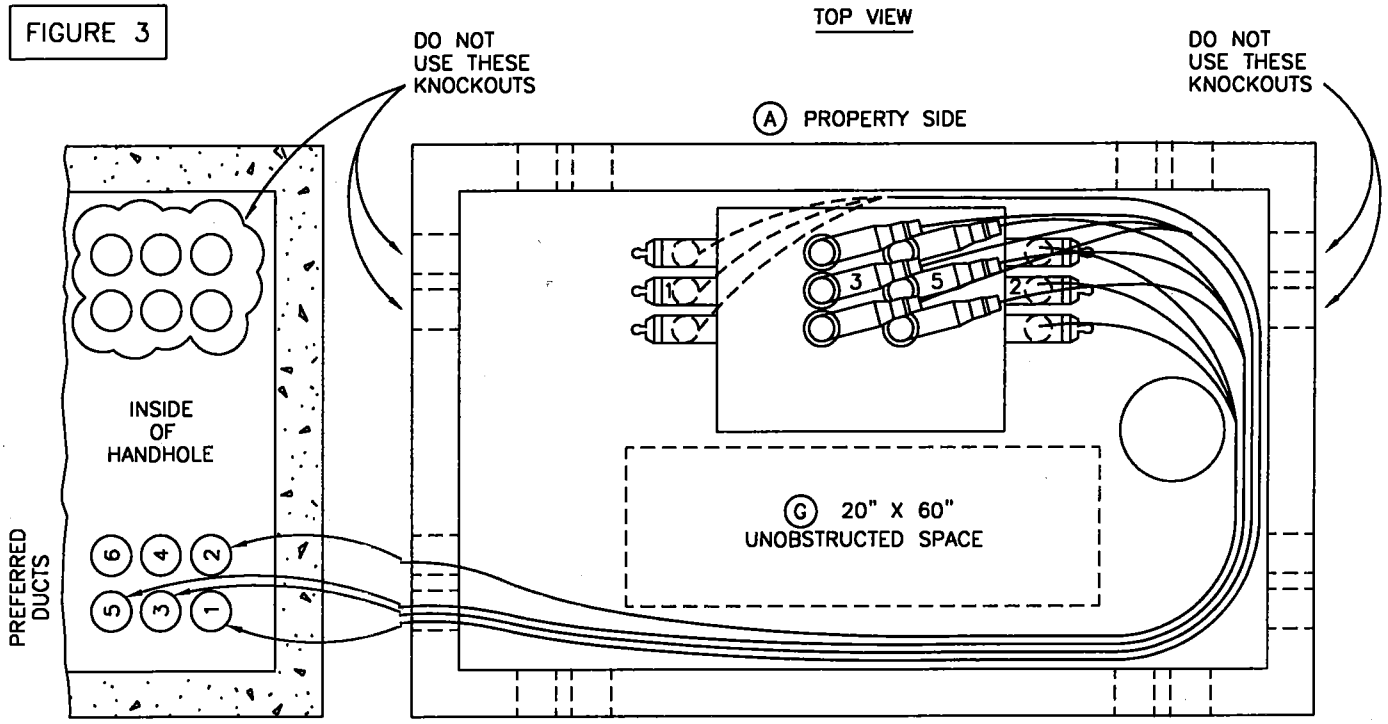

FOR FIELD MAINTENANCE ONLY

TABLE OF CONTENTS

DATE 7-31-84 APPD JLG/BDG	SDG&E ELECTRIC STANDARDS INSTALLATION OF SUBSURFACE/SURFACE OPERABLE SWITCH IN A 3316 HANDHOLE	3699.716 SUPERSEDES 3671.4 (1-1-98)

TYPICAL INSTALLATION DRAWINGS

SUBSURFACE/SURFACE OPERABLE SWITCH IN A 3316 HANDHOLE FOUR FEEDERS TWO FROM TWO DIRECTIONS (FIGURES 4, 5, & 6)

FIGURE 4

SECTION VIEW – SWITCH WALL

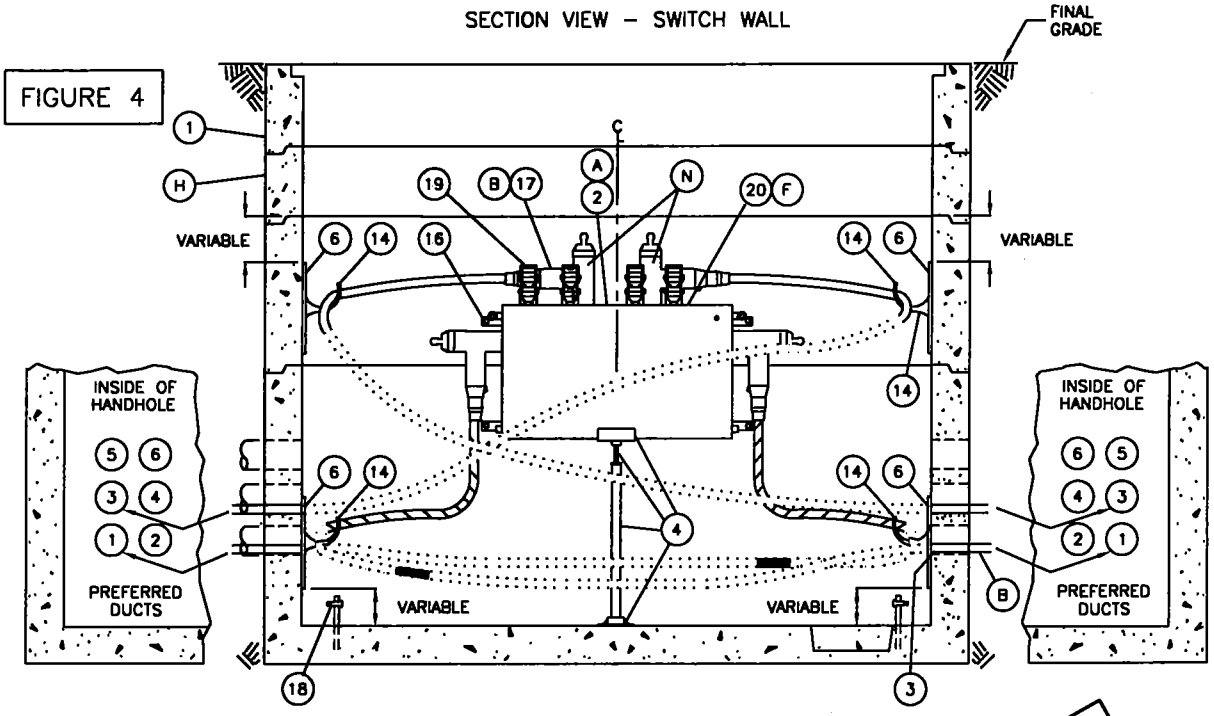

FIGURE 5

SECTION VIEW – WALL OPPOSITE SWITCH

FOR FIELD MAINTENANCE ONLY

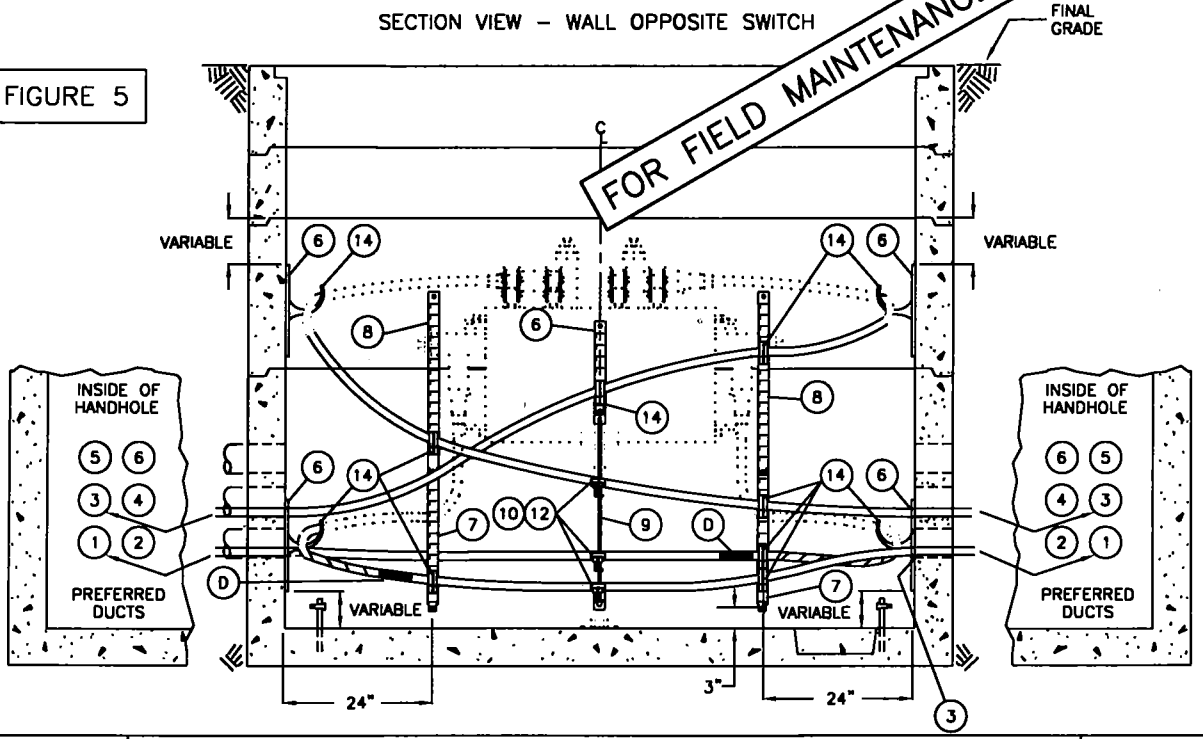

3699.717 SUPERSEDES 3671.5 (1-1-98)	SDG&E ELECTRIC STANDARDS INSTALLATION OF SUBSURFACE/SURFACE OPERABLE SWITCH IN A 3316 HANDHOLE	DATE 1-1-90 APPD JLB/BDJ

TABLE OF CONTENTS

FIGURE 6

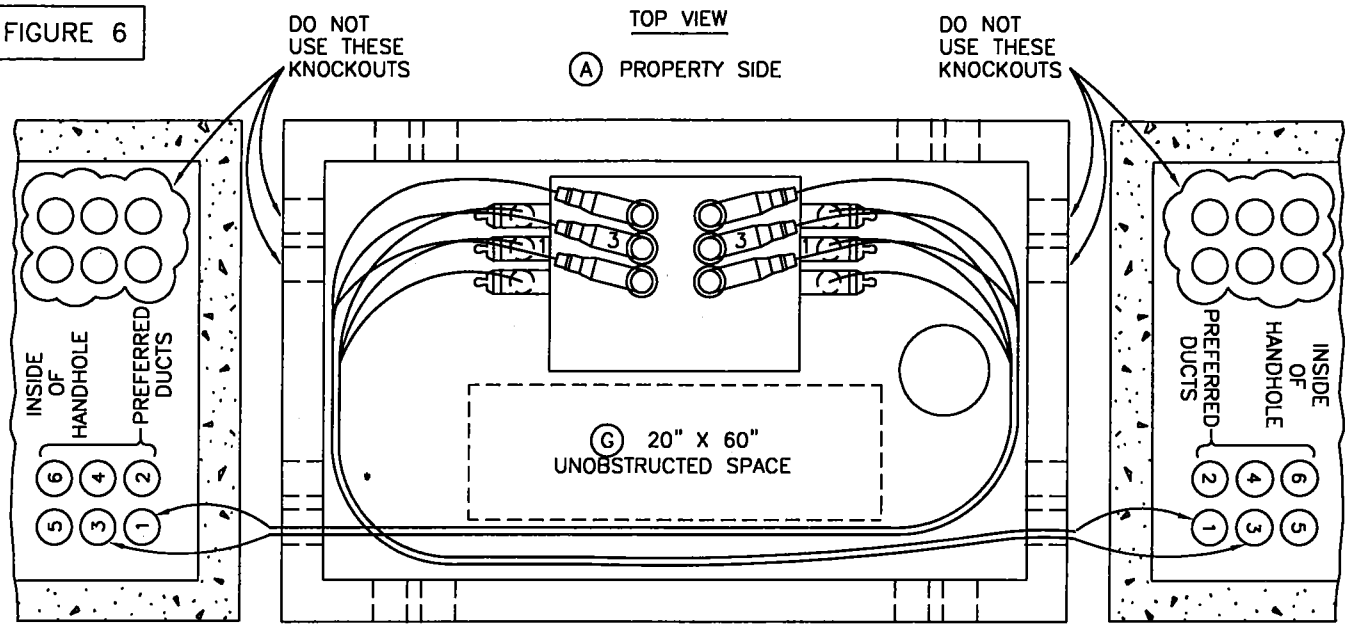

NOTES:

- OTHER CONFIGURATIONS MAY BE DESIGNED PROVIDED EQUIPMENT LIMITIONS AND THE PROPER UNOBSTRUCTED SPACE ARE PROVIDED TO ALLOW PERSONNEL TO PERFORM THEIR WORK SAFELY AND ALLOW ACCESS TO THE CONDUITS.
- FOR REPLACEMENT OF AN EXISTING 18 INCH SWITCH LEG, USE (STOCK NUMBER 457162).

BILL OF MATERIAL: (FOR FIGURES 1 THROUGH 6)

ITEM	DESCRIPTION	QUANTITY	CONST STD. OR PAGE NO.	STOCK NUMBER	ASSEMBLY UNIT
1	HANDHOLE, 5' X 8'-6" (PARKWAY OR TRAFFIC COVER)	1 (H)	3316 (H)	–	–
2	12KV SUBSURFACE/SURFACE OPERABLE SWITCH, 600A, 4-WAY	1	3670	708770	SW-4WY
3	PROTECTOR, CABLE U.G.	1	–	558720	–
4	SWITCH LEG, 1-1/2", 30"	1	–	457166	–
	SWITCH LEG HARDWARE	AS REQ'D	–		
5	AUTOMATIC FAULT INDICATOR	AS REQ'D	4352	–	–
6	HANGER, 15"	AS REQ'D	4178	564512	–
7	HANGER, 24"	AS REQ'D	4178	564544	–
8	HANGER, 30"	AS REQ'D	4178	564576	–
9	HANGER, CABLE ARM, 34"/36"	AS REQ'D	4178	564480	–
10	CABLE ARM, 10" (2 WAY)	AS REQ'D	4178	110496	–
11	CABLE ARM, 15" (3 WAY)	AS REQ'D	4178	110528	–
12	CABLE INSULATOR	AS REQ'D	4178	430592	–
14	CABLE HOOKS, 6"	AS REQ'D	4178	415112	–
15	TIE STRAP	AS REQ'D	4178	738440	–
16	ANCHOR, CONCRETE STAINLESS STEEL, 1/2" X 3-3/4"	AS REQ'D	4178	107654	–
17	12KV, 200A AND 600A CONNECTORS	AS REQ'D	4181	–	–
18	CLAMPS, GROUND ROD	AS REQ'D	–	230016	–
19	PADLOCK, SCHLAGE ELECT SERIES	AS REQ'D	–	514848	–
20	DECALS	AS REQ'D	3212	–	–
21	INHIBITOR (NOT SHOWN)	AS REQ'D	–	247200	–
22	ADAPTER FOR CABLE ARMS	AS REQ'D	4178	102016	–
23	CONNECTOR, COMPRESSION	AS REQ'D	4172	–	–

FOR FIELD MAINTENANCE ONLY

SDG&E ELECTRIC STANDARDS

DATE 1-1-94
APPD JLB/RDS

INSTALLATION OF SUBSURFACE/SURFACE OPERABLE SWITCH IN A 3316 HANDHOLE

3699.718
SUPERSEDES
3671.6 (1-1-98)

TABLE OF CONTENTS

INSTALLATION:

Ⓐ BOLT THE SWITCH TO THE WALL (PROPERTY SIDE IS PREFERRED). OIL SWITCH LEVELING REQUIREMENT IS A TOLERANCE OF 1/2 INCH FROM THE FRONT TO THE BACK OR 1/2 INCH END TO END. LEVELING OF THE SF-6 GAS SWITCH IS NOT REQUIRED. INSTALL THE SWITCH LEG USING THE MEASUREMENTS SHOWN IN THE DRAWING.

Ⓑ NO SECONDARY ALLOWED IN THIS INSTALLATION OTHER THAN THE FEED TO THE SUMP PUMP. THE ONLY 200 AMP AND 600 AMP CABLE ALLOWED IN THIS INSTALLATION IS CABLE TERMINATED ONTO THE SWITCH. THE 200 AMP CABLES MAY BE PULLED IN ANY CONDUIT OTHER THAN THOSE DESIGNATED (DO NOT USE) OR THE ONES USED FOR 600 AMP CABLES. DO NOT TERMINATE #2 OR 2/0 ONTO A BUSHING REQUIRING A BUSHING EXTENSION DUE TO HANDHOLE COVER CLEARANCE.

C. INSTALL CABLE AND CABLE SUPPORTS, ETC. IN THE HANDHOLE AND ON THE SWITCH AS SHOWN IN THE INSTALLATION DRAWINGS. ALL 350, 750 AND 1000 KCMIL CABLES MUST BE UNTRIPLEXED WHENEVER IT IS TRAINED AROUND THE CORNER (90° ANGLE) ON THE HANDHOLE. DO NOT "PIGGYBACK" 600 AMP TEES (ONE ON TOP OF THE OTHER) AT ANY TIME ON THE SWITCH BUSHING.

Ⓓ REMOVE THE JACKETING AS SHOWN (APPROXIMATELY 6 FEET) ON THE 750 AND 1000 KCMIL CABLE WHICH TERMINATES ON THE SIDE SWITCH BUSHINGS. INSTALL ONE LAYER OF SEALING COMPOUND UNDER AND OVER THE CONCENTRIC NEUTRAL BUTTING IT AGAINST THE CABLE JACKETING. INSTALL A HEAT SHRINK TUBE OVER THE SEALING COMPOUND AND JACKETING AND APPLY HEAT. MAKE SURE THE HEAT SHRINK TUBE SHRINKS ON THE SEALING COMPOUND AND CABLE JACKETING AND NOT ON THE CABLE SEMICONDUCTING MATERIALS.

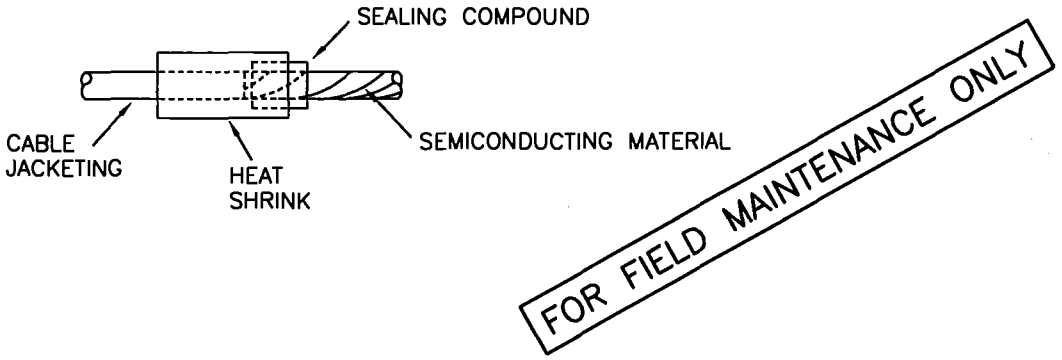

Ⓕ INSTALL SWITCH IDENTIFICATION NUMBER AND CABLE I.D. TAGS AS SHOWN IN STANDARD 3200.

Ⓖ A 20" X 60" UNOBSTRUCTED SPACE MUST BE MAINTAINED IN THE HANDHOLE.

Ⓗ INSTALL A 12 INCH EXTENSION SECTION (STOCK NUMBER 336208) BETWEEN THE TOP NECK SECTION AND THE 24 INCH EXTENSION SECTION.

REFERENCE:

J. SEE STANDARD 3670 FOR SUBSURFACE SWITCH.

K. SEE STANDARD 3213 FOR INSTALLING SWITCH IDENTIFICATION NUMBERS AND STANDARD 3202 FOR INSTALLING CABLE I.D. TAGS.

L. SEE PAGE 3374.3 FOR CONDUIT INSTALLATION PRACTICES.

M. SEE STANDARD 3362 FOR SUMP PUMP INSTALLATION.

Ⓝ SEE STANDARD 4181 FOR 12KV 200 AND 600 AMP CONNECTOR ASSEMBLIES.

O. SEE STANDARD 4530 FOR NEUTRAL AND GROUND WIRE DIAGRAM.

P. SEE DESIGN STANDARD 6111 FOR SWITCH APPLICATION.

R. SEE DESIGN STANDARD 6113 FOR AUTOMATIC FAULT INDICATOR APPLICATION.

TABLE OF CONTENTS

3699.719 SUPERSEDES 3671.7 (1-1-98)	SDG&E ELECTRIC STANDARDS INSTALLATION OF SUBSURFACE/SURFACE OPERABLE SWITCH IN A 3316 HANDHOLE	DATE 1-1-91 APPD JLG/RDG

MAIN TABLE OF CONTENTS

PAGE	SUBJECT
3799.101-.102	REPLACEMENT OF "YP" PAD-MOUNTED TRANSFORMER TO "YDP" LOW PROFILE PAD-MOUNTED TRANSFORMER WITH FUSED SECTIONALIZING CABINET
3799.103-.104	REPLACEMENT OF "YP" OR "YEP" PAD-MOUNTED TRANSFORMER TO "YDP" LOW PROFILE PAD-MOUNTED TRANSFORMER WHEN ONE-PHASE WITHIN TRANSFORMER COMPARTMENT
3799.105-.106	REPLACEMENT OF "YEP" PAD-MOUNTED TRANSFORMER TO "YDP" LOW PROFILE PAD-MOUNTED TRANSFORMER WHEN MULTI-PHASES WITHIN TRANSFORMER COMPARTMENT
3799.201	12KV, ONE-PHASE, PAD-MOUNTED TRANSFORMER INSTALLATION
3799.202	2.4 OR 7.2 ONE-PHASE PAD-MOUNTED TRANSFORMER INSTALLATION
3799.203	TRANSFORMER PREFIXES, PAD-MOUNTED, DEAD FRONT/SINGLE-PHASE
3799.204	TRANSFORMER PREFIXES, PAD-MOUNTED, LIVE FRONT/SINGLE-PHASE
3799.205	TRANSFORMER PREFIXES, PAD-MOUNTED, LIVE FRONT OR SUBSURFACE/SINGLE PHASE
3799.206	TRANSFORMER PREFIXES, SUBSURFACE/SINGLE-PHASE
3799.207	TRANSFORMER PREFIXES, PAD-MOUNTED DEAD FRONT/THREE-PHASE
3799.208-.209	TRANSFORMER PREFIXES, PAD-MOUNTED LIVE FRONT/THREE-PHASE
3799.210	TRANSFORMER PREFIXES, SUBSURFACE/THREE-PHASE
3799.301	TWO 12KV PAD-MOUNTED TRANSFORMERS FOR OPEN DELTA BANKS
3799.302	THREE 12KV PAD-MOUNTED TRANSFORMERS FOR CLOSED DELTA BANKS
3799.401-.402	SUBSURFACE TRANSFORMER AND ENCLOSURE INSTALLATION, SINGLE-PHASE, TYPE "WS", "WSV", "WUS", "YSV", "YIS", "YES", OR "HSS"
3799.403-.404	SUBSURFACE TRANSFORMER AND ENCLOSURE INSTALLATION, MULTIPLE PHASES, TYPE "YIS" OR "YES"
3799.501-.502	THREE-PHASE, 12KV, TYPE "HZL", "HAL", "HML" OR "HNL" LOOP FEED, DEAD FRONT, PAD-MOUNTED TRANSFORMER INSTALLATION
3799.503-.504	THREE-PHASE, 12KV, TYPE "PZR", "HZR", OR "HKR" RADIAL FEED, DEAD FRONT, PAD-MOUNTED TRANSFORMER INSTALLATION
3799.505-.506	THREE-PHASE, STEP DOWN, TYPE "HPP" RADIAL/LOOP LIVE FRONT PAD-MOUNTED TRANSFORMER INSTALLATION
3799.901	TERMINAL ADAPTOR PLATE
3899.001-.003	CAPACITOR MARKING INSTRUCTIONS, DECALS AND TAGS
3899.201-.203	1200 KVAR PAD-MOUNTED CAPACITOR
3999.001-.003	600 VOLT CABLE REFERENCE CHART
3999.301	TEMPORARY SERVICE - FROM PAD-MOUNT TRANSFORMER TO CUSTOMER-OWNED METER INSTALLATION
3999.401	CABLE-IN-CONDUIT (SIDA) SERVICE
4099.001	12KV CABLE SIZES
4099.012	0-600 VOLT CABLE SIZES AND AMPACITIES, COPPER AND ALUMINUM CABLES

© 1998 - 2019 San Diego Gas & Electric Company. All rights reserved. Removal of this copyright notice without permission is not permitted under law.

REV	CHANGE	BY	DSGN	APPV	DATE	REV	CHANGE	BY	DSGN	APPV	DATE
C						F					
B	COMPLETELY REVISED	JK	JS	CZH	10/16/2019	E					
A	ORIGINAL ISSUE	JK	JS	CZH	6/13/2019	D					

Indicates Latest Revision | X Completely Revised | New Page | Information Removed

SDG&E ELECTRIC UNDERGROUND FIELD MAINTENANCE ONLY STANDARDS

LEGACY UNDERGROUND FIELD MAINTENANCE
TABLE OF CONTENTS
TRANSFORMERS, CAPACITORS, CABLES

(A) REFER TO 3799.101 THROUGH 3799.104 FOR TRANSFORMER INSTALLATION, TEMPORARY AND PERMANENT REPLACEMENT PROCEDURE OF "YP" PADMOUNT TRANSFORMERS.

(B) REFER TO 3512 FOR LOW PROFILE FUSED SECTIONALIZING CABINET INSTALLATIONS.

(C) INSTALLATION PROCEDURES FOR LOW PROFILE FUSED SECTIONALIZING CABINETS.

FOR FIELD MAINTENANCE ONLY

TEMPORARY INSTALLATION PROCEDURE

(1A) ON LOAD SIDE OF REPLACED TRANSFORMER USE (PID) CABLES FOR TEMPORARY PRIMARY CIRCUIT TO NEXT TRANSFORMER. LAY CABLE ON GROUND SURFACE BETWEEN ADJACENT UNITS, PROTECTED AT POINTS WHERE VEHICULAR TRAFFIC WOULD REQUIRED CROSSING BY USE OF WOOD PLANKING AND BRIDGING. REMOVE LOAD BREAK ELBOW ON LOAD SIDE DE-ENERGIZING. BRING CABLE OUT LOW VOLTAGE SIDE OF TRANSFORMER CABLE COMPARTMENT SKIRT, IF CONVENIENT.

PERMANENT INSTALLATION PROCEDURE

(1) DIG AND BISECT THE PRIMARY CABLE (PID) ON LOAD SIDE FROM THE REPLACED TRANSFORMER, ON FIRST LOT LINE NOT OCCUPIED OR MOST CONVENIENT LOCATION.

(2) CUT CABLE SO THAT SUFFICIENT CABLE CAN BE BROUGHT UP INTO NEW PAD OPENING.

(3) INSTALL PAD (3421) ADJACENT TO EXCAVATION.

(4) INSTALL PAD GROUNDING (3407).

(5) CUT EXCESS DUCT AND CABLE (PID) IF REQUIRED.

(6) WITH THE END OF CABLE MAKE LOAD BREAK ELBOW (4191) CONNECTION. ATTACH LOAD SIDE PRIMARY TO THE RIGHT TOP BUSHING IN FUSED SECTIONALIZING CABINET (3512.00).

(7) IN EXCAVATION, LAY NEW SECTION OF EQUIVALENT SIZE (ABS) DUCT WITH SUFFICIENT LENGTH TO REACH CABINET BASE JUST ABOVE SLAB.

(8) ON NEW DUCT SLIDE COUPLING OVER END AND APPLY AQUA-SEAL AROUND DUCT OUTTER EDGE. SLIDE COUPLING OVER END, ON EXISTING (PID) DUCT APPLY AQUA-SEAL AROUND AND THEN SLIDE DUCT ON. TAPE AT SEAMS.

(9) PULL EXISTING (PID) CABLE FROM DUCT.

(10) INSTALL NEW PRIMARY CABLE FROM FUSED SECTIONALIZING CABINET TO LINE SIDE OF EXISTING TRANSFORMER.

(11) ON OPPOSITE END OF CABLE ATTACH LOAD BREAK ELBOW (4191). ATTACH TO LEFT BUSHING IN FUSED SECTIONALIZING CABINET.

(12) ATTACH GROUND TO CABINET.

(13) INSTALL PHASE AND ROUTE IDENTIFICATION TAGS (3231).

(14) LOCK FUSE SECTIONALIZING CABINET.

(15) REPLACE PROPERTY IN ORIGINAL ORDER.

TABLE OF CONTENTS

DATE 8-6-79 APPD TAF	SDGE ELECTRIC STANDARDS REPLACEMENT OF 'YP' PADMOUNT TRANSFORMER TO 'YDP' LOW PROFILE PADMOUNT TRANSFORMER WITH FUSED SECTIONALIZING CABINET	3799.101

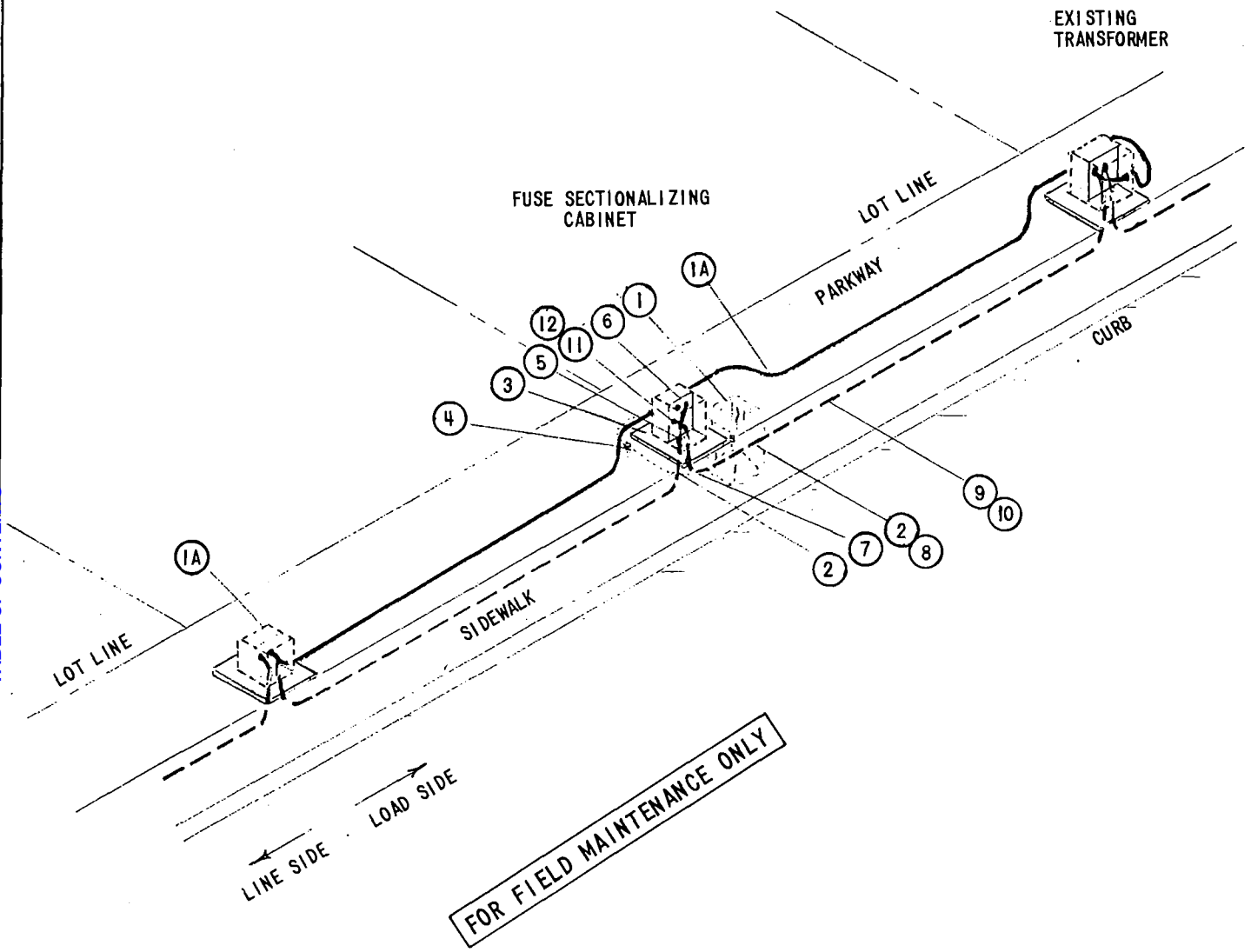

NOTE:

DURING ENTIRE TIME (PID) CABLE IS LAID ATOP GROUND A QUALIFIED ELECTRIC WORKER MUST BE IN ATTENDANCE.

3799.102	SDG&E ELECTRIC STANDARDS REPLACEMENT OF 'YP' PADMOUNT TRANSFORMER TO 'YDP' LOW PROFILE PADMOUNT TRANSFORMER WITH FUSED SECTIONALIZING CABINET	DATE 8-6-79 APPD TAF

TABLE OF CONTENTS

U-61.314

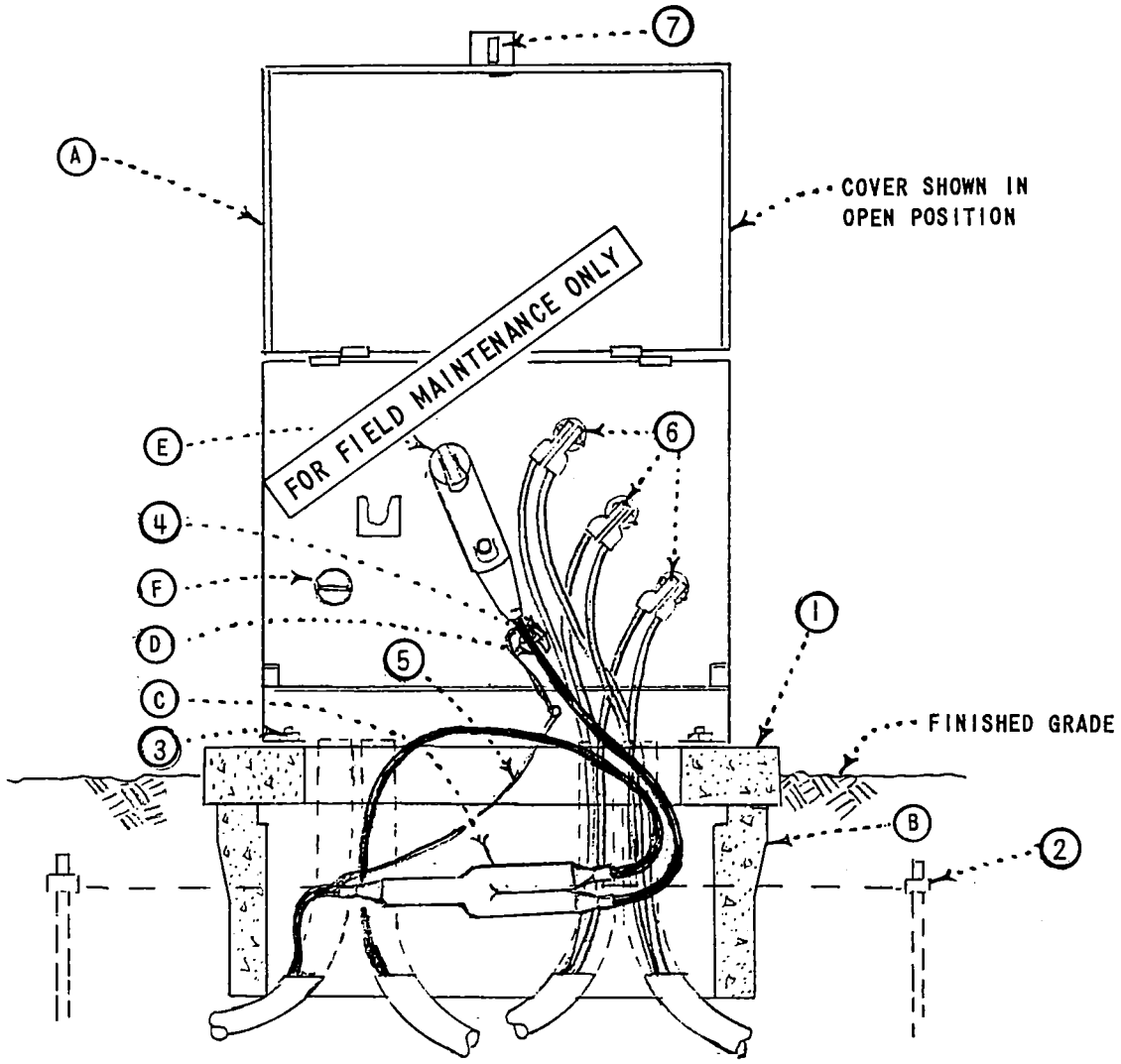

ITEM	DESCRIPTION (REUSABLE MATERIALS)	QUANTITY	STOCK NUMBER OR CONSTR. STD.
1	CONCRETE PAD	1	514240, 3421
2	PAD GROUNDING	1	3407.
3	HOLD DOWN DEVICE-NO STANDARD	-	-
4	PHASE AND ROUTE TAGS	AS REQ'D	3231
5	CONCENTRIC NEUTRAL TAIL	AS REQ'D	-
6	SECONDARY TERMINATIONS	AS REQ'D	4171, 4168
7	COMPANY LOCK, (CORBIN #27 FF KEY	1	514848
8			

ITEM	DESCRIPTION (NEW MATERIALS)	QUANTITY	STOCK NUMBER OR CONSTR. STD.
A	TRANSFORMER, LOW PROFILE	1	3702
B	HANDHOLE, BOTTOM SECTION (SEE NOTE 1)	1	162664, 3313
C	'Y' SPLICE, #2 CU, (SEE NOTE 1)	1	668416
D	CONDUCTOR, #2 CU, 15KV (SEE NOTE 1)	AS REQ'D	194496, U-12.4-FMO
E	ELBOW, LOAD BREAK, 7.2KV	1	443416, 4191
F	INSULATING RECEPTACLE, LOAD BREAK	1	204304, 4192

SDG&E ELECTRIC STANDARDS

DATE 8-6-79
APPD TAF

REPLACEMENT OF 'YP' OR 'YEP' PADMOUNT TRANSFORMER TO 'YDP' LOW PROFILE PADMOUNT TRANSFORMER
(WHEN ONE PHASE WITHIN TRANSFORMER COMPARTMENT)

3799.103

TABLE OF CONTENTS

NOTE:

1. IF SUFFICIENT SLACK CABLE FROM DUCT CAN BE OBTAINED OR IF LAST TRANSFORMER ON RADIAL FEED OMIT ITEM B, C, AND D.
2. STRUCTURE IDENTIFICATION, 3211.
3. TRANSFORMER IDENTIFICATION, 3212.
4. TRANSFORMER 'WARNING SIGN', 3221.

FOR FIELD MAINTENANCE ONLY

TEMPORARY REPLACEMENT PROCEDURE

TO AVOID EXTENDED OUTAGES ON RADIAL SYSTEMS IT IS RECOMMENDED THAT THE USE OF A PORTABLE "YDP" LOW PROFILE TRANSFORMER BE USED, MOUNTED ADJACENT TO THE TRANSFORMER BEING REPLACED. USE PID CABLE FOR TEMPORARY PRIMARY CIRCUIT BETWEEN ADJACENT UNITS OR ON LAST TRANSFORMER ON RADIAL FEED. TOTAL LENGTH OF PID CABLES TO BE MADE UP PRIOR TO USE. TWO LENGTHS OF CABLE, ONE END TO HAVE LOAD BREAK ELBOW (4191), OTHER END TO HAVE STRESS CONE (4121) AND CABLE LUG. LENGTHS OF CABLES TO BE 300' TO COVER ALL NORMAL INSTALLATIONS. THE "YDP" TRANSFORMER TO BE MOUNTED ON WOODEN FLOAT PROVIDING EASY INSTALLATION AND PORTABILITY. LAY PID CABLES ON GROUND SURFACE BETWEEN ADJACENT UNITS OR FROM LAST TRANSFORMER, PROTECTED AND MARKED AT POINTS WHERE VEHICULAR TRAFFIC WOULD REQUIRE CROSSING BY USE OF WOOD PLANKING AND BRIDGING. SECONDARY CONNECTIONS COULD BE PROVIDED BY JUMPING FROM PORTABLE "YDP" TO PERMANENT SECONDARY CONNECTION. WHEN TEMPORARY SERVICE IS RESTORED PROCEED WITH PERMANENT REPLACEMENT PROCEDURE.

PERMANENT REPLACEMENT PROCEDURE

1. REMOVE INCOMING AND OUTGOING (IF ANY) PRIMARY CONNECTIONS AND DETACH SECONDARY CONNECTIONS. REMOVE STRESS CONES, HARDWARE AND GROUNDS.
2. REMOVE EXISTING "YP" OR "YEP" TRANSFORMER FROM PAD.
3. IF REQUIRED (SEE NOTE 1) REMOVE PAD AND GROUNDING (LEAVE GROUND RODS IN PLACE).
4. IF REQUIRED (SEE NOTE 1) EXCAVATE HOLE, (38" W X 24" L X 14" DEEP, BACKFILL TO 12" LEVEL BELOW PAD), UNDER CONDUIT OPENING TO ACCOMMODATE (ITEM B) HANDHOLE - BOTTOM SECTION.
5. CUT DUCTS OFF 3" ABOVE THE BASE OF EXCAVATION (IF BOX REQUIRED).
6. INSTALL HANDHOLE OVER DUCTS.
7. PREPARE CABLE (S) DIRECTLY FOR LOAD BREAK ELBOW (4191) (IF SUFFICIENT CABLE AVAILABLE) OR FOR "Y" SPLICE (4151) WHEN NOT LAST TRANSFORMER ON RADIAL FEED.
8. ON ONE (DOUBLE END) OF "Y" SPLICE INSTALL JUMPER AND ATTACH TO LOAD BREAK ELBOW.
9. ON SECOND (DOUBLE END) OF "Y" INSTALL NEEDED #2 COPPER, 15KV CABLE TO MAKE CONNECTION TO TOP BUSHING. ADD ELBOW (4191) AND ATTACH GROUND WIRE TO TRANSFORMER GROUND POINT.
10. ATTACH SINGLE END OF "Y" SPLICE TO INCOMING CIRCUIT.
11. REPLACE PAD (IF REMOVED) OVER HANDHOLE (IF INSTALLED) SO THAT CABLES ARE IN LINE WITH CONNECTIONS.
12. REPLACE PAD GROUNDING.
13. INSTALL "YDP" TRANSFORMER, SECURE TO PAD AND ATTACH TO PAD GROUNDING.
14. ATTACH SECONDARIES TO TERMINALS, ADJUST IF NECESSARY.
15. INSTALL INSULATING RECEPTACLE (4192) ITEM F OVER LOWER UNUSED PRIMARY BUSHING TERMINAL, GROUND TO TRANSFORMER GROUND POINT.
16. INSTALL PHASE AND ROUTE IDENTIFICATION TAGS (3202).
17. LOCK TRANSFORMER CABINET.
18. REPLACE PROPERTY IN ORIGINAL ORDER.

TABLE OF CONTENTS

3799.104	SDG&E ELECTRIC STANDARDS REPLACEMENT OF 'YP' OR 'YEP' PADMOUNT TRANSFORMER TO 'YDP' LOW PROFILE PADMOUNT TRANSFORMER (WHEN ONE PHASE WITHIN TRANSFORMER COMPARTMENT)	DATE 8-6-79 APPD TAF

U-61.315

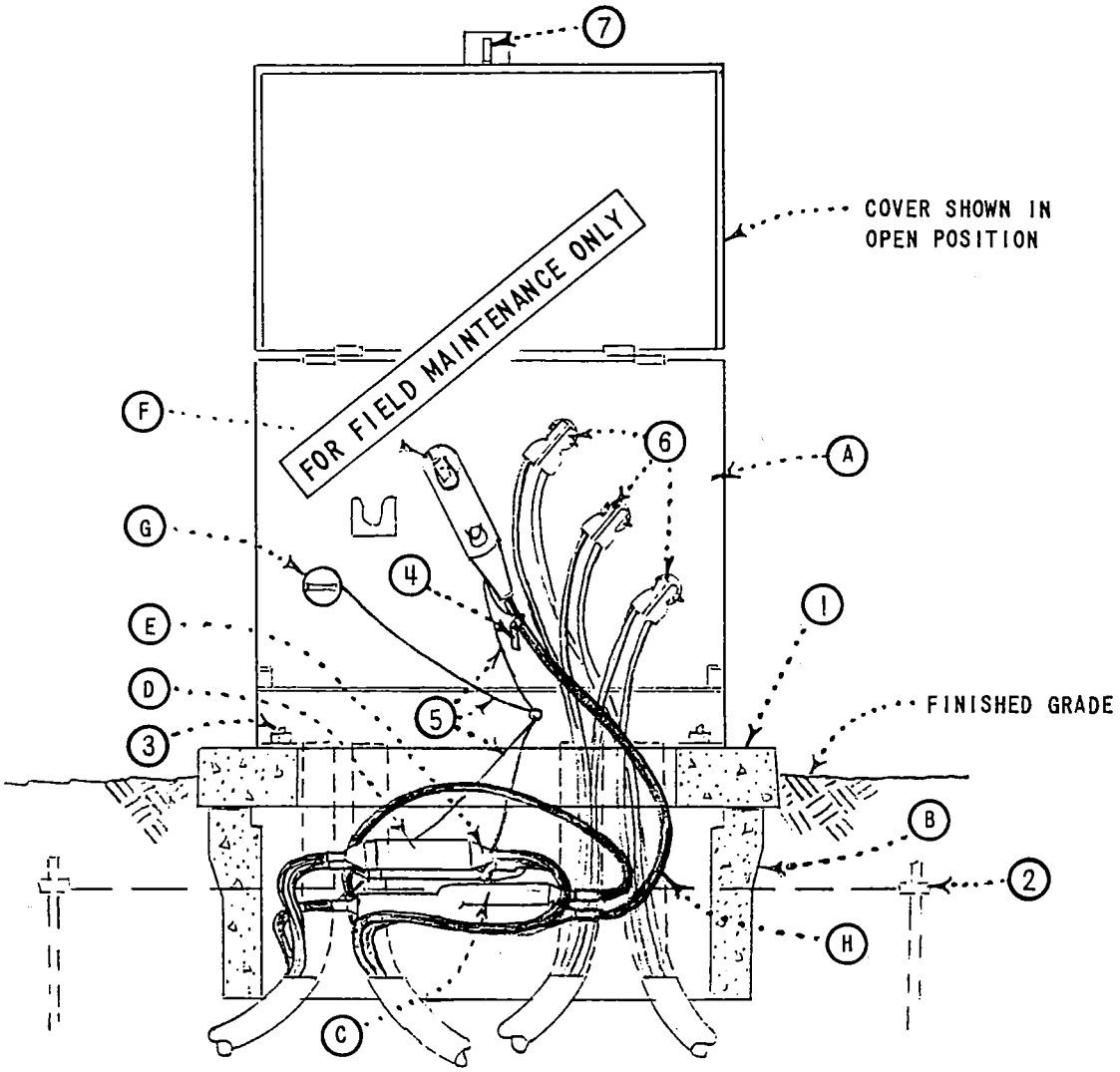

ITEM	DESCRIPTION (REUSABLE MATERIALS)	QUANTITY	STOCK NUMBER OR CONSTR. STD.
1	CONCRETE PAD	1	514240, 3421
2	PAD GROUNDING	1	3407
3	HOLD DOWN DEVICE-NO STANDARD		
4	PHASE AND ROUTE TAGS	AS REQ'D	3231
5	CONCENTRIC NEUTRAL TAILS	AS REQ'D	
6	SECONDARY TERMINATIONS	AS REQ'D	4171, 4168
7	COMPANY LOCK, (CORBIN #27) FF KEY	1	514848
8			

ITEM	DESCRIPTION (NEW MATERIALS)	QUANTITY	STOCK NUMBER OR CONSTR. STD.
A	TRANSFORMER, LOW PROFILE	1	3702
B	HANDHOLE, BOTTOM SECTION	1	162664, 3313
C	SPLICE, 'Y', #2,	1	668416, 4199.506
D	STRAIGHT RECEPTACLE, #2 COPPER	2	570256, 4196
E	STRAIGHT PLUG, #2 COPPER	2	544688, 4196
F	ELBOW, LOAD BREAK, 7.2KV	1	443418, 4191
G	INSULATING RECEPTACLE, LOAD BREAK	1	204304, 4192
H	CONDUCTOR, #2 COPPER, 15KV	AS REQ'D	194496,U-12.4 FMO

DATE 8-6-79
APPD TAF

SDG&E ELECTRIC STANDARDS

REPLACEMENT OF 'YEP' PADMOUNT TRANSFORMER TO 'YDP' LOW PROFILE PADMOUNT TRANSFORMER

(WHEN MULTI-PHASES WITHIN TRANSFORMER COMPARTMENT)

3799.105

TABLE OF CONTENTS

NOTES:

1. STRUCTURE IDENTIFICATION, 3211.
2. TRANSFORMER IDENTIFICATION, 3212.
3. TRANSFORMER 'WARNING SIGN', 3221.

FOR FIELD MAINTENANCE ONLY

TEMPORARY REPLACEMENT PROCEDURE

DROP ANY 3 ϕ LOAD IN LOAD SIDE OF TRANSFORMER BEING REPLACED TO PROTECT AGAINST ANY POSSIBLE BACK FEED. TO AVOID OUTAGES ON RADIAL SYSTEMS IT IS SUGGESTED THAT THE USE OF A PORTABLE "YDP" LOW PROFILE TRANSFORMER BE USED, MOUNTED ADJACENT TO THE TRANSFORMER BEING REPLACED. USE PID CABLE FOR TEMPORARY PRIMARY CIRCUIT BETWEEN ADJACENT UNITS TO THE TRANSFORMER BEING REPLACED. TOTAL LENGTH OF PID CABLES TO BE MADE UP PRIOR TO USE. TWO LENGTHS OF CABLE, ONE END TO HAVE LOAD BREAK ELBOW (4191), OTHER END TO HAVE STRESS CONE (4121) AND CABLE LUG. LENGTHS OF CABLES TO BE 300' TO COVER ALL NORMAL INSTALLATIONS. THE "YDP" TRANSFORMER TO BE MOUNTED ON WOODEN FLOAT PROVIDING EASY INSTALLATION AND PORTABILITY. LAY PID CABLES ON GROUND SURFACE BETWEEN ADJACENT UNITS OR FROM LAST TRANSFORMER, PROTECTED AND MARKED AT POINTS WHERE VEHICULAR TRAFFIC WOULD REQUIRE CROSSING BY USE OF WOOD PLANKING AND BRIDGING. SECONDARY CONNECTIONS COULD BE PROVIDED BY JUMPING FROM PORTABLE "YDP" TO PERMANENT SECONDARY CONNECTION. WHEN TEMPORARY SERVICE IS RESTORED PROCEED WITH PERMANENT REPLACEMENT PROCEDURE.

PERMANENT REPLACEMENT PROCEDURE

1. REMOVE INCOMING AND OUTGOING PRIMARY CONNECTIONS AND DETACH SECONDARY CONNECTIONS. REMOVE STRESS CONES, HARDWARE AND GROUNDS.
2. REMOVE EXISTING "YEP" TRANSFORMER FROM PAD.
3. REMOVE PAD AND GROUNDING (LEAVE GROUND RODS IN PLACE).
4. EXCAVATE HOLE, (48" W X 36" L X 20" DEEP, BACKFILL TO 18" LEVEL BELOW PAD), UNDER CONDUIT OPENING TO ACCOMMODATE (ITEM B) HANDHOLE-BOTTOM SECTION.
5. CUT DUCTS OFF 3" ABOVE THE BASE OF EXCAVATION.
6. INSTALL HANDHOLE OVER DUCTS.
7. THE TWO PHASE CONDUCTORS WHICH ARE NOT BEING EXTENDED TO THE TRANSFORMER REQUIRE INSTALLATION FOR STRAIGHT RECEPTACLE (4196) AND STRAIGHT PLUG (4196).
8. ON REMAINING PHASE PREPARE CABLE TO RECEIVE "Y" SPLICE (4199.506). INSTALL INCOMING LINE ON SINGLE END OF "Y", OUTGOING LINE ON ONE SIDE OF DOUBLE END.
9. REPLACE PAD OVER HANDHOLE SO THAT CABLES ARE IN LINE WITH CONNECTIONS.
10. REPLACE PAD GROUNDING.
11. INSTALL "YDP" TRANSFORMER, SECURE TO PAD AND ATTACH TO PAD GROUNDING.
12. ATTACH SECONDARIES TO TERMINALS, ADJUST IF NECESSARY.
13. INSTALL INSULATING RECEPTACLE (4192) OVER LOWER UNUSED PRIMARY BUSHING TERMINAL, GROUND TO TRANSFORMER GROUND POINT.
14. ON REMAINING OPEN END OF "Y" INSTALL NEEDED #2 COPPER, 15KV CABLE TO MAKE CONNECTION TO TOP PRIMARY BUSHING, ADD ELBOW (4191) AND ATTACH GROUND WIRE TO TRANSFORMER GROUND POINT.
15. INSTALL PHASE AND ROUTE IDENTIFICATION TAGS (3202).
16. LOCK TRANSFORMER CABINET.
17. REPLACE PROPERTY IN ORIGINAL ORDER.

3799.106	SDG&E ELECTRIC STANDARDS REPLACEMENT OF 'YEP' PADMOUNT TRANSFORMER TO 'YDP' LOW PROFILE PADMOUNT TRANSFORMER (WHEN MULTI PHASES WITHIN TRANSFORMER COMPARTMENT)	DATE 8-6-79 APPD TAF

TABLE OF CONTENTS

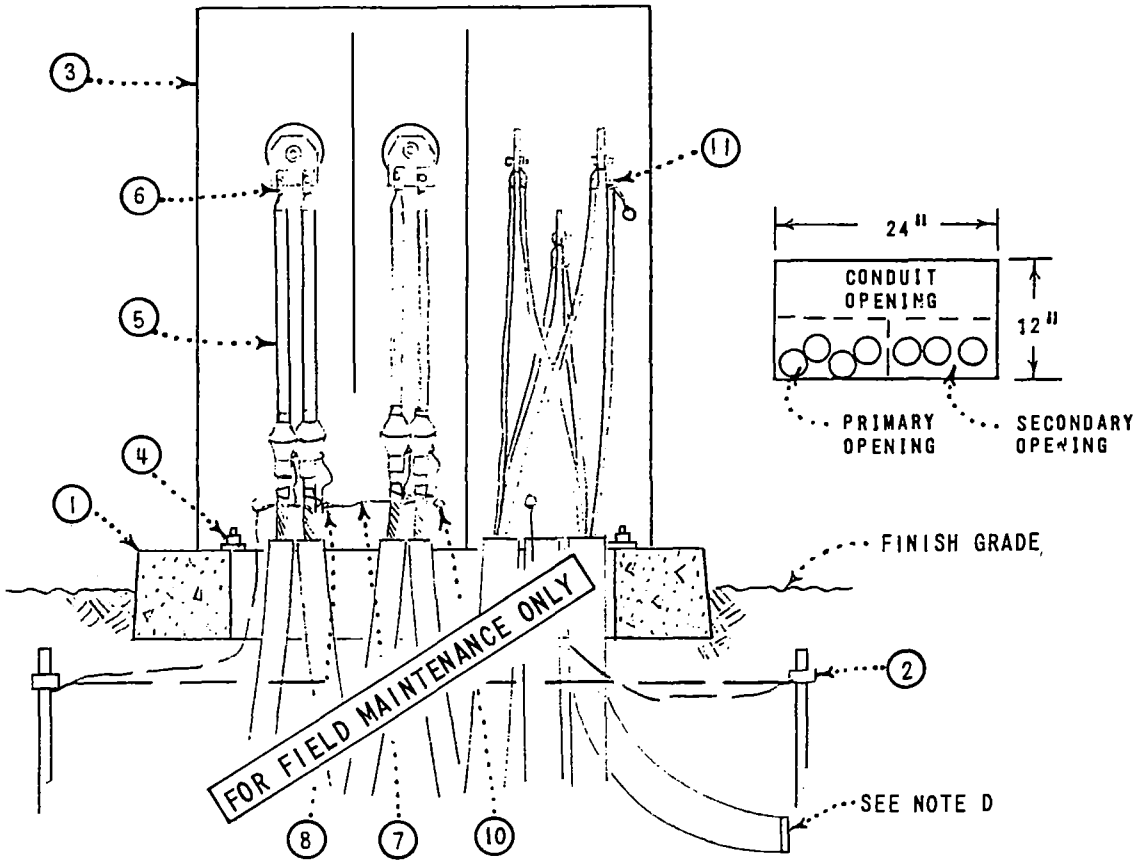

ITEM	DESCRIPTION	QUANTITY	STOCK NO. OR CONST. STD.
1	CONCRETE PAD	1	514240, 3421
2	PAD GROUNDING UNIT	1	3407
3	TRANSFORMER	1	3702
4	HOLD DOWN DEVICE, NO STANDARD	-	-
5	INDOOR TERMINATION	4	4121
6	COMPRESSION CONNECTOR	4	4171
7	CONCENTRIC NEUTRAL TAIL	-	-
8	CONNECTOR, COMPRESSION	AS REQ'D	257792
9	COMPANY LOCK, (CORBIN #27) FF KEY (NOT SHOWN ABOVE)	1	514848
10	PHASE AND ROUTE TAGS	AS REQ'D	3231
11	SECONDARY CONNECTION	AS REQ'D	4171, 4168

NOTES:

A. TRANSFORMER RATING AND SIZE PER WORK ORDER (3702)

B. TERMINATE DUCTS NOT LESS THAN 3" ABOVE FINISH GRADE.

C. COMPANY LOCK, ITEM 9, TO BE ATTACHED TO LATCHING MECHANISM ON TRANSFORMER.

D. AT THE TIME THE TRANSFORMER PAD IS SET A 2" IPS ABS (D8) 90° - 24" RADIUS BEND WITH PLUG SHOULD BE INSTALLED FOR EACH FUTURE SERVICE.

E. THE SURFACE OF THE PAD SHALL BE GROOVED TO INDICATE LOCATION OF BURIED FUTURE SERVICE STUB-OUTS (ITEM D).

F. TRANSFORMER IDENTIFICATION, 3211.

G. TRANSFORMER STATION CIRCUIT NUMBER, 3212.

H. TRANSFORMER WARNING SIGN, 3221.

I. TRANSFORMER BARRIER PROTECTION AND CLEARANCE, 3481.

DATE 4-10-75 APPD	SDG&E ELECTRIC STANDARDS 12KV 1Ø PADMOUNT TRANSFORMER INSTALLATION	3799.201

TABLE OF CONTENTS

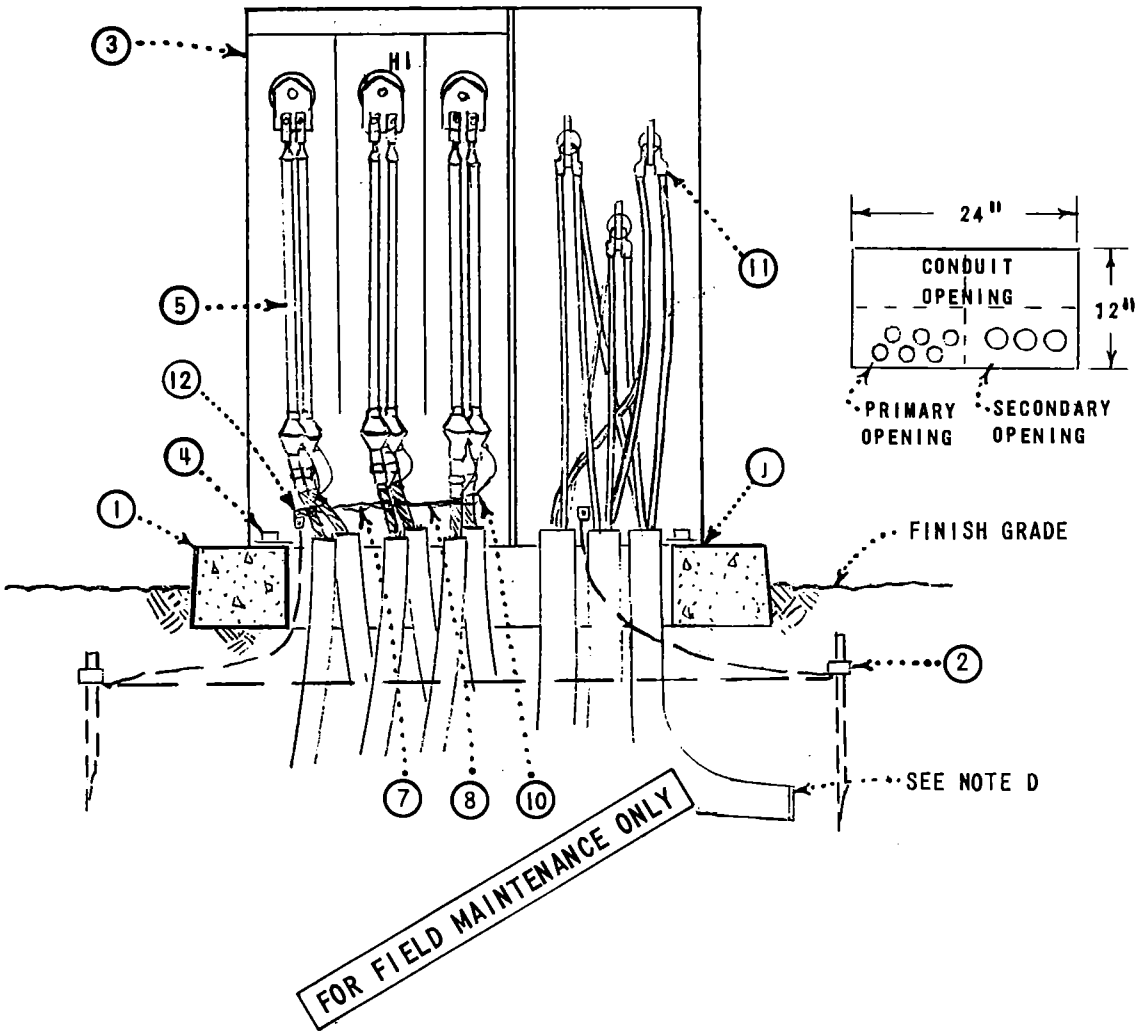

NOTES:

A. TRANSFORMER RATING AND SIZE PER WORK ORDER (PAGE 3702 AND T&D SPEC NO. 108).

B. TERMINATE DUCTS NOT LESS THAN 3" ABOVE FINISHED GRADE.

C. COMPANY LOCK, ITEM 9, TO BE ATTACHED TO LATCHING MECHANISM ON TRANSFORMER AND PENTAHEAD BOLT THREADED IN COMPLETELY.

D. TRANSFORMER IDENTIFICATION, PAGE 3211.

F. TRANSFORMER STATION CIRCUIT NUMBER, PAGE 3212.

G. TRANSFORMER WARNING SIGN, PAGE 3221.

H. TRANSFORMER BARRIER PROTECTION AND CLEARANCE PAGE 3481.

(J) BASE SHALL BE CHECKED AND CAULKED WHEN NECESSARY TO PREVENT WIRE ENTRY.

ITEM	DESCRIPTION	QUANTITY	STOCK NO. OR CONSTR STD
1	CONCRETE PAD	1	514240, PG 3421
2	PAD GROUNDING, UNIT	1	PG 3407
3	TRANSFORMER (INCLUDING NEP)	1	PG 3702
4	HOLD DOWN DEVICE, NO STANDARD	2	-
5	INDOOR TERMINATION (NO MORE THAN 2 PER LANDING PLATE)	AS REQ'D	PG 4121
6			
7	CONCENTRIC NEUTRAL TAILS	2	-
8	CONNECTOR, COMPRESSION	AS REQ'D	257792
9	COMPANY LOCK, (CORBIN #27) FF KEY (NOT SHOWN ABOVE)	1	514848
10	PHASE AND ROUTE TAGS	AS REQ'D	PG 3231
11	SECONDARY CONNECTIONS	AS REQ'D	PGS 4171, 4168
12	NEUTRAL GROUNDING STRAP (ON TRANSFORMER)	1	-

SDG&E ELECTRIC STANDARDS

3799.202

2.4 OR 7.2 1Ø PADMOUNT TRANSFORMER (INCLUDING NEP) INSTALLATION

DATE 8-6-79

APPD TAF

TABLE OF CONTENTS

PAD–MOUNTED DEAD FRONT/SINGLE PHASE:

PREFIX	VOLTAGE		DESCRIPTION	KVA	TAPS	STOCK NO.	ASSEMBLY UNITS
	PRIMARY	SECONDARY					
SDD	4160 GRDY/2400X 12000 GRDY/6930	240/120	WEAK LINK	25	–	761402 (A)	–
				50	–	761404 (A)	–
				75	–	761406 (A)	–
NDP	12000 GRDY/6930	240/120	WEAK LINK AND SECONDARY BREAKER	25	–	761380 (A)	–
				50	–	761382 (A)	–
				75	–	761384 (A)	–
				100		761386 (A)	–
NTP	12000 GRDY/6930	240/120	WEAK LINK AND SECONDARY BREAKER	25	(B)	761388 (A)	–
				50	(B)	761390 (A)	–
				75	(B)	761392 (A)	–
				100	(B)	761394 (A)	–
NTQ	12000 GRDY/6930	240/120	WEAK LINK & SECONDARY BREAKER LOW NOISE	25	(B)	761396 (A)	–
				75	(B)	761400 (A)	–
YDP	12470 GRDY/7200	240/120	WEAK LINK AND SECONDARY BREAKER	25	–	762260 (A)	–
				50	–	762264 (A)	–
				75	–	762268 (A)	–
				100	–	762258 (A)	–
YDQ	12470 GRDY/7200	240/120	WEAK LINK AND SECONDARY BREAKER LOW NOISE	25	–	762262 (A)	–
				50	–	762266 (A)	–
				75	–	762270 (A)	–
YTP	12470 GRDY/7200	240/120	WEAK LINK AND SECONDARY BREAKER	25	(H)	762532 (A)	–
				50	(H)	762534 (A)	–
				75	(H)	762536 (A)	–
				100	(H)	762538 (A)	–
HDD	12000	240/120	WEAK LINK	25		759826 (A)	–
				50	–	759828 (A)	–
				75	–	759830 (A)	–
				100	–	759832 (A)	–
				167	–	759834 (A)	–
HTD	12000	240/120	WEAK LINKS	50	(B)	761094 (A)	–
				167	(B)	761102 (A)	–
SUPERCEDES 3702.1 (1–1–96)							
NSD	12000 GRDY/6930	240/120	STAINLESS STEEL WEAK LINK	25	–	761415	NSD–25
				50	–	761416	NSD–50
				75	–	761417	NSD–75
				100	–	761418	NSD100

TABLE OF CONTENTS

DATE 1–1–96 APPD	SDG&E ELECTRIC STANDARDS TRANSFORMER PREFIXES PAD–MOUNTED DEAD FRONT/SINGLE–PHASE	3799.203

PAD-MOUNTED DEAD FRONT/SINGLE PHASE:

PREFIX	VOLTAGE		DESCRIPTION	KVA	TAPS	STOCK NUMBER
	PRIMARY	SECONDARY				
SDD	4160 GRDY/ 2400X 12000 GRDY/ 6930	240/120	WEAK LINK	25	-	761402 (A)
				50	-	761404 (A)
				75	-	761406 (A)
NDP	12000 GRDY/ 6930	240/120	WEAK LINK AND SECONDARY BREAKER	25	-	761380 (A)
				50	-	761382 (A)
				75	-	761384 (A)
				100	-	761386 (A)
NTP	12000 GRDY/ 6930	240/120	WEAK LINK AND SECONDARY BREAKER	25	(B)	761388 (A)
				50	(B)	761390 (A)
				75	(B)	761392 (A)
				100	(B)	761394 (A)
NTQ	12000 GRDY/ 6930	240/120	WEAK LINK AND SECONDARY BREAKER LOW NOISE	25	(B)	761396 (A)
				75	(B)	761400 (A)
YDP	12470 GRDY/ 7200	240/120	WEAK LINK AND SECONDARY BREAKER	25	-	762260 (A)
				50	-	762264 (A)
				75	-	762268 (A)
				100	-	762258 (A)
YDQ	12470 GRDY/ 7200	240/120	WEAK LINK AND SECONDARY BREAKER LOW NOISE	25	-	762262 (A)
				50	-	762266 (A)
				75	-	762270 (A)
YTP	12470 GRDY/ 7200	240/120	WEAK LINK AND SECONDARY BREAKER	25	(H)	762532 (A)
				50	(H)	762534 (A)
				75	(H)	762536 (A)
				100	(H)	762538 (A)
HDD	12000	240/120	WEAK LINKS	25	-	759826 (A)
				50	-	759828 (A)
				75	-	759830 (A)
				100	-	759832 (A)
				167	-	759834 (A)
HTD	12000	240/120	WEAK LINKS	50	(B)	761094 (A)
				167	(B)	761102 (A)

FOR FIELD MAINTENANCE ONLY

TABLE OF CONTENTS

DATE 1-1-88 APPD	SDG&E ELECTRIC STANDARDS TRANSFORMER PREFIXES PAD-MOUNTED DEAD FRONT/SINGLE-PHASE	3799.203

PAD-MOUNTED LIVE FRONT/SINGLE PHASE:

PREFIX	VOLTAGE		DESCRIPTION	KVA	TAPS	STOCK NUMBER
	PRIMARY	SECONDARY				
WEP	4160 GRDY/2400	240/120	WEAK LINK AND SECONDARY BREAKER	15	-	761408 (A)
				25	-	761440 (A)
				50	-	761472 (A)
				75	-	761504 (G)
WEQ	4160 GRDY/2400	240/120	WEAK LINK AND SECONDARY BREAKER LOW NOISE	25	-	761442 (A)
				50	-	761474 (A)
YP	12470 GRDY/7200	240/120	EXTERNALLY FUSED	15	-	762304 (A)
				25	-	762368 (A)
				50	-	762400 (A)
				50	(H)	762416 (A)
				75	-	762432 (A)
				100	-	762272 (A)
				167	-	762336 (A)
YEP	12470 GRDY/7200	240/120	WEAK LINK AND SECONDARY BREAKER	15	-	762048 (A)
				15	(H)	762080 (A)
				25	-	762112 (A)
				25	(B)	762144 (A)
				50	-	762176 (A)
				50	(B)	762208 (A)
				75	-	762240 (A)
				75	(B)	762256 (A)
				100	-	761984 (A)
				100	(B)	762016 (A)
NEP	12000 GRDY/6930	240/120	WEAK LINK	50	(B)	761410 (G)
				100	(B)	761414 (G)
HP	12000	240/120	EXTERNALLY FUSED	25	-	760672 (A)
				25	(B)	760674 (G)
				50	-	760704 (A)
				50	(B)	760706 (G)
				75	-	760736 (A)
				100	-	760608 (A)
				100	(B)	760740 (A)
				167	-	760640 (A)
				167	(B)	760744 (G)
HQ	12000	240/120	EXTERNALLY FUSED, LOW NOISE	167	-	760642 (A)

FOR FIELD MAINTENANCE ONLY

TABLE OF CONTENTS

SDG&E ELECTRIC STANDARDS

3799.204

TRANSFORMER PREFIXES
PAD-MOUNTED LIVE FRONT/SINGLE-PHASE

DATE 1-1-88
APPD

PAD-MOUNTED LIVE FRONT/SINGLE PHASE: (CONT'D)

PREFIX	VOLTAGE		DESCRIPTION	KVA	TAPS	STOCK NUMBER
	PRIMARY	SECONDARY				
HEP	12000	240/120	WEAK LINK AND SECONDARY BREAKER	15	-	759904 (A)
				15	(B)	759936 (A)
				25	-	759968 (A)
				25	(B)	760000 (G)
				37.5	-	760032 (A)
				50	-	760064 (A)
				50	(B)	760096 (G)
				75	-	760128 (A)
				75	(B)	760160 (A)
				100	-	759840 (A)
				100	(B)	759872 (G)
HEQ	12000	240/120	WEAK LINK AND SECONDARY BREAKER LOW NOISE	25	(B)	759970 (A)
				50	(B)	760066 (A)
				75	(B)	760130 (A)
HJP	12000	240/480	WEAK LINK AND SECONDARY BREAKER	15	-	760224 (A)
				25	-	760256 (A)
				25	(B)	760258 (A)
				50	-	760260 (A)
				50	(B)	760264 (G)
				100	(B)	760268 (A)

FOR FIELD MAINTENANCE ONLY

SUBSURFACE/SINGLE PHASE:

PREFIX	VOLTAGE		DESCRIPTION	KVA	TAPS	STOCK NUMBER
	PRIMARY	SECONDARY				
WS	2400/4160Y	240/120	LEAD PRIMARY BUSHINGS	5	-	757376 (A)
				5	(H)	757408 (A)
				7.5	-	757472 (A)
				10	-	757120 (A)
				15	-	757216 (A)
				15	(H)	757232 (A)
				20	-	- (A)
				25	-	757312 (A)
				30	-	757344 (A)
				37.5	-	757360 (A)
				40	-	- (A)

TABLE OF CONTENTS

TABLE OF CONTENTS

SUBSURFACE/SINGLE PHASE: (CONT'D)

PREFIX	VOLTAGE PRIMARY	VOLTAGE SECONDARY	DESCRIPTION	KVA	TAPS	STOCK NUMBER	ASSEMBLY UNITS
WS	2400/4160Y	240/120	LEAD PRIMARY BUSHINGS	50	–	757440 (A)	–
				75	–	757504 (A)	–
				75	(H)	757536 (A)	–
				100	–	757152 (A)	–
				100	(H)	757184 (A)	–
				167	–	757248 (A)	–
				167	(H)	757280 (G)	–
WSV	2400/4160Y	240/120	–	10	–	761632 (A)	–
				15	–	761664 (A)	–
				25	–	761696 (A)	–
				50	–	761728 (A)	–
				75	–	761760 (A)	–
WUS	2400/4160Y	240/120	WEAK LINK	25	–	761544 (G)	–
				50	–	761552 (G)	–
				37.5	–	761548 (A)	–
				75	–	761560 (G)	–
				100	–	761536 (G)	–
YSV	7200/12470Y	240/120	WEAK LINK AND SECONDARY BREAKER	25	–	762464 (A)	–
				50	–	762496 (A)	–
				75	–	762528 (A)	–
YIS	12470 GRDY/7200	240/120	RTE BAY-O-NET FUSE	50	–	764203 (A)	–
				100	–	764207 (A)	–
YES	12470 GRDY/7200	240/120	WEAK LINK AND SECONDARY BREAKER	25	–	764202 (A)	–
				50	–	764204 (A)	–
				75	–	764210 (A)	–
				100	–	764208 (A)	–
NES	12000 GRDY/6930	240/120	WEAK LINK	50	(B)	764221 (G)	–
				100	(B)	764223 (G)	–

FOR FIELD MAINTENANCE ONLY

STREET LIGHT

PREFIX	VOLTAGE PRIMARY	VOLTAGE SECONDARY	DESCRIPTION	KVA	TAPS	STOCK NUMBER	ASSEMBLY UNITS
RS	2400	6.6A	(STREET LIGHT) SUBWAY TYPE, CONSTANT CURRENT	5	–	– (A)	–
				10	–	763616 (G)	–
				15	(C)	763648 (G)	–
				25	(H)	763712 (A)	–
				25	(C)	763680 (G)	U–RS25
				30	(C)	763744 (G)	–
RRS	2400	20A	(STREET LIGHT) SUBWAY TYPE, CONSTANT CURRENT	30	(C)	763746 (G)	U––R25

PAD-MOUNTED DEAD FRONT/THREE-PHASE:

PREFIX	VOLTAGE		DESCRIPTION		KVA	TAPS	STOCK NUMBER
	PRIMARY	SECONDARY					
PZR	4160X12000	208Y/120 3 PHASE 4 WIRE	RADIAL PROTECTIVE LINKS BAY-O-NET (1) (D) FUSES	D.E.W.L.	75	-	761958 (A)
					150	-	761962 (A)
				FAULT SENSING	500	-	761976 (A)
HZL	12000	208Y/120 3 PHASE 4 WIRE	D.E.W.L. BAY-O-NET FUSES AND PROTECTIVE LINKS, LOOP (1)		75	-	761135 (A)
					150	-	761137 (A)
					225	-	761139 (A)
HZR	12000	208Y/120 3 PHASE 4 WIRE	D.E.W.L. BAY-O-NET FUSES AND PROTECTIVE LINKS, RADIAL (1)		75	-	761144 (A)
					150	-	761145 (A)
					225	-	761148 (A)
					300	-	761149 (A)
HAL	12000	208Y/120 3 PHASE 4 WIRE	FOR FIELD MAINTENANCE ONLY D.E.W.L. BAY-O-NET FUSES AND PROTECTIVE LINKS, LOOP (1)		300	(B)	759596 (A)
					500	(B)	759598 (A)
					750	(B)	759600 (A)
					1000	(B)	759602 (A)
HKR	12000	240/120 3 PHASE 4 WIRE	D.E.W.L. BAY-O-NET FUSES AND PROTECTIVE LINKS, RADIAL (1)		75	-	760269 (A)
					150	-	760270 (A)
					225	-	760271 (A)
HML	12000	480Y/277 3 PHASE 3 OR 4 WIRE	D.E.W.L. BAY-O-NET FUSES AND PROTECTIVE LINKS, LOOP (1)		75	-	760386 (A)
					150	-	760388 (A)
					225	-	760392 (A)
					300	-	760394 (A)
HNL	12000	480Y/277 3 PHASE 3 OR 4 WIRE	LOOP PROTECTIVE LINKS (1) BAY-O-NET FUSES	D.E.W.L.	500	(B)	760408 (A)
				FAULT SENSING	750	(B)	760410 (A)
					1000	(B)	760412 (A)
HPR	12000	2400/4160Y/2400 OR 2400/4160GRDY/2400, 3Ø 3 OR 4 WIRE	RADIAL PROTECTIVE LINKS BAY-O-NET FUSES (1)	D.E.W.L.	200AMP LOADBREAK SECONDARY BUSHING	225	(B) 760934 (A)
				FAULT SENSING	600AMP DEADBREAK SECONDARY BUSHING	500	(B) 760936 (A)
						750	(B) 760938 (A)
						1000	(B) 760940 (A)

NOTES:

- D.E.W.L. IS DEFINED AS "DUAL ELEMENT WEAK LINK".

TABLE OF CONTENTS

PAD-MOUNTED LIVE FRONT/THREE PHASE:

PREFIX	VOLTAGE		DESCRIPTION	KVA	TAPS	STOCK NUMBER
	PRIMARY	SECONDARY				
WGP	2400/4160Y	208Y/120	-	75	-	761600 (A)
				150	-	761568 (A)
WZP	4160	208Y/120 3 PHASE 4 WIRE	INTERNALLY FUSED, SECONDARY BREAKER	75	-	761920 (A)
				75	(B)	761952 (G)
				112.5	-	761856 (A)
				150	(B)	761888 (G)
WXP	4160	240X480 3 PHASE 3 WIRE	INTERNALLY FUSED, SECONDARY BREAKER	75	(B)	761824 (G)
				150	-	761792 (G)
HGP	12000	208Y/120	-	75	-	- (A)
				112.5	-	760176 (A)
				150	-	- (A)
				225	-	760184 (A)
				300	-	760188 (A)
				500	-	760192 (A)
HHP	12000	208Y/120	-	1875	-	760208 (A)
HAP	12000	208Y/120 3 PHASE 4 WIRE	EXTERNALLY FUSED	75	(B)	759776 (G)
				225	(B)	759680
				300	(B)	759712 (G)
				500	(B)	759744
				750	(B)	759808 (G)
				1000	(B)	759632
HAQ	12000	208Y/120 3Ø - 4 WIRE	EXTERNALLY FUSED, LOW NOISE	300	(B)	759714 (A)
HBP	12000	208Y/120	INTERNALLY FUSED	150	(B)	- (A)
				225	(B)	759816 (A)
				300	(B)	759834 (A)
HZP	12000	208Y/120 3 PHASE 4 WIRE	INTERNALLY FUSED, SECONDARY BREAKER	75	(B)	761376 (A)
				112.5	(B)	761312 (A)
				150	(B)	761344 (A)
HZQ	12000	208Y/120 3 PHASE 4 WIRE	INTERNALLY FUSED, SECONDARY BREAKER LOW NOISE	75	(B)	761378 (A)
				150	(B)	761346 (A)
HDP	12000	240/480	-	45	-	- (A)
				75	-	- (A)
				150	-	- (A)
				300	-	- (A)

FOR FIELD MAINTENANCE ONLY

TABLE OF CONTENTS

3799.208	SDG&E ELECTRIC STANDARDS TRANSFORMER PREFIXES PAD-MOUNTED LIVE FRONT/THREE-PHASE	DATE 1-1-88 APPD JJB/RDS

PAD-MOUNTED LIVE FRONT/THREE-PHASE: (CONT'D)

PREFIX	VOLTAGE PRIMARY	VOLTAGE SECONDARY	DESCRIPTION	KVA	TAPS	STOCK NUMBER	ASSEMBLY UNITS
HFP	12000	240/480	INTERNALLY FUSED	30	–	– (A)	–
HLP	12000	240X480 THREE-PHASE 3 WIRE	EXTERNALLY FUSED	75	(B)	760384 (A)	–
				150	–	760272 (A)	–
				225	(B)	760288 (A)	–
				300	(B)	760320 (A)	–
				500	(B)	760352 (A)	–
HXP	12000	240X480 THREE-PHASE 3 WIRE	INTERNALLY FUSED, SECONDARY BREAKER	45	(B)	761248 (A)	–
				75	(B)	761280 (A)	–
				112.5	(B)	761152 (A)	–
				150	(B)	761184 (A)	–
				225	(B)	761216 (A)	–
HUP	12000	480Y/277	–	225	(B)	– (A)	–
				300	(B)	– (A)	–
				500	–	–	–
				750	–	761136 (A)	–
HMP	12000	480Y/277 THREE-PHASE 3 OR 4 WIRE	EXTERNALLY FUSED	75	(B)	760560 (G)	–
				225	(B)	760480	–
				300	(B)	760512	–
				500	(B)	760544	–
				750	(B)	760576	–
				1000	(B)	760416	–
				1500	**(B)**	**760448**	**HMP1.5**
				2000	**(B)**	**760464**	**HMP2.0**
				2500	**(B)**	**760468**	**HMP2.5**
HOP	12000	4160Y/2400	–	500	(B)	– (A)	–
HPP	12000	2400/4160Y/2400 THREE-PHASE 3 OR 4 WIRE	EXTERNALLY FUSED	150	(B)	760800 (G)	–
				225	(B)	760832 (G)	–
				300	(B)	760864 (G)	–
				500	(B)	760896	–
				750	(B)	760928 (G)	–
				1000	(B)	760768 (G)	–
				1500	(B)	760816	HPP1.5
				2000	(B)	760824	HPP2.0
				2500	(B)	760828	HPP2.5
HSV	12000	7200/2400	–	10	–	760960 (A)	–
				15	–	760992 (A)	–
				25	–	761024 (A)	–
				50	–	761056 (A)	–
				75	–	761088 (A)	–

FOR FIELD MAINTENANCE ONLY

TABLE OF CONTENTS

DATE 7-21-99 APPD [signature] / [signature]	SDG&E ELECTRIC STANDARDS TRANSFORMER PREFIXES PAD-MOUNTED LIVE FRONT/THREE-PHASE	3799.209

SINGLE PHASE STREET LIGHT:

PREFIX	VOLTAGE		DESCRIPTION	KVA	TAPS	STOCK NUMBER
	PRIMARY	SECONDARY				
HAS	12000	208Y/120 3Ø – 4 WIRE	–	750	(B)	764200 (G)

INSTALLATION:

(A) NO LONGER PURCHASED.

(B) TWO 2 1/2% TAPS ABOVE AND BELOW

(C) TAPS 1–10%.

(D) BAY–O–NET FUSES MUST BE RESIZED WHEN TRANSFORMER IS CUT FROM 4 TO 12KV.

(G) SPECIAL ORDER (MAY REQUIRE 20 WEEKS LEAD TIME TO RECEIVE ITEMS).

(H) FOUR 2 1/2% TAPS BELOW.

REFERENCE:

(I) SEE STANDARD 4311 FOR FUSING.

J. FOR SINGLE AND THREE–PHASE POLE–MOUNTED, STREET LIGHT AND SUBSTATION TRANSFORMER, SEE OVERHEAD STANDARDS BOOK.

FOR FIELD MAINTENANCE ONLY

TABLE OF CONTENTS

3799.210	SDG&E ELECTRIC STANDARDS TRANSFORMER PREFIXES SUBSURFACE/SINGLE PHASE AND THREE PHASE	DATE 1-1-93 APPD JLB/

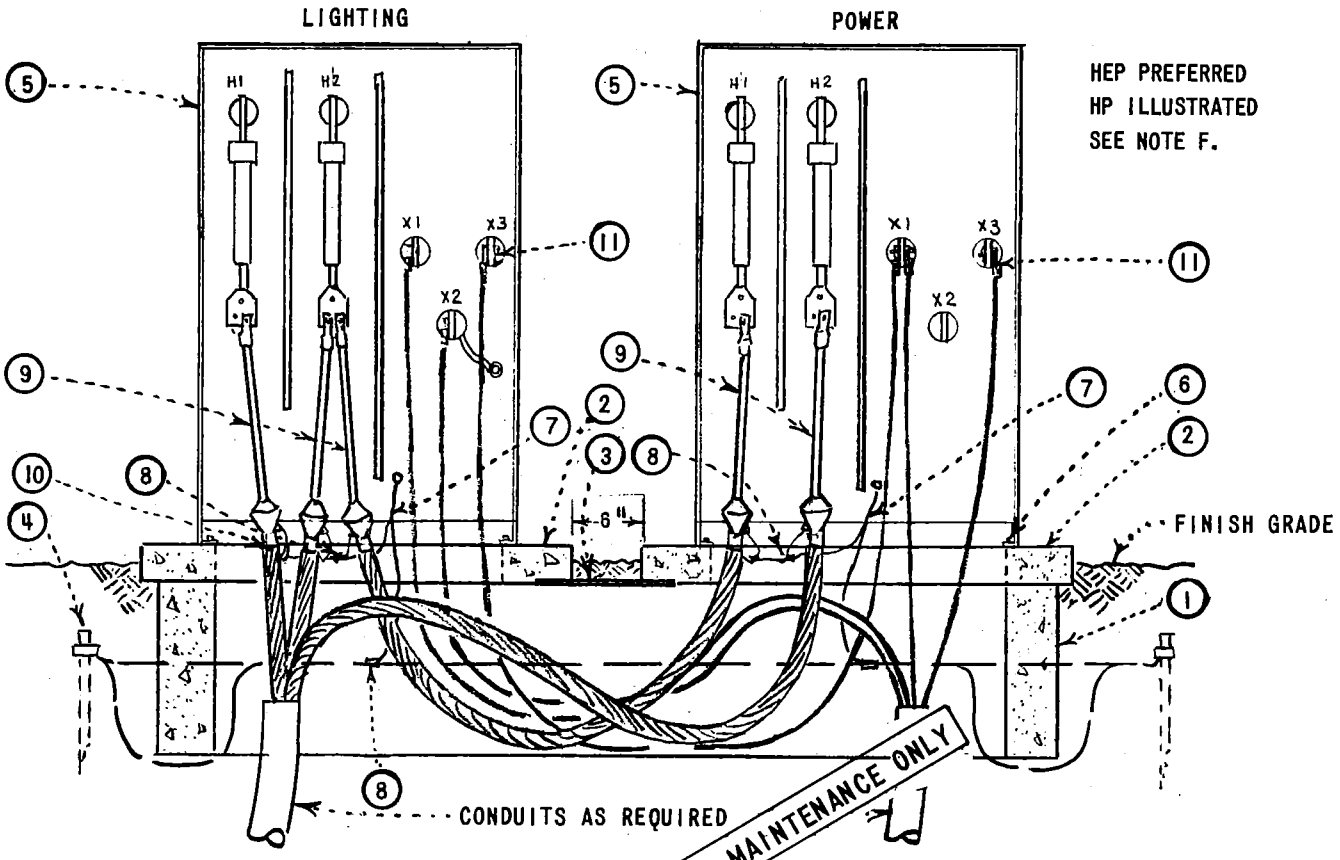

ITEM	DESCRIPTION	QUANTITY	STOCK NO. OR STD. PAGE
1	HANDHOLE, 14" X 14" X 66"	1	162660, 3311
2	CONCRETE PAD, 1φ	2	514240, 3421
3	FLOOR PLATE, 3/8" GALV., 12" X 24"	1	-
4	PAD GROUNDING	1	3407
5	TRANSFORMER HEP, HP, HEQ OR HQ (SEE NOTE F)	2	3702
6	TRANSFORMER HOLD DOWN	4	-
7	CONCENTRIC NEUTRAL TAIL	AS REQ'D	-
8	CONNECTOR, COMPRESSION (GROUND CONNECTION)	4	257792
9	INDOOR TERMINATIONS	5	4171, 4121
10	PHASE AND ROUTE IDENTIFICATION TAGS	AS REQ'D	3231
11	SECONDARY CONNECTIONS	6	4171, 4168
12	COMPANY LOCK, (CORBIN #27) FF KEY, (NOT SHOWN ABOVE)	2	514848

NOTES:

A. ON POWER TRANSFORMER REMOVE SECONDARY GROUND STRAP. ATTACH GROUND TO LIGHTING TRANSFORMER.

B. LEAVE 6" BETWEEN TRANSFORMER PAD, INSERT ITEM 3 PRIOR TO SETTING PADS.

C. PAD NUMBERING, 3211.

D. TRANSFORMER IDENTIFICATION, 3212.

E. TRANSFORMER ENCLOSURE 'WARNING SIGN', 3221.

F. HEP TRANSFORMERS ARE PREFERRED FOR THIS APPLICATION. HP TO BE USED ONLY WHEN HEP TRANSFORMERS ARE UNAVAILABLE.

G. HEQ OR HQ TRANSFORMERS TO BE USED ONLY WITH APPROVAL OF THE DISTRIBUTION ENGINEER.

SDG&E ELECTRIC STANDARDS

DATE 3-15-82
APPD

2-12KV PADMOUNTED TRANSFORMERS FOR OPEN DELTA BANKS

3799.301

TABLE OF CONTENTS

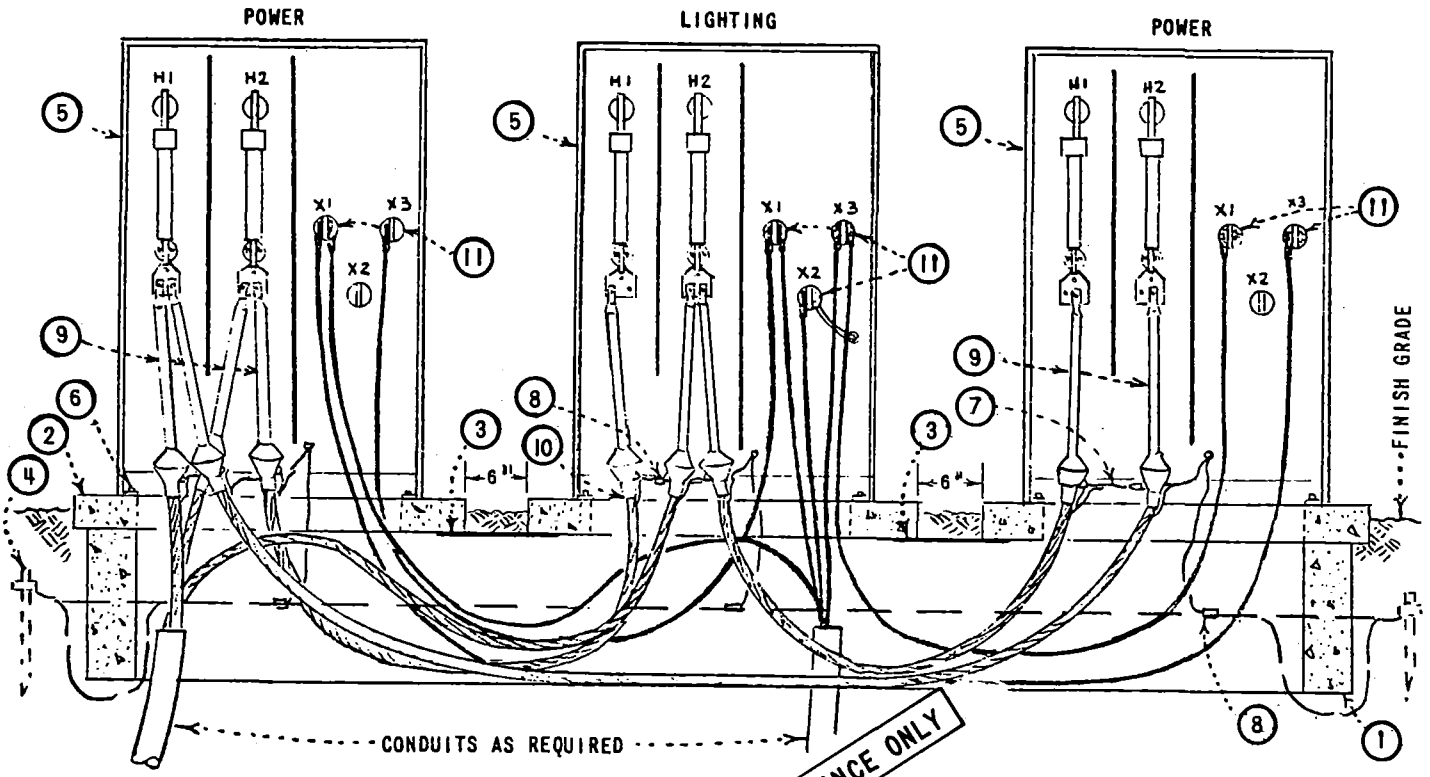

FOR FIELD MAINTENANCE ONLY

ITEM	DESCRIPTION	QUANTITY	STOCK NO. OR STD. PAGE
1	HANDHOLE, 14" X 14" X 108"	1	162662, 3311
2	CONCRETE PAD, 1ϕ	3	514240, 3421
3	FLOOR PLATE, 3/8" GALV., 12" X 24"	2	-
4	PAD GROUNDING	1	3407
5	TRANSFORMER (HP OR HQ)	3	3702
6	TRANSFORMER HOLD DOWN	6	-
7	CONCENTRIC NEUTRAL TAILS	AS REQ'D	-
8	CONNECTOR, COMPRESSION (GROUND CONNECTION)	4	257792
9	INDOOR TERMINATIONS	9	4171, 4121
10	PHASE AND ROUTE IDENTIFICATION TAGS	AS REQ'D	3231
11	SECONDARY CONNECTIONS	10	4171, 4168
12	COMPANY LOCK, (CORBIN #27) FF KEY, (NOT SHOWN ABOVE)	3	514848

NOTES:

A. ON POWER TRANSFORMERS REMOVE SECONDARY GROUND STRAPS. ATTACH GROUND TO LIGHTING TRANSFORMER.

B. LEAVE 6" BETWEEN EACH TRANSFORMER PAD, INSERT ITEM 3 AT BOTH LOCATIONS JUST PRIOR TO SETTING PADS.

C. PAD NUMBERING, 3211.

D. TRANSFORMER IDENTIFICATION, 3212.

E. TRANSFORMER ENCLOSURE 'WARNING SIGN', 3221.

TABLE OF CONTENTS

3799.302	SDG&E ELECTRIC STANDARDS 3-12KV PADMOUNTED TRANSFORMERS FOR CLOSED DELTA BANKS	DATE 3-15-82 APPD

TABLE OF CONTENTS

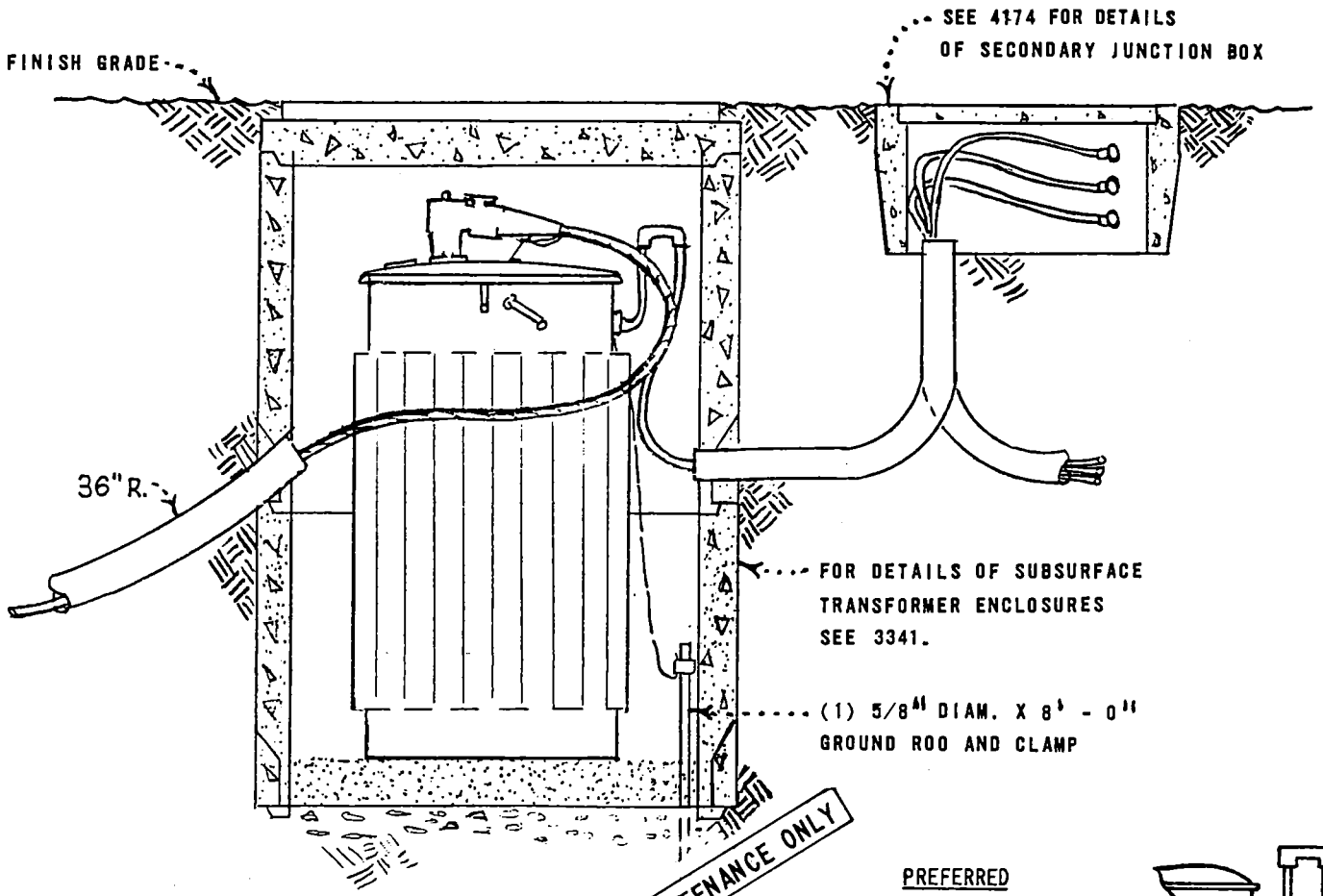

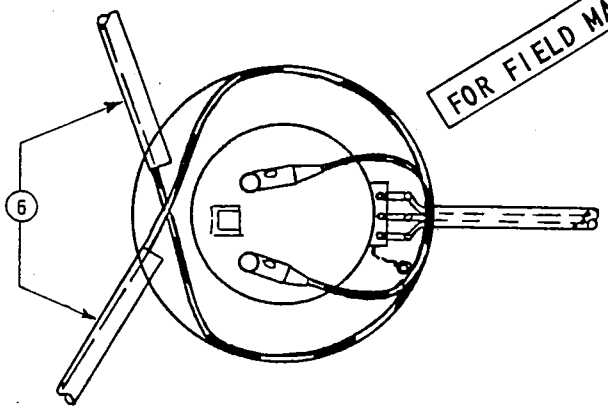

PREFERRED

SECONDARY CONNECTION WHEN 1 FOOT CABLE LEADS OR STUD IS FURNISHED

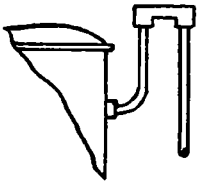

ALTERNATE

USE A HEAT SHRINK SLEEVE ON COMPRESSION CONNECTOR AND TAPE SPADE FOR COMPLETE INSULATION OF SECONDARY CONNECTION

ALTERNATE SECONDARY CONNECTION WHEN NEMA SPADE IS USED ON TRANSFORMER



NOTES:

1. SECONDARY CONNECTION USING 2 POSITION URD MOLE, COMPRESSION CONNECTOR AND HEAT SHRINKIBLE TUBING. SEE 4173.
2. REFER TO 3799.403 WHERE MULTIPLE PHASES ARE INSTALLED.
3. REFER TO 4196 FOR SPLICES.
4. ENCLOSURE NUMBERING, SEE
5. THIS INSTALLATION IS LIMITED TO #2 AWG PRIMARY CONDUCTORS.
6. SKETCH ILLUSTRATES CABLING ORIENTATION FOR 'YIS' AND 'YES'.

APPD [signature] DATE 4-16-76	SAN DIEGO GAS & ELECTRIC COMPANY UNDERGROUND STANDARDS SUBSURFACE TRANSFORMER AND ENCLOSURE INSTALLATION, SINGLE PHASE, TYPE "WS", "WSV", "WUS", "YSV", "YIS", "YES" OR "HSS"	3799.401

INSTALLATION OF SUBSURFACE TRANSFORMER ENCLOSURE
PROCEDURE

Ⓐ EXCAVATE HOLE 60" IN DIAMETER BY 6' - 6" DEEP.
Ⓑ PLACE 6" OF TAMPED GRAVEL IN BOTTOM OF HOLE FOR DRAINAGE.
Ⓒ PLACE SHAFTS IN CENTER OF EXCAVATION.
Ⓓ INSTALL 1 - 5/8" DIAMETER BY 8' - 0" GROUND ROD AND CLAMP WITH SUFFICIENT #2 COPPER WIRE TO CLEAR OPENING.
Ⓔ BACKFILL WITH USABLE SPOIL OR SAND OUTSIDE SHAFT TO A POINT JUST BELOW CONDUIT OPENING ENTRY INTO ENCLOSURE.
Ⓕ INSTALL DUCTS AS REQUIRED.
Ⓖ PULL PRIMARY CABLE, BEND BACK FOR TRANSFORMER ENTRY. ALLOW 10' INSIDE SHAFT FOR TRAINING AND TERMINATING.
Ⓗ PULL SECONDARY CABLES, ALLOW SUFFICIENT CABLE FOR TRAINING AND TERMINATING.
Ⓘ COMPLETE BACK FILL WITH USABLE SPOIL OR SAND OUTSIDE ENCLOSURE TO JUST BELOW FININSHED GRADE.
Ⓙ INSERT TRANSFORMER.
Ⓚ MAKE PRIMARY AND SECONDARY CONNECTIONS.
Ⓛ REFER TO 3341 FOR SUBSURFACE EQUIPMENT ENCLOSURE FOR PROPER COMPONENT PARTS.

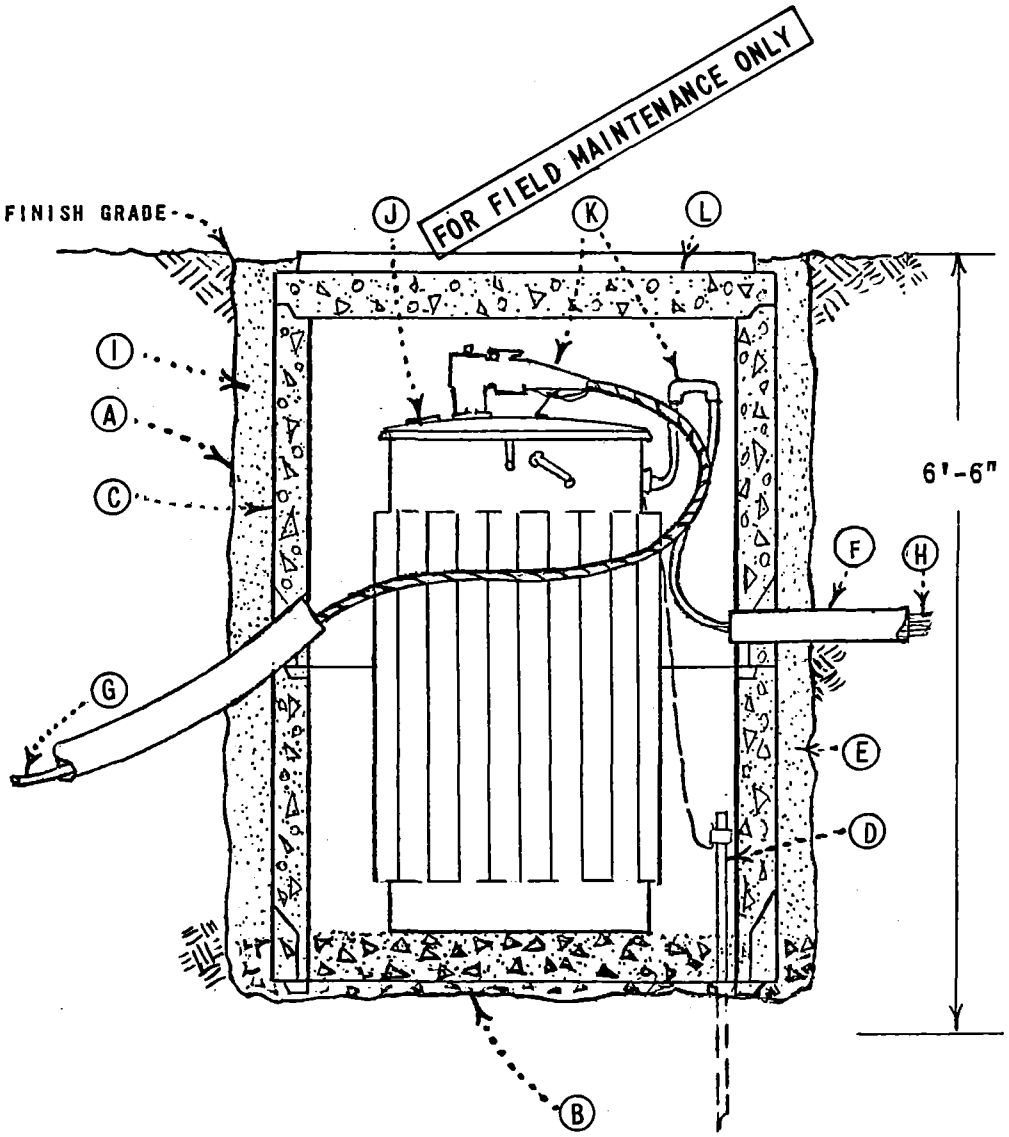

TABLE OF CONTENTS

3799.402	SAN DIEGO GAS & ELECTRIC COMPANY UNDERGROUND STANDARDS SUBSURFACE TRANSFORMER AND ENCLOSURE INSTALLATION, SINGLE PHASE, TYPE "WS", "WSV", "WUS", "YSV", "YIS", "YES" OR "HSS"	DATE 4-16-76 APPD

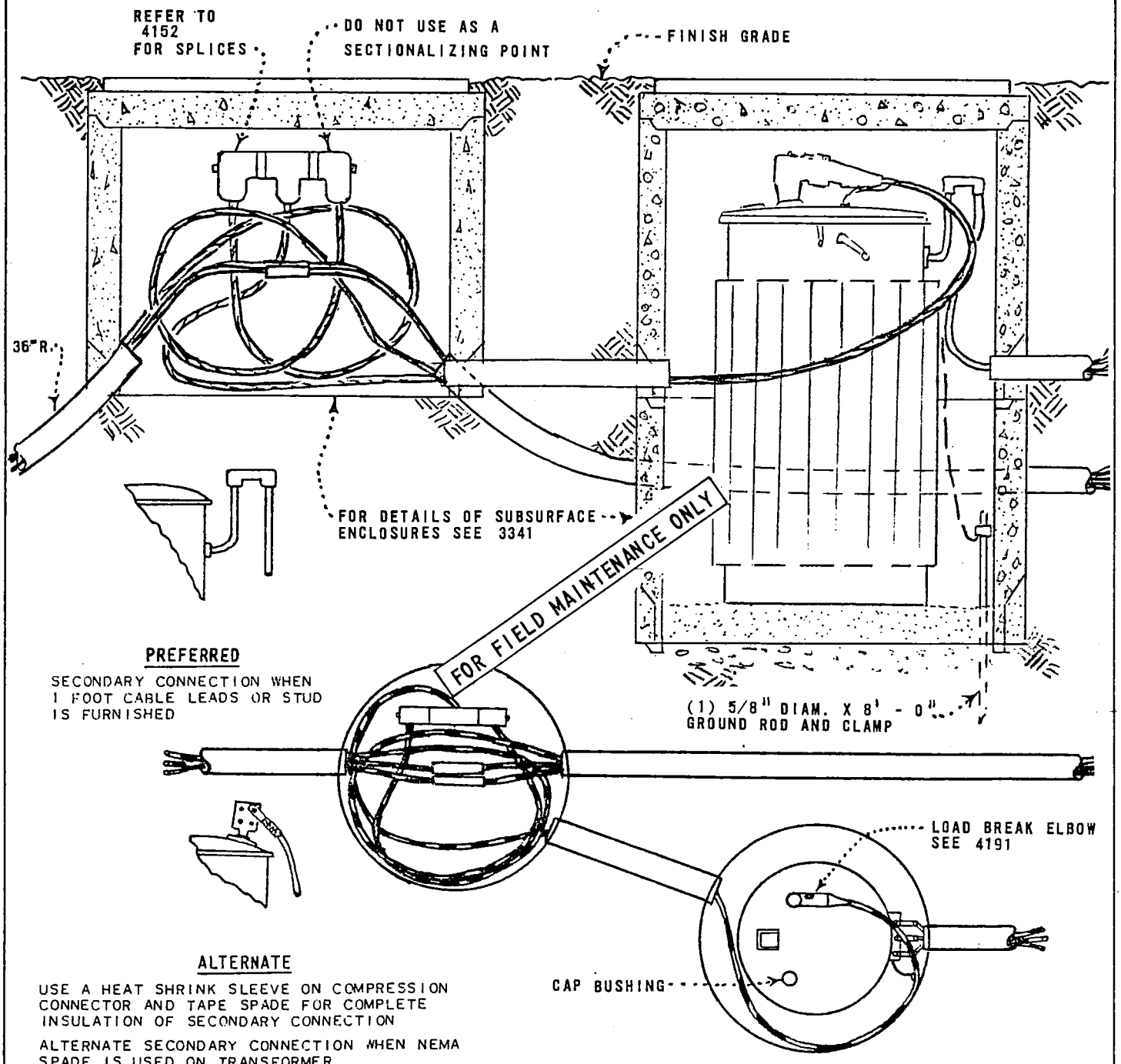

PREFERRED

SECONDARY CONNECTION WHEN 1 FOOT CABLE LEADS OR STUD IS FURNISHED

ALTERNATE

USE A HEAT SHRINK SLEEVE ON COMPRESSION CONNECTOR AND TAPE SPADE FOR COMPLETE INSULATION OF SECONDARY CONNECTION

ALTERNATE SECONDARY CONNECTION WHEN NEMA SPADE IS USED ON TRANSFORMER

NOTES:

1. SECONDARY CONNECTION USING 2 POSITION URD MOLE, COMPRESSION CONNECTOR AND HEAT SHRINKIBLE TUBING. SEE 4173.
2. REFER TO 3799.401 WHERE SINGLE PHASE IS INSTALLED.
3. REFER TO 4196 FOR SPLICES.
4. ENCLOSURE NUMBERING, SEE 3211.
5. THIS INSTALLATION IS LIMITED TO #2 AWG PRIMARY CONDUCTORS.

APPD JWK DATE 4-16-76	SAN DIEGO GAS & ELECTRIC COMPANY UNDERGROUND STANDARDS SUBSURFACE TRANSFORMER AND ENCLOSURE INSTALLATION, MULTIPLE PHASES, TYPE "YIS" OR "YES"	3799.403

TABLE OF CONTENTS

INSTALLATION OF SUBSURFACE TRANSFORMER ENCLOSURE
PROCEDURE

(A) EXCAVATE HOLE 60" IN DIAMETER BY 6' - 6" DEEP.
(B) PLACE 6" OF TAMPED GRAVEL IN BOTTOM OF HOLE FOR DRAINAGE.
(C) PLACE SHAFTS IN CENTER OF EXCAVATION.
(D) INSTALL 1 - 5/8" DIAMETER X 8' - 0" GROUND ROD AND CLAMP WITH SUFFICIENT #2 COPPER TO CLEAR OPENING.
(E) BACKFILL WITH USABLE SPOIL OR SAND OUTSIDE SHAFT TO A POINT JUST BELOW CONDUIT ENTRY INTO ENCLOSURE.
(F) INSTALL DUCTS AS REQUIRED.
(G) PULL PRIMARY CABLE, BEND BACK FOR TRANSFORMER ENTRY. ALLOW 10' INSIDE SHAFT FOR TRAINING AND TERMINATING.
(H) PULL SECONDARY CABLES, ALLOW SUFFICIENT CABLE FOR TRAINING AND TERMINATING.
(I) COMPLETE BACKFILL WITH USABLE SPOIL OR SAND OUTSIDE SHAFT TO JUST BELOW FININSED GRADE.
(J) INSERT TRANSFORMER.
(K) MAKE PRIMARY AND SECONDARY CONNECTIONS.
(L) REFER TO 3341 FOR SUBSURFACE EQUIPMENT ENCLOSURE FOR PROPER COMPONENT PARTS.

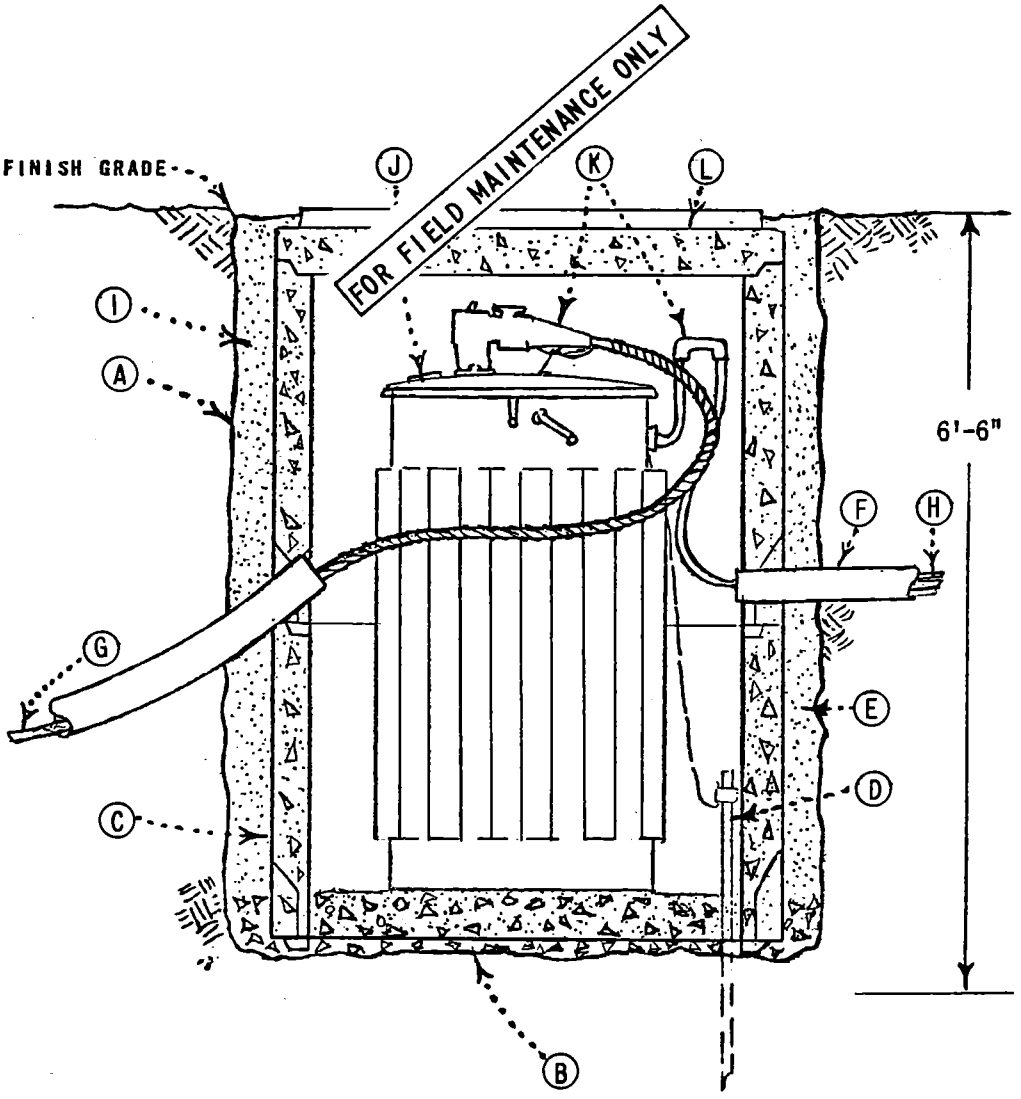

TABLE OF CONTENTS

3799.404	SAN DIEGO GAS & ELECTRIC COMPANY UNDERGROUND STANDARDS SUBSURFACE TRANSFORMER AND ENCLOSURE INSTALLATION, MULTIPLE PHASES, TYPE "YIS" OR "YES"	DATE 4-16-76 APPD J.W.K.

SCOPE: THIS STANDARD SHOWS THE CONNECTION USED FOR INSTALLING THREE-PHASE, 12KV RADIAL/LOOP FEED DEAD FRONT PAD-MOUNTED TRANSFORMER.

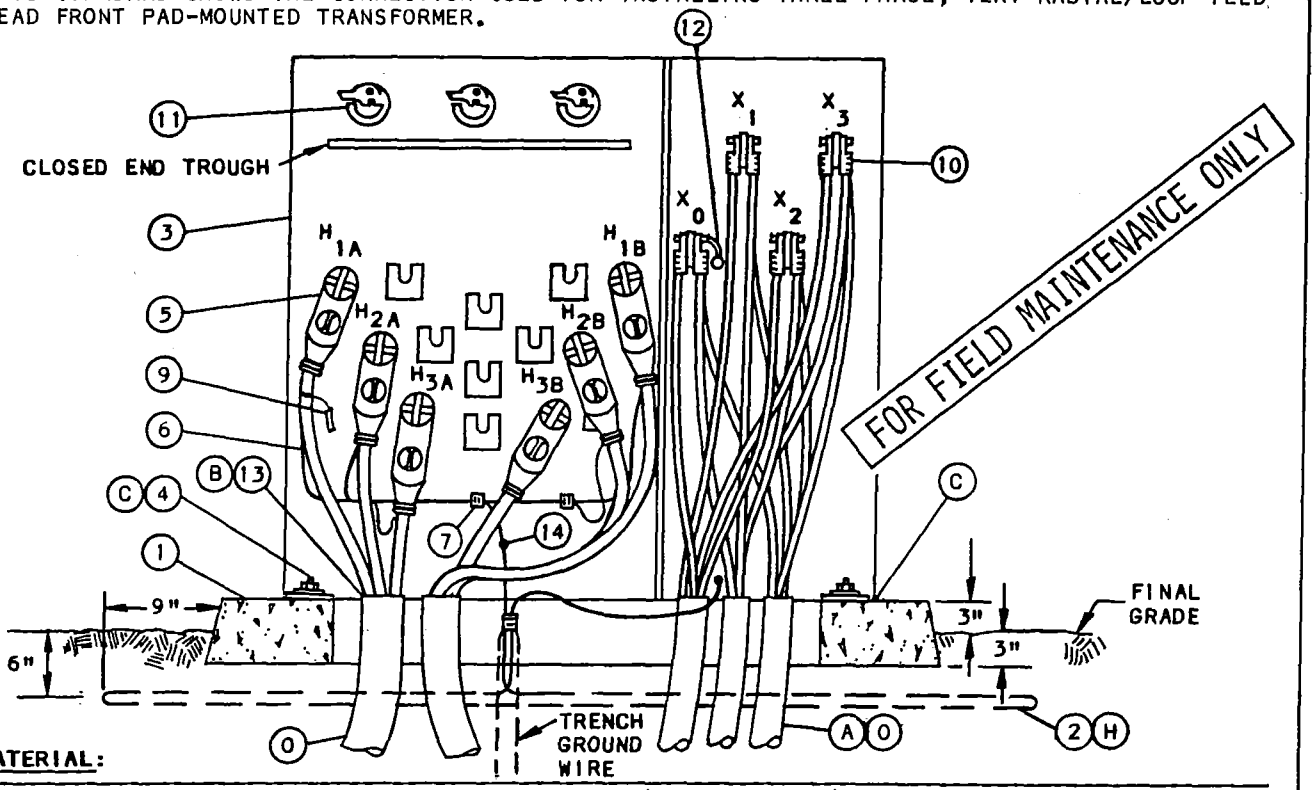

BILL OF MATERIAL:

ITEM	DESCRIPTION	QUANTITY	CONST STD OR PG NO	STOCK NUMBER
1	PAD, TRANSFORMER, 3Ø	1	3425,3426,3427	-
2	PAD GROUNDING EQUIPMENT (H)	1	3407	-
3	TRANSFORMER, (THRU 1000 KVA) (F)	1	3702	-
4	HOLD DOWN DEVICE - (SUPPLIED WITH CABINET)	2	-	-
5	ELBOW, LOADBREAK, 12KV (WITH WHITE-BLACK-WHITE BAND)	6	4191	-
6	CONCENTRIC NEUTRAL TAILS	-	-	-
7	CONNECTOR, COMPRESSION	AS REQ'D	4172	-
8	KEYLESS LOCK, (NOT SHOWN ABOVE) (G)	1	-	468010 (E)
9	CABLE IDENTIFICATION TAGS	AS REQ'D	3202	-
10	SECONDARY CONNECTIONS	AS REQ'D	4168 , 4171	-
11	FUSE, "BAY-O-NET" (T)	3	4311	-
12	NEUTRAL GROUND STRAP (ON TRANSFORMER)	1	-	-
13	AQUA-SEAL OR EQUIVALENT	AS REQ'D	-	442976 (E)
14	SERVICE POST CONNECTOR	2	-	262560 (E)

INSTALLATION:

(A) THIS INSTALLATION USES 6 SINGLE CONDUCTOR #2 OR 2/0 PRIMARY CABLES.

(B) TERMINATE PRIMARY AND SECONDARY CONDUITS FLUSH WITH TOP OF PAD. SEAL SECONDARY AND PRIMARY CONDUITS WITH AQUA-SEAL OR EQUIVALENT. SEAL SERVICE LATERAL CONDUITS PER STANDARD 3948 (G.O. 128 RULE 31.6).

	SDG&E ELECTRIC STANDARDS	
DATE 1-1-87 APPD JLB/RDY	THREE-PHASE, 12KV, TYPE "HZL", "HAL", "HML" OR "HNL" LOOP FEED, DEAD FRONT, PAD-MOUNTED TRANSFORMER INSTALLATION	3799.501

TABLE OF CONTENTS

(C) TRANSFORMER SHALL BE SOLIDLY SECURED TO PAD TO PREVENT UNAUTHORIZED MOVEMENT OR ENTRY THE BASE SHALL BE CAULKED WHEN NECESSARY TO PREVENT WIRE ENTRY.

(E) EXEMPT MATERIAL.

(F) TRANSFORMER RATING AND SIZE PER WORK ORDER.

(G) KEYLESS LOCK (ITEM 8) TO BE ATTACHED TO LATCHING MECHANISM ON TRANSFORMER AFTER PENTAHEAD BOLT IS THREADED IN COMPLETELY.

(H) USE PREFERRED GROUNDING SHOWN IN SKETCH WHEN A SYSTEM NEUTRAL FROM A SUBSTATION OR GROUNDING BANK IS PRESENT, OTHERWISE USE PREFERRED II GROUNDING METHOD SHOWN ON PAGE 4512.1.

REFERENCE:

I. SEE STANDARD 3202 FOR CABLE IDENTIFICATION.

J. SEE STANDARD 3211 FOR PAD IDENTIFICATION.

K. SEE STANDARD 3212 FOR TRANSFORMER IDENTIFICATION.

FOR FIELD MAINTENANCE ONLY

L. SEE STANDARD 3221 FOR HIGH VOLTAGE DECAL.

M. SEE STANDARD 3407 FOR PAD GROUNDING OR GROUNDING TELCO CONDUCTORS.

N. SEE STANDARD 3408 FOR WIRE ENTRY PREVENTION.

(O) SEE STANDARD 3425, 3426 OR 3427 FOR PAD, HANDHOLE AND CONDUIT PLACEMENT.

P. SEE STANDARD 3481 FOR BARRIER PROTECTION.

Q. SEE STANDARD 3483 FOR MINIMUM OPERATING AND CLEARANCE REQUIREMENTS (PAD PLACEMENT).

R. SEE STANDARD 3487 FOR RETAINING WALL REQUIREMENTS.

S. SEE STANDARD 3702 FOR TRANSFORMER PREFIXES.

(T) SEE STANDARD 3704 FOR "BAY-O-NET" FUSE OPERATING INSTRUCTIONS.

U. SEE STANDARD 3948 FOR SEALING SERVICE LATERAL CONDUITS.

TABLE OF CONTENTS

3799.502	SDG&E ELECTRIC STANDARDS THREE-PHASE, 12KV, TYPE "HZL", "HAL", "HML" OR "HNL" LOOP FEED, DEAD FRONT, PAD-MOUNTED TRANSFORMER INSTALLATION	DATE 1-1-87 APPD JLB/RDH

SCOPE: THIS STANDARD SHOWS THE CONNECTION USED FOR INSTALLING THREE-PHASE, 12KV RADIAL FEED DEAD FRONT PAD-MOUNTED TRANSFORMERS.

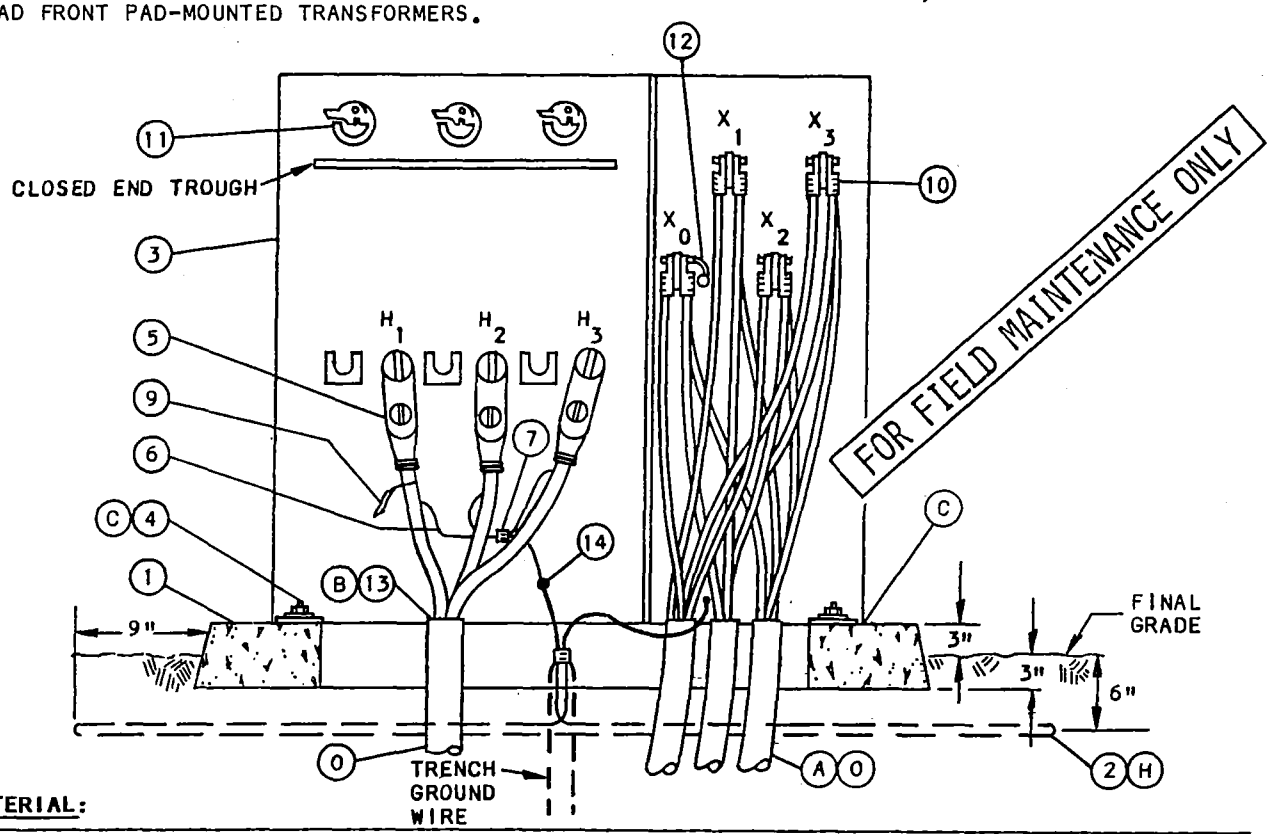

BILL OF MATERIAL:

ITEM	DESCRIPTION	QUANTITY	CONST STD OR PG NO	STOCK NUMBER
1	PAD, TRANSFORMER, 3Ø	1	3425,3426,3427	-
2	PAD GROUNDING EQUIPMENT (H)	1	3407	-
3	TRANSFORMER, (THRU 1000 KVA) (F)	1	3702	-
4	HOLD DOWN DEVICE - (SUPPLIED WITH CABINET	2	-	-
5	ELBOW, LOADBREAK, 12KV (WITH WHITE-BLACK-WHITE BAND)	3	4191	-
6	CONCENTRIC NEUTRAL TAILS	3	-	-
7	CONNECTOR, COMPRESSION	AS REQ'D	4172	-
8	KEYLESS LOCK, (NOT SHOWN ABOVE) (G)	1	-	468010 (E)
9	CABLE IDENTIFICATION TAGS	AS REQ'D	3202	-
10	SECONDARY CONNECTIONS	AS REQ'D	4171	-
11	FUSE, "BAY-O-NET" (T)	3	4311	-
12	NEUTRAL GROUND STRAP (ON TRANSFORMER)	1	-	-
13	AQUA-SEAL OR EQUIVALENT	AS REQ'D	-	442976 (E)
14	SERVICE POST CONNECTOR	2	-	262560 (E)

INSTALLATION:

(A) THIS INSTALLATION USES 3 SINGLE PHASE #2 OR 2/0 PRIMARY CABLES.

(B) TERMINATE PRIMARY AND SECONDARY CONDUITS FLUSH WITH TOP OF PAD. SEAL SECONDARY AND PRIMARY CONDUITS WITH AQUA-SEAL OR EQUIVALENT. SEAL SERVICE LATERAL CONDUITS PER STANDARD 3948 (G.O. 128 RULE 31.6).

DATE 1-1-87 APPD JJB/RDT	SDG&E ELECTRIC STANDARDS THREE-PHASE, 12KV, TYPE "PZR", "HZR" OR HKR" RADIAL FEED, DEAD FRONT, PAD-MOUNTED TRANSFORMER INSTALLATION	3799.503 supercedes 3752.1 (1-1-86)

TABLE OF CONTENTS

(C) TRANSFORMER SHALL BE SOLIDLY SECURED TO PAD TO PREVENT UNAUTHORIZED MOVEMENT OR ENTRY. THE BASE SHALL BE CHECKED AND WHEN NECESSARY CAULK TO PREVENT WIRE ENTRY.

(E) EXEMPT MATERIAL.

(F) TRANSFORMER RATING AND SIZE PER WORK ORDER.

(G) KEYLESS LOCK (ITEM 8) TO BE ATTACHED TO LATCHING MECHANISM ON TRANSFORMER AFTER PENTAHEAD BOLT IS THREADED IN COMPLETELY.

(H) USE PREFERRED GROUNDING SHOWN IN SKETCH WHEN A SYSTEM NEUTRAL FROM A SUBSTATION OR GROUNDING BANK IS PRESENT, OTHERWISE USE PREFERRED II GROUNDING METHOD SHOWN ON PAGE 4512.1.

REFERENCE:

I. SEE STANDARD 3202 FOR CABLE IDENTIFICATION.

J. SEE STANDARD 3211 FOR PAD IDENTIFICATION.

K. SEE STANDARD 3212 FOR TRANSFORMER IDENTIFICATION.

L. SEE STANDARD 3221 FOR HIGH VOLTAGE DECAL.

M. SEE STANDARD 3407 FOR PAD GROUNDING OR GROUNDING TELCO CONDUCTORS.

N. SEE STANDARD 3408 FOR WIRE ENTRY PREVENTION.

(O) SEE STANDARD 3425, 3426 OR 3427 FOR PAD, HANDHOLE AND CONDUIT PLACEMENT.

P. SEE STANDARD 3481 FOR BARRIER PROTECTION.

Q. SEE STANDARD 3483 FOR MINIMUM OPERATING AND CLEARANCE REQUIREMENTS (PAD PLACEMENT).

R. SEE STANDARD 3487 FOR RETAINING WALL REQUIREMENTS.

S. SEE STANDARD 3702 FOR TRANSFORMER PREFIXES.

(T) SEE STANDARD 3704 FOR "BAY-O-NET" FUSE OPERATING INSTRUCTIONS.

U. SEE STANDARD 3948 FOR SEALING SERVICE LATERAL CONDUITS.

TABLE OF CONTENTS

FOR FIELD MAINTENANCE ONLY

3799.504 SUPERCEDES 3752.2 (1-1-86)	SDG&E ELECTRIC STANDARDS THREE-PHASE, 12KV, TYPE "PZR", "HZR" OR HKR" RADIAL FEED, DEAD FRONT, PAD-MOUNTED TRANSFORMER INSTALLATION	DATE 1-1-87 APPD JLB/RDD

SCOPE: THIS STANDARD SHOWS THE METHOD OF INSTALLING A THREE-PHASE, STEP-DOWN TYPE "HPP" RADIAL/LOOP FEED LIVE FRONT PAD-MOUNTED TRANSFORMER.

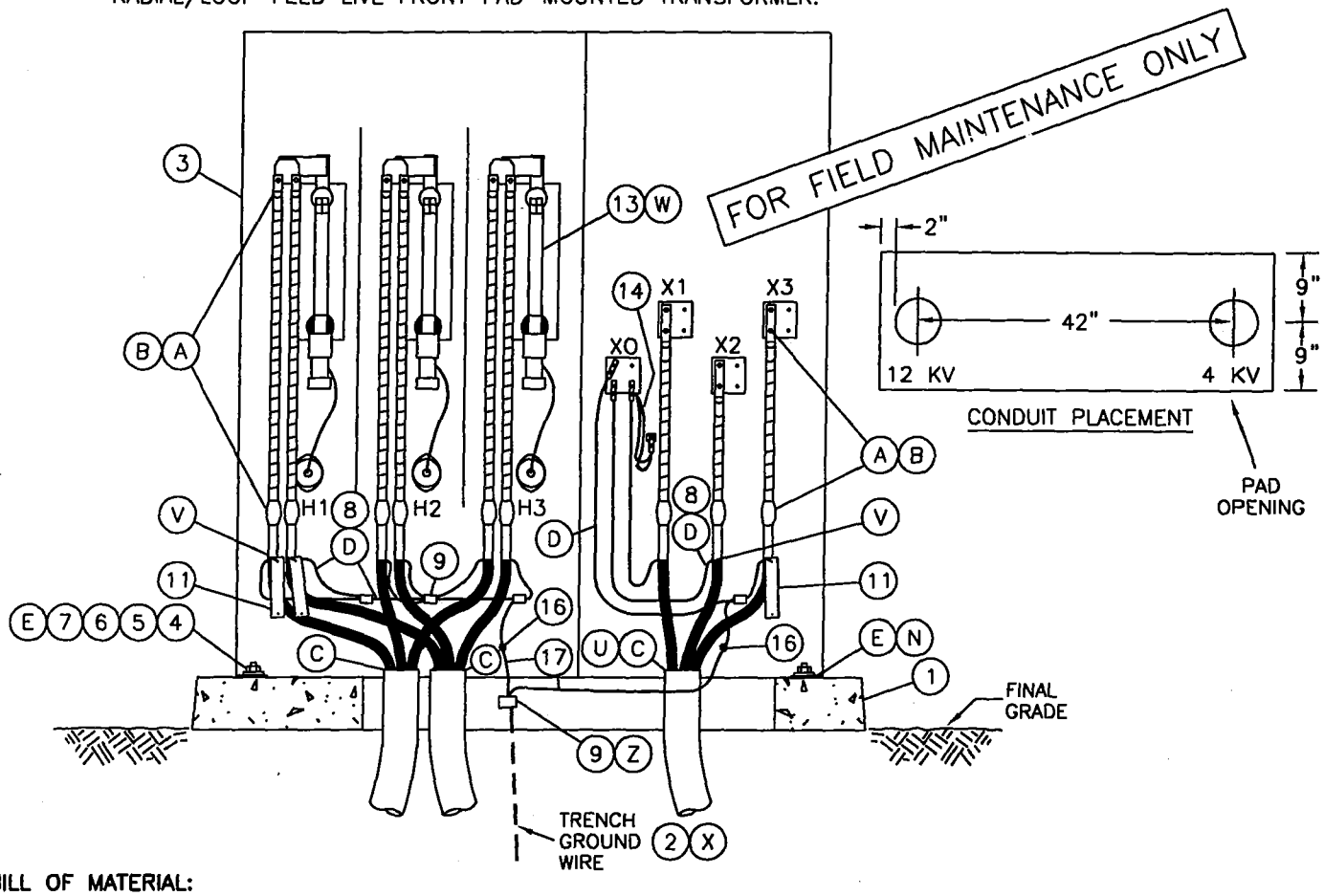

BILL OF MATERIAL:

ITEM	DESCRIPTION	QUANTITY	CONST STD. OR PG NO	STOCK NUMBER	ASSEMBLY UNITS
1	PAD, TRANSFORMER, THREE-PHASE	1	3427	514012	3427BO
2	TRENCH GROUNDING WIRE (X)	AS REQ'D	4510	–	GP-T/W
3	TRANSFORMER, (1500 THRU 2500 KVA) (F)(T)	1	3702	–	–
4	HOLD DOWN DEVICE – (SUPPLIED WITH CABINET)	2	–	–	–
5	NUT, CLAMPING CHANNEL	2	–	503520	–
6	SCREW, HEX HEAD CAP, BRONZE, 1/2"	2	–	616192	–
7	WASHER, FLAT, ROUND, BRONZE, 1/2"	2	–	799488	–
8	CONCENTRIC NEUTRAL TAILS (D)	–	4172.1	–	–
9	CONNECTOR, COMPRESSION	AS REQ'D	4172	–	–
10	KEYLESS LOCK (NOT SHOWN) (G)	1	–	468010	–
11	CABLE IDENTIFICATION TAGS	AS REQ'D	3202	–	–
12	PRIMARY CONNECTIONS (B)	–	4121	–	–
13	FUSE, SML-4 (SUPPLIED WITH TRANS) (W)	3	4311	–	–
14	NEUTRAL GROUND STRAP (ON TRANSFORMER)	1	–	–	–
15	SEALING COMPOUND (C)	AS REQ'D	–	442976	–
16	SERVICE POST CONNECTOR	2	–	262560	–
17	WIRE, BARE STRANDED COPPER, #2	AS REQ'D	–	812816	GDWIRE

	SDG&E ELECTRIC STANDARDS	
DATE 8-5-99 APPD	THREE-PHASE STEP-DOWN, TYPE "HPP", RADIAL/LOOP, LIVE FRONT, PAD-MOUNTED TRANSFORMER INSTALLATION	3799.505 SUPERSEDES 3756.1 (1-1-98)

TABLE OF CONTENTS

INSTALLATION:

(A) THIS INSTALLATION USES FROM 3 TO 6 SINGLE-PHASE CONDUCTOR #2 OR 2/0 PRIMARY CABLES FOR THE 12KV SIDE AND 350, 750 OR 1000 KCMIL FOR THE 4KV SIDE.

(B) TERMINATE PRIMARY CABLE AS SHOWN ON STD. 4121, INCREASE THE 14 INCH MEASUREMENT SHOWN ON STD. 4121 AS REQUIRED. THE PORTION OF CABLE DOWN TO AND INCLUDING THE STRESS RELIEF KIT SHOULD BE AS STRAIGHT AS POSSIBLE TO PREVENT ANY CONTAMINATION THAT MAY BUILD UP ON THE SHOCABLE.

(C) TERMINATE CONDUITS FLUSH WITH TOP OF PAD. SEAL 12KV AND 4KV CONDUITS WITH SEALING COMPOUND SEAL SERVICE LATERAL CONDUITS PER STANDARD 3948 (G.O. 128 RULE 31.6).

(D) CONCENTRIC NEUTRAL WIRE OR #2 PER PHASE FOR #2, #2/0 OR 350 KCMIL CABLE. CONCENTRIC NEUTRAL WIRE OR #1/0 PER PHASE FOR 750 OR 1000 KCMIL CABLE.

(E) TRANSFORMER SHALL BE SOLIDLY SECURED TO PAD TO PREVENT UNAUTHORIZED MOVEMENT OR ENTRY. THE BASE SHALL BE CAULKED TO PREVENT MOISTURE AND WIRE ENTRY.

(F) TRANSFORMER RATING AND SIZE PER WORK ORDER.

(G) KEYLESS LOCK TO BE ATTACHED TO LATCHING MECHANISM ON TRANSFORMER AFTER PENTAHEAD BOLT IS THREADED IN COMPLETELY.

REFERENCE:

FOR FIELD MAINTENANCE ONLY

K. SEE STANDARD 3202 FOR CABLE IDENTIFICATION.

L. SEE STANDARD 3212 FOR TRANSFORMER IDENTIFICATION.

M. SEE STANDARD 3221 FOR HIGH VOLTAGE DECAL.

(N) SEE STANDARD 3408 FOR MOISTURE AND WIRE ENTRY PREVENTION.

O. SEE STANDARD 3481 FOR BARRIER PROTECTION.

P. SEE STANDARD 3483 FOR MINIMUM OPERATING AND CLEARANCE REQUIREMENTS (PAD PLACEMENT).

Q. SEE STANDARD 3484 FOR PAD INSTALLATION OF PAD-MOUNTED EQUIPMENT.

R. SEE STANDARD 3486 FOR RETAINING WALL REQUIREMENTS AND CLEARANCES FROM REVERSE SUBGRADE RETAINING WALLS.

S. SEE STANDARD 3487 FOR RETAINING WALLS.

(T) SEE STANDARD 3702 FOR TRANSFORMER PREFIXES.

(U) SEE STANDARD 3948 FOR SEALING SERVICE LATERAL CONDUITS.

(V) SEE STANDARD 4108 FOR CABLE TERMINATION INSTRUCTIONS.

(W) SEE STANDARD 4311.5 FOR TRANSFORMER FUSING TABLES.

(X) SEE STANDARD 4510 FOR (PREFERRED I) AND (ALTERNATE) TRENCH GROUND WIRE.

Y. SEE STANDARD PAGE 4512.1 FOR (PREFERRED II) EQUIPMENT GROUNDING INSTALLATION.

(Z) SEE STANDARD 4512.2 FOR EQUIPMENT GROUNDING.

AA. SEE STANDARD 4514 FOR GROUNDING TELCO CONDUCTOR IN PAD-MOUNTED EQUIPMENT.

TABLE OF CONTENTS

3799.506 SUPERSEDES 3756.2 (1-1-98)	SDG&E ELECTRIC STANDARDS THREE-PHASE STEP-DOWN, TYPE "HPP", RADIAL/LOOP, LIVE FRONT, PAD-MOUNTED TRANSFORMER INSTALLATION	DATE 8-5-99 APPD JLG/RDG

MAJOR USE:

TO CONNECT TWO PRIMARY CABLES TO A SINGLE TRANSFORMER BUSHING.

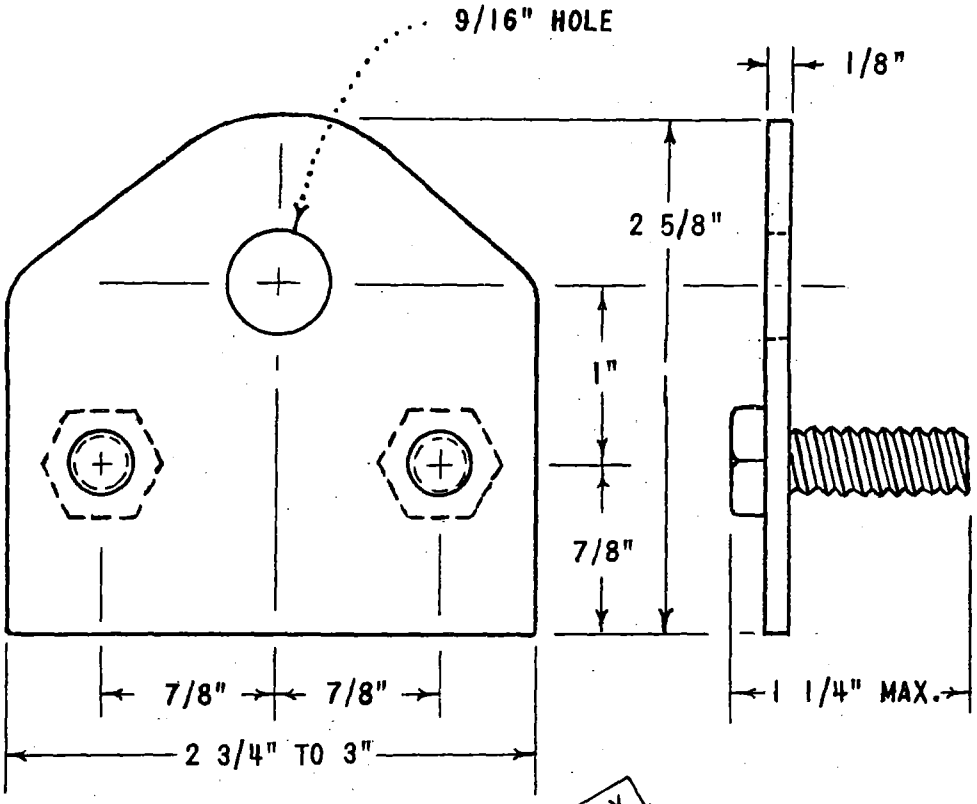

FOR FIELD MAINTENANCE ONLY

STOCK NO.
541072

NOTES:

A. ADAPTER PLATE TO BE TINNED COPPER.

B. BOLTS TO BE 3/8" 16 THREADS PER INCH, THREADS SHALL BE CONTINUOUS TO ADAPTER PLATE CONTACT SURFACE.

C. BOLTS TO BE BRAZED TO BACK OF PLATE.

D. ADAPTER PLATE TO BE MOUNTED WITH 2-3/8" BOLTS IN LOWEST POSITION (DOWNWARD).

DATE 4-10-75 APPD J.W.K	SDG&E ELECTRIC STANDARDS TERMINAL ADAPTER PLATE	3799.901

TABLE OF CONTENTS

SCOPE: THIS STANDARD DESCRIBES CAPACITOR MARKING AND HANDLING PROCEDURES.

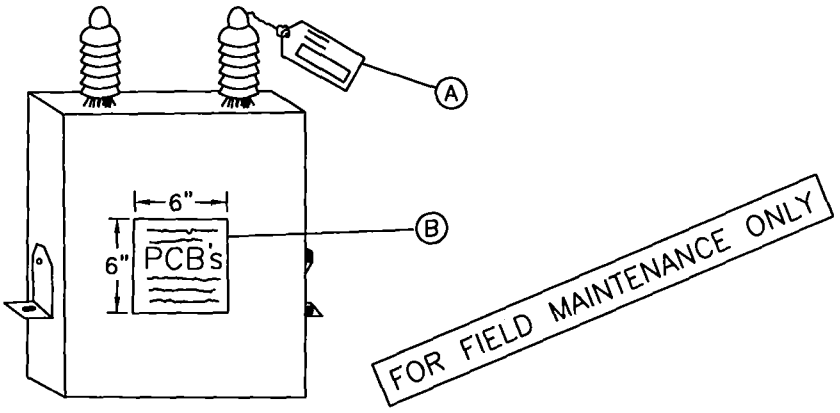

(A) CAPACITOR TAGS

THIS IDENTIFICATION TAG (SDG&E FORM 120-7240, STK. NO. 043450) IS USED FOR TRACKING THE CAPACITOR DURING REMOVAL/RETIREMENT AND INSTALLATION. IT SHALL BE USED ON ALL CAPACITORS, PCB UNITS AND NON-PCB UNITS.

EACH CAPACITOR UNIT IN STOCK WILL BE AFFIXED WITH A CAPACITOR IDENTIFICATION TAG BEFORE IT IS REMOVED FROM STOCK. THIS TAG IS TO BE COMPLETED BY THE FIELD PERSONNEL WHO EITHER REMOVES OR INSTALLS A CAPACITOR UNIT. ONE SIDE OF THIS TAG IS USED FOR REMOVAL AND THE OTHER FOR INSTALLATION.

1. INSTALLATION

   THE DISTRICT STOCKKEEPER SHALL COMPLETE AS MUCH OF THE CAPACITOR TAG(S) AS POSSIBLE ON THE INSTALLATION SIDE OF THE TAG AND ATTACH TO THE SPECIFIC UNIT. WHEN THE INSTALLATION IS COMPLETED, THE CREW FOREMAN SHALL REMOVE THE TAG AND COMPLETE THE REQUESTED INFORMATION.

2. REPLACEMENT

   WHEN A CAPACITOR UNIT IS REPLACING ONE THAT IS BEING REMOVED, THE FOREMAN SHALL FILL OUT BOTH SIDES OF THE TAG.

   IF REMOVAL AND REPLACEMENT IS NOT COMPLETED WITHIN TWO CONSECUTIVE WORKDAYS, TWO FORMS ARE TO BE COMPLETED, ONE FOR A REMOVAL, AND ANOTHER FOR INSTALLATION.

   IF REPLACEMENT IS DUE TO FAILURE OF ONE OR MORE UNITS, AN EQUIPMENT FAILURE REPORT IS REQUIRED.

3. REMOVAL

   WHEN A CAPACITOR UNIT IS REMOVED, THE CREW FOREMAN SHALL COMPLETE THE REMOVAL PORTION ONLY. IF TAGS ARE NOT STORED ON THE TRUCKS, THE DISPATCHER SHALL PROVIDE THE CREW WITH SUFFICENT TAGS FOR EACH CAPACITOR UNIT TO BE REMOVED.

TABLE OF CONTENTS

4. RETIREMENT

WHEN A CAPACITOR UNIT IS RETIRED, THE RETIRED PORTION OF THE CAPACITOR TAG MUST BE FILLED OUT BY THE PERSONNEL RETIRING THE UNIT.

5. DISPOSITION

IT SHALL BE THE DISPATCHER'S RESPONSIBILITY TO SEE THAT THE COMPLETED TAGS ARE SENT TO THE DISTRICT'S RECORDS SECTION, ATTENTION OF THE ENGINEERING CLERK, WITHIN ONE WORKING DAY AFTER THE CAPACITOR UNITS HAVE BEEN INSTALLED OR REMOVED.

(B) DECAL

THIS DECAL (STOCK NO. 301880) IS TO BE PLACED ON ALL CAPACITOR UNITS WHICH CONTAIN PCB'S.

FIELD PERSONNEL AND STOCKKEEPERS SHOULD MAKE EVERY EFFORT TO INSURE THAT ALL PCB UNITS HAVE A DECAL, AND THAT ALL WORN, WEATHERED DECALS BE REPLACED WITH NEW DECALS. THE DECAL IS BLACK PRINT ON EITHER YELLOW OR WHITE BACKGROUND.

1. MARKING

EVERY CAPACITOR IN SERVICE OR IN STORAGE, WHICH USES AN INSULATING FLUID CONTAINING PCB'S, SHALL BE LABELED WITH THE DECAL (STOCK NO. 301880).

EVERY PCB CAPACITOR WHICH IS REMOVED FROM SERVICE AND DOES NOT HAVE THE DECAL (STOCK NO. 301880) SHALL HAVE THE DECAL PUT ON IT AT THE TIME IT IS REMOVED FROM SERVICE. THIS SHALL BE DONE BY THE WORK CREW THAT REMOVES THE UNIT. IF A PCB UNIT ARRIVES AT A STOREYARD WITH NO PCB DECAL, THE STOCKKEEPER SHALL PUT A DECAL ON.

NOTE: ALL CAPACITOR UNITS PURCHASED BEFORE 1977 USED AN INSULATING FLUID WHICH CONTAINED PCB'S. THE UNITS WITH THE PCB FLUIDS CAN BE IDENTIFIED BY THE WORDS "NON-FLAMMABLE LIQUID" ON NAMEPLATE OR BY THE MANUFACTURER'S TRADE NAMES WHICH ARE:

G.E. – PYRANOL
WESTINGHOUSE – INERTEEN
MCGRAW-EDISON – ELEMEX
CORNEL DUBILIER OR FEDERAL PACIFIC – DYKANOL
SANGAMO – DIACHLOR
ALLIS CHALMERS – CHLOREXTOL

FOR FIELD MAINTENANCE ONLY

ALL OF THE CAPACITOR UNITS RECEIVED THAT DO NOT CONTAIN PCB INSULATING FLUIDS HAVE THE WORDS "CONTAINS A NON-PCB INSULATING FLUID" ON THE NAMEPLATE OR ON A BLUE TANK DECAL.

2. HANDLING CAPACITORS CONTAINING POLYCHLORINATED BIPHENYLS (PCB)

CAPACITORS CONTAINING PCB SHALL BE HANDLED AS SPECIFIED IN THE PCB HANDLING AND PERSONAL SAFETY PROCEDURES. (SEE CONSTRUCTION MANAGEMENT STANDARD PRACTICE 107).

3. RETIRING RUPTURED OR DAMAGED UNITS

WHENEVER TRANSPORTATION OR KEARNY MAINTENANCE RETIRES A CAPACITOR AND DISPOSES OF IT, SPECIFIC DATA (I.E. SERIAL NUMBER, PCB OR NON-PCB, MANUFACTURER, SIZE, ETC.) MUST BE RECORDED ON THE CAPACITOR TAG AND SENT TO THE DISTRICT'S RECORDS SECTION, ATTENTION OF THE ENGINEERING CLERK.

TABLE OF CONTENTS

C. PRECAUTIONARY MEASURES – DAMAGED CAPACITOR UNITS

DAMAGED CAPACITOR UNITS WITH BULGED CASES MAY HAVE EXCESSIVE PRESSURE INSIDE. THE UNITS MAY RUPTURE WHEN HANDLED OR BUMPED. SINCE THE INSULATING LIQUID IN THE UNITS IS TOXIC, CARE SHALL BE EXERCISED WHEN WORKING WITH BULGED OR OTHERWISE DAMAGED UNITS. UNITS WITH BULGED OR DAMAGED CASES SHALL NOT BE RE-ENERGIZED.

D. CAPACITOR NAMEPLATES

THE CAPACITOR NAMEPLATE AND UNIT SHALL REMAIN INTACT. UNDER NO CIRCUMSTANCES SHALL THE NAMEPLATE BE REMOVED FROM THE CAPACITOR UNIT.

F. SERIES STREET LIGHTING TRANSFORMERS

THE TROUBLEMAN AND/OR CREW SHALL CHECK THE NAMEPLATE OF ANY RUPTURED 2400 VOLT, CONSTANT CURRENT STREET LIGHTING TRANSFORMER TO DETERMINE IF IT CONTAINS AN INTERNAL CAPACITOR. IF NO CAPACITOR IS SHOWN ON THE NAMEPLATE, THE TRANSFORMER IS TO BE TREATED AS ANY OTHER TRANSFORMER ON THE SYSTEM, NO SPECIAL HANDLING OR DISPOSAL IS REQUIRED. IF IT DOES, IT SHALL BE TREATED AS ANY PCB CONTAINING DEVICE UNTIL IT REACHES KEARNY MAINTENANCE. (SEE CONSTRUCTION MANAGEMENT STANDARD PRACTICE 107).

KEARNY SHALL REMOVE THE INTERNAL CAPACITOR IMMEDIATELY AND CHECK TO SEE IF IT HAS LEAKED. IF IT HAS NOT LEAKED, THE CAPACITOR SHALL BE DISPOSED OF IN ACCORDANCE WITH THE EPA REGULATIONS. THE TRANSFORMER MAY THEN RE-ENTER THE SYSTEM AS AN RO UNIT OR BE SCRAPPED.

IF PCB CONTAMINATION OF THE TRANSFORMER OIL IS SUSPECTED, KEARNY MAINTENANCE SHALL HAVE THE BEST LAB VERIFY THE LEVEL OF CONTAMINATION. IF IT IS 500PPM OR GREATER, THE OIL AND THE TRANSFORMER SHALL BE DISPOSED OF ACCORDING TO EPA REGULATIONS.

TABLE OF CONTENTS

FOR FIELD MAINTENANCE ONLY

SCOPE: THIS STANDARD SHOWS THE 1200 KVAR PAD-MOUNTED CAPACITOR.

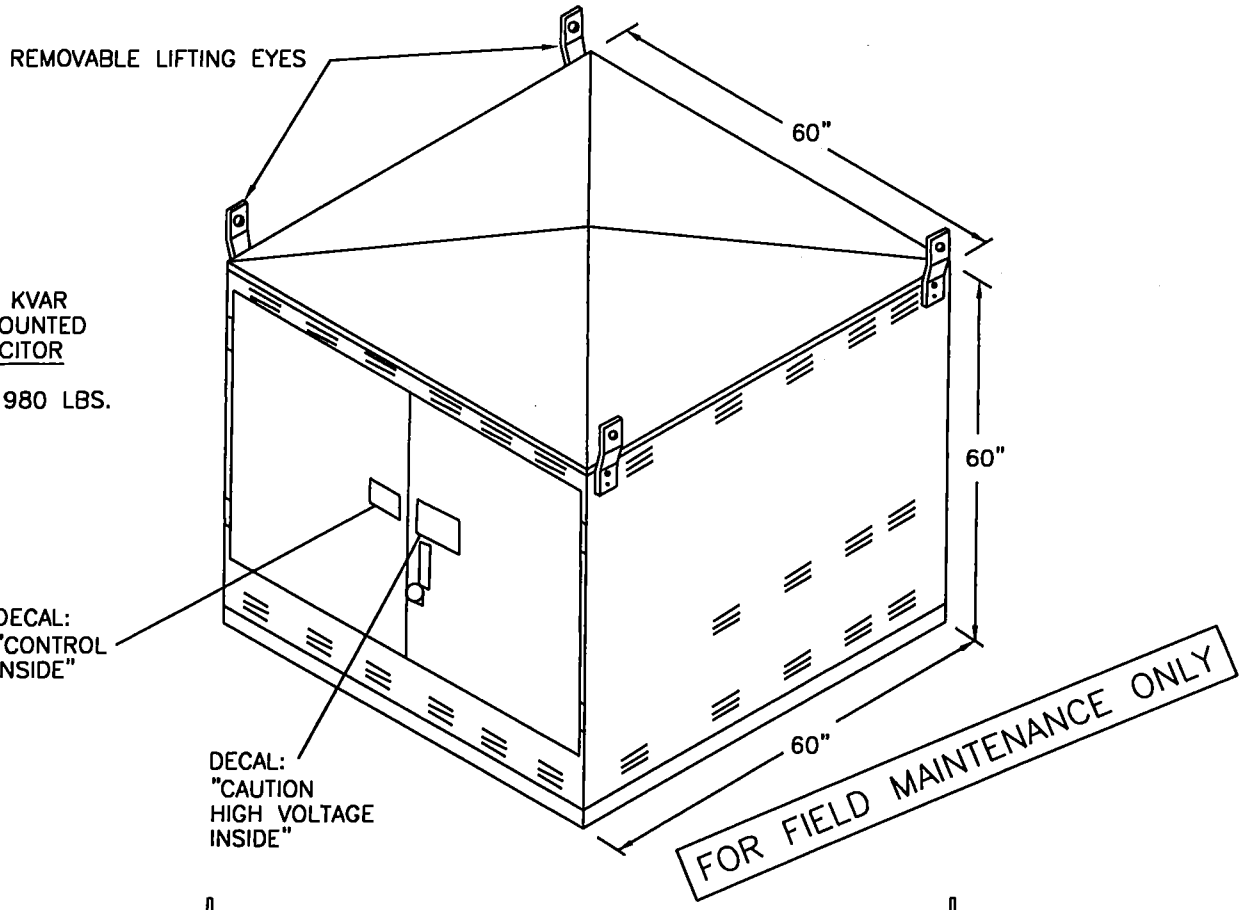

1200 KVAR
PAD-MOUNTED
CAPACITOR

WEIGHT 1980 LBS.

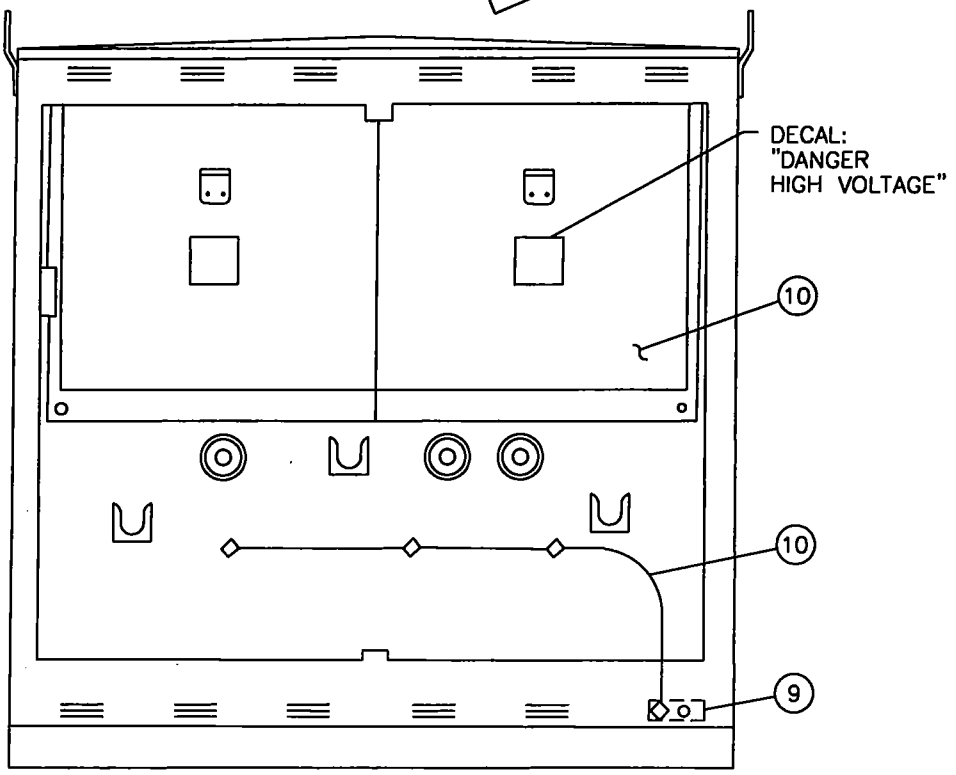

FRONT VIEW
(EXPOSED)

TABLE OF CONTENTS

3899.201	SDG&E ELECTRIC STANDARDS 1200 KVAR PAD-MOUNTED CAPACITOR	DATE 1-1-96 APPD

TABLE OF CONTENTS

BACK VIEW
EXPOSED

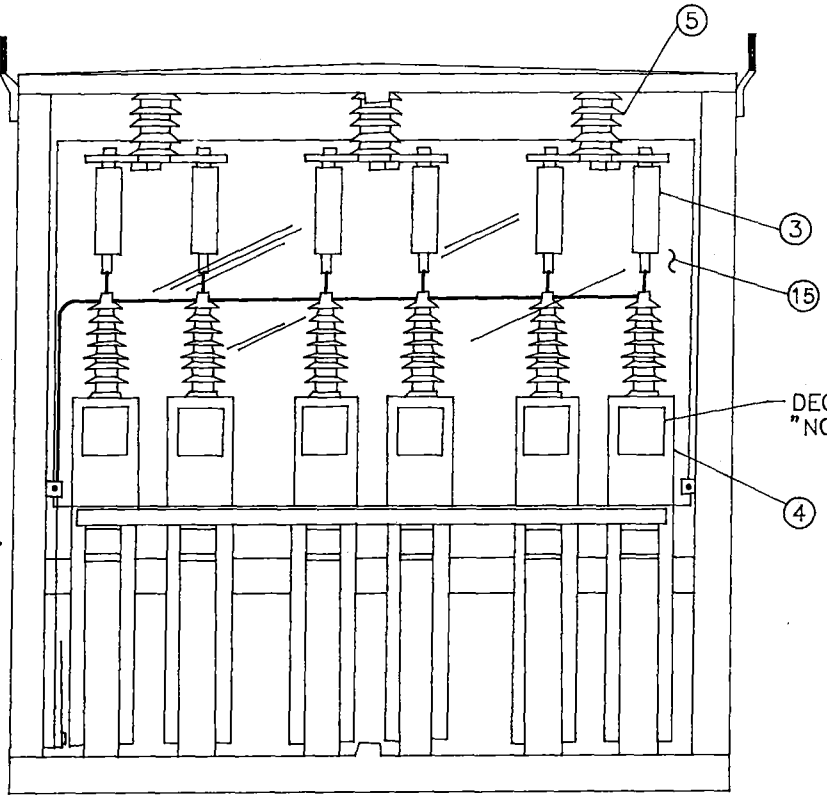

FOR FIELD MAINTENANCE ONLY

SIDE VIEW
EXPOSED

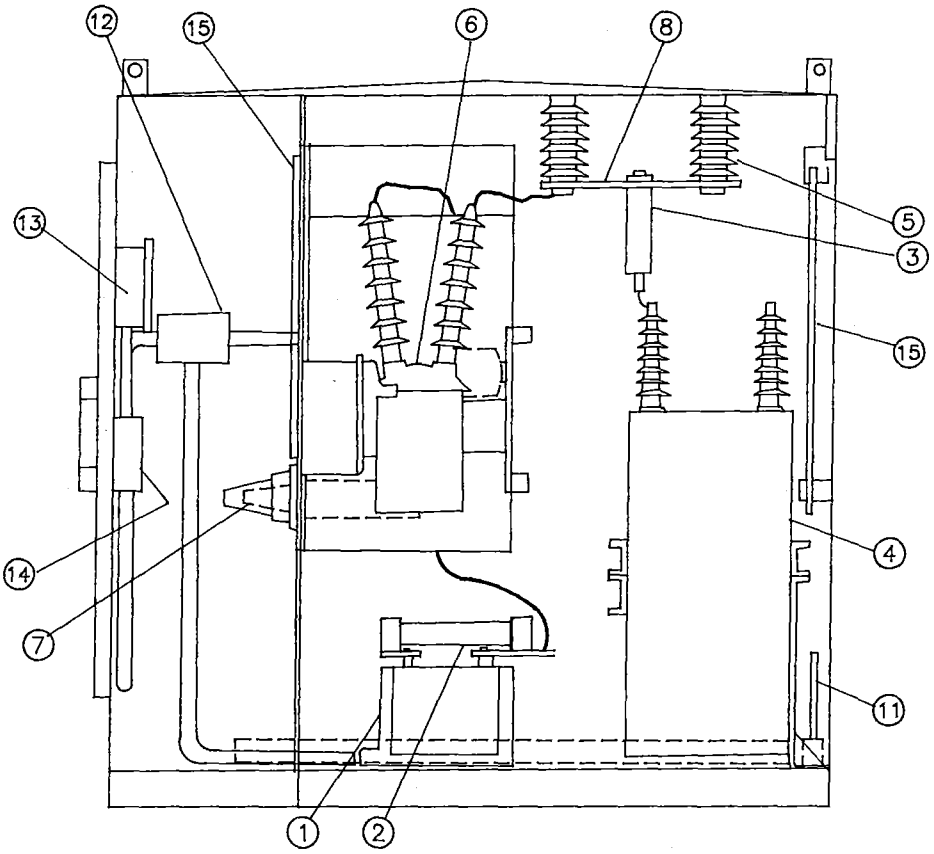

DATE 1-1-96 APPD	SDG&E ELECTRIC STANDARDS 1200 KVAR PAD-MOUNTED CAPACITOR	3899.202

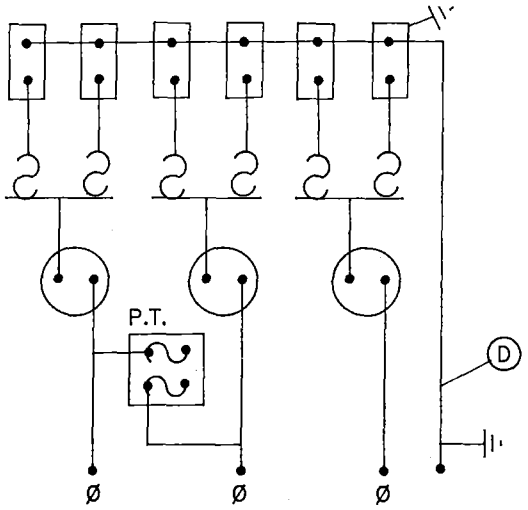

SCHEMATIC DIAGRAM

NOTES:

– PAD–MOUNTED CAPACITOR (STOCK NUMBER 207426) IS DELIVERED FROM THE SUPPLIER WITH ALL THE PARTS LISTED IN THE PARTS LIST.

CAPACITOR PARTS LIST

ITEM	DESCRIPTION	QUANTITY	CONSTR STD OR PAGE NO	STOCK NUMBER
1	TRANSFORMER (P.T.), 12KV	1	--	762714
2	FUSE, CURRENT–LIMITING 0.5 AMP, 14.4KV – GE TYPE J–1	2	--	366456
3	FUSE, MCGRAW EDISON TYPE NXC, 45 AMP, 8.3KV	6	--	365718
4	CAPACITOR, 200 KVAR, 7200V, 1Ø	6	--	207350
5	POST INSULATOR, 110 KV BIL	9	--	--
6	SWITCH, OIL 15KV, 200 AMP	3	--	705568
7	PLUG, BUSHING, 14.4KV, 200 AMP	3	4192.01	544676
8	COPPER BUS	6	--	--
9	GROUND BUS	1	--	--
10	#2 COPPER GROUND WIRE	AS REQ'D	--	--
11	3/8" COPPER ROD 9" LONG	1	--	--
12	JUNCTION BOX	1	--	--
13	METER SOCKET – 6 CLIP (FOR CAPACITOR CONTROL SWITCH)	1	--	--
14	TERMINAL BOARD	1	--	--
15	1/4" CLEAR ACRYLIC BARRIER (REMOVABLE)	4	--	--

FOR FIELD MAINTENANCE ONLY

REFERENCE:

A. SEE STANDARD 3821 FOR THE INSTALLATION INSTRUCTIONS.

B. SEE STANDARDS 4302 AND 4309 FOR FUSING.

C. SEE DESIGN MANUAL 5811.5 FOR CONNECTING CAPACITOR TO SYSTEM.

DATE 1–1–96 APPD	SDG&E ELECTRIC STANDARDS 1200 KVAR PAD–MOUNTED CAPACITOR	3899.203

TABLE OF CONTENTS

UNDERGROUND CABLE REFERENCE CHART
INDIVIDUAL 120/240V 1φ SERVICE
DIRECTLY FROM TRANSFORMER (ALUMINUM CONDUCTOR)

TRANSFORMER KVA	DESIGN DEMAND 85% P.F. KW	DESIGN DEMAND 85% P.F. AMP	COND./DUCT AWG & KCMIL (AL)	DUCT SIZE MINIMUM (INCHES)	NO. DUCT RUNS USED	THERMAL LIMIT 85% P.F. AMP	THERMAL LIMIT 85% P.F. KW	THERMAL LIMIT 85% P.F. (KVA)
15	12.5	62	2-#2 & 1-#4	2	1	120	24	28
25	21	104	2-1/0 & 1-#2	2	1	159	32	37
37.5	32	156	2-3/0 & 1-1/0	2	1	209	42	50
			2-#2 & 1-#4 (1)		2	225	45	53
50	42	208	2-350 & 1-3/0	2.5	1	326	66	77
			2-1/0 & 1-#2	2	2	299	61	72
			2-#2 & 1-#4 (1)		3	328	67	78
75	63	312	2-3/0 & 1-1/0	2	3	570	116	137
			2-1/0 & 1-#2	2	4	553	112	133
			2-#2 & 1-#4 (1)		5	503	102	121
100	85	417	2-350 & 1-3/0	2.5	2	612	125	147
			2-3/0 & 1-1/0	2	4	727	148	174
			2-1/0 & 1-#2 (1)		5	867	136	160
			2-#2 & 1-#4 (1)		7	862	135	159
167	142	696	2-350 & 1-3/0	2.5	4	1133	231	272
			2-3/0 & 1-1/0 (1)	2	7	1157	238	277
			2-1/0 & 1-1/0 (1)		9	1116	228	268
			2-#2 & 1-#4 (1)		11	1000	204	240

FOR FIELD MAINTENANCE ONLY

NOTES:

(1) NOT TO BE USED WITHOUT CLEARANCE BY UNDERGROUND DESIGN SUPERVISOR.

2 RUNS EXCEEDING 100' SHOULD BE GIVEN INDIVIDUAL CONSIDERATION.

TABLE OF CONTENTS

U-8.2

UNDERGROUND CABLE REFERENCE CHART
INDIVIDUAL 277/480Y 3$^{\phi}$ SERVICE
DIRECTLY FROM TRANSFORMER (ALUMINUM CONDUCTOR)

TRANSFORMER KVA	DESIGN DEMAND 85% P.F. KW	DESIGN DEMAND 85% P.F. AMP	COND./DUCT AWG & KCMIL (AL)	DUCT SIZE MINIMUM 3W	DUCT SIZE MINIMUM 4W	NO. DUCT RUNS USED	THERMAL LIMIT 85% P.F. AMP	THERMAL LIMIT 85% P.F. KW	THERMAL LIMIT 85% P.F. (KVA)
75	83	90	3-1/0 & 1-#2	2	2	1	159	112	132
			3-#2 & 1-#4 (1)			2	226	160	188
150	127	181	3-350 & 1-3/0	3	3	1	328	230	271
			3-1/0 & 1-#2	2	2	2	299	211	248
			3-#2 & 1-#4 (1)			3	327	231	272
225	191	271	3-500 & 1-350	3½	3½	1	402	283	334
			3-3/0 & 1-1/0	2	2½	2	393	277	326
			3-1/0 & 1-#2		2	3	434	308	360
			3-#2 & 1-#4 (1)			4	418	295	347
300	255	362	7-350 OR 6-350 & 2-3/0	4	4½	1	522	368	433
			3-350 & 1-3/0	3	3	2	612	431	507
			3-3/0 & 1-1/0	2	2½	3	570	402	473
			3-1/0 & 1-#2		2	4	553	390	459
			3-#2 & 1-#4 (1)			6	584	412	485
500	425	602	7-350 OR 8-350 & 2-3/0	4	4½	2	982	693	818
			3-350 & 1-3/0	3	3	3	890	628	740
			3-3/0 & 1-1/0	2	2½	5	878	618	728
			3-1/0 & 1-#2 (1)		2	7			
			3-#2 & 1-#4 (1)			9	843	594	700
750	638	904	7-350 OR 8-350 & 2-3/0	4	4½	3	1425	1010	1185
			3-500 & 1-350	3½	3½	4	1400	987	1160
			3-350 & 1-3/0	3	3	5	1370	968	1140
			3-3/0 & 1-1/0	2	2½	8	1305	922	1085
			3-1/0 & 1-#2 (1)		2	11	1295	913	1075
			3-#2 & 1-#4 (1)			15			
1000	850	1205	7-500 OR 8-500 & 2-350	4½	5	3	1755	1240	1460
			7-350 OR 8-350 & 2-3/0	4	4½	4	1815	1280	1510
			3-500 & 1-350	3½	3½	6	1950	1375	1620
			3-350 & 1-3/0	3	3	7	1825	1290	1515
			3-3/0 & 1-1/0 (1)	2	2½	12	1855	1310	1540
			3-1/0 & 1-#2 (1)		2	16	1860	1312	1545
1500	1275	1810	7-500 OR 8-500 & 2-350	4½	5	5	2700	1905	2240
			7-350 OR 8-350 & 2-3/0	4	4½	7	2885	2040	2400
			3-500 & 1-350	3½	3½	9	2820	1990	2345
			3-350 & 1-3/0	3	3	11	2650	1870	2200
			3-3/0 & 1-1/0 (1)	2	2½	18	2670	1890	2220
2000	REQUIRES INDIVIDUAL CONSIDERATION								

FOR FIELD MAINTENANCE ONLY

NOTES:
(1) NOT TO BE USED WITHOUT CLEARANCE BY UNDERGROUND DESIGN SUPERVISOR.
2 RUNS EXCEEDING 50' SHOULD BE GIVEN INDIVIDUAL CONSIDERATION.
3 THIS CHART IS NOT TO BE USED FOR SIZING CABLE.

TABLE OF CONTENTS

UNDERGROUND CABLE REFERENCE CHART
INDIVIDUAL 120/208Y 3$^{\phi}$ SERVICE
DIRECTLY FROM TRANSFORMER (ALUMINUM CONDUCTORS)

TRANSFORMER	DESIGN DEMAND 85% P.F.		CONDUCTOR	DUCT		NO. DUCT	THERMAL LIMIT 85% P.F.		
KVA	KW	AMP	AWG & KCMIL (AL)	3W	4W	RUNS USED	AMP	KW	(KVA)
75	63	208	4-350	3	3	1	328	99	117
			4-1/0	2	2	2	289	91	107
			4-#2			3	327	89	117
150	127	417	7-500 OR 6-500 & 2-350	4½	5	1	643	196	231
			3-350 & 1-3/0	3	3	2	612	187	220
			3-3/0 & 1-1/0	2	2½	4	726	222	262
			3-1/0 & 1-#2		2	5	667	204	240
			3-#2 & 1-#4 (1)			7	663	203	239
225	191	627	7-350 OR 6-350 & 2-3/0	4	4½	2	982	300	353
			3-500 & 1-350	3½	3½	3	1010	335	395
			3-350 & 1-3/0	3	3	4	1135	346	407
			3-3/0 & 1-1/0	2	2½	6	1015	310	365
			3-1/0 & 1-#2		2	8	993	304	357
300	255	834	7-350 OR 6-350 & 2-3/0	4	4½	3	1425	435	512
			3-500 & 1-350	3½	3½	4	1400	427	503
			3-350 & 1-3/0	3	3	5	1370	418	492
			3-3/0 & 1-1/0	2	2½	6	1305	398	468
500	425	1390	7-500 OR 6-500 & 2-350	4½	5	4	2240	685	805
			7-350 OR 6-350 & 2-3/0	4	4½	5	2190	672	790
			3-500 & 1-350	3½	3½	7	2220	680	800
			3-350 & 1-3/0	3	3	8	2035	622	732
			3-3/0 & 1-1/0 (1)	2	2½	14	2135	653	768
750	638	2085	7-500 OR 6-500 & 2-350	4½	5	6	3120	956	1120
			7-350 OR 6-350 & 2-3/0	4	4½	8	3255	990	1170
			3-500 & 1-350	3½	3½	10	3095	950	1115
			3-350 & 1-3/0	3	3	12	2970	909	1070
			3-3/0 & 1-1/0 (1)	2	2½	20	2965	906	1065
1000	850	2780	7-500 OR 6-500 & 2-350	4½	5	8	4000	1225	1442
			7-350 OR 6-350 & 2-3/0	4	4½	10	4020	1230	1445
			3-500 & 1-350	3½	3½	14	4050	1240	1458
			3-350 & 1-3/0	3	3	17	4050	1240	1458
			3-3/0 & 1-1/0 (1)	2	2½	28	4030	1232	1450
1500	REQUIRES INDIVIDUAL CONSIDERATION								

FOR FIELD MAINTENANCE ONLY

NOTES:
1. NOT TO BE USED WITHOUT CLEARANCE BY UNDERGROUND DESIGN SUPERVISOR.
2. RUNS EXCEEDING 50' SHOULD BE GIVEN INDIVIDUAL CONSIDERATION.
3. THIS CHART IS NOT TO BE USED FOR SIZING CABLE.

SAN DIEGO GAS & ELECTRIC COMPANY UNDERGROUND STANDARDS

DATE 12-27-73
APPD

600 VOLT CABLE REFERENCE CHART

3999.003

TABLE OF CONTENTS

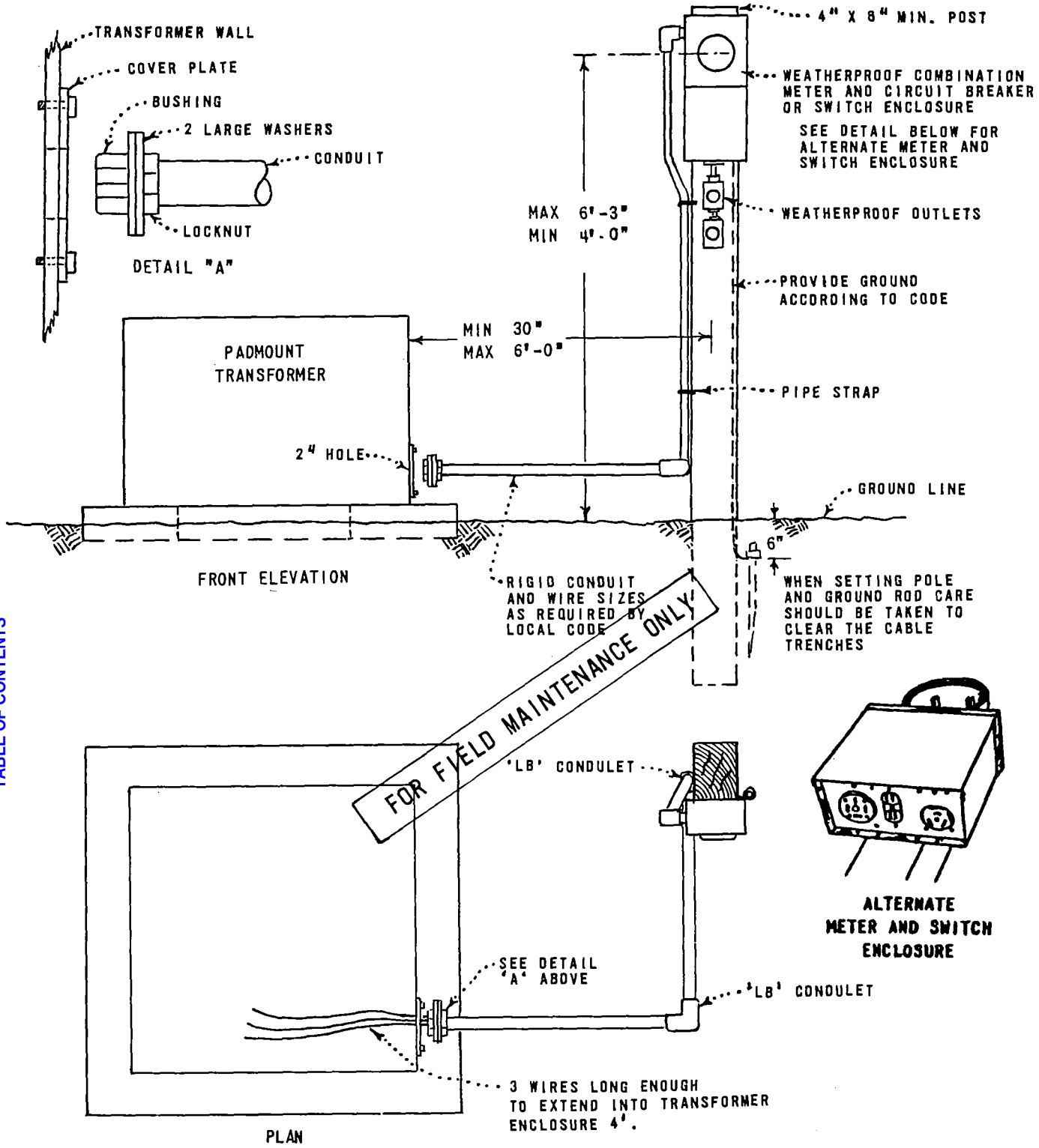

TABLE OF CONTENTS

CUSTOMER SHALL FURNISH, INSTALL, OWN & MAINTAIN AT HIS EXPENSE:

(1) POST, METER INSTALLATION, CONDUIT RISER, WEATHERPROOF PULL BOX, CONDULETS AND FITTINGS.

SDG&E WILL:

(2) CONNECT RIGID CONDUIT TO PADMOUNT TRANSFORMER AND CONNECT SECONDARY CONDUCTORS.

NOTE:

A. OVERHEAD CONDUCTORS SHALL NOT BE ATTACHED TO THIS METER POLE.

3999.301	SDG&E ELECTRIC STANDARDS TEMPORARY SERVICE FROM PAD-MOUNT TRANSFORMER TO CUSTOMER-OWNED METER INSTALLATION	DATE 12-9-75 APPD

SCOPE: THIS STANDARD SHOWS CABLE-IN-CONDUIT (SIDA) TERMINATION AT THE CUSTOMERS CONDUIT RISER.

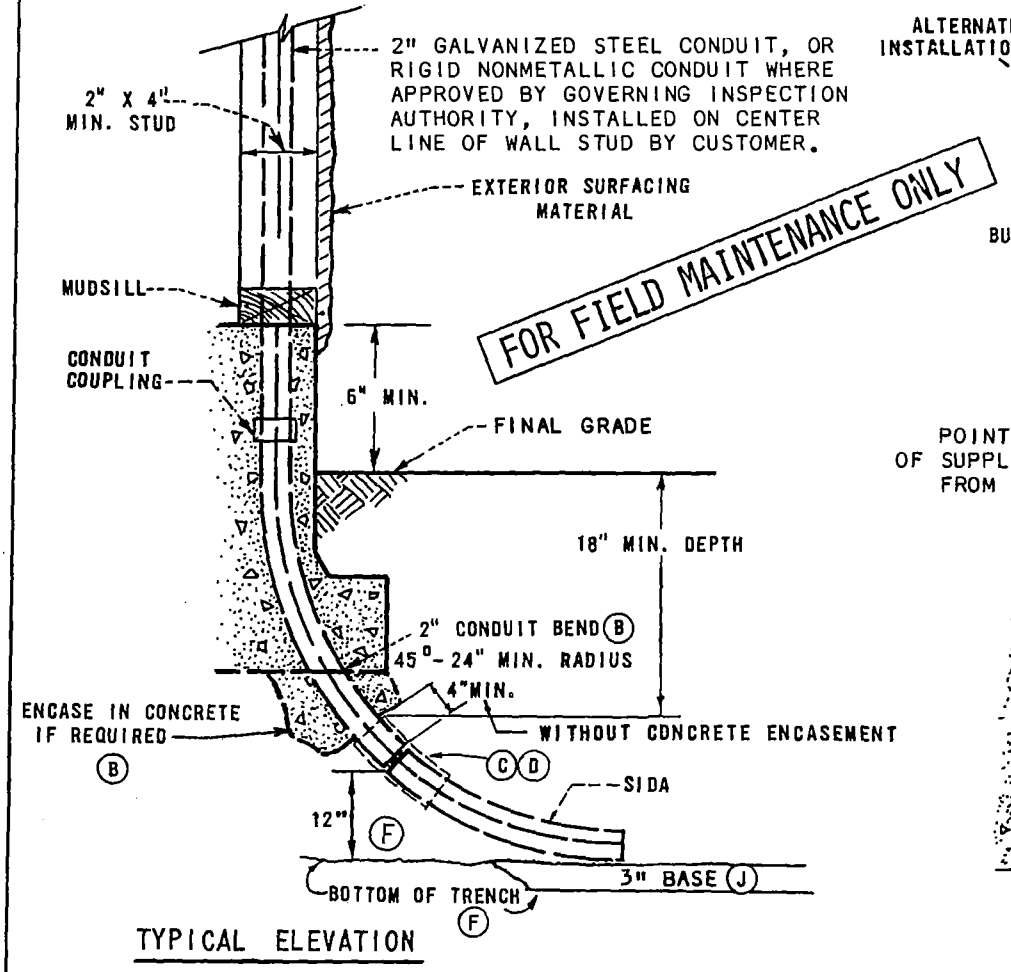

TYPICAL ELEVATION

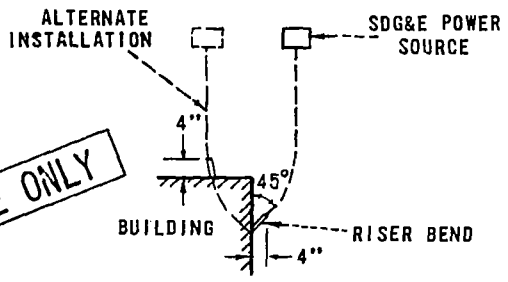

TYPICAL PLAN

POINT CONDUIT STUB IN DIRECTION OF SUPPLY SOURCE NORMALLY AT 45° ANGLE FROM OUTER FACE OF BUILDING WALL

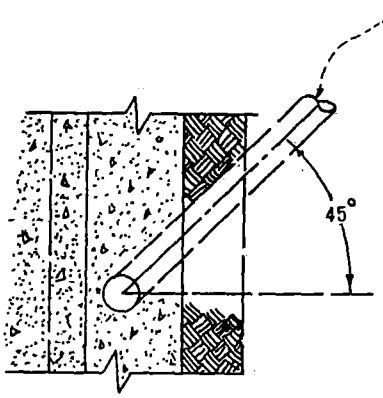

PLAN

INSTALLATION:

A. VERIFY METER AND SERVICE LOCATION WITH SDG&E BEFORE INSTALLATION.

(B) G.O. 128 RULE 33.4D REQUIRES ONE OF THE FOLLOWING DOWN TO AN 18 INCH DEPTH ON PRIVATE PROPERTY: (A) STEEL CONDUIT, OR (B) SCHEDULE 40 PVC OR SCHEDULE 80 PVC CONDUIT WITH A MINIMUM WALL THICKNESS OF 0.15 INCHES, OR (C) AT LEAST A 3 INCH LAYER OF CONCRETE ABOVE AND 2 INCHES ON EACH SIDE OF THE CONDUIT.

(C) IF A 2-3/0, 1-1/0 SIDA SERVICE (196928) IS REQUIRED THE SIDA CONDUIT WILL BE CUT BACK TO ALLOW THE CABLE TO BE INSERTED INTO THE CONDUIT BEND THE REQUIRED AMOUNT. A 2 INCH COUPLING (279872 (E)) WITH TWO LAYERS OF GRAY TAPE (721120 (E)) OVER THE COUPLING SHALL BE INSTALLED BY SDG&E TO SEAL THE JUNCTION BETWEEN THE BEND AND THE SIDA. FILL WITH SOIL AND COMPACT UNDER THE COUPLING BEFORE BACKFILLING THE TRENCH.

(D) WHEN A COUPLING IS NOT USED, TERMINATE CONDUIT OF SIDA A MINIMUM OF ONE FOOT INSIDE CONDUIT BEND. WHERE DUCT ENTERS THE CONDUIT BEND, SDG&E CREW WILL SEAL WITH ONE LAYER OF AQUASEAL (442976 (E)) OR EQUIVALENT AND TWO LAYERS OF GRAY INSULATING TAPE (721120 (E)) TO PREVENT DUCT FROM PULLING OUT OF RISER BEND AND ALSO TO PREVENT WATER AND DIRT ENTRY.

(E) EXEMPT MATERIAL.

(F) FIRST 3 FEET OF TRENCH AT BUILDING MUST BE A MINIMUM OF 24 INCHES AND 12 INCHES BELOW THE BOTTOM OF CONDUIT BEND. A SLOPE OF 1 FOOT OF THE TRENCH WALL BUTTED AGAINST THE BUILDING AT THE SERVICE ENTRANCE FOR EVERY 1 FOOT DEPTH OF TRENCH SHALL BE MAINTAINED IF UNDERMINING IS POSSIBLE AT THE BUILDING.

REFERENCE:

J SEE STANDARD 3370 FOR TRENCH DEPTHS, BASE SHADING AND BACKFILL REQUIREMENTS.
K. SEE STANDARD 3941 FOR CABLE IN CONDUIT SERVICE LATERAL.
L. SEE STANDARD 3948 FOR SEALING CONDUITS.

APPD 1-1-87 ISSUED	SDG&E ELECTRIC STANDARDS CABLE-IN-CONDUIT (SIDA) SERVICE	3999.401 SUPERCEDES 3943 (1-1-86)

TABLE OF CONTENTS

ALUMINUM

WIRE SIZE	DUCT OR CONDUIT MIN. SIZE	REEL FOOTAGE	MAXIMUM REEL DIAMETER	STOCK NUMBER	U-NUMBER REFERENCE
1/C #2 SOL PECN (A)	2"	5000'	52" WIDE X 96" DIA.	194482	U-12.04
1/C #2 SOL PECN-PEJ (A)(C)	1-1/4" PID	5000'	52" WIDE X 96" DIA.	194492	U-12.051
1/C #2 SOL PECN (A)	1-1/4" PID	5000'	52" WIDE X 96" DIA.	194490	U-12.05
3-1/C #2/0 STR PECN (A)	3"	2000'	52" WIDE X 96" DIA.	194486	U-12.06
3-1/C 750 KCMIL STR XLPECN (A)	5"	600' 1200'	52" WIDE X 96" DIA. 64" WIDE X 108" DIA.	197776	U-12.09
3-1/C 1000 KCMIL STR XLPECN (A)	5"	600' 1200'	52" WIDE X 96" DIA. 64" WIDE X 108" DIA.	197785	U-12.095
1/C 1000 KCMIL STR XLPECN-PEJ	5"	3600'	45" WIDE X 90" DIA.	197628	U-12.097

COPPER

WIRE SIZE	DUCT OR CONDUIT MIN. SIZE	REEL FOOTAGE	MAXIMUM REEL DIAMETER	STOCK NUMBER	U-NUMBER REFERENCE
1/C #4 STR PECN (A)	1-1/4" PID	2000'	52" WIDE X 96" DIA.	194880	U-12.3
1/C #4 STR PECN (A)	3"	5000'	52" WIDE X 96" DIA.	194656	U-12.2
1/C #2 STR PECN (A)	1-1/2" PID	2000'	52" WIDE X 96" DIA.	194784	U-12.5
1/C #2 STR PECN (A)	3"	5000'	52" WIDE X 96" DIA.	194496	U-12.4
3-1/C #2 STR PECN (A)	3"	1500'	52" WIDE X 96" DIA.	194544	U-12.41
3-1/C #4/0 STR PECN (A)(B)	5"	600' 1200'	52" WIDE X 96" DIA. 62" WIDE X 96" DIA.	194592	U-12.7
3/C 500 KCMIL PECN (A)(B)	5"	1200'	62" WIDE X 96" DIA.	194720	U-12.9
3-1/C 500 KCMIL PECN-PEJ	5"	1200'	62" WIDE X 96" DIA.	194736	U-12.91

FOR FIELD MAINTENANCE ONLY

TABLE OF CONTENTS

ABBREVIATION DEFINITIONS

1/C = ONE CONDUCTOR
3/C = THREE CONDUCTORS
PECN-PEJ = POLYETHYLENE INSULATION, CONCENTRIC NEUTRAL, POLYETHYLENE JACKET
XLPECN-PEJ = CROSSLINKED POLYETHYLENE INSULATION, CONCENTRIC NEUTRAL, POLYETHYLENE JACKET
EPR-PEJ = ETHYLENE PROPYLENE RUBBER INSULATION, FLAT STRAP NEUTRAL, POLYETHYLENE JACKET
SOL = SOLID
STR = STRANDED
PID = PRIMARY-IN-DUCT
KCMIL = THOUSAND CIRCULAR MILS

INSTALLATION:

(A) NO LONGER PURCHASED.

(B) MAY BE INSTALLED EXISTING 4 INCH CONDUITS (SEE STANDARD 3372).

(C) INFORMATION REMOVED FROM PAGE 4002.2 AND ADDED TO FMO SECTION IN 1987.

	SDG&E ELECTRIC STANDARDS	
DATE 1-1-87 APPD JLB/RDJ	12KV CABLE SIZES	4099.001

600 VOLT CABLE AMPACITIES
COPPER AND ALUMINUM TRIPLEXED CONCENTRIC STRANDED CABLES IN DUCT, 600 VOLT, 1 CIRCUIT, 75°C INSULATED CABLE IN 25°C AMBIENT EARTH WITH 75% LOAD FACTOR AND RHO-120

NUMBER CONDUCTORS/WIRE SIZE-AWG	COPPER	ALUMINUM
2 - #8	58	44
2 - #4, 1 - #6	100	77
2 - #2, 1 - #4	131	102
2 - #1/0, 1 - #2	174	136
2 OR 3 - #3/0, 1 - #1/0	228	178
2 - #4/0, 1 - #1/0	262	206
2 OR 3 - 350KCMIL & 1 - #3/0	352	277
2 OR 3 - 500KCMIL & 1 - #4/0	430	340

FOR FIELD MAINTENANCE ONLY

TABLE OF CONTENTS

600 VOLT SIDA CABLE SIZES

600 VOLT ALUMINUM CROSS-LINKED POLYETHYLENE (A)

WIRE SIZE	CABLE-IN-CONDUIT SIZE	REEL FOOTAGE	MAXIMUM REEL DIMIAMETER	STOCK NUMBER	U-NUMBER REFERENCE
2-#8	3/4" SIDA	2000	32" WIDE X 50" DIA.	196960	U-10.01
2-#2, 1-#4	1 1/4" SIDA	4000	52" WIDE X 96" DIA.	196832	U-10.03
2-1/0, 1-#2	1 1/2" SIDA	3000	52" WIDE X 96" DIA.	196768	U-10.05
2-3/0, 1-1/0	2" SIDA	2000	52" WIDE X 96" DIA.	196928	U-10.07
2-350KCMIL, 1-3/0	2 1/2" SIDA	1500	52" WIDE X 96" DIA.	197570	U-10.081

ABBREVIATION DEFINITIONS

SIDA = SECONDARY-IN-DUCT, ALUMINUM
KCMIL = THOUSAND CIRCULAR MILLS

INSTALLATION:

(A) INFORMATION REMOVED FROM PAGE 4002.1 AND ADDED TO THE "FIELD MAINTENANCE ONLY" SECTION IN 1987.

4100 TERMINATIONS, SPLICING CONNECTIONS

4100 TERMINATIONS, SPLICING CONNECTIONS

PAGE	SUBJECT
4199.001	COMPATIBILITY CHART FOR 200 AMP CLASS URD SYSTEMS, LOADBREAK
4199.002	COMPATIBILITY CHART FOR 200 AMP CLASS URD SYSTEMS, DEADBREAK
4199.101-.102	CABLE TERMINALS
4199.103-.106	CABLE TERMINATION INSTRUCTIONS "RA" OIL SWITCHES
4199.107-.108	OIL FILLED FUSE CUTOUTS (SUBMERSIBLE), 4KV, 100 AMP AND 200 AMP, SINGLE-PHASE
4199.109	OIL FILLED FUSE CUTOUTS (SUBMERSIBLE), 4KV, 60 AMP OR LESS
4199.201	OUTDOOR COPPER CABLE TERMINALS
4199.202	INDOOR CABLE TERMINATIONS, POLYETHYLENE CABLES
4199.203-.204	LIVE FRONT CABLE TERMINATIONS, POLYETHYLENE CABLES
4199.401	PRECAST SPLICE BOX INSTALLATION
4199.402-.405	SPLICES FOR 5KV AND 15KV 1/C POLYETHYLENE INSULATED CONCENTRIC TYPE CABLE
4199.406	SPLICE FOR 15KV 500 KCMIL CU PILC-NJ TO 15KV 750 KCMIL XLPE
4199.407-.409	SPLICE (CADWELD)
4199.501-.503	15KV SPLICE CONNECTIONS FOR NON-LOADBREAK
4199.504	NON-LOADBREAK BURIED EQUIPMENT ENCLOSURE INSTALLATION - SPLICES
4199.505	1 PHASE LOADBREAK & 3 PHASE NON-LOADBREAK BURIED EQUIPMENT ENCLOSURE INSTALLAITON - SPLICES
4199.506	200 AMP DEADBREAK CONNECTORS - 12KV
4199.600	ALUMINUM TERMINATION SECONDARY (600V) AT TRANSFORMER OR BUS
4199.702	0-750 VOLT PULL BOX INSTALLATION
4199.703	0-600 VOLT CONNECTIONS
4199.704	0-750 VOLT PRECAST HANDHOLE INSTALLATION
4199.705	0-600 VOLT CONNECTIONS FOR #8 THROUGH 350 KCMIL ALUMINUM CONDUCTORS
4199.706-.708	0-600 VOLT CONNECTORS FOR #8 THROUGH 350 KCMIL AL OR CU CONNECTORS
4199.801-.802	15KV 200 AND 600 AMP SPLICES AND CONNECTORS - IDENTIFICATION CHART
4199.803	12KV 600 AMP SPLICES AND CONNECTIONS - IDENTIFICATION CHART
4199.804	12KV, 200 AMP CONNECTOR ASSEMBLIES IDENTIFICATION CHART
4199.805	12KV, 200 AMP PREMOLDED SPLICE AND CONNECTOR ASSEMBLIES IDENTIFICATION CHART
4199.806	12KV 200 & 600 AMP PREMOLDED SPLICE & CONNECTOR ASSEMBLIES IDENTIFICATION CHART
4199.807-.808	12KV 20 & 600 AMP CONNECTOR ASSEMBLIES IDENTIFICATION CHART
4199.901	NON-LOADBREAK CABLE TAP
4199.902-.903	LOADBREAK CABLE TAPS - INSTALLATION
4199.904-.905	LOADBREAK ACCESSORIES, 12KV AND/OR 6.9KV
4199.906	LOADBREAK ELBOW TEE CONNECTOR "PIGGYBACK", 12000 VOLTS AND BELOW
4199.907	LOADBREAK ELBOW TEE "PIGGYBACK", INSTRUCTIONS
4199.908	LOADBREAK ELBOW CONNECTOR, 6930 VOLTS AND BELOW
4199.909	LOADBREAK ACCESSORIES, 12KV AND/OR 6.9KV

MAIN TABLE OF CONTENTS

© 1998 - 2019 San Diego Gas & Electric Company. All rights reserved. Removal of this copyright notice without permission is not permitted under law.

REV	CHANGE	BY	DSGN	APPV	DATE	REV	CHANGE	BY	DSGN	APPV	DATE
C						F					
B	COMPLETELY REVISED	JK	JS	CZH	10/16/2019	E					
A	ORIGINAL ISSUE	JK	JS	CZH	6/13/2019	D					

Indicates Latest Revision | X | Completely Revised | New Page | Information Removed

SDG&E ELECTRIC UNDERGROUND FIELD MAINTENANCE ONLY STANDARDS

LEGACY UNDERGROUND FIELD MAINTENANCE
TABLE OF CONTENTS
TERMINATIONS, SPLICING, CONNECTIONS

SCOPE: THIS STANDARD SHOWS COMPATIBILITY, IDENTIFICATION, CONNECTORS, AND ACCESSORIES FOR 200 AMP LOADBREAK ASSEMBLIES.

• LOADBREAK DEVICE • STANDARDS REFERENCE • STOCK NUMBER			INSULATING RECEPTCLE	STAND-OFF PLUG	BUSHING PLUG	FEED-THRU INSERT	FEED-THRU BUSHING	3-WAY CABLE TAP	4-WAY CABLE TAP		FUSED ELBOW	ELBOW			
INSULATING RECEPT. 4192 204304 			—	X	X	X	X	X	X		—	—			
STAND-OFF PLUG 4192 547312 			X	—	—	—	—	—	—		X	X			
BUSHING PLUG 4192 544676 			X	—	—	—	—		—		X	X			
FEED-THRU INSERT 4192 544678 			X	—	—	—		—	—		X	X			
FEED-THRU BUSHING 4192 182016 			X	—	—		—	X	X		X	X			
3-WAY CABLE TAP 4192 718312 			X	—		—	—	—	—		X	X			
4-WAY CABLE TAP 4192 718328 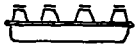			X		—	—	—	—	—		X	X			
FUSED ELBOW 4191 VARIOUS 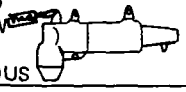			—	X	X	X	X	X	X		—	—			
ELBOW 4191 VARIOUS 			—	X	X	X	X	X	X		—	—			

FOR FIELD MAINTENANCE ONLY

NOTE: X DENOTES UNIT COMPATIBILITY

TABLE OF CONTENTS

DATE 1-1-87 APPD JLB/RDH	SDG&E ELECTRIC STANDARDS COMPATIBILITY CHART, FOR 200 AMP CLASS URD SYSTEMS, LOADBREAK	4199.001 SUPERCEDES 4105.1 (6-3-83)

SCOPE: THIS PAGE PROVIDES THE COMPATIBILITY CHART FOR 200 AMP CLASS DEADBREAK EQUIPMENT.

DEADBREAK DEVICE STANDARDS REFERENCE STOCK NUMBER	T CONNECTOR	STRAIGHT RECEPTACLE	STRAIGHT PLUG	DEAD END RECEPTACLE	DEAD END PLUG	GROUNDING PLUG	STAND OFF PLUG	BUSHING PLUG	BAILING ASSEMBLY PLUG/RECEPTACLE	BAILING ASSEMBLY DEADBREAK BUSHING	BAILING ASSEMBLY DEAD END PLUG	ELBOW	BAIL CONNECTOR
T CONNECTOR 4196 256112 	-	-	X	X	X	X	X	X	-	X	X	X	X
STRAIGHT RECEPTACLE 4196 	X	-	X	-	X	X	X	X	X	-	-	-	-
STRAIGHT PLUG 4196 	X	X	-	X	-	-	-	-	X	-	-	X	-
DEAD END RECEPTACLE 4197 570304 	X	-	X	-	-	X	X	-	-	-	-	-	-
DEAD END PLUG 4197 544864 	X	X	-	-	-	-	-	-	-	-	X	X	-
GROUNDING PLUG 4197 544844 	X	X	-	X	-	-	-	-	-	-	-	X	-
STAND OFF PLUG 4197 547304 	X	X	-	-	-	-	-	-	-	-	-	X	-
BUSHING PLUG 4197 544684 	X	X	-	-	-	-	-	-	-	-	-	X	-
BAILING ASSEMBLY 4196 120384 (E) 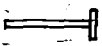	X	X	X	-	-	-	-	-	-	-	-	-	-
BAILING ASSEMBLY 4196 120416 	X	-	-	-	-	-	-	-	-	-	-	X	-
BAILING ASSEMBLY 4196 120352 (E) 	X	-	-	-	X	-	-	-	-	-	-	-	-
ELBOW 4196 	X	-	X	-	X	X	X	X	-	-	-	-	X
BAIL CONNECTOR 4196 120448 (E) 	X	-	-	-	-	-	-	-	-	-	-	X	-

FOR FIELD MAINTENANCE ONLY

TABLE OF CONTENTS

NOTES:

- "X" DENOTES UNIT CAP COMPATIBILITY.

INSTALLATION:

(E) EXEMPT MATERIAL.

4199.002 SUPERCEDES 4105.2 (1-1-85)	SDG&E ELECTRIC STANDARDS COMPATIBILTY CHART FOR 200 AMP CLASS URD SYSTEMS, DEADBREAK	DATE 1-1-87 APPD JLB/RDD

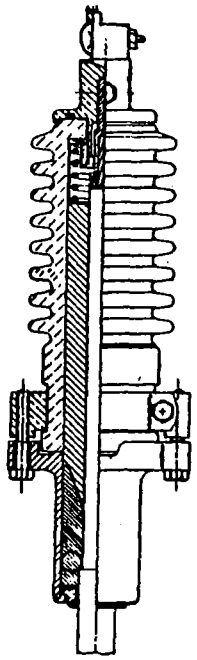

FIGURE 1

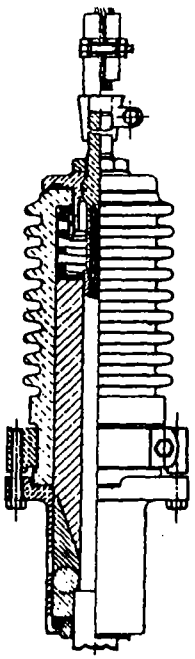

FIGURE 2

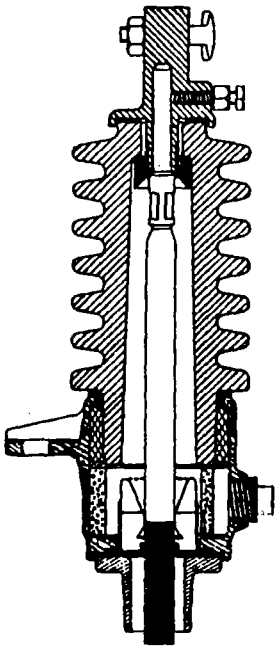

FIGURE 3

FOR FIELD MAINTENANCE ONLY

JOSLYN PSC TERMINALS - 15KV

CABLE	CONDUCTOR	MODEL "C" BODY	STOCK NO.	FIG. NO.	FILLER KIT (1)	STOCK NO.	AERIAL LUG	COMPRESSION CONNECTOR.	STOCK NO.	MOUNTING BRACKET
4099.004	4 CU	J9280	727616	1	80-4C71J80 OR 80-4B71J80	445742	-	80-20A-4Z	259584	J9201-E6A
4099.005	2 CU	J9280	727520	1	80-2C79J85 OR 80-2B79J85	445728	-	80-20A-2Z	259168	J9201-E6A
4099.008	4/0 CU	J9280-2	727584	2	80-04C104L110 OR 80-04B104L110	445760	80-108	80-39A-04Z	259552	J9201-E6A
4099.010	500 MCM CU	J9280-2	727648	2	80-50C135L145 OR 80-50B135L145	445824	80-106	80-39B-50Z	259648	J9201-E6A
4099.002	750 MCM AL	J9280-3	727552	2	80-75C141V150	445840	80-111	80-128-75Z	259680	J9201-N

(1) USE FILLER KIT 'C' WITH MODEL "C" BODY ONLY. USE FILLER KIT 'B' WITH ANY SALVABLE 'B' BODY. ('B' BODY NO LONGER MANUFACTURED)

G&W TERMINALS - 15KV "SLIP-ON" TERMINAL - FIGURE 3

CABLE	CONDUCTOR	CATALOG NUMBER	STOCK NO.	AERIAL LUG	BRACKET
4099.004 4099.007	4 & 2 CU.	PAT 1701 - FURNISH WIRE SIZE, O. D. OVER SEMI-CONDUCTING JACKET, ALUMINUM OR COPPER CONDUCTORS.	727616 727520	—	—
4099.008	4/0 CU.	PAT 1802 - FURNISH WIRE SIZE, O. D. OVER SEMI-CONDUCTING JACKET, ALUMINIM OR COPPER CONDUCTORS.	727584	—	—

NOTE:

FOR INDOOR TERMINATIONS SEE 4121.

DATE 1-28-74 APPD	SDG&E ELECTRIC STANDARDS CABLE TERMINALS	4199.101

TABLE OF CONTENTS

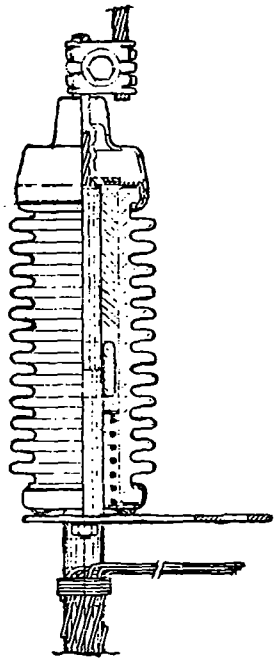

FIGURE 1

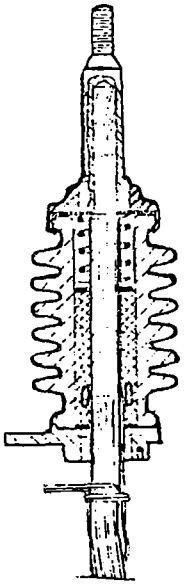

FIGURE 2

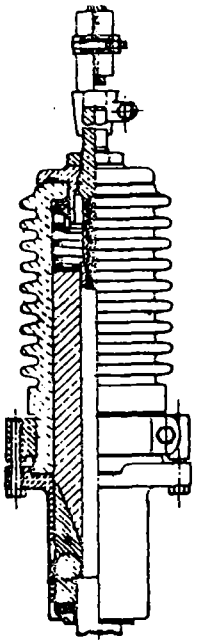

FIGURE 3

FOR PELCO MAINTENANCE ONLY

TABLE OF CONTENTS

JOSLYN PSC & "EASY-ON" TERMINALS - 15KV

CABLE	CONDUCTOR	TERMINAL	STOCK NO.	FIG. NO.	AERIAL LUG	COMPRESSION CONNECTOR	STOCK NO.	MOUNTING BRACKET
4099.004	4 CU	J9279	727616	1	-	103-01-091	259540	J9201-E6A
4099.005	2 CU	J9279	727520	1	-	103-01-125	259536	J9201-E6A
4099.008	4/0 CU	E5260	727584	2	80-108	1047013	259538	J9201-E6A
4099.010	500 KCM CU	E5260	727648	2	80-108	10474146	259542	J9201-E6A
4099.002	750 KCM AL	J9280-3/78 (1)	727552	3	80-111	80-128-75Z	259680	J9201-N

NOTE: (1) FOR 4099.001 750 KCM AL USE FILLER KIT 80-75C141V155 STOCK NUMBER 445840.

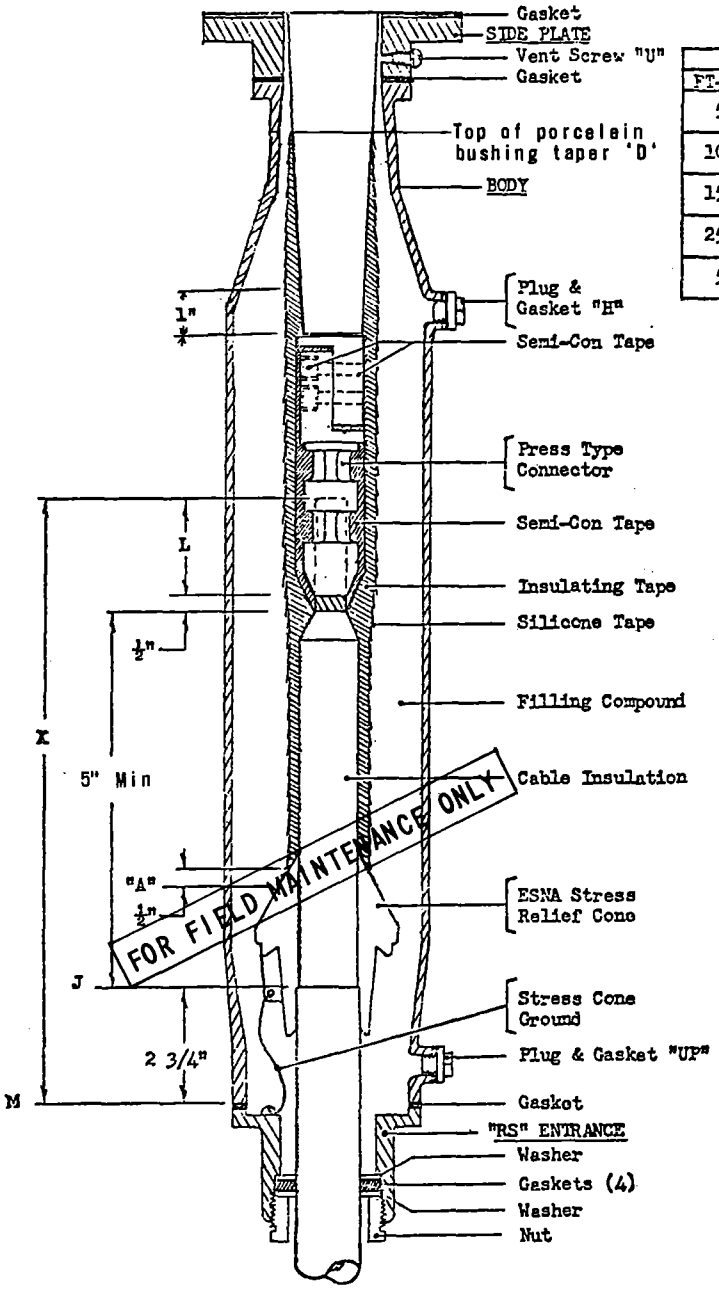

TORQUE GUIDE	
FT-LBS	DESCRIPTION
5	$\frac{5}{16}$"-18 ENTRANCE BOLTS
10	$\frac{3}{8}$"-16 BODY BOLTS
15	$\frac{3}{8}$"-16 CONNECTOR BOLTS
25	$\frac{1}{2}$"-13 SIDEPLATE NUTS
5	$\frac{1}{2}$" STRAIGHT PIPE PLUG

TABLE OF CONTENTS

SDG&E ELECTRIC STANDARDS

DATE 4-29-77
APPD TAF

CABLE TERMINATION INSTRUCTIONS 'RA' OIL SWITCHES

3-1/C STUD BUSHING COMPONENTS FOR 15KV 750KCMIL (MAX)

4199.103

CABLE TERMINATION INSTRUCTION
"RA" OIL SWITCHES
3-1/C STUD BUSHING COMPARTMENTS FOR 15KV 750MCM (MAX)

The following instructions apply to concentric neutral cable, copper or aluminum, press connectors, Novoid 254 compound filled compartments, "RS" entrance. Make measurements on each conductor after the switch is mounted in position. Do not remove the porcelain bushings from the switch.

1. Remove the entrance and gaskets.

2. Measure the "X" dimension with a stiff wire.

3. a. Position cable and mark jacket at point (M).

   b. Cut cable "X" inches above mark (M) on jacket.

   c. Bend neutral wires back out of the way.

4. Remove the body and connector. Torque sideplate nuts to 25 ft - lbs.

5. Place the entrance parts and body back over the cable in proper sequence for reassembly.

6. Measure the depth "L" of the connector socket and add $\frac{1}{2}$" to this dimension. Remove the cable jacket, insulation and any semi-conducting strand shielding for this distance from the end of the cable.

7. Measure and remove the cable semi-con jacket to cable mark (J).

8. a. Remove all trace of semi-conducting material from the surface of the cable insulation.

   b. Taper the cable insulation.

   c. Install ESNA stress relief cone. (Complete with ground wire.)

9. Install appropriate connector per the following instructions:

   a. <u>COPPER PRESS TYPE</u>:

      Orient the connector on the conductor for a bolted connection without twisting the cable. Press the connector onto the conductor according to the press manufacturer's instructions.

   b. <u>ALUMINUM PRESS TYPE</u>:

      Using a wire brush, clean the bare conductor strands to remove all traces of aluminum oxide. Remove the seal over the connector socket and <u>immediately</u> fit the connector over the cable conductor. Orient the connector on the conductor for a bolted connection without twisting the cable. Press the connector onto the conductor according to the press manufacturer's instructions.

FOR FIELD MAINTENANCE ONLY

TABLE OF CONTENTS

4199.104	SAN DIEGO GAS & ELECTRIC COMPANY UNDERGROUND STANDARDS CABLE TERMINATION INSTRUCTIONS 'RA' OIL SWITCHES 3-1/C STUD BUSHING COMPONENTS FOR 15KV 750KCMIL (MAX)	DATE 6-14-74 APPD

10. a. Bolt connector to pad. Torque screws to values shown in table.

b. Pack semi-con tape into all connector bolt holes to form a smooth taping surface.

c. File off flashing from press operation to blend with circular connector. Fill circumferential grooves with semi-con to form a smooth cylindrical surface. Cut tape to fit grooves.

d. Clean the porcelain, connector and cable end.

e. Apply one half-lapped layer of semi-conducting tape over the entire connector surface, starting at the cable stranding and wrapping to the porcelain edge at the top of the connector.

11. Apply half-lapped layers of insulating tape (3M23 or Bishop 3) to a thickness of 200 mils. Start taping at the connector-conductor junction and "fill-in" until the applied tape is even with the cable insulation, then complete the overall taping maintaining 200 mils one (1) inch onto porcelain bushing before tapering, as per sketch, up to top of porcelain bushing taper at point (D).

12. Apply (1) half-lapped layer of Bishop Tri-Sil silicone tape. Start wrapping at point (A) on the cone and continue up the slope and overlap 1" of the insulating tape onto the porcelain bushing up to top of taper at point (D).

13. Clean the termination and compartment parts.

14. a. Assemble the gasket and body to the sideplate. Cross torque bolts to values in table.

b. Fasten the stress cone ground wire to ground screw.

15. Install the entrance:

"RS" Entrance - Bolt the "RS" body to the entrance gasket and compartment base. Cross torque bolts to value shown in table. Raise the "RS" washers and gaskets and nut into the body. Tighten the nut to seal the entrance to the cable jacket.

16. After the compartments are completely assembled they must be prepared for compounding.

17. Screw a riser pipe into the pipe plug boss listed below. Extend the riser pipe about 12" above the highest point to be filled with compound.

Vent the compartment in the following manner:

FOR UPRIGHT COMPOUNDING - remove the vent screw "U", fill through boss "UP".

FOR INVERTED COMPOUNDING - vent through the top of the entrance; fill through boss "H". Loosen or remove the entrance to provide a vent.

FOR HORIZONTAL COMPOUNDING - remove plug "H" for venting, fill through boss "UP".

FOR FIELD MAINTENANCE ONLY

TABLE OF CONTENTS

DATE 4-29-77 APPD TAF	SAN DIEGO GAS & ELECTRIC COMPANY UNDERGROUND STANDARDS CABLE TERMINATION INSTRUCTIONS 'RA' OIL SWITCHES 3-1/C STUD BUSHING COMPONENTS FOR 15KV 750KCMIL (MAX)	4199.105

18. **The compartment is prepared for compounding after the filling system is assembled and vented.**

19. Heat the compound to the temperature indicated on the container label and observe precautions thereon. Use a thermometer to prevent overheating.

20. The compartment must be warm to prevent the compound from "freezing" on the cold surface. If necessary, warm with hot air or infra-red lights before filling. CAUTION: Do not heat by applying a torch flame. The riser pipe must be kept hot during the entire pouring operation until the compound in the compartment has completely cooled.

21. Pour the compound through the riser pipe until the compound reaches a vent level. Clean all compound from the sealing surfaces and seal the vent. To prevent void formation continue to add compound until cool.

22. Remove the riser pipe and seal the compartment. Torque pipe plug to value in table.

23. Clean the outside of the compartment. Tighten all bolts, nuts and fittings.

24. Restore neutral wires to their original position on cable. Twist wires together underneath the entrance for attachment to ground.

25. Make the neutral wire ground connection.

FOR FIELD MAINTENANCE ONLY

TABLE OF CONTENTS

PRECAUTIONS:

1. Do not bend cable to a radius less than that recommended by the cable manufacturer.

2. Make all required reference marks using string or tape.

3. Remove all shielding from cable ends for proper creepage distance and terminate cable shielding with stress relief cones.

4. All trace of semi-conducting material must be removed from the surface of the exposed insulation.

5. Avoid damaging the cable insulation.

6. Keep cable insulation clean and dry.

7. Gasket and gasket surfaces must be free of oil or dirt. Do not use adhesive or cement on gaskets.

8. Fill compartment with hot compound. Do not "top off".

9. Check all joints for positive tightness.

4199.106	SAN DIEGO GAS & ELECTRIC COMPANY UNDERGROUND STANDARDS CABLE TERMINATION INSTRUCTIONS 'RA' OIL SWITCHES 3-1/C STUD BUSHING COMPONENTS FOR 15KV 750KCMIL (MAX)	DATE 6-14-74 APPD

SCOPE: THIS STANDARD SHOWS THE 100 AMP AND 200 AMP SUBMERSIBLE OIL FILLED FUSE CUTOUTS.

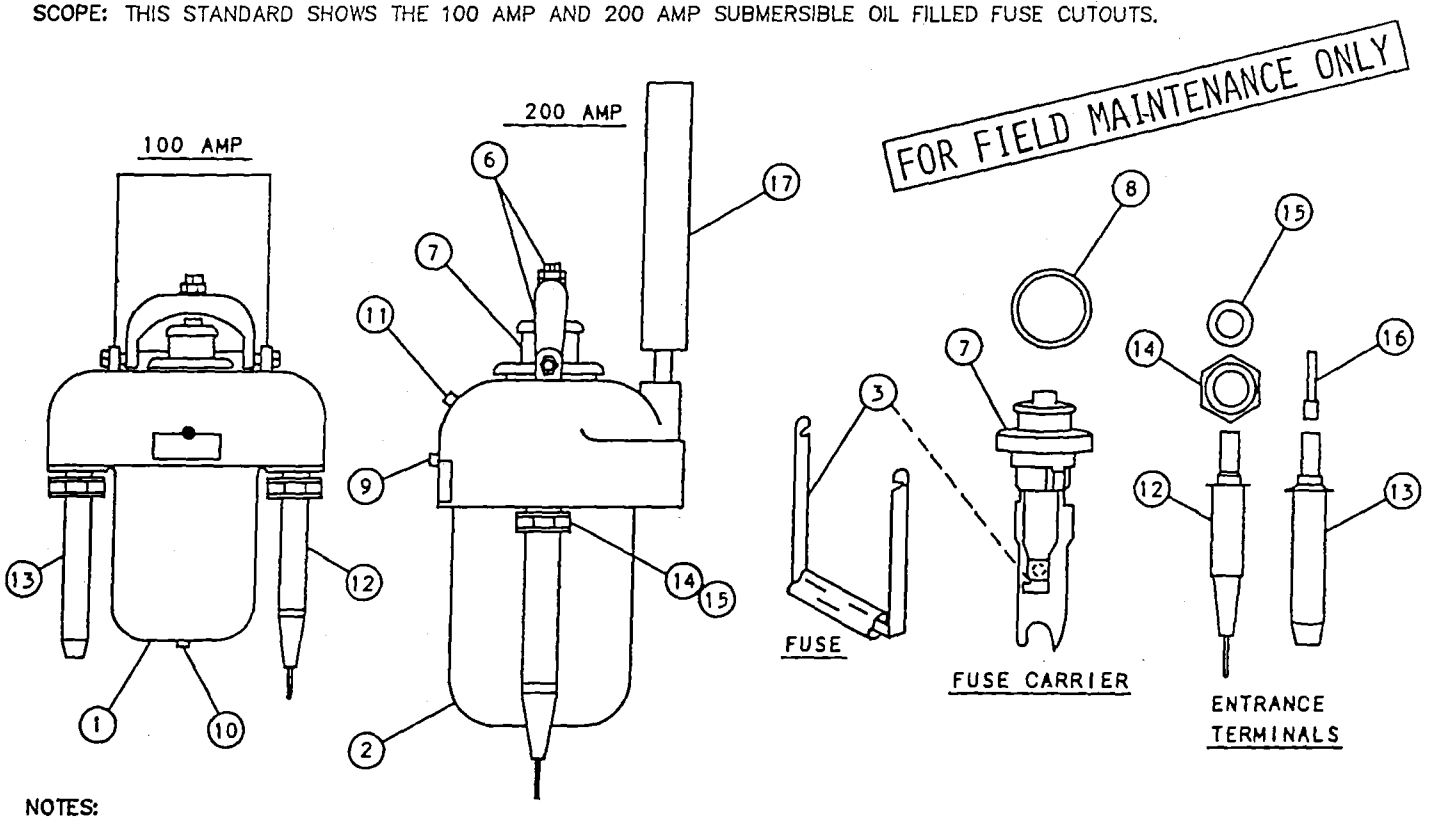

NOTES:

- CAUTION DO NOT INSERT THE FUSE CARRIER INTO THE CUTOUT IF THE FUSE IS BLOWN OR DAMAGED.
- ALWAYS OPEN OR CLOSE THE ENERGIZED CUTOUT WITH ONE COMPLETE RAPID MOTION.
- CUTOUTS COME AS A UNIT INCLUDING TWO ENTRANCE TERMINALS FOR POLYETHYLENE TYPE CABLES.

BILL OF MATERIAL/PARTS LIST:

ITEM	DESCRIPTION		QUANTITY	CONST. STD. OR PAGE NO.	STOCK NUMBER	ASSEMBLY UNITS
1	100 AMP LOAD MAKE/LOAD BREAK CUTOUT (RATED 5.2KV)		AS REQ'D	--	297824	DW100
2	200 AMP LOAD MAKE/LOAD BREAK CUTOUT (RATED 5.2KV)		AS REQ'D	--	297856	DW200
3	FUSE		1	4311.4	--	--
4	OIL (NOT SUPPLIED WITH CUTOUT)		AS REQ'D	--	--	--
5	PETROLATUM (NOT SHOWN)		AS REQ'D	--	--	--
6	YOKE, CLAMPING SCREW & LOCKNUT ASSEMBLY		1	--	--	--
7	FUSE CARRIER		1		--	--
8	FUSE CARRIER GASKET		1	--	--	--
9	OIL LEVEL PLUG		1	--	--	--
10	OIL DRAIN PLUG		1	--	--	--
11	OIL FILL PLUG		1	--	--	--
12	ENTRANCE TERMINAL FOR POLYETHYLENE TYPE CABLE	100 AMP	AS REQ'D	--	730272	PE-100
		200 AMP			730304	PE-200
13	WIPING SLEEVE FOR LEAD COVERED CABLE (FERRULE)		AS REQ'D	--	--	--

SDG&E ELECTRIC STANDARDS

DATE 1-1-96
APPD

4KV OIL FILLED FUSE CUTOUTS (SUBMERSIBLE)

4199.107

TABLE OF CONTENTS

SCOPE: THIS STANDARD SHOWS THE 100 AMP AND 200 AMP SUBMERSIBLE OIL FILLED FUSE CUTOUTS.

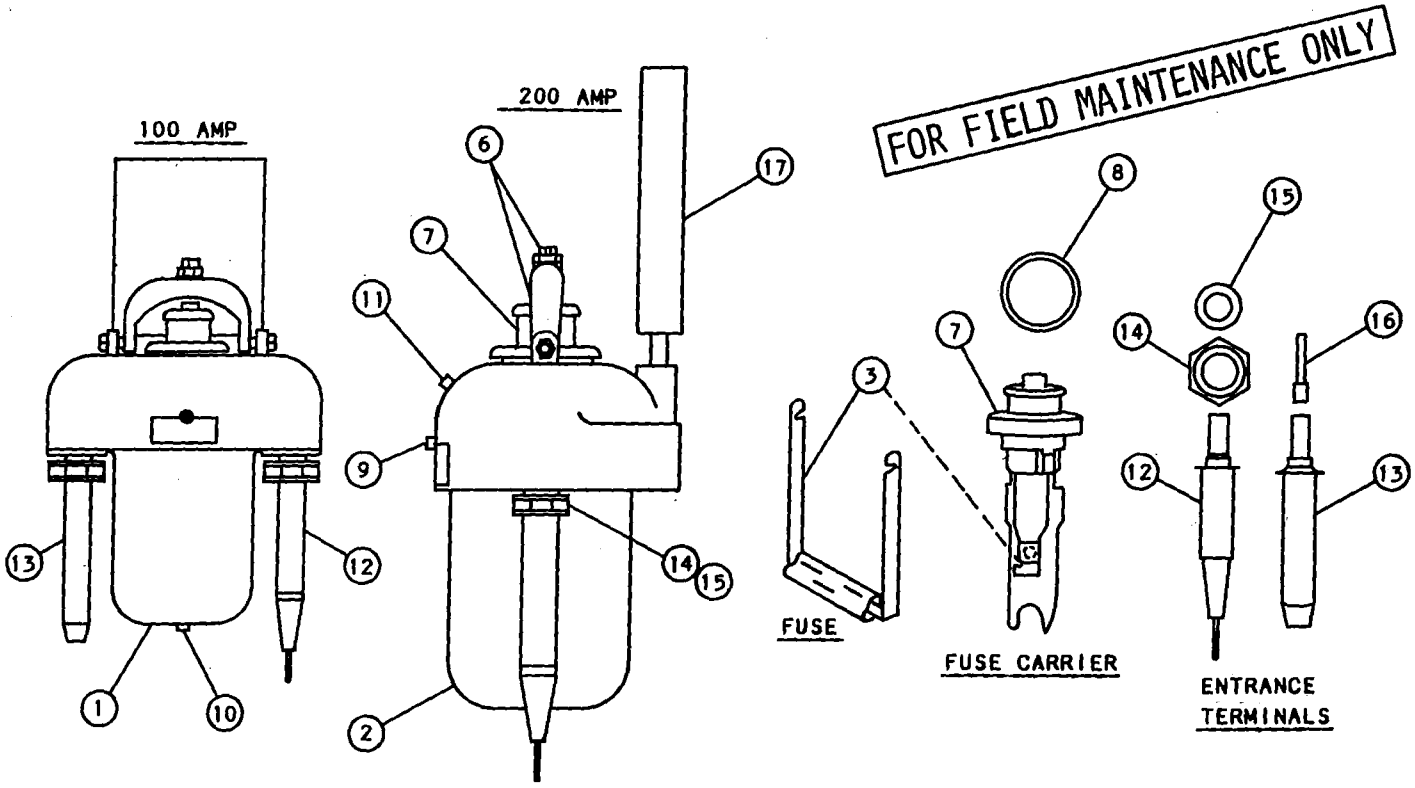

NOTES:

- CAUTION DO NOT INSERT THE FUSE CARRIER INTO THE CUTOUT IF THE FUSE IS BLOWN OR DAMAGED.
- ALWAYS OPEN OR CLOSE THE ENERGIZED CUTOUT WITH ONE COMPLETE RAPID MOTION.
- CUTOUTS COME AS A UNIT INCLUDING TWO ENTRANCE TERMINALS FOR POLYETHYLENE TYPE CABLES.

BILL OF MATERIAL/PARTS LIST:

ITEM	DESCRIPTION		QUANTITY	CONST STD OR PAGE NO	STOCK NUMBER
1	100 AMP LOAD MAKE/LOAD BREAK CUTOUT (RATED 5.2KV)		AS REQ'D	--	297824
2	200 AMP LOAD MAKE/LOAD BREAK CUTOUT (RATED 5.2KV)		AS REQ'D	--	297856
3	FUSE		1	4311.4	--
4	OIL (NOT SUPPLIED WITH CUTOUT)		AS REQ'D	--	--
5	PETROLATUM (NOT SHOWN)		AS REQ'D	--	--
6	YOKE, CLAMPING SCREW & LOCKNUT ASSEMBLY		1	--	--
7	FUSE CARRIER		1	--	--
8	FUSE CARRIER GASKET		1	--	--
9	OIL LEVEL PLUG		1	--	--
10	OIL DRAIN PLUG		1	--	--
11	OIL FILL PLUG		1	--	--
12	ENTRANCE TERMINAL FOR POLYETHYLENE TYPE CABLE	100 AMP	AS REQ'D	--	730272
		200 AMP			730304
13	WIPING SLEEVE FOR LEAD COVERED CABLE (FERRULE)		AS REQ'D	--	--

	SDG&E ELECTRIC STANDARDS	
DATE 1-1-86 APPD JLB/BSG	4KV OIL FILLED FUSE CUTOUTS (SUBMERSIBLE)	4199.107

TABLE OF CONTENTS

BILL OF MATERIAL/PARTS LIST CON'T:

ITEM	DESCRIPTION	QUANTITY
14	UNION NUT FOR ENTRANCE TERMINALS	2
15	UNION GASKET FOR ENTRANCE TERMINAL	2
16	PLUG CONTACT FOR WIPING SLEEVE TYPE TERMINALS	2
17	EXPANSION CHAMBER	1

INSTALLATION:

A. FOLLOW MANUFACTURERS INSTRUCTIONS WHEN ASSEMBLING CUTOUT.

TABLE OF CONTENTS

FOR FIELD MAINTENANCE ONLY

SCOPE: THIS STANDARD SHOWS 60 AMP SUBMERSIBLE OIL FILLED CUTOUTS. **CAUTION: AT NO TIME SHOULD THIS CUTOUT BE OPERATED ENERGIZED OR ANY SERVICE WORK BE PERFORMED WHILE IT IS ENERIZED.**

CAUTION

FOR FIELD MAINTENANCE ONLY

60 AMP OR LESS

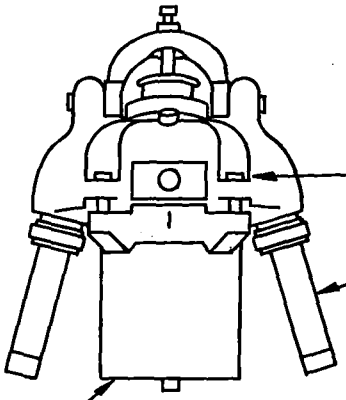

NOTES:

THESE CUTOUTS HAVE BEEN REMOVED FROM OUR SYSTEM BUT IF ONE IS LOCATED IT SHOULD BE CHANGED OUT. THEY MAY STILL BE INSTALLED ON THE CUSTOMERS SYSTEM AND SHOULD BE DEALT WITH IN THE FOLLOWING MANNER:

1. DO NOT OPERATE ENERGIZED.
2. DO NOT DO ANY SERVICE WORK TO THE CUTOUT (CHANGE THE FUSE OR REMOVE CABLES, ETC).

SEVERAL PROBLEMS THAT EXIST WITH THIS STYLE CUTOUT ARE AS FOLLOWS:

1. OIL CAN BE DISCHARGED FROM THE CUTOUT WHEN OPENING THE CUTOUT FUSE HOLDER.
2. THE INTERNAL SPRING CONTACTS MAY BE DETERIORATED AND CAN BREAK APART WHEN THE CUTOUT IS OPERATED RESULTING IN FAILURE. THE CONTACT CANNOT HANDLE OVERLOADS OR FAULT CURRENTS.
3. SOME CABLE FERRULES CAN BE PULLED APART WHEN REMOVING CABLE.

TABLE OF CONTENTS

TABLE OF CONTENTS

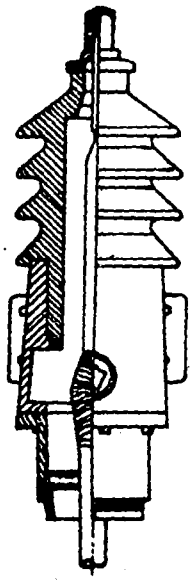

FIGURE 1

G&W TERMINALS - 8.7KV - FIGURE 1					
CABLE	CONDUCTOR	CATALOG NUMBER	COMPOUND	BRACKET	STOCK NO. OR CONSTR. STD.
U-11.3 & U-11.5 FMO	4 & 2 CU	UT-15031-R	DOW ID 254	NONE-BOLT TO CROSSARM	728096
U-11.7 FMO	4/0 CU	UT-15231-R			728192
4099.001	500KCMIL CU	UT-15531-R			728352

FOR FIELD MAINTENANCE ONLY

NOTE:

A. FOR INDOOR TERMINATIONS SEE 4121.

APP'D J.W.K DATE 10-30-74	SAN DIEGO GAS & ELECTRIC COMPANY UNDERGROUND STANDARDS OUTDOOR COPPER CABLE TERMINALS	4199.201

MAJOR USE: USED FOR INDOOR PRIMARY CABLE TERMINATIONS.

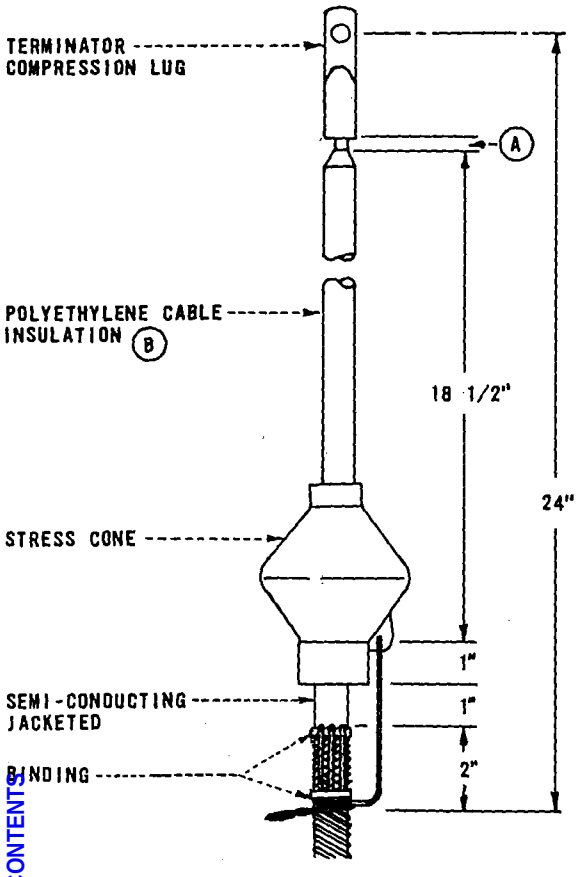

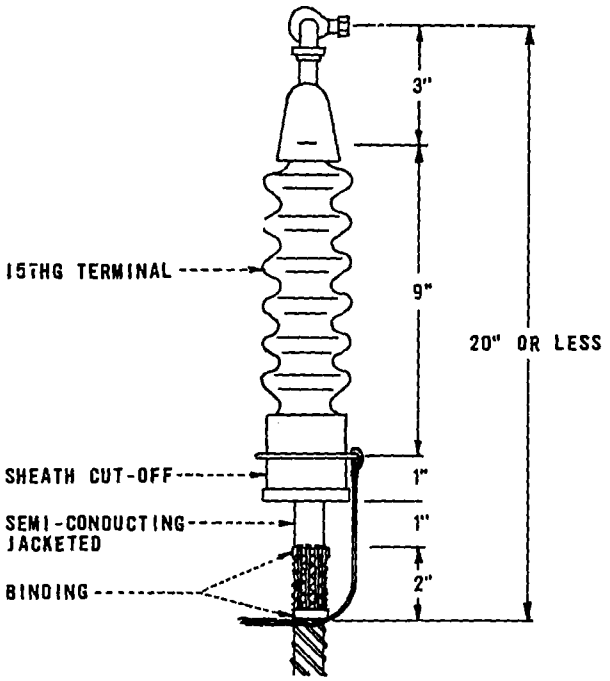

FIELD MAINTANANCE ONLY

TABLE OF CONTENTS

OTES:

(A) BEVEL TOP EDGE OF CABLE INSULATION NOT MORE THAN 1/4" BACK. FOR ALUMINUM CABLES, SEAL INSULATION TO CABLE TERMINALS WITH THREE 1/2" LAP LAYERS OF ELECTRICAL TAPE (720480). FOR COPPER CABLES LEAVE 1/2" GAP.

(B) THIS INSTALLATION WITHOUT SILICONE TAPE (720384) SHOULD NO LONGER BE INSTALLED. REFER TO PAGE 4121 FOR PROPER INSTALLATION.

	SDG&E ELECTRIC STANDARDS	
199.202	INDOOR CABLE TERMINATIONS, POLYETHYLENE CABLES	DATE 8-6-79 APPD TAF

SCOPE: THIS STANDARD SHOWS LIVE FRONT INDOOR PRIMARY CABLE TERMINATIONS.

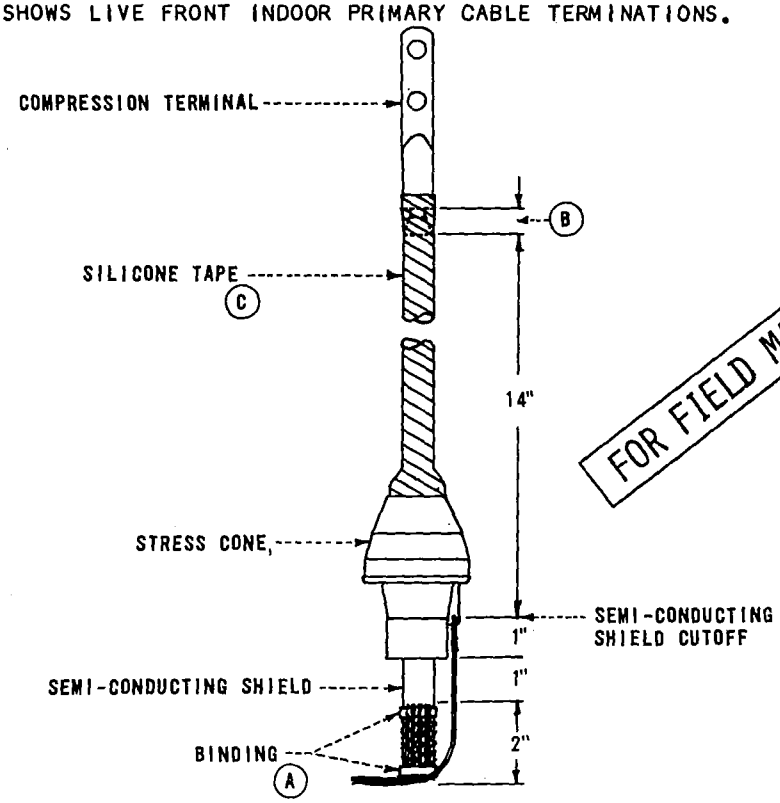

FOR FIELD MAINTENANCE ONLY

BILL OF MATERIAL:

15KV CABLE SIZE POLYETHYLENE	STRESS CONE		COMPRESSION TERMINAL
	CATALOG NUMBER	STOCK NUMBER	STOCK NUMBER
2 CU	35-MSC-FG SKC-FG	252928 (E)	259008 (E)
4 CU	35-MSC-FAG SKC-FAB	252880 (E)	259040 (E)
4/0 CU	35-MSC-HA SKC-HA	252960 (E)	729792 (E)
500 KCMIL CU	35-MSC-JAB	252896 (E)	729856 (E)

INSTALLATION:

(A) USE THREE LAYERS OF 1/2" GLASS TAPE (STOCK NUMBER 720256 (E)) WITH THREE LAYERS OF 3/4" VINYL PLASTIC TAPE (STOCK NUMBER 720580 (E)) OVER GLASS TAPE.

(B) BEVEL TOP EDGE OF CABLE INSULATION 1/4" BACK. FOR ALUMINUM CABLES, LEAVE 1/4" BARE CONDUCTOR BELOW COMPRESSION TERMINAL AND SEAL INSULATION TO CABLE TERMINALS WITH A MINIMUM OF THREE 1/2 LAP LAYERS OF HIGH VOLTAGE INSULATING TAPE (STOCK NUMBER 720480 (E)). FOR COPPER CABLES LEAVE 1/2" GAP.

(C) USE MODERATE OR SLIGHT TENSION TO APPLY SILICONE TAPE (STOCK NUMBER 720384 (E)). HALF LAP TAPE STARTING ABOUT 1/2" BELOW TOP OF STRESS CONE AND ENDING 1/4 WAY UP LUG FOR ALUMINUM CABLES OR BELOW GAP FOR COPPER CABLES. (DO NOT END TAPE INSIDE THE CRIMP OF THE COMPRESSION TERMINAL, BECAUSE IT MAY COLLECT MOISTURE).

D. FOR OUTDOOR TERMINATIONS REFER TO PAGE 4111.

(E) EXEMPT MATERIAL.

REFERENCE:

G. SEE STANDARD 4122 FOR INDOOR CABLE TERMINATIONS FOR EXISTING CABLES.

SDG&E ELECTRIC STANDARDS

DATE 1-1-87
APPD JYB/RBB

LIVE FRONT CABLE TERMINATIONS, POLYETHYLENE CABLES

4199.203

TABLE OF CONTENTS

SCOPE: THIS STANDARD SHOWS LIVE FRONT TERMINATION FOR HIGH VOLTAGE CABLE.

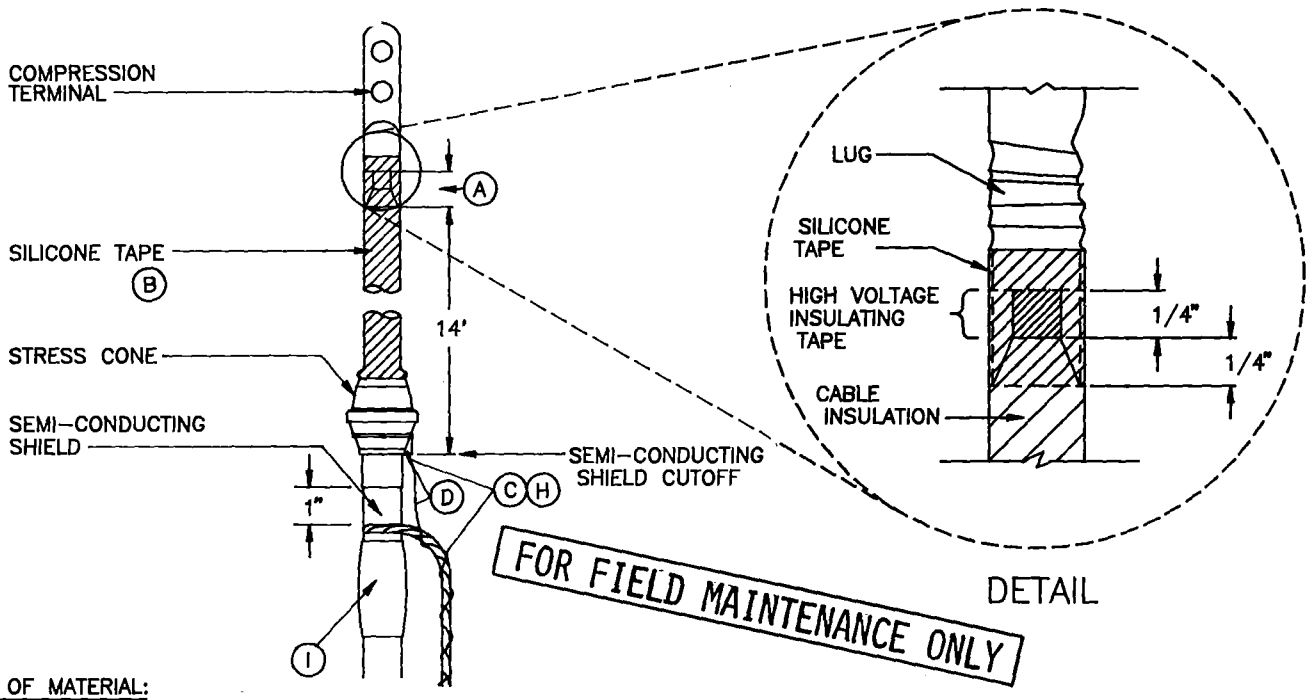

BILL OF MATERIAL:

15KV CABLE SIZE POLYETHYLENE	STRESS CONE		COMPRESSION TERMINAL
	CATALOG NUMBER	STOCK NUMBER	STOCK NUMBER
2 SOL AL	35-MSC-FAG SKC-FAB	252880 (E)	728688 (E)
2/0 AL	35-MSC-GA	252882 (E)	728696 (E)
350 KCMIL AL	35-MSC-HAB SKC-HAB	252886 (E)	728864 (E)
750 KCMIL AL	35-MSC-JB	253008 (E)	729280 (E)
1000 KCMIL AL	SEE STANDARD PAGE 4121 FOR STRESS RELIEF KIT		

TABLE OF CONTENTS

INSTALLATION:

(A) BEVEL TOP EDGE OF CABLE INSULATION BACK 1/4". LEAVE 1/4" BARE CONDUCTOR BELOW COMPRESSION TERMINAL AND SEAL THE CABLE INSULATION TO THE CABLE TERMINAL WITH A MINIMUM OF THREE HALF-LAP LAYERS OF HIGH VOLTAGE INSULATING TAPE (STOCK NUMBER 720480 (E)).

(B) USE MODERATE OR SLIGHT TENSION TO APPLY SILICONE TAPE (STOCK NUMBER 720384 (E)). HALF-LAP TAPE STARTING ABOUT 1/2" BELOW TOP OF STRESS CONE AND ENDING 1/4 WAY UP THE LUG. DO NOT END TAPE INSIDE THE CRIMP OF THE COMPRESSION TERMINAL, BECAUSE IT MAY COLLECT MOISTURE.

(C) GROUND EACH GROUNDING EYE OF THE PREMOLDED CONNECTORS. USE A PIECE OF NO. 14 SOLID COPPER WIRE OR A SURPLUS PIECE OF CONCENTRIC NEUTRAL TAIL THAT IS LONG ENOUGH TO REACH THE NEAREST COMPRESSION CONNECTOR OR TO THE BUSHING WELL TAB USED TO SECURE BAILING ASSEMBLIES. DO NOT USE ANY CONCENTRIC NEUTRAL ATTACHED TO THE CABLE STRANDS UNLESS THE CABLE IS 2/0 OR 2 SOLID TRIPLEXED.

(D) MAKE A SMALL LOOP THRU THE GROUNDING EYE AND TWIST THE WIRE TIGHTLY AROUND ITSELF TAKING CARE NOT TO DAMAGE THE EYE. WRAP THE WIRE AROUND THE CONCENTRIC NEUTRAL TAIL.

(E) EXEMPT MATERIAL.

REFERENCE:

F SEE STANDARD 4111 FOR OUTDOOR TERMINATIONS.

G. SEE STANDARD 4122 FOR INDOOR CABLE TERMINATIONS FOR EXISTING CABLES.

(H) SEE STANDARD 4525 FOR CONCENTRIC NEUTRAL TERMINATIONS AND GROUNDING PREMODELED CONNECTORS.

(I) SEE STANDARD 4108 FOR INSTRUCTIONS ON SEALING JACKETED CABLE.

J. SEE STANDARD 4199.203 FOR INDOOR CABLE TERMINATIONS ON "FIELD MAINTENANCE ONLY" CABLES.

	SDG&E ELECTRIC STANDARDS	
4199.204	LIVE FRONT CABLE TERMINATIONS, POLYETHYLENE CABLES	DATE 1-1-91 APPD JJB/KD

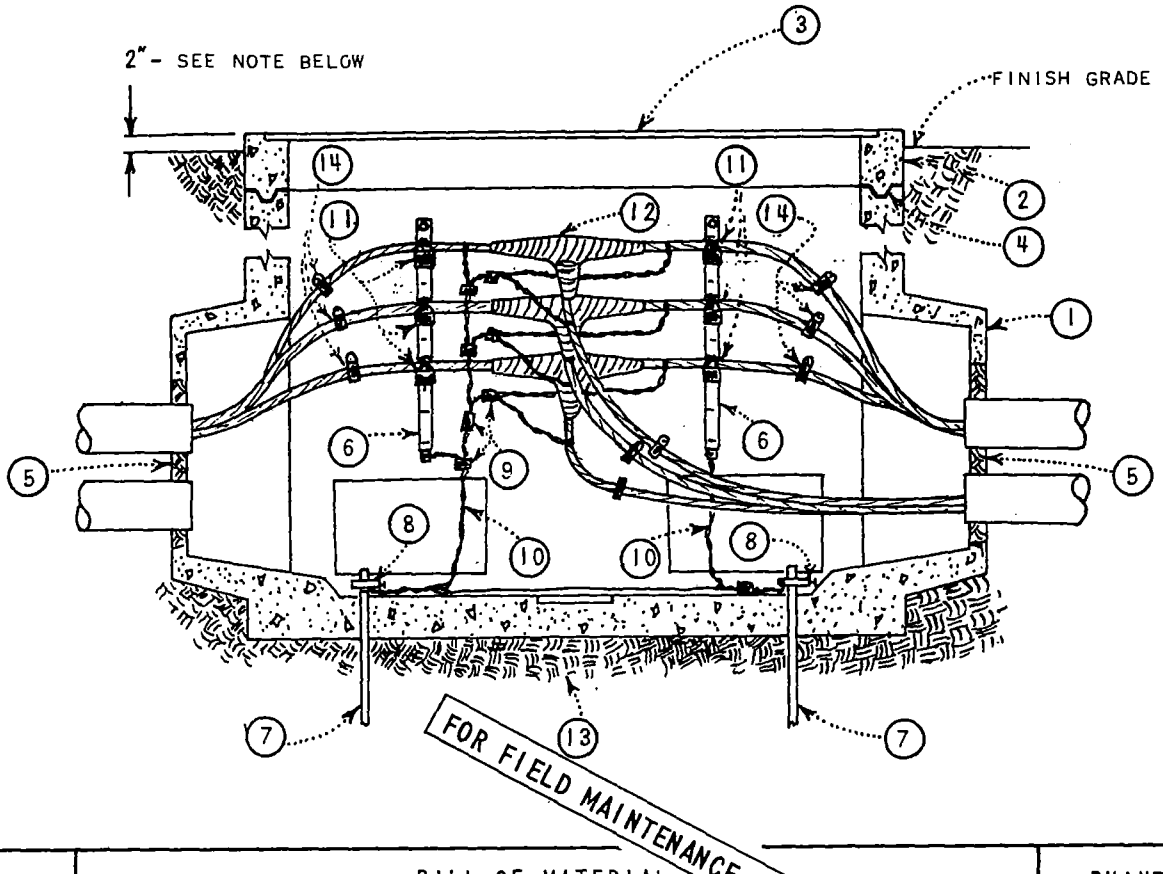

ITEM	BILL OF MATERIAL	QUANTITY
1	SPLICE BOX, AS SPECIFIED	1
2	EXTENSION (AS REQUIRED PER WORK ORDER)	AS REQ'D.
3	COVER (PARKWAY OR TRAFFIC PER WORK ORDER)	1
4	GROUT OR SEALENT PER MANUFACTURES INSTRUCTIONS	AS REQ'D.
5	GROUT	AS REQ'D.
6	CABLE RACK, 3361	AS REQ'D.
7	GROUND ROD, 5/8" X 8', COPPERWELD	2
8	GROUND ROD CLAMP	2
9	COPPER SPLIT COMPRESSION CONNECTORS	AS REQ'D.
10	#2 COPPER GROUND WIRE	AS REQ'D.
11	CABLE BINDER - GLASS TAPE	AS REQ'D.
12	SPLICE, 4142, 4143	AS REQ'D.
13	BEDDING SAND, 3" TO 6"	AS REQ'D.
14	CABLE CLAMPS	AS REQ'D.

NOTE:

1. INSTALL SPLICE BOX FLUSH WHEN IN OR ADJACENT TO SIDEWALK OR PAVED AREA.

DATE 6-1-75 APPD	SDG&E ELECTRIC STANDARDS PRECAST SPLICE BOX INSTALLATION	4199.401

TABLE OF CONTENTS

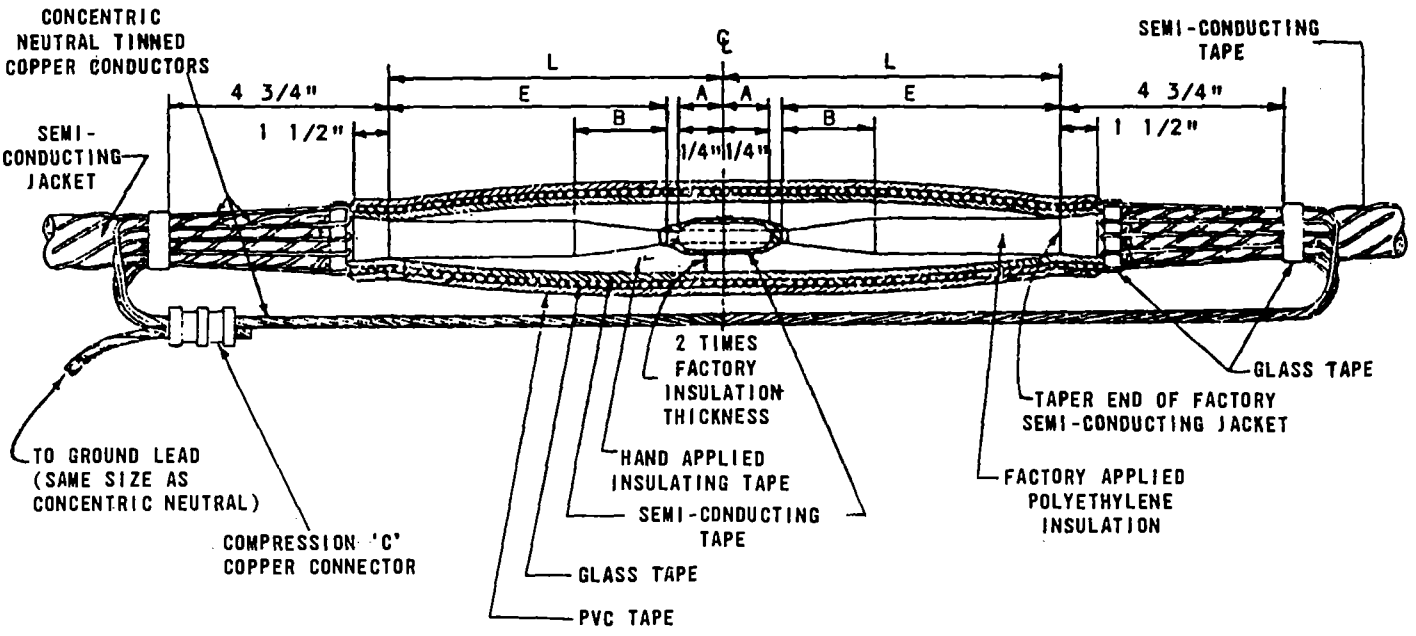

TABLE 1

CABLE RATING KV	DIMENSIONS INCHES		
	L	B	E
5	4 1/2+A	1	4
15	6 1/2+A	2	6

FOR FIELD MAINTENANCE ONLY

NOTES:

1. TRAIN THE CABLES INTO POSITION. MARK THE POINT AT WHICH EACH CABLE IS TO BE CUT.
2. APPLY SEVERAL LAYERS OF FRICTION TAPE AT A DISTANCE L + 4 3/4 INCHES FROM THE PREVIOUS MARK. UNWIND THE CONCENTRIC CONDUCTORS. FOLD AND LAY THESE CONDUCTORS BACK OUT OF THE WAY. CUT THE CABLES AT THE MARK (THE CONCENTRIC CONDUCTORS SHOULD BE LONGER THAN THE INSULATED CONDUCTOR TO ALLOW FOR FOLDING BACK OF CONCENTRIC CONDUCTORS AT EACH END OF SPLICE. SEE TABLE 1. IF THIS IS NOT POSSIBLE, THE TWISTED NEUTRAL CONDUCTOR MAY BE "SPLICED OUT").
3. USING THE SEMI-CONDUCTOR SCORING TOOL MAKE A CIRCUMFERENTIAL SCORE AROUND THE SEMI-CONDUCTING JACKET AT A DISTANCE "L" FROM THE END OF THE CABLE. USING THE SCORING TOOL MAKE SEVERAL LONGITUDINAL SCORES FROM THE CIRCUMFERENTIAL SCORE TO THE END OF THE CABLE. USE CARE TO ENSURE THAT THE PROPER BLADE IS IN THE SCORING TOOL. THE SCORES MUST NOT COMPLETELY PENETRATE THE SEMI-CONDUCTING JACKET. REMOVE THE SEMI-CONDUCTING JACKET BY TEARING THE STRIPS ALONG THE LONGITUDINAL SCORES.
4. REMOVE THE INSULATION AND CONDUCTOR STRAND SHIELDING FOR A DISTANCE OF A + 1/4".
5. TAPER THE INSULATION WITH A TAPERING TOOL TO DIMENSION "B". BUFF THE TAPER.
6. JOIN THE CONDUCTOR WITH A COMPRESSION TYPE CONNECTOR. USE CIRCULAR CRIMP DIES AS SHOWN IN TABLE 2. ALL IRREGULARITIES AND ROUGHNESS MUST BE REMOVED FROM THE CONNECTOR BY USE OF A FILE.
7. CLEAN THE EXPOSED SURFACE OF THE INSULATION USING A CLEAN RAG MOISTENED WITH SOLVENT. USE CARE NOT TO WIPE FROM THE SEMI-CONDUCTING JACKET BACKOVER THE INSULATION AS THIS WILL CARRY CONTAMINANTS ONTO THE SURFACE OF THE INSULATION.
8. WRAP A 1/2 LAP LAYER OF SEMI-CONDUCTING TAPE OVER THE CONNECTOR AND EXPOSED CONDUCTOR, OVERLAPPING THE FACTORY STRAND SHIELDING BUT NOT THE FACTORY INSULATION. THE SEMI-CONDUCTING TAPE SHOULD BE APPLIED SMOOTHLY BY STRETCHING TO BE IN INTIMATE CONTACT WITH THE FACTORY STRAND SHIELDING, THE CONDUCTOR, AND THE COMPRESSION CONNECTOR.

TABLE OF CONTENTS

4199.402	SDG&E ELECTRIC STANDARDS SPLICES FOR 5KV AND 15KV 1/C POLYETHYLENE INSULATED CONCENTRIC TYPE CABLE STRAIGHT SPLICE (TYPE Pe-CN)	DATE 5-5-78 APPD TAF

9. TAPE OVER THE JOINT AND ALL THE EXPOSED INSULATION WITH HIGH VOLTAGE INSULATING TAPE, BEING CAREFUL NOT TO COVER THE FACTORY SEMI-CONDUCTING LAYER AT EACH END. WRAP THE INSULATING TAPE 1/2 LAP IN SUCCESSIVE LAYERS UNTIL THE THICKNESS OVER THE CONNECTOR IS EQUAL TO 2 TIMES THE THICKNESS OF THE FACTORY INSULATION. IN WRAPPING THE TAPE, STRETCH IT UNTIL ITS WIDTH IS APPROXIMATELY 3/4 OF ITS ORIGINAL WIDTH. EVEN TENSION SHOULD BE USED SO THAT EACH LAYER IS OF UNIFORM THICKNESS AND DENSITY. KEEP THE TAPE FREE OF DIRT AND MOISTURE.

10. WRAP A 1/2 LAP LAYER OF SEMI-CONDUCTING TAPE OVER THE INSULATED JOINT OVERLAPPING THE FACTORY SEMI-CONDUCTING LAYER 1 1/2 INCHES AT EACH END OF THE SPLICE. THE SEMI-CONDUCTING TAPE SHOULD BE APPLIED SMOOTHLY BY STRETCHING TO BE IN INTIMATE CONTACT WITH THE INSULATION.

11. APPLY A HALF-LAPPED LAYER OF GLASS TAPE OVER THE SEMI-CONDUCTING TAPE AS SHOWN.

12. STARTING NEXT TO THE TURNED BACK CONCENTRIC CONDUCTORS, OVERWRAP THE ENTIRE SPLICE WITH TWO HALF LAPPED LAYERS OF PVC TAPE.

13. REPLACE THE CONCENTRIC CONDUCTORS AND USING GLASS TAPE AS SHOWN, FOLD BACK THE CONCENTRIC CONDUCTORS OVER BINDING AND LAY THEM AGAINST THE CABLE. APPLY A SECOND BINDING OF GLASS TAPE OVER THE LAYED BACK CONCENTRIC CONDUCTORS APPROXIMATELY 4 INCHES FROM THE PREVIOUSLY APPLIED BINDING. TWIST THE REMAINING LENGTH OF CONCENTRIC CONDUCTORS TOGETHER TO FORM A STRANDED CONDUCTOR.

14. CONNECT TWISTED CONDUCTORS TOGETHER USING A COMPRESSION CONNECTOR.

TABLE 2

CONDUCTOR SIZE	DIE	NUMBER OF COMPRESSIONS	STOCK NO. OR CONSTR. STD.
4	U161	1	—
	U242	2	
2	U182	1	649800
4/0	U243	2	649840
500KCMIL	U251	3	649848

FOR FIELD MAINTENANCE ONLY

DESCRIPTION	UNIT	STOCK NO. OR CONSTR. STD.
HIGH VOLTAGE INSULATING	30 FT. ROLL	720480 (E)
SEMI-CONDUCTING TAPE	15 FT. ROLL	720352 (E)
PVC TAPE	66 FT. ROLL	720580
SOLVENT	1 GAL. CAN	662484
GLASS TAPE	80 FT. ROLL	720224 (E)

NOTE:

(E) EXEMPT MATERIAL

DATE 5-5-78 APPD TAF	SAN DIEGO GAS & ELECTRIC COMPANY UNDERGROUND STANDARDS SPLICES FOR 5KV AND 15KV 1/C POLYETHYLENE INSULATED CONCENTRIC TYPE CABLE STRAIGHT SPLICE (TYPE Pe-CN)	4199.403

TABLE OF CONTENTS

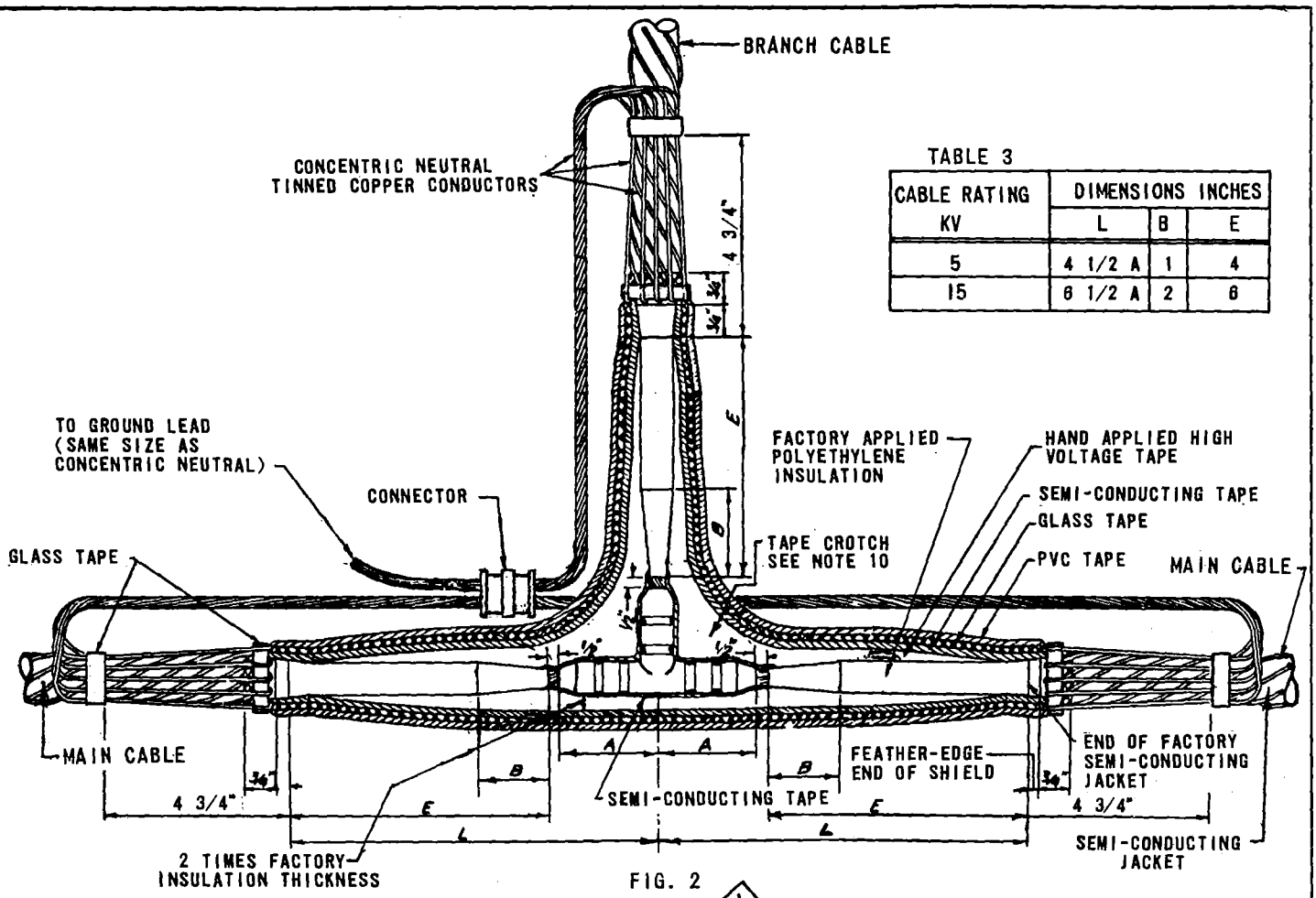

FIG. 2

TABLE 3

CABLE RATING KV	DIMENSIONS INCHES L	B	E
5	4 1/2 A	1	4
15	6 1/2 A	2	6

NOTE: THIS SPLICE SHALL NOT BE USED FOR NEW INSTALLATIONS. THE MOLDED 'T' SPLICE SHALL BE USED WHERE THIS TYPE OF INSTALLATION IS REQUIRED AS FOLLOWS:

1. FOR #2 OR #4 CABLE USE UG STANDARD PAGE 4151, INSTALL 1 - 'T' CONNECTOR, 1- STRAIGHT PLUG AND 2-STRAIGHT RECEPTACLES.
2. FOR CABLES 4/0 AND LARGER USE UG STANDARD PAGE 4182, INSTALL 3 - ELBOW- T'S 1- INSULATED PLUG W/TEST POINT AND 1- INSULATED PLUG W/TEST POINT AND STUD.

FOR FIELD MAINTENANCE ONLY

NOTES:

1. TRAIN THE MAIN CABLES AND THE BRANCH CABLE INTO POSITION. MARK THE POINT AT WHICH EACH CABLE IS TO BE CUT.
2. MARK THE MAIN CABLES 'L' 4 3/4 INCHES AND FOR THE BRANCH CABLE AT A DISTANCE 'L' 4 3/4 INCHES FROM THE PREVIOUS. UNWIND THE CONCENTRIC CONDUCTORS OF EACH CABLE. FOLD AND LAY THESE CONDUCTORS BACK OUT OF THE WAY. CUT EACH CABLE AT ITS MARK. (THE CONCENTRIC CONDUCTORS SHOULD BE LONGER THAN THE INSULATED CONDUCTOR TO ALLOW FOR FOLDING BACK OF CONCENTRIC CONDUCTORS AS SHOWN IN FIG.2. IF THIS IS NOT POSSIBLE, THE TWISTED NEUTRAL CONDUCTOR MAY BE 'SPLICED OUT')
3. USING THE SEMI-CONDUCTOR SCORING TOOL MAKE A CIRCUMFERENTIAL SCORE AROUND THE SEMI-CONDUCTING JACKET AT A DISTANCE 'L FROM THE END OF EACH MAIN CABLE AND THE BRANCH CABLE. USING THE SCORING TOOL MAKE SEVERAL LONGITUDINAL SCORES FROM THE CIRCUMFERENTIAL SCORE TO THE END OF EACH CABLE. USE CARE TO ENSURE THAT THE PROPER BLADE IS IN THE SCORING TOOL. THE SCORES MUST NOT COMPLETELY PENETRATE THE SEMI-CONDUCTING JACKET. REMOVE THE SEMI-CONDUCTING JACKET BY TEARING THE STRIPS ALONG THE LONGITUDINAL SCORES.
4. REMOVE THE INSULATION AND CONDUCTOR STRAND SHIELDING OF THE MAIN CABLES FOR A DISTANCE OF A + 1/2 AND OF THE BRANCH CABLE FOR A DISTANCE OF A + 1/2 AS SHOWN.
5. TAPER THE INSULATION OF EACH CABLE WITH A TAPERING TOOL TO DIMENSION 'B'. BUFF THE TAPER.
6. JOIN THE CONDUCTORS WITH A 'HYTEE' COUPLER. USE REDUCING TEE WHEN REQUIRED. USE CIRCULAR SRIMP DIES AS SHOWN IN TABLE 2. ALL IRREGULARITIES AND ROUGHNESS MUST BE REMOVED FROM THE CONNECTOR BY USE OF A FILE.
7. CLEAN THE SURFACE OF THE EXPOSED SURFACE OF THE INSULATION USING A CLEAN RAG MOISTENED WITH SOLVENT. USE CARE NOT TO WIPE FROM THE SEMI-CONDUCTING JACKET BACKOVER THE INSULATION AS THIS WILL CARRY CONTAMINANTS ONTO THE SURFACE OF THE INSULATION.
8. APPLY ONE LAYER HALF LAPPED SEMI-CONDUCTING TAPE OVER THE CONNECTOR AND EXPOSED CONDUCTOR OVERLAPPING FACTORY APPLIED SEMI-CONDUCTING STRAND SHIELDING BUT NOT OVER THE FACTORY INSULATION. THE SEMI-CONDUCTING TAPE SHOULD BE APPLIED SMOOTHLY BY STRETCHING TO BE IN INTIMATE CONTACT WITH THE FACTORY STRAND SHIELDING, THE CONDUCTOR AND THE COMPRESSION CONNECTOR.

204

	SOG&E ELECTRIC STANDARDS	
4199.404	SPLICES FOR 5KV AND 15KV 1/C POLYETHYLENE INSULATED CONCENTRIC TYPE CABLE 'T' SPLICE, (TYPE Pe-CN)	DATE 5-5-78 APPD TAF

TABLE OF CONTENTS

9. BUILD UP INSULATION WITH HIGH VOLTAGE INSULATING TAPE TO 2 TIMES THE THICKNESS OF THE FACTORY INSULATION OVER THE CONNECTOR. TAPERING OFF AS SHOWN. USE A MIRROR TO VIEW UNDERSIDE OF SPLICE TO INSURE VOID FREE TAPING. IN WRAPPING THE TAPE, STREYCH IT IN ACCORDANCE WITH MANUFACTURERS RECOMMENDATIONS EVEN TENSION SHOULD BE USED SO THAT EACH LAYER IS OF UNIFORM THICKNESS AND DENSITY. KEEP THE TAPE FREE OF DIRT AND MOISTURE. USE EXTRA CARE IN TAPING CROTCHES.

10. APPLY 1/2 LAPPED LAYER OF SEMI-CONDUCTING TAPE OVER THE INSULATED JOINT, OVERLAPPING THE SEMI-CONDUCTING FACTORY LAYER 1 1/2 INCHES AT EACH END OF THE SPLICE AS SHOWN.THE SEMI-CONDUCTING TAPE SHOULD BE APPLIED SMOOTHLY BY STRETCHING TO BE IN INTIMATE CONTACT WITH THE INSULATION. USE MIRROR TO VIEW UNDERSIDE OF SPLICE.

11. APPLY A HALF-LAPPED LAYER OF GLASS TAPE OVER THE SEMI-CONDUCTING TAPE AS SHOWN.

12. STARTING NEXT TO THE TURNED BACK CONCENTRIC CONDUCTORS, OVERWRAP THE ENTIRE SPLICE WITH TWO HALF LAPPED LAYER OF PVC TAPE AS SHOWN.

13. REPLACE THE CONCENTRIC CONDUCTORS OF EACH CABLE AND USING GLASS TAPE, BIND DOWN AS SHOWN. FOLD BACK THE CONCENTRIC CONDUCTORS OF EACH CABLE OVER GLASS TAPE BINDING AND LAY THEM AGAINST THE CABLE. APPLY A SECOND BINDING OF GLASS TAPE OVER THE LAYER BACK CONCENTRIC CONDUCTORS APPROXIMATLEY 4 INCHES FROM THE PREVIOUSLY APPLIED BINDING. TWIST THE REMAINING LENGTH OF CONCENTRIC CONDUCTORS TOGETHER OF EACH CABLE SEPARATELY TO FORM THREE SEPARATE STRANDED NEUTRAL CONDUCTORS.

14. INSERT THE TWISTED CONCENTRIC CONDUCTORS INTO A COPPER CONNECTOR AND SQUEEZE TOGETHER TO MAKE A TIGHT FIT.

TABLE 2

COPPER CONDUCTOR SIZE	DIE	NUMBER OF COMPRESSIONS	STOCK NO. OR CONSTR. STD.
4	U161	1	-
	U242	2	
2	U162	1	649800
4/0	U243	2	649840
500 KCMIL	U251	3	649848

FOR FIELD MAINTENANCE ONLY

DESCRIPTION	UNIT	STOCK NO. OR CONSTR. STD.
HIGH VOLTAGE INSULATING	30 FT. ROLL	720480 (E)
SEMI-CONDUCTING TAPE	15 FT. ROLL	720352 (E)
PVC TAPE	66 FT. ROLL	720580
SOLVENT	1 GAL. CAN	662464
GLASS TAPE	60 FT. ROLL	720224 (E)

NOTE:

(E) EXEMPT MATERIAL

TABLE OF CONTENTS

DATE 5-5-78 APPD TAF	SDG&E ELECTRIC STANDARDS SPLICES FOR 5KV AND 15KV I/C POLYETHYLENE INSULATED CONCENTRIC TYPE CABLE 'T' SPLICE, (TYPE Pe-CN)	4199.405

SCOPE: THIS STANDARD SHOWS A 1Ø TRANSITION SPLICE FROM 15KV, 500 KCMIL CU LEAD CABLE TO 15KV, 750 KCMIL POLYETHYLENE CABLE.

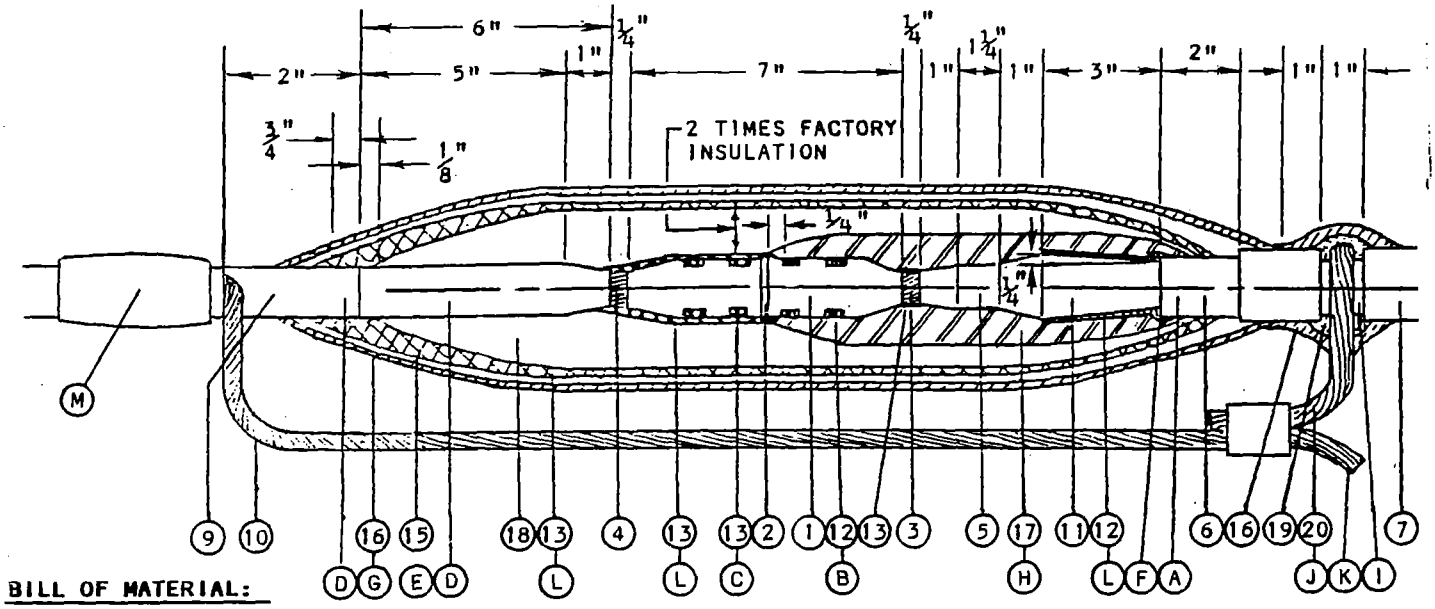

BILL OF MATERIAL:

ITEM	DESCRIPTION	CONST STD	STOCK NO.
1	CONNECTOR, 500 CU TO 750 AL		652320
2	OIL DAM (PART OF CONNECTOR)	--	--
3	500 KCMIL CU. CONDUCTOR	--	195120
4	750 KCMIL AL CONDUCTOR	4002	197776
5	FACTORY PAPER INSULATION	--	--
6	LEAD SHEATH	--	--
7	NEOPRENE JACKET		--
8	FACTORY XLPE INSULATION		--
9	SEMI-CON PE JACKET	--	--
10	CONCENTRIC NEUTRAL	--	
11	VARNISHED CAMBRIC TAPE, 3/4"	--	721024 (E)
12	CU. BRAID	--	168864 (E)
13	SEMI-CON TAPE, 3/4"	--	720352 (E)
15	GLASS TAPE, 1/2"	--	720256 (E)
16	VINYL PLASTIC TAPE, 3/4"	--	720580 (E)
17	TAPE, SILICONE	--	720384 (E)
18	H.V. INSULATING TAPE	--	720480 (E)
19	AQUA SEAL OR EQUIVALENT	--	631872
20	#4 STR. CU. GROUND WIRE	--	808256

FOR FIELD MAINTENANCE ONLY

INSTALLATION	
(A)	ROUGH UP LEAD FOR OIL STOP
(B)	FILL CRIMPS WITH BRAID
(C)	FILL CRIMPS WITH SEMI-CON TAPE
(D)	ROUGH SURFACE W/ALUMINUM OXIDE CLOTH
(E)	EXEMPT MATERIAL
(F)	BEFORE SOLDERING BRAID PEEN DOWN LEAD TO EXCLUDE AIR
(G)	TWO HALF-LAPPED LAYERS
(H)	SIX HALF-LAPPED LAYERS OF SILICONE TAPE
(I)	RING NEOPRENE JACKET TO EXPOSE LEAD SHEATH
(J)	SPOT SOLDER #4 STR. CU. GRD. WIRE TO LEAD SHEATH
(K)	CONNECT TO GROUND
(L)	ONE HALF-LAPPED LAYER
(M)	SEE STANDARD 4108 FOR SEALING JACKETED CABLE

INSTALLATION:

(E) EXEMPT MATERIAL.

REFERENCE:

(A) SEE STANDARD **4525** FOR CONCENTRIC NEUTRAL TERMINATIONS AND GROUNDING PREMOLDED CONNECTORS.

TABLE OF CONTENTS

	SDG&E ELECTRIC STANDARDS	
4199.406	SPLICE FOR 15KV 500 KCMIL CU PILC-NJ TO 15KV 750 KCMIL AL XLPE	DATE 1-1-90 APPD

MAJOR USE: TO CONNECT CONDUCTORS FOR NON-DISCONNECTABLE SPLICES ON 5, 15, AND 69KV CABLES.

EXOTHERMIC CONNECTION – INSTRUCTIONS

FOR FIELD MAINTENANCE ONLY

PREPARATION OF CONDUCTORS

ALUMINUM TO ALUMINUM

1. PREPARE END OF CONDUCTOR IN NORMAL FASHION. SEE TABLE BELOW FOR STRIPPING INSTRUCTIONS.

CONDUCTOR	4/0 TO 350 KCMIL	500 TO 1000 KCMIL
MIN STRIP LENGTH	2-1/2"	3"

2. END OF CABLE TO BE WELDED MUST BE WASHED WITH SOLVENT TO REMOVE ALL OIL, GREASE AND DRAWING COMPOUNDS. ALLOW TO DRAIN AND DRY WITH CABLE TIPPED DOWNWARD.
3. ALLOW 1/8" TAPPER (TOP TO BOTTOM) ON CONDUCTOR ENDS. BRUSH END AND OUTER STRANDS OF CABLE WITH CABLE CLEANING WIRE BRUSH TO REMOVE ALL OXIDES.
4. PEEL BACK REQUIRED DISTANCE ON INSTALLATION. TAP CONDUCTOR ENDS TO REMOVE ALL FILINGS.
5. APPLY NON-ADHESIVE OR COTTON BINDING TAPE (STOCK NUMBER 721504) OVER CONDUCTOR LEAVING "X" EXPOSED BEFORE FLUXING CONDUCTOR.

SIZE	"X"
4/0	1-1/8"
500	1-1/8"
750	1-1/4"
1000	1-3/8"

6. APPLY AIR DRY FLUX, FROM AEROSOL CAN, TO CABLE END AND 1/2" TO 3/4" BACK ALONG SIDES OF CABLE. APPLY EVENLY AS A MIST AND ALLOW TO DRY TO AN EVEN WHITE COATING.

NOTES:

- ALUMINUM AIR DRY FLUX IS A MECHANICAL SUSPENSION OF FLUX IN A QUICK EVAPORATING LIQUID VEHICLE. IT MUST BE SPRAYED ON AS A MIST, NOT A SOLID STREAM. A SOLID STREAM WILL GIVE TOO HEAVY A COATING AND LUMPS. BRUSH OR WASH OFF EXCESS IF NECESSARY.
- SHAKE FLUX BOTTOM VIGOROUSLY TO PLACE FLUX IN MECHANICAL SUSPENSION, TURN BOTTOM OVER TO BE SURE ALL FLUX IS OFF THE BOTTOM. IT IS ALSO NECESSARY TO FREQUENTLY SHAKE FLUX BOTTLE WHILE SPRAYING TO MAINTAIN CORRECT MECHANICAL MIXTURE OF FLUX AND LIQUID VEHICLE.

COPPER TO ALUMINUM TRANSITION

1. COPPER MUST BE TINNED BACK ABOUT 4" FROM END TO BE WELDED. ALLOW 1/8" TAPER ON CONDUCTOR ENDS.
2. TINNING MUST BE DONE WITH 100% PURE TIN. DO NOT USE SOLDER (TIN AND LEAD) AS LEAD WILL CONTAMINATE WELDS. USE A NON-CORROSIVE COPPER SOLDERING FLUX. ANY GREASY FILM REMAINING MUST BE REMOVED WITH SOLVENT.
3. DO NOT FLUX TINNED COPPER CONDUCTOR PRIOR TO WELDING.
4. FOLLOW INSTRUCTIONS FOR ALUMINUM CABLE (ABOVE) AND WELDING PROCEDURE (BELOW).

COPPER TO COPPER

1. CUT INSULATION BACK 1/2 MOLD WIDTH ± 1/2" FROM EACH END. COPPER MUST BE CLEAN AND DRY TO INSURE A COMPLETE WELD. ALLOW 1/8" TAPER ON CONDUCTOR ENDS.
2. CABLE ENDS SHOULD BE STRAIGHTENED PRIOR TO INSERTION INTO MOLD. THIS RELIEVES ANY TENSION IN MOLD.
3. USING FILE CARD, CLEAN, BRIGHTEN AND ROUGH UP CONDUCTORS.

WELDING PROCEDURE

1. CLEAN MOLD (SEE STEP 9 BELOW).
2. WET OR DAMP MOLDS WILL PRODUCE POROUS WELDS. CAUTION: MOLD MUST BE HEATED AND DRIED OUT WITH TORCH BEFORE MAKING THE FIRST WELD WITH IT AFTER MOLD HAS BEEN SITTING AROUND AT AMBIENT TEMPERATURE.
3. INSERT THE PREPARED CABLE (FLUXED OR TINNED) CONDUCTORS INTO MOLD.
4. LOCK MOLD WITH E-Z CHANGE HANDLE CLAMP.
5. INSERT CERAMIC INSERTS AND METAL DISK, MAKING SURE IT IS PROPERLY SEATED AND COMPLETELY COVERS TAP HOLE.

NOTE:

- WHEN CABLE ENTRANCE HOLE IN MOLD BECOMES WORN, DISCARD MOLD TO PREVENT LEAKAGE OF WELD MATERIAL.

TABLE OF CONTENTS

	SDG&E ELECTRIC STANDARDS	
DATE 1-1-86 APPD JLB/RS	CONDUCTOR CONNECTIONS, EXOTHERMIC TYPE (CADWELD)	4199.407

6. OPEN FOIL CARTRIDGE BAG AND REMOVE INNER POLYETHYLENE BAG CONTAINING WELDING POWDER. KNEAD BAG TO BREAK UP ANY LUMPS. FLUFF POWDER BY HOLDING AT TOP AND SHAKING UP AND DOWN. (NOTE: SMALL SIZE CARTRIDGES ARE PACKED TWO OR MORE IN FOIL BAG AS NOTED ON OUTER LABEL).

7. DUMP WELDING POWDER INTO CRUCIBLE, BEING CAREFUL NOT TO UPSET THE METAL DISK. DO NOT TAMP OR COMPRESS WELDING POWDER IN CRUCIBLE. OPEN STARTING POWDER CARTRIDGE AND SPREAD EVENLY OVER WELDING POWDER. PLACE A SMALL AMOUNT OF STARTING POWDER ON TOP OF THE CRUCIBLE SECTION OF MOLD, UNDER THE COVERED OPENING FOR EASY IGNITION.

8. CLOSE COVER AND IGNITE WITH FLINT GUN. JERK GUN AWAY QUICKLY TO PREVENT FOULING. IF GUN BECOMES FOWLED, SOAK IN HOUSEHOLD AMMONIA.

9. ALLOW MINIMUM OF TWO MINUTES FOR WELD METAL TO SOLIDIFY BEFORE OPENING MOLD.

10. REMOVE ALL SLAG FROM MOLD AFTER MAKING EACH WELD. CLEAN MOLD AND COVER BEFORE EACH WELD. CLEAN WITH CLOTH. DO NOT USE WIRE BRUSH.

NOTES:

A. PROPER CARTRIDGE SIZE IS MARKED ON MOLD TAG AND SHOWN IN CATALOG PROVIDED.

B. PROPER CARTRIDGE MUST BE USED. DO NOT SUBSTITUTE.

WELD CLEAN-UP

1. CUT OFF WELD RISER WITH HACK SAW CLOSE TO WELD BODY OF CONNECTION.

2. USING A FILE, SMOOTH AND REMOVE ALL FLASHING FROM TOP TO BOTTOM OF CONNECTION.

3. REMOVE ANY OTHER SHARP CORNERS, EDGES, ETC.

4. CONNECTION MUST BE SMOOTHED, IF REQUIRED, USING ALUMINUM OXIDE METAL CLOTH STRIPS.

5. MINOR VOIDS SHALL BE FILLED FLUSH WITH WELD SURFACE WITH SEMI-CONDUCTING TAPE.
CAUTION: DO NOT FILE CABLE STRANDS.

6. WIPE CONNECTION CLEAN. INSURE THAT ALL FILINGS AND FLUX ARE REMOVED FROM CONDUCTOR STRANDS.

TABLE OF CONTENTS

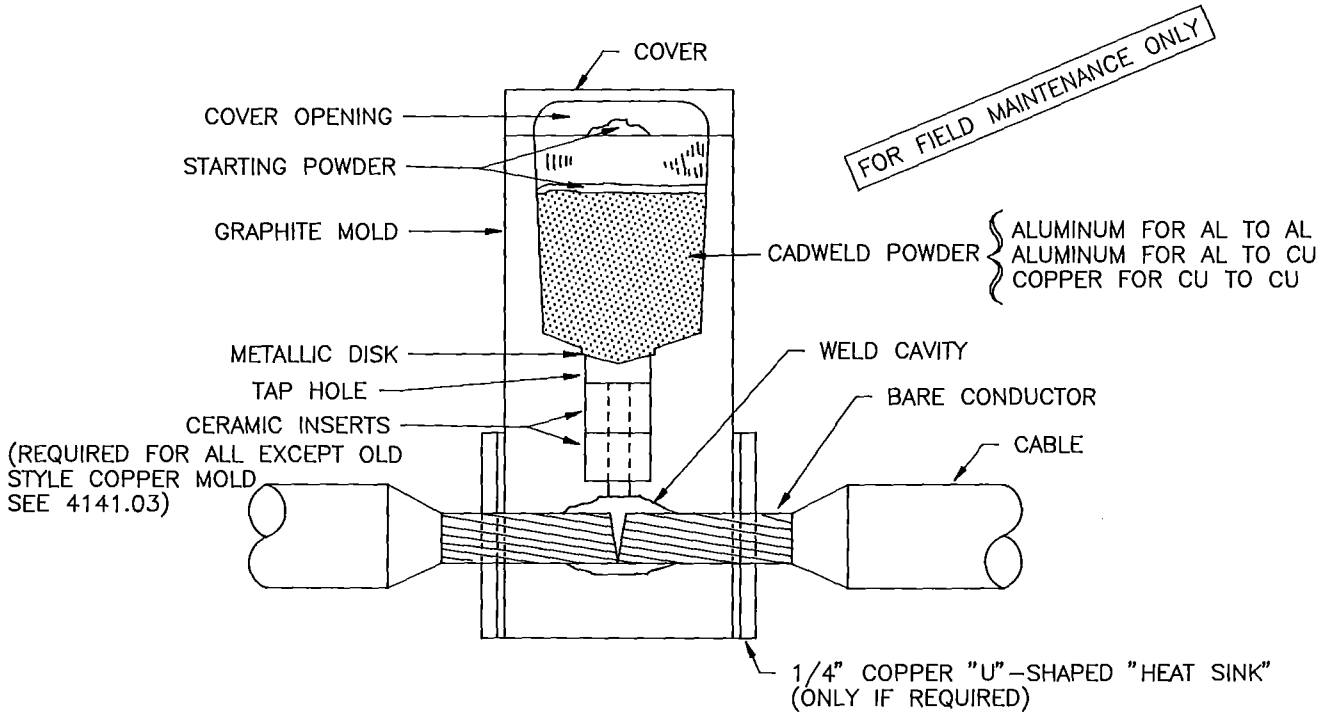

	SDG&E ELECTRIC STANDARDS	
4199.408	CONDUCTOR CONNECTIONS, EXOTHERMIC TYPE (CADWELD)	DATE 1-1-94 APPD JYB/RDS

TABLE OF CONTENTS

COMPONENT PARTS FOR EXOTHERMIC SPLICING (CADWELD)

MOLDS			
CABLE SIZE	CATALOG NUMBER		STOCK NUMBER
	OLD	NEW	
4/0 CU	WC-3093-2Q	S3R-2QC	484560
500 CU	WC-3093-3Q	S3R-3QC	484568
750 AL	WD-1556-4L	S1F-4LC	484512
1000 AL	WD-1556-4Y	S1F-4YC	484482

MOLD HANDLE CLAMP		
CABLE SIZE	CATALOG NUMBER	STOCK NUMBER
4/0 CU	L-160	227888
500 CU	L-160	227888
750 AL	L-159	227880
1000 AL	L-159	227880

CARTRIDGES			
CABLE SIZE	CATALOG NUMBER		STOCK NUMBER
	OLD	NEW	
4/0 CU	CADWELD 90 CU	#96-2C	209228
500 CU	CADWELD 200 CU	#206-2C	209224
750 AL	CADWELD 300 XAL	#201-2D	209220 INCLUDES NO. 426208
1000 AL	CADWELD 480 XAL	#301-2D	209226 INCLUDES NO. 426208

FOR FIELD MAINTENANCE ONLY

CERAMIC INSERTS		
CABLE SIZE	CATALOG NO.	STOCK NUMBER
750 AL	20-S-3671	426208
1000 AL	20-S-3671	426208

ALUMINUM CABLE PREPARATION MATERIAL	
CATALOG NUMBER	STOCK NUMBER
FLUX CADWELD T327B	359264
SOLVENT CADWELD ERICO 27 S-3506-Q	662368

	SDG&E ELECTRIC STANDARDS	
DATE 1-1-96 APPD	CONDUCTOR CONNECTIONS, EXOTHERMIC TYPE (CADWELD)	4199.409

COMPONENT PARTS FOR EXOTHERMIC SPLICING (CADWELD)

MOLDS			
CABLE SIZE	CATALOG NUMBER		STOCK NUMBER
	OLD	NEW	
4/0 CU	WC-3093-2Q	S3R-2QC	484560
500 CU	WC-3093-3Q	S3R-3QC	484568
750 AL	WD-1556-4L	S1F-4LC	484512
1000 AL	WD-1556-4Y	S1F-4YC	484482

MOLD HANDLE CLAMP		
CABLE SIZE	CATALOG NUMBER	STOCK NUMBER
4/0 CU	L-160	227888
500 CU	L-160	227888
750 AL	L-159	227880
1000 AL	L-159	227880

CARTRIDGES			
CABLE SIZE	CATALOG NUMBER		STOCK NUMBER
	OLD	NEW	
4/0 CU	CADWELD 90 CU	#96-2C	209228
500 CU	CADWELD 200 CU	#206-2C	209224
750 AL	CADWELD 300 XAL	#201-2D	209220 INCLUDES NO. 426208
1000 AL	CADWELD 480 XAL	#301-2D	209226 INCLUDES NO. 426208

FOR FIELD MAINTENANCE ONLY

CERAMIC INSERTS		
CABLE SIZE	CATALOG NO.	STOCK NUMBER
750 AL	20-S-3671	426208
1000 AL	20-S-3671	426208

ALUMINUM CABLE PREPARATION MATERIAL	
CATALOG NUMBER	STOCK NUMBER
APPLICATOR, FLUX CADWELD KIT S-4047	109728
APPLICATOR, POWER CADWELD KIT S-4048	109760
FLUX CADWELD KIT S-4049	359264
SOLVENT CADWELD ERICO 27 S-3506-Q	662368

TABLE OF CONTENTS

DATE 1-1-94 APPD JLB/RDS	SDG&E ELECTRIC STANDARDS CONDUCTOR CONNECTIONS, EXOTHERMIC TYPE (CADWELD)	4199.409

U-41.8

INSTALLATION OF "T" CONNECTOR

PROCEDURE

(A) LUBRICATE MATING SURFACES WITH SILICONE GREASE.

(B) PLACE NYLON STRING OR ROD IN SOCKET OF MATING DEVICE WITH ENOUGH STRING OR ROD EXPOSED TO PROVIDE FIRM GRIP. STRING OR ROD WILL PERMIT ENTRAPPED AIR TO ESCAPE AFTER DEVICES ARE MATED.

(C) FIRMLY PLACE "T" CONNECTOR AGAINST RECEPTACLE OR PLUG AND HOLD IN POSITION UNTIL AIR HAS BEEN EXHAUSTED.

(D) REMOVE NYLON STRING OR ROD.

INSTALLATION OF STRAIGHT RECEPTACLE AND STRAIGHT PLUG

PROCEDURE

(A) CUT CABLE, BIND BACK CONCENTRIC NEUTRAL WIRES WITH TAPE 6 1/2" FROM END. ALLOW EXTRA LENGTH ON NEUTRAL WIRES FOR GROUND CONNECTION. IF CONNECTING TO A MATING STRAIGHT PLUG, THE CABLE ENDS WILL BE 3 1/2" APART WHEN THE CONNECTION IS COMPLETE.

(B) REMOVE 1" INSULATION OF CABLE INSULATION. LEAVE A SQUARE SHOULDER. (DO NOT PENCIL).

(C) CRIMP SMOOTH END OF THREADED COMPRESSION CONNECTOR ON BARED CONDUCTOR.

(D) ON RECEPTACLE REMOVE THE SEMI-CONDUCTIVE SHIELD TO A POINT 6" BACK FROM THE END OF THE PIN, CUT SQUARELY.

ON STRAIGHT PLUG

1. TEMPORARILY REMOVE PLASTIC PIN.
2. REMOVE SEMI-CONDUCTIVE SHIELD 6 1/4" FROM THE END OF THE SOCKET; CUT SQUARELY.
3. REPLACE PLASTIC PIN.

(E) REMOVE PROTECTIVE CAPS. LUBRICATE THE CABLE INSULATION AND INSIDE CABLE ENTRANCE WITH SILICONE GREASE.

(F) ON STRAIGHT RECEPTACLE PUSH CABLE INTO HOUSING UNTIL THE BASE OF THE PIN COMES FLUSH WITH THE INSIDE FACE OF THE RECEPTACLE.

ON STRAIGHT PLUG:

1. INSERT NYLON STRING OR ROD INTO CABLE ENTRANCE OF PLUG.
2. INSERT CABLE UNTIL FRONT EDGE OF THE SOCKET CONTACT COMES FLUSH WITH FRONT EDGE OF PLUG. THEN REMOVE NYLON STRING OR ROD.
3. REMOVE PIN AND DISCARD.

(G) TO CONNECT TO A MATING PLUG OR RECEPTACLE:

1. LUBRICATE NOSE OF PLUG WITH SILICONE GREASE.
2. PLACE NYLON STRING OR ROD INTO RECEPTACLE BASE TO BOTTOM.
3. INSERT PLUG ASSEMBLY.
4. REMOVE NYLON STRING OR ROD.

(H) CABLE GROUNDING:

1. CONNECT ONE OR MORE CONCENTRIC NEUTRAL WIRES TO GROUNDING EYE AND TWIST TIGHTLY.
2. TWIST REMAINING WIRES TOGETHER WITH CRIMP CONNECTOR FOR GROUND CONNECTION.

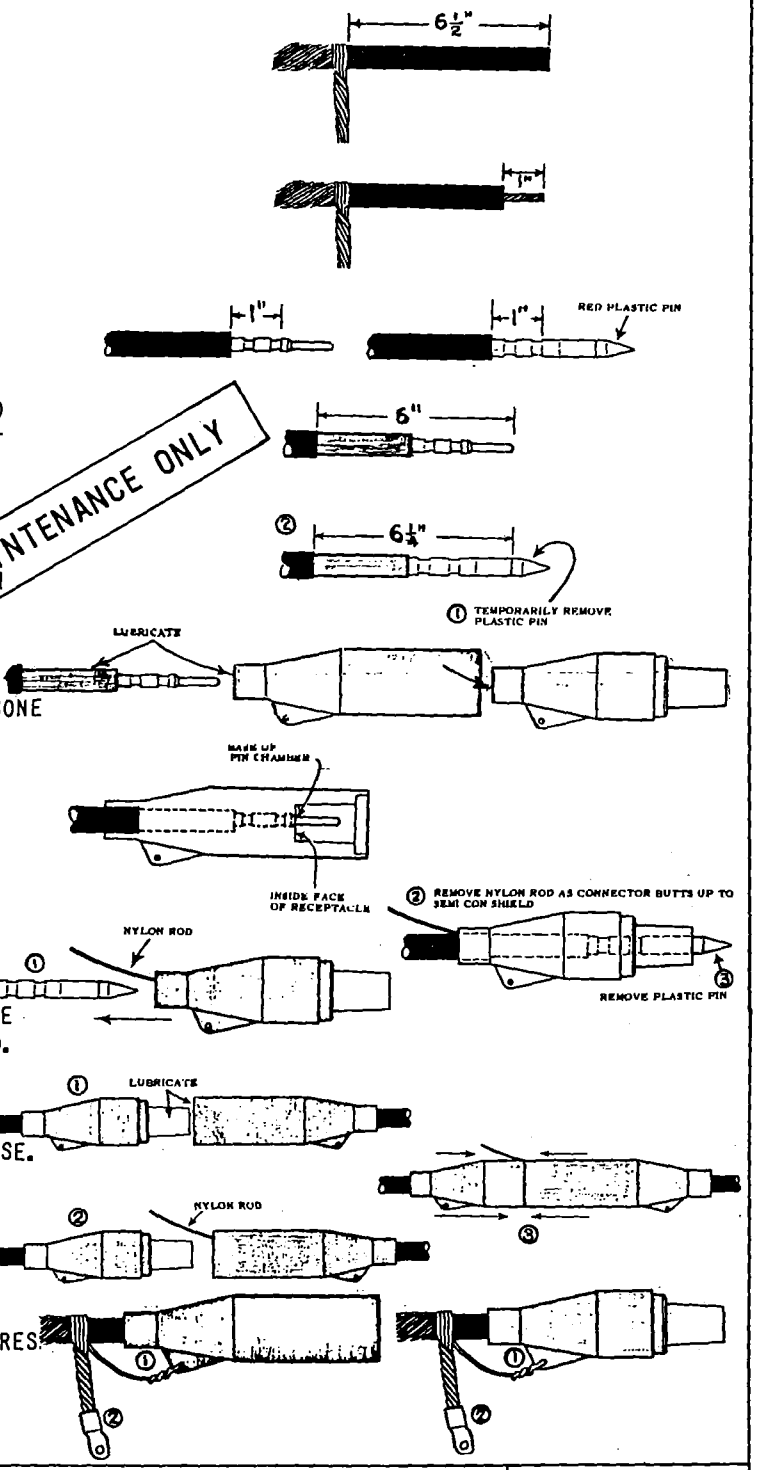

FOR FIELD MAINTENANCE ONLY

TABLE OF CONTENTS

4199.501	SAN DIEGO GAS & ELECTRIC COMPANY UNDERGROUND STANDARDS 15KV SPLICE CONNECTION FOR NON-LOAD BREAK	JJG/RB DATE 1-1-94

INSTALLATION OF "Y" SPLICE
PROCEDURE

(A) CUT CABLE WHERE SPLICE IS REQUIRED. ALLOW ABOUT 6" CONCENTRIC NEUTRAL BEYOND CUT. MEASURE 8" BACK FROM CUT AND PULL BACK CONCENTRIC NEUTRAL AND BIND.

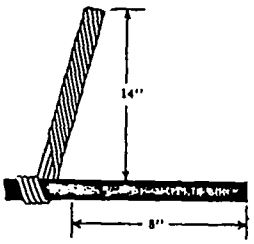

(B) REMOVE 7/8" TO 1" OF CABLE INSULATION FROM EACH END OF CABLE. CUT SQUARELY, DO NOT PENCIL. WIRE BRUSH BARE ALUMINUM CONDUCTORS AND INSERT IN CRIMP BARRELS.

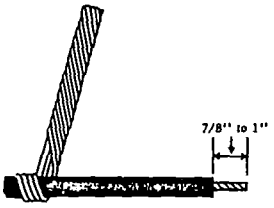

(C) CRIMP PIN CONTACT OR BARREL CONDUCTOR HOLDING CONTACT BARREL AGAINST THE CABLE INSULATION. ROTATE INDENTS OR CRIMPS 90°.



FOR FIELD MAINTENANCE ONLY

(D) REMOVE SEMI-CON SHIELD TO A POINT 7 5/16" BACK FROM THE FAR END OF THE PIN CONTACT WITH A STRAIGHT SMOOTH SQUARE CUT. MARK THE SEMI-CON SHIELD WITH A WRAP OF TAPE EXACTLY 8 5/16" BACK FROM THE FAR END OF THE PIN CONTACT. CLEAN THE SHIELD AND WIPE INSULATION CLEAN. BEVEL THE INSULATION NO MORE THAN 1/8" BACK AT 45°.

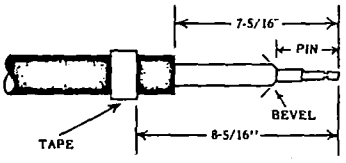

(E) REMOVE PROTECTIVE CAP FROM THE CABLE ENTRANCE ON THE "Y" SPLICE. LUBRICATE THE INSIDE OF THE CABLE ENTRANCE, PIN CONTACT AND CABLE INSULATION WITH LUBRICATING SILICONE GREASE SUPPLIED.

TABLE OF CONTENTS

(F) INSERT NYLON ROD ABOUT 6" INTO CABLE ENTRANCE. PUSH CABLE INTO ENTRANCE WITH A TWISTING MOTION UNTIL THE TAPE INDICATOR ON THE SEMI-CON SHIELD IS ABOUT 1" AWAY FROM THE END OF THE CABLE ENTRANCE. REMOVE THE ROD. CONTINUE TO PUSH THE CABLE INTO THE "Y" SPLICE UNTIL THE TAPE INDICATOR LINES UP WITH THE END OF THE "Y" SPLICE. CABLE IS THEN LOCKED INTO "Y" SPLICE.

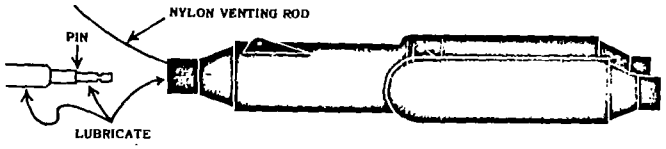

(G) REPEAT STEPS A THRU F FOR THE OTHER TWO CABLES.

(H) CONNECT ONE OR MORE CONCENTRIC NEUTRAL WIRES TO GROUNDING EYE AND TWIST TIGHTLY. TRAIN AND TWIST REMAINING WIRES TO OPPOSITE ENDS OF "Y" SPLICE HOUSING AND CRIMP TOGETHER WITH CONNECTOR.

FOR FIELD MAINTENANCE ONLY

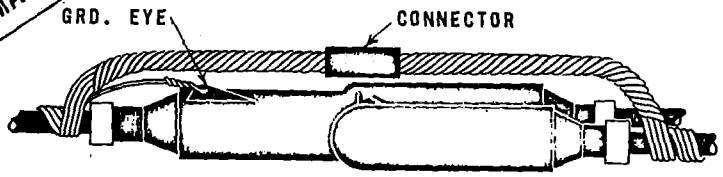

(I) TAPE CONCENTRIC NEUTRAL WIRE TO HOUSING.

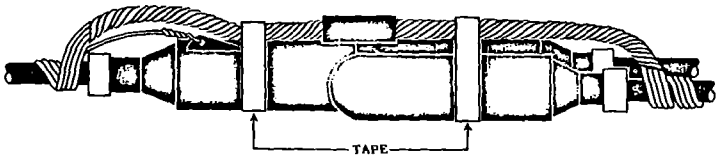

(J) "Y" SPLICE IS THEN COMPLETE.

TABLE OF CONTENTS

4199.503	SAN DIEGO GAS & ELECTRIC COMPANY UNDERGROUND STANDARDS 15KV SPLICE CONNECTIONS FOR NON-LOAD BREAK	DATE 12-27-73 APPD

MAJOR USE: USE NEXT OR ADJACENT TO A TRANSFORMER FOR A 1ϕ TAP FROM A 1ϕ OR 3ϕ CIRCUIT.

INSTALLATION OF BURIED EQUIPMENT ENCLOSURE
PROCEDURE

(A) EXCAVATE HOLE 40" TO 48" IN DIAMETER BY 5' - 0" DEEP.

(B) PLACE 4" TO 6" OF TAMPED 3/4" TO 1 1/2" CRUSHED ROCK IN BOTTOM OF HOLE FOR DRAINAGE, CUT 5' - 0" TUBE TO FIT FINISHED GRADE OR 2" ABOVE. SEE NOTE K BELOW.

(C) CUT CONDUIT HOLES IN WALL WITH SABRE SAW, KEYHOLE SAW OR HOLE BIT AT DESIRED DEPTHS.

(D) PLACE ENCLOSURE IN CENTER OF EXCAVATION. SEE NOTE K BELOW.

(E) BACKFILL WITH USABLE SPOIL OR SAND OUTSIDE ENCLOSURE TO A POINT JUST BELOW CONDUIT ENTRY INTO ENCLOSURE.

(F) INSTALL CONDUITS AS REQUIRED.

(G) PULL CABLE, ALLOW 10' INSIDE LINER FOR CONNECTIONS AND BEND UP FOR ACCESSIBILITY.

(H) COMPLETE BACKFILL WITH USABLE SPOIL OR SAND OUTSIDE ENCLOSURE TO JUST BELOW FINISHED GRADE.

(I) MAKE CONNECTIONS.

(J) SECURE GRATING OR SOLID COVER, IF GRATING IS USED PLACE IN A POSITION SO THAT WHEN INSTALLED GRATING BARS ARE PERPENDICULAR TO THE LINE OF THE SIDEWALK.

(K) WHERE A DRAINAGE PROBLEM MAY OCCUR IT IS SUGGESTED THAT A 3" SLOPED CONCRETE COLLAR AT GRATING AND CONTINUING TO JUST BELOW FINISHED GRADE BE INSTALLED. FIBRE TUBE TO BE FLUSH MOUNTED WHEN INSTALLED IN OR NEAR SIDEWALK USING SOLID COVER.

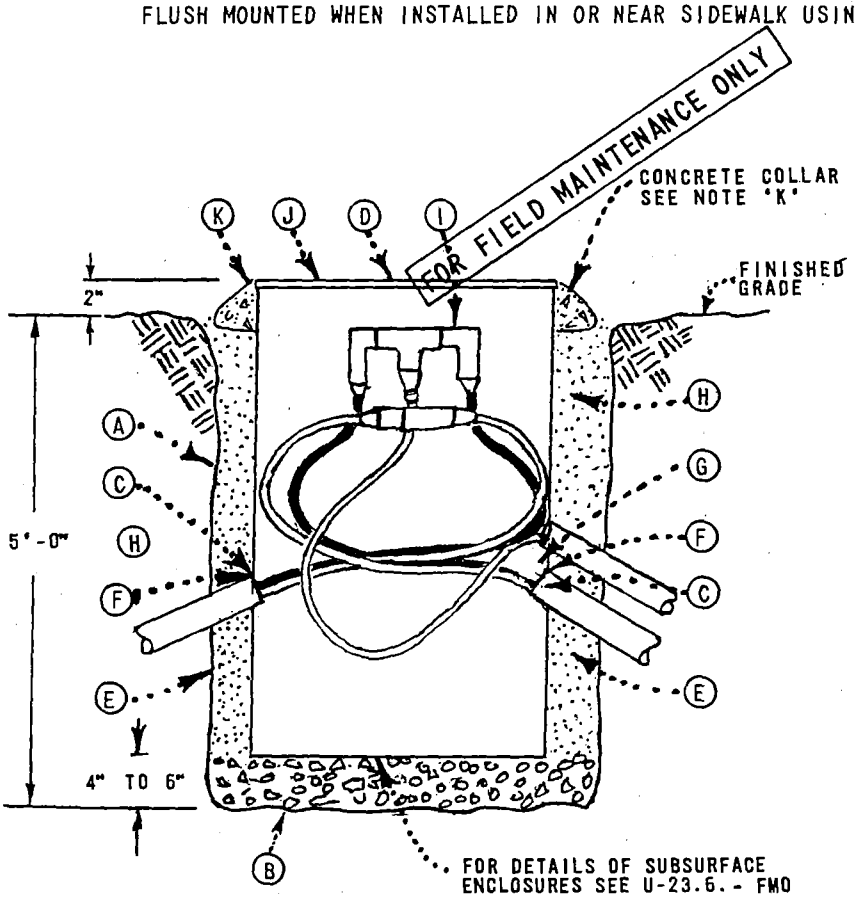

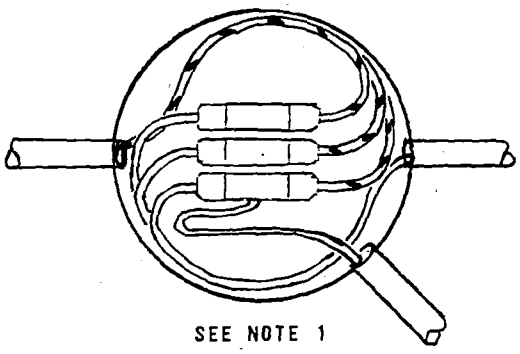
SEE NOTE 1

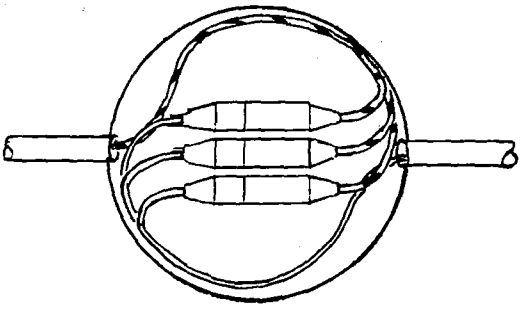
SEE NOTE 2

NOTES:

1. USE 'T' TAP (4196) AND NON-LOAD BREAK ELBOWS (4196) FOR 1-1ϕ TAP FROM 1ϕ OR 3ϕ CIRCUIT. USE STRAIGHT RECEPTACLE AND PLUG (4196) FOR PHASES NOT TAPPED.
2. USE STRAIGHT RECEPTACLE (4196) WITH STRAIGHT PLUG (4196) FOR SECTIONALIZING.

	SAN DIEGO GAS & ELECTRIC COMPANY UNDERGROUND STANDARDS	
DATE 6-30-78 APPD TAF	NON-LOAD BREAK BURIED EQUIPMENT ENCLOSURE INSTALLATION SPLICES	4199.504

TABLE OF CONTENTS

INSTALLATION OF BURIED EQUIPMENT ENCLOSURE
PROCEDURE

(A) EXCAVATE HOLE 5' X 9' X 5' DEEP.
(B) PLACE 4" TO 6" OF TAMPED 3/4" TO 1 1/2" CRUSHED ROCK IN BOTTOM OF HOLE.
(C) PLACE HANDHOLE IN CENTER OF EXCAVATION.
(D) INSTALL TOP SECTION USING MASTIC SEALING COMPOUND IN SECTION JOINTS.
(E) INSTALL CONDUITS AS REQUIRED.
(F) PULL CABLE, ALLOW 10' INSIDE HANDHOLE FOR CONNECTIONS.
(G) BACKFILL WITH USABLE SPOIL OR SAND OUTSIDE ENCLOSURE.
(H) MAKE CONNECTIONS.
(I) SECURE COVER.

TABLE OF CONTENTS

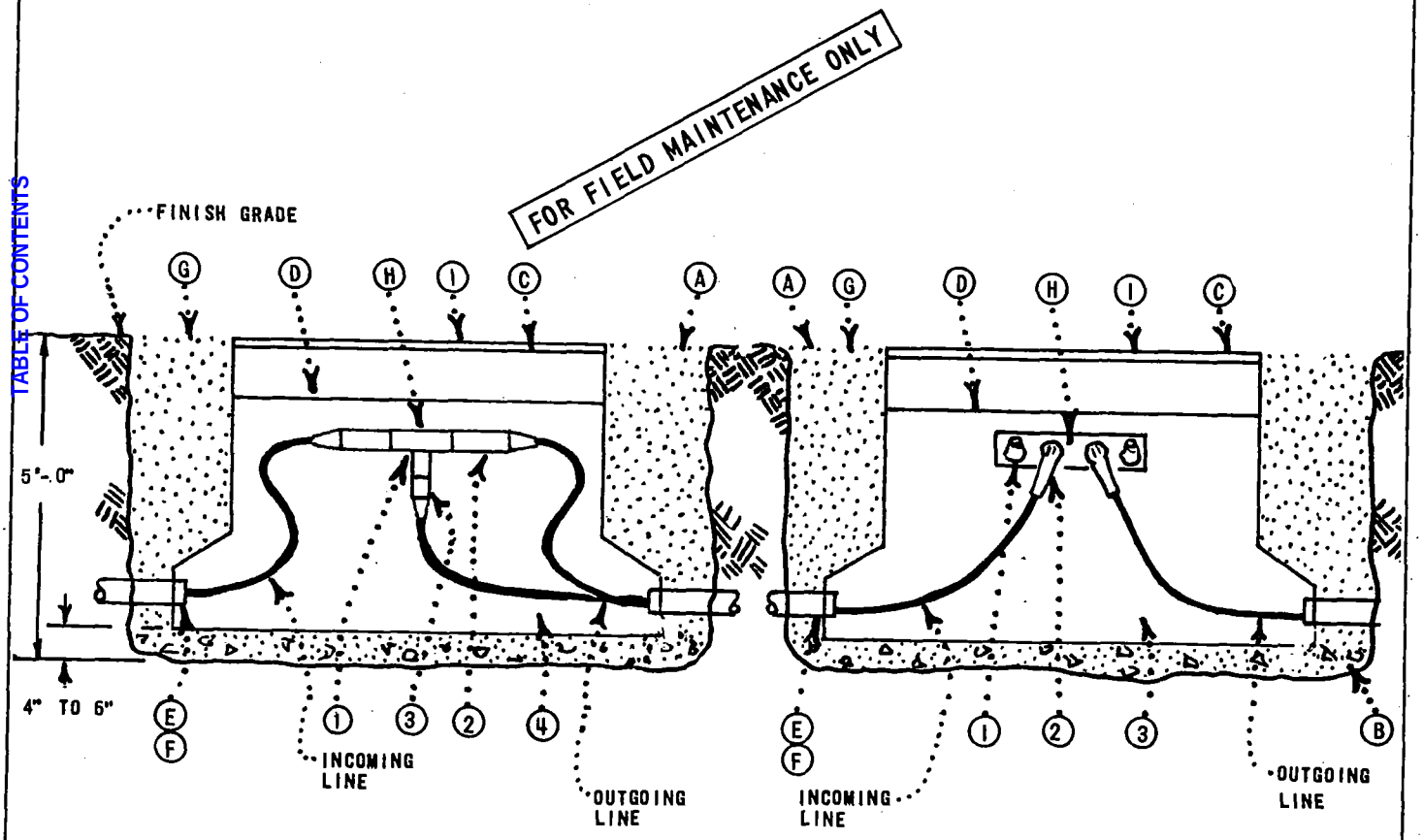

NOTES:
1. USE 'T' TAP NON-LOAD BREAK (4196).
2. USE STRAIGHT RECEPTACLE (4196).
3. USE STRAIGHT PLUG (4196)
4. USE HANDHOLE, 30" X 48" X 42", (3399.101)

NOTES:
1. USE CABLE TAPS, 3 & 4 WAY ONLY, (4192)
2. USE LOAD BREAK ELBOWS, (4191).
3. USE HANDHOLE, 30" X 48" X 42", (3399.101)

4199.505	SAN DIEGO GAS & ELECTRIC COMPANY UNDERGROUND STANDARDS 1φ LOAD BREAK & 3φ NON-LOAD BREAK BURIED EQUIPMENT ENCLOSURE INSTALLATION SPLICES	DATE 6-30-78 APPD TAF

200 AMP DEADBREAK CONNECTORS

"Y" SPLICE
(DELETED FROM PG. 4196.3)

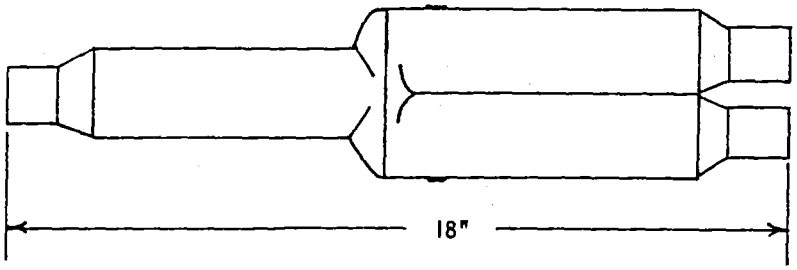

STOCK NUMBER	
#2 CU	668416
2/0 AL	668408
#2 SOL AL	668400
#2 CU-#2 CU #2 AL	668404

MAJOR USE:
USED FOR PERMANENT
SPLICE INSTALLATION

INSULATING PLUG
(DELETED FROM 4196.4)

STOCK NUMBER
#2 CU 544862



MAJOR USE: (#2 COPPER ONLY)
TO PLUG CABLE ENTRANCES
ON "Y" SPLICE. STRAIGHT
PLUG OR STRAIGHT RECEPTACLES

NOTES:
- FOR INSTALLATION PROCEDURES CONSULT INDIVIDUAL MANUFACTURERS CONTAINERS FOR CURRENT INSTRUCTIONS.

FOR FIELD MAINTENANCE ONLY

TABLE OF CONTENTS

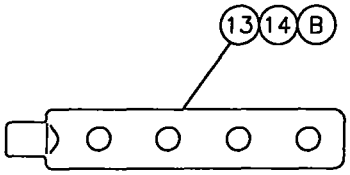

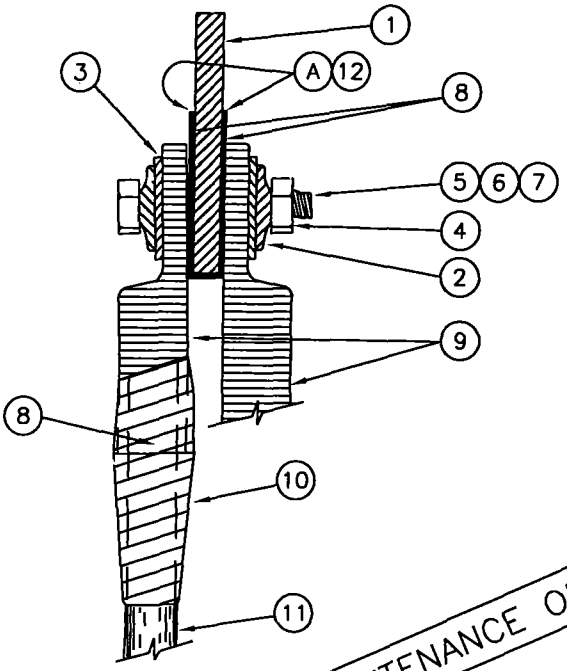

FOR FIELD MAINTENANCE ONLY

BILL OF MATERIAL:

ITEM	DESCRIPTION		CONST STD.	STOCK NUMBER
1	TRANSFORMER TERMINAL OR BUS		–	–
2	WASHER, 3/8", SPRING LOCK, CADMIUM PLATED		–	798620
3	WASHER, 3/8", FLAT, CADMIUM PLATED.		–	800160
4	NUT, 3/8", HEX, MACHINE THREAD, CADMIUM PLATED.		–	505020
5	BOLT, 3/8" X 1-1/2", HEX HEAD MACHINE THREAD, CADMIUM PLATED.		–	616106
6	BOLT, 3/8" X 2", HEX HEAD, MACHINE THREAD, CADMIUM PLATED.		–	616116
7	BOLT, 3/8" X 2-1/2", HEX HEAD, MACHINE THREAD, CADMIUM PLATED.		–	616120
8	INHIBITOR, (REFER TO 4106 FOR INSTALLATION INSTRUCTIONS)		–	247200
9	ALUMINUM LUG, (SIZE AS REQ'D)		4171	–
10	TAPE, PVC		–	720580
11	ALUMINUM CABLE		4002	–
12	TRANSITION PLATE, ALUMINUM TO COPPER	2 HOLE 1-1/2" X 3"	–	543208
		(A) 4 HOLE 3" X 3"	–	543216
		4 HOLE 4" X 4"	–	543224
13	ALUMINUM CONNECTOR, 5/8" STUD, FOR 25-75 KVA (B)		–	270280
14	ALUMINUM CONNECTOR, 1" STUD, FOR 100 & 167 KVA (B)		–	270276

INSTALLATION:

(A) TRANSITION PLATE (APPROPRIATE SIZE) TO BE USED WHEN BOLTING ALUMINUM LUG TO UN-TINNED COPPER BUS OR TRANSFORMER TERMINAL.

(B) COPPER TINNED LUGS MAY ATTACHED TO AN ALUMINUM CONNECTOR STUD, ITEMS 13 & 14.

4199.600 SUPERSEDES 4168 (9-7-99)	SDG&E ELECTRIC STANDARDS ALUMINUM TERMINATION SECONDARY (600V) AT TRANSFORMER OR BUS	DATE 1-1-94 APPD JJG/RDG

TABLE OF CONTENTS

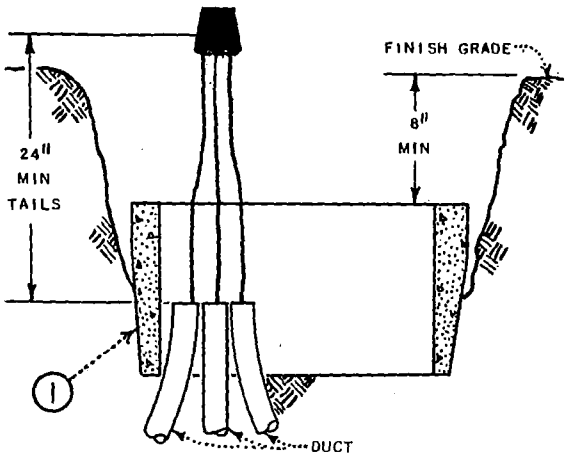

DUCTS AND CONDUCTORS

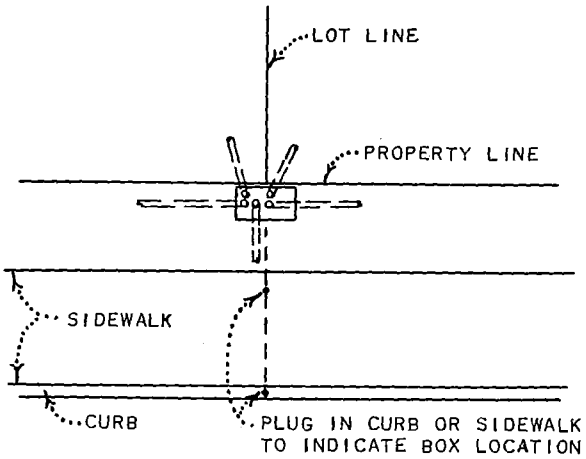

LOCATION PLAN

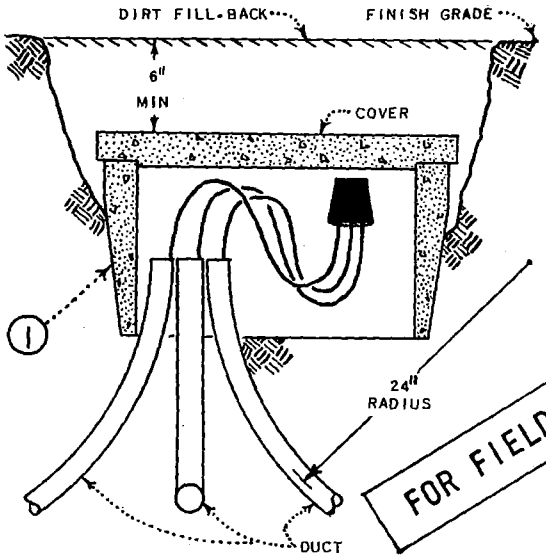

FINISHED CONDUCTOR CONFIGURATION

FOR FIELD MAINTENANCE ONLY

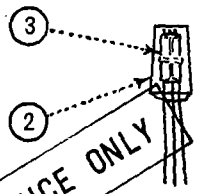

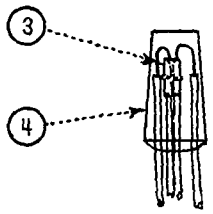

SQUEEZON

METHOD FOR CONNECTING ONE SECONDARY AND A MAXIMUM OF THREE SERVICE CONDUCTORS.

METHOD FOR CONNECTING TWO SECONDARY CONDUCTORS, PLUS TWO SERVICE CONDUCTORS.

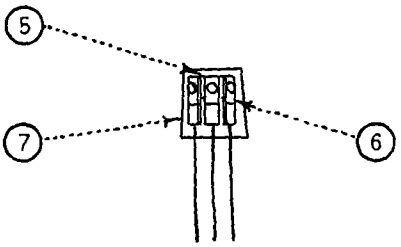

HEXAGONAL HUB

METHOD FOR CONNECTING 350 MCM OR THREE OR MORE SECONDARY CONDUCTORS, PLUS SERVICE CONDUCTORS.

CONNECTIONS

ITEM	BILL OF MATERIAL	QUANTITY
1	SECONDARY PULL BOX, REFR. FILE U-21.2	1
2	BOOT WITH COMPOUND, 6 OUNCE	3
3	SQUEEZON, 4199.701	3
4	BOOT WITH COMPOUND, 9 OUNCE	3
5	HEXAGONAL HUB	3
6	COMPRESSION LUG CONNECTORS FOR HEXAGONAL HUB, 4171	AS REQ'D
7	BOOT WITH COMPOUND, 36 OUNCE	3

DATE 1-27-67 SDG&E	SAN DIEGO GAS & ELECTRIC COMPANY UNDERGROUND STANDARDS 0-750 VOLT PULL BOX INSTALLATION HEXAGONAL HUB OR SQUEEZON CONNECTIONS	4199.702

TABLE OF CONTENTS

MAJOR USE: FOR SECONDARY TERMINATIONS

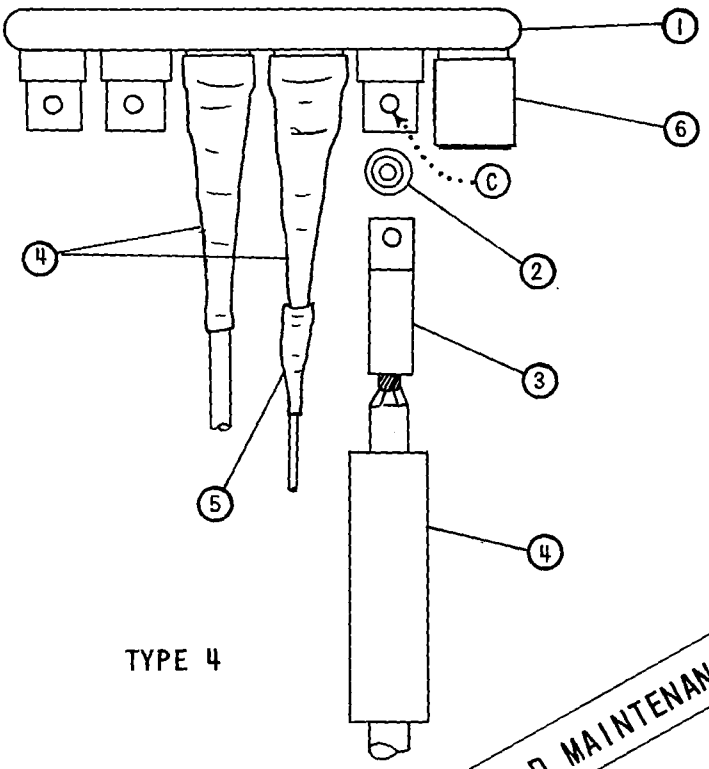

TYPE 4

FOR FIELD MAINTENANCE ONLY

URD CONNECTOR (1)	
POSITIONS	STOCK NO. OR CONSTR STD
4	270080
6	270208

HEAT SHRINK SLEEVE (4) (5)		
LUG	SLEEVE SIZE	STOCK NO. OR CONSTR STD
4-3/0	1.25 EXPANDED X 6"	777984
350 KCMIL	1.5 EXPANDED X 9"	778016
8	1.25 EXPANDED X 6"	777984
	(5) 0.75 EXPANDED X 3"	777952

INSULATING CAP FOR UNUSED POSITIONS SHIPPED WITH URD CONNECTOR (6)

URD INSULATED TERMINAL ASSEMBLY (INCLUDES (2) BOLT & WASHER (3) LUG)		
WIRE SIZE AWG	DIE	STOCK NO. OR CONSTR STD
4	BG	730688
2		730592
1/0	840	730560
3/0		730624
350 KCMIL	1 1/8, 705, 299	730656

NOTES:

A. USE TORCH TO SHRINK SLEEVES. FLAME SPREADER RECOMMENDED- DO NOT CONCENTRATE HEAT; PLAY FLAME OVER SURFACE OF SLEEVE STARTING AT SHOULDER OF CONNECTOR.

B. INSTALL SECONDARIES ON CENTER POSITIONS, SERVICES ON OUTER POSITIONS.

(C) APPLY INHIBITOR (247200) AT EACH ALUMINUM CONNECTION. FOR INSTALLATION INSTRUCTIONS OF ALUMIMUN CONNECTORS REFER TO 4106.

TABLE OF CONTENTS

4199.703	SAN DIEGO GAS & ELECTRIC COMPANY UNDERGROUND STANDARDS 0-600 VOLT CONNECTIONS FOR 8 THROUGH 350KCMIL ALUMINUM CONDUCTORS	DATE. 1-22-76 APPD

TABLE OF CONTENTS

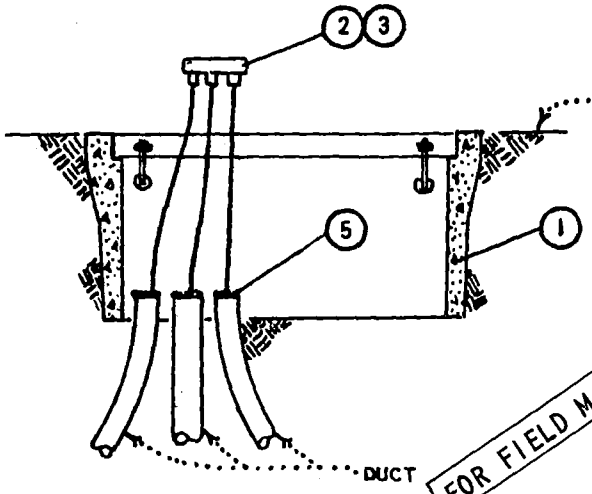

DUCTS AND CONDUCTORS

FOR FIELD MAINTENANCE ONLY

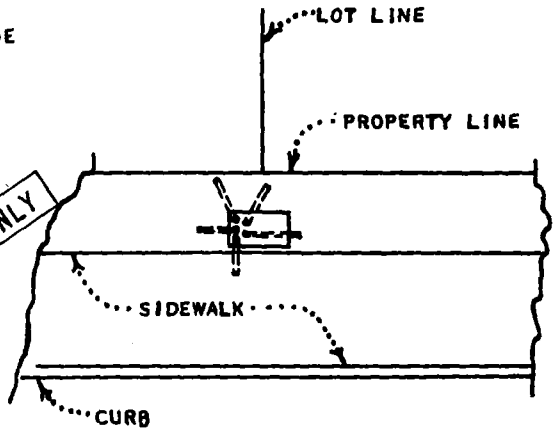

TYPICAL PLAN

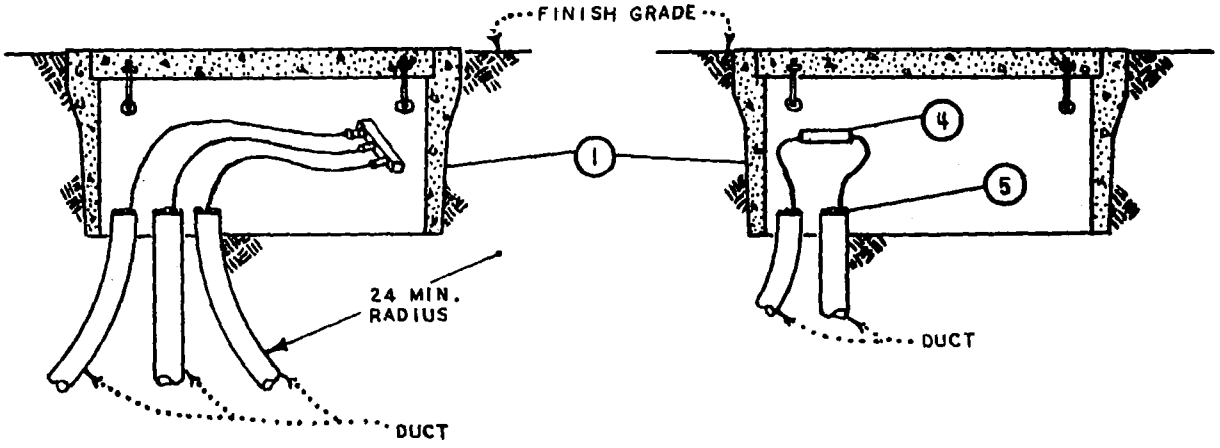

FINISHED INSTALLATION
SECONDARIES OR SERVICES

FINISHED INSTALLATION
SECONDARY IN - SERVICE OUT

ITEM	BILL OF MATERIAL	QUANTITY	STOCK NO. OR CONSTR. STD.
1	SECONDARY PRE-CAST HANDHOLE	1	3312
2	CONNECTOR	3	4199.705
3	LUGS & HEAT SHRINK SLEEVES	AS REQ'D.	4173
4	REDUCING SLEEVES & HEAT SHRINK SLEEVES	3	4173.4
5	AQUA SEAL	AS REQ'D.	631872

APPD J.W.K.
DATE 8-3-76

SAN DIEGO GAS & ELECTRIC COMPANY UNDERGROUND STANDARDS

0-750 VOLT PRE-CAST HANDHOLE INSTALLATION

4199.704

SCOPE: THIS STANDARD SHOWS THE EQUIPMENT AND INSTALLATION OF 600 VOLT CONNECTORS TO CONNECT SECONDARY AND SERVICE CABLE IN SUBSTRUCTURES.

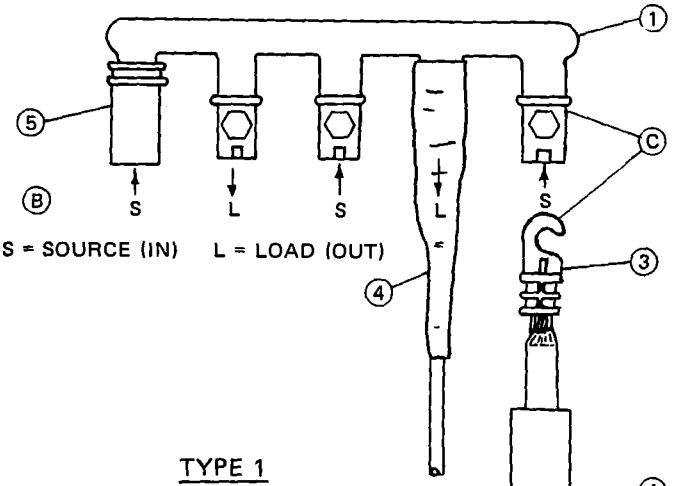

TYPE 1

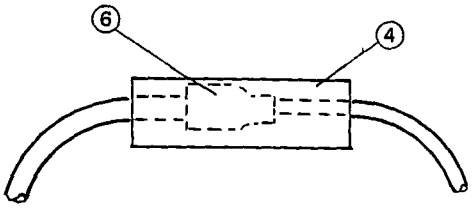

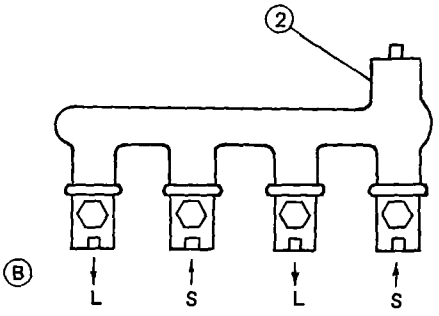

TYPE 2

THIS PAGE FOR FIELD MAINTENANCE ONLY

BILL OF MATERIAL:

ITEM	DESCRIPTION			STOCK NUMBER
1	CONNECTORS		3 POSITIONS	270048 (E)
			4 POSITIONS	270064 (E)
			5 POSITIONS	270176 (E)
			6 POSITIONS	270264 (E)
2	CONNECTORS WITH STREET LIGHT TAP FOR WIRE SIZES NO. 12 SOLID TO NO. 4 STRANDED AWG AL & CU.		3 POSITIONS	269980 (E)
			4 POSITIONS	270128 (E)
			6 POSITIONS	270274 (E)
3	LUGS, ALUMINUM (F)	DIE 840	NO. 4	269952 (E)
			NO. 2	269888 (E)
			1/0	269856 (E)
			3/0	269920 (E)
		DIE 655	350 KCMIL	269972 (E)
4	SLEEVES, HEAT SHRINK	4-3/0 LUG, SIZE–1.3 EXPANDED X 6"		777984 (E)
		350 KCMIL LUG, SIZE–1.5 EXPANDED X 9"		778016 (E)
5	COVER, INSULATING TERMINAL (FOR UNUSED PORTION)			286956
6	REDUCING SLEEVE OR INSULINKS	DIE W-BG	2-4	258528 (E)
			1/0-2	258656 (E)
		DIE W-K840	3/0-1/0	651872

INSTALLATION:

A. USE TORCH TO SHRINK SLEEVES, FLAME SPREADER RECOMMENDED. APPLY FLAME OVER SURFACE OF SLEEVE STARTING AT SHOULDER OF CONNECTOR. DO NOT CONCENTRATE HEAT.

(B) IF THE SOURCE AND LOAD (IN AND OUT) CONDUCTORS ARE ALTERNATED, THE TOTAL AMPACITY WILL BE THE SUM OF THE AMPACITIES OF THE SOURCE CONDUCTORS. IF THE SOURCE AND LOAD CONDUCTORS ARE NOT ALTERNATED THE MAXIMUM AMPACITY OF THE CONNECTOR WILL BE 750 AMPS FOR THIS SINGLE BOLT VERSION.

(C) APPLY INHIBITOR (STOCK NUMBER 247200) AT EACH ALUMINUM CONNECTION. FOR INSTALLATION INSTRUCTIONS OF ALUMINUM CONNECTORS REFER TO STANDARD 4106.

(E) EXEMPT MATERIAL.

(F) FILE SHARP EDGES AFTER CRIMPING.

TABLE OF CONTENTS

4199.705 SUPERSEDES 4173.1 (3-9-83)	SDG&E ELECTRIC STANDARDS 0-600 VOLT CONNECTIONS FOR #8 THROUGH 350 KCMIL ALUMINUM CONDUCTORS	DATE 3-9-83 APPD JMT/dR#

SCOPE: THIS STANDARD SHOWS THE EQUIPMENT AND INSTALLATION OF 600 VOLT CONNECTORS TO CONNECT SECONDARY AND SERVICE CABLE IN SUBSTRUCTURES.

TYPE 1

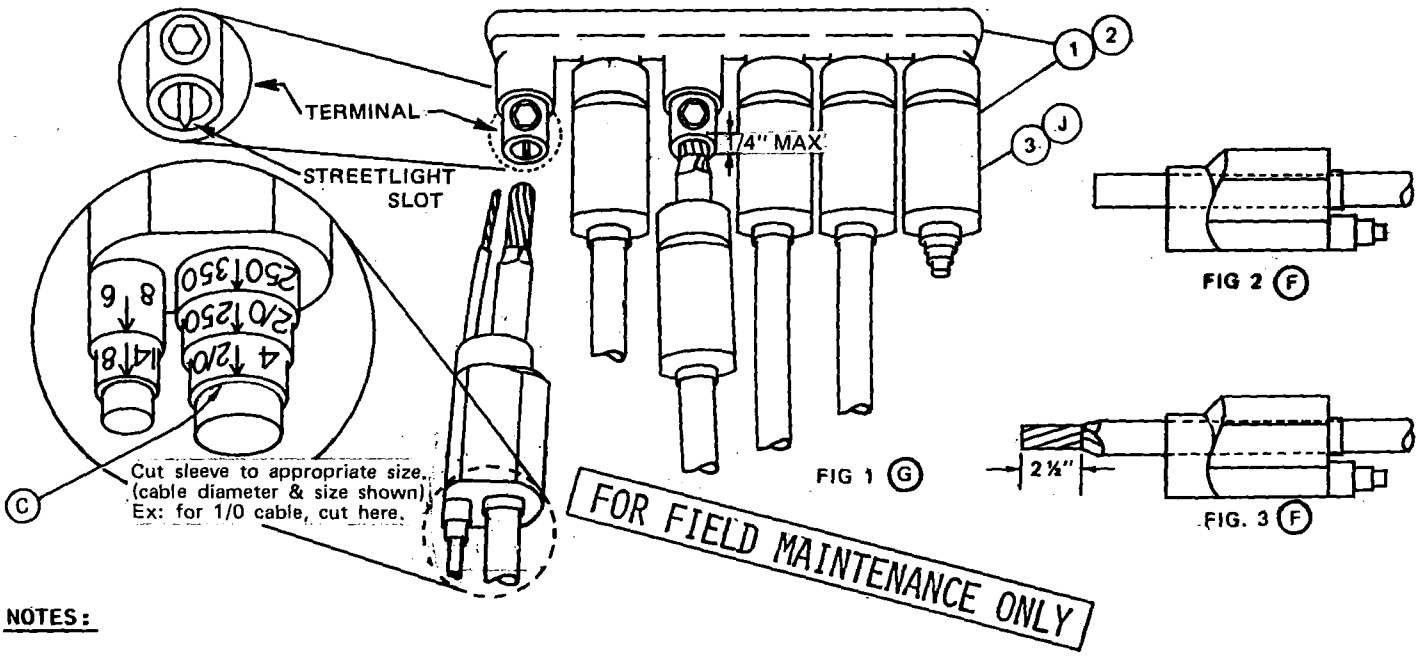

FOR FIELD MAINTENANCE ONLY

NOTES:

- IF MORE THAN ONE STREET LIGHT POSITION IS REQUIRED, REPLACE THE SINGLE POSITION SLEEVE SUPPLIED ON THE CONNECTOR WITH A DOUBLE POSITION SLEEVE, ITEM 3.
- IN THE BILL OF MATERIAL THE SIX POSITION CONNECTOR TERMINALS LISTED IN ITEM NUMBERS 1 AND 2 ARE THE SAME CONNECTOR KIT WITH DIFFERENT STOCK NUMBERS. THIS IS TO ASSURE THE AVAILABILITY OF A SIX POSITION STREET LIGHT CONNECTOR.

BILL OF MATERIAL (TYPE 1):

ITEM	DESCRIPTION		STOCK NUMBER
1	(KIT) CONNECTOR WITH SLEEVES #8 THRU #350	3 TERMINALS, AL	NO LONGER STOCKED
		4 TERMINALS, AL	
		5 TERMINALS, AL	
		6 TERMINALS, AL	
2	STREET LIGHT KIT CONNECTORS WITH SLEEVES #8 THRU #350	6 TERMINALS	
3	SLEEVE, INSULATING (DOUBLE POSITION)	#8 - #350	650154 E
4	INHIBITOR (USE AS REQUIRED)		247200 E

INSTALLATION:

A. INSTALL THE SOURCE IN A MIDDLE TERMINAL AND LOAD CABLES IN THE REMAINING TERMINALS. THE MAXIMUM AMPACITY OF THE CONNECTOR WILL BE 1000 AMPS FOR THIS SINGLE SETSCREW TYPE.

B. THE MINIMUM CABLE SIZE FOR A STREET LIGHT TERMINAL POSITION SHALL BE #8 AL. **NEVER INSTALL A #8 CABLE INTO A TERMINAL POSITION UNLESS IT IS COMBINED WITH EITHER #1/0, #3/0 OR #350 CABLES.** IF A STREET LIGHT CABLE IS CU, SPLICE A #8 AL TO THE CU CABLE AND INSTALL THE AL CABLE INTO THE TERMINAL. THIS CONNECTOR MAY BE USED FOR CU BUT NEVER COMBINE CU AND AL IN THE SAME TERMINAL POSITION. DO NOT TAP OFF ANOTHER CONDUCTOR.

C. REFERRING TO THE EMBOSSED MARKINGS ON THE INSULATOR SLEEVE, SELECT THE PROPER RING AND CUT (SEE FIGURE 1). CUT RING ONLY FOR THE SIZE OF CABLE TO BE INITIALLY INSTALLED.

TABLE OF CONTENTS

INSTALLATION CON'T:

D. PREPARE CABLE BY REMOVING ALL DIRT AND/OR MOISTURE FROM THE CABLE ENDS FOR A DISTANCE OF 12 TO 18 INCHES. LIBERALLY APPLY LUBRICANT (SILICONE GREASE) ON CABLE INSULATION AND ALL INTERNAL SEALING SURFACES OF INSULATING SLEEVE AND EXTERIOR OF TERMINAL WITH SUPPLIED LUBRICANT IN PREPARATION OF SLEEVE INSTALLATION.

(E) EXEMPT MATERIAL.

(F) CUT THE CABLE FLUSH, THEN SLIDE THE INSULATING SLEEVE OVER THE CABLE INSULATION (SEE FIGURE 2). REMOVE INSULATION 2-1/2 INCHES AS SHOWN IN FIGURE 3.

(G) WIRE BRUSH CONDUCTOR WITH INHIBITOR (SEE STANDARD 4106) AND INSERT CONDUCTOR INTO TERMINAL UNTIL THERE IS 1/4 INCH MAXIMUM GAP BETWEEN THE INSULATION AND THE TERMINAL (SEE FIGURE 1).

H. AFTER THE INITIAL CONNECTIONS HAVE BEEN MADE, VERIFY THAT THE PROPER TORQUE VALUES HAVE BEEN APPLIED. IT IS EXTREMELY IMPORTANT THE SETSCREWS BE TORQUED TO 25 FOOT POUNDS AS NOTED IN THE MANUFACTURER'S INSTRUCTIONS.

I. SLIDE INSULATING SLEEVES UP OVER CABLES SO THAT SLEEVES BUTT AGAINST CONNECTOR BAR.

(J) USE UNCUT SLEEVES ON SPARE TERMINALS.

TABLE OF CONTENTS

FOR FIELD MAINTENANCE ONLY

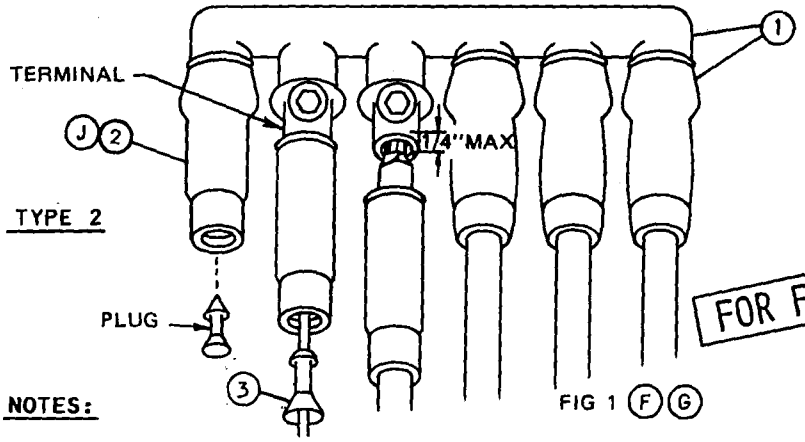

FIG 1 (F) (G)

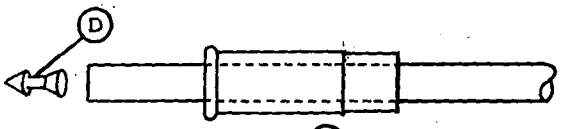

FIG 2 (F)

FOR FIELD MAINTENANCE ONLY

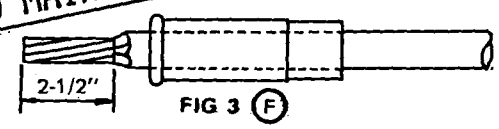

FIG 3 (F)

NOTES:

- IF MORE STREET LIGHT POSITIONS ARE REQUIRED THAN THERE ARE POSITIONS AVAILABLE, USE TYPE 1 CONNECTOR AND EXTRA DOUBLE POSITION SLEEVES, ITEMS 1 & 3, PAGE 4173.1
- IF A SIX POSITION CONNECTOR TERMINAL HAS SIX CABLES AND A STREET LIGHT CABLE IS REQUIRED IN ADDITION, THE TYPE 1 SIX POSITION CONNECTOR TERMINAL - ITEM 1, PAGE 4173.1 - MUST BE USED (STOCK NUMBER 256138 (E)). DO NOT TAP OFF ANOTHER CONDUCTOR.

BILL OF MATERIAL (TYPE 2):

ITEM	DESCRIPTION		STOCK NUMBER
1	(KIT) CONNECTOR WITH SLEEVES #2 THRU #350 AND ONE SLEEVE INSERT ADAPTOR #8 THRU #4	3 TERMINALS, AL-CU	NO LONGER STOCKED
		4 TERMINALS, AL-CU	
		5 TERMINALS, AL-CU	
		6 TERMINALS, AL-CU	
2	SLEEVE, INSULATING	#2 - #350	650150 (E)
3	SLEEVE, ADAPTOR	#8 - #4	650152 (E)
4	INHIBITOR (USE AS REQUIRED)		247200 (E)

INSTALLATION:

A. INSTALL THE SOURCE IN A MIDDLE TERMINAL AND LOAD CABLES IN THE REMAINING TERMINALS. THE MAXIMUM AMPACITY OF THE CONNECTOR WILL BE 1000 AMPS FOR THIS SINGLE SETSCREW TYPE.

(B) THIS CONNECTOR UNIT ONLY ALLOWS ONE CONDUCTOR PER TERMINAL. THE MINIMUM CABLE SIZE FOR A STREET LIGHT TERMINAL POSITION SHALL BE #8 AL OR CU AND SHALL OCCUPY ONE TERMINAL BY ITSELF.

C. PREPARE CABLE BY REMOVING ALL DIRT AND/OR MOISTURE FROM THE CABLE ENDS FOR A DISTANCE OF 12 TO 18 INCHES. LIBERALLY APPLY LUBRICANT (SILICONE GREASE) ON CABLE INSULATION AND ALL INTERNAL SEALING SURFACES OF INSULATING SLEEVE AND EXTERIOR OF TERMINAL WITH SUPPLIED LUBRICANT IN PREPARATION OF SLEEVE INSTALLATION.

(D) REMOVE SUPPLIED PLUG FROM SLEEVE BY PUSHING IT THROUGH THE INSULATED SLEEVE WITH BLUNT INSTRUMENT OR CABLE END (SEE FIGURE 2).

(E) EXEMPT MATERIAL.

(F) FOR #8 THRU #4 CABLES, CUT THE CABLE FLUSH THEN SLIDE LUBRICATED "SLEEVE INSERT ADAPTOR" OVER CABLE INSULATION. ALSO SLIDE THE INSULATING SLEEVE OVER THE CABLE INSULATION (SEE FIGURE 1). THEN, REMOVE INSULATION 2-1/2 INCHES AS SHOWN IN FIGURE 3. ONE ADAPTOR FOR #8 THRU #4 CONDUCTOR IS SUPPLIED IN EACH KIT. PLUGS ARE SUPPLIED IN EACH OF THE SLEEVES. FOR #2 THRU #350, CUT THE CABLE FLUSH THEN SLIDE THE INSULATING SLEEVE OVER THE CABLE INSULATION. REMOVE THE INSULATION AS SHOWN IN FIGURE 3.

(G) WIRE BRUSH CONDUCTOR WITH INHIBITOR (SEE STANDARD 4106) AND INSERT CONDUCTOR INTO TERMINAL UNTIL THERE IS A 1/4 INCH MAXIMUM GAP BETWEEN THE INSULATION AND THE TERMINAL (SEE FIGURE 1).

H. AFTER THE INITIAL CONNECTIONS HAVE BEEN MADE, VERIFY THAT THE PROPER TORQUE VALVES HAVE BEEN APPLIED. IT IS EXTREMELY IMPORTANT THAT SETSCREWS MEET THE FOLLOWING TORQUE VALUES: (#8 THRU #4) - 20 FT. LBS. TORQUE, (#2 THRU #350) - 25 FT. LBS. TORQUE.

I. SLIDE INSULATING SLEEVES UP OVER CABLE SO THAT SLEEVES BUTT AGAINST CONNECTOR BAR.

(J) USE REMAINING SLEEVES WITH PLUGS ON SPARE TERMINALS.

SDG&E ELECTRIC STANDARDS

DATE 1-1-91
APPD JLB/KD

0 - 600 VOLT CONNECTORS
FOR # 8 THRU 350 KCMIL AL OR CU CONDUCTORS

4199.708

TABLE OF CONTENTS

TABLE OF CONTENTS

12-A

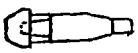

544888 (1)
570304 (1)

#2

12-B

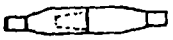

570256 (1)
544688 (1)

#2-#2

12-C

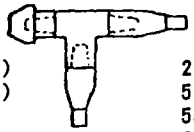

256112 (1)
570256 (1)
544688 (1)
570304 (1)

#2-#2

12-D

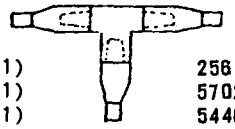

256112 (1)
570256 (2)
544688 (1)

#2-#2-#2

13-AG



326578 (1)
544856 (1)
544832 (1)
258698 (1)
102026 (1)
570608 (1)

4/0

13-BG

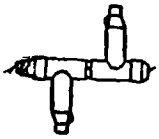

326578 (2)
544856 (1)
570608 (1)
544832 (2)
102026 (2)
258696 (2)

4/0-4/0

13-C

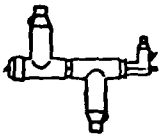

326578 (2)
544856 (1)
547324 (1)
544832 (1)
443456 (1)
102026 (2)
258696 (2)

4/0-4/0-#2

13-D

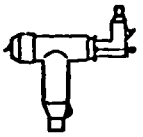

326578 (1)
544856 (1)
547324 (1)
443456 (1)
102026 (1)
258696 (1)

4/0-#2

13-EG

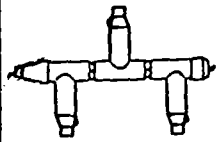

326578 (3)
544856 (1)
570608 (1)
544832 (3)
102026 (3)
258696 (3)

4/0-4/0-4/0

13-F

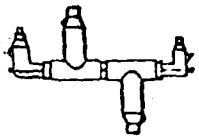

326578 (2)
547324 (1)
547318 (1)
544832 (1)
443456 (2)
102026 (2)
258696 (2)

#2-4/0-4/0-#2

13-G

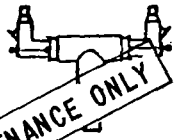

326578 (1)
547324 (1)
547318 (1)
443456 (2)
102026 (1)
258696 (1)

#2-4/0-#2

FOR FIELD MAINTENANCE ONLY

13-H

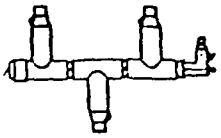

326578 (3)
547324 (1)
544856 (1)
544832 (2)
443456 (1)
102026 (3)
258696 (3)

4/0-4/0-4/0-#2

14-AG

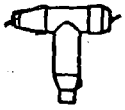

326578 (1)
544856 (1)
544832 (1)
102034 (1)
258704 (1)
570608 (1)

750

14-BG

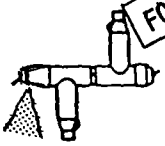

326578 (2)
544856 (1)
570608 (1)
544832 (2)
102034 (2)
258704 (2)

750-750

14-C

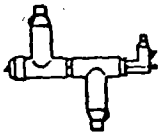

326578 (2)
544856 (1)
547324 (1)
544832 (1)
443456 (1)
102034 (2)
258704 (2)

750-750-#2

14-D

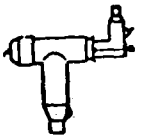

326578 (1)
544856 (1)
547324 (1)
443456 (1)
102034 (1)
258704 (1)

750-#2

14-EG

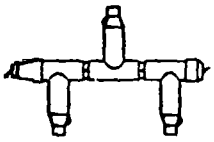

326578 (3)
544856 (1)
570608 (1)
544832 (3)
102034 (3)
258704 (3)

750-750-750

14-F

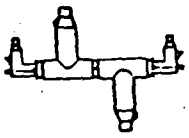

326578 (2)
547324 (1)
547318 (1)
544832 (1)
443456 (2)
102034 (2)
258704 (2)

#2-750-750-#2

14-G

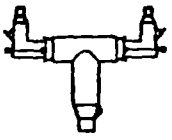

326578 (1)
547324 (1)
547318 (1)
443456 (2)
102034 (1)
258704 (1)

#2-750-#2

14-H

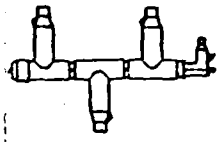

326578 (3)
547324 (1)
544856 (1)
544832 (2)
443456 (1)
102034 (3)
258704 (3)

750-750-750-#2

15-AG

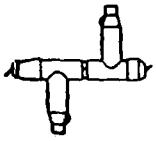

326578 (2)
544856 (1)
570608 (1)
544832 (2)
102034 (1)
258704 (1)
102026 (1)
258696 (1)

750-4/0

15-BG

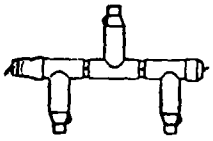

326578 (3)
544856 (1)
570608 (1)
544832 (3)
102034 (1)
258704 (1)
102026 (2)
258696 (2)

4/0-750-4/0

15-CG

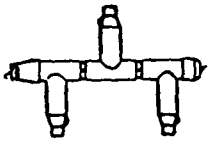

570608 (1)
544832 (3)
326578 (3)
544856 (1)
102034 (2)
258704 (2)
102026 (1)
258696 (1)

750-4/0-750

15-DG

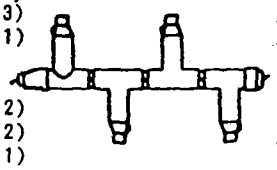

326578 (4)
544856 (1)
570608 (1)
544832 (4)
102034 (2)
258704 (2)
102026 (2)
258696 (2)

750-750-4/0-4/0

15-E

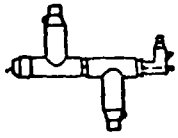

326578 (2)
544856 (1)
547324 (1)
544832 (1)
443456 (1)
102034 (1)
258704 (1)
102026 (1)
258696 (1)

750-4/0-#2

15-F

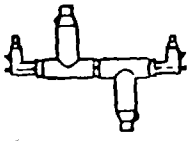

326578 (2)
547324 (1)
547318 (1)
544832 (1)
443456 (2)
102034 (1)
258704 (1)
102026 (1)
258696 (1)

#2-750-4/0-#2

15-G

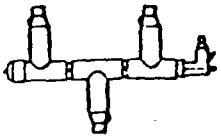

326578 (3)
547324 (1)
544856 (1)
544832 (2)
443456 (1)
102034 (2)
258704 (2)
102026 (1)
258696 (1)

750-4/0-750-#2

NOTES: 1. USED FOR ORDERING COMPONENT PARTS FROM ELECTRIC CONSTRUCTION ORDERS.

APPD JWK DATE 6-22-75	SAN DIEGO GAS & ELECTRIC COMPANY UNDERGROUND STANDARDS 15KV 200 & 600 AMP SPLICES AND CONNECTORS IDENTIFICATION CHART	4199.801

16-A

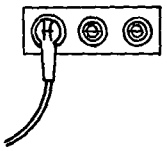

718320 (1)
443416 (1)
204304 (2)

#2

16-B

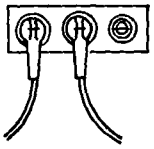

718320 (1)
443416 (2)
204304 (1)

#2-#2

16-C

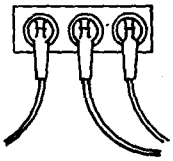

718320 (1)
443416 (3)

#2-#2-#2

16-D

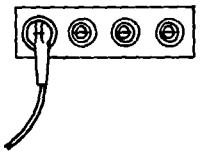

718336 (1)
443416 (1)
204304 (3)

#2

16-E

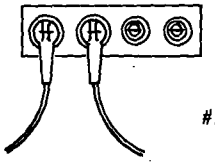

718336 (1)
443416 (2)
204304 (2)

#2-#2

16-F

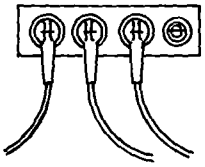

718336 (1)
443416 (3)
204304 (1)

#2-#2-#2

16-G

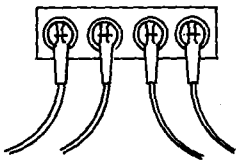

718336 (1)
443416 (4)

#2-#2-#2-#2

FOR FIELD MAINTENANCE ONLY

TABLE OF CONTENTS

17-A



326578 (1)
544848 (1)
258696 (1)
102026 (1)

4/0

17-B

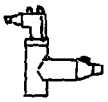

326578 (1)
547324 (1)
443456 (1)
258696 (1)
102026 (1)

4/0-#2

17-C

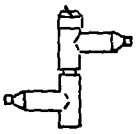

326578 (2)
544832 (1)
544848 (1)
258696 (2)
102026 (2)

4/0-4/0

18-A

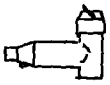

326578 (1)
544848 (1)
258704 (1)
102034 (1)

750

18-B

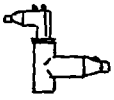

326578 (1)
547324 (1)
443456 (1)
258704 (1)
102034 (1)

750-#2

18-C

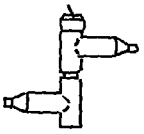

326578 (2)
544832 (1)
544848 (1)
258704 (2)
102034 (2)

750-750

NOTES:

A. USED FOR ORDERING COMPONENT PARTS FROM ELECTRIC CONSTRUCTION ORDERS.

B. IF NON-LOAD BREAK ELBOWS (443456) ARE USED SUBSTITUTE A 3 WAY CABLE TAP (718320) WITH A NON-LOAD BREAK CABLE TAP (718342)

C. WHEN USING #4 CABLE SUBSTITUTE LOAD BREAK ELBOW (#2 443416) WITH (#4 256124) ELBOW IN QUANTITIES REQUIRED ABOVE.

4199.802	SAN DIEGO GAS & ELECTRIC COMPANY UNDERGROUND STANDARDS 15KV 200 & 600 AMP SPLICES AND CONNECTORS IDENTIFICATION CHART	DATE 6-22-75 APPD JWK

12KV AND BELOW, 600 AMP - DEADBREAK SPLICE CONNECTIONS:

	666G	888G	898G	989G	999G
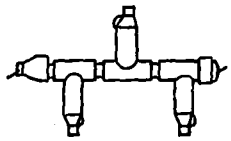	326578 (3) 544856 (1) 570608 (1) 544832 (3) 102026 (3) 258696 (3) 4/0 CU-4/0 CU-4/0 CU	326578 (3) 544856 (1) 570608 (1) 544832 (3) 102034 (3) 258704 (3) 750 AL-750 AL 750 AL	326578 (3) 544856 (1) 570608 (1) 544832 (3) 102034 (2) 258704 (2) 102050 (1) 258702 (1) 750 AL-1000 AL-750 AL	326578 (3) 544856 (1) 570608 (1) 544832 (3) 102034 (1) 258704 (1) 102050 (2) 258702 (2) 1000 AL-750 AL-1000 AL	326578 (3) 544856 (1) 570608 (1) 544832 (3) 102050 (3) 258702 (3) 1000 AL-1000 AL-1000 AL

FOR FIELD MAINTENANCE ONLY

NOTES:

I. FOR FIELD MAINTAINCE ONLY. THIS INSTALLATION SHOULD NO LONGER BE USED WHEN A FEEDER CABLE IS BRANCHED TWO OR MORE WAYS. IF FEEDER CABLE IS BRANCHED TWO OR MORE WAYS A SWITCH SHALL BE USED.

II. FOR SPECIFICATIONS AND INSTALLATIONS REFER TO PAGES 4182 AND 4196.

III. CABLE CODE: 6 - 4/0 CU, 8 - 750 AL, 9 - 1000 AL.

IV. COMPONENT CODE, SUFFIX: G - 600 AMP GROUNDABLE TEE SPLICE.

V. OTHER COMBINATIONS MAY BE CODED USING THE ABOVE CODES FOR THE SAME TYPE CONNECTIONS SHOWN ON THIS PAGE.

TABLE OF CONTENTS

DATE 1-23-80 APPD TRF	SDG&E ELECTRIC STANDARDS 12KV 600 AMP SPLICES AND CONNECTIONS IDENTIFICATION CHART	4199.803

SCOPE: THIS STANDARD SHOWS THE CONNECTIONS AND ASSEMBLY CODES USED FOR CALLING OUT 200 AMP SPLICE AND CONNECTOR ASSEMBLIES ON ELECTRIC CONSTRUCTION ORDERS.

PAD-MOUNTED AND SUBSURFACE CONNECTIONS -- 200 AMP LOADBREAK

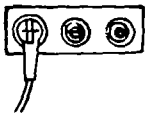	100 718312 (1) 443837 (1) 204304 (2) #2 CU	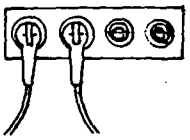	1100 718328 (1) 443837 (2) 204304 (2) #2 CU-#2 CU
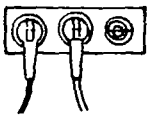	110 718312 (1) 443837 (2) 204304 (1) #2 CU-#2 CU	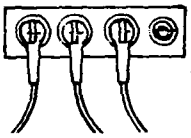	1110 718328 (1) 443837 (3) 204304 (1) #2 CU-#2 CU- #2 CU
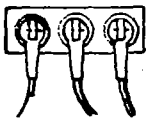	111 718312 (1) 443837 (3) #2 CU-#2 CU- #2 CU	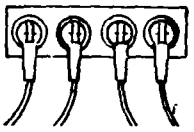	1111 718328 (1) 443837 (4) #2 CU-#2 CU- #2 CU-#2 CU
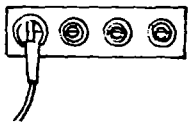	1000 718328 (1) 443837 (1) 204304 (3) #2 CU	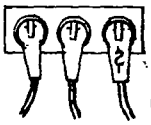 F. E. (FUSED ELBOW)	11A 718312 (1) 443837 (2) 443864 (1) #2 CU-#2 CU #2 CU F.E.

FOR FIELD MAINTENANCE ONLY

TABLE OF CONTENTS

NOTES:

- FOR SPECIFICATIONS AND INSTALLATION INSTRUCTIONS REFER TO STANDARDS 4191, & 4192.

- BELOW ARE THE KEYS TO THE CODES USED IN THE TABLES ON THIS PAGE.

CABLES
1 = #2 CU

COMPONENTS
A = #2 CU FUSED ELBOW
0 = 200 AMP INSULATING RECEPTACLE

-OTHER COMBINATIONS MAY BE CODED USING THE ABOVE CODES FOR THE SAME TYPE CONNECTIONS SHOWN.

4199.804	SDG&E ELECTRIC STANDARDS 12KV 200 AMP CONNECTOR ASSEMBLIES IDENTIFICATION CHART	DATE 1-1-87 APPD JZB/RDG

SCOPE: THIS STANDARD SHOWS THE CONNECTIONS AND ASSEMBLY CODES USED FOR CALLING OUT 200 AMP SPLICE AND CONNECTOR ASSEMBLIES ON ELECTRIC CONSTRUCTION ORDERS.

SUBSURFACE SPLICE CONNECTIONS -- 200 AMP DEADBREAK					
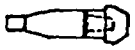	S1 544688 (1) 570304 (1) 120384 (1) #2 CU	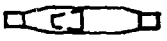	S11 570256 (1) 544688 (1) 120384 (1) #2 CU-#2 CU	S13 570256 (1) 547314 (1) 120384 (1) #2 CU-#2 AL	S15 570256 (1) 547316 (1) 120384 (1) #2 CU-2/0 AL
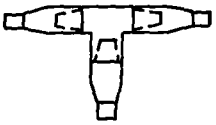	S111 570256 (2) 256112 (1) 544688 (1) 120384 (1) #2 CU-#2 CU-#2 CU	S333 570816 (2) 256112 (1) 547314 (1) 120384 (1) #2 AL-#2 AL-#2 AL	S555 570848 (2) 256112 (1) 547316 (1) 120384 (1) 2/0 AL-2/0 AL-2/0 AL		
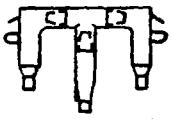	D111 256112 (1) 544688 (1) 443456 (2) 120384 (1) 120448 (2) #2 CU-#2 CU-#2 CU				
	D11 256112 (1) 544864 (1) 443456 (2) 120352 (1) 120448 (2) #2 CU-#2 CU				

FOR FIELD MAINTENANCE ONLY

NOTES:

- FOR SPECIFICATIONS AND INSTALLATION INSTRUCTIONS REFER TO STANDARDS 4191, & 4192.

- BELOW ARE THE KEYS TO THE CODES USED IN THE TABLES ON THIS PAGE.

CABLES
1 = #2 CU
3 = #2 AL
5 = 2/0 AL

COMPONENTS
D = 200 AMP TEE SPLICE
S = 200 AMP SPLICE

-OTHER COMBINATIONS MAY BE CODED USING THE ABOVE CODES FOR THE SAME TYPE CONNECTIONS SHOWN.

TABLE OF CONTENTS

DATE 1-1-87 APPD JLB/RSB	SDG&E ELECTRIC STANDARDS **12KV 200 AMP PREMOLDED SPLICE & CONNECTOR ASSEMBLIES IDENTIFICATION CHART**	4199.805

SCOPE: THIS STANDARD SHOWS THE CONNECTIONS AND ASSEMBLY CODES USED FOR CALLING OUT 200 AMP AND 600 AMP SPLICE AND CONNECTOR ASSEMBLIES ON ELECTRIC CONSTRUCTION ORDERS.

SUBSURFACE CONNECTIONS -- 200 AMP AND 600 AMP DEADBREAK				
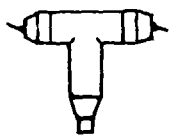	6 326578 (1) 544856 (1) 258696 (1) 102026 (1) 544848 (1) 4/0 CU			
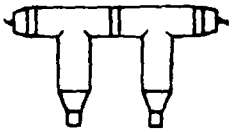	66 326578 (2) 544856 (1) 544832 (1) 102026 (2) 258696 (2) 544848 (1) 4/0 CU-4/0 CU	76 326578 (2) 544856 (1) 544832 (1) 102026 (1) 258698 (1) 102027 (1) 258696 (1) 544848 (1) 350 AL-4/0 CU	86 326578 (2) 544856 (1) 544832 (1) 102034 (1) 258704 (1) 102026 (1) 258696 (1) 544848 (1) 750 AL-4/0 CU	
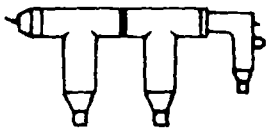	661 326578 (2) 544856 (1) 547324 (1) 544832 (1) 443456 (1) 102026 (2) 258696 (2) 4/0 CU-4/0 CU-#2 CU	771 326578 (2) 544856 (1) 547324 (1) 544832 (1) 443456 (1) 102027 (2) 258698 (2) 350 AL-350 AL-#2 CU	881 326578 (2) 544856 (1) 547324 (1) 544832 (1) 443456 (1) 102034 (2) 258704 (2) 750 AL-750 AL-#2 CU	991 326578 (2) 544856 (1) 547324 (1) 544832 (1) 443456 (1) 102050 (2) 258702 (2) 1000 AL-1000 AL-#2 CU

FOR FIELD MAINTENANCE ONLY

SUBSURFACE CONNECTIONS -- 600 AMP DEADBREAK		
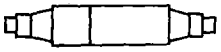	SS77 667264 (E) (1) 350 AL-350 AL	STRAIGHT SPLICE MAJOR USE: STRAIGHT SPLICE FOR SPLICING.
	STOCK NUMBER 746650 (E)	SPLICE ASSEMBLY TOOL MAJOR USE: TOOL USED FOR JOINING THE STRAIGHT SPLICE

NOTES:

- FOR SPECIFICATIONS AND INSTALLATION INSTRUCTIONS SEE STANDARDS 4182 AND 4196.
- BELOW ARE THE KEYS TO THE CODES USED IN THE TABLES ABOVE.

CABLES

1 = #2 CU
6 = 4/0 CU
7 = 350 AL
8 = 750 AL
9 = 1000 AL

COMPONENTS

SS = 600 AMP STRAIGHT SPLICE

- OTHER COMBINATIONS MAY BE CODED USING THE ABOVE CODES FOR THE SAME TYPE CONNECTIONS SHOWN.

INSTALLATION:

(E) EXEMPT MATERIAL.

TABLE OF CONTENTS

4199.806	SDG&E ELECTRIC STANDARDS 12KV 200 & 600 AMP PREMOLDED SPLICE AND CONNECTOR ASSEMBLIES IDENTIFICATION CHART	DATE 1-1-87 APPD JLB/RBL

SCOPE: THIS STANDARD SHOWS THE CONNECTIONS AND ASSEMBLY CODES USED FOR CALLING OUT 200 AMP AND 600 AMP SPLICE AND CONNECTOR ASSEMBLIES ON ELECTRIC CONSTRUCTION ORDERS.

SUBSURFACE/SURFACE OPERABLE SWITCH CONNECTIONS -- 200 AMP AND 600 AMP DEADBREAK					
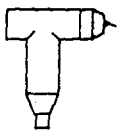	T6 326578 (1) 544848 (1) 258696 (1) 102026 (1) 4/0 CU	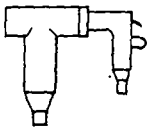	T61 326578 (1) 547324 (1) 443456 (1) 258696 (1) 102026 (1) 4/0 CU-#2 CU	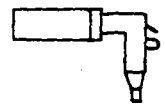	F1 336204 (1) 547324 (1) 443456 (1) #2 CU

PAD-MOUNTED SWITCH CONNECTIONS -- 200 AMP AND 600 AMP LOADBREAK					
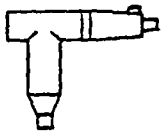	P60 326578 (1) 719600 (1) 544676 (1) 204304 (1) 258696 (1) 102026 (1) 4/0 CU	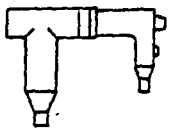	P61 326578 (1) 719600 (1) 544676 (1) 443837 (1) 258696 (1) 102026 (1) 4/0 CU-#2 CU	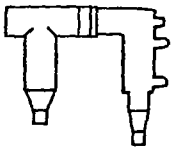	PA61 326578 (1) 719600 (1) 544676 (1) 443864 (1) 258696 (1) 102026 (1) 4/0 CU-#2 CU
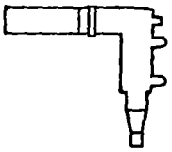	EA1 336204 (1) 719600 (1) 544676 (1) 443864 (1) #2 CU		E1 336204 (1) 719600 (1) 544676 (1) 443837 (1) #2 CU		

NOTES:

- DO NOT "PIGGYBACK" 600 AMP TEES ON TOP OF EACH OTHER AT ANY TIME ON THE SWITCH BUSHING.
- THE 200 AMP/600 AMP LOADBREAK CONFIGURATIONS ON THESE PAGES ARE ONLY TO BE USED ON PAD-MOUNTED SWITCH INSTALLATIONS.
- FOR SPECIFICATIONS AND INSTALLATION INSTRUCTIONS REFER TO STANDARDS 4182, 4191, 4192, AND 4196.
- BELOW ARE THE KEYS TO THE CODES USED IN THE TABLES ON THIS PAGE:

CABLES

1 = #2 CU
6 = 4/0 CU

COMPONENTS

A = #2 CU FUSED ELBOW
E = 600 AMP PAD-MOUNTED SWITCH BUSHING EXTENSION
F = 600 AMP SUBSURFACE/SURFACE OPERABLE SWITCH BUSHING EXTENSION
P = 600 AMP PAD-MOUNTED SWITCH TEE
O = 200 AMP INSULATING RECEPTACLE
T = 600 AMP SUBSURFACE/SURFACE OPERABLE SWITCH TEE

FOR FIELD MAINTENANCE ONLY

- OTHER COMBINATIONS MAY BE CODED USING THE ABOVE CODES FOR THE SAME TYPE CONNECTIONS SHOWN.

SDG&E ELECTRIC STANDARDS

DATE 1-1-87
APPD J.L. BIRDY

12KV 200 & 600 AMP
CONNECTOR ASSEMBLIES --IDENTIFICATION CHART

4199.807

TABLE OF CONTENTS

SCOPE: THIS STANDARD SHOWS THE CONNECTIONS AND ASSEMBLY CODES USED FOR CALLING OUT 200 AMP AND 600 AMP SPLICE AND CONNECTOR ASSEMBLIES ON ELECTRIC CONSTRUCTION ORDERS.

SUBSURFACE CONNECTIONS -- 200 AMP AND 600 AMP DEADBREAK

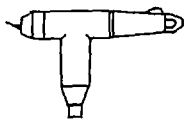	6G 326578 (1) 544856 (1) 544832 (1) 258696 (1) 102026 (1) 570608 (1) 4/0 CU	7G 326578 (1) 544856 (1) 544832 (1) 258698 (1) 102027 (1) 570608 (1) 350 AL	8G 326578 (1) 544856 (1) 544832 (1) 258704 (1) 102034 (1) 570608 (1) 750 AL	9G 326578 (1) 544856 (1) 544832 (1) 258702 (1) 102050 (1) 570608 (1) 1000 AL	
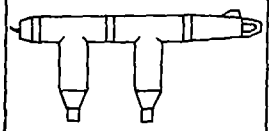	66G 326578 (2) 544856 (1) 570608 (1) 544832 (2) 102026 (1) 258696 (2) 4/0 CU-4/0 CU	76G 326578 (2) 544856 (1) 570608 (1) 544832 (2) 102026 (1) 258698 (1) 102027 (1) 258696 (1) 350 AL-4/0 CU	77G 326578 (2) 544856 (1) 570608 (1) 544832 (2) 102027 (2) 258698 (2) 350 AL-350 AL	86G 326578 (2) 544856 (1) 570608 (1) 544832 (2) 102034 (1) 258704 (1) 102026 (1) 258696 (1) 750 AL-4/0 CU	87G 326578 (2) 544856 (1) 570608 (1) 544832 (2) 102034 (1) 258704 (1) 102027 (1) 258698 (1) 750 AL-350 AL
	88G 326578 (2) 544856 (1) 570608 (1) 544832 (2) 102034 (2) 258704 (2) 750 AL-750 AL	97G 326578 (2) 544856 (1) 570608 (1) 544832 (2) 102050 (1) 258702 (1) 102027 (1) 258698 (1) 1000 AL-350 AL	98G 326578 (2) 544856 (1) 570608 (1) 544832 (2) 102034 (1) 258704 (1) 102050 (1) 258702 (1) 1000 AL-750 AL	99G 326578 (2) 544856 (1) 570608 (1) 544832 (2) 102050 (2) 258702 (2) 1000 AL-1000 AL	
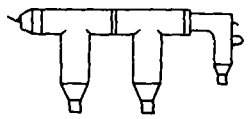	661 326578 (2) 544856 (1) 547324 (1) 544832 (1) 443456 (1) 102026 (2) 258696 (2) 4/0 CU-4/0 CU- #2 CU	771 326578 (2) 544856 (1) 547324 (1) 544832 (1) 443456 (1) 102027 (2) 258698 (2) 350 AL-350 AL- #2 CU	773 326578 (2) 544856 (1) 547324 (1) 544832 (1) 443842 (1) 102027 (2) 258698 (2) 350 AL-350 AL- #2 AL	775 326578 (2) 544856 (1) 547324 (1) 544832 (1) 443844 (1) 102027 (2) 258698 (2) 350 AL-350 AL- 2/0 AL	881 326578 (2) 544856 (1) 547324 (1) 544832 (1) 443456 (1) 102034 (2) 258704 (2) 750 AL-750 AL- #2 CU
	883 326578 (2) 544856 (1) 547324 (1) 544832 (1) 443842 (1) 102034 (2) 258704 (2) 750 AL-750 AL- #2 AL	885 326578 (2) 544856 (1) 547324 (1) 544832 (1) 443844 (1) 102034 (2) 258704 (2) 750 AL-750 AL- 2/0 AL	991 326578 (2) 544856 (1) 547324 (1) 544832 (1) 443456 (1) 102050 (2) 258702 (2) 1000 AL- 1000 AL-#2 CU	993 326578 (2) 544856 (1) 547324 (1) 544832 (1) 443842 (1) 102050 (2) 258702 (2) 1000 AL- 1000 AL-#2 AL	995 326578 (2) 544856 (1) 547324 (1) 544832 (1) 443844 (1) 102050 (2) 258702 (2) 1000 AL- 1000 AL-2/0 AL

FOR FIELD MAINTENANCE ONLY

NOTES:

- FOR SPECIFICATIONS AND INSTALLATION INSTRUCTIONS SEE STANDARDS 4182 AND 4196.

- BELOW ARE THE KEYS TO THE CODES USED IN THE TABLES ON PAGE 4181.1.

CABLES

1 = #2 CU
3 = #2 AL
5 = 2/0 AL
6 = 4/0 CU
7 = 350 AL
8 = 750 AL
9 = 1000 AL

COMPONENTS

G = 600 AMP GROUNDABLE TEE SPLICE
SS = 600 AMP STRAIGHT SPLICE

- OTHER COMBINATIONS MAY BE CODED USING THE ABOVE CODES FOR THE SAME TYPE CONNECTIONS SHOWN.

TABLE OF CONTENTS

MAJOR USE: USED AS A LATERAL TAP FROM A CIRCUIT

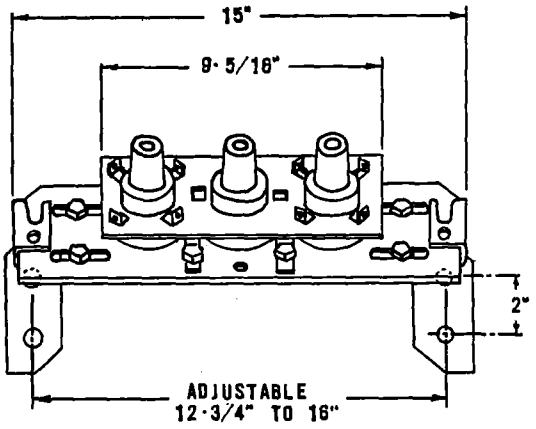

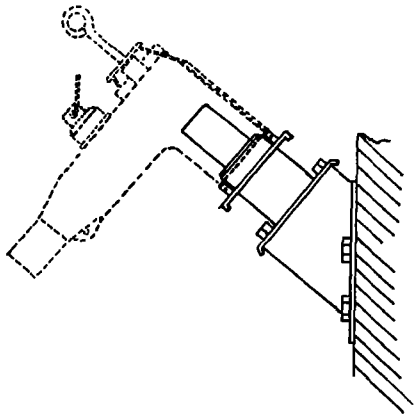

3 WAY CABLE TAP ILLUSTRATED

FOR FIELD MAINTENANCE ONLY

CABLE TAP	STOCK NO OR CONSTR. STD.
3 WAY	718342
4 WAY	718348

NOTES:

- USE ONLY FOR REPLACEMENT OF EXISTING CABLE TAP.
- CAP OFF ALL UNUSED TAPS WITH DEAD END RECEPTACLE 4197.

TABLE OF CONTENTS

DATE 8-21-81 APPD JEY	SDG&E ELECTRIC STANDARDS NON-LOADBREAK CABLE TAP	4199.901

U-41.82

INSTALLATION OF CABLE TAP
PROCEDURE

(A) TRAIN CABLE AND MARK AT DESIRED LENGTH. ALLOW ENOUGH CABLE AROUND UNIT FOR FUTURE REPLACEMENT FROM ENCLOSURE. INSTALL MOUNTING BRACKET ON SIDE OF ENCLOSURE A SUFFICIENT HEIGHT FOR LOAD BREAK ELBOW OPERATION. CUT CABLE 2 3/4" FROM CENTER OF BRACKET. MEASURE 8 1/2" FROM END OF CABLE AND BIND CONCENTRIC NEUTRAL WIRES AND TAPE, ALLOW EXTRA LENGTH ON NEUTRAL FOR GROUND CONNECTION.

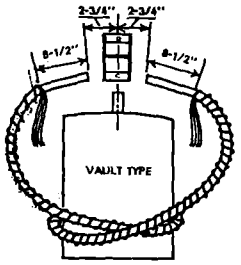

(B) REMOVE 1" OF CABLE INSULATION AND CONDUCTIVE SHIELD. LEAVE A SQUARE SHOULDER. (DO NOT PENCIL)

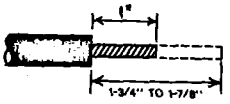

FOR FIELD MAINTENANCE ONLY

(C) CRIMP SMOOTH END OF THREADED COMPRESSION CONNECTOR ON BARED CONDUCTOR HOLDING CONNECTOR AGAINST INSULATION.

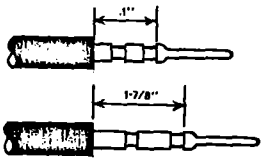

TABLE OF CONTENTS

4199.902	SDG&E ELECTRIC STANDARDS LOADBREAK CABLE TAPS INSTALLATION	DATE 12-27-73 APPD

TABLE OF CONTENTS

(D) REMOVE THE SEMI-CON SHIELD TO A POINT 7 1/2" BACK FROM THE END CONNECTOR LEAVING A SMOOTH SQUARE SHOULDER. MARK THE SEMI-CON SHIELD WITH A WRAP OF TAPE EXACTLY 8 1/2" BACK FROM THE FAR END OF THE SOCKET. BEVEL THE INSULATION SLIGHTLY.

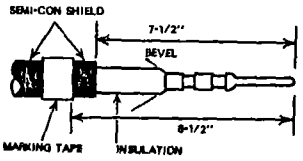

(E) REMOVE THE SMALLER PROTECTIVE CAP FROM THE CABLE ENTRANCE ON ONE OF THE CABLE TAPS. LUBRICATE THE INSIDE OF THE CABLE INSULATION WITH SILICONE GREASE.

(F) INSERT NYLON ROD APPROXIMATELY 6" INTO CABLE ENTRANCE. PUSH CABLE INTO ENTRANCE IN TWISTING MOTION UNTIL TAPE INDICATOR IS APPROXIMATELY 1" AWAY FROM THE END OF THE CABLE ENTRANCE. REMOVE THE ROD. CONTINUE TO PUSH CABLE INTO TAP UNTIL THE TAPE INDICATOR LINES UP WITH THE END OF THE CABLE TAP. WIPE EXCESS GREASE.

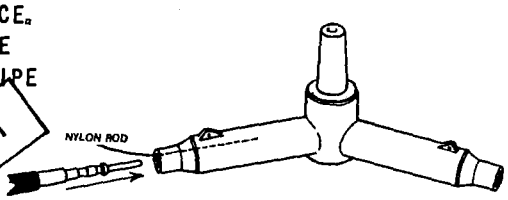

FOR FIELD MAINTENANCE ONLY

(G) CONNECT ONE OR MORE CONCENTRIC NEUTRAL WIRES TO GROUNDING EYE AND TWIST TIGHTLY. TWIST REMAINING WIRES TOGETHER AND CONNECT TO GROUND.

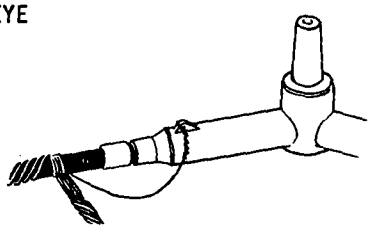

(H) REPEAT PROCEDURE B THRU G FOR OTHER SIDE.

(I) PLACE CABLE TAP IN POSITION ON BRACKET BACK PLATE. PLACE HOLDING BRACKET OVER CABLE TAP SO THAT PLUG IS ABOVE BRACKET CENTER AND SECURE TO WALL.

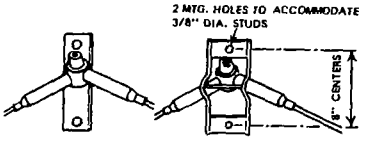

APP'D: [signature] DATE 12-27-73	SDG&E ELECTRIC STANDARDS LOADBREAK CABLE TAPS INSTALLATION	4199.903

MAJOR USE: USED AS LINE TAP ON SUBSURFACE TRANSFORMERS.

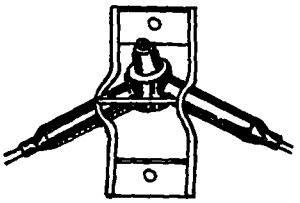

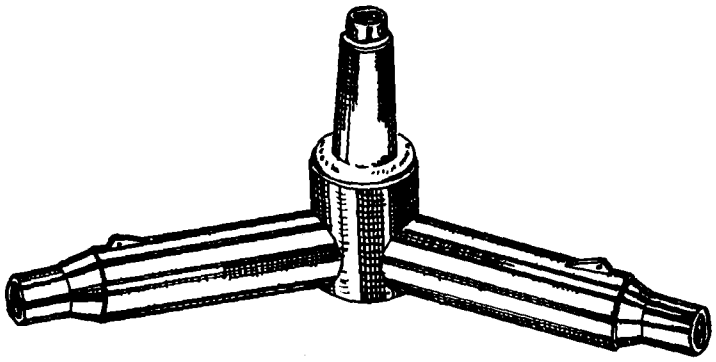

CABLE TAP

CABLE TAP FOR FIELD MAINTENANCE ONLY

STOCK NUMBER		
2 CU	718360	(A)
2 SOL AL	718266	(A)
2/0 AL	718298	(A)
2 SOL AL	718234	(B)
2/0 AL	718282	(B)

NOTES:

(A) NOT LOADBREAK RATED ON 12KV SYSTEM.

(B) INSTALL WHITE-BLACK-WHITE BAND ON BUSHING, TO IDENTIFY 12KV SWITCHING CAPABILITY (122495).

C. CABLE TAP IS COMPLETE WITH MOUNTING BRACKET.

TABLE OF CONTENTS

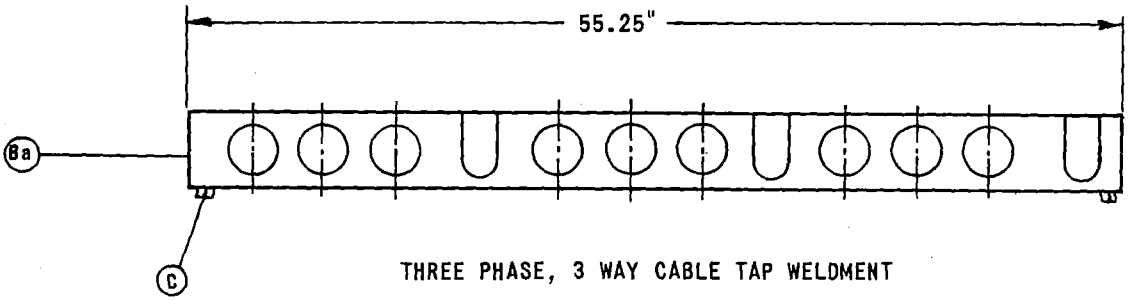

THREE PHASE, 3 WAY CABLE TAP WELDMENT

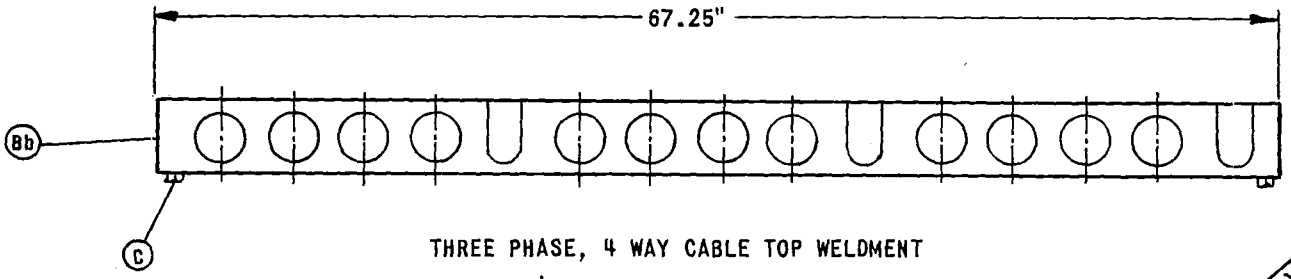

THREE PHASE, 4 WAY CABLE TOP WELDMENT

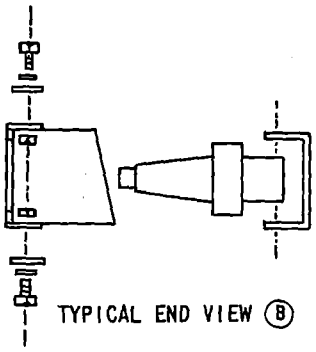

TYPICAL END VIEW (B)

THIS PAGE FOR FIELD MAINTENANCE ONLY

WELDMENT (A)	STOCK NUMBER
3 WAY	803250
4 WAY	803258

NOTES:

(A) WELDMENT TO BE USED IN SECTIONALIZING HANDHOLE PAGE 3315 WITH THREE APPROPRIATE GE CABLE TAPS (718314 OR 718338) TO ALLOW ROOM FOR MOUNTING ON ONE WALL.

(B) ASSEMBLY CONSISTS OF:
- (a) 3 PHASE, 3 WAY WELDMENT (803250), 9 "U" BRACKETS, 18 BOLTS, LOCKWASHERS, WASHERS
- (b) 3 PHASE, 4 WAY WELDMENT (803258), 12 "U" BRACKETS, 24 BOLTS, LOCKWASHERS, WASHERS

(C) GROUND WELDMENT USING 2 SERVICE POST CONNECTORS (262656).

D. USE EXTREME CAUTION WHEN ASSEMBLING CABLE TAPS IN WELDMENTS. CHECK LARGE DIAMETER HOLES FOR BUSHINGS WHEN INSERTING THEM IN WELDMENTS.

DATE 8-21-81 APPD JEX	SDG&E ELECTRIC STANDARDS LOADBREAK ACCESSORIES, 12KV AND/OR 6.9KV	4199.905

MAJOR USE:

TO ALLOW LOOP FEED THROUGH SINGLE PHASE AND OPEN DELTA 12KV DEAD FRONT TRANSFORMERS AND TO CONVERT THREE PHASE 12KV DEAD FRONT RADIAL FEED TO LOOP FEED TRANSFORMER (LOAD BREAK AT 12KV, 6.9KV AND 4.16KV, 2.4KV)

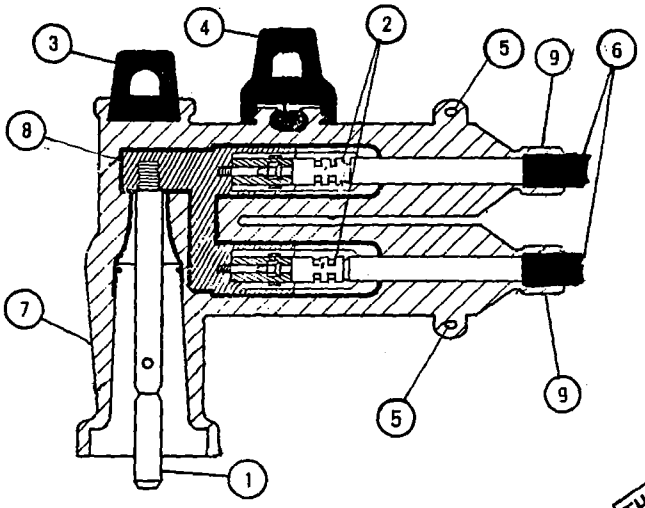

THIS PAGE FOR FIELD MAINTENANCE ONLY

ATTENTION:

THIS DEVICE IS DESIGNED FOR OPERATION AS A LOADBREAK DEVICE ON 12.0, 6.9 & 4.16KV SYSTEMS. HOWEVER, IF IT IS INSTALLED ON A 12KV SYSTEM WITHOUT A 12KV RATED BUSHING, A TAG (3232) "DO NOT OPERATE ENERGIZED" IS THEN ATTACHED.

RATINGS	
KV	14.4
AMPERES	200
LOAD BREAK OR LOAD MAKE 20 OPERATIONS	200 AMPS AT 70-80 % POWER FACTOR
FAULT CLOSE RMS SYMMETRICAL AMPERES	15,000

SPARE PARTS	STOCK NO.
GE 2 SOL AL PROBE CONNECTOR	260850
GE 2/0 AL PROBE CONNECTOR	260854
SILICON GREASE	391424
MALE CONTACT PROBE	444425

NO.	PARTS	STOCK NO. OR CONSTR. STD.
1	MALE CONTACT PROBE	2 SOL AL (443846) OR 2/0 AL (443848)
2	PROBE CONNECTORS	
3	ELBOW PULLING EYE	
4	VOLTAGE TEST POINT AND COVER	
5	GROUNDING EYES	
6	CABLES (D)	
7	ELBOW	
8	ELECTRICAL BUS	
9	WHITE-BLACK-WHITE ID BANDS (E)	

NOTES:

A. UNDER PROPER SUPERVISION THIS ELBOW MAY BE USED AS A LOAD BREAK DEVICE AT 12KV AND BELOW. REFER TO 4107 FOR OPERATING INSTRUCTIONS ON 12KV SYSTEMS TO AVOID FERRORESONANCE.

B. FOR INSTALLATION PROCEDURES CONSULT INDIVIDUAL MANUFACTURERS CONTAINERS FOR CURRENT INSTRUCTIONS.

C. REFER TO FOLLOWING PAGES FOR INSTRUCTIONS.

(D) FOR INSULATING PLUG, INSTEAD OF CABLE, USE 544860 FOR 2 SOL AL OR 544852 FOR 2/0 AL.

(E) WHITE-BLACK-WHITE BAND IDENTIFIES ELBOW THAT CAN BE USED FOR 12KV (2 OR 3 PHASE) SWITCHING WITH 12KV RATED BUSHING AND 6930 VOLT (1 PHASE) SWITCHING.

TABLE OF CONTENTS

I. APPLICATIONS:

A. 12KV - SINGLE PHASE DEADFRONT TRANSFORMER, FOR CONVERSION TO LOOP FEED, WITH NOT MORE THAN THREE TRANSFORMERS BEYOND FIRST 'PIGGYBACK'. (PAGE 3712)

B. 12KV - THREE PHASE RADIAL FEED TRANSFORMER, FOR CONVERSION TO LOOP FEED TRANSFORMER, WITH NOT MORE THAN THREE TRANSFORMERS BEYOND FIRST 'PIGGYBACK'.

C. 12KV - OPEN DELTA TRANSFORMER INSTALLATION. (PAGE 3713)

II INSTALLATIONS:

A. 12KV - SINGLE PHASE DEADFRONT TRANSFORMERS. USE STANDARD PAGE 3712 WITH SUBSTITUTION OF TWO 'PIGGYBACK' ELBOWS AND ADDITION OF TWO MORE CABLES WITH CONDUIT(S).

B. 12KV - THREE PHASE RADIAL FEED DEADFRONT TRANSFORMERS. USE STANDARD PAGE 3751.1 WITH SUBSTITUTION OF THREE 'PIGGYBACK' ELBOWS AND ADDITION OF THREE MORE CABLES WITH CONDUIT(S). IF LATERAL IS TO BE EXTENDED AT LATER DATE, CABLE CAN BE CONNECTED FROM TRANSFORMER TO TERMINATOR INITALLY. THIS ALLOWS LATER EXTENSION FROM TERMINATOR. CONSIDERATION FOR LOOP FEED TRANSFORMER SHOULD BE GIVEN ALSO IN THIS CASE, INSTEAD OF 'PIGGYBACK' AND TERMINATOR.

C. 12KV - OPEN DELTA TRANSFORMERS. USE STANDARD PAGE 3713. IF NECESSARY TO LOOP THROUGH OPEN DELTA BANK, USE THREE ADDITIONAL 'PIGGYBACK' ELBOWS.

III OPERATING PROCEDURES:

A. TRANSFORMER ISOLATION-

1. PLACE STANDOFF BUSHINGS IN PARKING STANDS.
2. PLACE 'PIGGYBACK' ELBOWS ON STANDOFF BUSHINGS, TRANSFORMER ISOLATED.

B. CABLE ISOLATION - (START AT SOURCE TRANSFORMER)

THIS PAGE FOR FIELD MAINTENANCE ONLY

1. PLACE FEED THRUS IN PARKING STANDS.
2. PLACE GROUND ROD IN EACH FEED THRU.
3. OPEN CIRCUIT ON SOURCE SIDE OF TRANSFORMER.
4. TEST 'PIGGYBACK' ELBOWS, IF DEAD.
5. PLACE 'PIGGYBACK' ELBOW ON ITS RESPECTIVE FEED THRU, GROUNDING CABLE VISIBLY.
6. GROUND ALL POSSIBLE SOURCES TO EACH 'PIGGYBACK'.
7. REMOVE CABLE TO BE ISOLATED FROM EACH 'PIGGYBACK' BY HAND.

DUE TO THE DIFFICULTY IN THE DISSASSEMBLY PROCESS, IT IS NECESSARY TO MAKE THIS A TWO MAN OPERATION.

THE PIGGY BACK ELBOW THAT IS TO BE DISSASSEMBLED MUST BE REMOVED FROM TRANSFORMER OR STAND OFF BUSHING AND HELD TO THE LEFT HAND SIDE OF TRANSFORMER AS LOW AS POSSIBLE. THEN THE OTHER PERSON CAN WITH A PULLING TWISTING MOTION REMOVE THE CABLE FROM THE ELBOW.
THIS POSITIONING OF ELBOW WILL GIVE THE MAXIMUM PULLING POWER FOR REMOVAL OF CABLE.

8. INSERT NYLON ROD INTO EACH PIGGYBACK ELBOW (STOCK NUMBER 544852 OR 544860) SEALING CABLE ENTRANCE.
9. REMOVE GROUNDS FROM SOURCE TO EACH PIGGYBACK AND PLACE PIGGYBACKS ON BUSHINGS.
10. CLOSE CIRCUIT ON SOURCE SIDE OF TRANSFORMER.
11. ISOLATE CABLES AT OTHER ENDS IN SIMILAR MANNER.
12. REMOVE GROUND RODS AND FEED THRUS.

NOTE:

A. TEMPORARY BY-PASS CABLE MAY BE INSERTED INTO PIGGYBACK ELBOW INSTEAD OF NYLON ROD IN ORDER TO JUMPER FAILED CABLE.

TABLE OF CONTENTS

MAJOR USE :
USED ON SUBSURFACE, LOW PROFILE PAD-MOUNT TRANSFORMERS AND LOADBREAK CABLE TAPS.
(LOADBREAK ON 6.9KV AND 4.16KV SYSTEMS ONLY)

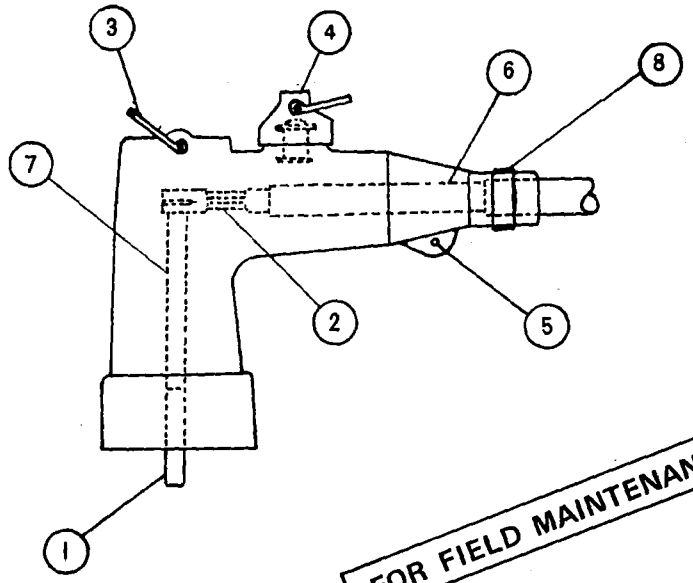

FOR FIELD MAINTENANCE ONLY

ATTENTION: THIS ELBOW IS DESIGNED FOR OPERATION AS A LOADBREAK DEVICE ON 6.9 & 4.16KV SYSTEMS ONLY. HOWEVER, IF IT IS INSTALLED ON A 12KV SYSTEM, A TAG (3232) " DO NOT OPERATE ENERGIZED" IS THEN ATTACHED.

RATINGS	
KV	8.3
AMPERES	200
KV-BIL	95
LOADBREAK OR LOADMAKE 10 OPERATIONS	200 AMPS AT 70-80 % POWER FACTOR
FAULT CLOSE RMS SYMMETRICAL AMPERES	10,000

NO.	PARTS	STOCK NO. OR CONSTR. STD.
1	ARC FOLLOWER	
2	COMPRESSION SOCKET TERMINAL	256124 (#4 CU)
3	ELBOW PULLING EYE	
4	VOLTAGE TEST POINT & COVER	OR
5	GROUNDING POINT(S)	
6	CABLE	443416 (#2 CU)
7	ELECTRICAL MALE CONTACT	
8	WHITE IDENTIFICATION BAND (D)	

NOTES:

A. ITEMS ABOVE ACCOMMODATE EITHER #2 OR #4 AWG COPPER CONDUCTORS
B. UNDER PROPER SUPERVISION THIS ELBOW MAY BE USED AS A LOADBREAK DEVICE AT 6.9KV AND BELOW.
C. FOR INSTALLATION PROCEDURES CONSULT INDIVIDUAL MANUFACTURERS CONTAINERS FOR CURRENT INSTRUCTIONS.
(D) WHITE BAND IDENTIFIES ELBOW THAT CAN ONLY BE USED FOR SWITCHING ON A 6939 VOLT (1 PHASE) SYSTEM.

SDG&E ELECTRIC STANDARDS

DATE 6-3-83
APPD RES RJB

LOADBREAK ELBOW CONNECTOR, 6930 VOLTS AND BELOW

4199.908
SUPERSEDES 4191.1 (5-20-83)

TABLE OF CONTENTS

MAJOR USE: 3-WAY – USED AS A LATERAL TAP FROM A CIRCUIT.

4-WAY – USED TO ESTABLISH TWO LATERAL TAPS OR A LOOP FROM A CIRCUIT.

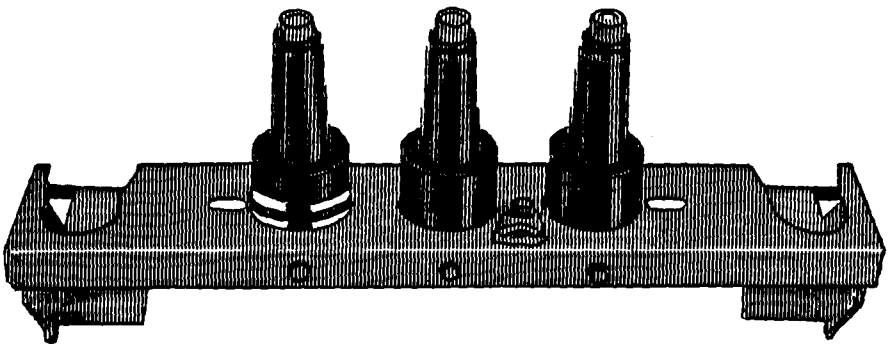

3-WAY CABLE TAP

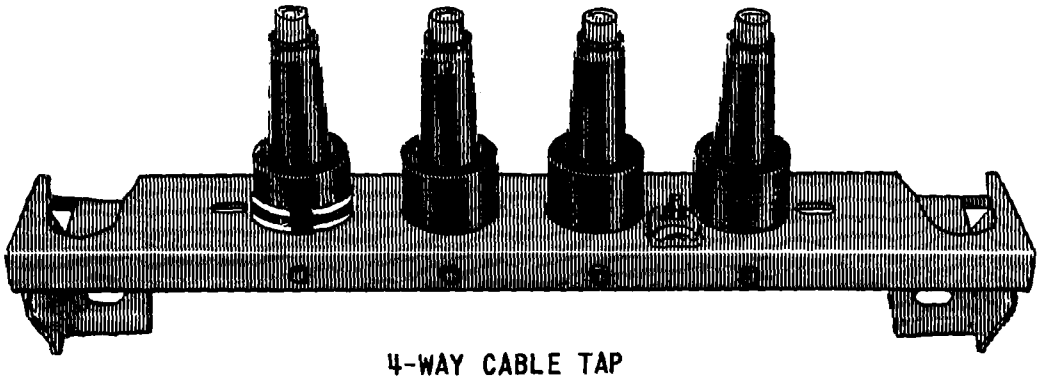

4-WAY CABLE TAP

TABLE OF CONTENTS

FOR FIELD MAINTENANCE ONLY

CABLE TAP WITH BRACKET	STOCK NUMBER
3-WAY	718320 (A)
4-WAY	718336 (A)
3-WAY	718312 (B)
4-WAY	718328 (B)

CABLE TAP (D) WITHOUT BRACKET	STOCK NUMBER
3-WAY	718314 (B)
4-WAY	718338 (B)

NOTES:

(A) NOT LOADBREAK RATED ON 12KV SYSTEM.

(B) INSTALL ONE WHITE-BLACK-WHITE BAND ON THE LEFT BUSHING (WITH A RED MARK), TO IDENTIFY 12KV SWITCHING CAPABILITY (122495).

C. CAP OFF ALL UNUSED TAPS WITH INSULATING RECEPTACLE (204304).

(D) CABLE TAPS PURCHASED WITHOUT BRACKET TO BE USED FOR REPLACEMENT PURPOSES IN CABLE TAPS WITH BRACKETS. IF NOT AVAILABLE, USE CABLE TAP WITH BRACKET AND SAVE BRACKET.

4199.909 SUPERSEDES 192.02 (5-20-83)	SDG&E ELECTRIC STANDARDS LOADBREAK ACCESSORIES, 12KV AND/OR 6.9KV	DATE 6-3-83 APPD

MAIN TABLE OF CONTENTS

PAGE	SUBJECT
4299.001	JOINT CABLE POLE RISERS USING WOODEN LADDER ARMS
4299.002	CABLE POLE RISER INSTALLATION, CABLE-IN-CONDUIT
4299.003-.008	3 PHASE CABLE POLE RISER INSTALLATION, CABLE-IN-CONDUIT
4299.009	3 PHASE CABLE POLE RISER INSTALLATION, MODIFICATION FROM SINGLE TO DOUBLE RISER
4299.010-.011	CABLE POLE TERMINAL MOUNTING INFORMATION (PORCELAIN TERMINATIONS) (FOR CONTAMINATION DISTRICT 1)
4299.101	0-750V CUSTOMER OWNED UNDERGROUND SERVICE FROM AND OVERHEAD LINE, ONE DUCT
4299.104	0-750V VOLT THREE AND FOUR DUCT RISER SUPPORTS
4299.201-.202	CROSSARM MOUNTED TERMINALS, 4KV, 4-WIRE SYE
4299.203-.206	12.47KV AND BELOW 3 PHASE CABLE POLE 1/C PER PHASE, LINE ARM MOUNTED DISCONNECTS
4299.301-.302	BRACKET MOUNTED TERMINALS, 12KV, 3-WIRE ARMLESS TANGENT CONSTRUCTION
4299.303-.304	BRACKET MOUNTED TERMINALS, 12KV, 3-WIRE ARMLESS DEADEND CONSTRUCTION
4299.305-.306	12.47KV AND BELOW CABLE POLE, UPSWEEP BRACKET, 3 PHASE 1/C PER PHASE, LINE ARM MOUNTED DISCONNECTS
4299.307-.309	CROSSARM CABLE POLE 3 PHASE 1/C PER PHASE DEADEND CONSTRUCTION, 12.47KV AND BELOW
4299.401-.403	12.47KV AND BELOW DEAD END CABLE POLE ARM, 3 PHASE, 1/C PER PHASE, HOOKSTICK SWITCHED
4299.501-.503	CABLE POLE, STEEL, LIGHT DUTY
4299.504-.506	12.47KV AND BELOW DEAD END CABLE POLE, 6 OR 7 OH CONDUCTORS, 1 OR 2 TERMINALS PER CONDUCTOR, HOOKSTICK SWITCHED
4399.501-.502	FAULT INDICATOR INSTALLATION
4499.101	NUMBERING ORNAMENTAL STREET LIGHT POLES
4499.201	MERCURY VAPOR CONVENTIONAL LUMINAIRES
4499.203-.204	HIGH PRESSURE SODIUM VAPOR LUMINAIRE AND REPLACEMENT BALLAST
4499.701	STREET LIGHTING - MULTIPLE MERCURY VAPOR BALLAST
4499.702	FOUNDATION DETAIL PRESTRESSED CONCRETE LIGHT STANDARD
4599.001	3312 HANDHOLE STEEL COVER GROUNDING
4599.201-.202	EQUIPMENT GROUNDING INSTALLATION
4599.203	PAD GROUNDING INSTALLATION (PREFERRED II)
4599.204	PAD GROUNDING INSTALLATION

© 1998 - 2019 San Diego Gas & Electric Company. All rights reserved. Removal of this copyright notice without permission is not permitted under law.

REV	CHANGE	BY	DSGN	APPV	DATE	REV	CHANGE	BY	DSGN	APPV	DATE
C						F					
B	COMPLETELY REVISED	JK	JS	CZH	10/16/2019	E					
A	ORIGINAL ISSUE	JK	JS	CZH	6/13/2019	D					

Indicates Latest Revision | X Completely Revised | New Page | Information Removed

SDG&E ELECTRIC UNDERGROUND FIELD MAINTENANCE ONLY STANDARDS

LEGACY UNDERGROUND FIELD MAINTENANCE
TABLE OF CONTENTS
CABLE POLES, FUSES, FAULT INDICATORS, LIGHTING, GROUNDING

SCOPE: THIS STANDARD: 1) SHOWS THE STANDARD CABLE POLE RISER POSITIONS FOR SDG&E, TELCO, AND CATV COMPANIES. IT IS FOR RISER PLACEMENT ONLY (SEE SECTION 1400/4200 FOR SPECIFIC CONSTRUCTION DETAILS).

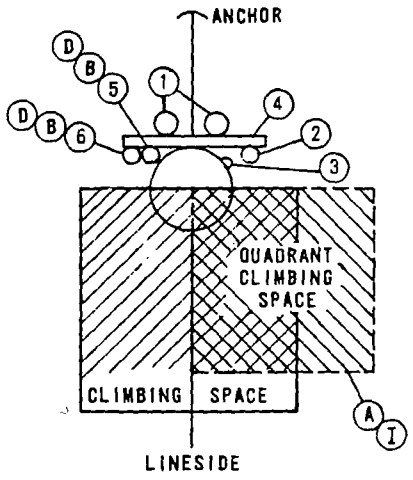

FIGURE 1

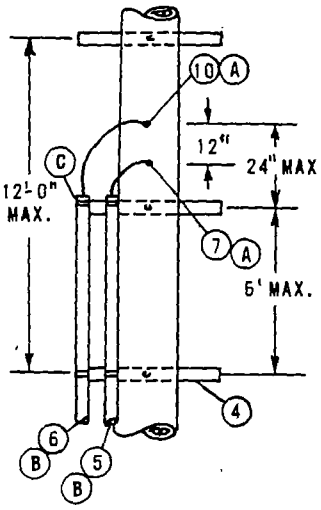

FIGURE 2

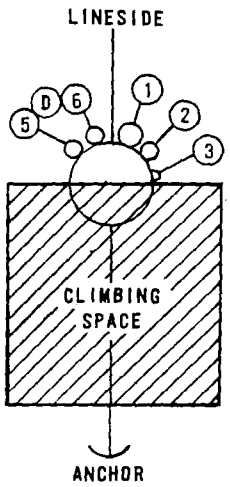

FIGURE 3

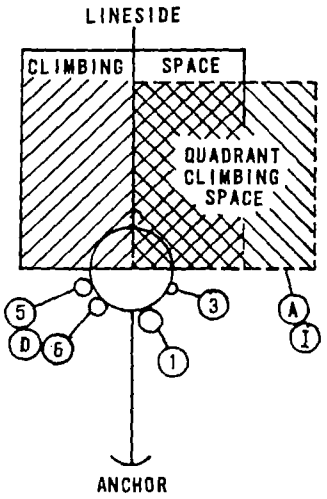

FIGURE 4

DEAD END CONSTRUCTION

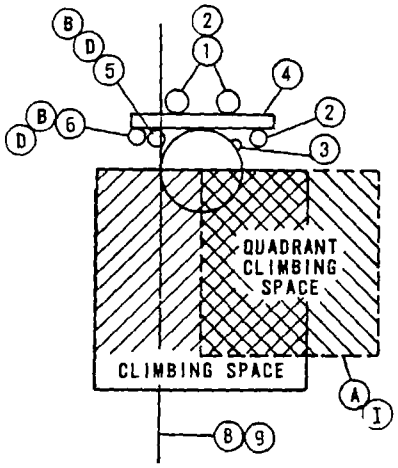

FIGURE 5

FOR FIELD MAINTENANCE ONLY

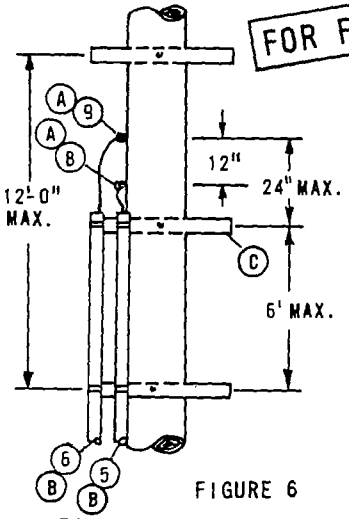

FIGURE 6

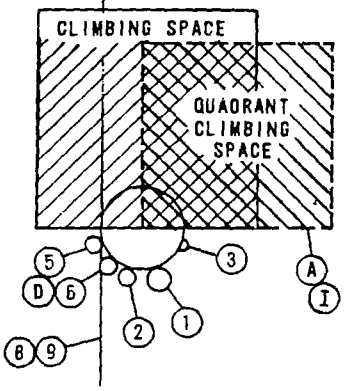

FIGURE 7

TANGENT CONSTRUCTION

INSTALLATION:

(A) QUADRANT CLIMBING SPACE PROVIDED THROUGH CATV AND TELCO AERIAL ATTACHMENT LEVELS ONLY.

(B) C.A.T.V. AND TELCO TO ATTACH CONDUIT TO BACK SIDE OF RISER LADDER ARMS.

(C) C.A.T.V. OR TELCO TO PLACE RISER LADDER ARM TO HOLD TOP OF OWN CONDUIT.

(D) C.A.T.V. AND TELCO TO ALWAYS BE IN SAME QUADRANT.

F. CONDUIT RISER AT BASE OF POLE NOT TO INFRINGE ON CURB OR SIDEWALK POSITIONS.

REFERENCES:

G. PVC RISERS ARE NOT PERMITTED WITHIN THE CLIMBING SPACE PER G.O. 95 RULE 22.2C.

H. G.O. 95 RULE 91.3-A1C REQUIRES POLE STEPS ON ALL JOINTLY USED CABLE POLES (SEE STANDARD 363).

I. SEE SECTION 200 FOR ALLOWABLE G.O. 95 CLIMBING SPACE OBSTRUCTIONS.

J. NO CATV OR TELCO JUMPERS ALLOWED IN QUADRANT CLIMBING SPACE PER G.O. 95 RULE 84.7.

ITEM	DESCRIPTION	ITEM	DESCRIPTION
1	SDG&E PRIMARY RISER	6	C.A.T.V. RISER POSITION
2	SDG&E SECONDARY RISER	7	TELCO DEAD END ATTACHMENT
3	SDG&E ELECTRIC GROUND	8	TELCO TANGENT (THRU) POSITION
4	RISER LADDER ARM	9	C.A.T.V. TANGENT (THRU) POSITION
5	TELCO RISER POSITION	10	C.A.T.V. DEAD END ATTACHMENT

DATE 11-16-81
APPD JEG

SDG&E ELECTRIC STANDARDS

JOINT CABLE POLE RISERS USING WOODEN LADDER ARMS

~~OH 1499.001~~
UG 4299.001
SUPERCEDES
4202.1 (3-31-81)

TABLE OF CONTENTS

SCOPE: THIS STANDARD SHOWS THE CONSTRUCTION FOR SINGLE-PHASE PRIMARY AND SECONDARY CABLE-IN-CONDUIT (CIC) INSTALLATIONS.

CABLE AND CONDUIT TABLE

RISER EXTENSION	CABLE POLE RISER	PRIMARY IN CONDUIT (PID)	SECONDARY IN CONDUIT (SIDA)
3"	3" (D)	1	1-(2-3/0, 1-1/0 & SMALLER)
4"	3"	2	1-(2-350 KCMIL, 1-1/0) (B)
5"	3"	(H)	2-(2-3/0, 1-1/0 ONLY) (C)

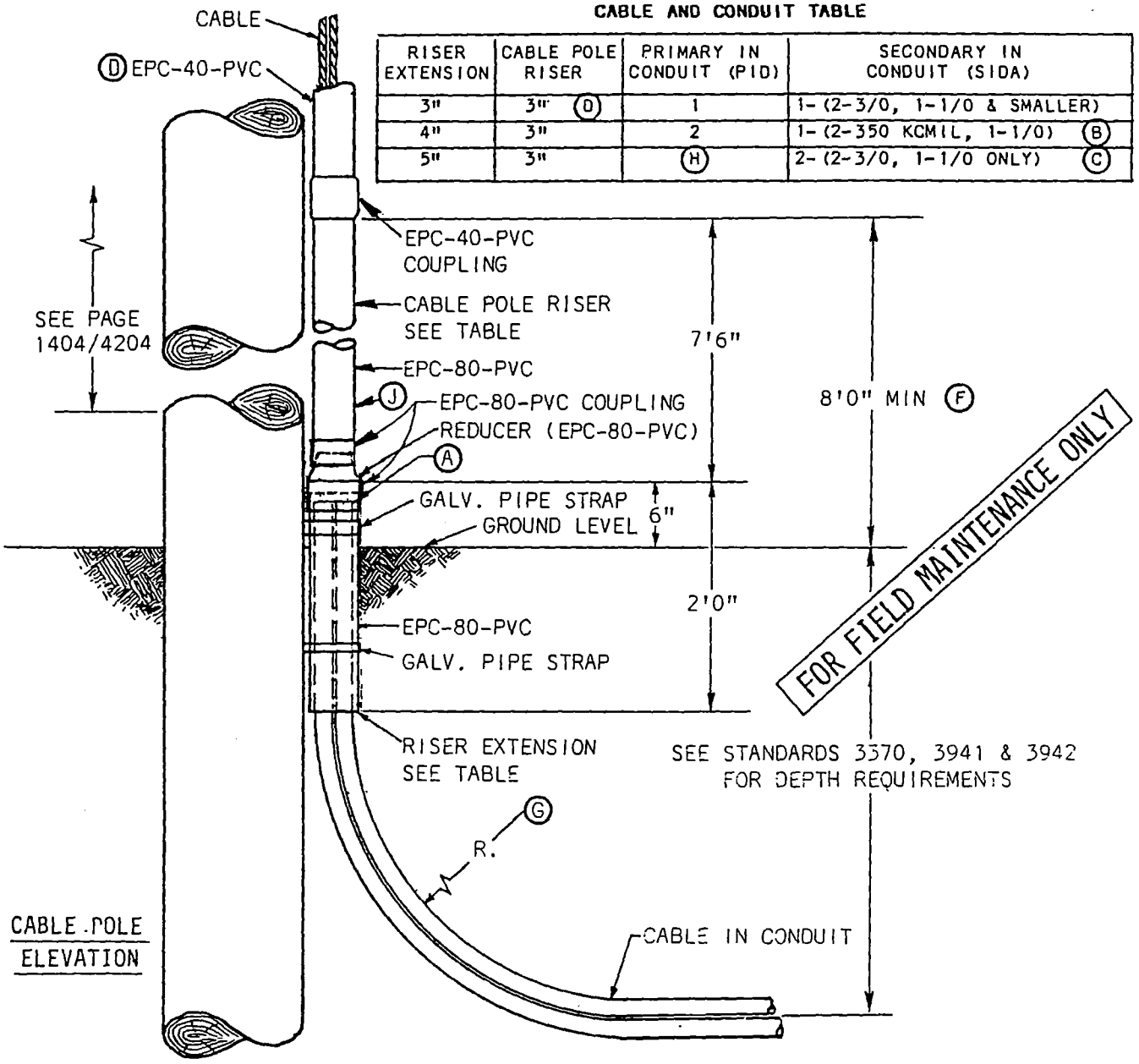

NOTES: NO MORE THAN TWO CIC CONDUITS FOR A RIGID CONDUIT RISER IS ALLOWED.

INSTALLATION:

(A) CUT CONDUIT FROM CABLE-IN-CONDUIT 4 INCHES ABOVE GROUND LEVEL.

(B) THE 350 KCMIL CABLE-IN-CONDUIT (SIDA) SHALL NOT BE USED FOR SERVICES. IF A SERVICE REQUIRES 350 CABLE, USA CABLE AND RIGID CONDUIT MUST BE USED.

(C) FOR 2 RUNS OF SIDA IN ONE RISER, DERATE AMPACITY 20%.

(D) FOR 3/0 AND SMALLER SIDA, REDUCE THE TOP PORTION OF THE RISER ABOVE THE 8 FOOT LEVEL TO 2 INCH CONDUIT.

REFERENCE:

(F) RISERS OF PLASTIC PIPE SHALL BE EPC-80-PVC (SCHEDULE 80) WITH A MINIMUM NOMINAL PIPE SIZE OF 3 INCHES FROM THE GROUND LINE TO A LEVEL NOT LESS THAN 8 FEET ABOVE THE GROUND LINE PER G.O. 95, RULE 54.6-E.

(H) SEE PAGES 1499.003/4299.003 THRU 1403.7/4203.7 FOR THREE-PHASE PRIMARY CABLE IN CONDUIT INSTALLATION WHICH REQUIRES 'U' SHAPED MOULDING.

(I) SEE PAGE 1404.1/4204.2 FOR CABLE POLE RISER BILL OF MATERIAL.

(J) SEE PAGES 1499.009/4299.009 THRU 1405.3/4205.3 FOR MULTIPLE RISER INSTALLATION.

TABLE OF CONTENTS

~~OH 1499.002~~	SDG&E ELECTRIC STANDARDS	
UG 4299.002 MERCEDES 4203.1 (3-2-84)	CABLE POLE RISER INSTALLATION CABLE-IN-CONDUIT	DATE 1-1-87 APPD

SCOPE: THIS STANDARD SHOWS THE MATERIALS AND PROCEDURES FOR TERMINATING THREE PREASSEMBLED CABLE-IN-CONDUIT ON RISER POLE.

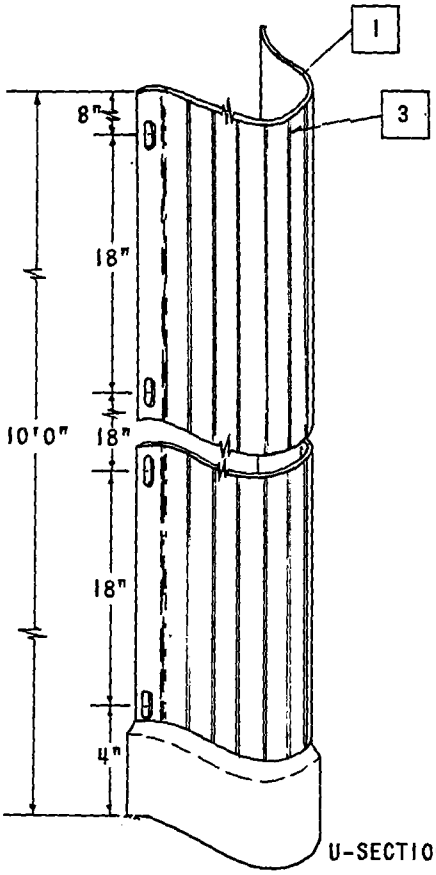

U-SECTION

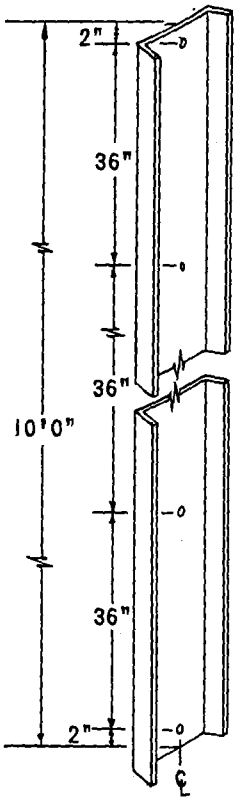

BACKUP PLATE

FOR FIELD MAINTENANCE ONLY

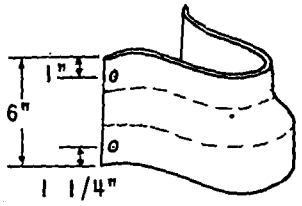

REDUCER BOOT

NOTE: DIMENSIONS A, B, & C HAVE A TOLERANCE OF ± .13".

BILL OF MATERIAL:

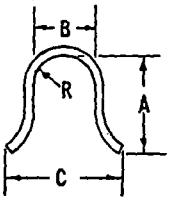

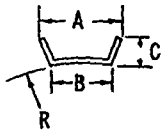

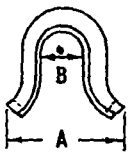

	U-SECTION MOLDING			BACKUP PLATE		REDUCER BOOT		
SIZE	3"	3"	4"	3"	4"	3" TO 4"		
SCHEDULE	80	30	40	N/A	N/A	N/A		
LENGTH	10'0"	10'0"	10'0"	10'0"	10'0"	6"		
M & S NO.	600064	600032	600096	542992	542994	160608		
A	3 3/8"	3 3/8"	4 1/8"	3 1/4"	4 1/4"	8 1/4"		
B	3"	3"	4"	2 5/8"	3 5/8"	2 5/8"		
C	6 1/4"	6 1/4"	7 1/4"	7/8"	1"	--		
R	1 7/16"	1 19/32"	2"	5"	5"	--		
WALL THICKNESS	.300"	.150"	.237"	.063"	.063"	.150"		
TOLERANCE	-.0" +.036"	-.0" +.020"	-.0" +.020"	±.015"	±.015"	-.0" +.015"		

DATE 1-1-87
APPD JAB/RDB

SDG&E ELECTRIC STANDARDS

3Ø CABLE POLE RISER INSTALLATION
CABLE-IN-CONDUIT

~~OH 1499.003~~
UG 4299.003
SUPERCEDES 4203.7
(1-4-80)

TABLE OF CONTENTS

SEQUENCE FOR INSPECTION

SEQ	DESCRIPTION/DIMENSIONS			TOLERANCE
1	WALL THICKNESS			
	U-Sections	3"	Sch. 80 .300	-.0" + .036"
		3"	Sch. 30 .150"	-.0" + .020"
		4"	Sch. 40 .237"	-.0" + .020"

Above wall thicknesses are in accordance with G.O. 95 Rule 54.6D2.

2 GENERAL APPEARANCE ALL SURFACES

U-Sections, Backup Plates and Reducer Boot — Free from warpage, cuts, blemishes and protrusions.

FOR FIELD MAINTENANCE ONLY

3 SCRIBE MARK

Scribe mark indicating minimum overlap distance should be visible 1" from the plain end of the U-Section.

BILL OF MATERIAL:

ITEM	*QUANTITY REQUIRED	DESCRIPTION	USE BELOW 8 FT.	USE ABOVE 8 FT.	STOCK NO. OR CONST. STDS.
1	3'	Riser, U-Section 4"x10' Sch. 40	yes	no	600096
2	1	Riser, U-Section 3"x10' Sch. 80	yes	no**	600064
3	2	Riser, U-Section 3"x10' Sch. 40	no	yes	600032
4	1	Boot, Reducer 4" to 3"	yes	no	160608
5	3	Plate, Backup 3"x10'	yes	yes	542992
6	3'	Plate, Backup 4"x10'	yes	no	542994
7	1	Screw, Lag, Sq. Head 1/2'x4" (E)	no	yes	621568
8	42	Screw, Lag, Sq. Head 1/4"x 2 1/2" (E)	yes	yes	621856
9	42	Washer, Std. Flat Round 1/4" (E)	yes	yes	799520
10	46	6d Galvanized Nails (E)	yes	yes	--
11	3	Grip, Cable 5 1/4"x12"	no	yes	394336

(E) Exempt Material

* This quantity is a typical 40' riser installation, if pole height varies from this distance adjust appropriate material accordingly.

** Only excess portion of 1 - 10 ft. 3" Sch. 80 U-Section is allowed above the 8 ft. level.

TABLE OF CONTENTS

~~OH 1499.004~~
UG 4299.004
'ERCEDES 4203.3
(11-16-81)

SDG&E ELECTRIC STANDARDS

3Ø CABLE POLE RISER INSTALLATION CABLE-IN-CONDUIT

DATE 1-1-87
APPD JLB/RTS

INSTALLATION INSTRUCTIONS

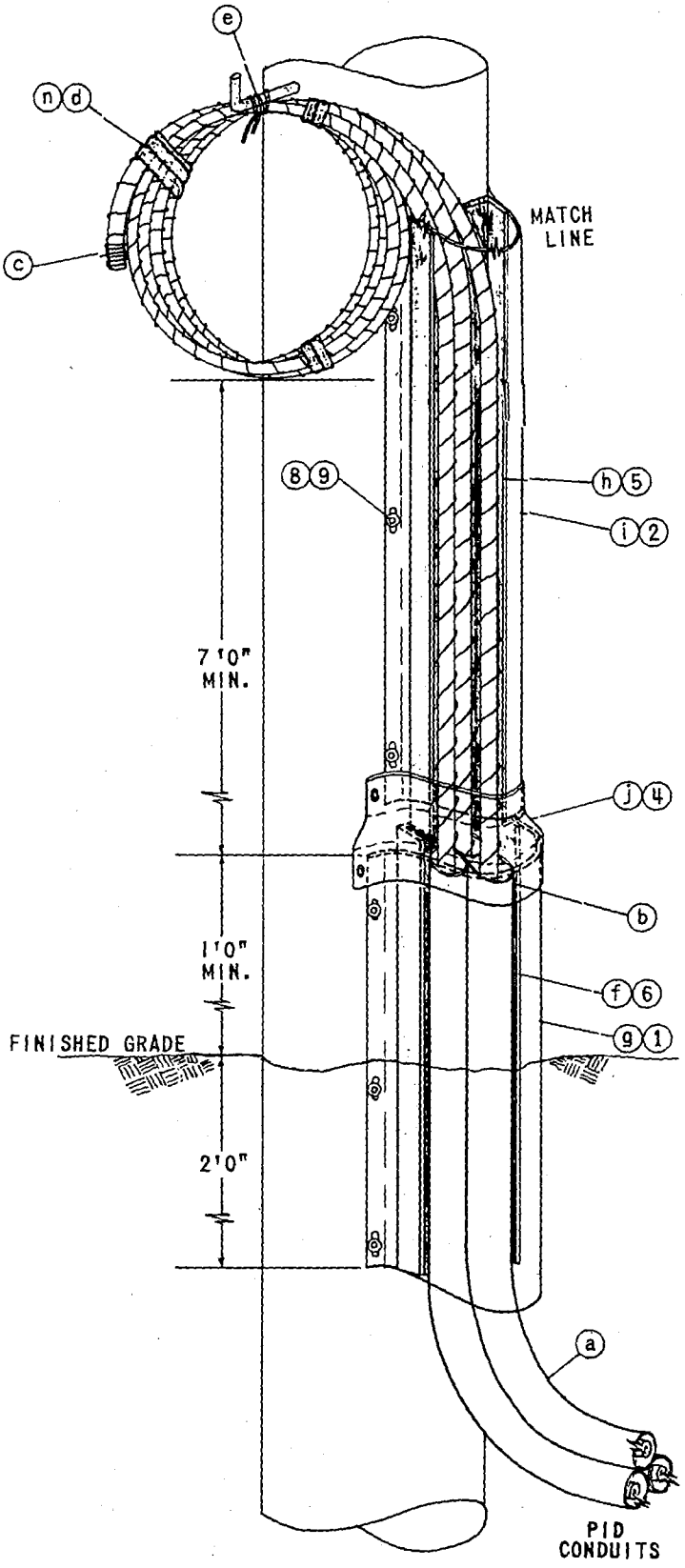

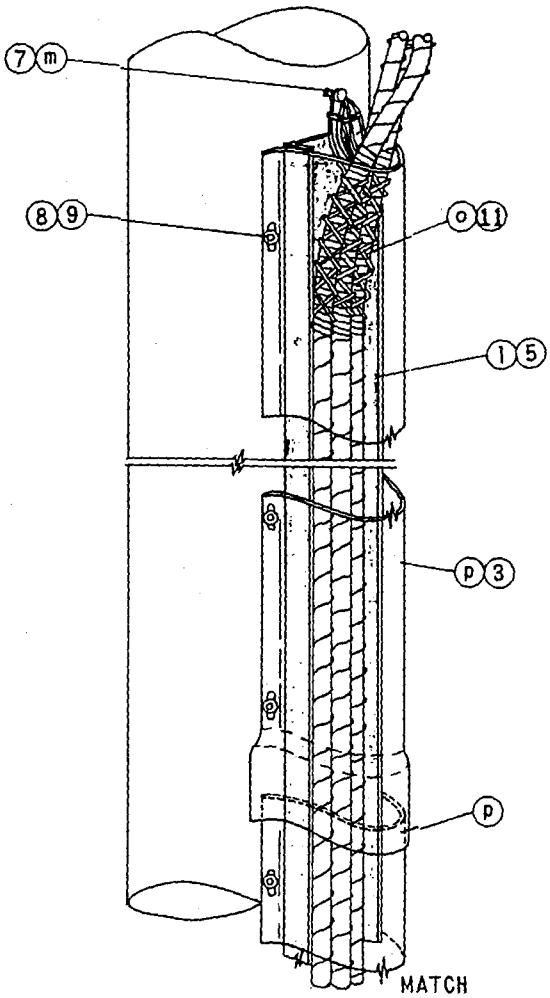

NOTE: Care must be taken not to spike conductors with linemans hooks while performing installation, ascending or descending a riser pole.

FOR FIELD MAINTENANCE ONLY

DATE 1-1-87 APPD 9-28-1987	SDG&E ELECTRIC STANDARDS 3Ø CABLE POLE RISER INSTALLATION CABLE-IN-CONDUIT	~~OH 1499.00~~ UG 4299.00 SUPERCEDES 42 (1-23-80)

FOR FIELD MAINTENANCE ONLY

U-SECTION MOLDING LOCATION

Verify that the quadrant selected by Designer/Planner for the cable pole riser meets the following requirements. If the following requirements cannot be met, contact the Designer or Planner who requested the installation:

Clearances

The U-section molding shall not enter climbing space per G.O. 95 Rule 22.2D. See O.H. Standard page 251 for allowable working and climbing space requirements.

Location of U-section molding in relation to TELCO and CATV (per Overhead Standards page 1402).

U-SECTION MOLDING INSTALLATION

Material Installation Sequence

Note: If installation can be completed sequencially, steps c, d and n, can be eliminated.

(a) Terminate PID at cable pole by forming a 36" minimum radius bend with the cable-in-conduit at the base of the pole. Provide sufficient cable-in-conduit needed to terminate cable with drip loop at terminal level before cutting cable-in-conduit from cable reel.

(b) Cut and remove excess pvc conduit from the PID run so the remaining conduit terminates 1' above finished grade. When removing excess pvc conduit, carefully slide excess conduit away from primary conductors.

(c) To prevent moisture from entering exposed conductors, always seal exposed ends of conductors with "Aquaseal" and pvc tape.

(d) Individually coil each primary conductor making sure coil is not less than 2' in diameter. Secure each coil in several places with a gray gas wrap tape to prevent conductors from uncoiling.

(e) Secure coils to the bottom of the pole step with rope to prevent conductors from damage when the pole is climbed. If pole steps are not available, install lag screws (M&S 621856) in place of pole steps. Bottom of each coil must be 8' above existing grade to prevent vandalism.

(f) Install a 3' section of 4" backup plate with 2' extended below finished grade and 1' extended above finished grade. Temporarily push conductors to one side of the riser quadrant and secure 4" backup plate to pole with 6d galvanized nails at each end and in the middle. Because holes are not provided nails must be driven through backup plate.

TABLE OF CONTENTS

TABLE OF CONTENTS

ⓖ Install a 3' section of 4" U-section molding over the previously installed backup plate (step f) encasing the conduits. Nail 4" U-section molding to pole every 18" using lag screws and washers, (items 8 and 9 from bill of materials).

ⓗ Install a 10' section of 3" backup plate behind primary conductors and mate to previously installed backup plate. Temporarily push conductors to one side of the riser quadrant to prevent damage to conductors. Use 6d galvanized nails to attach backup plate to pole starting and ending at each end.

ⓘ Install a 10' section of 3" U-section molding schedule 80, over previously installed backup plate (step h) encasing primary conductors. To permit thermal expansion, do not drive lag screws tight and leave approximately 1/4" gap between the 3" and 4" U-section moldings. Secure U-section molding to pole every 18" with lag screw and washers (item 8 and 9 from bill of materials).

ⓙ Install reducer boot over 3" and 4" U-section molding using 6d galvanized nails. Make sure reducer boot fits securely over each section.

FOR FIELD MAINTENANCE ONLY

k) When the contractor provides trench, the area around the riser bend at base of pole must be backfilled and compacted to 90% and a distance equal to the depth of the trench by the crew to prevent damage to conductors.

ⓛ Install remaining backup plate from termination point in (step h) to elevation of pole where U-section molding will terminate. Refer to Overhead Standards page 1406 for elevation of U-section molding termination. Nail backup plate to pole with 6d galvanized nails every 18".

ⓜ Install lag screw (item 7 from bill of materials) 2" beyond termination of U-section molding for cable grip support.

ⓝ Remove each conductor coil from pole step, and remove binding tape. Uncoil each conductor carefully to prevent bending conductor.

ⓞ Install one cable grip approximately 2' from the end of each conductor, (item 11 from bill of materials). Hoist each conductor and hang cable grip on lag screw installed by (step m) . Adjust cable grips to determine optimum support positions, tie cables temporarily to pole and slide cable grip below final position. Tape over concentric neutral at final position where grip will seat with half lapped layers of glass tape (720256) and vinyl plastic (720580) over glass tape to assure positive grip. Position cable grip over taped area and attach cable grip to lag screw installed in (step m).

ⓟ Install required amount of 3" U-section schedule 30 sections needed to cover backup plate and encase conductors to the termination point of the riser installation. Install belled end of U-section molding over a plain end of previously installed U-section molding. Line up edge of belled end with scribe mark 1" from plain end to ensure that sufficient spacing is provided between U-sections for thermal expansion. Nail U-section molding to pole with lag screws and washers (item 8 and 9 from bill of materials) every 36". Lag screws should be snug but not tight, this is also to allow thermal expansion of U-section. Additional lag screws may be needed at 18" intervals if U-section molding separates more than 1/16" away from pole.

DATE 1-1-87 APPD 9283 ROF	SDG&E ELECTRIC STANDARDS 30 CABLE POLE RISER INSTALLATION CABLE-IN-CONDUIT	~~OH 1499.007~~ UG 4299.007 SUPERCEDES 4203.6 (6-14-83)

MAINTENANCE REQUIREMENTS

Inspection

The U-section molding installation shall be inspected periodically for the following:

Warpage of U-Section Exposing Conductors

For Separation of U-Section Molding From Pole More than 1/16"

Cracks or Damage in U-Sections Which Expose Conductors

FOR FIELD MAINTENANCE ONLY

TABLE OF CONTENTS

TABLE OF CONTENTS

SCOPE: THIS STANDARD SHOWS THE CONSTRUCTION USED WHEN MODIFYING AN EXISTING SINGLE RISER CABLE POLE WHERE A SECOND RISER IS ADDED.

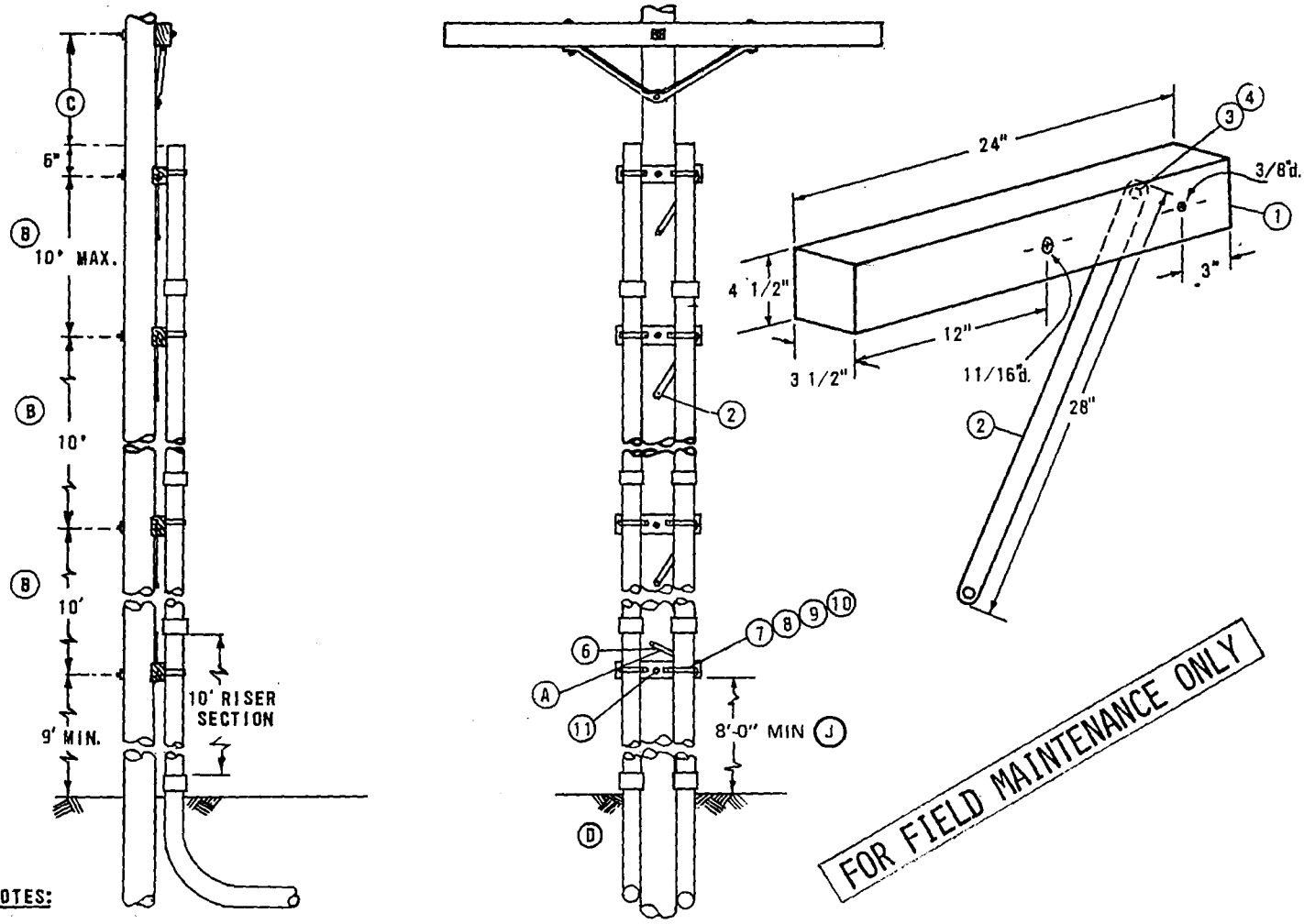

NOTES:

- THIS CONSTRUCTION IS RESTRICTED TO A MAXIMUM OF TWO SDG&E RISERS, (PRIMARY OR SECONDARY).
- WHENEVER POSSIBLE RISERS SHOULD BE INSTALLED ON THE SIDE OF THE POLE OPPOSITE TRAFFIC FLOW.
- SPARE DUCT SHALL BE CAPPED JUST ABOVE GROUND LEVEL TO PREVENT MOISTURE ENTRY AND NOT TO BE CONSIDERED AS A RISER.

BILL OF MATERIAL:

	ITEM	DESCRIPTION	QUANTITY	STOCK NO. OR CONST. STDS.		ITEM	DESCRIPTION	QUANITY	STOCK NO. OR CONST. STDS
P	1	CROSSARM, 3-1/2"x 4-1/2"x 2'-0"	AS REQ'D.	380.05 IT.1	P	8	STRAP, PIPE, 2 HOLE, GALV., 4"	AS REQ'D.	697952 (E)
	2	BRACE, FLAT 28"	AS REQ'D.	164192		9	STRAP, PIPE, 2 HOLE, GALV., 5"	AS REQ'D.	697984 (E)
	3	BOLT, WASHER HEAD 3/8"X 4 1/2"	AS REQ'D.	158528 (E)		10	NAILS, FLATHEAD, STEEL GALV. 16D	AS REQ'D.	491424 (E)
T	4	WASHER, 3/8" SPRING LOCK	AS REQ'D.	795832 (E)	T	11	BOLT,MACH.-GALV.,5/8"X (LENGTH AS REQ'D),2-SQ.WASH.1-DBL COIL WASH	AS REQ'D.	PG.392.1 392.2 (E)
&	5				&				
F	6	SCREW, LAG 1/2"X 4"	AS REQ'D.	621568 (E)	F				
	7	STRAP, PIPE, 2 HOLE, GALV., 3"	AS REQ'D.	697920 (E)					

INSTALLATION:

(A) LADDER ARMS TO BE INSTALLED BY U.G. CREWS. MOUNT LOWEST ARM NO LOWER THAN 9 FEET AND INSTALL THE FLAT BRACE ABOVE THE FIRST ARM AS SHOWN.
(B) INSTALL AT LEAST ONE BRACKET FOR EACH JOINT OF CONDUIT.
(C) 48 INCHES MINIMUM FOR 350 OR LARGER UG CABLE, 30 INCHES MINIMUM FOR 2/0 AND SMALLER CABLE. THIS DIMENSION APPLIES TO THE TRIPLE TERMINATOR BRACKET AS WELL AS CROSSARMS.
(D) EXCAVATION MIGHT BE REQUIRED AROUND EXISTING RISER TO FACILITATE THE INSTALLATION OF LADDER ARMS.
(E) EXEMPT MATERIAL.

REFERENCE:

F. SEE PAGE 1402.1/4202 FOR POSITION OF RISERS INVOLVING MORE THAN ONE UTILITY.
G. POLES ARE TO BE STEPPED PER STANDARD 363.
H. SEE PAGE 1404.1 FOR INSTALLATION OF ONE CABLE RISER.
I. PVC RISERS ARE NOT PERMITTED WITHIN THE CLIMBING SPACE PER G.O. 95 RULE-22.2C.
(J) RISERS OF PLASTIC PIPE SHALL BE EPC-80-PVC SCHEDULE 80, WITH A MINIMUM NORMAL PIPE SIZE OF 2-1/2 INCHES, FROM THE GROUND LINE TO A LEVEL NOT LESS THAN 8 FEET ABOVE THE GROUND LINE PER G.O. 95 RULE 54-6-E.

DATE 1-1-87
APPD

SDG&E ELECTRIC STANDARDS

3Ø CABLE POLE RISER INSTALLATION MODIFICATION FROM SINGLE TO DOUBLE RISER FOR EXISTING CABLE POLES

~~OH 1499.009~~
UG 4299.009
SUPERCEDES 4205.1
(6-14-83)

SCOPE: THIS STANDARD SHOWS VARIOUS METHODS OF CABLE TERMINATION BRACKETS USED TO CONNECT UNDERGROUND CABLES TO OVERHEAD CONDUCTORS.

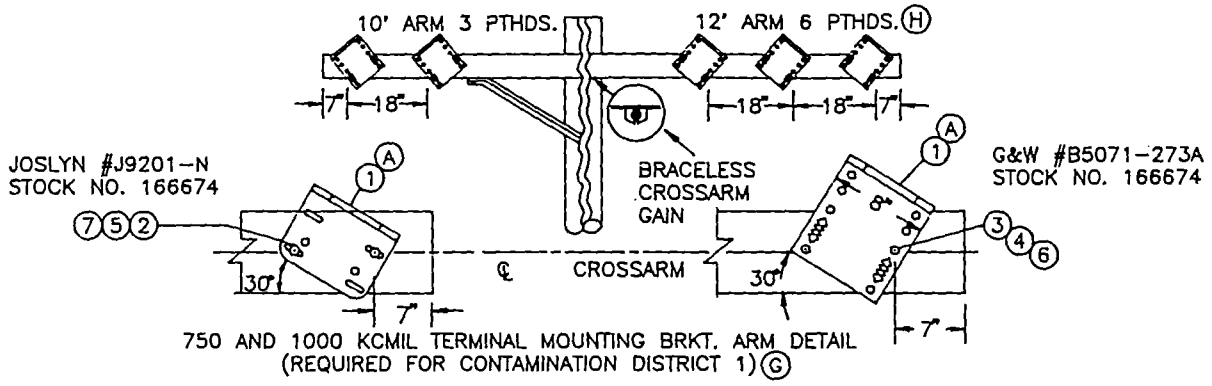

750 AND 1000 KCMIL TERMINAL MOUNTING BRKT. ARM DETAIL
(REQUIRED FOR CONTAMINATION DISTRICT 1) (G)

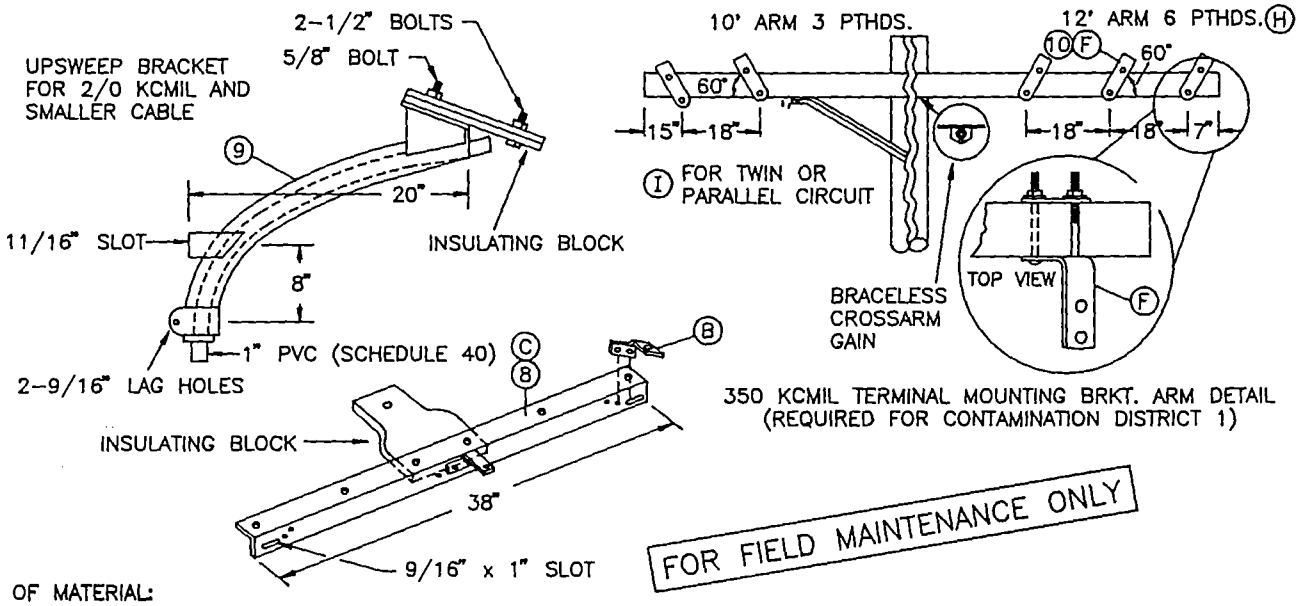

350 KCMIL TERMINAL MOUNTING BRKT. ARM DETAIL
(REQUIRED FOR CONTAMINATION DISTRICT 1)

FOR FIELD MAINTENANCE ONLY

TABLE OF CONTENTS

BILL OF MATERIAL:

ITEM	DESCRIPTION	QUANTITY	STOCK NO. OR CONSTR STD	ASSEMBLY UNITS
1	BRACKET, POTHEAD MOUNTING	3 OR 6	166674	P-X-BK
2	BOLT, MACHINE, GALV. 1/2" x 5" (E)	2	153024	–
3	BOLT, MACHINE, GALV. 3/8" x 5" (E)	2	154368	–
4	WASHER, 3/8" ROUND (E)	4	800288	–
5	WASHER, 1/2" ROUND (E)	4	800192	–
6	WASHER, 3/8" DBL COIL (E)	2	798528	–
7	WASHER, 1/2" DBL COIL (E)	2	798464	–
8	BRACKET TRIPLE TERMINAL (C)	1	166676	(OVERHEAD) TTB
9	BRACKET GALV. TERMINAL UPSWEEP	1	166856	(OVERHEAD) USB
10	BRACKET, CROSSARM TERMINAL	3 OR 6	166060	–

INSTALLATION:

(A) HOLES IN ARM FOR POTHEAD MOUNTING BRACKETS ARE DRILLED BY OVERHEAD CREWS.
(B) THREE OF THESE BRACKETS ARE SUPPLIED WITH THE TRIPLE TERMINAL BRACKET (ITEM 8).
(C) THIS CONSTRUCTION TO BE USED ONLY FOR CABLE SIZES 2/0 AND BELOW.
(E) EXEMPT MATERIAL.
(F) TURN TOP OF BRACKET OUTWARD TO OBTAIN APPROX. 60° ANGLE.

REFERENCE:

(G) FOR CONSTRUCTION IN CONTAMINATION DISTRICTS 2 AND 3, SEE STANDARD 1407.2/4207.2.
(H) SEE STANDARD 1407.2/4207.2 FOR TERMINAL AND LIGHTNING ARRESTER DETAIL.
(I) SEE STANDARD 1442.1/4242.1 FOR 3-350 KCMIL POTHEADS ON A 10 FOOT CROSSARM.

~~JH 1499.010~~ JG 4299.010 SUPERCEDES 4207.1 (1-1-93)	SDG&E ELECTRIC STANDARDS CABLE POLE TERMINAL MOUNTING INFORMATION (PORCELAIN TERMINATIONS) (FOR CONTAMINATION DISTRICT 1)	DATE 1-1-93 APPD JGB/RD

12' ARM 6 PTHS AND 6 ARRESTORS

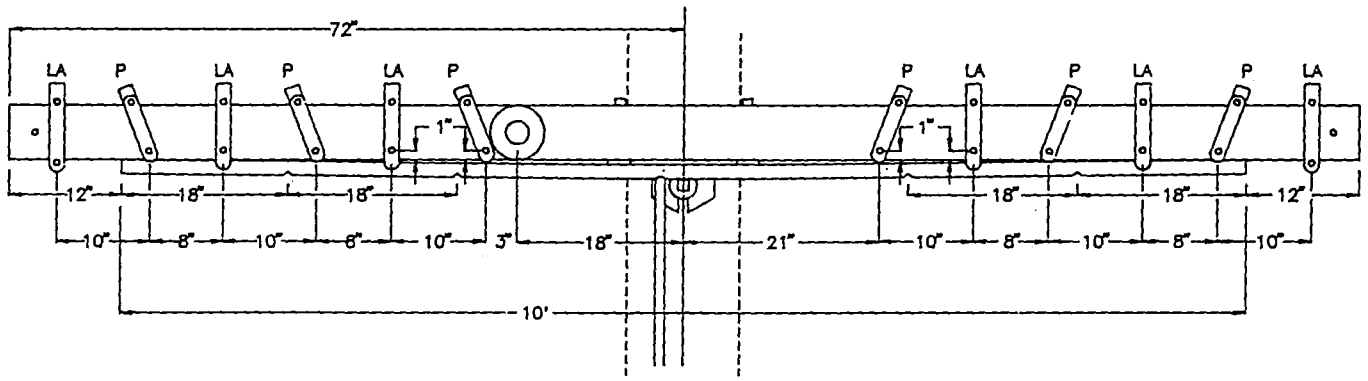

350 KCMIL TERMINAL AND LIGHTNING ARRESTER BRACKETS MOUNTING DETAIL

P=POTHEAD BRACKET

LA=LIGHTNING ARRESTER BRACKET

FOR FIELD MAINTENANCE ONLY

12' ARM 6 PTHS AND 6 ARRESTORS

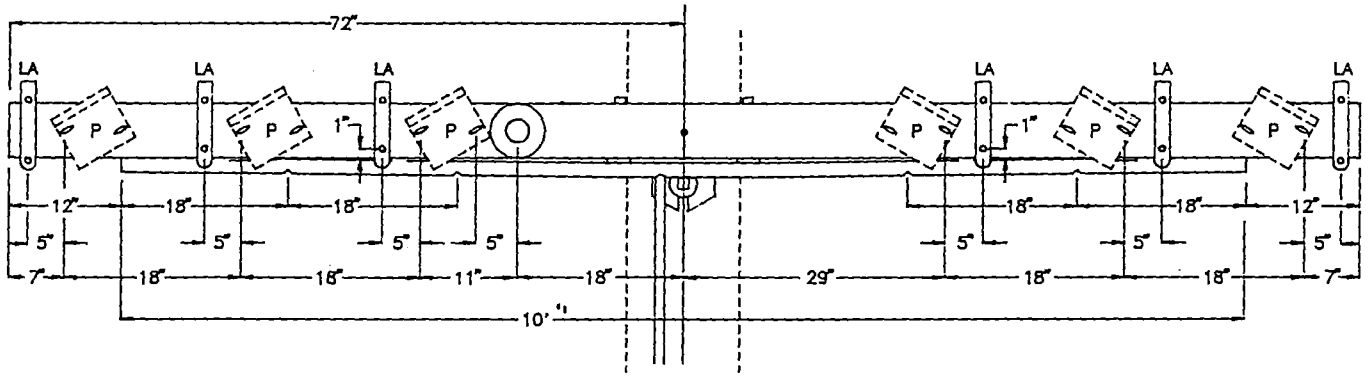

750 AND 1000 KCMIL TERMINAL AND LIGHTNING ARRESTER BRACKETS MOUNTING DETAIL

TABLE OF CONTENTS

DATE 1-1-93 APPD JLG/RPG	SDG&E ELECTRIC STANDARDS CABLE POLE TERMINAL MOUNTING INFORMATION (PORCELAIN TERMINATIONS) (FOR CONTAMINATION DISTRICT 1)	~~OH 1499.011~~ UG 4299.011 SUPERCEDES 4207.2 (1-1-93)

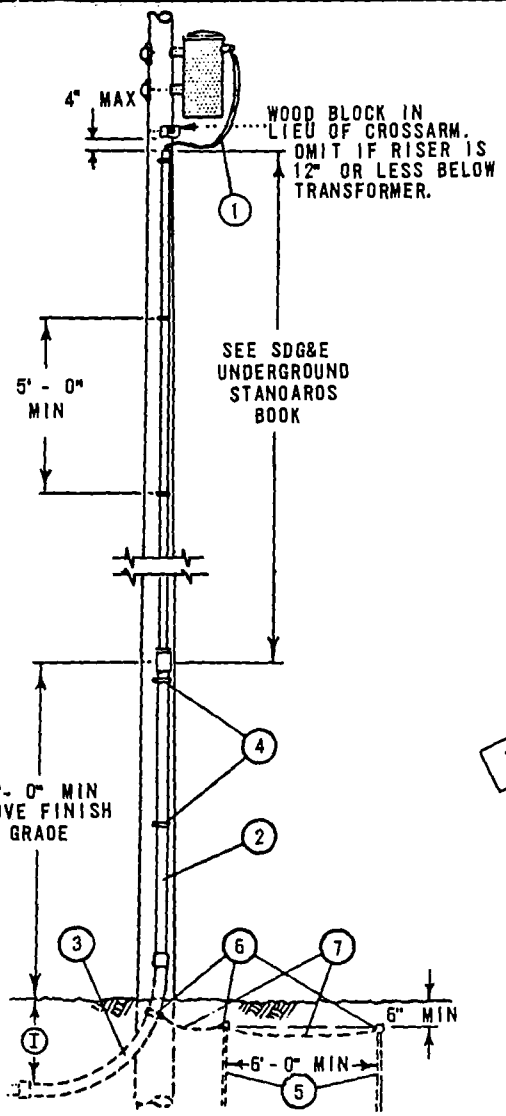

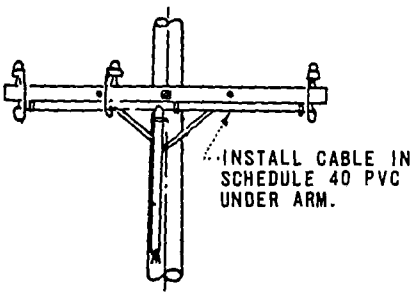

CROSSARM CONSTRUCTION



RACK CONSTRUCTION

FOR FIELD MAINTENANCE ONLY

TABLE OF CONTENTS

NOTES:

(A) SEE PAGE 1404 /4204 FOR RISER CONSTRUCTION.

(B) CUSTOMER'S SERVICE ENTRANCE CONDUCTORS SHALL RUN CONTINUOUSLY WITHOUT SPLICES FROM SERVICE EQUIPMENT TO SECONDARY OR TRANSFORMER TERMINALS AND SHALL BE OF A LENGTH SUFFICIENT TO FORM DRIP LOOPS AT THE TOP OF THE RISER. CONTRACTOR SHALL IDENTIFY SERVICE ENTRANCE CONDUCTORS WITH CODING OR TAGGING FOR PURPOSE OF PARALLELING PHASES AND NEUTRALS. MAXIMUM SIZE OF EACH CONDUCTOR, SINGLE OR PARALLELED RUNS, SHALL NOT EXCEED 500 KCM.

(C) WHEN ITEMS 2 AND 3 ARE SCHEDULE 80 PVC OMIT ITEMS 5, 6, AND 7.(SEE SDG&E UNDERGROUND STANDARDS BOOK)

(D) OMIT ITEMS 5, 6, AND 7 WHERE CUSTOMER'S UNDERGROUND CONDUIT RUN IS AN APPROVED METALLIC CONDUIT.

(F) OMIT ITEM 5, AND 7 WHERE #6 BARE COPPER BONDING WIRE IS INSTALLED BETWEEN ITEMS 3 AND CUSTOMER'S SERVICE. ENTRANCE EQUIPMENT.

(G) USE TWO ROD GROUND SPACED A MINIMUM OF 6 FEET APART.

H. APPROVED METALLIC CONDUIT OR #6 BARE COPPER BONDING WIRE SHALL BE GROUNDED AT THE SERVICE ENTRANCE IN ACCORDANCE WITH REQUIREMENTS OF THE LOCAL INSPECTION AUTHORITY.

(I) 18" MIN DEPTH ON PRIVATE AND PUBLIC PROPERTY OTHER THAN STREETS AND ALLEYS. 24" MIN DEPTH ACROSS STREETS AND ALLEYS. 24" MIN TO BE MAINTAINED CONTINUOUSLY WHERE DUCTS TRAVERSE BOTH STREETS (AND ALLEYS) AND PRIVATE PROPERTY. 24" MIN DEPTH FOR NON-METALLIC CONDUITS.

MATERIAL FURNISHED AND INSTALLED BY CUSTOMER

EM	DESCRIPTION (A)	
	CUSTOMER'S SERVICE ENTRANCE CONDUCTORS	(B)
	CONDUIT, GALV. IRON RIGID RISER	(C)
	CONDUIT, GALV IRON BEND, 90°, 36" RADIUS	(C)
	STRAP, PIPE GALV, 2-10D GALV NAILS	
	RODS, 5/8" X 8' - 0" COPPERCLAD STEEL GROUND	(D) (F) (G)
	CLAMPS, APPROVED TYPE GROUNDING	(D)
	WIRE, #6 BARE STRANDED COPPER	(D) (F)

~~H 1499.101~~
6 4299.101
SUPERCEDES
215 (10-2-78)

SDG&E ELECTRIC STANDARDS

0-750V CUSTOMER OWNED UNDERGROUND SERVICE FROM AN OVERHEAD LINE, ONE DUCT

DATE 11-16-81
APPD JEY

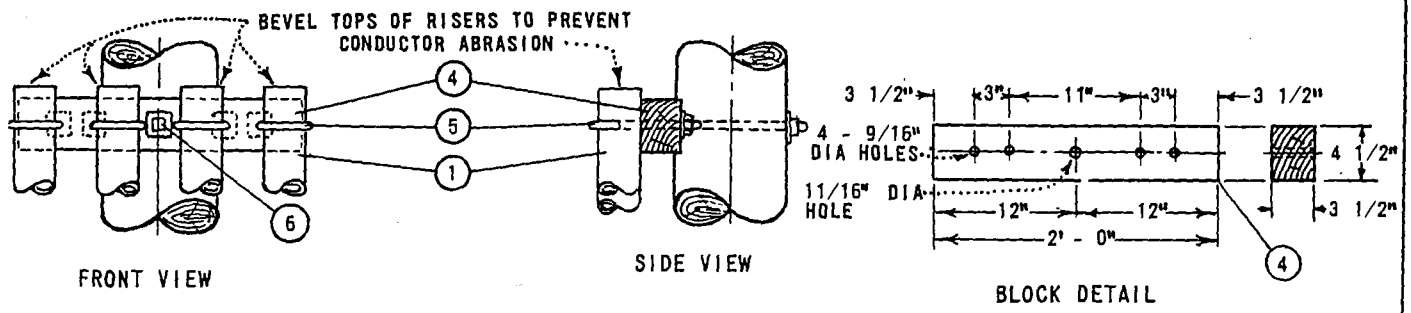

FIGURE 1
PLASTIC PIPE RISER SUPPORT DETAILS

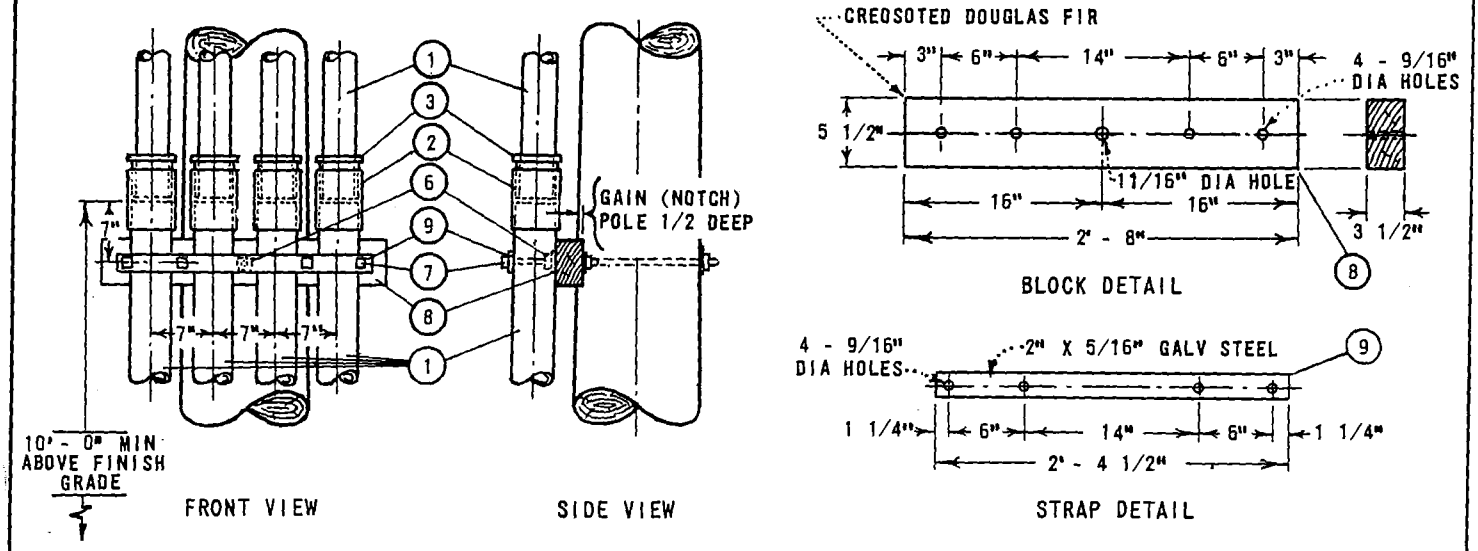

FIGURE 2
GALVANIZED PIPE RISER SUPPORT DETAIL

FOR FIELD MAINTENANCE ONLY

NOTES:

A. SEE UNDERGROUND STANDARDS BOOK FOR CABLE, CONDUIT SIZING INFORMATION.

(E) EXEMPT MATERIALS.

ITEM	DESCRIPTION	QUANTITY NUMBER OF RISERS 3"	QUANTITY NUMBER OF RISERS 4"	STOCK NO. OR CONSTR STD
1	CONDUIT, PVC SIZE AS REQUIRED	AS REQ'D		3" - 251552, 4" - 251584
2	COUPLINGS, PLASTIC SIZE AS REQ'D	AS REQ'D		3" - 280448, 4" - 280480
3	BUSHINGS, PLASTIC REDUCER 3 1/2" OR 4" X 3"	3	4	3½" - 181024, 4" - 573408
4	BLOCKS, RISER SUPPORT (SEE FIGURE 1)	1	1	-
5	BOLT, "J" 1 SQ WASH.	3	4	PGS 140, 144
6	BOLT, MACH 5/8" X ", 2 - 2" SQ WASH. (E)	1	1	PGS 139, 140
7	BOLT MACH 1/2" X 9", 1 RD WASH. (E)	3	4	153184, 800192
8	BLOCK, SPACER (SEE FIGURE 2)	1	1	-
9	STRAP, GALV STEEL (SEE FIGURE 2)	1	1	-

SDG&E ELECTRIC STANDARDS

DATE 1-1-87
APPD 9/26/RDK

0-750 VOLT THREE AND FOUR DUCT RISER SUPPORTS

~~OH 1499.104~~
UG 4299.104
SUPERCEDES 4219
(5-22-75)

TABLE OF CONTENTS

TABLE OF CONTENTS

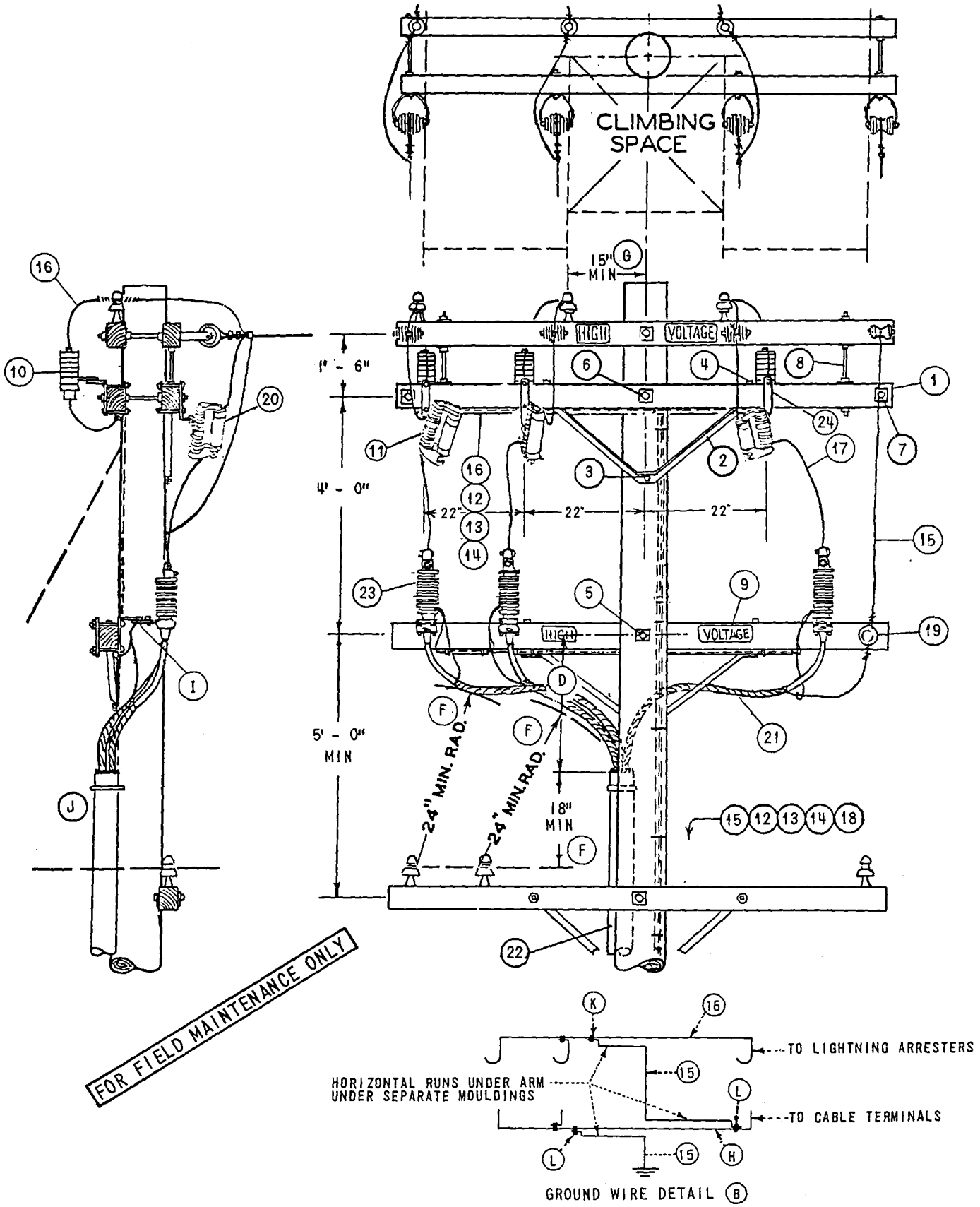

DATE 8-27-82 APPD DRH	SDG&E ELECTRIC STANDARDS CROSSARM MOUNTED TERMINALS 4KV 4 WIRE WYE	~~OH 1499.201~~ UG 4299.201 SUPERCEDES 4228.1 (2-27-80)

NOTES:

(A) UNIT GROUND COMPLETE ORDER 603120 WITH GRAY MOULDING, 603136 WITH PLAIN MOULDING

(B) INTERCONNECT ARRESTER GROUND LEAD DISCONNECTS WITH #6 BARE COPPER AND GROUND IT WITH #2 BARE COPPER NEAR CENTER ARRESTER.

(C) USE TWO GROUND RODS SPACED A MINIMUM OF 6' APART.

(D) 3 FOOT MINIMUM DIMENSION, 4 FOOT DIMENSION PREFERRED FOR 750 KCM AND LARGER 15KV CABLE.

(E) EXEMPT MATERIAL.

(F) G.O. 95 MINIMUM DIMENSION.

(G) G.O. 95 MINIMUM DIMENSION FOR 4KV. USE 18" MIN IF BUILT WITH 15KV CABLE.

(H) USE #2 BARE STRANDED COPPER OR LARGER AS REQUIRED.

(I) CONNECT NEUTRAL, TERMINAL AND SHIELDED CABLE GROUNDS TO LIGHTNING ARRESTER GROUND.

(J) INSTALL RISER ON FACE OF POLE OPPOSITE CLIMBING SPACE AND IN A POSITION NEAREST THE END OF ARM ON WHICH THE TWO 4KV PHASES ARE LOCATED.

(K) CONNECT #2 BARE STRANDED COPPER CONDUCTOR TO #6 BARE STRANDED COPPER CONDUCTOR AT POINT NEAR CENTER LIGHTNING ARRESTER.

(L) CONNECT #2 BARE STRANDED COPPER CONDUCTOR TO REQUIRED CONDUCTOR AT POINT NEAR CENTER TERMINAL AND END TERMINAL.

FOR FIELD MAINTENANCE ONLY

TABLE OF CONTENTS

	ITEM	DESCRIPTION	QUANTITY	STOCK NO. OR CONSTR STDS
PTF	1	CROSSARM, 3 3/4" X 5 3/4" X 10' - 0"	3	300 SECTION
	2	BRACE, ANGLE CROSSARM 4' - 0"	2	164032
	3	SCREW, LAG GALV, 5/8" X 5" (E)	2	621600
	4	BOLT, MACH GALV, 1/2" X 7", 1 RD WASH. & 1 DBL COIL WASH. (E)	4	PGS 139, 140
	5	BOLT, MACH GALV, 5/8" X 14", 2 - 3" SQ WASH. & 1 DBL COIL WASH. (E)	1	PGS 139, 140
	6	BOLT, MACH GALV, 5/8" X 20", 2 - 3" SQ WASH. & 1 DBL COIL WASH. (E)	1	PGS 139, 140
	7	BOLT, SPACE GALV, 5/8" X 20", 4 SQ WASH. & 4 DBL COIL WASH. (E)	2	PGS 139, 140
	8	BOLT, SPACE GALV, 5/8" X 28", 4 SQ WASH. & 4 DBL COIL WASH. (E)	2	PGS 139, 140
	9	SIGN, HIGH VOLTAGE & 8 ROOFING NAILS (E)	1	647648, 492224
UCD	10	ARRESTER, LIGHTNING 3KV	3	113216
	11	CUTOUT, FOR CURRENT-LIMITING FUSE	3	1200 SECTION
	12	STAPLES, FENCE GALV, 1 1/4" (A) (E)	25	678528
	13	MOULDING, HARDWOOD 1" (A)	55'	487200
	14	STAPLES, MOULDING GALV, 3" X 1 1/16" X 1/4" (A) (E)	25	678560
	15	WIRE, #2 BARE STRANDED COPPER (B)	44'	813664
	16	WIRE, #6 BARE STRANDED COPPER (B)	18'	813536
	17	WIRE, COPPER, SIZED PER U.G. CABLE AMPACITY.	8'	81___
	18	ROD & CLAMP, GROUND (A) (C)	2	603072, 230016
	19	INSULATOR, 4KV WIRE HOLDER	1	413792
	20	FUSE, CURRENT-LIMITING SIZE AS SPECIFIED ON WORK ORDER	3	1200 SECTION
	21	CABLE, POLYETHYLENE, CONCENTRIC NEUTRAL PRIMARY	AS REQ'D	SEE UG. STDS
	22	RISER CONSTRUCTION	AS REQ'D	1400/4200 SECTION
	23	TERMINAL CABLE	3	UG BOOK
	24	BRACKET, CUTOUT /ARRESTER CROSSARM MOUNTING (E)	3	166070
	25			

~~JH 1499.202~~
JG 4299.202
SUPERCEDES
228.2 (2-27-80)

SDG&E ELECTRIC STANDARDS

CROSSARM MOUNTED TERMINALS 4KV 4 WIRE WYE

DATE 8-27-82
APPD

SCOPE: THIS STANDARD SHOWS TANGENT LINE (FIG.1) AND DEAD-END CONSTRUCTION (FIG.2) FOR 12.47 KV AND BELOW, 3Ø CABLE POLE WITH UPSWEEP BRACKET MOUNTED TERMINALS FOR #2/0 AND SMALLER UG CABLE.

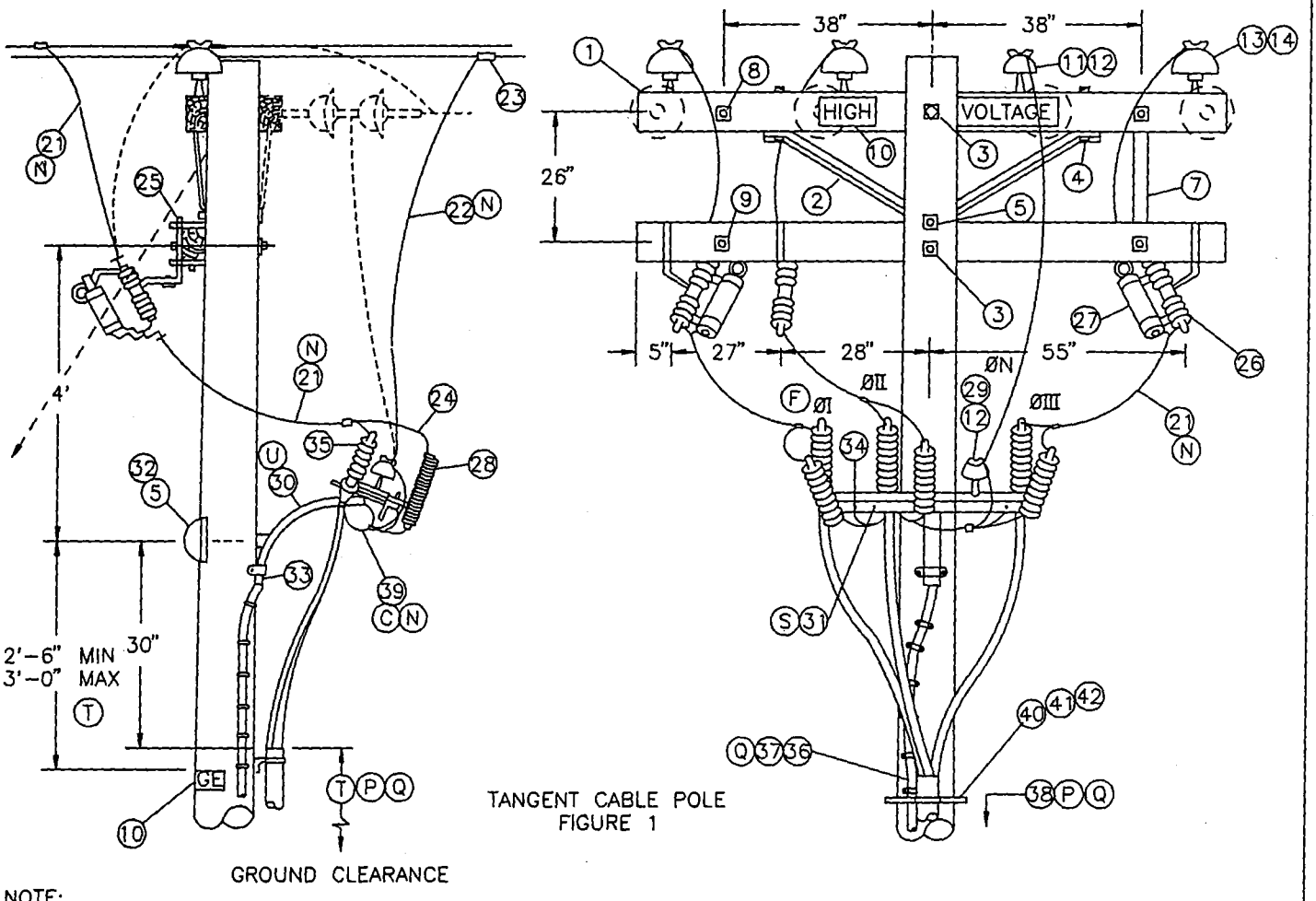

TANGENT CABLE POLE
FIGURE 1

NOTE:

- TANGENT CABLE POLE (FIG.1) OR DEAD-END CABLE POLE (DOTTED LINE) IS TO BE USED WHEN FURTHER LINE EXTENSION IS EXPECTED.
- DO NOT USE THIS UPSWEEP BRACKET CONSTRUCTION FOR 4KV, 3Ø CABLE POLE. INSTEAD, USE STANDARD 1439/4239.

FOR FIELD MAINTENANCE ONLY

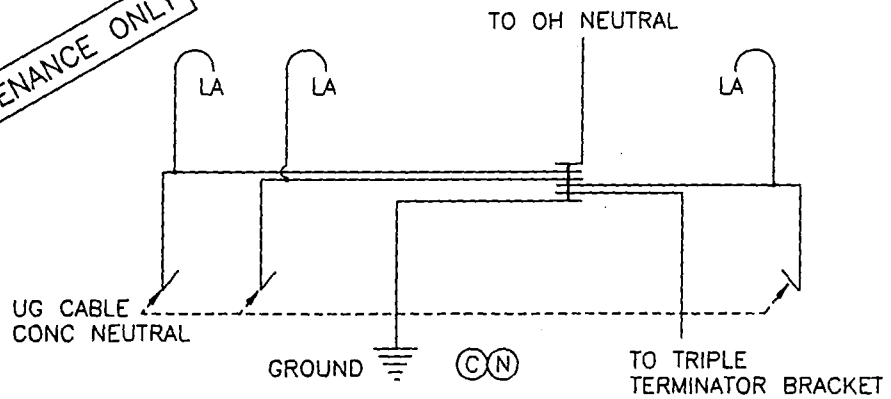

GROUND. WIRING DETAIL

DATE 1-1-93 APPD JVB/RR	SDG&E ELECTRIC STANDARDS 12.47KV AND BELOW 3Ø CABLE POLE 1/C PER Ø, UPSWEEP BRACKET CONSTRUCTION	~~OH 1499.203~~ UG 4299.203 SUPERCEDES 4229.1 (1-1-93)

TABLE OF CONTENTS

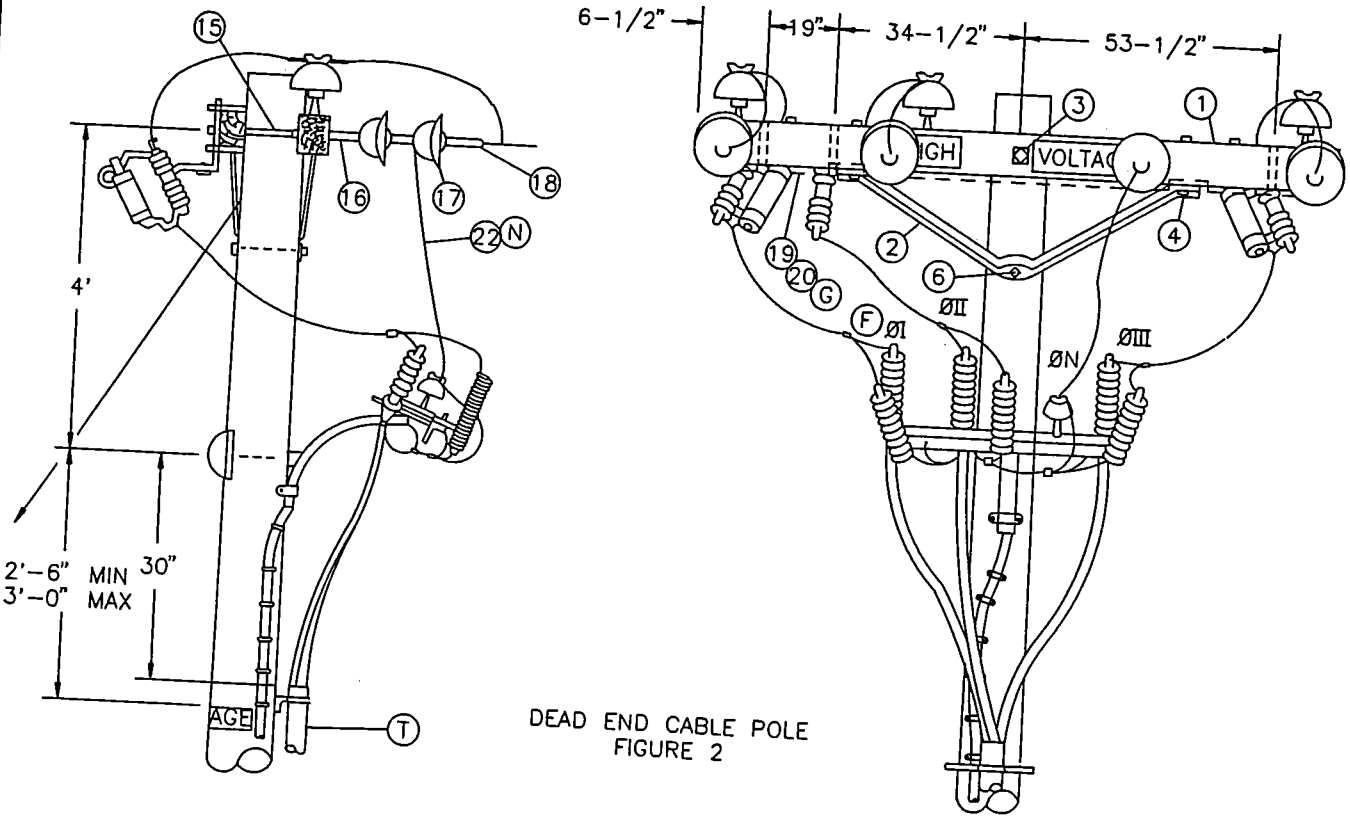

DEAD END CABLE POLE
FIGURE 2

NOTE:

- DEAD END CABLE POLE (FIG.2) IS TO BE USED ONLY WHEN NO FURTHER LINE EXTENSION OR NO RECONDUCTORING IS EXPECTED.

FOR FIELD MAINTENANCE ONLY

~~)H 1499.204~~ IG 4299.204 SUPERCEDES 4229.2 (1-1-93)	SDG&E ELECTRIC STANDARDS 12.47KV AND BELOW 3Ø CABLE POLE 1/C PER Ø UPSWEEP BRACKET CONSTRUCTION	DATE 1-1-93 APPD JLB/RDJ

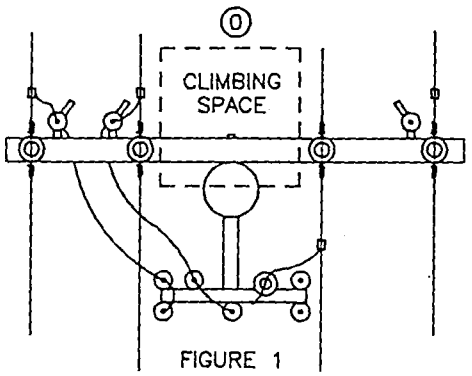

FIGURE 1

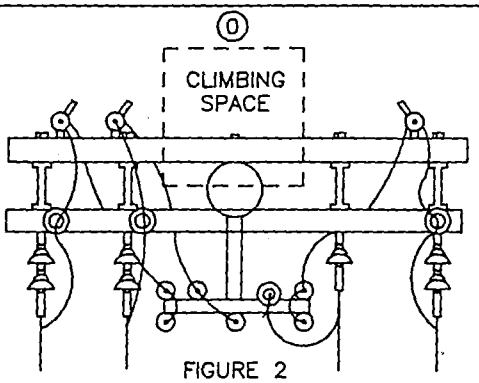

FIGURE 2

CLIMBING SPACE

FOR FIELD MAINTENANCE ONLY

BILL OF MATERIAL:

ITEM	DESCRIPTION			QUANTITY FIG.1	QUANTITY FIG.2	CONST STD OR PAGE NO	STOCK NUMBER
1	CROSSARM, 3-3/4" X 5-3/4" X 10'-0"			2	2	–	294128
2	BRACE, ANGLE, CROSSARM, 5'			1	2	–	164128
3	BOLT, MACH, GALV, 5/8" X (LENGTH AS REQ'D), 2 SQUARE & 1 DOUBLE COIL SPRING WASHER		E	2	1	392	–
4	BOLT, MACH, GALV, 1/2" X 7", 1 ROUND & 1 DOUBLE COIL SPRING WASHER		E	2	4	392	–
5	BOLT, MACH, GALV, 5/8" X (LENGTH AS REQ'D), 1 SQUARE & 1 DOUBLE COIL SPRING WASHER		E	2	1	392	–
6	BOLT, MACH, GALV, 5/8" X (LENGTH AS REQ'D), 1 DOUBLE COIL SPRING WASHER		E	–	1	392	–
7	BRACE, FLAT, CROSSARM, 28"		E	2	–	–	164192
8	BOLT, MACH, GALV, 3/8" X (LENGTH AS REQ'D), 1 ROUND & 1 SPRING WASHER		E	2	–	392	–
9	BOLT, MACH, GALV, 1/2" X (LENGTH AS REQ'D), 1 ROUND & 1 DOUBLE COIL SPRING WASHER		E	2	–	392	–
10	SIGN, HIGH VOLTAGE AND		E	3	3	–	647648
	9 ROOFING NAILS, GALV		E	AS REQ'D		–	492224
11	PIN, INSULATOR, STRAIGHT, 12KV, 1" LEAD THREAD	D	E	1	–	–	532704
12	INSULATOR, LINE, 12KV, NEUTRAL	D	E	2	1	–	429216
13	PIN, INSULATOR, STRAIGHT, 12KV, 1" OR		E	3	3	–	532704
	1-3/8" LEAD THREAD		E	3	3	–	532448
14	INSULATOR, LINE, 12KV, 1" OR 1-3/8" PIN		E	3	3	750	–
15	BOLT, SPACE, 5/8" X (LENGTH AS REQ'D) 3 SQ, 2 RD, 2 DOUBLE COIL SPRING WASHERS & 1 NUT	D	E	–	4	392	–
16	CLEVIS, DEAD END, 5/8" BOLT, STEEL	D	E	–	4	–	235712
17	INSULATOR, SUSPENSION, 12KV, CLEVIS	D		–	7	750	–
18	CLAMP, STRAIGHT LINE, D.E.	D	E	–	4	741	–
19	WIRE, #8, BARE SOLID ANNEALED COPPER			10'	10'	–	812928
20	STAPLES, FENCE, GALV, 1-1/4"		E	AS REQ'D		–	678528
21	WIRE, BARE STRANDED COPPER (OH JUMPER)	N		21'	25'	715-716	–
22	WIRE, BARE STRANDED CU OR AL (OH NEUT JUMPER)	N		9'	7'	711-716	–
23	CONNECTOR, WIRE COMPRESSION (SIZE AS REQ'D)	D	E	AS REQ'D		785-787	–

CABLE SIZE	UG MACRO UNIT PORCELAIN	
	W/O LADDER ARMS	W/LADDER ARMS
3C-#2 AL	CP-3#2	CP3#2L
3C-#2/0	CP#2/0	CP2/0L

DATE 1-1-93 APPD JLB/RP	SDG&E ELECTRIC STANDARDS 12.47KV AND BELOW 3Ø CABLE POLE 1/C PER Ø UPSWEEP BRACKET CONSTRUCTION	~~OH 1499.20~~ UG 4299.20 SUPERCEDES 4229.3 (1-1-93)

TABLE OF CONTENTS

BILL OF MATERIAL: (CONTINUED)

ITEM	DESCRIPTION	QUANTITY FIG. 1	QUANTITY FIG. 2	CONSTR. STD OR PAGE NO.	STOCK NUMBER
24	WIRE, #6, BARE STRANDED COPPER	9'	9'	–	813536
25	BRACKET, CUTOUT/ARRESTER, FOR CROSSARM MOUNTING (E)	3	3	–	166070
26	CUTOUT BODY FOR CURRENT LIMITING FUSE	3	3	–	297952
27	FUSE, CURRENT-LIMITING, SIZE AS REQ'D	3	3	1206	–
28	ARRESTER, LIGHTNING	3	3	1247	–
29	PIN, SHORT SHANK, 1" LEAD THREAD (D) (E)	1	1	–	534426
30	BRACKET, GALV, TERMINAL, UPSWEEP	1	1	–	166856
31	BRACKET, TRIPLE TERMINATOR (S)	1	1	–	166676
32	COVER, BOLT, PLASTIC & (E)	1	1	–	285696
	6 – 10D NAILS, GALV (E)	–	–	–	491392
33	SCREW, LAG, GALV, 1/2" X 4" (E)	2	2	–	621568
34	BOLT, MACH, GALV, 5/8" X 1 1/2", 1 ROUND AND 1 LOCK WASHER (E)	1	1	392	–
35	TERMINALS AND UNDERGROUND CABLE	3	3	4111	–
36	WIRE, #4, BARE STRANDED COPPER	50'	45'	–	813760
37	UNIT GROUND, COMPLETE (Q)	1	1	–	603136
38	RISER CONSTRUCTION	–	–	1400/4200	–
39	WIRE, COPPER BARE STRANDED (CABLE POLE NEUTRAL) (N)	5'	5'	715/716	–
40	BRACKET, LADDER ARM (E)	AS REQ'D		1404/4204	167184
41	NUT, CLAMPING CHANNEL, W/SPRING, 1/2" (E)	AS REQ'D		1404/4204	503488
42	CHANNEL, DOUBLE GALV, 24" (E)	AS REQ'D		1404/4204	216700

INSTALLATION:

A. NEW CABLE POLES SHALL HAVE A STANDARD DEPTH OF 9'. IN MOST CASES THIS WILL REQUIRE A 5' TALLER POLE.

B. THIS CONSTRUCTION TO BE USED WITH 2/0 AND SMALLER UNDERGROUND CABLE.

(C) CONNECT OVERHEAD NEUTRAL, TRIPLE TERMINAL BRACKET, AND CONCENTRIC CABLE NEUTRAL CONDUCTOR TO LIGHTNING ARRESTER GROUND.

(D) REDUCE QUANTITIES AS REQUIRED WHEN NOT USING NEUTRAL.

(E) EXEMPT MATERIAL.

(F) OMIT PHASE II AND PHASE N FOR SINGLE PHASE 12KV CABLE POLE; OMIT PHASE I AND PHASE II FOR SINGLE PHASE 6.9 KV CABLE POLE.

(G) INTERCONNECT CUTOUTS AND DEADEND BONDS PER G.O. 95 RULE 52.7D. BONDING SHOULD BE DONE IN ACCORDANCE WITH RULE 53.4.

(N)

UG CABLE SIZE AWG OR KCMIL, AL	OH JUMPER COND SIZE, AWG OR KCMIL, CU	OH NEUT JUMPER SIZE CU	AL		CABLE POLE NEUT SIZE (CU) UNDER POTHEAD ARM OR TRIPLE TERM BRKT
2	4	6	2	–	#6 PER PHASE
2/0	4	6	2	–	#6 PER PHASE
350	4/0	1/0	3/0	–	#2 PER PHASE
750	500	4/0	336.4	OR SAME SIZE AS O.H. NEUT CONDUCTOR	1/0 PER PHASE
1000	500	4/0	336.4		1/0 PER PHASE

REFERENCE:

(O) ALLOWABLE WORKING AND CLIMBING SPACE – SEE STANDARD 251.

(P) POLE STEPPING – SEE STANDARD 363/4205.

(Q) GROUNDING METHODS – SEE PAGE 1002.5.

R. SEE STANDARD SECTION 1200/4300 FOR FUSING.

S. RISER POSITIONS – SEE STANDARD 1402/4202.

(T) MINIMUM VERTICAL SEPARATION AS PER G.O. 95 – SEE STANDARD 1406/4206.

(U) SEE STANDARD 1407/4207 FOR PORCELAIN AND NON-PORCELAIN TERMINAL MOUNTING BRACKET INSTALLATIONS AND MATERIALS.

FOR FIELD MAINTENANCE ONLY

TABLE OF CONTENTS

~~1499.206~~ 4299.206 SUPERCEDES 29.4 (1-1-93)	SDG&E ELECTRIC STANDARDS 12.47KV AND BELOW 3 PHASE, CABLE POLE, 1/C PER PHASE, UPSWEEP BRACKET CONSTRUCTION	DATE 1-1-93 APPD JJB/RBS

TABLE OF CONTENTS

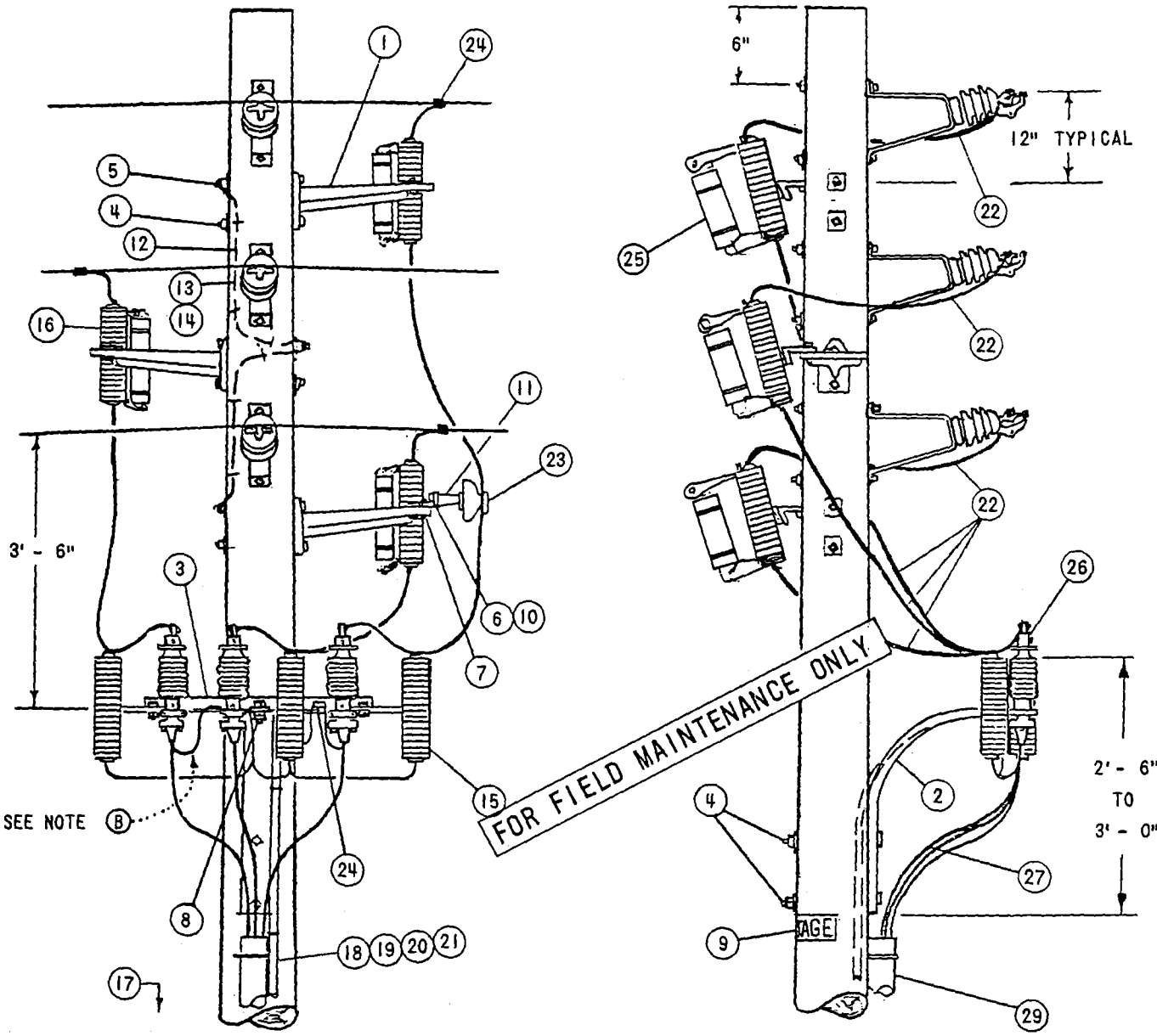

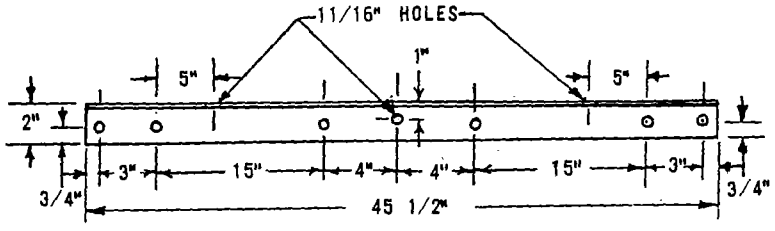

ALL HOLES 9/16" EXCEPT AS NOTED

FABRICATE FROM 2" X 2" X 3/16" STEEL ANGLE
HOT DIP GALVANIZE AFTER FABRICATION

ARMLESS TERMINAL MOUNTING BRACKET

DATE 8-27-82 APPD ORH	SDG&E ELECTRIC STANDARDS BRACKET MOUNTED TERMINALS, 12KV 3 WIRE ARMLESS TANGENT CONSTRUCTION	~~OH 1499.3(~~ UG 4299.3(SUPERCEDES 4237.1 (10-2-

NOTES:

(A) UNIT GROUND, COMPLETE, ORDER 603120 WITH GRAY MOULDING, 603136 WITH PLAIN MOULDING.

(B) THE FIBERGLASS UPSWEEP TERMINAL BRACKET IS TO BE USED FOR UNDERGROUND CONDUCTORS 4/0 OR SMALLER. DO NOT USE FOR 500 KCM AND LARGER CONDUCTORS.

(C) USE TWO-ROD GROUND SPACED A MINIMUM OF 6 FEET APART.

D. CONNECT ONE STRAND OF CONCENTRIC NEUTRAL TO TERMINAL BOLT WITH DOUBLE NUT.

(E) EXEMPT MATERIAL

FOR FIELD MAINTENANCE ONLY

ITEM			DESCRIPTION	QUANTITY	STOCK NO. OR CONSTR STD
INSTALLED	PTF	1	BRACKET, GALV., 4-HOLE, MOUNTING	3	166240
		2	BRACKET, FIBERGLASS, TERMINAL, UPSWEEP SEE NOTE (F)	1	166864
		3	BRACKET, ARMLESS, TERMINAL MOUNTING, SEE DETAIL PAGE 1437.1	1	166672
		4	MACH. BOLT, GALV., 5/8" X LENGTH AS REQ'D., 1-SQ. CURV. WASH., 1-DBL. COIL SPR. WASH. & 1-NUT (E)	5	PGS 139, 140
		5	MACH. BOLT, GALV., 5/8" X LENGTH AS REQ'D., 1-SQ., CURV. WASH., 1-DBL. COIL SPR.WASH., 2-FLAT RD. WASH. & 2-NUTS (E)	3	PGS 139, 140
		6	MACH. BOLT, GALV., 5/8" X 1 1/2", 1-LOCK WASH. (E)	1	PGS 139, 140
		7	MACH. BOLT, GALV., 1/2" X 1 1/2", 1-LOCK WASH.& 1-NUT (E)	1	PGS 139, 140
		8	MACH. BOLT, GALV., 5/8" X 2 1/2", 1-LOCK, 2-RD. WASH. & 2-NUTS (E)	1	PGS 139, 140
		9	HIGH VOLTAGE SIGN & 8-ROOFING NAILS, GALV. (E)	2	647648, 492224
		10	BRACKET, INSULATOR, MOUNTING ANGLE	1	166208
		11	PIN, INSULATOR, 12KV, 1" OR 1 3/8" LEAD THREAD	1	529248-529218
		12	WIRE, BOND, BARE SOLID ANNEALED, #8	6'	812928
		13	HARDWOOD MOULDING, 1" (OTHER THAN TOP CIRCUIT ON POLE)	6'	487200
		14	MOULDING STAPLES, GALV., 3" X 1 1/16" X 1/4" (OTHER THAN TOP CIRCUIT ON POLE)	6	678560
	UCD	15	LIGHTNING ARRESTER, 12KV	3	113248
		16	CUTOUT, FOR CURRENT-LIMITING FUSE	3	1200 SECTION
		17	GROUND ROD & CLAMP (A) (C)	2	603072-230016 (E)
		18	HARDWOOD MOULDING, 1" (A)	36'	487200
		19	STAPLES,MOULDING, GALV., 3" X 1 1/16" X 1/4" (A) (E)	24	678560
		20	STAPLES, FENCE, GALV., 1 1/4" (A) (E)	1/3#	678528
		21	WIRE, BARE STRANDED COPPER, #2 (B)	50'	813664
		22	WIRE, BARE STRANDED, COPPER, (SIZE AS REQ'D)	25'	
		23	INSULATOR, 12KV, PIN TYPE (CLASS AS REQ'D)	1	429056-429152
		24	CONNECTOR, WIRE, COMPRESSION (SIZE AS REQ'D)	4	
		25	FUSE, CURRENT-LIMITING SIZE AS SPECIFIED ON WORK ORDER	3	1200 SECTION
		26	CABLE TERMINAL	3	SEE UG STDS
		27	CABLE, PRIMARY	AS REQ'D	SEE UG STDS
		28			
		29	RISER CONSTRUCTION	AS REQ'D	1400/4200 SECTION

TABLE OF CONTENTS

~~1499.302~~ 4299.302 SUPERCEDES 7.2 (2-27-80)	SDG&E ELECTRIC STANDARDS BRACKET MOUNTED TERMINALS, 12KV 3 WIRE ARMLESS TANGENT CONSTRUCTION	DATE 8-27-82 APPD

TABLE OF CONTENTS

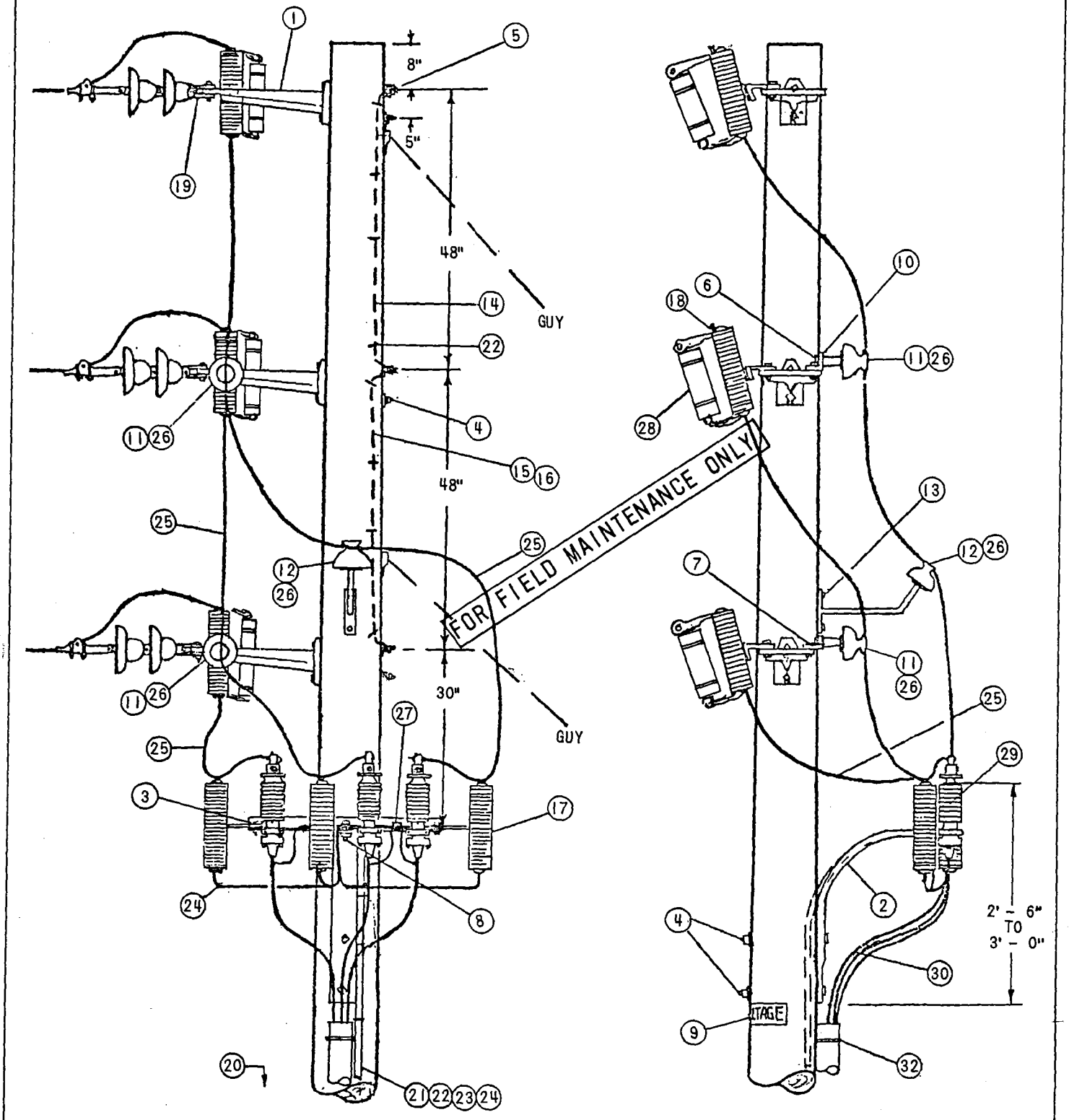

DATE 8-27-82 APPD HRH	SDG&E ELECTRIC STANDARDS BRACKET MOUNTED TERMINALS, 12KV 3 WIRE, ARMLESS DEAD END CONSTRUCTION	~~OH 1499.303~~ UG 4299.303 SUPERCEDES 4238.1 (2-27-80)

NOTES:

(A) UNIT GROUND COMPLETE ORDER 603120 WITH GRAY MOULDING, 603136 WITH PLAIN MOULDING.

B. UNTWIST SUFFICIENT LENGTH OF #2 STRANDED WIRE TO CONNECT EACH ARRESTER AND POTHEAD (TERMINAL) GROUND WITH A SINGLE STRAND.

(C) USE TWO-ROD GROUND SPACED A MINIMUM OF 6 FEET APART.

D. THIS CONFIGURATION NOT TO BE USED WHERE A FUTURE EXTENSION IS ANTICIPATED

(E) EXEMPT MATERIALS.

F. THIS INSTALLATION DOES NOT INCLUDE GUYING MATERIAL

(G) THE FIBERGLASS UPSWEEP TERMINAL BRACKET IS TO BE USED FOR UNDERGROUND CONDUCTORS 4/0 OR SMALLER. DO NOT USE FOR 500 KCM AND LARGER CONDUCTORS

FOR FIELD MAINTENANCE ONLY

TABLE OF CONTENTS

		ITEM	DESCRIPTION	QUANT	STOCK NO. OR CONSTR STDS
OH CREWS	P T & F	1	BRACKET, GALV., 4-HOLE, MOUNTING SEE NOTE (G)	3	166240
		2	BRACKET, FIBERGLASS, TERMINAL, UPSWEEP	1	166864
		3	BRACKET, ARMLESS, TERMINAL MOUNTING (SEE DETAIL PG. 1437.1)	1	166672
		4	MACH. BOLT, GALV., 5/8" X LENGTH AS REQ'D., 1-SQ. CURV. WASH., 1-OBL. COIL SPR. WASH. & 1-NUT (E)	5	PGS 139, 140
		5	MACH. BOLT, GALV., 5/8" X LENGTH AS REQ'D,, 1-SQ. CURV. WASH., 1-OBL. COIL SPR. WASH., 2-FLAT RD. WASH. & 2-NUTS (E)	3	PGS 139, 140
		6	MACH. BOLT, GALV., 5/8" X 1 1/2" (E)	2	PGS 139, 140
		7	MACH. BOLT, GALV., 1/2" X 1 1/2" (E)	2	PGS 139, 140
		8	MACH. BOLT, GALV., 5/8" X 2 1/2", 1-LOCK, 2-rd. WASH. & 2-NUTS (E)	1	PGS 139, 140
		9	HIGH VOLTAGE SIGN & 8-ROOFING NAILS, GALV. (E)	2	647648, 492192
		10	BRACKET, INSULATOR, MOUNTING ANGLE	2	PG 151
		11	PIN, INSULATOR, 12KV, 1" OR 1 3/8" LEAD THREAD	2	529248-529216
		12	BRACKET, INSULATOR, 1" OR 1 3/8" LEAD THREAD	1	166144-166176
		13	SCREW, LAG, GALV., 1/2" X 4" (E)	2	621568
		14	WIRE, BOND, BARE SOLID ANNEALED, #8	10'	812928
		15	HARDWOOD MOULDING, 1", (OTHER THAN TOP CIRCUIT ON POLE)	10'	487200
		16	MOULDING STAPLES, GALV., 3" X 1 1/16" X 1/4" (OTHER THAN TOP CIRCUIT ON POLE) (E)	6	678560
	U C & D	17	LIGHTNING ARRESTER, 12KV	3	113248
		18	CUTOUT, FOR CURRENT-LIMITING FUSE	3	1200 SECTION
		19	CLEVIS	3	235776
		20	GROUND ROD & CLAMP (C)	2	603072, 230016 (A)(E)
		21	HARDWOOD MOULDING, 1"	36'	487200 (A)
		22	STAPLES, MOULDING, GALV., 3" X 1 1/16" X 1/4" (E)	24	678560 (A)
		23	STAPLES, FENCE, GALV., 1 1/4" (E)	32	678528 (A)
		24	WIRE, BARE STRANDED, COPPER, #2	50'	813664
		25	WIRE, BARE STRANDED, COPPER, (SIZE AS REQ'D)	25'	PGS 715-717
		26	INSULATOR, 12KV, PIN TYPE, (CLASS 55-5 OR 56-1)	3	429056-429152
		27	CONNECTOR, WIRE, COMPRESSION, (SIZE AS REQ'D)	1	PGS 783-787
		28	FUSE, CURRENT-LIMITING AS SPECIFIED ON WORK ORDER	3	1200 SECTION
UG CREWS		29	CABLE TERMINAL	3	SEE UG STDS
		30	CABLE, PRIMARY	AS REQ'D	SEE UG STDS
		31			
		32	RISER CONSTRUCTION	AS REQ'D	1400/4200 SECTION

~~OH 1499.304~~
UG 4299.304
SUPERCEDES
4238.2 (2-27-80)

SDG&E ELECTRIC STANDARDS

BRACKET MOUNTED TERMINALS, 12KV 3 WIRE, ARMLESS DEAD END CONSTRUCTION

DATE 8-27-82
APPD ARH

TABLE OF CONTENTS

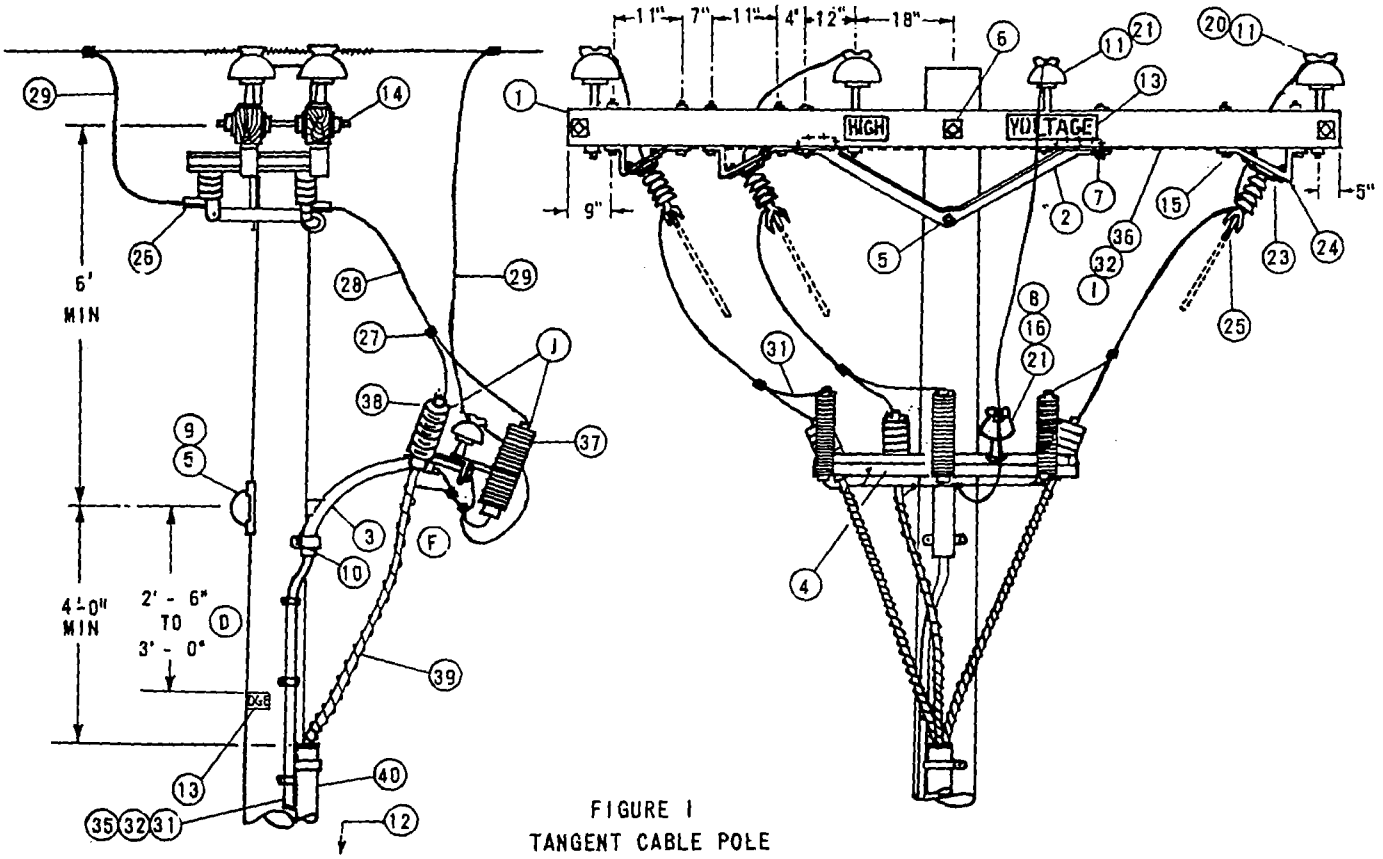

FIGURE 1
TANGENT CABLE POLE

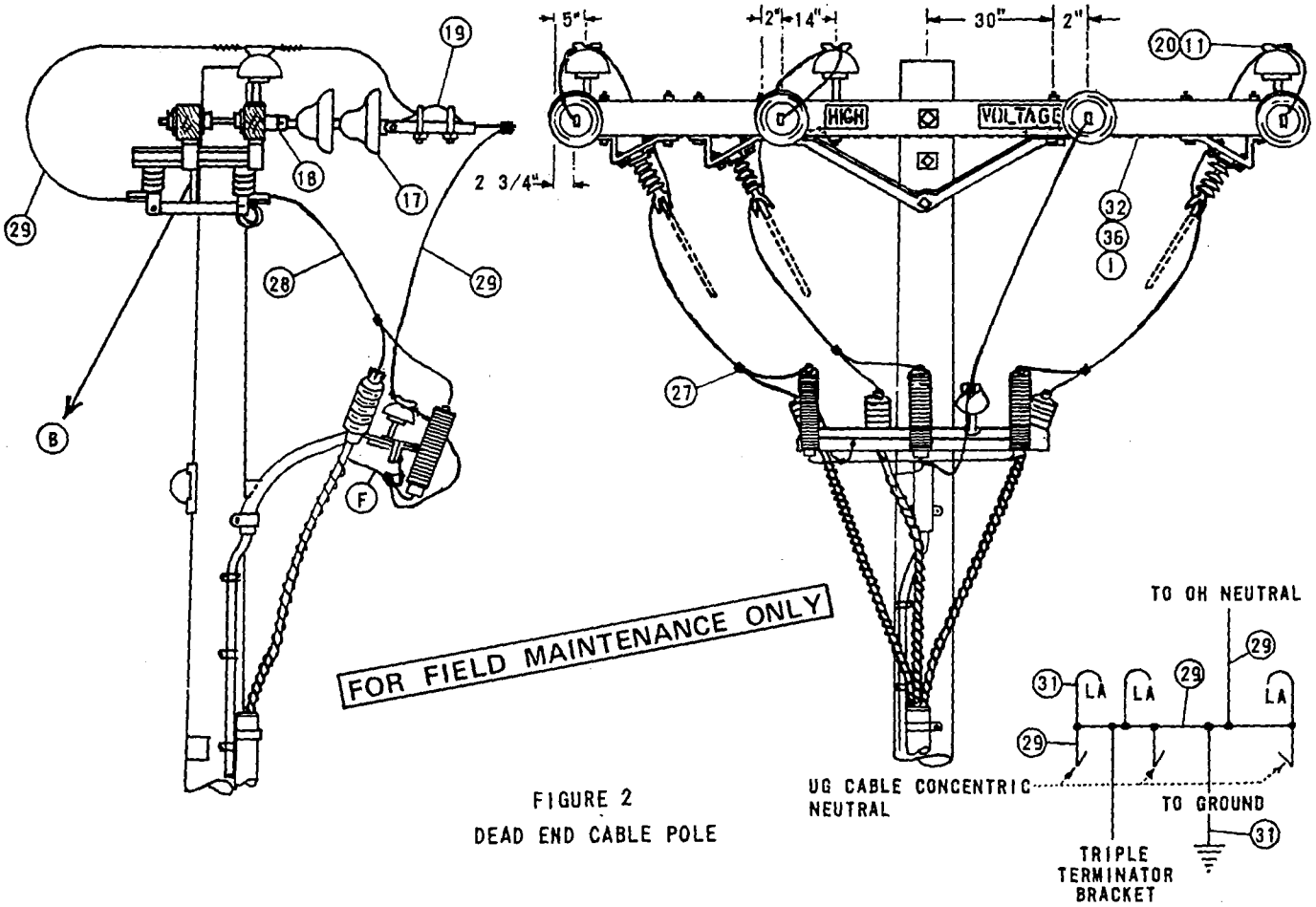

FIGURE 2
DEAD END CABLE POLE

	Indicates Latest Revision	Completely Revised	New Page
ISSUE 1993 DATE 3-9-83 APPD JHT/KRH	SDG&E ELECTRIC STANDARDS 12.47KV AND BELOW CABLE POLE, UPSWEEP BRACKET, 3Φ, 1/C PER PHASE, LINE ARM MOUNTED DISCONNECTS		~~OH 1499.305~~ UG 4299.305 SUPERSEDES 4233.1 (3-9-83)

FIGURE 1

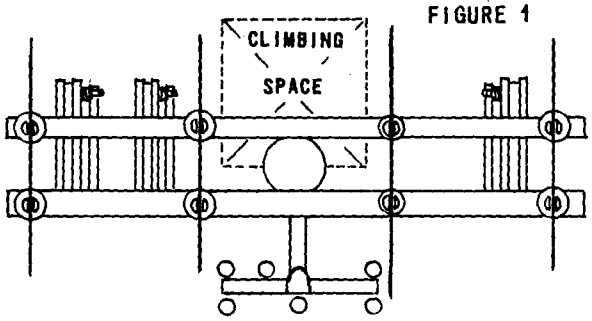

FIGURE 2

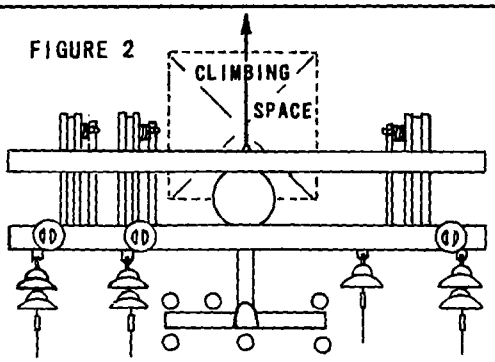

NOTES:

A. SEE PAGE 1406/4206 FOR G.O. 95 MINIMUM VERTICAL SEPARATION BETWEEN TOP OF RISER PROTECTION AND NEXT LOWER CONDUCTOR LEVEL.

(B) SEE PAGE 251 FOR ALLOWABLE CLIMBING SPACE OBSTRUCTIONS.

(C) USE TWO GROUND RODS SPACED A MINIMUM OF 6' APART.

(D) G.O. 95 DIMENSION.

(E) EXEMPT MATERIAL.

(F) INTERCONNECT TRIPLE TERMINAL BRACKET, LIGHTNING ARRESTER GROUND, CONCENTRIC NEUTRAL, AND OVERHEAD NEUTRAL.

(G) REDUCE QUANTITIES AS REQUIRED WHEN NOT USING NEUTRAL.

H. THIS CONSTRUCTION TO BE USED WITH 350 KCMIL AND LARGER UNDERGROUND CABLE.

(I) INTERCONNECT SWITCH AND DEAD END BONDS PER G.O. 95 RULE 52.7 D

(J) ARRESTER AND CABLE TERMINAL POSITIONS MAY BE INTERCHANGED AT THE DISCRETION OF DISTRICT OPERATIONS PERSONNEL.

FOR FIELD MAINTENANCE ONLY

ITEM	DESCRIPTION	QUANTITY FIG 1	QUANTITY FIG 2	STOCK NO. OR CONSTR STDS
1	CROSSARM, 3 3/4" X 5 3/4" X 12'-0"	2	2	300 SECTION
2	BRACE, ANGLE, CROSSARM, 5'	2	2	164128
3	BRACKET, GALV, TERMINAL UPSWEEP, WITH PVC LINER, COMPLETE	1	1	166856
4	BRACKET, TRIPLE TERMINAL	1	1	166676
5	BOLT, MACH, GALV, 5/8" X (LENGTH AS REQ'D), 1 SQ WASH., 1 DBL COIL WASH. (E)	1	1	100 SECTION
6	BOLT, MACH, GALV, 5/8" X (LENGTH AS REQ'D), 2-SQ WASH., 1 DBL COIL WASH. (E)	1	1	100 SECTION
7	BOLT, MACH, GALV, 1/2" X 7", 1 RD WASH., 1 DBL COIL WASH. (E)	4	4	100 SECTION
8	BOLT, MACH, GALV, 5/8" X (LENGTH AS REQ'D), 1 LOCK WASH (G) (E)	1	1	100 SECTION
9	COVER, BOLT, PLASTIC, & 6-100 NAILS (E)	1	1	285696
10	SCREW, LAG, GALV, 4" (E)	2	2	621568
11	PIN INSULATOR STRAIGHT 12KV (AS REQ'D BY ITEM 21) (G)	8	3	532704, 532448
12	STEPS, POLE (E)	16	16	692992
13	SIGN, HIGH VOLTAGE, & 8 ROOFING NAILS	3	3	647648, 492224
14	BOLT, SPACE, GALV, 5/8" X (LENGTH AS REQ'D) 4-SQ WASH., 2 DBL COIL WASH, (G) (E)	2	4	100 SECTION
15	BOLT, MACH, GALV, 1/2" X 8", 1 RD WASH., 1 DBL COIL WASH (E)	12	12	100 SECTION
16	PIN, TRANSFORMER ADAPTER, 1" LEAD THREAD (G)	1	1	529248
17	INSULATOR, SUSPENSION, 12KV, CLEVIS (G)	-	7	700 SECTION
18	CLEVIS, DEAD END, 5/8" BOLT STEEL (G) (E)	-	4	235712
19	CLAMP, STRAIGHT LINE, D.E. (G)	-	4	700 SECTION
20	INSULATOR, LINE, 12KV	6	3	700 SECTION
21	INSULATOR, 12KV, NEUTRAL (G) (E)	3	1	429216
22				
23	BOLT MACH, GALV, 1/2" X 3" 1-LOCK WASH (E)	12	12	100 SECTION
24	BRACKET, DISCONNECT ANGLE MOUNTING, 1/4" X 3" MILD STEEL	6	6	166542
25	SWITCH, HOOKSTICK DISCONNECT, 14.4KV, 400 A, 600 A.	3	3	1200 SECTION
26	TERMINAL, COMPRESSION	6	6	700 SECTION
27	CONNECTOR WIRE COMPRESSION (SIZE AS REQ'D) (E)	13	9	700 SECTION
28	WIRE, COPPER W.P., SIZE PER UG CABLE AMPACITY	15'	15'	700 SECTION
29	WIRE, BARE STRANDED COPPER, SIZE PER UG CABLE AMPACITY	22'	31'	700 SECTION
30				
31	WIRE, #6, BARE STRANDED COPPER	40'	40'	813536
32	STAPLES, FENCE, GALV, 1 1/4" (E)	40	40	678528
33				
34				
35	UNIT GROUND, COMPLETE (WITH GRAY MLDG, WITH PLAIN MLDG) (C)	1	1	603120, 603136
36	WIRE, #8, BARE SOLID ANNEALED COPPER	1 LB	1 LB	812928
37	ARRESTER, LIGHTNING	3	3	1200 SECTION
38	TERMINALS UG CABLE	3	3	SEE UG STDS
39	CABLE PRIMARY	AS REQ'D		SEE UG STDS
40	RISER CONSTRUCTION	AS REQ'D		1400/4200 SECTION

TABLE OF CONTENTS

~~H 1499.306~~
IG 4299.306
SUPERSEDES
1233.2 (3-9-83)

SDG&E ELECTRIC STANDARDS

12.47KV AND BELOW CABLE POLE, UPSWEEP BRACKET, 3Ø, 1/C PER PHASE, LINE ARM MOUNTED DISCONNECTS

DATE 3-9-83
APPD SAT/WR

SCOPE: THIS STANDARD SHOWS DEADEND CONSTRUCTION FOR 12.47KV AND BELOW, 3 PHASE CABLE POLE WITH CROSSARM MOUNTED TERMINALS FOR #2/0 AND SMALLER U.G. CABLE. THIS CONSTRUCTION IS TO BE USED IN CONTAMINATION DISTRICT 1 ONLY.

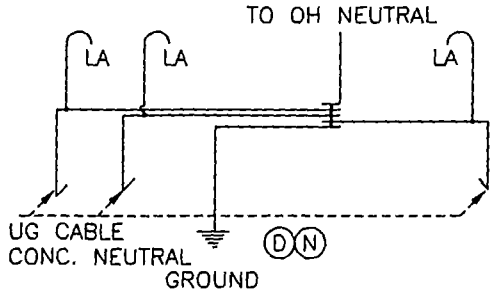

GROUND WIRING DETAIL

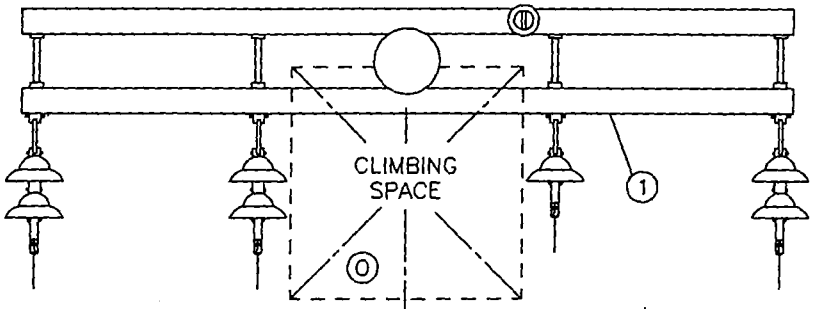

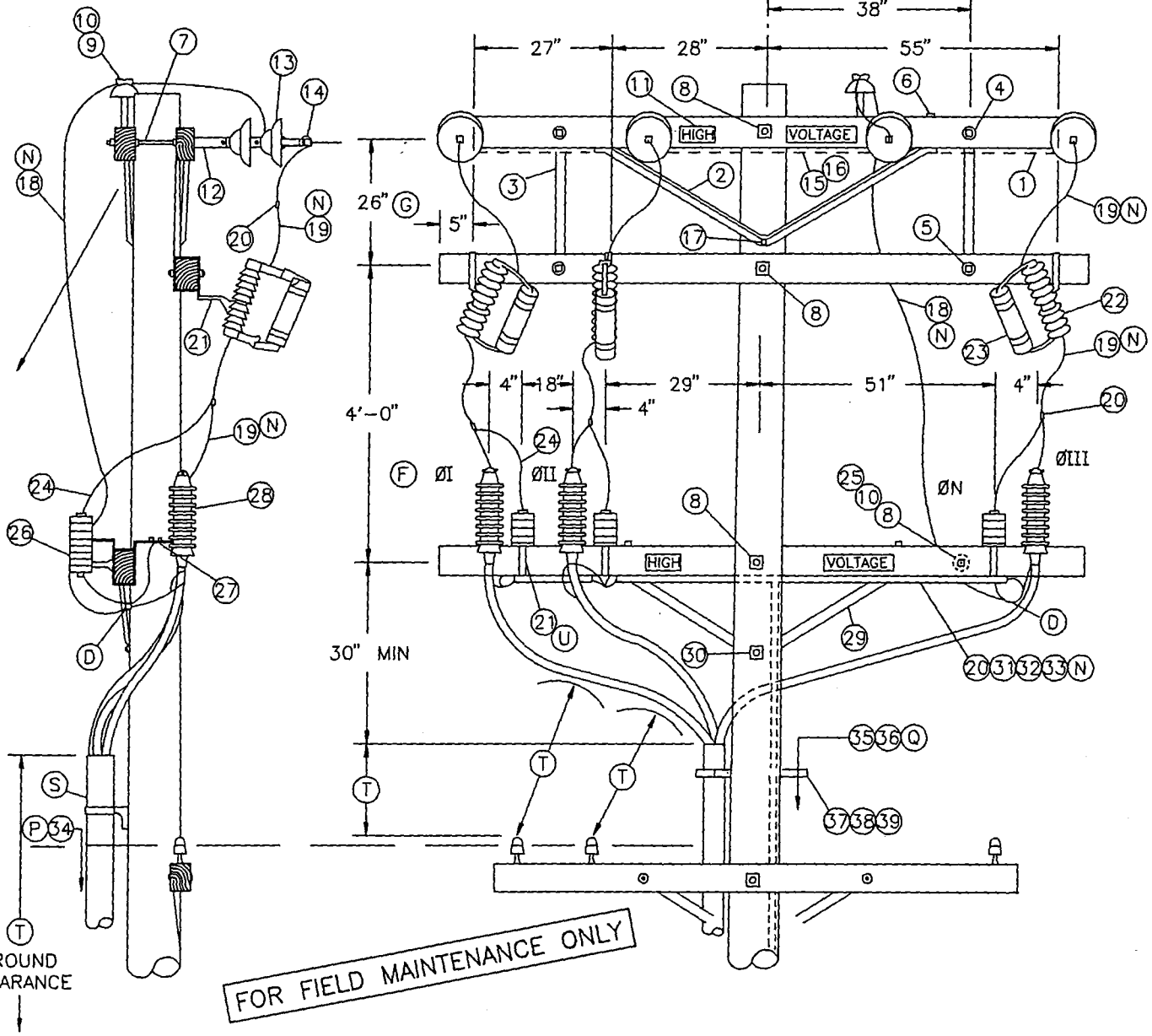

FOR FIELD MAINTENANCE ONLY

ISSUE 1994	SDG&E ELECTRIC STANDARDS	~~OH 1499.307~~
DATE 1-1-93	CROSSARM CABLE POLE, 3Ø, 1/C PER PHASE DEADEND CONSTRUCTION, 12.47KV AND BELOW	UG 4299.307
APPD JLB/RSS		SUPERCEDES 4239.1 (1-1-83)

TABLE OF CONTENTS

BILL OF MATERIAL:

ITEM	DESCRIPTION	QUANTITY	CONST STD OR PAGE NO	STOCK NUMBER
1	CROSSARM, 3-3/4" X 5-3/4" X 10' - 0"	4	–	294128
2	BRACE, ANGLE, CROSSARM, 5' - 0"	2	–	164128
3	BRACE, FLAT, CROSSARM, 28" (E)	2	–	164192
4	BOLT, WASHERHEAD, GALV, 3/8" X 4-1/2", 1 ROUND & 1 SPRING WASHER (E)	2	392	–
5	BOLT, MACH, GALV, 1/2-1 X 5", 1 ROUND & 1 DOUBLE COIL, SPRING WASHER (E)	2	392	–
6	BOLT, MACH, GALV, 1/2" X 7", 1 ROUND & 1 DOUBLE COIL SPRING WASHER (E)	6	392	–
7	BOLT, SPACE, GALV, 5/8" X (LENGTH AS REQ'D), 2 ROUND, 4 SQUARE & 2 DOUBLE COIL SPRING WASHERS (B) (E)	4	392	–
8	BOLT, MACH, GALV, 5/8" X (LENGTH AS REQ'D), 2 SQUARE & 1 DOUBLE COIL SPRING WASHER (B) (E)	4	392	–
9	PIN, INSULATOR, STRAIGHT, 12KV, 1" (B) (E)	1	–	532704
10	INSULATOR, LINE, 12KV NEUTRAL (B) (E)	2	–	429216
11	SIGN, HIGH VOLTAGE & (E)	4	–	647648
	9 ROOFING NAILS, GALV (E)	–	–	492224
12	CLEVIS, DEAD END, 5/8" BOLT STEEL (B) (E)	4	–	235712
13	INSULATOR, SUSPENSION, 12KV, CLEVIS (B)	7	750	–
14	CLAMP, STRAIGHT LINE, D.E. (B)	4	741	–
15	WIRE, #8, BARE SOLID ANNEALED COPPER	10'	–	812928
16	STAPLES, FENCE, GALV, 1-1/4" (E)	AS REQ'D	–	678528
17	BOLT, MACH, GALV, 5/3" X (LENGTH AS REQ'D) & 1 DOUBLE COIL SPRING WASHER (E)	1	392	–
18	WIRE, COPPER, BARE STRANDED OR ACSR/AW BARE (OH NEUTRAL JUMPER) (B) (N)	10'	711-715	–
19	WIRE, COPPER, BARE STRANDED (OH JUMPERS) (N)	18'	715	–
20	CONNECTOR, WIRE, COMPRESSION (SIZE AS REQ'D) (E)	AS REQ'D	783-787	–
21	BRACKET, CUTOUT/ARRESTER, FOR CROSSARM MOUNTING (E)	6	–	166070
22	CUTOUT, FOR CURRENT-LIMITING FUSE	3	1212	–
23	FUSE, CURRENT-LIMITING (SIZE AS SPECIFIED ON WORK ORDER)	3	1207	–
24	WIRE, BARE STRANDED COPPER, #6	14'	–	813536
25	PIN, TRANSFORMER ADAPTER, 1" LEAD THREAD (B) (E)	1	–	529248
26	ARRESTER, LIGHTNING	3	1247	–
27	BRACKET, CROSSARM, TERM (FOR #2 & #2/0 AL CABLE ONLY) (E)	3	–	166060
28	TERMINALS, UNDERGROUND CABLE	3	4111	–
29	BRACE, ANGLE, CROSSARM, 4' - 0"	1	–	164032
30	BOLT, MACH, GALV, 5/8" X (LENGTH AS REQ'D), 1 SQUARE & 1 DOUBLE COIL SPRING WASHER (E)	1	392	–
31	WIRE, BARE STRANDED COPPER (UNDER POTHEAD ARM) (N) (CABLE POLE NEUTRAL)	10'	715	–
32	CONDUIT, PVC TYPE 2, SCHEDULE 40, 1" (E)	10'	–	251200
33	STRAPS, PIPE, GALV, 1" & (E)	AS REQ'D	–	697792
	2 - 6D NAILS, GALV (E)		–	491552
34	RISER CONSTRUCTION	AS REQ'D	1400/4200	–
35	WIRE, #4, BARE STRANDED COPPER	45'	–	813760
36	UNIT GROUND, COMPLETE (S)	1		603136
37	BRACKET, LADDER ARM (E)	AS REQ'D	1404/4204	167184
38	NUT, CLAMPING CHANNEL, W/SPRING, 1/2" (E)	AS REQ'D	1404/4204	503488
39	CHANNEL, DOUBLE GALV, 24" (E)	AS REQ'D	1404/4204	216700

FOR FIELD MAINTENANCE ONLY

CABLE SIZE	UG MACRO UNIT	
	PORCELAIN W/LADDER ARMS	W/O LADDER ARMS
3C #2/0 AL	CP2/0L	CP#2/0
3C-3#2 AL	CP3#2L	CP-3#2

TABLE OF CONTENTS

~~H 1499.308~~
G 4299.308
SUPERCEDES
239.2 (1-1-93)

SDG&E ELECTRIC STANDARDS

CROSSARM CABLE POLE, 3Ø, 1/c PER PHASE
DEADEND CONSTRUCTION, 12.47KV AND BELOW

DATE 1-1-93
APPD JJG/RAK

INSTALLATION:

A. NEW CABLE POLES SHALL HAVE A STANDARD DEPTH OF 9'. IN MOST CASES THIS WILL REQUIRE A 5' TALLER POLE.

(B) REDUCE QUANTITIES AS REQUIRED WHEN NOT USING NEUTRAL.

C. USE THIS CONSTRUCTION FOR 2/0 AND SMALLER UNDERGROUND CABLE.

(D) INTERCONNECT OVERHEAD NEUTRAL, TERMINAL BASE, AND CONCENTRIC CABLE NEUTRAL CONDUCTOR TO LIGHTNING ARRESTER GROUND.

(E) EXEMPT MATERIAL.

(F) OMIT Ø II AND Ø N FOR SINGLE Ø 12KV CABLE POLE, OMIT Ø I AND ØII FOR SINGLE Ø 6.9KV CABLE POLE.

(N)

UG CABLE SIZE AWG OR KCMIL, AL	OH JUMPER COND SIZE, AWG OR KCMIL, CU	OH NEUT JUMPER SIZE			CABLE POLE NEUT SIZE (CU) UNDER POTHEAD ARM OR TRIPLE TERM BRKT
		CU	AL		
2	4	6	2	–	#6 PER PHASE
2/0	4	6	2	–	#6 PER PHASE
350	4/0	1/0	3/0	–	#2 PER PHASE
750	500	4/0	336.4	OR SAME SIZE AS O.H. NEUT CONDUCTOR	1/0 PER PHASE
1000	500	4/0	336.4		1/0 PER PHASE

REFERENCE:

(O) ALLOWABLE WORKING AND CLIMBING SPACE – SEE STD. 251.

(P) POLE STEPPING – SEE STD. 363/4205.

(Q) GROUNDING METHODS – SEE PAGE 1002.5.

R. SEE STANDARD SECTION 1200/4300 FOR FUSING.

(S) RISER POSITIONS – SEE STANDARD 1402/4202.

(T) MINIMUM VERTICAL SEPARATION AS PER G.O. 95 – SEE STD. 1406/4206.

(U) SEE STANDARD 1407/4207 FOR PORCELAIN TERMINAL MOUNTING BRACKET INSTRUCTIONS AND MATERIALS.

FOR FIELD MAINTENANCE ONLY

TABLE OF CONTENTS

DATE 1-1-93 APPD JJB/RDS	SDG&E ELECTRIC STANDARDS CROSSARM CABLE POLE, 3Ø, 1/C PER PHASE DEADEND CONSTRUCTION, 12.47KV AND BELOW	~~OH 1499.3C~~ UG 4299.3C SUPERCEDES 4239.3 (1-1-93)

SCOPE: THIS STANDARD SHOWS CABLE POLE CONSTRUCTION USING PORCELAIN TERMINATIONS FOR 750 AND LARGER UNDERGROUND CABLE. (SEE STANDARD 1407/4207 FOR 350 KCMIL TERMINAL MOUNTING INFORMATION).

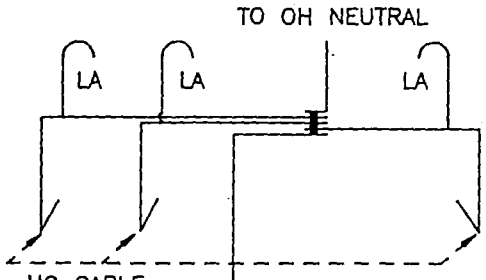

GROUND WIRING DETAIL

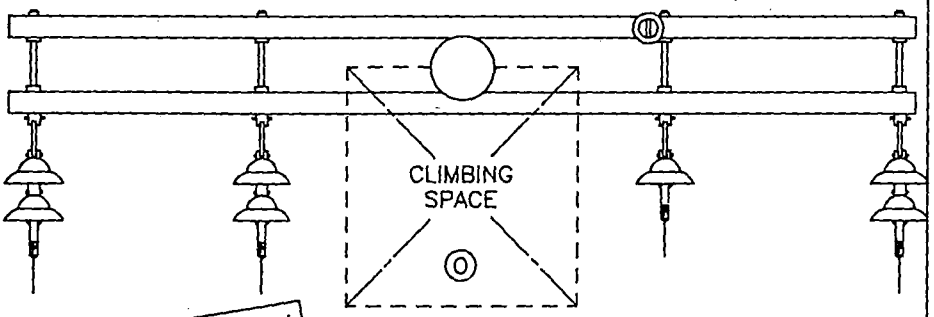

FOR FIELD MAINTENANCE ONLY

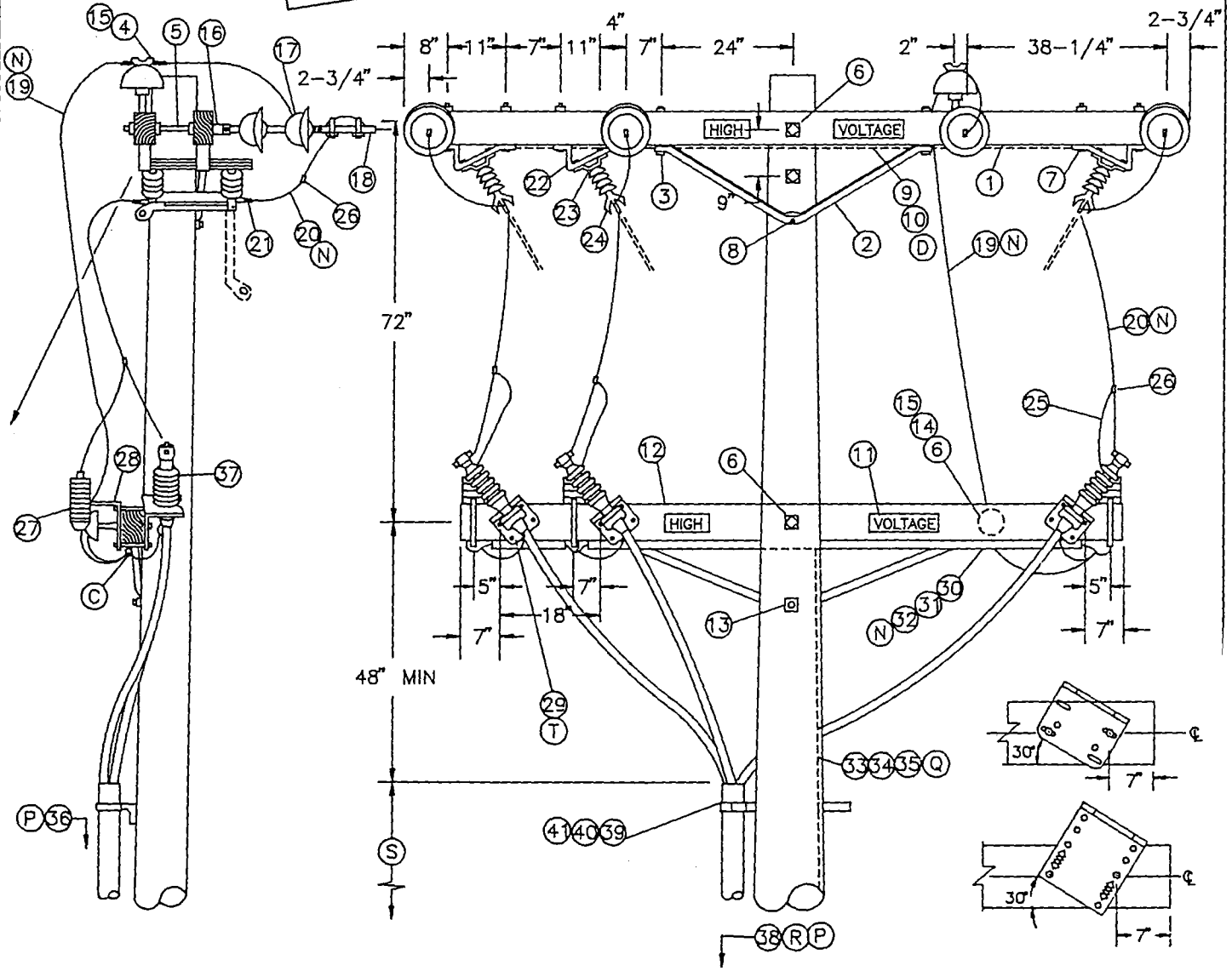

SDG&E ELECTRIC STANDARDS		
DATE 1-1-93 APPD JJG/RDS	12.47 KV AND BELOW DEAD END CABLE POLE ARM, 3Ø, 1/C PER Ø, HOOKSTICK SWITCHED	~~OH 1499.40~~ UG 4299.40 SUPERCEDES 4241.1 (1-1-93)

TABLE OF CONTENTS

BILL OF MATERIAL:

ITEM	DESCRIPTION	QUANTITY	CONSTR STANDARD	STOCK NUMBER
1	CROSSARM, 3-3/4" X 5-3/4" X 12'- 0" (G)	2	–	294160
2	BRACE, ANGLE, CROSSARM, 4'- 0"	3	–	164032
3	BOLT, MACH, GALV, 1/2" X 7", 1 ROUND AND 1 DOUBLE COIL SPRING WASHER (E)	6	392	–
4	PIN, INSULATOR, STRAIGHT, 12KV, 1" LEAD THREAD (F)(E)	1	–	532704
5	BOLT, SPACE, GALV, 5/8" X (LENGTH AS REQ'D), 3 SQUARE, 2 ROUND AND 2 DOUBLE COIL SPRING WASHERS (F)(E)	4	392	–
6	BOLT, MACH, GALV, 5/8" X (LENGTH AS REQ'D), 2 SQUARE AND 1 DOUBLE COIL SPRING WASHERS (F)(E)	3	392	–
7	BOLT, MACH, GALV, 1/2" X 8", 1 ROUND AND 1 DOUBLE COIL SPRING WASHER (E)	12	392	–
8	BOLT, MACH, GALV, 5/8" X (LENGTH AS REQ'D) AND 1 DOUBLE COIL SPRING WASHER (E)	1	392	–
9	WIRE, #8, BARE SOLID ANNEALED COPPER	15'	–	812928
10	STAPLES, FENCE, GALV, 1-1/4" (E)	AS REQ'D	–	678528
11	SIGN, HIGH VOLTAGE AND 9 ROOFING NAILS, GALV (E)	4	–	647648 492224
12	CROSSARM, 3-3/4" X 5-3/4 X 10'- 0"	1	–	294128
13	BOLT, MACH, GALV, 5/8" X (LENGTH AS REQ'D), 1 SQUARE AND 1 DOUBLE COIL SPRING WASHER (E)	1	392	–
14	PIN, TRANSFORMER LEAD ADAPTER, 1" (F)(E)	1	–	529248
15	INSULATOR, 12KV, NEUTRAL (F)(E)	2	–	429216
16	CLEVIS, DEAD END, 5/8" BOLT STEEL (F)(E)	4	–	235712
17	INSULATOR, SUSPENSION, 12KV, CLEVIS (F)	7	750	–
18	CLAMP, STRAIGHT LINE, D.E. (F)	4	741	–
19	WIRE, BARE STRANDED CU OR AL (OH NEUT JUMPER) (N)(F)	12'	711-715	–
20	WIRE, BARE STRANDED COPPER (OH JUMPER) (N)	25'	715	–
21	TERMINAL, COMPRESSION (E)	6	794-795	–
22	BRACKET, DISCONNECT, ANGLE MOUNTING	6	–	166542
23	BOLT, MACH, GALV, 3/8" X 3", 2 ROUND & 1 LOCK WASHER (E)	6	392	–
24	SWITCH, HOOKSTICK DISCONNECT, 14.4KV, 600 A OR 1200 A	3	1222	–
25	WIRE, #6, BARE STRANDED COPPER	12'	–	813536
26	CONNECTOR, WIRE, COMPRESSION (SIZE AS REQ'D) (E)	AS REQ'D	783-787	–
27	ARRESTER, LIGHTNING (N)	3	–	113248
28	BRACKET, CUTOUT/ARRESTER (E)	3	–	166070
29	BRACKET, TERMINAL MOUNTING	3	–	166674
30	CONDUIT, PVC TYPE 2, SCHEDULE 40, 1" (E)	10'	–	251200
31	STRAPS, PIPE, GALV, 1" AND 2 - 6D NAILS , GALV (E)	AS REQ'D	–	697792 491552
32	WIRE, BARE STRANDED COPPER (CP NEUT-UNDER POTHEAD ARM) (N)	15'	715	–
33	WIRE, #4, BARE STRANDED COPPER	45'	–	813760
34	STAPLES, FENCE, GALV, 1-1/4" (E)	AS REQ'D	–	678528
35	UNIT GROUND, COMPLETE (Q)	1	–	603136
36	TAGS, SWITCH NUMBER (E)	2	–	720704
37	TERMINALS, UNDERGROUND CABLE	3	4111	–
38	RISER CONSTRUCTION	AS REQ'D	1400/4200	–
39	BRACKET, LADDER ARM (E)	AS REQ'D	1404/4204	167184
40	NUT, CLAMPING CHANNEL, W/SPRING, 1/2" (E)	AS REQ'D	1404/4204	503488
41	CHANNEL, DOUBLE GALV, 24" (E)	AS REQ'D	1404/4204	216700

FOR FIELD MAINTENANCE ONLY

CABLE SIZE	UG MACRO UNIT W/LADDER ARMS
3C-#350	CP350L
3C-#750	CP750L
3C-#1000	CP-1KL

TABLE OF CONTENTS

~~H 1499.402~~
G 4299.402
SUPERCEDES
241.2 (1-1-93)

SDG&E ELECTRIC STANDARDS

12.47KV AND BELOW DEAD END CABLE POLE ARM, 3Φ, 1/C PER Φ, HOTSTICK SWITCHED

DATE 1-1-93
APPD JLB/KLB

INSTALLATION:

A. NEW CABLE POLES SHALL HAVE A STANDARD SETTING DEPTH OF 9'. IN MOST CASES THIS WILL REQUIRE A 5' TALLER POLE.

B. THIS CONSTRUCTION TO BE USED WITH 350 KCMIL AND LARGER UNDERGROUND CABLE.

Ⓒ INTERCONNECT OVERHEAD NEUTRAL, TERMINAL BASE, AND CONCENTRIC CABLE NEUTRAL CONDUCTOR TO LIGHTNING ARRESTER GROUND.

Ⓓ INTERCONNECT SWITCH AND DEADEND BONDS PER G.O. 95 RULE 52.7D. BONDING SHOULD BE DONE IN ACCORDANCE WITH RULE 53.4.

Ⓔ EXEMPT MATERIAL.

Ⓕ REDUCE QUANTITIES AS REQUIRED WHEN NOT USING NEUTRAL.

Ⓖ WHEN ADDING THIS CONSTRUCTION TO AN EXISTING POLE WITH A 10' LINE ARM. AND SUFFICIENT POLE HEIGHT EXISTS, INSTALL 10' SWITCH ARMS AND ASSOCIATED HARDWARE BELOW THE LINE ARM TO AVOID CHANGING LINE ARM FROM 10' TO 12' (SEE O.H. STANDARD 1222, FIG. 1-B).

Ⓝ

UG CABLE SIZE AWG OR KCMIL, AL	OH JUMPER COND SIZE, AWG OR KCMIL, CU	OH NEUT JUMPER SIZE			CABLE POLE NEUT SIZE (CU) UNDER POTHEAD ARM OR TRIPLE TERM BRKT
		CU	AL		
2	4	6	2	–	#6 PER PHASE
2/0	4	6	2	–	#6 PER PHASE
350	4/0	1/0	3/0	–	#2 PER PHASE
750	500	4/0	336.4	OR SAME SIZE AS O.H. NEUT CONDUCTOR	1/0 PER PHASE
1000	500	4/0	336.4		1/0 PER PHASE

REFERENCE:

Ⓞ ALLOWABLE WORKING AND CLIMBING SPACE – SEE STANDARD 251.

Ⓟ POLE STEPPING – SEE STANDARD 363.

Ⓠ GROUNDING METHODS – SEE STANDARD 1002.

Ⓡ RISER POSITIONS – SEE STANDARD 1402/4202.

Ⓢ MINIMUM VERTICAL SEPARATION AS PER G.O. 95 – SEE STANDARD 1406/4206.

Ⓣ SEE STANDARD 1407/4207 FOR PORCELAIN AND NON PORCELAIN TERMINAL MOUNTING BRACKET INSTRUCTIONS AND MATERIALS.

FOR FIELD MAINTENANCE ONLY

TABLE OF CONTENTS

DATE 1-1-93 APPD JLB/RL	SDG&E ELECTRIC STANDARDS 12.47KV AND BELOW DEAD END CABLE POLE ARM, 3Ø, 1/C PER Ø, HOOKSTICK SWITCHED	~~OH 1499.40~~ UG 4299.40 SUPERCEDES 4241.3 (1-1-93)

TABLE OF CONTENTS

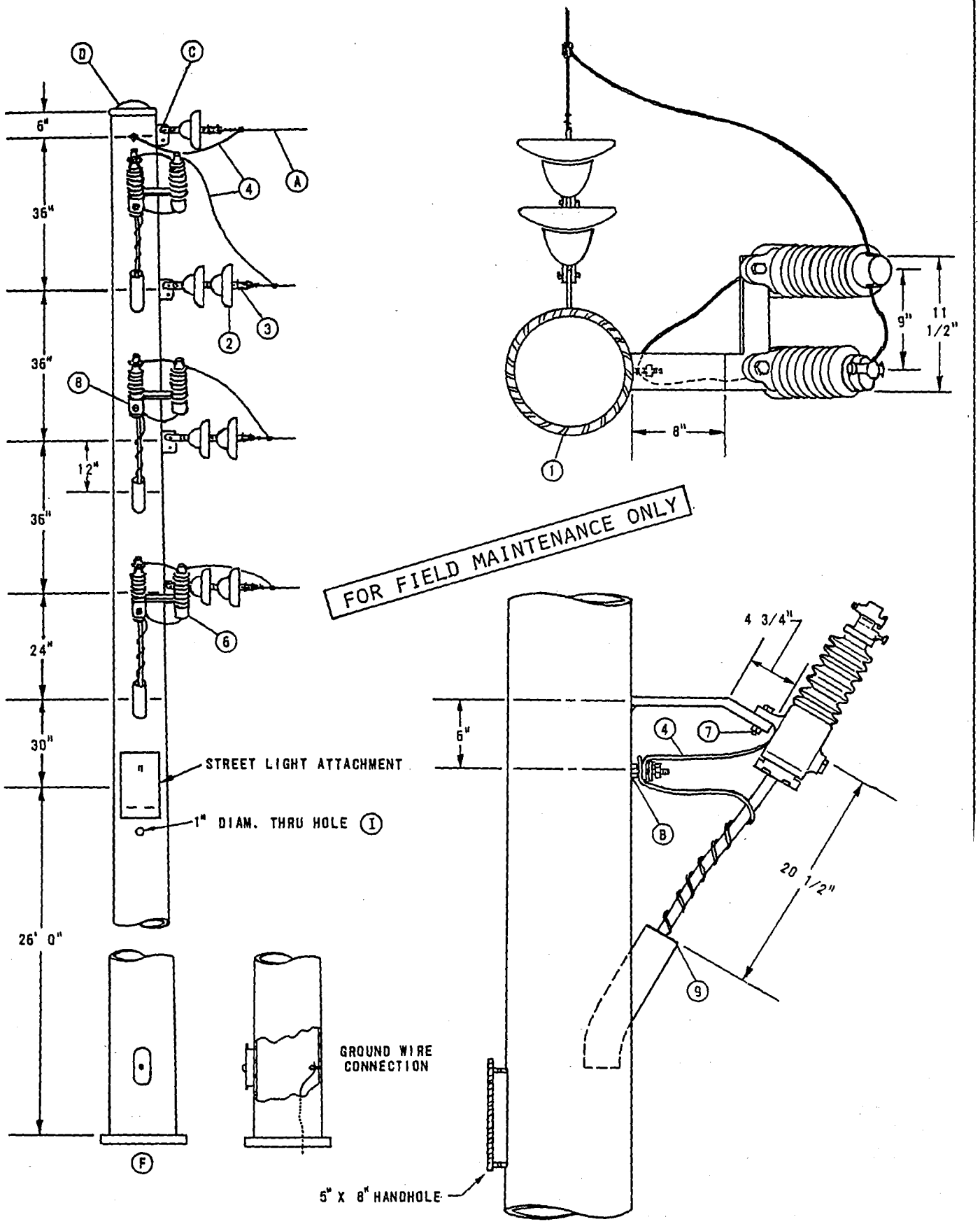

DATE 1-1-92 APPD	SDG&E ELECTRIC STANDARDS CABLE POLE, STEEL, LIGHT DUTY	~~OH 1499.50~~ UG 4299.50

FOR FIELD MAINTENANCE ONLY

TABLE OF CONTENTS

NOTES:

(A) THIS POLE IS DESIGNED FOR A MAXIMUM LOADED TENSION OF 850# PER CONDUCTOR, AND A MAXIMUM SPAN LENGTH OF 250'.

(B) LIGHTNING ARRESTER GROUND, AND CONCENTRIC CABLE NEUTRAL ARE CONNECTED TO STUD AS SHOWN. BASE OF TERMINAL GROUNDED THROUGH MOUNTING BRACKET.

(C) DEAD END TO BE ATTACHED TO TOP HOLE OF DEAD END ATTACHMENT PLATE.

(D) TOP IS REMOVABLE.

(E) EXEMPT MATERIAL.

(F) SEE STANDARDS PAGES 1454/4241 FOR FOUNDATION CONSTRUCTION.

G. SECTIONALIZING TO BE DONE ON ADJACENT POLE.

H. THIS POLE IS NONCLIMBABLE.

(I) TO BE USED FOR STREET LIGHT SECONDARY FROM UG SYSTEM.

J. NO OVERHEAD ATTACHMENT THAN THOSE SHOWN MAY BE MADE TO THIS POLE.

ITEM F	UCD	MATERIAL	QUANTITY	STOCK NO. OR CONSTR. STD.
		POLE, LIGHT DUTY, STEEL CABLE, NONCLIMBABLE	1	552418
		INSULATOR, SUSPENSION	7	700 SECTION
		CLAMP, DEAD END	4	700 SECTION
	4	WIRE, #2 WP COPPER	10'	812608
	5	WIRE, #6 BS COPPER	8'	813536
	6	ARRESTER, LIGHTNING	3	1200 SECTION
	7	BOLT, MACH., GALV., 5/8" X 2", 1 LOCK WASHER. (E)	6	100 SECTION
	8	TERMINAL, UNDERGROUND CABLE	3	SEE U.G. STDS.
	9	GRIP, CABLE	3	394048

~~1499.502~~
4299.502

SDG&E ELECTRIC STANDARDS

CABLE POLE, STEEL, LIGHT DUTY

DATE 1-1-92
APPD

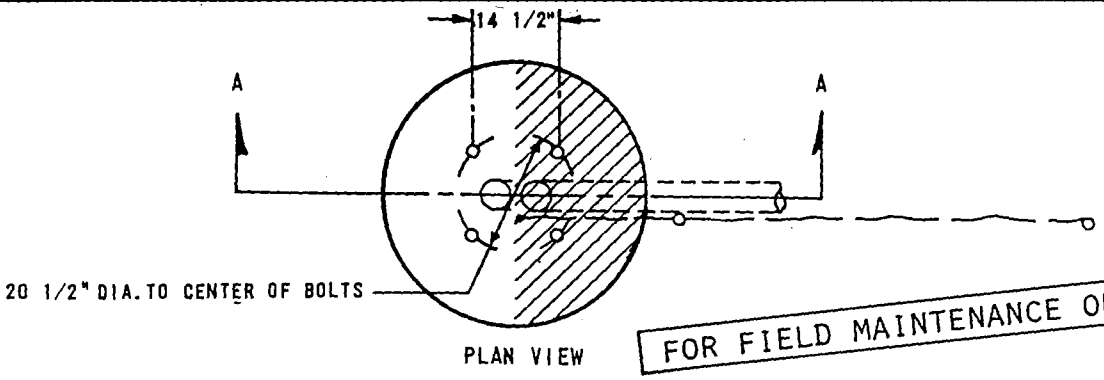

PLAN VIEW

FOR FIELD MAINTENANCE ONLY

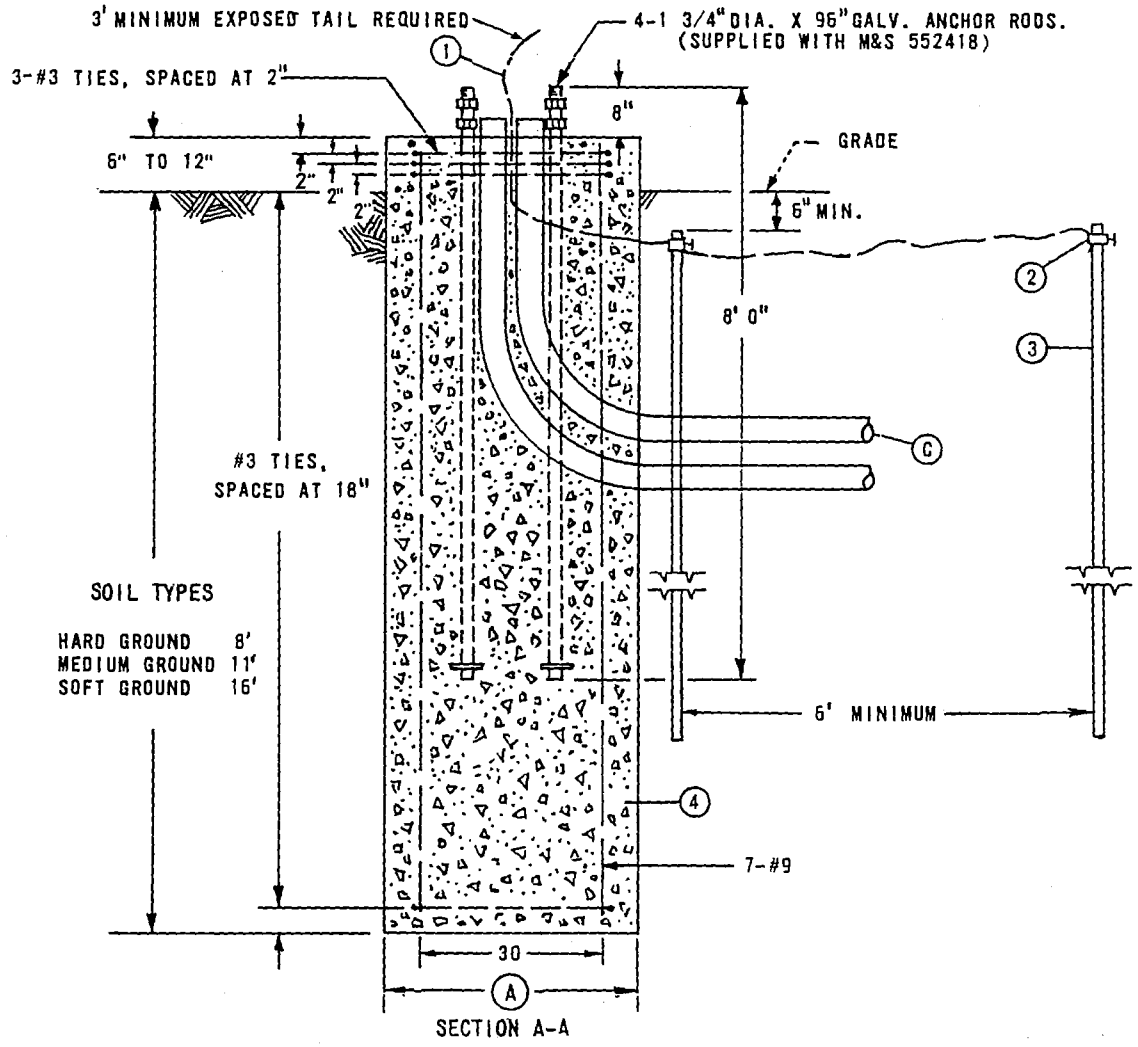

SECTION A-A

NOTES:

(A) WHEN DIRECTION OF PULL OF THE OVERHEAD CONDUCTORS IS IN SHADED AREA IN THE PLAN VIEW, FOUNDATION DIAMETER SHALL BE 48". WHEN IN THE UNSHADED AREA THE FOUNDATION DIAMETER MAY BE REDUCED TO 42". DIAMETER REQUIRED ON WORK ORDER.

B CONTACT CIVIL ENGINEERING FOR CONFIRMATION OF SOIL TYPES BEFORE DECIDING FOUNDATION DIMENSIONS.

(C) TWO DUCTS TO BE INSTALLED IN FOUNDATION. THREE DUCTS ARE REQUIRED IF STREET LIGHT IS TO BE INSTALLED ON POLE

(E) EXEMPT MATERIAL.

ITEM	DESCRIPTION	QUANTITY	STOCK NO.	VOLUME OF CONCRETE (IN CUBIC YARDS)		
				DEPTH (IN FEET)	DIAMETER (IN INCHE 42	48
1	WIRE, #2 BARE STRANDED COPPER	15'	813664			
2	CLAMPS, GROUND (E)	2	230016			
3	RODS, GROUND	2	603072	8	2.85	3.72
4	CONCRETE	(SEE TABLE)	—	11	3.92	5.12
				16	5.70	7.45

SDG&E ELECTRIC STANDARDS

DATE 1-1-92

FOUNDATION, STEEL CABLE POLE, LIGHT DUTY

~~OH 1499.5(~~
UG 4299.5(

TABLE OF CONTENTS

SCOPE: THIS STANDARD SHOWS 6 OR 7 CONDUCTOR DEAD END CABLE POLE WITH HOOKSTICK SWITCHES FOR 750 KCMIL AND LARGER U.G. CABLE. (SEE STANDARD 1407/4207 FOR 350 KCMIL TERMINAL MOUNTING INFORMATION).

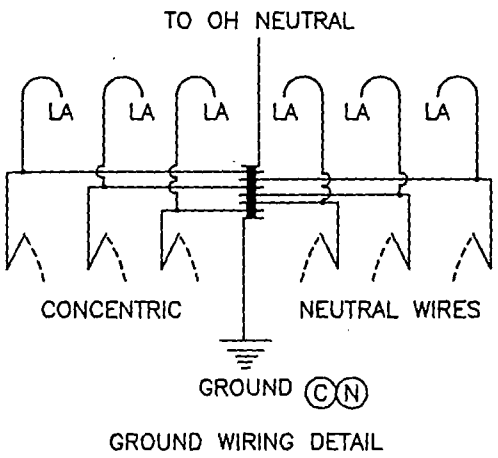

GROUND WIRING DETAIL

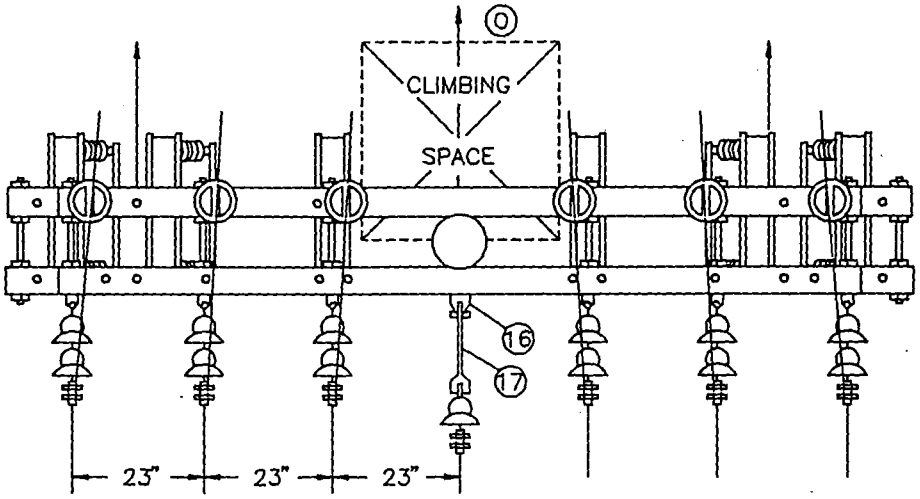

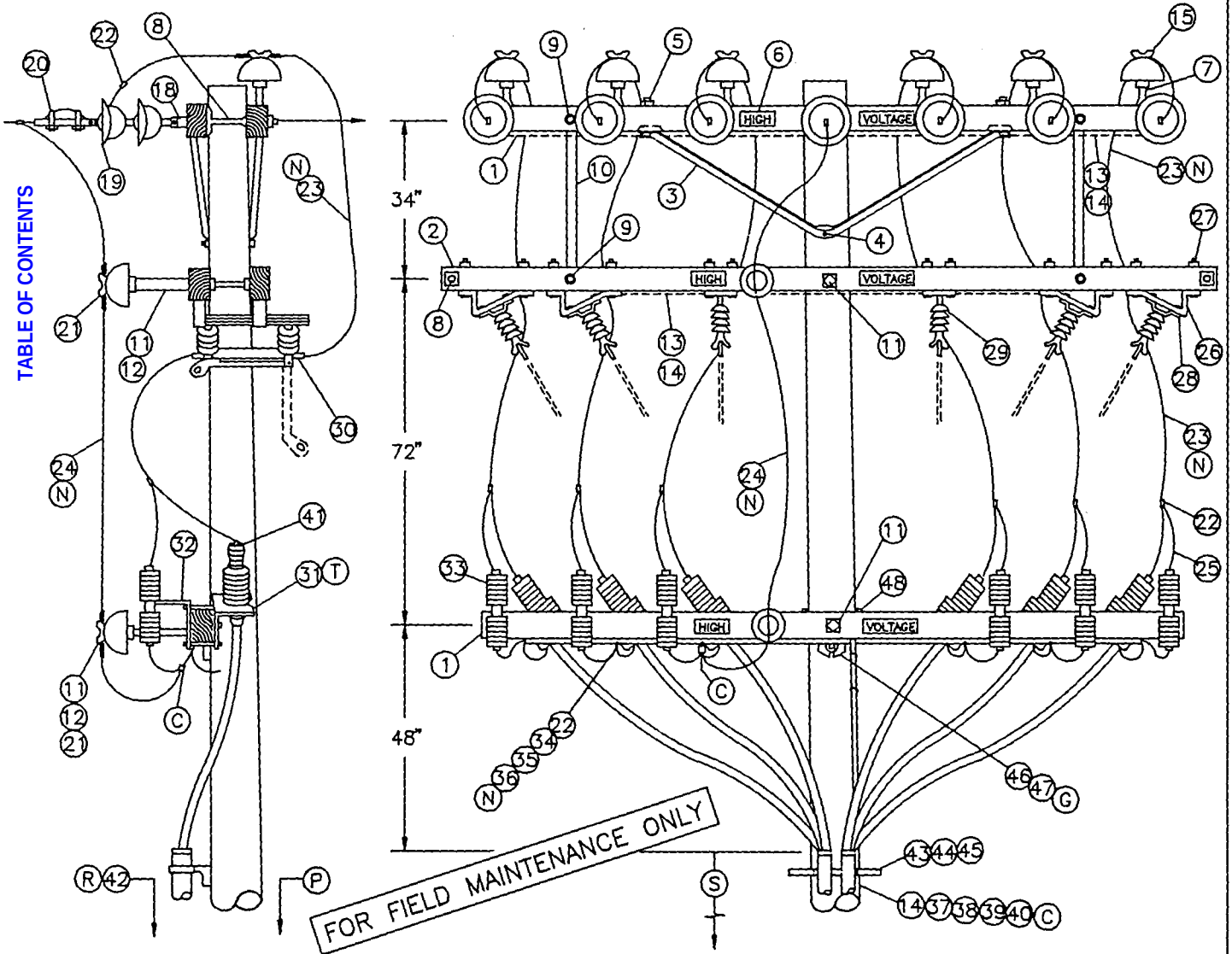

TABLE OF CONTENTS

~~1499.504~~ 4299.504 SUPERCEDES 1.1 (1-1-93)	SDG&E ELECTRIC STANDARDS 12.47KV AND BELOW DEAD END CABLE POLE, 6 OR 7 OH CONDUCTORS, 1 OR 2 TERMINALS PER CONDUCTOR, HOOKSTICK SWITCHED	DATE 1-1-93 APPD

BILL OF MATERIAL:

ITEM	DESCRIPTION		QUANTITY	CONST STD OR PG NO	STOCK NUMBER
1	CROSSARM, 3-3/4" X 5-3/4" X 12'-0"		3	–	294160
2	CROSSARM, 3-3/4" X 5-3/4" X 13'-6"		2	–	294368
3	BRACE, ANGLE, CROSSARM, 6'	(E)	3	–	164160
4	BOLT, MACH, GALV, 5/8" X (LENGTH AS REQ'D), 1 DBL COIL WASH	(E)	1	392.1&.2	–
5	BOLT, MACH, GALV, 1/2" X 7", 1 RD & 1 DBL COIL WASH	(E)	4	392.1&.2	–
6	SIGN, HIGH VOLTAGE & 8 ROOFING NAILS	(E)	6	–	647648 492224
7	PIN, INSULATOR, STRAIGHT, 12KV, 1" OR 1 3/8"	(E)	6	–	532704 532448
8	BOLT, SPACE, 5/8" X (LENGTH AS REQ'D), 3 SQ WASH & 2 DBL COIL WASH	(E)	8	392.1&.2	–
9	BOLT, MACH, GALV, 5/8" X (LENGTH AS REQ'D), 1 RD WASH & 1 DBL COIL WASH	(E)	8	392.1&.2	–
10	BRACE, VERTICAL, 36"	(E)	4	–	164224
11	BOLT, MACH, GALV, 5/8" X (LENGTH AS REQ'D), 2 SQ FLAT WASH & 1 DBL COIL WASH	(E)	5	392.1&.2	–
12	PIN, TRANSFORMER ADAPTER, 1" LEAD THREAD	(D) (E)	2	–	529248
13	WIRE, #8, BARE SOLID ANNEALED COPPER		2 LB	–	812928
14	STAPLES, FENCE, GALV, 1-1/4"	(D) (E)	AS REQ'D	–	678528
15	INSULATOR, LINE, 12KV, 1" OR 1-3/8" PIN		6	750	–
16	CLEVIS, DEAD END, 3/4" BOLT, STEEL (OPEN TYPE)	(D) (E)	1	–	235618
17	LINK, EXTENSION, 1/2" X 1-1/2" X 12"	(D)	1	–	466240
18	CLEVIS, DEAD END, 5/8" BOLT, STEEL (CLOSED TYPE)	(E)	6	–	235712
19	INSULATOR, SUSPENSION, 12KV	(D)	13	750	–
20	CLAMP, STRAIGHT LINE, D.E.	(D)	7	742-743	–
21	INSULATOR, LINE, 12KV, NEUTRAL	(D) (E)	2	–	429216
22	CONNECTOR, WIRE, (SIZE & TYPE AS REQ'D)	(E)	AS REQ'D	783-787	–
23	WIRE, BARE STRANDED COPPER, (OH JUMPER)	(N)	72'	715-716	–
24	WIRE, BARE STRANDED CU OR AL, (OH NEUT JUMPER)	(N)	12'	711-716	–
25	WIRE, #6, BARE STRANDED COPPER		25'	–	813536
26	BRACKET, DISCONNECT, ANGLE MOUNTING, 1/4" X 3"		8	–	166542
27	BOLT, MACH, GALV, 1/2" X 8", 1 RD & 1 DBL COIL WASH	(D)	24	392.1&.2	–
28	BOLT, MACH, GALV, 3/8" X 3"	(E)	8	392.1&.2	–
29	SWITCH, DISCONNECT, 14.4KV, 600 A OR 1200 A		6	1205	–
30	COMPRESSION TERMINALS, CU, 2 HOLE (SIZE AS REQ'D)		12	794-795	–
31	BRACKET, POTHEAD MOUNTING		6	1400/4200	–
32	BRACKET, CUTOUT/ARRESTER, FOR CROSSARM MOUNTING	(E)	6	–	166070
33	ARRESTER, LIGHTNING	(E)	6	1247	–
34	CONDUIT, PVC, SCHEDULE 40, 1-1/2"	(E)	10'	–	25123
35	STRAPS, PIPE, GALV, 1" & 6D NAILS, GALV	(E)	AS REQ'D	–	69779 49155
36	WIRE, BARE STRANDED CU, (C.P. NEUTRAL SIZE)	(N)	35'	715-716	–
37	WIRE, #4, BARE STRANDED COPPER		45'	–	8137
38	STAPLES, MOULDING, GALV, 3" X 1-1/16" X 1/4"	(D) (E)	AS REQ'D	–	6785
39	UNIT GROUND, COMPLETE	(Q)	1	–	6031
40	CLAMP, 5/8", GROUND ROD	(E)	2	–	230
41	TERMINALS, UNDERGROUND CABLE		6	4111	
42	RISER CONSTRUCTION	(E)	AS REQ'D	1400/4200	
43	BRACKET, LADDER ARM	(E)	AS REQ'D	1404/4204	16
44	NUT, CLAMPING CHANNEL, W/SPRING, 1/2"	(E)	AS REQ'D	1404/4204	50
45	CHANNEL, DOUBLE GALV, 24"	(E)	AS REQ'D	1404/4204	21
46	BOLT, MACH, GALV, 5/8" X (LENGTH AS REQ'D), 1 SQUARE, 1 ROUND & 1 DOUBLE COIL SPRING WASHER	(E)	1	392	
47	GAIN, CROSSARM, BRACELESS	(G)	1	–	3
48	BOLT, MACH, GALV, 5/8" X 7", 1 ROUND & 1 DOUBLE COIL SPRING WASHER	(E)	2	392	

FOR FIELD MAINTENANCE ONLY

CABLE SIZE	UG MACRO UNIT PORCELAIN W/LADDER ARMS
3C-#750 AL TWO RUNS	2R750L
3C-#1000 AL TWO RUNS	2R-1KL

SDG&E ELECTRIC STANDARDS

DATE 1-1-93

APPD JLG/RDJ

12.47KV AND BELOW DEAD END CABLE POLE, 6 OR 7 OH CONDUCTORS, 1 OR 2 TERMINALS PER CONDUCTOR, HOOKSTICK SWITCHED

~~OH~~ UG SU 4251

TABLE OF CONTENTS

£ POLES SHALL HAVE A STANDARD DEPTH OF 9'. IN MOST CASES THIS WILL REQUIRE A 5'
LE.

TRUCTION TO BE USED WITH 350 KCMIL AND LARGER UNDERGROUND CABLE.

CT OVERHEAD NEUTRAL, TERMINAL BASE, AND CONCENTRIC CABLE NEUTRAL CONDUCTOR TO
ARRESTER GROUND.

ANTITIES AS REQUIRED WHEN NOT USING NEUTRAL .

RIAL.

TIONS TO INSTALL POTHEAD MOUNTING BRACKETS AND LIGHTNING ARRESTER BRACKETS.

GAINS IN THE POLE WHEN INSTALLING THE VERTICALLY MOUNTED SECTIONALIZING
THE GAIN HARDWARE USED HERE MAKE CUT GAINS UNNECESSARY.

CABLE SIZE AWG OR KCMIL. AL	OH JUMPER COND SIZE, AWG OR KCMIL, CU	OH NEUTRAL JUMPER SIZE CU OR AL	CABLE POLE NEUT SIZE (CU) UNDER POTHEAD ARM OR TRIPLE TERM BRKT
350	4/0	SAME SIZE AS O.H. NEUT CONDUCTOR	#2 PER PHASE
750	500		1/0 PER PHASE
1000	500		1/0 PER PHASE

ABLE WORKING AND CLIMBING SPACE – SEE STD. 251.

STEPPING — SEE STD. 363.

NDING METHODS – SEE PAGE 1002.5.

POSITIONS — SEE STANDARD 1402/4202.

UM VERTICAL SEPARATION AS PER G.O. 95 – SEE STD. 1406/4206.

STANDARD 1407/4207 FOR PORCELAIN AND NON PORCELAIN TERMINAL MOUNTING BRACKET
UCTIONS AND MATERIALS.

TABLE OF CONTENTS

FOR FIELD MAINTENANCE ONLY

506
506
93)

SDG&E ELECTRIC STANDARDS

12.47KV AND BELOW DEAD END CABLE POLE,
6 OR 7 OH CONDUCTORS
1 OR 2 TERMINALS PER CONDUCTOR, HOOKSTICK SWITCHED

DATE 1-1-93
APPD JJG/RSE

HANDHOLE INSTALLATIONS

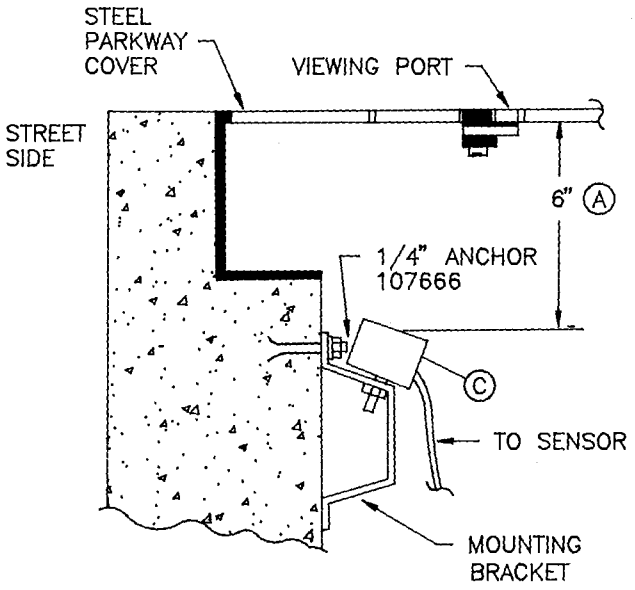

FOR FIELD MAINTENANCE ONLY

INSTALLATION:

(A) ALL MEASUREMENTS SHOWN ARE APPROXIMATE – EXACT PLACEMENT OF THE FAULT INDICATOR TARGET WILL HAVE TO BE DETERMINED INDIVIDUALLY, USING THE FRAME AND COVER INTENDED FOR THAT INSTALLATION.

B. ATTACH LEADS TO HANDHOLE WALL.

(C) THREE FAULT INDICATORS MAY BE INSTALLED UNDER ONE VIEWING PORT.

REFERENCE:

F. SEE STANDARD 3212 FOR FAULT INDICATOR IDENTIFICATION.

G. SEE STANDARD 4352 FOR AUTOMATIC FAULT INDICATORS APPLICATION AND SELECTION.

	SDG&E ELECTRIC STANDARDS	
DATE 1-1-96 APPD	FAULT INDICATOR INSTALLATION	4399.5

TABLE OF CONTENTS

VIEWING PORT ADAPTER AND INSTALLATION ON HANDHOLE PARKWAY COVERS

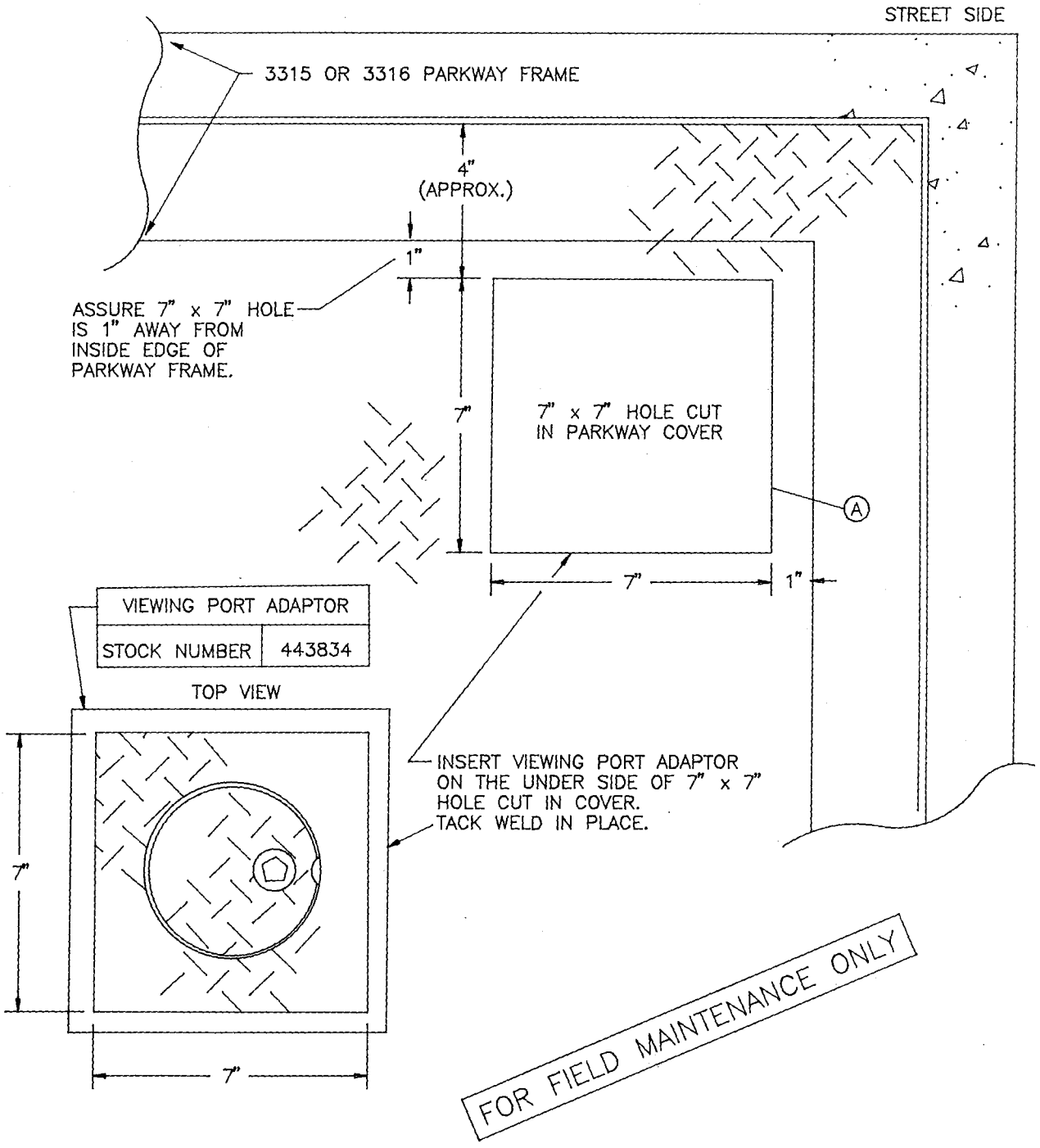

INSTALLATION:

(A) APPLY RUST INHIBITOR AND SAME COLOR PAINT ON TACK WELD AND EDGES OF HOLE CUT IN COVER.

DATE 1-1-96 APPD RJT/BDJ	SDG&E ELECTRIC STANDARDS FAULT INDICATOR INSTALLATION	4399.5(

TABLE OF CONTENTS

SCOPE: THIS STANDARD SHOWS THE INSTALLATION AND REQUIREMENTS FOR TAGGING SDG&E OWNED ORNAMENTAL STREET LIGHT POLES.

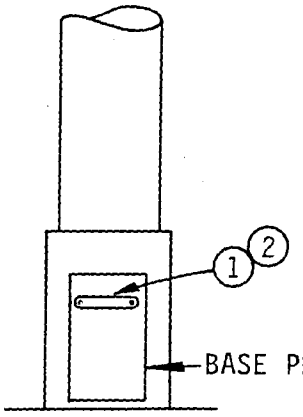

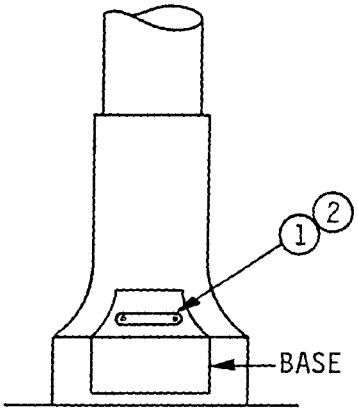

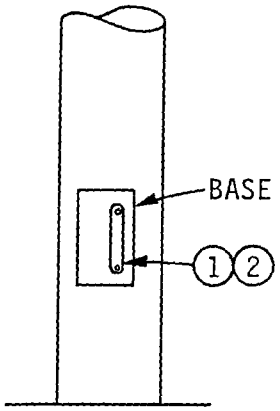

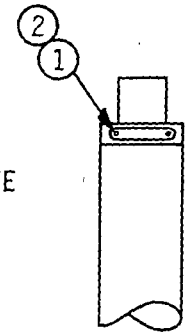

TOP OF POLE FOR POST TOP MOUNTED LUMINAIRES

TAG PER CALIFORNIA GRID COORDINATE SYSTEM

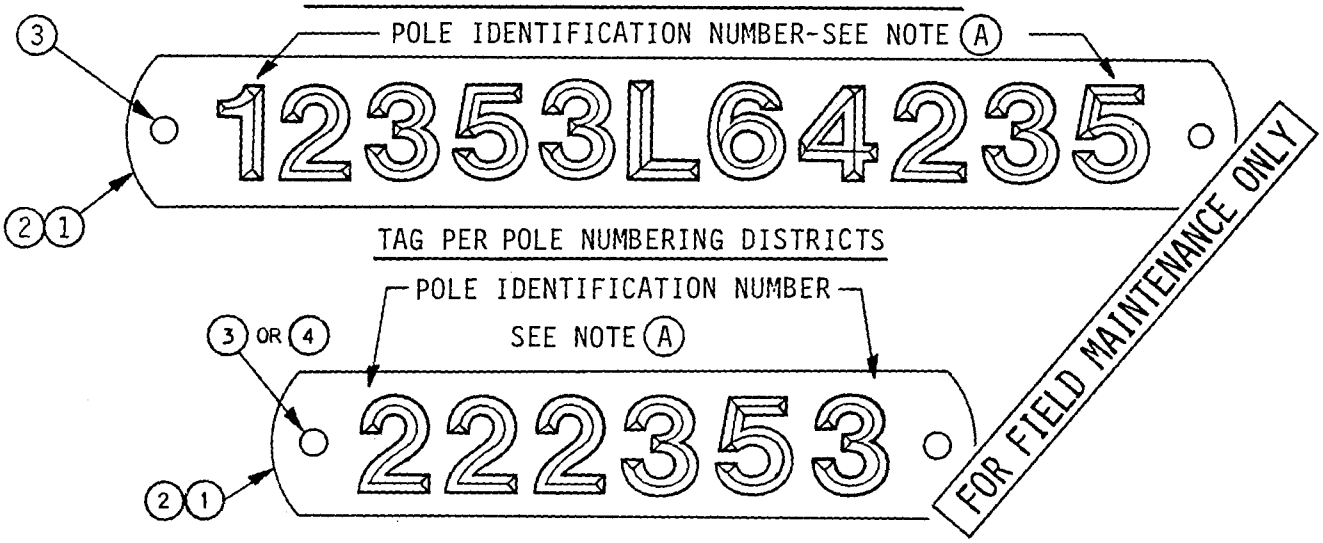

NOTES:

-TAG SDG&E OWNED POLES ONLY-DO NOT TAG POLES OWNED BY OTHERS.

-DO NOT RETAG (WITH NEW IDENTIFICATION NUMBERS), EXISTING POLES THAT HAVE OLD CAL-GRID OR POLE DISTRICT NUMBERS. THE OLD NUMBER STILL APPLIES FOR IDENTIFICATION PURPOSES.

BILL OF MATERIAL:

ITEM	DESCRIPTION	QUANTITY	STOCK NO.
1	ALUMINUM EMBOSSING TAPE 7/8" ROLL	AS REQ'D	720704 (E)
2	BRASS EMBOSSING TAPE 7/8" ROLL	AS REQ'D	720736 (D) (E)
3	STAINLESS STEEL SELF TAPPING DRIVE SCREW #4 - 1/4"	2	621344 (E)
4	EPOXY PASTE	AS REQ'D	213244 (E)

INSTALLATION:

(A) NUMBER IS ACCORDING TO OLD SDG&E POLE NUMBERING DISTRICTS OR OLD CAL-GRID COORIDINATE SYSTEM.

B. ALL TAGS TO BE ATTACHED BY DRILLING TWO HOLES AS SHOWN ABOVE USING SELF TAPPING SCREWS OR EPOXY PASTE.

C. WORK ORDER SKETCHES, TEXT AND MATERIAL LISTS WILL SPECIFY NUMBERS TO BE ATTACHED TO POLES.

(D) FOR USE IN CORROSIVE AREAS.

(E) EXEMPT MATERIAL.

TABLE OF CONTENTS

DATE 1-1-87	SDG&E ELECTRIC STANDARDS	4499.1C
	NUMBERING ORNAMENTAL STREET LIGHT POLES	

SCOPE: THIS STANDARD SHOWS MERCURY VAPOR LUMINAIRES USED TO PROVIDE ROADWAY AND DUSK TO DAWN LIGHTING, AND REPLACEMENT REFRACTORS.

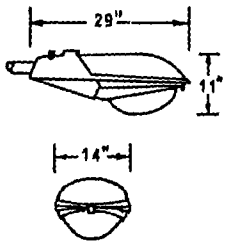

GENERAL ELECTRIC
M-250A POWR/DOOR

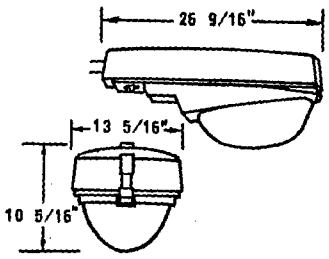

MCGRAW EDISON
UNIDOR 250

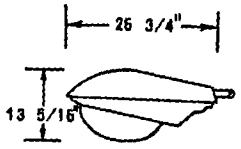

WESTINGHOUSE
OV-15

FIGURE 1

FOR FIELD MAINTENANCE ONLY

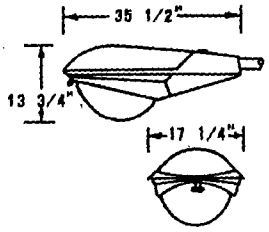

GENERAL ELECTRIC
M-400A POWR/DOOR

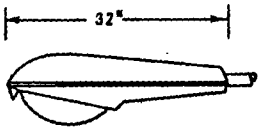

WESTINGHOUSE
OV-25

FIGURE 2

BILL OF MATERIAL:

FIG. NO.	STOCK NUMBER	LAMP SIZE WATTS	BALLAST		MANUFACTURER AND CATALOG NUMBER							
			TYPE	SOURCE VOLTAGE	GENERAL ELECTRIC		MCGRAW EDISON		WESTINGHOUSE		UNICORN ELECTRIC	
					TYPE	CAT. NO.	TYPE	CAT. NO.	TYPE	CAT. NO.	TYPE	CAT. NO.
1	473920	175	REGULATOR	120/240 (A)	M-250A	C727G002 (B)	UNIDOR	UU1104-120R	OV-15	811A208G04		
	474048		REACTOR NPF	240	POWR/DOOR	C727G014 (B)	250	UU-1154R		811A208G20		
	473910		SERIES	6.6 AMPS	M-250-R2	M2AR17CXSIGMS31036					--	UCM-A66-175
2	474208	400	REGULATOR	120/240 (A)	M-400A POWR/DOOR	C723G001 (B)			OV-25	656A303G04		
	473912		SERIES	6.6 AMPS	M-250-R2	M4AR40CXSIGMN32043					--	UCM-A66-400

REPLACEMENT REFRACTORS FOR MERCURY VAPOR LUMINAIRES						
CONVENTIONAL LUMINAIRES		LAMP TYPE	LAMP WATTAGE	REPLACEMENT REFRACTOR		
MANUFACTURER	TYPE			TYPE	CATALOG NUMBER	STOCK NUMBER
GENERAL ELECTRIC	M-250A (C)	MV	175,250	GLASS	35-130583-01	579264
GENERAL ELECTRIC	M-400A (C)	MV	400	GLASS	35-231137-01	579296
				LEXAN	35-130015-02	579312
AMERICAN ELECTRIC	23 SERIES (C)	MV	175,250	GLASS	23-002	579264
AMERICAN ELECTRIC	25 SERIES (C)	MV	400	GLASS	25-003	578928 (F)
				LEXAN	25-003-6	-- (F)
AMERICAN ELECTRIC	327 SERIES	MV	1000	GLASS	27-003	578936 (F)
WESTINGHOUSE	OV-15	MV	175,250	GLASS	464-D067-H01	578976 (F)
WESTINGHOUSE	OV-25 (C)	MV	400	GLASS	464-D336-H02	579040
				LEXAN	6716-D13-H01	579056 (F)

INSTALLATION:

(A) FACTORY WIRED FOR 120 VOLTS, DO NOT WIRE FOR 240 VOLTS ON NEW INSTALLATIONS.

(B) ASTRODOME UNITS ARE EQUIPPED WITH BUILT-IN PHOTOELECTRIC CELL, FOR REPLACEMENT SEE PAGE 1512/4412.

(C) A GLASS OR A LEXAN REFRACTOR MAY BE USED ON THESE LUMINAIRES.

D. LEXAN REFRACTORS TO BE USED IN HIGH VANDALISM AREAS ONLY.

(F) ITEM IS NO LONGER PURCHASED.

DATE 1-1-89 APPD [illegible]	SDG&E ELECTRIC STANDARDS MERCURY VAPOR CONVENTIONAL LUMINAIRES AND REPLACEMENT REFRACTORS	~~OH 159~~ UG 449 SUPERCE 4420.1

TABLE OF CONTENTS

TABLE OF CONTENTS

SCOPE: THIS STANDARD SHOWS HIGH PRESSURE SODIUM VAPOR LUMINAIRES USED TO PROVIDE ROADWAY AND DUSK TO DAWN LIGHTING, REPLACEMENT BALLAST AND REFRACTORS.

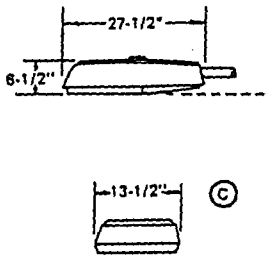

GENERAL ELECTRIC
M150 CUTOFF POWER/DOOR

FIGURE 1

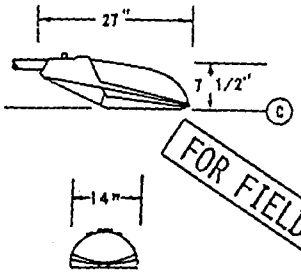

GENERAL ELECTRIC
M-250A CUTOFF POWER/DOOR

FIGURE 2

FOR FIELD MAINTENANCE ONLY

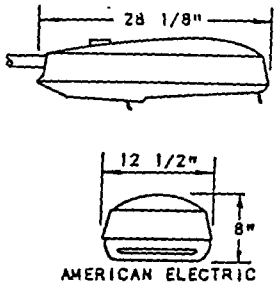

AMERICAN ELECTRIC
SERIES 213 CUTOFF
POWER/PAD

FIGURE 3

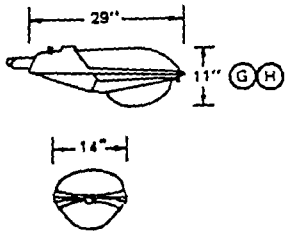

GENERAL ELECTRIC
M-250A POWER/DOOR

FIGURE 4

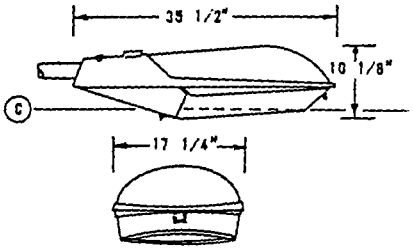

GENERAL ELECTRIC
M-400A CUTOFF
POWER/DOOR

FIGURE 5

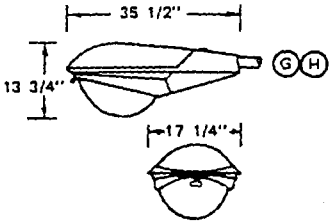

GENERAL ELECTRIC
M-400A POWER/DOOR

FIGURE 6

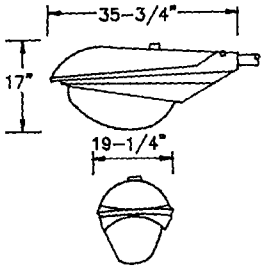

GENERAL ELECTRIC
M-1000

FIGURE 7

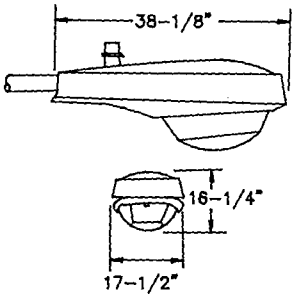

AMERICAN ELECTRIC
SERIES 327

FIGURE 8

TABLE 1 (D)
HIGH PRESSURE SODIUM VAPOR (HPSV) LUMINAIRES - COMPLETE ASSEMBLY (EXCLUDING LAMP)

FIG. NO.	MANUFACTURER		LAMP SIZE	BALLAST		STOCK NUMBER
	GENERAL ELECTRIC	AMER. ELECT.	WATTS	TYPE	SOURCE VOLTAGE	
1, 2 & 3	M 150 CUTOFF M 250A CUTOFF	SERIES 213	70	REACTOR	120	473382
	M 150 CUTOFF M 250A CUTOFF	SERIES 213	100		120	473376
	M 150 CUTOFF M 250A CUTOFF	SERIES 213	150		120	473344
4	M 250A	-	100	REACTOR	120	473924
5 & 6	M 400A	-	200	REGULATOR	120	473360
	M 400A CUTOFF	-	250	AUTO REGULATOR	120	473312
			400	REGULATOR	120	473280
6	M 400A	-	250	AUTO REGULATOR	120	473928
7 & 8	M 1000	SERIES 327	1000	AUTO REGULATOR	120	473248

SDG&E ELECTRIC STANDARDS

DATE 1-1-94
APPD PA/RDA

HIGH PRESSURE SODIUM VAPOR LUMINAIRE, REPLACEMENT BALLAST AND REFRACTORS

~~OH 1599.20~~
UG 4499.20

TABLE 2 (F)

REPLACEMENT BALLAST ONLY FOR HIGH PRESSURE SODIUM VAPOR (HPSV) LUMINAIRES

FIG. NO.	BALLAST TYPE	BALLAST SOURCE VOLTAGE	LAMP SIZE WATTS	MANUFACTURER	MANUFACTURER TYPE POWER/DOOR	STOCK NUMBER
1, 2, 3 & 4	REACTOR	120	70	GE	M 150	121044
				GE	M 250A	121140
				AMER. ELECT.	SERIES 213	121172
		120	100	GE	M 150	121076
				GE	M 250A	121142
				AMER. ELECT.	SERIES 213	121174
		120	150	GE	M 150	121108
				GE	M 250A	121144
				AMER. ELECT.	SERIES 213	121176
5 & 6	REACTOR	120	150	GE	M 400A	121146
	REGULATOR	120	200	GE	M 400A	121204
				AMER. ELECT.	SERIES 25	121178
	AUTO REGULATOR	120	250	GE	M 400A	121148
				AMER. ELECT.	SERIES 25	121180
	REGULATOR	120	400	GE	M 400A	121150
				AMER. ELECT.	SERIES 25	121182

FOR FIELD MAINTENANCE ONLY

TABLE OF CONTENTS

TABLE 3

REPLACEMENT REFRACTORS FOR HPSV LUMINAIRES						
CONVENTIONAL LUMINAIRES		LAMP TYPE	LAMP WATTAGE	REPLACEMENT REFRACTOR		
MANUFACTURER	TYPE			TYPE	CATALOG NUMBER	STOCK NUMBER
GENERAL ELECTRIC	M-250A (I)	HPSV	100,150	LEXAN	35-130707-01	579248
GENERAL ELECTRIC	M-250A-CUTOFF	HPSV	100,150	GLASS	35-962560-21	579282
GENERAL ELECTRIC	M-400A-CUTOFF	HPSV	250,400	GLASS	35-962490-V4	578706
GENERAL ELECTRIC	M-1000	HPSV	1000	GLASS	35-130170-02	578704
AMERICAN ELECTRIC	23 SERIES (I)	HPSV	100,150	LEXAN	23-002-6	579248
AMERICAN ELECTRIC	25 SERIES CUTOFF	HPSV	250,400	GLASS	-	- (B)
AMERICAN ELECTRIC	327 SERIES	HPSV	1000	GLASS	27-003	579936 (B)

INSTALLATION:

A. ALL LUMINAIRES ARE TO BE WIRED FOR 120 VOLTS ONLY. APPLICATION OF 240 VOLTS TO THESE UNITS WILL CAUSE SEVERE BALLAST DAMAGE.

(B) ITEM IS NO LONGER PURCHASED.

(C) CUTOFF LUMINAIRES SHALL BE INSTALLED WITH THE OPTICAL ASSEMBLY (GLASSWARE) HORIZONTAL.

(D) ITEMS IN TABLE 1 ARE FOR COMPLETE LUMINAIRE UNITS AND ARE NO LONGER PURCHASED.

(F) STOCK NUMBERS IN TABLE 2 ARE FOR BALLAST ONLY AND MAY BE PURCHASED FOR PURPOSE OF REPLACEMENT.

(G) ASTRODOME UNITS ARE EQUIPPED WITH BUILT-IN PHOTOELECTRIC CELL.

(H) USE LEVELING PAD FOR PROPER ADJUSTMENT OF LUMINAIRE.

(I) A GLASS OR A LEXAN REFRACTOR MAY BE USED ON THESE LUMINAIRES (LEXAN REFRACTORS TO BE USED IN HIGH VANDALISM AREAS ONLY).

EFERENCE:

J. SEE STANDARD 1512/4412 FOR PHOTOELECTRIC CONTROL.

K. SEE STANDARD 1514/4414 FOR IDENTIFICATION DECAL.

	SDG&E ELECTRIC STANDARDS	
~~1599.204~~ 4499.204	HIGH PRESSURE SODIUM VAPOR LUMINAIRE, REPLACEMENT BALLAST AND REFRACTORS	DATE 1-1-89 APPD PJA/RDJ

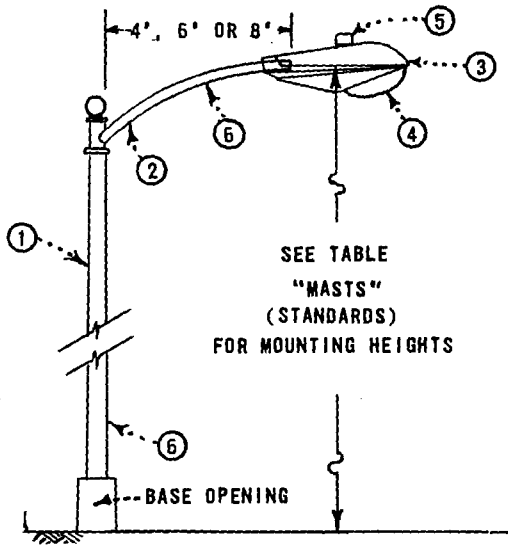

FOR FIELD MAINTENANCE ONLY

FUSES			
DESCRIPTION	MANUFACTURER	CATALOG NUMBER	STOCK NO.
FUSE HOLDER	ESNA	64-B4A-B4A	443392
FUSE CARTRIDGE DUAL ELEMENT 10A 250V	BUSSMANN	FNM 10	363936
LIMITRON 20A, 600V	BUSSMANN	KTK 20	366128

MERCURY VAPOR STREET LIGHT CODE							
WATT	LUMEN	REGULATOR BALLAST			REACTOR BALLAST		
		4'	6'	8'	4'	6'	8'
175	7000	4AG	6AG	8AG	4AR	6AR	8AR
250	10000	4BG	6BG	8BG	4BR	6BR	8BR
400	20000	4CG	6CG	8CG	-	-	-

ITEM	MATERIAL		QUANTITY BALLAST REGULATOR 4AG 4BG 4CG	QUANTITY BALLAST REGULATOR 6AG 6BG 6CG	QUANTITY BALLAST REGULATOR 8AG 8BG 8CG	QUANTITY BALLAST REACTOR 4AR 4BR -	QUANTITY BALLAST REACTOR 6AR 6BR -	QUANTITY BALLAST REACTOR 8AR 8BR -	STOCK NUMBER OR CONSTR. STD.
1	PACIFIC UNION METAL MFG. CO. SEE TABLE BELOW (STANDARDS)		AS REQ'D	AS REQ'D	AS REQ'D	AS REQ'D	AS REQ'D	AS REQ'D	SEE TABLE BELOW
2	UPSWEEP BRACKET, 2" I.P.S.		1	1	1	1	1	1	167296-6'
3	MERCURY VAPOR LAMP		1	1	1	1	1	1	PG. 4410
4	MERCURY VAPOR LUMINAIRE,	REGULATOR BALLAST	1	1	1	-	-	-	PG. 4420
		REACTOR BALLAST	-	-	-	1	1	1	
5	PHOTOELECTRIC CONTROL, TWISTLOCK BASE.	105-285 VOLT	1	1	1	-	-	-	273888
			-	-	-	1	1	1	
6	WIRE, #8 THW, 600V, ALUMINUM INSULATED CABLE	1023K	62'	67'	73'	62'	67'	73'	196176
		938K	70'	75'	81'	70'	75'	81'	

STANDARDS							
LUMEN	PACIFIC UNION METAL COMPANY OR EQUIVALENT	4'	STOCK NO.	6'	STOCK NO.	8'	STOCK NO.
7000	1023K	26'-0"	-	26'-9"	677792	27'-5"	-
10000	938K	30'-0"	-	30'-9"	677856	31'-5"	-
20000	938K	30'-0"	-	30'-9"	677856	31'-5"	-

NOTES:

A. FOR STREET LIGHT FOUNDATIONS SEE PAGE 4472

B. INSTALL FUSE HOLDER AT BASE OPENING.

C. DOUBLE MOUNTING BRACKETS TO BE ORDERED SEPARATELY AND SPECIAL.

APP'D RWK
DATE 6-2-76

SAN DIEGO GAS & ELECTRIC COMPANY UNDERGROUND STANDARDS

STREET LIGHTING

MULTIPLE MERCURY VAPOR LUMINAIRE

4499.

TABLE OF CONTENTS

FOR FIELD MAINTENANCE ONLY

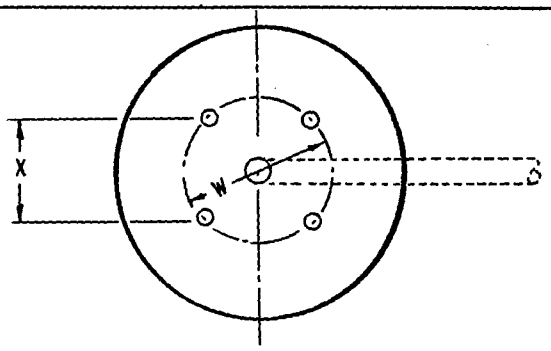

PLAN

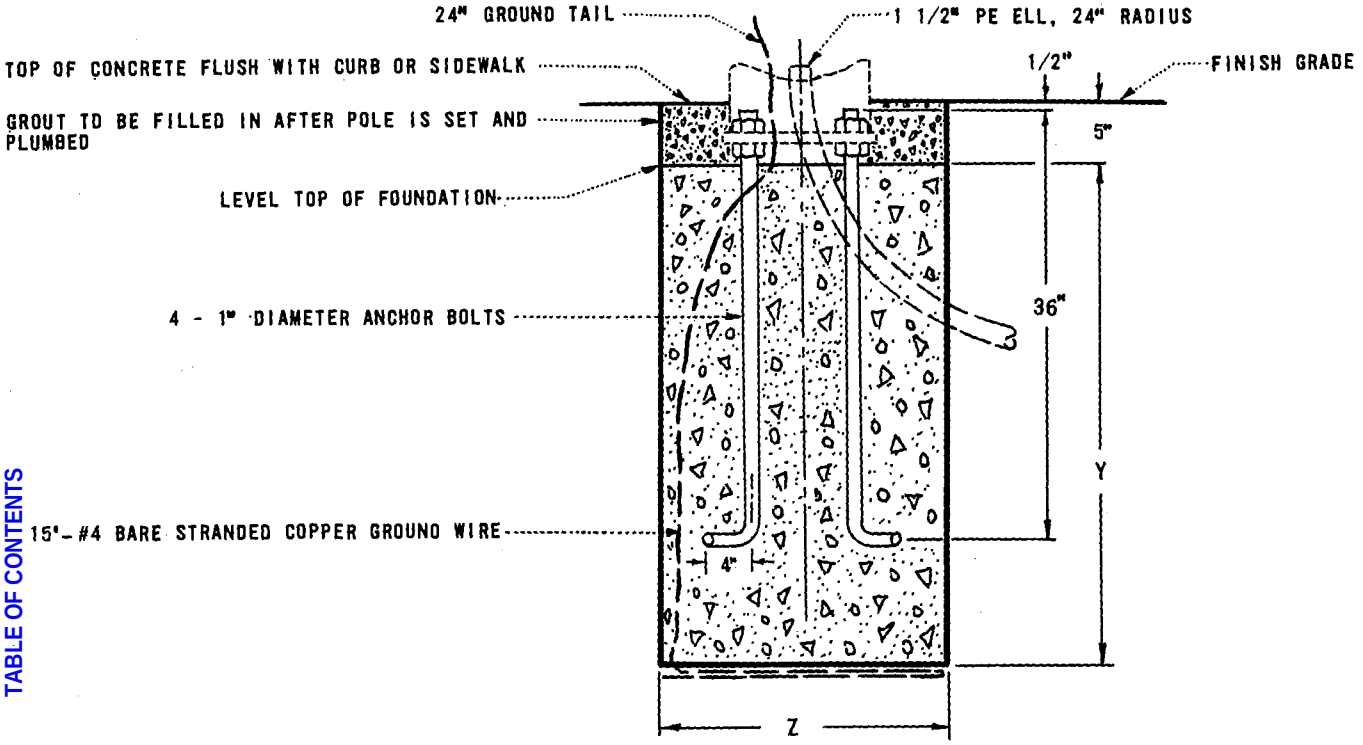

ELEVATION

TABLE OF CONTENTS

NOTES:

A. CONCRETE USED FOR FOUNDATIONS TO BE CLASS 'A' 5 1/2 SACK, MINIMUM.

B. FOR PRESTRESSED CONCRETE POLES SEE SPECIFICATION 132.

C. FOUNDATION DEPTH IS BASED ON AVERAGE SOIL CONDITIONS. IF SOIL IS LOOSE, USE THE FOLLOWING PROCEDURE:

1. EXCAVATE TO THE FOUNDATION DEPTH (Y) SPECIFIED WITH A MINIMUM BOTTOM DIAMETER FOR A 3' - 6" ROUND FORM.
2. FORM AND PLACE 3' - 6" DIAMETER FOUNDATION, INCLUDING THE ANCHOR BOLTS PLACED IN THE PROPER BOLT CIRCLE (W) AND BOLT SQUARE (X) .
3. BACKFILL TO BE WELL TAMPED.

DATION RENCE BER	LIGHTING STANDARD STOCK NO.	BOLT CIRCLE (W)	BOLT SQ. (X)	FOUNDATION DEPTH (Y)	FOUNDATION DIA. (Z)	CONCRETE (CU. YDS.)
	677856	12 1/2"	8 7/8"	42" (C)	24"	.41
	677872					
	677792	14"	9 7/8"	43" (C)	24"	.42
	677808					
	677888	15 1/4"	10 3/4"	42" (C)	24"	.41
	677912					
	677754					
3	677904	12 1/2"	8 7/8"	42" (C)	24"	.41
	677748					
	674908					
4	677742	15 1/4"	10 3/4"	42" (C)	24"	.41
	677736					

SAN DIEGO GAS & ELECTRIC COMPANY UNDERGROUND STANDARDS

39.702

FOUNDATION DETAIL
PRESTRESSED CONCRETE LIGHT STANDARDS

DATE 6-2-76

APPD J.W.K.

SCOPE: THIS STANDARD SHOWS THE GROUND ROD INSTALLATION FOR 3312 HANDHOLES WITH STEEL COVERS.

GROUND ROD INSTALLATION
3312 HANDHOLE WITH STEEL COVER

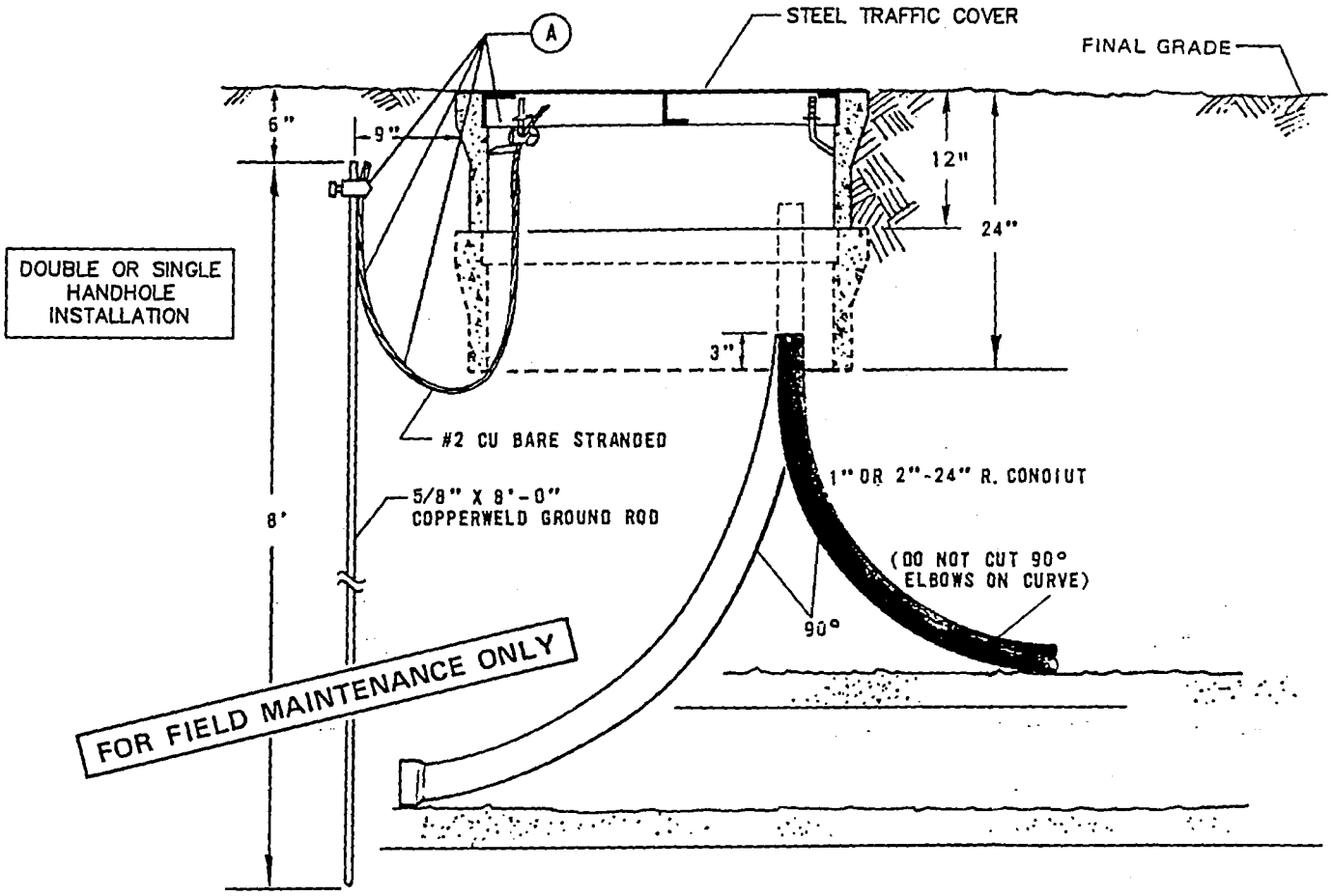

INSTALLATION:

Ⓐ ALL EXISTING 3312 HANDHOLES WITH STEEL COVERS SHALL BE SAFETY GROUNDED BY DRIVING A 5/8" X 8'-0' COPPERWELD GROUND ROD (STOCK NUMBER 603072) AND ATTACHING A #2 CU WIRE (STOCK NUMBER 812816) WITH A GROUND ROD CLAMP (STOCK NUMBER 230016 Ⓔ). THE OTHER END OF THE WIRE SHALL BE ATTACHED TO THE HANDHOLE "L" BOLT OR SWING BOLT WITH A 2-STRAND CONNECTOR (STOCK NUMBER 269536 Ⓔ). USE ONLY ONE GROUND PER INSTALLATION, ONE OR TWO HANDHOLES.

	SDG&E ELECTRIC STANDARDS	
DATE .1-1-90 APPD SLC	3312 HANDHOLE STEEL COVER GROUNDING	4599.001

TABLE OF CONTENTS

TABLE OF CONTENTS

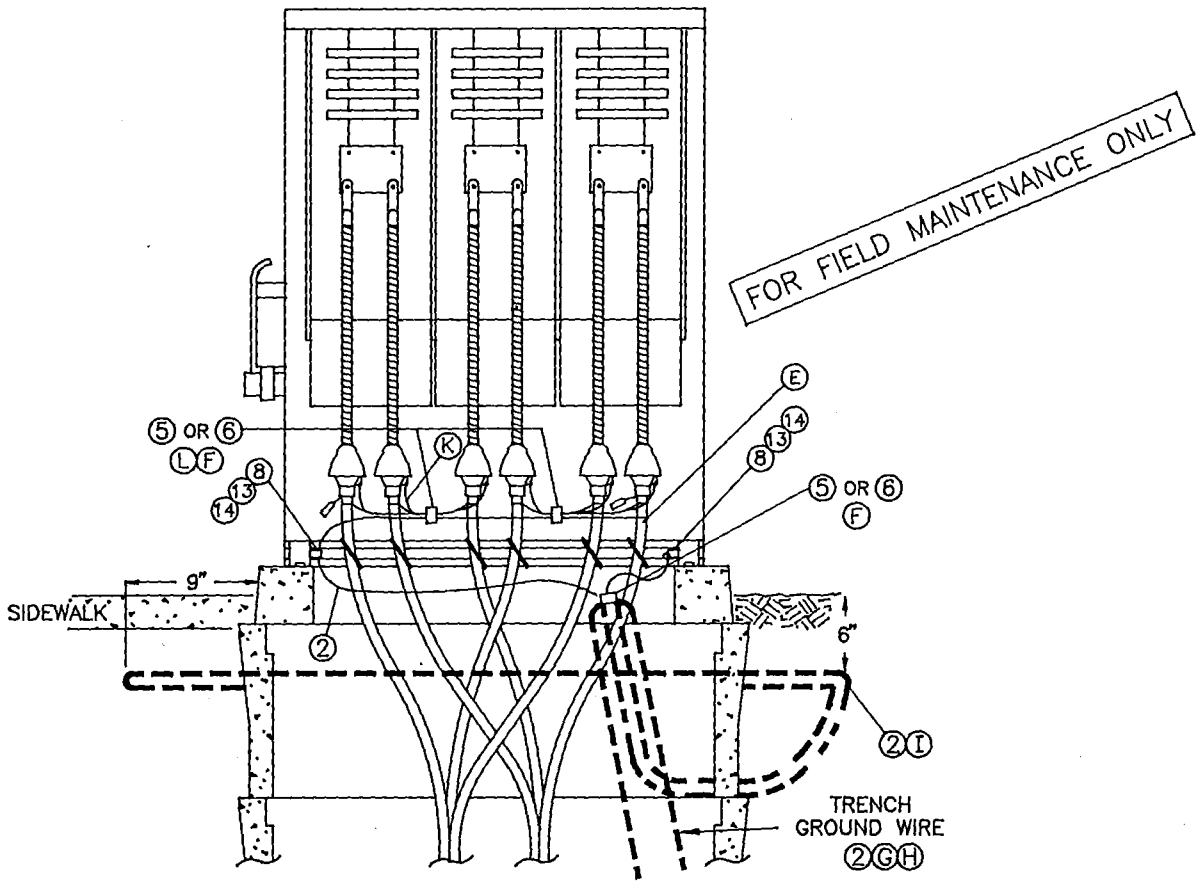

3520/3521 THREE–PHASE TERMINATING ENCLOSURE

GROUNDING DETAILS

FRONT SIDE — BACK SIDE

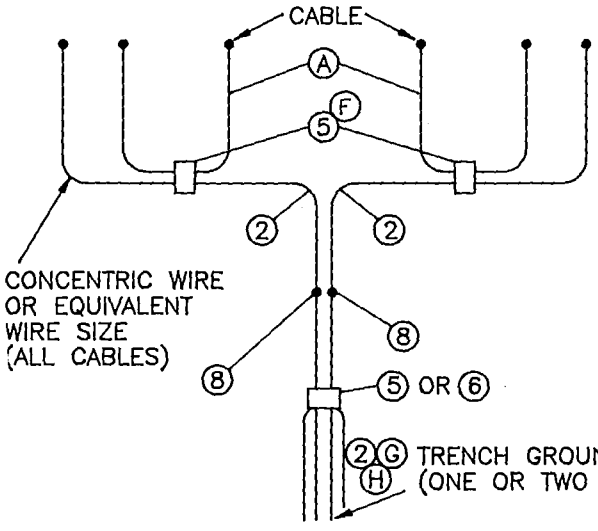

3521 – 2/0 CABLE & SMALLER

2/0 CABLE AND SMALLER SIDE — 350 KCMIL – 1000 KCMIL SIDE

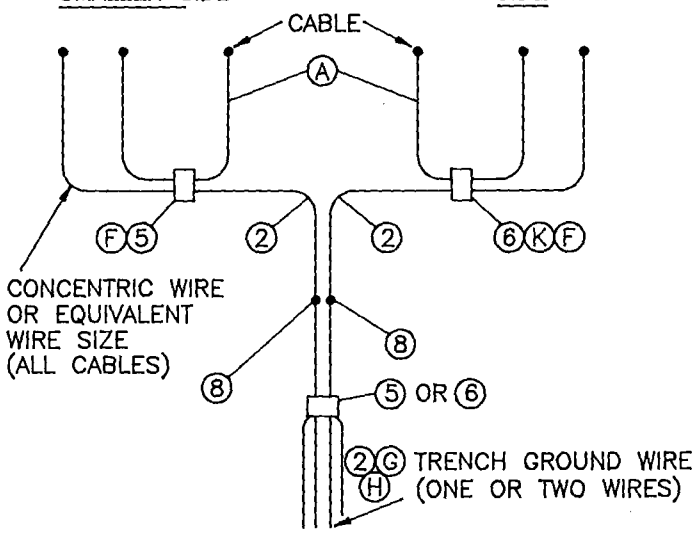

3520 – 1000 KCMIL & SMALLER

4599.201 SUPERCEDES 520.3 1–1–94	SDG&E ELECTRIC STANDARDS GROUNDING PAD–MOUNTED EQUIPMENT	DATE 1–1–94 APPD JGB/RK

BILL OF MATERIAL:

ITEM	DESCRIPTION	QUANTITY	STOCK NUMBER	ASSEMBLY UNITS
1	#14 SOLID CU OR A SURPLUS STRAND OF CONCENTRIC NEUTRAL	AS REQ'D	–	–
2	WIRE, BARE COPPER, #2, 7 STR. SOFT DRAWN	AS REQ'D	812816 (M)	GDWIRE
3	WIRE, BARE COPPER 1/0 STR. SOFT DRAWN	AS REQ'D	812752 (M)	–
4	WIRE, BARE COPPER 4/0 STR. SOFT DRAWN	AS REQ'D	812764 (M)	4/0–SD
5	CONNECTOR, COMPRESSION 1/0 – 1/0	AS REQ'D	257760	–
6	CONNECTOR, COMPRESSION 4/0 – 1/0	AS REQ'D	257856	–
7	CONNECTOR, COMPRESSION 4/0 – 4/0	AS REQ'D	257824	–
8	SERVICE POST CONNECTOR	AS REQ'D	262560	–
9	GROUND CONNECTOR PROVIDED WITH EQUIPMENT	–	–	–
10	GROUND ROD CLAMP	2	230016	–
11	UNISTRUT, CHANNEL FITTING, 1 7/8" X 2"	AS REQ'D	348960	–
12	ANCHOR, CONCRETE STAINLESS STEEL, 1/2" X 3 3/4"	AS REQ'D	107654	–
13	NUT, HEXAGON BRONZE, 1/2"	2	506112	–
14	WASHER, STANDARD FLAT ROUND, BRONZE 1/2"	2	799488	–

INSTALLATION:

(A) CONCENTRIC NEUTRAL TAILS OR EQUIVALENT WIRE SIZE PER PHASE (SEE STANDARD 4172 FOR EQUIVALENT WIRE SIZE).

REFERENCE:

(E) SEE STANDARD 4108 FOR SEALING JACKETED CABLE.

(F) SEE STANDARD 4172 FOR CONCENTRIC NEUTRAL/COMPRESSION CONNECTOR APPLICATION CHART AND COPPER COMPRESSION CONNECTORS.

(G) SEE STANDARD 4510 FOR (PREFERRED I) AND (ALTERNATE) TRENCH GROUND WIRE INSTALLATION.

(H) SEE STANDARD PAGE 4512.1 FOR (PREFERRED II) PAD GROUNDING INSTALLATION.

(I) SEE STANDARD 4512 FOR PAD GROUNDING INSTALLATION.

J. SEE STANDARD 4514 FOR GROUNDING TELCO CONDUCTOR IN PAD–MOUNTED EQUIPMENT.

(K) SEE STANDARD 4525 FOR CONCENTRIC NEUTRAL TERMINATIONS AND GROUNDING PREMOLDED CONNECTORS.

(L) SEE STANDARD 4530 FOR NEUTRAL AND GROUND WIRE SCHEMATIC DIAGRAM.

(M) SEE STANDARD 4002.2 FOR WIRE INFORMATION.

FOR FIELD MAINTENANCE ONLY

TABLE OF CONTENTS

DATE 1–1–94 APPD JGB/RB	SDG&E ELECTRIC STANDARDS GROUNDING PAD–MOUNTED EQUIPMENT	4599.202 SUPERCEDES 4520.5 1–1–94

SCOPE: THIS STANDARD SHOWS THE PAD GROUNDING INSTALLATION USED TO PROVIDE EQUIPMENT GROUNDING. THIS METHOD SHALL BE USED WHEN DIFFERENT PARTIES ARE RESPONSIBLE FOR THE CONDUIT AND PAD INSTALLATION. USE PREFERRED OR ALTERNATE TRENCH GROUND WIRE IN STANDARD 4510 WHEN THE SAME PARTY IS RESPONSIBLE FOR CONDUIT AND PAD INSTALLATION.

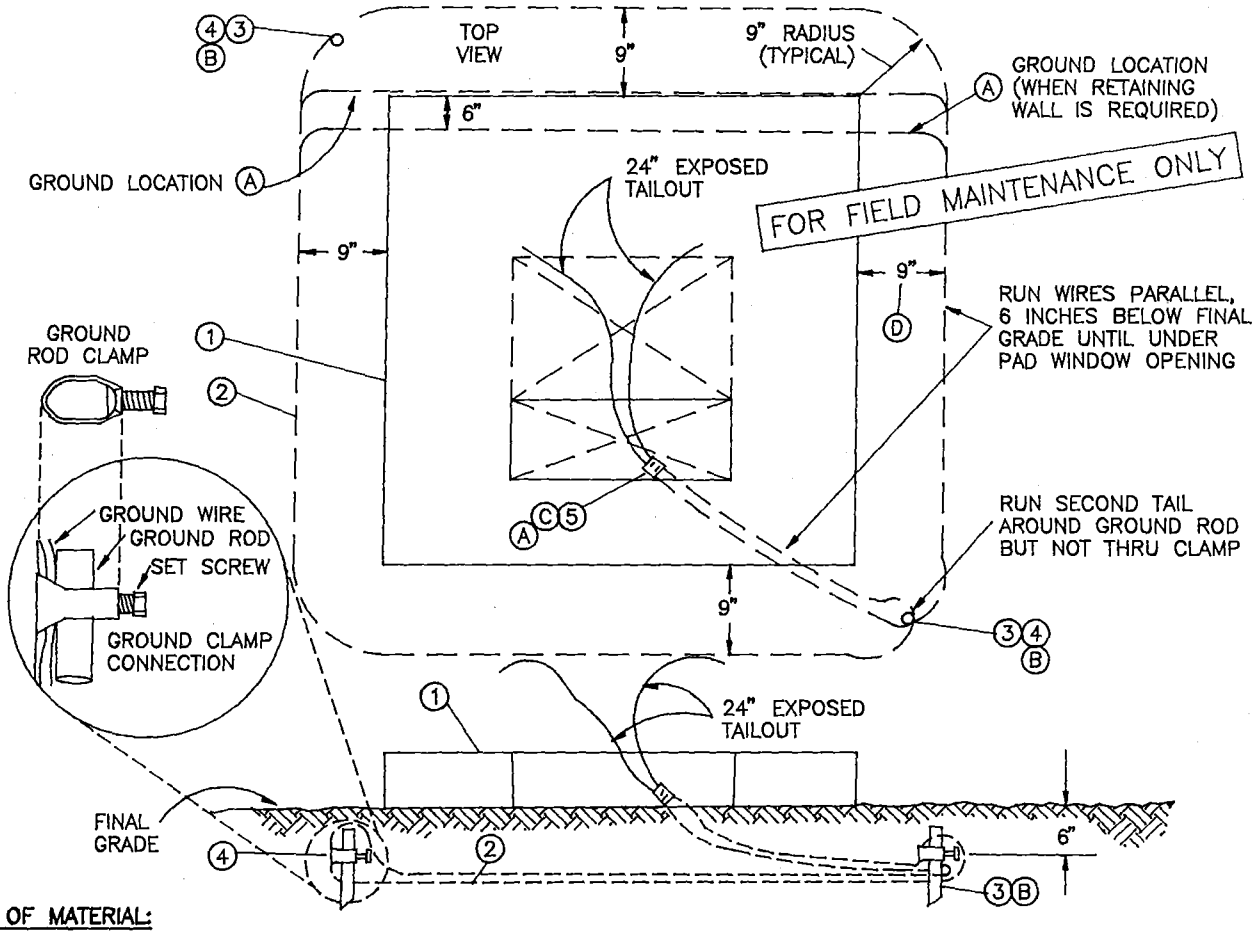

BILL OF MATERIAL:

ITEM	DESCRIPTION	QUANTITY	STOCK NUMBER	ASSEMBLY UNITS
1	PAD (TYPICAL)	1	REFER TO WORK ORDER	–
2	WIRE, BARE COPPER, #2, 7 STR. SOFT DRAWN	AS REQ'D.	812816 (K)	GDWIRE
3	GROUND ROD, 5/8" X 8'–0", COPPERWELD	2	603072	–
4	GROUND ROD, CLAMP	2	230016	–
5	CONNECTOR, COMPRESSION	1	257760 (C)	–

INSTALLATION:

(A) INSTALL GROUND GRID AT THE EDGE OF PAD (ON ANY SIDE) WHERE THE 9 INCH DISTANCE REQUIRED AROUND PAD CANNOT BE MET. IN GROUND GRID INSTALLATIONS WHERE A RETAINING WALL IS REQUIRED, GROUND GRID MAY BE INSTALLED 6 INCHES UNDER PAD (ON ANY SIDE), AS SHOWN. SQUEEZE THE GROUND WIRES TOGETHER WITH A COMPRESSION CONNECTOR (ITEM 5).

(B) GROUND RODS TO HAVE 6 FOOT MINIMUM SEPARATION.

(C) SDG&E SHALL FURNISH AND INSTALL THE COMPRESSION CONNECTOR (ITEM 5).

(D) FOR PAD–MOUNTED CAPACITOR INSTALLATION, THE PAD GROUND SHALL BE INSTALLED UNDER THE OUTER EDGE OF THE PAD SO IT WILL NOT ENCROACH PRIVATE PROPERTY (OUTSIDE OF RIGHT–OF–WAY).

REFERENCE:

G. SEE STANDARD 3211 FOR EQUIPMENT PAD IDENTIFICATION.
H. SEE STANDARDS 3426 AND 3427 FOR PAD INSTALLATIONS OVER HANDHOLES.
I. SEE STANDARD 4510 FOR (PREFERRED I) AND (ALTERNATE) TRENCH GROUND WIRE INSTALLATIONS.
J. SEE STANDARD 4514 FOR GROUNDING TELCO CONDUCTOR IN PAD–MOUNTED EQUIPMENT.
(K) SEE STANDARD 4002.2 FOR WIRE INFORMATION.

	SDG&E ELECTRIC STANDARDS	
DATE 1–1–96 APPD JYB/RDG	PAD GROUNDING INSTALLATION (PREFERRED II)	4599.203

TABLE OF CONTENTS

SCOPE: THIS STANDARD SHOWS PAD GROUNDING INSTALLATION USED WHEN (PREFERRED I) OR (ALTERNATE) TRENCH GROUND WIRE IS INSTALLED, STANDARD 4510. SUBSITUTE GROUND RODS SHOWN ON STANDARD PAGE 4512.1 FOR TRENCH GROUND WIRE IF (PREFERRED I) OR (ALTERNATE INSTALLATIONS DO NOT APPLY.

FOR FIELD MAINTENANCE ONLY

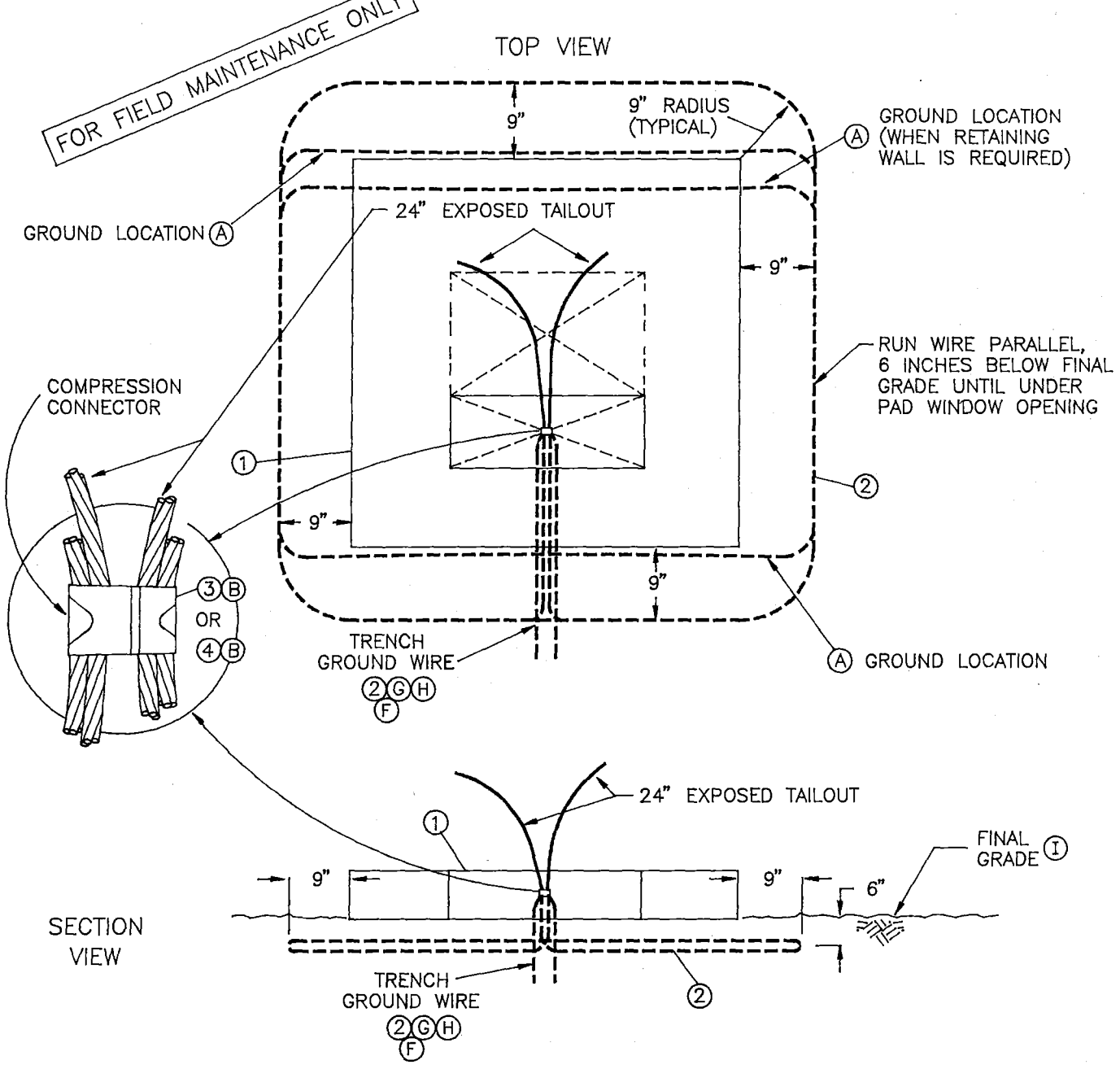

TOP VIEW
(TYPICAL PAD WITHOUT HANDHOLE)

ASSEMBLY UNITS
GP--E/W
GP--T/W

DATE 1-1-96 APPD JLG/RDJ	SDG&E ELECTRIC STANDARDS PAD GROUNDING INSTALLATION	4599.204

TABLE OF CONTENTS