2025
UNDERGROUND CONSTRUCTION STANDARDS

Historical Record: 1/24/2025
External Version

SDGE™

GENERAL INFORMATION	3000
PRACTICES	3100
IDENTIFICATION	3200
SUBSTRUCTURES	3300
PADS, RETAINING WALLS & CLEARANCES	3400
PAD & WALL MOUNTED SECTIONALIZING EQUIPMENT	3500
SUBSURFACE SECTIONALIZING EQUIPMENT	3600
TRANSFORMERS	3700
CAPACITORS	3800
SECONDARIES/SERVICES	3900
CABLES	4000
TERMINATIONS SPLICING CONNECTIONS	4100
CABLE POLES	4200
FUSES & FAULT INDICATORS	4300
LIGHTING	4400
GROUNDING	4500
TELECOMMUNICATIONS & SCADA	4600
PRIMARY METER, REGULATOR & MISCELLANEOUS EQUIPMENT	4700
VAULT STANDARDS	4800
TRENCHLESS CONSTRUCTION	5000
DISCLAIMER & CONTACTS	
SUMMARY OF CHANGES	
REFERENCE	

ATTENTION:

THESE STANDARDS WERE DEVELOPED FOR MAINTAINING SAFETY AND RELIABILITY OF THE ELECTRIC DISTRIBUTION AND SERVICE SYSTEMS.

THE INTENT OF THIS STANDARD IS TO GUIDE ENGINEERS, DESIGNERS/PLANNERS AND CONSTRUCTION PERSONNEL AND PROVIDE TYPICAL CONSTRUCTION METHODS FOR ELECTRIC DISTRIBUTION. NOT ALL ARRANGEMENTS ARE DEPICTED AND IT IS THE USER'S RESPONSIBILITY TO APPLY THESE STANDARDS APPROPRIATELY. ALL USERS MUST USE GOOD JUDGMENT. STANDARDS ARE UPDATED AS NEEDED. CONSULT EDE FOR LATEST VERSION. SDG&E STANDARDS MUST BE APPLIED. PRE-CONSTRUCTION APPROVAL OF A "DEVIATION REQUEST" IS REQUIRED FOR ANY EXCEPTION TO THESE STANDARDS. ANY ALTERATIONS, MODIFICATIONS OR IMPROVEMENTS TO THIS AND ALL STANDARDS MUST BE REVIEWED, APPROVED AND DOCUMENTED BY EDE-CONSTRUCTION STANDARDS AND DISTRICT C&O'S.

THE CPUC'S GENERAL ORDER 95 RULES/REQUIREMENTS ARE NOT INTENDED FOR USE AS COMPLETE CONSTRUCTION SPECIFICATIONS BUT EMPLOY ONLY THE MINUMUM REQUIREMENTS WHICH ARE MOST IMPORTANT FROM THE STANDPOINT OF **SAFETY AND RELIABILITY.** SDG&E MAY IMPOSE STRICTER RULES AND REQUIREMENT IN THE INTREST MAINTANANING SAFETY AND RELIABILTY OF OUR ELECTRICAL SYSTEM.

CONSTRUCTION SHALL BE ACCORDING TO ACCEPTED GOOD PRACTICE FOR GIVEN LOCAL CONDITIONS IN ALL SITUATIONS NOT SPECIFIED IN THE STANDARD.

SDG&E WILL NOT ACCEPT ANY SYSTEM DESIGN OR INSTALLATION WHICH DOES NOT CONFORM TO THESE STANDARDS

DEVIATIONS CANNOT BE GRANTED WHICH CONFLICT WITH THE CPUC GENERAL ORDERS OR OTHER GOVERNING AGENCIES. THESE MAY INCLUDE SEPARATION FROM ENERGIZED FACILITIES AND WORKING CLEARANCES.

BASED ON UNUSUAL OR UNSAFE SITE CONDITIONS SDG&E MAY IN THE INTEREST OF SAFETY OR RELIABILITY REQUIRE CONSTRUCTION MEASURES BEYOND THOSE SPECIFICALLY STATED IN THIS MANUAL.

EXCEPT FOR A REQUIREMENT TO IMMEDIATELY ADOPT NEWLY PUBLISHED STANDARDS, THE APPLICATION OF NEWLY PUBLISHED STANDARDS IS REQUIRED FOR ALL WORK UP TO THE 30% PROJECT DESIGN APPROVAL LEVEL. ALL DESIGN AND CONSTRUCTION WORK AFTER 30% PROJECT DESIGN APPROVAL MAY USE CONSTRUCTION STANDARDS THAT IMMEDIATELY PRECEDE THE NEWLY UPDATED STANDARD, UNLESS THE IMMEDIATE ADOPTION OF NEWLY PUBLISHED STANDARDS IS MANDATED.

USE OF "BLOCK STOCK" MUST BE COORDINATED WITH INVENTORY & LOGISTICS AND IS GENERALLY ONLY APPLIED AS A "LAST RESORT" AFTER CONSULTATION AND AGREEMENT WITH STAKEHOLDERS AND AN ALTERNATE SOLUTION, SUPPLIER, MATERIAL OR METHOD IS DEEMED ACCEPTABLE AND AVAILABLE.

IF YOU HAVE ANY QUESTIONS REGARDING THE CONTENT OF THESE MANUALS, PLEASE EMAIL CONSTRUCTIONSTANDARDSADMINISTRATORS@SEMPRAUTILITIES.COM OR CONTACT:

MAIN TABLE OF CONTENTS

SUMMARY OF CHANGES

DATE	STANDARD PAGES	QTY	FILE NAME
01/23/19	NEW FORMAT RELEASE	1	UGCS2019v0123.pdf
02/22/19	3409, (Formatting Updates: 3104, 3111, 3140, 3238, 4307, 4308, 4359, 4202, 4203, 4204, 4206, 4214, 4218, 4232, 4235, 4244, 4247, 4251, 4252, 4410, 4411, 4412, 4414)	24	UGCS2019v0222.pdf
03/20/19	4198, 4201, (4232 to FMO), 4306, 4354, 4647, 4650, 4660	8	UGCS2019v0320.pdf
04/19/19	3111, 3140, 3238, 3312, 4172, 4308, 4701, 4713, 4714	9	UGCS2019v0419.pdf
05/23/19	3376	1	UGCS2019v0523.pdf
06/13/19	3415	1	UGCS2019v0613.pdf
07/15/19	4308, 4601, 4649	3	UGCS2019v0715.pdf
08/19/19	4244, 4647	2	UGCS2019v0819.pdf
09/20/19	4201	1	UGCS2019v0920.pdf
10/25/19	4307, 4401, 4470, 4471	4	UGCS2019v1025.pdf
11/19/19	3316, 3405, 3483, 3522, (3551.1-.9 Removed Temporarily), 3752,4172.2, 4172.3, 4172.3A, 4235, 4354	11	UGCS2019v1119.pdf
12/20/19	4101, 4181, 4189, 4601, 4620, 4621, 4622, 4623, 4624, 4625, 4626	11	UGCS2019v1220.pdf
01/24/20	COVER PAGE	1	UGCS2020v0124.pdf
02/19/20	3518, 4301, 4344	3	UGCS2020v0219.pdf
03/20/20	3111, 3228, 3376, 4308, 4601, 4640, 4641, 4642, 4643, 4644, 4645, 4646, 4647, 4648, 4651, 4653, 4661, 5001, 5010, 5020, 5030, 5040, 5050,5060, 5070	25	UGCS2020v0320.pdf
04/24/20	3517, 4101, 4172, 4174, 4201, 4242, 4244, 4247, 4306, 4471	10	UGCS2020v0424.pdf
05/22/20	3315, 3373, INTERNAL SERVER UPGRADE	3	UGCS2020v0522.pdf
06/19/20	4101, 4106, 4108, 4109, 4110, 4111, 4113, 4121, 4122, 4127, 4147, 4148, 4167, 4168, 4169, 4170, 4171, 4172, 4173, 4174, 4175, 4176, 4177, 4178, 4179, 4180, 4181, 4182, 4183, 4184, 4185, 4186, 4187, 4188, 4190, 4191, 4195, 4196, 4197, 4198	40	UGCS2020v0619.pdf
07/24/20	4101, (4411 to FMO)	2	UGCS2020v0724.pdf
08/21/20	3646, 4205	2	UGCS2020v0821.pdf
09/25/20	4195	1	UGCS2020v0925.pdf
10/23/20	3701, (3720 to FMO), 4111, 4201, (4207 to FMO), 4252, 4301, 4302, 4305, 4306, 4307, 4309, 4310, 4311, 4312, 4313, 4314, 4344, 4352, 4354, 4355, 4359	22	UGCS2020v1023.pdf
10/28/20	3005	1	UGCS2020v1028.pdf
11/20/20	3316, 3365, 3374, 3401, 3405, 3408, 3409, 3410, 3414, 3415, 3416, 3417, 3418, 3419, 3421, 3423, 3425, 3426, 3427, 3428, 3429, 3478, 3479, 3480, 3481, 3482, 3483, 3484, 3485, 3486, 3487, 3488, 3489, 3649, 4101, 4192, 4240, 4649	38	UGCS2020v1120.pdf
12/18/20	3001, 3002, 3003, 4242	4	UGCS2020v1218.pdf
01/22/21	COVER PAGE, DISCLAIMER, 3101, 3104, 3111, 3113, 3140, 3150, 3560	9	UGCS2021v0122.pdf
02/19/21	3201, 3202, 3203, 3204, 3211, 3212, 3213, 3214, 3215, 3216, 3217, 3218, 3221, 3225, 3230, 3232, 3233, 3234, 3238, 3239,3240, 4202, 4203, 4235, 4601, 4630	26	UGCS2021v0219.pdf
03/19/21	3309, 3680	2	UGCS2021v0319.pdf
05/21/21	3501, 3511, 3512, 3514, 3515, 3516, 3517, 3518, 3522, 3523, 3524, 3525, 3550, 3551, 3552, 3553, 3554, 3555, 3568, 3580, 3583, 3584, 3585, 3586, 3588, 3590, 3591, 4401, 4472	29	UGCS2021v0521.pdf
06/25/21	3301, 3365, 3366, 3703, 3801, 3815, 3821,4501, 4505, 4510, 4512, 4514, 4520, 4521, 4525, 4530, 4540, 4550	18	UGCS2021v0625.pdf
07/23/21	3675	1	UGCS2021v0723.pdf
08/20/21	3140, 3314, 3369, 3370, 3379, 3401, 3414, 3428, 3443, 3550, 3647, 4111, 4167, 4201, (4230 to FMO), 4251, 4301, 4360	18	UGCS2021v0820.pdf
09/24/21	3901, 3903, 3904, 3941, 3942, 3944, 3948, 3950, 3960, 4001, 4002, 4003, 4004, 4005, 4006, 4007, 4008, 4009, 4011, 4010, 4012, 4201,4204, 4206, 4214, 4218, 4240, 4244	28	UGCS2021v0924.pdf
10/22/21	3301, 3313, 3368, 4305, 4645	5	UGCS2021v1022.pdf

MAIN TABLE OF CONTENTS

ARCHIVED BOOKS AVAILABLE ON THE INTERNAL VERSION

SUMMARY OF CHANGES

11/19/21	3301, 3302, 3303, 3304, 3305, 3306, 3308, 3310, 3311, 3315, 3316, 3317, 3325, 3326, 3327, 3332, 3360, 3361, 3362, 3363, 3364, 3367, 3371, 3372, 3373, 3375, 3376, 3377, 3378, 3382, 3383, 3390, 4701, 4705, 4710, 4712, 4713, 4714, 4720, 3821	40	UGCS2021v1119.pdf
12/17/21	3523, 3580, 4101, (4122 to FMO), 4174, (4183 to FMO), 4204	7	UGCS2021v1217.pdf
01/21/22	3601, 3605, 3644, 3645, 3648, 3649, 3660, 3669, 3670, 3671, 3672, 3677, 3678, 3679, 3680	15	UGCS2022v0121.pdf
02/25/22	3372, 3518, 3646, 3702, 4002, 4101, (4113 to FMO), 4169, 4170, 4177, 4202, 4206, 4301, 4307, (4308 to FMO), 4401, 4405, 4410, 4412, 4413, 4414, 4422, 4423, 4424, 4430, 4431, 4432, 4433, 4434, 4435, 4470, 4471, 4473	33	UGCS2022v0225.pdf
03/25/22	3003, 3005, 3479, 4214, 4720	5	UGCS2022v0325.pdf
04/22/22	3002, 4218, 4630	3	UGCS2022v0422.pdf
05/20/22	4203, 4235, 4306	3	UGCS2022v0520.pdf
06/24/22	3517, 4001, (4009 REMOVED), 4110	4	UGCS2022v0624.pdf
07/22/22	3311, 3428, 3551, 3552, 3553, 3554, 3555, 3821, 4178, 4182, 4206, 4244, 4251, 4650	14	UGCS2022v0722.pdf
08/17/22	4651	1	UGCS2022v0817.pdf
09/23/22	4470, DISCLAIMER	2	UGCS2022v0923.pdf
10/14/22	3501, (3525 to FMO), 3405, 4191, 4430, 4431	6	UGCS2022v1014.pdf
11/22/22	3369, 3421, 3517, 3713, 4004, 4186, 4240, 4306, 4312, 4645, 4646, 4647	12	UGCS2022v1122.pdf
01/20/23	COVER PAGE, DISCLAIMER, 3111, 3313, 3314, 3315, 3316, 4182	8	UGCS2023v0120.pdf
02/07/23	(4240 REVERTED TO PREVIOUS VERSION)	1	UGCS2023v0207.pdf
03/24/23	3315, 3366, 3429, 4167, 4244, 4434, 4471, 4601, 4641	9	UGCS2023v0324.pdf
04/21/23	3360, 3518, 4198, 4310, 4360	5	UGCS2023v0421.pdf
05/19/23	3104, 3140, 3238, 3301, (3383 to FMO), 3567, 4630	7	UGCS2023v0519.pdf
06/23/23	3111, 3201, 3225, 3250, 3421, 4005, 4174, 4184, 4252, 4626, 5060	11	UGCS2023v0623.pdf
07/21/23	3308, 3316	2	UGCS2023v0721.pdf
08/25/23	3304, 3311, 3314, 3315, 3317, 3332, 3375, 3376, 3379, 3382, 4235, 4401, (4410 to FMO), 4644	14	UGCS2023v0825.pdf
09/22/23	3313, 3316, 3372, 3377, 3479, 3482, 3821, 4111	8	UGCS2023v0922.pdf
10/20/23	3301, 3312, 3384, 3426, 4101, 4193	6	UGCS2023v1020.pdf
11/22/23	4181	1	UGCS2023v1122.pdf
12/21/23	3310, 3316, 3373, 3415, 4121, 4510	6	UGCS2023v1221.pdf
01/19/24	3373	1	UGCS2024v0119.pdf
01/31/24	COVER PAGE, 4244	2	UGCS2024v0131.pdf
02/23/24	3416, 3443, 4301, 4305, 5060	5	UGCS2024v0223.pdf
03/22/24	3302, 3401, (3417 to FMO), 3427, 4307, 4470, 4473, 5020	8	UGCS2024v0322.pdf
04/19/24	3003	1	UGCS2024v0419.pdf
05/06/24	3313, 3314, 3315	3	UGCS2024v0506.pdf
06/07/24	3101, 3201, 3401, 3501, 3801, 3901, 4001, 4101, 4201, 4401, 4412, 4501, 4601, 4624, 5001	15	UGCS2024v0607.pdf
06/21/24	3001, 3150, 3378, 3568, 3904, 4405, 4701	7	UGCS2024v0621.pdf
08/23/24	4301, 3950	2	UGCS2024v0823.pdf
09/20/24	4205, 4701, (4711 REMOVED)	3	UGCS2024v0920.pdf
11/22/24	3204, 3213, 3217, 3230, 3234, 3239, 3306, 3361, 3364, 3371, 3375, 3501, (3590 to FMO), (3591 To FMO), 3644, 4003, 4106	17	UGCS2024v1122.pdf
12/13/24	3215, 3233, 3305, 3370, 3414, 4101, 4176, 4189, 4201, 4218	10	UGCS2024v1213.pdf
01/24/25	3001, 3002, 3005, 3006, 3212, 3218, 3240, 3362, 3363, 3365, 3376, 3408, 3488, 3648, 4101, 4147, 4191, 4195, 4205, 4650, 4661	21	UGCS2025v0124.pdf

MAIN TABLE OF CONTENTS

ARCHIVED BOOKS AVAILABLE ON THE INTERNAL VERSION

UNDERGROUND CONSTRUCTION STANDARDS

3000 General Information
Construction Standards Request form and Procedure. Deviation Request Form.

3100 Practices
Switch Numbering, Structure Numbering. GFIS Maps Electric Conduit Field Mapping

3200 Identification
Pull String, Communication Conduit, Transformer, Fuse and Conduit Identification. Decals and Tags.

3300 Substructures, Conduits
Handholes, Manholes, False Curbs. Sump Pumps, Trenching and Backfills. Conduit Installation and Stub Markers.

3400 Pads, Retaining Walls, Clearances
Pads, Box Pads Masonry Retaining Walls, Clearance Requirements for Pad-mounted and subsurface equipment, Sound Enclosures.

3500 Pad Mounted/Wall Mounted Sectionalizing Equipment
Single and Three Phase Fuse Cabinets, Single and Three Phase Terminators, Cable Junction Pedestal, PME Air Break Switchgear, Vista Gas Insulated Vacuum Switchgear - SCADA and Manual, and Trayer Oil Insulated Vacuum Switchgear - SCADA and Manual.

3600 Subsurface Sectionalizing Equipment
Substructure Use and Limitations Reference Sheet, Unobstructed Space, Cable and Connector Placement, Equipment Assemblies, Vista Gas Insulated Vacuum Switchgear, and G&W Gas Insulated Switchgear.

3700 Transformers
Single and Three Phase Transformers, Bay-o-net Fuses, XD Transformers

3800 Capacitors
Pad-Mounted Capacitors

3900 Secondaries/Services
Cathodic Protection Station, Secondary Test Procedure, Services, Sealing Service Lateral Conduit Instructions.

MAIN TABLE OF CONTENTS

4000 Cables

Six Hundred Volt Cable Sizes, 12kV Cable Sizes, Minimum Bending Radius for Underground Cables, Cable Pulling Eyes.

4100 Terminations, Splicing Connections

Cable End Seals, Outdoor Cable Terminals for Polyethylene Cable, Transition Module, Stacking Adaptors, Slip-Fit Connectors, 200A Dead Break and Loadbreak, 600A Elbow Tees, Cam-Link Connectors, 600A CLEER Cable Tap.

4200 Cable Poles

Joint Cable Pole Riser Positions, Pole Quadrant and Riser Identification, Underground Service from an Overhead Line, 12.47kV Cable Poles.

4300 Fuses, Fault Indicators

Fuse Application Guide, Primary Current-Limiting Fuse Installation, Electronic Sectionalizer, Current Limiting to SM-4 Conversion for PME Switch, Transformer Fusing Table, Fault Indicator Installation.

4400 Lighting

High Intensity Discharge Lamps, Replacement Refractors, High and Low-Pressure Sodium Vapor Luminaires, Walk Way Lighting, Direct Burial Pole Installation.

MAIN TABLE OF CONTENTS

4500 Grounding

Trench Ground Wire, Equipment Grounding, Grounding Telco Conductors in Pad-Mounted Equipment, Neutral and Ground Wire Schematic Diagram.

4600 Telecommunications, SCADA

Telecommunications Splicing Pedestal, Conduit Trenches and Riser, Pulling Grips, Handhole Installation for Locating Stations for Fiber Optic Cable. Pad-Mounted vista SCADA installation, PME SCADA installation, Subsurface Vista Installation. Antenna Poles.

4700 Miscellaneous Equipment

Padmounted Voltage Regulation. Misc Equipment

4800 Vault Standards

Electric Vault Requirements & Specification.

PAGE	SUBJECT
3002	PEDESTRIAN PATH OF TRAVEL AND ACCESSIBILITY
3003	STANDARD PAGE FORMAT
3005	CONSTRUCTION STANDARD REQUEST (CSR)
3006	DEVIATION REQUEST

MAIN TABLE OF CONTENTS

REV	CHANGE	DRWN	BY	CHKD	APVD	DATE
D	EDITORIAL CHANGES	GLC	MRF	MRF	KRG	01/17/2025
C	REVISED TO 3D FORMAT	NV5	JIK	-	-	05/30/2024
B	FORMATTING	EDM	JIK	-	-	12/07/2020

© 1998 - 2025 San Diego Gas and Electric Company. All rights reserved. Removal of this copyright notice without permission is not permitted under law.

SDG&E ELECTRIC UNDERGROUND CONSTRUCTION STANDARDS

GENERAL INFORMATION
TABLE OF CONTENTS

SCALE: NOT TO SCALE

DRAWING NO: UG3001.1

SHEET: 1 OF 1

X Indicates Latest Revision | Completely Revised | New Page | Information Removed

TABLE OF CONTENTS

SCOPE: TO PROVIDE GUIDELINES FOR ACCOMMODATING THE NEEDS OF ALL PEDESTRIANS INCLUDING THOSE WITH MOBILITY, VISUAL OR HEARING DISABILITIES, AT WORKSITES THAT ENCROACH UPON A SIDEWALK, WALKWAY OR CROSSWALK.

DEFINITIONS:

- **ALTERNATE CIRCULATION PATH:** A TEMPORARY ROUTE OR DETOUR PROVIDED AS A SUBSTITUTE FOR THE NORMAL PEDESTRIAN ACCESS ROUTE.
- **BARRICADE:** AN OBSTRUCTION TO DETER THE PASSAGE OF PERSONS OR VEHICLES.
- **CONTRAST:** LIGHT-VERSUS-DARK COMPARISON BETWEEN TWO SURFACES, AN OBJECT AND ITS IMMEDIATE SURROUNDINGS, OR, AN OBJECT AND ITS PERCEIVED BACKGROUND. IT IS NEITHER AN EXPRESSION OF, NOR NECESSARILY ACHIEVED BY, COLOR DIFFERENCES.
- **CROSS-SLOPE:** THE SLOPE OR GRADE OF A SURFACE PERPENDICULAR TO THE RUNNING GRADE.
- **CROSSWALK:** THE PART OF A ROADWAY WHERE MOTORISTS ARE REQUIRED TO YIELD TO PEDESTRIANS CROSSING, AS DEFINED BY STATE AND LOCAL REGULATIONS, WHETHER MARKED OR UNMARKED.
- **CURB LINE:** A LINE THAT REPRESENTS THE EXTENSION OF THE FACE OF THE CURB AND MARKS THE TRANSITION BETWEEN THE PUBLIC SIDEWALK AND THE GUTTER OR ROADWAY AT A CURB RAMP OR FLUSH LANDING.
- **CURB RAMP:** A SHORT SECTION OF THE PEDESTRIAN ACCESS ROUTE, WITH A RUNNING GRADE GREATER THAN 1:20 (5 PERCENT), JOINING THE STREET ELEVATION TO THE PUBLIC SIDEWALK ELEVATION THROUGH A CUT IN THE CURB FACE.
- **DETECTABLE WARNING:** A SPECIFIED SURFACE TREATMENT FOR IMPROVED SURFACES THAT CAN BE DETECTED BY MOST PEDESTRIANS WHO USE A LONG CANE FOR NAVIGATION.
- **DRIVEWAY:** A PRIVATE VEHICULAR WAY GIVING ACCESS FROM A PUBLIC RIGHT-OF-WAY TO ADJACENT PROPERTY.
- **FIXTURE:** A FIXED ELEMENT IN THE PUBLIC RIGHT-OF-WAY THAT IS NOT INTENDED FOR PUBLIC USE AND DOES NOT REQUIRE CLEAR GROUND SPACE FOR APPROACH OR USE, SUCH AS A STREET LIGHTING POLE, FIRE HYDRANT OR SIGNAL CONTROLLER CABINET.
- **FLUSH:** WHEN TWO PORTIONS OF PUBLIC SIDEWALK AND/OR ROADWAY JOIN, WITHOUT VERTICAL SEPARATION OR LIP.
- **GRADE:** THE RATE OF ASCENT OR DESCENT OF A SURFACE WITH RESPECT TO A LEVEL PLANE, EXPRESSED AS A PERCENT; THE CHANGE IN ELEVATION PER UNIT OF HORIZONTAL LENGTH.
- **HANDRAIL:** A FIXED CONTINUOUS ELEMENT AT A SPECIFIED HEIGHT PROVIDED FOR PEDESTRIAN USE WHERE THERE IS A CHANGE OF ELEVATION, SUCH AS RAMPS, STAIRS, AND LANDINGS.
- **IMPROVED SURFACE:** AN AREA THAT, BY THE ADDITION OF MATERIALS OR ITS TREATMENT, PROVIDES A FIRM, STABLE AND SLIP-RESISTANT BASE FOR PEDESTRIAN MOVEMENT. EXAMPLES OF SUCH MATERIALS INCLUDE: ASPHALT CONCRETE PAVING, PORTLAND-CEMENT CONCRETE PAVING, STONE, CERAMICS, WOOD, METAL, COMPOSITE OR OTHER GENERALLY FIRM AND STABLE MATERIAL. SURFACES THAT HAVE ONLY FIRMLY PACKED EARTH, GRAVEL BASE, GRAVEL, VEGETATION, WOOD CHIPS, SHELLS OR OTHER MALLEABLE MATERIAL ARE NOT CONSIDERED, FOR THE PURPOSE OF THIS DEFINITION, TO BE IMPROVED SURFACES.
- **LANDING:** A LEVEL AREA WITH A CROSS-SLOPE OF LESS THAN 1:48 (2 PERCENT) IN ANY DIRECTION ALONG A PUBLIC SIDEWALK, TRANSITION RAMP, CURB RAMP OR RAMP, USED FOR MANEUVERING OR WAITING.
- **MUTCD:** MANUAL OF UNIFORM TRAFFIC CONTROL DEVICES, CURRENT EDITION, AS APPROVED BY THE STATE OF CALIFORNIA-DEPARTMENT OF TRANSPORTATION.
- **PEDESTRIAN:** A PERSON TRAVELING THE PUBLIC RIGHT-OF-WAY BY MEANS OF A WHEELCHAIR, ELECTRIC SCOOTER, LEGS, CRUTCHES OR OTHER WALKING DEVICES OR MOBILITY AIDS.
- **PEDESTRIAN ACCESS ROUTE (PAR):** A CORRIDOR OF ACCESSIBLE TRAVEL THROUGH THE PUBLIC RIGHT-OF-WAY THAT HAS, AMONG OTHER PROPERTIES, A SPECIFIED MINIMUM WIDTH AND CROSS-SLOPE.
- **PEDESTRIAN CONTROL PLAN:** AN ON-SITE, TEXT, GRAPHIC DESIGN, LAYOUT, OR PLAN THAT PROVIDES FOR THE PROPER USAGE OF ALL PEDESTRIAN ACCESS ROUTES THROUGH OR AROUND A WORKSITE; INCLUDING TEMPORARY PATHS OF TRAVEL, CURB RAMPS, BARRICADES, SIGNS, AND OTHER DEVICES PLACED ON A STREET, SIDEWALK OR WALKWAY. THE PEDESTRIAN CONTROL PLAN MAY DEPICT AN AREA OR WORK ZONE TO BE USED FOR THE FACILITATION OF PEDESTRIAN TRAFFIC THROUGH A TEMPORARY TRAFFIC CONTROL ZONE, AND MAY BE USED IN CONJUNCTION WITH A TRAFFIC CONTROL PLAN.
- **PROJECT AREA:** THE ENTIRE WIDTH OF THE PUBLIC RIGHT-OF-WAY THROUGHOUT THE LENGTH UPON WHICH WORK IS PROPOSED OR UNDERTAKEN. PROJECT AREA MAY CONSIST OF A SINGLE ROUTE OR MULTIPLE ROUTES.
- **PUBLIC RIGHT-OF-WAY:** LAND, PROPERTY, OR INTEREST THEREIN, USUALLY IN A CORRIDOR, ACQUIRED FOR OR DEVOTED TO TRANSPORTATION PURPOSES AND SUBJECT TO THE CONTROL OF A PUBLIC AGENCY.
- **RAILING:** A BARRIER LOCATED NEAR THE OPEN SIDES OF ELEVATED WALKING SURFACES TO MINIMIZE THE POSSIBILITY OF AN ACCIDENTAL FALL OR SLIP FROM THE WALKING SURFACE TO THE LOWER LEVEL.
- **RUNNING GRADE:** THE GRADE THAT IS PARALLEL TO THE DIRECTION OF TRAVEL.
- **SIDEWALK:** THAT PORTION OF A PUBLIC RIGHT-OF-WAY BETWEEN THE BACK OF THE CURB LINE OR LATERAL LINE OF A ROADWAY AND THE ADJACENT PROPERTY LINE, THAT IS DEFINED BY AN IMPROVED SURFACE AND INTENDED FOR USE BY PEDESTRIANS.
- **SIDEWALK/STREET TRANSITION:** THE TRANSITION BETWEEN THE PUBLIC SIDEWALK AND A MARKED CROSSWALK OR INTENDED STREET CROSSING, MEDIAN REFUGE, ISLAND, OR OTHER LOCATION WHERE A PEDESTRIAN ACCESS ROUTE CROSSES OR ENTERS THE ROADWAY OR A DRIVEWAY.
- **SIGN:** ANY PEDESTRIAN OR TRAFFIC CONTROL DEVICE THAT COMMUNICATES INFORMATION TO PEDESTRIANS OR ROAD USERS THROUGH A WORD OR SYMBOL LEGEND. IT DOES NOT INCLUDE TRAFFIC CONTROL SIGNALS, PAVEMENT MARKINGS, DELINEATORS, OR CHANNELIZATION DEVICES.
- **WORKSITE OR ZONE:** AN AREA OF A PUBLIC RIGHT-OF-WAY WITH CONSTRUCTION, MAINTENANCE OR UTILITY WORK ACTIVITIES. IT MAY CONSIST OF A SINGLE ROUTE OR MULTIPLE ROUTES, AND INCLUDES THE ENTIRE WIDTH OF THE PUBLIC RIGHT-OF-WAY THROUGHOUT THE LENGTH UPON WHICH WORK IS PROPOSED OR UNDERTAKEN.

INSTALLATION: NONE

BILL OF MATERIALS: NONE

NOTES:

I. POLICY:

a. ALL WORKSITES THAT ENCROACH UPON A SIDEWALK, WALKWAY OR CROSSWALK SHALL ACCOMMODATE THE NEEDS OF ALL PEDESTRIANS. SPECIAL CONSIDERATION SHALL BE GIVEN TO ACCESSIBILITY FOR PERSONS WITH DISABILITIES, INCLUDING THOSE WHO USE WHEELCHAIRS OR OTHER MOBILITY DEVICES, WHO ARE BLIND OR VISUALLY IMPAIRED OR WHO ARE DEAF OR HARD OF HEARING.

b. PEDESTRIAN SAFETY AND ACCESSIBILITY CONSIDERATIONS, INCLUDING CONSIDERATION OF NECESSARY EQUIPMENT TO CREATE A SAFE AND ACCESSIBLE PATH OF TRAVEL AROUND THE WORKSITE, SHALL BE INCLUDED DURING WORKSITE PLANNING ASSESSMENTS.

c. PEDESTRIANS SHALL HAVE A SMOOTH, CLEARLY DELINEATED PATH OF TRAVEL THROUGH OR AROUND A WORK AREA UNTIL A PROJECT IS COMPLETED AND SHALL BE PROTECTED FROM POTENTIAL INJURY CAUSED BY ELECTRIC CONSTRUCTION WORK.

II. RESPONSIBILITIES:

a. CONSTRUCTION AND OPERATIONS AND MAINTENANCE AND OPERATIONS DISTRICTS ARE RESPONSIBLE FOR COMPLIANCE AND IMPLEMENTATION OF THIS STANDARD AND ITS ASSOCIATED STANDARDS AND/OR ELECTRIC STANDARD PRACTICES AS THEY RELATE TO PEDESTRIAN PATH OF TRAVEL AND ACCESSIBILITY.

b. EMPLOYEES ARE RESPONSIBLE FOR ADHERENCE TO STANDARDS, GUIDELINES, ELECTRIC STANDARD PRACTICES, AND POLICIES AND PROCEDURES WHILE PERFORMING ALL DUTIES.

III. GENERAL DESCRIPTION OF REQUIREMENTS:

a. THIS STANDARD IS DESIGNED TO ENSURE THE PROVISION OF ONE OR MORE TEMPORARY, ACCESSIBLE PATHS OF TRAVEL AROUND THE WORKSITE, FOR ALL DISRUPTED SURFACES WITHIN THE SCOPE OF THE PROJECT. THIS PROCEDURE APPLIES TO ALL WORKSITES WHERE THE WORK AREA ENCROACHES UPON A DESIGNATED PUBLIC RIGHT-OF-WAY PEDESTRIAN PATH OF TRAVEL (SIDEWALK, WALKWAY OR CROSSWALK AREA).

REV	CHANGE	DRWN	BY	CHKD	APVD	DATE
E	DRAWING UPDATE	NV5	SPC	MRF	MRF	12/18/2024
D	REVISED TO 3D FORMAT	ARC	JIK	-	-	4/12/2022
C	FORMATTING	EDM	JIK	-	-	12/07/2020

SDG&E ELECTRIC OVERHEAD AND UNDERGROUND CONSTRUCTION STANDARDS

PEDESTRIAN PATH OF TRAVEL AND ACCESSIBILITY

SCALE: NOT TO SCALE

DRAWING NO: OH102.1 UG3002.1

SHEET: 1 OF 4

© 1998 - 2025 San Diego Gas and Electric Company. All rights reserved. Removal of this copyright notice without permission is not permitted under law.

X Indicates Latest Revision | Completely Revised | New Page | Information Removed

TABLE OF CONTENTS

NOTES (CONT'D):

b. EMPLOYEES WORKING ON A SIDEWALK THAT ARE UNABLE TO PROVIDE A SUITABLE AND PROTECTED 48-INCH WIDE PEDESTRIAN PATH OF TRAVEL ON THE SIDEWALK, SHALL ENSURE A SAFE AND ACCESSIBLE PATH OF TRAVEL FOR PEDESTRIANS AROUND THE WORKSITE, OR CLOSE THE SIDEWALK TO ALL TRAFFIC AND DIRECT ALL PEDESTRIANS TO AN ALTERNATE CIRCULATION PATH.

c. IMPROVEMENTS WITHIN A WORKSITE IN THE PUBLIC RIGHT-OF-WAY THAT ARE REMOVED OR DISTURBED DURING THE COMPANY'S ACTIVITIES AT THE SITE, SHALL BE REPLACED WITH CONSTRUCTION THAT MEETS THE ACCESSIBILITY REQUIREMENTS AS DESCRIBED IN THESE GUIDELINES.

(IV) **PEDESTRIAN CONTROL PLANS FOR TEMPORARY MAINTENANCE AND CONSTRUCTION PROJECTS:** EVERY WORKSITE OR ZONE WHERE THE NORMAL PEDESTRIAN PATH OF TRAVEL IS INTERRUPTED, BLOCKED, LOCATED DIRECTLY ADJACENT TO A WORK AREA OR OTHERWISE IMPACTED BY THE WORK, SHALL HAVE AT LEAST ONE, AND POTENTIALLY SEVERAL, TEMPORARY AND ACCESSIBLE PATHS OF TRAVEL PROVIDED. WHERE THE AUTHORITY HAVING JURISDICTION DICTATES SPECIFIC REQUIREMENTS, THE COMPANY SHALL PERFORM ITS CONSTRUCTION IN COMPLIANCE WITH THAT AUTHORITY. IN SITUATIONS WHERE THE AUTHORITY HAVING JURISDICTION HAS SPECIFIED REQUIREMENTS WHICH PROVIDE LESS ACCESS THAN THE REQUIREMENTS IN THIS SECTION, THE COMPANY SHALL USE THE REQUIREMENTS IN THIS SECTION WHICH PROVIDE MORE ACCESS, UNLESS THE AUTHORITY HAVING JURISDICTION EXPLICITLY CONTRADICTS OUR REQUIREMENTS.

a. **PEDESTRIAN CONTROL PLAN:** AN APPROPRIATELY DETAILED PEDESTRIAN CONTROL PLAN SHALL BE FORMULATED AND IMPLEMENTED PRIOR TO ANY WORK BEING UNDERTAKEN AT THE WORKSITE.

b. **MAJOR CONSIDERATIONS:** THE MAJOR CONSIDERATIONS IN PLANNING FOR PEDESTRIAN ACCESS IN TEMPORARY PEDESTRIAN CONTROL ZONES WITHIN THE PUBLIC RIGHT-OF-WAY ARE AS FOLLOWS:

- PEDESTRIANS SHALL NOT BE LED INTO CONFLICTS WITH WORKSITE VEHICLES, EQUIPMENT, EXCAVATIONS OR OTHER OPERATIONS.
- PEDESTRIANS SHALL NOT BE LED INTO CONFLICTS WITH VEHICULAR TRAFFIC.
- PEDESTRIANS SHALL BE PROVIDED WITH A CONVENIENT, SAFE, AND ACCESSIBLE PATH OF TRAVEL THAT REPLICATES, AS NEARLY AS POSSIBLE, THE MOST DESIRABLE CHARACTERISTICS OF EXISTING SIDEWALKS OR WALKWAYS IN THE AREA.
- PEDESTRIANS SHALL BE INFORMED OF CHANGES IN THE TRAVEL PATH IN A MANNER THAT IS READILY UNDERSTANDABLE.

c. **EXCEPTIONS**: THE FOLLOWING TYPES OF TEMPORARY MAINTENANCE AND CONSTRUCTION WORK AND WORKSITES ARE EXCLUDED:

- WORKSITES THAT ARE TO BE USED SHORT TERM, DEFINED AS BEING FOUR HOURS OR LESS.
- WORKSITES THAT ARE REQUIRED FOR THE RESOLUTION OF PROBLEMS CAUSED BY AN EMERGENCY, NATURAL DISASTER, SUBSTANTIAL ACCIDENT OR SIMILAR UNUSUAL OR EXTREME CONDITIONS WHERE PROTECTION OF THE HEALTH AND SAFETY OF THE PUBLIC SUPERSEDES ANY OTHER CONSIDERATIONS. SUCH CONDITIONS SHALL NOT EXCEED A DURATION OF ONE WEEK.

(V) **ALTERNATE CIRCULATION PATHS:** AN ALTERNATE CIRCULATION PATH SHALL BE PROVIDED WHENEVER THE NORMAL PEDESTRIAN ACCESS ROUTE IN THE PUBLIC RIGHT-OF-WAY IS BLOCKED OR ALTERED BY CONSTRUCTION, ALTERATION, MAINTENANCE OR OTHER TEMPORARY CONDITIONS.

a. **LOCATION:** WHERE FEASIBLE, THE ALTERNATE CIRCULATION PATH SHALL PARALLEL THE DISRUPTED PEDESTRIAN ACCESS ROUTE ON THE SAME SIDE OF THE STREET. SIDEWALK CLOSURES TO ALL PEDESTRIAN TRAFFIC SHOULD ONLY OCCUR WHERE A SAFE PASSAGE FOR ALL PEDESTRIANS AROUND THE WORKSITE CANNOT BE ESTABLISHED.

b. **ALTERNATE CIRCULATION PATH PROTECTION:** THE ALTERNATE CIRCULATION PATH SHALL NOT HAVE ABRUPT CHANGES IN GRADE, ELEVATION OR TERRAIN. THE ALTERNATE CIRCULATION PATH SHALL HAVE NO PROTRUSIONS UP TO A HEIGHT OF 80 INCHES, INCLUDING SCAFFOLDING AND SCAFFOLDING BRACES. WHEN OVERHEAD WORK IS CONDUCTED, THE PEDESTRIAN PASSAGE AREA BELOW SHALL BE PROTECTED OR REROUTED. WHERE THE ALTERNATE CIRCULATION PATH IS ADJACENT TO HAZARDOUS CONDITIONS, THE PATH SHALL BE PROTECTED WITH A BARRICADE, CONSISTENT WITH THE REQUIREMENTS DESCRIBED IN THIS STANDARD. MOVEMENT BY WORK VEHICLES AND EQUIPMENT ACROSS AN ALTERNATE CIRCULATION PATH SHOULD BE AVOIDED WHENEVER POSSIBLE. IF VEHICLES AND EQUIPMENT NEED TO TRAVEL ACROSS AN ALTERNATE CIRCULATION PATH, EMPLOYEES SHALL USE FLAGGERS OR EQUAL METHODS TO DIRECT VEHICULAR TRAFFIC.

c. **TEMPORARY FACILITIES:** TEMPORARY FACILITIES IN THE PUBLIC RIGHT-OF-WAY, INCLUDING TEMPORARY WALKING SURFACES, CURB RAMPS, AND SIMILAR FEATURES, SHALL CONFORM TO THE ACCESSIBILITY REQUIREMENTS FOR NEW OR REPLACEMENT CONSTRUCTION, EXCEPT AS DESCRIBED IN THIS SECTION. (XII)(XIII)(XIV)(XV)

d. **PROHIBITED REDUCTION IN ACCESSIBILITY:** TEMPORARY FACILITIES SHALL NOT HAVE AN EFFECT THAT DECREASES THE ACCESSIBILITY OF AN EXISTING PUBLIC RIGHT-OF-WAY OR SITE ARRIVAL POINTS TO BUILDINGS OR FACILITIES ADJACENT TO THE ALTERED PORTION OF THE PUBLIC RIGHT-OF-WAY. HOWEVER, WHERE ACCESSIBLE PEDESTRIAN FACILITIES DO NOT EXIST OR ARE DEFICIENT, TEMPORARY FACILITIES ARE NOT REQUIRED TO BE PROVIDED IN EXCESS OF THE DEGREE OF ACCESSIBILITY PRESENT PRIOR TO THE BEGINNING OF THE WORK.

e. **WORKSITE CONDITIONS:** TOOLS, EQUIPMENT OR MATERIALS MAY NOT BE STORED WITHIN THE ALTERNATE CIRCULATION PATH. HEAVY EQUIPMENT WITH PROTRUDING PARTS SHALL NOT BE LOCATED IN OR PROJECTED INTO THE PATH OF TRAVEL. DEBRIS SHOULD BE REMOVED FROM ALL TEMPORARY PATHS OF TRAVEL, AND SUCH AREAS SHALL BE PROPERLY DRAINED.

(VI) **DESIGN REQUIREMENTS FOR SIDEWALKS AND PEDESTRIAN PATHS OF TRAVEL:**

a. **SURFACES:** EACH PART OF THE UNALTERED PATH OF TRAVEL OR THE ALTERNATE CIRCULATION PATH SHALL BE AN "IMPROVED SURFACE" THAT IS FIRM, STABLE, AND SLIP-RESISTANT. SEE DEFINITIONS.

b. **CLEAR WIDTH:** EACH PART OF THE UNALTERED PATH OF TRAVEL OR THE ALTERNATE CIRCULATION PATH SHALL BE AT LEAST 4 FEET (48 INCHES) WIDE.

EXCEPTION 1: THE CLEAR WIDTH NEED NOT BE WIDER THAN THE EXISTING CLEAR WIDTH OF THE IMPROVED SURFACE OF THE SIDEWALK OR WALKWAY.

EXCEPTION 2: THE CLEAR WIDTH MAY BE REDUCED TO 36 INCHES FOR A DISTANCE OF 48 INCHES.

EXCEPTION 3: THE CLEAR WIDTH MAY BE REDUCED TO 36 INCHES IF UNUSUAL SITE CONSTRAINTS (SUCH AS PERMANENT FENCES OR REDUCED RIGHT-OF-WAY WIDTH) PRECLUDE AN EFFECTIVE METHOD FOR PROVIDING THE FULL WIDTH, BUT IN NO CASE SHALL THE DISTANCE OF SUCH REDUCTION BE MORE THAN 20 FEET.

c. SLOPES AND CROSS-SLOPES OF THE ALTERNATE CIRCULATION PATH SHALL NOT EXCEED 5 PERCENT OR 2 PERCENT, RESPECTIVELY.

d. **CHANGES IN LEVEL**: CHANGES IN LEVEL IN THE UNALTERED PATH OF TRAVEL OR THE ALTERNATE CIRCULATION PATH SHALL NOT EXCEED 1/2-INCH VERTICAL. A 1/4-INCH VERTICAL CHANGE IN LEVEL MAY BE MADE WITHOUT PROVISIONS FOR BEVELING THE LIP OF THE CHANGE. CHANGES BETWEEN 1/4-INCH AND 1/2-INCH MUST BE BEVELED AT A 1:2 RATIO.

e. **PEDESTRIAN TRAFFIC PLATES:** WORKSITE TRENCHES OR EXCAVATIONS MAY BE BRIDGED WITH STURDY PLYWOOD OR METAL PLATES AS LONG AS THE SURFACE IS CONTINUOUS AND STABLE, WITH NO GAPS OR CHANGES IN LEVEL, INCLUDING LIP EDGES FACING THE PATH OF TRAVEL, GREATER THAN 1/2-INCH. A 1/4-INCH VERTICAL CHANGE IN LEVEL MAY BE MADE WITHOUT PROVISIONS FOR BEVELING THE LIP OF THE CHANGE. CHANGES BETWEEN 1/4-INCH AND 1/2-INCH MUST BE BEVELED AT A 1:2 RATIO. TRENCH PLATES SHALL BE USED WITH AN APPROPRIATE AMOUNT OF COLD MIX PACK OR SIMILAR MATERIALS TO PROVIDE A SMOOTH TRANSITION FROM THE SIDEWALK OR STREET TO THE PLATE. IF PLATES HAVE THE POTENTIAL TO MOVE AND CAUSE A HAZARD, THEY MAY BE RECESSED INTO THE WALKWAY. OTHER METHODS SUCH AS EXPANSION BOLTS MAY ALSO BE USED TO PREVENT PLATE MOVEMENT. BEVELED EDGES OR FEATHERED/COMPACTED ASPHALT OR CONCRETE SHALL BE PROVIDED AT A BEVEL OF ONE VERTICAL TO TWO HORIZONTAL. IF METAL TRENCH PLATES IN THE PATH OF TRAVEL HAVE "LIFT HOLES" TO ALLOW A CHAIN WITH A HOOK TO MOVE THE PLATES, SUCH HOLES SHALL BE PLUGGED WITH MATERIAL SUCH AS WOOD OR PLASTIC PLUGS TO FILL IN THE LIFT HOLES AND AVOID CREATING A TRIPPING HAZARD.

REV	CHANGE	DRWN	BY	CHKD	APVD	DATE
E	DRAWING UPDATE	NV5	SPC	MRF	MRF	12/18/2024
D	REVISED TO 3D FORMAT	ARC	JIK	-	-	4/12/2022
C	FORMATTING	EDM	JIK	-	-	12/07/2020

SDGE™

SDG&E ELECTRIC OVERHEAD AND UNDERGROUND CONSTRUCTION STANDARDS

PEDESTRIAN PATH OF TRAVEL AND ACCESSIBILITY

SCALE: NOT TO SCALE

DRAWING NO:	SHEET:
OH102.2 UG3002.2	2 OF 4

© 1998 - 2025 San Diego Gas and Electric Company. All rights reserved. Removal of this copyright notice without permission is not permitted under law.

X Indicates Latest Revision | Completely Revised | New Page | Information Removed

TABLE OF CONTENTS

NOTES (CONT'D):

(VII) **DESIGN REQUIREMENTS FOR TEMPORARY CURB RAMPS:**

a. TEMPORARY CURB RAMPS SHALL BE USED WHEN PEDESTRIANS ARE DIVERTED OFF THE SIDEWALK OR WALKWAY INTO THE STREET ADJACENT TO THE WORKSITE. CURB RAMPS SHALL PROVIDE ALL PEDESTRIANS ADEQUATE TRANSITION FROM THE SIDEWALK INTO THE STREET AND BACK ONTO THE SIDEWALK.

b. TEMPORARY CURB RAMPS SHALL BE A MINIMUM OF 48 INCHES WIDE. CURB RAMPS SHALL HAVE A MAXIMUM RUNNING SLOPE OF 1:12 (1-FOOT RUN FOR EVERY INCH OF THE CURB) OR 8.33 PERCENT. ALL CURB RAMPS MUST HAVE SMOOTH ON AND OFF TRANSITIONS AT THE TOP AND BOTTOM. CURB RAMPS SHALL BE LOCATED SO THAT THEY DO NOT PROJECT INTO VEHICULAR TRAFFIC LANES OR CAUSE PEDESTRIANS TO ENTER OR EXIT INTO TRAFFIC LANES. RAISED CURB RAMPS SHALL HAVE "CURBING" AT LEAST 2-INCH HIGH AROUND ANY OPEN SIDES TO PREVENT AGAINST FALLING HAZARDS. TEMPORARY CURB RAMPS DO NOT REQUIRE THE USE OF DETECTABLE WARNINGS.

c. TEMPORARY CURB RAMPS MAY BE ANY OF THE THREE FOLLOWING TYPES:

PREFABRICATED METAL RAMPS AND LANDINGS: STANDARD METAL CURB RAMPS PROVIDED BY THE COMPANY, INCLUDING A 5-FOOT BY 5-FOOT LANDING WITH ADJUSTABLE "FEET" AND WITH A 2-INCH HIGH CURB AT THE BACK AND SIDE, A 4-FOOT WIDE ADJUSTABLE SLOPING RAMP SECTION, WITH ADJUSTABLE BOTTOM TRANSITION PLATE AND A 2-INCH HIGH CURB AT EACH SIDE, AND METAL RAILINGS AT THE SIDE OF THE LANDING AND SLOPING RAMP. (a)

SITE CONSTRUCTED RAMPS: CURB RAMPS CONSTRUCTED FROM 1-INCH OR THICKER PLYWOOD, WITH 2-INCH HIGH WOOD CURBING, AND WITH THE BOTTOM BEVELED TO CONFORM TO THE STREET SURFACE. (b)

EXISTING DRIVEWAYS MAY BE UTILIZED FOR CURB RAMPS UNDER THE FOLLOWING CONDITIONS:

- THE DRIVEWAY SLOPE DOES NOT EXCEED 1:10 (10 PERCENT).
- A 1.5-INCH WIDE X 1-INCH HIGH X 4-FOOT LONG METAL OR WOOD WEDGE IS POSITIONED AT THE BOTTOM OF THE DRIVEWAY RAMP.
- FOR COMMERCIAL DRIVEWAYS WIDE ENOUGH TO PROVIDE FOR SAFE IN AND OUT VEHICULAR TRAFFIC, A 4-FOOT PORTION OF THE DRIVEWAY IS BARRICADED FROM VEHICULAR USE.
- FOR RESIDENTIAL DRIVEWAYS, EITHER A 4-FOOT PORTION OF THE DRIVEWAY IS BARRICADED FROM VEHICULAR USE AND THE DRIVEWAY CLOSED TO ALL VEHICULAR USE, OR THE VEHICULAR TRAFFIC ACROSS THE DRIVEWAY IS CONTINUOUSLY MONITORED BY WORKERS.

(VIII) **DESIGN REQUIREMENTS FOR BARRICADES:**

a. BARRICADES SHALL BE PROVIDED AT THE FOLLOWING LOCATIONS:

- BETWEEN THE EXISTING PEDESTRIAN ACCESS ROUTE, IF UNALTERED, AND ANY ADJACENT WORKSITE OR ZONE.
- BETWEEN AN ALTERNATE CIRCULATION PATH AND ANY ADJACENT WORKSITE OR ZONE,
- BETWEEN AN ALTERNATE CIRCULATION PATH AND THE VEHICULAR WAY, IF THE ALTERNATE CIRCULATION PATH IS DIVERTED INTO THE STREET.
- BETWEEN AN ALTERNATE CIRCULATION PATH AND ANY PROTRUDING OBJECTS, DROP-OFFS OR OTHER HAZARDS TO PEDESTRIANS.

b. **VEHICULAR BARRICADES:** BARRICADES SUCH AS K-RAILS OR SIMILAR SOLID RAILINGS SHALL BE USED TO SEPARATE VEHICULAR TRAFFIC AND THE ALTERNATE PEDESTRIAN ROUTE IN AREAS WHERE THE VOLUME AND SPEED OF VEHICULAR TRAFFIC IS HIGH. SUCH BARRICADES SHALL HAVE SUFFICIENT STRENGTH AND LOW DEFLECTION CHARACTERISTICS TO KEEP VEHICLES FROM INTRUDING INTO THE ALTERNATE PEDESTRIAN ROUTE OR WORKSITES. SHORT, NON-CONTINUOUS SEGMENTS SHOULD BE AVOIDED, AS THEY INCREASE THE POTENTIAL FOR INJURY TO BOTH VEHICLE OCCUPANTS AND PEDESTRIANS, AND PRESENT BLUNT LEADING ENDS. WHEN USING SUCH BARRICADES, ADJACENT SEGMENTS SHOULD BE CONTINUOUS AND PROPERLY JOINED.

c. **PEDESTRIAN BARRICADES:** A BARRICADE AT THE EXISTING PEDESTRIAN ACCESS ROUTE OR THE ALTERNATE CIRCULATION PATH SHALL BE CONTINUOUS, STABLE AND NON-FLEXIBLE. A BARRICADE CAN BE ANY MATERIAL THAT PROTECTS PEDESTRIANS WITHOUT MATERIALLY IMPAIRING THE PEDESTRIAN PATH OF TRAVEL. IT SHALL HAVE A SOLID TOE RAIL WITH ITS TOP EDGE AT 6 INCHES MINIMUM IN HEIGHT AND ITS BOTTOM EDGE NO HIGHER THAN 1.5 INCHES OFF THE ADJACENT SURFACE. IT SHALL HAVE A CONTINUOUS TOP RAILING MOUNTED AT A HEIGHT OF 36 INCHES TO 42 INCHES. BASES SHALL BE USED AT EACH END OF EACH BARRICADE AND TAPED OR TIED AT THE TOP TO PROVIDE PROPER SUPPORT AND STABILITY.

IX. **CAUTION:**

* TAPE ALONE WOULD NOT PROVIDE AN ADEQUATE BARRICADE AND SHOULD NOT BE USED TO DELINEATE THE ALTERNATE CIRCULATION PATH.

** CONES, OR UNCONNECTED A-FRAMES, OR CONNECTED A-FRAMES WITHOUT A HANDRAIL AND TOE RAIL SHOULD NOT BE USED TO DIRECT PEDESTRIAN TRAFFIC. NO BARRIER SUPPORT MEMBER SHALL PROTRUDE MORE THAN 4 INCHES BEYOND THE TOP RAIL INTO THE ALTERNATE CIRCULATION PATH.

EXCEPTION 1: BARRICADES SHALL NOT BE REQUIRED WHERE THE WORKSITE OR ALTERNATE CIRCULATION PATH IS ENCLOSED WITH A SOLID FENCE OR WALL.

EXCEPTION 2: BARRICADES SHALL NOT BE REQUIRED WHEN THE WORKSITE OR ZONE REQUIRES ONLY THE USE OF HAND TOOLS AND NO HOLES OR EXCAVATIONS AS LONG AS WORKERS ARE PRESENT TO MONITOR AND ASSIST ANY PEDESTRIAN TRAFFIC.

XI. **WARNINGS AND SIGNAGE:**

WHEN AN ALTERNATE CIRCULATION PATH OR A BARRICADE IS CREATED IN THE PUBLIC RIGHT-OF-WAY, A WARNING AND/OR APPROPRIATE SIGNAGE SHALL BE PROVIDED.

a. WARNINGS SHALL BE LOCATED AT BOTH THE NEAR-SIDE AND THE FAR-SIDE OF THE INTERSECTION PRECEDING A TEMPORARY AND COMPLETELY BLOCKED PEDESTRIAN ACCESS ROUTE. SIGNAGE LOCATED AT THE INTERSECTION PRECEDING THE BLOCKED WAY SHALL BE PROVIDED.

b. SIGNS SHALL BE PLACED AT INTERSECTIONS SO PEDESTRIANS ARE NOT CONFRONTED WITH MID-BLOCK WORKSITES THAT COULD CAUSE THEM TO SKIRT THE WORK ZONE OR MAKE A MID-BLOCK CROSSING. AMPLE ADVANCE NOTIFICATION OF SIDEWALK CLOSURES IS IMPORTANT. DETOUR SIGNS ARE REQUIRED TO DIRECT ALL PEDESTRIANS TO USE THE ALTERNATE CIRCULATION PATH, IF PROVIDED. IF CONSTRUCTION TEMPORARILY AFFECTS TRAFFIC SIGNALS, ALTERNATIVE VISUAL SIGNALS ARE REQUIRED. (c)

(XII) **NEW OR REPLACEMENT CONSTRUCTION:**

WHERE THE REQUIRED SCOPE OF WORK AT A WORKSITE OR ZONE REQUIRES THE REMOVAL OF EXISTING FACILITIES, INCLUDING SIDEWALKS, WALKWAYS, DRIVEWAY APPROACHES, CURB RAMPS, AND SIMILAR ELEMENTS WITHIN THE PUBLIC RIGHT-OF-WAY OR WHERE LOCAL PERMITTING PROCESSES REQUIRE IT, NEW OR REPLACEMENT FACILITIES SHALL BE CONSTRUCTED BY THE COMPANY AFTER THE COMPLETION OF ALL WORK WITHIN THE WORKSITE OR ZONE. WHERE THE AUTHORITY HAVING JURISDICTION DICTATES SPECIFIC REQUIREMENTS, THE COMPANY SHALL PERFORM ITS CONSTRUCTION IN COMPLIANCE WITH THAT AUTHORITY. IN SITUATIONS WHERE THE AUTHORITY HAVING JURISDICTION HAS SPECIFIED REQUIREMENTS WHICH PROVIDE LESS ACCESS THAN THE REQUIREMENTS IN THIS SECTION, THE COMPANY SHALL USE THE REQUIREMENTS IN THIS SECTION WHICH PROVIDE MORE ACCESS, UNLESS THE AUTHORITY HAVING JURISDICTION EXPLICITLY CONTRADICTS OUR REQUIREMENTS.

(XIII) **PUBLIC SIDEWALKS:**

WHERE REPLACED OR NEWLY CONSTRUCTED, PUBLIC SIDEWALKS SHALL COMPLY WITH THIS SECTION

a. **PEDESTRIAN ACCESS ROUTE:** WHERE PUBLIC SIDEWALKS ARE PROVIDED, THEY SHALL CONTAIN A PEDESTRIAN ACCESS ROUTE.

b. **CLEAR WIDTH:** THE MINIMUM CLEAR WIDTH OF A PEDESTRIAN ACCESS ROUTE SHALL BE 48 INCHES, EXCLUSIVE OF THE WIDTH OF THE CURB.

REV	CHANGE	DRWN	BY	CHKD	APVD	DATE
E	DRAWING UPDATE	NV5	SPC	MRF	MRF	12/18/2024
D	REVISED TO 3D FORMAT	ARC	JIK	-	-	4/12/2022
C	FORMATTING	EDM	JIK	-	-	12/07/2020

SDGE™

SDG&E ELECTRIC OVERHEAD AND UNDERGROUND CONSTRUCTION STANDARDS

PEDESTRIAN PATH OF TRAVEL AND ACCESSIBILITY

SCALE: NOT TO SCALE

DRAWING NO: OH102.3 UG3002.3

SHEET: 3 OF 4

© 1998 - 2025 San Diego Gas and Electric Company. All rights reserved. Removal of this copyright notice without permission is not permitted under law.

X Indicates Latest Revision | Completely Revised | New Page | Information Removed

TABLE OF CONTENTS

NOTES (CONT'D):

EXCEPTION 1: THE CLEAR WIDTH MAY BE REDUCED TO 36 INCHES IF UNUSUAL SITE CONSTRAINTS (SUCH AS PERMANENT FENCES OR REDUCED RIGHT-OF-WAY WIDTH) PRECLUDE AN EFFECTIVE METHOD FOR PROVIDING THE FULL WIDTH. BUT IN NO CASE SHALL THE DISTANCE OF SUCH REDUCTION BE MORE THAN 20 FEET.

c. **CROSS-SLOPE:** THE CROSS-SLOPE OF THE PEDESTRIAN ACCESS ROUTE SHALL NOT EXCEED 1:48 (2 PERCENT).

d. **RUNNING GRADE:** THE RUNNING GRADE OF THE PEDESTRIAN ACCESS ROUTE SHALL NOT EXCEED 1:20 (5 PERCENT), EXCEPT THAT STEEPER GRADES CONSISTENT WITH GRADES ESTABLISHED FOR THE ADJACENT ROADWAY MAY BE PROVIDED.

e. **SURFACES:** THE SURFACES OF THE PEDESTRIAN ACCESS ROUTE SHALL BE SMOOTH, FIRM, AND SLIP-RESISTANT.

f. **CHANGES IN LEVEL:** CHANGES IN LEVEL IN THE PEDESTRIAN ACCESS ROUTE SHALL NOT EXCEED 1/2-INCH VERTICAL. A 1/4-INCH VERTICAL CHANGE IN LEVEL MAY BE MADE WITHOUT PROVISIONS FOR BEVELING THE LIP OF THE CHANGE. CHANGES BETWEEN 1/4-INCH AND 1/2-INCH MUST BE BEVELED AT A 1:2 RATIO.

g. **WALL MOUNTED OBJECTS:** OBJECTS WITH LEADING EDGES MORE THAN 27 INCHES FROM THE GROUND AND NOT MORE THAN 80 INCHES ABOVE THE GROUND SHALL PROTRUDE NO MORE THAN 4 INCHES HORIZONTALLY INTO THE PUBLIC SIDEWALK.

h. **POST-MOUNTED OBJECTS:** FREE STANDING OBJECTS MOUNTED ON POSTS OR PYLONS SHALL OVERHANG A MAXIMUM OF 4 INCHES WHEN LOCATED MORE THAN 27 INCHES FROM THE GROUND AND LESS THAN 80 INCHES ABOVE THE GROUND. WHERE A SIGN OR OTHER OBSTRUCTION IS MOUNTED BETWEEN POSTS OR PYLONS AND THE CLEAR DISTANCE BETWEEN THE POSTS OR PYLONS IS GREATER THAN 12 INCHES, THERE SHALL BE A BAR OR SIMILARLY DETECTABLE ELEMENT 15 INCHES ABOVE THE GROUND CONNECTING THE TWO POSTS OR PYLONS. SUCH BAR OR OTHER ELEMENT SHALL PROVIDE VISUAL CONTRAST WITH THE GROUND SURFACE.

i. **REDUCED VERTICAL CLEARANCE:** RAILINGS OR OTHER BARRIERS SHALL BE PROVIDED WHERE THE VERTICAL CLEARANCE IS LESS THAN 80 INCHES HIGH. THE LEADING EDGE OF SUCH RAILING OR BARRIER SHALL BE LOCATED NO MORE THAN 27 INCHES ABOVE THE GROUND.

j. **PASSING SPACE:** PATHS OF TRAVEL THAT EXCEED 200 FEET ALONG THE PEDESTRIAN ACCESS ROUTE THAT ARE LESS THAN 5 FEET IN CLEAR WIDTH SHALL PROVIDE PASSING SPACES 5 FEET WIDE FOR A DISTANCE OF 5 FEET TO ALLOW PEDESTRIANS IN WHEELCHAIRS ADEQUATE SPACE TO PASS.

(XIV) **CURB RAMPS:**

WHERE REPLACED OR NEWLY CONSTRUCTED, CURB RAMPS SHALL COMPLY WITH THIS SECTION.

a. **WHERE REQUIRED:** A CURB RAMP OR FLUSH LANDING SHALL BE PROVIDED WHEREVER THE PEDESTRIAN ACCESS ROUTE CROSSES A SIDEWALK/STREET TRANSITION, INCLUDING INTERSECTIONS, MID-BLOCK CROSSWALKS, MEDIANS AND ISLANDS TRAVERSED BY CROSSWALKS, ALLEYS, ACCESSIBLE PARKING AISLES, PASSENGER LOADING ZONES, AND LOCATIONS WHERE THE PUBLIC SIDEWALK ENDS AND PEDESTRIAN TRAVEL CONTINUES IN THE ROADWAY. SIDEWALK/STREET TRANSITIONS SHALL HAVE DETECTABLE WARNINGS COMPLYING WITH THE SECTION BELOW.

b. **RUNNING SLOPE:** THE RUNNING SLOPE OF THE MAIN PORTION OF THE CURB RAMP SHALL BE 1:12 (8.33 PERCENT) MAXIMUM.

c. **CROSS-SLOPE:** THE CROSS-SLOPE OF THE MAIN PORTION OF THE CURB RAMP SHALL BE 2 PERCENT MAXIMUM.

d. **LANDING:** A LANDING MEASURING A MINIMUM OF 48 INCHES BY 48 INCHES SHALL BE PROVIDED AT THE TOP OF THE CURB RAMP AND SHALL BE PERMITTED TO OVERLAP OTHER LANDINGS AND CLEAR SPACES. RUNNING AND CROSS-SLOPES OF THE LANDING SHALL BE 2 PERCENT MAXIMUM.

e. **FLARED SIDES:** FLARED SIDES WITH A MAXIMUM SLOPE OF 1:10 (10 PERCENT). MEASURED ALONG THE CURB LINE, SHALL BE PROVIDED WHERE A CIRCULATION PATH CROSSES THE CURB RAMP.

f. **CLEAR WIDTH:** THE CLEAR WIDTH OF THE MAIN PORTION OF THE CURB RAMP, EXCLUDING FLARED SIDES, SHALL BE 48 INCHES, MINIMUM.

g. **DETECTABLE WARNINGS:** DETECTABLE WARNING SURFACES SHALL BE PROVIDED FOR THE FULL WIDTH OF THE MAIN PORTION OF THE CURB RAMP AND FOR A DEPTH OF 24 INCHES MINIMUM, WITH THE FRONT EDGE LOCATED APPROXIMATELY 6 INCHES BEHIND THE CURB LINE. THE DETECTABLE WARNING SURFACE SHALL BE A PREFABRICATED, VITRIFIED POLYMER COMPOSITE, EMBEDDED TYPE MATERIAL. THE DETECTABLE WARNING SURFACE SHALL HAVE IN-LINE, SQUARE GRID PATTERN TRUNCATED DOMES 0.2-INCH HIGH, WITH 0.9-INCH MINIMUM AND 1.4-INCH MAXIMUM BASE DIAMETER, TAPERING UP TO A TOP DIAMETER OF 0.4-INCH MINIMUM AND 0.5-INCH MAXIMUM, WITH A CENTER TO CENTER SPACING OF APPROXIMATELY 2.3 INCHES MEASURED DIAGONALLY, AND WITH SAFETY FIELD DOTS THIRTY PER SQUARE INCH BETWEEN TRUNCATED DOMES. DETECTABLE WARNINGS SHALL BE SAFETY YELLOW CONFORMING TO FEDERAL COLOR NO. 33538.

h. **GROOVED BORDER:** A 12-INCH WIDE GROOVED BORDER WITH 1/4-INCH GROOVES APPROXIMATELY 3/4-INCH ON CENTER SHALL BE PROVIDED AT THE TOP OF THE MAIN SLOPE AND AT THE SIDE OF EACH SIDE SLOPE.

i. **SURFACES:** SURFACES OF CURB RAMPS AND LANDINGS SHALL COMPLY WITH THE PEDESTRIAN CONTROL PLANS FOR TEMPORARY MAINTENANCE AND CONSTRUCTION PROJECTS SECTION OF THIS STANDARD. GRATINGS, ACCESS COVERS, AND OTHER APPURTENANCES SHALL NOT BE LOCATED ON CURB RAMPS, LANDINGS, AND GUTTER AREAS DIRECTLY IN FRONT OF CURB RAMPS. (IV)(V)(VI)(VII)(VIII)

j. **CHANGES IN LEVEL:** VERTICAL CHANGES IN LEVEL SHALL NOT BE PERMITTED ON CURB RAMPS, LANDINGS OR GUTTER AREAS DIRECTLY IN FRONT OF CURB RAMPS.

k. **GUTTER SLOPE:** THE COUNTER SLOPE OF THE GUTTER AREA OR STREET AT THE FOOT OF A CURB RAMP OR LANDING SHALL BE 1:20 (5 PERCENT) MAXIMUM, MEASURED FOR A DISTANCE OF 8 INCHES FROM THE CURB LINE.

(XV) **DRIVEWAY APPROACHES OR RAMPS:**

a. **WHERE REQUIRED:** WHERE THE PEDESTRIAN ACCESS ROUTE CROSSES A VEHICULAR ENTRANCE TO AN ADJACENT PROPERTY, A DRIVEWAY APPROACH SHALL BE PROVIDED THAT MEETS THE REQUIREMENTS OF THIS SECTION.

b. **PEDESTRIAN ACCESS ROUTE WIDTH:** EACH DRIVEWAY APPROACH SHALL INCLUDE A LEVEL AREA WITH A CROSS-SLOPE OF NO MORE THAN 2 PERCENT FOR A CLEAR WIDTH OF 4 FEET (48 INCHES).

EXCEPTION 1: THE CLEAR WIDTH MAY BE REDUCED TO 36 INCHES IF UNUSUAL SITE CONSTRAINTS (SUCH AS PERMANENT FENCES OR REDUCED RIGHT-OF-WAY WIDTH) PRECLUDE AN EFFECTIVE METHOD FOR PROVIDING THE FULL WIDTH, BUT IN NO CASE SHALL THE DISTANCE OF SUCH REDUCTION BE MORE THAN 20 FEET.

c. **DRIVEWAY LIP:** EACH DRIVEWAY RAMP SHALL HAVE A 1-INCH VERTICAL LIP AT THE STREET.

REFERENCE:

(a) SEE ESP138 FOR TEMPORARY PATHWAYS FOR PUBLIC ACCESS (REFER TO ATTACHMENT C - PEDESTRIAN RAMPS).
(b) SEE ESP138 FOR TEMPORARY PATHWAYS FOR PUBLIC ACCESS (REFER TO ATTACHMENT D - PEDESTRIAN PATHWAYS PLATES).
(c) SEE ESP138 FOR TEMPORARY PATHWAYS FOR PUBLIC ACCESS (REFER TO ATTACHMENT E & G - SIGNS AND ARROWS WITH DOT SIGN NUMBER & EXAMPLES OF TEMPORARY PATHWAY PLANS.

REV	CHANGE	DRWN	BY	CHKD	APVD	DATE
E	DRAWING UPDATE	NV5	SPC	MRF	MRF	12/18/2024
D	REVISED TO 3D FORMAT	ARC	JIK	-	-	4/12/2022
C	FORMATTING	EDM	JIK	-	-	12/07/2020

SDGE™

SDG&E ELECTRIC OVERHEAD AND UNDERGROUND CONSTRUCTION STANDARDS

PEDESTRIAN PATH OF TRAVEL AND ACCESSIBILITY

SCALE: NOT TO SCALE

DRAWING NO:	SHEET:
OH102.4 UG3002.4	4 OF 4

© 1998 - 2025 San Diego Gas and Electric Company. All rights reserved. Removal of this copyright notice without permission is not permitted under law.

X Indicates Latest Revision | Completely Revised | New Page | Information Removed

SCOPE: THIS PAGE DESCRIBES GENERAL INFORMATION CONCERNING THE FORMAT FOR STANDARD PAGES.

INSTALLATION: NONE

BILL OF MATERIALS: NONE

NOTES:

PAGE FORMAT

I. NOTE CALL-OUT:
   a. AN UNCIRCLED LETTERED NOTE (E.G., A) REFERS TO THE ENTIRE PAGE. REFERENCE TO THAT NOTE DOES NOT NORMALLY APPEAR ELSEWHERE ON THAT PAGE.
   b. CIRCLED LETTERED NOTE (E.G., (A)) REFERS TO A SPECIFIC PORTION OF THE PAGE. THE CIRCLED LETTER WILL BE REPLACED ELSEWHERE ON THAT PAGE.

II. THE FOLLOWING NOTES FOUND IN THE TITLE BLOCK (AT THE BOTTOM OF PAGE), ARE METHODS OF INDICATING PAGE CHANGES AND/OR ADDITIONS.
   a. [X] "INDICATES LATEST REVISION" (OLD VERSIONS) OR "INDICATES LATEST REVISION" (NEW VERSIONS)
      SHADING OR ORANGE FONT INDICATES THE MOST RECENT CHANGES AND/OR ADDITIONS ON A PAGE.
   b. [X] "COMPLETELY REVISED"
      THIS NOTE IS USED TO INDICATE THE PAGE HAS HAD MAJOR CHANGES.
   c. [X] "NEW PAGE"
      THIS NOTE IS USED TO INDICATE THE PAGE IS NEW.
   d. [X] "INFORMATION REMOVED"
      THIS NOTE INDICATES INFORMATION HAS BEEN DELETED.

III. PAGE NUMBERS WITH A DECIMAL INDICATE THAT THE STANDARD TAKES MORE THAN ONE PAGE.

IV. ALL STANDARD PAGES WILL BE MARKED WITH THE ABBREVIATION FOR THE MANUAL THEY EXIST IN. IF THE STANDARD EXISTS IN MORE THAN ONE MANUAL ALL ABBREVIATIONS AND STANDARD NUMBERS WILL BE INDICATED.

V. STANDARD PAGES WHICH APPEAR IN THE SERVICES STANDARDS & GUIDE MANUAL WILL BE INDICATED IN THE REFERENCE SECTION.

REFERENCE: NONE

TABLE OF CONTENTS

REV	CHANGE	DRWN	BY	CHKD	APVD	DATE
E	NO CHANGES - REAFFIRMED	DV	JIK	-	-	04/08/2024
D	REVISED TO 3D FORMAT	ARC	JIK	-	-	03/09/2022
C	UPDATED STANDARDS	-	GW	JS	CZH	11/15/2018

SDGE

SDG&E ELECTRIC OVERHEAD AND UNDERGROUND CONSTRUCTION STANDARDS

STANDARD PAGE FORMAT

SCALE: NOT TO SCALE

DRAWING NO: OH103.1 UG3003.1

SHEET: 1 OF 1

© 1998 - 2024 San Diego Gas and Electric Company. All rights reserved. Removal of this copyright notice without permission is not permitted under law.

X Indicates Latest Revision | Completely Revised | New Page | Information Removed

TABLE OF CONTENTS

SCOPE: THIS STANDARD EXPLAINS HOW TO SUBMIT A CONSTRUCTION STANDARDS REQUEST (CSR) RELATED TO; CONSTRUCTION STANDARDS, ELECTRIC STANDARD PRACTICES, ELECTRIC DISTRIBUTION DESIGN MANUAL, SERVICE STANDARDS & GUIDE, OR DESIGN UNITS.

ATTENTION:

*JOB AIDS ARE AVAILABLE IN THE DASHBOARD TO HELP EXPLAIN EACH FIELD AND THEIR REQUIREMENTS.

**INCOMPLETE INFORMATION WILL RESULT IN DELAYED RESPONSE TIME OR REQUIRE A REVISION AND RE-SUBMITTAL OF THE REQUEST.

***USE THE REQUEST ID TO LOOK UP A REQUEST QUICKLY AND ACCURATELY IN THE DASHBOARD.

****CLEARANCES RELATED TO ANY REQUEST MUST BE CLEARLY DELINEATED AND INCLUDED ON A SKETCH OR MODEL.

THE CSR PROCESS MAY BE UTILIZED FOR PROJECT SPECIFIC INQUIRIES FOR DIRECTION REGARDING CONSTRUCTION STANDARDS AND DESIGN MANUAL INTERPRETATIONS AND CLARIFICATIONS.

DESIGN CHECK IS NOT PART OF THE CSR OR DEVIATION REQUEST PROCESS.

INSTALLATION:

A. ELECTRONIC FORMS FOR EACH TYPE OF REQUEST CAN BE FOUND AT THE ELECTRIC DISTRIBUTION ENGINEERING (EDE) REQUEST DASHBOARD.

B. ACCESS TO THE DASHBOARD IS GRANTED TO APPROVED USERS WITH VALID SDG&E OR SDG&E CONTRACTOR EMAILS.

C. FROM THE DASHBOARD, SELECT THE APPROPRIATE REQUEST TYPE:
   a. CONSTRUCTION STANDARD.
   b. ELECTRIC DISTRIBUTION DESIGN MANUAL.
   c. ELECTRIC STANDARD PRACTICE.
   d. SERVICE STANDARD.

D. FILL OUT THE REQUIRED FIELDS SHOWN IN THE REQUEST FORM*.
   a. TITLE: PLEASE ENTER STANDARD NUMBER PLUS KEY WORDS DESCRIBING THE REQUEST.
   b. DESCRIPTION AND REASON FOR REQUEST: EXPLAIN THE REQUEST WITH ALL RELEVANT DETAILS HERE.
   c. ACTION REQUESTED: CLARIFICATION, REMOVE INFO, UPDATE STANDARD, ADD NEW STANDARD.
   d. REQUEST TYPE: OH, UG, OR DESIGN UNIT.
   e. STANDARD / SECTION AFFECTED: PLEASE ENTER THE STANDARD OR SECTION NAME.
   f. REQUESTERS SUPERVISON: PLEASE SELECT YOUR SUPERVISOR OR PROJECT MANAGER FOR THE PROJECT YOU ARE WORKING ON. SEARCH BY TYPING IN LAST NAME, FOLLOWED BY FIRST NAME TO NARROW THE SEARCH, THEN SELECT THE CORRECT NAME.
   g. ATTACHMENTS: SEE BOM FILE LIMIT IS 50MB.

E. FIND AND SELECT SDG&E SUPERVISOR FROM REQUESTERS SUPERVISOR FIELD.

F. IT IS REQUIRED TO PROVIDE COPIES OF ANY APPLICABLE STANDARDS, DOCUMENTS, PHOTOS, AND CRITICAL INFORMATION RELEVANT TO THE REQUEST**.

G. WHEN REQUEST IS COMPLETE AND ALL DOCUMENTS PROVIDED, CLICK ON THE SAVE AND SUBMIT BUTTON.

H. A UNIQUE REQUEST ID WILL BE PROVIDED FOR THE REQUEST ON THE NEXT SCREEN***.

I. CLICK "SUBMIT TO SUPERVISOR" BUTTON TO SEND EMAIL NOTIFICATION TO REQUESTER'S SDG&E SUPERVISOR.

J. CLICK BLUE CHECKMARK TO SAVE PROGRESS AND COMPLETE THE SUBMISSION.

BILL OF MATERIALS:

PROJECT SPECIFIC DOCUMENTATION IS REQUIRED TO FACILITATE A THOROUGH AND TIMELY EVALUATION (.BAK FILES ARE NOT REQUIRED NOR PREFERRED). ALL REQUESTS SHOULD INCLUDE SPECIFIC DOCUMENTATION THAT RELATES TO THE REQUEST, SUCH AS: CLIMBING SPACE DETAIL, JUMPER CONFIGURATIONS, CLEARANCES, LAND RIGHTS, ETC.

- MARKED UP STANDARD(S) APPLICABLE TO THE CSR.
- PICTURES OF THE EXISTING ISSUE OR LOCATION.
- SKETCH OR MODEL OF PROPOSED CONSTRUCTION****.

NOTES:

CONSTRUCTION STANDARDS REQUESTS;

I. AFTER REQUEST IS SUBMITTED IT WILL BE ENTERED IN THE QUEUE WITH "PENDING REQUESTER'S SUPERVISOR APPROVAL" STATUS.
II. PRIOR TO REVIEW BY EDE, THE REQUEST MUST BE APPROVED BY THE REQUESTER'S SDG&E SUPERVISOR.
III. ONCE THE REQUESTER'S SDG&E SUPERVISOR COMPLETES THEIR COMMENTS AND APPROVAL, THE REQUEST WILL BE UPDATED TO "NEW REQUEST" STATUS.
IV. THE REQUEST WILL BE REVIEWED AND INVESTIGATED DURING THE NEXT APPROPRIATE EDE TEAM MEETING AND UPDATED TO "UNDER INVESTIGATION" STATUS.
V. THE REQUESTER IS NOTIFIED VIA EMAIL ANY TIME THE REQUEST IS EDITED AND WHEN REQUEST IS EITHER APPROVED OR DENIED BY EDE.
VI. DURING THE INVESTIGATION THE REQUEST MAY BE SENT TO ADDITIONAL REVIEWERS AND NON-EDE APPROVERS AT EDE'S DISCRETION.
VII. RESPONSE WILL BE PROVIDED BASED ON URGENCY. REQUESTS ARE GENERALLY RESPONDED TO WITHIN 2 WEEKS. SOME REQUESTS MAY REQUIRE MORE TIME FOR ADDITIONAL INVESTIGATION.

REFERENCE:

ELECTRIC DISTRIBUTION ENGINEERING REQUEST DASHBOARD (LINK).

REV	CHANGE	DRWN	BY	CHKD	APVD	DATE
E	COMPLETELY REVISED	GLC	MRF	MRF	KRG	04/09/2024
D	REVISED TO 3D FORMAT	ARC	JIK	-	-	03/09/2022

SDG&E ELECTRIC OVERHEAD AND UNDERGROUND CONSTRUCTION STANDARDS

CONSTRUCTION STANDARD REQUEST (CSR)

SCALE: NOT TO SCALE

DRAWING NO: OH105.1 UG3005.1

SHEET: 1 OF 1

© 1998 - 2024 San Diego Gas and Electric Company. All rights reserved. Removal of this copyright notice without permission is not permitted under law.

Indicates Latest Revision [X] Completely Revised | New Page | Information Removed

TABLE OF CONTENTS

SCOPE: THIS STANDARD EXPLAINS HOW TO SUBMIT A DEVIATION REQUEST (DR) RELATED TO CONSTRUCTION STANDARDS OR THE ELECTRIC DISTRIBUTION DESIGN MANUAL. DEVIATIONS ARE FOR NONSTANDARD INSTALLATIONS NOT SHOWN IN THE OVERHEAD/UNDERGROUND CONSTRUCTION STANDARDS. DEVIATIONS SHOULD BE THE EXCEPTION AND NOT THE RULE AND SHOULD BE CONSIDERED ONLY AS A LAST ALTERNATIVE. (I)

INSTALLATION:

A. ELECTRONIC FORMS FOR EACH TYPE OF REQUEST CAN BE FOUND AT THE ELECTRIC DISTRIBUTION ENGINEERING (EDE) REQUEST DASHBOARD.

B. ACCESS TO THE DASHBOARD IS GRANTED TO APPROVED USERS WITH VALID SDG&E OR SDG&E CONTRACTOR EMAILS.

C. FROM THE DASHBOARD, SELECT "CONSTRUCTION OR DESIGN DEVIATION" FROM THE CREATE REQUEST SECTION.

D. FILL OUT THE REQUIRED FIELDS SHOWN IN THE DEVIATION - NEW REQUEST FORM: (II)

1. WORK STOPPAGE: SPECIFIC FOR JOBS IN ACTIVE CONSTRUCTION, NOT IN DESIGN.
2. TITLE: PLEASE ENTER STANDARD NUMBER PLUS KEY WORDS DESCRIBING THE REQUEST.
3. DESCRIPTION AND REASON FOR REQUEST: EXPLAIN THE REQUEST WITH ALL RELEVANT DETAILS HERE.
4. REQUEST TYPE: OH, UG, OR DESIGN UNIT.
5. STANDARD / SECTION AFFECTED: PLEASE ENTER THE STANDARD OR SECTION NAME.
6. PROJECT AREA: COASTAL, HFTD, NA.
7. REQUESTERS DEPARTMENT.
8. C&O DISTRICT IMPACTED: NORTHEAST, NORTH COAST, METRO, EASTERN, BEACH CITIES, ORANGE COUNTY, RAMONA, MOUNTAIN EMPIRE.
9. JOB TITLE: JOB TITLE FROM JOB PACKET.
10. POLE OR STRUCTURE NUMBER: PLEASE ENTER THE POLE OR STRUCTURE ID WITH LETTER FIRST FOLLOWED BY NUMBER SEQUENCE.
11. CIRCUIT NUMBER: PLEASE ENTER C FOR CIRCUIT FOLLOWED BY NUMBER SEQUENCE AND CIRCUIT SECTION LAST. DO NOT USE SPACES.
12. PROJECT: SELECT THE APPROPRIATE PROJECT FROM THE DROP DOWN.
13. WORK ORDER NUMBER: PLEASE ENTER ONLY NUMBERS AND NO LETTERS. IF WORK ORDER NUMBER HAS NOT BEEN ISSUED, ADD THE PROJECT OR JOB NUMBER (WORK ORDER PROBABLY HASN'T BEEN ISSUED, MAYBE START WITH PROJECT NUMBER).
14. REQUESTERS SUPERVISOR: PLEASE SELECT YOUR SDG&E SUPERVISOR OR SDG&E PROJECT MANAGER FOR THE PROJECT YOU ARE WORKING ON. SEARCH BY TYPING IN LAST NAME, FOLLOWED BY FIRST NAME TO NARROW THE SEARCH, THEN SELECT THE CORRECT NAME.
15. ATTACHMENTS: SEE BOM. FILE LIMIT IS 50MB.

E. FIND AND SELECT SDG&E SUPERVISOR FROM REQUESTERS SUPERVISOR FIELD.

F. IT IS REQUIRED TO PROVIDE COPIES OF ANY APPLICABLE STANDARDS, DOCUMENTS, PHOTOS, AND CRITICAL INFORMATION RELEVANT TO THE REQUEST. (III)

G. WHEN REQUEST IS COMPLETE AND ALL DOCUMENTS PROVIDED, CLICK ON THE SAVE AND SUBMIT BUTTON.

H. A UNIQUE REQUEST ID WILL BE PROVIDED FOR THE REQUEST ON THE NEXT SCREEN. (IV)

J. CLICK "SUBMIT TO SUPERVISOR" BUTTON TO SEND EMAIL NOTIFICATION TO REQUESTER'S SDG&E SUPERVISOR.

K. CLICK BLUE CHECKMARK TO SAVE PROGRESS AND COMPLETE THE SUBMISSION.

BILL OF MATERIALS: NONE

NOTES:

(I) ALTERNATIVES INCLUDE BUT ARE NOT LIMITED TO: DESIGN CONFIGURATIONS, PLANNING CONSIDERATIONS, LAND ISSUES, ADDITIONAL STRUCTURES, ETC.

(II) JOB AIDS ARE AVAILABLE IN THE DASHBOARD TO HELP EXPLAIN EACH FIELD AND THEIR REQUIREMENTS.

(III) INCOMPLETE INFORMATION WILL RESULT IN DELAYED RESPONSE TIME OR REQUIRE A REVISON AND RESUBMITTAL OF THE REQUEST.

(IV) USE THE REQUEST ID TO LOOK UP A REQUEST QUICKLY AND ACCURATELY IN THE DASHBOARD.

(V) CLEARANCES RELATED TO ANY REQUEST MUST BE CLEARLY DELINEATED AND INCLUDED ON A SKETCH OR MODEL.

VI. DEVIATIONS SHOULD BE ON A PER LOCATION BASIS (NO BLANKET DEVIATIONS)

VII. DESIGN CHECK IS NOT PART OF THE CSR OR DEVIATION REQUEST PROCESS.

VIII. EDE DOES NOT DEVIATE FROM GENERAL ORDERS.

IX. PROJECT SPECIFIC DOCUMENTATION IS REQUIRED TO FACILITATE A THOROUGH AND TIMELY EVALUATION (.BAK FILES ARE NOT REQUIRED NOR PREFERRED). ALL REQUESTS SHOULD INCLUDE SPECIFIC DOCUMENTATION THAT RELATES TO THE REQUEST, SUCH AS:

a. CLIMBING SPACE DETAIL, JUMPER CONFIGURATIONS, CLEARANCES, AND LAND RIGHTS
a. MARKED UP STANDARD(S) APPLICABLE TO THE DR.
b. PICTURES OF THE EXISTING ISSUE OR LOCATION.
c. SKETCH OR MODEL OF PROPOSED CONSTRUCTION. (V)

DEVIATION REQUEST PROCESS

XI. AFTER REQUEST IS SUBMITTED IT WILL ENTER THE QUEUE WITH "PENDING REQUESTER'S SUPERVISOR APPROVAL" STATUS.

XII. PRIOR TO REVIEW BY EDE, THE REQUEST MUST BE APPROVED BY THE REQUESTER'S SDG&E SUPERVISOR.

XIII. ONCE THE REQUESTER'S SDG&E SUPERVISOR COMPLETES THEIR COMMENTS AND APPROVAL, THE REQUEST WILL BE UPDATED TO "NEW REQUEST" STATUS.

XIV. THE REQUEST WILL BE REVIEWED AND INVESTIGATED DURING THE NEXT APPROPRIATE EDE TEAM MEETING AND UPDATED TO "UNDER INVESTIGATION" STATUS.

XV. THE REQUESTER IS NOTIFIED VIA EMAIL ANY TIME THE REQUEST IS EDITED AND WHEN REQUEST IS EITHER APPROVED OR DENIED BY EDE.

XVI. DURING THE INVESTIGATION THE REQUEST MAY BE SENT TO ADDITIONAL REVIEWERS AND NON-EDE APPROVERS AT EDE'S DISCRETION.

XVII. REQUESTS MAY BE REQUIRE ADDITIONAL REVIEW AND APPROVAL BY THE DISTRICT CONSTRUCTION SUPERVISOR, GENERAL FOREMAN, OR CONSTRUCTION PROJECT COORDINATOR.

XVIII. RESPONSE WILL BE PROVIDED BASED ON URGENCY. REQUESTS ARE GENERALLY RESPONDED TO WITHIN TWO WEEKS, SOME REQUESTS MAY REQUIRE MORE TIME FOR ADDITIONAL INVESTIGATION.

XIX. DEVIATION REQUESTS WILL BE RETURNED EITHER APPROVED OR DENIED WITH COMMENTS AND EXPLANATIONS GIVEN IN PDF FORM.

REFERENCE:

a. ELECTRIC DISTRIBUTION ENGINEERING REQUEST DASHBOARD (LINK).

REV	CHANGE	DRWN	BY	CHKD	APVD	DATE
C	-	-	-	-	-	-
B	-	-	-	-	-	-
A	ORIGINAL ISSUE	DV	JIK	MRF	KRG	01/03/2025

SDGE

SDG&E ELECTRIC OVERHEAD AND UNDERGROUND CONSTRUCTION STANDARDS

DEVIATION REQUEST

SCALE: NOT TO SCALE

DRAWING NO: OH106.1 UG3006.1

SHEET: 1 OF 1

© 1998 - 2024 San Diego Gas and Electric Company. All rights reserved. Removal of this copyright notice without permission is not permitted under law.

Indicates Latest Revision | Completely Revised | X New Page | Information Removed

MAIN TABLE OF CONTENTS

PAGE	SUBJECT
3104	DISTRIBUTION SWITCH NUMBERING
3111	DISTRIBUTION STRUCTURE NUMBERING
3113	GIS UG MAP SYMBOL TABLE
3140	CONTAMINATION DISTRICTS
3150	ELECTRIC CONDUIT FIELD MAPPING

THIS SECTION HAS BEEN REMOVED FROM THE EXTERNAL VERSION.
DUE TO CONFIDENTIAL INFORMATION.

REV	CHANGE	DRWN	BY	CHKD	APVD	DATE
F	REVISED TO 3D FORMAT	NV5	JIK	-	-	05/07/2024
E	FORMATTING	EDM	JIK	-	-	01/13/2021
D	EDITORIAL CHANGES	-	JK	JS	CZH	05/18/2018

© 1998 - 2024 San Diego Gas and Electric Company. All rights reserved. Removal of this copyright notice without permission is not permitted under law.

SDG&E ELECTRIC UNDERGROUND CONSTRUCTION STANDARDS

PRACTICES
TABLE OF CONTENTS

SCALE: NOT TO SCALE

DRAWING NO: UG3101.1

SHEET: 1 OF 1

X Indicates Latest Revision | Completely Revised | New Page | Information Removed

MAIN TABLE OF CONTENTS

PAGE	SUBJECT
3202	CABLE IDENTIFICATION
3203	PULL AND MEASURING TAPE, CONDUIT AND CONDUIT KNOCKOUT IDENTIFICATION
3204	COMMUNICATION CONDUIT IDENTIFICATION
3211	STRUCTURE/EQUIPMENT IDENTIFICATION - SUBSURFACE AND PAD MOUNTED
3212	FIRE PUMP WARNING LABEL
3213	PRIMARY METERING STATION IDENTIFICATION
3214	TRANSFORMER STATION IDENTIFICATION
3215	SUBSURFACE/SURFACE OPERABLE AND PAD MOUNTED SWITCH IDENTIFICATION
3216	FAULT INDICATOR IDENTIFICATION
3217	FUSE IDENTIFICATION
3218	IDENTIFICATION DECALS
3221	PAD MOUNTED EQUIPMENT - HIGH VOLTAGE DECALS
3225	TRANSFORMER COMPANY NUMBER
3230	CUSTOMER GENERATOR IDENTIFICATION - WARNING DECAL
3232	LOADBREAK AND DEADBREAK ELBOW IDENTIFICATION - TAG AND STRAP
3233	NORMALLY OPEN POINT IDENTIFICATION - TAG AND STRAP
3234	CIRCUIT TIE - DO NOT OPERATE ENERGIZED - TAG AND STRAP
3238	SCADA SITE IDENTIFICATION DECAL
3239	BURIED FIBER OPTIC CABLE WARNING DECAL
3240	PAD MOUNTED EQUIPMENT - WORKING SPACE DECALS
3250	GENERAL ARRANGEMENT MARKER FOR UNDERGROUND EQUIPMENT AND POWER CABLE

THIS SECTION HAS BEEN REMOVED FROM THE EXTERNAL VERSION.
DUE TO CONFIDENTIAL INFORMATION.

REV	CHANGE	DRWN	BY	CHKD	APVD	DATE
I	REVISED TO 3D FORMAT	NV5	JIK	-	-	05/07/2024
H	UPDATES TO 3250	GLC	ADW	JAS	KRG	05/22/2023
G	FORMATTING	EDM	JIK	-	-	02/04/2021

© 1998 - 2024 San Diego Gas and Electric Company. All rights reserved. Removal of this copyright notice without permission is not permitted under law.

SDG&E ELECTRIC UNDERGROUND CONSTRUCTION STANDARDS

IDENTIFICATION TABLE
TABLE OF CONTENTS

SCALE: NOT TO SCALE

DRAWING NO: UG3201.1

SHEET: 1 OF 1

X Indicates Latest Revision | Completely Revised | New Page | Information Removed

MAIN TABLE OF CONTENTS

PAGE	SUBJECT
3302	SUBSTRUCTURE APPLICATIONS
3303	CONCRETE PRODUCTS - MANHOLES, HANDHOLES, COVERS AND ENCLOSURES
3304	FALSE CURB
3305	INSTALLATION OF SUBSTRUCTURES ON SLOPING GRADES
3306	JOINT (PLASTIC-MASTIC) SEALING COMPOUND - INSTALLATION
3308	HANDHOLE - CITY OF SAN DIEGO STREET LIGHT (INSIDE DIMENSIONS 10 1/4" X 15 3/8")
3309	HANDHOLE POLYMER CONCRETE (37 5/8" X 26" X 18" OR 37 5/8" X 26" X 26")
3310	PENCELL SECONDARY BOX PEDESTAL WITH DOME
3311	HANDHOLE - CONCRETE (INSIDE DIMENSIONS - 14" X 66" X 14" OR 14" X 108" X 14")
3312	HANDHOLE - HIGH DENSITY POLYETHYLENE (HDPE), CONCRETE (INSIDE DIMENSIONS - 17" X 30")
3313	HANDHOLE - CONCRETE (INSIDE DIMENSIONS - 24" X 36" OR 30" X 48")
3314	HANDHOLE EQUIPMENT ENCLOSURE - CONCRETE (INSIDE DIMENSIONS 3'-0" X 6'-0")
3315	HANDHOLE EQUIPMENT ENCLOSURE - CONCRETE (INSIDE DIMENSIONS 4'-0" X 6'-6")
3316	HANDHOLE EQUIPMENT ENCLOSURE - CONCRETE (INSIDE DIMENSIONS 5'-0" X 8'-6")
3317	HANDHOLE EQUIPMENT ENCLOSURE - CONCRETE (INSIDE DIMENSIONS 6'-0" X 8'-0")
3325	MANHOLE - TUB TYPE (INSIDE DIMENSIONS 8'-0" X 14'-0" X 9'-6")
3326	MANHOLE - TUB TYPE (INSIDE DIMENSIONS 8'-0" X 20'-0" X 9'-6")
3327	SUBSTATION MANHOLE VAULT 10'-0" X 24'-0" X 8'-0"
3332	MANHOLE NECK AND COVER - TRAFFIC BEARING (INSIDE DIMENSIONS 48" X 60")
	SUBSTRUCTURE AND VAULT ACCESSORIES
3360	SUMP PUMP INSTALLATION FOR MANHOLES 3324, 3325, 3326, 3327
3361	STREET RESURFACING
3362	UTILITY LOCATIONS IN LOCAL AND COLLECTOR STREETS IN S.D. COUNTY
3363	UTILITY LOCATIONS IN MAJOR STREETS, PRIME ARTERIALS, AND EXPRESSWAYS IN S.D. COUNTY
3364	JOINT TRENCH TYPICAL LOCATION FOR UNDERGROUND CONVERSIONS IN S.D. COUNTY

© 1998 - 2023 San Diego Gas & Electric Company. All Rights Reserved. Removal Of This Copyright Notice Without Permission Is Not Permitted Under Law.

REV	CHANGE	DR	BY	DSN	APV	DATE	REV	CHANGE	DR	BY	DSN	APV	DATE
E	ADDED 3368	NV5	ADW	JES	CZH	10/01/2021	H	ADDED UG3384	EDM	ADW	EJA	KRG	09/20/2023
D	EDITORIAL CHANGES	EDM	DEC	JES	CZH	06/07/2021	G	3383 MOVED TO FMO	ARC	ADW	JES	KRG	05/08/2023
C	ADDED 3327	-	JS	JS	CZH	11/01/2018	F	FORMATTING	EDM	JIK	-	-	10/27/2021

MAIN TABLE OF CONTENTS

PAGE	SUBJECT
3365	IMPORTED OR NATIVE BACKFILL
3366	SLURRY BACKFILL
3367	TRENCH PARALLELING FOUNDATIONS
3368	SHALLOW TRENCHING
3369	BIO RETENTION/WET FACILITIES STANDARD
3370	UNDERGROUND DISTRIBUTION (UD) TRENCHES AND UTILITY POSITIONING - S.D. COUNTY
3371	UNDERGROUND DISTRIBUTION (UD) TRENCHES AND UTILITY POSITIONING - ORANGE COUNTY
3372	CONDUIT SIZING FOR UNDERGROUND CABLES
3373	CONDUIT AND CONDUIT FITTINGS - EB, & POLYETHYLENE
3374	CONDUIT INSTALLATION PRACTICES
3375	CONDUIT SPACER DATA
3376	CONDUIT, ENCASED MULTI-CONDUIT INSTALLATION
3377	CONDUIT STUB MARKER AND BALL MARKER LOCATING SYSTEM
3378	CONDUIT INSTALLATION IN BRIDGES
3379	CONDUIT MANDRELING
3382	CONDUIT SUBSTRUCTURE ADAPTORS
3384	UNDERWALL CONDUIT
3390	GAS STUB MARKER

© 1998 - 2023 San Diego Gas & Electric Company. All rights reserved. Removal of this copyright notice without permission is not permitted under law.

REV	CHANGE	DR	BY	DSN	APV	DATE	REV	CHANGE	DR	BY	DSN	APV	DATE
E	ADDED 3368	NV5	ADW	JES	CZH	10/01/2021	H	ADDED UG3384	EDM	ADW	EJA	KRG	09/20/2023
D	EDITORIAL CHANGES	EDM	DEC	JES	CZH	06/07/2021	G	3383 MOVED TO FMO	ARC	ADW	JES	KRG	05/08/2023
C	ADDED 3327	-	JS	JS	CZH	11/01/2018	F	FORMATTING	EDM	JIK	-	-	10/27/2021

SCOPE: THIS STANDARD DESCRIBES SUBSTRUCTURE APPLICATIONS FOR EQUIPMENT LIMITATIONS, TERMINATION CONFIGURATIONS AND UNOBSTRUCTED SPACE REQUIREMENTS. (a)

TABLE 1

SUBSTRUCTURE APPLICATIONS	
SUBSTRUCTURE	APPLICATION
3309.3 36" X 24 1/4" X 26" HANDHOLE	HANDHOLE CAN BE USED IN SINGLE-FAMILY RESIDENTIAL, MULTI-FAMILY, AND COMMERCIAL DEVELOPMENTS FOR THE TERMINATION AND CONNECTION OF SINGLE-PHASE AND LIMITED THREE-PHASE SECONDARIES AND SERVICES. HANDHOLE MUST BE INSTALLED IN NON-TRAFFIC AREAS WHERE VEHICLES CANNOT DRIVE OVER OR PARK ON TOP OF HANDHOLE. NEVER INSTALL IN STREETS OR DRIVEWAYS. WHEN A 3309 IS REQUIRED IN A TRAFFIC AREA, SUBSTITUTE THE 3309 WITH THE 3313 AND TRAFFIC COVER. 3313 REQUIRES TRUCK ACCESS FOR INSTALLATION AND MAINTENANCE.
3311 14" X 66" X 14" HANDHOLE	FOR PRIMARY AND SECONDARY CABLE TRAINING BETWEEN TWO SINGLE-PHASE PAD MOUNTED TRANSFORMERS CONNECTED IN AN OPEN-DELTA BANK.
3311 14" X 108" X 14" HANDHOLE	FOR PRIMARY AND SECONDARY CABLE TRAINING BETWEEN THREE SINGLE-PHASE PAD MOUNTED TRANSFORMERS CONNECTED IN A CLOSED DELTA-BANK WHEN HKR TRANSFORMER CANNOT BE USED.
3312 17" X 30" X 12" HANDHOLE-1 BODY SECONDARY AND UNDER PAD	3312 HANDHOLE MAY BE USED FOR REPLACEMENT OF EXISTING FACILITIES. USE 3309 IF POSSIBLE. ALL FACILITIES REQUIRING 30" X 17" BOX UNDER PAD MOUNTED EQUIPMENT.
3313 24" X 36" X 24" HANDHOLE	HANDHOLE CAN BE USED IN SINGLE-FAMILY RESIDENTIAL, MULTI-FAMILY, AND COMMERCIAL DEVELOPMENTS FOR TERMINATION AND CONNECTION OF SINGLE-PHASE OR THREE-PHASE SECONDARIES AND SERVICES OR SINGLE-PHASE PRIMARY. SECONDARIES AND PRIMARY ARE NOT PERMITTED IN THE SAME HANDHOLE. HANDHOLE WITH PARKWAY COVER MUST BE INSTALLED IN AREAS WHERE VEHICLES CANNOT DRIVE OVER OR PARK ON TOP OF HANDHOLE. HANDHOLE WITH A TRAFFIC COVER MAY BE INSTALLED IN STREETS OR DRIVEWAYS BUT ONLY WHEN A NON-TRAFFIC LOCATION IS UNAVAILABLE. REQUIRES TRUCK ACCESS FOR INSTALLATION AND MAINTENANCE.

TABLE OF CONTENTS

© 1998 - 2024 San Diego Gas & Electric Company. All rights reserved. Removal of this copyright notice without permission is not permitted under law.

REV	CHANGE	DR	BY	DSN	APV	DATE	REV	CHANGE	DR	BY	DSN	APV	DATE
C	TABLE UPDATE	GLC	EJA	EJA	KRG	03/07/2024	F						
B	FORMATTING	EDM	JIK	-	-	10/27/2021	E						
A	EDITORIAL CHANGES	-	JS	TR	MDJ	10/27/2016	D						

TABLE 1 (CONT'D)

SUBSTRUCTURE APPLICATIONS	
SUBSTRUCTURE	APPLICATION
3314 3'-0" X 6'-0" X 4'-0" HANDHOLE	HANDHOLE CAN BE USED IN SINGLE-FAMILY RESIDENTIAL, MULTI-FAMILY, AND COMMERCIAL DEVELOPMENTS FOR THE TERMINATION AND CONNECTION OF SINGLE-PHASE AND THREE-PHASE PRIMARY LOCAL DISTRIBUTION AND/OR SECONDARIES AND SERVICES. HANDHOLE WITH PARKWAY COVER MUST BE INSTALLED IN AREAS WHERE VEHICLES CANNOT DRIVE OVER OR PARK ON TOP OF HANDHOLE. IF A NEW 3314 HANDHOLE IS REQUIRED IN A STREET OR DRIVEWAY WHERE A NON-TRAFFIC LOCATION IS UNAVAILABLE, IT MUST BE SUBSTITUTED WITH A 3315 HANDHOLE AND TRAFFIC COVER. IF A TRAFFIC COVER IS REQUIRED ON AN EXISTING 3314 HANDHOLE LOCATED IN A VEHICULAR AREA, USE THE 3315 "TRAFFIC COVER ASSEMBLY". REQUIRES TRUCK ACCESS FOR INSTALLATION AND MAINTENANCE. (THE 3523 IS PREFERRED)
3315 4'-0" X 6'-6" X 6'-0" HANDHOLE	HANDHOLE CAN BE USED IN SINGLE-FAMILY RESIDENTIAL, MULTI-FAMILY, AND COMMERCIAL DEVELOPMENTS FOR THE TERMINATION AND CONNECTION OF SINGLE-PHASE AND THREE-PHASE PRIMARY LOCAL DISTRIBUTION, THREE-PHASE PRIMARY FEEDERS, SECONDARIES AND SERVICES. HANDHOLE WITH PARKWAY COVER MUST BE INSTALLED IN AREAS WHERE VEHICLES CANNOT DRIVE OVER OR PARK ON TOP OF HANDHOLE. HANDHOLE WITH A TRAFFIC COVER MAY BE INSTALLED IN STREETS OR DRIVEWAYS BUT ONLY WHEN A NON-TRAFFIC LOCATION IS UNAVAILABLE. REQUIRES TRUCK ACCESS FOR INSTALLATION AND MAINTENANCE.
3316 5'-0" X 8'-6" X 6'-6" HANDHOLE	HANDHOLE CAN BE USED IN SINGLE-FAMILY RESIDENTIAL, MULTI-FAMILY, AND COMMERCIAL DEVELOPMENTS FOR THE TERMINATION AND CONNECTION OF SINGLE-PHASE AND THREE-PHASE PRIMARY LOCAL DISTRIBUTION, THREE-PHASE PRIMARY FEEDERS, 4-WAY SWITCH, SECONDARIES AND SERVICES. HANDHOLES WITH PARKWAY COVER MUST BE INSTALLED IN AREAS WHERE VEHICLES CANNOT DRIVE OVER OR PARK ON TOP OF HANDHOLE. HANDHOLES WITH TRAFFIC COVER MAY BE INSTALLED IN STREETS OR DRIVEWAYS BUT ONLY WHEN A NON-TRAFFIC LOCATION IS UNAVAILABLE. REQUIRES TRUCK ACCESS FOR INSTALLATION AND MAINTENANCE.
3317 6'-0" X 8'-0" X 5'-10" HANDHOLE	HANDHOLE CAN BE USED IN EXISTING SINGLE-FAMILY RESIDENTIAL, MULTI-FAMILY, AND COMMERCIAL DEVELOPMENTS AND OTHER NON-NEW DEVELOPMENT PROJECTS. TO BE USED ONLY TO INSTALL THE "VISTA" SUB-SURFACE, SURFACE OPERABLE 4-WAY SWITCH, AND TERMINATE ON SWITCH THREE-PHASE PRIMARY FEEDERS, SINGLE & THREE-PHASE LOCAL DISTRIBUTION CABLES. HANDHOLE MUST BE INSTALLED IN NON-TRAFFIC AREAS WHERE VEHICLES CANNOT DRIVE OVER OR PARK ON TOP OF HANDHOLE. REQUIRES TRUCK ACCESS FOR INSTALLATION AND MAINTENANCE.
3325 8'-0" X 14'-0" X 9'-6" 3326 8'-0" X 20'-0" X 9'-6" MANHOLE	MANHOLE CAN BE USED IN SINGLE-FAMILY RESIDENTIAL, MULTI-FAMILY, AND COMMERCIAL DEVELOPMENTS FOR TERMINATION AND CONNECTION OF LOCAL PRIMARY DISTRIBUTION THREE-PHASE PRIMARY FEEDERS, SECONDARIES AND SERVICES AND ON-OFF OR 4-WAY SWITCHES. MANHOLE CAN BE INSTALLED IN NON-TRAFFIC OR STREET LOCATIONS. REQUIRES TRUCK ACCESS FOR INSTALLATION AND MAINTENANCE. (b)

INSTALLATION: NONE

BILL OF MATERIALS: NONE

NOTES: NONE

REFERENCE:

(a) SEE UG3605, UG3644, UG3646, UG3647, UG3648, AND UG3649.

(b) FOR 4-WAY SWITCH MANHOLE REQUIREMENTS, SEE UG3605.

© 1998 - 2024 San Diego Gas & Electric Company. All rights reserved. Removal of this copyright notice without permission is not permitted under law.

REV	CHANGE	DR	BY	DSN	APV	DATE	REV	CHANGE	DR	BY	DSN	APV	DATE
C	TABLE UPDATE	GLC	EJA	EJA	KRG	03/07/2024	F						
B	FORMATTING	EDM	JIK	-	-	10/27/2021	E						
A	EDITORIAL CHANGES	-	JS	TR	MDJ	10/27/2016	D						

TABLE OF CONTENTS

SCOPE: THIS STANDARD LISTS THE CONCRETE PRODUCTS USED IN SUBSURFACE INSTALLATIONS.

TABLE 1

CONCRETE PRODUCTS				
TYPE	**DIMENSIONS**	**STANDARD PAGE**	**INSTALLED BY**	**CRANE REQUIRED** (B)
HANDHOLE	3309 - 37" X 26 X 18"	3309	CREWS OR CONTRACTOR	NO
	3309 - 37" X 26" X 26"			
	14" X 66" X 14"	3311	CREWS OR CONTRACTOR	NO
	14" X 108" X 14"			
	17" X 30" X 12"	3312	CREWS OR CONTRACTOR	NO
	24" X 36" X 24"	3313	CREWS OR CONTRACTOR	NO
	36" X 72" X 48"	3314	CREWS OR CONTRACTOR (A)	NO
	4'-0" X 6'-6" X 6'-0"	3315	CREWS OR CONTRACTOR (A)	NO
	5'-0" X 8'-6" X 6'-6"	3316	CREWS, CONTRACTOR OR SUPPLIER (A)	NO
	6'-0" X 8" X 6'-6"	3317	CREWS OR CONTRACTOR (A)	YES
MANHOLE	8'-0" X 14'-0" X 8'-6"	3325	CREWS, CONTRACTOR OR SUPPLIER	YES
	8'-0" X 20'-0" X 9'-6"	3326	CREWS, CONTRACTOR OR SUPPLIER	YES
MANHOLE NECK & COVER-TRAFFIC BEARING	48" X 60"	3332	CREWS OR CONTRACTOR	NO

INSTALLATION:

(A) SUPPLIER WILL SET SUBSTRUCTURE ON JOB SITE IF EXCAVATION IS COMPLETED.

(B) WHEN SUPPLIER'S OR SDG&E'S EQUIPMENT CANNOT GET CLOSE ENOUGH TO EXCAVATE DUE TO SOFT SAND, ETC. A CRANE WILL BE REQUIRED.

BILL OF MATERIALS: NONE

NOTES:

I. SPECIAL ORDER MANHOLES LARGER THAN THOSE LISTED WILL BE INSTALLED BY SUPPLIER/CONTRACTOR.

REFERENCE:

a. FOR WATER SEALING CONCRETE SECTIONS, SEE UG3306.

TABLE OF CONTENTS

© 1998 - 2021 San Diego Gas & Electric Company. All rights reserved. Removal of this copyright notice without permission is not permitted under law.

REV	CHANGE	DR	BY	DSN	APV	DATE	REV	CHANGE	DR	BY	DSN	APV	DATE
C							F						
B	FORMATTING	EDM	JIK	-	-	10/27/2021	E						
A	EDITORIAL CHANGES	-	JS	TR	MDJ	10/27/2016	D						

SCOPE: THIS STANDARD PROVIDES INFORMATION ON HOW TO APPLY, ORDER, AND INSTALL FALSE CURBS.

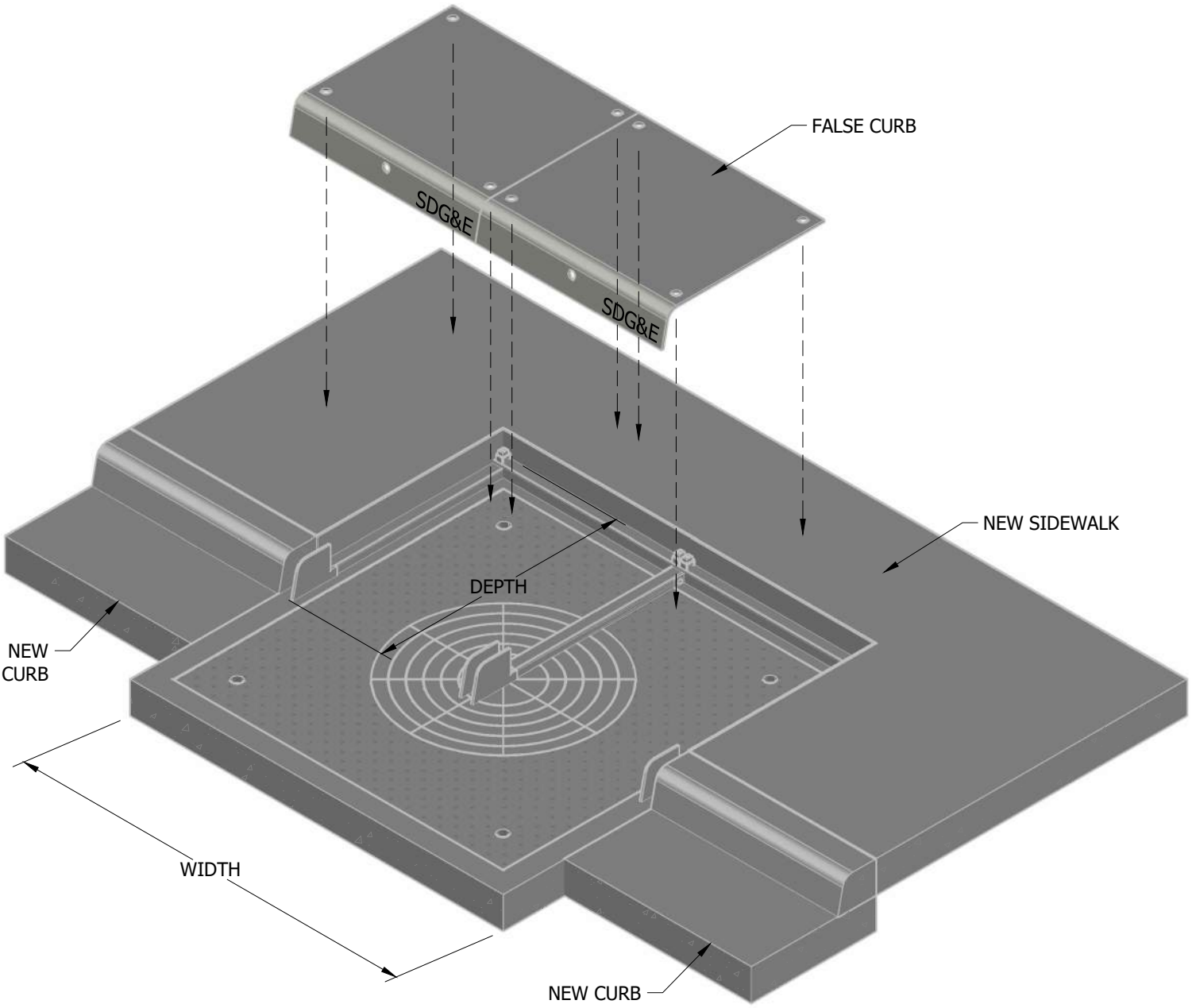

FIGURE 1

TABLE OF CONTENTS

© 1998 - 2023 San Diego Gas & Electric Company. All rights reserved. Removal of this copyright notice without permission is not permitted under law.

REV	CHANGE	DR	BY	DSN	APV	DATE	REV	CHANGE	DR	BY	DSN	APV	DATE
C	FIGURE UPDATE	TSA	EJA	EJA	KRG	07/28/2023	F						
B	FORMATTING	EDM	JIK	-	-	10/27/2021	E						
A	EDITORIAL CHANGES	-	JS	TR	MDJ	10/27/2016	D						

ATTENTION:

* FALSE CURBS ARE PRIMARILY USED IN ASSOCIATION WITH ROAD IMPROVEMENT PROJECTS. THE FALSE CURB IS AN EFFECTIVE WAY TO ELIMINATE THE NEED TO RELOCATE A PRIMARY HANDHOLE OR MANHOLE WHEN THE OPENING TO THE STRUCTURE ENDS UP IN THE CURB AND GUTTER. FALSE CURBS ARE NOT RECOMMENDED FOR SECONDARY HANDHOLES.

INSTALLATION: NONE

BILL OF MATERIALS: NONE

NOTES:

PREPARATION

I. IF IT IS DETERMINED BY THE PLANNER DESIGNING THE JOB THAT A FALSE CURB COULD BE USED, THEY SHOULD CONTACT THE LIAISON PLANNER TO ESTABLISH IF IT IS APPROPRIATE FOR THE LOCATION. THE LIAISON PLANNER WILL THEN CONTACT THE APPROPRIATE MUNICIPALITY TO GET APPROVAL FOR THE INSTALLATION.

II. ONCE APPROVAL IS GIVEN BY THE MUNICIPALITY, THE PLANNER SHOULD MAKE ARRANGEMENTS WITH THE C&O CENTER TO DETERMINE IF THE TOP SECTION OF THE STRUCTURE CAN BE LOWERED AND A TRAFFIC COVER INSTALLED. THE FIELD ENGINEER CAN ASSIST WITH MEASUREMENTS FOR THE FALSE CURB AND NEW CURB ALIGNMENT. IF ADDITIONAL HELP IS NEEDED, CONTACT ELECTRIC DISTRIBUTION STANDARDS.

III. ONCE THE DIMENSIONS OF THE FALSE CURB ARE DETERMINED, CONTACT MADRUGA IRON WORKS AT (209) 832-7003, OR FAX (209) 832-2444. IF YOU HAVE MORE THAN ONE FALSE CURB, THEY SHOULD BE LISTED SEPARATELY WITH SPECIFIC DIMENSIONS.

IV. A REPRESENTATIVE FROM MADRUGA IRON WORKS WILL THEN FAX A COST QUOTE TO THE REQUESTOR FOR THE COST OF EACH FALSE CURB. THE REQUESTOR WILL NOW NEED TO COMPLETE A REQUISITION FOR MATERIAL AND SERVICE FORM (RMS).

DIMENSIONS:

V. WHEN ORDERING A FALSE CURB MAKE SURE TO INDICATE THAT ALL DIMENSIONS ARE INSIDE DIMENSIONS (ID).

a. WIDTH (SIDE TO SIDE): THE INSIDE MEASUREMENT FOR THE FALSE CURB IS BASED ON THE OUTSIDE MEASUREMENT OF THE TRAFFIC COVER ON WHICH THE FALSE CURB IS TO BE PLACED. A 3314 OR 3315 HANDHOLE WILL MEASURE 96 INCHES WIDE. A 3316 MEASURES 120 INCHES WIDE. MANHOLES WILL VARY DEPENDING ON THE VINTAGE OF THE STRUCTURE. ALL MEASUREMENTS SHOULD BE FIELD VERIFIED.

b. DEPTH (FRONT TO BACK): MEASURE FROM WHERE THE FACE OF THE NEW CURB AND THE GUTTER MEET THE BACK EDGE OF THE STRUCTURE, ADD SIX INCHES TO THIS MEASUREMENT. THIS MEASUREMENT IS THE INSIDE DIMENSION FOR DEPTH.

c. HEIGHT: SPECIFY EITHER A SIX-INCH OR EIGHT-INCH CURB.

MISCELLANEOUS:

VI. IN ADDITION TO THE DIMENSIONS OF THE FALSE CURB, THE FOLLOWING INFORMATION WILL NEED TO BE INCLUDED IN THE RMS:

a. SPECIFY THAT THE FALSE CURB ASSEMBLY IS THE BOLT DOWN STYLE.

b. AFFIX SDG&E TO THE LOWER FACE OF THE CURB.

ATTENTION:

* MADRUGA IRON WORKS WILL DETERMINE THE NUMBER OF COVERS ON THE FALSE CURB BASED ON THE OVERALL SIZE OF THE ASSEMBLY.

PURCHASING

VII. A PURCHASE ORDER MUST BE SUBMITTED.

VIII. WORK WITH THE LIAISON PLANNER TO SEE IF THE MUNICIPALITY'S CONTRACTOR WILL INSTALL THE FALSE CURBS. IF THEY ARE INTERESTED AND THE MUNICIPALITY APPROVES, THEN THEY ARE TO SUBMIT A BID FOR THE INSTALLATION COST. IF THE BID IS APPROVED BY THE LIAISON PLANNER AND SUPERVISOR, THE LIAISON PLANNER WILL NOTIFY THE CONTRACTOR. THE CONTRACTOR, AT THIS TIME, MAY ALSO PROVIDE SDG&E WITH A RELEASE FORM, WHICH, AS THE MUNICIPALITY'S CONTRACTOR, ALLOWS THEM TO INSTALL THE FALSE CURBS. IF WE DO NOT ACCEPT THE BID, THEN SDG&E WILL INSTALL THE CURBS AND COORDINATE WITH THE CONTRACTOR. PROVIDE CITY CONTRACTOR WITH A COPY OF THE WORK ORDER.

TABLE OF CONTENTS

© 1998 - 2023 San Diego Gas & Electric Company. All rights reserved. Removal of this copyright notice without permission is not permitted under law.

REV	CHANGE	DR	BY	DSN	APV	DATE	REV	CHANGE	DR	BY	DSN	APV	DATE
C	FIGURE UPDATE	TSA	EJA	EJA	KRG	07/28/2023	F						
B	FORMATTING	EDM	JIK	-	-	10/27/2021	E						
A	EDITORIAL CHANGES	-	JS	TR	MDJ	10/27/2016	D						

NOTES (CONT'D):

INSTALLATION:

IX. THE MUNICIPALITY'S CONTRACTOR WILL WORK WITH THE DISTRICT AND PROJECT COORDINATOR ON THE ACTUAL INSTALLATION OF THE FALSE CURBS. THE CONTRACTOR IS RESPONSIBLE FOR PICK-UP OF MATERIAL FROM THE C&O DISTRICT.

XI. UPON COMPLETION OF THE WORK BY THE MUNICIPALITY'S CONTRACTOR, THEY ARE TO SUBMIT A REQUEST FOR PAYMENT. UPON RECEIPT, THE LIAISON PLANNER WILL PREPARE A REQUEST FOR VOUCHER CHECK FORM. PAYMENT IS TO BE MADE TO THE CONTRACTOR AND CHARGED TO THE APPROPRIATE BUDGET.

DESIGN (DPSS)

XII. BE SURE TO INDICATE AT THE LOCATION (WHERE THE FALSE CURBS ARE BEING INSTALLED) THAT THE MUNICIPALITY'S CONTRACTOR IS DOING THE INSTALLATION. SDG&E WILL BE LOWERING THE SUBSTRUCTURE AND INSTALLING A TRAFFIC COVER.

REFERENCE:

a. FOR HANDHOLE EQUIPMENT ENCLOSURE (INSIDE DIMENSIONS - 3'-0" X 6'-0"), SEE UG3314.

b. FOR HANDHOLE EQUIPMENT ENCLOSURE (INSIDE DIMENSIONS - 4'-0" X 6'-0"), SEE UG3315.

c. FOR HANDHOLE EQUIPMENT ENCLOSURE (INSIDE DIMENSIONS - 5'-0" X 8'-6"), SEE UG3316.

d. FOR 48" X 60" NECK AND COVER TRAFFIC BEARING, SEE UG3332.

e. AVAILABLE IN SERVICE STANDARDS AND GUIDE MANUAL.

TABLE OF CONTENTS

© 1998 - 2023 San Diego Gas & Electric Company. All rights reserved. Removal of this copyright notice without permission is not permitted under law.

REV	CHANGE	DR	BY	DSN	APV	DATE	REV	CHANGE	DR	BY	DSN	APV	DATE
C	FIGURE UPDATE	TSA	EJA	EJA	KRG	07/28/2023	F						
B	FORMATTING	EDM	JIK	-	-	10/27/2021	E						
A	EDITORIAL CHANGES	-	JS	TR	MDJ	10/27/2016	D						

SCOPE: THIS STANDARD SHOWS THE INSTALLATION AND MATERIAL REQUIRED TO SET SUBSTRUCTURES ON SLOPING GRADES.

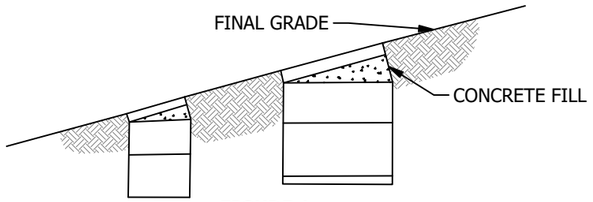

FIGURE 1
SUBSURFACE TRANSFORMER ENCLOSURE (c)
(FIELD MAINTENANCE ONLY)

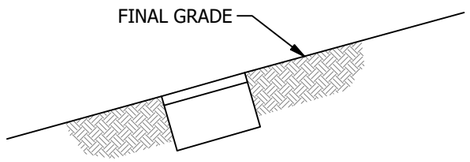

FIGURE 2

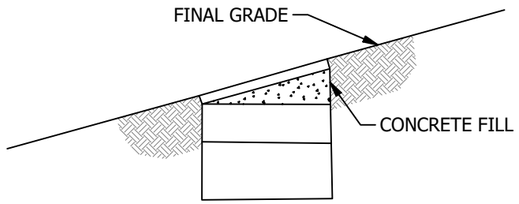

FIGURE 3
MULTISECTION MANHOLES (d)

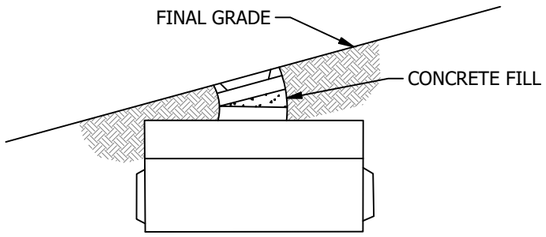

FIGURE 4
MANHOLES - 3'-0" OPENING (e)
(FIELD MAINTENANCE ONLY)

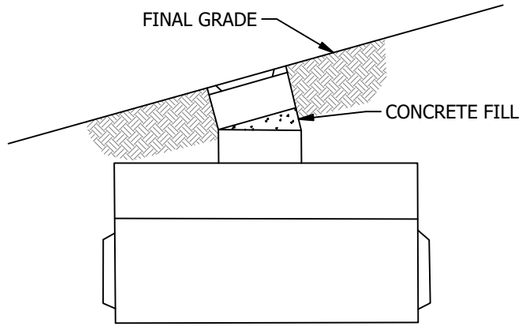

FIGURE 5
MANHOLES - 4'-0" OPENING (f)

INSTALLATION:

A. ALIGN TOP SECTION TO FINAL GRADE. POUR CONCRETE (4 SACK MIX WITH 3/8-INCH PEA GRAVEL OR AS REQUIRED BY CITY OR COUNTY, CALTRANS OR U.S. GOVERNMENT CODES).

BILL OF MATERIALS: NONE

NOTES: NONE

REFERENCE:

a. SEE UG3480, UG3482, AND UG3483 FOR MINIMUM OPERATING AND CLEARANCE REQUIREMENTS (SUBSTRUCTURE PLACEMENT).
b. SEE UG3485, UG3486, AND UG3489 FOR RETAINING WALLS WHERE BANKS OR EXCESSIVE SLOPES EXIST.
(c) SEE FMO UGL3399.401 AND FMO UGL3399.404 FOR SUBSURFACE TRANSFORMER AND EQUIPMENT ENCLOSURE.
(d) SEE FMO UGL3399.101, UG3313, UG3314, UG3315, AND UG3316 FOR HANDHOLE EQUIPMENT ENCLOSURES.
(e) SEE FMO UGL3399.201, FMO UGL3399.202, FMO UGL3399.306, AND FMO UGL3399.307 FOR MANHOLE EQUIPMENT ENCLOSURES.
(f) SEE UG3332, FMO UGL3399.203, FMO UGL3399.205, AND FMO UGL3399.305 FOR MANHOLE NECK AND COVER EQUIPMENT ENCLOSURES.

TABLE OF CONTENTS

REV	CHANGE	DRWN	BY	CHKD	APVD	DATE
C	REVISED TO 3D FORMAT	NV5	EJA	JAS	JAS	10/11/2024
B	FORMATTING	EDM	JIK	-	-	10/27/2021
A	EDITORIAL CHANGES	-	JS	TR	MDJ	10/27/2016

SDG&E ELECTRIC UNDERGROUND CONSTRUCTION STANDARDS

INSTALLATION OF SUBSTRUCTURES ON SLOPING GRADES

SCALE: NOT TO SCALE

DRAWING NO: UG3305.1

SHEET: 1 OF 1

© 1998 - 2024 San Diego Gas and Electric Company. All rights reserved. Removal of this copyright notice without permission is not permitted under law.

X Indicates Latest Revision | Completely Revised | New Page | Information Removed

SCOPE: THIS STANDARD SHOWS THE INSTALLATION PROCEDURE FOR PLASTIC-MASTIC SEALANT ON CONCRETE SUBSTRUCTURES.

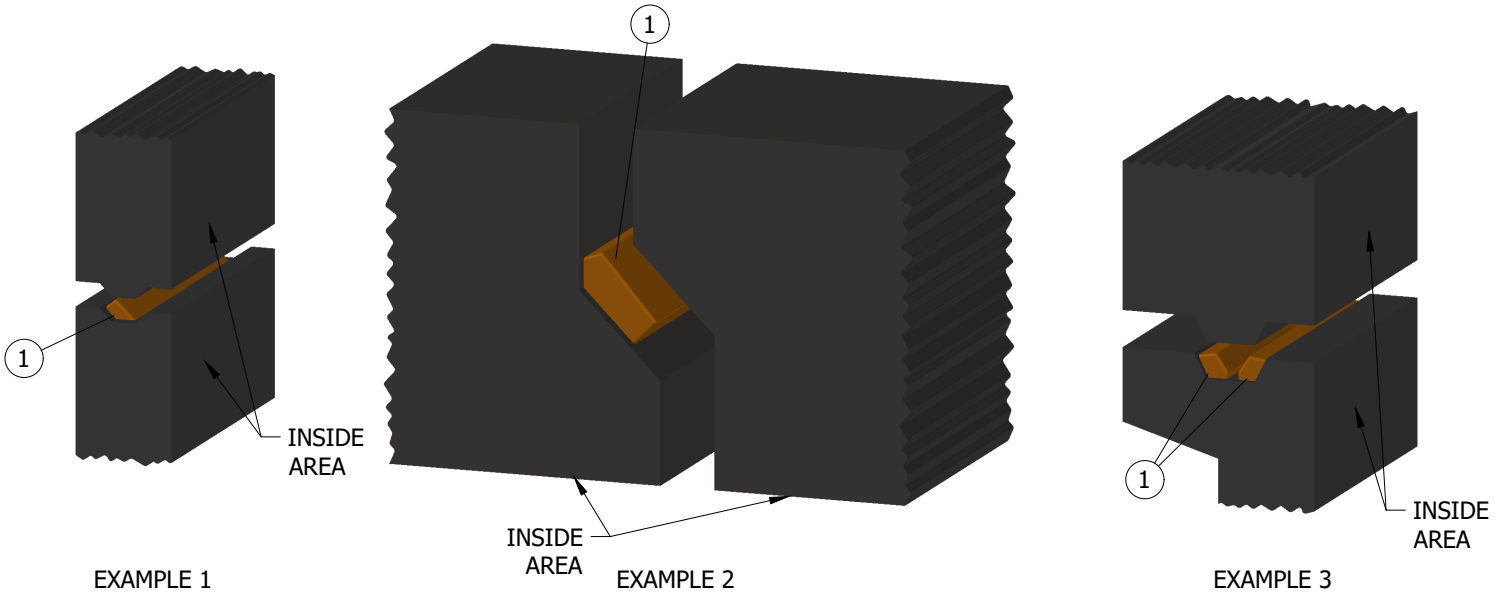

FIGURE 1
TYPICAL SUBSTRUCTURE JOINTS

INSTALLATION:

A. CLEAN JOINT SURFACES WITH BRUSH AND ASSURE THE JOINTS ARE DRY. REMOVE SILICONE-TREATED PROTECTING PAPER WRAPPING FROM ONE SIDE OF MASTIC SEALING STRIPS.

B. LAY MASTIC STRIPS, PAPER SIDE UP, ON CLEANED, DRY, JOINT SURFACE. FIRMLY PRESS STRIPS TO SURFACE END-TO-END AROUND ENTIRE JOINT. ALLOW 1-INCH OVERLAPS WHEN ABUTTING.

C. REMOVE PROTECTIVE PAPER COVERING FROM STRIPS. NEXT SECTION IS THEN LOWERED INTO DRY BEFORE SECTIONS POSITION. MAKE SURE SECTION IS POSITIONED PROPERLY AND JOINTS AND SEALANT ARE ADJOIN.

D. FOLLOW PLACEMENT PROCEDURES ABOVE FOR VARIOUS TYPES OF JOINTS.

TABLE OF CONTENTS

BILL OF MATERIALS:

ITEM	DESCRIPTION	QUANTITY	STANDARD PAGE	STOCK NUMBER	DESIGN UNITS
1	SEALANT, PLASTIC-MASTIC JOINT, 30"	AS REQ'D	--	S631872	--

NOTES:

I. ON 3315 AND LARGER SUBSTRUCTURES, USE DOUBLE SEAL IF FIELD CONDITIONS INDICATE THAT WATER WILL PENETRATE THE JOINTS.

II. PLASTIC-MASTIC SEALANT, SUFFICIENT FOR SETTING EACH SUBSTRUCTURE IS SUPPLIED BY THE MANUFACTURER.

REFERENCE: NONE

© 1998 - 2024 San Diego Gas & Electric Company. All rights reserved. Removal of this copyright notice without permission is not permitted under law.

REV	CHANGE	DR	BY	DSN	APV	DATE	REV	CHANGE	DR	BY	DSN	APV	DATE
C	DRAWING UPDATE	NV5	EJA	JAS	JAS	11/05/2024	F						
B	FORMATTING	EDM	JIK	-	-	10/27/2021	E						
A	EDITORIAL CHANGES	-	JS	TR	MDJ	10/27/2016	D						

X Indicates Latest Revision | Completely Revised | New Page | Information Removed

SDG&E ELECTRIC UNDERGROUND CONSTRUCTION STANDARDS

JOINT (PLASTIC-MASTIC) SEALING COMPOUND INSTALLATION

UG3306.1

SCOPE: THIS STANDARD SHOWS THE INSTALLATION AND MATERIAL REQUIREMENTS FOR A 3 1/2 STREET LIGHT HANDHOLE FOR THE CITY OF SAN DIEGO "ONLY".

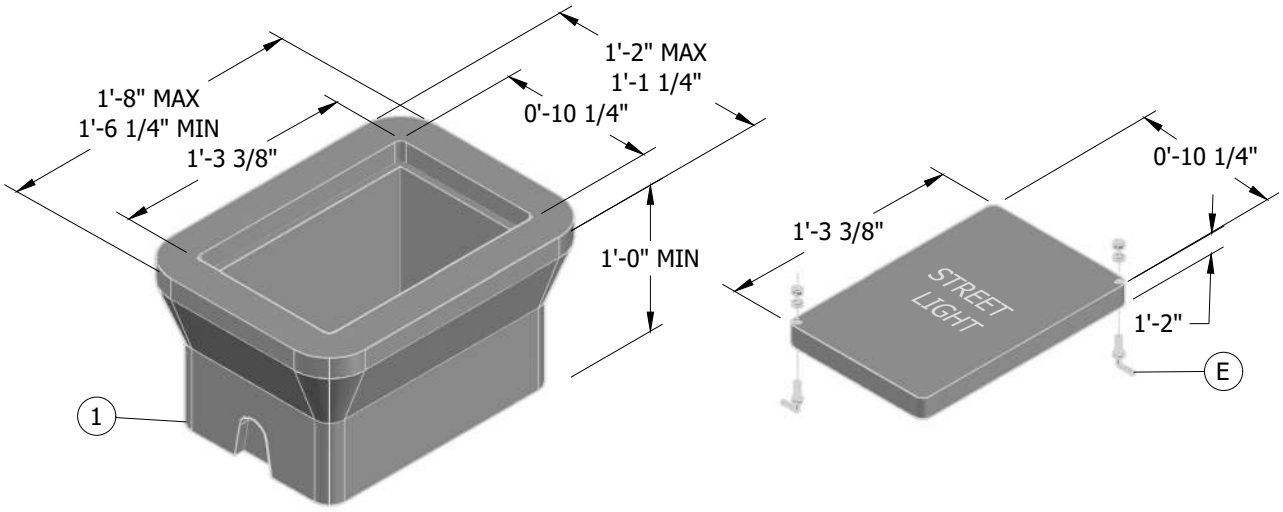

FIGURE 1
NO. 3 1/2 STREET LIGHT HANDHOLE (IV)

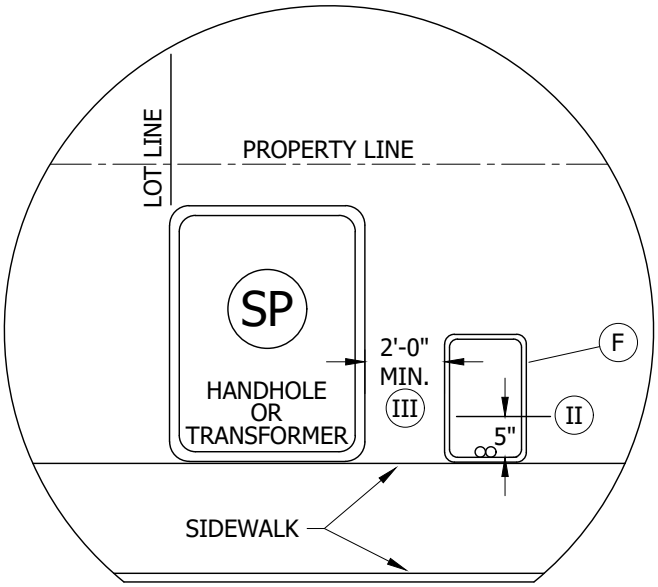

FIGURE 2
TYPICAL PLAN VIEW

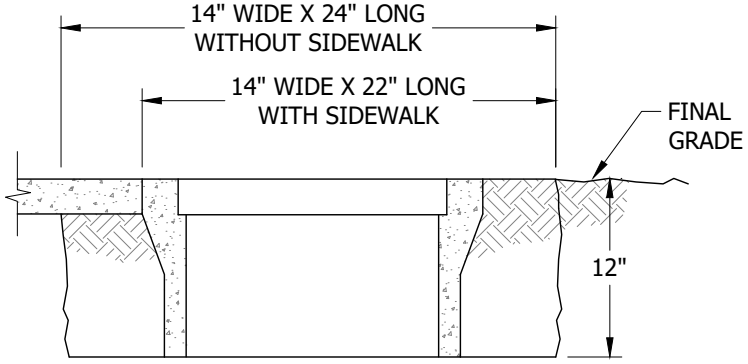

FIGURE 3
EXCAVATION DIMENSIONS
SINGLE HANDHOLE INSTALLATION

© 1998 - 2023 San Diego Gas & Electric Company. All rights reserved. Removal of this copyright notice without permission is not permitted under law.

REV	CHANGE	DR	BY	DSN	APV	DATE	REV	CHANGE	DR	BY	DSN	APV	DATE
C	FIGURE UPDATE	TSA	EJA	EJA	ERG	03/29/2023	F						
B	FORMATTING	EDM	JIK	-	-	10/27/2021	E						
A	EDITORIAL CHANGES	-	JS	TR	MDJ	06/02/2016	D						

X Indicates Latest Revision | Completely Revised | New Page | Information Removed

SDG&E ELECTRIC UNDERGROUND CONSTRUCTION STANDARDS

HANDHOLE - CITY OF SAN DIEGO STREET LIGHT
(INSIDE DIMENSIONS 10 1/4" X 15 3/8")

UG3308.1

TABLE OF CONTENTS

INSTALLATION:

A. ESTABLISH THE HANDHOLE LOCATION PAYING PARTICULAR ATTENTION TO GAS AND FOREIGN UTILITY PLACEMENTS. ANY CHANGE IN LOCATION BY DISTRICT CONSTRUCTION REQUIRES PRIOR APPROVAL FROM SERVICE PLANNING.

B. AFTER THE LOCATION IS ESTABLISHED, MARK OUT DIMENSIONS FOR THE EXCAVATION WIDTH, LENGTH AND DEPTH PER DRAWING ABOVE. THE WIDTH AND LENGTH DIMENSIONS GIVEN ALLOW EXTRA SPACE FOR SETTING THE SUBSTRUCTURE AND TAMPING THE BACKFILL.

C. TO DETERMINE FINAL GRADE, MEASURE FROM THE TOP OF CURB OR ESTABLISHED GRADE.

D. EXCAVATION IS NOW PREPARED FOR INSTALLATION OF SUBSTRUCTURE SECTION. AFTER GRADE LEVEL IS ESTABLISHED, SET A STRING LINE FOR CHECKING GRADE. SET HANDHOLE AT FINAL GRADE.

(E) APPLY SILICONE GREASE, TO THE BOLTS WHEN SECURING THE COVER TO REDUCE REMOVAL AND INSTALLATION DIFFICULTIES.

(F) IF RIGHT-OF-WAY OR OBSTRUCTIONS CAUSE A PROBLEM, THE HANDHOLE MAY BE TURNED TO WHERE THE LONG SIDE OF THE HANDHOLE PARALLELS THE SIDEWALK OR PROPERTY LINE.

BILL OF MATERIALS:

ITEM	DESCRIPTION	QUANTITY	STANDARD PAGE	STOCK NUMBER	DESIGN UNITS
1	NO. 3 1/2 HANDHOLE	1	--	-- (IV)	31/2PB
2	GREASE, SILICONE	AS REQ'D	--	S391424	--

NOTES:

I. THE ONLY LOCATION FOR A NO. 3 1/2 HANDHOLE IS IN NON-VEHICULAR TRAFFIC AREAS (BEHIND CURBS, PARKWAY POSITION, ETC.).

(II) CONDUIT TERMINATION AREA SHALL BE WITHIN FIVE INCHES MAX. FROM END OF SUBSTRUCTURE.

(III) LOCATE HANDHOLE A MINIMUM OF TWO FEET TO A MAXIMUM OF FIVE FEET FROM THE SERVICE POINT, PREFERABLY BETWEEN THE SERVICE POINT AND THE STREET LIGHT BEING SERVED.

(IV) SUPPLIED BY CITY OF SAN DIEGO.

REFERENCE:

a. FOR MINIMUM OPERATING CLEARANCE REQUIREMENTS, SEE UG3480, UG3481, UG3482, AND UG3483. (USE 3312)

b. FOR SETTING HANDHOLE ON A SLOPING GRADE, SEE UG3485.

c. FOR RETAINING WALL REQUIREMENTS AND CLEARANCES FROM REVERSE SUBGRADE RETAINING WALLS, SEE UG3486, UG3487, AND UG3488. (USE 3312)

d. AVAILABLE IN SERVICE STANDARDS AND GUIDE MANUAL.

TABLE OF CONTENTS

© 1998 - 2023 San Diego Gas & Electric Company. All rights reserved. Removal of this copyright notice without permission is not permitted under law.

REV	CHANGE	DR	BY	DSN	APV	DATE	REV	CHANGE	DR	BY	DSN	APV	DATE
C	FIGURE UPDATE	TSA	EJA	EJA	ERG	03/29/2023	F						
B	FORMATTING	EDM	JIK	-	-	10/27/2021	E						
A	EDITORIAL CHANGES	-	JS	TR	MDJ	06/02/2016	D						

X Indicates Latest Revision | Completely Revised | New Page | Information Removed

SDG&E ELECTRIC UNDERGROUND CONSTRUCTION STANDARDS

HANDHOLE - CITY OF SAN DIEGO STREET LIGHT
(INSIDE DIMENSIONS 10 1/4" X 15 3/8")

UG3308.2

SCOPE: THIS STANDARD SHOWS THE INSTALLATION AND MATERIAL REQUIREMENTS FOR 3309 HANDHOLES.

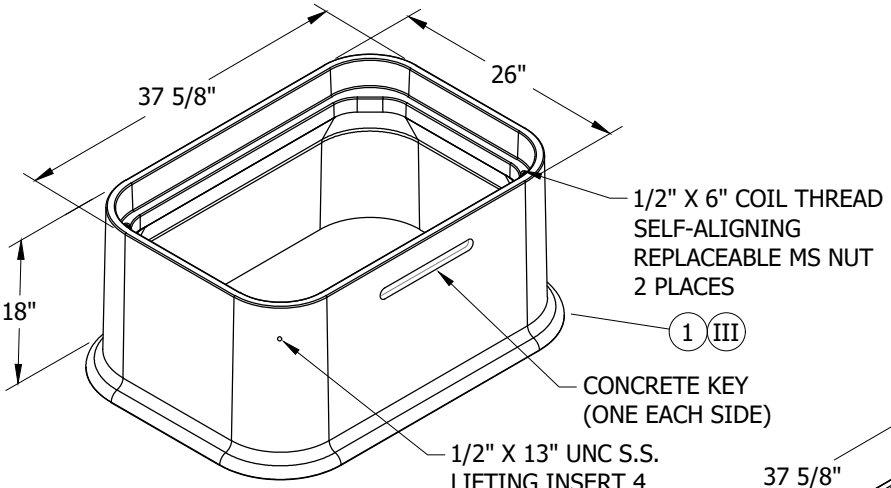

FIGURE 1
3309.1 HANDHOLE BODY

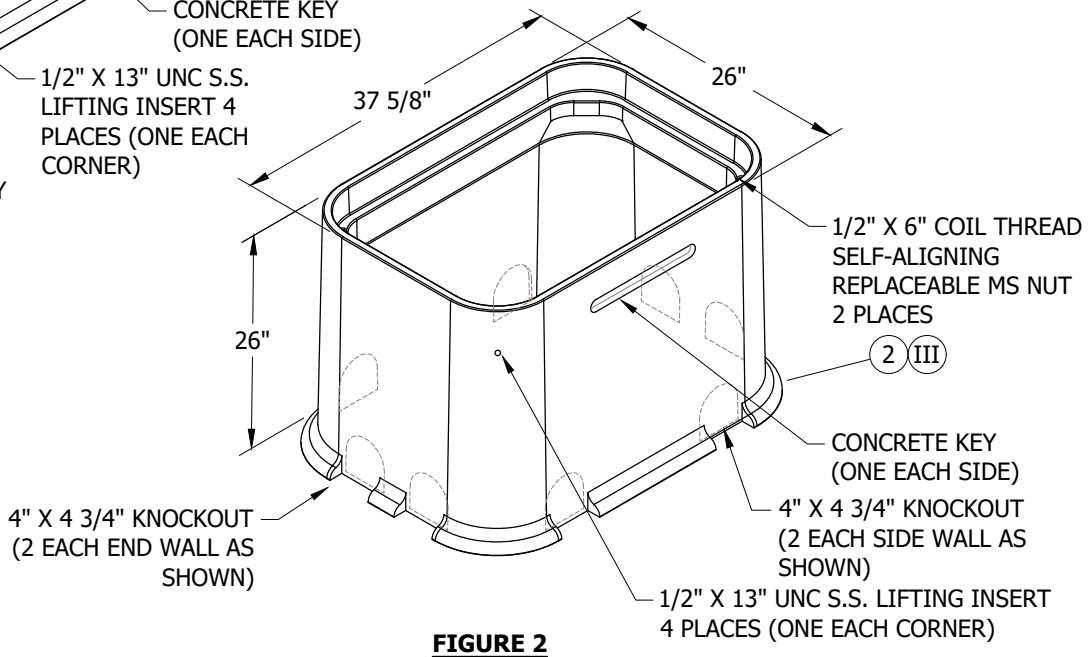

FIGURE 2
3309.2 HANDHOLE BODY

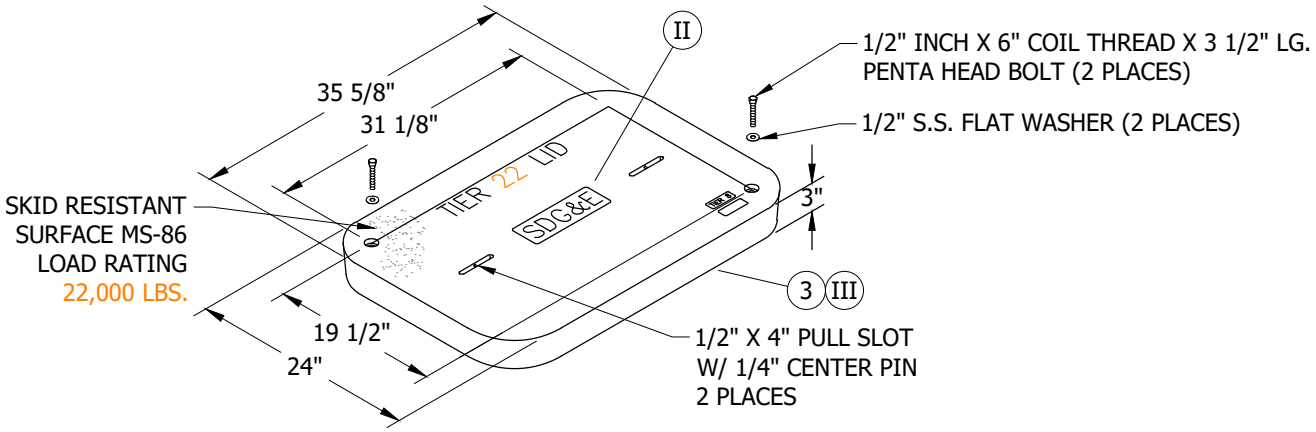

FIGURE 3
3309.1 & 3309.2 HANDHOLE COVER

© 1998 - 2021 San Diego Gas & Electric Company. All rights reserved. Removal of this copyright notice without permission is not permitted under law.

REV	CHANGE	DR	BY	DSN	APV	DATE	REV	CHANGE	DR	BY	DSN	APV	DATE
C							F						
B	FIGURE UPDATE	EDM	EJA	GLW	CZH	3/5/2021	E						
A	EDITORIAL CHANGES	-	JS	TR	MDJ	09/18/2015	D						

X Indicates Latest Revision | Completely Revised | New Page | Information Removed

SDG&E ELECTRIC UNDERGROUND CONSTRUCTION STANDARDS

HANDHOLE POLYMER CONCRETE
(37" X 26" X 18")

UG3309.1

TABLE OF CONTENTS

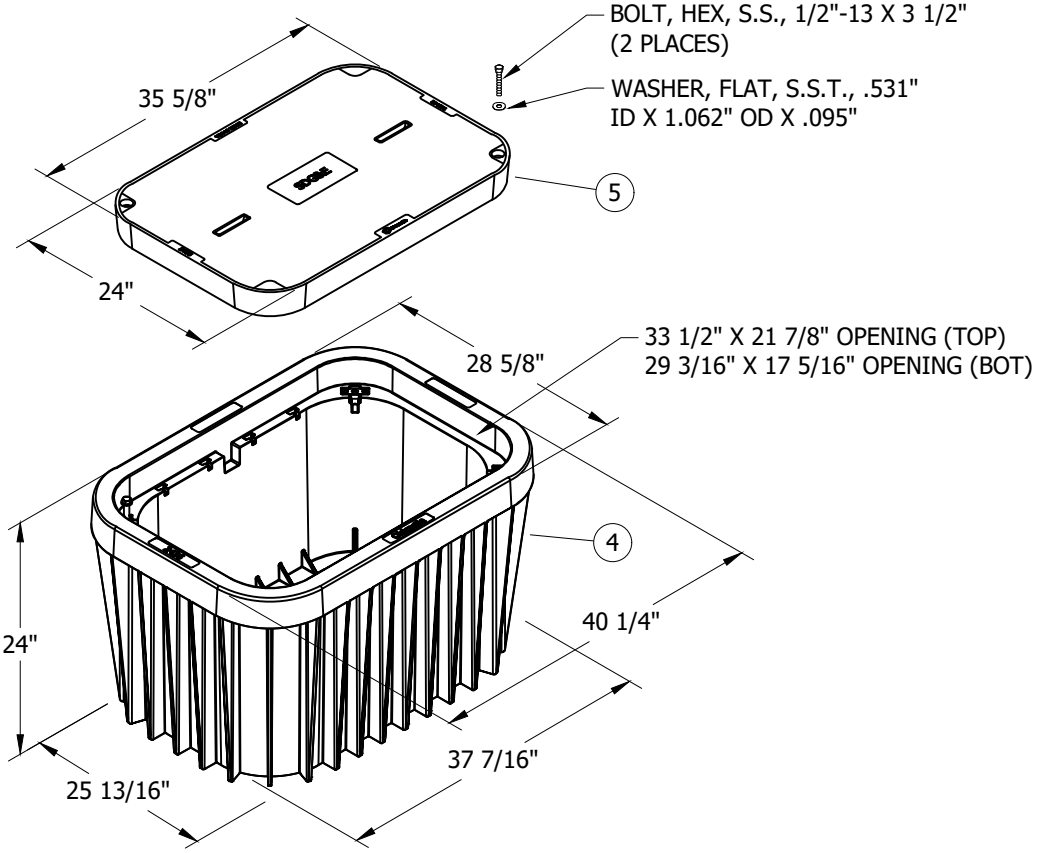

FIGURE 4
3309.3 HANDHOLE BODY WITH
3309.3 (TIER 22) COVER

HANDHOLE MAY BE INSTALLED ON EITHER SIDE OF LOT LINE OR IN CENTER OF LOT LINE IN AREA WITH LIMITED SPACE. BUTT AGAINST BACK OF SIDEWALK.

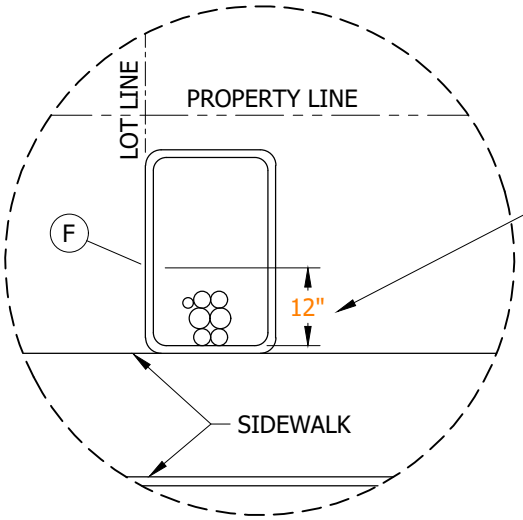

CONDUIT TERMINATION AREA SHALL BE WITHIN 12" MAX. FROM END OF SUBSTRUCTURE

FIGURE 5
TYPICAL PLAN VIEW

© 1998 - 2021 San Diego Gas & Electric Company. All rights reserved. Removal of this copyright notice without permission is not permitted under law.

REV	CHANGE	DR	BY	DSN	APV	DATE	REV	CHANGE	DR	BY	DSN	APV	DATE
C							F						
B	FIGURE UPDATE	EDM	EJA	GLW	CZH	3/5/2021	E						
A	EDITORIAL CHANGES	-	JS	TR	MDJ	09/18/2015	D						

X Indicates Latest Revision | Completely Revised | New Page | Information Removed

SDG&E ELECTRIC UNDERGROUND CONSTRUCTION STANDARDS

HANDHOLE POLYMER CONCRETE
(HEAVY DUTY COVER FOR 3309)

UG3309.2

TABLE OF CONTENTS

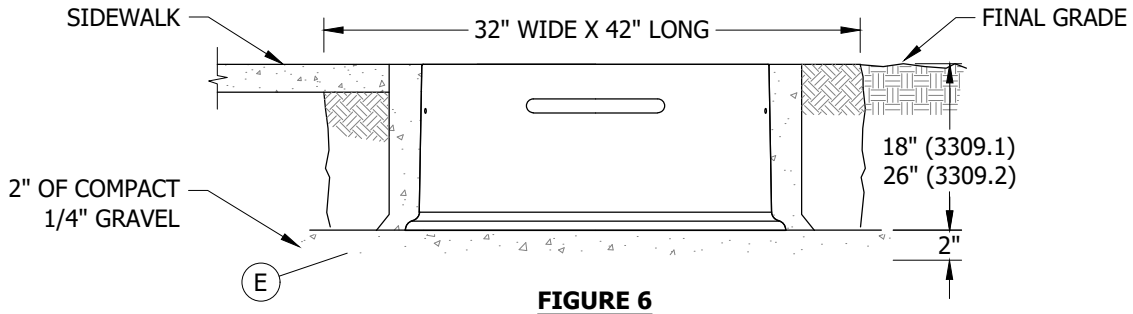

FIGURE 6
3309.1 & 3309.2 EXCAVATION DIMENSIONS

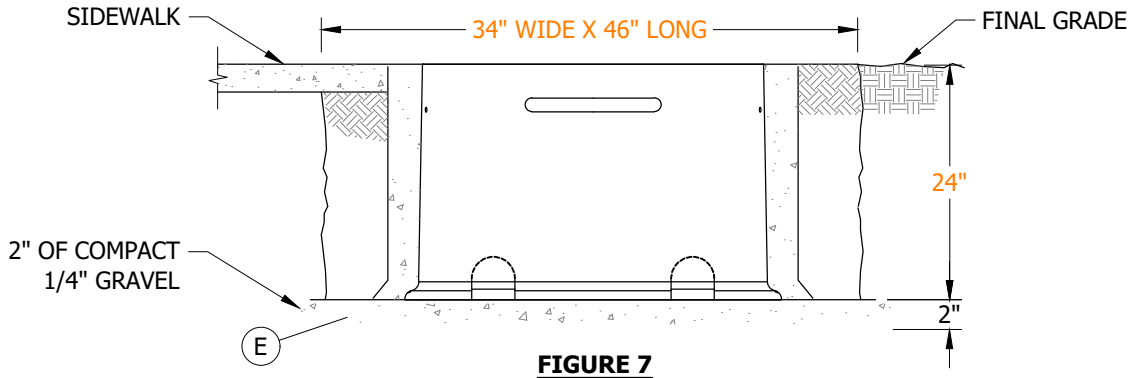

FIGURE 7
3309.3 EXCAVATION DIMENSIONS

INSTALLATION:

A. ESTABLISH HANDHOLE LOCATION PAYING PARTICULAR ATTENTION TO GAS AND FOREIGN UTILITY PLACEMENTS. ANY CHANGE IN LOCATION BY CONSTRUCTION REQUIRES PRIOR APPROVAL FROM SERVICE PLANNING.

B. AFTER LOCATION IS ESTABLISHED, MARK OUT DIMENSIONS FOR EXCAVATION WIDTH, LENGTH AND DEPTH PER DRAWING ABOVE. THE WIDTH AND LENGTH DIMENSIONS GIVEN ALLOW EXTRA SPACE FOR SETTING THE SUBSTRUCTURE AND TAMPING THE BACKFILL.

C. TO DETERMINE FINAL GRADE, MEASURE FROM TOP OF CURB OR ESTABLISHED GRADE.

D. EXCAVATION IS NOW PREPARED FOR INSTALLATION OF SUBSTRUCTURE SECTIONS. AFTER GRADE LEVEL IS ESTABLISHED, SET A STRING LINE FOR CHECKING GRADE. SET HANDHOLE TOP AT FINAL GRADE.

(E) BOX SHALL BE SET ON 2 INCHES OF COMPACT 1/4-INCH GRAVEL.

(F) IF RIGHT OF WAY OR OBSTRUCTIONS CAUSE A PROBLEM, LONG SIDE OF HANDHOLE MAY BE PLACED PARALLEL TO THE SIDEWALK OR PROPERTY LINE.

BILL OF MATERIALS:

ITEM	DESCRIPTION	DIMENSIONS	WEIGHT	QUANITY	STANDARD PAGE	STOCK NUMBER	DESIGN UNITS	SAP CU
1 3	BOX, HANDHOLE, 3309.1, SECONDARY COVER, HANDHOLE, 3309.1 & 3309.2	37 5/8" X 26" X 18" 35 5/8" X 24"	144 LBS. MAX. 55 LBS. MAX.	1 1	--	S162688	330913	330913HH
2 3	BOX, HANDHOLE, 3309.2, SECONDARY COVER, HANDHOLE, 3309.1 & 3309.2	37 5/8" X 26" X 26" 35 5/8" X 24"	199 LBS. MAX. 55 LBS. MAX.	1 1	--	S162690	330926	330926HH
3	COVER, HANDHOLE, 3309.1 & 3309.2	35 5/8" X 24"	55 LBS. MAX. (I)	1	--	S459952	09-COV	--
4 5	BOX, HANDHOLE, 3309.3 COVER, HANDHOLE, 3309.3	40 1/4" X 38 5/8" X 24" 35 5/8" X 24"	80 LBS. 151 LBS.	1 1	--	S162422 S459950	-- --	-- --

© 1998 - 2021 San Diego Gas & Electric Company. All rights reserved. Removal of this copyright notice without permission is not permitted under law.

REV	CHANGE	DR	BY	DSN	APV	DATE	REV	CHANGE	DR	BY	DSN	APV	DATE
C							F						
B	FIGURE UPDATE	EDM	EJA	GLW	CZH	3/5/2021	E						
A	EDITORIAL CHANGES	-	JS	TR	MDJ	09/18/2015	D						

X Indicates Latest Revision | Completely Revised | New Page | Information Removed

SDG&E ELECTRIC UNDERGROUND CONSTRUCTION STANDARDS

HANDHOLE POLYMER CONCRETE (EXCAVATION DIMENSIONS)

UG3309.3

TABLE OF CONTENTS

NOTES:

(I) WEIGHT OF PREVIOUS LID: 115 LBS.

(II) IF CUSTOMER IS REQUIRED TO INSTALL A HANDHOLE IN A SERVICE LATERAL, THE LID SHALL BE TAGGED WITH MONEL STAINLESS STEEL TAG "CUSTOMER OWNED" BELOW SDG&E LOGO. FOLLOW UNDERGROUND CONSTRUCTION STANDARD 3211 FOR TAGGING INSTRUCTIONS.

(III) FOR TRAFFIC INSTALLATIONS, USE THE 3313 HANDHOLE AND STEEL TRAFFIC COVER.

REFERENCE:

a. SEE UG3302 FOR SUBSTRUCTURE APPLICATIONS.

b. SEE UG3483 FOR MINIMUM OPERATING CLEARANCE REQUIREMENTS.

c. SEE UG3485 WHEN SETTING HANDHOLE ON A SLOPING GRADE.

d. SEE UG3486 FOR RETAINING WALL REQUIREMENTS AND CLEARANCES FROM REVERSE SUBGRADE RETAINING WALLS.

e. SEE UG3605 FOR SUBSTRUCTURE USE AND LIMITATIONS REFERENCE SHEET (MAXIMUM NUMBER OF CABLES, CONNECTORS AND CONDUITS).

f. SEE UG4173 FOR TRENCH DEPTH, CONDUIT AND CABLE INSTALLATION.

TABLE OF CONTENTS

© 1998 - 2021 San Diego Gas & Electric Company. All rights reserved. Removal of this copyright notice without permission is not permitted under law.

REV	CHANGE	DR	BY	DSN	APV	DATE	REV	CHANGE	DR	BY	DSN	APV	DATE
C							F						
B	FIGURE UPDATE	EDM	EJA	GLW	CZH	3/5/2021	E						
A	EDITORIAL CHANGES	-	JS	TR	MDJ	09/18/2015	D						

X Indicates Latest Revision | Completely Revised | New Page | Information Removed

SDG&E ELECTRIC UNDERGROUND CONSTRUCTION STANDARDS

HANDHOLE POLYMER CONCRETE (EXCAVATION DIMENSIONS)

UG3309.4

SCOPE: THIS STANDARD COVERS THE PENCELL SECONDARY BOX PEDESTAL.

ATTENTION:

* THIS SECONDARY PEDESTAL IS DESIGNED FOR AND SHALL BE LOCATED IN GREEN BELTS, EXTREME WET ENVIRONMENTS, AREAS WITH HIGH VEGETATION THAT MAY COVER A SECONDARY BOX AND OTHER SIMILAR AREAS.

** ANY SPECIAL APPLICATION OF THIS FACILITY SHALL REQUIRE A DEVIATION REQUEST.

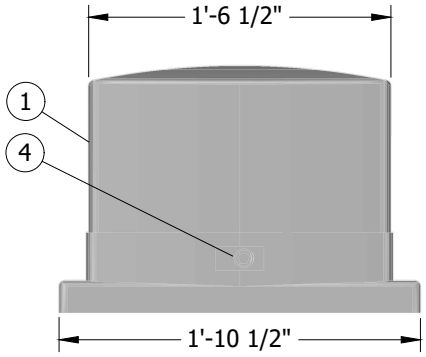

FIGURE 1
TOP SECTION OF COVER
FRONT VIEW

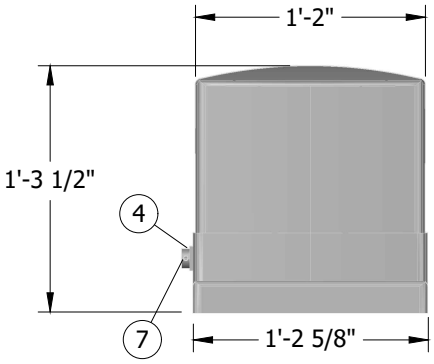

FIGURE 1
TOP SECTION OF COVER
SIDE VIEW

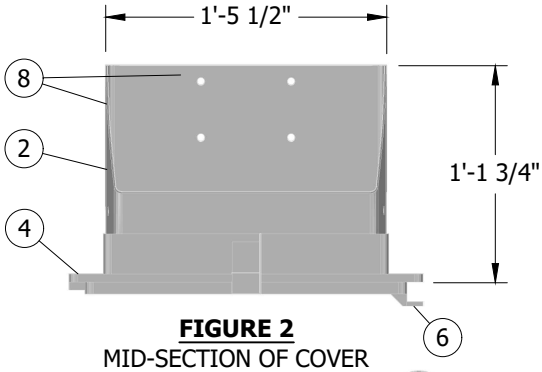

FIGURE 2
MID-SECTION OF COVER
FRONT VIEW

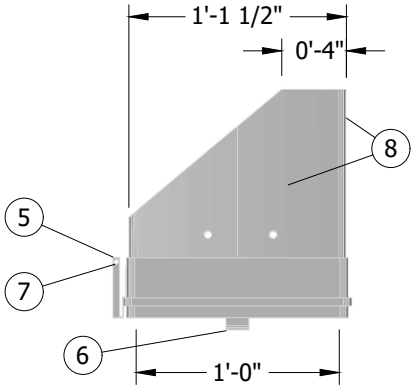

FIGURE 2
MID-SECTION OF COVER
SIDE VIEW

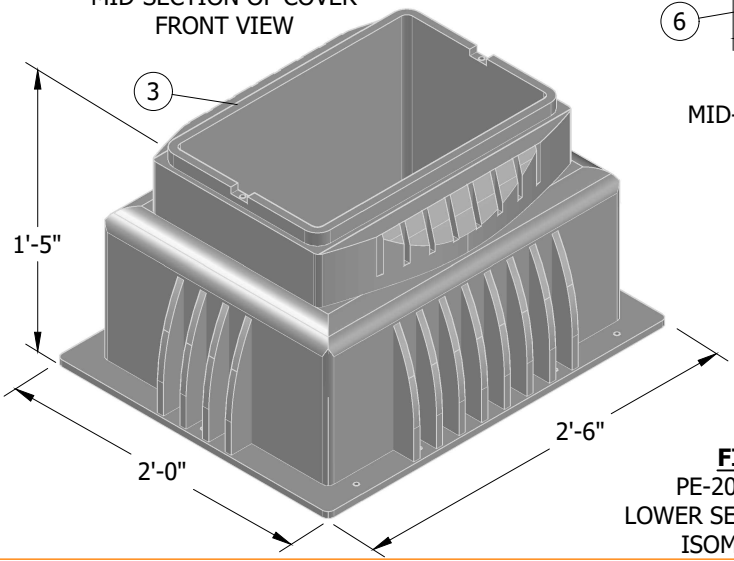

FIGURE 4
PE-20 ENCLOSURE
LOWER SECTION OF COVER
ISOMETRIC VIEW



FIGURE 1



FIGURE 3



FIGURE 5
PENCELL PLASTICS AG-18
PEDESTAL WITH DOME

TABLE OF CONTENTS

© 1998 - 2023 San Diego Gas & Electric Company. All rights reserved. Removal of this copyright notice without permission is not permitted under law.

REV	CHANGE	DR	BY	DSN	APV	DATE	REV	CHANGE	DR	BY	DSN	APV	DATE
C	FIGURE UPDATE	TSA	EJA	EJA	KRG	11/22/2023	F						
B	FORMATTING	EDM	JIK	-	-	10/27/2021	E						
A	EDITORIAL CHANGES	-	JC	TR	MDJ	09/01/2015	D						

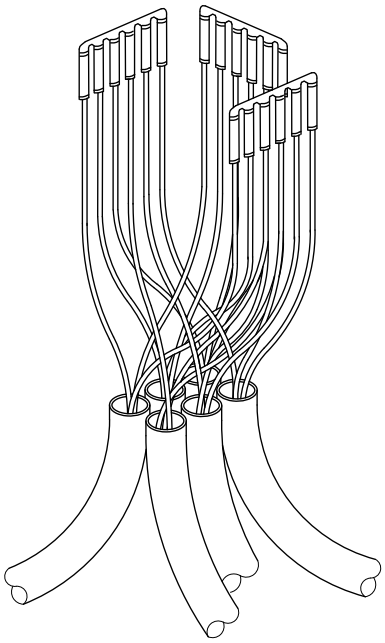

FIGURE 6

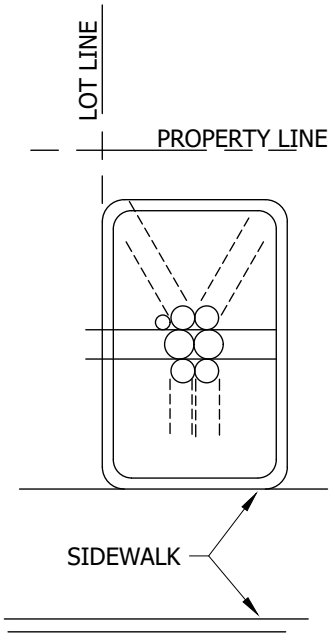

FIGURE 7

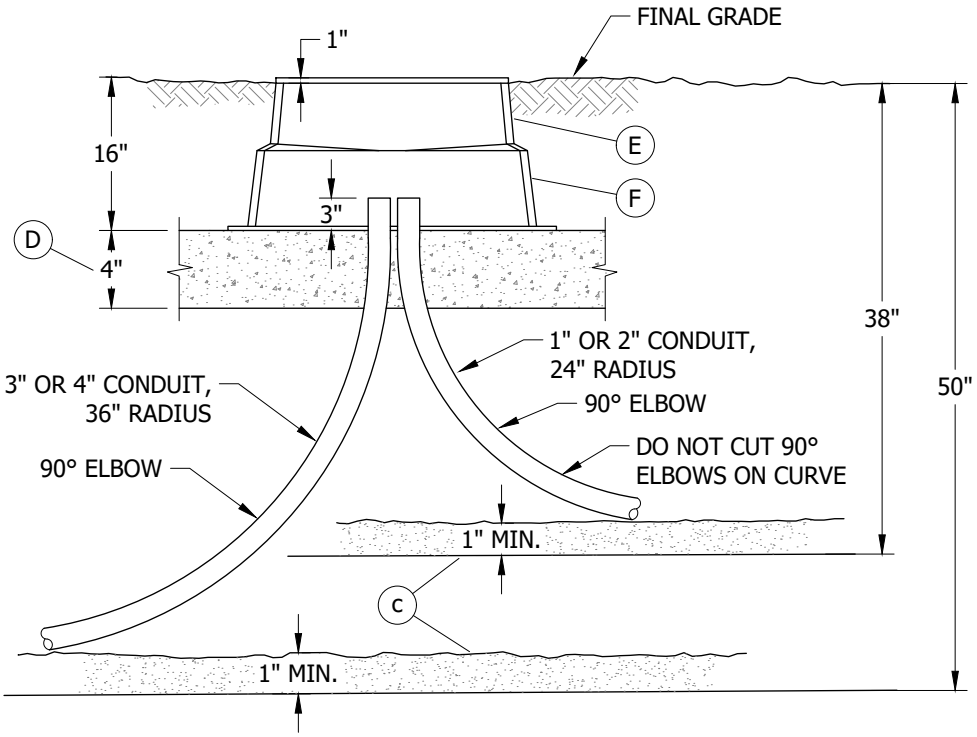

FIGURE 8

© 1998 - 2023 San Diego Gas & Electric Company. All rights reserved. Removal of this copyright notice without permission is not permitted under law.

REV	CHANGE	DR	BY	DSN	APV	DATE	REV	CHANGE	DR	BY	DSN	APV	DATE
C	FIGURE UPDATE	TSA	EJA	EJA	KRG	11/22/2023	F						
B	FORMATTING	EDM	JIK	-	-	10/27/2021	E						
A	EDITORIAL CHANGES	-	JC	TR	MDJ	09/01/2015	D						

X Indicates Latest Revision | Completely Revised | New Page | Information Removed

SDG&E ELECTRIC UNDERGROUND CONSTRUCTION STANDARDS

PENCELL SECONDARY BOX
PEDESTAL WITH DOME

UG3310.2

TABLE OF CONTENTS

INSTALLATION:

A. ESTABLISH THE HANDHOLE LOCATION PAYING PARTICULAR ATTENTION TO GAS AND FOREIGN UTILITY PLACEMENTS. ANY CHANGE IN LOCATION BY DISTRICT CONSTRUCTION REQUIRES PRIOR APPROVAL FROM SERVICE PLANNING.

B. AFTER THE LOCATION IS ESTABLISHED, MARK OUT DIMENSIONS FOR THE EXCAVATION WIDTH, LENGTH, AND DEPTH PER FIGURES 7 AND 8 ABOVE. THE WIDTH AND LENGTH DIMENSIONS GIVEN ALLOW EXTRA SPACE FOR SETTING THE SUBSTRUCTURE AND TAMPING THE BACKFILL.

C. TO DETERMINE FINAL GRADE, MEASURE FROM THE TOP OF CURB OR ESTABLISHED GRADE.

(D) ADD FOUR INCHES OF GRAVEL AND COMPACT BOTTOM OF EXCAVATION AND SET FINAL GRADE.

(E) EXCAVATION IS NOW PREPARED FOR INSTALLATION OF SUBSTRUCTURE SECTIONS. AFTER GRADE LEVEL IS ESTABLISHED, SET A STRING LINE FOR CHECKING GRADE. SET HANDHOLE AT FINAL GRADE. BOX SHOULD BE SET ONE-INCH ABOVE GRADE. DO NOT BACK FILL WITH LARGE ROCKS.

(F) INSTALL PULLING AND MEASURING TAPE IN CONDUIT.

CABLE AND CONNECTIONS

G. WITH PEDESTAL BASE AND COVER REMOVED, PULL IN CABLE AS NEEDED. CUT CABLE AND AVOID EXCESS WASTE.

H. INSTALL PEDESTAL BASE, TERMINATE CABLE WITH CORRECT SECONDARY MOLDS.

J. WHEN THE MOLDS ARE INSTALLED, THEY SHOULD NOT BE TERMINATED HIGHER THAN THE PEDESTAL BASE.

K. APPLY SILICON GREASE TO THE PENTA BOLT ON THE PEDESTAL BASE AND TIGHTEN BOLT TO PEDESTAL BOX BY HAND.

L. APPLY LARGE BLACK STRAPS (S738440) TO MOLDS AND BLACK CABLE MOUNTING BRACKETS TO HOLD CABLE IN PLACE.

M. INSTALL PEDESTAL COVER. APPLY SILICON GREASE TO PENTA BOLT AND TIGHTEN BY HAND. APPLY KEYLESS LOCK AND SHEAR BOLT.

BILL OF MATERIALS:

ITEM	DESCRIPTION	QUANTITY	STANDARD PAGE	STOCK NUMBER	DESIGN UNITS
1	COVER, PEDESTAL	1	--	S525348	3310
2	BASE, PEDESTAL	1	--		
3	ENCLOSURE, BOX	1	--		
4	BOLT, PENTA	1	--	INCLUDED	--
5	LATCH, LOCKING	1	--	INCLUDED	--
6	LOCK, MOLDED KEY	1	--	INCLUDED	--
7	LOCK, KEYLESS	2	--	S738440	--
8	BRACKET, CONNECTION MOUNTING, CABLE	3	--	INCLUDED	--
9	EXCAVATION, 3310	1	--	--	X10H

NOTES: NONE

REFERENCE:

a. FOR SUBSTRUCTURE APPLICATIONS, SEE UG3302.

b. FOR MINIMUM OPERATING CLEARANCE REQUIREMENTS, SEE UG3480, UG3481, UG3482, AND UG3483.

(c) FOR TRENCH DEPTHS, BASE SHADING AND BACKFILL REQUIREMENTS, SEE UG3370.

d. FOR RETAINING WALL REQUIREMENTS AND CLEARANCES FROM REVERSE SUBGRADE RETAINING WALLS, SEE UG3486, UG3487, AND UG3488.

e. FOR SUBSTRUCTURE USE AND LIMITATIONS REFERENCE SHEET (MAXIMUM NUMBER OF CABLES, CONNECTORS, AND CONDUITS), SEE UG3605.

TABLE OF CONTENTS

© 1998 - 2023 San Diego Gas & Electric Company. All rights reserved. Removal of this copyright notice without permission is not permitted under law.

REV	CHANGE	DR	BY	DSN	APV	DATE	REV	CHANGE	DR	BY	DSN	APV	DATE
C	FIGURE UPDATE	TSA	EJA	EJA	KRG	11/22/2023	F						
B	FORMATTING	EDM	JIK	-	-	10/27/2021	E						
A	EDITORIAL CHANGES	-	JC	TR	MDJ	09/01/2015	D						

SCOPE: THIS STANDARD COVERS THE 3311-S AND 3311-L TROUGHS.

ATTENTION:

* THESE STRUCTURES GO BELOW THE PAD FOR OPEN/CLOSED DELTA TRANSFORMER INSTALLATIONS FOR CABLE TRAINING BETWEEN SINGLE-PHASE PAD MOUNTED TRANSFORMERS.

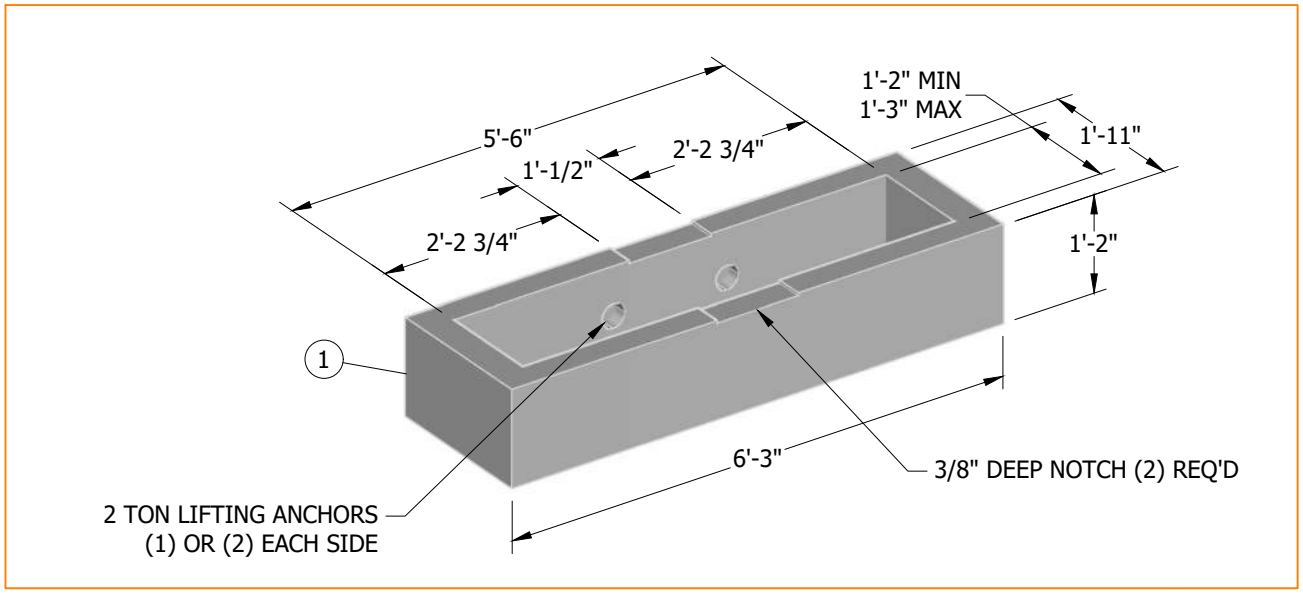

FIGURE 1 (I)

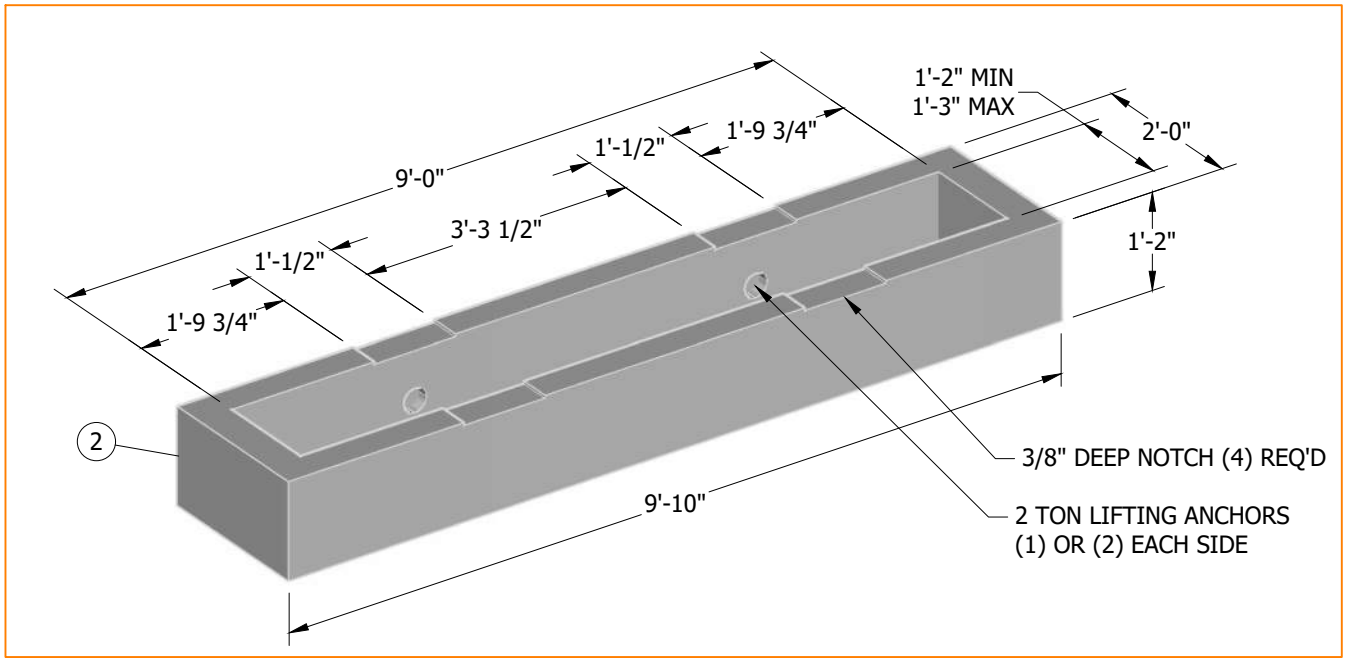

FIGURE 2 (II)

TABLE OF CONTENTS

© 1998 - 2023 San Diego Gas & Electric Company. All rights reserved. Removal of this copyright notice without permission is not permitted under law.

REV	CHANGE	DR	BY	DSN	APV	DATE	REV	CHANGE	DR	BY	DSN	APV	DATE
C	DRAWING UPDATE	EDM	ADW	GLW	KRG	06/27/2022	F						
B	FORMATTING	EDM	JIK	-	-	10/27/2021	E						
A	EDITORIAL CHANGES	-	JS	TR	MDJ	06/02/2016	D	FIGURE UPDATE	TSA	EJA	EJA	KRG	07/28/2023

X Indicates Latest Revision | Completely Revised | New Page | Information Removed

SDG&E ELECTRIC UNDERGROUND CONSTRUCTION STANDARDS

HANDHOLE - CONCRETE
(INSIDE DIMENSIONS 14" X 66" X 14" OR 14" X 108" X 14")

UG3311.1

INSTALLATION: NONE

BILL OF MATERIALS:

ITEM	DESCRIPTION	WEIGHT (LBS)	QUANTITY	STANDARD PAGE	STOCK NUMBER	DESIGN UNITS
1	3311-S TROUGH	986 MAX.	--	--	S162660	3311-S
2	3311-L TROUGH	1,605 MAX.	--	--	S162662	3311-L

NOTES:

(I) USED FOR TWO 12KV PAD MOUNTED TRANSFORMERS IN OPEN DELTA BANKS AND PAD MOUNTED SWITCH INSTALLATION.

(II) USED FOR THREE 12KV PAD MOUNTED TRANSFORMERS IN CLOSED DELTA BANKS.

REFERENCE:

a. AVAILABLE IN SERVICE STANDARDS AND GUIDE MANUAL.

MAIN TABLE OF CONTENTS

© 1998 - 2023 San Diego Gas & Electric Company. All rights reserved. Removal of this copyright notice without permission is not permitted under law.

REV	CHANGE	DR	BY	DSN	APV	DATE	REV	CHANGE	DR	BY	DSN	APV	DATE
C	DRAWING UPDATE	EDM	ADW	GLW	KRG	06/27/2022	F						
B	FORMATTING	EDM	JIK	-	-	10/27/2021	E						
A	EDITORIAL CHANGES	-	JS	TR	MDJ	06/02/2016	D	FIGURE UPDATE	TSA	EJA	EJA	KRG	07/28/2023

SCOPE: THIS STANDARD ILLUSTRATES 37" X 39", 83" X 39", AND 129" X 39" CONCRETE HANDHOLES.

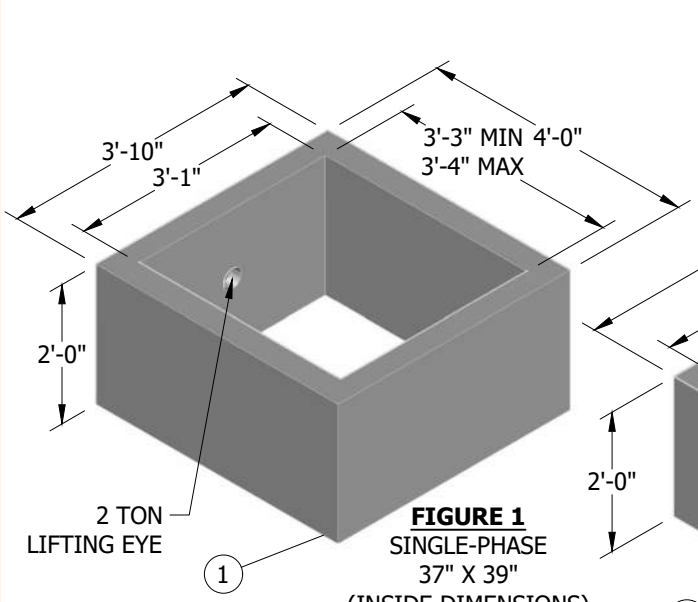

FIGURE 1
SINGLE-PHASE
37" X 39"
(INSIDE DIMENSIONS)

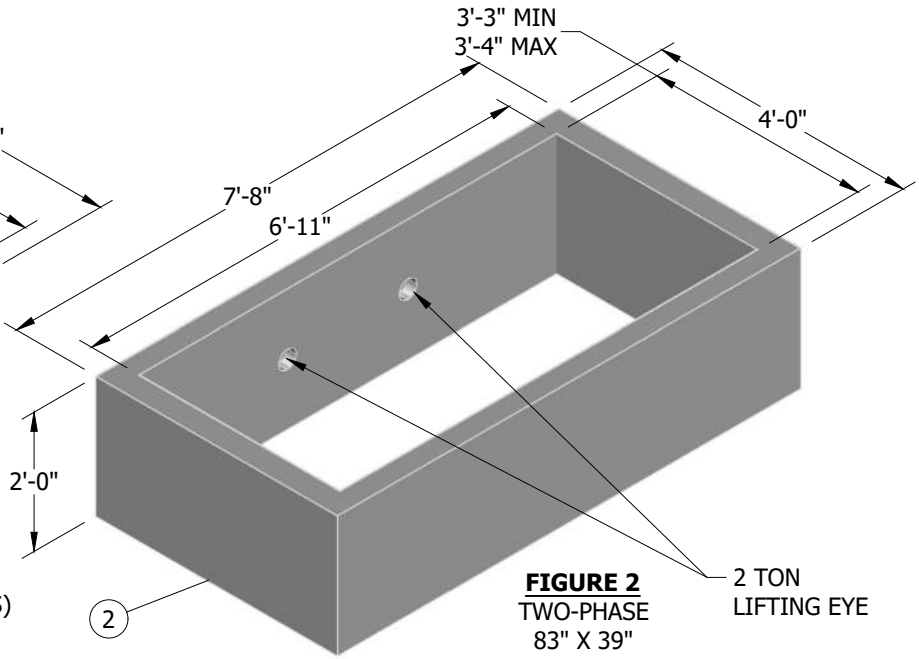

FIGURE 2
TWO-PHASE
83" X 39"
(INSIDE DIMENSIONS)

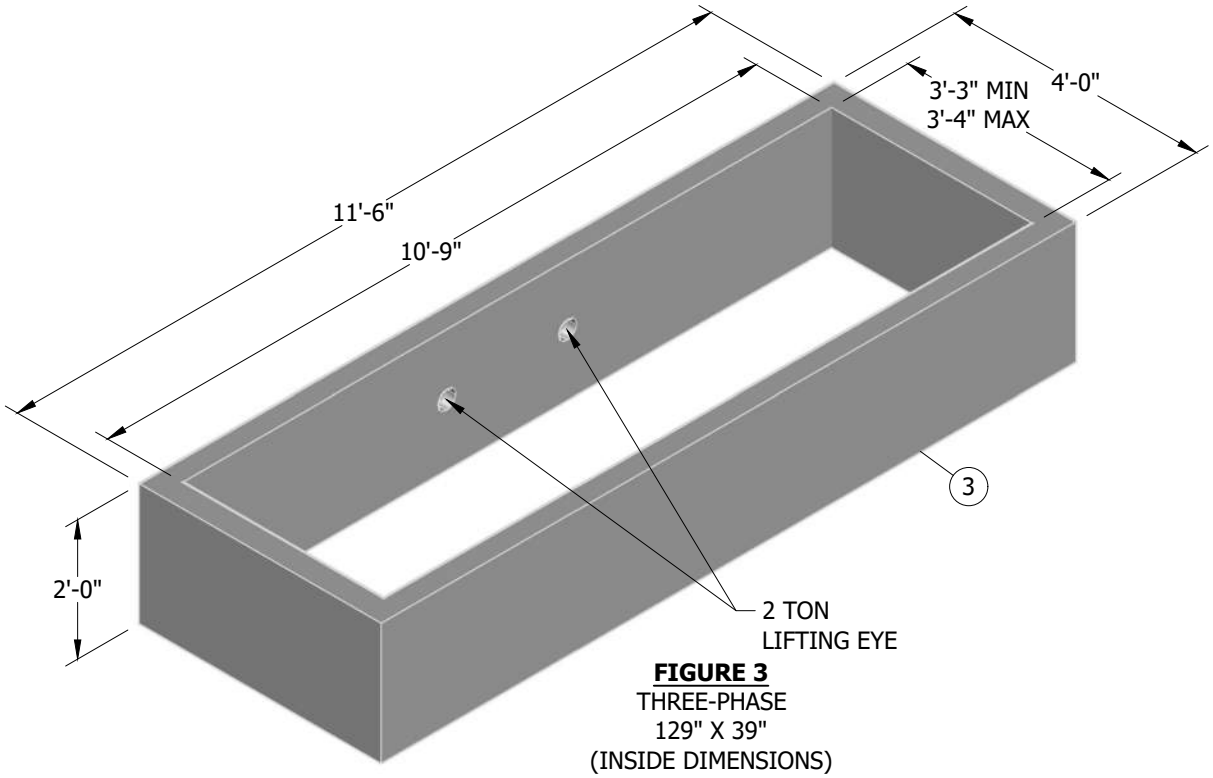

FIGURE 3
THREE-PHASE
129" X 39"
(INSIDE DIMENSIONS)

TABLE OF CONTENTS

© 1998 - 2023 San Diego Gas & Electric Company. All rights reserved. Removal of this copyright notice without permission is not permitted under law.

REV	CHANGE	DR	BY	DSN	APV	DATE	REV	CHANGE	DR	BY	DSN	APV	DATE
C	DRAWING UPDATE	EDM	ADW	GLW	KRG	06/27/2022	F						
B	FORMATTING	EDM	JIK	-	-	10/27/2021	E						
A	EDITORIAL CHANGES	-	JS	TR	MDJ	06/02/2016	D	FIGURE UPDATE	TSA	EJA	EJA	KRG	07/28/2023

X Indicates Latest Revision | Completely Revised | New Page | Information Removed

SDG&E ELECTRIC UNDERGROUND CONSTRUCTION STANDARDS

HANDHOLE - CONCRETE
INSIDE DIMENSIONS
37" X 39" X 24", 83" X 39" X 24", 129" X 39" X 24"

UG3311.3

INSTALLATION: NONE

BILL OF MATERIALS:

ITEM	DESCRIPTION	INSIDE DIMENSIONS	QUANTITY	STANDARD PAGE	STOCK NUMBER	DESIGN UNITS
1	HANDHOLE, SINGLE-PHASE	37" X 39" X 24"	AS REQ'D	--	S162432	3311-1
2	HANDHOLE, TWO-PHASE	83" X 39" X 24"	AS REQ'D	--	S162434	3311-2
3	HANDHOLE, THREE-PHASE	129" X 39" X 24"	AS REQ'D	--	S162436	3311-3

NOTES: NONE

REFERENCE:

a. AVAILABLE IN SERVICE STANDARDS AND GUIDE MANUAL.

TABLE OF CONTENTS

© 1998 - 2023 San Diego Gas & Electric Company. All rights reserved. Removal of this copyright notice without permission is not permitted under law.

REV	CHANGE	DR	BY	DSN	APV	DATE	REV	CHANGE	DR	BY	DSN	APV	DATE
C	DRAWING UPDATE	EDM	ADW	GLW	KRG	06/27/2022	F						
B	FORMATTING	EDM	JIK	-	-	10/27/2021	E						
A	EDITORIAL CHANGES	-	JS	TR	MDJ	06/02/2016	D	FIGURE UPDATE	TSA	EJA	EJA	KRG	07/28/2023

X Indicates Latest Revision | Completely Revised | New Page | Information Removed

SDG&E ELECTRIC UNDERGROUND CONSTRUCTION STANDARDS

HANDHOLE - CONCRETE
INSIDE DIMENSIONS
37" X 39" X 24", 83" X 39" X 24", 129" X 39" X 24"

UG3311.4

SCOPE: THIS STANDARD SHOWS THE INSTALLATION OF HIGH DENSITY POLYETHYLENE (HDPE) BOXES AND LIDS.

ATTENTION:

* THESE BOXES AND LIDS ARE TO BE USED ON SECONDARY SERVICE AS WELL AS UNDER 12KV EQUIPMENT PAD. THE STRENGTH DESIGN RATING OF BOX AND LID IS TIER 22 (22,500 LBS). INCIDENTAL TRAFFIC RATED.

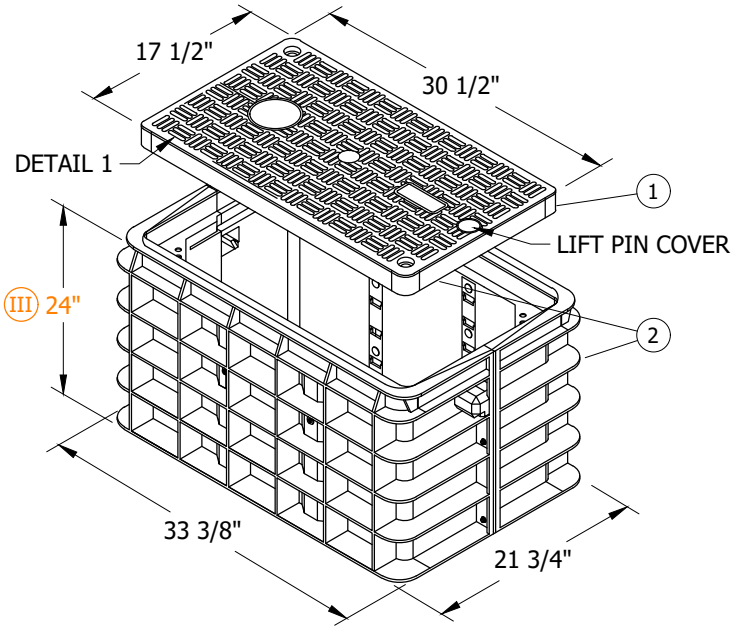

FIGURE 1
SHIELD COVER AND HDPE BOX

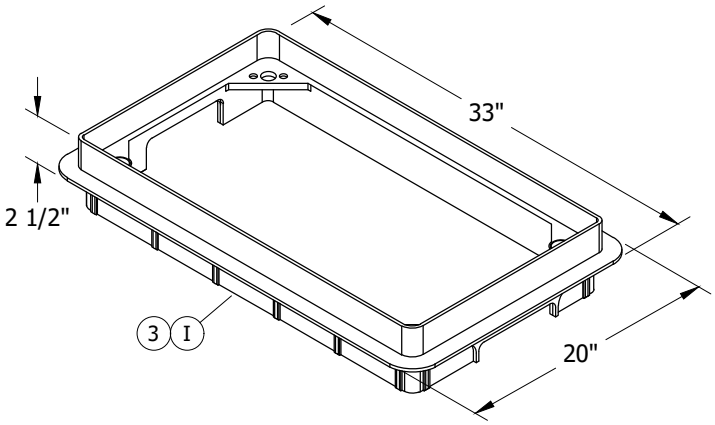

FIGURE 1
RAISING RING

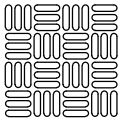

DETAIL 1
ANTI-SLIP TREAD PATTERN

INSTALLATION:

A. TO SECURE THE SHIELD COVER TO THE BOX, USE TWO PENTA LAG SCREWS PROVIDED WITH THE UNIT.

B. TO SECURE A RAISING RING TO THE BOX, LOCATE THE LARGER HOLES ON THE RING AND ATTACH TO THE BOX USING TWO LAG SCREWS. ATTACH THE SHIELD COVER TO THE RING USING THE TWO PENTA LAG SCREWS.

C. A SHIELD COVER MAY BE USED TO REPLACE A CONCRETE LID. TO ATTACH THE SHIELD COVER TO A CONCRETE BOX, TWO SWING BOLTS MUST BE USED.

D. A RAISING RING MAY BE USED TO RAISE THE HEIGHT OF ANY 3312. TO ATTACH THE RING TO THE BOX, CLEAN THE TOP OF THE BOX AND INSERT THE RING BY APPLYING PRESSURE. NO BOLTS ARE REQUIRED. USE TWO PENTA LAG SCREWS TO SECURE THE SHIELD COVER TO THE RAISING RING.

BILL OF MATERIALS:

ITEM	DESCRIPTION	QUANTITY	STANDARD PAGE	STOCK NUMBER	DESIGN UNITS
1	COVER, SHIELD	1	--	S286750	3312SH
2	BOX, HDPE WITH SHIELD COVER	1	--	S162424	3312CB
3	RING, RAISING	1	--	S596750	3312RR

© 1998 - 2023 San Diego Gas & Electric Company. All rights reserved. Removal of this copyright notice without permission is not permitted under law.

REV	CHANGE	DR	BY	DSN	APV	DATE	REV	CHANGE	DR	BY	DSN	APV	DATE
C	EDITORIAL CHANGES	-	JC	JS	CZH	04/22/2019	F						
B	BILL OF MATERIALS & NOTES UPDATE	-	JC	JS	CZH	12/01/2018	E						
A	ORIGINAL ISSUE	-	JC	JS	CZH	07/09/2018	D	DRAWING UPDATE	EDM	ADW	EJA	KRG	09/21/2023

TABLE OF CONTENTS

NOTES:

(I) THE RAISING RING CAN BE USED FOR RAISING THE LID 2 1/2". THE MAXIMUM RINGS ALLOWED IS A QUANTITY OF THREE.

II. TO LIFT THE LID, REMOVE THE LIFT PIN COVER AND REPLACE WHEN DONE. COVER MUST BE IN PLACE TO PREVENT TRIPPING HAZARD PER THE AMERICANS WITH DISABILITIES ACT. (a)

(III) REQUIRED MINIMUM DEPTH OF HOLE IS 12 INCHES. IF NECESSARY, HANDHOLE MAY BE CUT FROM BOTTOM TO ACHIEVE THIS MINIMUM DEPTH.

REFERENCE:

(a) SEE THE AMERICANS WITH DISABILITIES ACT.

TABLE OF CONTENTS

© 1998 - 2023 San Diego Gas & Electric Company. All rights reserved. Removal of this copyright notice without permission is not permitted under law.

REV	CHANGE	DR	BY	DSN	APV	DATE	REV	CHANGE	DR	BY	DSN	APV	DATE
C	EDITORIAL CHANGES	-	JC	JS	CZH	04/22/2019	F						
B	BILL OF MATERIALS & NOTES UPDATE	-	JC	JS	CZH	12/01/2018	E						
A	ORIGINAL ISSUE	-	JC	JS	CZH	07/09/2018	D	DRAWING UPDATE	EDM	ADW	EJA	KRG	09/21/2023

X Indicates Latest Revision | Completely Revised | New Page | Information Removed

SDG&E ELECTRIC UNDERGROUND CONSTRUCTION STANDARDS

HANDHOLE
HIGH DENSITY POLYETHLYLENE (HDPE)

UG3312.2

SCOPE: THIS STANDARD SHOWS THE INSTALLATION AND MATERIAL REQUIREMENTS FOR A 3312 HANDHOLE.

ATTENTION:

* THESE BOXES AND LIDS INCIDENTAL TRAFFIC RATED.

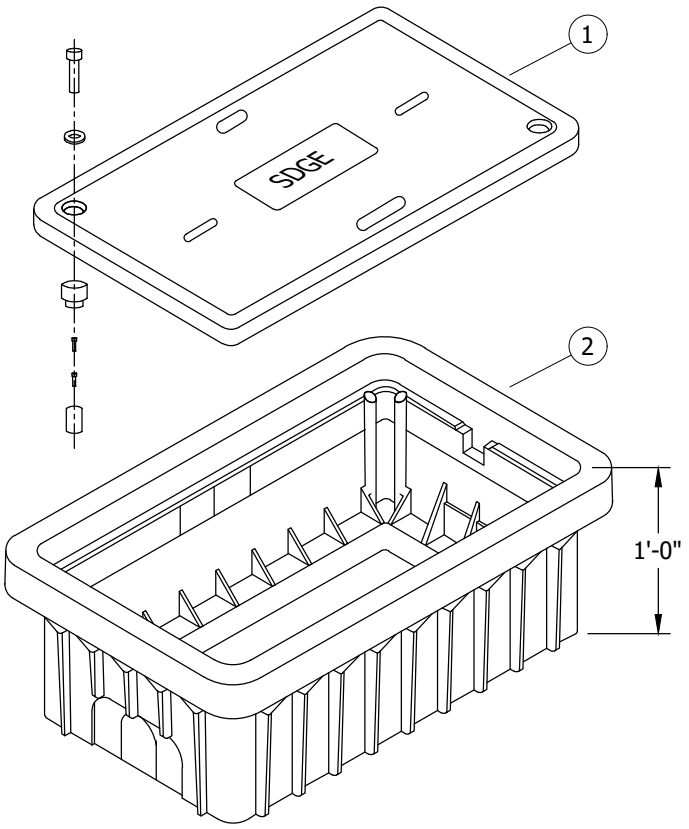

FIGURE 1
DURALITE HANDHOLE

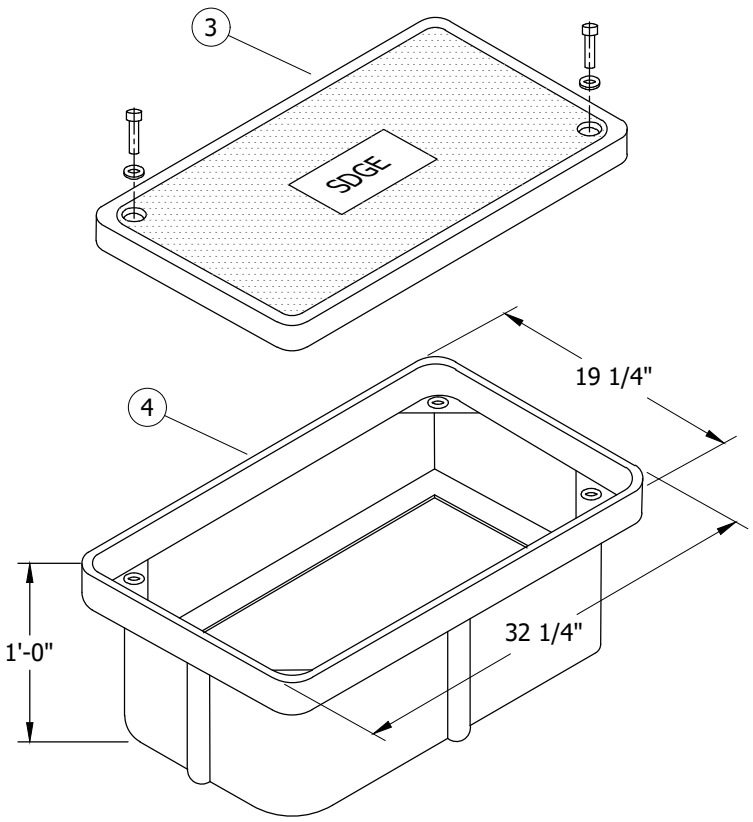

FIGURE 2
COMPOSITE HANDHOLE

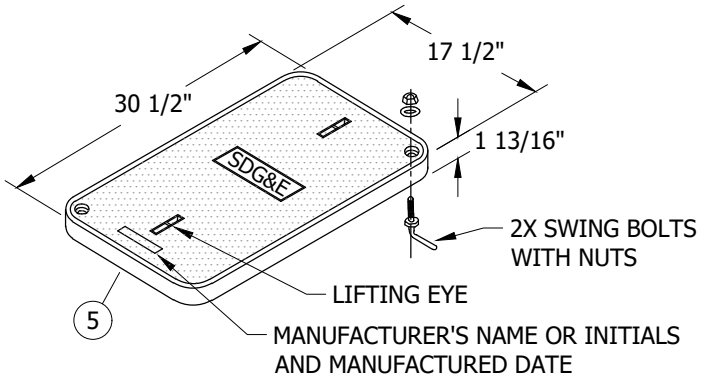

FIGURE 3
POLYMER PARKWAY COVER
3312 HANDHOLE

© 1998 - 2023 San Diego Gas & Electric Company. All rights reserved. Removal of this copyright notice without permission is not permitted under law.

REV	CHANGE	DR	BY	DSN	APV	DATE	REV	CHANGE	DR	BY	DSN	APV	DATE
C	EDITORIAL CHANGES	-	JC	JS	CZH	04/22/2019	F						
B	BILL OF MATERIALS & NOTES UPDATE	-	JC	JS	CZH	12/01/2018	E						
A	ORIGINAL ISSUE	-	JC	JS	CZH	07/09/2018	D	DRAWING UPDATE	EDM	ADW	EJA	KRG	09/21/2023

Indicates Latest Revision | Completely Revised | X New Page | Information Removed

SDG&E ELECTRIC UNDERGROUND CONSTRUCTION STANDARDS

DURALITE AND COMPOSITE HANDHOLE

UG3312.3

TABLE OF CONTENTS

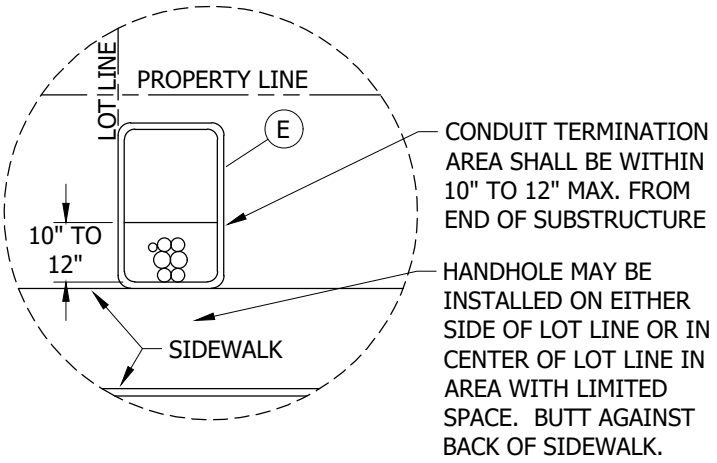

FIGURE 4
TYPICAL PLAN VIEW

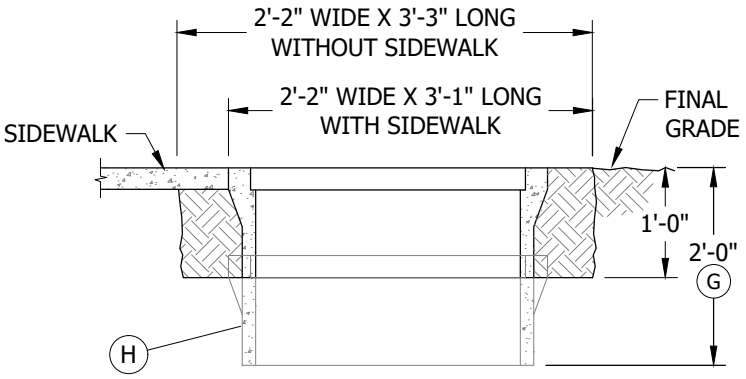

FIGURE 5
EXCAVATION DIMENSIONS (F)

INSTALLATION:

A. ESTABLISH THE HANDHOLE LOCATION PAYING PARTICULAR ATTENTION TO GAS AND FOREIGN UTILITY PLACEMENTS. ANY CHANGE IN LOCATION BY DISTRICT CONSTRUCTION REQUIRES PRIOR APPROVAL FROM SERVICE PLANNING.

B. AFTER THE LOCATION IS ESTABLISHED, MARK OUT DIMENSIONS FOR THE EXCAVATION WIDTH, LENGTH AND DEPTH PER DRAWING ABOVE. THE WIDTH AND LENGTH DIMENSIONS GIVEN ALLOW EXTRA SPACE FOR SETTING THE SUBSTRUCTURE AND TAMPING THE BACKFILL.

C. TO DETERMINE FINAL GRADE, MEASURE FROM THE TOP OF CURB OR ESTABLISHED GRADE.

D. EXCAVATION IS NOW PREPARED FOR INSTALLATION OF SUBSTRUCTURE SECTIONS. AFTER GRADE LEVEL IS ESTABLISHED, SET A STRING LINE FOR CHECKING GRADE. SET HANDHOLE AT FINAL GRADE.

(E) IF RIGHT OF WAY OR OBSTRUCTIONS CAUSE A PROBLEM, THE HANDHOLE MAY BE TURNED TO WHERE THE LONG SIDE OF THE HANDHOLE PARALLELS THE SIDEWALK OR PROPERTY LINE.

(F) IF INSTALLING TWO OR MORE 350MCM OR ABOVE, USE DOUBLE BOX.

(G) ADJUST AS NECESSARY TO ENSURE TOP BOX FLUSH WITH FINAL GRADE.

(H) OLDER STYLE CONCRETE COMBINATION (AS SHOWN) MAY BE REPLACED WITH POLYMER BOX. SEE SHEET 1.

BILL OF MATERIALS:

ITEM	DESCRIPTION	APPROX. WEIGHT (LBS)	QUANTITY	STANDARD PAGE	STOCK NUMBER	DESIGN UNITS
1	COVER, HANDHOLE, HDPE	66	1	--	S286830	--
2	BOX, HANDHOLE, HDPE			--	S162428	--
3	COVER, HANDHOLE, HDPE	69		--	S286828	--
4	BOX, HANDHOLE, HDPE	70		--	S162430	--
5	COVER, PARKWAY, HDPE	64		--	S286818	3312CP

© 1998 - 2023 San Diego Gas & Electric Company. All rights reserved. Removal of this copyright notice without permission is not permitted under law.

REV	CHANGE	DR	BY	DSN	APV	DATE	REV	CHANGE	DR	BY	DSN	APV	DATE
C	EDITORIAL CHANGES	-	JC	JS	CZH	04/22/2019	F						
B	BILL OF MATERIALS & NOTES UPDATE	-	JC	JS	CZH	12/01/2018	E						
A	ORIGINAL ISSUE	-	JC	JS	CZH	07/09/2018	D	DRAWING UPDATE	EDM	ADW	EJA	KRG	09/21/2023

Indicates Latest Revision | Completely Revised [X] | New Page | Information Removed

TABLE OF CONTENTS

NOTES:

I. THE POLYMER COVER CAN BE USED FOR REPLACEMENT OF BROKEN CONCRETE LIDS.

II. PEDESTRIAN LOADING ONLY. USE THE 3313 HANDHOLE FOR TRAFFIC INSTALLATIONS.

III. IF THE CUSTOMER IS REQUIRED TO INSTALL A HANDHOLE IN A SERVICE LATERAL, THE LID SHALL BE MARKED "ELECTRIC" NOT "SDG&E".

REFERENCE:

a. FOR SUBSTRUCTURE APPLICATIONS, SEE UG3302.

b. FOR MINIMUM OPERATING CLEARANCE REQUIREMENTS, SEE UG3483.

c. WHEN SETTING HANDHOLE ON A SLOPING GRADE, SEE UG3485.

d. FOR RETAINING WALL REQUIREMENTS AND CLEARANCES FROM REVERSE SUBGRADE RETAINING WALLS, SEE UG3486.

e. FOR SUBSTRUCTURE USE AND LIMITATIONS REFERENCE SHEET (MAXIMUM NUMBER OF CABLES, CONNECTORS AND CONDUITS), SEE UG3605.

f. FOR TRENCH DEPTH, CONDUIT AND CABLE INSTALLATION, SEE UG4173.

g. AVAILABLE IN SERVICE UGS AND GUIDE MANUAL.

TABLE OF CONTENTS

© 1998 - 2023 San Diego Gas & Electric Company. All rights reserved. Removal of this copyright notice without permission is not permitted under law.

REV	CHANGE	DR	BY	DSN	APV	DATE	REV	CHANGE	DR	BY	DSN	APV	DATE
C	EDITORIAL CHANGES	-	JC	JS	CZH	04/22/2019	F						
B	BILL OF MATERIALS & NOTES UPDATE	-	JC	JS	CZH	12/01/2018	E						
A	ORIGINAL ISSUE	-	JC	JS	CZH	07/09/2018	D	DRAWING UPDATE	EDM	ADW	EJA	KRG	09/21/2023

Indicates Latest Revision | Completely Revised [X] | New Page | Information Removed

SDG&E ELECTRIC UNDERGROUND CONSTRUCTION STANDARDS

DURALITE AND COMPOSITE HANDHOLE

UG3312.5

SCOPE: THIS STANDARD SHOWS THE INSTALLATION AND MATERIAL REQUIREMENTS FOR A 3313 NON-TRAFFIC RATED, ELECTRIC DISTRIBUTION AND COMMUNICATION HANDHOLES.

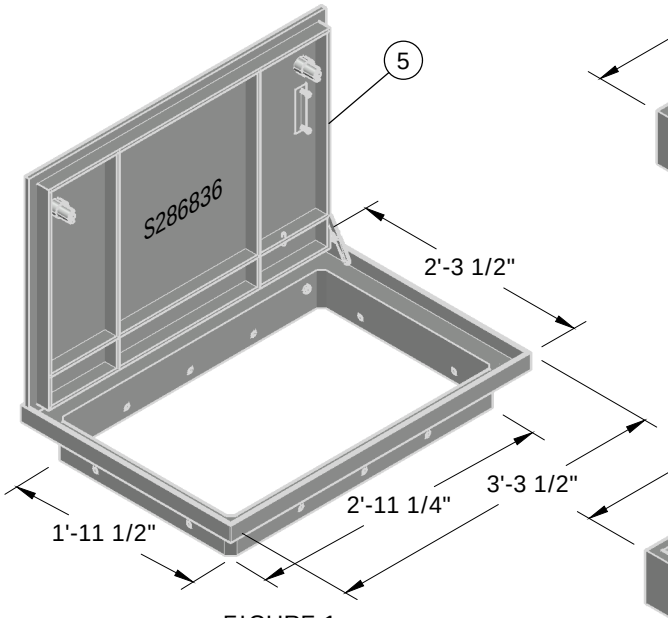

FIGURE 1
PARKWAY EZ-LIFT ALUMINUM COVER (V)
3313 HANDHOLE

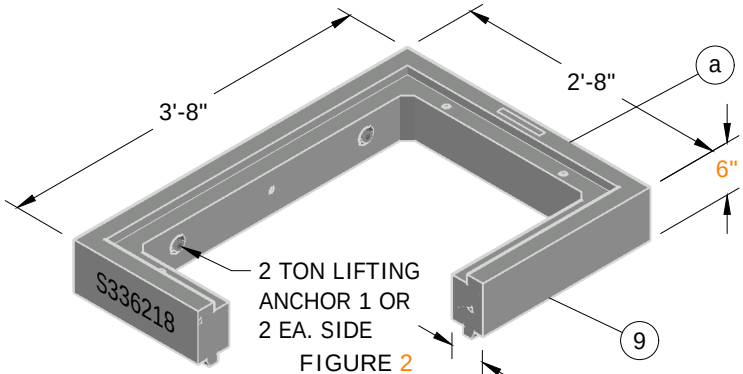

FIGURE 2
6" TOP SECTION
3313 HANDHOLE

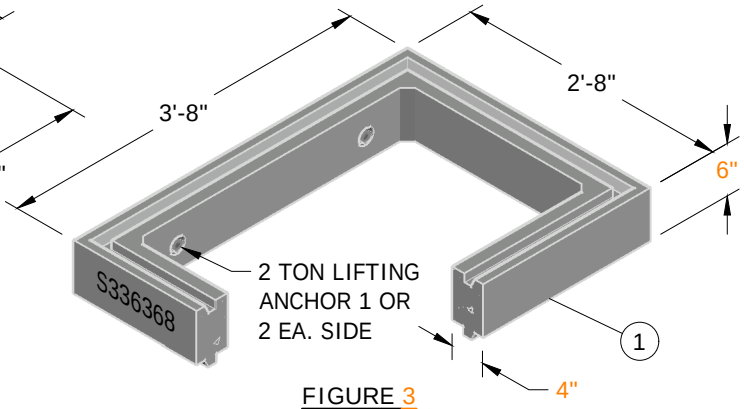

FIGURE 3
6" INTERMEDIATE
EXTENSION SECTION
3313 HANDHOLE

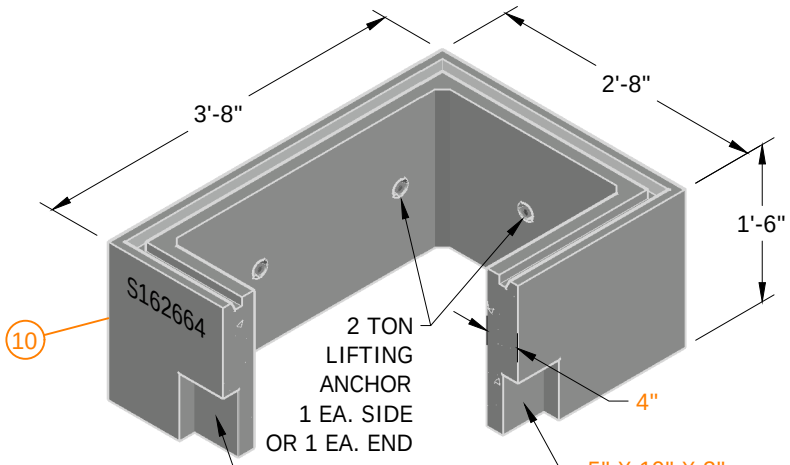

FIGURE 4
18" BASE SECTION
3313 HANDHOLE

© 1998 - 2024 San Diego Gas & Electric Company. All rights reserved. Removal of this copyright notice without permission is not permitted under law.

REV	CHANGE	DR	BY	DSN	APV	DATE	REV	CHANGE	DR	BY	DSN	APV	DATE
C	DRAWING UPDATE	EDM	ADW	JES	CZH	10/04/2021	F	INSTALLATION UPDATE	GLC	JES	JAS	KRG	05/06/2024
B	ADD 3313 L & XL	-	-	GW	JS	06/01/2018	E	FIGURE UPDATE	TSA	EJA	EJA	KRG	08/29/2023
A	EDITORIAL CHANGES	-	-	JS	TR	05/26/2016	D	BILL OF MATERIALS UPDATE	ARC	ADW	JES	KRG	01/16/2023

X	Indicates Latest Revision		Completely Revised	New Page	X Information Removed

SHEET 1 OF 8

SDG&E ELECTRIC UNDERGROUND CONSTRUCTION STANDARDS

3313 NON-TRAFFIC RATED ELECTRIC DISTRIBUTION HANDHOLE
PRECAST CONCRETE
(OD - 44" X 32")

UG3313.1

TABLE OF CONTENTS

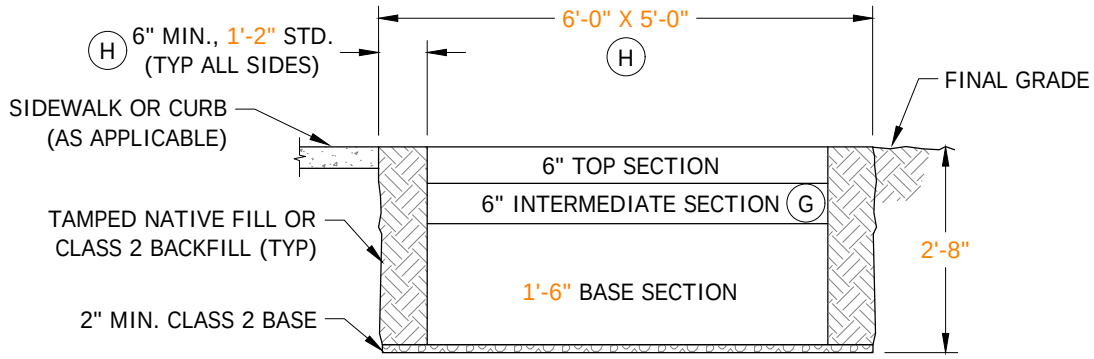

FIGURE 5
EXCAVATION DIMENSIONS

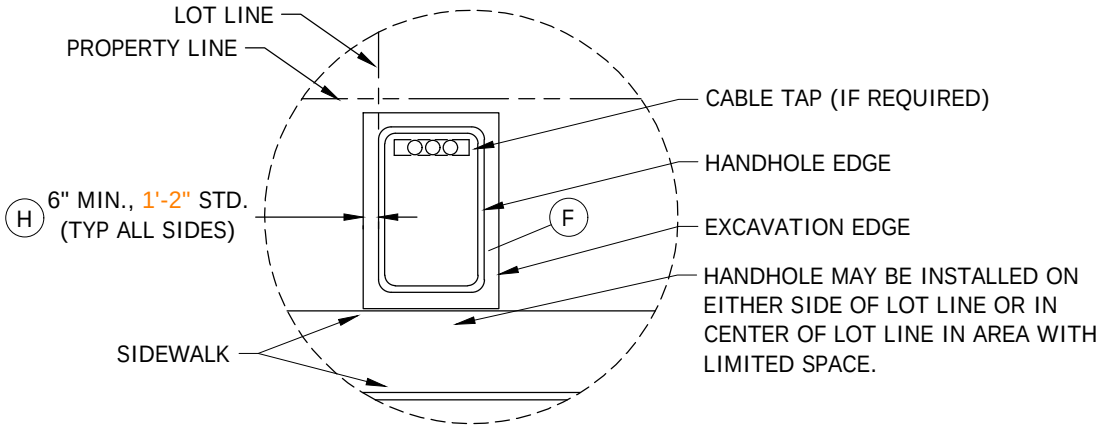

FIGURE 6
TYPICAL PLAN VIEW

INSTALLATION:

A. ESTABLISH THE HANDHOLE LOCATION PAYING PARTICULAR ATTENTION TO GAS AND FOREIGN UTILITY PLACEMENTS. RELOCATING THE HANDHOLE REQUIRES PRIOR APPROVAL FROM A CUSTOMER PROJECT PLANNER.

B. AFTER THE LOCATION IS ESTABLISHED, MARK OUT DIMENSIONS FOR THE EXCAVATION WIDTH, LENGTH AND DEPTH PER FIGURES 5 & 6. THE WIDTH AND LENGTH DIMENSIONS GIVEN ALLOW EXTRA SPACE FOR SETTING THE SUBSTRUCTURE AND TAMPING THE BACKFILL.

C. TO DETERMINE FINAL GRADE, MEASURE FROM THE TOP OF CURB OR ESTABLISHED GRADE.

D. WHEN EXCAVATION IS PREPARED, INSTALL A MINIMUM OF 2 INCHES CLASS 2 BASE, THEN INSTALL SUBSTRUCTURE SECTION(S). SET HANDHOLE AT FINAL GRADE. PLACE PLASTIC-MASTIC SEALANT BETWEEN ALL SECTIONS.

(E) INTENTIONALLY LEFT BLANK.

(F) IF RIGHT OF WAY OR OBSTRUCTIONS CAUSE A PROBLEM, THE HANDHOLE MAY BE TURNED TO WHERE THE LONG SIDE OF THE HANDHOLE PARALLELS THE SIDEWALK OR PROPERTY LINE. IF THE HANDHOLE HOUSES A CABLE TAP, THE HANDHOLE IS NOT TO BE TURNED AND THE TYPICAL PLAN VIEW OUTLINED IN THE STANDARD MUST BE FOLLOWED (CABLE TAP IS MOUNTED ON THE END OF HANDHOLE AND THE FIVE-FOOT CLEARANCE FOR HOT STICK OPERATION WOULD BE ON THE SIDEWALK SIDE OR PROPERTY LINE).

© 1998 - 2024 San Diego Gas & Electric Company. All rights reserved. Removal of this copyright notice without permission is not permitted under law.

REV	CHANGE	DR	BY	DSN	APV	DATE	REV	CHANGE	DR	BY	DSN	APV	DATE
C	DRAWING UPDATE	EDM	ADW	JES	CZH	10/04/2021	F	INSTALLATION UPDATE	GLC	JES	JAS	KRG	05/06/2024
B	ADD 3313 L & XL	-	-	GW	JS	06/01/2018	E	FIGURE UPDATE	TSA	EJA	EJA	KRG	08/29/2023
A	EDITORIAL CHANGES	-	-	JS	TR	05/26/2016	D	BILL OF MATERIALS UPDATE	ARC	ADW	JES	KRG	01/16/2023

TABLE OF CONTENTS

INSTALLATION (CONT'D):

(G) THE 6-INCH INTERMEDIATE SECTION IS NEEDED IN THE 3313 HANDHOLE FOR THE FOLLOWING SCENARIOS:

1. SECONDARY HANDHOLE WITH 2 OR MORE RUNS OF 350 CABLE
2. SECONDARY HANDHOLE WITH 7 OR 8 SECONDARY/SERVICE RUNS
3. PRIMARY ONLY HANDHOLE

(H) IF STANDARD DIMENSION CANNOT BE MET, FILL WITH 1-SACK SLURRY.

ATTENTION:

* LOCATE SECONDARY CONDUITS WITHIN 12 INCHES OF THE END OF THE HANDHOLE CLOSEST TO THE SIDEWALK.

** GENERAL INSTALLATION NOTES:

1. RACKS SHOULD BE LOCATED IN SUCH A WAY THAT THE OPEN LID DOES NOT IMPEDE ACCESS TO HANDHOLE EQUIPMENT.

BILL OF MATERIALS:

ITEM	DESCRIPTION	WEIGHT (LBS MAX.)	QUANTITY	STANDARD PAGE	STOCK NUMBER		DESIGN UNITS	
INTERMEDIATE SECTION AND MISCELLANEOUS ITEMS - ADD AS NEEDED								
1	EXTENSION, HANDHOLE, 6", 32" X 44", TOP	267	AS REQ'D	--	S336368	--	3313X1	--
2	LUBRICANT, SPRAY, 7 OZ, BOTTLE, EZ-1	--	AS REQ'D	--	S469764	--	--	
3	ITEM INTENTIONALLY LEFT BLANK							
4	SEALANT, PLASTIC-MASTIC JOINT, 30"	--	AS REQ'D	--	S631872	--	--	
PARKWAY 3313 EZ-LIFT ELECTRIC DISTRIBUTION HANDHOLE								
5	COVER, FRAME, AL, 3313 EZ LIFT	96	1	--	S286836	S400338	3313PKEZ	3313PCEZ
9	EXTENSION, HANDHOLE, 6", 32" X 44", INTE	285	1	--	S336218		3313X6	
10	BASE, HANDHOLE, 18", 32" X 44", 3313	885	1	--	S162664		3313-B	

NOTES:

(I) IF THE CUSTOMER IS REQUIRED TO INSTALL A HANDHOLE IN A SERVICE LATERAL, THE LID SHALL BE MARKED. "ELECTRIC" NOT "SDG&E".

(II) TO BE ORDERED ONLY FOR ADDITIONAL HEIGHT.

(III) NOT TO BE INSTALLED IN DIRECT TRAFFIC. APPROVED FOR USE IN AREAS OF INDIRECT TRAFFIC SUCH AS ALLEYWAYS, DRIVEWAYS, PARKING LOTS, ETC.

(IV) NOT SHOWN ON FIGURES

(V) ALLOWED ONLY IN AREAS WHERE NO TRAFFIC IS PERMITTED (E.G. SIDEWALKS, GRASS, ETC.)

(VI) INTENTIONALLY LEFT BLANK.

VII. ONLY HINGED COVERS SHOULD BE INSTALLED FOR NEW INSTALLATIONS OR HH REBUILD.

TABLE OF CONTENTS

© 1998 - 2024 San Diego Gas & Electric Company. All rights reserved. Removal of this copyright notice without permission is not permitted under law.

REV	CHANGE	DR	BY	DSN	APV	DATE	REV	CHANGE	DR	BY	DSN	APV	DATE
C	DRAWING UPDATE	EDM	ADW	JES	CZH	10/04/2021	F	INSTALLATION UPDATE	GLC	JES	JAS	KRG	05/06/2024
B	ADD 3313 L & XL	-	-	GW	JS	06/01/2018	E	FIGURE UPDATE	TSA	EJA	EJA	KRG	08/29/2023
A	EDITORIAL CHANGES	-	-	JS	TR	05/26/2016	D	BILL OF MATERIALS UPDATE	ARC	ADW	JES	KRG	01/16/2023

REFERENCE:

(a) SEE UG3211 FOR STRUCTURE/EQUIPMENT IDENTIFICATION - SUBSURFACE AND PAD MOUNTED.

b. SEE UG3302 FOR SUBSTRUCTURE APPLICATIONS.

c. SEE UG3306 FOR JOINT (PLASTIC-MASTIC) SEALING COMPOUND - INSTALLATION.

d. SEE UG3480, UG3482, AND UG3483 FOR MINIMUM OPERATING AND CLEARANCE REQUIREMENT.

e. SEE UG3485 FOR SUBSTRUCTURE INSTALLATION ON SLOPING GRADES.

f. SEE UG3486, UG3487, AND UG3488 FOR RETAINING WALL REQUIREMENTS AND CLEARANCES FROM REVERSE SUBGRADE RETAINING WALLS.

g. SEE UG3605 FOR SUBSTRUCTURE USE AND LIMITATIONS REFERENCE SHEET.

h. SEE UG3660 FOR SECTIONALIZING HANDHOLE - 200A, 6.9KV SINGLE-PHASE.

i. SEE UG3312 FOR POSITIONING SECONDARY CONDUITS.

j. AVAILABLE IN SERVICE STANDARDS AND GUIDE MANUAL.

k. SEE UG4540 FOR EQUIPMENT GROUNDING OF PRIMARY ONLY HANDHOLE.

TABLE OF CONTENTS

© 1998 - 2024 San Diego Gas & Electric Company. All rights reserved. Removal of this copyright notice without permission is not permitted under law.

REV	CHANGE	DR	BY	DSN	APV	DATE	REV	CHANGE	DR	BY	DSN	APV	DATE
C	DRAWING UPDATE	EDM	ADW	JES	CZH	10/04/2021	F	INSTALLATION UPDATE	GLC	JES	JAS	KRG	05/06/2024
B	ADD 3313 L & XL	-	-	GW	JS	06/01/2018	E	FIGURE UPDATE	TSA	EJA	EJA	KRG	08/29/2023
A	EDITORIAL CHANGES	-	-	JS	TR	05/26/2016	D	BILL OF MATERIALS UPDATE	ARC	ADW	JES	KRG	01/16/2023

X Indicates Latest Revision | Completely Revised | New Page | Information Removed

SDG&E ELECTRIC UNDERGROUND CONSTRUCTION STANDARDS

3313 NON-TRAFFIC RATED ELECTRIC DISTRIBUTION HANDHOLE
PRECAST CONCRETE
(OD - 44" X 32")

SCOPE: THIS STANDARD SHOWS THE INSTALLATION AND MATERIAL REQUIREMENTS FOR 3313-L, 3313-T, AND 3313-XL HANDHOLES.

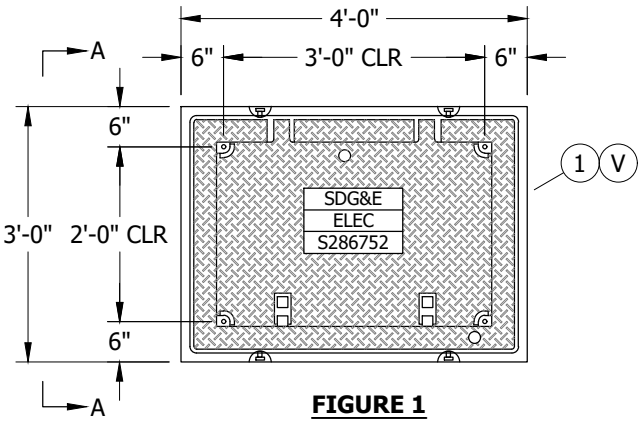

FIGURE 1
STEEL DIRECT TRAFFIC
FRAME AND HINGED COVER
3313-T ELECTRIC - HANDHOLE
PLAN VIEW

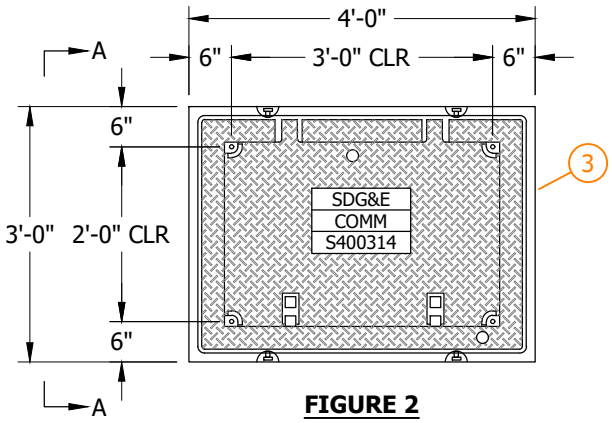

FIGURE 2
STEEL DIRECT TRAFFIC
FRAME AND HINGED COVER
3313-L COMM - HANDHOLE
PLAN VIEW

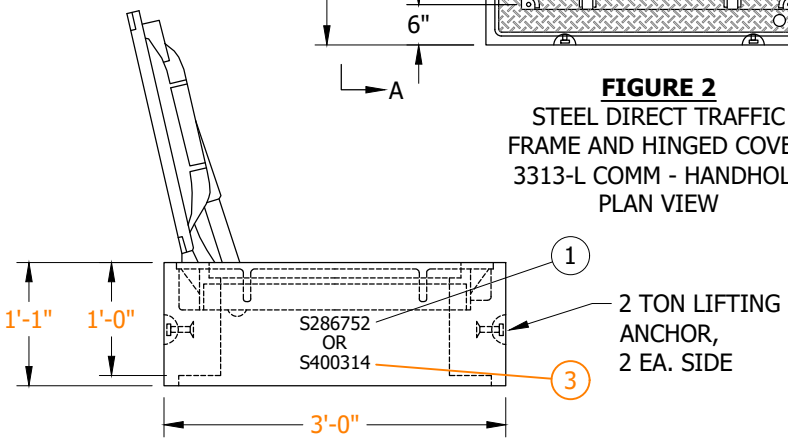

FIGURES 1 AND 2
STEEL DIRECT TRAFFIC FRAME AND HINGED COVER
3313-L COMM - HANDHOLE
3313-T ELECTRIC - HANDHOLE
VIEW A-A

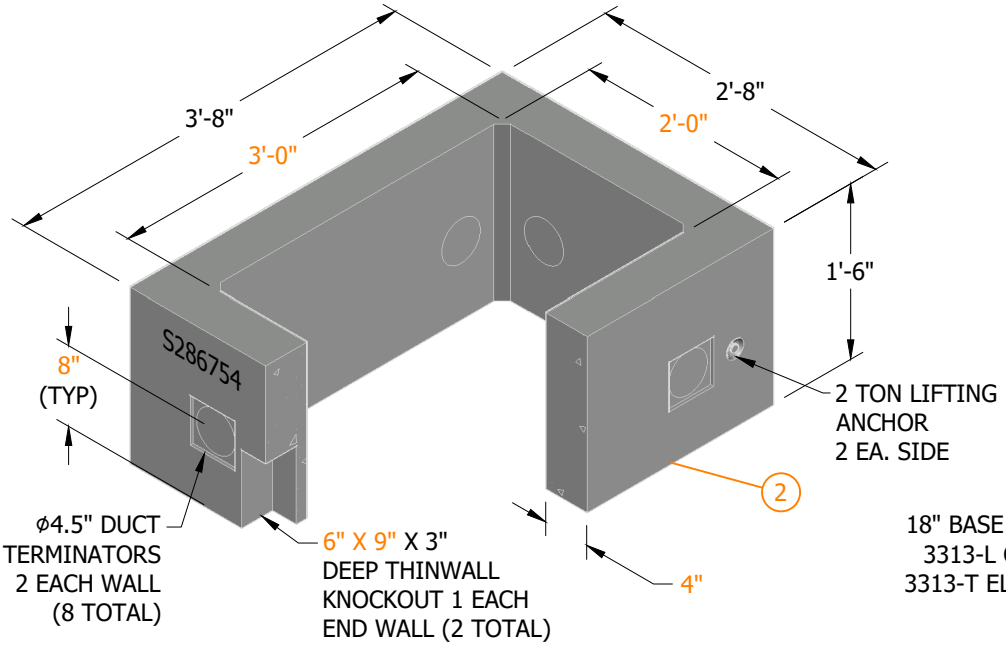

FIGURE 3
18" BASE SECTION USE WITH:
3313-L COMM - HANDHOLE
3313-T ELECTRIC - HANDHOLE

TABLE OF CONTENTS

© 1998 - 2024 San Diego Gas & Electric Company. All rights reserved. Removal of this copyright notice without permission is not permitted under law.

REV	CHANGE	DR	BY	DSN	APV	DATE	REV	CHANGE	DR	BY	DSN	APV	DATE
C	DRAWING UPDATE	EDM	ADW	JES	CZH	10/04/2021	F	INSTALLATION UPDATE	GLC	JES	JAS	KRG	05/06/2024
B	ADD 3313 L & XL	-	-	GW	JS	06/01/2018	E	FIGURE UPDATE	TSA	EJA	EJA	KRG	08/29/2023
A	EDITORIAL CHANGES	-	-	JS	TR	05/26/2016	D	BILL OF MATERIALS UPDATE	ARC	ADW	JES	KRG	01/16/2023

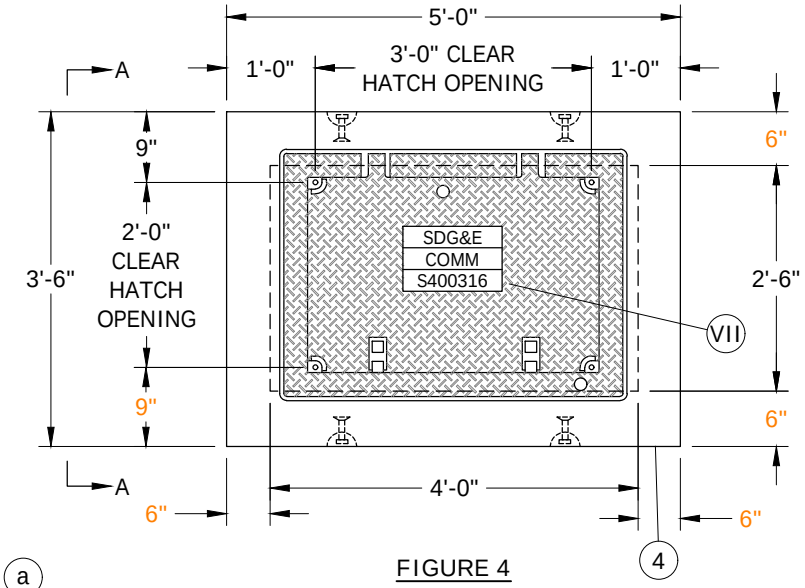

FIGURE 4
STEEL DIRECT TRAFFIC
FRAME AND HINGED COVER
3313-XL COMM - HANDHOLE
PLAN VIEW

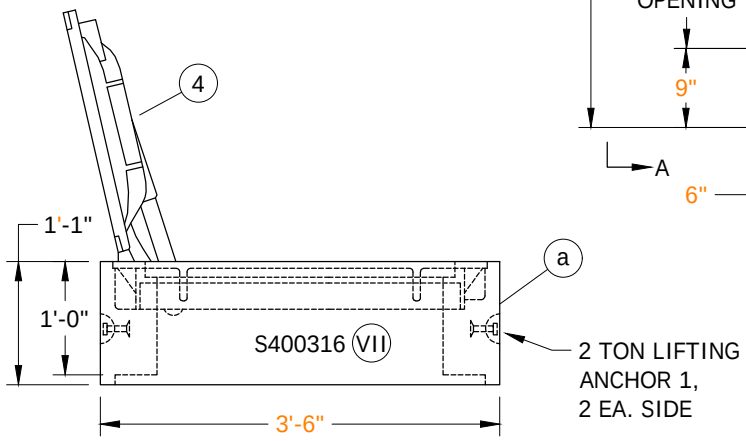

FIGURE 4
STEEL DIRECT TRAFFIC FRAME AND HINGED COVER
3313-XL COMM - HANDHOLE
VIEW A-A

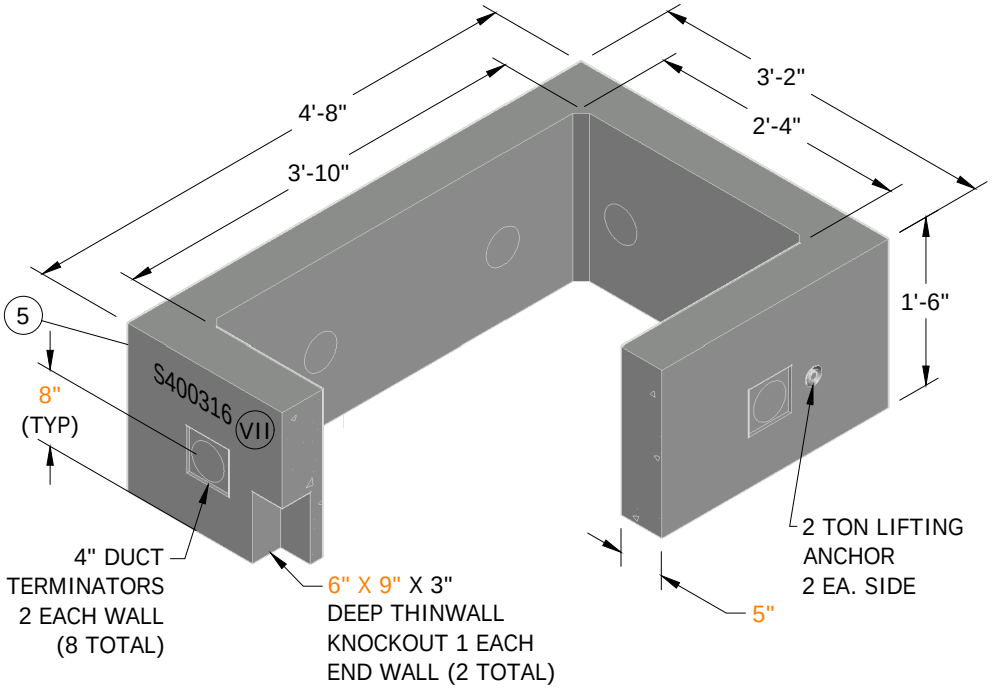

FIGURE 5
18" BASE SECTION
3313-XL COMM - HANDHOLE

TABLE OF CONTENTS

© 1998 - 2024 San Diego Gas & Electric Company. All rights reserved. Removal of this copyright notice without permission is not permitted under law.

REV	CHANGE	DR	BY	DSN	APV	DATE	REV	CHANGE	DR	BY	DSN	APV	DATE
C	DRAWING UPDATE	EDM	ADW	JES	CZH	10/04/2021	F	INSTALLATION UPDATE	GLC	JES	JAS	KRG	05/06/2024
B	ADD 3313 L & XL	-	-	GW	JS	06/01/2018	E	FIGURE UPDATE	TSA	EJA	EJA	KRG	08/29/2023
A	EDITORIAL CHANGES	-	-	JS	TR	05/26/2016	D	BILL OF MATERIALS UPDATE	ARC	ADW	JES	KRG	01/16/2023

X Indicates Latest Revision | Completely Revised | New Page | Information Removed

SDG&E ELECTRIC UNDERGROUND CONSTRUCTION STANDARDS

3313-XL DIRECT TRAFFIC RATED COMM HANDHOLE
PRECAST CONCRETE
(OD - 60" X 42")

UG3313.6

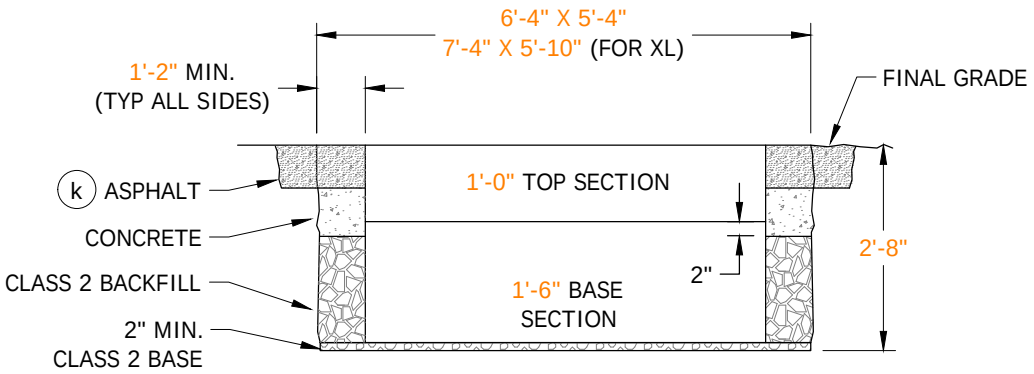

FIGURE 6
EXCAVATION DIMENSIONS

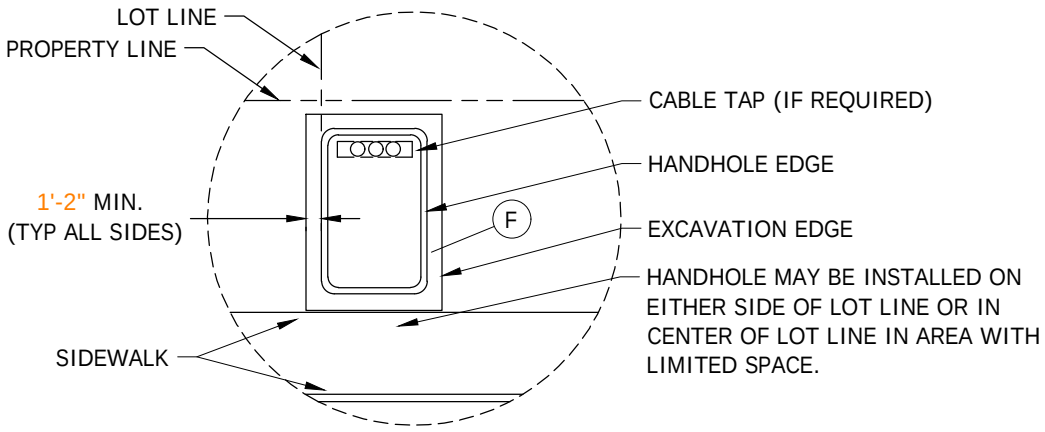

FIGURE 7
TYPICAL PLAN VIEW

INSTALLATION:

A. ESTABLISH THE HANDHOLE LOCATION PAYING PARTICULAR ATTENTION TO GAS AND FOREIGN UTILITY PLACEMENTS. RELOCATING THE HANDHOLE REQUIRES PRIOR APPROVAL FROM A CUSTOMER PROJECT PLANNER.

B. AFTER THE LOCATION IS ESTABLISHED, MARK OUT DIMENSIONS FOR THE EXCAVATION WIDTH, LENGTH AND DEPTH PER FIGURES 6 & 7. THE WIDTH AND LENGTH DIMENSIONS GIVEN ALLOW EXTRA SPACE FOR SETTING THE SUBSTRUCTURE AND TAMPING THE BACKFILL.

C. TO DETERMINE FINAL GRADE, MEASURE FROM THE TOP OF CURB OR ESTABLISHED GRADE.

D. WHEN EXCAVATION IS PREPARED, INSTALL A MINIMUM OF 2 INCHES CLASS 2 BASE, THEN INSTALL SUBSTRUCTURE SECTION. SET HANDHOLE AT FINAL GRADE. PLACE PLASTIC-MASTIC SEALANT BETWEEN ALL SECTIONS.

E. APPLY LOCTITE 720 HIGH STRENGTH STUDLOCK TO BOLTS WHEN SECURING THE COVERS. TIGHTEN DOWN BOLTS WITH TORQUE WRENCH TO REFUSAL.

(F) IF RIGHT OF WAY OR OBSTRUCTIONS CAUSE A PROBLEM, THE HANDHOLE MAY BE TURNED TO WHERE THE LONG SIDE OF THE HANDHOLE PARALLELS THE SIDEWALK OR PROPERTY LINE. IF THE HANDHOLE HOUSES A CABLE TAP, THE HANDHOLE IS NOT TO BE TURNED AND THE TYPICAL PLAN VIEW OUTLINED IN THE STANDARD MUST BE FOLLOWED (CABLE TAP IS MOUNTED ON THE END OF HANDHOLE AND THE FIVE-FOOT CLEARANCE FOR HOT STICK OPERATION WOULD BE ON THE SIDEWALK SIDE).

© 1998 - 2024 San Diego Gas & Electric Company. All rights reserved. Removal of this copyright notice without permission is not permitted under law.

REV	CHANGE	DR	BY	DSN	APV	DATE	REV	CHANGE	DR	BY	DSN	APV	DATE
C	DRAWING UPDATE	EDM	ADW	JES	CZH	10/04/2021	F	INSTALLATION UPDATE	GLC	JES	JAS	KRG	05/06/2024
B	ADD 3313 L & XL	-	-	GW	JS	06/01/2018	E	FIGURE UPDATE	TSA	EJA	EJA	KRG	08/29/2023
A	EDITORIAL CHANGES	-	-	JS	TR	05/26/2016	D	BILL OF MATERIALS UPDATE	ARC	ADW	JES	KRG	01/16/2023

X Indicates Latest Revision | Completely Revised | New Page | X Information Removed

SDG&E ELECTRIC UNDERGROUND CONSTRUCTION STANDARDS

3313-L, 3313-T, AND 3313-XL
DIRECT TRAFFIC RATED HANDHOLES - PRECAST CONCRETE
(OD - 48" X 36" OR 60" X 42")

UG3313.7

TABLE OF CONTENTS

ATTENTION:

* LOCATE SECONDARY CONDUITS WITHIN 12 INCHES OF THE END OF THE HANDHOLE CLOSEST TO THE SIDEWALK.

BILL OF MATERIALS:

ITEM	DESCRIPTION	WEIGHT (LBS MAX.)	QUANTITY	STANDARD PAGE	STOCK NUMBER		DESIGN UNITS	
DIRECT TRAFFIC RATED 3313-T AND 3313-L HANDHOLE (OD - 48" X 36")								
1	COVER, HANDHOLE, 3313-T	921	1	--	S286752	S400334 (IX)	3313T	COMPLETE ASSEMBLY 3313HTA
2	BASE, HANDHOLE, 18", 3313-L	878	1	--	S286754		--	
3	COVER, HANDHOLE, 3313-L (VIII)	921	1	--	--	S400314	3313LB	3313COMM
DIRECT TRAFFIC RATED 3313-XL HANDHOLE (OD - 60" X 42")								
4	COVER, HANDHOLE, 3313-XL	1,632	1	--	--	S400316	--	3313CM
5	BASE, HANDHOLE, 18", 3313-XL	1,169	1	--	--		--	

NOTES:

I. HANDHOLE SECTIONS AND PARKWAY COVERS FROM DIFFERENT SUPPLIERS ARE INTERCHANGEABLE.

II. THE PREFERRED LOCATION FOR A 3313 HANDHOLE IS IN NON-VEHICULAR TRAFFIC AREAS (BEHIND CURBS, PARKWAY POSITION, ETC.). USE A PARKWAY COVER IN THESE AREAS.

III. HANDHOLES WITH A DIRECT TRAFFIC COVER MAY BE INSTALLED IN AREAS WITH VEHICULAR TRAFFIC, BUT ONLY WHEN THERE IS NO NON-TRAFFIC LOCATION AVAILABLE.

IV. LIFTING ANCHORS ARE NOT TO BE USED FOR CABLE PULLING.

(V) IF THE CUSTOMER IS REQUIRED TO INSTALL A HANDHOLE IN A SERVICE LATERAL, THE LID SHALL BE MARKED. "ELECTRIC" NOT "SDG&E".

(VI) INTENTIONALLY LEFT BLANK.

(VII) INCLUDES ITEMS 4 AND 5.

(VIII) BASE SECTION S286754 IS NOT INCLUDED IN THIS STOCK NUMBER.

(IX) THIS STOCK CODE INCLUDES S286752 HINGED TOP SECTION AND S286754 18" BASE SECTION.

REFERENCE:

(a) SEE UG3211 FOR STRUCTURE/EQUIPMENT IDENTIFICATION - SUBSURFACE AND PAD MOUNTED.

b. SEE UG3302 FOR SUBSTRUCTURE APPLICATIONS.

c. SEE UG3306 FOR JOINT (PLASTIC-MASTIC) SEALING COMPOUND - INSTALLATION.

d. SEE UG3480, UG3482, AND UG3483 FOR MINIMUM OPERATING AND CLEARANCE REQUIREMENT.

e. SEE UG3485 FOR SUBSTRUCTURE INSTALLATION ON SLOPING GRADES.

f. SEE UG3486, UG3487, AND UG3488 FOR RETAINING WALL REQUIREMENTS AND CLEARANCES FROM REVERSE SUBGRADE RETAINING WALLS.

g. SEE UG3605 FOR SUBSTRUCTURE USE AND LIMITATIONS REFERENCE SHEET.

h. SEE UG3660 FOR SECTIONALIZING HANDHOLE - 200A, 6.9KV SINGLE-PHASE.

i. SEE UG3312 FOR POSITIONING SECONDARY CONDUITS.

j. AVAILABLE IN SERVICE STANDARDS AND GUIDE MANUAL.

(k) SEE CITY CODE FOR ASPHALT REQUIREMENTS.

TABLE OF CONTENTS

© 1998 - 2024 San Diego Gas & Electric Company. All rights reserved. Removal of this copyright notice without permission is not permitted under law.

REV	CHANGE	DR	BY	DSN	APV	DATE	REV	CHANGE	DR	BY	DSN	APV	DATE
C	DRAWING UPDATE	EDM	ADW	JES	CZH	10/04/2021	F	INSTALLATION UPDATE	GLC	JES	JAS	KRG	05/06/2024
B	ADD 3313 L & XL	-	-	GW	JS	06/01/2018	E	FIGURE UPDATE	TSA	EJA	EJA	KRG	08/29/2023
A	EDITORIAL CHANGES	-	-	JS	TR	05/26/2016	D	BILL OF MATERIALS UPDATE	ARC	ADW	JES	KRG	01/16/2023

SCOPE: THIS STANDARD SHOWS THE MATERIAL AND INSTALLATION REQUIREMENTS FOR A 3314 HANDHOLE.

ATTENTION:

* SLIP RESISTANT SURFACE REQUIRED.

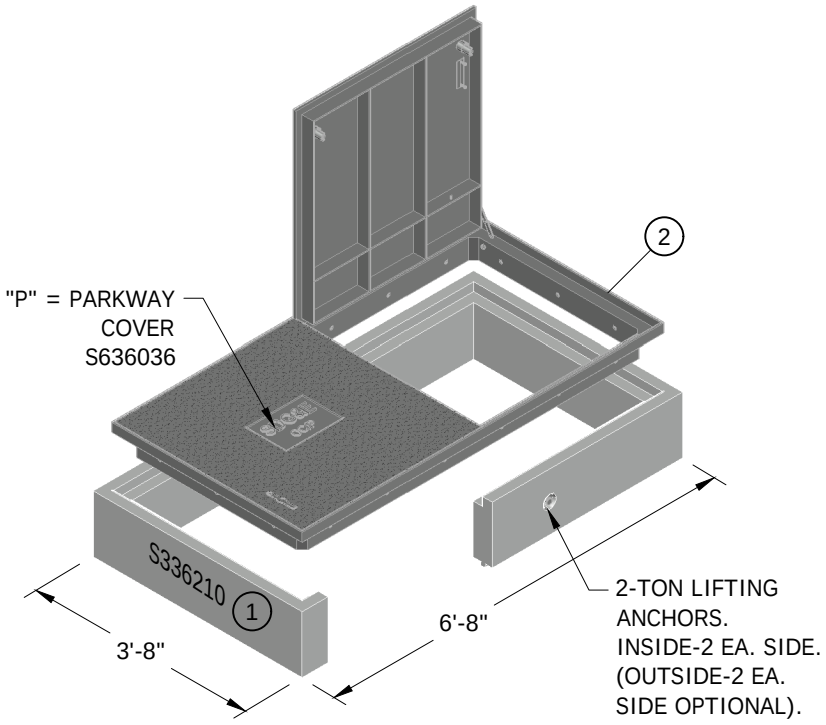

FIGURE 1
3314 CONCRETE PARKWAY
HANDHOLE COVER ASSEMBLY

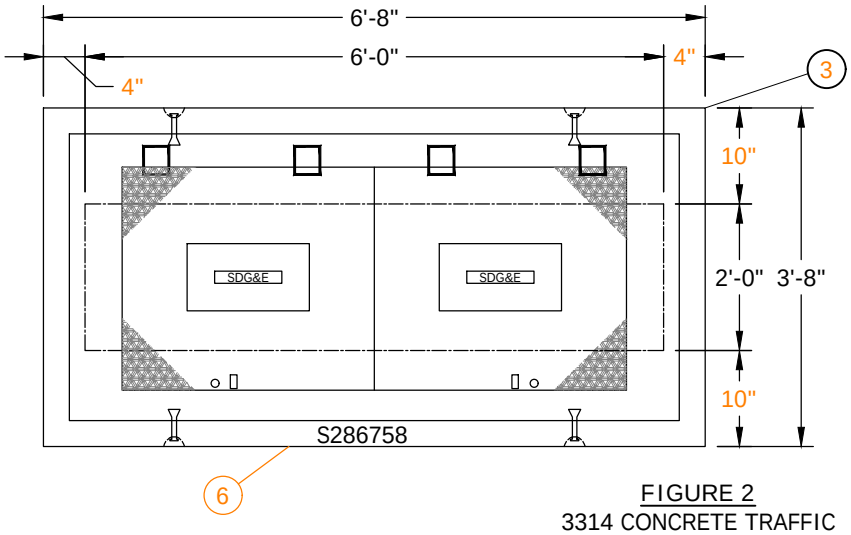

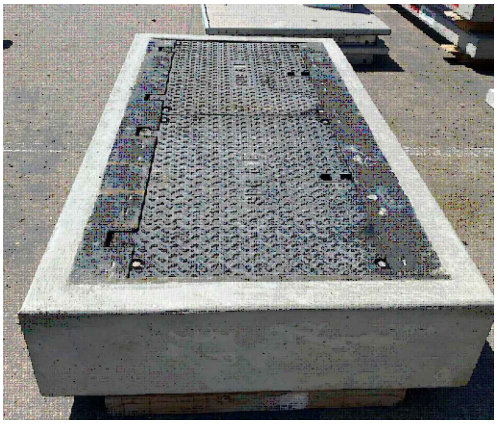

FIGURE 2
3314 CONCRETE TRAFFIC
HANDHOLE COVER ASSEMBLY

©1998 - 2024 San Diego Gas & Electric Company. All rights reserved. Removal of this copyright notice without permission is not permitted under law.

REV	CHANGE	DR	BY	DSN	APV	DATE	REV	CHANGE	DR	BY	DSN	APV	DATE
C	BILL OF MATERIALS UPDATE	ARC	ADW	JES	KRG	01/16/2023	F						
B	FIGURE UPDATE	EDM	ADW	JES	CZH	08/13/2021	E	BILL OF MATERIALS UPDATE	GLC	JES	JAS	KRG	05/01/2024
A	EDITORIAL CHANGES	-	JS	TR	MDJ	05/26/2016	D	FIGURE UPDATE	TSA	EJA	EJA	KRG	08/07/2023

TABLE OF CONTENTS



(OPEN FRONT VIEW)



(OPEN BACK VIEW)

FIGURE 2
3314 CONCRETE HANDHOLE COVER ASSEMBLY

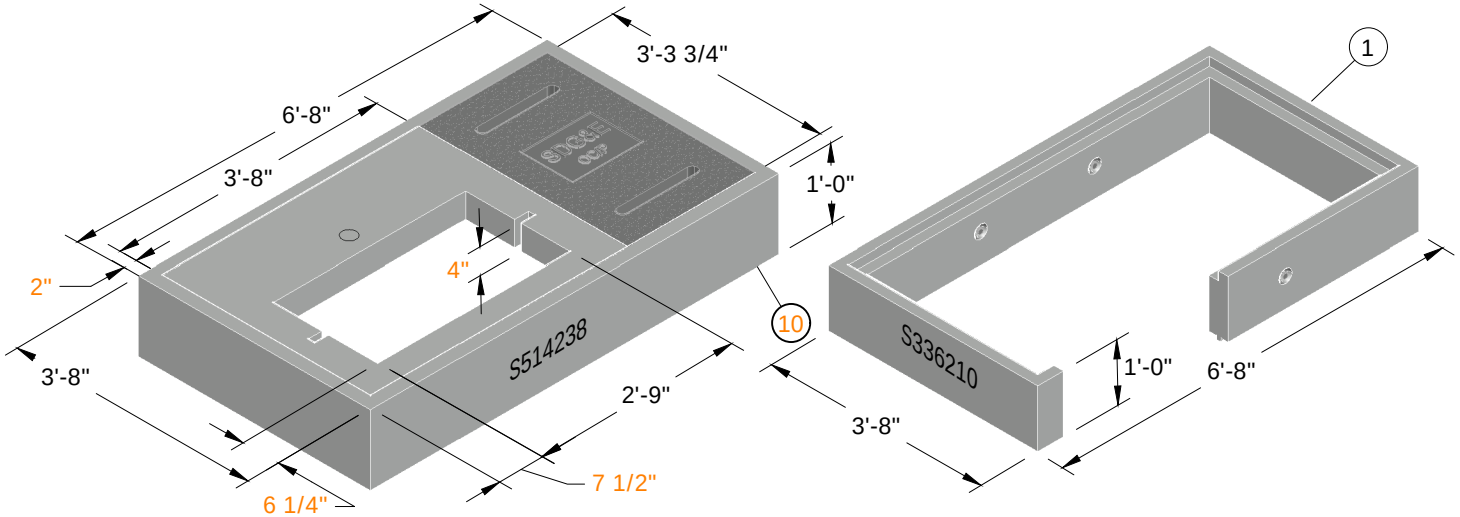

FIGURE 3
B-BOX COVER

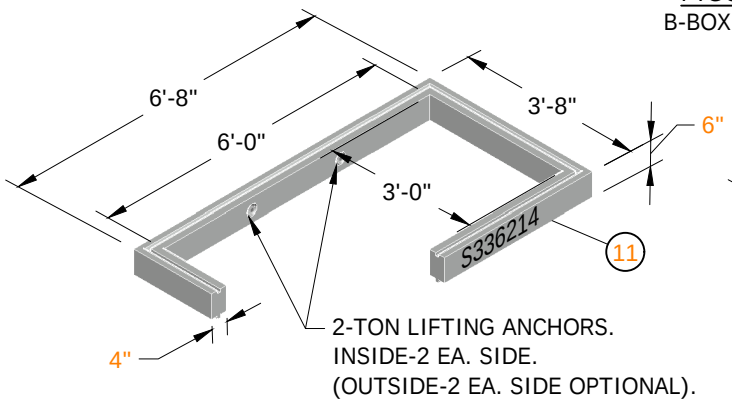

FIGURE 4
6" INTERMEDIATE EXTENSION SECTION

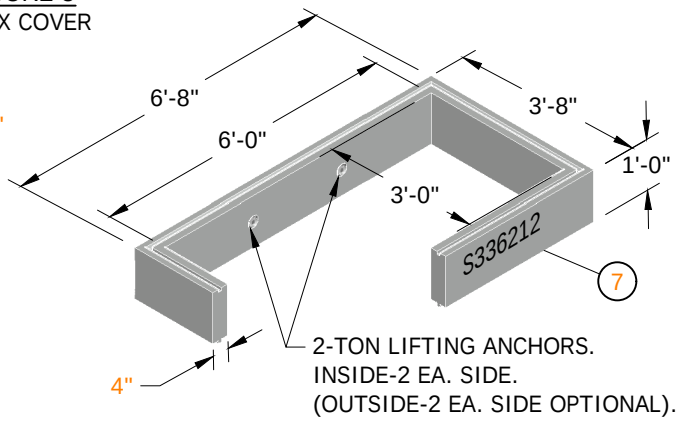

FIGURE 5
12" INTERMEDIATE EXTENSION SECTION (IV)

© 1998 - 2024 San Diego Gas & Electric Company. All rights reserved. Removal of this copyright notice without permission is not permitted under law.

REV	CHANGE	DR	BY	DSN	APV	DATE	REV	CHANGE	DR	BY	DSN	APV	DATE
C	BILL OF MATERIALS UPDATE	ARC	ADW	JES	KRG	01/16/2023	F						
B	FIGURE UPDATE	EDM	ADW	JES	CZH	08/13/2021	E	BILL OF MATERIALS UPDATE	GLC	JES	JAS	KRG	05/01/2024
A	EDITORIAL CHANGES	-	JS	TR	MDJ	05/26/2016	D	FIGURE UPDATE	TSA	EJA	EJA	KRG	08/07/2023

X Indicates Latest Revision | Completely Revised | New Page | Information Removed

SHEET 2 OF 7

SDG&E ELECTRIC UNDERGROUND CONSTRUCTION STANDARDS

HANDHOLE EQUIPMENT ENCLOSURE - CONCRETE
(INSIDE DIMENSIONS - 3'-0" X 6'-0")

UG3314.2

TABLE OF CONTENTS

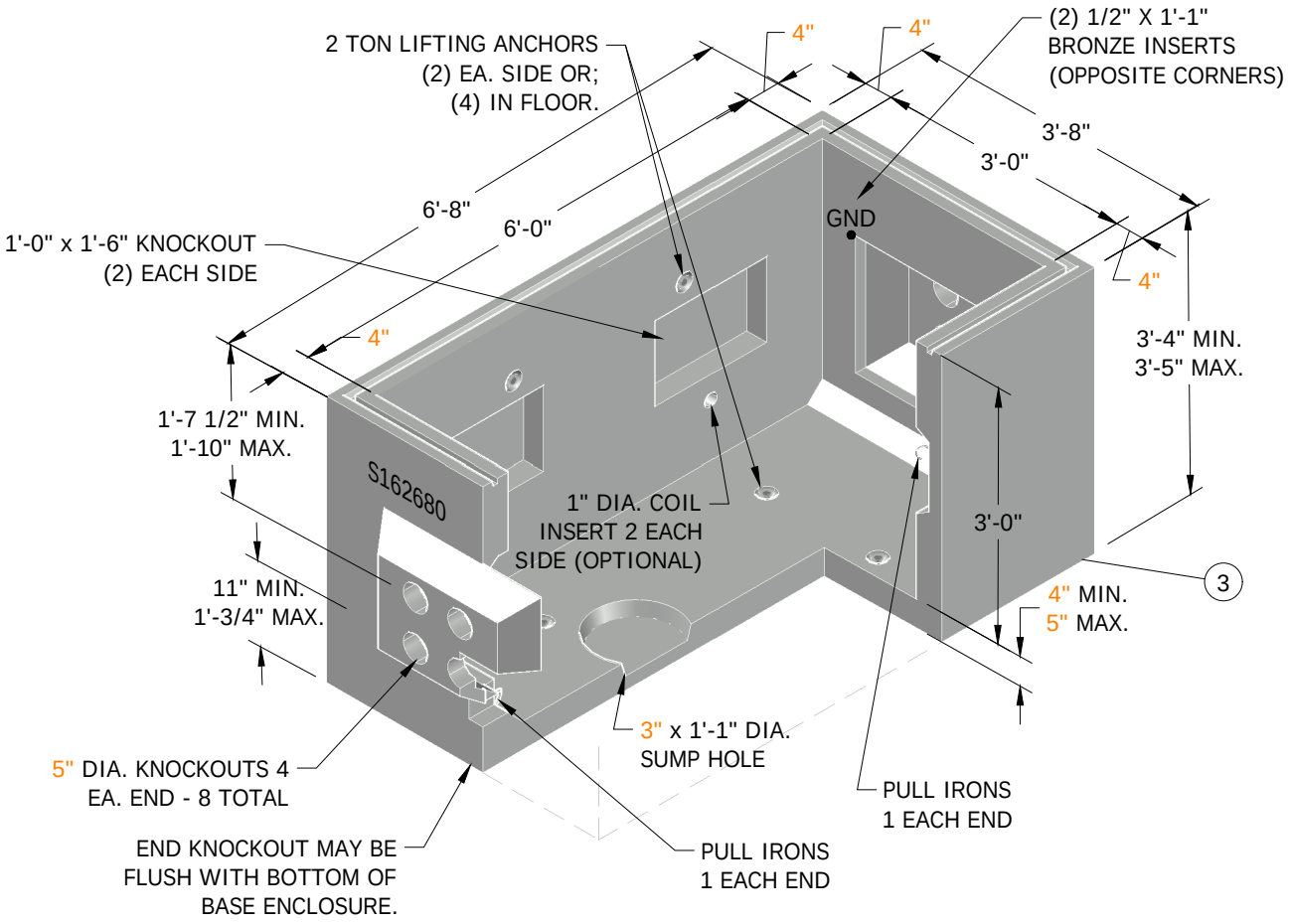

FIGURE 6
BASE ENCLOSURE
(3'X6'X3')

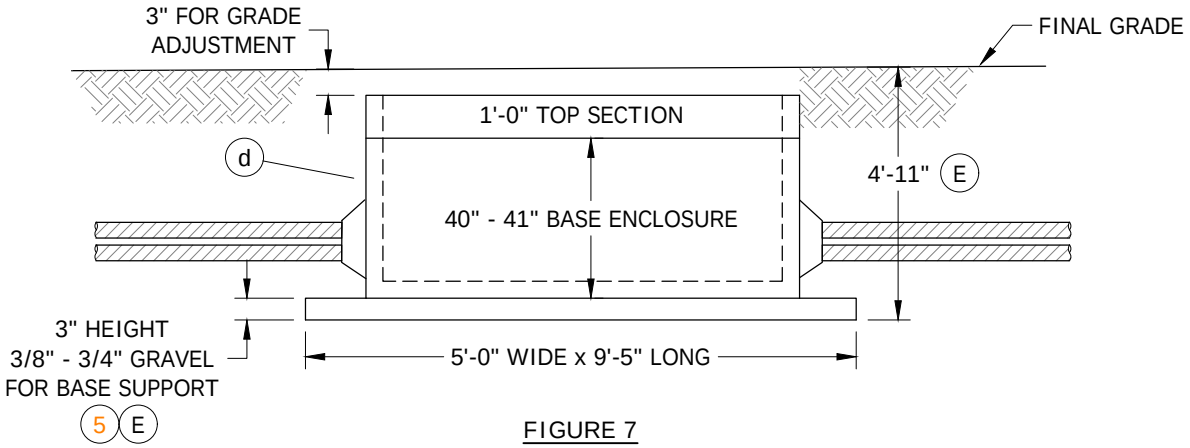

FIGURE 7
EXCAVATION DIMENSIONS
PARKWAY COVER ASSEMBLY

© 1998 - 2024 San Diego Gas & Electric Company. All rights reserved. Removal of this copyright notice without permission is not permitted under law.

REV	CHANGE	DR	BY	DSN	APV	DATE	REV	CHANGE	DR	BY	DSN	APV	DATE
C	BILL OF MATERIALS UPDATE	ARC	ADW	JES	KRG	01/16/2023	F						
B	FIGURE UPDATE	EDM	ADW	JES	CZH	08/13/2021	E	BILL OF MATERIALS UPDATE	GLC	JES	JAS	KRG	05/01/2024
A	EDITORIAL CHANGES	-	JS	TR	MDJ	05/26/2016	D	FIGURE UPDATE	TSA	EJA	EJA	KRG	08/07/2023

X Indicates Latest Revision | Completely Revised | New Page | Information Removed

SHEET
3 OF 7

SDG&E ELECTRIC UNDERGROUND CONSTRUCTION STANDARDS

HANDHOLE EQUIPMENT ENCLOSURE - CONCRETE
(INSIDE DIMENSIONS - 3'-0" X 6'-0")

UG3314.3

TABLE OF CONTENTS

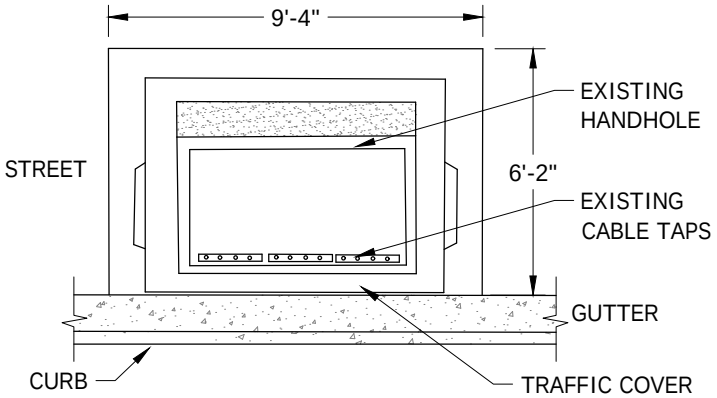

FIGURE 8
EXCAVATION DIMENSIONS TOP VIEW
TRAFFIC COVER ASSEMBLY
EXISTING HANDHOLE
WITH CABLE TAPS ON "CURB SIDE"

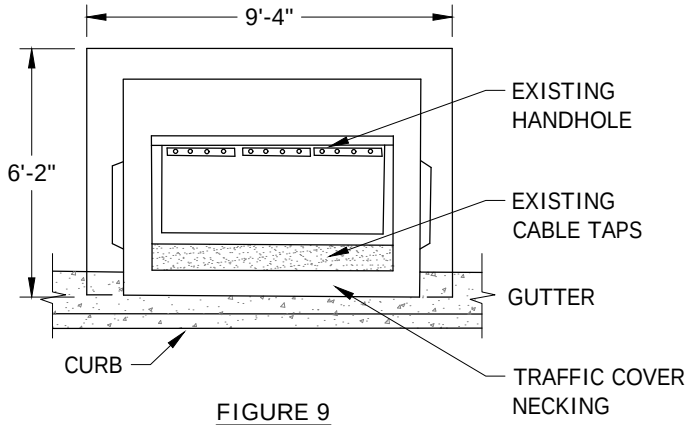

FIGURE 9
EXCAVATION DIMENSIONS TOP VIEW
TRAFFIC COVER ASSEMBLY
EXISTING HANDHOLE
WITH CABLE TAPS ON "STREET SIDE"

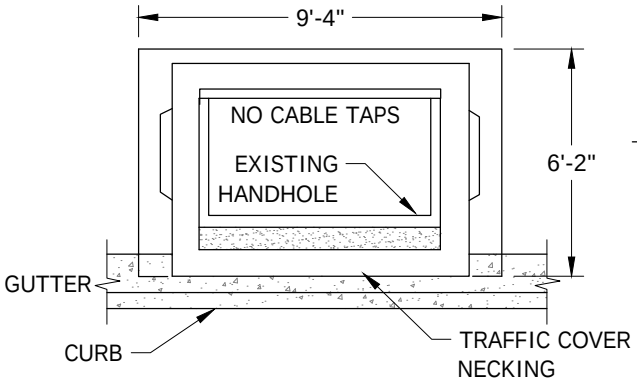

FIGURE 10
EXCAVATION DIMENSIONS TOP VIEW
TRAFFIC COVER ASSEMBLY
EXISTING HANDHOLE
NO CABLE TAPS

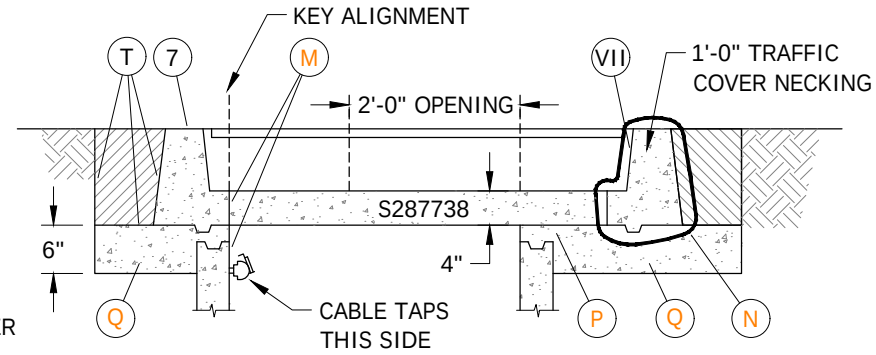

FIGURE 11
INSTALLATION DRAWING
BASE ENCLOSURE

INSTALLATION:

HANDHOLE WITH PARKWAY COVER ASSEMBLY

A. ESTABLISH THE HANDHOLE LOCATION PAYING PARTICULAR ATTENTION TO FOREIGN UTILITY PLACEMENTS. RELOCATING THE HANDHOLE REQUIRES APPROVAL FROM PROJECT MANAGEMENT.

B. AFTER THE LOCATION IS ESTABLISHED, MARK OUT DIMENSIONS FOR THE EXCAVATION WIDTH, LENGTH AND DEPTH PER FIGURE 8. THE WIDTH AND LENGTH DIMENSIONS GIVEN ALLOW AN EXTRA 8 INCHES FOR SETTING THE SUBSTRUCTURE.

C. EXCAVATION IS NOW PREPARED FOR INSTALLATION OF SUBSTRUCTURE SECTIONS. PLACE PLASTIC-MASTIC SEALANT BETWEEN ALL SECTIONS. DO NOT APPLY SEALANT UNDER THE TOP SECTION IF CONCRETE IS REQUIRED FOR GRADE ADJUSTMENT. ASSURE THE SUBSTRUCTURE WALLS ARE STRAIGHT AND THE FLOOR IS LEVEL.

D. TO DETERMINE FINAL GRADE ONE OF THE TWO FOLLOWING METHODS MAY BE USED:

1. WHEN CURB OR GRADE LEVEL IS ALREADY ESTABLISHED, MEASURE FROM THE TOP OF CURB OR GRADE.
2. HAVE THE FIELD ENGINEER SET GRADE STAKES. AFTER GRADE LEVEL IS ESTABLISHED, SET A STRING LINE FOR CHECKING GRADE LEVEL.

©1998 - 2024 San Diego Gas & Electric Company. All rights reserved. Removal of this copyright notice without permission is not permitted under law.

REV	CHANGE	DR	BY	DSN	APV	DATE	REV	CHANGE	DR	BY	DSN	APV	DATE
C	BILL OF MATERIALS UPDATE	ARC	ADW	JES	KRG	01/16/2023	F						
B	FIGURE UPDATE	EDM	ADW	JES	CZH	08/13/2021	E	BILL OF MATERIALS UPDATE	GLC	JES	JAS	KRG	05/01/2024
A	EDITORIAL CHANGES	-	JS	TR	MDJ	05/26/2016	D	FIGURE UPDATE	TSA	EJA	EJA	KRG	08/07/2023

X Indicates Latest Revision | Completely Revised | New Page | Information Removed

INSTALLATION (CONT'D):

(E) EXCAVATION DEPTH ALLOWS 3 INCHES FOR ADJUSTMENT TO FINAL GRADE AND AN ADDITIONAL 3 INCHES FOR PLACEMENT OF GRAVEL AS BASE SUPPORT.

F. ALIGN HANDHOLE COVER TO FINAL GRADE USING BRICKS OR WOODEN WEDGES. BEFORE POURING CONCRETE (4-SACK MIX WITH 3/8 INCH PEA GRAVEL, OR AS REQUIRED BY CITY OR COUNTY CODES), FRAME THE INSIDE OPEN AREA BETWEEN SECTIONS CONCRETE CAN BE POURED FROM THE OUTSIDE OF THE TOP COVER SECTION. MAKE SURE THE BRICKS OR WOODEN WEDGES DO NOT SHOW FROM THE INSIDE ONCE THE CONCRETE IS POURED. THE INSIDE FRAME MAY BE OMITTED IF THE CONCRETE IS NOT TOO WET. IF FRAME IS OMITTED, TROWEL CONCRETE SMOOTH ON THE INSIDE.

(G) APPLY LOCTITE 248 HIGH STRENGTH STUDLOCK TO THE PENTAHEAD BOLTS WHEN SECURING THE COVERS. TIGHTEN DOWN BOLTS WITH TORQUE WRENCH TO REFUSAL.

EXISTING HANDHOLE WITH A 3315 TRAFFIC COVER ASSEMBLY (FOR USE ONLY WHEN NEW 3314 TRAFFIC COVER IS NOT APPLICABLE)

H. ESTABLISH THE COVER LOCATION PAYING PARTICULAR ATTENTION TO FOREIGN UTILITY PLACEMENTS AND CHECK THE LOCATION OF ANY EXISTING CABLE TAPS.

J. AFTER THE LOCATION IS ESTABLISHED, MARK OUT DIMENSIONS FOR THE EXCAVATION WIDTH, LENGTH AND DEPTH PER FIGURES 8-10. THE WIDTH AND LENGTH DIMENSIONS GIVEN ALLOW AN EXTRA 8 INCHES FOR SETTING THE 3315 TRAFFIC COVER ASSEMBLY. EXCAVATING MUST BE DONE ACCURATELY FOR PROPER PLACEMENT OF THE "TRAFFIC COVER ASSEMBLY" ASSURING CABLE TAP ACCESS FOR HOT STICK OPERATION.

K. IF COVER IS GOING TO BE SET IN ANY PORTION OF A CONCRETE GUTTER OR STREET, THE CONCRETE MUST BE "SAWCUT" BEFORE EXCAVATING. ASPHALT MUST BE SCORED WITH A JACKHAMMER OR CLAYDIGGER. MEASURE AROUND EXISTING HANDHOLE AND CUT ACCORDINGLY.

L. DIG DOWN 18 INCHES AND REMOVE THE EXISTING TOP SECTION (OLD STYLE TWO PIECE METAL TRAFFIC COVER, SEE 3399.104). IF THE EXISTING TOP SECTION IS 24 INCHES, REMOVE IT AND REPLACE WITH A 12 INCHES INTERMEDIATE SECTION.

(M) SET THE TRAFFIC COVER USING THE INSIDE LIFTING ANCHORS TO PREVENT ANY PROBLEMS REMOVING THE LIFTING DEVICE. LINE UP THE INSIDE EDGE OF THE TRAFFIC COVER NECKING WITH THE INSIDE EDGE OF THE HANDHOLE INTERMEDIATE SECTION ON THE SAME SIDE THE CABLE TAPS ARE LOCATED. IF HANDHOLE DOES NOT HOUSE CABLE TAPS, ALIGN THE INSIDE EDGE OF THE 3315 HANDHOLE TRAFFIC COVER NECKING WITH THE INSIDE EDGE OF THE INTERMEDIATE HANDHOLE SECTION ON THE STREET SIDE. THIS IS THE KEY ALIGNMENT TO THE ENTIRE INSTALLATION. SEE FIGURE 11.

(N) IF ANY OF THE TRAFFIC COVER NECKING WILL BE SET IN CONCRETE (ALONG A CURB OR IN A CONCRETE STREET), WRAP 4 OR 6 MIL POLYETHYLENE SHEETING COMPLETELY AROUND THE NECKING AND TIE WITH TAPE. THIS WILL PREVENT EXISTING CONCRETE AND NEW CONCRETE FROM BONDING MAKING IT EASIER TO RAISE COVER IN THE FUTURE. SEE FIGURE 11.

O. TO DETERMINE FINAL GRADE, ONE OF THE TWO FOLLOWING METHODS MAY BE USED:

1. WHEN CURB OR GRADE LEVEL IS ALREADY ESTABLISHED, MEASURE FROM THE TOP OF CURB OR GRADE.
2. HAVE THE FIELD ENGINEER SET GRADE STAKES. AFTER GRADE LEVEL IS ESTABLISHED, SET A STRING LINE FOR CHECKING GRADE LEVEL.

(P) ALIGN TRAFFIC COVER NECKING TO GRADE USING BRICKS OR WOODEN WEDGES. POUR CONCRETE (4-SACK MIX WITH 3/8 INCH PEA GRAVEL OR AS REQUIRED BY CITY OR COUNTY CODES) INSIDE OF NECKING AND INTO THE OVERLAPPING AREA OF SECTIONS. SMOOTH CONCRETE WITH GROUT AND TROWEL. SEE FIGURE 11.

(Q) ON THE OUTSIDE OF THE NECKING, POUR AND PACK CONCRETE UNDERNEATH WITH A SHOVEL UP TO THE BOTTOM OF THE NECKING AND UP TO FINAL GRADE LEVEL AT THE CURB. SMOOTH OUT ANY EXCESS CONCRETE COMING THROUGH ON INSIDE OF HANDHOLE. TRIM AWAY EXCESS PLASTIC SHEETING. SEE FIGURE 11.

TABLE OF CONTENTS

© 1998 - 2024 San Diego Gas & Electric Company. All rights reserved. Removal of this copyright notice without permission is not permitted under law.

REV	CHANGE	DR	BY	DSN	APV	DATE	REV	CHANGE	DR	BY	DSN	APV	DATE
C	BILL OF MATERIALS UPDATE	ARC	ADW	JES	KRG	01/16/2023	F						
B	FIGURE UPDATE	EDM	ADW	JES	CZH	08/13/2021	E	BILL OF MATERIALS UPDATE	GLC	JES	JAS	KRG	05/01/2024
A	EDITORIAL CHANGES	-	JS	TR	MDJ	05/26/2016	D	FIGURE UPDATE	TSA	EJA	EJA	KRG	08/07/2023

INSTALLATION (CONT'D):

(T) BEFORE BACKFILLING, SPRAY RS-1 EMULSION TO THE INSIDE OF THE EXCAVATION TO HELP THE ASPHALT ADHERE. BACKFILL EXCAVATION WITH ASPHALT AND TAMP DOWN.

(U) APPLY LUBRICANT (EZ-1) TO THE PENTAHEAD BOLTS WHEN SECURING THE COVERS TO REDUCE REMOVAL OR INSTALLATION DIFFICULTIES. TIGHTEN DOWN BOLTS WITH TORQUE WRENCH TO REFUSAL.

ATTENTION:

* GENERAL INSTALLATION NOTES:

1. INSTALL HINGED SIDE ON SAME SIDE OF RACK OR EQUIPMENT.
2. RACKS SHOULD BE LOCATED IN SUCH A WAY THAT THE OPEN LID DOES NOT IMPEDE ACCESS TO HANDHOLE EQUIPMENT.
3. INSTALL HINGED SIDE AS THE SAME SIDE AS ROADSIDE OR CURB (IN MOST APPLICATIONS).

BILL OF MATERIALS:

ITEM	DESCRIPTION	WEIGHT (LBS MAX.)	QUANTITY	STANDARD PAGE	STOCK NUMBER	DESIGN UNITS	
PARKWAY 3314 HANDHOLE							
1	FRAME, HANDHOLE, 12", 44" X 80", PARKWAY (VII)	952	1	--	S336210	3314FO	COMPLETE ASSEMBLY 3314-PC (S400304)
2	COVER, FRAME, AL, 3314 EZ LIFT	225	1	--	S636036	3314PC	
3	ENCLOSE, HANDHOLE, 36", CONCRETE, BASE	4,470	1	--	S162680	3314-B	
4	SEALANT, PLASTIC-MASTIC JOINT, 30"	--	AS REQ'D	--	S631872	--	
5	GRAVEL, 3/8"-3/4"	--	AS REQ'D	--	--	--	--
TRAFFIC 3314 HANDHOLE							
3	ENCLOSE, HANDHOLE, 36", CONCRETE, BASE	4,470	AS REQ'D	--	S162680	3314-B	COMPLETE TRAFFIC ASSEMBLY 3314HTA (S400336)
6	COVER, 3314 TRAFFIC, TOP SECTION (IX)	2,393	AS REQ'D	--	S286758	3314T	
7	EXTENSION, HANDHOLE, 12", 44" X 80"	994	AS REQ'D	--	S336212	3314X1	
5	GRAVEL, 3/8"-3/4"	--	AS REQ'D	--	--	--	--
8	ITEMS INTENTIONALLY LEFT BLANK						
9							
B-BOX & EXTENSION SECTIONS - AS REQUIRED							
7	EXTENSION, HANDHOLE, 12", 44" X 80"	994	AS REQ'D	--	S336212	3314X1	--
10	PAD, COVER, 3314 B-BOX (XII)	--	1	--	S514238	3314BBCT	--
11	EXTENSION, HANDHOLE, 6", 44" X 80"	485	1	--	S336214	3314X2	--

TABLE OF CONTENTS

© 1998 - 2024 San Diego Gas & Electric Company. All rights reserved. Removal of this copyright notice without permission is not permitted under law.

REV	CHANGE	DR	BY	DSN	APV	DATE	REV	CHANGE	DR	BY	DSN	APV	DATE
C	BILL OF MATERIALS UPDATE	ARC	ADW	JES	KRG	01/16/2023	F						
B	FIGURE UPDATE	EDM	ADW	JES	CZH	08/13/2021	E	BILL OF MATERIALS UPDATE	GLC	JES	JAS	KRG	05/01/2024
A	EDITORIAL CHANGES	-	JS	TR	MDJ	05/26/2016	D	FIGURE UPDATE	TSA	EJA	EJA	KRG	08/07/2023

NOTES:

I. HANDHOLE SECTIONS AND PARKWAY COVERS FROM DIFFERENT SUPPLIERS ARE INTERCHANGEABLE.

II. CAST IRON COVERS FROM DIFFERENT SUPPLIERS ARE INTERCHANGEABLE. FOR CMP USE S787734 (3-PC) COVER, CAST-IRON, TRAFFIC & S156012 BOLT, PENTAHEAD, 1/2" X 2-1/2".

III. 3314 PARKWAY COVER ASSEMBLY IS TO BE USED IN NON-TRAFFIC AREAS. 3314 TRAFFIC COVER ASSEMBLY TO BE USED IN TRAFFIC AREAS.

(IV) TO BE ORDERED ONLY FOR ADDITIONAL HEIGHT.

(V) FOR USE IN TRANSFORMER INSTALLATIONS.

VI. LIFTING ANCHORS ARE NOT TO BE USED FOR CABLE PULLING.

(VII) WHEN TRAFFIC COVER IS REMOVED CHECK GASKET MATERIAL AND REPLACE AS NEEDED. SDG&E STOCK NUMBER (S341020).

MATERIAL CODE	DESCRIPTION
S246956	5/8" SOFT FILLER
S246958	7/8" SOFT FILLER
S246962	SELF-LEVELING LIQUID

(VIII) WEIGHT DOES NOT INCLUDE COVERS.

(IX) DESIGNED TO BE LIFTED AT 5,500 PSI WITH 4 LIFT CONNECTIONS EQUALLY LOADED TO 4 LIFTING POINTS AT A MINIMUM 90 DEG SLING ANGLE, MEASURED FROM HORIZONTAL.

XI. ONLY HINGED COVERS SHOULD BE USED ON NEW INSTALLATIONS OR HH REBUILD.

(XII) PAD, TRANSFORMER, SINGLE PHASE, WITH STEEL LID FOR 3314 (B-BOX).

REFERENCE:

(a) SEE UG3211 FOR STRUCTURE/EQUIPMENT IDENTIFICATION - SUBSURFACE AND PAD MOUNTED.

b. SEE UG3302 FOR SUBSTRUCTURE APPLICATIONS.

c. SEE UG3306 FOR JOINT (PLASTIC-MASTIC) SEALING COMPOUND - INSTALLATION.

(d) SEE UG3366 FOR SLURRY BACKFILL.

e. SEE UG3482 FOR MINIMUM OPERATING CLEARANCE REQUIREMENTS FOR SUBSURFACE EQUIPMENT.

f. SEE UG3485 FOR SUBSTRUCTURE INSTALLATION ON SLOPING GRADES.

g. SEE UG3486, UG3487, AND UG3488 FOR RETAINING WALL REQUIREMENTS AND CLEARANCES FROM REVERSE SUBGRADE RETAINING WALLS.

h. SEE UG3605 FOR SUBSTRUCTURE USE AND LIMITATIONS REFERENCE SHEET.

i. SEE UGL3399.105 AND UGL3399.106 FOR 3314 HANDHOLE REPAIR - "OLD STYLE" PARKWAY COVER.

j. AVAILABLE IN SERVICE STANDARDS AND GUIDE MANUAL.

TABLE OF CONTENTS

© 1998 - 2024 San Diego Gas & Electric Company. All rights reserved. Removal of this copyright notice without permission is not permitted under law.

REV	CHANGE	DR	BY	DSN	APV	DATE	REV	CHANGE	DR	BY	DSN	APV	DATE
C	BILL OF MATERIALS UPDATE	ARC	ADW	JES	KRG	01/16/2023	F						
B	FIGURE UPDATE	EDM	ADW	JES	CZH	08/13/2021	E	BILL OF MATERIALS UPDATE	GLC	JES	JAS	KRG	05/01/2024
A	EDITORIAL CHANGES	-	JS	TR	MDJ	05/26/2016	D	FIGURE UPDATE	TSA	EJA	EJA	KRG	08/07/2023

X Indicates Latest Revision | Completely Revised | New Page | Information Removed

SDG&E ELECTRIC UNDERGROUND CONSTRUCTION STANDARDS

HANDHOLE EQUIPMENT ENCLOSURE - CONCRETE
(INSIDE DIMENSIONS - 3'-0" X 6'-0")

UG3314.7

SCOPE: THIS STANDARD SHOWS THE INSTALLATION AND MATERIAL REQUIREMENT FOR A 3315 HANDHOLE.

ATTENTION:

* SLIP RESISTANT COATING REQUIRED.

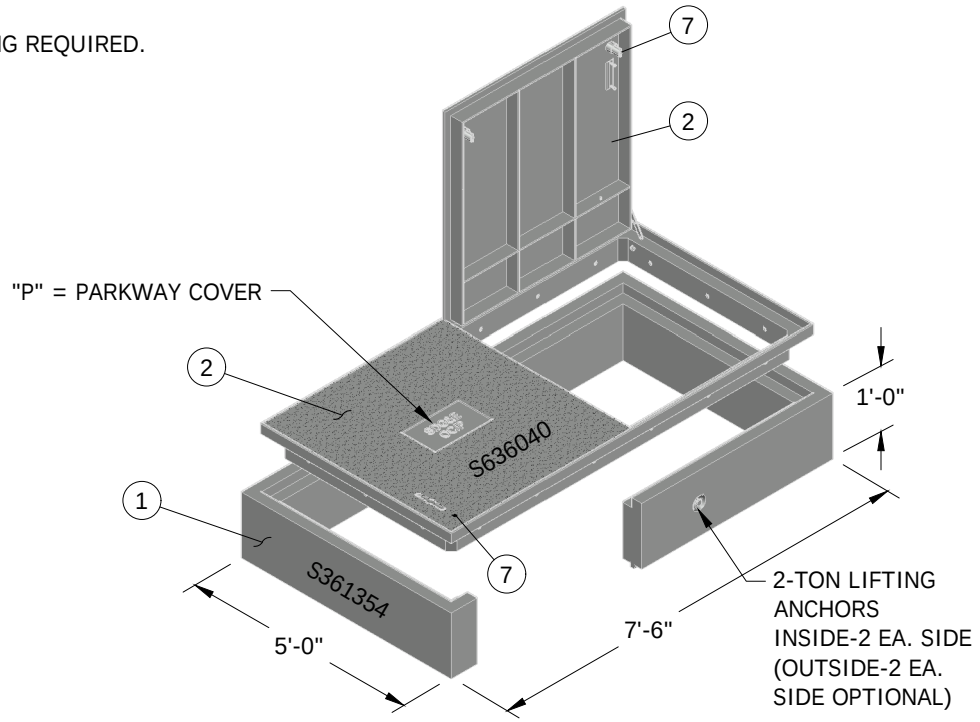

FIGURE 1
PARKWAY COVER ASSEMBLY
3315 HANDHOLE

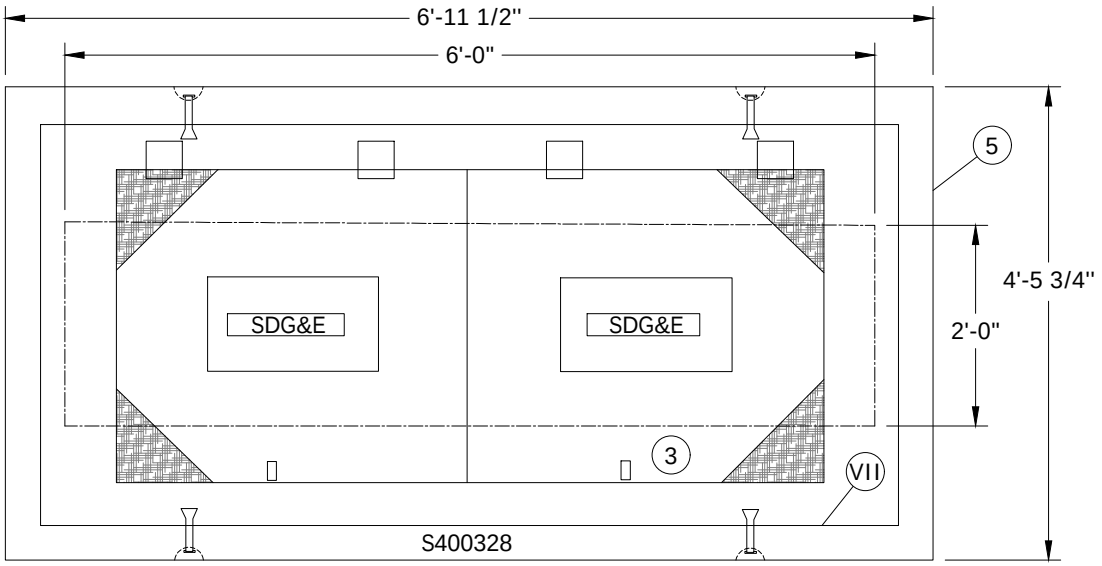

FIGURE 2
TRAFFIC COVER ONLY
3315 HANDHOLE

©1998 - 2024 San Diego Gas & Electric Company. All rights reserved. Removal of this copyright notice without permission is not permitted under law.

REV	CHANGE	DR	BY	DSN	APV	DATE	REV	CHANGE	DR	BY	DSN	APV	DATE
D	BILL OF MATERIALS UPDATE	ARC	ADW	JES	KRG	01/16/2023	G	BILL OF MATERIALS UPDATE	GLC	JES	JAS	KRG	04/30/2024
C	FORMATTING	EDM	JIK	-	-	10/27/2021	F	FIGURE UPDATE	TSA	EJA	EJA	KRG	07/28/2023
B	FIGURE UPDATE	-	ADW	JES	CZH	04/13/2020	E	FIGURE UPDATE	ARC	ADW	JES	KRG	03/09/2023

X Indicates Latest Revision | Completely Revised | New Page | Information Removed

SDG&E ELECTRIC UNDERGROUND CONSTRUCTION STANDARDS

HANDHOLE EQUIPMENT ENCLOSURE - CONCRETE
(INSIDE DIMENSIONS - 4'-0" X 6'-6")

UG3315.1

TABLE OF CONTENTS

TABLE OF CONTENTS

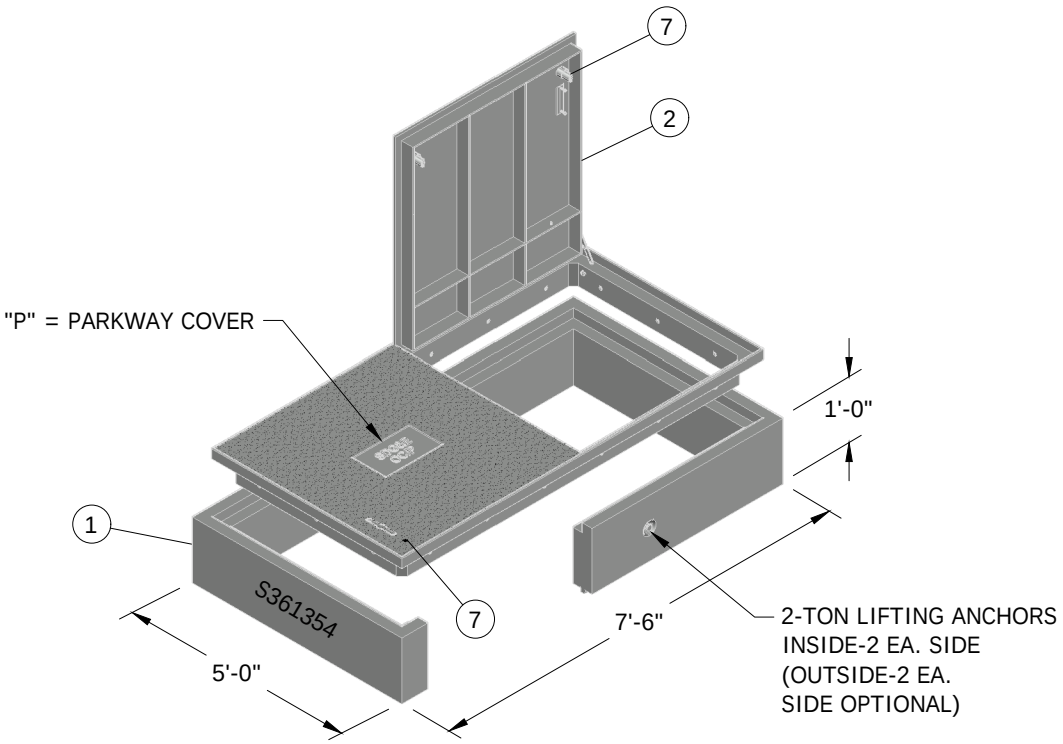

FIGURE 3
PARKWAY FLUSH COVER ASSEMBLY (G)

© 1998 - 2024 San Diego Gas & Electric Company. All rights reserved. Removal of this copyright notice without permission is not permitted under law.

REV	CHANGE	DR	BY	DSN	APV	DATE	REV	CHANGE	DR	BY	DSN	APV	DATE
D	BILL OF MATERIALS UPDATE	ARC	ADW	JES	KRG	01/16/2023	G	BILL OF MATERIALS UPDATE	GLC	JES	JAS	KRG	04/30/2024
C	FORMATTING	EDM	JIK	-	-	10/27/2021	F	FIGURE UPDATE	TSA	EJA	EJA	KRG	07/28/2023
B	FIGURE UPDATE	-	ADW	JES	CZH	04/13/2020	E	FIGURE UPDATE	ARC	ADW	JES	KRG	03/09/2023

X Indicates Latest Revision | Completely Revised | New Page | Information Removed

SDG&E ELECTRIC UNDERGROUND CONSTRUCTION STANDARDS

HANDHOLE EQUIPMENT ENCLOSURE - CONCRETE
(INSIDE DIMENSIONS - 4'-0" X 6'-6")

UG3315.2

TABLE OF CONTENTS

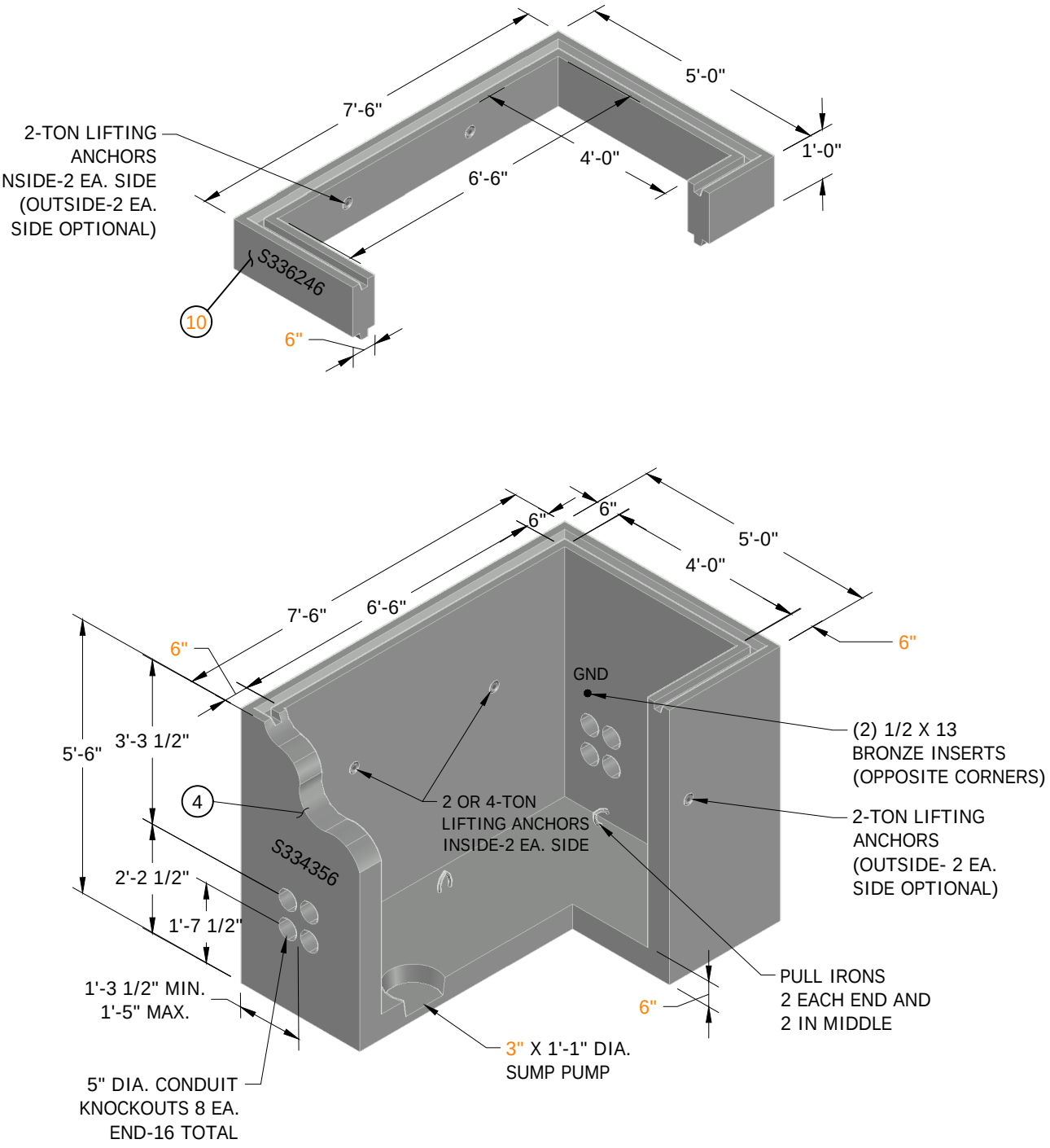

FIGURE 4
HANDHOLE BODY SECTIONS

© 1998 - 2024 San Diego Gas & Electric Company. All rights reserved. Removal of this copyright notice without permission is not permitted under law.

REV	CHANGE	DR	BY	DSN	APV	DATE	REV	CHANGE	DR	BY	DSN	APV	DATE
D	BILL OF MATERIALS UPDATE	ARC	ADW	JES	KRG	01/16/2023	G	BILL OF MATERIALS UPDATE	GLC	JES	JAS	KRG	04/30/2024
C	FORMATTING	EDM	JIK	-	-	10/27/2021	F	FIGURE UPDATE	TSA	EJA	EJA	KRG	07/28/2023
B	FIGURE UPDATE	-	ADW	JES	CZH	04/13/2020	E	FIGURE UPDATE	ARC	ADW	JES	KRG	03/09/2023

X	Indicates Latest Revision		Completely Revised	New Page	X Information Removed

SDG&E ELECTRIC UNDERGROUND CONSTRUCTION STANDARDS

HANDHOLE EQUIPMENT ENCLOSURE - CONCRETE
(INSIDE DIMENSIONS - 4'-0" X 6'-6")

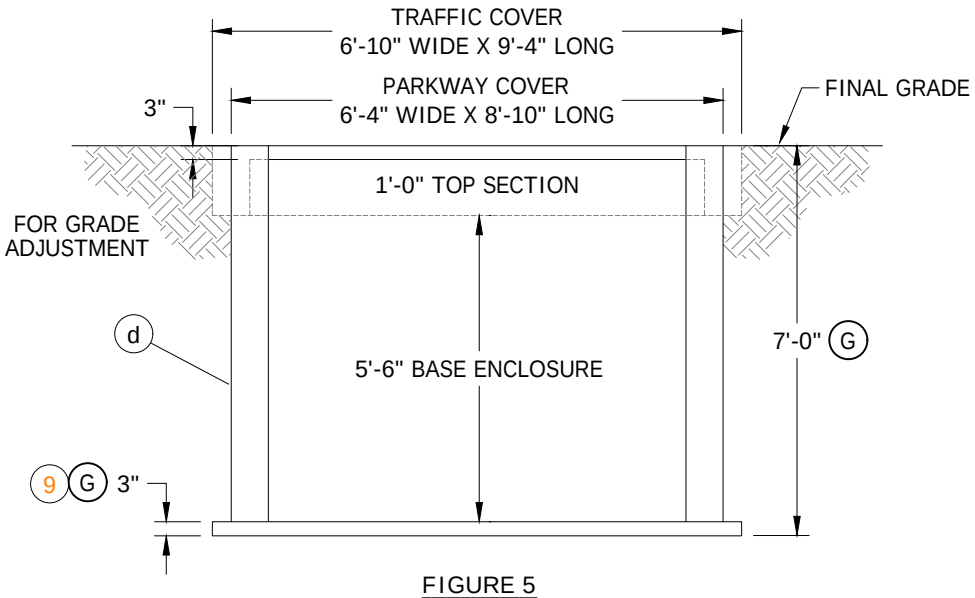

FIGURE 5
EXCAVATION DIMENSIONS

INSTALLATION:

A. ESTABLISH THE HANDHOLE LOCATION PAYING PARTICULAR ATTENTION TO FOREIGN UTILITY PLACEMENTS. RELOCATING THE HANDHOLE REQUIRES APPROVAL FROM PROJECT MANAGEMENT.

B. AFTER THE LOCATION IS ESTABLISHED MARK OUT DIMENSIONS FOR THE EXCAVATION WIDTH, LENGTH AND DEPTH PER FIGURE 5. THE WIDTH AND LENGTH DIMENSIONS GIVEN, ALLOW AN EXTRA 8 INCHES FOR SETTING THE SUBSTRUCTURE.

C. EXCAVATION IS NOW PREPARED FOR INSTALLATION OF SUBSTRUCTURE SECTIONS. PLACE PLASTIC-MASTIC SEALANT BETWEEN ALL SECTIONS. USE DOUBLE SEAL IF FIELD CONDITIONS INDICATE THAT WATER WILL PENETRATE THE JOINTS. DO NOT APPLY SEALANT UNDER THE TOP SECTION IF CONCRETE IS REQUIRED FOR GRADE ADJUSTMENT. ASSURE THE SUBSTRUCTURE WALLS ARE STRAIGHT AND THE FLOOR IS LEVEL.

D. TO DETERMINE FINAL GRADE, ONE OF THE FOLLOWING METHODS MAY BE USED:

1. WHEN CURB OR GRADE LEVEL IS ALREADY ESTABLISHED, MEASURE FROM THE TOP OF CURB OR GRADE OR
2. HAVE THE FIELD ENGINEER SET THE GRADE STAKES. AFTER GRADE LEVEL IS ESTABLISHED, SET A STRING LINE FOR CHECKING GRADE LEVEL.

E. ALIGN HANDHOLE COVER TO FINAL GRADE USING BRICKS OR WOODEN WEDGES. BEFORE POURING CONCRETE (4-SACK MIX WITH 3/8-INCH PEA GRAVEL OR AS REQUIRED BY CITY OR COUNTY CODES), FRAME THE INSIDE OPEN AREA BETWEEN SECTIONS SO CONCRETE CAN BE POURED FROM THE OUTSIDE OF THE TOP COVER SECTION. MAKE SURE THE BRICKS OR WOODEN WEDGES DO NOT SHOW FROM THE INSIDE ONCE THE CONCRETE IS POURED. THE INSIDE FRAME MAY BE OMITTED IF THE CONCRETE IS NOT TOO WET. IF FRAME IS OMITTED, TROWEL CONCRETE SMOOTH ON THE INSIDE.

F. INSTALL CONDUITS USING THE BOTTOM OUTSIDE (CLOSEST TO THE WALL) KNOCKOUTS FIRST.

(G) EXCAVATION DEPTH ALLOWS 3 INCHES FOR ADJUSTMENT TO FINAL GRADE AND AN ADDITIONAL 3 INCHES FOR REPLACEMENT OF GRAVEL AS BASE SUPPORT.

H. APPLY LOCTITE 248 HIGH STRENGTH STUDLOCK TO THE PENTAHEAD BOLTS WHEN SECURING THE COVERS. TIGHTEN DOWN BOLTS WITH TORQUE WRENCH TO REFUSAL.

© 1998 - 2024 San Diego Gas & Electric Company. All rights reserved. Removal of this copyright notice without permission is not permitted under law.

REV	CHANGE	DR	BY	DSN	APV	DATE	REV	CHANGE	DR	BY	DSN	APV	DATE
D	BILL OF MATERIALS UPDATE	ARC	ADW	JES	KRG	01/16/2023	G	BILL OF MATERIALS UPDATE	GLC	JES	JAS	KRG	04/30/2024
C	FORMATTING	EDM	JIK	-	-	10/27/2021	F	FIGURE UPDATE	TSA	EJA	EJA	KRG	07/28/2023
B	FIGURE UPDATE	-	ADW	JES	CZH	04/13/2020	E	FIGURE UPDATE	ARC	ADW	JES	KRG	03/09/2023

X Indicates Latest Revision | Completely Revised | New Page | Information Removed

SDG&E ELECTRIC UNDERGROUND CONSTRUCTION STANDARDS

HANDHOLE EQUIPMENT ENCLOSURE - CONCRETE
(INSIDE DIMENSIONS - 4'-0" X 6'-6")

UG3315.4

TABLE OF CONTENTS

ATTENTION:

* GENERAL INSTALLATION NOTES:

1. INSTALL HINGED SIDE ON SAME SIDE OF RACK OR EQUIPMENT.
2. RACKS SHOULD BE LOCATED IN SUCH A WAY THAT THE OPEN LID DOES NOT IMPEDE ACCESS TO HANDHOLE EQUIPMENT.
3. INSTALL HINGED SIDE AS THE SAME SIDE AS ROADSIDE OR CURB (IN MOST APPLICATIONS).

BILL OF MATERIALS:

PARKWAY 3315 HANDHOLE								
ITEM	DESCRIPTION	WEIGHT (LBS MAX.)	QUANTITY	STANDARD PAGE	STOCK NUMBER	STOCK NUMBER	DESIGN UNITS	
1	FRAME, HANDHOLE, 12", 60" X 90", PARKWAY (IX)	1,690	1	-	S361354	S400306 (VIII)	3315FO	3315PC
2	COVER, FRAME, AL, 3315 EZ LIFT	290	1	-	S636040		3315AL	
	COVER, HANDHOLE PARKWAY, GLV, 3315 TOP	-	1	-	-		-	
					S286736 (XII)		7CO-15 (XII)	
4	ENCLOSURE, HANDHOLE, 66", CONCRETE, BASE	11,320	1	-	S334356		3315BSEC	
7	BOLT, PENTAHEAD, SS, 1/2" X 2-1/2"	-	12	-	S156012 (X)		-	
5	SEALANT, PLASTIC-MASTIC JOINT, 30" (XIII)	-	AS REQ'D	-	S631872	-	-	
6	LUBRICANT, SPRAY, 7 OZ, BOTTLE, EZ-1 (XIII)	-	AS REQ'D	-	S469764	-	-	-
10	EXTENSION, HANDHOLE, 12", 60" X 90"	1,725	AS REQ'D	-	S336246	-	3315X1	-
11	ITEM INTENTIONALLY LEFT BLANK							
9	GRAVEL, 3/8" - 3/4"	-	AS REQ'D	-	-	-	-	-
TRAFFIC 3315 HANDHOLE								
3	HANDHOLE, HINGED COVERS, 3315 TRAFFIC	3,037	1	-	S400328	S400332	3315HTC	COMPLETE TRAFFIC ASSEMBLY 3315HTA (S400332)
4	ENCLOSURE, HANDHOLE, 66", CONCRETE, BASE	11,320	1	-	S334356		3315BSEC	
5	SEALANT, PLASTIC-MASTIC JOINT, 30"	-	AS REQ'D	-	S631872		-	
6	LUBRICANT, SPRAY, 7 OZ, BOTTLE, EZ-1 (XIII)	-	AS REQ'D	-	S469764		-	
10	EXTENSION, HANDHOLE, 12", 60" X 90"	1,725	AS REQ'D	-	S336246		3315X1	
8	ITEM INTENTIONALLY LEFT BLANK							
9	GRAVEL, 3/8"-3/4"	-	AS REQ'D	-	-	-	-	-

TABLE OF CONTENTS

© 1998 - 2024 San Diego Gas & Electric Company. All rights reserved. Removal of this copyright notice without permission is not permitted under law.

REV	CHANGE	DR	BY	DSN	APV	DATE	REV	CHANGE	DR	BY	DSN	APV	DATE
D	BILL OF MATERIALS UPDATE	ARC	ADW	JES	KRG	01/16/2023	G	BILL OF MATERIALS UPDATE	GLC	JES	JAS	KRG	04/30/2024
C	FORMATTING	EDM	JIK	-	-	10/27/2021	F	FIGURE UPDATE	TSA	EJA	EJA	KRG	07/28/2023
B	FIGURE UPDATE	-	ADW	JES	CZH	04/13/2020	E	FIGURE UPDATE	ARC	ADW	JES	KRG	03/09/2023

NOTES:

I. HANDHOLE SECTIONS AND PARKWAY COVERS FROM DIFFERENT SUPPLIERS ARE INTERCHANGEABLE.

II. CAST IRON COVERS FROM DIFFERENT SUPPLIERS ARE INTERCHANGEABLE. FOR CMP USE S287734 (3-PC) COVER, CAST-IRON, TRAFFIC & S156012 BOLT, PENTAHEAD, 1/2" X 2-1/2".

III. THE PREFERRED LOCATION FOR A 3315 HANDHOLE IS IN NONVEHICULAR TRAFFIC AREAS (BEHIND CURBS, PARKWAY POSITION, ETC.). USE A PARKWAY COVER IN THESE AREAS.

IV. HANDHOLES WITH A TRAFFIC COVER MAY BE INSTALLED IN AREAS WITH VEHICULAR TRAFFIC, BUT ONLY WHEN THERE IS NO NON-TRAFFIC LOCATION AVAILABLE.

V. LIFTING ANCHORS ARE NOT TO BE USED FOR CABLE PULLING.

VI. 3315 HANDHOLES ARE DELIVERED BY THE SUPPLIER TO JOB SITE.

(VII) WHEN TRAFFIC COVER IS REMOVED CHECK GASKET MATERIAL AND REPLACE AS NEEDED. SDG&E STOCK NUMBER (S341020).

MATERIAL CODE	DESCRIPTION
S246956	5/8" SOFT FILLER
S246958	7/8" SOFT FILLER
S246962	SELF-LEVELING LIQUID

(VIII) DOES NOT INCLUDE FLUSH MOUNT COVER.

(IX) WEIGHT DOES NOT INCLUDE COVERS.

(X) THIS ITEM IS EXEMPT.

(XI) USED ONLY FOR CMP REPLACEMENTS. S286986 MOVED TO FMO.

(XII) USED FOR NEW CONSTRUCTION AND NON-CMP RELATED REPLACEMENTS.

(XIII) NOT SHOWN OF FIGURES.

REFERENCE:

(a) SEE UG3211 AND UG3212 FOR INSTALLATION OF IDENTIFICATION TAG.

b. SEE UG3302 FOR SUBSTRUCTURE APPLICATIONS.

c. SEE UG3306 FOR JOINT (PLASTIC-MASTIC) SEALING COMPOUND - INSTALLATION.

(d) SEE UG3366 FOR SLURRY BACKFILL.

e. SEE UG3480, UG3481, UG3482, AND UG3483 FOR MINIMUM OPERATING AND CLEARANCE REQUIREMENT.

f. SEE UG3485 FOR SUBSTRUCTURE INSTALLATION ON SLOPING GRADES.

g. SEE UG3486, UG3487, AND UG3488 FOR RETAINING WALL REQUIREMENTS AND CLEARANCES FROM REVERSE SUBGRADE RETAINING WALLS.

h. SEE UG3605 FOR SUBSTRUCTURE USE AND LIMITATIONS REFERENCE SHEET.

i. AVAILABLE IN SERVICE STANDARDS AND GUIDE MANUAL.

TABLE OF CONTENTS

© 1998 - 2024 San Diego Gas & Electric Company. All rights reserved. Removal of this copyright notice without permission is not permitted under law.

REV	CHANGE	DR	BY	DSN	APV	DATE	REV	CHANGE	DR	BY	DSN	APV	DATE
D	BILL OF MATERIALS UPDATE	ARC	ADW	JES	KRG	01/16/2023	G	BILL OF MATERIALS UPDATE	GLC	JES	JAS	KRG	04/30/2024
C	FORMATTING	EDM	JIK	-	-	10/27/2021	F	FIGURE UPDATE	TSA	EJA	EJA	KRG	07/28/2023
B	FIGURE UPDATE	-	ADW	JES	CZH	04/13/2020	E	FIGURE UPDATE	ARC	ADW	JES	KRG	03/09/2023

X	Indicates Latest Revision		Completely Revised		New Page
X	Information Removed				

SDG&E ELECTRIC UNDERGROUND CONSTRUCTION STANDARDS

HANDHOLE EQUIPMENT ENCLOSURE - CONCRETE
(INSIDE DIMENSIONS - 4'-0" X 6'-6")

UG3315.6

SCOPE: THIS STANDARD SHOWS THE INSTALLATION AND MATERIAL REQUIREMENTS FOR A 3316 HANDHOLE.

ATTENTION:

* SLIP RESISTANT COATING REQUIRED.

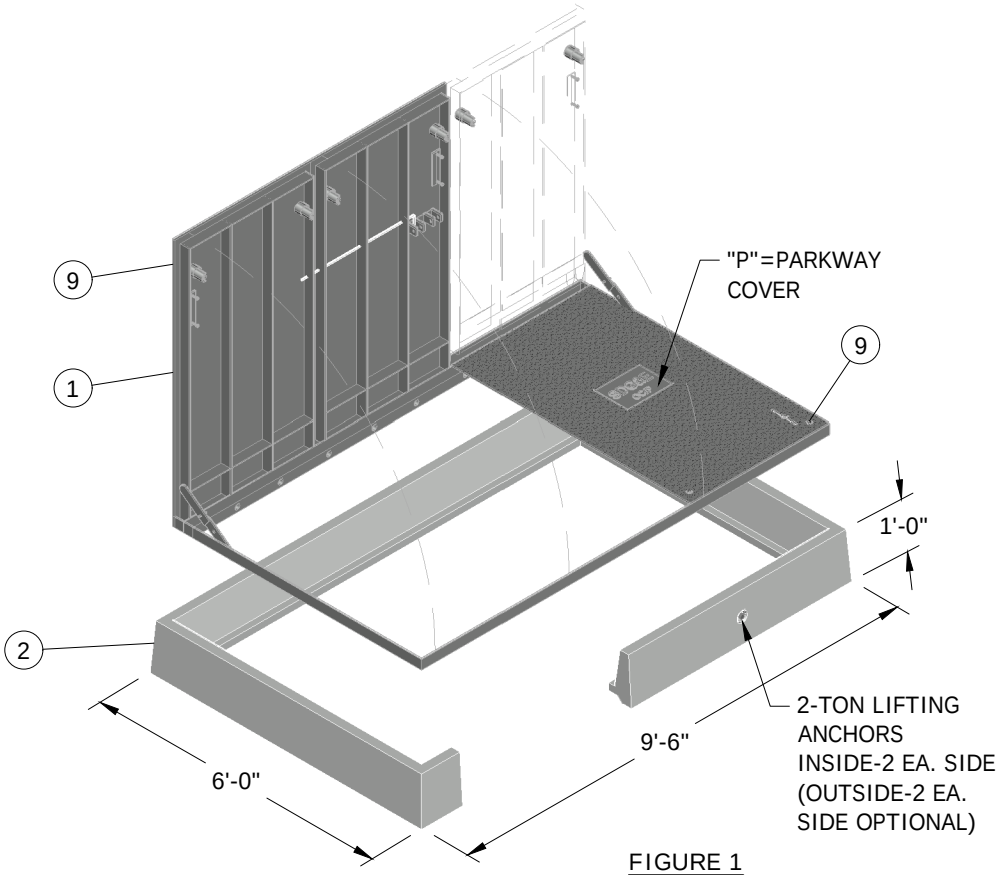

FIGURE 1
PARKWAY COVER ASSEMBLY

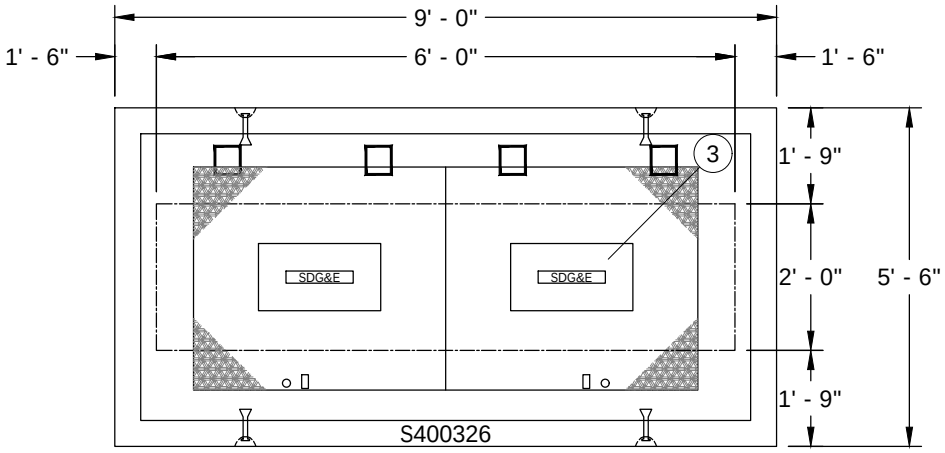

FIGURE 2
TRAFFIC COVER ONLY

©1998 - 2023 San Diego Gas & Electric Company. All rights reserved. Removal of this copyright notice without permission is not permitted under law.

REV	CHANGE	DR	BY	DSN	APV	DATE	REV	CHANGE	DR	BY	DSN	APV	DATE
F	BILL OF MATERIALS UPDATE	ARC	ADW	JES	KRG	01/16/2023	I	NOTES UPDATE	GLC	ADW	EJA	KRG	11/28/2023
E	FORMATTING	EDM	JIK	-	-	10/27/2021	H	FIGURE UPDATE	TSA	EJA	EJA	KRG	08/31/2023
D	BILL OF MATERIALS UPDATE	EDM	ADW	JES	CZH	11/09/2020	G	FIGURE UPDATE	ARC	ADW	JES	FRC	06/23/2023

X Indicates Latest Revision | Completely Revised | New Page | Information Removed

SDG&E ELECTRIC UNDERGROUND CONSTRUCTION STANDARDS

HANDHOLE EQUIPMENT ENCLOSURE - CONCRETE
(INSIDE DIMENSIONS - 5'-0" X 8'-6")

UG3316.1

TABLE OF CONTENTS

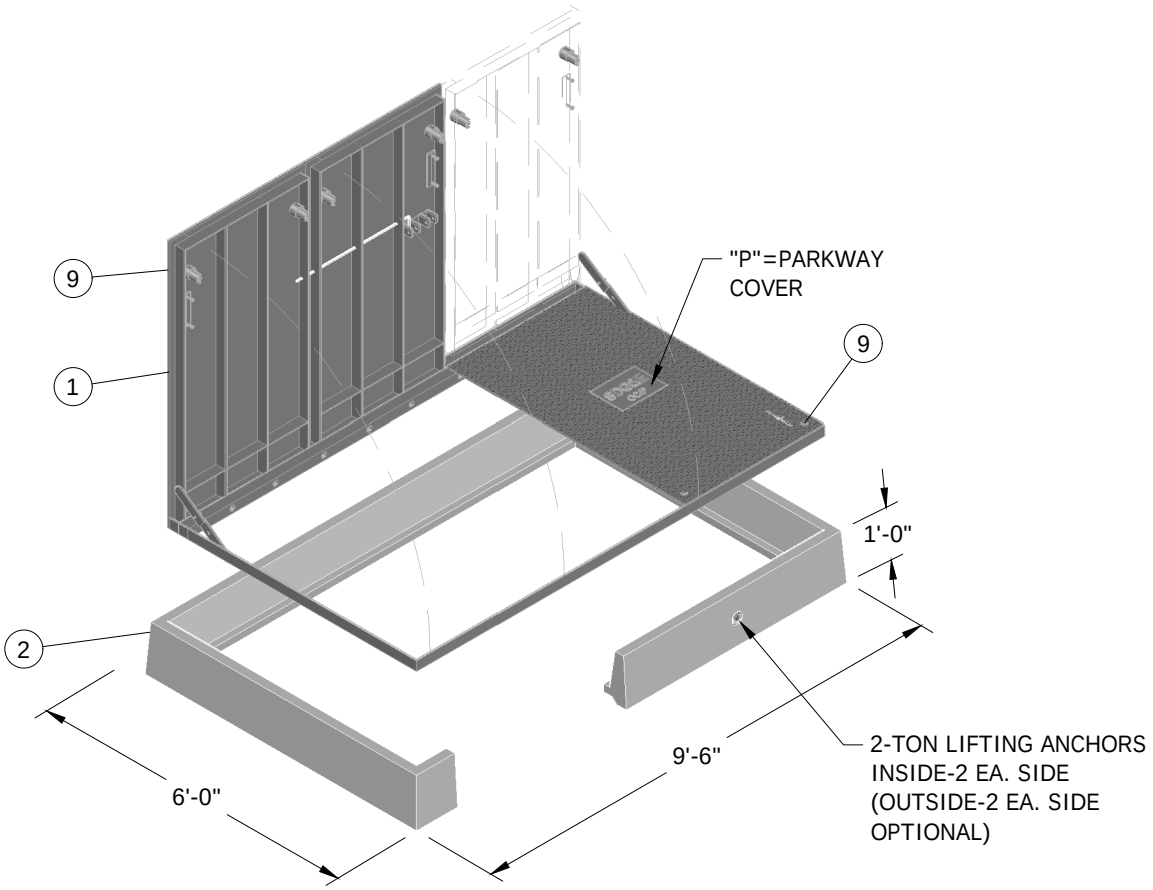

FIGURE 3
PARKWAY FLUSH COVER ASSEMBLY

© 1998 - 2023 San Diego Gas & Electric Company. All rights reserved. Removal of this copyright notice without permission is not permitted under law.

REV	CHANGE	DR	BY	DSN	APV	DATE	REV	CHANGE	DR	BY	DSN	APV	DATE
F	BILL OF MATERIALS UPDATE	ARC	ADW	JES	KRG	01/16/2023	I	NOTES UPDATE	GLC	ADW	EJA	KRG	11/28/2023
E	FORMATTING	EDM	JIK	-	-	10/27/2021	H	FIGURE UPDATE	TSA	EJA	EJA	KRG	08/31/2023
D	BILL OF MATERIALS UPDATE	EDM	ADW	JES	CZH	11/09/2020	G	FIGURE UPDATE	ARC	ADW	JES	FRC	06/23/2023

X Indicates Latest Revision | Completely Revised | New Page | Information Removed

SDG&E ELECTRIC UNDERGROUND CONSTRUCTION STANDARDS

HANDHOLE EQUIPMENT ENCLOSURE - CONCRETE
(INSIDE DIMENSIONS - 5'-0" X 8'-6")

UG3316.2

TABLE OF CONTENTS

TABLE OF CONTENTS

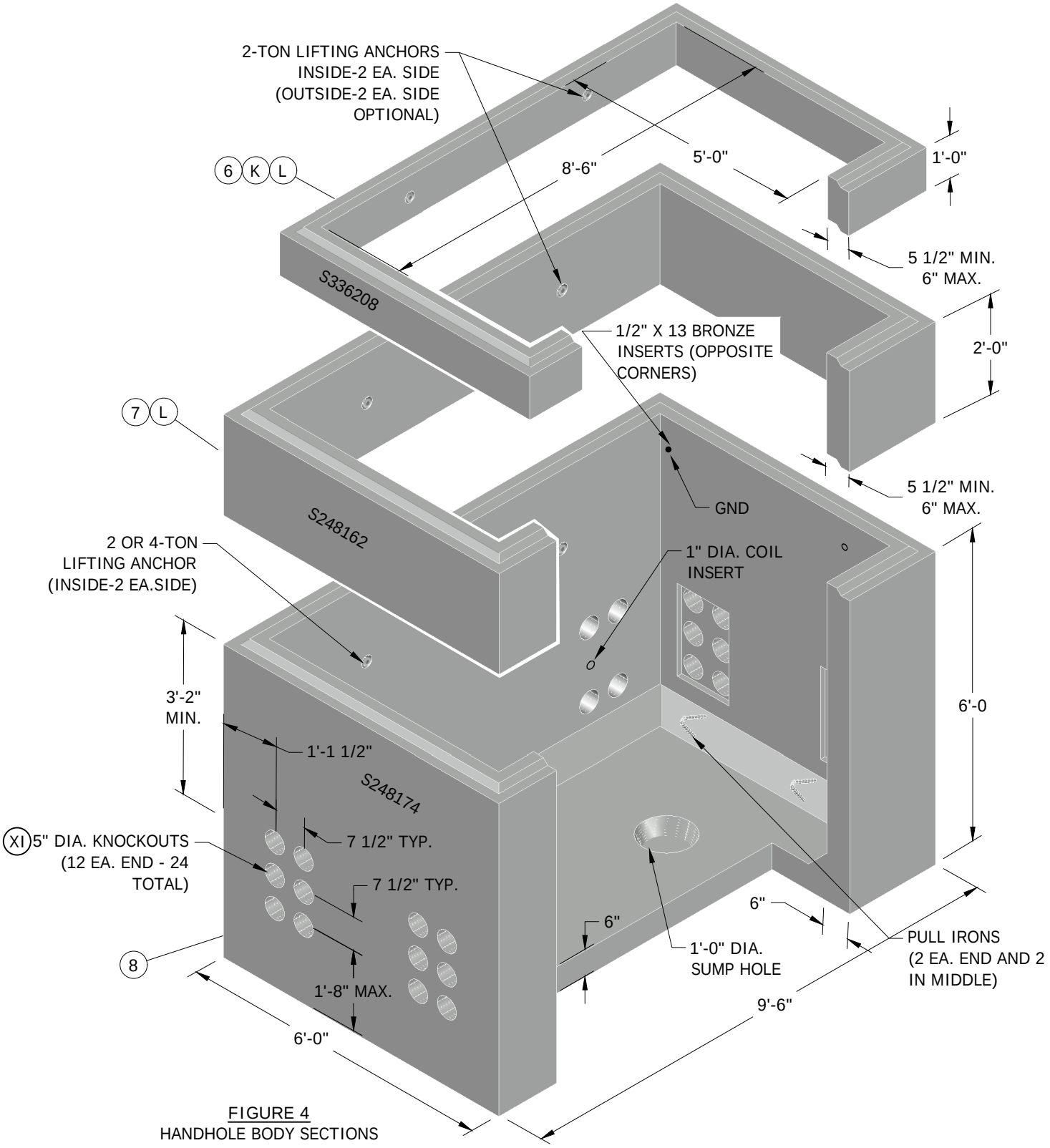

FIGURE 4
HANDHOLE BODY SECTIONS

© 1998 - 2023 San Diego Gas & Electric Company. All rights reserved. Removal of this copyright notice without permission is not permitted under law.

REV	CHANGE	DR	BY	DSN	APV	DATE	REV	CHANGE	DR	BY	DSN	APV	DATE
F	BILL OF MATERIALS UPDATE	ARC	ADW	JES	KRG	01/16/2023	I	NOTES UPDATE	GLC	ADW	EJA	KRG	11/28/2023
E	FORMATTING	EDM	JIK	-	-	10/27/2021	H	FIGURE UPDATE	TSA	EJA	EJA	KRG	08/31/2023
D	BILL OF MATERIALS UPDATE	EDM	ADW	JES	CZH	11/09/2020	G	FIGURE UPDATE	ARC	ADW	JES	FRC	06/23/2023

X Indicates Latest Revision | Completely Revised | New Page | Information Removed

SDG&E ELECTRIC UNDERGROUND CONSTRUCTION STANDARDS

HANDHOLE EQUIPMENT ENCLOSURE - CONCRETE
(INSIDE DIMENSIONS - 5'-0" X 8'-6")

UG3316.3

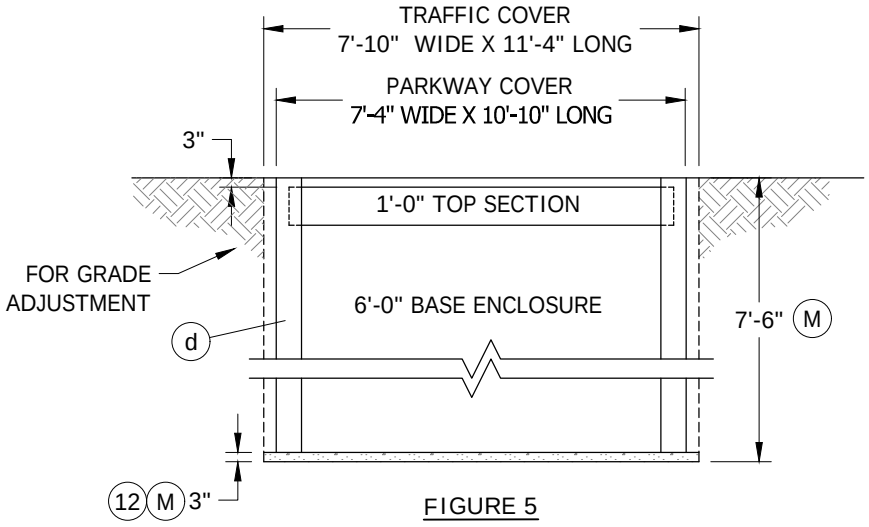

FIGURE 5
EXCAVATION DIMENSIONS

INSTALLATION:

A. ESTABLISH THE HANDHOLE LOCATION PAYING PARTICULAR ATTENTION TO FOREIGN UTILITY PLACEMENTS. RELOCATING THE HANDHOLE TO ANOTHER LOCATION REQUIRES APPROVAL FROM PROJECT MANAGEMENT.

B. AFTER THE LOCATION IS ESTABLISHED, MARK OUT DIMENSIONS FOR THE EXCAVATION WIDTH, LENGTH AND DEPTH PER FIGURE 5. THE WIDTH AND LENGTH DIMENSIONS GIVEN ALLOW AN EXTRA 8 INCHES FOR SETTING THE SUBSTRUCTURE.

C. EXCAVATION IS NOW PREPARED FOR INSTALLATION OF SUBSTRUCTURE SECTIONS. PLACE PLASTIC-MASTIC SEALANT BETWEEN ALL SECTIONS. USE DOUBLE SEAL IF FIELD CONDITIONS INDICATE THAT WATER WILL PENETRATE THE JOINTS. DO NOT APPLY SEALANT UNDER THE TOP SECTION IF CONCRETE IS REQUIRED FOR GRADE ADJUSTMENT. ASSURE THE SUBSTRUCTURE WALLS ARE STRAIGHT AND THE FLOOR IS LEVEL.

D. TO DETERMINE FINAL GRADE, ONE OF THE TWO FOLLOWING METHODS MAY BE USED:

1. WHEN CURB OR GRADE LEVEL IS ALREADY ESTABLISHED, MEASURE FROM TOP OF CURB OR GRADE OR
2. HAVE THE FIELD ENGINEER SET GRADE STAKES. AFTER GRADE LEVEL IS ESTABLISHED, SET A STRING LINE FOR CHECKING GRADE LEVEL.

E. ALIGN HANDHOLE COVER TO FINAL GRADE USING BRICKS OR WOODEN WEDGES. BEFORE POURING CONCRETE (4-SACK MIX WITH 3/8-INCH GRAVEL OR AS REQUIRED BY CITY OR COUNTY CODES), FRAME INSIDE OPEN AREA BETWEEN SECTIONS SO CONCRETE CAN BE POURED FROM OUTSIDE OF TOP COVER SECTION. MAKE SURE BRICKS OR WOODEN WEDGES DO NOT SHOW FROM THE INSIDE ONCE CONCRETE IS POURED. THE INSIDE FRAME MAY BE OMITTED IF THE CONCRETE IS NOT TOO WET. IF FRAME IS OMITTED, TROWEL CONCRETE SMOOTH ON THE INSIDE.

F. INSTALL CONDUITS USING THE BOTTOM OUTSIDE (CLOSEST TO THE WALL) KNOCKOUTS FIRST.

(G) WHEN INSTALLING TRAFFIC COVER, PLACE THE OUTSIDE CAST IRON COVERS ON FIRST, THEN SLIDE THE CENTER CAST IRON COVER ON LAST. WHEN REMOVING CAST IRON COVERS, SLIDE CENTER COVER OFF FIRST. SEE FIGURES 1-4.

(H) APPLY LUBRICANT (EZ-1) TO THE PENTAHEAD BOLTS WHEN SECURING COVERS TO REDUCE REMOVAL OR INSTALLATION DIFFICULTIES. TIGHTEN DOWN BOLTS WITH TORQUE WRENCH TO 30 FT-LBS MIN., 40 FT-LBS MAX.

J. CORE BORE INDENTATIONS ARE PROVIDED AND SHOULD BE UTILIZED WHEN INSTALLING CONDUITS FROM THE SIDE. THESE INDENTATIONS ARE EITHER ON THE INSIDE OR OUTSIDE OF THE LONG SIDE WALLS. DO NOT CORE BORE OTHER THAN THE PROVIDED INDENTATIONS AS IT MAY REDUCE THE STRUCTURAL INTEGRITY.

(K) MAY BE USED WITH UG3341 SWITCH PAD INSTALLATION.

(L) MAY BE USED FOR GRADING AND/OR ADDITIONAL HEADROOM.

(M) EXCAVATION DEPTH ALLOWS 3 INCHES FOR ADJUSTMENT TO FINAL GRADE AND AN ADDITIONAL 3 INCHES FOR REPLACEMENT OF GRAVEL AS BASE SUPPORT.

© 1998 - 2023 San Diego Gas & Electric Company. All rights reserved. Removal of this copyright notice without permission is not permitted under law.

REV	CHANGE	DR	BY	DSN	APV	DATE	REV	CHANGE	DR	BY	DSN	APV	DATE
F	BILL OF MATERIALS UPDATE	ARC	ADW	JES	KRG	01/16/2023	I	NOTES UPDATE	GLC	ADW	EJA	KRG	11/28/2023
E	FORMATTING	EDM	JIK	-	-	10/27/2021	H	FIGURE UPDATE	TSA	EJA	EJA	KRG	08/31/2023
D	BILL OF MATERIALS UPDATE	EDM	ADW	JES	CZH	11/09/2020	G	FIGURE UPDATE	ARC	ADW	JES	FRC	06/23/2023

X Indicates Latest Revision | Completely Revised | New Page | Information Removed

SDG&E ELECTRIC UNDERGROUND CONSTRUCTION STANDARDS

HANDHOLE EQUIPMENT ENCLOSURE - CONCRETE
(INSIDE DIMENSIONS - 5'-0" X 8'-6")

UG3316.4

TABLE OF CONTENTS

ATTENTION:

* GENERAL INSTALLATION NOTES:

1. INSTALL HINGED SIDE ON SAME SIDE OF RACK OR EQUIPMENT.
2. RACKS SHOULD BE LOCATED IN SUCH A WAY THAT THE OPEN LID DOES NOT IMPEDE ACCESS TO HANDHOLE EQUIPMENT.
3. INSTALL HINGED SIDE AS THE SAME SIDE AS ROADSIDE OR CURB (IN MOST APPLICATIONS).

BILL OF MATERIALS:

ITEM	DESCRIPTION	WEIGHT (LBS)	QUANTITY	STANDARD PAGE	STOCK NUMBER	STOCK NUMBER	DESIGN UNITS
	3316 PARKWAY HANDHOLE						
1	COVER, PARKWAY, ALUMINUM 4-PC.	445 TOTAL	1	--	S248164	COMPLETE PARKWAY HANDHOLE S400310 (VII)	3316CA
	COVER, PARKWAY, ALUMINUM, FLUSH MOUNT, HINGED	--	1	--	S286756		3316FH
2	FRAME, PARKWAY, 12" (VIII)	1,960 MAX.	1	--	S248170		3316FO
8	ENCLOSURE, BASE, 72"	16,220 MAX.	1	--	S248174		COMPLETE PARKWAY HANDHOLE 3316PC
9	BOLT, PENTAHEAD, 1/2" X 2 1/2"	--	16	--	S156012		
	WASHER, 1/2", FLAT ROUND STAINLESS STEEL	--	16	--	799680		
10	SEALANT, PLASTIC-MASTIC (IX)	--	AS REQ'D	--	S631872		
11	LUBRICANT EZ-1 (IX)	--	AS REQ'D	--	S469764		
12	GRAVEL, 3/8" - 3/4" (3" BASE)	--	AS REQ'D	--	--		
	3316 TRAFFIC HANDHOLE						
3	3316 TRAFFIC PLUG WITH HINGED COVERS	4,899 MAX.	AS REQ'D	--	S400326	COMPLETE TRAFFIC HANDHOLE S400330	3316HTC
8	ENCLOSURE, BASE, 72"	16,220 MAX.	1	--	S248174		COMPLETE TRAFFIC HANDHOLE 3316HTA
10	SEALANT, PLASTIC-MASTIC (IX)	--	AS REQ'D	--	S631872		
11	LUBRICANT EZ-1 (IX)	--	AS REQ'D	--	S469764		
12	GRAVEL, 3/8" - 3/4" (3" BASE)	--	AS REQ'D	--	--		
	3316 SPECIAL EXTENSION SECTIONS						
6	EXTENSION SECTION, SPECIAL 12"	2,175 MAX.	AS REQ'D	--	S336208	--	3316X1
7	EXTENSION SECTION, SPECIAL 24"	4,350 MAX.	AS REQ'D	--	S248162	--	3316X2

TABLE OF CONTENTS

© 1998 - 2023 San Diego Gas & Electric Company. All rights reserved. Removal of this copyright notice without permission is not permitted under law.

REV	CHANGE	DR	BY	DSN	APV	DATE	REV	CHANGE	DR	BY	DSN	APV	DATE
F	BILL OF MATERIALS UPDATE	ARC	ADW	JES	KRG	01/16/2023	I	NOTES UPDATE	GLC	ADW	EJA	KRG	11/28/2023
E	FORMATTING	EDM	JIK	-	-	10/27/2021	H	FIGURE UPDATE	TSA	EJA	EJA	KRG	08/31/2023
D	BILL OF MATERIALS UPDATE	EDM	ADW	JES	CZH	11/09/2020	G	FIGURE UPDATE	ARC	ADW	JES	FRC	06/23/2023

NOTES:

I. HANDHOLE SECTIONS AND COVERS FROM DIFFERENT SUPPLIERS ARE INTERCHANGEABLE.

II. THE PREFERRED LOCATION FOR A 3316 HANDHOLE IS IN NONVEHICULAR TRAFFIC AREAS (BEHIND CURBS, PARKWAY POSITION, ETC.). USE A PARKWAY COVER IN THESE AREAS.

III. HANDHOLES WITH A TRAFFIC COVER MAY BE INSTALLED IN AREAS WITH VEHICULAR TRAFFIC, BUT ONLY WHEN THERE IS NO NON-TRAFFIC LOCATION AVAILABLE.

IV. LIFTING ANCHORS ARE NOT TO BE USED FOR CABLE PULLING.

V. 3316 HANDHOLES ARE DELIVERED BY THE SUPPLIER TO JOB SITE.

(VI) WHEN TRAFFIC COVER IS REMOVED, CHECK GASKET MATERIAL AND REPLACE AS NEEDED. SDG&E STOCK NUMBER (S341020).

(VII) DOES NOT INCLUDE FLUSH MOUNT COVER.

(VIII) WEIGHT DOES NOT INCLUDE COVERS.

(IX) NOT SHOWN OF FIGURES.

(XI) CORE DRILL THE 5" KNOCKOUTS TO 6" AS NEEDED.

REFERENCE:

(a) FOR INSTALLATION OF IDENTIFICATION TAG, SEE UG3211 AND UG3212.

b. FOR SUBSTRUCTURE APPLICATIONS, SEE UG3302.

c. FOR INSTALLATION OF PLASTIC-MASTIC SEALANT, SEE UG3306.

(d) FOR SLURRY BACKFILL, SEE UG3366.

e. FOR MINIMUM OPERATING AND CLEARANCE REQUIREMENTS, SEE UG3480, UG3481, UG3482, AND UG3483.

f. WHEN SETTING HANDHOLE ON A SLOPING GRADE, SEE UG3485.

g. FOR RETAINING WALL REQUIREMENTS AND CLEARANCES FROM REVERSE SUBGRADE RETAINING WALLS, SEE UG3486, UG3487, AND UG3488.

h. FOR SUBSTRUCTURE USE AND LIMITATIONS REFERENCE SHEET (MAXIMUM NUMBER OF CABLES, CONNECTORS, AND CONDUITS), SEE UG3605.

TABLE OF CONTENTS

© 1998 - 2023 San Diego Gas & Electric Company. All rights reserved. Removal of this copyright notice without permission is not permitted under law.

REV	CHANGE	DR	BY	DSN	APV	DATE	REV	CHANGE	DR	BY	DSN	APV	DATE
F	BILL OF MATERIALS UPDATE	ARC	ADW	JES	KRG	01/16/2023	I	NOTES UPDATE	GLC	ADW	EJA	KRG	11/28/2023
E	FORMATTING	EDM	JIK	-	-	10/27/2021	H	FIGURE UPDATE	TSA	EJA	EJA	KRG	08/31/2023
D	BILL OF MATERIALS UPDATE	EDM	ADW	JES	CZH	11/09/2020	G	FIGURE UPDATE	ARC	ADW	JES	FRC	06/23/2023

X Indicates Latest Revision | Completely Revised | New Page | Information Removed

SDG&E ELECTRIC UNDERGROUND CONSTRUCTION STANDARDS

SHEET 6 OF 6

HANDHOLE EQUIPMENT ENCLOSURE - CONCRETE
(INSIDE DIMENSIONS - 5'-0" X 8'-6")

UG3316.6

SCOPE: THIS STANDARD SHOWS THE INSTALLATION AND MATERIAL REQUIRE FOR THE 3317 HANDHOLE.

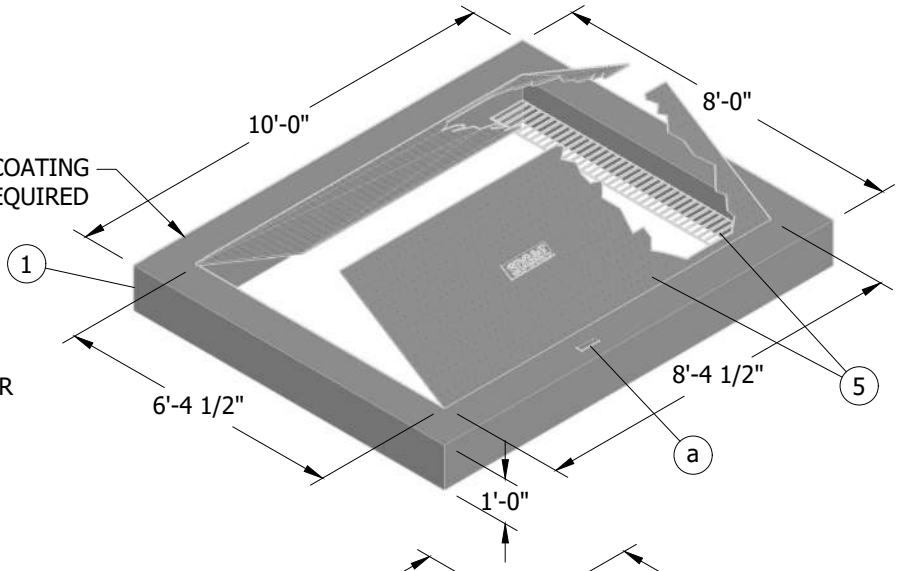

FIGURE 1
12" PARKWAY TOP SECTION AND COVER

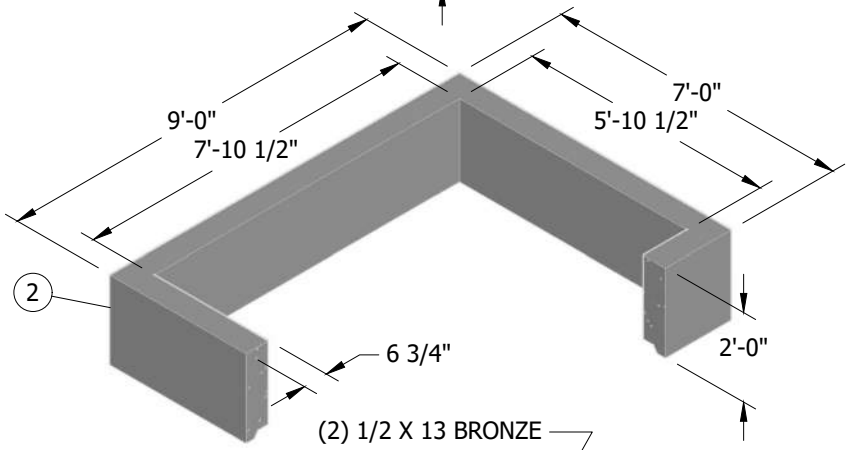

FIGURE 2
24" EXTENSION SECTION

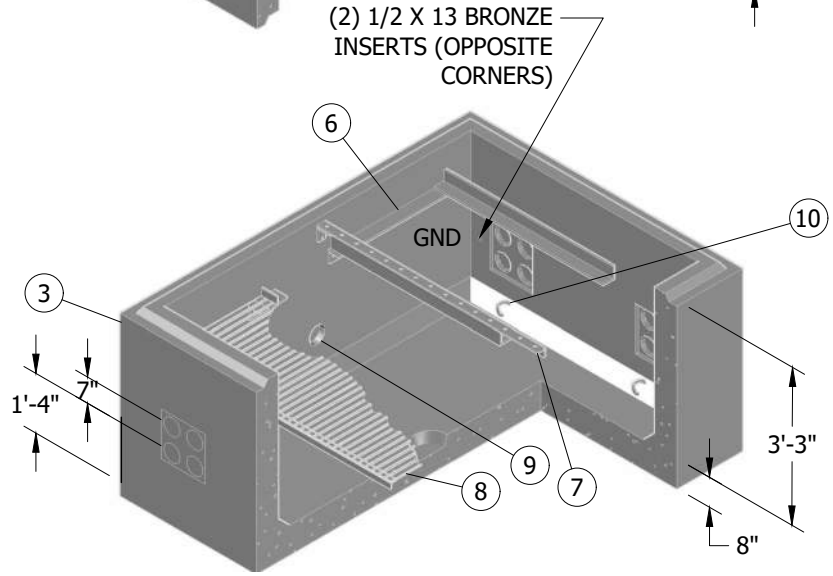

FIGURE 3
47" BASE ENCLOSURE

TABLE OF CONTENTS

© 1998 - 2023 San Diego Gas & Electric Company. All rights reserved. Removal of this copyright notice without permission is not permitted under law.

REV	CHANGE	DR	BY	DSN	APV	DATE	REV	CHANGE	DR	BY	DSN	APV	DATE
C	FIGURE UPDATE	TSA	EJA	EJA	KRG	07/28/2023	F						
B	FORMATTING	EDM	JIK	-	-	10/27/2021	E						
A	EDITORIAL CHANGES	-	JS	TR	MDJ	05/26/2016	D						

X Indicates Latest Revision | Completely Revised | New Page | Information Removed

SDG&E ELECTRIC UNDERGROUND CONSTRUCTION STANDARDS

HANDHOLE EQUIPMENT ENCLOSURE - CONCRETE
(INSIDE DIMENSIONS - 6'-0" X 8'-0")

UG3317.1

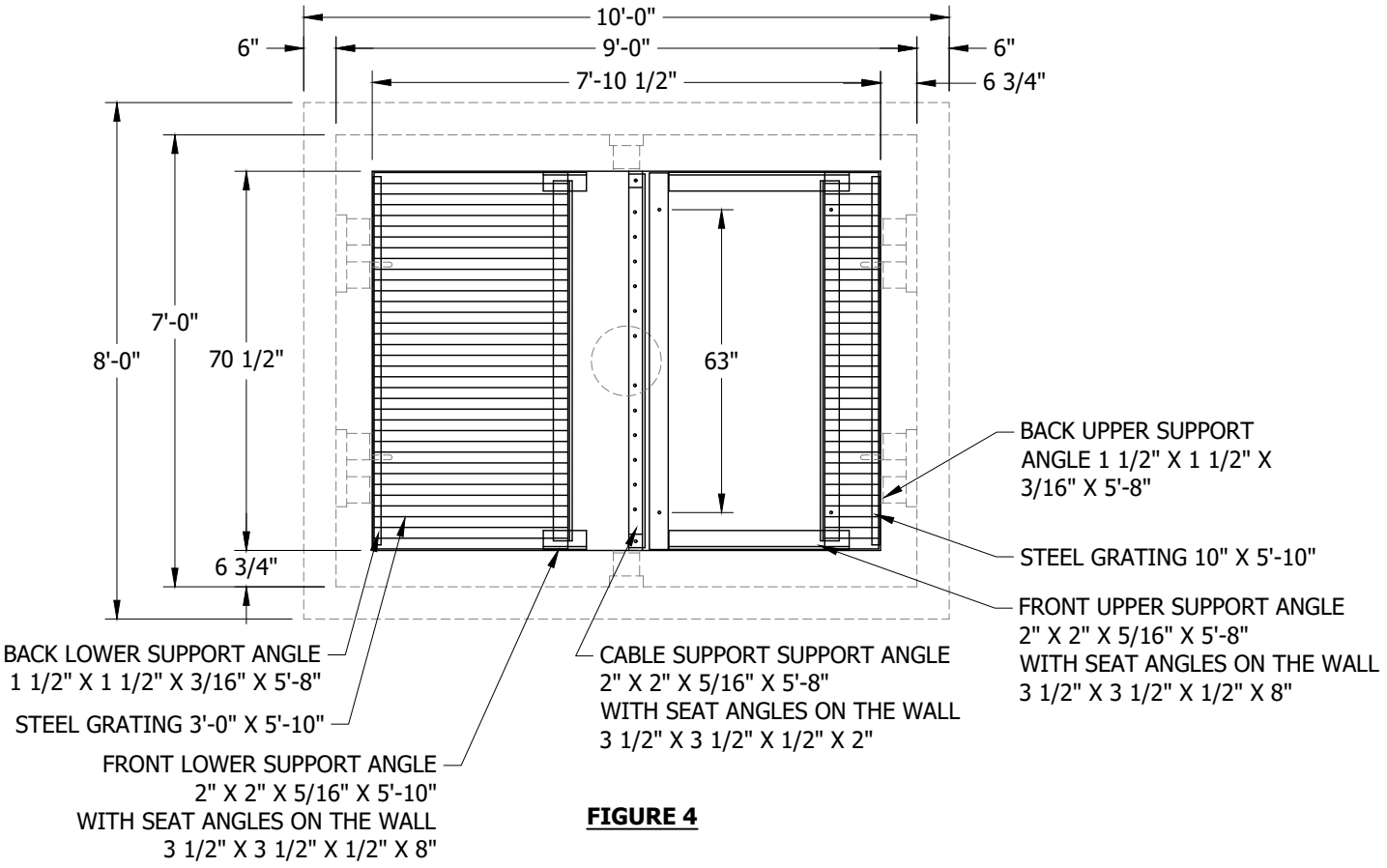

FIGURE 4

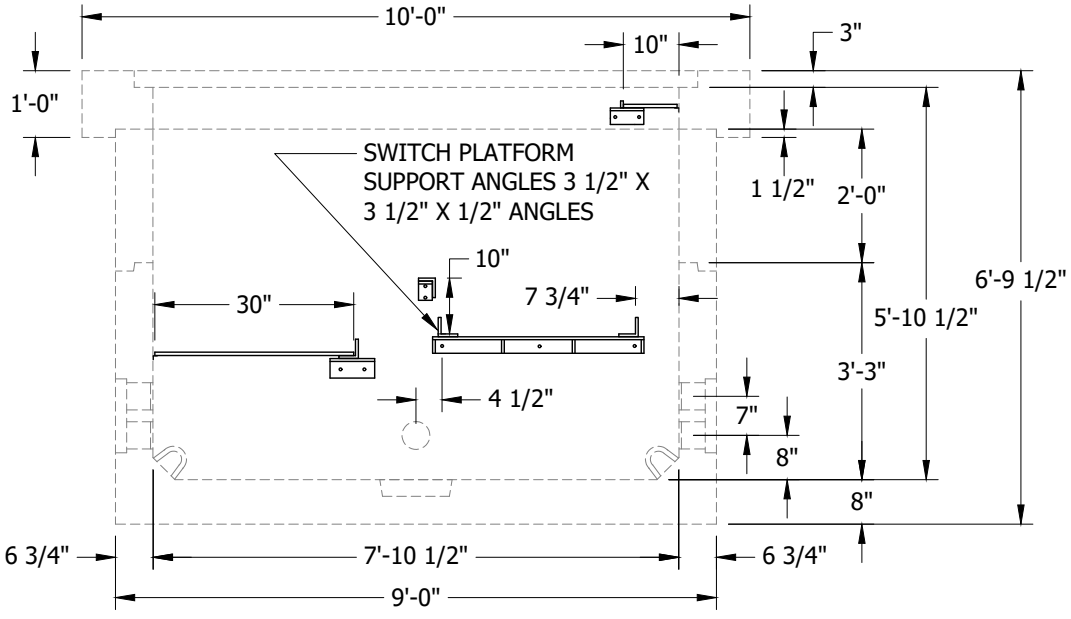

FIGURE 5

© 1998 - 2023 San Diego Gas & Electric Company. All rights reserved. Removal of this copyright notice without permission is not permitted under law.

REV	CHANGE	DR	BY	DSN	APV	DATE	REV	CHANGE	DR	BY	DSN	APV	DATE
C	FIGURE UPDATE	TSA	EJA	EJA	KRG	07/28/2023	F						
B	FORMATTING	EDM	JIK	-	-	10/27/2021	E						
A	EDITORIAL CHANGES	-	JS	TR	MDJ	05/26/2016	D						

X Indicates Latest Revision | Completely Revised | New Page | Information Removed

SDG&E ELECTRIC UNDERGROUND CONSTRUCTION STANDARDS

HANDHOLE EQUIPMENT ENCLOSURE - CONCRETE
(INSIDE DIMENSIONS - 6'-0" X 8'-0")

UG3317.2

TABLE OF CONTENTS

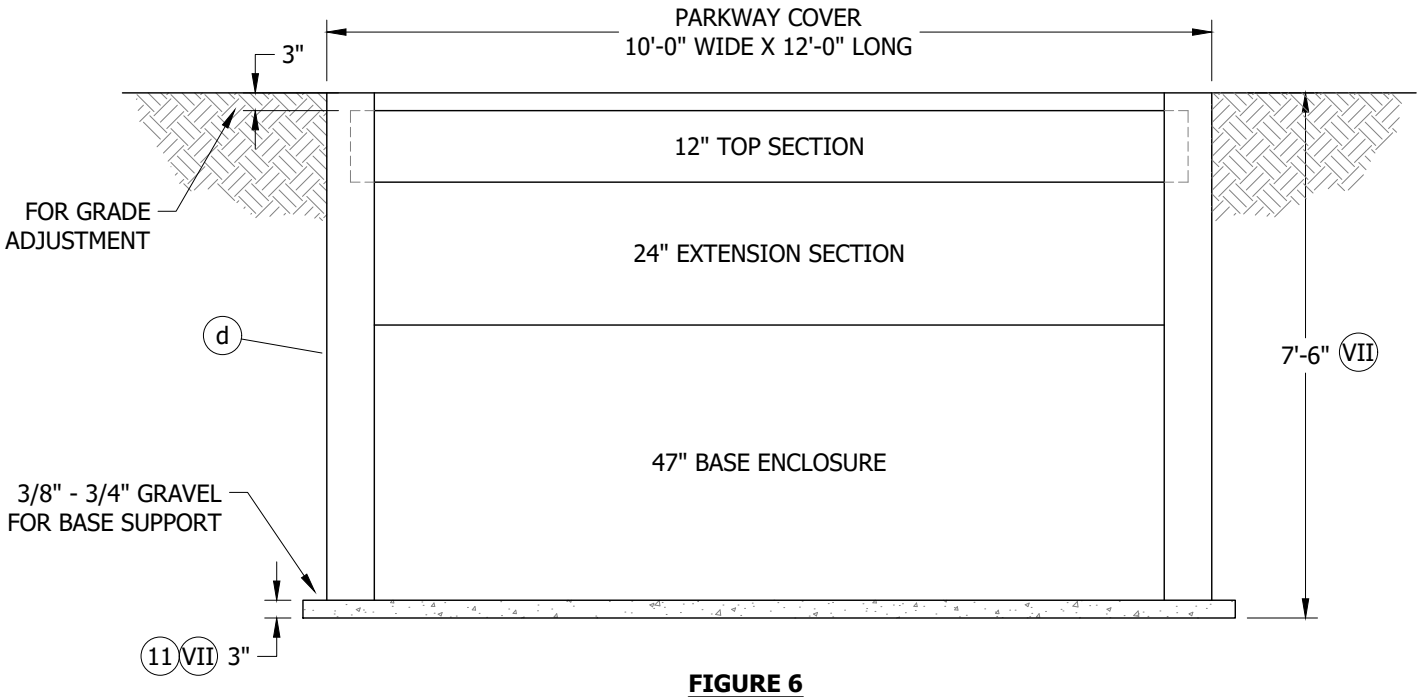

FIGURE 6
EXCAVATION DIMENSIONS

INSTALLATION:

A. ESTABLISH THE HANDHOLE LOCATION PAYING PARTICULAR ATTENTION TO FOREIGN UTILITY PLACEMENTS. RELOCATING THE HANDHOLE TO ANOTHER LOCATION REQUIRES APPROVAL FROM PROJECT MANAGEMENT.

B. AFTER THE LOCATION IS ESTABLISHED, MARK OUT DIMENSIONS FOR THE EXCAVATION WIDTH, LENGTH AND DEPTH PER DRAWING BELOW. THE WIDTH AND LENGTH DIMENSIONS GIVEN, ALLOW AN EXTRA 8 INCHES MIN. FOR SETTING THE SUBSTRUCTURE.

C. EXCAVATION IS NOW PREPARED FOR INSTALLATION OF SUBSTRUCTURE SECTIONS. PLACE PLASTICMASTIC SEALANT BETWEEN SECTIONS. USE DOUBLE SEAL IF FIELD CONDITIONS INDICATE THAT WATER WILL PENETRATE THE JOINTS. DO NOT APPLY SEALANT UNDER THE TOP SECTION IF CONCRETE IS REQUIRED FOR GRADE ADJUSTMENT. ASSURE THE SUBSTRUCTURE WALLS ARE STRAIGHT AND THE FLOOR IS LEVEL.

D. TO DETERMINE FINAL GRADE, ONE OF THE TWO FOLLOWING METHODS MAY BE USED:

1. WHEN CURB OR GRADE LEVEL IS ALREADY ESTABLISHED, MEASURE FROM THE TOP OF CURB OR GRADE OR
2. HAVE THE FIELD ENGINEER SET THE GRADE STAKES. AFTER GRADE LEVEL IS ESTABLISHED, SET A STRING LINE FOR CHECKING GRADE LEVEL.

E. ALIGN HANDHOLE COVER TO FINAL GRADE USING BRICKS OR WOODEN WEDGES. BEFORE POURING CONCRETE (4-SACK MIX WITH 3/8-INCH GRAVEL OR AS REQUIRED BY CITY OR COUNTY CODES). FRAME THE INSIDE OPEN AREA BETWEEN SECTIONS SO CONCRETE CAN BE POURED FROM THE OUTSIDE OF THE TOP COVER SECTION. MAKE SURE THE BRICKS OR WOODEN WEDGES DO NOT SHOW FROM THE INSIDE ONCE THE CONCRETE IS POURED. THE INSIDE FRAME MAY BE OMITTED IF THE CONCRETE IS NOT TOO WET. IF FRAME IS OMITTED, TROWEL CONCRETE SMOOTH ON THE INSIDE.

F. INSTALL CONDUITS USING THE BOTTOM KNOCKOUTS FIRST.

G. INSTALL (2) 5-INCH CONDUITS IN THE TWO UPPERMOST KNOCKOUTS OPPOSITE OR UNDER SWITCH WAY 4 FOR SCADA.

© 1998 - 2023 San Diego Gas & Electric Company. All rights reserved. Removal of this copyright notice without permission is not permitted under law.

REV	CHANGE	DR	BY	DSN	APV	DATE	REV	CHANGE	DR	BY	DSN	APV	DATE
C	FIGURE UPDATE	TSA	EJA	EJA	KRG	07/28/2023	F						
B	FORMATTING	EDM	JIK	-	-	10/27/2021	E						
A	EDITORIAL CHANGES	-	JS	TR	MDJ	05/26/2016	D						

BILL OF MATERIALS:

ITEM	DESCRIPTION	WEIGHT (LBS)	QUANTITY	STANDARD PAGE	STOCK NUMBER	DESIGN UNITS
1	TOP SECTION, W/ COVERS	4,200	1	--	S334430	3317SE
2	INTERMEDIATE SECTION, 24"	5,000	1	--	--	--
3	BASE SECTION, 47"	14,500	1	--	--	--
4	UPPER PLATFORM, W/ SUPPORTS (VIII)	--	1	--	--	--
5	COVERS, SPRING ASSISTED	--	2	--	--	--
6	SWITCH SUPPORT	--	1	--	--	--
7	BRACKET, CABLE SUPPORT	--	1	--	--	--
8	LOWER PLATFORM, W/ SUPPORTS	--	1	--	--	--
9	KNOCKOUT, SIDE CONDUIT, 5"	--	2	--	--	--
10	PULLING IRON	--	4	--	--	--
11	GRAVEL, 3/8" - 3/4"	--	AS REQ'D	--	--	--

NOTES:

I. ALL INTERIOR HARDWARE SHALL BE HOT DIPPED GALVANIZED AFTER FABRICATION.

II. HANDHOLE SECTIONS AND COVERS FROM DIFFERENT SUPPLIERS ARE NOT INTERCHANGEABLE.

III. THE ONLY LOCATION FOR A 3317 HANDHOLE IS IN NONVEHICULAR TRAFFIC AREAS (BEHIND CURBS, PARKWAY POSITION, ETC.). THE 3317 IS SUPPLIED WITH PARKWAY COVERS ONLY.

IV. LIFTING ANCHORS ARE NOT TO BE USED FOR CABLE PULLING.

V. 3317 HANDHOLES ARE DELIVERED BY THE SUPPLIER TO JOB SITE.

VI. THIS HANDHOLE TO BE INSTALLED ONLY WHEN THERE IS INSUFFICIENT SPACE FOR PME, TRAYER SWITCH.

VII. EXCAVATION DEPTH ALLOWS 3 INCHES FOR ADJUSTMENT TO FINAL GRADE AND AN ADDITIONAL 3 INCHES FOR REPLACEMENT OF GRAVEL AS BASE SUPPORT.

(VIII) NOT SHOWN ON FIGURES.

REFERENCE:

(a) FOR INSTALLATION OF IDENTIFICATION TAG, SEE UG3211 AND UG3212.

b. FOR SUBSTRUCTURE APPLICATIONS, SEE UG3302.

c. FOR INSTALLATION OF PLASTIC-MASTIC SEALANT, SEE UG3306.

(d) FOR SLURRY BACKFILL, SEE UG3365 AND UG3366.

e. FOR MINIMUM OPERATING AND CLEARANCE REQUIREMENTS, SEE UG3480, UG3481, UG3482, AND UG3483.

f. WHEN SETTING HANDHOLE ON A SLOPING GRADE, SEE UG3485.

g. FOR RETAINING WALL REQUIREMENTS AND CLEARANCES FROM REVERSE SUBGRADE RETAINING WALLS, SEE UG3486, UG3487, AND UG3488.

h. FOR SUBSTRUCTURE USE AND LIMITATIONS REFERENCE SHEET (MAXIMUM), SEE UG3605.

i. FOR SUBSURFACE/SURFACE SWITCH, SEE UG3669 (PREVIOUS #UG3670.1, .2) AND UG3670.

j. FOR INSTALLATION OF SUBSURFACE/SURFACE OPERABLE SWITCH, SEE UG3671.

k. AVAILABLE IN SERVICE STANDARDS AND GUIDE MANUAL.

TABLE OF CONTENTS

© 1998 - 2023 San Diego Gas & Electric Company. All rights reserved. Removal of this copyright notice without permission is not permitted under law.

REV	CHANGE	DR	BY	DSN	APV	DATE	REV	CHANGE	DR	BY	DSN	APV	DATE
C	FIGURE UPDATE	TSA	EJA	EJA	KRG	07/28/2023	F						
B	FORMATTING	EDM	JIK	-	-	10/27/2021	E						
A	EDITORIAL CHANGES	-	JS	TR	MDJ	05/26/2016	D						

SCOPE: THIS STANDARD SHOWS THE INSTALLATION AND MATERIAL REQUIREMENTS FOR A 3325 MANHOLE.

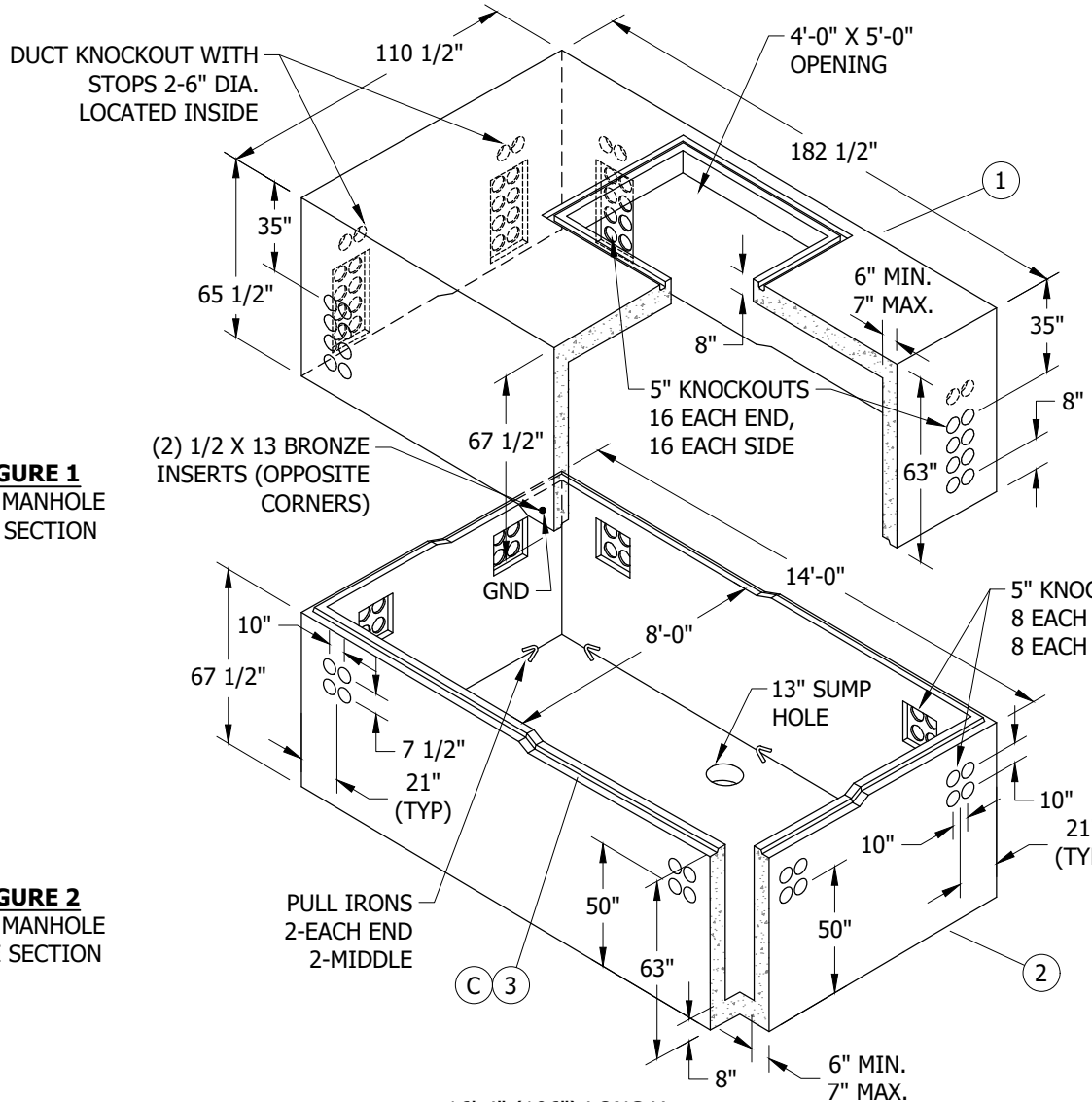

FIGURE 1
3325 MANHOLE
TOP SECTION

FIGURE 2
3325 MANHOLE
BASE SECTION

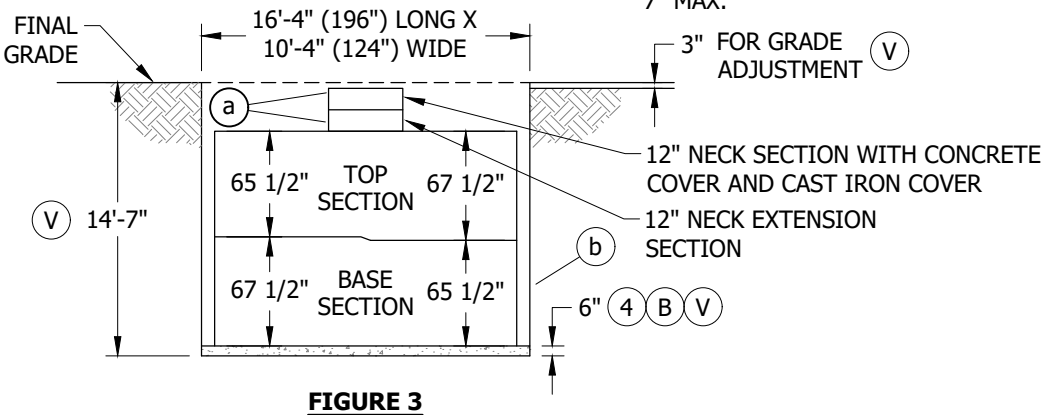

FIGURE 3
EXCAVATION DIMENSIONS

TABLE OF CONTENTS

© 1998 - 2021 San Diego Gas & Electric Company. All rights reserved. Removal of this copyright notice without permission is not permitted under law.

REV	CHANGE	DR	BY	DSN	APV	DATE	REV	CHANGE	DR	BY	DSN	APV	DATE
C							F						
B	FORMATTING	EDM	JIK	-	-	10/27/2021	E						
A	COMPLETELY REVISED	-	JS	TR	MDJ	05/26/2016	D						

X Indicates Latest Revision | Completely Revised | New Page | Information Removed

SDG&E ELECTRIC UNDERGROUND CONSTRUCTION STANDARDS

SHEET 1 OF 2

MANHOLE - TUB TYPE
(INSIDE DIMENSIONS 8'-0" X 14'-0" X 9'-6")

UG3325.1

INSTALLATION:

A. ESTABLISH THE MANHOLE LOCATION PAYING PARTICULAR ATTENTION TO FOREIGN UTILITY PLACEMENTS. RELOCATING THE MANHOLE TO ANOTHER LOCATION REQUIRES APPROVAL FROM SERVICE PLANNING.

(B) PLACE GRAVEL 6 INCHES DEEP ON EXCAVATION BOTTOM AND SET MANHOLE LEVEL.

(C) USE MASTIC SEALING COMPOUND IN ALL SECTIONS. (d)

D. INSTALL CONDUITS USING THE BOTTOM OUTSIDE (CLOSEST TO THE WALL) KNOCKOUTS FIRST.

E. USE #2 AWG BARE COPPER (S812818) FOR GROUNDS WITH SERVICE POST CONNECTOR (S262560).

F. ON INITIAL CABLE INSTALLATION, OCCUPY LOWEST CONDUIT OPENINGS FIRST.

BILL OF MATERIALS:

ITEM	DESCRIPTION	WEIGHT (LBS)	QUANTITY	STANDARD PAGE	STOCK NUMBER	DESIGN UNITS
1	TOP SECTION, 4'-9"	33,280	1	--	S475902	3325MH
2	BASE SECTION, 4'-9"	33,915	1	--		
3	SEALANT, PLASTIC MASTIC (C)	--	AS REQ'D	3306	S631872	--
4	GRAVEL, 3/8" - 3/4" (B)	--	AS REQ'D	--	--	--

NOTES:

I. MANHOLE SECTIONS AND COVERS FROM DIFFERENT SUPPLIERS ARE NOT INTERCHANGEABLE.

II. THE PREFERRED LOCATION FOR A 3325 MANHOLE IS IN NONVEHICULAR TRAFFIC AREAS (BEHIND CURBS, PARKWAY POSITION, ETC.).

III. 3325 MANHOLES ARE DELIVERED BY THE SUPPLIER TO JOB SITE.

IV. LIFTING ANCHORS ARE NOT TO BE USED FOR CABLE PULLING.

(V) EXCAVATION DEPTH ALLOWS 3 INCHES FOR ADJUSTMENT TO FINAL GRADE AND AN ADDITIONAL 6 INCHES FOR PLACEMENT OF GRAVEL AS BASE SUPPORT.

(X) THIS ITEM IS EXEMPT.

REFERENCE:

(a) FOR MANHOLE NECK AND COVER TRAFFIC BEARING, SEE UG3332.

(b) FOR SLURRY BACKFILL, SEE UG3365 AND UG3366.

c. AVAILABLE IN SERVICE STANDARDS AND GUIDE MANUAL.

(d) SEE UG3306.

e. FOR 48" X 60" MANHOLE NECK AND COVER, SEE UG3332.

TABLE OF CONTENTS

© 1998 - 2021 San Diego Gas & Electric Company. All rights reserved. Removal of this copyright notice without permission is not permitted under law.

REV	CHANGE	DR	BY	DSN	APV	DATE	REV	CHANGE	DR	BY	DSN	APV	DATE
C							F						
B	FORMATTING	EDM	JIK	-	-	10/27/2021	E						
A	COMPLETELY REVISED	-	JS	TR	MDJ	05/26/2016	D						

SCOPE: THIS STANDARD SHOWS THE INSTALLATION AND MATERIAL REQUIREMENTS FOR A 3326 MANHOLE.

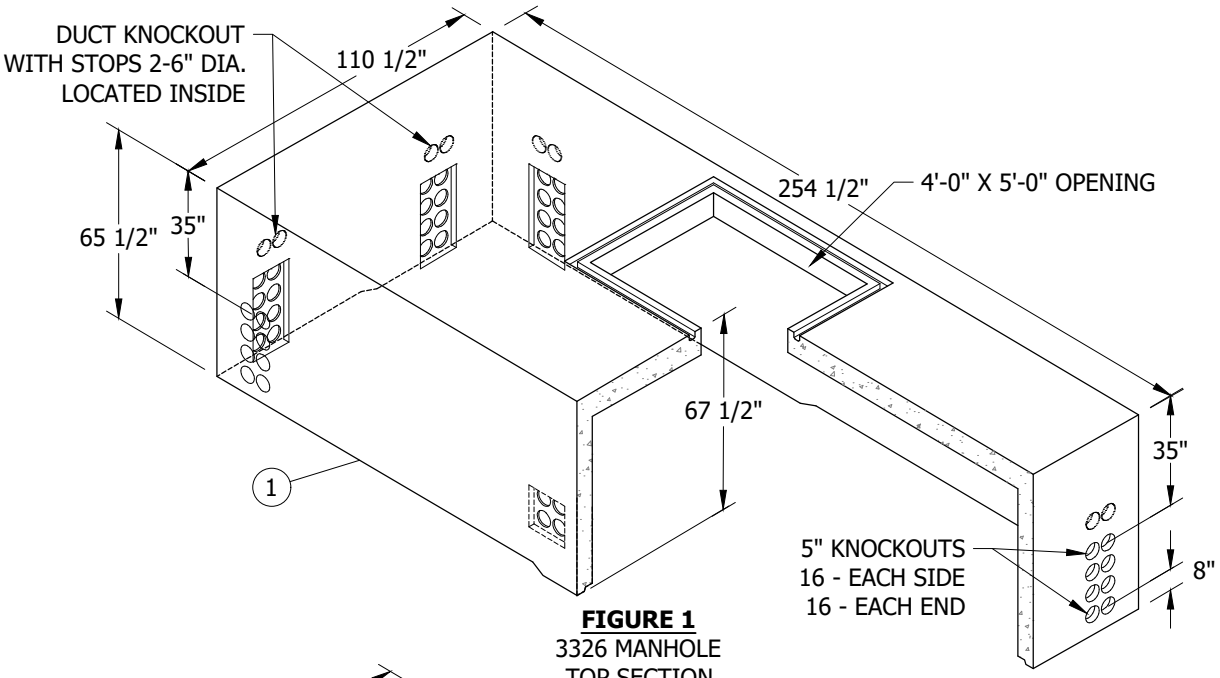

FIGURE 1
3326 MANHOLE
TOP SECTION

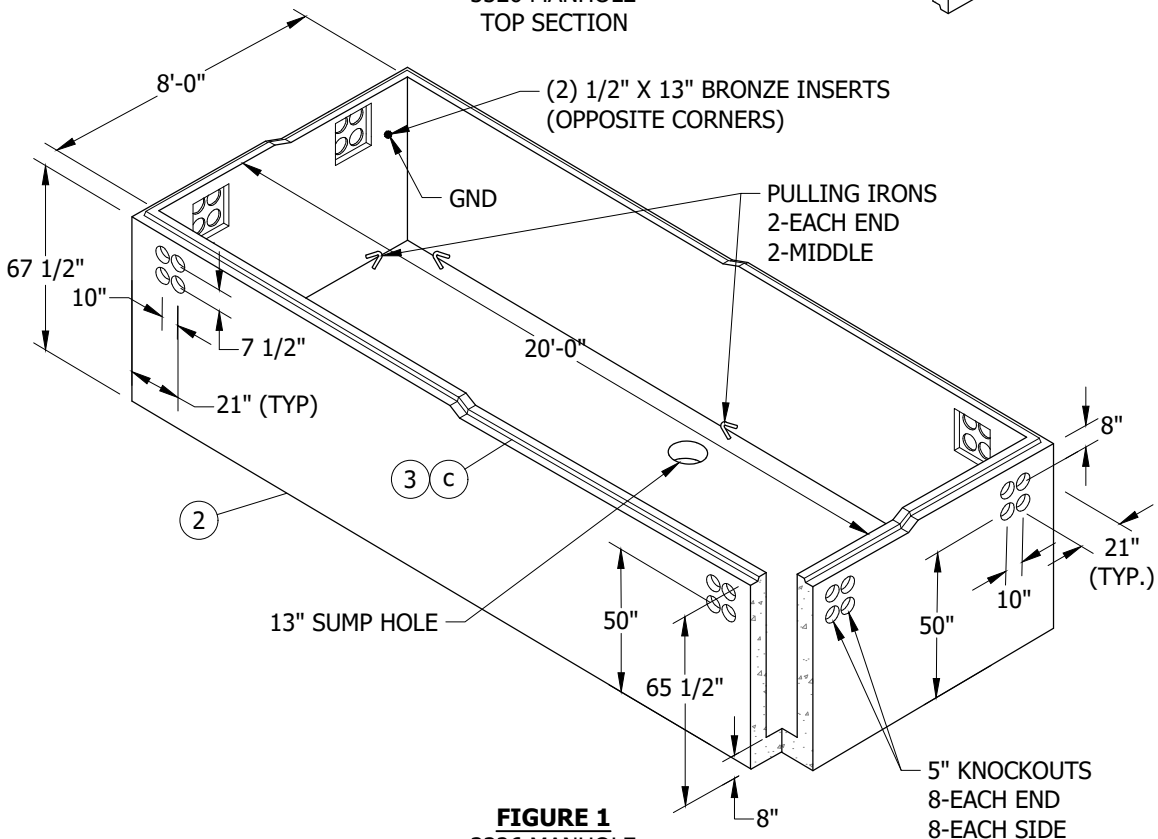

FIGURE 1
3326 MANHOLE
BASE SECTION

© 1998 - 2021 San Diego Gas & Electric Company. All rights reserved. Removal of this copyright notice without permission is not permitted under law.

REV	CHANGE	DR	BY	DSN	APV	DATE	REV	CHANGE	DR	BY	DSN	APV	DATE
C							F						
B	FORMATTING	EDM	JIK	-	-	10/27/2021	E						
A	COMPLETELY REVISED	-	JS	TR	MDJ	05/26/2016	D						

X Indicates Latest Revision | Completely Revised | New Page | Information Removed

SDG&E ELECTRIC UNDERGROUND CONSTRUCTION STANDARDS

MANHOLE - TUB TYPE
INSIDE DIMENSIONS 8'-0" X 20'-0" X 9'-6"

UG3326.1

TABLE OF CONTENTS

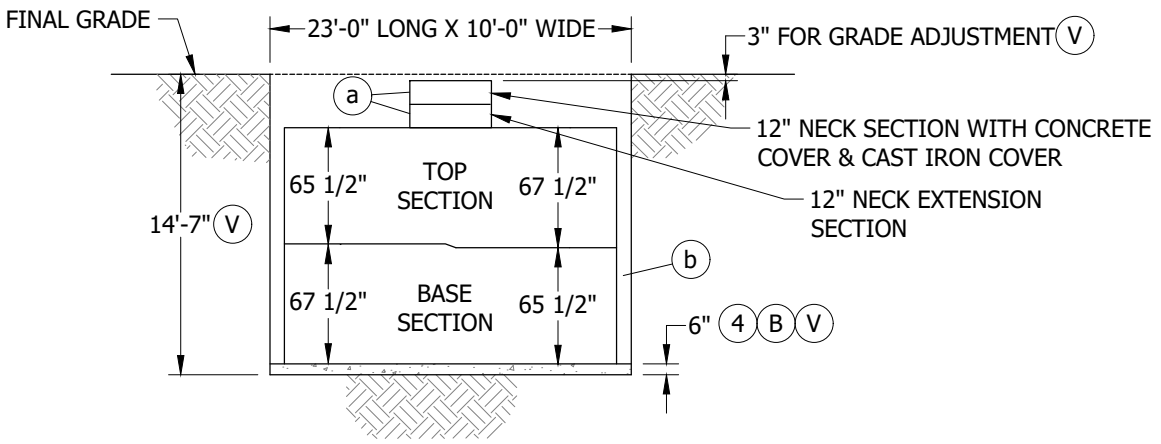

FIGURE 2
EXCAVATION DIMENSIONS

INSTALLATION:

A. ESTABLISH THE MANHOLE LOCATION PAYING PARTICULAR ATTENTION TO FOREIGN UTILITY PLACEMENTS. RELOCATING THE MANHOLE TO ANOTHER LOCATION REQUIRES APPROVAL FROM SERVICE PLANNING.

(B) PLACE GRAVEL SIX INCHES DEEP ON EXCAVATION BOTTOM AND SET MANHOLE LEVEL.

(C) USE MASTIC SEALING COMPOUND IN ALL SECTIONS.(c)

D. INSTALL CONDUITS USING THE BOTTOM OUTSIDE (CLOSEST TO THE WALL) KNOCKOUTS FIRST.

E. USE #2 AWG BARE COPPER (S812818 (X)) FOR GROUNDS WITH SERVICE POST CONNECTOR (S262560).

F. ON INITIAL CABLE INSTALLATION, OCCUPY LOWEST CONDUIT OPENINGS FIRST.

BILL OF MATERIALS:

ITEM	DESCRIPTION	WEIGHT (LBS)	QUANTITY	STANDARD PAGE	STOCK NUMBER	DESIGN UNITS
1	TOP SECTION, 4'-9"	40,000	1	--	S475904	3326MH
2	BASE SECTION, 4'-9"	41,500				
3	SEALANT, PLASTIC MASTIC (C)	--	AS REQ'D	3306	S631872	--
4	GRAVEL, 3/8" - 3/4" (B)	--	AS REQ'D	--	--	--

NOTES:

I. MANHOLE SECTIONS AND COVERS FROM DIFFERENT SUPPLIERS ARE NOT INTERCHANGEABLE.

II. THE PREFERRED LOCATION FOR A 3326 MANHOLE IS IN NON-VEHICULAR TRAFFIC AREAS (BEHIND CURBS, PARKWAY POSITION, ETC.).

III. 3325 MANHOLES ARE DELIVERED BY THE SUPPLIER TO JOB SITE.

IV. LIFTING ANCHORS ARE NOT TO BE USED FOR CABLE PULLING.

(V) EXCAVATION DEPTH ALLOWS THREE INCHES FOR ADJUSTMENT TO FINAL GRADE AND AN ADDITIONAL SIX INCHES FOR PLACEMENT OF GRAVEL AS BASE SUPPORT.

(X) THIS ITEM IS EXEMPT.

© 1998 - 2021 San Diego Gas & Electric Company. All rights reserved. Removal of this copyright notice without permission is not permitted under law.

REV	CHANGE	DR	BY	DSN	APV	DATE	REV	CHANGE	DR	BY	DSN	APV	DATE
C							F						
B	FORMATTING	EDM	JIK	-	-	10/27/2021	E						
A	COMPLETELY REVISED	-	JS	TR	MDJ	05/26/2016	D						

TABLE OF CONTENTS

REFERENCE:

(a) FOR MANHOLE NECK AND COVER TRAFFIC BEARING, SEE UG3332.

(b) FOR SLURRY BACKFILL, SEE UG3365 AND UG3366.

(c) FOR MASTIC SEALING COMPOUND, SEE UG3306.

d. FOR 48-INCH X 60-INCH MANHOLE NECK AND COVER, SEE UG3332.

TABLE OF CONTENTS

© 1998 - 2021 San Diego Gas & Electric Company. All rights reserved. Removal of this copyright notice without permission is not permitted under law.

REV	CHANGE	DR	BY	DSN	APV	DATE	REV	CHANGE	DR	BY	DSN	APV	DATE
C							F						
B	FORMATTING	EDM	JIK	-	-	10/27/2021	E						
A	COMPLETELY REVISED	-	JS	TR	MDJ	05/26/2016	D						

X Indicates Latest Revision | Completely Revised | New Page | Information Removed

SDG&E ELECTRIC UNDERGROUND CONSTRUCTION STANDARDS

MANHOLE - TUB TYPE
INSIDE DIMENSIONS 8'-0" X 20'-0" X 9'-6"

UG3326.3

SCOPE: THIS STANDARD SHOWS THE INSTALLATION AND MATERIAL REQUIREMENTS FOR A 3327 MANHOLE.

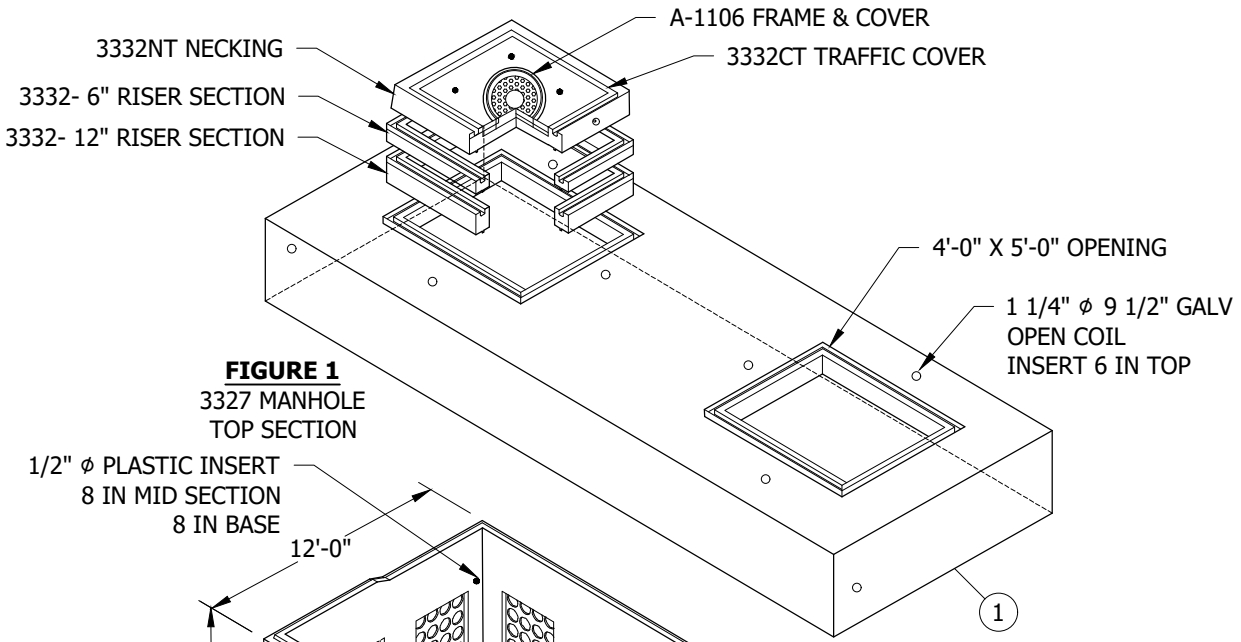

FIGURE 1
3327 MANHOLE
TOP SECTION

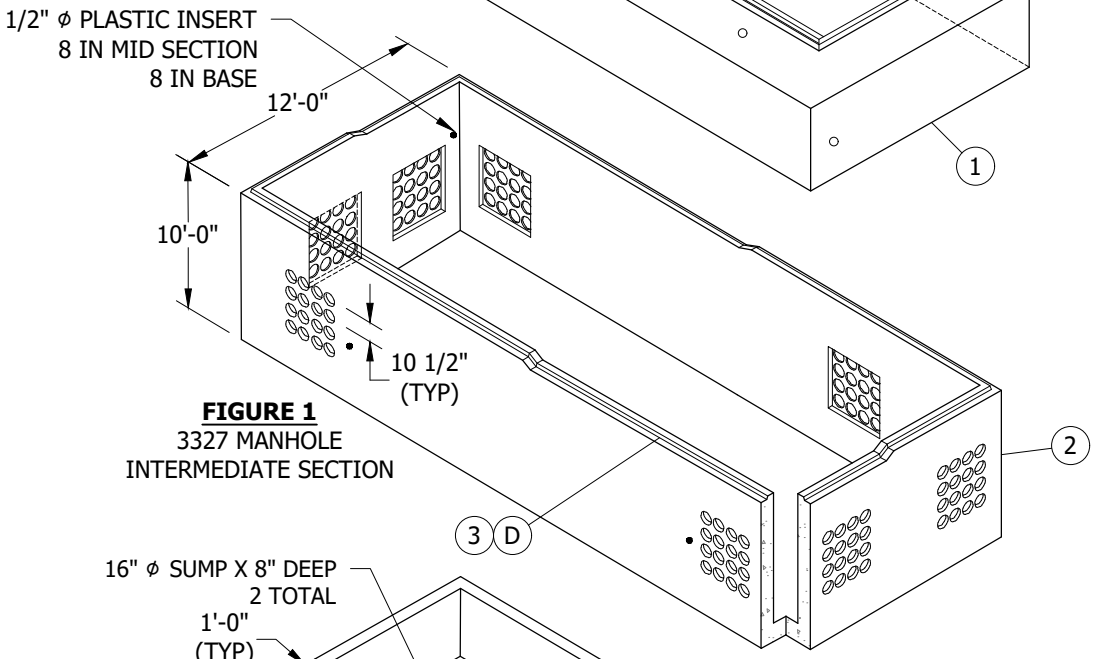

FIGURE 1
3327 MANHOLE
INTERMEDIATE SECTION

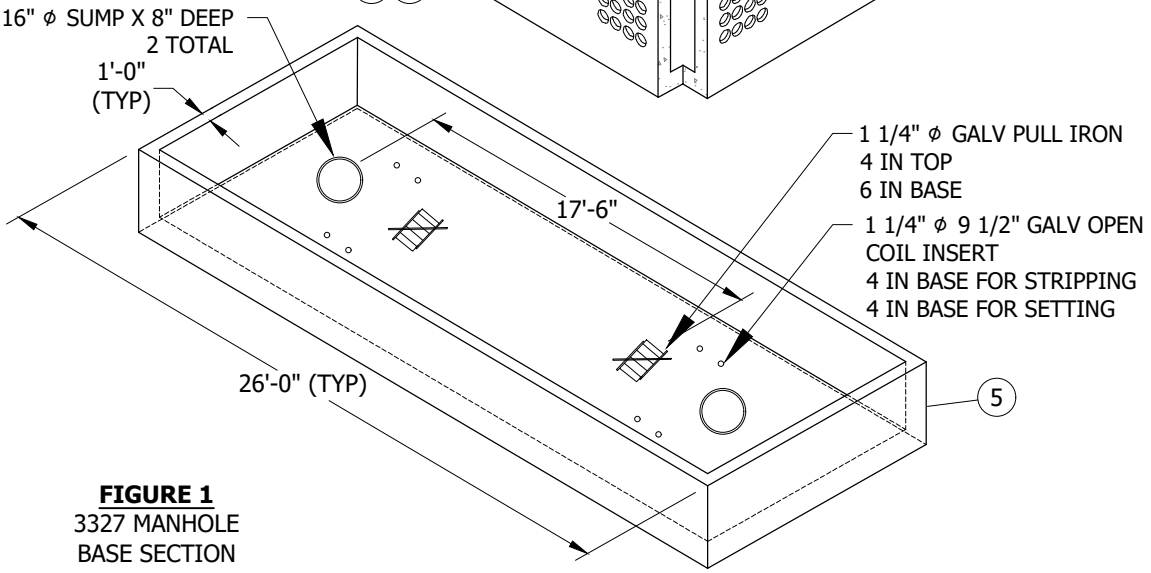

FIGURE 1
3327 MANHOLE
BASE SECTION

© 1998 - 2021 San Diego Gas & Electric Company. All rights reserved. Removal of this copyright notice without permission is not permitted under law.

REV	CHANGE	DR	BY	DSN	APV	DATE	REV	CHANGE	DR	BY	DSN	APV	DATE
C							F						
B	FORMATTING	EDM	JIK	-	-	10/27/2021	E						
A	ORIGINAL ISSUE	-	GW	JS	CZH	11/01/2018	D						

X Indicates Latest Revision | Completely Revised | New Page | Information Removed

SDG&E ELECTRIC UNDERGROUND CONSTRUCTION STANDARDS

SHEET
1 OF 3

SUBSTATION MANHOLE VAULT
10'-0" X 24'-0" X 8'-0"

UG3327.1

TABLE OF CONTENTS

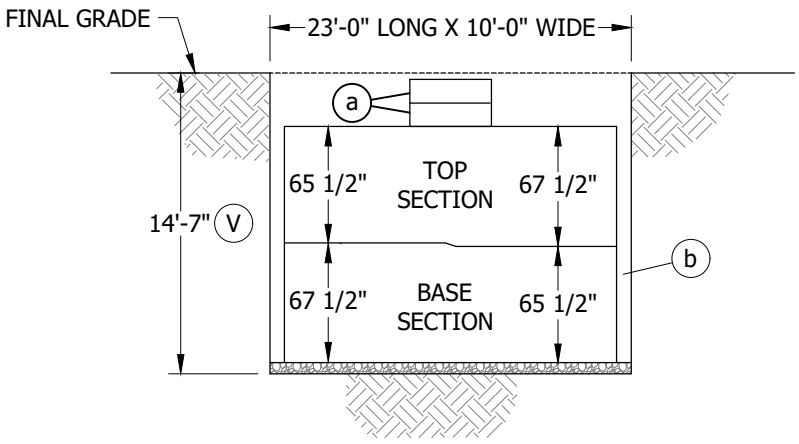

FIGURE 2
EXCAVATION DIMENSIONS

INSTALLATION:

A. ESTABLISH THE MANHOLE LOCATION PAYING PARTICULAR ATTENTION TO FOREIGN UTILITY PLACEMENTS. RELOCATING THE MANHOLE TO ANOTHER LOCATION REQUIRES APPROVAL FROM SERVICE PLANNING.

B. PLACE GRAVEL SIX INCHES DEEP ON EXCAVATION BOTTOM AND SET MANHOLE LEVEL.

(C) USE MASTIC SEALING COMPOUND IN ALL SECTIONS. (c)

D. INSTALL CONDUITS USING THE BOTTOM OUTSIDE (CLOSEST TO THE WALL) KNOCKOUTS FIRST.

E. USE #2 AWG BARE COPPER (S812818 (X)) FOR GROUNDS WITH SERVICE POST CONNECTOR (S262560).

F. ON INITIAL CABLE INSTALLATION, OCCUPY LOWEST CONDUIT OPENINGS FIRST.

BILL OF MATERIALS:

ITEM	DESCRIPTION	WEIGHT (LBS)	QUANTITY	STANDARD PAGE	STOCK NUMBER	DESIGN UNITS
1	TOP SECTION	55,550	1	--	S475906	3327MH
2	BASE SECTION	60,382				
3	SEALANT, PLASTIC MASTIC	--	AS REQ'D	3306	S631875	--
4	GRAVEL, 3/8" - 3/4"	--	AS REQ'D	--	--	--
5	BASE SECTION	58,221	--	--	--	--

NOTES:

I. MANHOLE SECTIONS AND COVERS FROM DIFFERENT SUPPLIERS ARE NOT INTERCHANGEABLE.

II. THE PREFERRED LOCATION FOR A 3327 MANHOLE IS IN NONVEHICULAR TRAFFIC AREAS (BEHIND CURBS, PARKWAY POSITION, ETC.).

III. 3325 MANHOLES ARE DELIVERED BY THE SUPPLIER TO JOB SITE.

IV. LIFTING ANCHORS ARE NOT TO BE USED FOR CABLE PULLING.

(V) EXCAVATION DEPTH ALLOWS THREE INCHES FOR ADJUSTMENT TO FINAL GRADE AND AN ADDITIONAL SIX INCHES FOR PLACEMENT OF GRAVEL AS BASE SUPPORT.

(X) THIS ITEM IS EXEMPT.

© 1998 - 2021 San Diego Gas & Electric Company. All rights reserved. Removal of this copyright notice without permission is not permitted under law.

REV	CHANGE	DR	BY	DSN	APV	DATE	REV	CHANGE	DR	BY	DSN	APV	DATE
C							F						
B	FORMATTING	EDM	JIK	-	-	10/27/2021	E						
A	ORIGINAL ISSUE	-	GW	JS	CZH	11/01/2018	D						

TABLE OF CONTENTS

REFERENCE:

(a) FOR MANHOLE NECK AND COVER TRAFFIC BEARING, SEE UG3332.

(b) FOR SLURRY BACKFILL, SEE UG3365 AND UG3366.

(c) FOR SEALING COMPOUND, SEE UG3306.

d. FOR 48-INCH X 60-INCH MANHOLE NECK AND COVER, SEE UG3332.

TABLE OF CONTENTS

© 1998 - 2021 San Diego Gas & Electric Company. All rights reserved. Removal of this copyright notice without permission is not permitted under law.

REV	CHANGE	DR	BY	DSN	APV	DATE	REV	CHANGE	DR	BY	DSN	APV	DATE
C							F						
B	FORMATTING	EDM	JIK	-	-	10/27/2021	E						
A	ORIGINAL ISSUE	-	GW	JS	CZH	11/01/2018	D						

X Indicates Latest Revision | Completely Revised | New Page | Information Removed

SDG&E ELECTRIC UNDERGROUND CONSTRUCTION STANDARDS

SUBSTATION MANHOLE VAULT
10'-0" X 24'-0" X 8'-0"

UG3327.3

SCOPE: THIS STANDARD SHOWS THE INSTALLATION AND MATERIAL REQUIREMENTS FOR THE MANHOLE NECK, NECK EXTENSION, AND COVER USED FOR ACCESS TO A 3325 AND 3326 MANHOLE.

FIGURE 1
CAST IRON COVER

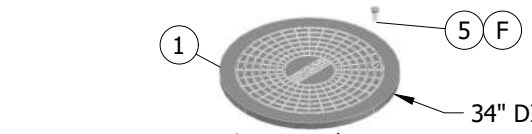

FIGURE 2
CONCRETE COVER

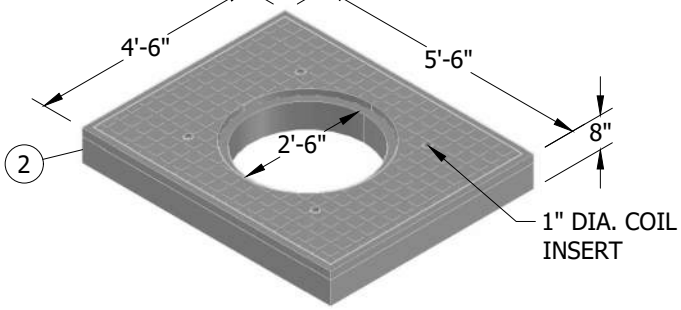

FIGURE 3
NECK SECTION

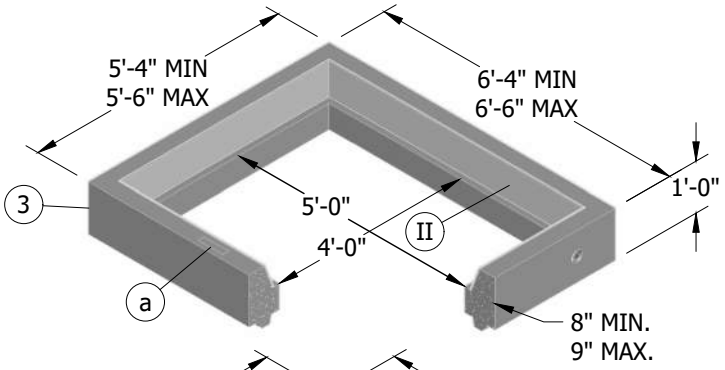

FIGURE 4
NECK EXTENSION SECTION

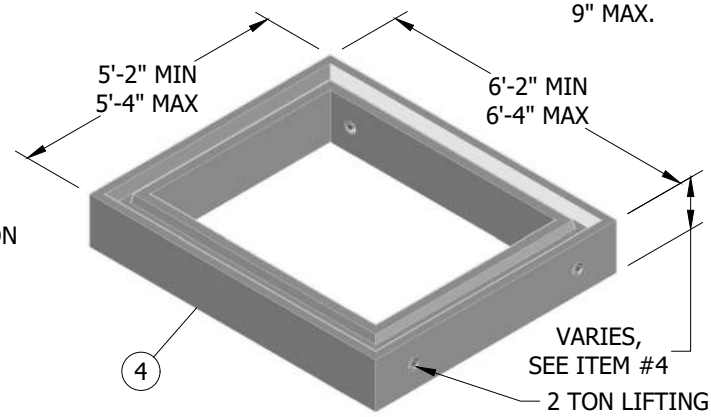

INSTALLATION:

A. PLACE PLASTIC-MASTIC SEALANT BETWEEN ALL SECTIONS. DO NOT APPLY SEALANT UNDER THE TOP SECTION IF CONCRETE IS REQUIRED FOR GRADE ADJUSTMENT.

B. TO DETERMINE FINAL GRADE, ONE OF THE TWO FOLLOWING METHODS MAY BE USED:

1. CURB OR GRADE LEVEL IS ALREADY ESTABLISHED, MEASURE FROM THE TOP OF CURB OR GRADE.
2. HAVE THE FIELD ENGINEER SET THE GRADE STAKES. AFTER GRADE LEVEL IS ESTABLISHED, SET A STRING LINE FOR CHECKING GRADE LEVEL.

© 1998 - 2023 San Diego Gas & Electric Company. All rights reserved. Removal of this copyright notice without permission is not permitted under law.

REV	CHANGE	DR	BY	DSN	APV	DATE	REV	CHANGE	DR	BY	DSN	APV	DATE
C	FIGURE UPDATE	TSA	EJA	EJA	KRG	07/28/2023	F						
B	FORMATTING	EDM	JIK	-	-	10/27/2021	E						
A	EDITORIAL CHANGES	-	JC	TR	JS/MDJ	09/08/2015	D						

X Indicates Latest Revision | Completely Revised | New Page | Information Removed

SDG&E ELECTRIC UNDERGROUND CONSTRUCTION STANDARDS

MANHOLE NECK & COVER - TRAFFIC BEARING
(INSIDE DIMENSIONS 48" X 60")

UG3332.1

TABLE OF CONTENTS

INSTALLATION (CONT'D):

C. ALIGN MANHOLE COVER TO FINAL GRADE USING BRICKS OR WOODEN WEDGES. BEFORE POURING CONCRETE (4-SACK MIX WITH 3/8-INCH PEA GRAVEL OR AS REQUIRED BY CITY OR COUNTY CODES), FRAME THE INSIDE OPEN AREA BETWEEN SECTIONS SO CONCRETE CAN BE POURED FROM THE OUTSIDE OF THE TOP COVER SECTION. MAKE SURE THE BRICKS OR WOODEN WEDGES DO NOT SHOW FROM THE INSIDE ONCE THE CONCRETE IS POURED. THE INSIDE FRAME MAY BE OMITTED IF THE CONCRETE IS NOT TOO WET. IF FRAME IS OMITTED, TROWEL CONCRETE SMOOTH ON THE INSIDE.

D. **TABLE 1**

DEPTHS OF MANHOLE ROOF BELOW GRADE	
EXTENSION	**DEPTH BELOW GRADE**
0"	1'-0"
6"	1'-6"
9"	1'-9"
12"	2'-0"

(E) APPLY INHIBITOR TO THE BOLTS WHEN SECURING THE COVER TO REDUCE INSTALLATION OR REMOVAL DIFFICULTIES.

BILL OF MATERIALS:

ITEM	DESCRIPTION		WEIGHT (LBS)	QUANTITY	STANDARD PAGE	STOCK NUMBER	DESIGN UNITS	
1	COVER, DUCTILE IRON, 34"		205	1	--	S287056	MH-COV	24NKCV
2	COVER, CONCRETE		2,077	1	--	S287110	--	
3	NECK, SECTION		1,949	1	--	S597300	24MHNK	
4	NECK, EXTENSION SECTION	6"	1,040	AS REQ'D	--	S493550	24NK06	
		9"	1,560			S493564	24NK09	
		12"	2,040			S493495	24NK12	
5	BOLT, HEX HEAD, 5/8" X 1 1/2"		--	4	--	S156758	--	
6	SEALANT, PLASTIC-MASTIC (III)		--	AS REQ'D	3306	S631872	--	
7	INHIBITOR (III)		--	AS REQ'D	--	S247200	--	

NOTES:

I. CAST IRON COVERS FROM DIFFERENT SUPPLIERS ARE INTERCHANGEABLE. THE CONCRETE COVER, NECK SECTION AND NECK EXTENSION SECTION FROM DIFFERENT SUPPLIERS ARE NOT INTERCHANGEABLE.

(II) WHEN TRAFFIC COVER IS REMOVED CHECK GASKET MATERIAL AND REPLACE AS NEEDED (S341020).

REFERENCE:

(a) FOR INSTALLATION OF IDENTIFICATION TAG, SEE UG3211 AND UG3212.

b. FOR SUBSTRUCTURE APPLICATIONS, SEE UG3302.

c. FOR INSTALLATION OF PLASTIC-MASTIC SEALANT, SEE UG3306.

d. FOR SLURRY BACKFILL, SEE UG3365 AND UG3366.

e. FOR MINIMUM OPERATING AND CLEARANCE REQUIREMENTS, SEE UG3480, UG3481, UG3482, AND UG3483.

f. FOR SETTING MANHOLE ON SLOPING GRADE, SEE UG3485.

g. FOR RETAINING WALL REQUIREMENTS AND CLEARANCES FROM REVERSE SUBGRADE RETAINING WALLS, SEE UG3486, UG3487, AND UG3488.

h. FOR SUBSTRUCTURE USE AND LIMITATIONS REFERENCE SHEET (MAXIMUM NUMBER OF CABLES, CONNECTORS AND CONDUITS), SEE UG3605.

© 1998 - 2023 San Diego Gas & Electric Company. All rights reserved. Removal of this copyright notice without permission is not permitted under law.

REV	CHANGE	DR	BY	DSN	APV	DATE	REV	CHANGE	DR	BY	DSN	APV	DATE
C	FIGURE UPDATE	TSA	EJA	EJA	KRG	07/28/2023	F						
B	FORMATTING	EDM	JIK	-	-	10/27/2021	E						
A	EDITORIAL CHANGES	-	JC	TR	JS/MDJ	09/08/2015	D						

X Indicates Latest Revision | Completely Revised | New Page | Information Removed

SDG&E ELECTRIC UNDERGROUND CONSTRUCTION STANDARDS

MANHOLE NECK & COVER - TRAFFIC BEARING
(INSIDE DIMENSIONS 48" X 60")

UG3332.2

TABLE OF CONTENTS

SCOPE: THIS STANDARD SHOWS THE INSTALLATION AND APPLICATION OF SUMP PUMPS INSTALLED IN MANHOLES THAT CONTAIN OR WILL CONTAIN SWITCHES.

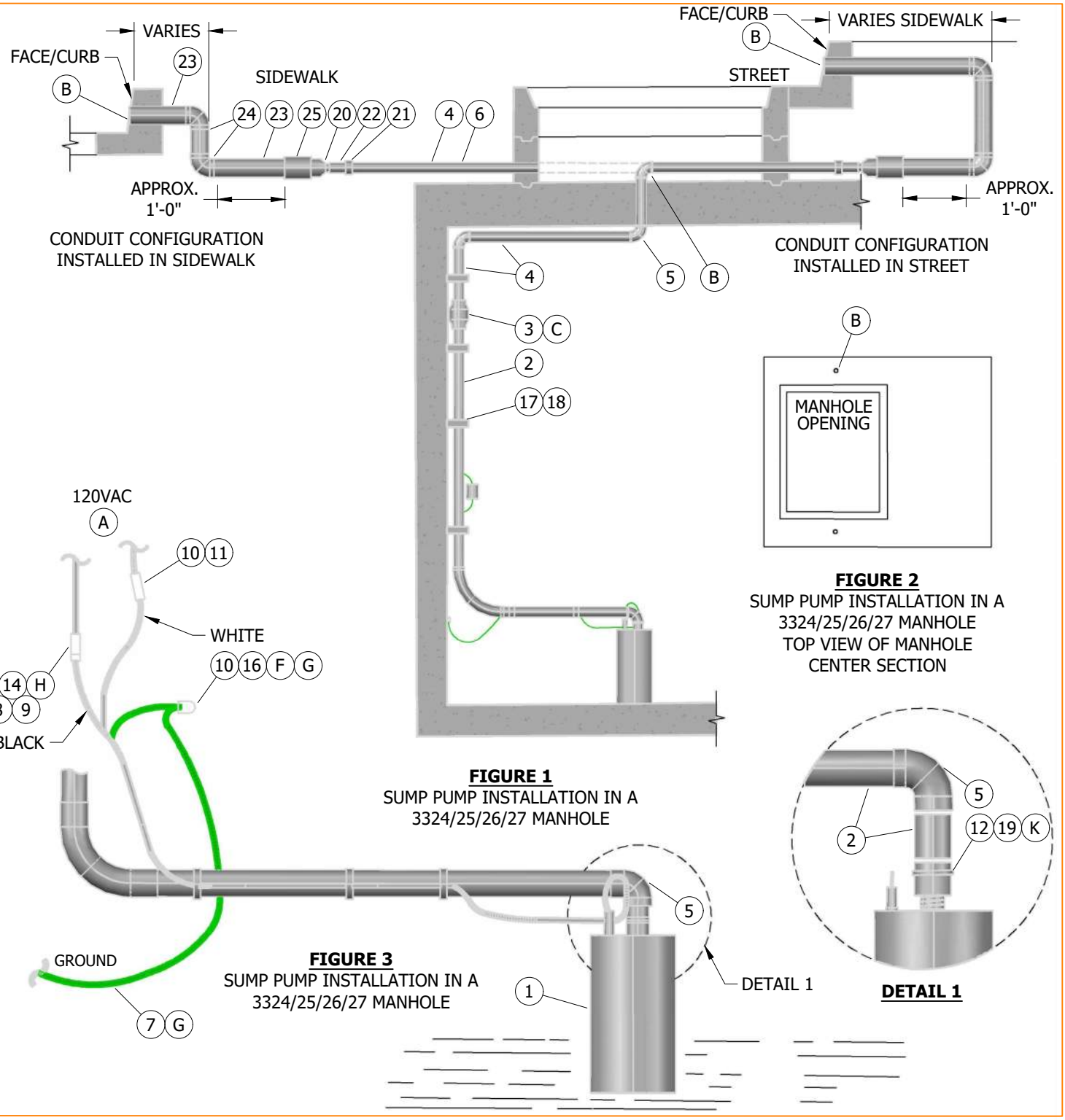

FIGURE 1
SUMP PUMP INSTALLATION IN A
3324/25/26/27 MANHOLE

FIGURE 2
SUMP PUMP INSTALLATION IN A
3324/25/26/27 MANHOLE
TOP VIEW OF MANHOLE
CENTER SECTION

FIGURE 3
SUMP PUMP INSTALLATION IN A
3324/25/26/27 MANHOLE

TABLE OF CONTENTS

© 1998 - 2023 San Diego Gas & Electric Company. All rights reserved. Removal of this copyright notice without permission is not permitted under law.

REV	CHANGE	DR	BY	DSN	APV	DATE	REV	CHANGE	DR	BY	DSN	APV	DATE
C	FIGURE UPDATE	TSA	EJA	EJA	KRG	03/27/2023	F						
B	MOVED FROM UG3362	EDM	JIK	-	-	10/27/2021	E						
A	REPL'D PUMP MODEL	-	ML	AW	MDJ	02/13/2018	D						

X Indicates Latest Revision	Completely Revised	New Page	Information Removed	

SDG&E ELECTRIC UNDERGROUND CONSTRUCTION STANDARDS

SHEET 1 OF 3

SUMP PUMP INSTALLATION
FOR MANHOLES 3324, 3325, 3326, 3327

UG3360.1

INSTALLATION:

(A) PROVIDE A 120V, SINGLE-PHASE SERVICE TO PUMP LOCATION. IF SECONDARY DOES NOT EXIST IN SUBSTRUCTURE AND A SPARE SECONDARY CONDUIT IS NOT AVAILABLE, A PRIMARY CONDUIT MAY BE SUBSTITUTED.

(B) CORE BORE WITH A 3 1/2-INCH BIT TO MAKE THE HOLE THROUGH THE CURB AND 2-INCH BIT TO MAKE THE HOLE THROUGH THE MANHOLE. CORE BORE THE CURB AT A 45 DEGREE ANGLE TOWARD THE GRAVITY LOW OF THE WATER ON THE DOWNWARD SIDE OF THE SUBSTRUCTURE. REDUCE CONDUIT TO 1 1/2 INCHES AFTER THE SECOND 3-INCH 90 DEGREE BEND. BRING THE CONDUIT IN ON THE SHORT SIDE OF THE SUBSTRUCTURE WHENEVER POSSIBLE.

(C) INSTALL THE DISCHARGE CONDUIT AS SHOWN IN FIGURES 1 OR 3, MAKING SURE THAT ARROW ON CHECK VALVE IS DIRECTING WATER FLOW UPWARD TOWARD STREET.

D. SOLVENT CEMENT IS REQUIRED WHEN ATTACHING P.V.C HOSE TO FITTINGS.

(E) WHEN PUMP IS DISCONNECTED FROM HOSE, CUT THE HOSE AS CLOSE TO THE PUMP AS POSSIBLE. FOR RE-ATTACHMENT, USE A 1 1/2-INCH COUPLING.

(F) CUT 120V ELECTRICAL PLUG FROM END OF PUMP CORD. USING STA-KON OR EQUIVALENT CONNECTORS AND HEAT SHRINK TUBES, ATTACH WIRE AS SHOWN IN FIGURES 1 OR 3.

(G) SPLICE THE PUMP GROUND WIRE (GREEN) TO A #8 CU WIRE (ITEM 7) USING A STA-KON OR EQUIVALENT CONNECTOR. ATTACH THE #8 CU WIRE TO SUBSTRUCTURE GROUND.

(H) INSTALL FUSE HOLDER WITH FUSE INSIDE AS HIGH AS POSSIBLE AND ABOVE WATER MARKS ON SUBSTRUCTURE WALL WHERE FUSE CAN BE CHANGED FROM LADDER. APPLY SEALING COMPOUND TO ASSURE A WATERTIGHT CONNECTION.

J. WHEN CORE BORING CURB, ENSURE DISCHARGE IS ON THE LOWER SIDE OF THE MANHOLE OPENING IF OPENING IS IN THE STREET.

(K) THIS PUMP SHALL NOT BE USED TO PUMP THE SUBSTRUCTURE DRY. MANUAL OPERATION OF SUMP PUMP WITHOUT 2 INCHES MINIMUM OF WATER SURROUNDING PUMP AT ALL TIMES WILL DAMAGE THE PUMP UNIT.

BILL OF MATERIALS:

ITEM	DESCRIPTION	QUANTITY	STANDARD PAGE	STOCK NUMBER	DESIGN UNITS	
1	SUMP PUMP, AUTOMATED	1	--	S561570	ECOPMP	SUMPAS
2	HOSE, 1 1/2", PVC (E)(F)	AS REQ'D	--	S417200	1-1/2F	
3	VALVE, CHECK, 1 1/2"	1	--	S783110	--	
4	CONDUIT, SCH 40 PVC, 1 1/2"	AS REQ'D	--	S251232	1-1/2C	
5	ELBOW, 90°, 1 1/2"	3	--	S325476	--	
6	COUPLING, SCH 40 PVC, 1 1/2" (E)(F)	AS REQ'D	--	S280320		
7	WIRE, #8 THW 600V COPPER	AS REQ'D	--	S808320		
8	HOLDER, FUSE	1	--	S443392		
9	CARTRIDGE, FUSE, 15A, BUSS FNM15	1	--	S363790		
10	HEAT-SHRINK, TUBE, 1.3" ID X 6"	3	--	S777984		
11	SERVICE CONNECTOR	1	--	S258496	--	
12	TIE STRAP	AS REQ'D	--	S738440	--	
13	SOLVENT CEMENT (E)(VI)	AS REQ'D	--	S213232	--	
14	SEALING COMPOUND (K)	1	--	S442976	--	
15	WIRE, TWO #8, 600V ALUMINUM INSULATED CABLE (U10.011) (VI)	AS REQ'D	--	S196176	--	
16	CONNECTOR, STA-KON OR EQUIVALENT	3	--	S258712	--	
17	PIPE STRAP, TWO HOLE, 1 1/2", STAINLESS STEEL	AS REQ'D	--	S697664	--	
18	ANCHOR BOLT, 1/4" X 2 1/4", STAINLESS STEEL	AS REQ'D	--	S107660	--	
19	ADAPTER, THREADED 1 1/4" TO 1 1/2" SLIP	1	--	S102064	--	

TABLE OF CONTENTS

© 1998 - 2023 San Diego Gas & Electric Company. All rights reserved. Removal of this copyright notice without permission is not permitted under law.

REV	CHANGE	DR	BY	DSN	APV	DATE	REV	CHANGE	DR	BY	DSN	APV	DATE
C	FIGURE UPDATE	TSA	EJA	EJA	KRG	03/27/2023	F						
B	MOVED FROM UG3362	EDM	JIK	-	-	10/27/2021	E						
A	REPL'D PUMP MODEL	-	ML	AW	MDJ	02/13/2018	D						

BILL OF MATERIALS (CONT'D):

ITEM	DESCRIPTION	QUANTITY	STANDARD PAGE	STOCK NUMBER	DESIGN UNITS	
20	REDUCER, SCH 80 PVC, 3"-2"	1	--	S573392	--	
21	REDUCER, NESTING BUSHING, SCH 40 PVC, 2" X 1 1/2"	1	--	S573411	--	
22	COUPLING, SCH 40 PVC, 2"	1	--	S280384	--	
4	CONDUIT, SCH 40 PVC, 1 1/2"	AS REQ'D	--	S251232	1-1/2C	X-COND
23	CONDUIT, SCH 40 PVC, 3"	10'-0" MAX.	--	S251360	--	
24	ELBOW, 90°, SCH 40 PVC, 3"	2	--	S321818	--	
25	COUPLING, SCH 40 PVC, 3"	AS REQ'D	--	S280448	--	

NOTES:

THE INSTALLATION CRITERIA SHALL BE THE FOLLOWING FOR SWITCHES:

I. IN MANHOLES WHICH WILL HOUSE NEW SWITCH(ES), INSTALL A SUMP PUMP AND DISCHARGE CONDUIT AS SHOWN IN THIS STANDARD AND PROVIDE 120V POWER FOR THE PUMP.

II. IN MANHOLES WHICH MAY ULTIMATELY HOUSE SWITCH(ES), INSTALL THE DISCHARGE CONDUIT FROM THE CURB TO A POINT 6 INCHES INSIDE THE SUBSTRUCTURE. INSTALL A TEMPORARY CAP ON THE 6-INCH PORTION WITH SOLVENT CEMENT. INSTALL THE ELECTRIC CONDUIT THAT WILL BE USED FOR THE SERVICE TO THE PUMP IN THE KNOCKOUT DIRECTLY ABOVE THE DESIGNATED CONDUITS TOWARD THE SOURCE OR FUTURE SOURCE OF FEED.

III. INSTALL A SUMP PUMP WHENEVER THE WATER LEVEL REACHES THE BOTTOM OF AN EXISTING SUBSURFACE SWITCH OR 9 INCHES, WHICHEVER IS LESS.

THE INSTALLATION CRITERIA SHALL BE THE FOLLOWING FOR ON-OFF SWITCHES:

IV. IN MANHOLES WHICH WILL HOUSE NEW SWITCH(ES), INSTALL A SUMP PUMP AND DISCHARGE CONDUIT AS SHOWN IN THIS STANDARD AND PROVIDE 120V POWER FOR THE PUMP.

V. IN MANHOLES WHICH MAY ULTIMATELY HOUSE SWITCH(ES) AT A LATER DATE, INSTALL THE DISCHARGE CONDUIT FROM THE CURB TO A POINT 6 INCHES INSIDE THE SUBSTRUCTURE. INSTALL A TEMPORARY CAP ON THE 6-INCH PORTION WITH SOLVENT CEMENT. INSTALL THE ELECTRIC CONDUIT THAT WILL BE USED FOR SERVICE TO THE PUMP IN THE KNOCKOUT DIRECTLY ABOVE THE DESIGNATED CONDUITS TOWARD THE SOURCE OR FUTURE SOURCE OF FEED.

(VI) NOT SHOWN ON FIGURES.

REFERENCE: NONE

TABLE OF CONTENTS

© 1998 - 2023 San Diego Gas & Electric Company. All rights reserved. Removal of this copyright notice without permission is not permitted under law.

REV	CHANGE	DR	BY	DSN	APV	DATE	REV	CHANGE	DR	BY	DSN	APV	DATE
C	FIGURE UPDATE	TSA	EJA	EJA	KRG	03/27/2023	F						
B	MOVED FROM UG3362	EDM	JIK	-	-	10/27/2021	E						
A	REPL'D PUMP MODEL	-	ML	AW	MDJ	02/13/2018	D						

X Indicates Latest Revision | Completely Revised | New Page | Information Removed

SDG&E ELECTRIC UNDERGROUND CONSTRUCTION STANDARDS

SUMP PUMP INSTALLATION
FOR MANHOLES 3324, 3325, 3326, 3327

UG3360.3

SCOPE: THIS STANDARD SHOWS RESURFACING OF AN EXISTING STREET AFTER THE INSTALLATION OR RAISING OF A 3300 SUBSTRUCTURE.

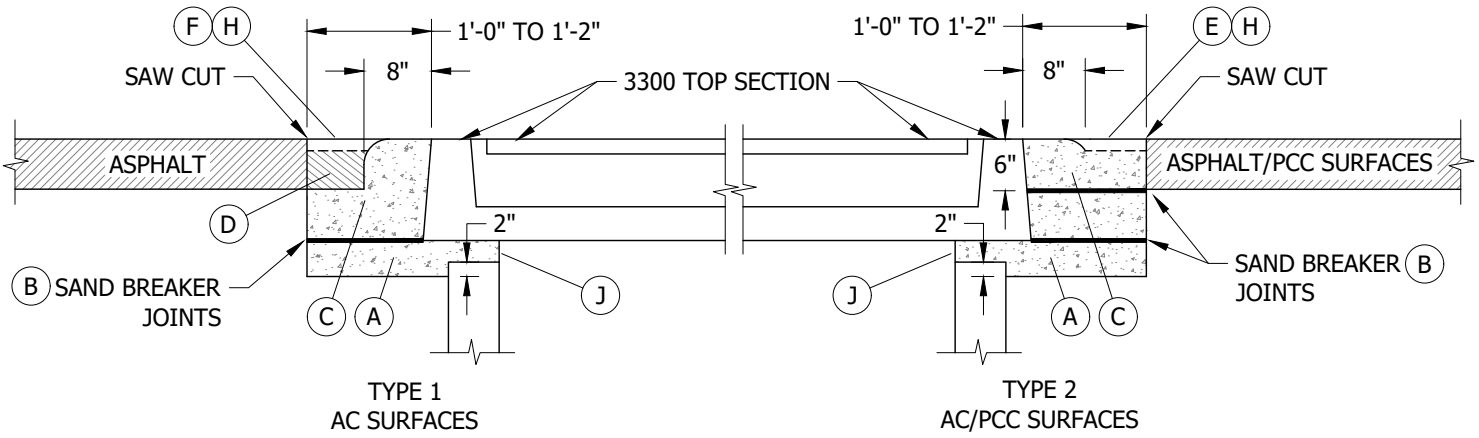

FIGURE 1

INSTALLATION:

A. CONCRETE 6 SACK MIX (560-C-3250) WITH 1-INCH ROCK.

B. INSTALL 1/2-INCH LAYER OF WASHED CONCRETE SAND OR OTHER BOND BREAKERS EVERY 6 INCHES FOR POSITIVE CONSTRUCTION BREAKER JOINTS. IF SUBSTRUCTURE IS RAISED AT A LATER DAY DUE TO STREET RESURFACING, ETC., BREAKER JOINT WILL EASE RAISING SUBSTRUCTURE.

C. CONCRETE 6 SACK MIX (560-C-3250). APRON 8 INCHES IN WIDTH, TROWELED SURFACE 1/4-INCH ROLLED EDGE (SIDEWALK EDGING TOOL). CONCRETE APRON SERVES AS PROTECTION FOR SUBSTRUCTURE.

D. ASPHALT ROAD BASE, 6-INCH MINIMUM DEPTH.

E. FOR AC SURFACES, MAINTAIN CONCRETE BASE SURFACE 1/8-INCH LOW TO LEAVE ENOUGH ROOM FOR CLASS 'F' ASPHALT TO BE EVENLY SPREAD, RESULTING IN A SMOOTH (FLAT) EXISTING SURFACE BETWEEN EXISTING ROADWAY AND 3300 TOP (NECK) SECTION.

F. CLASS 'F' ASPHALT SPREAD EVENLY, RESULTING IN A SMOOTH TRANSITION SURFACE FROM ROADWAY TO 3300 TOP (NECK) SECTION.

G. INSTALL 1/2-INCH LAYER OF WASHED CONCRETE SAND OR OTHER BOND BREAKERS IF CONCRETE UNDER TOP (NECK) SECTION EXCEEDS 3 INCHES.

H. FOR AC SURFACES CLASS 'F' ASPHALT SHALL BE SEALED WITH ASPHALTIC TYPE EMULSION THEN SAND SEALED.

J. FRAME THE INSIDE OPEN AREA BETWEEN SECTIONS SO CONCRETE CAN BE POURED FROM OUTSIDE THE SUBSTRUCTURE.

K. THE INSTALLATION SHALL MEET LOCAL GOVERNMENTAL REQUIREMENTS. IF THIS STANDARD DOES NOT CONFORM, FOLLOW AGENCY, GOVERNMENTAL REQUIREMENTS.

BILL OF MATERIALS: NONE

NOTES: NONE

REFERENCE: NONE

a. SEE UG3303 FOR CONCRETE PRODUCTS - MANHOLES, HANDHOLES, COVERS AND ENCLOSURES.

TABLE OF CONTENTS

© 1998 - 2024 San Diego Gas & Electric Company. All rights reserved. Removal of this copyright notice without permission is not permitted under law.

REV	CHANGE	DR	BY	DSN	APV	DATE	REV	CHANGE	DR	BY	DSN	APV	DATE
C	DRAWING UPDATE	NV5	EJA	JAS	JAS	11/05/2024	F						
B	MOVED FROM UG3363	EDM	JIK	-	-	10/27/2021	E						
A	EDITORIAL CHANGE	-	JS	TR	MDJ	05/26/2016	D						

X Indicates Latest Revision | Completely Revised | New Page | Information Removed

SDG&E ELECTRIC UNDERGROUND CONSTRUCTION STANDARDS

STREET RESURFACING

UG3361.1

SCOPE: THIS STANDARD SHOWS TYPICAL UTILITY LOCATIONS IN LOCAL AND COLLECTOR STREETS IN SAN DIEGO COUNTY.

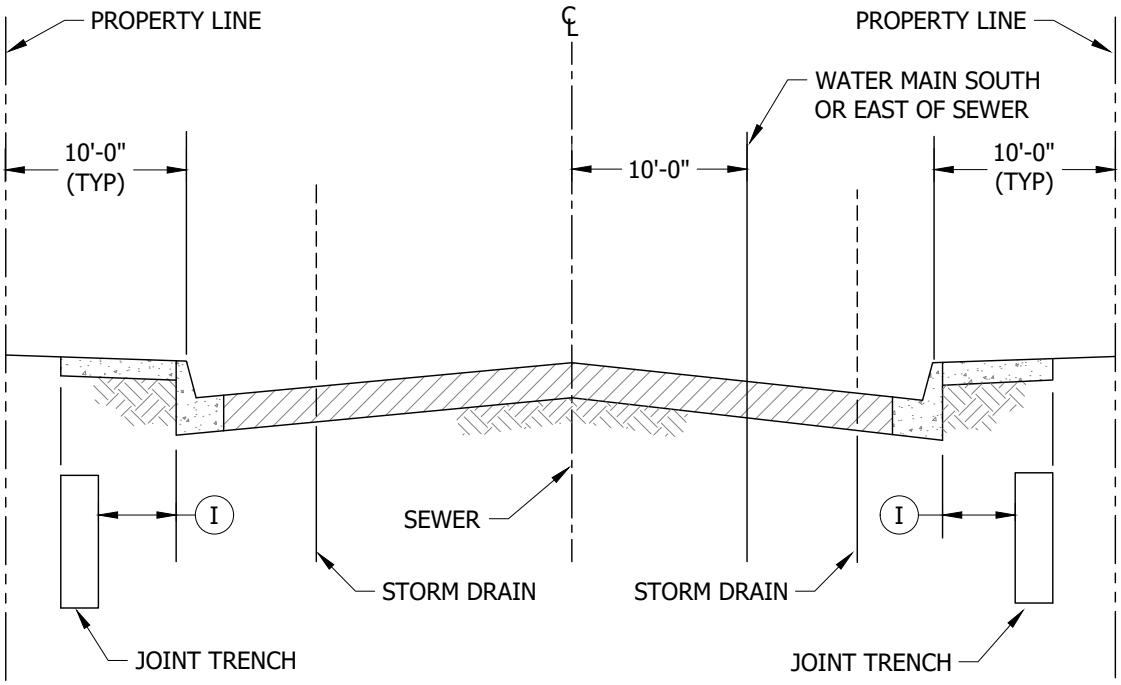

FIGURE 1
NEW CONSTRUCTION
TYPICAL STREET

INSTALLATION: NONE

BILL OF MATERIALS: NONE

NOTES:

(I) AT CATCH BASIN LOCATIONS, JOINT TRENCH SHALL BE 4 FEET MINIMUM FROM BACK OF CURB TO INSIDE WALL OF TRENCH.

REFERENCE: NONE

TABLE OF CONTENTS

© 1998 - 2025 San Diego Gas & Electric Company. All rights reserved. Removal of this copyright notice without permission is not permitted under law.

REV	CHANGE	DR	BY	DSN	APV	DATE	REV	CHANGE	DR	BY	DSN	APV	DATE
C	NO CHANGES - REAFFIRMED	NV5	ADW	JAS	JAS	11/08/2024	F						
B	MOVED FROM UG3364	EDM	JIK	-	-	10/27/2021	E						
A	EDITORIAL CHANGES	-	JS	TR	MDJ	06/06/2016	D						

SCOPE: THIS STANDARD SHOWS TYPICAL UTILITY LOCATIONS IN MAJOR STREETS, PRIME ARTERIALS, AND EXPRESSWAYS IN SAN DIEGO COUNTY.

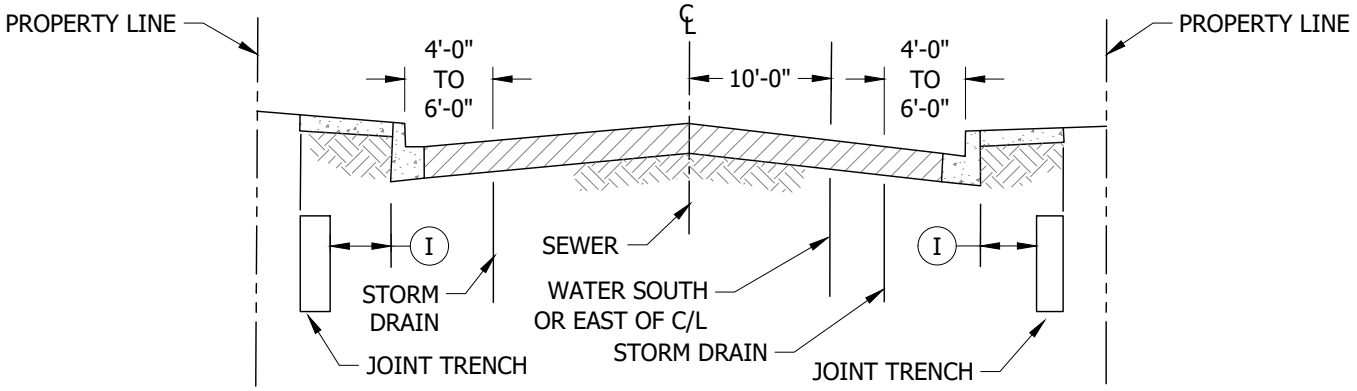

CONFIGURATION 1
MAJOR STREET
FOUR LANE, 78'-0" CURB TO CURB, 90'-0" P/L TO P/L

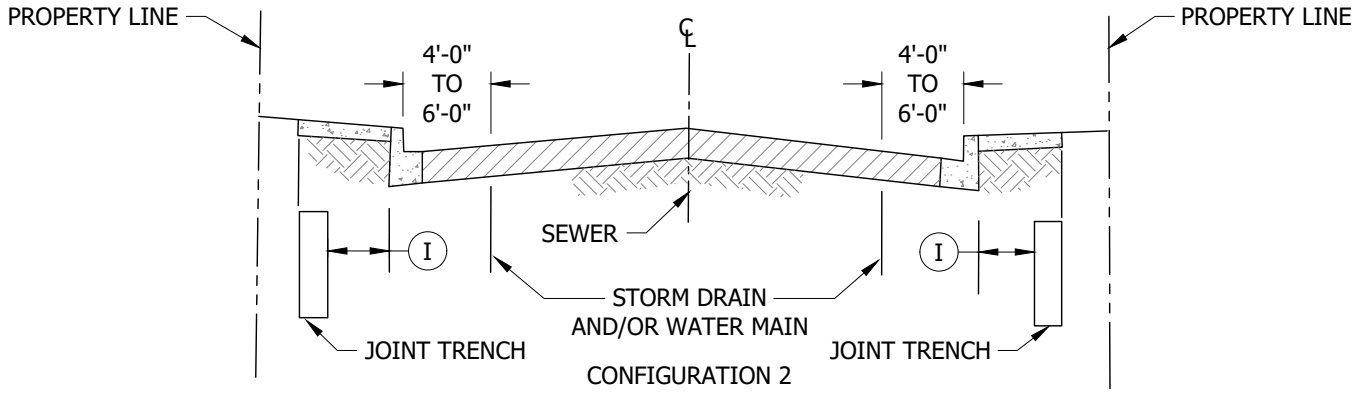

CONFIGURATION 2
PRIME ARTERIAL
SIX LANE, 102'-0" CURB TO CURB, 122'-0" P/L TO P/L

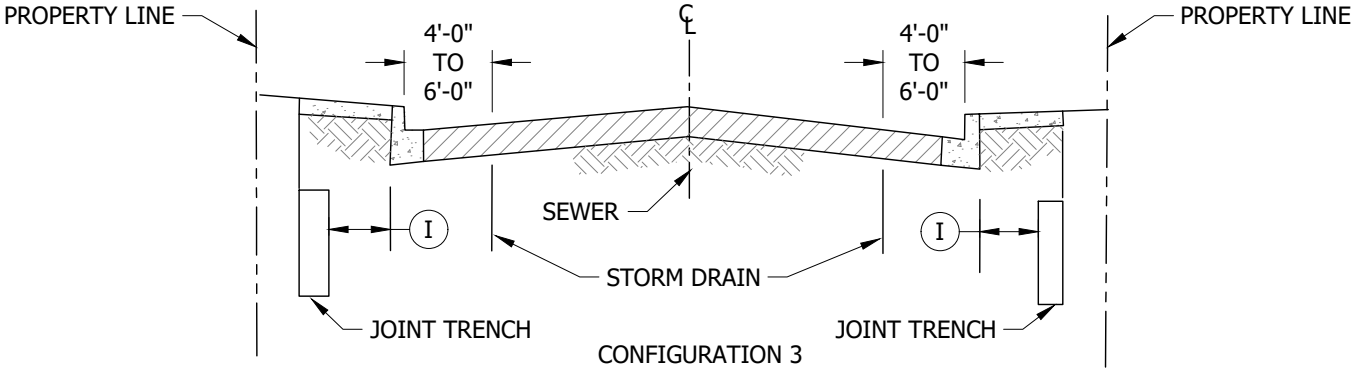

CONFIGURATION 3
EXPRESSWAY
SIX LANE, 102'-0" CURB TO CURB, 122'-0" P/L TO P/L GREATER SPEEDS

FIGURE 1
NEW CONSTRUCTION

© 1998 - 2024 San Diego Gas & Electric Company. All rights reserved. Removal of this copyright notice without permission is not permitted under law.

REV	CHANGE	DR	BY	DSN	APV	DATE	REV	CHANGE	DR	BY	DSN	APV	DATE
C	FORMATTING	NV5	ADW	JAS	JAS	12/09/2024	F						
B	MOVED FROM UG3364	EDM	JIK	-	-	10/27/2021	E						
A	EDITORIAL CHANGES	-	JS	TR	MDJ	06/06/2016	D						

X Indicates Latest Revision | Completely Revised | New Page | Information Removed

SDG&E ELECTRIC UNDERGROUND CONSTRUCTION STANDARDS

UTILITY LOCATIONS IN MAJOR STREETS, PRIME ARTERIALS, AND EXPRESSWAYS IN S.D. COUNTY

UG3363.1

TABLE OF CONTENTS

INSTALLATION: NONE

BILL OF MATERIALS: NONE

NOTES:

(I) AT CATCH BASIN LOCATIONS, JOINT TRENCH SHALL BE 4 FEET MINIMUM FROM BACK OF CURB TO INSIDE WALL OF TRENCH.

REFERENCE: NONE

TABLE OF CONTENTS

© 1998 - 2024 San Diego Gas & Electric Company. All rights reserved. Removal of this copyright notice without permission is not permitted under law.

REV	CHANGE	DR	BY	DSN	APV	DATE	REV	CHANGE	DR	BY	DSN	APV	DATE
C	FORMATTING	NV5	ADW	JAS	JAS	12/09/2024	F						
B	MOVED FROM UG3364	EDM	JIK	-	-	10/27/2021	E						
A	EDITORIAL CHANGES	-	JS	TR	MDJ	06/06/2016	D						

X Indicates Latest Revision | Completely Revised | New Page | Information Removed

SDG&E ELECTRIC UNDERGROUND CONSTRUCTION STANDARDS

UTILITY LOCATIONS IN MAJOR STREETS, PRIME ARTERIALS, AND EXPRESSWAYS IN S.D. COUNTY

UG3363.2

SCOPE: THIS STANDARD SHOWS TYPICAL JOINT TRENCH LOCATION FOR UNDERGROUND CONVERSIONS IN SAN DIEGO COUNTY.

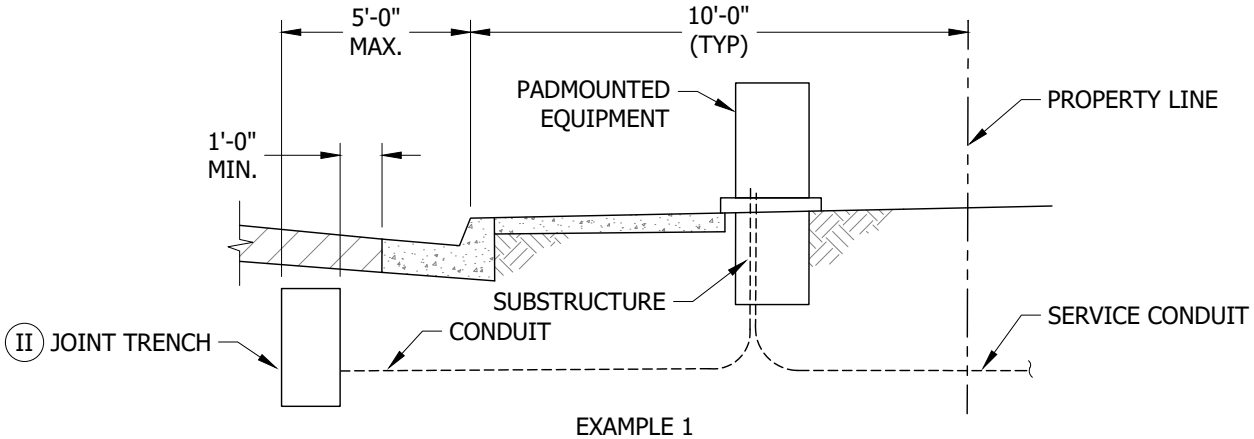

EXAMPLE 1
SIDEWALK NEXT TO CURB

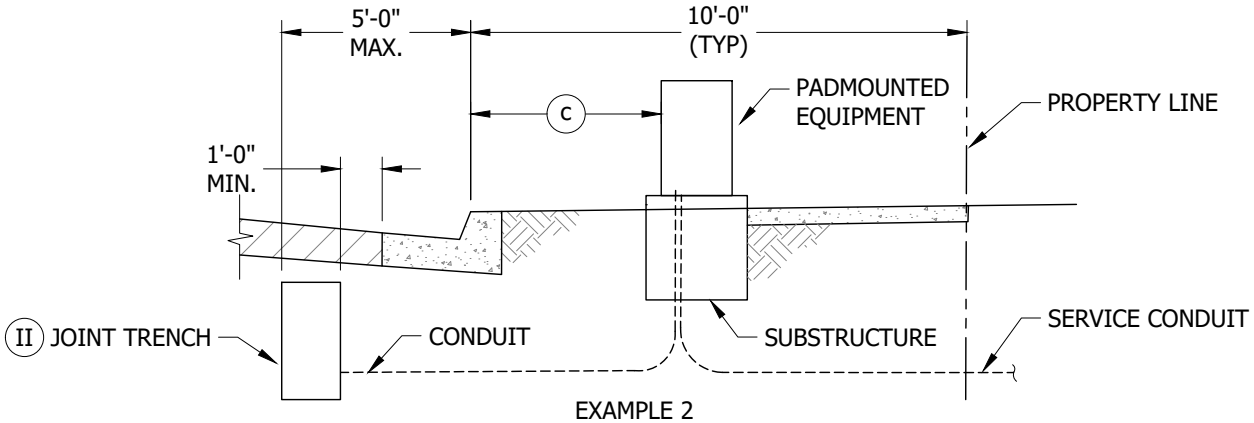

EXAMPLE 2
SIDEWALK NEXT TO PROPERTY LINE

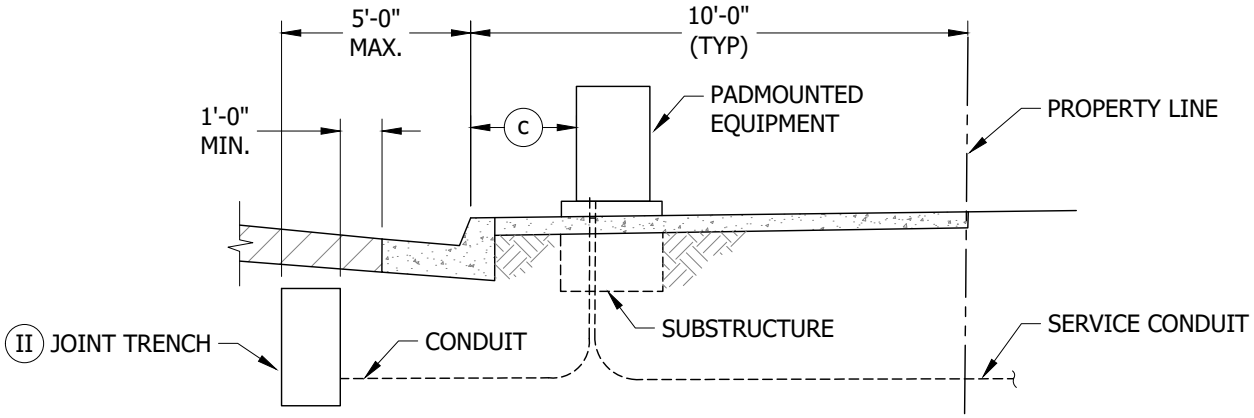

EXAMPLE 3
SIDEWALK NEXT TO CURB AND PROPERTY LINE

FIGURE 1
UNDERGROUND CONVERSIONS

© 1998 - 2024 San Diego Gas & Electric Company. All rights reserved. Removal of this copyright notice without permission is not permitted under law.

REV	CHANGE	DR	BY	DSN	APV	DATE	REV	CHANGE	DR	BY	DSN	APV	DATE
C	DRAWING UPDATE	NV5	EJA	JAS	JAS	11/05/2024	F						
B	FORMATTING	EDM	JIK	-	-	10/27/2021	E						
A	EDITORIAL CHANGES	-	JS	TR	MDJ	06/06/2016	D						

X Indicates Latest Revision | Completely Revised | New Page | Information Removed

SDG&E ELECTRIC UNDERGROUND CONSTRUCTION STANDARDS

SHEET 1 OF 2

JOINT TRENCH TYPICAL LOCATION
FOR UNDERGROUND CONVERSIONS IN S.D. COUNTY

UG3364.1

TABLE OF CONTENTS

INSTALLATION: NONE

BILL OF MATERIALS: NONE

NOTES:

I. SIDEWALK SHALL HAVE A MINIMUM OF 4-FOOT CLEAR AREA (PATH, NOT INCLUDING CURB) PASSING PEDESTALS, PULLBOXES AND OTHER STRUCTURES. (b)

(II) STREET LIGHTS, GAS, UNDERGROUND ELECTRIC, TELEPHONE AND CATV.

REFERENCE:

a. SEE GAS STANDARDS 7425.1, 7425.2, AND 7425.3 [FOR INTERNAL USE ONLY].

(b) SEE UG3002 FOR PEDESTRIAN PATH OF TRAVEL AND ACCESSIBILITY.

(c) SEE UG3479, UG3480, UG3481, UG3482, UG3483, AND UG3488 FOR CLEARANCES.

d. SEE UG3484 AND UG3485 FOR SUBSTRUCTURE OR PAD INSTALLATION ON SLOPING GRADE.

e. SEE UG3486 AND UG3487 FOR RETAINING WALL REQUIREMENTS.

TABLE OF CONTENTS

© 1998 - 2024 San Diego Gas & Electric Company. All rights reserved. Removal of this copyright notice without permission is not permitted under law.

REV	CHANGE	DR	BY	DSN	APV	DATE	REV	CHANGE	DR	BY	DSN	APV	DATE
C	DRAWING UPDATE	NV5	EJA	JAS	JAS	11/05/2024	F						
B	FORMATTING	EDM	JIK	-	-	10/27/2021	E						
A	EDITORIAL CHANGES	-	JS	TR	MDJ	06/06/2016	D						

X Indicates Latest Revision | Completely Revised | New Page | Information Removed

SDG&E ELECTRIC UNDERGROUND CONSTRUCTION STANDARDS

SHEET 2 OF 2

JOINT TRENCH TYPICAL LOCATION
FOR UNDERGROUND CONVERSIONS IN S.D. COUNTY

UG3364.2

SCOPE: THIS STANDARD SHOWS TYPICAL PLACEMENT OF BASE, SHADING, AND IMPORTED OR NATIVE BACKFILL MATERIAL FOR SDG&E FACILITIES IN SAN DIEGO COUNTY. IMPORTED OR NATIVE BACKFILL IS THE ALTERNATE BACKFILL MATERIAL, ONE SACK SLURRY IS THE PREFERRED BACKFILL MATERIAL.

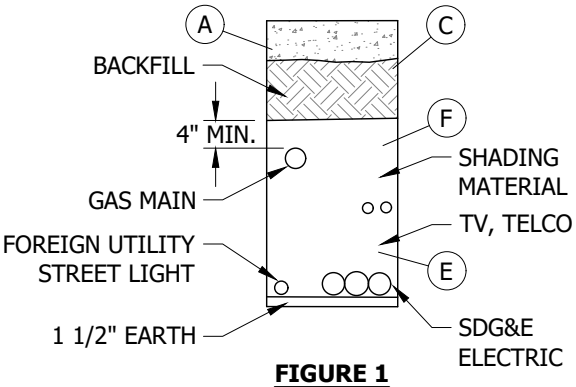

FIGURE 1
JOINT TRENCH

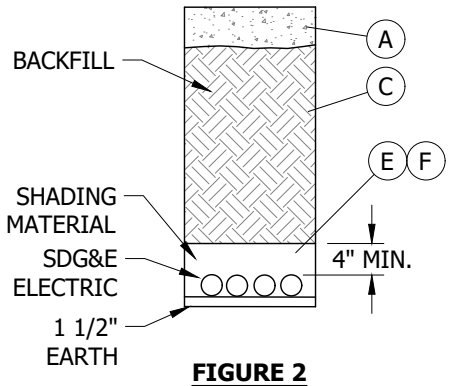

FIGURE 2
ELECTRIC ONLY

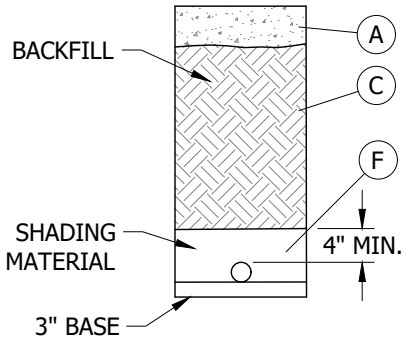

FIGURE 3
SINGLE GAS ONLY

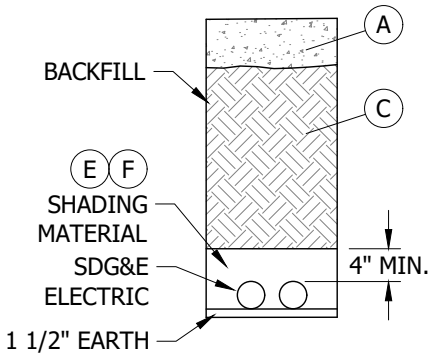

FIGURE 4
ELECTRIC ONLY

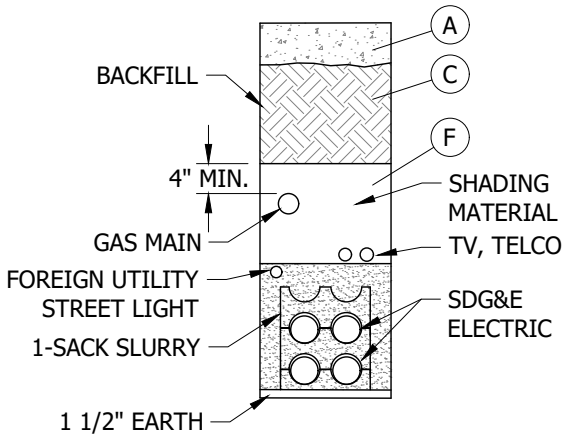

FIGURE 5
JOINT TRENCH
WITH SLURRY

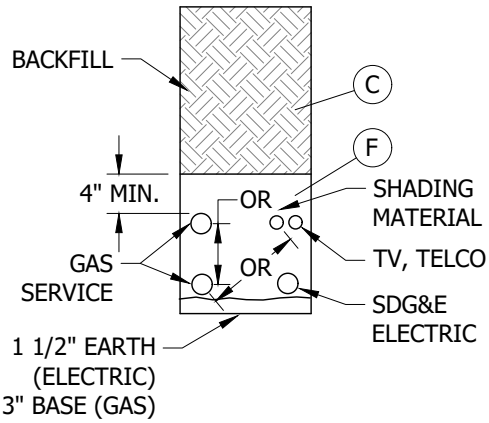

FIGURE 6
SERVICE TRENCH ON
PRIVATE PROPERTY

INSTALLATION:

(A) DOES NOT CONFORM, FOLLOW AGENCY AND GOVERNMENTAL REQUIREMENTS.

B. SHADING MATERIAL SHALL MEET GAS STANDARD 7405 OR UNDERGROUND 3370/3371 SPECIFICATIONS AND MUST BE APPROVED BY AN SDG&E INSPECTOR.

(C) BACKFILL MATERIAL SHALL MEET THE GOVERNMENTAL (PERMITTING) AGENCIES REQUIREMENTS AND SDG&E STANDARDS. ROCKS GREATER THAN 6 INCHES ARE NOT ALLOWED IN BACKFILL MATERIAL. (b)

D. IF FOREIGN UTILITIES REQUIRE ENCASEMENT, MAINTAIN CLEARANCES AND PROVIDE BASE FOR GAS MAIN.

(E) ALL 5-INCH PRIMARY CONDUITS SHALL BE INSTALLED WITH SPACERS AND ENCASED WITH CONCRETE SLURRY (1 SACK MIX).

(F) THE MINIMUM COMPACTED SHADING MATERIAL OVER THE UPPERMOST GAS PIPE OR CONDUIT SHALL BE 4 INCHES.

© 1998 - 2024 San Diego Gas & Electric Company. All rights reserved. Removal of this copyright notice without permission is not permitted under law.

REV	CHANGE	DR	BY	DSN	APV	DATE	REV	CHANGE	DR	BY	DSN	APV	DATE
C	EDITORIAL CHANGES	EDM	DEC	JES	CZH	06/07/2021	F						
B	FIGURE UPDATE	EDM	EJA	GLW	CZH	11/11/2020	E						
A	EDITORIAL CHANGES	-	JS	TR	MDJ	11/28/2016	D	DRAWING UPDATE	NV5	ADW	JAS	JAS	12/09/2024

TABLE OF CONTENTS

BILL OF MATERIALS: NONE

NOTES: NONE

REFERENCE:

a. SEE UG3366 (GAS STANDARD 7410) FOR SLURRY BACKFILL.

b. SEE UG3370, UG3371 NOTE D (GAS STANDARD 7403 NOTE D) FOR UTILITY PLACEMENT, CLEARANCES, MINIMUM SHADING, COVER, AND COMPACTION.

c. AVAILABLE IN SERVICE STANDARDS AND GUIDE MANUAL.

d. SEE GAS STANDARD G7409.

TABLE OF CONTENTS

© 1998 - 2024 San Diego Gas & Electric Company. All rights reserved. Removal of this copyright notice without permission is not permitted under law.

REV	CHANGE	DR	BY	DSN	APV	DATE	REV	CHANGE	DR	BY	DSN	APV	DATE
C	EDITORIAL CHANGES	EDM	DEC	JES	CZH	06/07/2021	F						
B	FIGURE UPDATE	EDM	EJA	GLW	CZH	11/11/2020	E						
A	EDITORIAL CHANGES	-	JS	TR	MDJ	11/28/2016	D	DRAWING UPDATE	NV5	ADW	JAS	JAS	12/09/2024

SCOPE: THIS STANDARD SHOWS TYPICAL PLACEMENT OF BASE, SHADING, AND SLURRY BACKFILL FOR SDG&E FACILITIES IN SAN DIEGO COUNTY.

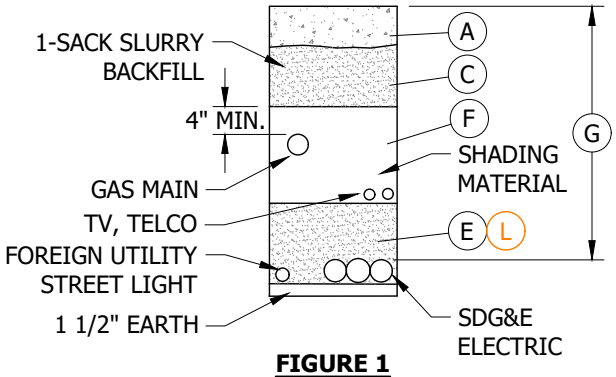

FIGURE 1
JOINT TRENCH

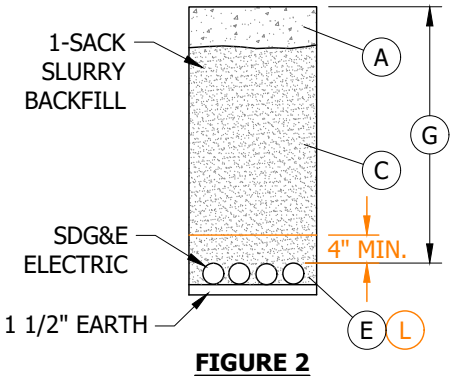

FIGURE 2
ELECTRIC ONLY

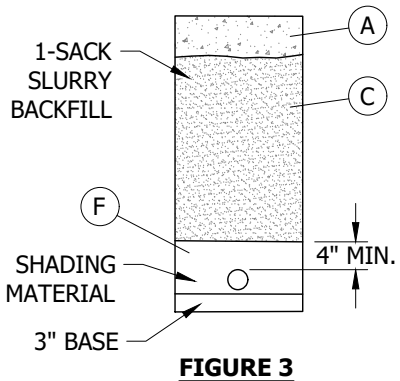

FIGURE 3
SINGLE GAS ONLY

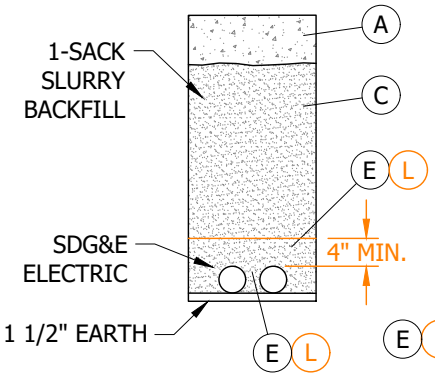

FIGURE 4
ELECTRIC ONLY

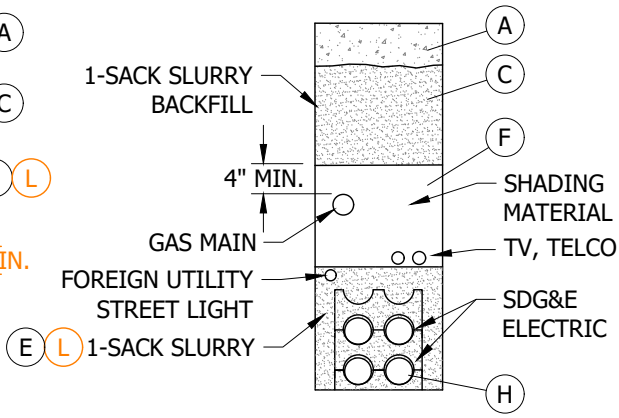

FIGURE 5
JOINT TRENCH

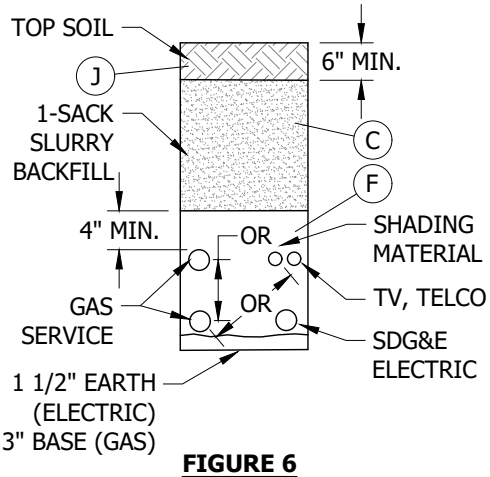

FIGURE 6
SERVICE TRENCH ON PRIVATE PROPERTY

INSTALLATION:

(A) ALL TRENCH RESURFACING SHALL BE DONE ACCORDING TO GOVERNMENTAL AGENCIES REQUIREMENTS.

B. SHADING MATERIAL SHALL MEET GAS STANDARD 7405 OR UG3370 & UG3371 SPECIFICATIONS AND MUST BE APPROVED BY AN SDG&E AUTHORIZED INSPECTOR.

(C) BACKFILL MATERIAL SHALL MEET THE GOVERNMENTAL (PERMITTING) AGENCIES REQUIREMENTS AND SDG&E STANDARDS. THE SAND USED FOR THE ONE SACK SLURRY OR TWO SACK, IF REQUIRED BY GOVERNMENTAL AGENCIES, MUST MEET THE CONCRETE SAND SPECIFICATION LISTED IN THE STANDARD SPECIFICATIONS FOR PUBLIC WORKS CONSTRUCTION (GREEN BOOK) AND CONTAIN NO GRAVEL. SLURRY MUST BE FIRM BEFORE A PAVEMENT CONCRETE CAP IS INSTALLED. SLURRY IS TYPICALLY USED FOR BACKFILLING AROUND SUBSTRUCTURES, UNDER EQUIPMENT PADS, FOR TRENCHES IN EXISTING PAVED AREAS, AND UNDER CONCRETE OR PAVED DRIVEWAYS.

D. IT MAY NOT BE APPROPRIATE TO USE ONE SACK SLURRY UNDER THE THE FOLLOWING CIRCUMSTANCES:

1. GOVERNMENTAL AGENCIES DO NOT ALLOW ONE SACK OR MAY REQUIRE TWO SACK SLURRY BACKFILL.
2. INACCESSIBILITY OF CONCRETE TRUCKS DELIVERING SLURRY.
3. WHEN SLURRY IS NOT COST EFFECTIVE.
4. NEW RESIDENTIAL SUBDIVISIONS, SINGLE FAMILY RESIDENCE SERVICE TRENCH
5. SHALLOW WELD HOLES, POT HOLES, ETC.

© 1998 - 2023 San Diego Gas & Electric Company. All rights reserved. Removal of this copyright notice without permission is not permitted under law.

REV	CHANGE	DR	BY	DSN	APV	DATE	REV	CHANGE	DR	BY	DSN	APV	DATE
C	MOVED FROM UG3365	EDM	DEC	JES	CZH	06/07/2021	F						
B	FIGURE UPDATE	EDM	EJA	GLW	CZH	11/11/2020	E						
A	EDITORIAL CHANGES	-	JS	TR	MDJ	11/28/2016	D	ADD RED DYE	NV5	ADW	JES	CZH	09/07/2022

TABLE OF CONTENTS

INSTALLATION (CONT'D):

(E) ALL 5-INCH PRIMARY CONDUITS SHALL BE INSTALLED WITH SPACERS AND ENCASED WITH CONCRETE SLURRY (1 SACK MIX).

(F) MINIMUM COMPACTED SHADING MATERIAL OVER THE UPPERMOST GAS PIPE OR CONDUIT SHALL BE 4 INCHES. THE GAS MAIN OR GAS SERVICE SHALL NEVER BE CONCRETE OR SLURRY ENCASED AND SHALL HAVE THE PROPER BASE, SHADING, BACKFILL AND COMPACTION.

(G) MAINTAIN A MINIMUM 24 INCHES COVER FROM FINISHED SURFACE TO TOP OF ELECTRIC CONDUIT PACKAGE OVER PRIMARY.

(H) USE APPROVED SDG&E CONDUIT AND SPACERS. THE USE OF CONDUIT SPACERS DOES NOT REQUIRE THE 1 ½" OF EARTH BASE.

(J) ON SERVICES IN PRIVATE YARDS, ALLOW FOR 6 INCHES OF TOP SOIL FOR LANDSCAPING PURPOSES.

K. IF FOREIGN UTILITIES REQUIRE ENCASEMENT, MAINTAIN CLEARANCES AND PROVIDE BASE FOR GAS MAIN.

(L) ALL SLURRY THAT ENCASES PRIMARY CONDUITS SHALL BE RED IN COLOR. COLOR SHALL BE INTEGRAL AND OBTAINED BY USING QUIKCRETE LIQUID COLORANT AT A RATE OF 16 FLUID OUNCES TO ONE CUBIC YARD OF SLURRY, OR APPROVED EQUIVALENT.

BILL OF MATERIALS: NONE

NOTES: NONE

REFERENCE:

a. SEE UG3370 & UG3371 (GAS STANDARD 7403) FOR UTILITY PLACEMENT, CLEARANCES, MINIMUM SHADING, COVER, AND COMPACTION.

b. SEE UG3376.1 FOR 1 SACK CONCRETE SLURRY MIX AND 2 SACK 3/8-INCH GRAVEL CONCRETE MIX OR AS REQUIRED BY GOVERNMENTAL AGENCY.

c. SEE UG3365.1 OR GAS STANDARD 7409 FOR ALTERNATE IMPORTED OR NATIVE BACKFILL.

TABLE OF CONTENTS

© 1998 - 2023 San Diego Gas & Electric Company. All rights reserved. Removal of this copyright notice without permission is not permitted under law.

REV	CHANGE	DR	BY	DSN	APV	DATE	REV	CHANGE	DR	BY	DSN	APV	DATE
C	MOVED FROM UG3365	EDM	DEC	JES	CZH	06/07/2021	F						
B	FIGURE UPDATE	EDM	EJA	GLW	CZH	11/11/2020	E						
A	EDITORIAL CHANGES	-	JS	TR	MDJ	11/28/2016	D	ADD RED DYE	NV5	ADW	JES	CZH	09/07/2022

SCOPE: THIS STANDARD SHOWS TYPICAL PLACEMENT OF BASE, SHADING AND ONE SACK SLURRY BACKFILL AS A PREFERRED METHOD OF BACKFILL FOR SDG&E FACILITIES.

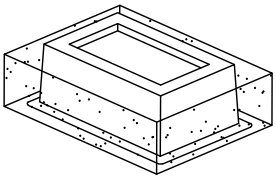

INSTALLATION 1
3418, 3419, & 3423
BOX PAD

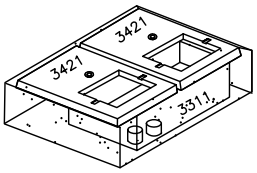

INSTALLATION 2
3713 INSTALLATION
OPEN DELTA BANK THREE-PHASE

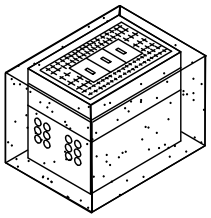

INSTALLATION 3
3315/3316 HANDHOLE

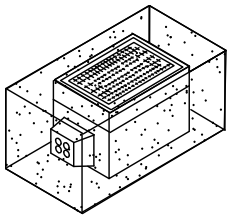

INSTALLATION 4
3314 HANDHOLE

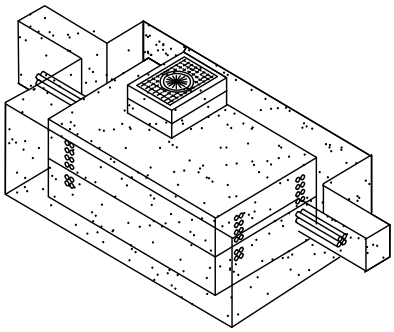

INSTALLATION 5
3325/3326 MANHOLES

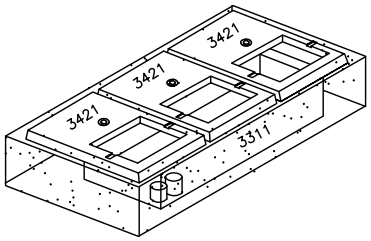

INSTALLATION 6
3714 INSTALLATION
CLOSED DELTA BANK THREE-PHASE

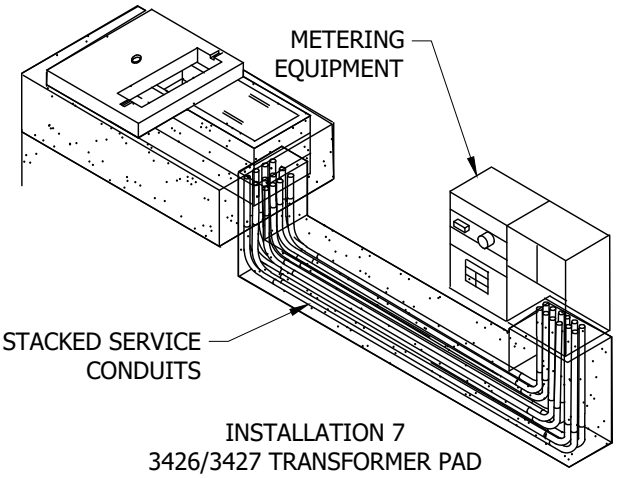

INSTALLATION 7
3426/3427 TRANSFORMER PAD
WITH 3314 SECTIONS

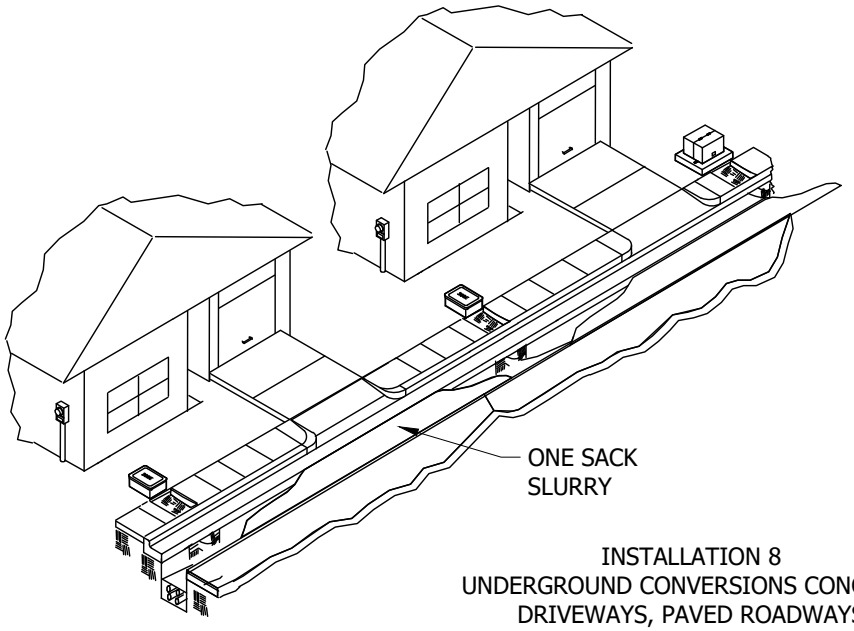

INSTALLATION 8
UNDERGROUND CONVERSIONS CONCRETE
DRIVEWAYS, PAVED ROADWAYS

FIGURE 1
TYPICAL SLURRY INSTALLATIONS

TABLE OF CONTENTS

© 1998 - 2023 San Diego Gas & Electric Company. All rights reserved. Removal of this copyright notice without permission is not permitted under law.

REV	CHANGE	DR	BY	DSN	APV	DATE	REV	CHANGE	DR	BY	DSN	APV	DATE
C	MOVED FROM UG3365	EDM	DEC	JES	CZH	06/07/2021	F						
B	FIGURE UPDATE	EDM	EJA	GLW	CZH	11/11/2020	E						
A	EDITORIAL CHANGES	-	JS	TR	MDJ	11/28/2016	D	ADD RED DYE	NV5	ADW	JES	CZH	09/07/2022

X Indicates Latest Revision | Completely Revised | New Page | Information Removed

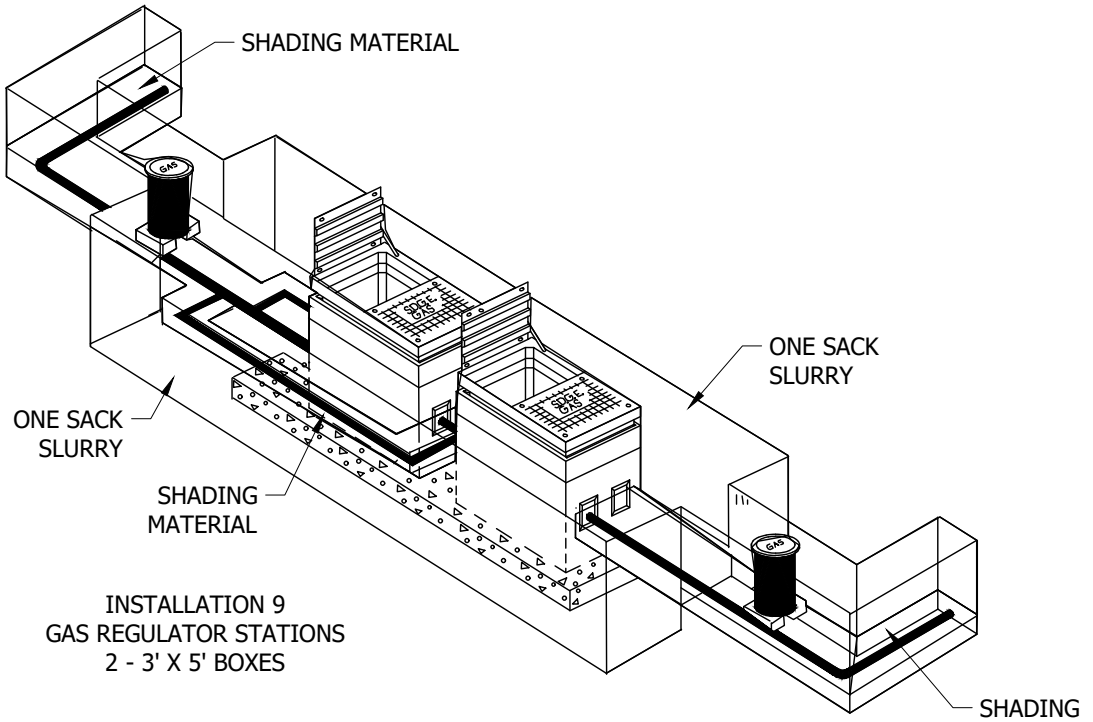

FIGURE 1 (CONT'D)
TYPICAL SLURRY INSTALLATIONS

INSTALLATION:

A. ONE SACK SLURRY IS THE PREFERRED METHOD FOR BACKFILL.

B. IMPORTED OR NATIVE BACKFILL IS THE ALTERNATE METHOD FOR BACKFILL.

C. SLURRY IS TYPICALLY USED FOR BACKFILLING AROUND SUBSTRUCTURES, UNDER EQUIPMENT PADS, FOR TRENCHES IN EXISTING PAVED AREAS AND UNDER CONCRETE OR PAVED DRIVEWAYS.

D. SLURRY IS THE ONLY ALLOWED BACKFILL AROUND FIBERGLASS BOX PADS.

E. IT MAY NOT BE APPROPRIATE TO USE ONE SACK SLURRY UNDER THE FOLLOWING CIRCUMSTANCES:

1. GOVERNMENTAL (PERMITTING) AGENCIES DO NOT ALLOW ONE SACK SLURRY OR MAY REQUIRE TWO SACK SLURRY BACKFILL.
2. INACCESSIBILITY OF CONCRETE TRUCKS DELIVERING SLURRY.
3. WHEN SLURRY IS NOT COST EFFECTIVE.
4. NEW RESIDENTIAL SUBDIVISIONS, SINGLE FAMILY RESIDENT SERVICES.
5. SHALLOW WELD HOLES, POT HOLES, ETC.

(F) MINIMUM COMPACTED SHADING MATERIAL OVER THE UPPERMOST GAS PIPE OR CONDUIT SHALL BE 4 INCHES. THE GAS MAIN OR GAS SERVICE SHALL NEVER BE CONCRETE OR SLURRY ENCASED AND SHALL HAVE THE PROPER BASE, SHADING, BACKFILL AND COMPACTION.

BILL OF MATERIALS: NONE

NOTES:

I. GAS PIPE SHALL NOT BE SLURRY ENCASED. (F)

REFERENCE:

a. SEE UG3365.1 (GAS STANDARD G7409) FOR ALTERNATE IMPORTED OR NATIVE BACKFILL.

© 1998 - 2023 San Diego Gas & Electric Company. All rights reserved. Removal of this copyright notice without permission is not permitted under law.

REV	CHANGE	DR	BY	DSN	APV	DATE	REV	CHANGE	DR	BY	DSN	APV	DATE
C	MOVED FROM UG3365	EDM	DEC	JES	CZH	06/07/2021	F						
B	FIGURE UPDATE	EDM	EJA	GLW	CZH	11/11/2020	E						
A	EDITORIAL CHANGES	-	JS	TR	MDJ	11/28/2016	D	ADD RED DYE	NV5	ADW	JES	CZH	09/07/2022

SCOPE: THIS STANDARD DEMONSTRATES THE 45 DEGREE RULE THAT SHALL BE FOLLOWED WHEN EXCAVATING A TRENCH THAT PARALLELS ANY FOUNDATION.

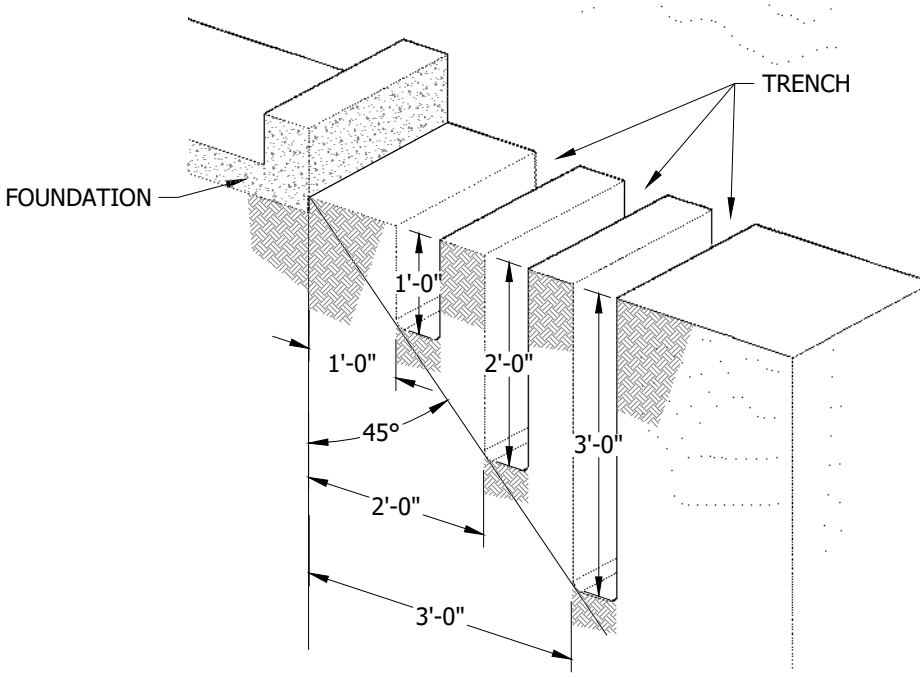

FIGURE 1

INSTALLATION: NONE

BILL OF MATERIALS: NONE

NOTES:

I. WHERE TRENCHES ARE MADE PARALLEL TO A BUILDING OR STRUCTURE AND ARE DEEPER THAN THE BUILDING OR STRUCTURE FOOTING, SUCH TRENCHES SHALL BE A MINIMUM DISTANCE AWAY FROM THE FOOTING AT LEAST EQUAL TO DEPTH OF THE TRENCH UNLESS PERMISSION TO VARY HEREFROM IS GRANTED BY THE ENFORCING AGENCY.

II. NOTE THAT THE DEPTH FOR A TRENCH PARALLELING ANY FOUNDATION IS LIMITED BY THE DISTANCE FROM THE FOUNDATION. FOR EXAMPLE, TRENCH DEPTH FOR A TRENCH WITH NEAREST SIDE TWO FEET FROM A FOUNDATION IS LIMITED TO A 2-FOOT DEPTH.

REFERENCE: NONE

TABLE OF CONTENTS

© 1998 - 2021 San Diego Gas & Electric Company. All rights reserved. Removal of this copyright notice without permission is not permitted under law.

REV	CHANGE	DR	BY	DSN	APV	DATE	REV	CHANGE	DR	BY	DSN	APV	DATE
C							F						
B	FORMATTING	EDM	JIK	-	-	10/27/2021	E						
A	EDITORIAL CHANGES	-	JS	TR	MDJ	05/26/2016	D						

X Indicates Latest Revision | Completely Revised | New Page | Information Removed

SDG&E ELECTRIC UNDERGROUND CONSTRUCTION STANDARDS

TRENCH PARALLELING FOUNDATIONS

UG3367.1

SCOPE: THIS STANDARD SHOWS A TYPICAL SERVICE TRENCH EXCAVATION PARALLELING A RESIDENTIAL BUILDING. (EXCEPTION TO 45 DEGREE RULE ON SHEET 1/GAS STANDARD. 7415.1)

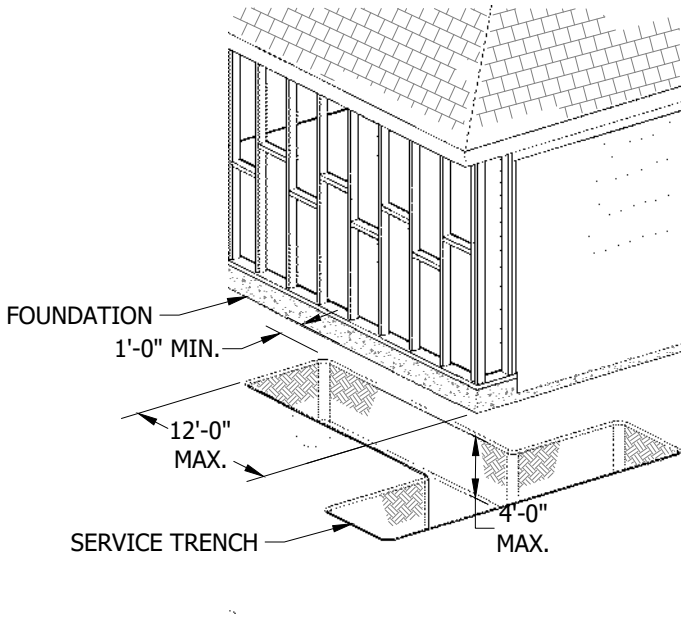

FIGURE 2

INSTALLATION:

A. THE FOLLOWING CONDITION(S) MUST BE MET:

1. BUILDING HAS A CONTINUOUS CONCRETE SLAB.
2. BUILDING HEIGHT IS LIMITED TO TWO STORIES.
3. BUILDING HEIGHT IS LIMITED TO TWO STORIES. 12-FOOT LENGTH ALONG THE FOUNDATION, AND MUST NOT EXCEED A 4-FOOT DEPTH.
4. SOIL CONDITIONS MUST BE STABLE AND MUST NOT CAUSE UNDERMINING OF THE FOUNDATION.
5. TRENCH WALLS MUST BE STABLE DURING AND AFTER EXCAVATION.

B. IF THE CONDITION(S) IN NOTE A CANNOT BE MET, THEN THE 45 DEGREE RULE MUST BE FOLLOWED. SEE SHEET 1.

BILL OF MATERIALS: NONE

NOTES: NONE

REFERENCE:

a. SEE GAS STANDARDS 7415.1 & 7415.2 (FOR INTERNAL USE ONLY).

b. AVAILABLE IN SERVICE STANDARDS AND GUIDE MANUAL.

TABLE OF CONTENTS

© 1998 - 2021 San Diego Gas & Electric Company. All rights reserved. Removal of this copyright notice without permission is not permitted under law.

REV	CHANGE	DR	BY	DSN	APV	DATE	REV	CHANGE	DR	BY	DSN	APV	DATE
C							F						
B	FORMATTING	EDM	JIK	-	-	10/27/2021	E						
A	EDITORIAL CHANGES	-	JS	TR	MDJ	05/26/2016	D						

X Indicates Latest Revision | Completely Revised | New Page | Information Removed

SDG&E ELECTRIC UNDERGROUND CONSTRUCTION STANDARDS

TRENCH PARALLELING FOUNDATIONS

UG3367.2

SCOPE: THIS IS A SHALLOW TRENCH CONFIGURATION FOR PRIMARY TRENCHES.

ATTENTION:

* THIS STANDARD IS RESERVED FOR AVOIDANCE OF UTILITIES, ENVIRONMENTAL CONDITIONS OR HARD DIGGING. THIS IS NOT A CONFIGURATION TO BE USED IN NORMAL CONDITIONS.

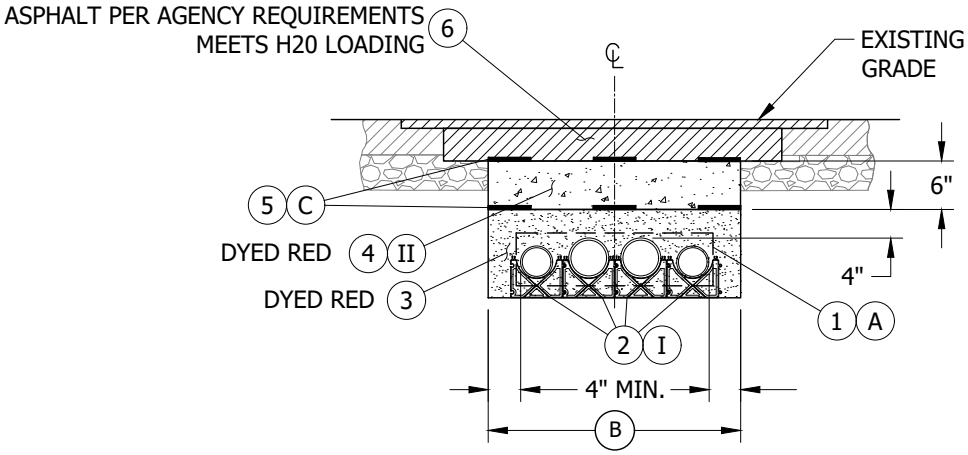

FIGURE 1
SHALLOW TRENCH

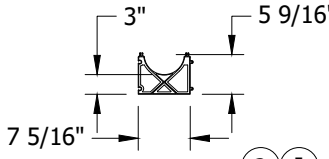

DETAIL 1 (2) (I)
CONDUIT SPACER

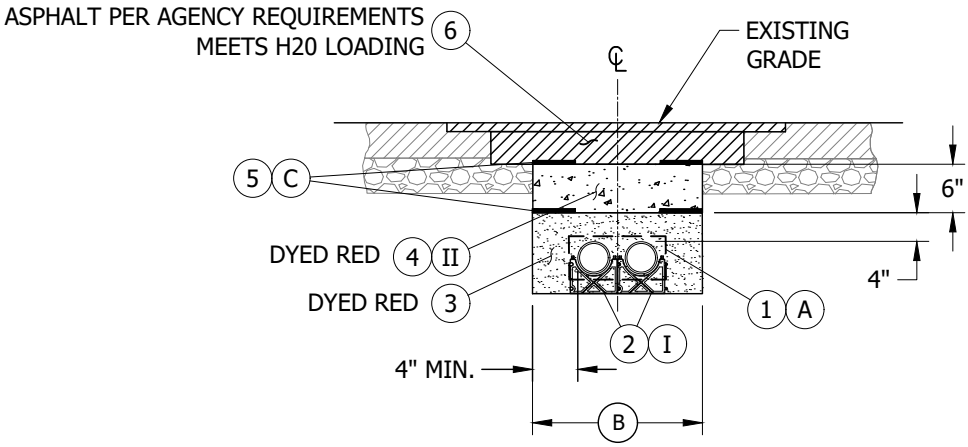

FIGURE 2
SHALLOW TRENCH

INSTALLATION:

(A) NUMBER AND SIZE OF CONDUITS MAY VARY. A STANDARD DESIGN PACKAGE IS SHOWN WITH 2-5" AND 2-4" DIAMETER SCHEDULE 40 PVC CONDUITS IN DETAIL 1. DETAIL 2 SHOWS 2-4" DIAMETER SCHEDULE 40 PVC CONDUITS. DEVIATION REQUIRED FOR MORE THAN EIGHT CONDUITS.

(B) TRENCH WIDTH IS EQUAL TO THE NUMBER OF SPACERS TIMES THE WIDTH OF SPACER PLUS 8". ROUND UP TO NEAREST BUCKET SIZE. STANDARD BUCKET SIZES ARE: 12", 18", 24", 30", 36", 42", 48".

(C) 6" WARNING TAPE TO BE PLACED IN THE TRENCH AT TWO LEVELS, AT THE TOP OF THE TWO SACK SLURRY AND ON TOP OF THE CONCRETE MECHANICAL PROTECTION. SPACING TO BE 3" MIN.AND 12" MAX EDGE TO EDGE OF TAPE.

© 1998 - 2021 San Diego Gas & Electric Company. All rights reserved. Removal of this copyright notice without permission is not permitted under law.

REV	CHANGE	DR	BY	DSN	APV	DATE	REV	CHANGE	DR	BY	DSN	APV	DATE
C							F						
B							E						
A	ORGINAL ISSUE	NV5	ADW	JES	CZH	10/01/2021	D						

Indicates Latest Revision | Completely Revised | X New Page | Information Removed

SDG&E ELECTRIC UNDERGROUND CONSTRUCTION STANDARDS

SHEET 1 OF 2

SHALLOW TRENCHING
PRIMARY TRENCH

UG3368.1

TABLE OF CONTENTS

BILL OF MATERIALS:

ITEM	DESCRIPTION	QUANTITY	STANDARD PAGE	STOCK NUMBER	DESIGN UNITS	SAP CU	MACRO
1	3" SCHEDULE 40 PVC CONDUIT (A)	AS REQ'D	UG 4204.4	S251360	LINEAR FEET	S40-3"	--
	4" SCHEDULE 40 PVC CONDUIT (A)	AS REQ'D	UG 4204.4	S251392	LINEAR FEET	S40-4"	
	5" SCHEDULE 40 PVC CONDUIT (A)	AS REQ'D	UG 4204.4	S251408	LINEAR FEET	S40-5"	
2	5" CONDUIT SPACER / 1" BASE SPACER (I)	AT 5' SPACING	UG 3375	S663530	EACH	--	--
3	TWO SACK SLURRY, DYED RED	AS REQ'D	UG 3366	S248201	LINEAR FEET	--	--
4	3000 PSI CONCRETE WITH 4" SLUMP (II)	AS REQ'D	--	--	CUBIC YARDS	--	--
5	6" WIDE RED WARNING TAPE WITH BLACK LETTERS	AS REQ'D	--	--	--	(X)	--
6	ASPHALT RESURFACING, PER AGENCY REQUIREMENTS (III)	AS REQ'D	UG 3363	S114201	LINEAR FEET	--	AB-M24

NOTES:

(I) CONDUIT SPACERS MAY VARY IN SIZE BASED ON MANUFACTURER AND TYPE. UNDERGROUND DEVICES, STACKABLE BOTTOM UNIT SHOWN IN DETAIL. VERIFY DIMENSIONS WITH MANUFACTURER.

(II) CONCRETE IS MECHANICAL PROTECTION PER G.O. 128.

(III) MACRO GIVEN FOR 24" WIDE TRENCH. QUANTITIES CAN BE ADJUSTED OR A DIFFERENT MACRO CAN BE USED FOR OTHER WIDTHS

(X) THIS ITEM IS EXEMPT.

REFERENCE: NONE.

TABLE OF CONTENTS

© 1998 - 2021 San Diego Gas & Electric Company. All rights reserved. Removal of this copyright notice without permission is not permitted under law.

REV	CHANGE	DR	BY	DSN	APV	DATE	REV	CHANGE	DR	BY	DSN	APV	DATE
C							F						
B							E						
A	ORGINAL ISSUE	NV5	ADW	JES	CZH	10/01/2021	D						

Indicates Latest Revision | Completely Revised | X | New Page | Information Removed

SDG&E ELECTRIC UNDERGROUND CONSTRUCTION STANDARDS

SHEET 2 OF 2

SHALLOW TRENCHING
PRIMARY TRENCH

UG3368.2

SCOPE: THIS STANDARD COVERS BIO-RETENTION FACILITIES AND SDG&E'S 600A AND 200A UNDERGROUND ELECTRIC SECONDARY, SERVICES AND GAS FACILITIES LOCATED ON RESIDENTIAL, COMMERCIAL, FEDERAL, STATE, AND MUNICIPAL LAND AND ALL OTHER PROPERTY TYPES. THE STANDARD APPLIES, BUT IS NOT LIMITED TO BIO-RETENTION BASINS AND/OR SWALES.

INSTALLATION: NONE

BILL OF MATERIALS: NONE

NOTES:

I. BIO-RETENTION FACILITIES ARE WET FACILITIES THAT WILL REQUIRE MAINTENANCE OVER TIME. THESE FACILITIES WILL REQUIRE MAJOR TRENCHING AND MAY BE LOCATED WITHIN STREETS AND PRIVATE PROPERTY PRESENTING POTENTIAL CONFLICTS WITH SDG&E PRIMARY AND SECONDARY ELECTRIC CABLE AND CONDUITS, ELECTRIC SERVICES, GAS AND ANY OTHER SDG&E FACILITIES.

II. BIO-RETENTION FACILITIES ARE DESIGNED TO CONTROL WATER RUN-OFF AND POSSIBLE DRAINAGE OVER-FLOW OF STORM WATER.

III. DURING THE DESIGN PHASE FOR THESE FACILITIES CUSTOMERS MUST DESIGN TO MEET THE REQUIREMENTS OF UG3364 FOR LOCATION, AND NOT ENCROACH ON SDG&E'S STANDARD FACILITY LOCATIONS. (a)

IV. SINCE BIO-RETENTION FACILITIES ARE A WET UTILITY, SIMILAR TO STORM DRAINS AND WATER RELATED FACILITIES, THEY MUST COORDINATE WITH SDG&E TRENCHING AND FACILITY LOCATIONS, AND MEET FACILITY SEPARATION REQUIREMENTS SHOWN IN UG3370 FOR SAN DIEGO COUNTY AND UG3371 FOR ORANGE COUNTY. (b)

V. IN ACCORDANCE WITH THESE UNDERGROUND CONSTRUCTION STANDARDS, BIO-RETENTION FACILITIES MUST MAINTAIN 5 FEET SEPARATION WHEN INSTALLED PARALLEL TO ALL SDG&E FACILITIES. A MINIMUM 6-INCH SEPARATION SHALL BE MAINTAINED WHEN BIO-RETENTION DUCTS AND/OR CONDUITS CROSS SDG&E FACILITIES.

VI. BIO-RETENTION DUCTS OR CONDUITS THAT CROSS SDG&E FACILITIES MUST BE RIGID PIPE WITHOUT ANY PERFORATION FOR A DISTANCE OF 5 FEET MINIMUM ON EITHER SIDE OF, AND IN THE AREA OF, WHERE THEY CROSS SDG&E FACILITIES.

VII. IN ORDER TO MAINTAIN SAFE OPERATIONAL AND MAINTENANCE ACCESS, SDG&E FACILITIES SHALL NOT BE INSTALLED OVER, UNDER OR WITHIN BIO-RETENTION SWALES, BASINS, CELLS OR ANY OTHER OPEN HOLDING AREA FOR BIO-RETENTION.

VIII. BIO-RETENTION FACILITIES SHALL NOT ENCROACH ON SDG&E MANHOLES, HAND-HOLES, PAD MOUNTED EQUIPMENT, OVERHEAD POLES AND ANCHORS, AND ANY OTHER OVERHEAD FACILITIES. THIS APPLIES TO GAS METERS, GAS VALVES AND RELATED GAS FACILITIES SUCH AS GAS REGULATION FACILITIES.

IX. AS A GENERAL RULE, GAS AND ELECTRIC FACILITIES ARE ALLOWED UNDER PERVIOUS PAVERS UNDER WHICH THERE IS NO MEMBRANE, LINER, NOR PERFORATED DRAIN LINES. GAS AND ELECTRIC FACILITIES MUST NOT BE DEEPER THAN 5 FEET FROM FINISHED GRADE AND THERE MUST BE 12 INCHES MINIMUM OF SDG&E APPROVED SHADE MATERIAL OVER SDG&E FACILITIES.

TABLE OF CONTENTS

REFERENCE:

(a) FOR UTILITY LOCATIONS, SEE UG3364.

(b) FOR UNDERGROUND DISTRIBUTION TRENCHES AND UTILITY POSITIONS, SEE UG3370 AND UG3371.

c. SEE BIO-RETENTION APPLICATION GUIDE FOR MORE INFORMATION ABOUT HOW TO APPLY BIO-RETENTION/WET FACILITIES STANDARD.

© 1998 - 2022 San Diego Gas & Electric Company. All rights reserved. Removal of this copyright notice without permission is not permitted under law.

REV	CHANGE	DR	BY	DSN	APV	DATE	REV	CHANGE	DR	BY	DSN	APV	DATE
C	NOTES UPDATE	EDM	EJA	EJA	KRG	11/03/2022	F						
B	NOTES UPDATE	EDM	EJA	GLW	CZH	08/10/2021	E						
A	ORIGINAL ISSUE	-	JS	TR	MDJ	06/10/2016	D						

SCOPE: THIS STANDARD SHOWS TYPICAL PLACEMENT OF UTILITIES WITHIN TRENCHES FOR DISTRIBUTION AND SERVICE IN DEDICATED R/W (STREET) AND PRIVATE PROPERTY, AND PROVIDES THE MINIMUM DEPTH AND CLEARANCE THAT MUST BE MAINTAINED BETWEEN VARIOUS UTILITIES OCCUPYING THE SAME TRENCH IN SAN DIEGO COUNTY.

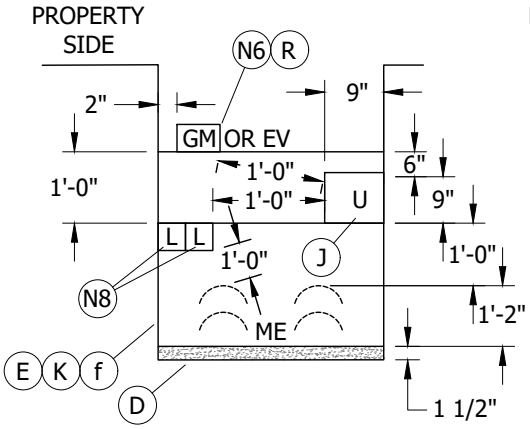

FIGURE 1

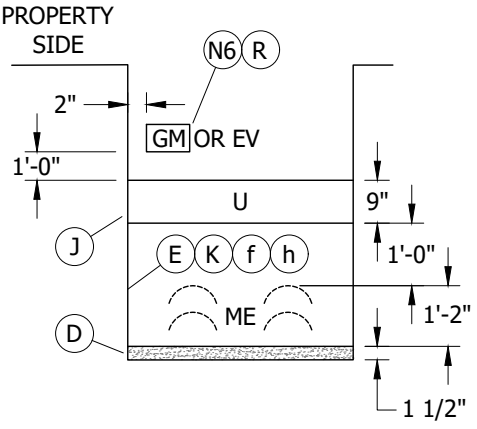

FIGURE 2

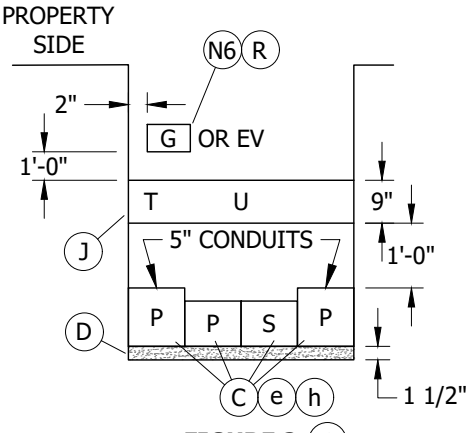

FIGURE 3 f

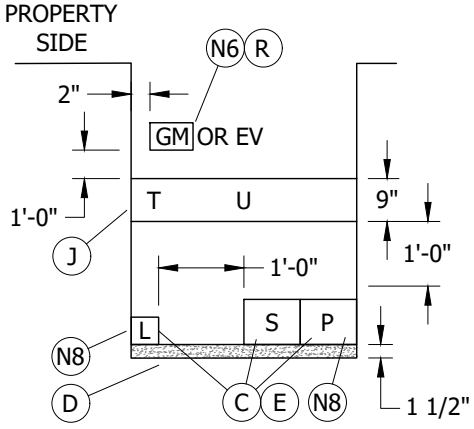

FIGURE 4

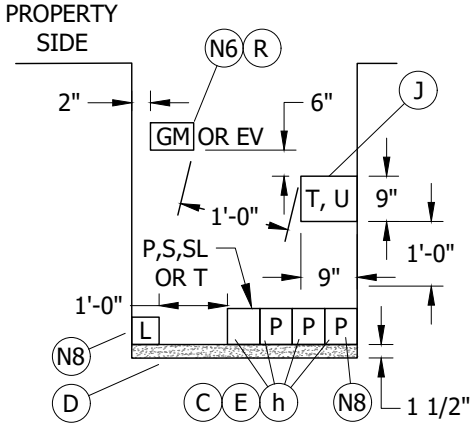

FIGURE 5

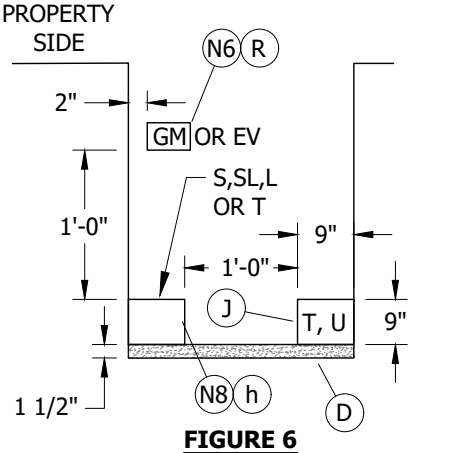

FIGURE 6

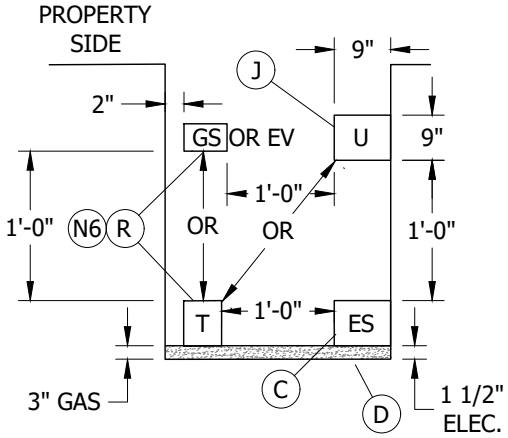

FIGURE 7
SERVICE TRENCH ON PRIVATE PROPERTY

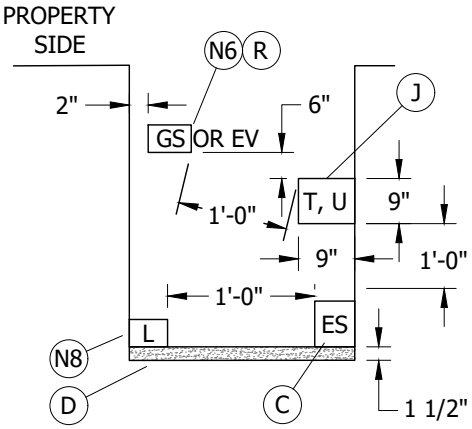

FIGURE 8
SERVICE TRENCH ON PRIVATE PROPERTY

TABLE 1

LEGEND	
GM	GAS MAIN
GS	GAS SERVICE
P	PRIMARY ELECTRIC
S	SECONDARY ELECTRIC
ES	ELECTRIC SERVICE
ME	MULTIPLE ELECTRIC (P OR S OR ES OR T, STACKED CONFIGURATION INCLUDING SPACERS AND 2-SACK CONCRETE SLURRY)
SL	SDG&E STREET LIGHT
L	FOREIGN UTILITY STREET LIGHT
U	FOREIGN UTILITY (TELCO, CATV)
T	SDG&E TELECOMMUNICATIONS (Q)
EV	SDG&E ELECTRIC VEHICLE CHARGER (120V THRU 480V)

TABLE OF CONTENTS

© 1998 - 2024 San Diego Gas & Electric Company. All rights reserved. Removal of this copyright notice without permission is not permitted under law.

REV	CHANGE	DR	BY	DSN	APV	DATE	REV	CHANGE	DR	BY	DSN	APV	DATE
C	FIGURE UPDATE	EDM	EJA	GLW	CZH	08/16/2021	F						
B	EDITORIAL CHANGES	-	GW	JS	CZH	11/01/2018	E						
A	EDITORIAL CHANGES	-	JS	TR	MDJ	05/26/2016	D	EDITORIAL CHANGES	NV5	ADW	EJA	JAS	12/09/2024

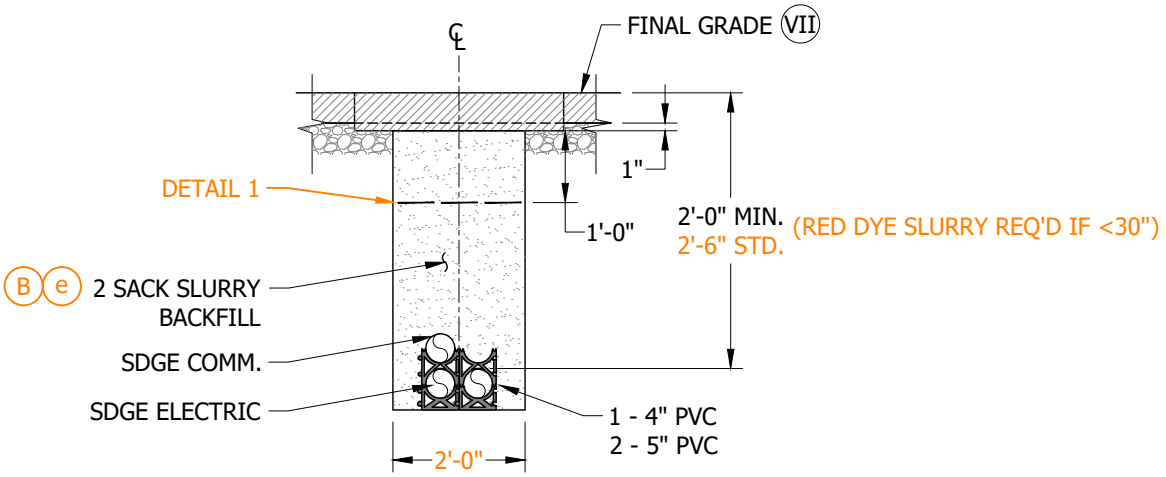

FIGURE 9
TIER 2 AND TIER 3

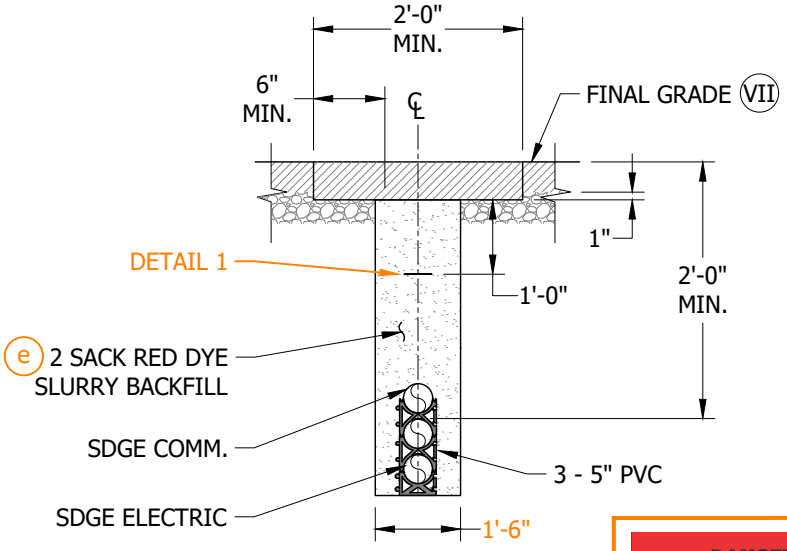

FIGURE 10
TIER 2 AND TIER 3

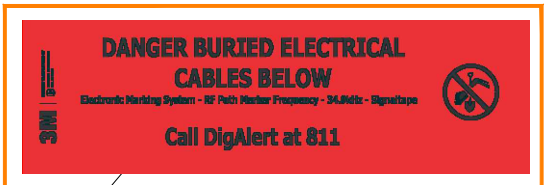

1 **DETAIL 1**
WARNING TAPE S

TABLE OF CONTENTS

© 1998 - 2024 San Diego Gas & Electric Company. All rights reserved. Removal of this copyright notice without permission is not permitted under law.

REV	CHANGE	DR	BY	DSN	APV	DATE	REV	CHANGE	DR	BY	DSN	APV	DATE
C	FIGURE UPDATE	EDM	EJA	GLW	CZH	08/16/2021	F						
B	EDITORIAL CHANGES	-	GW	JS	CZH	11/01/2018	E						
A	EDITORIAL CHANGES	-	JS	TR	MDJ	05/26/2016	D	EDITORIAL CHANGES	NV5	ADW	EJA	JAS	12/09/2024

ATTENTION:

* THE FOLLOWING CHARTS SHOW THE MINIMUM COVER FOR EACH UTILITY, THE MINIMUM SEPARATION BETWEEN SPACE ALLOTMENTS AND THE MAXIMUM SIZE FOR EACH SPACE ALLOTMENT. TO READ THE CHARTS, READ ACROSS AND DOWN UNTIL THE TWO JOIN IN A SQUARE, AND THAT IS THE DISTANCE REQUIRED BETWEEN THE TWO UTILITIES.

** IN REFERENCE TO THE EXAMPLE BELOW (TABLE 2), UNDER VERTICAL, "ES" & "ES" JOIN AT (C) WHICH REFERS TO INSTALLATION NOTE (C).

*** UNDER HORIZONTAL, "ES" & "GS" JOIN AT 12 INCHES WHICH WOULD BE THE DISTANCE REQUIRED FROM THE OUTER EDGE OF THE ELECTRIC SERVICE (SPACE ALLOTMENT) TO THE OUTER EDGE OF GAS SERVICE (SPACE ALLOTMENT).

TABLE 2

EXAMPLE								
		VERTICAL			HORIZONTAL			
			ES		GS			
			↓		↓			
ES	ELECTRIC SERVICE	→	(C)	→	12"			

TABLE 3

MAIN TRENCH, [SERVICE TRENCH PUBLIC PROPERTY] (MINIMUM SEPARATION FROM)																						
		VERTICAL (IN)									HORIZONTAL (IN)											
		GM GS	P	S	ES	SL	ME	L	U	EV	GM GS	P	S	ES	SL	ME	L	U	EV	MIN. COVER (V)	FACILITY SPACE ALLOTMENT (MAX)
GM GS	GAS MAIN GAS SERVICE (D) (G) (N6) (N9) (N10) (N11) (d) (e)	-	12"	12"	12"	12"	12"	12"	(J)	(R)	-	-	-	-	-	-	-	(J)	(R)	30" MIN. 42" MAX.	4 1/2" X 4 1/2"
P	PRIMARY ELECTRIC (D) (N8) (N11) (d) (e) (f)	12"	(C)	(C)	(C)	(C)	(C)	-	12"	(R)	-	(C)	(C)	(C)	(C)	(C)	12"	-	(R)	24" (B)	5 1/2" X 5 1/2"
S	SECONDARY ELECTRIC (D) (N11) (d) (e) (f)	12"	(C)	(C)	(C)	(C)	(C)	-	12"	12"	-	(C)	(C)	(C)	(C)	(C)	12"	12"	12"	30"	5 1/2" X 5 1/2"
ES	ELECTRIC SERVICE (D) (N11) (d) (e) (f)	12"	(C)	(C)	(C)	(C)	(C)	-	12"	12"	-	(C)	(C)	(C)	(C)	(C)	12"	12"	12"	30"	5 1/2" X 5 1/2"
SL	SDG&E STREET LIGHT (D) (N7) (N8) (N11) (d) (e) (f)	12"	(C)	(C)	(C)	(C)	(C)	-	12"	12"	-	(C)	(C)	(C)	(C)	(C)	12"	12"	12"	30"	2 1/2" X 2 1/2"
ME	MULTIPLE ELECTRIC (J) (K) (N11) (a) (f)	12"	(C)	(C)	(C)	(C)	(C)	12"	12"	12"	-	(C)	(C)	(C)	(C)	(C)	-	-	12"	30"	18" X 14" (4 DUCTS)
L	FOREIGN UTILITY STREET LIGHT (F) (N8) (d) (e)	12"	-	-	-	-	12"	-	12"	12"	-	12"	12"	12"	12"	-	1" OR LESS	12"	12"	24"	2 1/2" X 2 1/2"
U	FOREIGN UTILITY (TELCO, CATV) (F) (J) (L) (d) (e)	(J)	12"	12"	12"	12"	12"	12"	-	12"	(J)	-	12"	12"	12"	-	12"	-	12"	24"	9" X 24"
T	SDG&E TELECOMMUNICATIONS (C)	12"	(C)	(C)	(C)	(C)	(C)	-	12"	12"	-	(C)	(C)	(C)	(C)	(C)	12"	12"	12"	30"	4 1/2" X 4 1/2"
EV	SDG&E ELECTRIC VEHICLE CHARGER (480V THRU 120V)	(R)	(R)	12"	12"	12"	12"	12"	12"	-	(R)	(R)	12"	12"	12"	12"	12"	12"	-	30"	4 1/2" X 4 1/2"

TABLE OF CONTENTS

© 1998 - 2024 San Diego Gas & Electric Company. All rights reserved. Removal of this copyright notice without permission is not permitted under law.

REV	CHANGE	DR	BY	DSN	APV	DATE	REV	CHANGE	DR	BY	DSN	APV	DATE
C	FIGURE UPDATE	EDM	EJA	GLW	CZH	08/16/2021	F						
B	EDITORIAL CHANGES	-	GW	JS	CZH	11/01/2018	E						
A	EDITORIAL CHANGES	-	JS	TR	MDJ	05/26/2016	D	EDITORIAL CHANGES	NV5	ADW	EJA	JAS	12/09/2024

TABLE 4

SERVICE TRENCH PRIVATE PROPERTY (MINIMUM SEPARATION FROM)															
		VERTICAL						HORIZONTAL							
		GS	ES	ME	U	L	EV	GS	ES	ME	U	L	EV	MIN. COVER (V)	FACILITY SPACE ALLOTMENT (MAX)
GS	GAS SERVICE (D)(G)(N6)(N9)(N10)(N11)(d)(e)	-	12"	12"	-	12"	(R)	-	12"	-	12"	12"	(R)	24" MIN. 42" MAX.	2 1/2" X 2 1/2"
ES	ELECTRIC SERVICE (D)(G)(N11)(d)(e)(f)	12"	(C)	(C)	12"	12"	12"	12"	(C)	(C)	12"	12"	12"	24"	5 1/2" X 5 1/2"
ME	MULTIPLE ELECTRIC (K)(N11)(f)	12"	(C)	(C)	12"	12"	12"	-	(C)	(C)	-	-	12"	24"	WILL VARY DUE TO BOARD AMPACITY
U	FOREIGN UTILITY (TELCO, CATV) (F)(J)(L)(d)(e)	-	12"	6"	-	12"	12"	12"	12"	-	-	12"	12"	18"	9" X 9"
L	FOREIGN UTILITY STREET LIGHT (F)(N8)(d)(e)	12"	12"	12"	12"	-	12"	12"	12"	-	12"	1" OR LESS	12"	18"	2 1/2" X 2 1/2"
EV	SDG&E ELECTRIC VEHICLE CHARGER (480V THRU 120V)	(R)	12"	12"	12"	12"	-	(R)	12"	12"	12"	12"	-	24"	5 1/2" X 5 1/2"

INSTALLATION:

A. AN EFFORT SHOULD BE MADE TO KEEP THE TRENCH DEPTH LESS THAN 60 INCHES. IF A PERSON IS REQUIRED TO ENTER A TRENCH 60 INCHES OR DEEPER, IT SHALL BE SHORED, BENCHED, OR SLOPED TO PREVENT MOVEMENT OF EARTH THAT MAY ENDANGER LIFE OR PROPERTY. THE TRENCH CONFIGURATION, UTILITY POSITIONING AND ALL OTHER RELATED CONSTRUCTION MUST CONFORM TO THIS STANDARD AND THE STATE OF CALIFORNIA PUBLIC UTILITIES COMMISSION GENERAL ORDERS 128 AND 112D, AND ANY OTHER APPROPRIATE GOVERNMENTAL AGENCY HAVING JURISDICTION OVER CONSTRUCTION.

CAUTION:

* BENCHING THE TRENCH IS FOR SAFETY REASONS ONLY AND NOT TO BE USED FOR INSTALLATION PURPOSES.

(B) 2 SACK RED DYE SLURRY BACK FILL IS REQUIRED IF PRIMARY DEPTH IS LESS THAN STANDARD DEPTH OF 30 INCHES.

(C) ANY CONDUIT COMBINATION SMALLER THAN 5-INCH, (NOT MULTIPLE ELECTRIC-ME OR SERVICE CONDUITS) ARE PERMITTED WITHOUT SEPARATION WHEN INSTALLED IN A HORIZONTAL CONFIGURATION. SDG&E TELECOMMUNICATIONS SPACE ALLOTMENT IS PERMITTED NEXT TO THE ELECTRIC SPACE ALLOTMENTS WITHOUT SEPARATION. (6-INCH MINIMUM TRENCH WIDTH, 24-INCH MAXIMUM TRENCH WIDTH). (f)

(D) **BASE, SHADING, AND BACKFILL MATERIAL**

1. BASE AND SHADING MATERIAL FOR GAS TRENCH ONLY:

   IMPORTED MATERIAL CONSISTING OF NATURAL SAND OR MANUFACTURED SAND, EXISTING NATIVE MATERIAL, OR COMBINATIONS MAY BE USED FOR BASE AND SHADING MATERIAL PROVIDED IT COMPLIES WITH GAS STANDARD G7405 AND IS OF A QUALITY THAT WILL COMPLY WITH COMPACTION REQUIREMENTS OF GOVERNMENTAL AGENCIES. STANDARD G7405 SPECIFIES THAT THE MATERIAL MUST HAVE A MIXTURE OF PARTICLE SIZES ALL SMALLER THAN 1/2-INCH. EXISTING NATIVE MATERIAL AND IMPORTED MATERIAL PROVIDED BY A DEVELOPER DOES NOT HAVE TO BE TESTED BY AN INDEPENDENT PROFESSIONAL TESTING FIRM IF, IN THE OPINION OF THE INSPECTOR, IT MEETS THE G7405 SPECIFICATION.

2. SHADING MATERIAL FOR ELECTRIC TRENCH ONLY: ELECTRIC SHADING MATERIAL (ESM) SPECIFICATION.

   ACCEPTABLE MATERIAL FOR (DB) DIRECT BURIED CONDUITS. NATURAL SAND, MANUFACTURED SAND, DECOMPOSED GRANITE, ROCK FREE SANDY LOAM, EXISTING NATIVE MATERIAL OR COMBINATION THEREOF. AGGREGATE COMPOSITION SHALL BE CAPABLE OF PASSING THROUGH A 1/2-INCH SIEVE. GRAVELS SHALL NOT AMOUNT TO MORE THAN 50 PERCENT OF THE MIXTURE. SCREENING OR OTHER SUITABLE MEANS MAY BE REQUIRED AT THE DISCRETION OF THE SDG&E INSPECTOR TO MEET THIS (ESM) SHADING MATERIAL SPECIFICATION. NOT ACCEPTABLE ARE SOILS OF HIGHLY ORGANIC CONTENT IDENTIFIED BY ODOR OR SPONGY FEEL AND HIGHLY PLASTIC (SOGGY) CLAYS, SILTS OR METALLIC SLAG.

TABLE OF CONTENTS

© 1998 - 2024 San Diego Gas & Electric Company. All rights reserved. Removal of this copyright notice without permission is not permitted under law.

REV	CHANGE	DR	BY	DSN	APV	DATE	REV	CHANGE	DR	BY	DSN	APV	DATE
C	FIGURE UPDATE	EDM	EJA	GLW	CZH	08/16/2021	F						
B	EDITORIAL CHANGES	-	GW	JS	CZH	11/01/2018	E						
A	EDITORIAL CHANGES	-	JS	TR	MDJ	05/26/2016	D	EDITORIAL CHANGES	NV5	ADW	EJA	JAS	12/09/2024

INSTALLATION (CONT'D):

3. BASE AND SHADING MATERIAL FOR JOINT GAS AND ELECTRIC TRENCH:

   WHEN BOTH GAS AND ELECTRIC ARE INSTALLED IN THE SAME TRENCH, THE BASE AND SHADING MATERIAL WHICH COMPLIES WITH GAS STANDARD G7405 SHALL BE USED FOR THE GAS PIPE. ELECTRIC SHADING MATERIAL (ESM) MAY BE USED FOR SHADING MATERIAL ON ELECTRIC CONDUIT.

4. BACKFILL MATERIAL FOR GAS AND/OR ELECTRIC:

   THE MATERIAL USED FOR BACKFILLING THE TRENCH ABOVE THE SHADING MATERIAL AND EXTENDING UPWARD TO THE SUBGRADE SHALL BE FREE OF ROCKS OR CLODS LARGER THAN 6 INCHES IN ANY DIMENSION. THE COARSE MATERIAL SHALL BE WELL DISTRIBUTED THROUGHOUT THE FINER MATERIAL. THE AMOUNT OF ROCKS OR CLODS SHALL BE LIMITED, IN THE OPINION OF THE INSPECTOR, TO ALLOW FOR BAR TESTING FOR GAS LEAKS. THE BACKFILL MATERIAL SHALL MEET THE REQUIREMENTS OF ALL APPLICABLE CODES, ORDINANCES AND SDG&E STANDARDS AND BE FREE OF DEBRIS AND ORGANIC MATTER. 2-SACK RED DYE CONCRETE SLURRY MIX MAY BE USED FOR FOR BACKFILL MATERIAL IF THE PIPE GAS IS SHADED WITH A MINIMUM OF 4 INCHES OF COMPACTED SHADING MATERIAL. 2-SACK RED DYE CONCRETE SLURRY MIX IS PREFERRED FOR BACKFILL. THE SLURRY INSTALLATION SHALL MEET THE REQUIREMENTS OF GOVERNMENTAL AGENCIES AND SDG&E STANDARDS.

5. BASE INSTALLATION FOR GAS:

   FOR GAS, 3 INCHES OF BASE MATERIAL IS REQUIRED ON THE BOTTOM OF THE TRENCH TO PREVENT DAMAGE FROM ROCKS, SAGS, OR POCKETS.

6. EARTH TRENCH BOTTOM INSTALLATION FOR ELECTRIC: (ENCASED BURIED & DIRECT BURIED CONDUIT)

   THE 1 1/2-INCH EARTH TRENCH BOTTOM SHALL BE STABLE WITH A UNIFORM GRADE CONTAINING NO HARD CLODS, ROCKS, ETC. THAT MAY DAMAGE THE CONDUIT. IF, IN THE OPINION OF THE SDG&E INSPECTOR, THE CONDUIT MAY BE DAMAGED, TAMPING, WETTING OR A 3-INCH BASE ELECTRIC SHADING MATERIAL (ESM) MAY BE REQUIRED.

7. SHADING INSTALLATION:

   A MINIMUM COVER OF 4 INCHES OF COMPACTED SHADING MATERIAL (4 INCHES AFTER COMPACTION) SHALL BE REQUIRED ABOVE THE GAS PIPE AND ELECTRIC CONDUIT. A MINIMUM COVER OF 12 INCHES OF COMPACTED SHADING MATERIAL WILL BE REQUIRED IF, IN THE OPINION OF THE INSPECTOR, THERE IS AN EXCESSIVE AMOUNT OF ROCK AND CLODS IN THE BACKFILL. THE SHADING MATERIAL MUST BE INSTALLED AND COMPACTED AT EACH LEVEL BEFORE INSTALLING THE NEXT UTILITY. THE SHADING MATERIAL MUST BE INSTALLED BEFORE THE TRENCH IS BACKFILLED TO PREVENT DAMAGE FROM ROCKS, CLODS, ETC. GAS PIPE SHALL NEVER BE CONCRETE OR SLURRY ENCASED, AND SHALL HAVE THE PROPER BASE, SHADING, BACKFILL, AND COMPACTION.

8. COMPACTION:

   EXTREME CARE SHALL BE TAKEN TO ENSURE THAT SHADING MATERIAL IS ADEQUATELY COMPACTED BOTH UNDERNEATH AND AROUND GAS PIPE AND FITTINGS TO PREVENT EXCESSIVE STRESS AND SHEARING FORCES. HAND TAMP AROUND FITTINGS WHERE MECHANICAL COMPACTION CANNOT BE USED. COMPACTING WITH A HYDRAHAMMER OR SIMILAR EQUIPMENT SHALL NOT BE ALLOWED ON TRENCHES WHERE POLYETHYLENE PIPE HAS BEEN INSTALLED. WHEN THE SHEEP'S FOOT METHOD OF COMPACTION IS USED, A MINIMUM OF 18 INCHES OF COVER IS REQUIRED BEFORE COMPACTING. WHEEL ROLLING WITH A HEAVY VEHICLE, COMBINED WITH ADEQUATE MECHANICAL COMPACTION, IF NEEDED, IS ALLOWED FOR COMPACTING BACKFILL MATERIAL PROVIDED A MINIMUM OF 4 INCHES OF MECHANICALLY COMPACTED SHADE MATERIAL AND A MINIMUM OF 12 INCHES OF BACKFILL MATERIAL EXISTS OVER THE GAS PIPE OR ELECTRICAL CONDUIT. WHEN FLOODING OF THE TRENCH IS DONE TO CONSOLIDATE BACKFILL, CARE MUST BE TAKEN TO ENSURE THAT GAS PIPE OR ELECTRIC CONDUIT HAS NOT FLOATED FROM ITS POSITION IN THE TRENCH. COMPACTION BY THE WATER JETTING METHOD IS NOT ALLOWED. SHADING AND BACKFILL SHALL BE COMPACTED IN ACCORDANCE WITH GOVERNMENTAL AGENCIES AND SHALL HAVE A MINIMUM OF 90 PERCENT RELATIVE COMPACTION.

9. ALL BASE, SHADING, AND BACKFILL MATERIAL MUST BE APPROVED BY AN SDG&E INSPECTOR.

(E) ALL 5-INCH PRIMARY CONDUITS SHALL BE INSTALLED WITH SPACERS AND ENCASED WITH CONCRETE SLURRY (2 SACK MIX).

(F) FOREIGN UTILITIES MUST NOT BE LOCATED UNDER ANY SDG&E FACILITIES, SUCH AS HANDHOLES, TRANSFORMER PADS, ETC.

TABLE OF CONTENTS

© 1998 - 2024 San Diego Gas & Electric Company. All rights reserved. Removal of this copyright notice without permission is not permitted under law.

REV	CHANGE	DR	BY	DSN	APV	DATE	REV	CHANGE	DR	BY	DSN	APV	DATE
C	FIGURE UPDATE	EDM	EJA	GLW	CZH	08/16/2021	F						
B	EDITORIAL CHANGES	-	GW	JS	CZH	11/01/2018	E						
A	EDITORIAL CHANGES	-	JS	TR	MDJ	05/26/2016	D	EDITORIAL CHANGES	NV5	ADW	EJA	JAS	12/09/2024

INSTALLATION (CONT'D):

(G) TABLE 5

MINIMUM TRENCH WIDTH			
	UTILITY	**PIPE/CONDUIT SIZE**	**MINIMUM WIDTH (IN)**
GAS	SINGLE GAS-SERVICE	1-INCH AND LESS	6
	SINGLE GAS	2-INCH	9
	SINGLE GAS	3 AND 4 INCHES	12
	SINGLE GAS	6 AND 8 INCHES	18
ELECTRICAL MAIN TRENCH	ALL CONDUIT SIZES INCLUDING 2-5 INCHES		
	ELECTRIC	ALL SIZES	6
	JOINT UTILITIES	ALL PERMITTED SIZES (6 AND 8-INCH GAS)	12 18
	MULTIPLE ELECTRIC	SPACERS AND 2-SACK CONCRETE SLURRY	9
ELECTRICAL SERVICE TRENCH	SINGLE ELECTRIC	2-INCH CONDUIT	6
	SINGLE ELECTRIC & FOREIGN UTILITIES (EXCLUDING GAS)	2-INCH CONDUIT	6
	ELECTRIC	ALL SIZES	9
	SINGLE ELECTRIC & FOREIGN UTILITIES (EXCLUDING GAS)	LARGER THAT 2-INCH	12
	JOINT UTILITIES	ALL PERMITTED SIZES	12
	MULTIPLE ELECTRIC	SPACERS AND 2-SACK CONCRETE SLURRY	9

H. FOR A GAS OR ELECTRIC SERVICE, IF ANY OBSTRUCTION IS ENCOUNTERED (WATER PIPES, ETC.), A 2'-0" X 3'-0" HOLE MAY BE REQUIRED FOR WORKING ROOM IN THE AREA OF THE OBSTRUCTION. THIS IS TO BE DETERMINED BY AN SDG&E INSPECTOR.

(J) THE FOREIGN UTILITY (U) SPACE ALLOTMENT MUST BE A MINIMUM OF 6 INCHES BELOW THE GAS MAIN AND 12-INCH RADIAL SEPARATION FROM ALL OTHER UTILITIES MUST BE MAINTAINED (SEE FIGURES 1 AND 5). IF (U) SPACE ALLOTMENT EXCEEDS A 9-INCH HORIZONTAL MEASUREMENT, IT MUST BE PLACED DIRECTLY ABOVE THE ELECTRIC SPACE ALLOTMENTS AND SHALL NOT EXTEND PAST THE OUTER SIDES OF ELECTRIC SPACE ALLOTMENTS. (FOR INSTALLATION PURPOSES, BENCHING THE TRENCH IS NOT ALLOWED). SEE FIGURES 2, 3, & 4. IF (U) SPACE ALLOTMENT IS 9" X 9" OR SMALLER, IT IS ALLOWED AT THE SAME LEVEL AS THE ELECTRIC (SEE FIGURE 6).

(K) ALL ENCASED BURIED CONDUIT, REGARDLESS OF THE SIZE, SHALL BE CONCRETE ENCASED WITH 2 SACK CEMENT SLURRY. DIRECT BURIED CONDUIT MAY ALSO BE SLURRY ENCASED IF INCLUDED IN THE MULTIPLE ELECTRIC PACKAGE. IN A SERVICE TRENCH, ALL ENCASED BURIED CONDUIT SHALL BE ENCASED WITH CEMENT SLURRY (2 SACK). DIRECT BURIED CONDUIT MAY ALSO BE CONCRETE OR SLURRY ENCASED IF INCLUDED IN THE MULTIPLE ELECTRIC PACKAGE.

TABLE OF CONTENTS

© 1998 - 2024 San Diego Gas & Electric Company. All rights reserved. Removal of this copyright notice without permission is not permitted under law.

REV	CHANGE	DR	BY	DSN	APV	DATE	REV	CHANGE	DR	BY	DSN	APV	DATE
C	FIGURE UPDATE	EDM	EJA	GLW	CZH	08/16/2021	F						
B	EDITORIAL CHANGES	-	GW	JS	CZH	11/01/2018	E						
A	EDITORIAL CHANGES	-	JS	TR	MDJ	05/26/2016	D	EDITORIAL CHANGES	NV5	ADW	EJA	JAS	12/09/2024

INSTALLATION (CONT'D):

(L) TABLE 6

MINIMUM SEPARATION MAIN TRENCH	
UTILITY	**HORIZONTAL SEPARATION**
TELCO MULTIPLE CONCRETE DUCT (CONDEX), TRANSITE, WATER, SEWER, FUEL, OIL, DIESEL, PROPANE GAS, SPRINKLER, DRAIN, LEACH LINES, STEEL GAS MAIN LARGER THAN 2", PRIVATELY OWNED UTILITIES I.E. PRIVATE TELCO, VIDEO, AUDIO, SECURITY WIRES, FIRE ALARM, STREET LIGHTING, ETC.	NOT PERMITTED IN JOINT TRENCH WITH GAS AND/OR ELECTRIC
WATER, SEWER, EXISTING GAS OR ELECTRIC, STORM DRAINS, STEAM, IRRIGATION PIPE, SPRINKLER PIPE LARGER THAN 4", PRIVATE TELCO TRANSITE, PROPANE GAS	5 FEET WITH 3 FEET OF UNDISTURBED SOIL (VI)
SEWAGE LEACH LINES OR SEEPAGE PITS	5 FEET FROM MAIN TRENCH FOR EACH 1-FOOT DEPTH OF MAIN TRENCH
IRRIGATION, SPRINKLER PIPE 4" AND LESS	3 FEET PROVIDED DEPTH OF PIPE DOES NOT EXCEED DEPTH OF GAS OR ELECTRIC (VI)
FUEL OIL, GASOLINE, DIESEL	FROM GAS - 15 FEET, FROM ELECTRIC - 5 FEET WITH 3 FEET OF UNDISTURBED SOIL

CAUTION:

* IN CONSIDERATION FOR THE SAFETY OF THE GENERAL PUBLIC, PERSONS ENGAGED IN CONSTRUCTION, PROPERTY, AND FOR THE OPERATION AND MAINTENANCE OF SDG&E SYSTEM, PROPANE GAS LINES ARE NOT PERMITTED IN A JOINT TRENCH WITH SDG&E FACILITIES.

TABLE 7

MINIMUM VERTICAL CROSSING SEPARATION	
UTILITY	**VERTICAL (CROSSING) SEPARATION**
ALL WET UTILITIES, TELCO, TV, GAS, ELECT.	6 INCHES
FUEL OIL, GASOLINE, DIESEL	FROM GAS, 12 INCHES FROM ELECT. 6 INCHES
ARC-WELDABLE PIPELINES 3" AND LARGER	18 INCHES
STEAM (M)	FROM GAS, POLY PIPE 5 FEET FROM ELECT., 5 FEET

(M) PLACE INSULATING BARRIER BETWEEN STEAM MAIN AND POLYETHYLENE PIPE AND/OR ELECTRIC.

N. MINIMUM SEPARATION SERVICE TRENCH

1. IN A SERVICE TRENCH, WATER, SEWER, PROPANE GAS, SPRINKLER, DRAIN, LEACH LINES, PRIVATELY OWNED UTILITIES I.E., PRIVATE TELCO, VIDEO, AUDIO, SECURITY WIRES, FIRE ALARM, STREET LIGHTING, ETC., ARE NOT PERMITTED IN THE SAME TRENCH WITH GAS OR ELECTRIC. WHEN THESE FACILITIES PARALLEL GAS OR ELECTRIC, 12 INCHES SEPARATION BETWEEN SEPARATE TRENCHES SHALL BE MAINTAINED BETWEEN THE UTILITIES WITH AT LEAST 12 INCHES OF UNDISTURBED NATIVE SOIL BETWEEN TRENCHES. PROPANE GAS SHALL ALWAYS HAVE A 5-FOOT SEPARATION. WHEN CROSSING, A 6-INCH VERTICAL SEPARATION IS REQUIRED.
2. (EXCEPTION) WHEN THERE IS NO SDG&E GAS IN THE SERVICE TRENCH, A SINGLE NATURAL GAS LINE MAY BE INSTALLED IN THE TRENCH, PROVIDED A 12-INCH RADIAL SEPARATION IS MAINTAINED. (THIS IS FOR AN INDIVIDUAL HOUSE ON A CASE BY CASE BASIS, NOT A GROUP OF HOUSES/BUILDINGS).
3. FUEL OIL, GASOLINE, AND DIESEL LINES MUST MAINTAIN A 15-FOOT SEPARATION FROM GAS PIPELINES AND A 5-FOOT SEPARATION WITH 3 FEET OF UNDISTURBED SOIL SEPARATION FROM ELECTRIC CONDUITS.

© 1998 - 2024 San Diego Gas & Electric Company. All rights reserved. Removal of this copyright notice without permission is not permitted under law.

REV	CHANGE	DR	BY	DSN	APV	DATE	REV	CHANGE	DR	BY	DSN	APV	DATE
C	FIGURE UPDATE	EDM	EJA	GLW	CZH	08/16/2021	F						
B	EDITORIAL CHANGES	-	GW	JS	CZH	11/01/2018	E						
A	EDITORIAL CHANGES	-	JS	TR	MDJ	05/26/2016	D	EDITORIAL CHANGES	NV5	ADW	EJA	JAS	12/09/2024

INSTALLATION (CONT'D):

4. IF FIELD CONDITIONS WILL NOT PERMIT THESE SEPARATIONS, THEN APPROVAL OF REDUCED SEPARATIONS MUST COME FROM BOTH THE CUSTOMER PROJECT PLANNER AND SDG&E INSPECTOR.
5. WHEN FIELD CONDITIONS WILL NOT PERMIT STANDARD PARALLEL SEPARATIONS, A 12-INCH MINIMUM SEPARATION IS REQUIRED. PROPANE GAS SHALL ALWAYS HAVE A 5-FOOT SEPARATION.
6. THE GAS MAIN SHALL BE THE LAST INSTALLED, SHALL BE ON THE PROPERTY SIDE OF THE TRENCH, AND SHALL HAVE A MINIMUM OF INCH PAD (AFTER COMPACTION) OF SHADING MATERIAL THE WIDTH OF THE TRENCH ABOVE ANY FOREIGN UTILITY. ANY CROSSING INVOLVING GAS SHALL MAINTAIN A MINIMUM VERTICAL SEPARATION OF 6 INCHES. A GAS SERVICE INSTALLED IN A MAIN TRENCH OR A SERVICE TRENCH ON PUBLIC PROPERTY SHALL REQUIRE THE SAME COVER AND CLEARANCES AS A GAS MAIN. A GAS SERVICE IN A TRENCH ON PRIVATE PROPERTY MAY BE INSTALLED ON THE SAME LEVEL AS FOREIGN UTILITY OR ELECTRIC, BUT SHALL NOT BE DEEPER THAN THE ELECTRIC SERVICE. SDG&E INSPECTOR IS TO DETERMINE AT WHICH LEVEL THE GAS SERVICE IS INSTALLED ON PRIVATE PROPERTY.
7. SDG&E INSTALLED STREET LIGHT CIRCUITS, WHEN INSTALLED ALONE IN A TRENCH, SHALL BE AT A MINIMUM DEPTH OF 24 INCHES EVERYWHERE EXCEPT ON PRIVATE PROPERTY, WHERE THE MINIMUM MAY BE 18 INCHES BELOW FINAL GRADE.
8. THE ELECTRIC PRIMARY WILL BE ON THE STREET SIDE OF THE TRENCH. THE SDG&E STREET LIGHT CIRCUITS WILL BE ON THE PROPERTY SIDE OF THE TRENCH WHENEVER POSSIBLE. FOREIGN UTILITY STREET LIGHTS (NOT SERIES) SHALL BE ON THE PROPERTY SIDE OF THE TRENCH AT THE SAME LEVEL AS SDG&E CONDUITS AND SHALL MAINTAIN A 12-INCH RADIAL SEPARATION. ALL UTILITIES SHALL MAINTAIN A 6-INCH SEPARATION WHEN CROSSING ALL SDG&E ELECTRIC. FOR SEPARATION ON THE SERVICE TRENCH, SEE TABLES 3 AND 4.
9. MINIMUM HORIZONTAL SEPARATION FROM GAS PIPE TO ANY FOREIGN SUBSTRUCTURE (VAULTS, HANDHOLES, ETC.) SHALL BE 12 INCHES.
10. GAS LINES MUST NOT BE LOCATED UNDER ANY STRUCTURE, SUCH AS BUILDINGS, CARPORTS, PATIOS, BREEZEWAYS, EQUIPMENT PADS, AND FACILITIES, SUCH AS SPLICE BOXES FOR ELECTRIC, CATV, TELCO, ETC. TREES OR SHRUBBERY MUST NOT BE PLANTED OVER ANY GAS PIPELINE. A 3-FOOT SEPARATION MUST BE MAINTAINED BETWEEN THE TREE ROOT BALL AND THE GAS PIPELINE.
11. IF AN AGENCY OR UTILITY SUCH AS THE U.S. GOVERNMENT, SAN DIEGO UNIFIED PORT DISTRICT, TELCO, CATV, ETC. REQUIRES CONCRETE ENCASEMENT, CONCRETE MAY BE SUBSTITUTED FOR THE BACKFILL. BASE & SHADING SHALL BE PER SDG&E STANDARDS. ON SDG&E CONDUITS, EITHER DIRECT BURIED OR CONCRETE ENCASED, A MINIMUM INCH COMPACTED SHADING MATERIAL SHALL BE INSTALLED OVER THE UPPERMOST DIRECT BURIED CONDUITS BEFORE THE CONCRETE BACKFILL IS INSTALLED. ALL OTHER INSTALLATIONS SHALL PROVIDE THE REQUIRED MATERIALS AS SPECIFIED IN THIS STANDARD. (O) (d) (e) (f)

O. THE GAS MAIN, GAS SERVICE SHALL NEVER BE CONCRETE OR SLURRY ENCASED AND SHALL HAVE THE PROPER BASE, SHADING, BACKFILL, AND COMPACTION.

P. MINIMUM SEPARATION OF ANY FOREIGN UTILITY INCLUDING WATER PIPES, SEWER, ETC., FROM SDG&E SUBSTRUCTURES SHALL BE 12 INCHES. PROPANE GAS SHALL BE 5 FEET.

Q. SDG&E FIBER OPTIC COMMUNICATION CONDUIT MUST BE INSTALLED IN ALL NEW DISTRIBUTION MAIN FEEDER TRENCHES.

R. ELECTRIC VEHICLE CHARGER SERVICE IS PROHIBITED IN JOINT TRENCH WITH GAS LINE OR PRIMARY ELECTRIC.

S. WARNING TAPE NEEDS TO EXTEND A MINIMUM OF 1-INCH ON BOTH SIDES OF CONDUIT PACKAGE.

BILL OF MATERIALS:

ITEM	DESCRIPTION	QUANTITY	STANDARD PAGE	STOCK NUMBER	DESIGN UNIT
1	TAPE, WARNING, 12" X 500', RED	AS REQ'D	3370	S721748	MSTWRB

NOTES:

I. DRAWINGS ARE NOT TO SCALE.

II. SPACE ALLOTMENTS (OTHER THAN FOREIGN UTILITY) ARE 1/2-INCH LARGER THAN THE NOMINAL SIZE OF GAS MAIN, GAS SERVICE OR ELECTRIC CONDUIT. SEE INSTALLATION NOTE J FOR FOREIGN UTILITY SPACE ALLOTMENT.

© 1998 - 2024 San Diego Gas & Electric Company. All rights reserved. Removal of this copyright notice without permission is not permitted under law.

REV	CHANGE	DR	BY	DSN	APV	DATE	REV	CHANGE	DR	BY	DSN	APV	DATE
C	FIGURE UPDATE	EDM	EJA	GLW	CZH	08/16/2021	F						
B	EDITORIAL CHANGES	-	GW	JS	CZH	11/01/2018	E						
A	EDITORIAL CHANGES	-	JS	TR	MDJ	05/26/2016	D	EDITORIAL CHANGES	NV5	ADW	EJA	JAS	12/09/2024

TABLE OF CONTENTS

NOTES (CONT'D):

III. TYPICAL TRENCH SECTIONS ARE DESIGNED FOR INSTALLATIONS WHERE EACH OCCUPANT IS UTILIZING ENTIRE SPACE ALLOTMENT. SIZE OF SPACE ALLOTMENTS MAY BE REDUCED OR ADDITIONAL ALLOTMENTS MAY BE ADDED PROVIDED MINIMUM COVER AND CLEARANCES ARE MAINTAINED, AS LISTED IN TABLES 3 AND 4. ONLY ONE FOREIGN UTILITY SPACE ALLOTMENT FOR TELCO AND/OR CATV IS ALLOWED PER TRENCH. WIDTH AND DEPTH OF THE TRENCH MUST BE ADJUSTED ACCORDING TO SPACE ALLOTMENTS, MINIMUM CLEARANCES AND MINIMUM COVER.

IV. GAS PIPE REQUIRES A MINIMUM OF 12 INCHES RADIAL SEPARATION FROM ALL UTILITIES.

(V) ALL MINIMUM COVER DEPTHS MEASURED FROM FINAL GRADE. REDUCED DEPTHS IN NOTE (B) ARE LESSER DEPTHS THAN WHAT IS SHOWN UNDER "MINIMUM COVER".

(VI) IF FIELD CONDITIONS WILL NOT PERMIT ANY OF THESE SEPARATIONS, THEN APPROVAL OF REDUCED SEPARATIONS MUST COME FROM BOTH THE CUSTOMER PROJECT PLANNER AND SDG&E INSPECTOR. ON FIELD CONDITIONS THAT WILL NOT PERMIT STANDARD PARALLEL SEPARATIONS, A 12-INCH MINIMUM SEPARATION IS REQUIRED. PROPANE GAS SHALL ALWAYS HAVE A 5-FOOT SEPARATION.

(VII) ALL TRENCH RESURFACING SHALL BE DONE ACCORDING TO GOVERNMENTAL PERMITTING AGENCIES.

REFERENCE:

(a) SEE UG3362 FOR UTILITY LOCATIONS IN LOCAL AND COLLECTOR STREETS IN S.D. COUNTY.

b. SEE UG3363 FOR UTILITY LOCATIONS IN MAJOR STREETS, PRIME ARTERIALS AND EXPRESSWAYS IN S.D. COUNTY.

c. SEE UG3364 FOR JOINT TRENCH TYPICAL LOCATION FOR UNDERGROUND CONVERSIONS IN S.D. COUNTY.

(d) SEE UG3365 FOR IMPORTED OR NATIVE BACKFILL.

(e) SEE UG3366 FOR SLURRY BACKFILL.

(f) SEE UG3376 FOR CONDUIT, ENCASED MULTI-CONDUIT INSTALLATION.

g. SEE UG3376, UG3421, UG3425, UG3426, AND UG3427 FOR CONDUIT CONFIGURATIONS ALLOWED IN THE SERVICE TRENCH.

(h) SEE UG4620 TELECOMMUNICATIONS CONDUIT RISER & TRENCH.

i. SEE SDG&E TRENCHING AND SHORING MANUAL FOR TRENCHING AND SHORING QUESTIONS.

j. SEE UG7403.1, UG7403.2, UG7403.3, UG7403.4, UG7403.5, AND UG7403.6 [FOR INTERNAL USE ONLY].

k. AVAILABLE IN SERVICE STANDARDS AND GUIDE MANUAL.

TABLE OF CONTENTS

© 1998 - 2024 San Diego Gas & Electric Company. All rights reserved. Removal of this copyright notice without permission is not permitted under law.

REV	CHANGE	DR	BY	DSN	APV	DATE	REV	CHANGE	DR	BY	DSN	APV	DATE
C	FIGURE UPDATE	EDM	EJA	GLW	CZH	08/16/2021	F						
B	EDITORIAL CHANGES	-	GW	JS	CZH	11/01/2018	E						
A	EDITORIAL CHANGES	-	JS	TR	MDJ	05/26/2016	D	EDITORIAL CHANGES	NV5	ADW	EJA	JAS	12/09/2024

SCOPE: THIS STANDARD SHOWS TYPICAL PLACEMENT OF UTILITIES WITHIN TRENCHES FOR DISTRIBUTION AND SERVICE IN DEDICATED R/W (STREET) AND PRIVATE PROPERTY, AND PROVIDES THE MINIMUM DEPTH AND CLEARANCE THAT MUST BE MAINTAINED BETWEEN VARIOUS UTILITIES OCCUPYING THE SAME TRENCH IN ORANGE COUNTY.

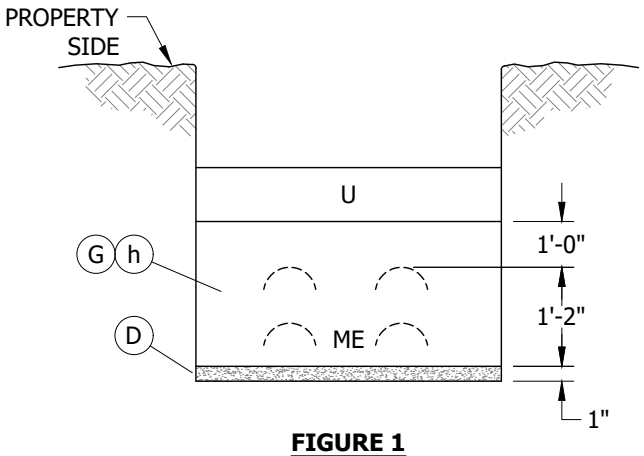

FIGURE 1

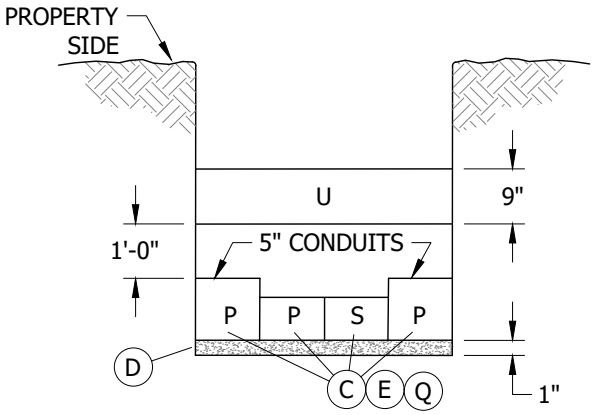

FIGURE 2 (h)

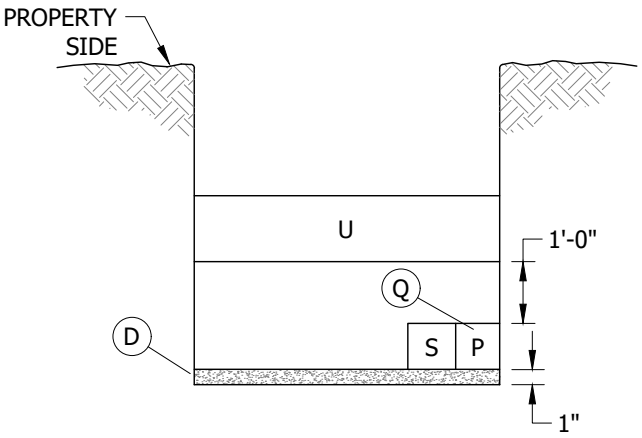

FIGURE 3

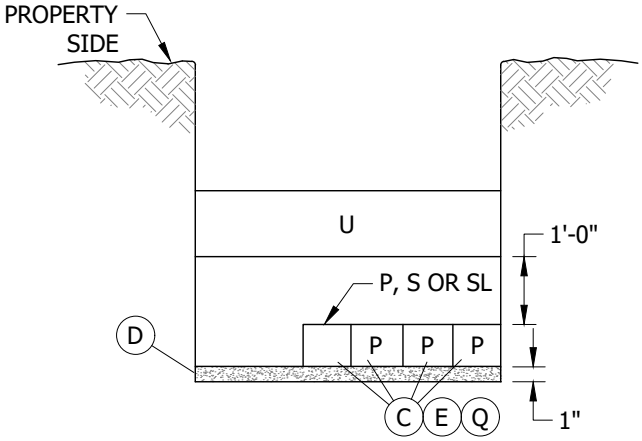

FIGURE 4

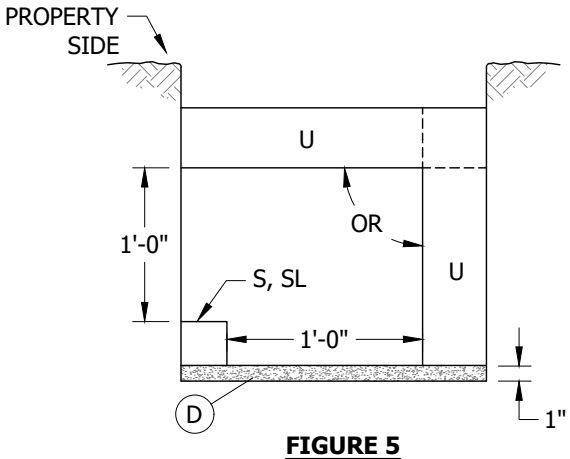

FIGURE 5

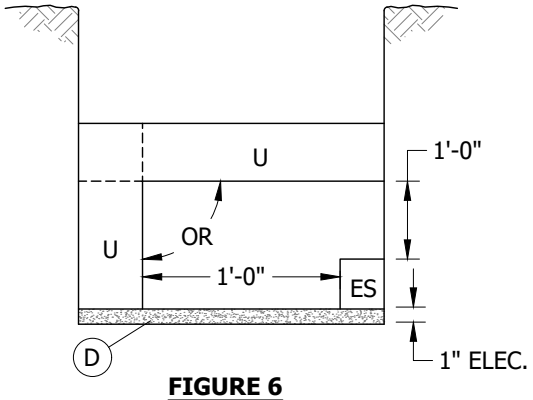

FIGURE 6
SERVICE TRENCH ON PRIVATE PROPERTY

TABLE 1

LEGEND	
CODE	**DESCRIPTION**
P	PRIMARY ELECTRIC
S	SECONDARY ELECTRIC
ES	ELECTRIC SERVICE
ME	MULTIPLE ELECTRIC (P OR S OR ES, STACKED CONFIGURATION INCLUDING SPACERS AND 1-SACK CONCRETE SLURRY)
SL	SDG&E STREET LIGHT
U	FOREIGN UTILITY STREET LIGHT, TELCO, (M) (L) CATV, GAS

TABLE OF CONTENTS

© 1998 - 2024 San Diego Gas & Electric Company. All rights reserved. Removal of this copyright notice without permission is not permitted under law.

REV	CHANGE	DR	BY	DSN	APV	DATE	REV	CHANGE	DR	BY	DSN	APV	DATE
C	DRAWING UPDATE	NV5	EJA	JAS	JAS	11/05/2024	F						
B	FORMATTING	EDM	JIK	-	-	10/27/2021	E						
A	EDITORIAL CHANGES	-	JS	TR	MDJ	05/26/2016	D						

ATTENTION:

* THE FOLLOWING TABLES SHOW THE COVER FOR EACH UTILITY, THE MINIMUM SEPARATION BETWEEN SPACE ALLOTMENTS AND THE MAXIMUM SIZE FOR EACH SPACE ALLOTMENT. TO READ THE TABLES, READ ACROSS AND DOWN UNTIL THE TWO JOIN IN A SQUARE, AND THAT IS THE DISTANCE REQUIRED BETWEEN THE TWO UTILITIES. SEE TABLE 2.

** UNDER VERTICAL, 'ES & ES' JOIN AT (C) WHICH REFERS TO INSTALLATION NOTE C.

*** UNDER HORIZONTAL, 'ES & U' JOIN AT 12 INCHES WHICH WOULD BE THE DISTANCE REQUIRED FROM THE OUTER EDGE OF THE ELECTRIC SERVICE (SPACE ALLOTMENT) TO THE OUTER EDGE OF THE FOREIGN UTILITY (SPACE ALLOTMENT).

TABLE 2

EXAMPLE								
		VERTICAL			HORIZONTAL			
			ES			U		
			↓			↓		
ES	ELECTRIC SERVICE	→	(C)			12"		

TABLE 3

MAIN TRENCH MINIMUM SEPARATION (SERVICE TRENCH PUBLIC PROPERTY)																
		VERTICAL						HORIZONTAL								
		P	S	ES	SL	ME	U	P	S	ES	SL	ME	U	MIN. COVER (IV)	FACILITY SPACE ALLOTMENT (MAX.)
P	PRIMARY ELECTRIC (D)(F)(N)(Q)(d)(e)(f)												(V)		
S	SECONDARY ELECTRIC (D)(N)(d)(e)(f)														
ES	ELECTRIC SERVICE (D)(N)(d)(e)(f)			(C)			12"			(C)			12"		5 1/2" X 2 1/2"
SL	SDG&E STREET LIGHT (D)(J)(N)(Q)(d)(e)(f)													30"	
ME	MULTIPLE ELECTRIC (G)(N)(f)														18" X 14" (4 DUCTS)
U	FOREIGN UTILITY (STREET LIGHT, TELCO, CATV) (H)(L)(M)(O)			12"			(V)	(V)		12"			(V)	(V)	9" X 24" HORIZONTAL OR VERTICAL
	GAS (L)(M)									(V)					

TABLE 4

SERVICE TRENCH PRIVATE PROPERTY MINIMUM SEPARATION										
		VERTICAL			HORIZONTAL					
		ES	ME	U	ES	ME	U	MIN. COVER (IV)	FACILITY SPACE ALLOTMENT (MAX.)	
ES	ELECTRIC SERVICE (D)(F)(K)(N)(d)(e)(f)	(C)		12"	(C)		12"	24"	5 1/2" X 5 1/2"	
ME	MULTIPLE ELECTRIC (G)(N)(f)(h)						(V)		WILL VARY DUE TO BOARD AMPACITY (h)	
U	FOREIGN UTILITY (STREET LIGHT, TELCO, CATV) (H)(K)(L)(M)(O)	12"		(V)	12"		(V)		9" X 24" HORIZONTAL OR VERTICAL	
	GAS (L)(M)				(V)					

© 1998 - 2024 San Diego Gas & Electric Company. All rights reserved. Removal of this copyright notice without permission is not permitted under law.

REV	CHANGE	DR	BY	DSN	APV	DATE	REV	CHANGE	DR	BY	DSN	APV	DATE
C	DRAWING UPDATE	NV5	EJA	JAS	JAS	11/05/2024	F						
B	FORMATTING	EDM	JIK	-	-	10/27/2021	E						
A	EDITORIAL CHANGES	-	JS	TR	MDJ	05/26/2016	D						

X Indicates Latest Revision	Completely Revised	New Page	Information Removed	

SDG&E ELECTRIC UNDERGROUND CONSTRUCTION STANDARDS

UNDERGROUND DISTRIBUTION (UD) TRENCHES AND UTILITY POSITIONING - ORANGE COUNTY

UG3371.2

TABLE OF CONTENTS

INSTALLATION:

A. AN EFFORT SHOULD BE MADE TO KEEP THE TRENCH DEPTH LESS THAN 60 INCHES. IF A PERSON IS REQUIRED TO ENTER A TRENCH 60 INCHES OR DEEPER, IT SHALL BE SHORED, BENCHED, OR SLOPED TO PREVENT MOVEMENT OF EARTH THAT MAY ENDANGER LIFE OR PROPERTY. THE TRENCH CONFIGURATION, UTILITY POSITIONING AND ALL OTHER RELATED CONSTRUCTION MUST CONFORM TO THIS STANDARD AND THE STATE OF CALIFORNIA PUBLIC UTILITIES COMMISSION GENERAL ORDERS 128 AND 112-F, AND ANY OTHER APPROPRIATE GOVERNMENTAL AGENCY HAVING JURISDICTION OVER CONSTRUCTION. (l)

CAUTION:

* BENCHING THE TRENCH IS FOR SAFETY REASONS ONLY AND NOT TO BE USED FOR INSTALLATION PURPOSES.

(B) THE TRENCH DEPTH IN THIS STANDARD SHALL BE FOLLOWED FOR ALL NORMAL INSTALLATIONS. IN INSTALLATIONS WHERE THE TRENCH DEPTH CANNOT BE MET, G.O. 128 REQUIRES ONE OF THE FOLLOWING:

1. STEEL
2. SCHEDULE 40 PVC OR SCHEDULE 80 PVC CONDUIT WITH A MINIMUM WALL THICKNESS OF 0.15 INCHES
3. A 3-INCH LAYER OF CONCRETE (2-SACK 3/8-INCH ROCK) ABOVE AND 2 INCHES ON EACH SIDE OF THE CONDUIT. REDUCED DEPTHS MUST BE APPROVED BY BOTH THE PROJECT MANAGEMENT SPECIALIST AND SDG&E INSPECTOR.

(C) ANY CONDUIT COMBINATION 5-INCH AND SMALLER, (NOT MULTIPLE ELECTRIC-ME OR SERVICE CONDUITS) ARE PERMITTED WITHOUT SEPARATION WHEN INSTALLED IN A HORIZONTAL CONFIGURATION (6-INCH MINIMUM TRENCH WIDTH, 24-INCH MAXIMUM TRENCH WIDTH). (h)

(D) BASE, SHADING, AND BACKFILL MATERIAL

1. SHADING MATERIAL FOR GAS AND/OR ELECTRIC: WHEN BOTH GAS AND ELECTRIC ARE INSTALLED IN THE SAME TRENCH, THE ELECTRIC SHADING MATERIAL (ESM) SHALL BE USED FOR SHADING ELECTRICAL CONDUITS. THE LOCAL GAS CO. SHALL SPECIFY THE MATERIAL REQUIRED FOR THEIR PORTION OF THE TRENCH.
2. SHADING MATERIAL FOR ELECTRIC TRENCH ONLY: ELECTRIC SHADING MATERIAL (ESM) SPECIFICATION. ACCEPTABLE MATERIAL FOR DIRECT BURIED (DB) CONDUIT. NATURAL SAND, MANUFACTURED SAND, DECOMPOSED GRANITE, ROCK FREE SANDY LOAM, EXISTING NATIVE MATERIAL OR COMBINATION THEREOF. AGGREGATE COMPOSITION SHALL BE CAPABLE OF PASSING THROUGH A 1/2-INCH SIEVE. GRAVELS SHALL NOT AMOUNT TO MORE THAN 50 PERCENT OF THE MIXTURE. SCREENING OR OTHER SUITABLE MEANS MAY BE REQUIRED AT THE DISCRETION OF THE SDG&E INSPECTOR TO MEET THIS (ESM) SHADING MATERIAL SPECIFICATION.
3. NOT ACCEPTABLE ARE SOILS OF HIGHLY ORGANIC CONTENT IDENTIFIED BY ODOR OR SPONGY FEEL AND HIGHLY PLASTIC (SOGGY) CLAYS, SILTS, OR METALLIC SLAG.
4. BACKFILL MATERIAL FOR GAS AND/OR ELECTRIC: THE MATERIAL USED FOR BACKFILLING THE TRENCH ABOVE THE SHADING MATERIAL AND EXTENDING UPWARD TO THE SUBGRADE SHALL BE FREE OF ROCKS OR CLODS LARGER THAN 6 INCHES IN ANY DIMENSION. THE COARSE MATERIAL SHALL BE WELL DISTRIBUTED THROUGHOUT THE FINER MATERIAL. THE AMOUNT OF ROCKS OR CLODS SHALL BE LIMITED, AND MUST BE APPROVED BY AN SDG&E INSPECTOR. THE BACKFILL MATERIAL SHALL MEET THE REQUIREMENTS OF ALL APPLICABLE CODES, ORDINANCES AND SDG&E STANDARDS AND BE FREE OF DEBRIS AND ORGANIC MATTER. 1-SACK CONCRETE SLURRY MIX IS THE PREFERRED BACKFILL MATERIAL. THE SLURRY INSTALLATION SHALL MEET THE REQUIREMENTS OF GOVERNMENTAL AGENCIES, LOCAL GAS CO., AND SDG&E STANDARDS.
5. EARTH TRENCH BOTTOM INSTALLATION FOR ELECTRIC (EB & DB CONDUIT): THE 1-INCH EARTH TRENCH BOTTOM SHALL BE STABLE WITH A UNIFORM GRADE CONTAINING NO HARD CLODS, ROCKS, ETC. THAT MAY DAMAGE THE CONDUIT. IF, IN THE OPINION OF THE SDG&E INSPECTOR, THE CONDUIT MAY BE DAMAGED, TAMPING, WETTING OR A 3-INCH BASE ELECTRIC SHADING MATERIAL (ESM) MAY BE REQUIRED.
6. SHADING INSTALLATION: A MINIMUM COVER OF 4 INCHES OF COMPACTED SHADING MATERIAL (4 INCHES AFTER COMPACTION) SHALL BE REQUIRED ABOVE ANY ELECTRICAL CONDUIT. A MINIMUM COVER OF 12 INCHES OF COMPACTED SHADING MATERIAL WILL BE REQUIRED IF, IN THE OPINION OF THE INSPECTOR, THERE IS AN EXCESSIVE AMOUNT OF ROCK AND CLODS IN THE BACKFILL. THE SHADING MATERIAL MUST BE INSTALLED AND COMPACTED AT EACH LEVEL BEFORE INSTALLING THE NEXT UTILITY. THE SHADING MATERIAL MUST BE INSTALLED BEFORE THE TRENCH IS BACKFILLED TO PREVENT DAMAGE FROM ROCKS, CLODS, ETC. GAS PIPE SHALL NEVER BE CONCRETE OR SLURRY ENCASED, AND SHALL HAVE THE PROPER BASE, SHADING, BACKFILL, AND COMPACTION.

TABLE OF CONTENTS

© 1998 - 2024 San Diego Gas & Electric Company. All rights reserved. Removal of this copyright notice without permission is not permitted under law.

REV	CHANGE	DR	BY	DSN	APV	DATE	REV	CHANGE	DR	BY	DSN	APV	DATE
C	DRAWING UPDATE	NV5	EJA	JAS	JAS	11/05/2024	F						
B	FORMATTING	EDM	JIK	-	-	10/27/2021	E						
A	EDITORIAL CHANGES	-	JS	TR	MDJ	05/26/2016	D						

INSTALLATION (CONT'D):

7. COMPACTION: EXTREME CARE SHALL BE TAKEN TO ENSURE THAT SHADING MATERIAL IS ADEQUATELY COMPACTED BOTH UNDERNEATH AND AROUND GAS PIPE AND FITTINGS TO PREVENT EXCESSIVE STRESS AND SHEARING FORCES. HAND TAMP AROUND FITTINGS WHERE MECHANICAL COMPACTION CANNOT BE USED. COMPACTING WITH A HYDRAHAMMER OR SIMILAR EQUIPMENT SHALL NOT BE ALLOWED ON TRENCHES WHERE POLYETHYLENE PIPE HAS BEEN INSTALLED. WHEN THE SHEEP'S FOOT METHOD OF COMPACTION IS USED, A MINIMUM OF 18 INCHES OF COVER IS REQUIRED BEFORE COMPACTING. WHEEL ROLLING WITH A HEAVY VEHICLE, COMBINED WITH ADEQUATE MECHANICAL COMPACTION, IF NEEDED, IS ALLOWED FOR COMPACTING BACKFILL MATERIAL PROVIDED A MINIMUM OF 6 INCHES OF MECHANICALLY COMPACTED SHADE MATERIAL AND A MINIMUM OF 12 INCHES OF BACKFILL MATERIAL EXISTS OVER THE GAS PIPE OR ELECTRICAL CONDUIT. WHEN FLOODING OF THE TRENCH IS DONE TO CONSOLIDATE BACKFILL, CARE MUST BE TAKEN TO ENSURE THAT GAS PIPE OR ELECTRIC CONDUIT IS NOT FLOATED FROM ITS POSITION HAS IN THE TRENCH. COMPACTION BY THE WATER JETTING METHOD IS NOT ALLOWED. SHADING AND BACKFILL SHALL BE COMPACTED IN ACCORDANCE WITH GOVERNMENTAL AGENCIES AND SHALL HAVE A MINIMUM OF 90 PERCENT RELATIVE COMPACTION.
8. ALL BASE, SHADING, AND BACKFILL MATERIAL MUST BE APPROVED BY AN SDG&E INSPECTOR.

(E) ONE OR MORE 5-INCH PRIMARY CONDUITS SHALL BE SLURRY ENCASED.

(F) **TABLE 5**

MINIMUM TRENCH WIDTH			
	UTILITY	**CONDUIT SIZE**	**MINIMUM DEPTH (IN)**
ELECTRICAL MAIN TRENCH	ALL CONDUIT SIZES INCLUDING 2-5 INCHES		--
	ELECTRIC	ALL SIZES	6
	JOINT UTILITIES	ALL SIZES	12
	MULTIPLE ELECTRIC	SPACERS AND 1-SACK CONCRETE SLURRY	9
ELECTRICAL SERVICE TRENCH	SINGLE ELECTRIC	2-INCH CONDUIT	6
	SINGLE ELECTRIC AND FOREIGN UTILITIES (EXCLUDING GAS)	2-INCH CONDUIT	6
	ELECTRIC	ALL SIZES	9
	SINGLE ELECTRIC AND FOREIGN UTILITIES (EXCLUDING GAS)	LARGER THAN 2-INCH	12
	JOINT UTILITIES	ALL PERMITTED SIZES	12
	MULTIPLE ELECTRIC	SPACERS AND 1-SACK CONCRETE SLURRY	9

1. IF ANY OBSTRUCTION IS ENCOUNTERED (WATER PIPES, ETC.), A 2-FOOT WIDE X 3-FOOT LONG HOLE MAY BE REQUIRED FOR WORKING ROOM IN THE AREA OF THE OBSTRUCTION. THIS IS TO BE DETERMINED BY AN SDG&E INSPECTOR.

(G) ALL EB CONDUIT, REGARDLESS OF THE SIZE, SHALL BE CONCRETE ENCASED WITH 1-SACK CEMENT SLURRY. DB CONDUIT MAY ALSO BE CONCRETE OR SLURRY ENCASED IF INCLUDED IN THE MULTIPLE ELECTRIC PACKAGE. IN A SERVICE TRENCH, ALL EB CONDUIT SHALL BE ENCASED WITH CEMENT 1-SACK SLURRY.

(H) **TABLE 6**

MINIMUM SEPARATION MAIN TRENCH	
UTILITY	**HORIZONTAL SEPARATION**
TELCO MULTIPLE CONCRETE DUCT (CONDEX), TRANSITE, WATER, SEWER, FUEL, OIL, DIESEL, PROPANE GAS, SPRINKLER, DRAIN, LEACH LINES, STEEL GAS MAIN LARGER THAN 2 INCHES, PRIVATELY OWNED UTILITIES, I.E. PRIVATE TELCO VIDEO, AUDIO, SECURITY WIRES, FIRE ALARM, STREET LIGHTING ETC., STEEL GAS MAIN LARGER THAN 2 INCHES	NOT PERMITTED IN TRENCH
WATER, SEWER, EXISTING GAS OR ELECTRIC, STORM DRAINS, STEAM, IRRIGATION PIPE, SPRINKLER PIPE LARGER THAN 4 INCHES, PRIVATE TELCO TRANSITE, PROPANE GAS	5 FEET WITH 3 FEET OF UNDISTURBED SOIL (H1)
SEWAGE LEACH LINES OR SEEPAGE PITS	5 FEET FROM MAIN TRENCH FOR EACH 1-FOOT DEPTH OF MAIN TRENCH
IRRIGATION, SPRINKLER PIPE, 4 INCHES AND LESS	3 FEET PROVIDED DEPTH OF PIPE DOES NOT EXCEED DEPTH OF ELECTRIC. (H1)
FUEL OIL, GASOLINE, DIESEL	5 FEET WITH 3 FEET OF UNDISTURBED SOIL

TABLE OF CONTENTS

© 1998 - 2024 San Diego Gas & Electric Company. All rights reserved. Removal of this copyright notice without permission is not permitted under law.

REV	CHANGE	DR	BY	DSN	APV	DATE	REV	CHANGE	DR	BY	DSN	APV	DATE
C	DRAWING UPDATE	NV5	EJA	JAS	JAS	11/05/2024	F						
B	FORMATTING	EDM	JIK	-	-	10/27/2021	E						
A	EDITORIAL CHANGES	-	JS	TR	MDJ	05/26/2016	D						

INSTALLATION (CONT'D):

CAUTION:

* IN CONSIDERATION OF SAFETY FOR THE GENERAL PUBLIC, PERSONS ENGAGED IN CONSTRUCTION, PROPERTY AND OPERATION AND MAINTENANCE OF SDG&E SYSTEM, PROPANE GAS LINES ARE NOT PERMITTED IN A JOINT TRENCH WITH SDG&E FACILITIES.

1. IF FIELD CONDITIONS WILL NOT PERMIT ANY OF THESE SEPARATIONS, THEN APPROVAL OF REDUCED SEPARATIONS MUST COME FROM BOTH THE CUSTOMER PROJECT PLANNER AND SDG&E INSPECTOR. ON FIELD CONDITIONS THAT WILL NOT PERMIT STANDARD PARALLEL SEPARATIONS, A 12-INCH MINIMUM SEPARATION IS REQUIRED. PROPANE GAS SHALL ALWAYS HAVE A 5-FOOT SEPARATION.

TABLE 7

MINIMUM VERTICAL CROSSING SEPARATION	
UTILITY	**VERTICAL (CROSSING) SEPARATION (MIN.)**
ALL WET UTILITIES, TELCO, TV, GAS, ELECTRIC	6 INCHES
FUEL OIL, GASOLINE, DIESEL	6 INCHES
ARC-WELDABLE PIPELINES, 4-INCH AND LARGER	18 INCHES
STEAM (H2)	5 FEET

2. PLACE INSULATING BARRIER BETWEEN STEAM MAIN AND GAS AND/OR ELECTRIC.

J. MINIMUM SEPARATION SERVICE TRENCH

1. IN A SERVICE TRENCH, WATER, SEWER, PROPANE GAS, SPRINKLER, DRAIN, LEACH LINES, PRIVATELY OWNED UTILITIES I.E. PRIVATE TELCO, VIDEO, AUDIO, SECURITY WIRES, FIRE ALARM, STREET LIGHTING ETC., ARE NOT PERMITTED IN THE SAME TRENCH WITH ELECTRIC. WHEN THESE FACILITIES PARALLEL ELECTRIC, 12 INCHES SEPARATION BETWEEN SEPARATE TRENCHES SHALL BE MAINTAINED BETWEEN THE UTILITIES WITH AT LEAST 12 INCHES OF UNDISTURBED NATIVE SOIL BETWEEN TRENCHES. PROPANE GAS SHALL ALWAYS HAVE A 5-FOOT SEPARATION. WHEN CROSSING, A 6-INCH VERTICAL SEPARATION IS REQUIRED.
2. (EXCEPTION) WHEN THERE IS NO SOUTHERN CAL. GAS IN THE SERVICE TRENCH, A SINGLE NATURAL GAS LINE MAY BE INSTALLED IN THE TRENCH PROVIDED A 12-INCH RADIAL SEPARATION IS MAINTAINED. (THIS IS FOR AN INDIVIDUAL HOUSE ON A CASE BY CASE BASIS, NOT A GROUP OF HOUSES/BUILDINGS).
3. FUEL OIL, GASOLINE, AND DIESEL LINES MUST MAINTAIN A FIVE-FOOT SEPARATION WITH THREE FEET OF UNDISTURBED SOIL SEPARATION FROM ELECTRIC CONDUITS.
4. IF FIELD CONDITIONS WILL NOT PERMIT THESE SEPARATIONS, THEN APPROVAL OF REDUCED SEPARATIONS MUST COME FROM BOTH THE CUSTOMER PROJECT PLANNER AND SDG&E INSPECTOR.
5. WHEN FIELD CONDITIONS WILL NOT PERMIT STANDARD PARALLEL SEPARATIONS, A 12-INCH MINIMUM SEPARATION IS REQUIRED. PROPANE GAS SHALL ALWAYS HAVE A 5-FOOT SEPARATION.

(K) ON CONVERSIONS A SINGLE ELECTRIC SERVICE ("ES") IN THE SERVICE TRENCH MAY BE INSTALLED WITHOUT SEPARATION FROM TELCO AND CATV.

(L) THE "SOUTHERN CAL." GAS MAIN OR GAS SERVICE SHALL NOT BE PLACED AT THE SAME LEVEL AS ELECTRIC.

(M) FOREIGN UTILITIES MUST NOT BE LOCATED UNDER ANY SDG&E ELECTRIC FACILITIES, SUCH AS HANDHOLES, TRANSFORMER PADS, ETC..

(N) IF AN AGENCY OR UTILITY SUCH AS THE U.S. GOVERNMENT, SAN DIEGO UNIFIED PORT DISTRICT, TELCO, CATV, ETC., REQUIRES CONCRETE ENCASEMENT, CONCRETE MAY BE SUBSTITUTED FOR THE BACKFILL. BASE & SHADING SHALL BE PER SDG&E STANDARDS. ON SDG&E CONDUITS, EITHER DIRECT BURIED OR CONCRETE ENCASED, A MINIMUM 6-INCH COMPACTED SHADING MATERIAL SHALL BE INSTALLED OVER THE UPPERMOST DB CONDUITS BEFORE THE CONCRETE BACKFILL IS INSTALLED. ALL OTHER INSTALLATIONS SHALL PROVIDE THE REQUIRED MATERIALS AS SPECIFIED IN THIS STANDARD, UG3365, AND UG3366.

1. THE GAS MAIN, GAS SERVICE SHALL NEVER BE CONCRETE OR SLURRY ENCASED AND SHALL HAVE THE PROPER BASE, SHADING, BACKFILL, AND COMPACTION.

TABLE OF CONTENTS

© 1998 - 2024 San Diego Gas & Electric Company. All rights reserved. Removal of this copyright notice without permission is not permitted under law.

REV	CHANGE	DR	BY	DSN	APV	DATE	REV	CHANGE	DR	BY	DSN	APV	DATE
C	DRAWING UPDATE	NV5	EJA	JAS	JAS	11/05/2024	F						
B	FORMATTING	EDM	JIK	-	-	10/27/2021	E						
A	EDITORIAL CHANGES	-	JS	TR	MDJ	05/26/2016	D						

INSTALLATION (CONT'D):

(O) MINIMUM SEPARATION OF ANY FOREIGN UTILITY INCLUDING WATER PIPES, SEWER, ETC., FROM SDG&E SUBSTRUCTURES SHALL BE 12 INCHES. PROPANE GAS SHALL BE 5 FEET.

(P) SDG&E INSTALLED STREET LIGHT CIRCUITS, WHEN INSTALLED ALONE IN A TRENCH, SHALL BE AT A MINIMUM DEPTH OF 24 INCHES EVERYWHERE, EXCEPT ON PRIVATE PROPERTY, WHERE THE MINIMUM MAY BE 18 INCHES BELOW FINAL GRADE.

(Q) THE ELECTRIC PRIMARY WILL BE ON THE STREET SIDE OF THE TRENCH. THE SDG&E STREET LIGHT CIRCUITS WILL BE ON THE PROPERTY SIDE OF THE TRENCH WHENEVER POSSIBLE. ALL UTILITIES SHALL MAINTAIN A 6-INCH SEPARATION WHEN CROSSING ALL SDG&E ELECTRIC. (FOR SEPARATION ON THE SERVICE TRENCH, SEE TABLE 1 AND 2).

BILL OF MATERIALS: NONE

NOTES:

I. FIGURES ARE NOT TO SCALE.

II. SPACE ALLOTMENTS (OTHER THAN FOREIGN UTILITY) ARE 1/2-INCH LARGER THAN THE NOMINAL SIZE OF ELECTRIC CONDUIT.

III. TYPICAL TRENCH SECTIONS ARE DESIGNED FOR INSTALLATIONS WHERE EACH OCCUPANT IS UTILIZING HIS ENTIRE SPACE ALLOTMENT. SIZE OF SPACE ALLOTMENT MAY BE REDUCED OR ADDITIONAL ALLOTMENTS MAY BE ADDED PROVIDING MINIMUM COVER AND CLEARANCES ARE MAINTAINED AS LISTED ON TABLE 3 AND 4. ONLY ONE FOREIGN UTILITY SPACE ALLOTMENT IS ALLOWED PER TRENCH. WIDTH AND DEPTH OF THE TRENCH MUST BE ADJUSTED ACCORDING TO SPACE ALLOTMENTS, MINIMUM CLEARANCES AND MINIMUM COVER.

(IV) ALL MINIMUM COVER DEPTHS MEASURED FROM FINAL GRADE. REDUCED DEPTHS IN NOTE (B) ARE LESSER DEPTHS THAN WHAT IS SHOWN UNDER "MINIMUM COVER".

(V) NOT ALLOWED.

REFERENCE:

a. SEE UG3362 FOR UTILITY LOCATIONS IN LOCAL AND COLLECTOR STREETS IN S.D. COUNTY.

b. SEE UG3363 FOR UTILITY LOCATIONS IN MAJOR STREETS, PRIME ARTERIALS AND EXPRESSWAYS IN S.D. COUNTY.

c. SEE UG3364 FOR JOINT TRENCH TYPICAL LOCATION FOR UNDERGROUND CONVERSIONS IN S.D. COUNTY.

(d) SEE UG3365 FOR IMPORTED OR NATIVE BACKFILL.

(e) SEE UG3366 FOR SLURRY BACKFILL.

(f) SEE UG3367 FOR TRENCH PARALLELING FOUNDATIONS.

g. SEE UG3370 FOR UNDERGROUND DISTRIBUTION (UD) TRENCHES AND UTILITY POSITIONING - S.D. COUNTY.

(h) SEE UG3376 FOR CONDUIT, ENCASED MULTI-CONDUIT INSTALLATION.

i. SEE UG3376, UG3421, UG3425, UG3426, AND UG3427 FOR CONDUIT CONFIGURATIONS AND CONDUIT PLACEMENTS.

j. FOR TRENCHING AND SHORING QUESTIONS, SEE SDG&E TRENCHING AND SHORING MANUAL.

k. AVAILABLE IN SERVICE STANDARDS AND GUIDE MANUAL.

(l) SEE G.O. 128 FOR RULES OF CONSTRUCTION OF UNDERGROUND ELECTRIC SUPPLY AND COMMUNICATION SYSTEMS AND SEE G.O. 112-F FOR RULES GOVERNING DESIGN, CONSTRUCTION, TESTING, OPERATION, AND MAINTENANCE OF GAS GATHERING, TRANSMISSION, AND DISTRIBUTION PIPING SYSTEMS.

TABLE OF CONTENTS

© 1998 - 2024 San Diego Gas & Electric Company. All rights reserved. Removal of this copyright notice without permission is not permitted under law.

REV	CHANGE	DR	BY	DSN	APV	DATE	REV	CHANGE	DR	BY	DSN	APV	DATE
C	DRAWING UPDATE	NV5	EJA	JAS	JAS	11/05/2024	F						
B	FORMATTING	EDM	JIK	-	-	10/27/2021	E						
A	EDITORIAL CHANGES	-	JS	TR	MDJ	05/26/2016	D						

SCOPE: THIS STANDARD LISTS THE MINIMUM CONDUIT SIZE REQUIRED FOR THE INSTALLATION OF PRIMARY AND SECONDARY CABLES.

TABLE 1

CONDUIT SIZING CHART			
CABLE TYPE	**CONDUCTOR SIZE (AWG OR KCMIL)**	**# CONDUCTORS**	**MINIMUM CONDUIT SIZE (IN)**
PRIMARY			
TRXLPECN-PEJ	#2 SOL AL	1/C	3
TRXLPECN-PEJ	#2 SOL AL	2-1/C	3 (C)
TRXLPECN-PEJ	#2 SOL AL	3-1/C	4 (D)(G)
TRXLPECN-PEJ	2/0 AL	3-1/C	4 (B)(G)
TRXLPECN-PEJ	350 AL	3-1/C	5 (B)(F)
EAM-PEJ	750 COMP AL	3-1/C	4 (B)
EAM-PEJ	750 COMP CU	3-1/C	4 (B)
TRXLPECN-PEJ	1000 AL	3-1/C	5 (B)
TRXLPECN-PEJ	1000 CU	3-1/C	5 (B)
SECONDARY			
XLPE	2-#8	--	1 (E)(c)
	2-#2 & 1-#4	--	2
	2-#1/0 & 1-#2	--	2
	2-#3/0 & 1-1/0	--	2
	3-#3/0 & 1-1/0	--	3
	3-350 KCMIL & 1-#3/0	--	3
	2-350 & 1-#3/0	--	3
	3-500 KCMIL & 1-350 KCMIL	--	4
	3-1000 KCMIL & 1-500 KCMIL	--	5

TABLE OF CONTENTS

INSTALLATION:

A. INSTALL CONDUIT AS SPECIFIED ON TABLE 1.

(B) 2/0, 350, 750 COMP, 1000 PRIMARY CABLES ARE ONLY PURCHASED IN TRIPLEX CONFIGURATION.

(C) 2-1 /C #2 SOL PECN-PEJ CABLES MAY BE PARALLELED IN A 3-INCH CONDUIT FOR SINGLE-PHASE 12KV LOAD.

(D) 3-1 /C #2 SOL PECN-PEJ CABLES MAY BE PARALLELED IN A 4-INCH CONDUIT FOR THREE-PHASE LOAD.

(E) CONDUIT FROM A RISER POLE TO THE FIRST LOCATION SHALL BE 2-INCH MINIMUM.

(F) MAY BE INSTALLED IN EXISTING 4-INCH CONDUITS.

(G) MAY BE INSTALLED IN EXISTING 3-INCH CONDUITS.

BILL OF MATERIALS: NONE

NOTES:

I. IF FUTURE LOAD GROWTH REQUIRES LARGER CABLE THAN INITIAL REQUIREMENTS, SIZE CONDUIT FOR FUTURE NEEDS. PROJECT MANAGEMENT SUPERVISOR'S APPROVAL IS REQUIRED.

REFERENCE:

a. FOR "CONDUIT SIZING CHARTS" OF CABLES NO LONGER PURCHASED, SEE FMO UG3372.

b. FOR RESIDENTIAL OR COMMERCIAL SERVICE LATERAL CONDUIT REQUIREMENTS, SEE UG3942.

(c) FOR CABLE POLE RISER INSTALLATION, SEE UG4204.

d. AVAILABLE IN SERVICE STANDARDS AND GUIDE MANUAL.

© 1998 - 2023 San Diego Gas & Electric Company. All rights reserved. Removal of this copyright notice without permission is not permitted under law.

REV	CHANGE	DR	BY	DSN	APV	DATE	REV	CHANGE	DR	BY	DSN	APV	DATE
C	EDITORIAL CHANGES	GLC	FRC	FRC	FRC	01/24/2022	F						
B	FORMATTING	EDM	JIK	-	-	10/27/2021	E						
A	EDITORIAL CHANGES	-	JS	TR	MDJ	05/24/2016	D	TABLE UPDATE	GLC	EJA	EJA	KRG	09/01/2023

X Indicates Latest Revision | Completely Revised | New Page | Information Removed

SDG&E ELECTRIC UNDERGROUND CONSTRUCTION STANDARDS

SHEET 1 OF 1

CONDUIT SIZING FOR UNDERGROUND CABLES

UG3372.1

SCOPE: THIS STANDARD SHOWS THE CONDUIT AND FITTINGS USED TO CONSTRUCT UNDERGROUND CONDUIT SYSTEMS. CONDUIT AND FITTINGS IN THIS STANDARD SHALL BE USED IN BELOW-GROUND OR BRIDGE CELL APPLICATIONS.

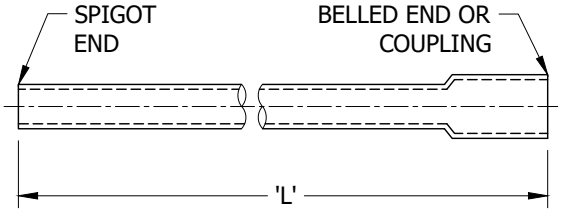

FIGURE 1
(PVC) POLYVINYLCHLORIDE CONDUIT
CONDUIT STRAIGHT SECTIONS

TABLE 1

(PVC) POLYVINYLCHLORIDE CONDUIT						
CONDUIT SIZE (IN)	TYPE	LENGTH 'L' (FT)	STOCK NUMBER	DESIGN UNITS		
				1-SACK ENCASE W/SPACERS	PRIMARY	SEC/SERV
2	DB 60	20	S249632	IDB2-P	1DB2-P	1DB2-S
3	DB 60	20	S249664	IDB3-P	1DB3-P	1DB3-S
4	DB 100	20	S249710	IDB4-P	1DB4-P	1DB4-S
5	DB 60	20	S249728	1, 2DB5SL	1DB5-P	1DB5-S
	SCH40	10	S251408	--	S40-5"	S40-5"

TABLE 2

(PE) POLYETHYLENE CONDUIT				
CONDUIT SIZE (IN)	TYPE	COIL LENGTH (FT)	STOCK NUMBER	DESIGN UNIT
1	SDR 9	2,000	S249630	1" PE
2	SCH 40	2,500	S252002	2" PE
3	SCH 40	1,000	S252004	3" PE
4	SDR 15.5	500	S252006	4" PE
5	SCH 80	20 LENGTHS	S252008	5" PE

TABLE OF CONTENTS

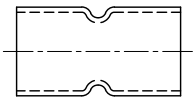

FIGURE 2
DB SWEDGE COUPLING

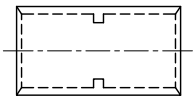

FIGURE 3
DB MOLDING COUPLING
(BOTH WITH CENTER STOPS)

TABLE 3 (FIGURE 2 AND 3)

CONDUIT COUPLINGS	
COUPLING CONDUIT SIZE (IN)	DB STOCK NUMBER
(XV) 2 (XIII)	S279872
3	S279904
4	S279936
5	S280032

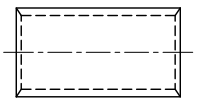

FIGURE 4
DB STRAIGHT COUPLING (WITHOUT CENTER STOPS, TO BE USED ONLY WHEN REPAIRING EXISTING CONDUIT SYSTEMS)

TABLE 4 (FIGURE 4)

CONDUIT COUPLINGS	
COUPLING CONDUIT SIZE (IN)	DB STOCK NUMBER
2 (XV)	--
3	S279920
4	S279952
5	S280064

© 1998 - 2024 San Diego Gas & Electric Company. All rights reserved. Removal of this copyright notice without permission is not permitted under law.

REV	CHANGE	DR	BY	DSN	APV	DATE	REV	CHANGE	DR	BY	DSN	APV	DATE
C	TABLE UPDATE	EDM	EJA	GLW	CZH	05/11/2020	F	EDITORIAL CHANGES	JIK	JIK	MRF	MRF	01/19/2024
B	EDITORIAL CHANGES	-	JS	JS	CZH	07/01/2018	E	TABLE UPDATE	ARC	RSL	EJA	KRG	10/26/2023
A	REVISION	-	-	-	TR/JW	08/10/2004	D	FORMATTING	EDM	JIK	-	-	10/27/2021

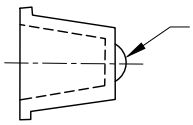

FIGURE 5
CONDUIT PLUG

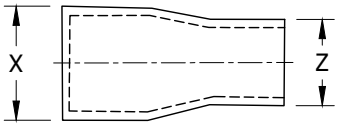

FIGURE 6
CONDUIT BELL REDUCER

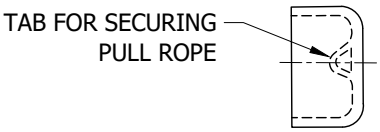

FIGURE 7
CONDUIT END CAP

TABLE 5 (FIGURE 5)

CONDUIT PLUG		
CONDUIT SIZE (IN)	**STOCK NUMBER**	**DESIGN UNITS**
2 (XV)	S544768	PLUG-2
3	S544800	PLUG-3
4	S544704	PLUG-4
5	S544736	PLUG-5

TABLE 6 (FIGURE 6)

CONDUIT BELL REDUCER		
CONDUIT SIZE X TO Z (IN)	**STOCK NUMBER**	**DESIGN UNITS**
3 - 2	S573376	RED3-2
4 - 3	S573380	RED4-3
5 - 4	S573384	RED5-4

TABLE 7 (FIGURE 7)

CONDUIT END CAP		
CONDUIT SIZE (IN)	**STOCK NUMBER**	**DESIGN UNITS**
2 (XV)	S203296	CAP-02
3	S203328	CAP-03
4	S203360	CAP-04
5	S203392	CAP-05

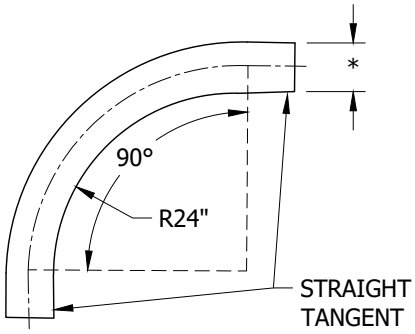

EXAMPLE 1
90 DEGREE ELBOW/24" RADIUS

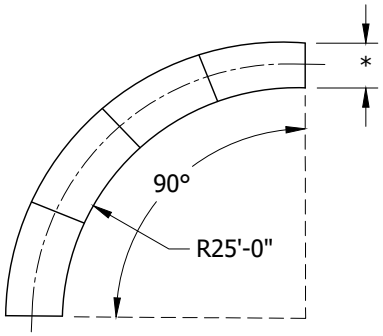

EXAMPLE 2
22 1/2 DEGREE SWEEP/25'-0" RADIUS

FIGURE 8
CONDUIT BENDS

TABLE OF CONTENTS

© 1998 - 2024 San Diego Gas & Electric Company. All rights reserved. Removal of this copyright notice without permission is not permitted under law.

REV	CHANGE	DR	BY	DSN	APV	DATE	REV	CHANGE	DR	BY	DSN	APV	DATE
C	TABLE UPDATE	EDM	EJA	GLW	CZH	05/11/2020	F	EDITORIAL CHANGES	JIK	JIK	MRF	MRF	01/19/2024
B	EDITORIAL CHANGES	-	JS	JS	CZH	07/01/2018	E	TABLE UPDATE	ARC	RSL	EJA	KRG	10/26/2023
A	REVISION	-	-	-	TR/JW	08/10/2004	D	FORMATTING	EDM	JIK	-	-	10/27/2021

TABLE 8

CONDUIT BENDS							
NOMINAL CONDUIT SIZE (IN)	DEGREE OF CURVATURE (DEG)	RADIUS OF CURVATURE	TYPE OF CONDUIT	STOCK NUMBER	DESIGN UNITS		
					CONCRETE ENCASE	PRIMARY	SEC/SERV
2	22 1/2	25'-0"	DB 60	S321808	1EB2-S	1DB2PS	1DB2SS
	45	24" (SECONDARY ONLY)	DB 60	S321920	--	--	1DB2S8
	45	36"	DB 60	S321810	1EB2-8	1DB2-8	--
	90	24" (SECONDARY ONLY)	DB 60	S321984	--	--	1DB2SB
	90	36"	DB 60	S321812	1EB2-B	1DB2-B	--
3	11 1/4	25'-0"	DB 60	S321876	1EB3-C	1DB3-C	1DB3SC
	22 1/2	25'-0"	DB 60	S322144	1EB3-S	1DB3PS	1DB3SS
	45	36"	DB 60	S321878	1EB3-8	1DB3-8	1DB3S8
	90	36"	DB 60	S322048	1EB3-B	1DB3-B	1DB3SB
4	11 1/4	25'-0"	DB 100	S321884	1EB4-C	1DB4-C	1DB3SC
	22 1/2	25'-0"	DB 100	S321826	1EB4-S	1DB4PS	1DB4SS
	45	36"	DB 100	S321942	1EB4-8	1DB4-8	1DB4S8
	90	36"	DB 100	S322082	1EB4-B	1DB4-B	1DB4SB
5	11 1/4	25'-0"	DB 60	S321882	1EB5-C	1DB5-C	1DB5SC
	22 1/2	25'-0"	DB 60	S321856	1EB5-S	1DB5PS	1DB5SS
	45	36"	DB 60	S321960	1EB5-8	1DB5-8	1DB5S8
	90	36"	DB 60	S322112	1EB5-B	1DB5-B	1DB5SB
	90	48"	SCH 80	S322488	5"CP-B	(X)	(X)

TABLE OF CONTENTS

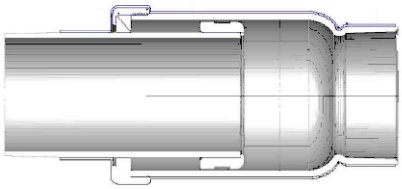

FIGURE 9

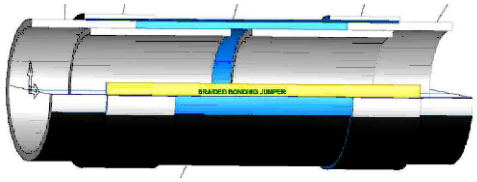

FIGURE 10

TABLE 9 (FIGURE 9)

EXPANSION SIZE (IN)	STOCK NUMBER	DESIGN UNITS
3	S252018	COEXF3
4	S252020	COEXF4
5	S252022	COEXF5

TABLE 10 (FIGURE 10)

COUPLING SIZE (IN)	STOCK NUMBER	DESIGN UNITS
3	S252024	COCPF3
4	S252026	COCPF4
5	S252028	COCPF5

© 1998 - 2024 San Diego Gas & Electric Company. All rights reserved. Removal of this copyright notice without permission is not permitted under law.

REV	CHANGE	DR	BY	DSN	APV	DATE	REV	CHANGE	DR	BY	DSN	APV	DATE
C	TABLE UPDATE	EDM	EJA	GLW	CZH	05/11/2020	F	EDITORIAL CHANGES	JIK	JIK	MRF	MRF	01/19/2024
B	EDITORIAL CHANGES	-	JS	JS	CZH	07/01/2018	E	TABLE UPDATE	ARC	RSL	EJA	KRG	10/26/2023
A	REVISION	-	-	-	TR/JW	08/10/2004	D	FORMATTING	EDM	JIK	-	-	10/27/2021

INSTALLATION: NONE

BILL OF MATERIALS: NONE

NOTES:

(PVC) POLYVINYLCHLORIDE CONDUIT

I. PVC CONDUIT SHALL BE GRAY OR BLACK IN COLOR. NO OTHER COLOR IS ACCEPTABLE FOR SDG&E CONDUIT SYSTEM.

II. FOR SCHEDULE 40 AND SCHEDULE 80 ABOVE-GROUND COMPONENTS TO CONSTRUCT CABLE POLE RISERS, SEE UG4204.

III. ALL 5-INCH CONDUIT MUST BE ENCASED WITH CONCRETE SLURRY (1-SACK MIX).

IV. DB CONDUIT IS REQUIRED FOR INSTALLATIONS REQUIRING DIRECT BURIED MATERIAL, I.E. SAND, DECOMPOSED GRANITE (DG), NATIVE, ETC.

V. FOR DIRECT BURIED INSTALLATIONS, DB 60 IS REQUIRED FOR 2-INCH, 3-INCH, AND 5-INCH CONDUIT. DB 100 IS REQUIRED FOR 4-INCH CONDUIT.

VI. ALL COUPLINGS, BENDS, AND SWEEPS CLASSIFIED AS DB ARE TO BE USED WITH DB AND EB CONDUIT.

VII. DB = DIRECT BURIED CONDUIT

VIII. EB = ENCASED BURIED CONDUIT

IX. THE SHELF LIFE FOR DB CONDUIT, BENDS, AND FITTINGS EXPOSED TO SUNLIGHT IS 6 MONTHS MAXIMUM. 2-#8 FROM A RISER POLE TO THE FIRST LOCATION SHALL BE INSTALLED IN 2-INCH CONDUIT.

(X) THIS ITEM IS EXEMPT.

XI. POLYETHYLENE CONDUIT SHALL BE BLACK OR BLACK WITH THREE EQUALLY SPACED RED STRIPS. NO OTHER COLOR IS ACCEPTABLE FOR THE SDG&E CONDUIT SYSTEM.

XII. CORRUGATED POLYETHYLENE CONDUIT IS NOT ACCEPTABLE FOR THE SDG&E CONDUIT SYSTEM.

(XIII) S280384 SCH 40 PVC MAY BE USED AS A REPLACEMENT ON A TEMPORARY BASIS (DEPENDS ON SUPPLIER OF COUPLING).

(XIV) SCHEDULE 40 CONDUIT IS REQUIRED IN BRIDGE CELLS.

(XV) 2" CONDUIT FOR USE ONLY WITH EXISTING 2" STUBS, ALL NEW CONSTRUCTION SHOULD BE 3" MINIMUM.

REFERENCE:

a. FOR SPLICING OR REPAIRING 1-INCH POLYETHYLENE CONDUIT, SEE UG3383.

b. FOR CABLE POLE INSTALLATION, SEE UG4204.

TABLE OF CONTENTS

© 1998 - 2024 San Diego Gas & Electric Company. All rights reserved. Removal of this copyright notice without permission is not permitted under law.

REV	CHANGE	DR	BY	DSN	APV	DATE	REV	CHANGE	DR	BY	DSN	APV	DATE
C	TABLE UPDATE	EDM	EJA	GLW	CZH	05/11/2020	F	EDITORIAL CHANGES	JIK	JIK	MRF	MRF	01/19/2024
B	EDITORIAL CHANGES	-	JS	JS	CZH	07/01/2018	E	TABLE UPDATE	ARC	RSL	EJA	KRG	10/26/2023
A	REVISION	-	-	-	TR/JW	08/10/2004	D	FORMATTING	EDM	JIK	-	-	10/27/2021

SCOPE: THIS STANDARD SHOWS PRACTICES WHICH ARE ESSENTIAL FOR PROPER INSTALLATION OF A CONDUIT SYSTEM.

INSTALLATION:

CUTTING CONDUIT/CHAMFERING

(A) A FINE-TOOTH SAW SHOULD BE USED TO CUT CONDUIT (I.E., HACKSAW FOR CONDUIT TWO INCHES OR LESS, WOODSAW FOR CONDUIT GREATER THAN TWO INCHES). THE CONDUIT MUST BE CUT STRAIGHT AND CLEANED OF BURRS. CONDUIT TRANSITIONS FROM SCHEDULE 40 OR SCHEDULE 80 EB OR DB CONDUIT SHALL BE CHAMFERED. IF CONDUITS ARE NOT CHAMFERED BY THE MANUFACTURER, THE CONDUITS MUST BE CHAMFERED IN THE FIELD WITH A KNIFE OR HALF ROUND FILE, ETC.

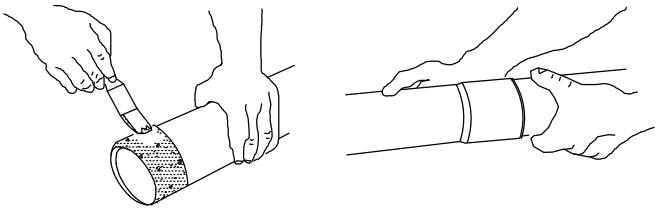

FIGURE 1 (A)

B. TO ASSURE A PROPER JOINT, SDG&E AND CONTRACTORS ARE TO USE ONLY SDG&E APPROVED SOLVENT CEMENTING PVC TO PVC OR ABS TO PVC CONDUIT AS DESCRIBED IN THE BILL OF MATERIAL. MAKE CERTAIN THAT ALL FOREIGN MATTER HAS BEEN WIPED FROM BOTH THE CONDUIT AND FITTINGS. APPLY A LIBERAL AND UNIFORM COAT OF SOLVENT CEMENT TO THE DUCT END A LENGTH EQUAL TO THE DEPTH OF THE BELL OR COUPLING BEING ATTACHED. FOR MAXIMUM STRENGTH ALSO APPLY A LIGHT COAT ON THE INSIDE ON THE COUPLING OR BELLED END. PREVENT EXCESS SOLVENT CEMENT FROM BEING FORCED INTO THE FITTING AT THE INSIDE SHOULDER OF THE CONDUIT. A NATURAL BRISTLE BRUSH OR THE APPLICATOR SUPPLIED WITH THE SOLVENT CONTAINER SHOULD BE USED. PLASTIC BRISTLE BRUSHES SHOULD NOT BE USED AS THE SOLVENT WILL DISSOLVE THE BRISTLES. FOLLOW THE MANUFACTURERS INSTRUCTIONS ON THE SOLVENT CONTAINER. SOLVENT CEMENT WITH A PAST EXPIRATION DATE INDICATED ON THE CONTAINER MUST BE DISCARDED. CONTRACTORS MAY OBTAIN LARGER CONTAINERS OF SOLVENT CEMENT IF NEEDED. THE LARGER CONTAINERS HAVE DIFFERENT CATALOG NUMBERS THAN SPECIFIED ON THE BILL OF MATERIAL.

BENDS AND SWEEPS

C. ANY JOINT INCLUDED IN A SECTION OF CONDUIT TO BE BENT IN A DITCH SHOULD BE FIRMLY STAKED FOR THE DESIRED RADIUS TO ENSURE THAT THE JOINT IS NOT DISTURBED OR DAMAGED BEFORE OR AFTER BACKFILL OR ENCASEMENT IS COMPLETED. IN CASES WHERE A PLASTIC CONNECTION IS MADE WITH THE JOINTS UNDER STRESS DUE TO MISALIGNMENT OR OTHER FACTORS, THE PLASTIC JOINT MUST BE HELD RIGID AFTER INSERTION UNTIL COMPLETELY CURED. WHERE STAKES ARE LOCATED AT THE CENTER OF A BEND OR SWEEP, CARE MUST BE EXERCISED TO PREVENT DEFORMATION OF DUCT DUE TO MOVEMENT BY CONTRACTION AND EXPANSION. STAKES TO BE REMOVED AFTER INITIAL BACKFILL IS PLACED.

D. HORIZONTAL BENDS (PRIMARY) IN THE CONDUIT SHALL BE MADE ONLY WITH LONG SWEEPS OF 25'-0" RADIUS OR LARGER WHENEVER POSSIBLE. SMALLER RADIUS SWEEPS MAY BE INSTALLED ONLY IF SPACE LIMITATIONS PROHIBIT THE USE OF THE 25'-0" RADIUS SWEEPS AND PULLING TENSIONS PERMIT (E.G. SHORT-SIDE SERVICES IN A SUBDIVISION). SHOULD FIELD CONDITIONS WARRANT A SMALLER RADIUS, APPROVAL MUST COME FROM BOTH THE CUSTOMER PROJECT PLANNER AND THE SDG&E INSPECTOR.

EXPANSION AND CONTRACTION

E. DUE TO EXPANSION AND/OR CONTRACTION OF PLASTIC CONDUIT, BACKFILL FROM CENTER OF TRENCH BOTH WAYS OR FROM ONE TIE-IN POINT TOWARD THE OPPOSITE END OF THE TRENCH.

TERMINATING CONDUIT, CONDUIT ENTRANCES AND CONNECTIONS

(F) ALL CONDUIT MUST BE WATERTIGHT AND MECHANICALLY SOUND AT THE SUBSTRUCTURE ENTRY POINT. CONDUIT SHALL BE TERMINATED IN SUBSTRUCTURES AS FOLLOWS:

1. CONDUIT END SHALL BE FLUSH WITH THE INTERIOR SURFACE OF SUBSTRUCTURE CONDUIT TERMINATOR.
2. USE A CONDUIT BELL REDUCER WHEN CONDUIT IS SMALLER THAN CONDUIT TERMINATOR KNOCKOUT (EXCEPT WITH 1-INCH CONDUIT). FOR 1-INCH CONDUIT, USE THE SUBSTRUCTURE ADAPTOR(S) SHOWN ON PAGE 3382.1.

© 1998 - 2020 San Diego Gas & Electric Company. All rights reserved. Removal of this copyright notice without permission is not permitted under law.

REV	CHANGE	DR	BY	DSN	APV	DATE	REV	CHANGE	DR	BY	DSN	APV	DATE
C							F						
B	INSTALLATION UPDATE	EDM	EJA	GLW	CZH	10/9/2020	E						
A	NO CHANGES - RE-AFFIRMED	-	JS	TR	MDJ	5/24/2016	D						

X Indicates Latest Revision | Completely Revised | New Page | Information Removed

SDG&E ELECTRIC UNDERGROUND CONSTRUCTION STANDARDS

CONDUIT INSTALLATION PRACTICES

UG3374.1

TABLE OF CONTENTS

INSTALLATION (CONT'D):

3. UNLESS OTHERWISE SPECIFIED ON THE JOB PRINT, INSTALL CONDUIT USING THE BOTTOM SET OF TERMINATOR KNOCKOUTS FIRST. IF ONLY ONE CONDUIT IS REQUIRED, USE THE BOTTOM OUTSIDE (CLOSET TO WALL) KNOCKOUT.
4. WHEN CONDUITS MUST ENTER THE SUBSTRUCTURE IN ANY AREA WHERE TERMINATION KNOCKOUTS ARE NOT PROVIDED, THE SUBSTRUCTURE MUST BE CORE BORED. CORE BORING LOCATIONS WILL BE SPECIFIED BY THE CUSTOMER PROJECT PLANNER AND MUST BE APPROVED (CLOSET TO WALL) KNOCKOUT. AN EFFORT SHOULD BE MADE TO MAINTAIN 5 FEET OF STRAIGHT PRIMARY CONDUIT FOR 90 DEGREE BENDS JUST OUTSIDE ANY SUBSTRUCTURE.
5. WHEN SUBSTRUCTURE REINFORCING STEEL IS EXPOSED BY CORE BORING, IT MUST BE COATED WITH GALVANOX (STOCK NUMBER S516064) AND THEN COATED WITH COAL TAR EPOXY (STOCK NUMBER S241000) TO MOISTURE SEAL. AFTER CONDUIT IS TERMINATED IN THE SUBSTRUCTURE, SEAL THE SUBSTRUCTURE ENTRANCE WITH CEMENT GROUT.

G. TYPICAL METHODS FOR ROUTING CONDUITS INTO HANDHOLES AND MANHOLES: (VII)

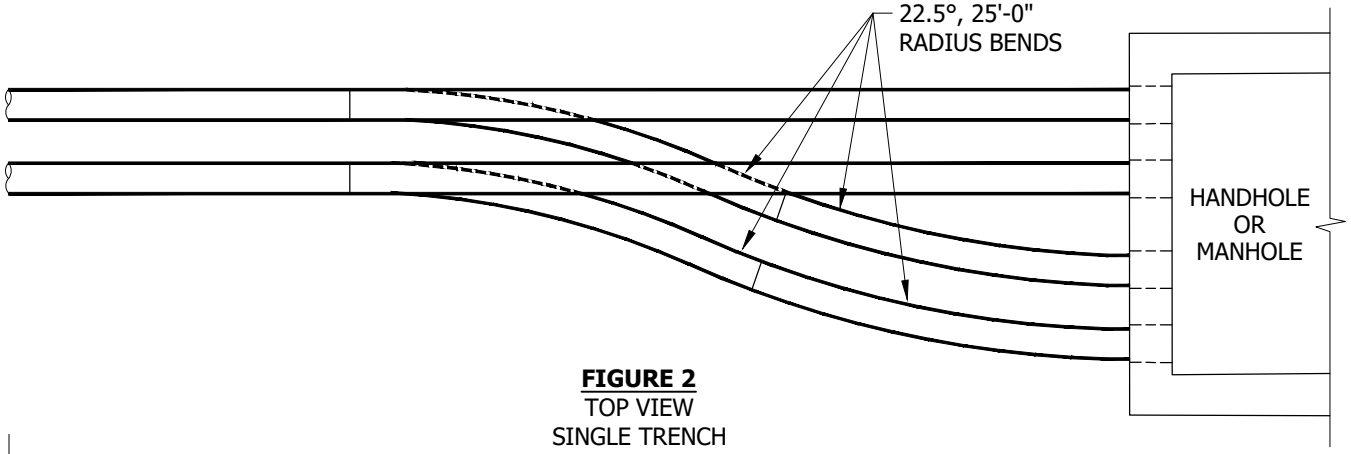

FIGURE 2
TOP VIEW
SINGLE TRENCH

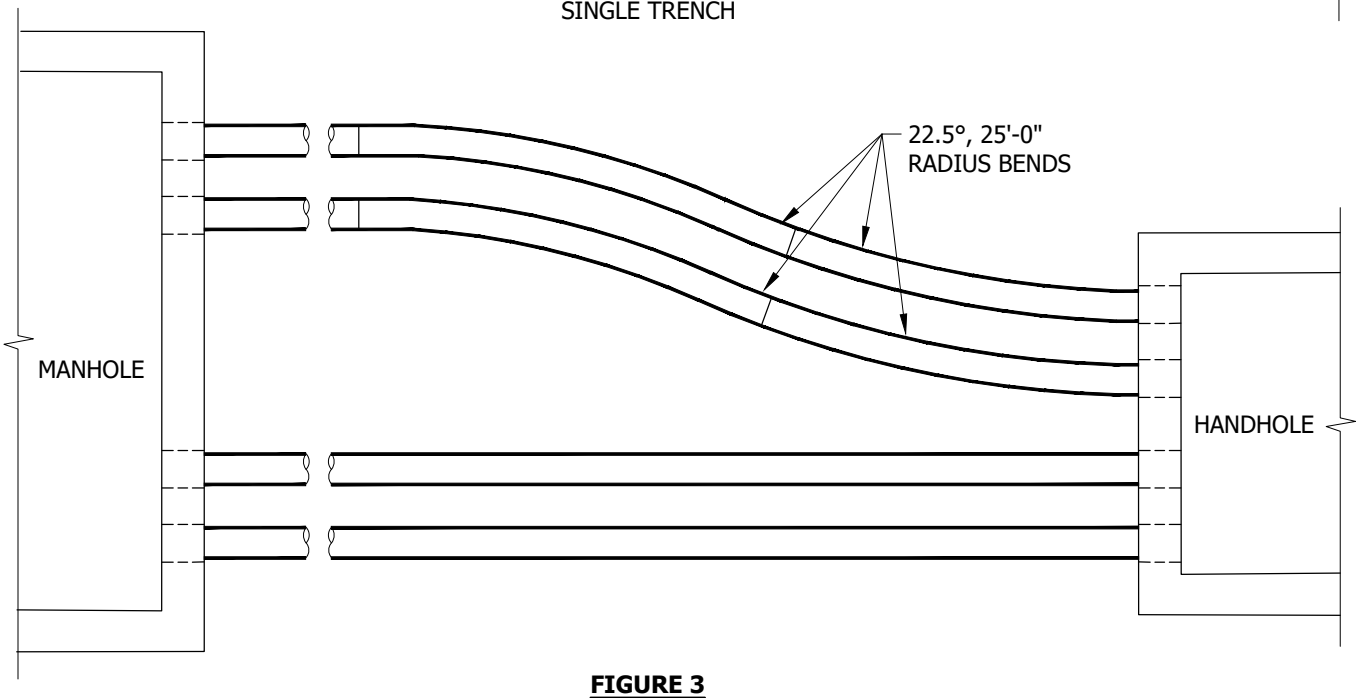

FIGURE 3
TOP VIEW
SEPARATE TRENCHES

TABLE OF CONTENTS

© 1998 - 2020 San Diego Gas & Electric Company. All rights reserved. Removal of this copyright notice without permission is not permitted under law.

REV	CHANGE	DR	BY	DSN	APV	DATE	REV	CHANGE	DR	BY	DSN	APV	DATE
C							F						
B	INSTALLATION UPDATE	EDM	EJA	GLW	CZH	10/9/2020	E						
A	NO CHANGES - RE-AFFIRMED	-	JS	TR	MDJ	5/24/2016	D						

BILL OF MATERIALS:

ITEM	DESCRIPTION		CATALOG NO.	QUANTITY	STANDARD PAGE	STOCK NUMBER	DESIGN UNITS
1	SOLVENT CEMENTS (CLEAR)	PERMALITE	405C	--	--	S213232	--
		CERTAINTEED	85172	--	--		--
		CARLON	VC9982	--	--		--
2	GALVANOX PAINT (F)		--	--	--	S516064	--
3	COAL TAR EPOXY (F)		--	--	--	S241000	--

NOTES:

I. EACH CONDUIT RUN BETWEEN SUBSTRUCTURES, PADS, CUSTOMER SERVICE, RISERS, ETC., SHALL BE ONE SIZE CONDUIT CONTINUOUSLY, I.E., NO REDUCERS ARE ALLOWED WITHIN A CONDUIT RUN EXCEPT WHERE THE CONDUIT ENTERS THE SUBSTRUCTURE OR ABOVE THE GROUND LEVEL ON A RISER POLE. IF A STUBOUT IS LARGER THAN THE CONDUIT REQUIRED, CONTINUE USING THE LARGER SIZE CONDUIT TO THE FIRST TERMINATION POINT THEN CONTINUE WITH THE SMALLER CONDUIT SIZED FOR THE CABLE. DEVIATIONS MUST BE APPROVED BY SDG&E'S CONSTRUCTION STANDARDS GROUP.

II. ROUNDNESS OF CONDUIT MUST BE MAINTAINED AT ALL TIMES.

III. DO NOT CUT SWEEPS & ELBOWS, THEY ARE NOT SIZED TO ACCEPT COUPLINGS.

IV. ALL BENDS, SWEEPS AND ELBOWS SHOWN ON JOB PRINT MUST BE INCLUDED IN CABLE PULLING CALCULATION.

V. FIELD BENDS ARE NOT ACCEPTABLE.

VI. TO AVOID CUTTING THE CONDUIT BENDS, SUBSTRUCTURES AND/OR CABLE POLES WHICH REQUIRE A 90° BEND SHALL BE LOCATED FAR ENOUGH AWAY FROM EACH OTHER TO ALLOW ROOM ENOUGH FOR THE TWO 90° BENDS. THIS WILL VARY DEPENDING ON THE SIZE OF THE 90° BEND.

(VII) IN EACH SUBSTRUCTURE AS MANY CONDUIT KNOCKOUTS MAY BE USED AS NEEDED, PROVIDING PROPER INSTALLATION IS FOLLOWED AND REQUIRED UNOBSTRUCTED SPACE IS MAINTAINED. INSTALL CONDUITS USING THE LOWER SET OF KNOCKOUTS FIRST, UNLESS OTHERWISE SPECIFIED ON JOB PRINT. IF ONLY ONE CONDUIT IS REQUIRED, USE THE BOTTOM OUTSIDE (CLOSET TO THE WALL) KNOCKOUT.

REFERENCE:

a. AVAILABLE IN SERVICE STANDARDS AND GUIDE MANUAL.

TABLE OF CONTENTS

© 1998 - 2020 San Diego Gas & Electric Company. All rights reserved. Removal of this copyright notice without permission is not permitted under law.

REV	CHANGE	DR	BY	DSN	APV	DATE	REV	CHANGE	DR	BY	DSN	APV	DATE
C							F						
B	INSTALLATION UPDATE	EDM	EJA	GLW	CZH	10/9/2020	E						
A	NO CHANGES - RE-AFFIRMED	-	JS	TR	MDJ	5/24/2016	D						

SCOPE: THIS STANDARD SHOWS CONDUIT SPACERS FOR MULTI-DUCT INSTALLATION.

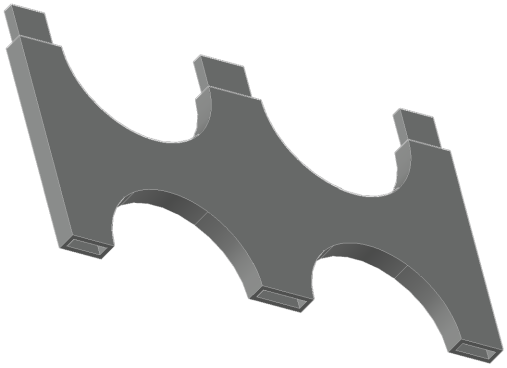

FIGURE 1
INTERMEDIATE SPACER OR BASE SPACER
USED IN BRIDGE CELLS

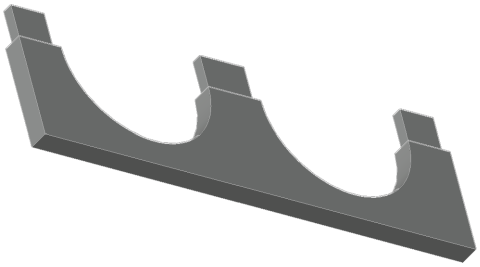

FIGURE 2
BASE SPACER

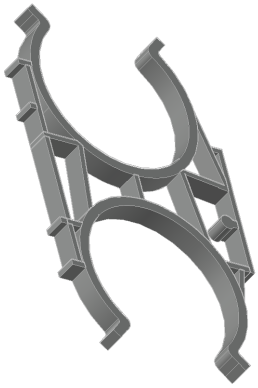

FIGURE 3
5-INCH VERTICAL SPACER
FOR 9-INCH WIDTH TRENCH

TABLE 1

CONDUIT SPACERS			
CONDUIT SIZE (IN)	**DESCRIPTION**	**QUANTITY**	**STOCK NUMBER**
5	SPACER INTERMEDIATE 2-WAY 5" CONDUIT	AS REQ'D	S663528
5	SPACER BASE 5 INCH UG CONDUIT	AS REQ'D	S663530
5	SPACER BASE 2-WAY 5 INCH CONDUIT	AS REQ'D	S663008
5	SPACER VERTICAL 5 INCH 3375	AS REQ'D	S663532

INSTALLATION: NONE

BILL OF MATERIALS: NONE

NOTES: NONE

REFERENCE:

a. AVAILABLE IN SERVICE STANDARDS AND GUIDE MANUAL.

TABLE OF CONTENTS

© 1998 - 2024 San Diego Gas & Electric Company. All rights reserved. Removal of this copyright notice without permission is not permitted under law.

REV	CHANGE	DR	BY	DSN	APV	DATE	REV	CHANGE	DR	BY	DSN	APV	DATE
C	FIGURE UPDATE	TSA	EJA	EJA	KRG	07/28/2023	F						
B	FORMATTING	EDM	JIK	-	-	10/27/2021	E						
A	EDITORIAL CHANGES	-	JS	TR	MDJ	05/24/2016	D	TABLE UPDATE	NV5	EJA	JAS	JAS	11/05/2024

SHEET 1 OF 1	X Indicates Latest Revision	Completely Revised	New Page	Information Removed
	SDG&E ELECTRIC UNDERGROUND CONSTRUCTION STANDARDS			UG3375.1
	CONDUIT SPACER DATA			

SCOPE: THIS STANDARD SHOWS CEMENT AND SLURRY MIXTURE. ALSO SHOWN ARE CONCRETE SLURRY ENCASED CONDUIT INSTALLATIONS.

TABLE 1

DATA FOR CONDUITS WHICH ARE NORMALLY INSTALLED 2 CONDUITS WIDE AND 1 THRU 4 ROWS HIGH		
NUMBER OF CONDUITS IN TRENCH	CONCRETE PER 100 FT OF TRENCH, CUBIC YARDS	
	4" CONDUITS	5" CONDUITS
2	5.5	5.2
4	8.7	8.5
6	12.4	11.8
8	16.1	15.1

TABLE 2

INGREDIENTS FOR 1 - SACK CONCRETE SLURRY MIX (PER YARD)									
CEMENT FOR	AIR ENTRAINMENT (%)	SAND (LBS)	GRAVEL		CEMENT		MAX., TOTAL WATER PER SACK OF CEMENT (GALS/YARD)	SLUMP	
			SIZE	LBS	SACKS	LBS		MIN. (IN)	MAX. (IN)
ENCASEMENT	0-2	3000 ± 50	-	-	1	94	60	6	8

TABLE 3

INGREDIENTS FOR 2 - SACK CONCRETE SLURRY MIX (PER YARD)									
CEMENT FOR	AIR ENTRAINMENT (%)	SAND (LBS)	GRAVEL		CEMENT		MAX., TOTAL WATER PER SACK OF CEMENT (GALS/YARD)	SLUMP	
			SIZE	LBS	SACKS	LBS		MIN. (IN)	MAX. (IN)
ENCASEMENT	0-2	1600 ± 20	3/8	1600 ± 20	2	188	50	6	8

TABLE OF CONTENTS

INSTALLATION:

SECONDARY SERVICE TRENCH: (a) (b) (c)

A. INSTALLATION WHERE CONCRETE SLURRY ENCASEMENT (1 SACK MIX) AND SPACERS ARE REQUIRED:

1. WHEN CONDUITS ARE IN A STACKED CONFIGURATION WITH SPACERS, ENCASED BURIED (EB) CONDUITS MUST BE ENCASED WITH 1 SACK SLURRY. DIRECT BURIED (DB) CONDUITS ARE ALSO ACCEPTABLE WHEN EXTENDED FROM A DIRECT BURIED TRENCH INTO THE STACKED CONFIGURATION.

B. INSTALLATION FOR CONCRETE SLURRY ENCASEMENT (1 SACK MIX) OR IMPORTED/NATIVE MATERIAL WITHOUT SPACERS:

1. WHEN CONDUITS ARE SIDE BY SIDE ON THE BOTTOM OF THE TRENCH (4 CONDUITS MAXIMUM). IN THE TRANSITION AREA WHERE THE CONDUITS FROM THE BOTTOM OF THE TRENCH START TOWARD THE SURFACE (THE STRAIGHT PORTION BY THE 90 BEND), SPACERS MAY BE REQUIRED TO ALLOW THE 90 BENDS TO ENTER STRAIGHT INTO THE PAD OPENING. USE DIRECT BURIED (DB) CONDUIT WITH IMPORTED NATIVE MATERIAL. USE ENCASED BURIED (EB) CONDUITS WITH CONCRETE SLURRY ENCASEMENT (1 SACK MIX). DIRECT BURIED (DB) CONDUITS ARE ALSO ACCEPTABLE.

2. IF THE SERVICE CONDUIT EXTENDS INTO THE MAIN TRENCH WHERE STACKING IS REQUIRED, ALL CONDUITS SHALL BE INSTALLED IN ONE PACKAGE WITH SPACERS AND 1 SACK SLURRY.

© 1998 - 2025 San Diego Gas & Electric Company. All rights reserved. Removal of this copyright notice without permission is not permitted under law.

REV	CHANGE	DR	BY	DSN	APV	DATE	REV	CHANGE	DR	BY	DSN	APV	DATE
C	INSTALLATION UPDATE	EDM	EJA	GLW	CZH	03/09/2020	F	DRAWING UPDATE	NV5	EJA	JAS	JAS	01/16/2025
B	NOTES UPDATE	-	JES	JES	CZH	05/23/2019	E	FIGURE UPDATE	TSA	EJA	EJA	KRG	07/28/2023
A	EDITORIAL CHANGES	-	JS	TR	MDJ	05/24/2016	D	FORMATTING	EDM	JIK	-	-	10/27/2021

INSTALLATION (CONT'D):

MAIN FEEDER TRENCH OR PRIMARY TRENCH: (c) (d)

C. INSTALLATION WHERE CONCRETE SLURRY ENCASEMENT (1 SACK MIX) AND SPACERS ARE REQUIRED:

1. ALL 5-INCH PRIMARY CONDUITS SHALL BE INSTALLED WITH SPACERS AND ENCASED WITH CONCRETE SLURRY (1 SACK MIX).
2. WHEN CONDUITS ARE IN A STACKED CONFIGURATION WITH SPACERS, ENCASED BURIED (EB) CONDUITS MUST BE ENCASED WITH 1 SACK SLURRY.
3. EXCAVATE TRENCH TO REQUIRED DEPTH AND WIDTH. (c)

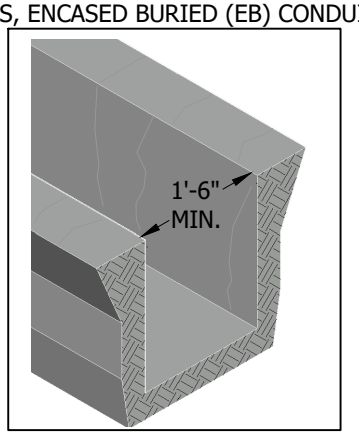

FIGURE 1 (C3)

4. MULTI-SIZED CONDUIT SYSTEMS TO BE A MAXIMUM OF TWO CONDUITS WIDE AND FIVE CONDUITS HIGH (UP TO TEN SPACER POSITIONS IN ONE TRENCH). IF MORE THAN TEN POSITIONS ARE REQUIRED, A SEPARATE CONDUIT BANK SHALL BE INSTALLED IN A SEPARATE TRENCH. MAINTAIN 5 FEET SEPARATION WITH 3 FEET OF UNDISTURBED NATIVE SOIL BETWEEN TRENCHES.
5. ASSEMBLE CONDUITS IN SPACERS ON TOP OF THE GROUND OR IN THE TRENCH. PLACE SPACERS 8 FEET TO 10 FEET APART.

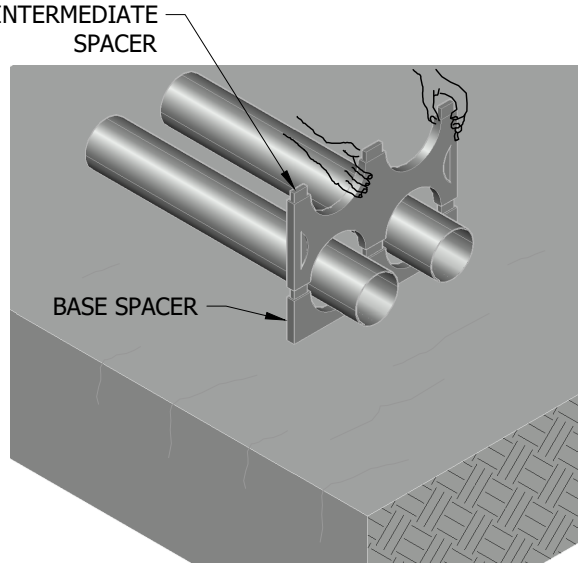

FIGURE 2 (C5)

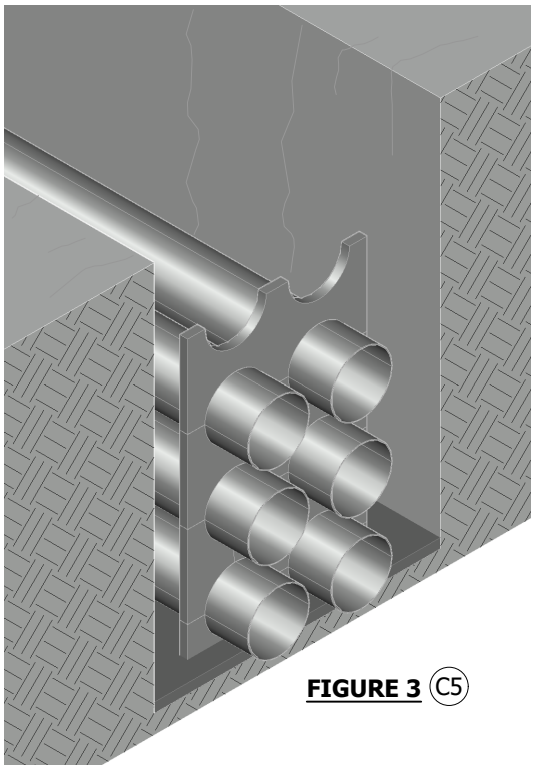

FIGURE 3 (C5)

6. SPOT POUR 1 SACK OVER CONDUITS APPROXIMATELY AT 25-FOOT INTERVALS TO PREVENT CONDUITS FROM FLOATING.

© 1998 - 2025 San Diego Gas & Electric Company. All rights reserved. Removal of this copyright notice without permission is not permitted under law.

REV	CHANGE	DR	BY	DSN	APV	DATE	REV	CHANGE	DR	BY	DSN	APV	DATE
C	INSTALLATION UPDATE	EDM	EJA	GLW	CZH	03/09/2020	F	DRAWING UPDATE	NV5	EJA	JAS	JAS	01/16/2025
B	NOTES UPDATE	-	JES	JES	CZH	05/23/2019	E	FIGURE UPDATE	TSA	EJA	EJA	KRG	07/28/2023
A	EDITORIAL CHANGES	-	JS	TR	MDJ	05/24/2016	D	FORMATTING	EDM	JIK	-	-	10/27/2021

X Indicates Latest Revision | Completely Revised | New Page | Information Removed

SDG&E ELECTRIC UNDERGROUND CONSTRUCTION STANDARDS

CONDUIT,
ENCASED MULTI-CONDUIT INSTALLATION

UG3376.2

TABLE OF CONTENTS

INSTALLATION (CONT'D):

7. A CONCRETE ENVELOPE USING 1 SACK CONCRETE MIX (PER TABLE 2) IS TO BE POURED AROUND AND OVER THE CONDUITS. TRENCH BACKFILL MATERIAL SHALL MEET THE GOVERNING AUTHORITY'S REQUIREMENTS AND COMPANY STANDARDS.

(8) TWO OR THREE 2-INCH CONDUITS MAY BE INSTALLED IN ONE SPACER POSITION.

FIGURE 4 (C8)

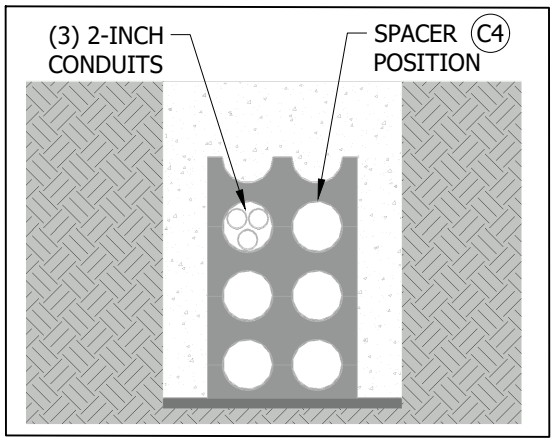

(D) MAXIMUM TWO 5-INCH CONDUITS USING CONDUIT SPACERS, ELECTRIC TRENCH ONLY:

1. ALL 5-INCH PRIMARY CONDUITS SHALL BE INSTALLED WITH SPACERS AND ENCASED WITH CONCRETE SLURRY (1 SACK MIX).
2. USE DIRECT BURIED (DB) CONDUIT EVEN THOUGH THEY ARE ENCASED IN 1 SACK CONCRETE SLURRY.

FIGURE 5 (D)

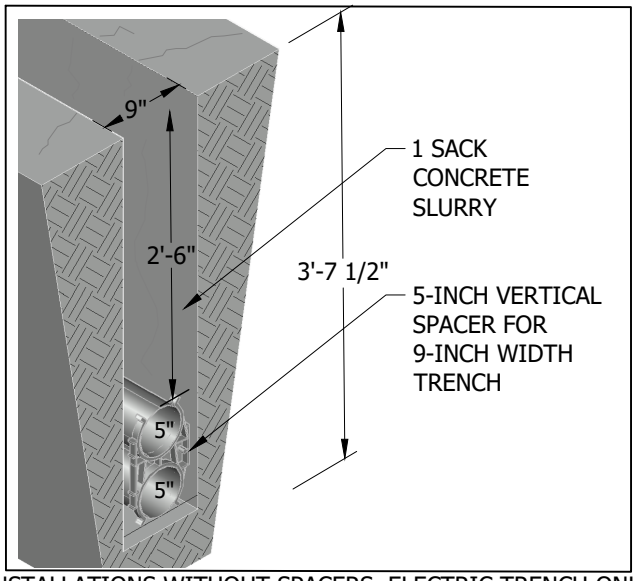

E. NON-PRIMARY FEEDER 5-INCH INSTALLATIONS WITHOUT SPACERS, ELECTRIC TRENCH ONLY, MAXIMUM OF TWO 5-INCH CONDUITS, FOR USE ON BRANCH OR LATERAL CIRCUITS ONLY. WHEN SPACER IS NOT REQUIRED:

1. ALL 5-INCH PRIMARY CONDUITS SHALL BE INSTALLED WITH SPACERS AND ENCASED WITH CONCRETE SLURRY (1 SACK MIX).
2. USE DIRECT BURIED (DB) CONDUIT EVEN THOUGH THEY ARE ENCASED IN 1 SACK CONCRETE SLURRY.
3. THE EXAMPLES SHOWN ARE TYPICAL. OTHER CONDUIT COMBINATIONS MAY BE USED PROVIDED THE TOTAL NUMBER DOES NOT EXCEED FOUR AND A REQUIRED 1 1/2-INCH MINIMUM SEPARATION BETWEEN CONDUITS AND OUTER WALL SURFACES ARE MAINTAINED. 1-INCH CONDUITS MAY BE ADDED AS NEEDED.
4. ALWAYS INSTALL 5-INCH CONDUITS ON THE OUTER SIDE OF THE TRENCH.

(5) THE EXAMPLES SHOWN MAY BE USED IN A JOINT TRENCH CONFIGURATION WITH PROPER VERTICAL SPACING.

© 1998 - 2025 San Diego Gas & Electric Company. All rights reserved. Removal of this copyright notice without permission is not permitted under law.

REV	CHANGE	DR	BY	DSN	APV	DATE	REV	CHANGE	DR	BY	DSN	APV	DATE
C	INSTALLATION UPDATE	EDM	EJA	GLW	CZH	03/09/2020	F	DRAWING UPDATE	NV5	EJA	JAS	JAS	01/16/2025
B	NOTES UPDATE	-	JES	JES	CZH	05/23/2019	E	FIGURE UPDATE	TSA	EJA	EJA	KRG	07/28/2023
A	EDITORIAL CHANGES	-	JS	TR	MDJ	05/24/2016	D	FORMATTING	EDM	JIK	-	-	10/27/2021

INSTALLATION (CONT'D):

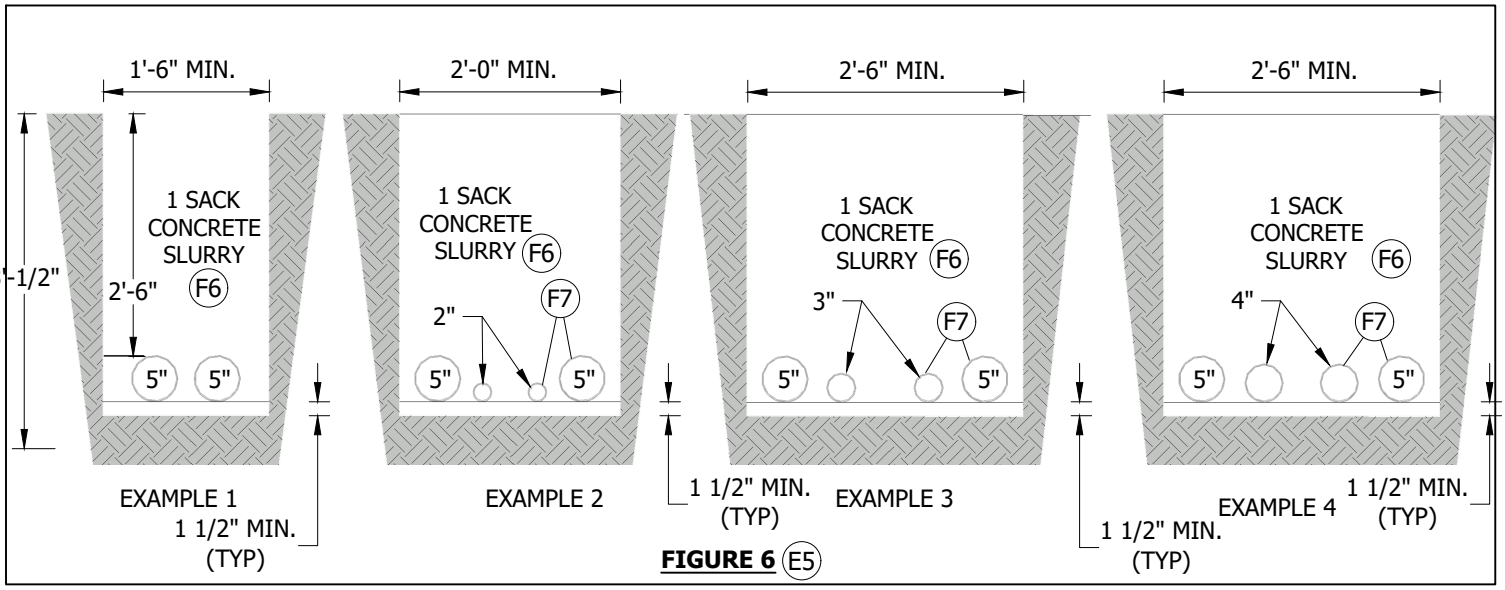

FIGURE 6 (E5)

F. CONDUITS 5 INCHES OR LESS, CONCRETE SLURRY ENCASEMENT 1 SACK MIX OR IMPORTED/NATIVE MATERIAL.

1. ANY CONDUIT COMBINATION SMALLER THAN 5 INCHES MAY BE INSTALLED SIDE BY SIDE ON BOTTOM OF TRENCH. (6-INCH MINIMUM TRENCH WIDTH, 24-INCH MAXIMUM TRENCH WIDTH).
2. THE CONDUIT COMBINATIONS DESCRIBED MAY BE USED IN A JOINT TRENCH CONFIGURATION.
3. USE DIRECT BURIED (DB) CONDUIT WHEN THEY ARE TO BE ENCASED OR IMPORTED/NATIVE BACKFILL IS USED.
4. NARROW TRENCHES, 6 INCHES THROUGH 12 INCHES REQUIRE 1 SACK CONCRETE SLURRY OR MINIMUM 90 PERCENT COMPACTION FOR IMPORTED OR NATIVE MATERIAL.
5. SEE UG3365 AND UG3366 FOR TYPICAL PLACEMENT AND PREFERRED TRENCH MATERIAL. (e)

(6) 12 INCHES MINIMUM SLURRY COVER.

(7) 1 1/2 INCHES MINIMUM SEPARATION REQUIRED BETWEEN CONDUITS AND BETWEEN CONDUIT AND OUTER WALL SURFACES.

8. STACKING CONDUIT IS PROHIBITED WITHOUT SPACERS.

BILL OF MATERIALS: NONE

NOTES: NONE

REFERENCE:

(a) AVAILABLE IN SERVICE STANDARDS AND GUIDE MANUAL.

(b) SEE UG3421, UG3425, UG3426, AND UG3427 FOR CONDUIT PLACEMENT AND TRENCH CONFIGURATION.

(c) SEE UG3370 AND UG3371 FOR UG TRENCHES AND POSITIONING IN SAN DIEGO AND ORANGE COUNTIES.

(d) SEE DM5722 FOR CONDUIT APPLICATION.

(e) SEE UG3365 AND UG3366 FOR NATIVE, IMPORTED OR SLURRY BACKFILL REQUIREMENTS.

TABLE OF CONTENTS

© 1998 - 2025 San Diego Gas & Electric Company. All rights reserved. Removal of this copyright notice without permission is not permitted under law.

REV	CHANGE	DR	BY	DSN	APV	DATE	REV	CHANGE	DR	BY	DSN	APV	DATE
C	INSTALLATION UPDATE	EDM	EJA	GLW	CZH	03/09/2020	F	DRAWING UPDATE	NV5	EJA	JAS	JAS	01/16/2025
B	NOTES UPDATE	-	JES	JES	CZH	05/23/2019	E	FIGURE UPDATE	TSA	EJA	EJA	KRG	07/28/2023
A	EDITORIAL CHANGES	-	JS	TR	MDJ	05/24/2016	D	FORMATTING	EDM	JIK	-	-	10/27/2021

SCOPE: THIS STANDARD SHOWS THE INSTALLATION AND MATERIAL REQUIRED FOR INSTALLING THE CONDUIT STUB MARKER AND BALL MARKER LOCATING SYSTEM USED TO LOCATE AND SHOW THE DEPTH OF PRIMARY, SECONDARY AND SERVICE CONDUIT STUBS.

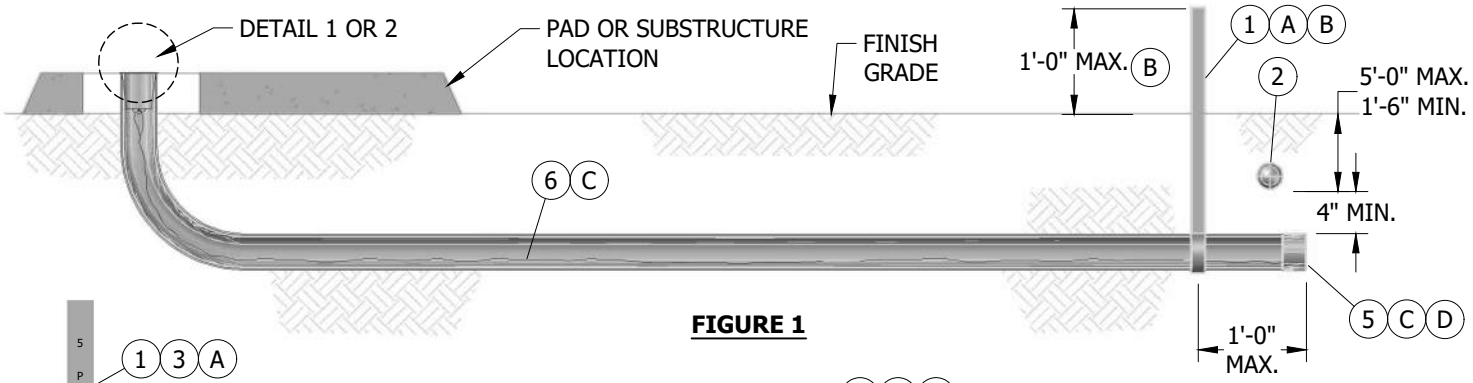

FIGURE 1

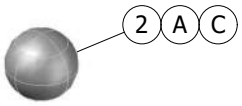

FIGURE 2
MARKER BALL

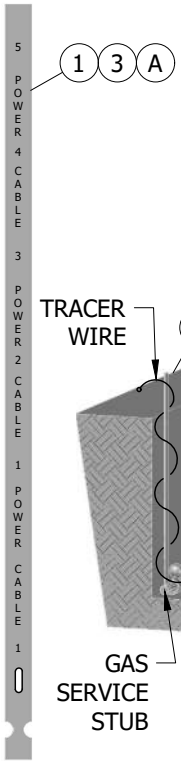

FIGURE 3
CONDUIT STUB MARKER

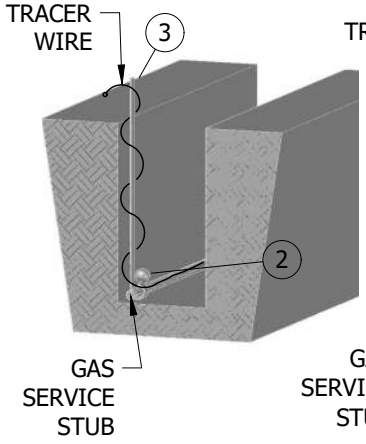

EXAMPLE 1
GAS SERVICE ONLY
(SEE TABLE 1)

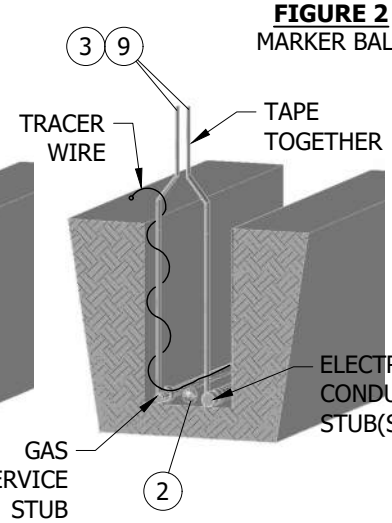

EXAMPLE 2
GAS SERVICE AND CONDUIT STUBS TOGETHER
(SEE TABLE 2)

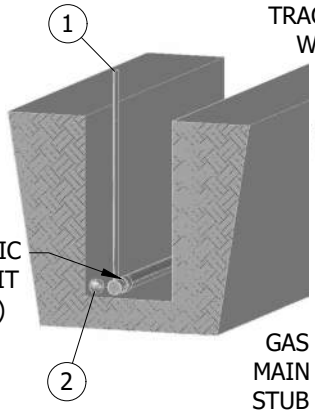

EXAMPLE 3
SINGLE CONDUIT STUB
(SEE TABLE 3)

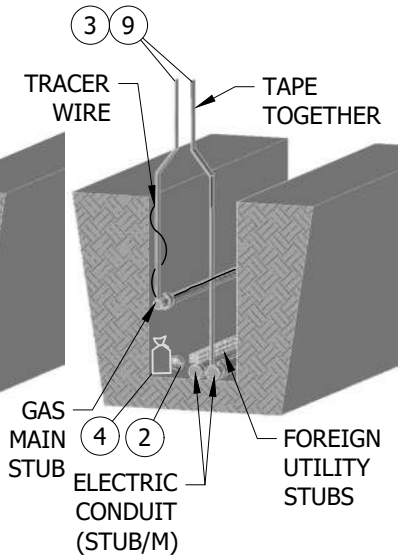

EXAMPLE 4
JOINT UTILITY STUBS
(SEE TABLE 4)

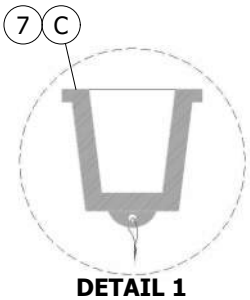

DETAIL 1

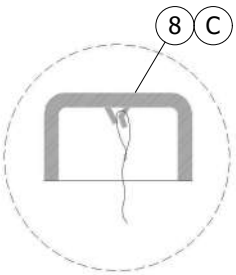

DETAIL 2

TABLE 1

DESIGN UNITS
STUB-M

TABLE 2

DESIGN UNITS
STUB/M (UG)
STUB-J (GAS)

TABLE 3

DESIGN UNITS
STUB/M

TABLE 4

DESIGN UNITS
STUB/M
STUB-J
ANODE-5

© 1998 - 2023 San Diego Gas & Electric Company. All rights reserved. Removal of this copyright notice without permission is not permitted under law.

REV	CHANGE	DR	BY	DSN	APV	DATE	REV	CHANGE	DR	BY	DSN	APV	DATE
C	FIGURE UPDATE	TSA	EJA	EJA	KRG	08/29/2023	F						
B	FORMATTING	EDM	JIK	-	-	10/27/2021	E						
A	EDITORIAL CHANGES	-	JS	TR	MDJ	05/24/2016	D						

X Indicates Latest Revision | Completely Revised | New Page | Information Removed

SDG&E ELECTRIC UNDERGROUND CONSTRUCTION STANDARDS

CONDUIT STUB MARKER AND BALL MARKER LOCATING SYSTEM

UG3377.1

TABLE OF CONTENTS

INSTALLATION:

(A) INSTALL CONDUIT STUB MARKERS AND BALL MARKERS ON ALL STUBS (REGARDLESS OF LENGTH), 1-FOOT MAXIMUM INWARD FROM THE END. IF MORE THAN ONE CONDUIT IS STUBBED OUT AT THE SAME LOCATION, INSTALL ONE BALL MARKER ABOVE THE CONDUIT(S) ONLY.

(B) LOOP THE STUB MARKER AROUND THE CONDUIT. IF THE MARKER IS NOT LONG ENOUGH TO SHOW ABOVE GRADE LEVEL, TAPE A SECOND MARKER TO THE FIRST MARKER.

(C) INSTALL THE PULLING TAPE INSIDE THE CONDUIT LEAVING SLACK AT THE PAD OR SUBSTRUCTURE END. AT THE SAME END, THE PULL ROPE MUST BE SECURELY ATTACHED TO EITHER A CONDUIT CAP OR TIE AND TAPE THE PULL ROPE TO THE END OF THE CONDUIT WITH GRAY TAPE.

(D) AT THE CONDUIT STUB END, TIE THE PULLING TAPE TO THE END OF THE CONDUIT AND TAPE THE END OF THE STUB OVER THE PULLING TAPE WITH GRAY TAPE.

BILL OF MATERIALS:

ITEM	DESCRIPTION	QUANTITY	STANDARD PAGE	STOCK NUMBER	DESIGN UNITS
1	MARKER, CONDUIT STUB (RED)	1	3377	S476302	STUB/M
2	BALL MARKER	1	--	S476492	STUB/M AND STUB-M
3	MARKER, GAS STUB (YELLOW)	1	3377/3390	S476306 (X)	STUB-M
4	ANODE, 5 LB	1	--	S109362 (X)	ANODE-5
5	TAPE, GRAY	AS REQ'D	--	S721120	--
6	PULLING AND MEASURING TAPE	AS REQ'D	--	S721700	--
7	PLUG, CONDUIT	AS REQ'D	3373	--	--
8	CAP, CONDUIT END	AS REQ'D	3373	--	--
9	MARKER, GAS STUB ONLY (YELLOW)	AS REQ'D	3377/3390	S476306 (X)	STUB-J

NOTES:

(X) THIS ITEM IS EXEMPT.

REFERENCE:

a. FOR MINIMUM CONDUIT COVER AND CONDUIT PLACEMENT, SEE UG3370.

b. FOR CONDUIT PLUG OR CONDUIT CAP STOCK NUMBERS, SEE UG3373.

c. FOR GAS STUB MARKER AND BALL MARKER LOCATING SYSTEM, SEE UG3390.

d. FOR POLICY ON MARKING GAS STUBS, SEE GAS STANDARDS D 7243, AND D 7244.

TABLE OF CONTENTS

© 1998 - 2023 San Diego Gas & Electric Company. All rights reserved. Removal of this copyright notice without permission is not permitted under law.

REV	CHANGE	DR	BY	DSN	APV	DATE	REV	CHANGE	DR	BY	DSN	APV	DATE
C	FIGURE UPDATE	TSA	EJA	EJA	KRG	08/29/2023	F						
B	FORMATTING	EDM	JIK	-	-	10/27/2021	E						
A	EDITORIAL CHANGES	-	JS	TR	MDJ	05/24/2016	D						

SCOPE: THIS SECTION EXPLAINS THE PROCESS REQUIRED TO INSTALL ELECTRIC CONDUIT IN NEW AND EXISTING BRIDGES. THIS INCLUDES SLAB, CLOSED CELL, T-SECTIONED, AND CUSTOM BRIDGES.

INSTALLATION: NONE

BILL OF MATERIALS: NONE

NOTES:

DISCUSSION

I. CONDUIT INSTALLATION DESIGN IN BRIDGES IS PROJECT SPECIFIC WORK. ALMOST EVERY BRIDGE HAS ITS OWN UNIQUE DESIGN AND CONDUIT ATTACHMENT REQUIREMENTS. DEVELOPING A STANDARD THAT COVERS CONDUIT INSTALLATION IN ALL TYPES OF BRIDGES WOULD PRODUCE A DOCUMENT CONTAINING SO MUCH INFORMATION THAT IT WOULD NOT BE PRACTICAL TO USE. THE CIVIL/STRUCTURAL ENGINEERING SECTION HAS EXPERIENCE IN DESIGNING CONDUIT SUPPORTS TO RESIST SEISMIC REQUIREMENTS AND BRIDGE CONSTRAINTS. THE CUSTOMER PROJECT PLANNER SHOULD CONTACT THE CIVIL/STRUCTURAL ENGINEERING SECTION ONCE THEY RECEIVE A BRIDGE JOB. THE CIVIL/STRUCTURAL ENGINEERING SECTION WILL PROVIDE INFORMATION COLLECTION, DESIGN, DRAWINGS, AND FIELD SUPPORT SERVICE AS REQUIRED.

PROCESS

II. CONTACT THE CIVIL/STRUCTURAL ENGINEERING SECTION ONCE ELECTRIC CONDUIT IS PROPOSED ON A NEW OR EXISTING BRIDGE.
CONTACT:
CIVIL/STRUCTURAL ENGINEERING MANAGER: (858) 636-6815
CIVIL/STRUCTURAL ENGINEERING OFFICE ASSISTANT: (858) 654-1615

III. A CIVIL/STRUCTURAL ENGINEER WILL BE ASSIGNED TO THE PROJECT. THE ENGINEER DEVELOP THE SCOPE OF WORK, ATTEND MEETINGS AND COMPILE BRIDGE AND SEISMIC INFORMATION. THE ENGINEER WILL ALSO PROVIDE ELECTRIC CONDUIT SUPPORT ANCHORAGE DESIGN AND DRAWINGS, BILL OF MATERIALS INCLUDING STOCK NUMBERS, DPSS ASSEMBLY UNITS (AU) CALL OUTS, AND CONSTRUCTION SUPPORT.

IV. THE CUSTOMER PROJECT PLANNER WILL RETAIN PROJECT AND JOB RESPONSIBILITY, NEGOTIATIONS, AND BE THE MAIN CONTACT WITH THE CUSTOMER. THE CUSTOMER PROJECT PLANNER WILL WORK CLOSELY WITH THE CIVIL/STRUCTURAL ENGINEER IN DESIGN COORDINATION, ATTENDING MEETINGS, AND FINALIZING THE JOB DESIGN. FINAL JOB COSTS, DPSS AU DATA ENTRY, AND COMPLETE FINAL JOB PACKAGE WILL ALSO BE PERFORMED BY THE CUSTOMER PROJECT PLANNER.

REFERENCE: NONE

TABLE OF CONTENTS

REV	CHANGE	DRWN	BY	CHKD	APVD	DATE
C	REVISED TO 3D FORMAT	NV5	JIK	-	-	06/18/2024
B	FORMATTING	EDM	JIK	-	-	10/27/2021
A	EDITORIAL CHANGES	-	JS	TR	MDJ	11/29/2016

SDG&E ELECTRIC UNDERGROUND CONSTRUCTION STANDARDS

CONDUIT INSTALLATION IN BRIDGES

SCALE: NOT TO SCALE

DRAWING NO: UG3378.1

SHEET: 1 OF 1

© 1998 - 2024 San Diego Gas and Electric Company. All rights reserved. Removal of this copyright notice without permission is not permitted under law.

X Indicates Latest Revision | Completely Revised | New Page | Information Removed

SCOPE: THIS STANDARD DESCRIBES THE PROCEDURE FOR MANDRELING CONDUITS AND THE INSTALLATION OF PULLING AND MEASURING TAPE.

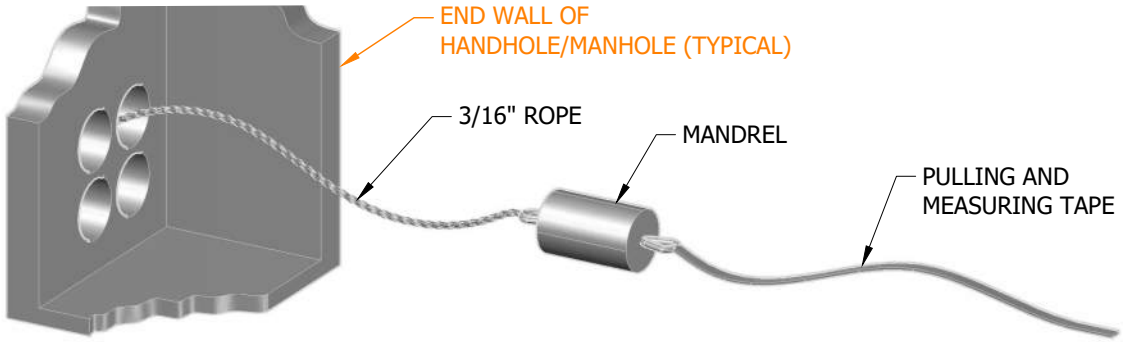

FIGURE 1

INSTALLATION:

A. ALL MANDRELING MUST BE DONE IN THE PRESENCE OF QUALIFIED SDG&E PERSONNEL.

B. AFTER CONDUITS ARE INSTALLED, THEY MUST BE MANDRELED BY THE CONDUIT INSTALLER TO CHECK THE INSIDE DIAMETER AND PROVIDE A PATH FREE OF OBSTRUCTIONS.

C. IN EACH CONDUIT RUN, USE A MANDREL EQUIVALENT TO THE SIZE CONDUIT BEING MANDRELED. THE MANDREL MUST BE SIZED TO THE SMALLEST INSIDE CONDUIT DIAMETER FOR THE TOTAL LENGTH OF THE RUN.

D. IF IT IS DETERMINED THAT ONE OR MORE OF THE CONDUITS ARE PARTIALLY OR TOTALLY COLLAPSED, OR CONTAIN BURRS OR OTHER OBSTRUCTIONS, AND THE MANDREL WILL NOT PASS THROUGH AN OBSTRUCTION, THE CONDUIT MUST BE SWABBED, REPLACED OR REPAIRED AT THAT POINT BY THE INSTALLER.

E. THE PULLING TAPE SHALL BE PULLED IN BEHIND THE MANDREL. WHEN THE PULLING AND MEASURING TAPE IS INSTALLED IT SHALL BE ONE CONTINUOUS LENGTH, NEW AND FREE OF WEAR, WITHOUT KNOTS FOR THE ACCURATE MEASUREMENT FOR CONDUCTOR INSTALLATION AND THE PULLING OF CONDUCTORS OR WINCH LINES.

F. THE CONDUIT INSTALLER MUST PROVIDE 3/4-INCH PULLING AND MEASURING TAPE (S721700) IN EACH CONDUIT. THE PULLING TAPE MUST BE APPROVED BY SDG&E AND HAVE A MINIMUM AVERAGE TENSILE STRENGTH OF 2,500 LBS. PULLING TAPE TAILS OF 24 INCHES SHALL BE SECURED AT EACH END OF CONDUIT.

BILL OF MATERIALS: NONE

NOTES:

I. **MATERIAL DATA**

a. CABLE PULLING AND MEASURING TAPE: SDG&E APPROVED TENSILE STRENGTH 2,500 LBS, WOVEN POLYESTER HIGH STRENGTH, CONTINUOUS FILAMENT, PRE LUBRICATED 3/4-INCH WITH FOOTAGE MARKING.

REFERENCE:

a. AVAILABLE IN SERVICE STANDARD AND GUIDE MANUAL.

b. SEE SDG&E ELECTRIC STANDARD, PRACTICE MANUAL NUMBER 217, FOR INSTALLATION OF PULLING AND MEASURING TAPE AND MANDRELING.

TABLE OF CONTENTS

© 1998 - 2023 San Diego Gas & Electric Company. All rights reserved. Removal of this copyright notice without permission is not permitted under law.

REV	CHANGE	DR	BY	DSN	APV	DATE	REV	CHANGE	DR	BY	DSN	APV	DATE
C	FIGURE UPDATE	TSA	EJA	EJA	KRG	07/28/2023	F						
B	NOTES UPDATE	EDM	EJA	GLW	CZH	07/29/2021	E						
A	EDITORIAL CHANGES	-	JS	TR	MDJ	05/24/2016	D						

SCOPE: THIS STANDARD SHOWS THE ACCESSORIES AND PROCEDURES THAT ENABLE 1-INCH CONDUIT TO BE INSTALLED INTO 5-INCH SUBSTRUCTURE DUCT TERMINATORS.

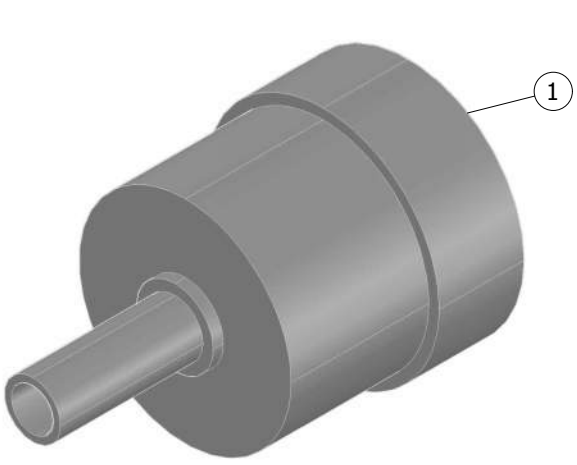

FIGURE 1
STYLE A

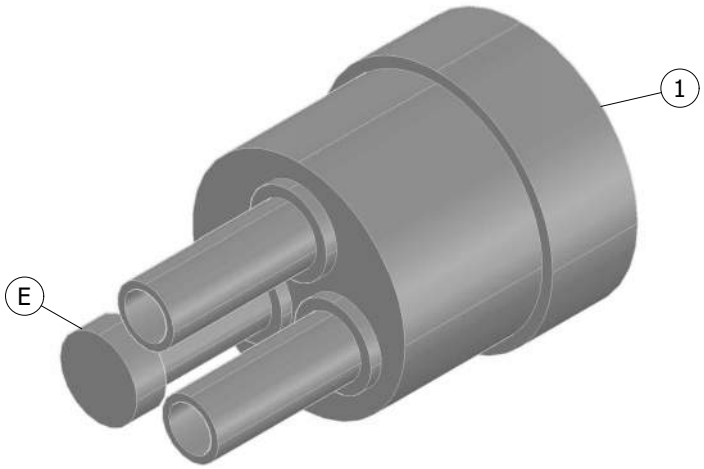

FIGURE 2
STYLE B

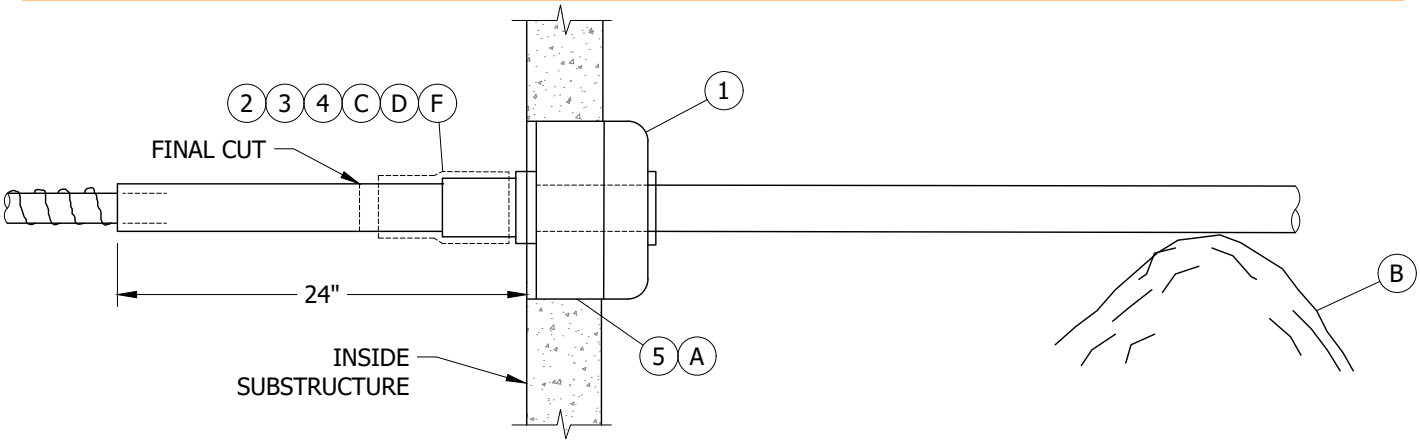

FIGURE 3

INSTALLATION:

(A) USE SOLVENT CEMENT TO CEMENT THE ADAPTOR INTO THE PREFERRED TERMINATOR KNOCKOUT.

(B) MAKE SURE THE CONDUIT ENTERS THE ADAPTOR STRAIGHT. THIS REQUIRES A MOUND OF DIRT APPROXIMATELY ONE OR TWO FEET OUTSIDE THE SUBSTRUCTURE (SEE FIGURE 3). LEAVE 24 INCHES OF THE CONDUIT EXPOSED BEYOND THE SUBSTRUCTURE TERMINATOR INSIDE THE SUBSTRUCTURE. THIS WILL ALLOW MOVEMENT OF THE CONDUIT UNTIL THE TRENCH IS BACKFILLED.

(C) AFTER THE TRENCH IS BACKFILLED, THE CONNECTION CREW SHALL INSTALL EITHER THE HEAT SHRINK SLEEVE OR TAPE WHERE THE CONDUIT AND ADAPTOR JOIN. NEXT MAKE THE FINAL CUT ON THE CONDUIT JUST BEYOND THE HEAT SHRINK SLEEVE OR TAPE AND DISREGARD THE EXCESS CONDUIT.

(D) ON SINGLE ENTRANCE ADAPTORS (STYLE A ON FIGURE 1), APPLY ONE LAYER OF AQUA-SEAL AND TWO LAYERS OF GRAY TAPE AT THE POINT WHERE THE CONDUIT ENTERS THE ADAPTOR INSIDE THE SUBSTRUCTURE.

(E) ONE ENTRANCE OF THE TRIPLE ENTRANCE ADAPTOR IS CAPPED SO IT MAY BE USED AS A TWO-WAY ADAPTOR. THE CAP MAY BE CUT OFF IF THE THIRD CONDUIT ENTRANCE IS NEEDED.

© 1998 - 2023 San Diego Gas & Electric Company. All rights reserved. Removal of this copyright notice without permission is not permitted under law.

REV	CHANGE	DR	BY	DSN	APV	DATE	REV	CHANGE	DR	BY	DSN	APV	DATE
C	FIGURE UPDATE	TSA	EJA	EJA	KRG	07/28/2023	F						
B	FORMATTING	EDM	JIK	-	-	10/27/2021	E						
A	EDITORIAL CHANGES	-	JS	TR	MDJ	07/25/2016	D						

X Indicates Latest Revision | Completely Revised | New Page | Information Removed

SDG&E ELECTRIC UNDERGROUND CONSTRUCTION STANDARDS

CONDUIT SUBSTRUCTURE ADAPTORS

UG3382.1

TABLE OF CONTENTS

INSTALLATION (CONT'D):

(F) HEAT SHRINK SLEEVES ARE REQUIRED ON DOUBLE AND TRIPLE ENTRANCE ADAPTORS (STYLE B ON FIGURE 2), INSTEAD OF THE HAND TAPED APPLICATION. BOTH METHODS DESCRIBED WILL PREVENT WATER AND OTHER DEBRIS FROM ENTERING THE SUBSTRUCTURE.

BILL OF MATERIALS:

ITEM	DESCRIPTION					QUANTITY	STANDARD PAGE	STOCK NUMBER	DESIGN UNITS
	WIRE TYPE	WIRE SIZE	U-NUMBER	ADAPTER STYLE	RUNS ALLOWED				
1	2-#8 IN 1" CONDUIT		U-10.011	A	1	AS REQ'D	--	S102052	ADPT-1
				B	2 OR 3		--	S102054	ADPT-2
2	SEALING COMPOUND						--	S442976	--
3	TAPE, GRAY						--	S721120	--
4	SLEEVE, HEAT SHRINK, 1.5 ID X 9" EXPANDED						--	S778016	--
5	CEMENT, SOLVENT						--	S213232	--

NOTES: NONE

REFERENCE:

a. AVAILABLE IN SERVICE STANDARDS AND GUIDE MANUAL.

TABLE OF CONTENTS

© 1998 - 2023 San Diego Gas & Electric Company. All rights reserved. Removal of this copyright notice without permission is not permitted under law.

REV	CHANGE	DR	BY	DSN	APV	DATE	REV	CHANGE	DR	BY	DSN	APV	DATE
C	FIGURE UPDATE	TSA	EJA	EJA	KRG	07/28/2023	F						
B	FORMATTING	EDM	JIK	-	-	10/27/2021	E						
A	EDITORIAL CHANGES	-	JS	TR	MDJ	07/25/2016	D						

SCOPE: THIS STANDARD DESCRIBES A METHOD TO INSTALL CONDUITS UNDER A RETAINING WALL FOOTING.

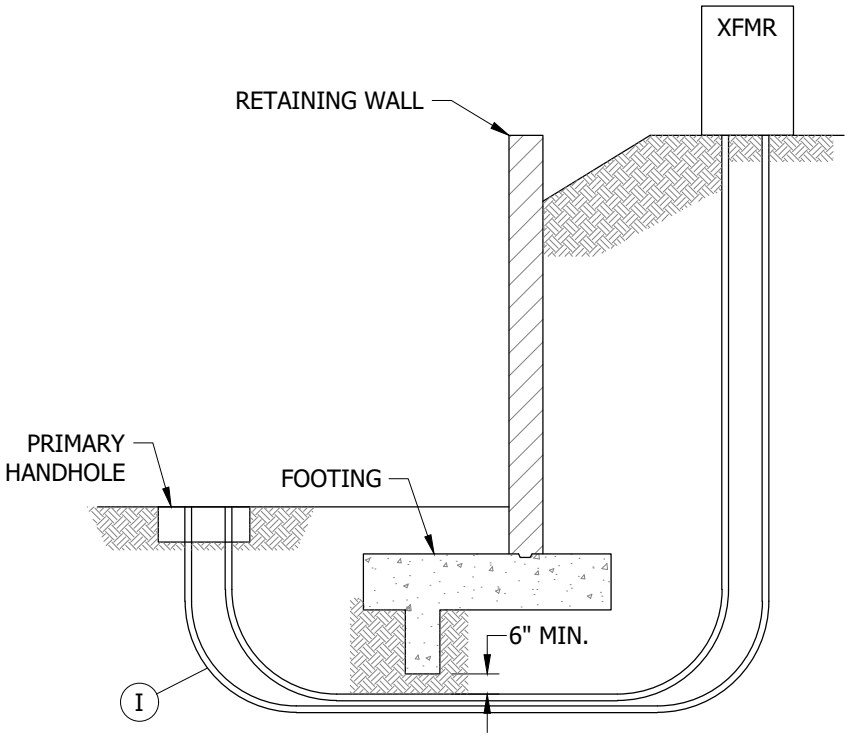

FIGURE 1

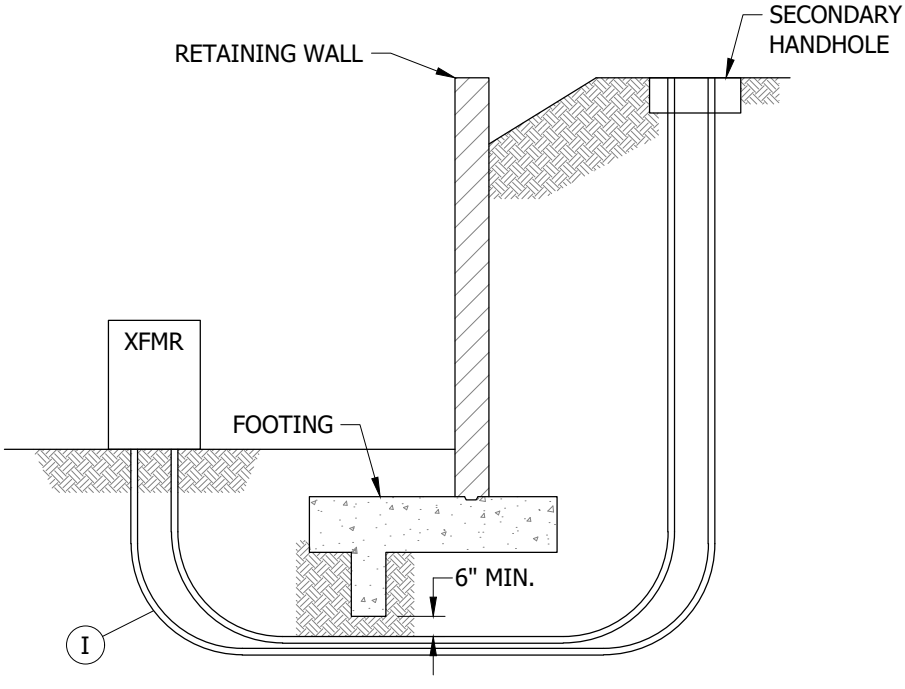

FIGURE 2

TABLE OF CONTENTS

© 1998 - 2023 San Diego Gas & Electric Company. All rights reserved. Removal of this copyright notice without permission is not permitted under law.

REV	CHANGE	DR	BY	DSN	APV	DATE	REV	CHANGE	DR	BY	DSN	APV	DATE
C							F						
B							E						
A	ORIGINAL ISSUE	EDM	ADW	EJA	KRG	09/20/2023	D						

Indicates Latest Revision | Completely Revised | X New Page | Information Removed

SHEET 1 OF 2

SDG&E ELECTRIC UNDERGROUND CONSTRUCTION STANDARDS

UNDERWALL CONDUIT

UG3384.1

INSTALLATION: NONE

BILL OF MATERIALS: NONE

NOTES:

(I) ONE ADDITIONAL CONDUIT IS NEEDED FOR BOTH PRIMARY AND SECONDARY SERVICE DUE TO ABNORMAL DEPTHS.

REFERENCE: NONE

TABLE OF CONTENTS

© 1998 - 2023 San Diego Gas & Electric Company. All rights reserved. Removal of this copyright notice without permission is not permitted under law.

REV	CHANGE	DR	BY	DSN	APV	DATE	REV	CHANGE	DR	BY	DSN	APV	DATE
C							F						
B							E						
A	ORIGINAL ISSUE	EDM	ADW	EJA	KRG	09/20/2023	D						

	Indicates Latest Revision		Completely Revised	X New Page		Information Removed

SDG&E ELECTRIC UNDERGROUND CONSTRUCTION STANDARDS

UNDERWALL CONDUIT

UG3384.2

SCOPE: THIS STANDARD SETS FORTH THE PROCEDURE FOR INSTALLING A GAS SERVICE STUB LOCATING MARKER.

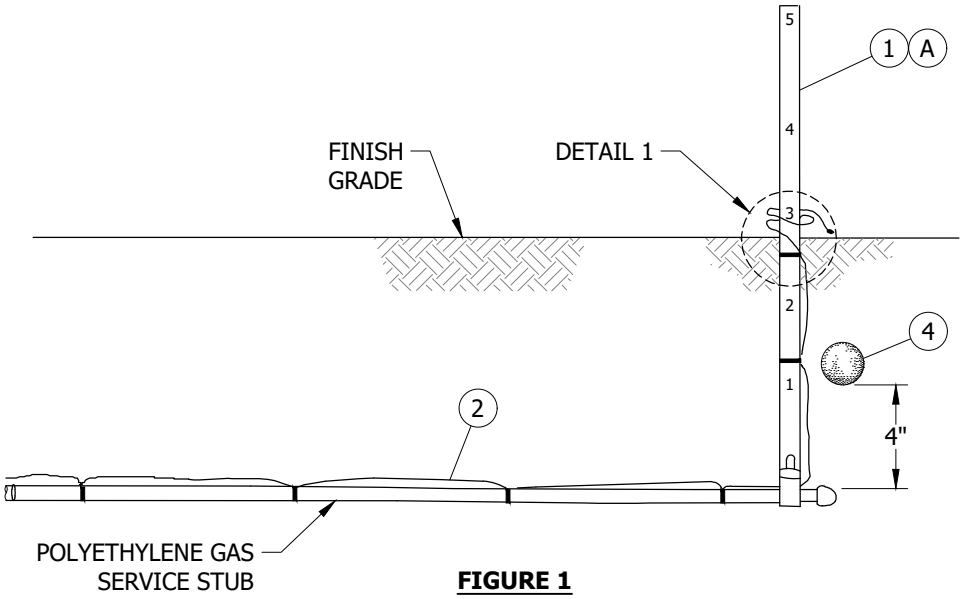

FIGURE 1
INSTALLATION

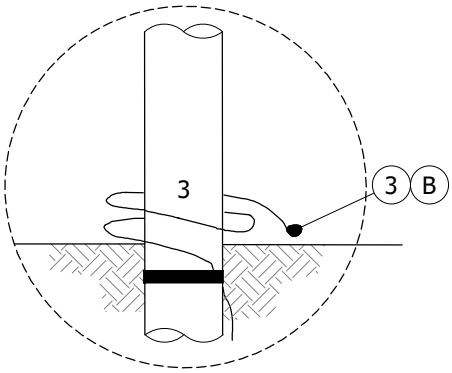

DETAIL 1

INSTALLATION:

(A) ATTACH A YELLOW PLASTIC GAS MARKER TO THE END OF THE GAS SERVICE AND EXTEND ABOVE GRADE.

(B) BRING THE YELLOW TRACER WIRE UP FROM THE POLY GAS SERVICE STUB AND TAPE IT TO THE YELLOW MARKER AT GRADE LEVEL. CUT THE TRACER WIRE 2 FEET ABOVE GRADE AND COIL AROUND THE MARKER AT GRADE LEVEL. SEAL TIP OF THE TRACER WIRE WITH AQUA-SEAL AND ELECTRICAL TAPE TO PREVENT GROUNDING.

C. AN APPROVED BALL MARKER WILL BE INSTALLED AT EACH STUB.

BILL OF MATERIALS:

ITEM	DESCRIPTION	QUANTITY	STANDARD PAGE	STOCK NUMBER	DESIGN UNITS
1	MARKER, GAS STUB (YELLOW)	1	3377/3390	S476306 (X)	--
2	WIRE, TRACER, (#14 AWG 600V YELLOW)	AS REQ'D	--	S809200	--
3	SEALING COMPOUND	AS REQ'D	--	S442976	--
4	BALL MARKER	1	--	S476492	--

NOTES:

I. THE INSTALLER SHALL FURNISH AND INSTALL ALL THE MATERIAL SHOWN IN THIS STANDARD.

(X) THIS ITEM IS EXEMPT.

REFERENCE:

a. SEE GAS STANDARDS 7241, 7244, 7344, & 7243 [FOR INTERNAL USE ONLY].

b. AVAILABLE IN SERVICE STANDARDS AND GUIDE MANUAL.

© 1998 - 2021 San Diego Gas & Electric Company. All rights reserved. Removal of this copyright notice without permission is not permitted under law.

REV	CHANGE	DR	BY	DSN	APV	DATE	REV	CHANGE	DR	BY	DSN	APV	DATE
C							F						
B	MOVED FROM UG3377	EDM	JIK	-	-	10/27/2021	E						
A	EDITORIAL CHANGES	-	JS	TR	MDJ	05/24/2016	D						

X Indicates Latest Revision | Completely Revised | New Page | Information Removed

SDG&E ELECTRIC UNDERGROUND CONSTRUCTION STANDARDS

GAS STUB MARKER

UG3390.1

TABLE OF CONTENTS

MAIN TABLE OF CONTENTS

PAGE	SUBJECT
3405	EQUIPMENT, PAD AND SUBSTRUCTURE CROSS REFERENCE
3408	PAD MOUNTED EQUIPMENT WIRE ENTRY PREVENTION
3409	RTU PAD FOR SWITCH WITH REMOTE RTU
3410	600A - 200A TERMINATOR PAD
3414	CAPACITOR PAD
3415	SERVICE RESTORER PAD
3416	12KV THREE-PHASE 200A TERMINATING CABINET PAD
3418	BOX PAD FOR PME-3 AND PME-5 SWITCHES
3419	BOX PAD FOR 3-WAY PAD MOUNTED SWITCH
3421	SINGLE-PHASE TRANSFORMER/UTILITY EQUIPMENT PAD
3423	BOX PAD WITH TEMPORARY COVER FOR PME 9, 10 AND 11, AND 2-SIDED TRAYER SWITCHES
3425	THREE-PHASE DEADFRONT TRANSFORMER PAD INSTALLATION
3426	THREE-PHASE DEADFRONT TRANSFORMER PAD INSTALLATION
3427	THREE-PHASE DEADFRONT/LIVEFRONT TRANSFORMER PAD INSTALLATION
3428	BOX PAD FOR 4-WAY TRAYER PAD MOUNTED SWITCH
3429	BOX PAD FOR 5-WAY TRAYER PAD MOUNTED SWITCH
3443	SWITCH PADS: 3443A, 3443B, AND 3443C
3478	TRANSFORMER SOUND ENCLOSURE
3479	EQUIPMENT BARRIER PROTECTION AND CLEARANCE
3480	CLEARANCE REQUIREMENTS FOR PAD MOUNTED AND SUBSURFACE EQUIPMENT FROM ABOVE GROUND OBJECTS
3481	MINIMUM OPERATING CLEARANCE REQUIREMENTS FOR PAD MOUNTED EQUIPMENT
3482	MINIMUM OPERATING CLEARANCE REQUIREMENTS FOR SUBSURFACE EQUIPMENT
3483	MINIMUM OPERATING CLEARANCE REQUIREMENTS FOR PAD MOUNTED AND SUBSURFACE EQUIPMENT
3484	PAD INSTALLATION FOR PAD MOUNTED EQUIPMENT, SLOPING GRADE INSTALLS, FIBERGLASS RETAINING WALLS
3485	SUBSTRUCTURE INSTALLATION ON SLOPING GRADES
3486	RETAINING WALL REQUIREMENTS AND CLEARANCES
3487	RETAINING WALL REQUIREMENTS AND SINGLE PHASE TRANSFORMER PAD LOCATIONS SHOWING CATV AND/OR TELCO LOCATIONS
3488	CLEARANCES BETWEEN SDG&E FACILITIES AND OTHER ABOVE GROUND OBJECTS
3489	MASONRY RETAINING WALLS - TYPES 1, 2, 3, 4, 5, 6 - LEVEL AND SLOPING BACKFILL

REV	CHANGE	DRWN	BY	CHKD	APVD	DATE
F	REVISED TO 3D FORMAT	NV5	JIK	-	-	05/07/2024
E	UG3417 MOVED TO FMO	EDM	EJA	EJA	KRG	03/07/2024
D	ADDED UG3443	EDM	ADW	GLW	CZH	07/29/2021

© 1998 - 2024 San Diego Gas and Electric Company. All rights reserved. Removal of this copyright notice without permission is not permitted under law.

SDG&E ELECTRIC UNDERGROUND CONSTRUCTION STANDARDS

PADS, RETAINING WALLS, CLEARANCES TABLE OF CONTENTS

SCALE: NOT TO SCALE

DRAWING NO: UG3401.1

SHEET: 1 OF 1

X Indicates Latest Revision | Completely Revised | New Page | Information Removed

SCOPE: THIS STANDARD SHOWS A CHART CROSS REFERENCING PAD MOUNTED EQUIPMENT WITH THE PAD AND SUBSTRUCTURES USED FOR INSTALLATION. READ FROM LEFT TO RIGHT.

TABLE 1

EQUIPMENT PAD AND SUBSTRUCTURE CROSS REFERENCE					
EQUIPMENT		**PAD**		**HANDHOLE**	
TYPE	**STANDARD PAGE**	**TYPE**	**STANDARD PAGE**	**TYPE/ STANDARD**	**INSIDE DIMENSIONS (IN)**
SINGLE-PHASE FUSE PAD	3512	TRANSFORMER/UTILITY EQUIPMENT PAD	3421	3312	17 X 30
THREE-PHASE SWITCHING CAB FUSED	--				
THREE-PHASE SWITCHING CAB FUSED (FEED THRU)	3514				
SINGLE-PHASE TEMINATOR	3522				
THREE-PHASE LOW PROFILE CABLE TERMINATING CABINET	3523	THREE-PHASE LOW PROFILE TERMINATOR PAD	3416	3311	14 X 66 X 14
60A TERMINATING CABINET (DEADFRONT)	3582	600A TERMINATING CABINET PAD	3417	3313	BASE SECTION
PAD MOUNTED PME 3 SWITCH	3583	PME 3 BOX PAD	3418	--	--
3-WAY PAD MOUNTED SWITCH	3586	BOX PAD	3419	--	--
PAD MOUNTED PME 9, 10 & 11 SWITCHES	3567	PME 9, 10 & 11 BOX PAD	3423	--	--
PAD MOUNTED SERVICE RESTORER OR 2-WAY SWITCH	3575	SERVICE RESTORER PAD	3415	3313	(1) 18" BASE SECTION
--	3711 3712 3713	TRANSFORMER/UTILITY EQUIPMENT PAD	3421	--	--
--	--	THREE-PHASE TRANSFORMER PAD (THRU 300 KVA DEADFRONT)	3425	--	--
1200 KVAR PAD MOUNT CAPACITOR	--	CAPACITOR PAD	3414,3415	--	--
600A TO 200A TERMINATOR	3410	TERMINATOR PAD	3410	3314	36 X 72
--	3751	THREE-PHASE TRANSFORMER PAD (500-1000 KVA DEADFRONT)	3426	3314	12" TOP SECTION (IF REQ'D) & (2) 3314 12" INTERMEDIATE EXTENSION SECTIONS (IF REQ'D)
		THREE-PHASE TRANSFORMER PAD (225-2500 KVA DEADFRONT) (A)	3427		
--	3755	THREE-PHASE TRANSFORMER PAD (3750 HHR KVA DEADFRONT)	3425	--	--

INSTALLATION:

(A) FOR USE WHEN CONDUIT REQUIREMENTS ARE GREATER THAN THE MAXIMUM SHOWN IN UG3426.

BILL OF MATERIALS: NONE

NOTES:

I. UNOBSTRUCTED READY ACCESS FOR THE UTILITIES VEHICLES AND EQUIPMENT MUST BE MAINTAINED TO INSTALL, REMOVE, OR MAINTAIN THESE FACILITIES.

REFERENCE: NONE

TABLE OF CONTENTS

© 1998 - 2022 San Diego Gas & Electric Company. All rights reserved. Removal of this copyright notice without permission is not permitted under law.

REV	CHANGE	DR	BY	DSN	APV	DATE	REV	CHANGE	DR	BY	DSN	APV	DATE
C	EDITORIAL CHANGE	-	GLW	JES	CZH	11/21/2019	F						
B	REVISION	-	RSW	VCR	-	08/31/2000	E	TABLE UPDATE	EDM	EJA	GLW	KRG	09/29/2022
A	REVISION	-	RSW	VCR	-	01/01/2000	D	FORMATTING	EDM	JIK	-	-	11/05/2020

SCOPE: THIS STANDARD SHOWS SEALANT USED TO FILL GAPS BETWEEN CONCRETE PADS AND PADMOUNTED EQUIPMENT TO PREVENT A PERSON FROM PASSING A WIRE OR OTHER CONDUCTING MATERIAL FROM THE THE OUTSIDE INTO A COMPARTMENT WITH EXPOSED LIVE PARTS AFTER THE EQUIPMENT IS CLOSED AND LOCKED.

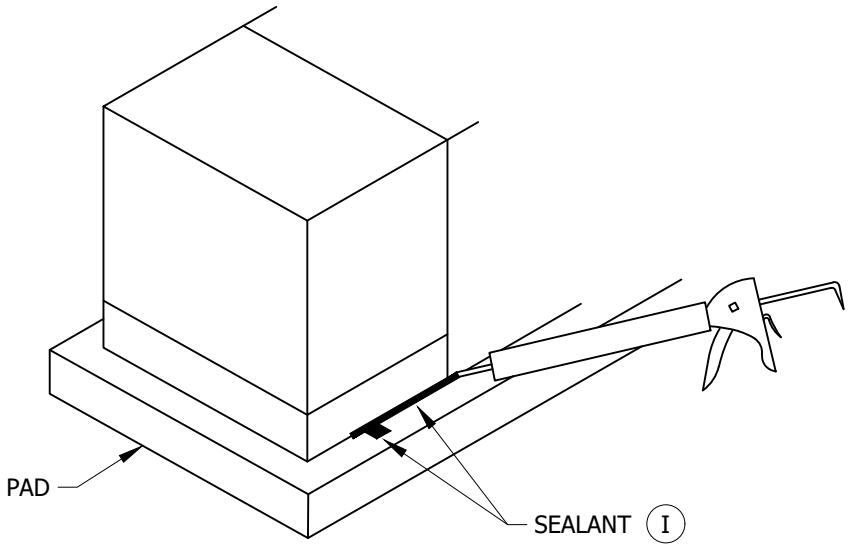

FIGURE 1

INSTALLATION:

A. ON ALL PADMOUNTED TRANSFORMERS, APPLY SEALANT AROUND THE FRONT OR SILL OF THE TRANSFORMER NEXT TO CONCRETE PAD AND THE "PAD UNISTRUT" INSIDE AND OUT. THIS WILL PREVENT ANY POSSIBLE WIRE ENTRY. ON ALL OTHER PADMOUNTED EQUIPMENT CHECK INSTALLATION USING A #18 AWG WIRE OR EQUIVALENT FOR GAPS BETWEEN EQUIPMENT BASE AND TOP OF PAD, INCLUDING EXPOSED UNISTRUT ENTRANCES. APPLY SEALANT WHERE NECESSARY TO PREVENT WIRE ENTRY. (B)

(B) USE EXTREME CAUTION WHEN CHECKING ENERGIZED EQUIPMENT AND USE INSULATING BARRIERS AS NECESSARY.

C. BEFORE APPLYING SEALANT, CAREFULLY FOLLOW INSTRUCTIONS ON THE CARTRIDGE. CLEAN SURFACE AND APPLY SEALANT WITH A CAULKING GUN. DO NOT SEAL MANHOLE OR HANDHOLE COVERS.

D. MAINTENANCE:

REPLACE ANY SEALANT THAT MAY BE LOOSE OR BROKEN. IF NEW SEALANT WILL NOT ADHERE TO EXISTING SEALANT, REMOVE IT AND FOLLOW INSTALLATION STEP C.

BILL OF MATERIALS: NONE

NOTES:

(I) SEALANT STOCK NUMBER S631800 (X).

(X) THIS ITEM IS EXEMPT.

REFERENCE: NONE

TABLE OF CONTENTS

© 1998 - 2025 San Diego Gas & Electric Company. All rights reserved. Removal of this copyright notice without permission is not permitted under law.

REV	CHANGE	DR	BY	DSN	APV	DATE	REV	CHANGE	DR	BY	DSN	APV	DATE
C	NO CHANGES-REAFFIRMED	PES	EJA	MRF	MRF	1/2/2025	F						
B	FORMATTING	EDM	JIK	-	-	11/5/2020	E						
A	REVISION	-	-	-	TR/MJC	9/20/2013	D						

SHEET 1 OF 1	X Indicates Latest Revision	Completely Revised	New Page	X Information Removed
	SDG&E ELECTRIC UNDERGROUND CONSTRUCTION STANDARDS			UG3408.1
	PADMOUNTED EQUIPMENT WIRE ENTRY PREVENTION			

SCOPE: THIS STANDARD SHOWS RTU PAD FOR S&C REMOTE. REMOTE TERMINAL UNITS.

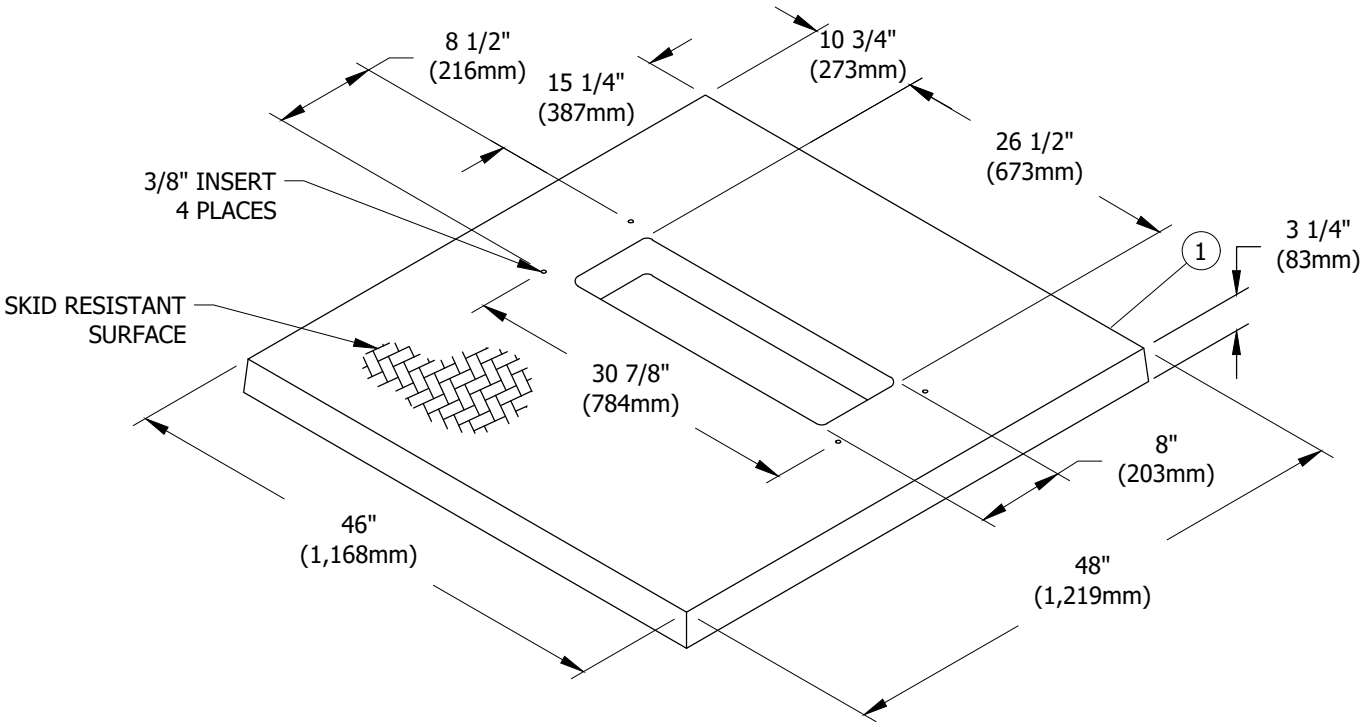

FIGURE 1
ISOMETRIC VIEW

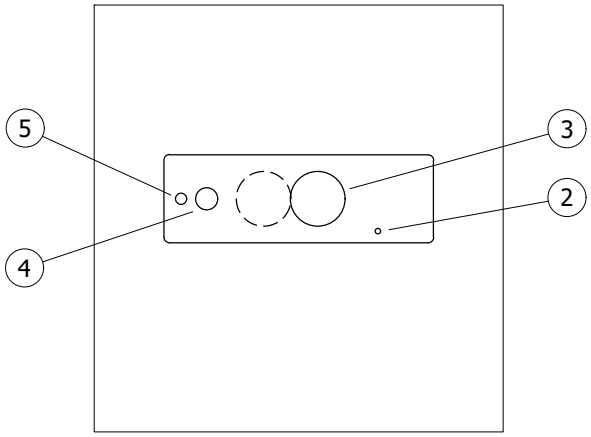

SIDEWALK

FIGURE 1
PLAN VIEW

© 1998 - 2020 San Diego Gas & Electric Company. All rights reserved. Removal of this copyright notice without permission is not permitted under law.

REV	CHANGE	DR	BY	DSN	APV	DATE	REV	CHANGE	DR	BY	DSN	APV	DATE
C							F						
B	FORMATTING	EDM	JIK	-	-	11/5/2020	E						
A	EDITORIAL CHANGES	-	JS	JS	CZH	2/18/2019	D						

X Indicates Latest Revision | Completely Revised | New Page | Information Removed

SDG&E ELECTRIC UNDERGROUND CONSTRUCTION STANDARDS

RTU PAD FOR VISTA SWITCH WITH REMOTE RTU

UG3409.1

TABLE OF CONTENTS

INSTALLATION:

A. SET PAD LEVEL TO FINAL AND INSTALL EQUIPMENT GROUND.

B. PLACE ONE OR TWO 5-INCH CONDUIT, ONE 2-INCH CONDUIT, ONE 1-INCH CONDUIT AND EQUIPMENT GROUND WITHIN PAD OPENING.

C. TERMINATE ALL CONDUITS FLUSH WITH THE TOP OF THE PAD. DO NOT CUT INTO THE CURVED PORTION OF THE ELBOWS. RADIUS OF CURVATURE IS 36-INCH MINIMUM OF 3-INCH, 5-INCH CONDUITS.

BILL OF MATERIALS:

ITEM	DESCRIPTION	WEIGHT (LBS)	APPROVED MFG	MFG PART NUMBER	QUANTITY	STANDARD PAGE	STOCK NUMBER	DESIGN UNITS
1	PAD - REMOTE TERMINAL UNIT	108 (49KGS)	QUAZITE	PL4846WA	1	3409.1	S513428	RTUPAD
2	EQUIPMENT GROUND	--	--	--	1	4510	--	TG-T-W
3	5-INCH CONDUIT	--	--	--	AS REQ'D	3373.1	S249728	--
4	2-INCH CONDUIT	--	--	--	1		S249632	1DB2-S
5	1-INCH PE	--	--	--	1		S249630	1"PE

NOTES:

I. THIS PAD IS NOT TO BE POURED IN PLACE.

REFERENCE:

a. SEE UG3211.3 FOR PAD IDENTIFICATION.

b. SEE UG3370 OR UG3371 FOR TRENCH, UTILITY POSITIONING, SHADING AND BACKFILL REQUIREMENTS.

c. SEE UG3479 FOR TRANSFORMER BARRIER PROTECTION.

d. SEE UG3480, UG3481, UG3482 & UG3483 FOR MINIMUM OPERATING AND CLEARANCE REQUIREMENTS (PAD PLACEMENT).

e. SEE UG3484 FOR PAD INSTALLATION OF PAD MOUNTED EQUIPMENT.

f. SEE UG3486 & UG3487 FOR RETAINING WALL REQUIREMENTS AND CLEARANCES FROM REVERSE SUBGRADE RETAINING WALLS.

g. SEE UG3489 FOR RETAINING WALLS.

h. SEE UG4512 FOR EQUIPMENT GROUNDING.

TABLE OF CONTENTS

© 1998 - 2020 San Diego Gas & Electric Company. All rights reserved. Removal of this copyright notice without permission is not permitted under law.

REV	CHANGE	DR	BY	DSN	APV	DATE	REV	CHANGE	DR	BY	DSN	APV	DATE
C							F						
B	FORMATTING	EDM	JIK	-	-	11/5/2020	E						
A	EDITORIAL CHANGES	-	JS	JS	CZH	2/18/2019	D						

X Indicates Latest Revision | Completely Revised | New Page | Information Removed

SDG&E ELECTRIC UNDERGROUND CONSTRUCTION STANDARDS

RTU PAD FOR VISTA SWITCH WITH REMOTE RTU

UG3409.2

SCOPE: THIS STANDARD SHOWS THE PAD USED WITH THE 600A TO 200A DEADFRONT TERMINATOR INSTALLED ON TOP OF AN EXISTING 3314 HANDHOLE.

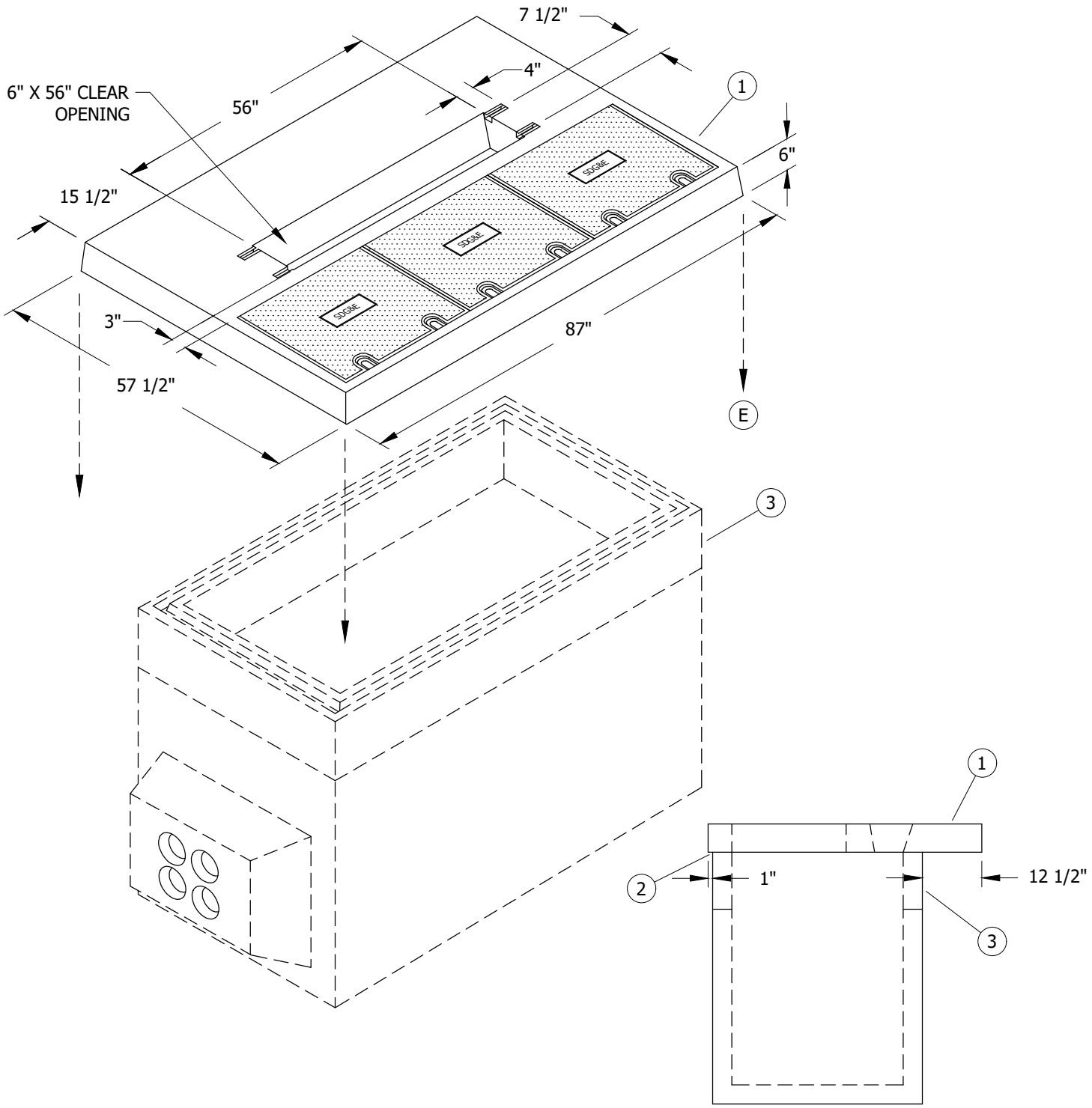

FIGURE 1

© 1998 - 2020 San Diego Gas & Electric Company. All rights reserved. Removal of this copyright notice without permission is not permitted under law.

REV	CHANGE	DR	BY	DSN	APV	DATE	REV	CHANGE	DR	BY	DSN	APV	DATE
C	FORMATTING	EDM	JIK	-	-	11/5/2020	F						
B	EDITORIAL CHANGES	-	JS	JS	CZH	7/1/2018	E						
A	REVISION	-	-	-	-	1/1/2000	D						

X Indicates Latest Revision | Completely Revised | New Page | Information Removed

SDG&E ELECTRIC UNDERGROUND CONSTRUCTION STANDARDS

SHEET 1 OF 2

600A TO 200A TERMINATOR PAD

UG3410.1

TABLE OF CONTENTS

INSTALLATION:

A. THIS PAD IS NOT TO BE INSTALLED ON NEW CONSTRUCTION. PAD IS TO BE INSTALLED ON THE TOP OF AN EXISTING 3314 HANDHOLE. MAY ALSO BE INSTALLED ON A "B" BOX PROVIDING THE TOP SECTION HAS BEEN MODIFIED OR REPLACED WITH 3314 INTERMEDIATE SECTIONS.

B. WHEN THE EXISTING HANDHOLE TOP SECTION HAS BEEN SET TO A SLOPING GRADE, THE TOP SECTION OF HANDHOLE MUST RE-GRADED AND SET LEVEL.

C. INSTALL A THIN LAYER OF SEALANT MASTIC BETWEEN HANDHOLE TOP SECTION AND PAD.

D. APPLY LUBRICANT SUCH AS EZ-1 TO THE PENTAHEAD BOLTS WHEN SECURING THE COVERS TO REDUCE REMOVAL OR INSTALLATION DIFFICULTIES. TIGHTEN DOWN BOLTS WITH A TORQUE WRENCH TO 30 FT./IBS MIN., 40FT/IBS. MAX.

(E) PAD SHOULD NOT BE INSTALLED ON EXISTING HANDHOLES LOCATED IN SIDEWALKS.

BILL OF MATERIALS:

ITEM	DESCRIPTION	WEIGHT (LBS)	QUANTITY	STANDARD PAGE	STOCK NUMBER	DESIGN UNITS	SAP CU
1	TERMINATOR PAD	1,480 MAX.	1	--	S514260	3410	3410PAD
2	SEALANT, PLASTIC-MASTIC (NOT SHOWN)	--	AS REQ'D	--	S631872	--	--
3	EXISTING 3314 HANDHOLE	--	1	3314	--	--	--

NOTES: NONE

REFERENCE:

a. SEE UG3479 FOR BARRIER PROTECTION AND CLEARANCE.

b. SEE UG3480, UG3481, UG3482 & UG3483 FOR MINIMUM OPERATING AND CLEARANCE REQUIREMENTS.

c. SEE UG3484 FOR PAD INSTALLATION OF PAD MOUNTED EQUIPMENT.

d. SEE UG3486 & UG3487 FOR RETAINING WALL REQUIREMENTS AND CLEARANCES FROM REVERSE SUBGRADE RETAINING WALLS.

e. SEE UG3489 FOR RETAINING WALLS.

f. SEE UG3524 FOR 600A TO 200A TERMINATOR.

TABLE OF CONTENTS

© 1998 - 2020 San Diego Gas & Electric Company. All rights reserved. Removal of this copyright notice without permission is not permitted under law.

REV	CHANGE	DR	BY	DSN	APV	DATE	REV	CHANGE	DR	BY	DSN	APV	DATE
C	FORMATTING	EDM	JIK	-	-	11/5/2020	F						
B	EDITORIAL CHANGES	-	JS	JS	CZH	7/1/2018	E						
A	REVISION	-	-	-	-	1/1/2000	D						

SCOPE: THIS STANDARD SHOWS THE PADMOUNTED SCADA CAPACITOR PAD AND CONDUIT PLACEMENT USED WITH THE 1200 KVAR PADMOUNTED SCADA CAPACITOR.

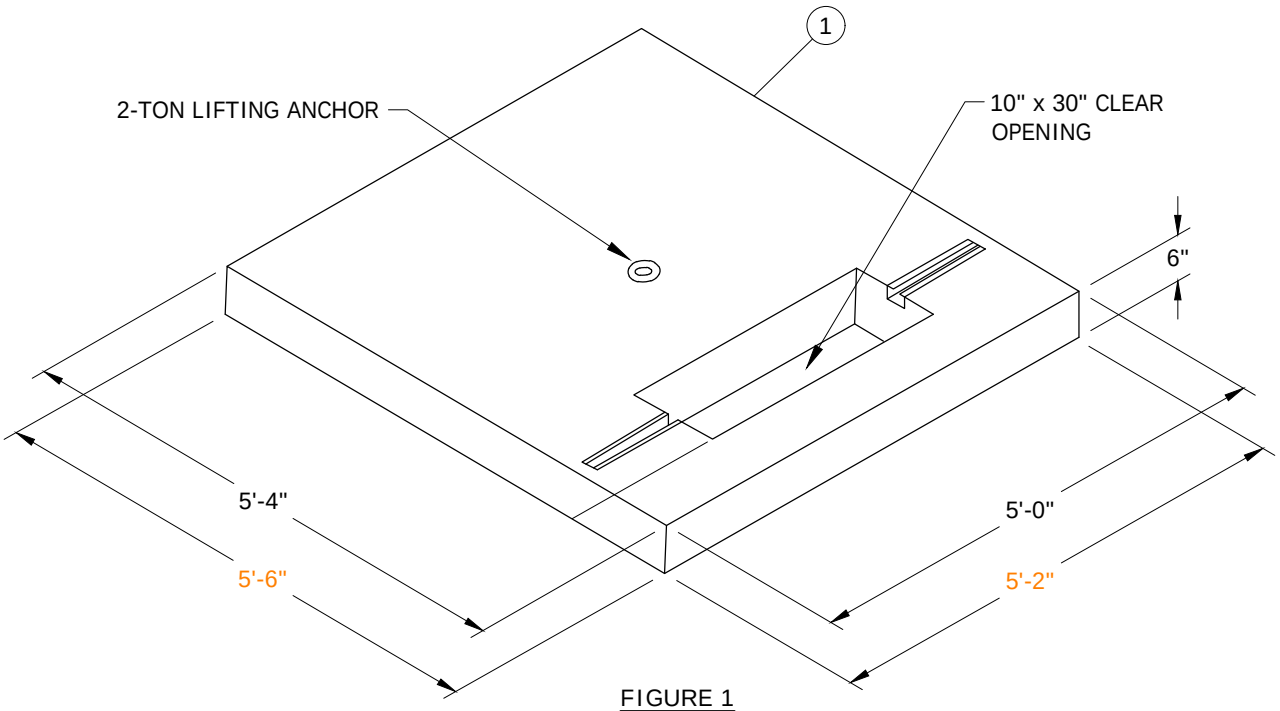

FIGURE 1
ISOMETRIC VIEW

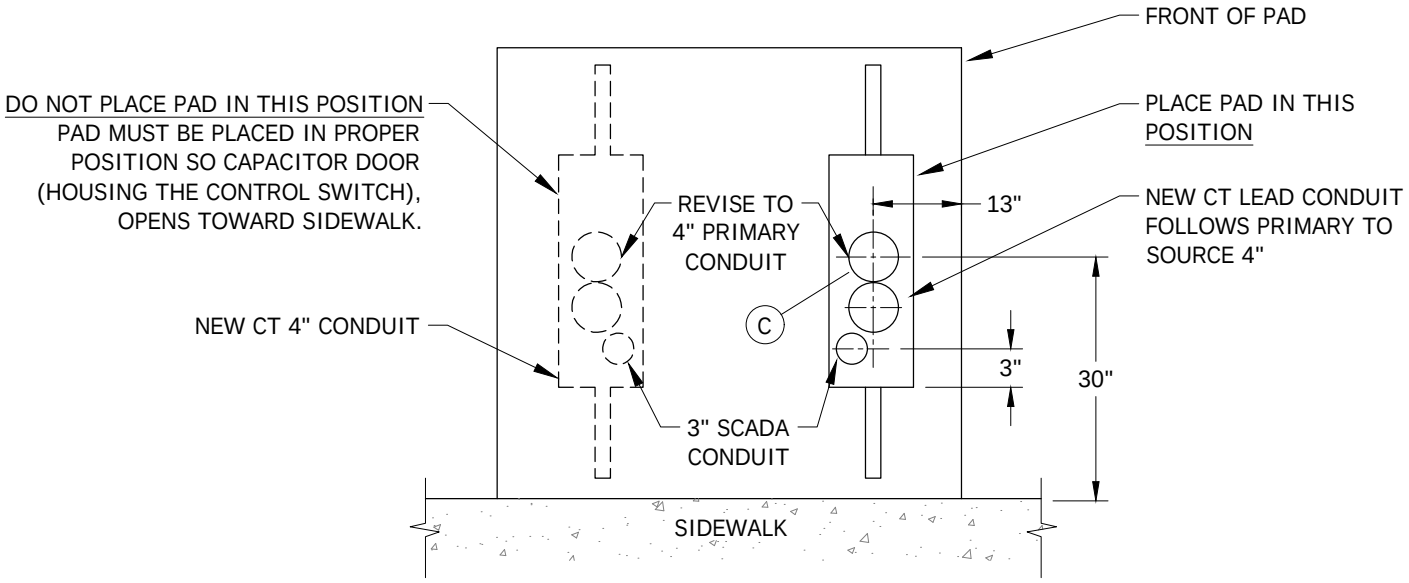

FIGURE 1
TOP VIEW

© 1998 - 2024 San Diego Gas & Electric Company. All rights reserved. Removal of this copyright notice without permission is not permitted under law.

REV	CHANGE	DR	BY	DSN	APV	DATE	REV	CHANGE	DR	BY	DSN	APV	DATE
C	DRAWING UPDATE	EDM	ADW	GLW	CZH	07/29/2021	F						
B	FORMATTING	EDM	JIK	-	-	11/05/2020	E						
A	DRAWING UPDATE	-	JC	TR	JS/MDJ	06/05/2015	D	DRAWING UPDATE	GLC	EJA	JAS	JAS	12/09/2024

X	Indicates Latest Revision		Completely Revised	New Page	X Information Removed

SDG&E ELECTRIC UNDERGROUND CONSTRUCTION STANDARDS

SHEET 1 OF 4

CAPACITOR PAD

UG3414.1

TABLE OF CONTENTS

INSTALLATION:

(A) THIS PAD MAY NOT BE POURED IN PLACE. USE PRECAST PADS ONLY.

B. 4-INCH CONDUITS SHOULD CONNECT TO THE ORIGINATION POINT OF THE PRIMARY (HANDHOLE/MANHOLE).

(C) TERMINATE ALL CONDUIT FLUSH WITH TOP OF PAD.

BILL OF MATERIALS:

ITEM	DESCRIPTION	WEIGHT (LBS)	QUANTITY	STANDARD PAGE	STOCK NUMBER	DESIGN UNITS
1	PAD, CONCRETE, CAPACITOR, 62" X 66" X 6" (A)	1,951	1	--	S514280	CAP-PD

NOTES: NONE

REFERENCE:

a. SEE UG3211 FOR STRUCTURE/EQUIPMENT IDENTIFICATION - SUBSURFACE AND PADMOUNTED.

b. SEE UG3479 FOR EQUIPMENT BARRIER PROTECTION AND CLEARANCE.

c. SEE UG3480, UG3481, UG3482 AND UG3483 FOR MINIMUM OPERATING AND CLEARANCE REQUIREMENTS (PAD PLACEMENT).

d. SEE UG3484 FOR PAD INSTALLATION FOR PADMOUNTED EQUIPMENT, SLOPING GRADE INSTALLS, FIBERGLASS RETAINING WALLS.

e. SEE UG3486 AND UG3487 FOR RETAINING WALL REQUIREMENTS AND CLEARANCES FROM REVERSE SUBGRADE RETAINING WALLS.

f. SEE UG3489 FOR MASONRY RETAINING WALLS - TYPES 1, 2, 3, 4, 5, AND 6 - LEVEL AND SLOPING BACKFILL.

g. SEE UG3821 FOR INSTALLATION OF SCADA 600 & 1200 KVAR PADMOUNTED CAPACITOR.

h. SEE UG4512 FOR EQUIPMENT GROUNDING INSTALLATION - SINGLE AND THREE-PHASE.

i. SEE UG3002 FOR PEDESTRIAN PATH OF TRAVEL AND ACCESSIBILITY.

j. SEE UG3408 FOR PADMOUNTED EQUIPMENT WIRE ENTRY PREVENTION.

TABLE OF CONTENTS

© 1998 - 2024 San Diego Gas & Electric Company. All rights reserved. Removal of this copyright notice without permission is not permitted under law.

REV	CHANGE	DR	BY	DSN	APV	DATE	REV	CHANGE	DR	BY	DSN	APV	DATE
C	DRAWING UPDATE	EDM	ADW	GLW	CZH	07/29/2021	F						
B	FORMATTING	EDM	JIK	-	-	11/05/2020	E						
A	DRAWING UPDATE	-	JC	TR	JS/MDJ	06/05/2015	D	DRAWING UPDATE	GLC	EJA	JAS	JAS	12/09/2024

SCOPE: THIS STANDARD IDENTIFIES A 3414 GENERAL USE PAD.

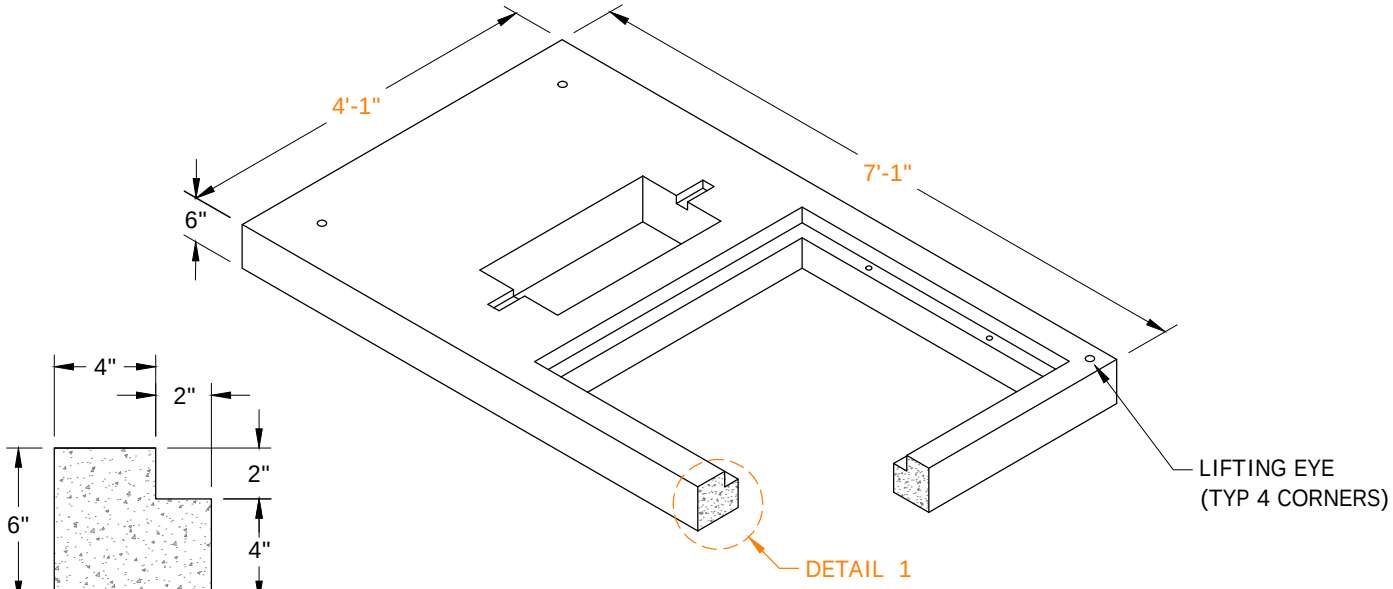

FIGURE 1
ISOMETRIC VIEW

DETAIL 1

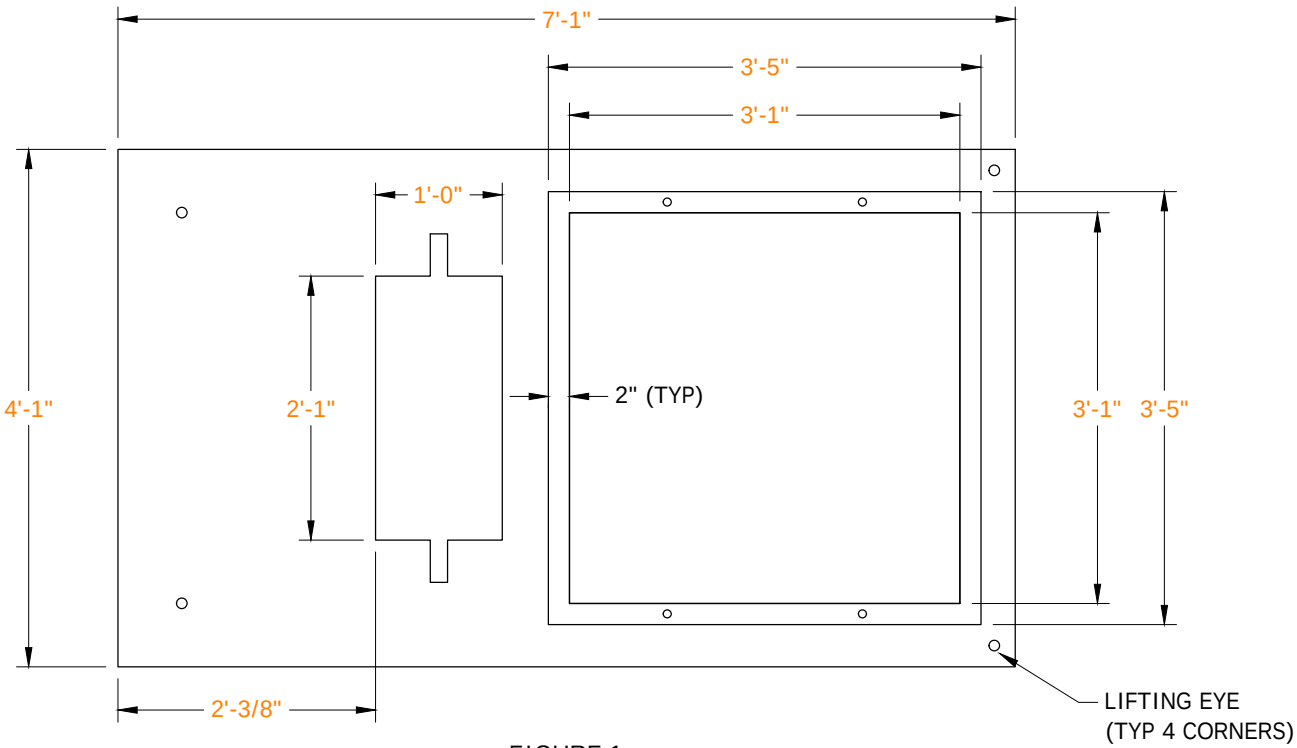

FIGURE 1
PLAN VIEW

TABLE OF CONTENTS

© 1998 - 2024 San Diego Gas & Electric Company. All rights reserved. Removal of this copyright notice without permission is not permitted under law.

REV	CHANGE	DR	BY	DSN	APV	DATE	REV	CHANGE	DR	BY	DSN	APV	DATE
C	DRAWING UPDATE	EDM	ADW	GLW	CZH	07/29/2021	F						
B	FORMATTING	EDM	JIK	-	-	11/05/2020	E						
A	DRAWING UPDATE	-	JC	TR	JS/MDJ	06/05/2015	D	DRAWING UPDATE	GLC	EJA	JAS	JAS	12/09/2024

X Indicates Latest Revision	Completely Revised	New Page	X Information Removed	

SHEET
3 OF 4

SDG&E ELECTRIC UNDERGROUND CONSTRUCTION STANDARDS

3414 GENERAL USE PAD
49" X 85"

UG3414.3

INSTALLATION:

A. SET PAD LEVEL TO FINISH GRADE AND INSTALL EQUIPMENT GROUND.

BILL OF MATERIALS:

ITEM	DESCRIPTION	WEIGHT (LBS)	QUANTITY	STANDARD PAGE	STOCK NUMBER	DESIGN UNITS
1	PAD, CONCRETE, B-BOX, 49" X 85" X 6"	1,600	1	--	S162520	--

NOTES:

I. EQUIPMENT IS NOT TO EXCEED OUTSIDE DIMENSIONS OF PAD.

REFERENCE:

a. SEE UG3002 FOR PEDESTRIAN PATH OF TRAVEL AND ACCESSIBILITY.
b. SEE UG3211 FOR STRUCTURE/EQUIPMENT IDENTIFICATION - SUBSURFACE AND PADMOUNTED.
c. SEE UG3408 FOR PADMOUNTED EQUIPMENT WIRE ENTRY PREVENTION.
d. SEE UG3479 FOR EQUIPMENT BARRIER PROTECTION AND CLEARANCE.
e. SEE UG3480, UG3481, UG3482 AND UG3483 FOR MINIMUM OPERATING AND CLEARANCE REQUIREMENTS (PAD PLACEMENT).
f. SEE UG3484 FOR PAD INSTALLATION FOR PADMOUNTED EQUIPMENT, SLOPING GRADE INSTALLS, FIBERGLASS RETAINING WALLS.
g. SEE UG3486 AND UG3487 FOR RETAINING WALL REQUIREMENTS AND CLEARANCES FROM REVERSE SUBGRADE RETAINING WALLS.
h. SEE UG3489 FOR MASONRY RETAINING WALLS - TYPES 1, 2, 3, 4, 5, AND 6 - LEVEL AND SLOPING BACKFILL.
i. SEE UG3821 FOR INSTALLATION OF SCADA 600 & 1200 KVAR PADMOUNTED CAPACITOR.
j. SEE UG4512 FOR EQUIPMENT GROUNDING INSTALLATION - SINGLE AND THREE-PHASE.

TABLE OF CONTENTS

© 1998 - 2024 San Diego Gas & Electric Company. All rights reserved. Removal of this copyright notice without permission is not permitted under law.

REV	CHANGE	DR	BY	DSN	APV	DATE	REV	CHANGE	DR	BY	DSN	APV	DATE
C	DRAWING UPDATE	EDM	ADW	GLW	CZH	07/29/2021	F						
B	FORMATTING	EDM	JIK	-	-	11/05/2020	E						
A	DRAWING UPDATE	-	JC	TR	JS/MDJ	06/05/2015	D	DRAWING UPDATE	GLC	EJA	JAS	JAS	12/09/2024

X Indicates Latest Revision | Completely Revised | New Page | Information Removed

SDG&E ELECTRIC UNDERGROUND CONSTRUCTION STANDARDS

3414 GENERAL USE PAD
49" X 85"

UG3414.4

SCOPE: THIS STANDARD SHOWS THE PAD MOUNTED SERVICE RESTORER PAD AND CONDUIT PLACEMENT USED WITH THE PAD MOUNTED SERVICE RESTORER.

ATTENTION:

* USE PRECAST PADS ONLY.

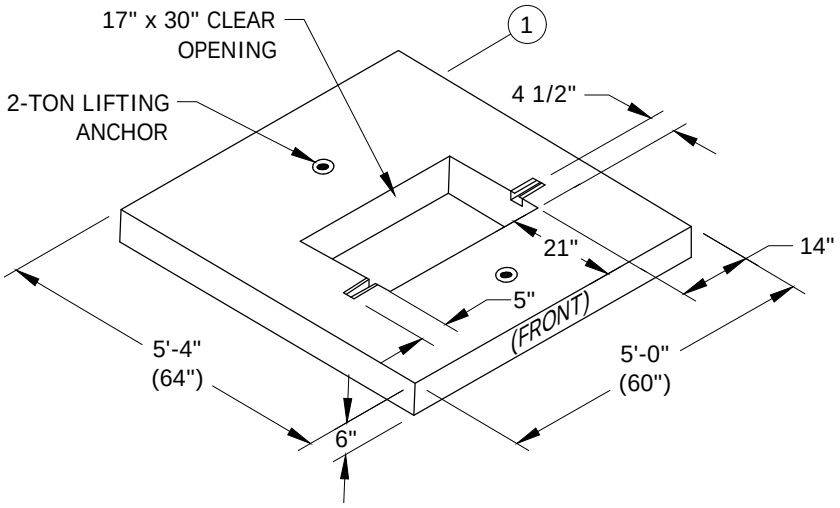

FIGURE 1
PAD FOR EATON-COOPER SERVICE RESTORER
ISOMETRIC VIEW

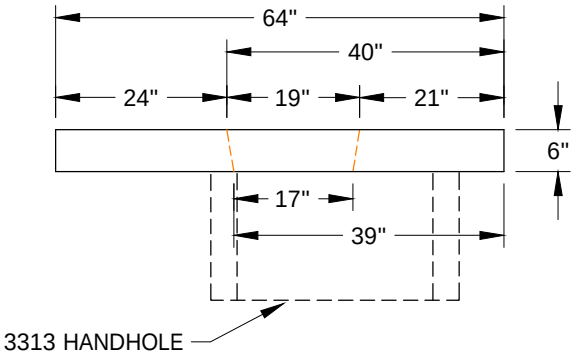

FIGURE 1
PAD FOR EATON-COOPER SERVICE RESTORER
PROFILE VIEW

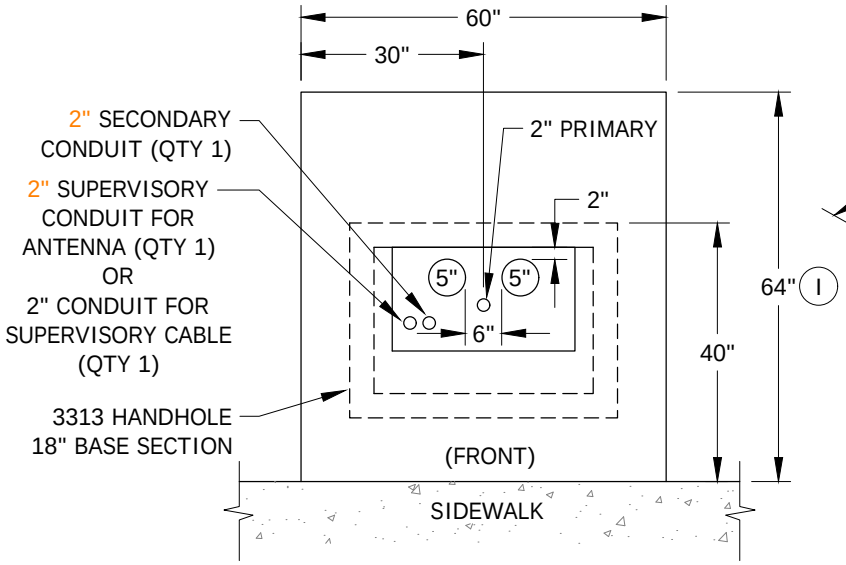

FIGURE 1
PAD FOR EATON-COOPER SERVICE RESTORER (I)
PREFERRED INSTALLATION
PLAN VIEW

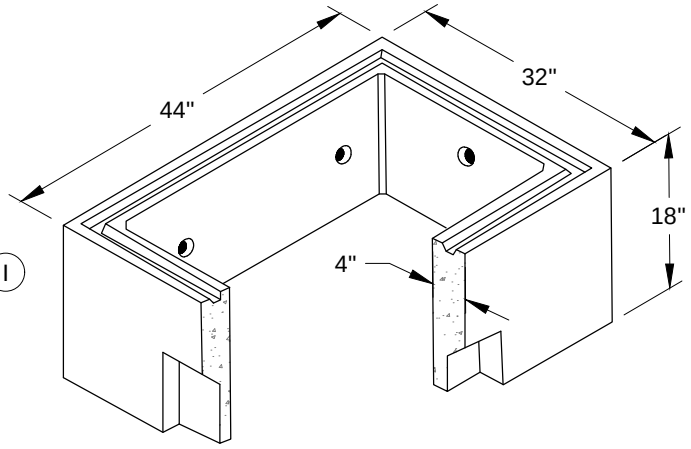

FIGURE 1
3313 HANDHOLE 18" BASE SECTION
ISOMETRIC VIEW

TABLE OF CONTENTS

© 1998 - 2023 San Diego Gas & Electric Company. All rights reserved. Removal of this copyright notice without permission is not permitted under law.

REV	CHANGE	DR	BY	DSN	APV	DATE	REV	CHANGE	DR	BY	DSN	APV	DATE
C	EDITORIAL CHANGES	-	GW	JS	CZH	9/4/2018	F	BILL OF MATERIALS UPDATE	GLC	EJA	EJA	KRG	11/22/2023
B	TITLE BLOCK UPDATE	-	BR	BR	-	2/24/2017	E	FORMATTING	EDM	JIK	-	-	11/5/2020
A	REVISION	-	-	-	-	1/1/1996	D	DRAWING UPDATES	-	GW	JS	CZH	6/13/2019

X	Indicates Latest Revision		Completely Revised	New Page	X Information Removed

SDG&E ELECTRIC UNDERGROUND CONSTRUCTION STANDARDS

SHEET 1 OF 3

SERVICE RESTORER PAD

UG3415.1

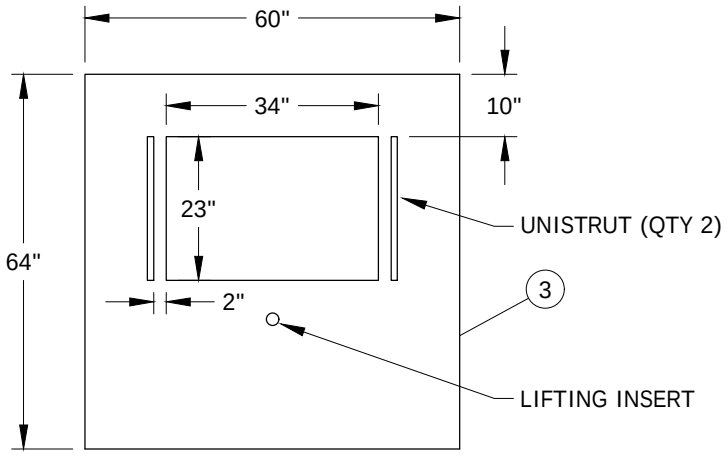

FIGURE 2
PAD FOR ISG AND FUTURE SERVICE RESTORERS
PLAN VIEW

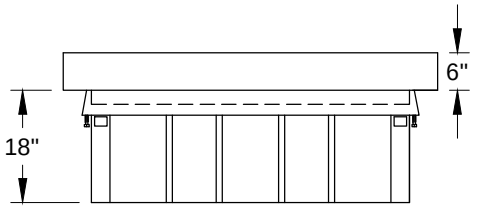

FIGURE 2
PAD FOR ISG AND FUTURE SERVICE RESTORERS
PROFILE VIEW

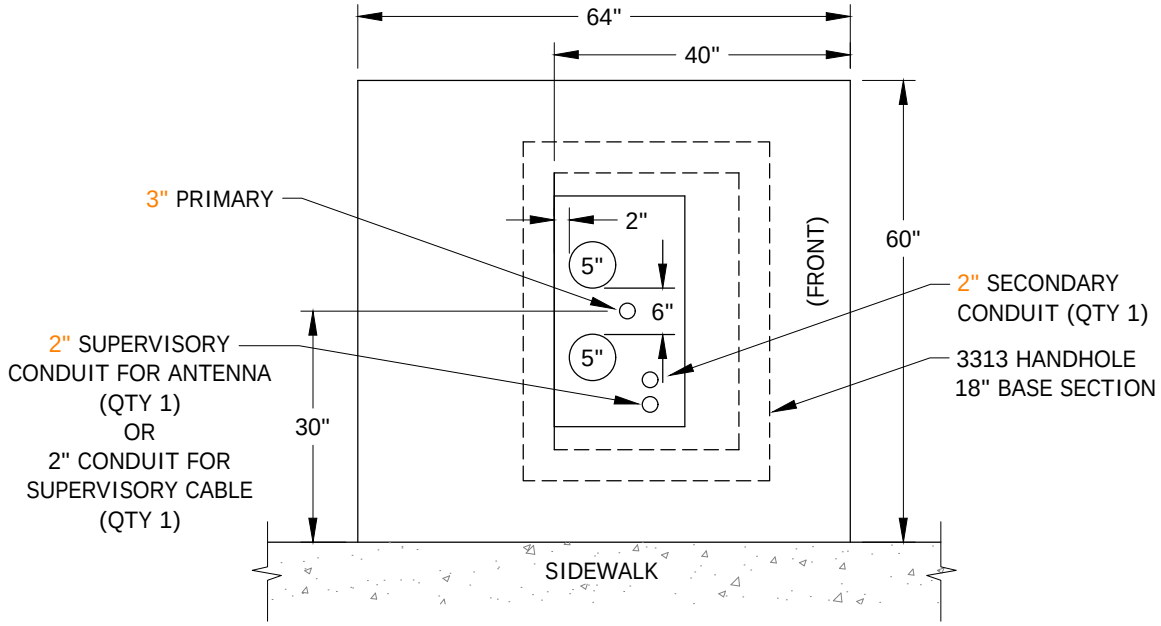

FIGURE 3
ALTERNATE INSTALLATION (D)(i)
PLAN VIEW

ATTENTION:

* DEVIATION REQUEST IS REQUIRED FOR PAD ALTERNATE INSTALLATION. (i)

© 1998 - 2023 San Diego Gas & Electric Company. All rights reserved. Removal of this copyright notice without permission is not permitted under law.

REV	CHANGE	DR	BY	DSN	APV	DATE	REV	CHANGE	DR	BY	DSN	APV	DATE
C	EDITORIAL CHANGES	-	GW	JS	CZH	9/4/2018	F	BILL OF MATERIALS UPDATE	GLC	EJA	EJA	KRG	11/22/2023
B	TITLE BLOCK UPDATE	-	BR	BR	-	2/24/2017	E	FORMATTING	EDM	JIK	-	-	11/5/2020
A	REVISION	-	-	-	-	1/1/1996	D	DRAWING UPDATES	-	GW	JS	CZH	6/13/2019

X Indicates Latest Revision | Completely Revised | New Page | Information Removed

SDG&E ELECTRIC UNDERGROUND CONSTRUCTION STANDARDS

SHEET 2 OF 3

SERVICE RESTORER PAD

UG3415.2

TABLE OF CONTENTS

INSTALLATION:

A. SET PAD LEVEL TO FINAL GRADE AND INSTALL EQUIPMENT GROUND.

B. TERMINATE CONDUITS 3 INCHES ABOVE THE BOTTOM OF THE 3313 HANDHOLE.

C. INSTALL SECONDARY CONDUIT WHEN SOURCE IS WITHIN PLUS OR MINUS 50 FEET, OTHERWISE INSTALL "N" TRANSFORMER.

(D) PLACE PAD IN THIS POSITION TO ALLOW DOOR, HOUSING CONTROL TO OPEN TOWARD THE SIDEWALK.

BILL OF MATERIALS:

ITEM	DESCRIPTION	WEIGHT (LBS)	QUANTITY	STANDARD PAGE	STOCK NUMBER	DESIGN UNITS	MACRO
1	PAD, LEGACY RECLOSER, FOR EATON-COOPER RECLOSER	1,825 MAX.	1	--	S514282	--	3415-B
2	BASE SECTION, 3313 HANDHOLE, 18"	885 MAX.	1	3313	S162664	3313-B	
3	PAD, BOX, POLY CONCRETE, 60X64X6 IN	--	1	--	S514262	3415-I	--

NOTES:

(I) 64" WILL NORMALLY REQUIRE A RIGHT-OF-WAY. USE ALTERNATE INSTALLATION WHEN RIGHT-OF-WAY CANNOT BE OBTAINED.

REFERENCE:

a. SEE UG3479 FOR BARRIER PROTECTION AND CLEARANCE.

b. SEE UG3480, UG3481, UG3482 & UG3483 FOR MINIMUM OPERATING AND CLEARANCE REQUIREMENTS (PAD PLACEMENT).

c. SEE UG3484 FOR PAD INSTALLATION OF PAD MOUNTED EQUIPMENT.

d. SEE UG3486 & UG3487 FOR RETAINING WALL REQUIREMENTS AND CLEARANCES FROM REVERSE SUBGRADE RETAINING WALLS.

e. SEE UG3489 FOR RETAINING WALLS.

f. SEE UG3575 FOR PAD MOUNTED SERVICE RESTORER.

g. SEE UG3576 FOR INSTALLATION REQUIREMENTS FOR PAD MOUNTED SERVICE RESTORER.

h. SEE UG4512 FOR EQUIPMENT GROUNDING INSTALLATION.

(i) SEE UG3005 FOR DEVIATION REQUEST FORM AND PROCEDURE.

TABLE OF CONTENTS

© 1998 - 2023 San Diego Gas & Electric Company. All rights reserved. Removal of this copyright notice without permission is not permitted under law.

REV	CHANGE	DR	BY	DSN	APV	DATE	REV	CHANGE	DR	BY	DSN	APV	DATE
C	EDITORIAL CHANGES	-	GW	JS	CZH	9/4/2018	F	BILL OF MATERIALS UPDATE	GLC	EJA	EJA	KRG	11/22/2023
B	TITLE BLOCK UPDATE	-	BR	BR	-	2/24/2017	E	FORMATTING	EDM	JIK	-	-	11/5/2020
A	REVISION	-	-	-	-	1/1/1996	D	DRAWING UPDATES	-	GW	JS	CZH	6/13/2019

X Indicates Latest Revision | Completely Revised | New Page | Information Removed

SDG&E ELECTRIC UNDERGROUND CONSTRUCTION STANDARDS

SERVICE RESTORER PAD

UG3415.3

SCOPE: THIS STANDARD SHOWS THE PAD AND HANDHOLE USED WITH THE PAD MOUNTED 200A LOW PROFILE CABLE TERMINATING CABINET. TYPICAL CONDUIT PLACEMENT IS ALSO SHOWN.

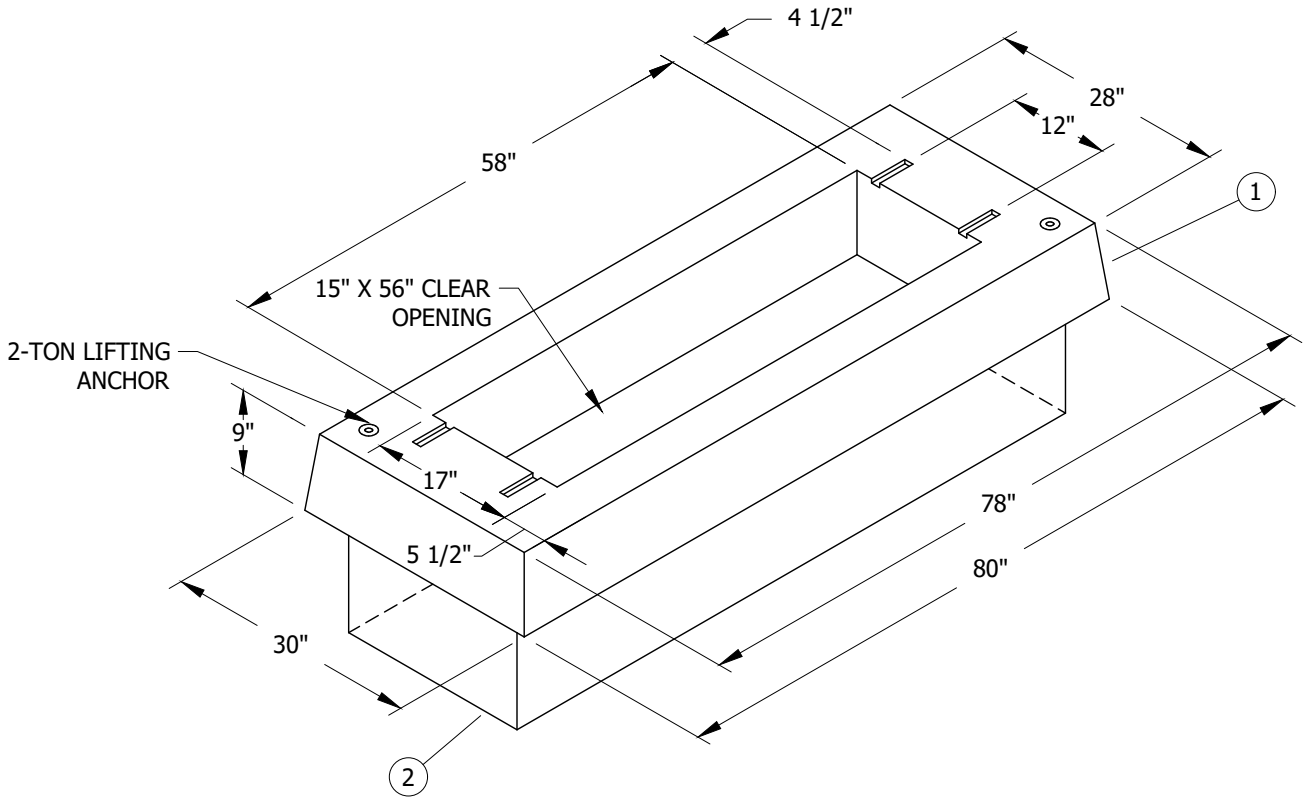

FIGURE 1
3416 PAD OVER 3311 BASE

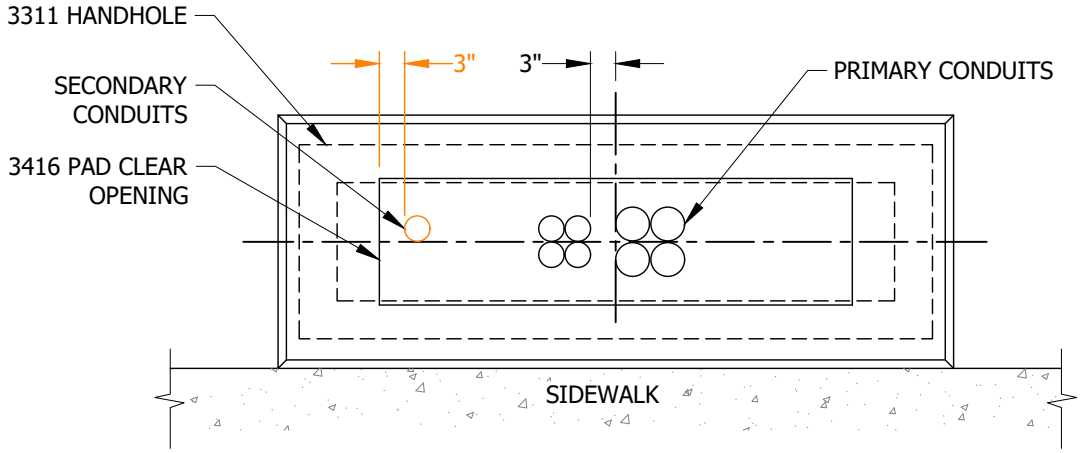

FIGURE 2
PLAN VIEW

© 1998 - 2023 San Diego Gas & Electric Company. All rights reserved. Removal of this copyright notice without permission is not permitted under law.

REV	CHANGE	DR	BY	DSN	APV	DATE	REV	CHANGE	DR	BY	DSN	APV	DATE
C	FORMATTING	EDM	JIK	-	-	11/5/2020	F						
B	EDITORIAL CHANGES	-	GW	JS	CZH	9/4/2018	E						
A	REVISION	-	-	-	-	1/1/1996	D	FIGURE UPDATE	ARC	JES	EJA	KRG	11/01/2023

X Indicates Latest Revision | Completely Revised | New Page | Information Removed

SDG&E ELECTRIC UNDERGROUND CONSTRUCTION STANDARDS

SHEET 1 OF 4

3416 PAD & HANDHOLE INSTALLATIONS FOR PAD MOUNTED 12KV THREE-PHASE 200A TERMINATING CABINET

UG3416.1

TABLE OF CONTENTS

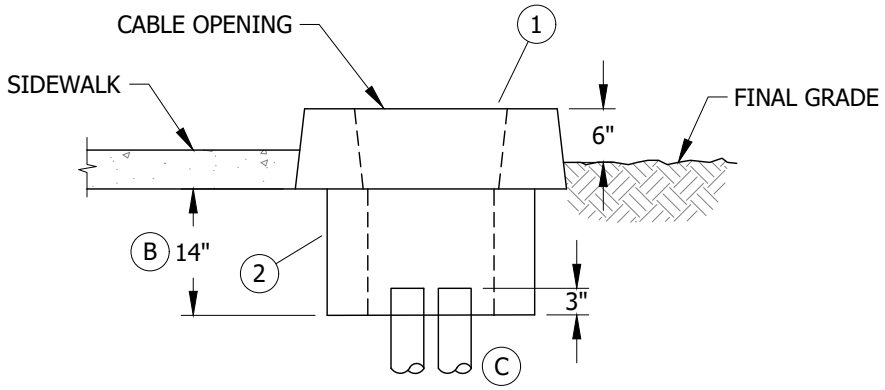

FIGURE 3
INSTALLATION LOCATION DETAIL

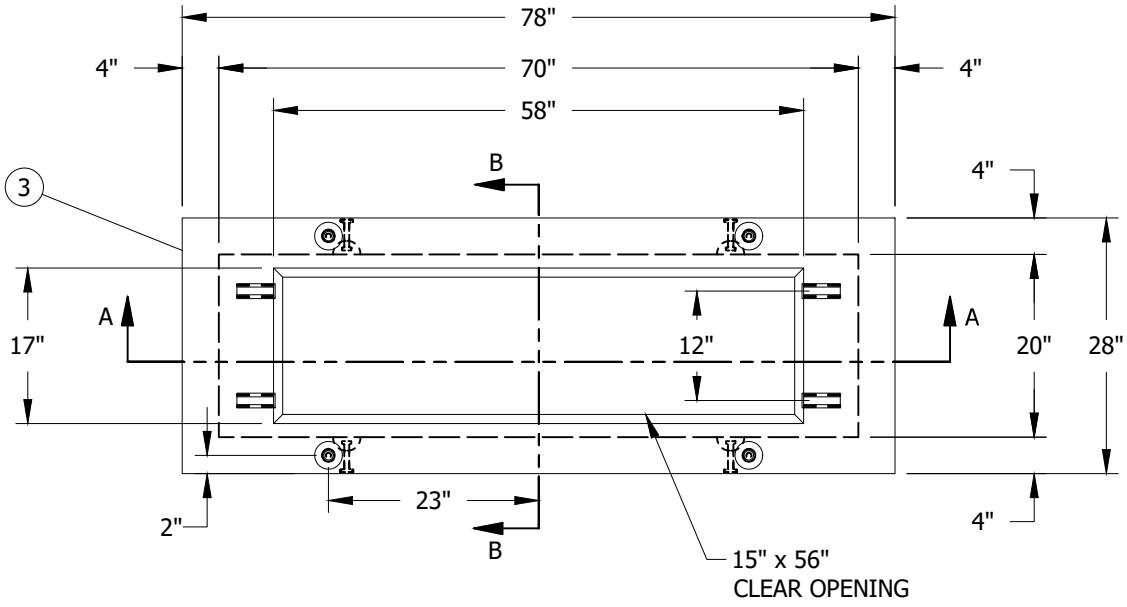

FIGURE 4
3416 BOX PAD EQUIPMENT PEDESTAL - PLAN VIEW

TABLE OF CONTENTS

© 1998 - 2023 San Diego Gas & Electric Company. All rights reserved. Removal of this copyright notice without permission is not permitted under law.

REV	CHANGE	DR	BY	DSN	APV	DATE	REV	CHANGE	DR	BY	DSN	APV	DATE
C	FORMATTING	EDM	JIK	-	-	11/5/2020	F						
B	EDITORIAL CHANGES	-	GW	JS	CZH	9/4/2018	E						
A	REVISION	-	-	-	-	1/1/1996	D	FIGURE UPDATE	ARC	JES	EJA	KRG	11/01/2023

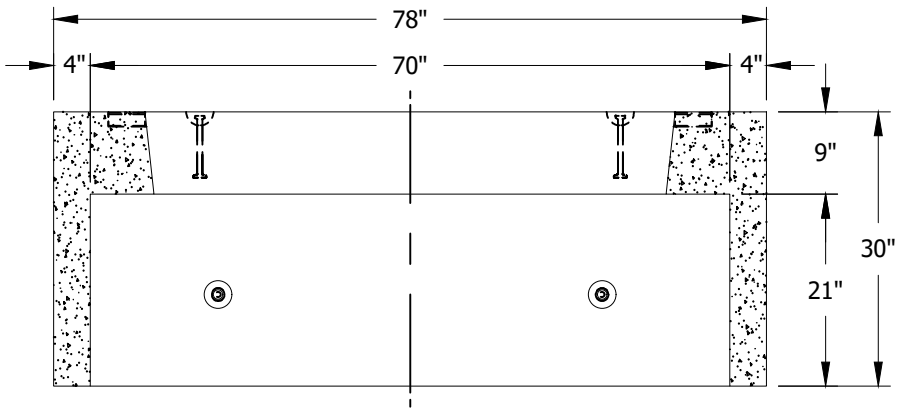

FIGURE 5
SECTION A-A

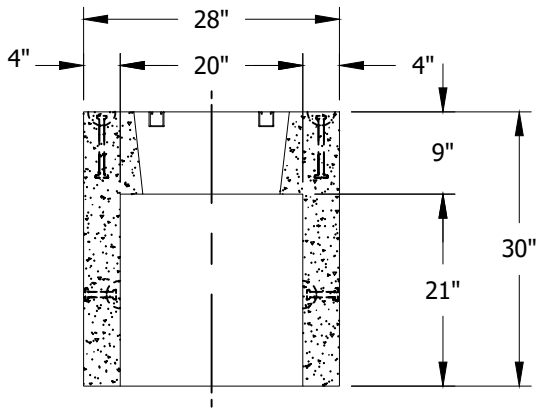

FIGURE 6
SECTION B-B

INSTALLATION:

3416 PAD OVER 3311 HANDHOLE

A. INSTALL CONDUITS AS SHOWN.

(B) THE PAD AND HANDHOLE LOCATION IS TO BE MARKED OUT PAYING PARTICULAR ATTENTION TO FOREIGN UTILITY PLACEMENTS. RELOCATING PAD AND HANDHOLES REQUIRES APPROVAL FROM SERVICE PLANNING. ONCE THE LOCATION HAS BEEN ESTABLISHED, MARK OUT DIMENSIONS FOR AN EXCAVATION OF 2'-5" WIDE X 6'-9" LONG. THE DEPTH OF THE EXCAVATION IS 17 INCHES ALLOWING THE BOTTOM OF THE PAD TO SET 3" BELOW GRADE.

(C) TERMINATE PRIMARY AND SECONDARY CONDUITS 3 INCHES ABOVE THE BOTTOM OF HANDHOLE.

D. COMBINATIONS OF PRIMARY & SECONDARY CONDUIT (2, 3, 4, AND 5 INCH) TO BE INSTALLED SPECIFIC TO EACH HANDHOLE LOCATION WITH A MAXIMUM TOTAL OF 9 CONDUITS EXCLUDING STREETLIGHTS OR COMMS.

BILL OF MATERIALS:

ITEM	DESCRIPTION	WEIGHT (LBS)	QUANTITY	STANDARD PAGE	STOCK NUMBER	DESIGN UNITS	SAP CU
1	PAD SECTION, 3416	1,200	1	3416.1	S514020	3416	3416PAD
2	HANDHOLE, 3311, 14" X 66" X 14"	--	1	3311	S162660		
3	PEDESTAL, EQUIPMENT, 78" X 28" X 30"	2450 MAX.	1	3316.2	S514068	--	3416BP

NOTES:

I. PAD SECTION MAY NOT BE POURED IN PLACE.

REFERENCE:

a. SEE UG3211.3 FOR INSTALLATION OF IDENTIFICATION TAG.

b. SEE UG3479 FOR EQUIPMENT BARRIER PROTECTION.

c. SEE UG3480, UG3481, UG3482 & UG3483 FOR MINIMUM OPERATING AND CLEARANCE REQUIREMENTS (PAD PLACEMENT).

d. SEE UG3484 FOR PAD INSTALLATION OF PAD MOUNTED EQUIPMENT.

e. SEE UG3486 & UG3487 FOR RETAINING WALL REQUIREMENTS AND CLEARANCES FROM REVERSE SUBGRADE RETAINING WALLS.

f. SEE UG3489 FOR RETAINING WALLS.

© 1998 - 2023 San Diego Gas & Electric Company. All rights reserved. Removal of this copyright notice without permission is not permitted under law.

REV	CHANGE	DR	BY	DSN	APV	DATE	REV	CHANGE	DR	BY	DSN	APV	DATE
C	FORMATTING	EDM	JIK	-	-	11/5/2020	F						
B	EDITORIAL CHANGES	-	GW	JS	CZH	9/4/2018	E						
A	REVISION	-	-	-	-	1/1/1996	D	FIGURE UPDATE	ARC	JES	EJA	KRG	11/01/2023

TABLE OF CONTENTS

REFERENCE (CONT'D):

g. SEE UG3523 FOR PAD MOUNTED CABLE TERMINATING CABINET.
h. SEE UG4510 FOR PREFERRED AND ALTERNATE TRENCH GROUND WIRE.
i. SEE UG4512 FOR EQUIPMENT GROUNDING INSTALLATION.
j. SEE UG4514 FOR GROUNDING TELCO CONDUCTOR IN PAD MOUNTED EQUIPMENT.

TABLE OF CONTENTS

© 1998 - 2023 San Diego Gas & Electric Company. All rights reserved. Removal of this copyright notice without permission is not permitted under law.

REV	CHANGE	DR	BY	DSN	APV	DATE	REV	CHANGE	DR	BY	DSN	APV	DATE
C	FORMATTING	EDM	JIK	-	-	11/5/2020	F						
B	EDITORIAL CHANGES	-	GW	JS	CZH	9/4/2018	E						
A	REVISION	-	-	-	-	1/1/1996	D	FIGURE UPDATE	ARC	JES	EJA	KRG	11/01/2023

X Indicates Latest Revision | Completely Revised | New Page | Information Removed

SDG&E ELECTRIC UNDERGROUND CONSTRUCTION STANDARDS

3416 PAD & HANDHOLE INSTALLATIONS FOR PAD MOUNTED 12KV THREE-PHASE 200A TERMINATING CABINET

SCOPE: THIS STANDARD SHOWS THE BOX PAD AND CONDUIT PLACEMENT FOR THE PME-3 AND PME-5 PAD MOUNTED AIR BREAK SWITCHES.

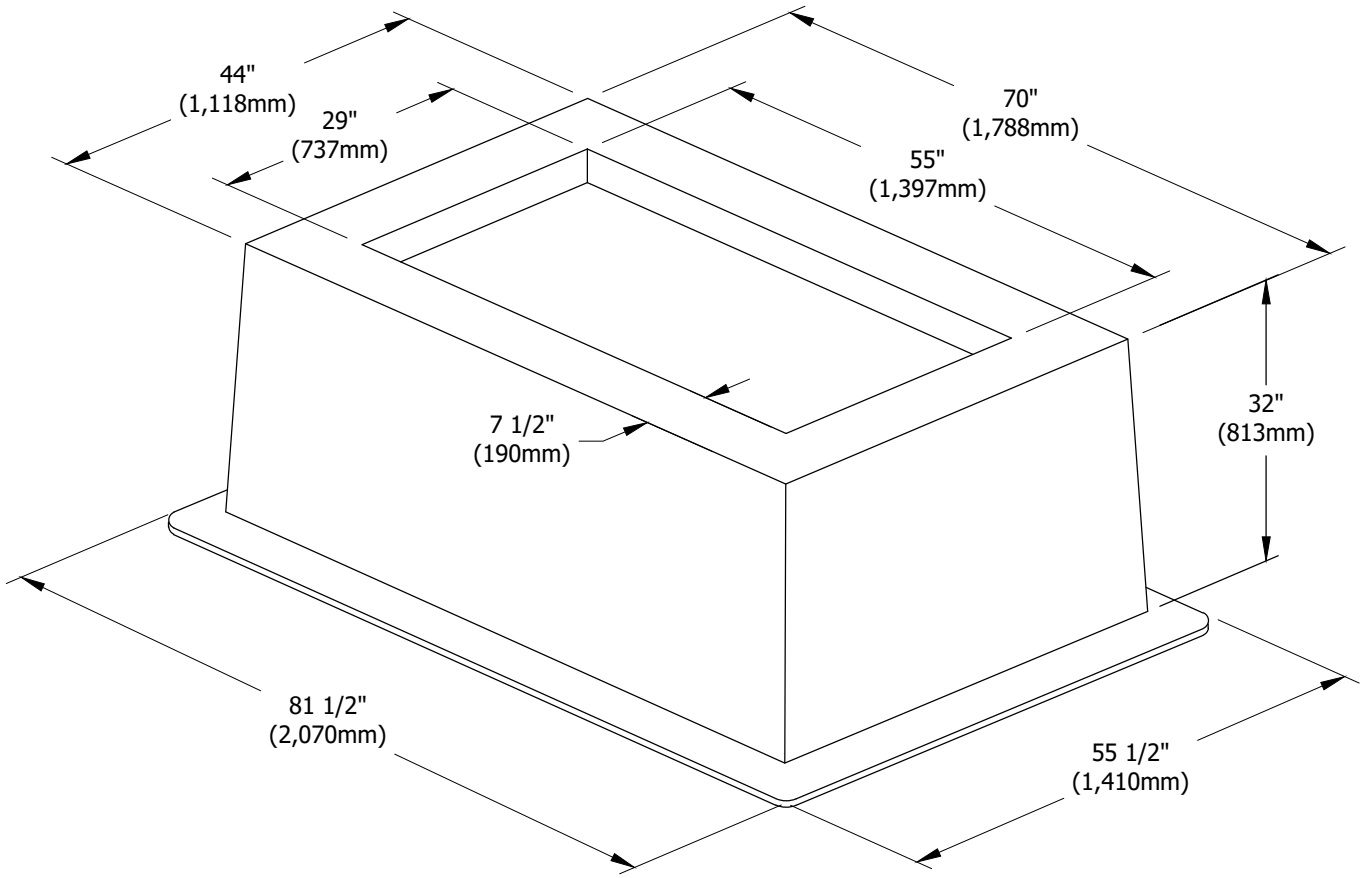

FIGURE 1 (II)

TABLE OF CONTENTS

© 1998 - 2020 San Diego Gas & Electric Company. All rights reserved. Removal of this copyright notice without permission is not permitted under law.

REV	CHANGE	DR	BY	DSN	APV	DATE	REV	CHANGE	DR	BY	DSN	APV	DATE
C	FORMATTING	EDM	JIK	-	-	11/5/2020	F						
B	EDITORIAL CHANGES	-	GW	JS	CZH	9/4/2018	E						
A	REVISION	-	-	-	-	1/1/2000	D						

X Indicates Latest Revision | Completely Revised | New Page | Information Removed

SDG&E ELECTRIC UNDERGROUND CONSTRUCTION STANDARDS

BOX PAD FOR PME-3 AND PME-5 SWITCHES

UG3418.1

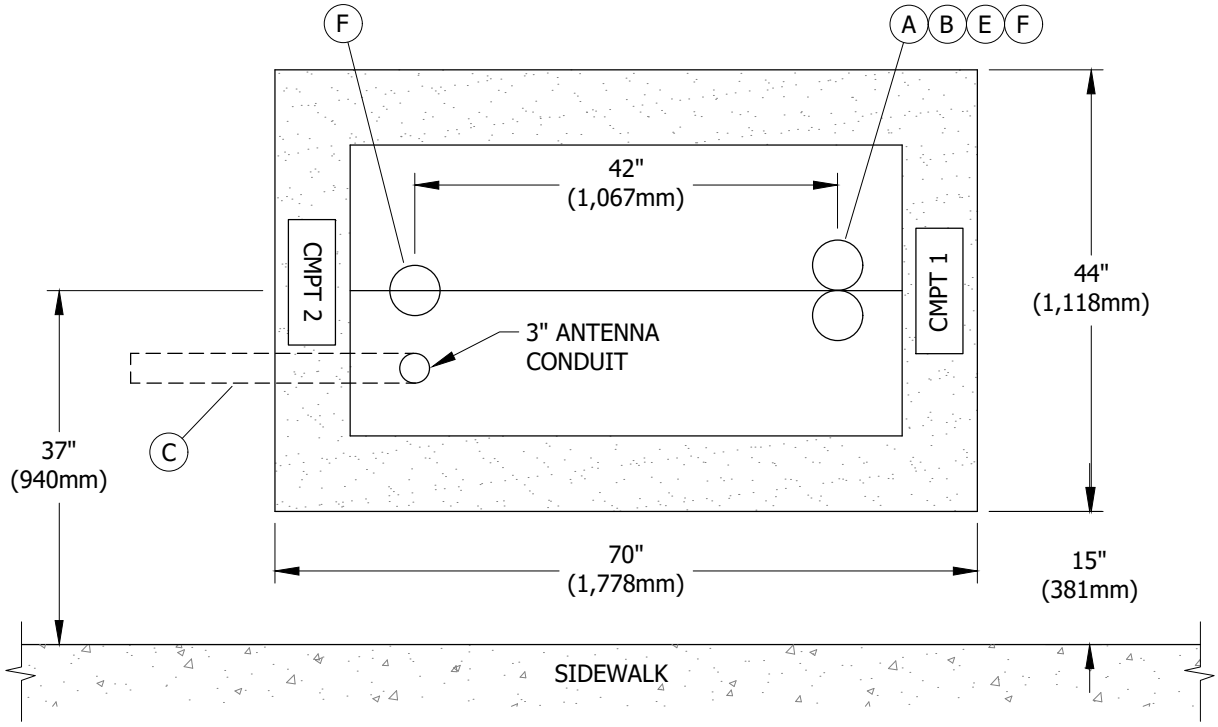

FIGURE 2
BOX & CONDUIT PLACEMENT
PLAN VIEW

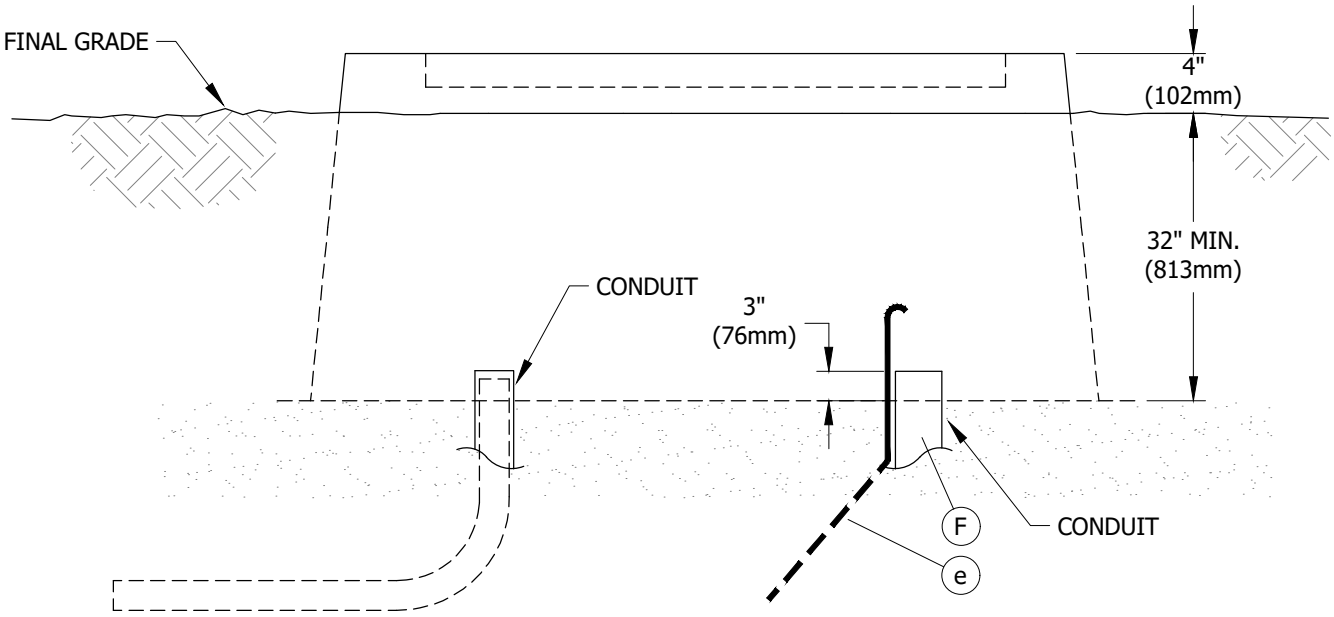

FIGURE 2
BOX & CONDUIT PLACEMENT
SIDE VIEW

© 1998 - 2020 San Diego Gas & Electric Company. All rights reserved. Removal of this copyright notice without permission is not permitted under law.

REV	CHANGE	DR	BY	DSN	APV	DATE	REV	CHANGE	DR	BY	DSN	APV	DATE
C	FORMATTING	EDM	JIK	-	-	11/5/2020	F						
B	EDITORIAL CHANGES	-	GW	JS	CZH	9/4/2018	E						
A	REVISION	-	-	-	-	1/1/2000	D						

X Indicates Latest Revision | Completely Revised | New Page | Information Removed

SDG&E ELECTRIC UNDERGROUND CONSTRUCTION STANDARDS

BOX PAD FOR PME-3 AND PME-5 SWITCHES

UG3418.2

TABLE OF CONTENTS

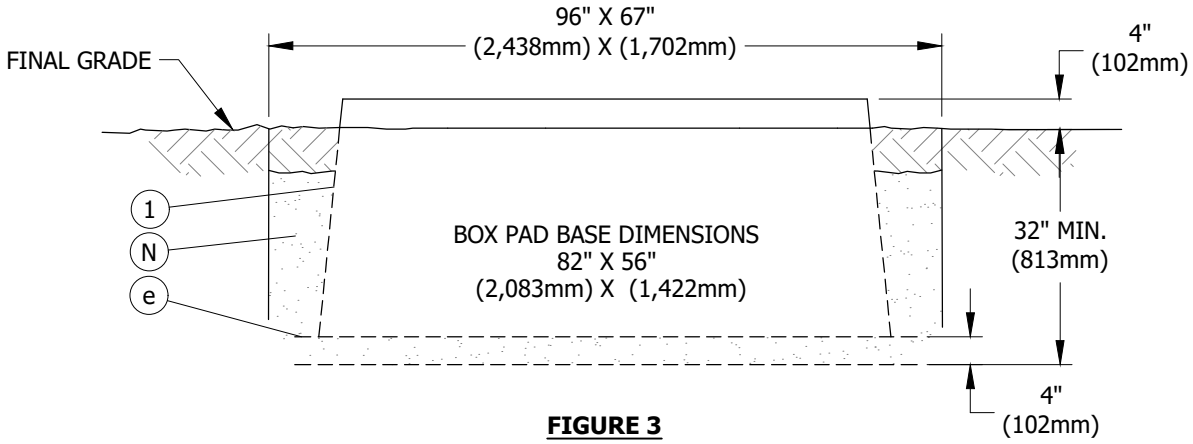

FIGURE 3
EXCAVATION DIMENSIONS

INSTALLATION:

CONDUIT:

(A) INSTALL CONDUITS AND TERMINATE THEM NOT LESS THAN 3 INCHES (76mm) ABOVE THE GRAVEL BASE.

(B) DO NOT CUT THE 90 DEGREE ELBOWS ON CURVE.

(C) STUB ONE 3-INCH (76mm) CONDUIT FROM CMPT #2, 4 FEET (1,219mm) FROM THE BOTTOM FLANGE OF BOX PAD.

D. NO MORE THAN 2 CONDUITS MAY BE INSTALLED IN COMPARTMENTS 1 & 2. ONE ADDITIONAL 3-INCH (76mm) CONDUIT IS ALLOWED IN CMPT 2 FOR SCADA ANTENNA.

(E) WHEN TWO CONDUITS ARE INSTALLED IN ONE COMPARTMENT, PLACE CONDUITS SIDE BY SIDE CENTERED ON THE APPROPRIATE DIMENSION.

(F) COMPLETELY SLURRY ENCASE ALL 5-INCH 90-DEGREE BENDS TO WITHIN 7 INCHES OF THE FINISH CUT OF THE CONDUIT.

BOX PAD:

G. THE BOX PAD LOCATION PAYING PARTICULAR ATTENTION TO FOREIGN UTILITY PLACEMENTS. RELOCATING THE BOX REQUIRES APPROVAL FROM PROJECT MANAGEMENT. WHEN INSTALLING ADJACENT TO NEW OR EXISTING HANDHOLES ALLOW 17 FEET MINIMUM FROM THE CLOSEST EDGE OF HANDHOLE TO THE CENTERLINE OF THE BOX PAD.

H. MARK OUT DIMENSIONS FOR THE EXCAVATION WIDTH AND LENGTH PER DRAWING BELOW. THE WIDTH, AND LENGTH DIMENSIONS GIVEN, ALLOW AN EXTRA 12 INCHES (305mm) FOR SETTING BOX PAD.

J. ADD 4 INCHES (102mm) OF GRAVEL TO BOTTOM OF EXCAVATION AND THEN COMPACT THIS MATERIAL BY HAND OR MACHINE.

K. PLACE THE BOX PAD IN THE EXCAVATION WITH THE LONG SIDE OF THE BOX PAD PARALLEL TO AND 15 INCHES (381mm) FROM THE BACK EDGE OF THE SIDEWALK.

L. LEVEL BOX PAD.

M. SET THE TOP SURFACE OF THE BOX PAD 4 INCHES (102mm) ABOVE FINAL GRADE.

(N) BACKFILL THE OUTSIDE WITH ONE SACK SLURRY. STOP SLURRY 6 INCHES (152mm) FROM FINISH GRADE, CONTINUE TO BACKFILL WITH NATIVE SOIL TO FINISH GRADE.

BILL OF MATERIALS:

ITEM	DESCRIPTION	WEIGHT (LBS)	QUANTITY	STANDARD PAGE	STOCK NUMBER	DESIGN UNITS
1	BOX PAD, 70" X 44" X 32" (1,778mm X 1,118mm X 813mm)	195 (88KG)	1	--	S614040	--
2	GRAVEL, 3/8" - 3/4"	--	AS REQ'D	--	S601600	3428BP

© 1998 - 2020 San Diego Gas & Electric Company. All rights reserved. Removal of this copyright notice without permission is not permitted under law.

REV	CHANGE	DR	BY	DSN	APV	DATE	REV	CHANGE	DR	BY	DSN	APV	DATE
C	FORMATTING	EDM	JIK	-	-	11/5/2020	F						
B	EDITORIAL CHANGES	-	GW	JS	CZH	9/4/2018	E						
A	REVISION	-	-	-	-	1/1/2000	D						

X Indicates Latest Revision | Completely Revised | New Page | Information Removed

TABLE OF CONTENTS

NOTES:

I. LOCATE THE LINE SIDE CONDUIT OR FEED TO THE SWITCH IN COMPARTMENT 1. COMPARTMENT 1 SHALL BE LOCATED ON THE RIGHT SIDE OF BOX PAD WHEN VIEWED FROM THE SIDEWALK OR STREET SIDE OF THE BOX PAD.

(II) APPEARANCE AND DIMENSIONS MAY VARY SLIGHTLY BETWEEN MANUFACTURERS.

REFERENCE:

a. SEE UG3211.3 FOR INSTALLATION OF IDENTIFICATION TAG.

b. SEE UG3365.2 FOR SLURRY BACKFILL.

c. SEE UG3480, UG3481, UG3482 & UG3483 FOR MINIMUM OPERATING AND CLEARANCE REQUIREMENTS.

d. SEE UG3486 & UG3487 FOR RETAINING WALL REQUIREMENTS AND CLEARANCES FROM REVERSE SUBGRADE RETAINING WALLS.

(e) SEE UG4510 FOR TRENCH GROUND WIRE.

f. SEE UG3583 FOR PME-3 SWITCH INSTALLATION.

TABLE OF CONTENTS

© 1998 - 2020 San Diego Gas & Electric Company. All rights reserved. Removal of this copyright notice without permission is not permitted under law.

REV	CHANGE	DR	BY	DSN	APV	DATE	REV	CHANGE	DR	BY	DSN	APV	DATE
C	FORMATTING	EDM	JIK	-	-	11/5/2020	F						
B	EDITORIAL CHANGES	-	GW	JS	CZH	9/4/2018	E						
A	REVISION	-	-	-	-	1/1/2000	D						

SCOPE: THIS STANDARD SHOWS THE BOX PAD FOR THE THREE-WAY PAD MOUNTED SWITCH.

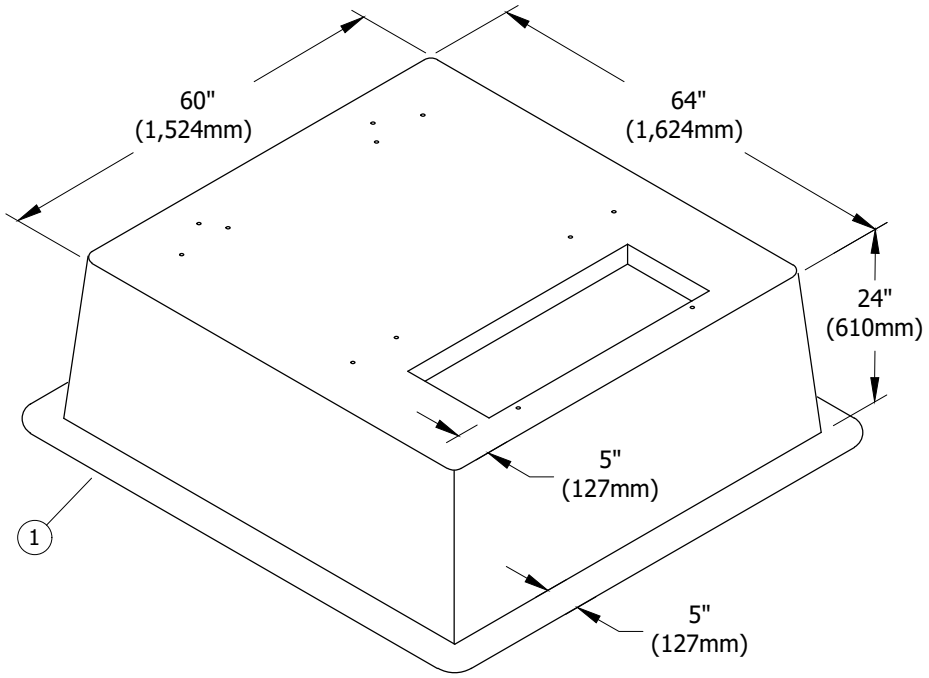

FIGURE 1
ISOMETRIC VIEW

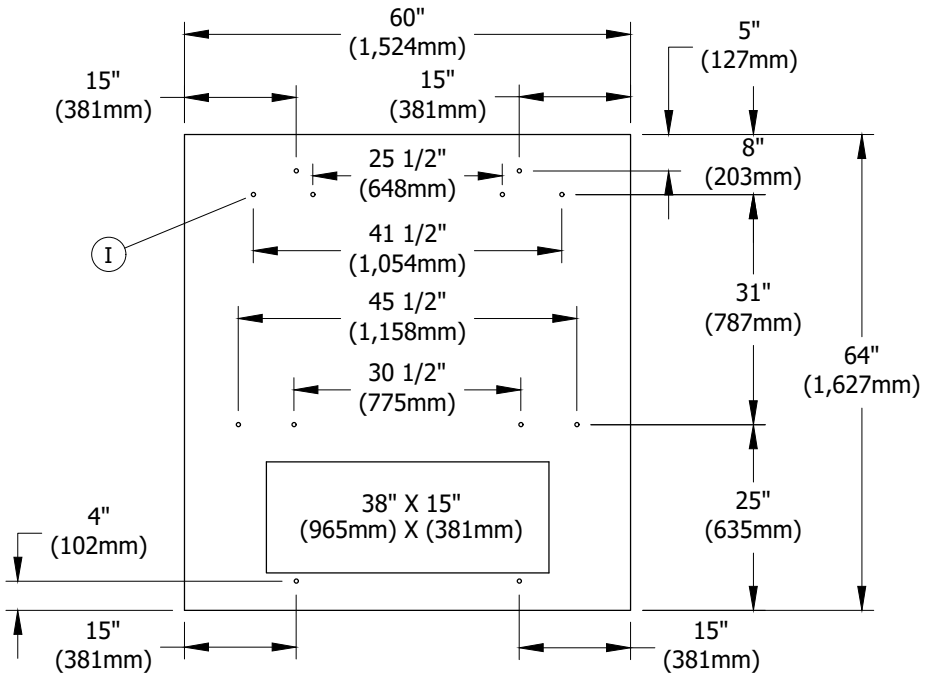

FIGURE 1
PLAN VIEW

TABLE OF CONTENTS

© 1998 - 2020 San Diego Gas & Electric Company. All rights reserved. Removal of this copyright notice without permission is not permitted under law.

REV	CHANGE	DR	BY	DSN	APV	DATE	REV	CHANGE	DR	BY	DSN	APV	DATE
C	FORMATTING	EDM	JIK	-	-	11/5/2020	F						
B	EDITORIAL CHANGES	-	GW	JS	CZH	9/4/2018	E						
A	REVISION	-	-	-	-	9/5/2000	D						

X Indicates Latest Revision | Completely Revised | New Page | Information Removed

SDG&E ELECTRIC UNDERGROUND CONSTRUCTION STANDARDS

BOX PAD FOR 3-WAY PAD MOUNTED SWITCH

UG3419.1

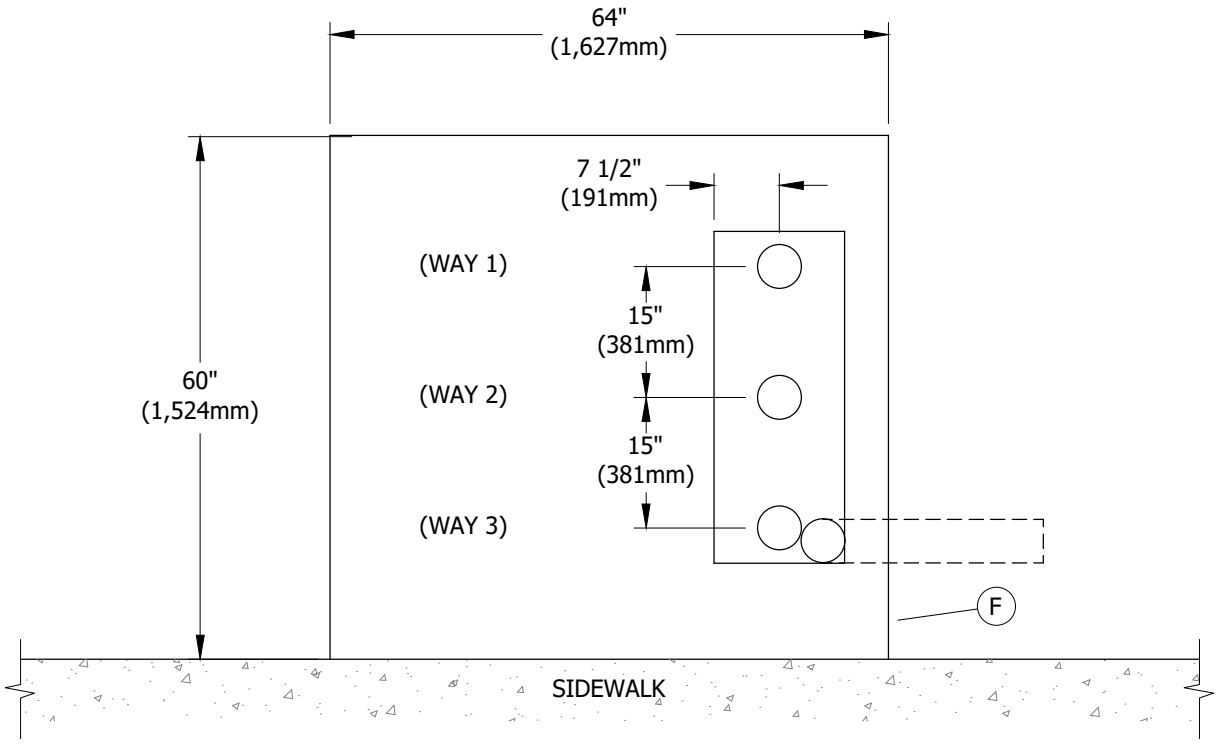

FIGURE 2
BOX PAD & CONDUIT PLACEMENT
PLAN VIEW

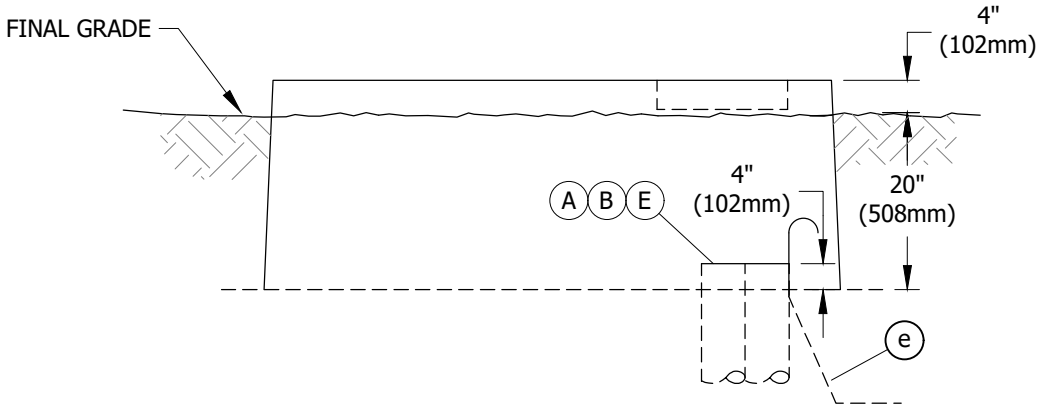

FIGURE 2
BOX PAD & CONDUIT PLACEMENT
SIDE VIEW

© 1998 - 2020 San Diego Gas & Electric Company. All rights reserved. Removal of this copyright notice without permission is not permitted under law.

REV	CHANGE	DR	BY	DSN	APV	DATE	REV	CHANGE	DR	BY	DSN	APV	DATE
C	FORMATTING	EDM	JIK	-	-	11/5/2020	F						
B	EDITORIAL CHANGES	-	GW	JS	CZH	9/4/2018	E						
A	REVISION	-	-	-	-	9/5/2000	D						

X Indicates Latest Revision | Completely Revised | New Page | Information Removed

SDG&E ELECTRIC UNDERGROUND CONSTRUCTION STANDARDS

BOX PAD FOR 3-WAY PAD MOUNTED SWITCH

UG3419.2

TABLE OF CONTENTS

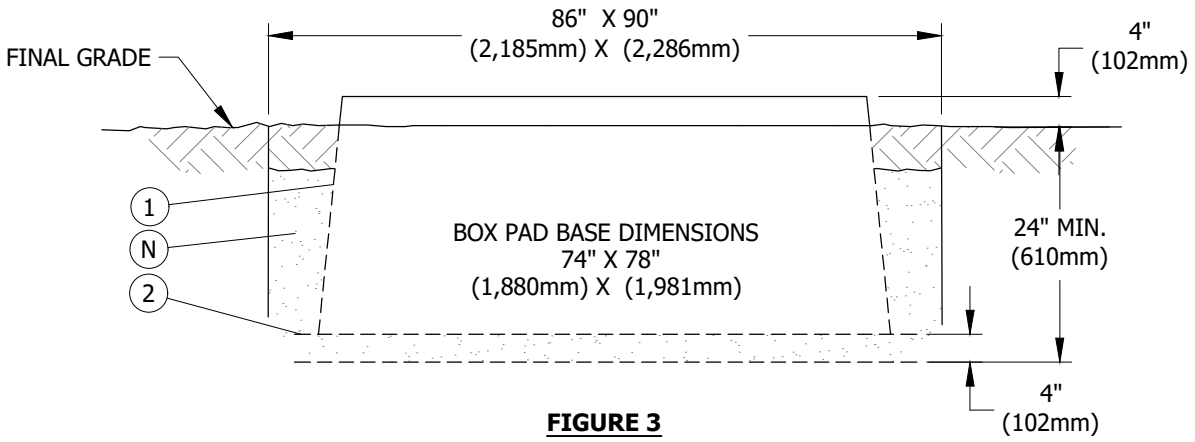

FIGURE 3
EXCAVATION DIMENSIONS

INSTALLATION:

CONDUIT:

(A) INSTALL CONDUITS AND TERMINATE THEM NOT LESS THAN 3 INCHES (76mm) ABOVE THE GRAVEL BASE.

(B) DO NOT CUT THE 90 DEGREE ELBOWS ON CURVE.

C. STUB ONE 5-INCH (127mm) CONDUIT FROM THE STREET SIDE OF WINDOW FOUR FEET FROM THE BOTTOM FLANGE OF BOX PAD.

D. INSTALL ONE CONDUIT PER SWITCH WAY. ONE ADDITIONAL CONDUIT MAY BE INSTALLED FOR SCADA POWER SOURCE.

(E) COMPLETELY SLURRY ENCASE ALL 5-INCH 90-DEGREE BENDS TO WITHIN 7 INCHES (178mm) OF THE FINISH CUT OF THE CONDUIT.

BOX PAD:

(F) ALWAYS INSTALL BOX PAD WITH LONG SIDE PARALLEL TO STREET OR SIDEWALK WITH OPENING TO THE RIGHT.

G. ESTABLISH THE BOX PAD LOCATION PAYING PARTICULAR ATTENTION TO FOREIGN UTILITY PLACEMENTS. RELOCATING THE BOX REQUIRES APPROVAL FROM PROJECT MANAGEMENT. WHEN INSTALLING ADJACENT TO NEW OR EXISTING HANDHOLES ALLOW 17 FEET MINIMUM FROM THE CLOSEST EDGE OF HANDHOLE TO THE CENTERLINE OF THE BOX PAD.

H. MARK OUT DIMENSIONS FOR THE EXCAVATION WIDTH AND LENGTH PER DRAWING BELOW. THE WIDTH AND LENGTH DIMENSIONS GIVEN ALLOW AN EXTRA 12 INCHES (305mm) FOR SETTING BOX PAD.

J. ADD 4 INCHES (102mm) OF GRAVEL TO BOTTOM OF EXCAVATION AND THEN COMPACT THIS MATERIAL BY HAND OR MACHINE.

K. PLACE THE BOX PAD IN THE EXCAVATION WITH THE LONG SIDE OF THE BOX PAD PARALLED TO AND AS CLOSE AS POSSIBLE TO BACK EDGE OF SIDEWALK.

L. LEVEL BOX PAD.

M. SET THE TOP SURFACE OF THE BOX PAD 4 INCHES (102mm) ABOVE FINAL GRADE.

(N) BACKFILL THE OUTSIDE WITH ONE SACK SLURRY. STOP SLURRY 6 INCHES (152mm) FROM FINISH GRADE; CONTINUE TO BACKFILL WITH NATIVE SOIL TO FINISH GRADE.

BILL OF MATERIALS:

ITEM	DESCRIPTION	WEIGHT (LBS)	QUANTITY	STANDARD PAGE	STOCK NUMBER	DESIGN UNITS
1	PAD, BOX, 60" X 64" X 24" (1,524mm X 1,627mm X 610mm)	210 (95 KG)	1	--	S513904	3419BP
2	GRAVEL, 3/8" - 3/4"	--	AS REQ'D	--	S601600	--

© 1998 - 2020 San Diego Gas & Electric Company. All rights reserved. Removal of this copyright notice without permission is not permitted under law.

REV	CHANGE	DR	BY	DSN	APV	DATE	REV	CHANGE	DR	BY	DSN	APV	DATE
C	FORMATTING	EDM	JIK	-	-	11/5/2020	F						
B	EDITORIAL CHANGES	-	GW	JS	CZH	9/4/2018	E						
A	REVISION	-	-	-	-	9/5/2000	D						

TABLE OF CONTENTS

NOTES:

(I) SIZE OF INSERT IS 1/2 X 13.

REFERENCE:

a. SEE UG3211.3 FOR INSTALLATION OF IDENTIFICATION TAG.

b. SEE UG3365.2 FOR SLURRY BACKFILL.

c. SEE UG3480, UG3481, UG3482 & UG3483 FOR MINIMUM OPERATING AND CLEARANCE REQUIREMENTS.

d. SEE UG3486 & UG3487 FOR RETAINING WALL REQUIREMENTS AND CLEARANCES FROM REVERSE SUBGRADE RETAINING WALLS.

(e) SEE UG4510 FOR TRENCH GROUND WIRE.

f. SEE UG3585 & UG3586 FOR SWITCH INSTALLATION.

TABLE OF CONTENTS

© 1998 - 2020 San Diego Gas & Electric Company. All rights reserved. Removal of this copyright notice without permission is not permitted under law.

REV	CHANGE	DR	BY	DSN	APV	DATE	REV	CHANGE	DR	BY	DSN	APV	DATE
C	FORMATTING	EDM	JIK	-	-	11/5/2020	F						
B	EDITORIAL CHANGES	-	GW	JS	CZH	9/4/2018	E						
A	REVISION	-	-	-	-	9/5/2000	D						

X Indicates Latest Revision | Completely Revised | New Page | Information Removed

SDG&E ELECTRIC UNDERGROUND CONSTRUCTION STANDARDS

BOX PAD FOR 3-WAY PAD MOUNTED SWITCH

UG3419.4

SCOPE: THIS STANDARD SHOWS THE PAD AND INSTALLATION REQUIREMENTS FOR THE ALLOWABLE CONDUIT COMBINATIONS AND CONFIGURATIONS FOR A SINGLE-PHASE TRANSFORMER, THREE-PHASE FUSE CABINET, SINGLE-PHASE FUSE CABINET AND SINGLE-PHASE CABLE TERMINATOR. THIS ALSO INCLUDES THE 'SP2' SHORT TRANSFORMER PAD USED FOR IN-KIND REPLACEMENTS WHERE THE STANDARD UG3421 PAD WILL NOT FIT.

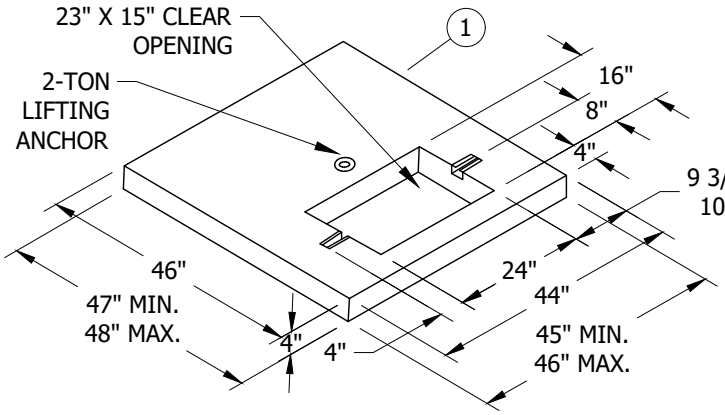

FIGURE 1
UG3421 PAD

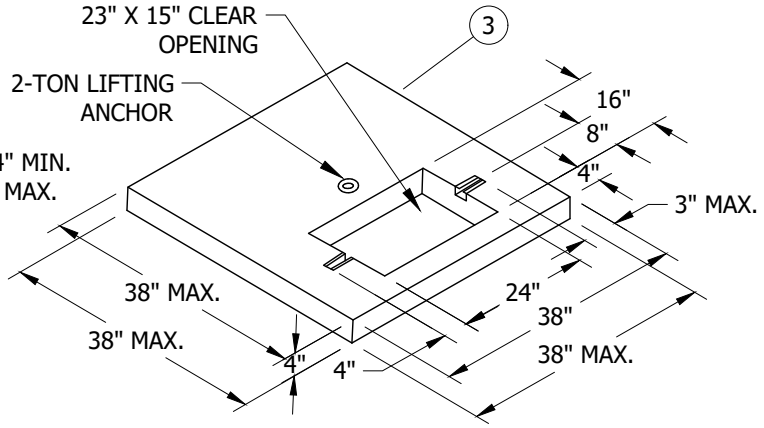

FIGURE 2
UG3421 'SP2' PAD (II)

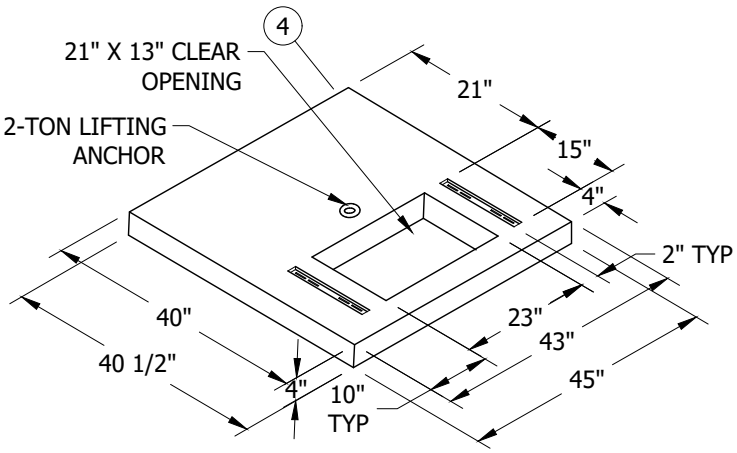

FIGURE 3
UG3421 'S' PAD

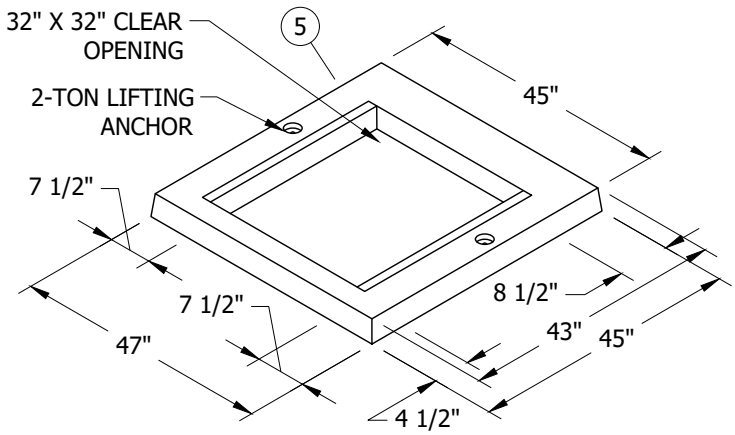

FIGURE 4
UG3421 '600A' PAD

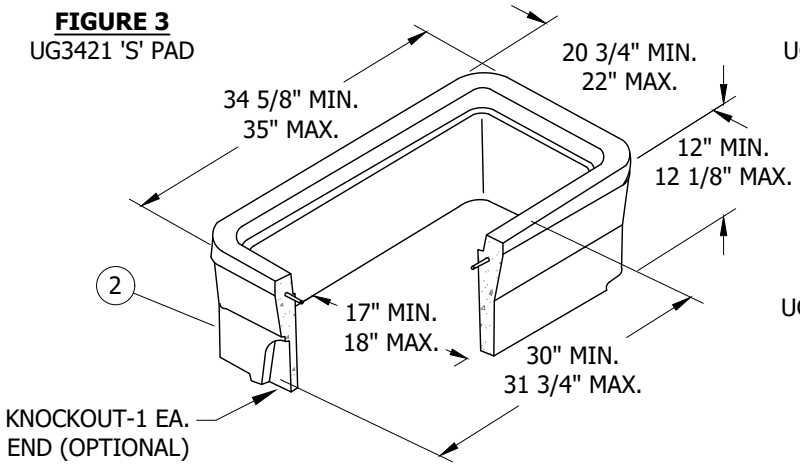

FIGURE 5
UG3312 HANDHOLE (I)

TABLE OF CONTENTS

© 1998 - 2023 San Diego Gas & Electric Company. All rights reserved. Removal of this copyright notice without permission is not permitted under law.

REV	CHANGE	DR	BY	DSN	APV	DATE	REV	CHANGE	DR	BY	DSN	APV	DATE
E	EDITORIAL CHANGES	-	GW	JS	CZH	09/04/2018	H	BILL OF MATERIAL UPDATE	ARC	JES	JAS	KRG	06/06/2023
D	FIGURE UPDATE	-	KR	JS	MDJ	07/25/2017	G	FIGURE UPDATE	EDM	ADW	GLW	KRG	10/21/2022
C	FIGURE UPDATE	-	-	-	TR/JJ	10/19/2010	F	FORMATTING	EDM	JIK	-	-	11/05/2020

X Indicates Latest Revision | Completely Revised | New Page | Information Removed

SDG&E ELECTRIC UNDERGROUND CONSTRUCTION STANDARDS

SHEET 1 OF 6

SINGLE-PHASE TRANSFORMER/UTILITY EQUIPMENT PAD

UG3421.1

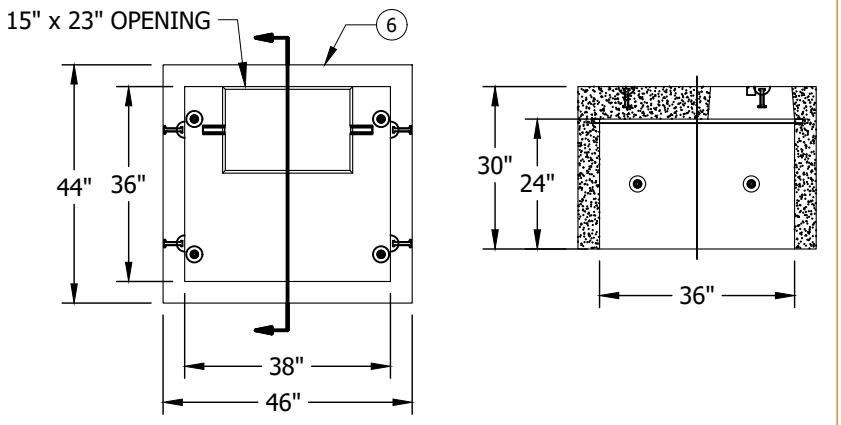

FIGURE 6
EQUIPMENT PEDESTAL

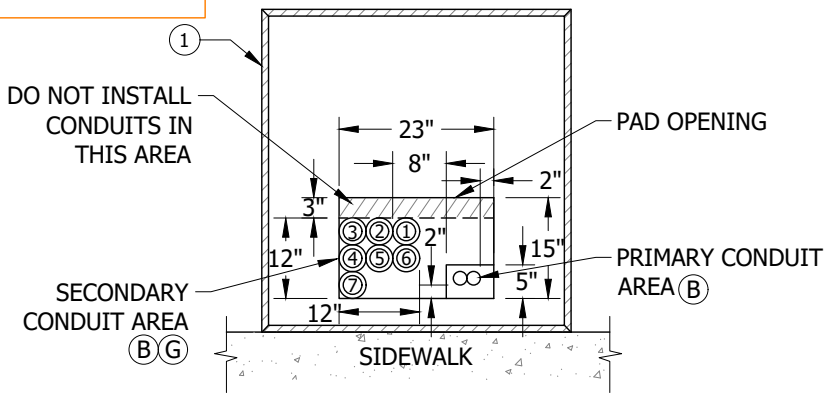

FIGURE 7
UG3711, UG3712 INSTALLATION (B)
SINGLE-PHASE TRANSFORMER
PLAN VIEW

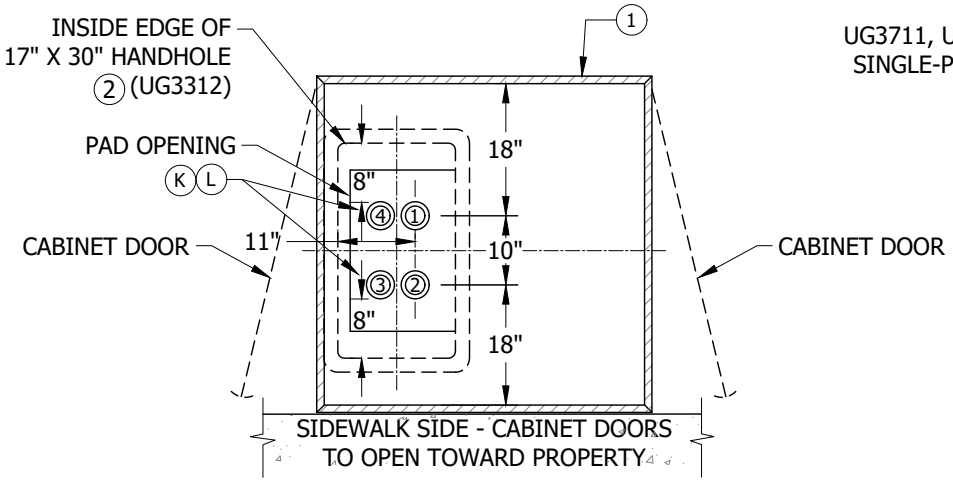

FIGURE 8
UG3514 INSTALLATION (B)
THREE-PHASE FUSE CABINET
PLAN VIEW

© 1998 - 2023 San Diego Gas & Electric Company. All rights reserved. Removal of this copyright notice without permission is not permitted under law.

REV	CHANGE	DR	BY	DSN	APV	DATE	REV	CHANGE	DR	BY	DSN	APV	DATE
E	EDITORIAL CHANGES	-	GW	JS	CZH	09/04/2018	H	BILL OF MATERIAL UPDATE	ARC	JES	JAS	KRG	06/06/2023
D	FIGURE UPDATE	-	KR	JS	MDJ	07/25/2017	G	FIGURE UPDATE	EDM	ADW	GLW	KRG	10/21/2022
C	FIGURE UPDATE	-	-	-	TR/JJ	10/19/2010	F	FORMATTING	EDM	JIK	-	-	11/05/2020

X Indicates Latest Revision | Completely Revised | New Page | Information Removed

TABLE OF CONTENTS

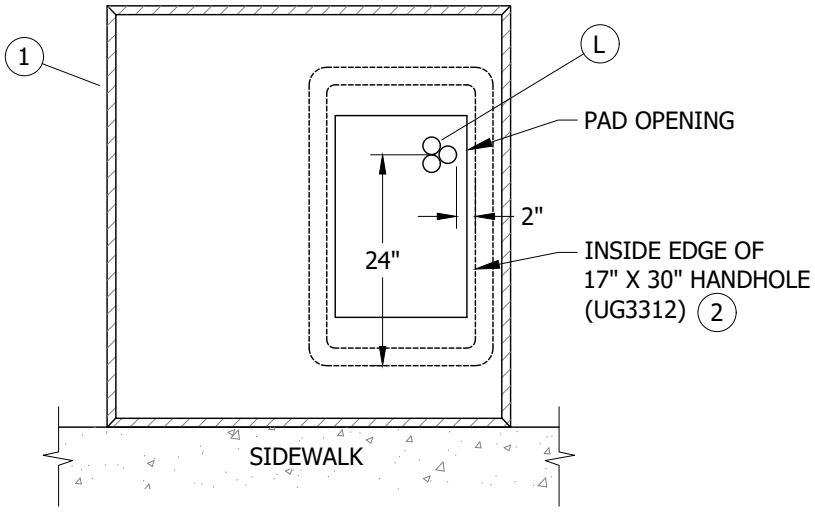

FIGURE 9
UG3512 INSTALLATION
SINGLE-PHASE FUSE CABINET
PLAN VIEW

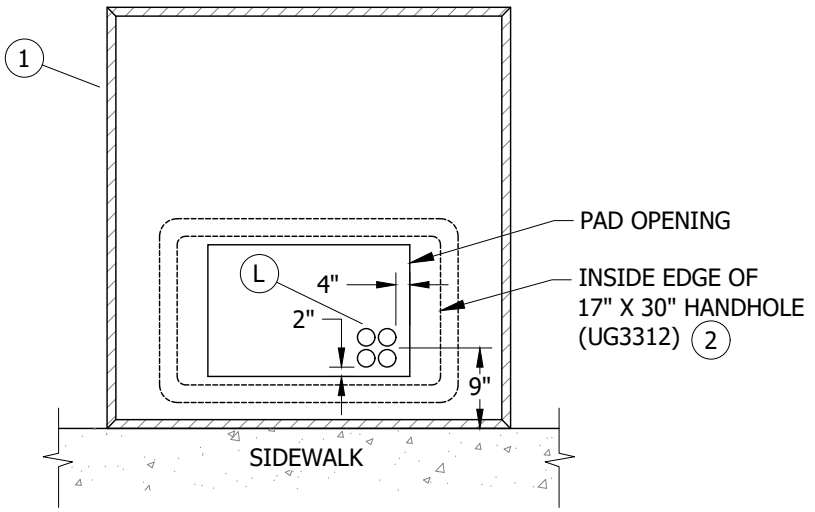

FIGURE 10
UG3522 INSTALLATION
SINGLE-PHASE CABLE TERMINATOR
PLAN VIEW

TABLE OF CONTENTS

© 1998 - 2023 San Diego Gas & Electric Company. All rights reserved. Removal of this copyright notice without permission is not permitted under law.

REV	CHANGE	DR	BY	DSN	APV	DATE	REV	CHANGE	DR	BY	DSN	APV	DATE
E	EDITORIAL CHANGES	-	GW	JS	CZH	09/04/2018	H	BILL OF MATERIAL UPDATE	ARC	JES	JAS	KRG	06/06/2023
D	FIGURE UPDATE	-	KR	JS	MDJ	07/25/2017	G	FIGURE UPDATE	EDM	ADW	GLW	KRG	10/21/2022
C	FIGURE UPDATE	-	-	-	TR/JJ	10/19/2010	F	FORMATTING	EDM	JIK	-	-	11/05/2020

INSTALLATION:

SINGLE-PHASE TRANSFORMER

A. SET PAD LEVEL TO FINAL GRADE AND INSTALL EQUIPMENT GROUND.

(B) PLACE ALL PRIMARY AND SECONDARY CONDUITS WITHIN THE PAD OPENING AS SHOWN IN FIGURES 7 AND 8. DO NOT CUT INTO THE CURVED PORTION ON THE ELBOWS. RADIUS OF CURVATURE IS 36-INCH MINIMUM FOR 3-INCH AND 4-INCH CONDUITS. PLACE ALL CONDUIT WITH 3/0 OR LARGER CABLE TOWARDS THE REAR OF THE 12-INCH SECONDARY AREA. (C)

(C) PRIMARY CONDUITS IN RIGHT HAND CORNER SHALL HAVE 2-INCH CLEARANCE FROM FRONT AND SIDE OF PAD.

(D) THE CONDUIT CONFIGURATION REQUIREMENT BETWEEN TERMINATING POINTS LIMITS THE SECONDARY CONDUIT CONFIGURATION TO 2 WIDE X 4 DEEP OR 4 WIDE X 2 DEEP (NO ONE CONDUIT IS TO BE COMPLETELY SURROUNDED ON ALL FOUR SIDES BY OTHER CONDUITS), USING SPACERS AND 1 SACK CONCRETE SLURRY BACKFILL. CONDUITS MAY ALSO BE INSTALLED SIDE BY SIDE ON THE BOTTOM OF THE TRENCH WITHOUT SPACERS OR CONCRETE SLURRY (4 CONDUITS MAX.). IN THE TRANSITION AREA WHERE THE CONDUITS FROM THE BOTTOM OF THE TRENCH START TOWARD THE SURFACE (THE STRAIGHT PORTION BY THE 90 DEGREE BEND), SPACERS MAY BE REQUIRED TO ALLOW THE 90 DEGREE BENDS TO ENTER STRAIGHT INTO THE PAD OPENING. AT THE SURFACE POINT, THE CONDUITS MAY BE BUNDLED TOGETHER. USE SDG&E APPROVED BASE, SHADING AND BACKFILL.

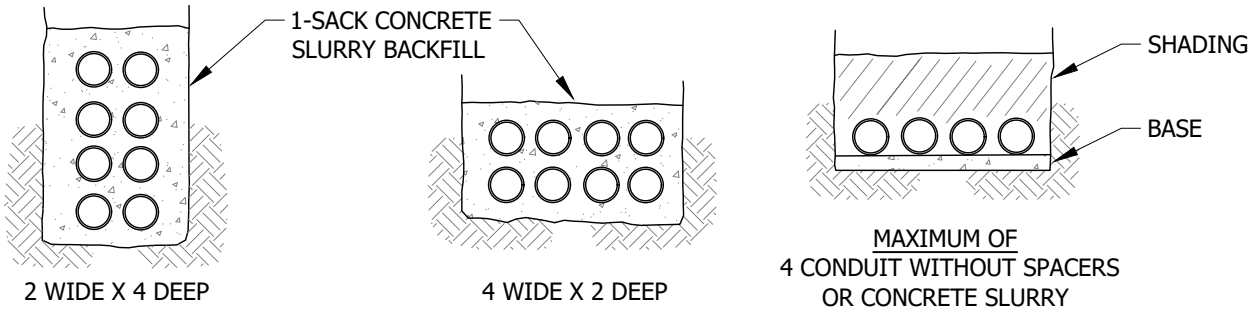

FIGURE 11 (D)

E. THE PRIMARY AND SECONDARY CONDUIT COMBINATIONS ALLOWED ARE SHOWN IN THE CHART BELOW. READ DOWN DESIRED COLUMN UNTIL THE NUMBER OF RUNS BEING INSTALLED ARE LOCATED, THEN READ ACROSS THE ROW CHECKING FOR ADDITIONAL ALLOWABLE RUNS. THE SUM OF THE COLUMNS SHALL NOT EXCEED THE TOTAL CONDUITS ALLOWED.

TABLE 1

SECONDARY CONDUIT COMBINATIONS			
2" (EB OR DB)	3" (EB OR DB)	4" (EB OR DB)	TOTAL CONDUITS ALLOWED (V)
--	6	--	7
2	4	--	7
3	3	--	7
4	2	--	7
7	--	--	7
1	--	4	5
--	1	4	5
1	1	3	5
--	3	2	5
--	4	1	5
4	--	3	7
5	--	2	7
6	--	1	7

TABLE 2

PRIMARY CONDUIT COMBINATIONS		
2" (EB OR DB)	3" (EB OR DB)	TOTAL CONDUITS ALLOWED (VI)
4	--	4
2	3	5
2	2	4
1	3	4
2	--	3
--	3	3
1	--	1
--	2	2

TABLE OF CONTENTS

© 1998 - 2023 San Diego Gas & Electric Company. All rights reserved. Removal of this copyright notice without permission is not permitted under law.

REV	CHANGE	DR	BY	DSN	APV	DATE	REV	CHANGE	DR	BY	DSN	APV	DATE
E	EDITORIAL CHANGES	-	GW	JS	CZH	09/04/2018	H	BILL OF MATERIAL UPDATE	ARC	JES	JAS	KRG	06/06/2023
D	FIGURE UPDATE	-	KR	JS	MDJ	07/25/2017	G	FIGURE UPDATE	EDM	ADW	GLW	KRG	10/21/2022
C	FIGURE UPDATE	-	-	-	TR/JJ	10/19/2010	F	FORMATTING	EDM	JIK	-	-	11/05/2020

INSTALLATION (CONT'D):

F. TERMINATE PRIMARY AND SECONDARY CONDUITS FLUSH WITH TOP OF PAD.

(G) WHEN THE NUMBER OF REQUIRED CONDUITS IS LESS THAN THE TOTAL CONDUITS ALLOWED IN THE TABLE, INSTALL CONDUITS IN NUMBERED SEQUENCE AS SHOWN IN FIGURE 7.

H. IN SOFT SOILS, A CONCRETE BACKFILL (1-SACK MIX) 12 INCHES BEYOND THE SIDE EDGES OF THE PAD AND 12 INCHES DEEP IS REQUIRED UNDER THE TRANSFORMER PAD.

THREE-PHASE FUSE CABINET

J. SET PAD LEVEL TO FINAL GRADE AND INSTALL EQUIPMENT GROUND. TERMINATE CONDUITS 3 INCHES ABOVE BOTTOM OF HANDHOLE. INSTALL CONDUITS.

(K) THE MAXIMUM PRIMARY CONDUITS ALLOWED ARE ULTIMATE 4 RUNS OF 4-INCH CONDUIT AS SHOWN IN FIGURE 8.

SINGLE-FUSE SWITCHING CABINET AND SINGLE-PHASE TERMINATOR

(L) SET PAD LEVEL TO FINAL GRADE AND INSTALL EQUIPMENT GROUND. TERMINATE CONDUITS 3 INCHES ABOVE BOTTOM OF HANDHOLE. INSTALL CONDUITS AS SHOWN IN FIGURE 8, 9 AND 10.

1. INSTALL CONDUITS #1 AND #2 WHENEVER THERE IS JUST ONE LINE AND ONE LOAD CABLE.
2. INSTALL CONDUITS #3 AND/OR #4 FOR THE SECOND LOAD OR LINE CABLE.

BILL OF MATERIALS:

ITEM	DESCRIPTION	WEIGHT (LBS)	QUANTITY	STANDARD PAGE	STOCK NUMBER	DESIGN UNITS	MACRO
1	PAD, SINGLE-PHASE TRANSFORMER/UTILITY EQUIPMENT PAD	619 MAX.	1	--	S514240	3421-1	FC3PAD
2	HANDHOLE, BODY	185 MAX.	1	3312	S162426	3312-1	
3	PAD, TRANSFORMER, 'SP2', 38" X 38"	505 MAX.	1	--	S514242	3421-2	--
4	PAD, TRANSFORMER, '1S'	--	1	--	S514220	3413-0	--
5	PAD, TRANSFORMER, '600A'	--	1	--	S514050	3421CT	--
6	PEDESTAL, EQUIPMENT, 46" X 44" X 30"	2250 MAX.	1	--	S514066	3421BP	--

NOTES:

(I) REQUIRED FOR THREE-PHASE FUSE CABINET, SINGLE-PHASE FUSE CABINET AND SINGLE-PHASE CABLE TERMINATOR.

(II) TO BE USED ONLY FOR IN-KIND REPLACEMENTS. DEVIATION REQUIRED FOR NEW INSTALLATIONS.

III. TRANSFORMER COOLING FINS MAY OVERHANG REAR OF PAD BY 6 INCHES.

IV. FIVE-INCH CONDUIT NOT ALLOWED IN THESE INSTALLATIONS.

(V) SECONDARY CONDUITS MAY INCLUDE TWO ADDITIONAL ONE-INCH CONDUITS FOR STREET LIGHTS.

(VI) ONE 4-INCH OR ONE 5-INCH PRIMARY CONDUIT IS ALLOWED WHEN THE CONDUIT IS EXTENDED FROM AN EXISTING STUBOUT.

REFERENCE:

a. SEE UG3211 FOR PAD IDENTIFICATION.

b. SEE UG3370 OR UG3371 FOR TRENCH, UTILITY POSITIONING, SHADING AND BACKFILL REQUIREMENTS.

c. SEE UG3376 FOR CONCRETE SLURRY, SHADING AND TYPE OF CONDUIT.

d. SEE UG3479 FOR BARRIER PROTECTION AND CLEARANCE.

e. SEE UG3487 FOR SINGLE-PHASE TRANSFORMER LOCATIONS NEXT TO CATV AND/OR TELCO.

f. SEE UG3480, UG3481, UG3482 AND UG3483 FOR MINIMUM OPERATING AND CLEARANCE REQUIREMENTS (PAD PLACEMENT).

g. SEE UG3484 FOR PAD INSTALLATION OF PAD MOUNTED EQUIPMENT.

h. SEE UG3486 FOR RETAINING WALL REQUIREMENTS AND CLEARANCES FROM REVERSE SUBGRADE RETAINING WALLS.

© 1998 - 2023 San Diego Gas & Electric Company. All rights reserved. Removal of this copyright notice without permission is not permitted under law.

REV	CHANGE	DR	BY	DSN	APV	DATE	REV	CHANGE	DR	BY	DSN	APV	DATE
E	EDITORIAL CHANGES	-	GW	JS	CZH	09/04/2018	H	BILL OF MATERIAL UPDATE	ARC	JES	JAS	KRG	06/06/2023
D	FIGURE UPDATE	-	KR	JS	MDJ	07/25/2017	G	FIGURE UPDATE	EDM	ADW	GLW	KRG	10/21/2022
C	FIGURE UPDATE	-	-	-	TR/JJ	10/19/2010	F	FORMATTING	EDM	JIK	-	-	11/05/2020

TABLE OF CONTENTS

REFERENCE (CONT'D):

i. SEE UG3485 AND UG3487 FOR RETAINING WALLS.

j. SEE UG3512 FOR SINGLE-PHASE LOW PROFILE FUSED SWITCHING CABINET.

k. SEE UG3522 FOR SINGLE-PHASE LOW PROFILE TERMINATOR INSTALLATION.

l. SEE UG3711, UG3712 AND UG3713 FOR TRANSFORMER INSTALLATIONS.

m. SEE UG4512 FOR EQUIPMENT GROUNDING.

n. SEE UG4514 FOR GROUNDING TELCO CONDUCTOR IN PAD MOUNTED EQUIPMENT.

TABLE OF CONTENTS

© 1998 - 2023 San Diego Gas & Electric Company. All rights reserved. Removal of this copyright notice without permission is not permitted under law.

REV	CHANGE	DR	BY	DSN	APV	DATE	REV	CHANGE	DR	BY	DSN	APV	DATE
E	EDITORIAL CHANGES	-	GW	JS	CZH	09/04/2018	H	BILL OF MATERIAL UPDATE	ARC	JES	JAS	KRG	06/06/2023
D	FIGURE UPDATE	-	KR	JS	MDJ	07/25/2017	G	FIGURE UPDATE	EDM	ADW	GLW	KRG	10/21/2022
C	FIGURE UPDATE	-	-	-	TR/JJ	10/19/2010	F	FORMATTING	EDM	JIK	-	-	11/05/2020

X Indicates Latest Revision | Completely Revised | New Page | Information Removed

SDG&E ELECTRIC UNDERGROUND CONSTRUCTION STANDARDS

SINGLE-PHASE TRANSFORMER/UTILITY EQUIPMENT PAD

UG3421.6

SCOPE: THIS STANDARD SHOWS THE BOX PAD **W/TEMPORARY COVER** AND CONDUIT PLACEMENT FOR THE PAD MOUNTED PME 9, 10, 11 AIR BREAK AND 2 SIDED 4-WAY TRAYER SWITCHES.

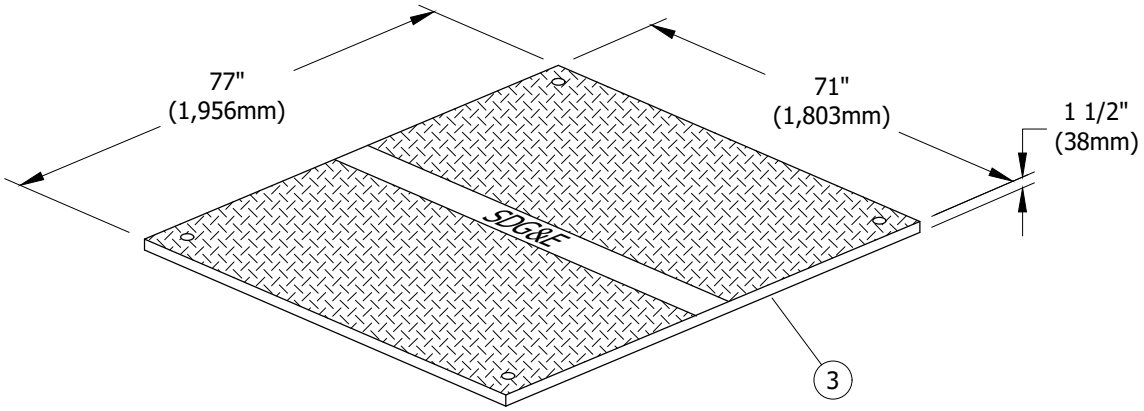

FIGURE 1
TEMPORARY COVER

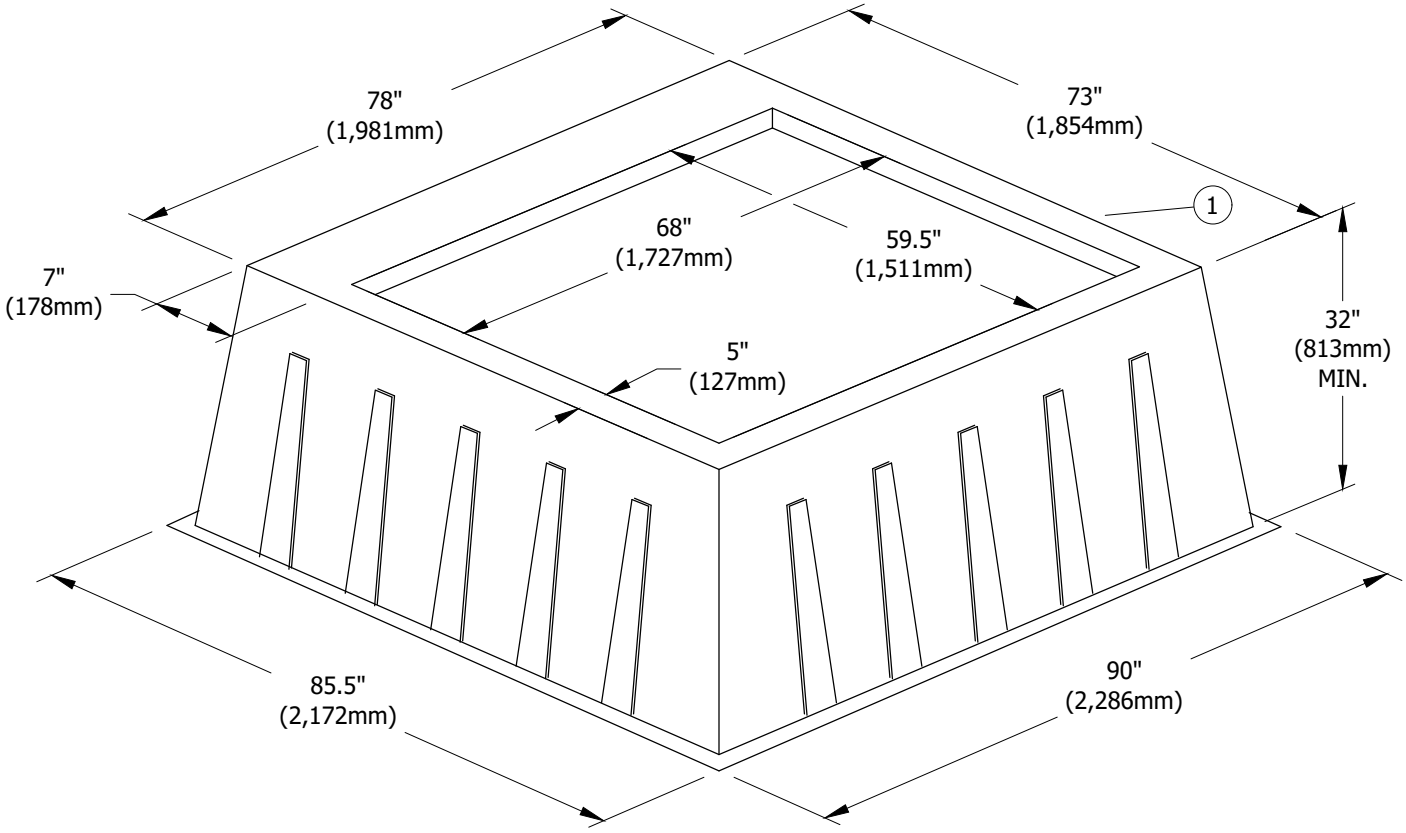

FIGURE 2 (I)
BOX PAD

© 1998 - 2020 San Diego Gas & Electric Company. All rights reserved. Removal of this copyright notice without permission is not permitted under law.

REV	CHANGE	DR	BY	DSN	APV	DATE	REV	CHANGE	DR	BY	DSN	APV	DATE
C	FORMATTING	EDM	JIK	-	-	11/5/2020	F						
B	EDITORIAL CHANGES	-	GW	JS	CZH	9/4/2018	E						
A	REVISION	-	-	-	-	2/5/2014	D						

TABLE OF CONTENTS

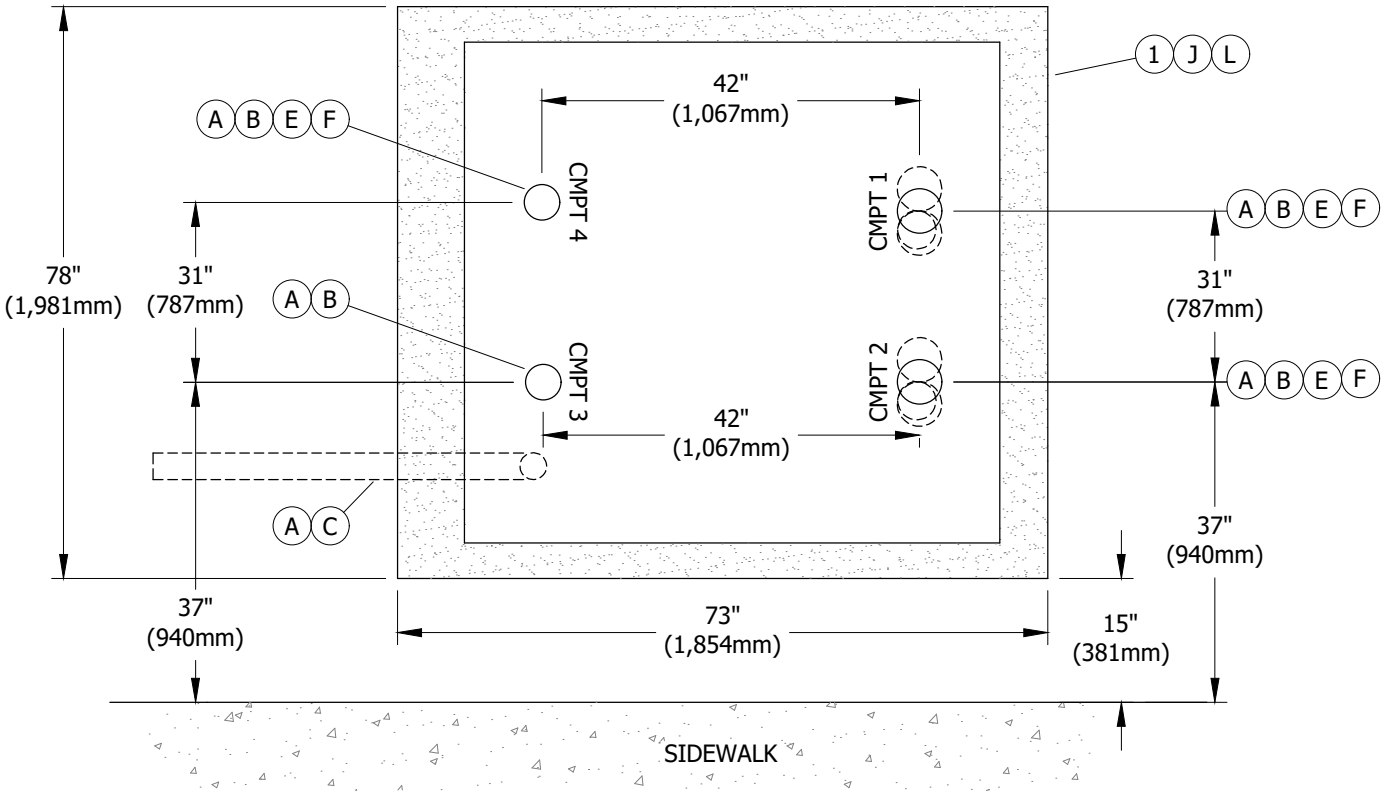

FIGURE 3
BOX & CONDUIT PLACEMENT
PLAN VIEW

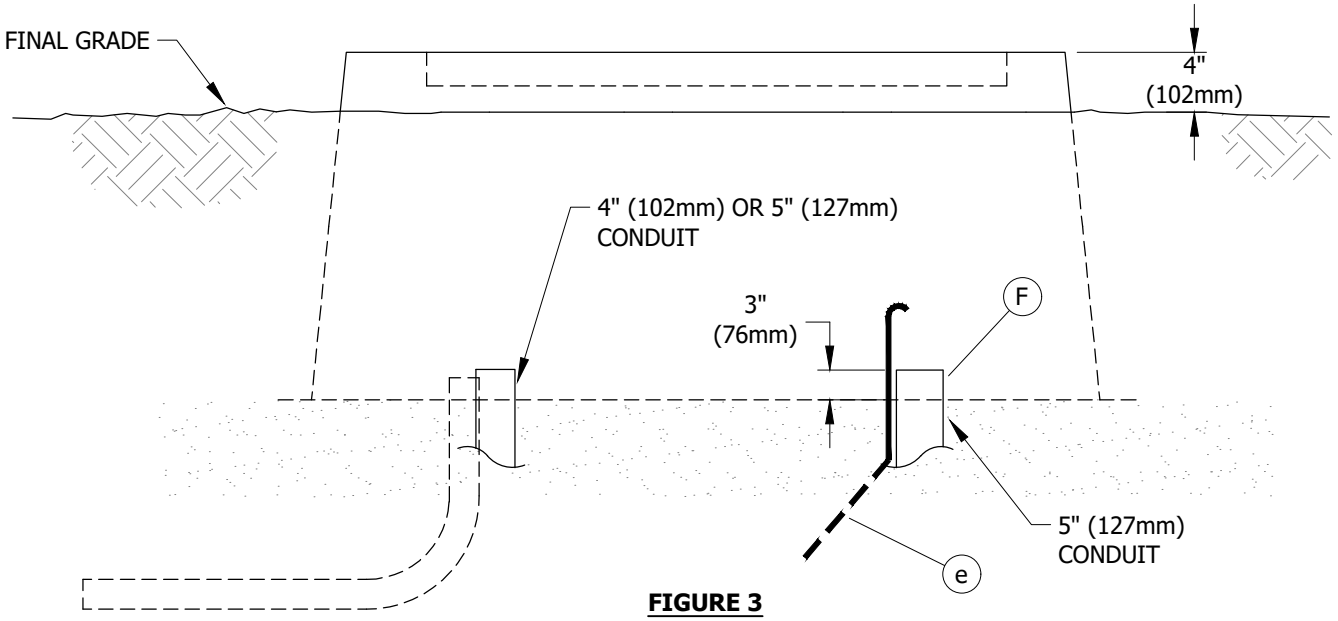

FIGURE 3
BOX & CONDUIT PLACEMENT
SIDE VIEW

TABLE OF CONTENTS

© 1998 - 2020 San Diego Gas & Electric Company. All rights reserved. Removal of this copyright notice without permission is not permitted under law.

REV	CHANGE	DR	BY	DSN	APV	DATE	REV	CHANGE	DR	BY	DSN	APV	DATE
C	FORMATTING	EDM	JIK	-	-	11/5/2020	F						
B	EDITORIAL CHANGES	-	GW	JS	CZH	9/4/2018	E						
A	REVISION	-	-	-	-	2/5/2014	D						

X Indicates Latest Revision | Completely Revised | New Page | Information Removed

SDG&E ELECTRIC UNDERGROUND CONSTRUCTION STANDARDS

BOX PAD W/ TEMPORARY COVER FOR
PME 9, 10, 11 AND 2 SIDED TRAYER SWITCHES

UG3423.2

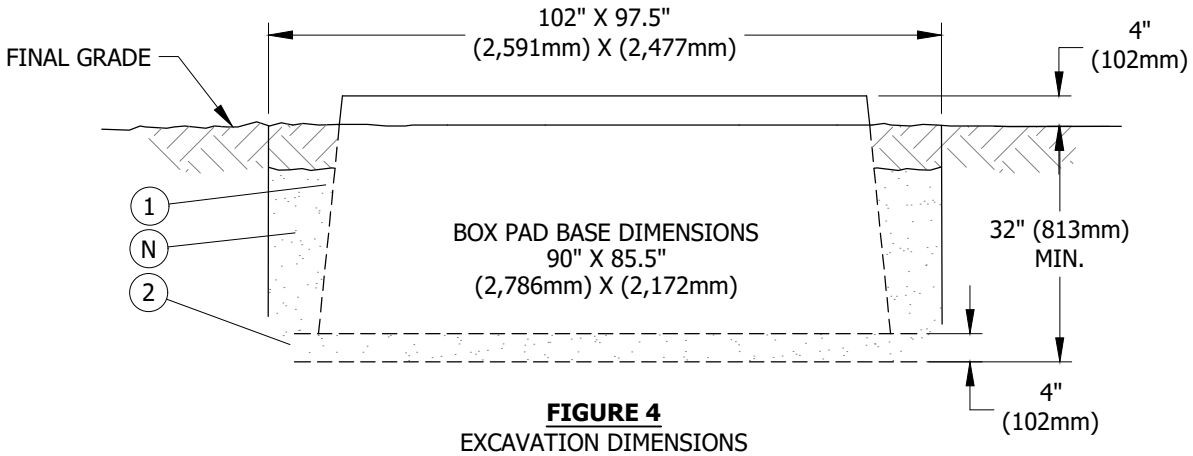

FIGURE 4
EXCAVATION DIMENSIONS

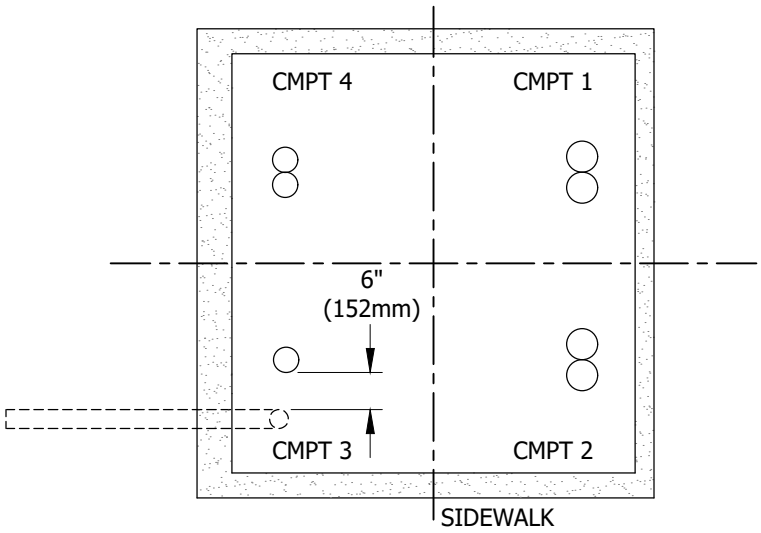

FIGURE 5

TABLE OF CONTENTS

© 1998 - 2020 San Diego Gas & Electric Company. All rights reserved. Removal of this copyright notice without permission is not permitted under law.

REV	CHANGE	DR	BY	DSN	APV	DATE	REV	CHANGE	DR	BY	DSN	APV	DATE
C	FORMATTING	EDM	JIK	-	-	11/5/2020	F						
B	EDITORIAL CHANGES	-	GW	JS	CZH	9/4/2018	E						
A	REVISION	-	-	-	-	2/5/2014	D						

X Indicates Latest Revision | Completely Revised | New Page | Information Removed

SDG&E ELECTRIC UNDERGROUND CONSTRUCTION STANDARDS

BOX PAD W/ TEMPORARY COVER FOR
PME 9, 10, 11 AND 2 SIDED TRAYER SWITCHES

UG3423.3

TABLE 1

CONDUIT COMBINATIONS				
SWITCH TYPE	**CMPT #1**	**CMPT #2**	**CMPT #3**	**CMPT #4**
PME-9	5" (127mm) (QTY 1) + 2" (51mm) THRU 5" (127mm) (QTY 1) TOTAL QTY = 2		4" (102mm) OR 5" (127mm) (QTY 1) + 3" (76mm) FOR SCADA ANTENNA ONLY (QTY 1) TOTAL QTY = 2	4" (102mm) OR 5" (127mm) (QTY 2) TOTAL QTY = 2
PME-10 (II)			5" (127mm) (QTY 2) + 3" (76mm) FOR SCADA ANTENNA ONLY (QTY 1) TOTAL QTY = 3	5" (127mm) (QTY 1) + 2" (51mm) THRU 5" (127mm) (QTY 1) TOTAL QTY = 2
TRAYER 2-SIDED 4-WAY (II)				
PME-11			4" (102mm) OR 5" (127mm) (QTY 1) + 3" (76mm) FOR SCADA ANTENNA ONLY (QTY 1) TOTAL QTY = 2	



FIGURE 6
TEMPORARY 3423 PME AND TRAYER PAD COVER INSTALLATION (O)(III)(IV)

TABLE OF CONTENTS

© 1998 - 2020 San Diego Gas & Electric Company. All rights reserved. Removal of this copyright notice without permission is not permitted under law.

REV	CHANGE	DR	BY	DSN	APV	DATE	REV	CHANGE	DR	BY	DSN	APV	DATE
C	FORMATTING	EDM	JIK	-	-	11/5/2020	F						
B	EDITORIAL CHANGES	-	GW	JS	CZH	9/4/2018	E						
A	REVISION	-	-	-	-	2/5/2014	D						

INSTALLATION:

CONDUIT:

(A) INSTALL CONDUITS AND TERMINATE THEM NOT LESS THAN 3 INCHES (76mm) ABOVE THE GRAVEL BASE.

(B) DO NOT CUT THE 90-DEGREE ELBOWS ON CURVE.

(C) STUB ONE 3-INCH (76mm) CONDUIT FROM CMPT #3, 4 FEET (1,219mm) FROM THE BOTTOM FLANGE OF BOX PAD FOR FUTURE SCADA ANTENNA.

D. NO MORE THAN TWO CONDUITS MAY BE INSTALLED IN COMPARTMENTS 1, 2 AND 4 FOR CABLE PULLING. NO ADDITIONAL CONDUITS MAY BE INSTALLED IN COMPARTMENTS 3.

(E) WHEN TWO CONDUITS ARE INSTALLED IN ONE COMPARTMENT, PLACE CONDUITS SIDE BY SIDE CENTERED ON THE APPROPRIATE DIMENSION.

(F) COMPLETELY SLURRY ENCASE ALL 5-INCH 90-DEGREE BENDS TO WITHIN 7 INCHES OF THE FINISH CUT OF THE CONDUIT.

BOX PAD:

G. ESTABLISH THE BOX PAD LOCATION PAYING PARTICULAR ATTENTION TO FOREIGN UTILITY PLACEMENTS. RELOCATING THE BOX REQUIRES APPROVAL FROM PROJECT MANAGEMENT. WHEN INSTALLING ADJACENT TO NEW OR EXISTING HANDHOLES ALLOW 17 FEET MINIMUM FROM THE CLOSEST EDGE OF HANDHOLE TO THE CENTERLINE OF THE BOX PAD.

H. MARK OUT DIMENSIONS FOR THE EXCAVATION WIDTH AND LENGTH PER DRAWING BELOW. THE WIDTH, AND LENGTH DIMENSIONS GIVEN, ALLOW AN EXTRA 12 INCHES (305mm) FOR SETTING BOX PAD.

(J) ADD 4 INCHES (102mm) OF GRAVEL TO BOTTOM OF EXCAVATION AND THEN COMPACT THIS MATERIAL BY HAND OR MACHINE.

K. PLACE THE BOX PAD IN THE EXCAVATION WITH THE SHORTEST SIDE OF THE BOX PAD PARALLEL TO AND 15 INCHES (381mm) FROM THE BACK EDGE OF THE SIDEWALK.

(L) LEVEL BOX PAD.

M. SET THE TOP SURFACE OF THE BOX PAD 4 INCHES (102mm) ABOVE FINAL GRADE.

(N) BACKFILL THE OUTSIDE WITH ONE SACK SLURRY. STOP SLURRY 6 INCHES (152mm) FROM FINISH GRADE, CONTINUE TO BACKFILL WITH NATIVE SOIL TO FINISH GRADE.

(O) **TEMPORARY COVER INSTALLATION:**

1. TEMPORARY COVERS WILL FIT ALL 3423 BOX PADS CURRENTLY PURCHASED.
2. PLACE COVER ON PAD, CENTER/ALIGN COVER ON BOX PAD FOR DRILLING.
3. USE A 5/16-INCH DRILL BIT AND DRILL MOTOR, DRILL THROUGH COVER AND BOX PAD.
4. INSTALL 4 SELF-TAPPING BOLTS (S152716 (X)) WITH 4 WASHERS (S800160).
5. TIGHTEN BOLTS BY HAND WITH SOCKET AND RATCHET, DO NOT OVER TORQUE.

BILL OF MATERIALS:

ITEM	DESCRIPTION	WEIGHT (LBS)	QUANTITY	STANDARD PAGE	STOCK NUMBER	DESIGN UNITS
1	PAD, BOX, 78" X 73" X 32" (1,981mm X 1,854mm X 813mm)	200 (91 KG)	1	--	S514028	3423BP
2	GRAVEL, 3/8" - 3/4"	--	AS REQ'D	--	S601600	--
3	COVER, TEMPORARY, 77" X 71" X 1 1/2" (1,956mm X 1,803mm X 38mm)	150 (68 KG)	1	--	S286810	PMECOV
4	BOLT, SIMPSON STRONGTIE, 3/8" X 4"	--	4	--	S152716 (X)	--
5	WASHER, 3/8"	--	4	--	S800160	--

TABLE OF CONTENTS

© 1998 - 2020 San Diego Gas & Electric Company. All rights reserved. Removal of this copyright notice without permission is not permitted under law.

REV	CHANGE	DR	BY	DSN	APV	DATE	REV	CHANGE	DR	BY	DSN	APV	DATE
C	FORMATTING	EDM	JIK	-	-	11/5/2020	F						
B	EDITORIAL CHANGES	-	GW	JS	CZH	9/4/2018	E						
A	REVISION	-	-	-	-	2/5/2014	D						

X Indicates Latest Revision | Completely Revised | New Page | Information Removed

SDG&E ELECTRIC UNDERGROUND CONSTRUCTION STANDARDS

BOX PAD W/ TEMPORARY COVER FOR PME 9, 10, 11 AND 2 SIDED TRAYER SWITCHES

UG3423.5

NOTES:

(I) APPEARANCE AND DIMENSIONS MAY VARY SLIGHTLY BETWEEN MANUFACTURERS.

(II) WHEN ONLY THREE OF THE FOUR SWITCH POSITIONS WILL BE UTILIZED, PULL CABLES IN COMPARTMENTS 1, 2 AND 4 FIRST.

(III) ALL PARTIES INCLUDING APPLICANT INSTALLERS, CONTRACT CONSTRUCTION CREWS AND SDG&E CREWS THAT INSTALL THE PAD 3423 ARE REQUIRED TO INSTALL A TEMPORARY PAD COVER AT ALL PME 9, 10 AND 11, AND 2-SIDED TRAYER SWITCH LOCATIONS. THE ONLY EXCEPTION TO THIS STANDARD APPLICATION IS THAT THE SWITCH SHALL BE INSTALLED ON THE PAD THE SAME DAY AFTER THE PAD IS INSTALLED.

(IV) WHEN TEMPORARY COVERS ARE REMOVED, THEY SHALL BE RETURNED TO THE DISTRICT OF RECORD AND CREDITED BACK AS THE PAD COVER IS REUSABLE FOR OTHER FUTURE INSTALLATIONS.

(X) THIS ITEM IS EXEMPT.

REFERENCE:

a. SEE UG3211.3 FOR INSTALLATION OF IDENTIFICATION TAG.

b. SEE UG3365.2 FOR SLURRY BACKFILL.

c. SEE UG3480, UG3481, UG3482 & UG3483 FOR MINIMUM OPERATING AND CLEARANCE REQUIREMENTS.

d. SEE UG3486 & UG3487 FOR RETAINING WALL REQUIREMENTS AND CLEARANCES FROM REVERSE SUBGRADE RETAINING WALLS.

(e) SEE UG4510 FOR TRENCH GROUND WIRE.

TABLE OF CONTENTS

© 1998 - 2020 San Diego Gas & Electric Company. All rights reserved. Removal of this copyright notice without permission is not permitted under law.

REV	CHANGE	DR	BY	DSN	APV	DATE	REV	CHANGE	DR	BY	DSN	APV	DATE
C	FORMATTING	EDM	JIK	-	-	11/5/2020	F						
B	EDITORIAL CHANGES	-	GW	JS	CZH	9/4/2018	E						
A	REVISION	-	-	-	-	2/5/2014	D						

X Indicates Latest Revision | Completely Revised | New Page | Information Removed

SDG&E ELECTRIC UNDERGROUND CONSTRUCTION STANDARDS

BOX PAD W/ TEMPORARY COVER FOR
PME 9, 10, 11 AND 2 SIDED TRAYER SWITCHES

UG3423.6

SCOPE: THIS STANDARD SHOWS REQUIREMENTS FOR INSTALLING A 3425 THREE-PHASE PAD FOR DEADFRONT TRANSFORMER APPLICATION THROUGH 300 KVA. ALSO FOR 3750 KVA HHR DEADFRONT BOOSTER TRANSFORMER AND PRIMARY METER CABINET.

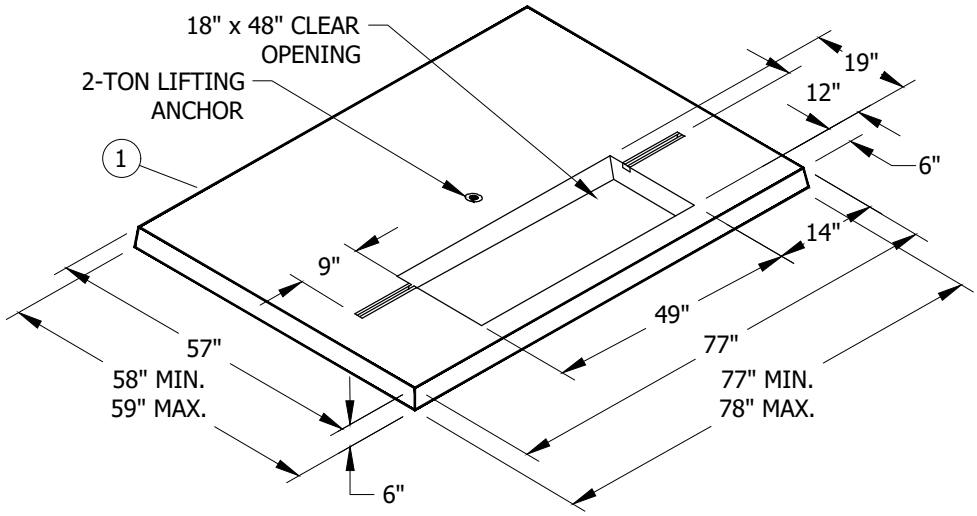

FIGURE 1

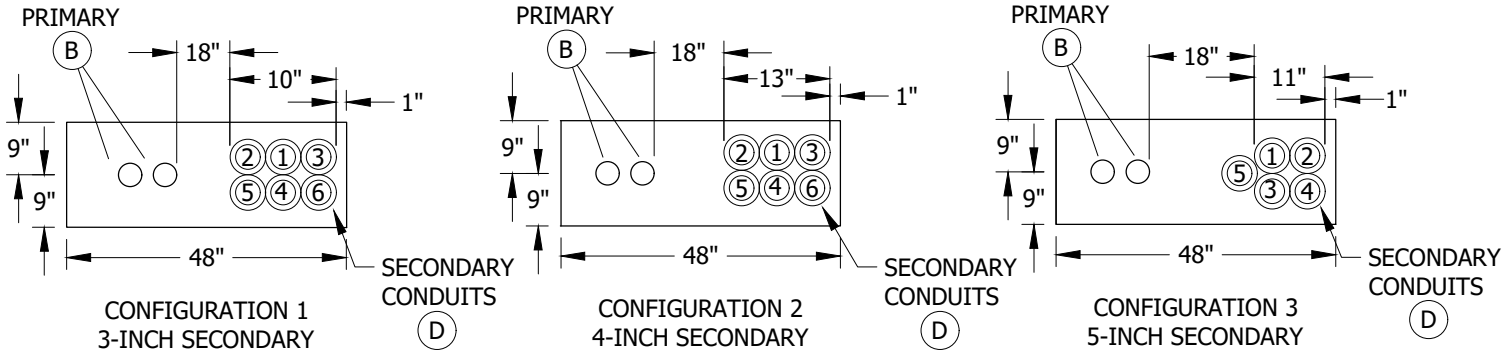

FIGURE 2
MAXIMUM PRIMARY CONDUITS ALLOWED (B)(C)(D)(E)
TWO RUNS OF 4-INCH (EB OR DB)

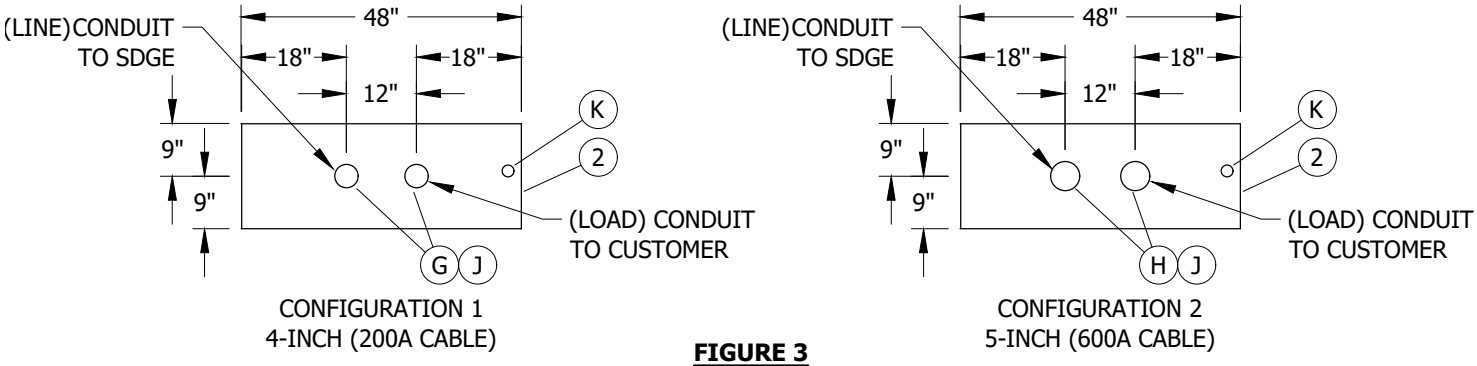

FIGURE 3
MAXIMUM OF TWO PRIMARY CONDUITS ALLOWED FOR PRIMARY METER CABINET

© 1998 - 2020 San Diego Gas & Electric Company. All rights reserved. Removal of this copyright notice without permission is not permitted under law.

REV	CHANGE	DR	BY	DSN	APV	DATE	REV	CHANGE	DR	BY	DSN	APV	DATE
C	FORMATTING	EDM	JIK	-	-	11/5/2020	F						
B	EDITORIAL CHANGES	-	GW	JS	CZH	9/4/2018	E						
A	REVISION	-	-	-	-	6/9/2005	D						

X Indicates Latest Revision | Completely Revised | New Page | Information Removed

SDG&E ELECTRIC UNDERGROUND CONSTRUCTION STANDARDS

THREE-PHASE DEADFRONT TRANSFORMER PAD INSTALLATION 3425

UG3425.1

TABLE OF CONTENTS

INSTALLATION:

(A) 1-INCH EARTH IN THE BOTTOM OF THE TRENCH IS REQUIRED TO PREVENT DAMAGE FROM ROCKS, SAGS, AND POCKETS.

(B) PLACE ALL PRIMARY AND SECONDARY CONDUITS WITHIN THE PAD OPENING AS SHOWN IN FIGURES 2 & 3. TERMINATE PRIMARY AND SECONDARY CONDUITS FLUSH WITH THE TOP OF THE PAD. DO NOT CUT INTO THE CURVED PORTION OF THE ELBOWS. RADIUS OF CURVATURE IS 36-INCH MINIMUM FOR 3-INCH, 4-INCH AND 5-INCH CONDUITS.

(C) THE CONDUIT CONFIGURATION REQUIREMENT BETWEEN TERMINATING POINTS LIMITS THE SECONDARY CONDUIT CONFIGURATION TO 2 WIDE X 3 DEEP OR 3 WIDE X 2 DEEP (NO ONE CONDUIT IS TO BE COMPLETELY SURROUNDED ON ALL FOUR SIDES BY OTHER CONDUITS), USING SPACERS AND 1 SACK CONCRETE SLURRY BACKFILL. CONDUITS MAY ALSO BE INSTALLED SIDE BY SIDE ON THE BOTTOM OF THE TRENCH WITHOUT SPACERS OR CONCRETE SLURRY (FOUR CONDUITS MAX.). IN THE TRANSITION AREA WHERE THE CONDUITS FROM THE BOTTOM OF THE TRENCH START TOWARD THE SURFACE (THE STRAIGHT PORTION BY THE 90° BEND), SPACERS MAY BE REQUIRED TO ALLOW THE 90° BENDS TO ENTER STRAIGHT INTO THE PAD OPENING. AT THE SURFACE POINT, THE CONDUITS MAY BE BUNDLED TOGETHER. USE SDG&E APPROVED BASE, SHADING AND BACKFILL.

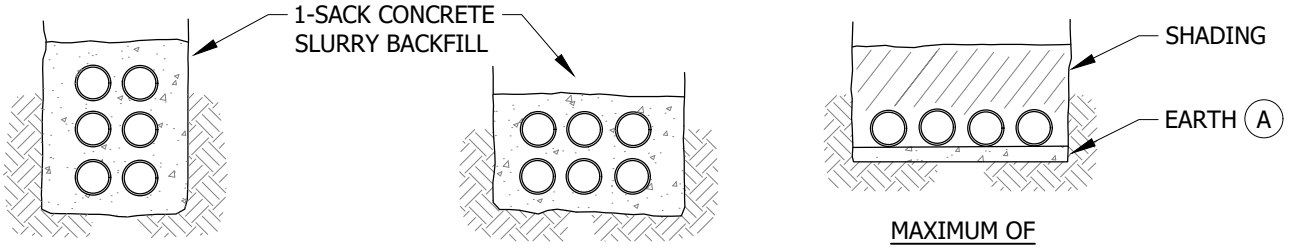

FIGURE 4 (C)

(D) ANY COMBINATION OF 3, 4 OR 5-INCH SECONDARY CONDUITS MAY BE USED, PROVIDED THEY DO NOT EXCEED THE TOTAL OF 6 OR THE MAXIMUM OF EACH SIZE CONDUIT AS SPECIFIED IN FIGURE 2. AN EXCEPTION WOULD BE WHEN THE TRANSFORMER FEEDS ONE CUSTOMER WITH A 2000A MAIN WHICH REQUIRES FIVE 5-INCH CONDUITS. NO FUTURE CUSTOMERS ARE ALLOWED IN THIS INSTALLATION. TWO EXTRA 1-INCH OR TWO EXTRA 2-INCH CONDUITS MAY BE ADDED TO SERVE STREET LIGHTS, RECREATION BUILDINGS, ETC.

(E) WHEN NUMBER OF REQUIRED CONDUITS IS LESS THAN THE TOTAL ALLOWABLE SHOWN IN FIGURE 2, INSTALL IN NUMBERED SEQUENCE AS SHOWN.

F. IN SOFT SOILS A CONCRETE BACKFILL (1-SACK MIX.) IS REQUIRED UNDER THE PAD, 12 INCHES BEYOND THE SIDE EDGES OF PAD AND 12 INCHES DEEP.

(G) MAXIMUM NUMBER OF CONDUITS ALLOWED FOR 200A APPLICATION IS TWO 4-INCH PRIMARY CONDUITS. NO COMBINATION OF DIFFERENT SIZE PRIMARY CONDUITS ALLOWED. NO SECONDARY CONDUITS ALLOWED.

(H) MAXIMUM NUMBER OF CONDUITS ALLOWED FOR 600A APPLICATION IS TWO 5-INCH PRIMARY CONDUITS. NO COMBINATION OF DIFFERENT SIZE PRIMARY CONDUITS ALLOWED. NO SECONDARY CONDUITS ALLOWED.

(J) PLACE PRIMARY CONDUITS WITHIN THE PAD OPENING AS SHOWN IN FIGURES 2 & 3. TERMINATE PRIMARY CONDUITS 3 INCHES ABOVE THE BOTTOM OF 3311 HANDHOLE. 3311 HANDHOLE TO BE INSTALLED WITH PRIMARY METER APPLICATIONS. DO NOT CUT THE CURVED PORTION OF CONDUIT ELBOWS. RADIUS OF CURVATURE IS 36 INCHES MINIMUM FOR 4-INCH OR 5-INCH CONDUITS.

(K) WHEN METER WILL NOT BE ATTACHED TO PRIMARY METER CABINET, INSTALL 1-INCH CONDUIT TO REMOTE METER LOCATION. 1-INCH CONDUIT NOT REQUIRED WHEN METER ATTACHED.

TABLE OF CONTENTS

© 1998 - 2020 San Diego Gas & Electric Company. All rights reserved. Removal of this copyright notice without permission is not permitted under law.

REV	CHANGE	DR	BY	DSN	APV	DATE	REV	CHANGE	DR	BY	DSN	APV	DATE
C	FORMATTING	EDM	JIK	-	-	11/5/2020	F						
B	EDITORIAL CHANGES	-	GW	JS	CZH	9/4/2018	E						
A	REVISION	-	-	-	-	6/9/2005	D						

BILL OF MATERIALS:

ITEM	DESCRIPTION	WEIGHT (LBS)	QUANTITY	STANDARD PAGE	STOCK NUMBER	DESIGN UNITS	MACRO UNITS
1	PAD	1,900 MAX.	AS REQ'D	--	S513998	3425-3	3425-M
2	HANDHOLE, 3311	--	AS REQ'D	--	S162660	3311-S	

NOTES:

I. TRANSFORMER COOLING FINS MAY OVERHANG REAR OF PAD BY 6 INCHES.

II. IF NUMBER OF SECONDARY CONDUITS IS GREATER THAN MAXIMUM SHOWN, USE PAD PER UG3426 OR UG3427.

III. TRANSFORMER PAD MAY NOT BE POURED IN PLACE. USE PRECAST PADS ONLY.

REFERENCE:

a. SEE UG3211.3 FOR PAD IDENTIFICATION.

b. SEE UG3370 OR 3371 FOR TRENCH, UTILITY POSITIONING, SHADING AND BACKFILL REQUIREMENTS.

c. SEE UG3376 FOR CONCRETE SLURRY.

d. SEE UG3479 FOR TRANSFORMER BARRIER PROTECTION.

e. SEE UG3480, UG3481, UG3482 & UG3483 FOR MINIMUM OPERATING AND CLEARANCE REQUIREMENTS (PAD PLACEMENT).

f. SEE UG3484 FOR PAD INSTALLATION OF PAD MOUNTED EQUIPMENT.

g. SEE UG3486 & UG3487 FOR RETAINING WALL REQUIREMENTS AND CLEARANCES FROM REVERSE SUBGRADE RETAINING WALLS.

h. SEE UG3489 FOR RETAINING WALLS.

i. SEE UG3751 FOR TRANSFORMER INSTALLATION.

j. SEE UG4512 FOR EQUIPMENT GROUNDING.

k. SEE UG4514 FOR GROUNDING TELCO CONDUCTOR IN PAD MOUNTED EQUIPMENT.

TABLE OF CONTENTS

© 1998 - 2020 San Diego Gas & Electric Company. All rights reserved. Removal of this copyright notice without permission is not permitted under law.

REV	CHANGE	DR	BY	DSN	APV	DATE	REV	CHANGE	DR	BY	DSN	APV	DATE
C	FORMATTING	EDM	JIK	-	-	11/5/2020	F						
B	EDITORIAL CHANGES	-	GW	JS	CZH	9/4/2018	E						
A	REVISION	-	-	-	-	6/9/2005	D						

SCOPE: THIS STANDARD SHOWS REQUIREMENTS FOR INSTALLING A 3426 THREE-PHASE PAD FOR DEADFRONT TRANSFORMER APPLICATION THROUGH 1000 KVA.

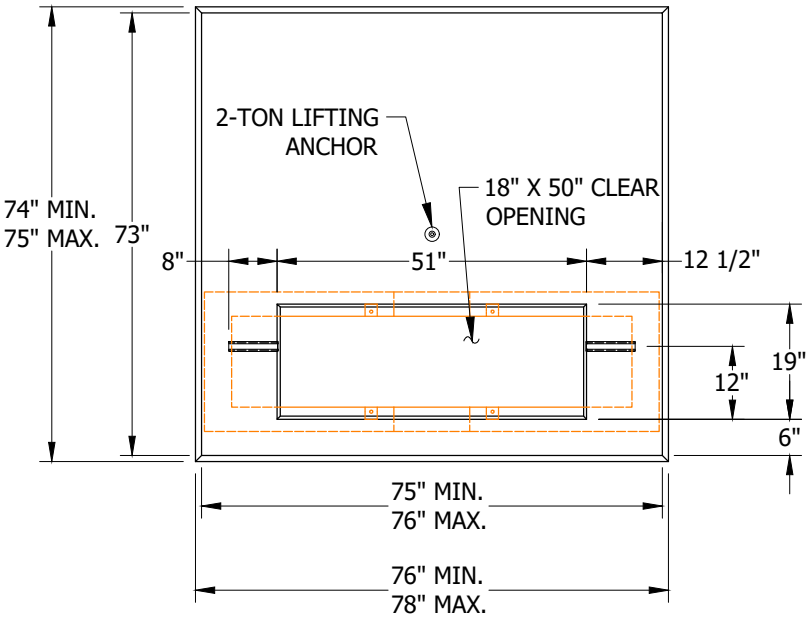

FIGURE 1
PAD AND SUBSTRUCTURE
TOP VIEW

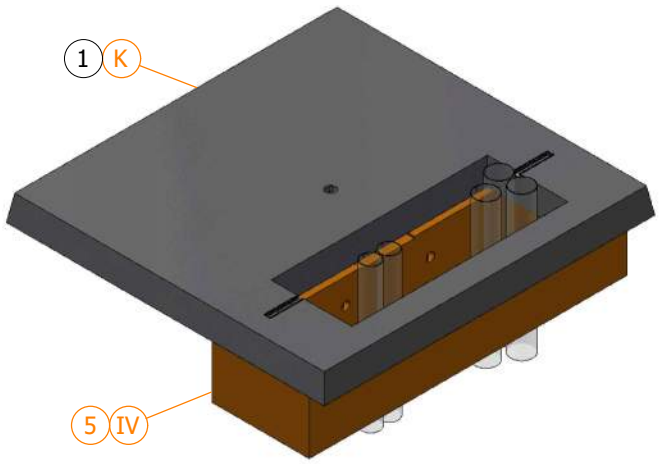

FIGURE 1
PAD AND SUBSTRUCTURE
ISO VIEW

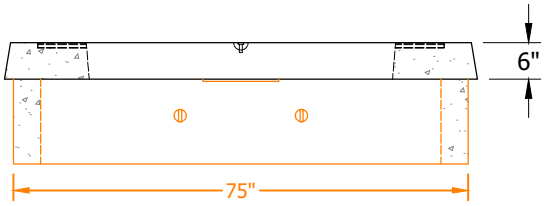

FIGURE 1
PAD AND SUBSTRUCTURE
FRONT VIEW

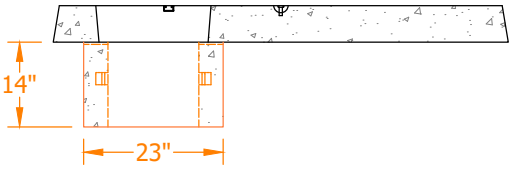

FIGURE 1
PAD AND SUBSTRUCTURE
SIDE VIEW

TABLE OF CONTENTS

© 1998 - 2023 San Diego Gas & Electric Company. All rights reserved. Removal of this copyright notice without permission is not permitted under law.

REV	CHANGE	DR	BY	DSN	APV	DATE	REV	CHANGE	DR	BY	DSN	APV	DATE
C	FORMATTING	EDM	JIK	-	-	11/5/2020	F						
B	EDITORIAL CHANGES	-	AW	JS	CZH	7/1/2018	E						
A	REVISION	-	-	-	-	1/1/1998	D	DRAWING UPDATE	EDM	ADW	EJA	KRG	09/20/2023

X Indicates Latest Revision | Completely Revised | New Page | Information Removed

SDG&E ELECTRIC UNDERGROUND CONSTRUCTION STANDARDS

THREE-PHASE DEADFRONT TRANSFORMER PAD INSTALLATION 3426

UG3426.1

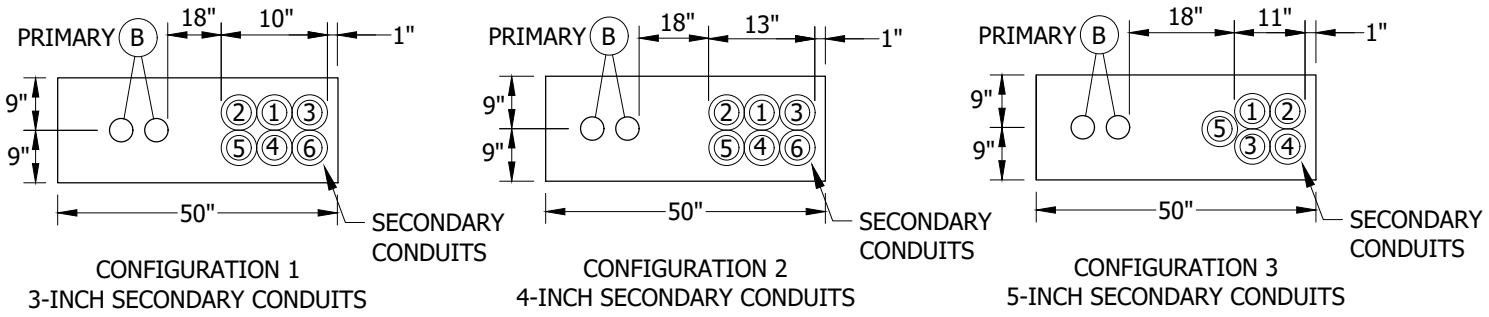

FIGURE 2
MAXIMUM PRIMARY CONDUITS ALLOWED (B)(C)(D)(E)
TWO RUNS OF 4-INCH (EB OR DB)

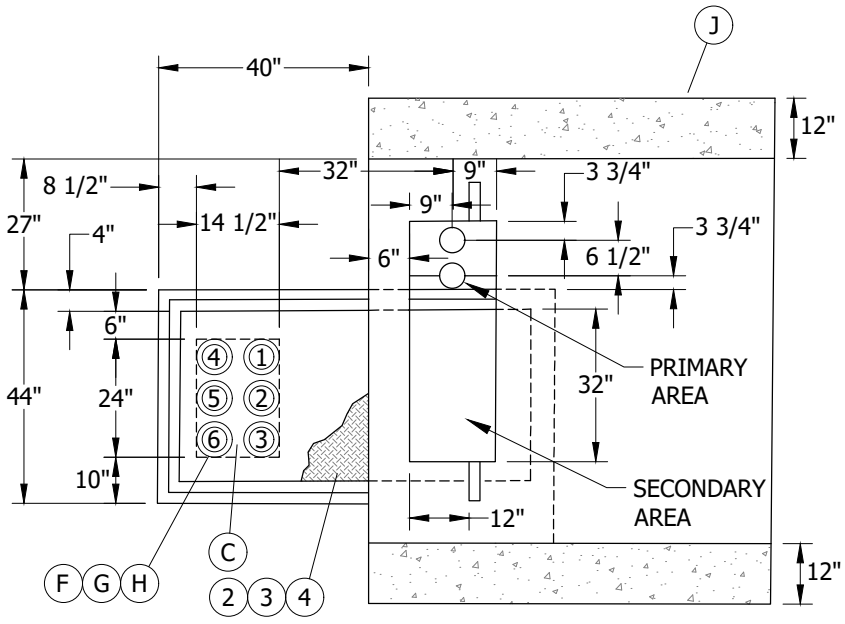

FIGURE 3
MAXIMUM PRIMARY CONDUITS ALLOWED
TWO RUNS OF 4-INCH (EB OR DB)

© 1998 - 2023 San Diego Gas & Electric Company. All rights reserved. Removal of this copyright notice without permission is not permitted under law.

REV	CHANGE	DR	BY	DSN	APV	DATE	REV	CHANGE	DR	BY	DSN	APV	DATE
C	FORMATTING	EDM	JIK	-	-	11/5/2020	F						
B	EDITORIAL CHANGES	-	AW	JS	CZH	7/1/2018	E						
A	REVISION	-	-	-	-	1/1/1998	D	DRAWING UPDATE	EDM	ADW	EJA	KRG	09/20/2023

X Indicates Latest Revision | Completely Revised | New Page | Information Removed

TABLE OF CONTENTS

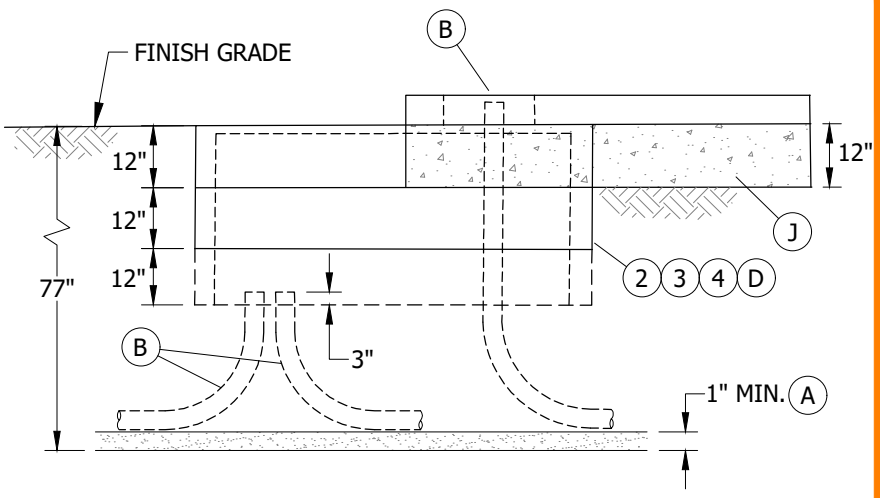

FIGURE 4
TYPICAL INSTALLATION FOR SIX 5-INCH
SECONDARY CONDUITS

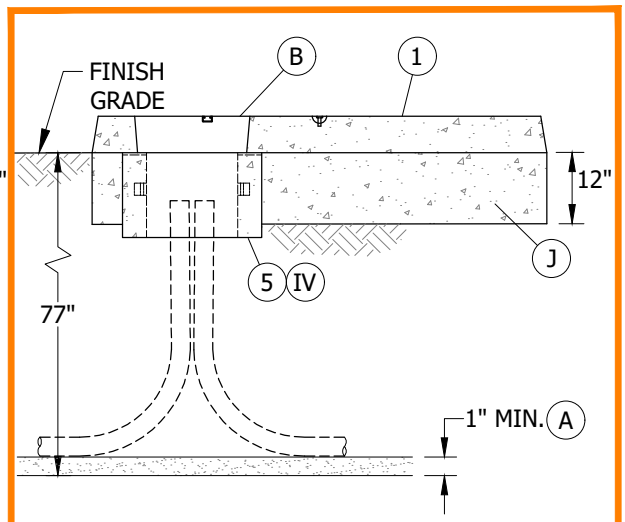

FIGURE 5
TYPICAL INSTALLATION FOR
THREE 5-INCH SECONDARY CONDUITS

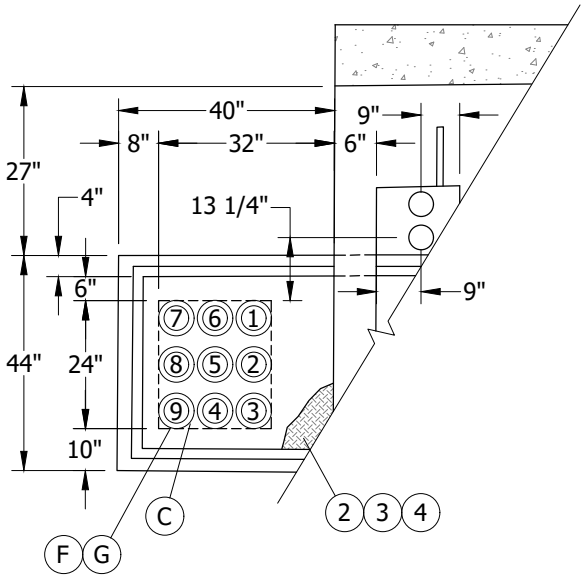

DETAIL 1
TYPICAL INSTALLATION FOR
NINE 3-INCH OR NINE 4-INCH
SECONDARY CONDUITS

TABLE OF CONTENTS

© 1998 - 2023 San Diego Gas & Electric Company. All rights reserved. Removal of this copyright notice without permission is not permitted under law.

REV	CHANGE	DR	BY	DSN	APV	DATE	REV	CHANGE	DR	BY	DSN	APV	DATE
C	FORMATTING	EDM	JIK	-	-	11/5/2020	F						
B	EDITORIAL CHANGES	-	AW	JS	CZH	7/1/2018	E						
A	REVISION	-	-	-	-	1/1/1998	D	DRAWING UPDATE	EDM	ADW	EJA	KRG	09/20/2023

INSTALLATION:

(A) 1-INCH EARTH IN THE BOTTOM OF TRENCH IS REQUIRED TO PREVENT DAMAGE FROM ROCKS, SAGS AND POCKETS.

(B) PLACE ALL SECONDARY CONDUITS WITHIN THE PAD OR HANDHOLE OPENING AS SHOWN IN FIGURES 2 THROUGH 5. TERMINATE PRIMARY OR SECONDARY CONDUITS FLUSH WITH THE TOP OF THE PAD. WHEN A HANDHOLE IS REQUIRED FOR SECONDARY CONDUITS, TERMINATE THEM NOT LESS THAN 3 INCHES ABOVE BOTTOM OF HANDHOLE. DO NOT CUT INTO THE CURVED PORTION OF THE ELBOWS. RADIUS OF CURVATURE IS 36 INCHES MINIMUM FOR 3-INCH, 4-INCH AND 5-INCH CONDUITS.

(C) THE CONDUIT CONFIGURATION REQUIREMENT BETWEEN TERMINATING POINTS LIMITS THE SECONDARY CONDUIT CONFIGURATION TO TWO WIDE X FIVE DEEP OR FIVE WIDE X TWO DEEP (NO ONE CONDUIT IS TO BE COMPLETELY SURROUNDED ON ALL FOUR SIDES BY OTHER CONDUITS), USING SPACERS AND ONE SACK CONCRETE SLURRY BACKFILL. CONDUITS MAY ALSO BE INSTALLED SIDE BY SIDE ON THE BOTTOM OF THE TRENCH WITHOUT SPACERS OR CONCRETE SLURRY (FOUR CONDUITS MAX.). IN THE TRANSITION AREA WHERE THE CONDUITS FROM THE BOTTOM OF THE TRENCH START TOWARD THE SURFACE (THE STRAIGHT PORTION BY THE 90° BEND), SPACERS MAY BE REQUIRED TO ALLOW THE 90° BENDS TO ENTER STRAIGHT INTO THE PAD OPENING. AT THE SURFACE POINT, THE CONDUITS MAY BE BUNDLED TOGETHER. USE SDG&E APPROVED BASE, SHADING AND BACKFILL.

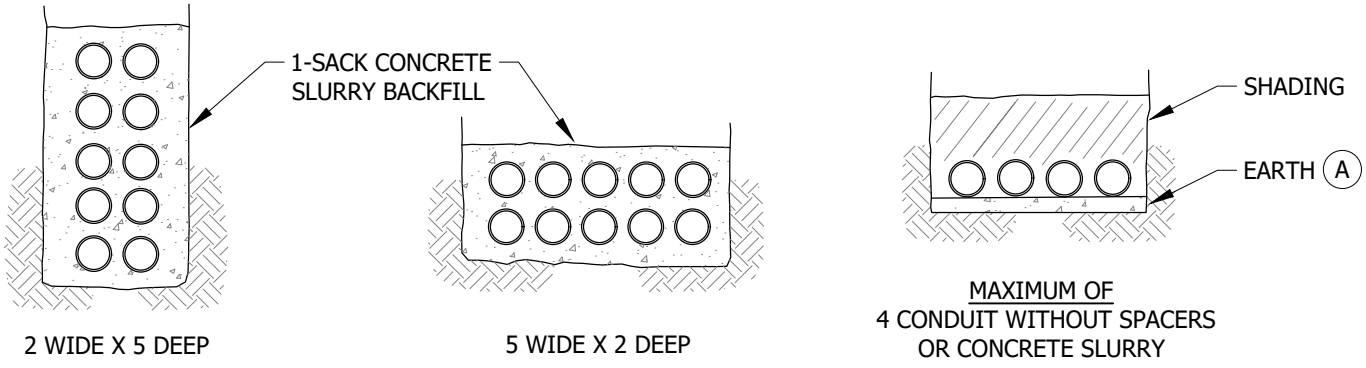

FIGURE 6 (C)

(D) THE TOP AND INTERMEDIATE 3314 HANDHOLE SECTIONS MAY BE ELIMINATED WHEN INSTALLATION SERVES ONLY ONE CUSTOMER ULTIMATELY AND CONDUIT REQUIREMENTS DO NOT EXCEED WHAT IS SHOWN IN FIGURE 2 OR AS SPECIFIED IN NOTE E. IF MORE THAN FIVE 5-INCH CONDUITS ARE USED (REGARDLESS OF THE NUMBER OF CUSTOMERS), ONE TOP SECTION AND TWO INTERMEDIATE SECTIONS ARE REQUIRED.

(E) **FOR SECONDARY INSTALLATION WITHOUT A HANDHOLE (ULTIMATELY ONE CUSTOMER ONLY),** ANY COMBINATION OF 3-INCH, 4-INCH OR 5-INCH SECONDARY CONDUITS MAY BE USED PROVIDED THEY DO NOT EXCEED A TOTAL OF SIX OR THE TOTAL OF EACH SIZE CONDUIT SHOWN IN FIGURE 2. TWO EXTRA 1-INCH OR TWO EXTRA 2-INCH CONDUITS MAY BE ADDED TO SERVE STREET LIGHT, RECREATION BUILDINGS, ETC.

(F) **FOR SECONDARY INSTALLATIONS IN A HANDHOLE**, ANY COMBINATION OF 3-INCH, 4-INCH, OR 5-INCH SECONDARY CONDUITS MAY BE USED, PROVIDED THEY DO NOT EXCEED THE TOTAL OF NINE OR THE MAXIMUM OF EACH SIZE CONDUIT (SEE FIGURES 3 & 4). TWO EXTRA 1-INCH OR TWO EXTRA 2-INCH CONDUITS MAY BE ADDED TO SERVE STREET LIGHT, RECREATION BUILDINGS, ETC.

(G) WHEN THE NUMBER OF REQUIRED CONDUITS IS LESS THAN THE TOTAL SHOWN ON THE SKETCHES, INSTALL THE CONDUITS IN NUMBERED SEQUENCE AS SHOWN.

(H) SEE DETAIL 1 FOR ADDITIONAL SECONDARY CONDUIT SIZES.

(J) IN SOFT SOILS A CONCRETE BACKFILL (1-SACK MIX.) IS REQUIRED UNDER THE PAD, 12 INCHES BEYOND THE SIDE EDGES OF PAD AND 12 INCHES DEEP.

(K) PAD MUST HAVE A SUB-STRUCTURE: 3311-S MINIMUM.

TABLE OF CONTENTS

© 1998 - 2023 San Diego Gas & Electric Company. All rights reserved. Removal of this copyright notice without permission is not permitted under law.

REV	CHANGE	DR	BY	DSN	APV	DATE	REV	CHANGE	DR	BY	DSN	APV	DATE
C	FORMATTING	EDM	JIK	-	-	11/5/2020	F						
B	EDITORIAL CHANGES	-	AW	JS	CZH	7/1/2018	E						
A	REVISION	-	-	-	-	1/1/1998	D	DRAWING UPDATE	EDM	ADW	EJA	KRG	09/20/2023

BILL OF MATERIALS:

ITEM	DESCRIPTION	WEIGHT (LBS)	QUANTITY	STANDARD PAGE	STOCK NUMBER	DESIGN UNITS
1	PAD	2,430 MIN. 2,690 MAX.	1	--	S514005	3426B0
2	HANDHOLE SECTION, TOP	--	1	3314	S336210	--
3	HANDHOLE SECTION, INTERMEDIATE	--	2		S336212	--
4	COVER, PARKWAY	--	1		S286843	--
5	BOX, HANDHOLE, 14" X 14" X 66"	986	1	3311	S162660	3311-S

NOTES:

I. TRANSFORMER COOLING FINS MAY OVERHANG REAR OF PAD BY 6 INCHES.

II. IF NUMBER OF SECONDARY CONDUITS IS GREATER THAN MAXIMUM SHOWN, USE PAD 3427. (I)

III. TRANSFORMER PAD MAY NOT BE POURED IN PLACE. USE PRECAST PADS ONLY.

(IV) FOR THREE SECONDARY CONDUITS MAXIMUM

REFERENCE:

a. FOR PAD IDENTIFICATION, SEE UG3211.3.

b. FOR TRENCH, UTILITY POSITIONING, SHADING AND BACKFILL REQUIREMENTS, SEE UG3370 OR UG3371.

c. FOR CONCRETE SLURRY, SHADING AND TYPE OF CONDUIT, SEE UG3376.

d. FOR TRANSFORMER BARRIER PROTECTION, SEE UG3479.

e. FOR MINIMUM OPERATING AND CLEARANCE REQUIREMENTS (PAD PLACEMENT), SEE UG3480, UG3481, UG3482 AND UG3483.

f. FOR PAD INSTALLATION OF PAD MOUNTED EQUIPMENT, SEE UG3484.

g. FOR RETAINING WALL REQUIREMENTS AND CLEARANCES FROM REVERSE SUBGRADE RETAINING WALLS, SEE UG3486 AND UG3487.

h. FOR RETAINING WALLS, SEE UG3489.

i. FOR TRANSFORMER INSTALLATION, SEE UG3751.

j. FOR EQUIPMENT GROUNDING, SEE UG4512.

k. FOR GROUNDING TELCO CONDUCTOR IN PAD MOUNTED EQUIPMENT, SEE UG4514.

(I) SEE UG3427: THREE-PHASE TRANSFORMER PAD INSTALLATION 3427.

TABLE OF CONTENTS

© 1998 - 2023 San Diego Gas & Electric Company. All rights reserved. Removal of this copyright notice without permission is not permitted under law.

REV	CHANGE	DR	BY	DSN	APV	DATE	REV	CHANGE	DR	BY	DSN	APV	DATE
C	FORMATTING	EDM	JIK	-	-	11/5/2020	F						
B	EDITORIAL CHANGES	-	AW	JS	CZH	7/1/2018	E						
A	REVISION	-	-	-	-	1/1/1998	D	DRAWING UPDATE	EDM	ADW	EJA	KRG	09/20/2023

X Indicates Latest Revision | Completely Revised | New Page | Information Removed

SCOPE: THIS STANDARD SHOWS THE REQUIREMENTS FOR INSTALLING A 3427 THREE-PHASE PAD FOR DEADFRONT TRANSFORMER APPLICATION FROM 1,500 KVA THROUGH 2,500 KVA AND 3,000 KVA LIVEFRONT TRANSFORMER.

ATTENTION:

* DEADFRONT TRANSFORMERS BETWEEN 225 KVA & 1,000 KVA MAX. ARE TO BE USED ON THIS PAD WHENEVER THE CONDUIT REQUIREMENTS ARE GREATER THAN THE MAXIMUM SHOWN ON UG3425 OR UG3426. (I)

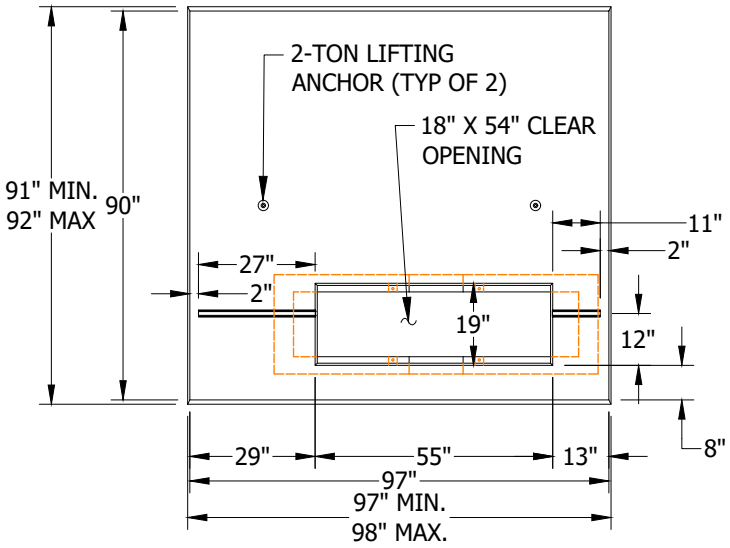

FIGURE 1
PAD AND SUBSTRUCTURE
TOP VIEW

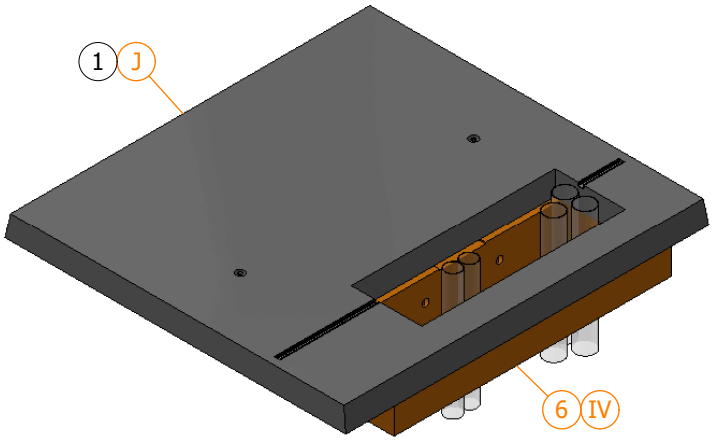

FIGURE 1
PAD AND SUBSTRUCTURE
ISO VIEW

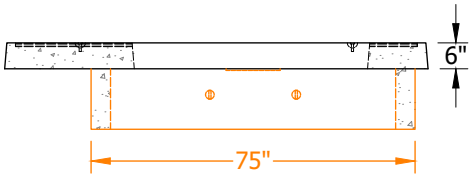

FIGURE 1
PAD AND SUBSTRUCTURE
FRONT VIEW

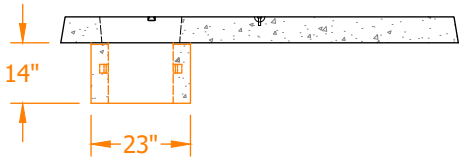

FIGURE 1
PAD AND SUBSTRUCTURE
SIDE VIEW

TABLE OF CONTENTS

© 1998 - 2024 San Diego Gas & Electric Company. All rights reserved. Removal of this copyright notice without permission is not permitted under law.

REV	CHANGE	DR	BY	DSN	APV	DATE	REV	CHANGE	DR	BY	DSN	APV	DATE
C	FORMATTING	EDM	JIK	-	-	11/5/2020	F						
B	EDITORIAL CHANGES	-	AW	JS	CZH	7/1/2018	E						
A	REVISION	-	-	-	-	1/1/2000	D	DRAWING UPDATE	EDM	ADW	EJA	KRG	03/07/2024

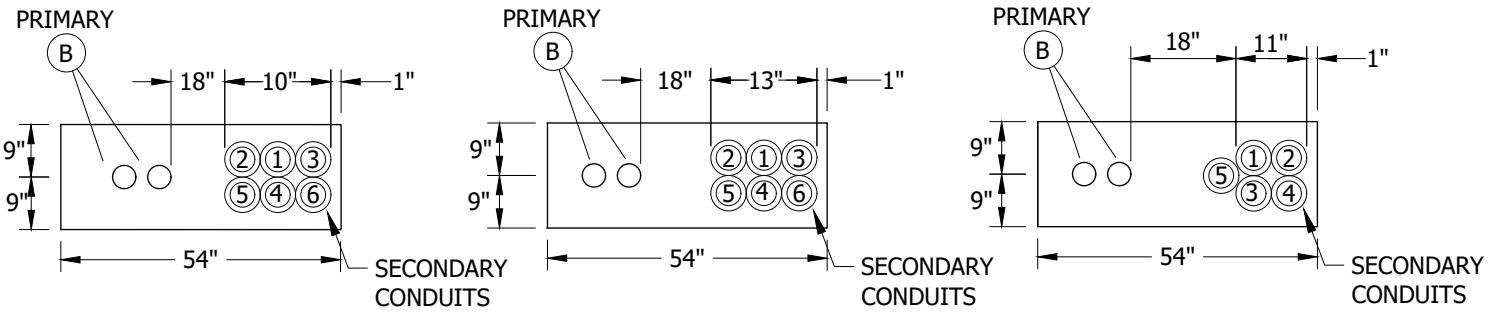

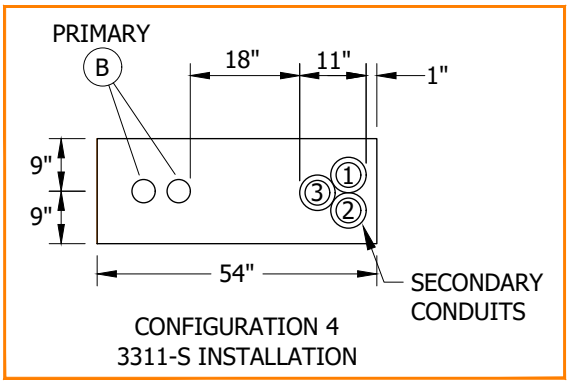

FIGURE 2
MAXIMUM PRIMARY CONDUITS ALLOWED (B)(C)(E)(G)
TWO RUNS OF 4-INCH (EB OR DB)

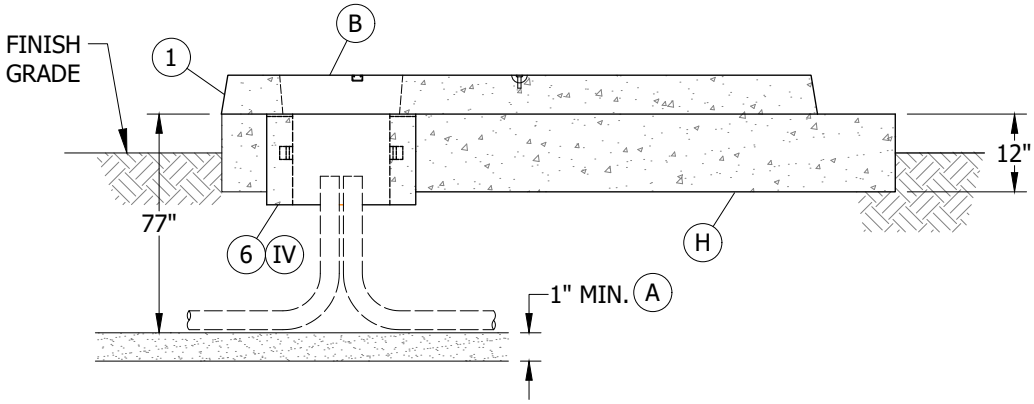

FIGURE 3
TYPICAL INSTALLATION FOR THREE
5-INCH SECONDARY CONDUITS

TABLE OF CONTENTS

© 1998 - 2024 San Diego Gas & Electric Company. All rights reserved. Removal of this copyright notice without permission is not permitted under law.

REV	CHANGE	DR	BY	DSN	APV	DATE	REV	CHANGE	DR	BY	DSN	APV	DATE
C	FORMATTING	EDM	JIK	-	-	11/5/2020	F						
B	EDITORIAL CHANGES	-	AW	JS	CZH	7/1/2018	E						
A	REVISION	-	-	-	-	1/1/2000	D	DRAWING UPDATE	EDM	ADW	EJA	KRG	03/07/2024

X Indicates Latest Revision | Completely Revised | New Page | Information Removed

SDG&E ELECTRIC UNDERGROUND CONSTRUCTION STANDARDS

THREE-PHASE DEADFRONT/LIVEFRONT TRANSFORMER PAD INSTALLATION 3427

UG3427.2

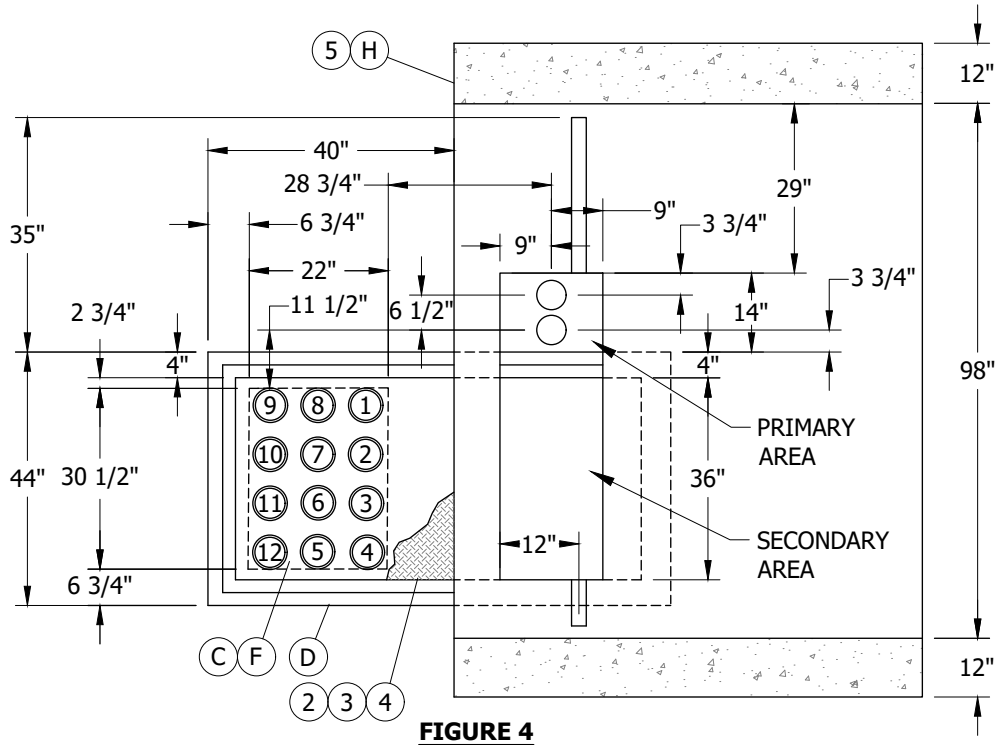

FIGURE 4
MAXIMUM PRIMARY CONDUITS ALLOWED
TWO RUNS OF 4-INCH (EB OR DB)
TOP VIEW

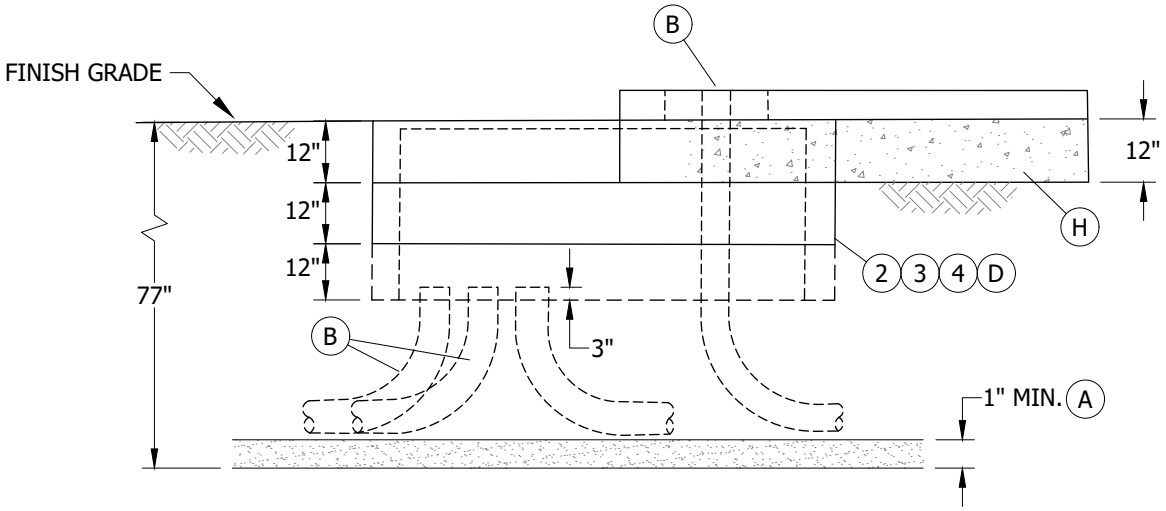

FIGURE 4
MAXIMUM PRIMARY CONDUITS ALLOWED
TWO RUNS OF 4-INCH (EB OR DB)
SIDE VIEW

TABLE OF CONTENTS

© 1998 - 2024 San Diego Gas & Electric Company. All rights reserved. Removal of this copyright notice without permission is not permitted under law.

REV	CHANGE	DR	BY	DSN	APV	DATE	REV	CHANGE	DR	BY	DSN	APV	DATE
C	FORMATTING	EDM	JIK	-	-	11/5/2020	F						
B	EDITORIAL CHANGES	-	AW	JS	CZH	7/1/2018	E						
A	REVISION	-	-	-	-	1/1/2000	D	DRAWING UPDATE	EDM	ADW	EJA	KRG	03/07/2024

X Indicates Latest Revision | Completely Revised | New Page | Information Removed

INSTALLATION:

(A) 1-INCH EARTH IN THE BOTTOM OF THE TRENCH IS REQUIRED TO PREVENT DAMAGE FROM ROCKS, SAGS OR POCKETS.

(B) PLACE ALL SECONDARY CONDUITS WITHIN THE PAD OR HANDHOLE OPENING AS SHOWN IN FIGURES 2 THROUGH 4. TERMINATE PRIMARY OR SECONDARY CONDUITS FLUSH WITH TOP OF THE PAD. WHEN A HANDHOLE IS REQUIRED FOR SECONDARY CONDUITS, TERMINATE THEM NOT LESS THAN 3 INCHES ABOVE BOTTOM OF HANDHOLE. DO NOT CUT INTO THE CURVED PORTION OF THE ELBOWS. RADIUS OF CURVATURE IS 36 INCHES MINIMUM FOR 3-INCH, 4-INCH AND 5-INCH CONDUITS.

(C) THE CONDUIT CONFIGURATION REQUIREMENT BETWEEN TERMINATING POINTS LIMITS THE SECONDARY CONDUIT CONFIGURATION TO TWO WIDE X SIX DEEP OR SIX WIDE X TWO DEEP (NO ONE CONDUIT IS TO BE COMPLETELY SURROUNDED ON ALL FOUR SIDES BY OTHER CONDUITS) USING SPACERS AND 1 SACK CONCRETE SLURRY BACKFILL. CONDUITS MAY ALSO BE INSTALLED SIDE BY SIDE ON THE BOTTOM OF THE TRENCH WITHOUT SPACERS OR CONCRETE SLURRY (FOUR CONDUITS MAX.). IN THE TRANSITION AREA WHERE THE CONDUITS FROM THE BOTTOM OF THE TRENCH START TOWARD THE SURFACE (THE STRAIGHT PORTION BY THE 90° BEND), SPACERS MAY BE REQUIRED TO ALLOW THE 90° BENDS TO ENTER STRAIGHT INTO THE PAD OPENING. AT THE SURFACE POINT, THE CONDUITS MAY BE BUNDLED TOGETHER. USE SDG&E APPROVED BASE, SHADING AND BACKFILL.

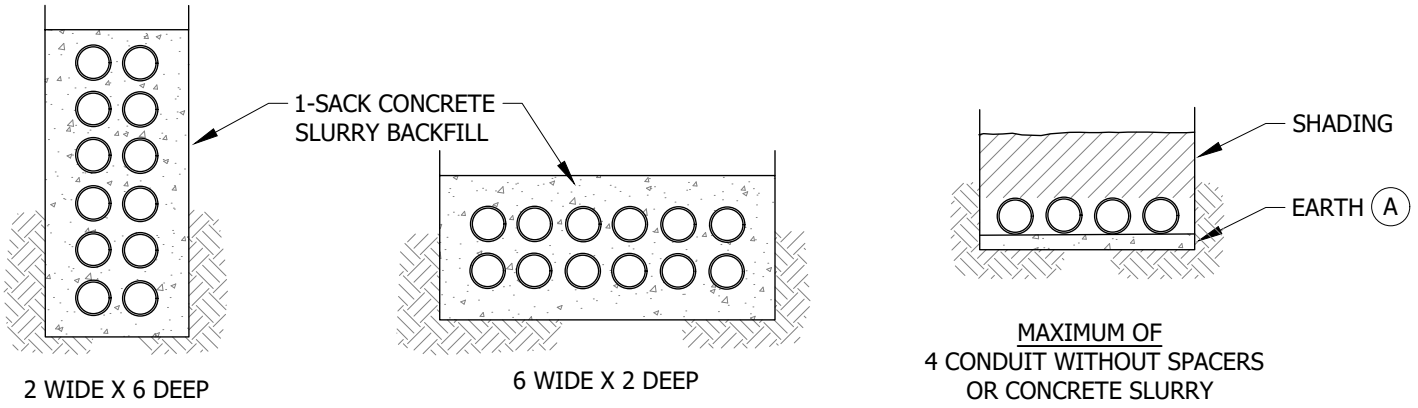

FIGURE 5 (C)

(D) THE 3314 HANDHOLE SECTIONS ARE NOT REQUIRED WHEN INSTALLATION SERVES ONLY ONE CUSTOMER ULTIMATELY AND CONDUIT REQUIREMENTS DO NOT EXCEED THAT SHOWN IN FIGURE 2 OR AS SPECIFIED IN NOTE E. IF MORE THAN FIVE 5-INCH CONDUITS ARE USED (REGARDLESS OF THE NUMBER OF CUSTOMERS), ONE TOP SECTION AND TWO INTERMEDIATE ARE REQUIRED.

(E) **FOR SECONDARY INSTALLATIONS WITHOUT A HANDHOLE (ULTIMATELY ONE CUSTOMER ONLY)**, ANY COMBINATION OF 3-INCH, 4-INCH OR 5-INCH SECONDARY CONDUITS MAY BE USED PROVIDED THEY DO NOT EXCEED THE TOTAL OF EACH SIZE CONDUIT SHOWN IN FIGURE 2. TWO EXTRA 1-INCH OR TWO EXTRA 2-INCH CONDUITS MAY BE ADDED TO SERVE STREET LIGHT, RECREATION BUILDINGS, ETC.

(F) **FOR SECONDARY INSTALLATIONS IN A HANDHOLE**, ANY COMBINATION OF 3-INCH, 4-INCH OR 5-INCH SECONDARY CONDUITS MAY BE USED PROVIDED THEY DO NOT EXCEED THE TOTAL OF 12 OR THE MAXIMUM OF EACH SIZE CONDUIT (12-3", 12-4" OR 12-5"). TWO EXTRA 1-INCH OR TWO EXTRA 2-INCH CONDUITS MAY BE ADDED TO SERVE STREET LIGHT, RECREATION BUILDINGS, ETC.

(G) WHEN NUMBER OF REQUIRED CONDUITS IS LESS THAN TOTAL SHOWN ON SKETCHES, INSTALL CONDUITS IN NUMBERED SEQUENCE AS SHOWN.

(H) A CONCRETE BACKFILL (1-SACK MIX.) IS REQUIRED UNDER THE PAD, 12 INCHES BEYOND THE SIDE EDGES OF PAD AND 12 INCHES DEEP.

(J) PAD MUST HAVE A SUB-STRUCTURE: 3311-S MINIMUM.

TABLE OF CONTENTS

© 1998 - 2024 San Diego Gas & Electric Company. All rights reserved. Removal of this copyright notice without permission is not permitted under law.

REV	CHANGE	DR	BY	DSN	APV	DATE	REV	CHANGE	DR	BY	DSN	APV	DATE
C	FORMATTING	EDM	JIK	-	-	11/5/2020	F						
B	EDITORIAL CHANGES	-	AW	JS	CZH	7/1/2018	E						
A	REVISION	-	-	-	-	1/1/2000	D	DRAWING UPDATE	EDM	ADW	EJA	KRG	03/07/2024

BILL OF MATERIALS:

ITEM	DESCRIPTION	WEIGHT (LBS)	QUANTITY	STANDARD PAGE	STOCK NUMBER	DESIGN UNITS
1	PAD	4,000 MIN. 4,100 MAX.	1	--	S514012	3427B0
2	HANDHOLE SECTION, TOP	--	1	3314	S332610	--
3	HANDHOLE SECTION, INTERMEDIATE	--	2		S336212	--
4	COVER, PARKWAY	--	1		S286843	--
5	BACKFILL, CONCRETE	--	AS REQ'D	--	--	3427CB
6	BOX HANDHOLE, 14" X 14" X 66"	986	1	3311	S162660	3311-S

NOTES:

I. SET TRANSFORMER ON THE PAD AS FAR TO THE LEFT AS POSSIBLE IN ORDER TO OBTAIN MAXIMUM CLEARANCE IN THE SECONDARY COMPARTMENT FOR CABLE TRAINING.

II. TRANSFORMER COOLING FINS MAY OVERHANG REAR OF PAD BY 6 INCHES.

III. PAD MAY NOT BE POURED IN PLACE. USE PRECAST PADS ONLY.

(IV) FOR THREE SECONDARY CONDUITS MAXIMUM.

REFERENCE:

a. FOR PAD IDENTIFICATION, SEE UG3211.3.

b. FOR TRENCH, UTILITY POSITIONING, SHADING AND BACKFILL REQUIREMENTS, SEE UG3370 OR UG3371.

c. FOR CONCRETE SLURRY, SHADING AND TYPE OF CONDUIT, SEE UG3376.

d. FOR TRANSFORMER BARRIER PROTECTION, SEE UG3479.

e. FOR MINIMUM OPERATING AND CLEARANCE REQUIREMENTS (PAD PLACEMENT), SEE UG3480, UG3481, UG3482 AND UG3483.

f. FOR PAD INSTALLATION OF PAD MOUNTED EQUIPMENT, SEE UG3484.

g. FOR RETAINING WALL REQUIREMENTS AND CLEARANCES FROM REVERSE SUBGRADE RETAINING WALLS, SEE UG3486 AND UG3487.

h. FOR RETAINING WALLS, SEE UG3489.

i. FOR TRANSFORMER INSTALLATION, SEE UG3751.

j. FOR EQUIPMENT GROUNDING, SEE UG4512.

k. FOR GROUNDING TELCO CONDUCTOR IN PAD MOUNTED EQUIPMENT, SEE UG4514.

(l) FOR CONDUIT PLACEMENT OF STEP-DOWN TRANSFORMER INSTALLATION, SEE UG3755.

TABLE OF CONTENTS

© 1998 - 2024 San Diego Gas & Electric Company. All rights reserved. Removal of this copyright notice without permission is not permitted under law.

REV	CHANGE	DR	BY	DSN	APV	DATE	REV	CHANGE	DR	BY	DSN	APV	DATE
C	FORMATTING	EDM	JIK	-	-	11/5/2020	F						
B	EDITORIAL CHANGES	-	AW	JS	CZH	7/1/2018	E						
A	REVISION	-	-	-	-	1/1/2000	D	DRAWING UPDATE	EDM	ADW	EJA	KRG	03/07/2024

X Indicates Latest Revision | Completely Revised | New Page | Information Removed

SDG&E ELECTRIC UNDERGROUND CONSTRUCTION STANDARDS

THREE-PHASE DEADFRONT/LIVEFRONT TRANSFORMER PAD INSTALLATION 3427

SCOPE: THIS STANDARD SHOWS THE BOX PAD 4-WAY SWITCH.

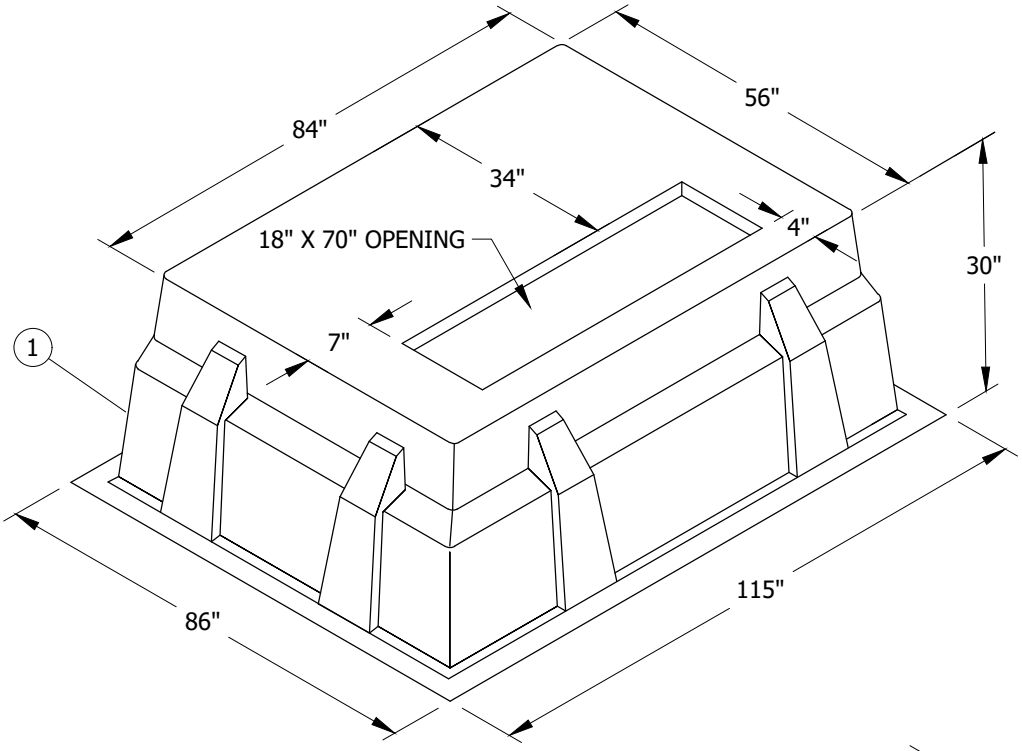

FIGURE 1
FIBERGLASS PAD
ISOMETRIC VIEW

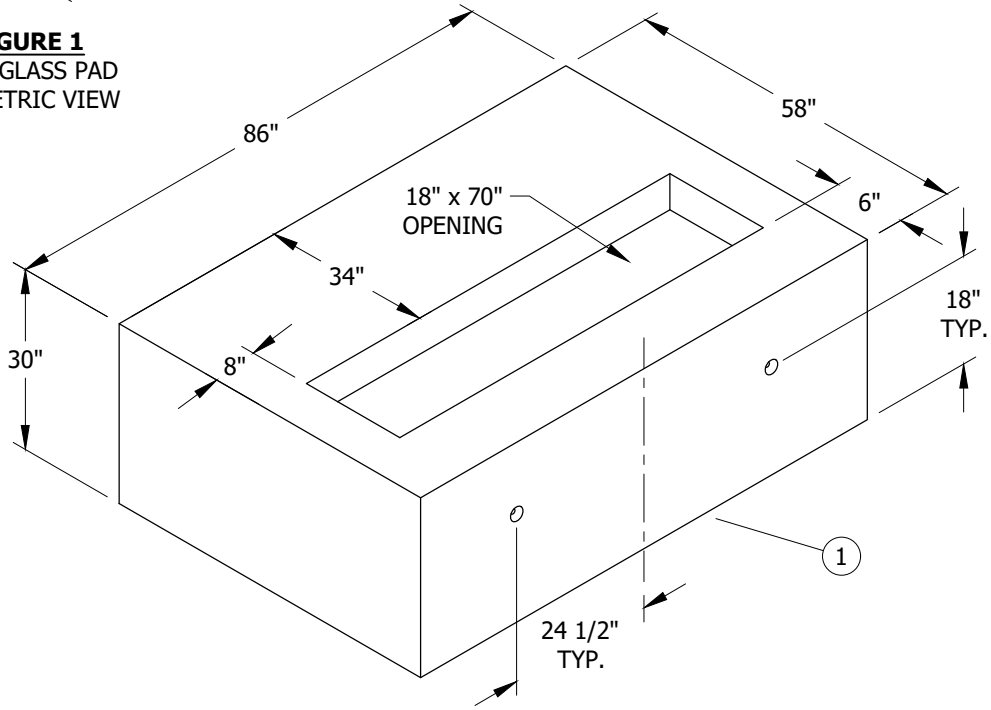

FIGURE 2
CONCRETE PAD
ISOMETRIC VIEW

© 1998 - 2022 San Diego Gas & Electric Company. All rights reserved. Removal of this copyright notice without permission is not permitted under law.

REV	CHANGE	DR	BY	DSN	APV	DATE	REV	CHANGE	DR	BY	DSN	APV	DATE
C	FORMATTING	EDM	JIK	-	-	11/05/2020	F						
B	EDITORIAL CHANGES	-	AW	JS	CZH	07/01/2018	E	DRAWING UPDATE	EDM	EJA	JES	KRG	07/14/2022
A	REVISION	-	-	-	-	12/08/2005	D	DRAWING UPDATE	EDM	EJA	GLW	CZH	07/29/2021

X Indicates Latest Revision | Completely Revised | New Page | Information Removed

SDG&E ELECTRIC UNDERGROUND CONSTRUCTION STANDARDS

BOX PAD FOR 4-WAY PAD MOUNTED SWITCH

UG3428.1

TABLE OF CONTENTS

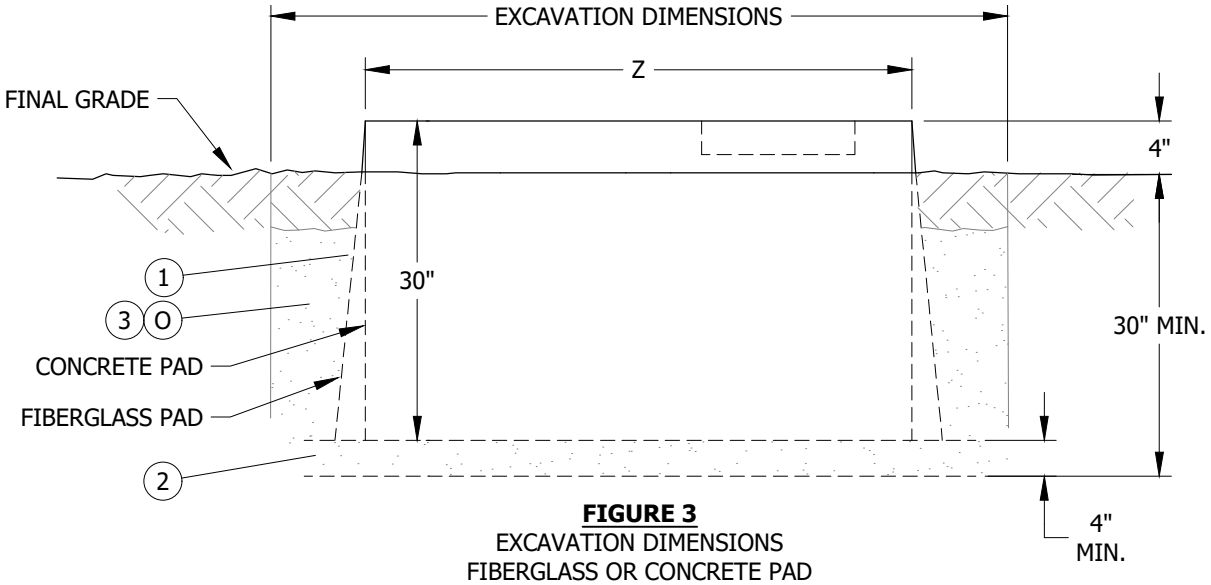

FIGURE 3
EXCAVATION DIMENSIONS
FIBERGLASS OR CONCRETE PAD
SEE TABLE 1

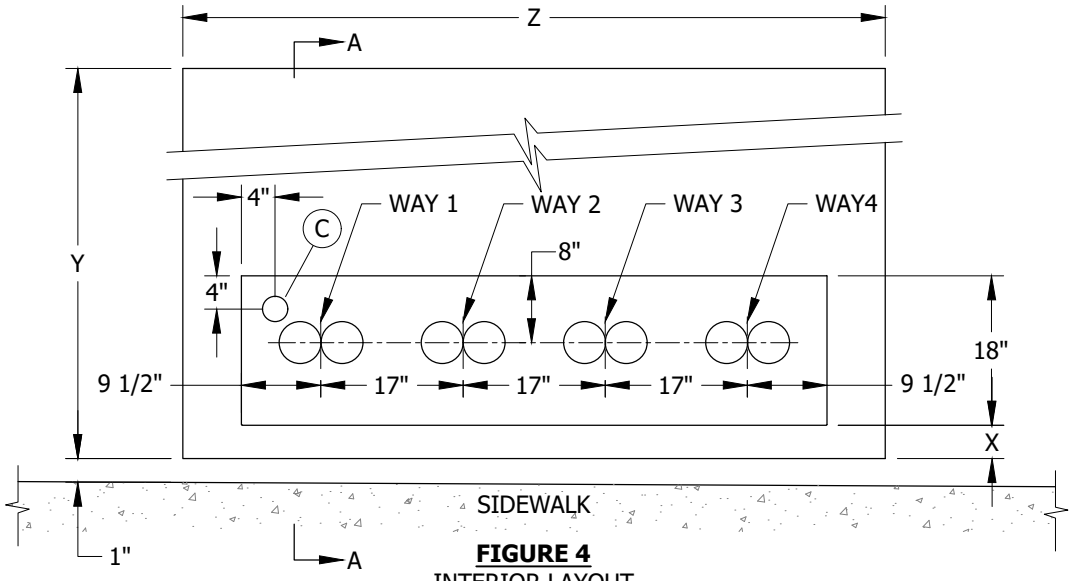

FIGURE 4
INTERIOR LAYOUT
FIBERGLASS OR CONCRETE PAD (F) (G) (I)

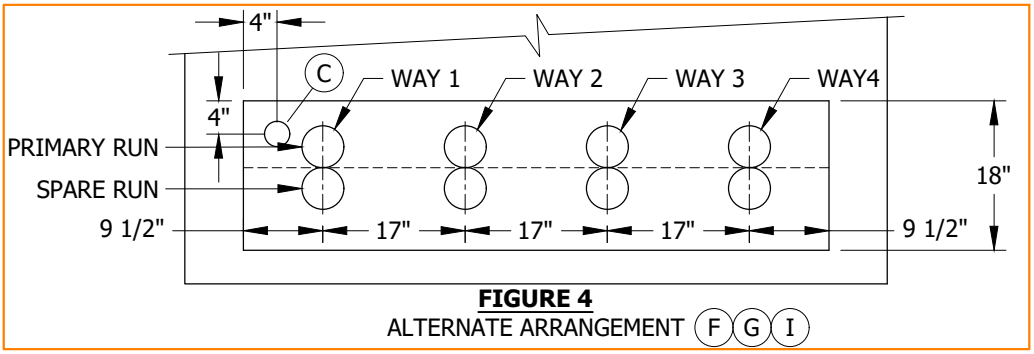

FIGURE 4
ALTERNATE ARRANGEMENT (F) (G) (I)

TABLE OF CONTENTS

© 1998 - 2022 San Diego Gas & Electric Company. All rights reserved. Removal of this copyright notice without permission is not permitted under law.

REV	CHANGE	DR	BY	DSN	APV	DATE	REV	CHANGE	DR	BY	DSN	APV	DATE
C	FORMATTING	EDM	JIK	-	-	11/05/2020	F						
B	EDITORIAL CHANGES	-	AW	JS	CZH	07/01/2018	E	DRAWING UPDATE	EDM	EJA	JES	KRG	07/14/2022
A	REVISION	-	-	-	-	12/08/2005	D	DRAWING UPDATE	EDM	EJA	GLW	CZH	07/29/2021

X Indicates Latest Revision | Completely Revised | New Page | Information Removed

SDG&E ELECTRIC UNDERGROUND CONSTRUCTION STANDARDS

BOX PAD FOR 4-WAY PAD MOUNTED SWITCH

UG3428.2

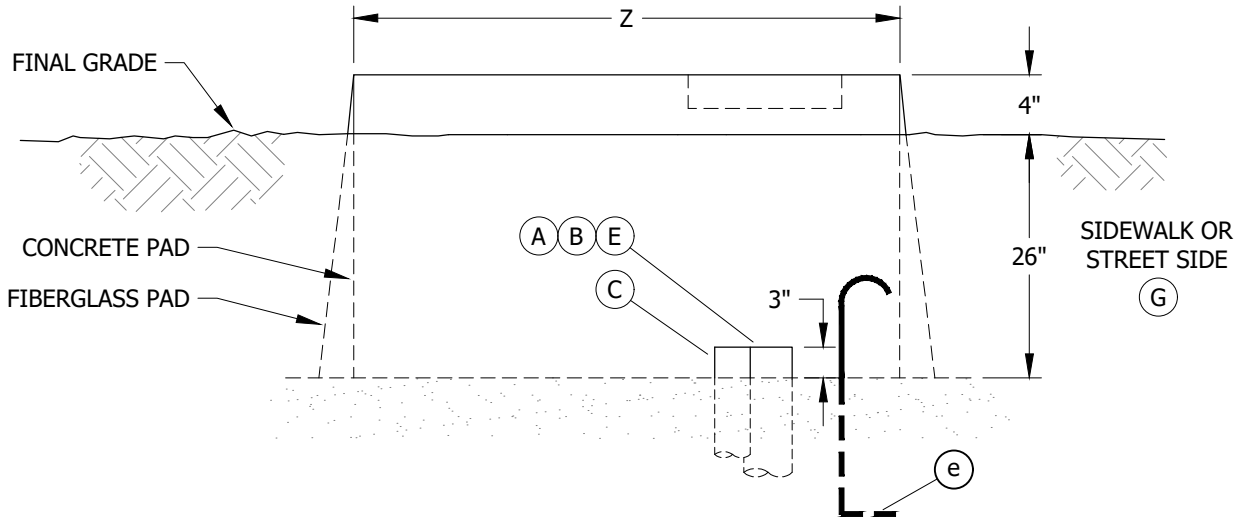

FIGURE 4
FIBERGLASS OR CONCRETE PAD
SEE TABLE 1
VIEW A-A

TABLE 1

BOX PAD DIMENSIONS				
BOX PAD MATERIAL	**Z (IN)**	**Y (IN)**	**X (IN)**	**EXCAVATION DIMENSIONS (IN)**
FG	56	84	4	127 X 98
CONCRETE	58	86	6	98 X 70

TABLE OF CONTENTS

INSTALLATION:

CONDUIT

(A) INSTALL CONDUITS AND TERMINATE THEM NO LESS THAN 3 INCHES ABOVE THE GRAVEL BASE.

(B) DO NOT CUT THE 90-DEGREE ELBOWS ON CURVE.

(C) SCADA ANTENNA CONDUIT TO BE LOCATED ON LEFT SIDE OF WINDOW. STUB ONE 3-INCH CONDUIT OUT FOUR FEET.

D. TWO CONDUITS MAY BE INSTALLED AT ONE SWITCH POSITION ONLY IF CONDUIT LENGTH EXCEEDS 50 FEET OR GOES TO A POLE SUBJECT TO FUTURE CONVERSION. THE SECOND CONDUIT MUST GO TO THE ADJACENT POSITION AT THE NEXT STRUCTURE.

(E) COMPLETELY SLURRY ENCASE ALL 5-INCH 90-DEGREE BENDS TO WITHIN 7 INCHES OF FINISH CUT OF CONDUIT.

(F) EVERY DEDICATED RUN SHALL HAVE A SPARE RUN. ALL PRIMARY WAYS SHALL BE STUBBED OUT.

BOX PAD

(G) ALWAYS INSTALL BOX PAD WITH WINDOW SIDE PARALLEL TO STREET OR SIDEWALK.

H. ESTABLISH BOX PAD LOCATION PAYING PARTICULAR ATTENTION TO FOREIGN UTILITY PLACEMENTS. RELOCATING BOX REQUIRES APPROVAL FROM PROJECT MANAGEMENT. WHEN INSTALLING ADJACENT TO NEW OR EXISTING HANDHOLES ALLOW 17 FEET MINIMUM FROM CLOSEST EDGE OF HANDHOLE TO CENTERLINE OF BOX PAD.

J. MARK OUT DIMENSIONS FOR EXCAVATION WIDTH AND LENGTH PER FIGURE 4. THE WIDTH AND LENGTH DIMENSIONS GIVEN ALLOW AN EXTRA 12 INCHES FOR SETTING BOX PAD.

K. ADD 4 INCHES OF GRAVEL TO BOTTOM OF EXCAVATION AND THEN COMPACT THIS MATERIAL BY HAND OR MACHINE.

© 1998 - 2022 San Diego Gas & Electric Company. All rights reserved. Removal of this copyright notice without permission is not permitted under law.

REV	CHANGE	DR	BY	DSN	APV	DATE	REV	CHANGE	DR	BY	DSN	APV	DATE
C	FORMATTING	EDM	JIK	-	-	11/05/2020	F						
B	EDITORIAL CHANGES	-	AW	JS	CZH	07/01/2018	E	DRAWING UPDATE	EDM	EJA	JES	KRG	07/14/2022
A	REVISION	-	-	-	-	12/08/2005	D	DRAWING UPDATE	EDM	EJA	GLW	CZH	07/29/2021

INSTALLATION (CONT'D):

BOX PAD

L. PLACE BOX PAD IN EXCAVATION WITH WINDOW SIDE OF BOX PAD PARALLEL TO AND AS CLOSE AS POSSIBLE TO BACK EDGE OF SIDEWALK.

M. LEVEL BOX PAD.

N. SET TOP SURFACE OF BOX PAD 4 INCHES ABOVE FINAL GRADE. MAY BE SET AT 6 INCHES FOR MINOR GRADE ADJUSTMENTS TO BACK OR SIDES OF PAD.

(O) BACKFILL OUTSIDE WITH ONE SLACK SLURRY. STOP SLURRY 6 INCHES FROM FINISH GRADE; CONTINUE TO BACKFILL WITH NATIVE SOIL TO FINISH GRADE.

BILL OF MATERIALS:

ITEM	DESCRIPTION	MANUFACTURER PART NUMBER	QUANTITY	STANDARD PAGE	STOCK NUMBER	DESIGN UNITS
1	PAD, BOX, FIBERGLASS	SG845630	1	--	S514026	3428BP
	PAD, BOX, CONCRETE	--		--	S514060	3428CB
2	GRAVEL, 3/8" - 3/4"	--	AS REQ'D	--	S601600	3428BP
3	SLURRY, 1 SLACK	--	AS REQ'D	--	S656400	
4	EXCAVATION, BOX PAD (II)	--	1	--	--	X3428

NOTES:

(I) IDENTIFIES CONDUIT LOCATION FOR SWITCH WAY POSITION.

(II) THIS ITEM IS NOT SHOWN ON FIGURES.

REFERENCE:

a. SEE UG3211 FOR INSTALLATION OF IDENTIFICATION TAG.

b. SEE UG3366 FOR SLURRY BACKFILL.

c. SEE UG3480, UG3481, UG3482 AND UG3483 FOR MINIMUM OPERATING AND CLEARANCE REQUIREMENTS.

d. SEE UG3486 AND UG3487 FOR RETAINING WALL REQUIREMENTS AND CLEARANCES FROM REVERSE SUBGRADE RETAINING WALLS.

(e) SEE UG4510 FOR TRENCH GROUND WIRE.

f. SEE UG3550, UG3551, UG3552, UG3553, UG3554, AND UG3555 FOR SWITCH INSTALLATION.

TABLE OF CONTENTS

© 1998 - 2022 San Diego Gas & Electric Company. All rights reserved. Removal of this copyright notice without permission is not permitted under law.

REV	CHANGE	DR	BY	DSN	APV	DATE	REV	CHANGE	DR	BY	DSN	APV	DATE
C	FORMATTING	EDM	JIK	-	-	11/05/2020	F						
B	EDITORIAL CHANGES	-	AW	JS	CZH	07/01/2018	E	DRAWING UPDATE	EDM	EJA	JES	KRG	07/14/2022
A	REVISION	-	-	-	-	12/08/2005	D	DRAWING UPDATE	EDM	EJA	GLW	CZH	07/29/2021

X Indicates Latest Revision | Completely Revised | New Page | Information Removed

SDG&E ELECTRIC UNDERGROUND CONSTRUCTION STANDARDS

BOX PAD FOR 4-WAY PAD MOUNTED SWITCH

UG3428.4

SCOPE: THIS STANDARD SHOWS THE BOX PAD TRAYER 5-WAY SWITCH.

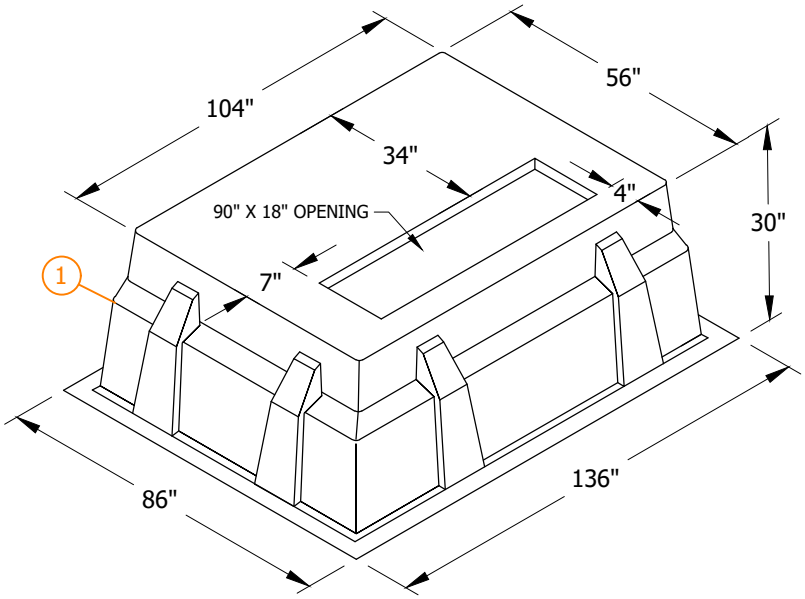

FIGURE 1
FIBERGLASS PAD
ISOMETRIC VIEW

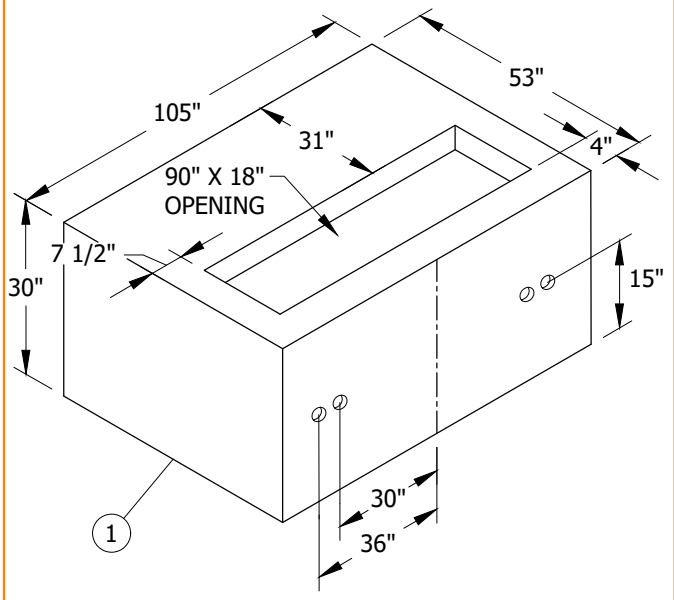

FIGURE 2
CONCRETE PAD
ISOMETRIC VIEW

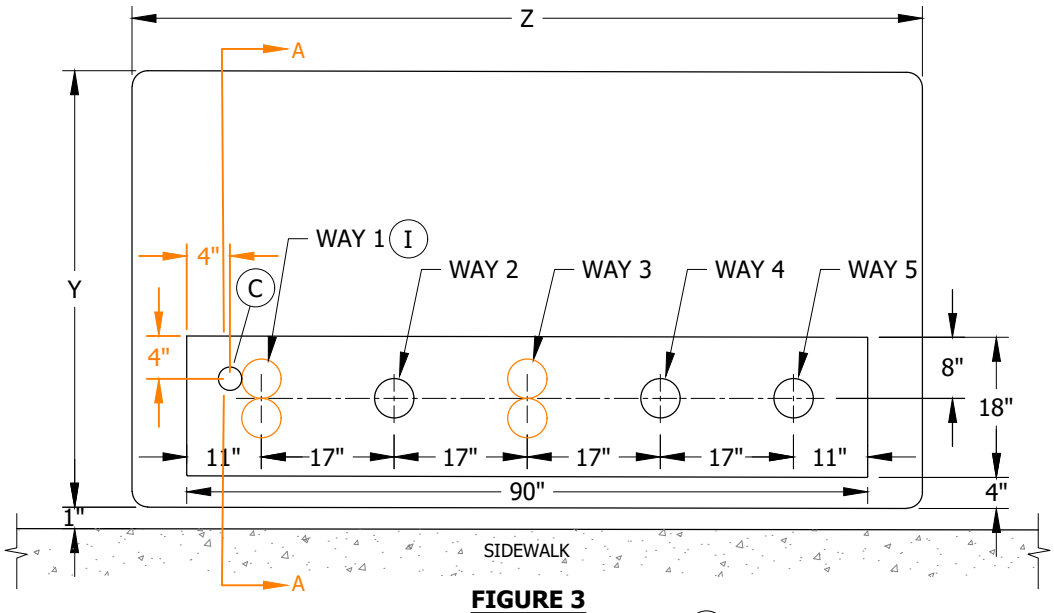

FIGURE 3
FIBERGLASS/CONCRETE PAD (F)
INTERIOR LAYOUT

TABLE OF CONTENTS

© 1998 - 2023 San Diego Gas & Electric Company. All rights reserved. Removal of this copyright notice without permission is not permitted under law.

REV	CHANGE	DR	BY	DSN	APV	DATE	REV	CHANGE	DR	BY	DSN	APV	DATE
C	FORMATTING	EDM	JIK	-	-	11/5/2020	F						
B	EDITORIAL CHANGES	-	AW	JS	CZH	7/1/2018	E						
A	REVISION	-	-	-	TR/JJ	12/8/2005	D	DRAWING UPDATE	ARC	ADW	GLW	KRG	03/10/2023

X Indicates Latest Revision | Completely Revised | New Page | Information Removed

SDG&E ELECTRIC UNDERGROUND CONSTRUCTION STANDARDS

SHEET 1 OF 3

BOX PAD FOR 5-WAY TRAYER PAD MOUNTED SWITCH

UG3429.1

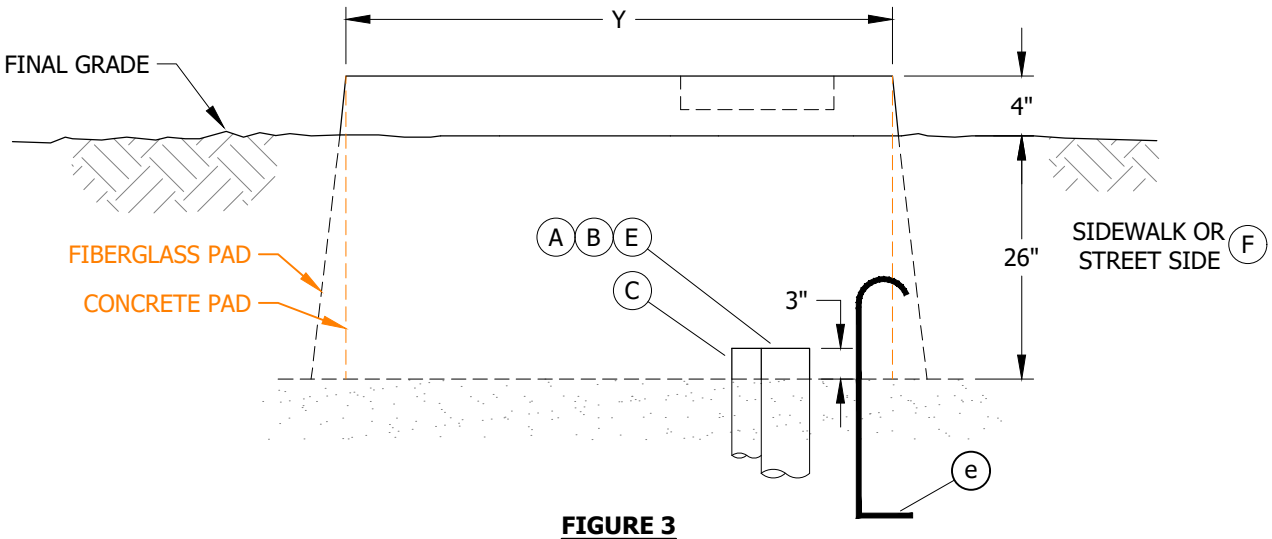

FIGURE 3
FIBERGLASS/CONCRETE PAD
INTERIOR LAYOUT
VIEW A-A

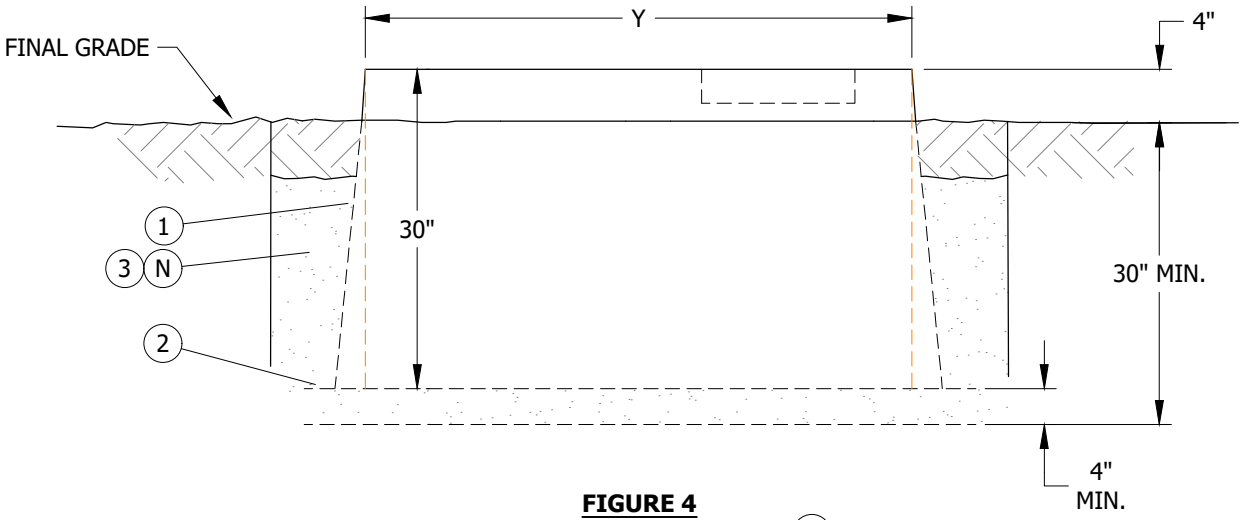

FIGURE 4
EXCAVATION DIMENSIONS (H)
SEE TABLE 1

TABLE 1

BOX PAD DIMENSIONS					
BOX PAD MATERIAL	Z (IN)	Y (IN)	BOX PAD BASE		EXCAVATION DIMENSIONS (IN)
			LENGTH (IN)	WIDTH (IN)	
FIBERGLASS	104	56	136	86	148 X 98
CONCRETE	105	57	105	57	117 X 69

© 1998 - 2023 San Diego Gas & Electric Company. All rights reserved. Removal of this copyright notice without permission is not permitted under law.

REV	CHANGE	DR	BY	DSN	APV	DATE	REV	CHANGE	DR	BY	DSN	APV	DATE
C	FORMATTING	EDM	JIK	-	-	11/5/2020	F						
B	EDITORIAL CHANGES	-	AW	JS	CZH	7/1/2018	E						
A	REVISION	-	-	-	TR/JJ	12/8/2005	D	DRAWING UPDATE	ARC	ADW	GLW	KRG	03/10/2023

X Indicates Latest Revision | Completely Revised | New Page | Information Removed

SDG&E ELECTRIC UNDERGROUND CONSTRUCTION STANDARDS

BOX PAD FOR 5-WAY TRAYER PAD MOUNTED SWITCH

UG3429.2

TABLE OF CONTENTS

INSTALLATION:

CONDUIT

(A) INSTALL CONDUITS AND TERMINATE THEM NOT LESS THAN 3 INCHES ABOVE GRAVEL BASE.

(B) DO NOT CUT 90-DEGREE ELBOWS ON CURVE.

(C) SCADA ANTENNA CONDUIT TO BE LOCATED ON LEFT SIDE OF WINDOW. STUB ONE 3-INCH CONDUIT OUT FOUR FEET.

D. INSTALL ONE CONDUIT PER SWITCH POSITION.

(E) COMPLETELY SLURRY ENCASE ALL 5-INCH 90-DEGREE BENDS TO WITHIN 7 INCHES OF FINISH CUT OF CONDUIT.

BOX PAD

(F) ALWAYS INSTALL BOX PAD WITH WINDOW SIDE PARALLEL TO STREET OR SIDEWALK.

G. ESTABLISH BOX PAD LOCATION PAYING PARTICULAR ATTENTION TO FOREIGN UTILITY PLACEMENTS. RELOCATING BOX REQUIRES APPROVAL FROM PROJECT MANAGEMENT. WHEN INSTALLING ADJACENT TO NEW OR EXISTING HANDHOLES ALLOW 17 FEET MINIMUM FROM CLOSEST EDGE OF HANDHOLE TO CENTERLINE OF BOX PAD.

(H) MARK OUT DIMENSIONS FOR EXCAVATION WIDTH AND LENGTH. THE WIDTH AND LENGTH DIMENSIONS GIVEN ALLOW AN EXTRA 12 INCHES FOR SETTING BOX PAD. SEE TABLE 1.

J. ADD 4 INCHES OF GRAVEL TO BOTTOM OF EXCAVATION. COMPACT THIS MATERIAL BY HAND OR MACHINE.

K. PLACE BOX PAD IN EXCAVATION WITH WINDOW SIDE OF BOX PAD PARALLEL AND AS CLOSE AS POSSIBLE TO BACK EDGE OF SIDEWALK.

L. LEVEL BOX PAD.

M. SET TOP SURFACE OF BOX PAD 4 INCHES ABOVE FINAL GRADE. MAY BE SET AT 6 INCHES FOR MINOR GRADE ADJUSTMENTS TO BACK OR SIDES OF PAD.

(N) BACKFILL OUTSIDE WITH ONE SLACK SLURRY. STOP SLURRY 6 INCHES FROM FINISH GRADE; CONTINUE TO BACKFILL WITH NATIVE SOIL TO FINISH GRADE.

BILL OF MATERIALS:

ITEM	DESCRIPTION	MANUFACTURER	MANUFACTURER PART NUMBER	WEIGHT (LBS)	QUANTITY	STANDARD PAGE	STOCK NUMBER	DESIGN UNITS
1	PAD, BOX, CONCRETE	JENSEN PRECAST	200050852	4,854	1	--	S514062	BP3429
	PAD, BOX, FIBERGLASS	PROGLASS, INC	SG1045630	--	1	--	S514036	3429BP
2	GRAVEL, 3/8" - 3/4"	--	--	--	AS REQ'D	--	S601600	
3	SLURRY, 1 SLACK	--	--	--	AS REQ'D	--	S656400	
4	EXCAVATION, BOX PAD (II)	--	--	--	1	--	--	X3429

NOTES:

(I) IDENTIFIES CONDUIT LOCATION FOR SWITCH WAY POSITION.

(II) THIS ITEM IS NOT SHOWN ON FIGURES.

REFERENCE:

a. SEE UG3211.3 FOR INSTALLATION OF IDENTIFICATION TAG.

b. SEE UG3365 FOR SLURRY BACKFILL.

c. SEE UG3480, UG3481, UG3482 & UG3483 FOR MINIMUM OPERATING AND CLEARANCE REQUIREMENTS.

d. SEE UG3486 & UG3487 FOR RETAINING WALL REQUIREMENTS AND CLEARANCES FROM REVERSE SUBGRADE RETAINING WALLS.

(e) SEE UG4510 FOR TRENCH GROUND WIRE.

f. SEE UG3550 FOR SWITCH INSTALLATION.

© 1998 - 2023 San Diego Gas & Electric Company. All rights reserved. Removal of this copyright notice without permission is not permitted under law.

REV	CHANGE	DR	BY	DSN	APV	DATE	REV	CHANGE	DR	BY	DSN	APV	DATE
C	FORMATTING	EDM	JIK	-	-	11/5/2020	F						
B	EDITORIAL CHANGES	-	AW	JS	CZH	7/1/2018	E						
A	REVISION	-	-	-	TR/JJ	12/8/2005	D	DRAWING UPDATE	ARC	ADW	GLW	KRG	03/10/2023

SCOPE: THIS STANDARD IS FOR 3443A, 3443B, AND 3443C SWITCH PADS.

ATTENTION:

* PADS MAY ALSO BE USED FOR PAD MOUNTED TRANSFORMERS.

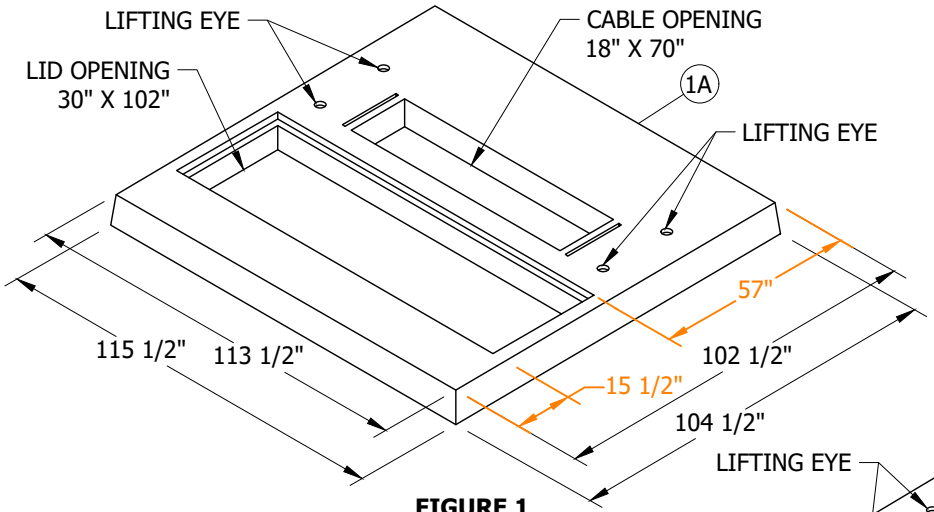

FIGURE 1
3443A

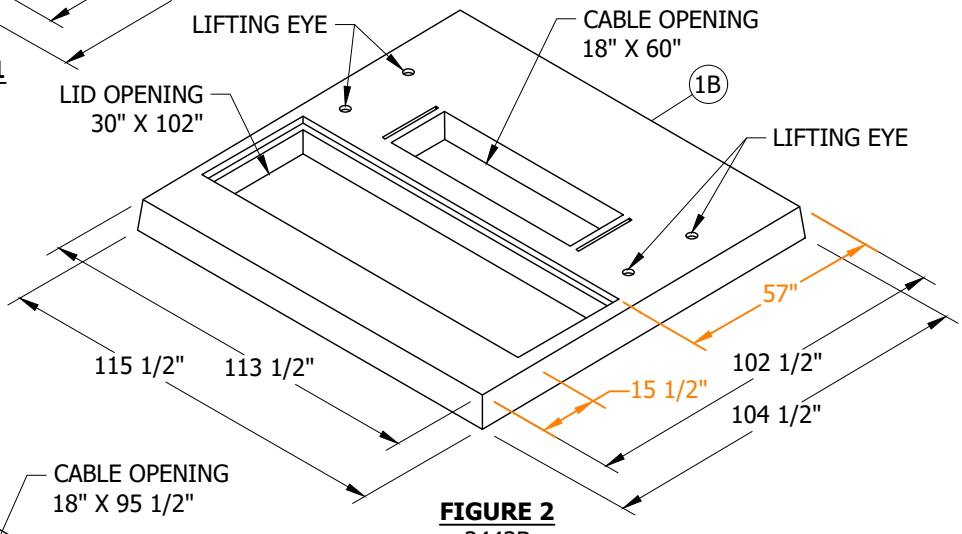

FIGURE 2
3443B

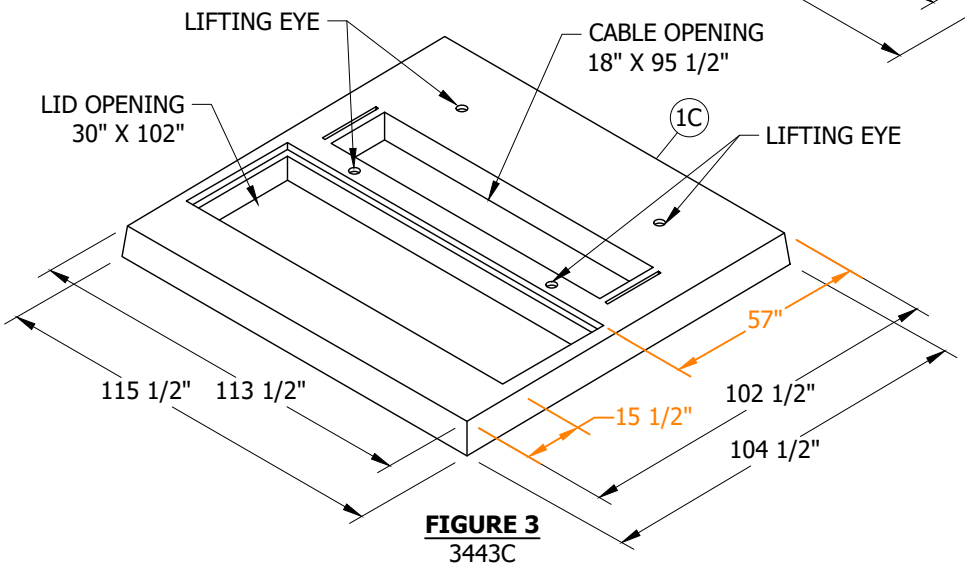

FIGURE 3
3443C

TABLE OF CONTENTS

© 1998 - 2024 San Diego Gas & Electric Company. All rights reserved. Removal of this copyright notice without permission is not permitted under law.

REV	CHANGE	DR	BY	DSN	APV	DATE	REV	CHANGE	DR	BY	DSN	APV	DATE
C							F						
B	FIGURE UPDATE	ARC	ADW	EJA	KRG	02/15/2024	E						
A	ORIGINAL ISSUE	EDM	ADW	GLW	CZH	07/29/2021	D						

X Indicates Latest Revision | Completely Revised | New Page | Information Removed

SDG&E ELECTRIC UNDERGROUND CONSTRUCTION STANDARDS

SHEET 1 OF 2

SWITCH PADS
3443A, 3443B, AND 3443C

UG3443.1

INSTALLATION:

A. USE ALL FOUR LIFTING EYES WHEN MOVING PAD.

BILL OF MATERIALS:

ITEM		DESCRIPTION	LID OPENING (IN)	CABLE OPENING (IN)	QUANTITY	STANDARD PAGE	STOCK NUMBER	DESIGN UNITS
1	A	PAD, SWITCH, 104 1/2" X 115 1/2"	30 X 102	18 X 70	AS REQ'D	SECTION 3400	S514052	3443-A
	B	PAD, SWITCH, 104 1/2" X 115 1/2"	30 X 102	18 X 60			S514054	3443-B
	C	PAD, SWITCH, 104 1/2" X 115 1/2"	30 X 102	18 X 95 1/2			S514056	3443-C

NOTES: NONE

REFERENCE: NONE

TABLE OF CONTENTS

© 1998 - 2024 San Diego Gas & Electric Company. All rights reserved. Removal of this copyright notice without permission is not permitted under law.

REV	CHANGE	DR	BY	DSN	APV	DATE	REV	CHANGE	DR	BY	DSN	APV	DATE
C							F						
B	FIGURE UPDATE	ARC	ADW	EJA	KRG	02/15/2024	E						
A	ORIGINAL ISSUE	EDM	ADW	GLW	CZH	07/29/2021	D						

X Indicates Latest Revision | Completely Revised | New Page | Information Removed

SDG&E ELECTRIC UNDERGROUND CONSTRUCTION STANDARDS

SWITCH PADS
3443A, 3443B, AND 3443C

UG3443.2

SCOPE: THIS STANDARD SHOWS THE DIMENSIONAL CRITERIA FOR INSTALLATION OF PAD MOUNTED TRANSFORMER SOUND ENCLOSURES. ENCLOSURES ARE TO BE USED WHEN TRANSFORMERS NOISE IS TO BE REDUCED.

ATTENTION:

* THIS IS AN ON GRADE FACILITY ONLY.

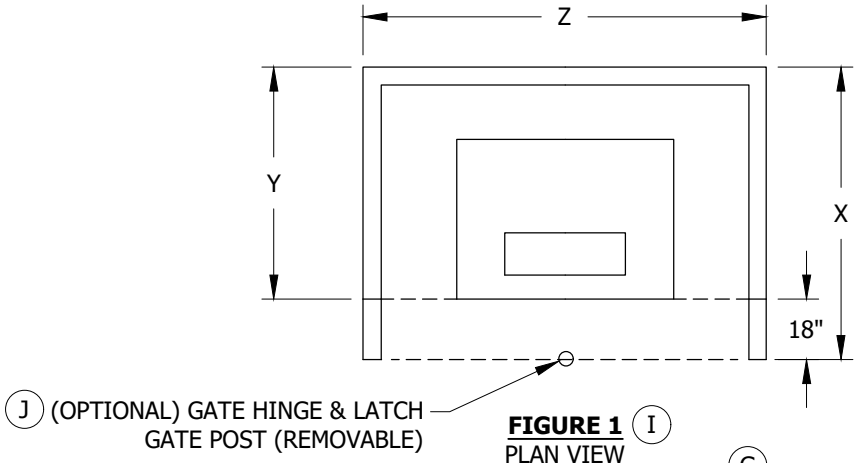

FIGURE 1 (I)
PLAN VIEW

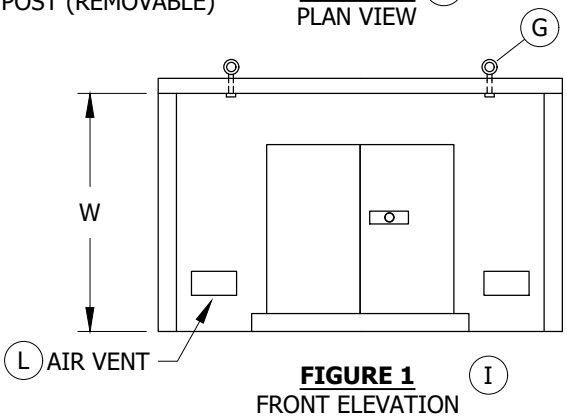

FIGURE 1 (I)
FRONT ELEVATION

INSTALLATION:

A. CUSTOMER SHALL INSTALL, OWN, AND MAINTAIN TRANSFORMER ENCLOSURE.

B. ENCLOSURE WALLS SHALL CONSIST OF EITHER REINFORCED CONCRETE, NOT LESS THAN 6 INCHES THICK, OR REINFORCED CONCRETE BLOCK, NOT LESS THAN 8 INCHES THICK.

C. THE ENCLOSURE MUST BE DESIGNED TO MEET BUILDING CODE REQUIREMENTS. DESIGN CALCULATIONS AND DRAWINGS ARE TO BE STAMPED AND SIGNED BY A CIVIL OR STRUCTURAL ENGINEER REGISTERED IN THE STATE OF CALIFORNIA.

D. INSIDE DIMENSIONS OF ENCLOSURE TO BE BASED ON TRANSFORMER PAD SELECTION AS DESIGNATED BY SDG&E PLANNER/DESIGNER.

TABLE 1

MINIMUM REQUIREMENTS FOR DEADFRONT TRANSFORMER INSTALLATIONS THROUGH 1,000KVA (E)				
PAD (UGS REF.)	**Z (IN)**	**Y (IN)**	**X (IN) (J)**	**W (IN)**
3421	94	72	90	52
3425	126	83	101	89
3426	126	99	117	98
3427	146	116	134	114

© 1998 - 2020 San Diego Gas & Electric Company. All rights reserved. Removal of this copyright notice without permission is not permitted under law.

REV	CHANGE	DR	BY	DSN	APV	DATE	REV	CHANGE	DR	BY	DSN	APV	DATE
C	FORMATTING	EDM	JIK	-	-	11/5/2020	F						
B	EDITORIAL CHANGES	-	AW	JS	CZH	7/1/2018	E						
A	REVISION	-	-	-	-	1/1/2000	D						

TABLE OF CONTENTS

INSTALLATION (CONT'D):

(E) HEIGHT REQUIREMENTS MAY INCREASE FOR LARGER TRANSFORMER INSTALLATIONS. FUTURE LOAD ADDITIONS SHOULD BE CONSIDERED.

F. ENCLOSURE COVER TO BE PITCHED (2%) TO PROMOTE DRAINAGE TO SIDE OR REAR OF ENCLOSURE.

(G) ENCLOSURE COVER TO BE CONSTRUCTED OF STEEL OR STEEL REINFORCED CONCRETE. SOLID COVER TO BE REMOVABLE AND FITTED WITH FOUR (4) REMOVABLE LIFTING EYES. COVER WEIGHT SHALL BE STENCILED ON UNDERSIDE OF COVER.

H. ENCLOSURE COVER TO BE SECURED TO WALL STRUCTURE WITH PINS OR BOLTS TO PREVENT LATERAL MOVEMENT.

(J) WHEN OPTIONAL ENCLOSURE GATE IS PROVIDED, USE LENGTH X SHOWN ABOVE. GATE CONSTRUCTION TO PROVIDE FULL VENTILATION. GATE MUST BE A MINIMUM OF 18 INCHES IN FRONT OF TRANSFORMER PAD. GATE TO BE LATCHED WITH HASP FOR SDG&E PADLOCK.

K. MINIMUM CRANE OPERATING HEADROOM CLEARANCE IS 20 FEET ABOVE PAD. UTILITY TRUCK ACCESS TO BE WITHIN 10 FEET OF ENCLOSURE.

(L) 8" X 16" VENT OPENINGS ARE REQUIRED IN WALL, (8 INCHES FROM BASE AND 8 INCHES FROM EACH REAR CORNER). DO NOT VENT INTO BUILDINGS.

M. A MINIMUM OF 3 1/2-INCH THICK CONCRETE IS REQUIRED BETWEEN WALL AND PAD. SLOPE CONCRETE SLIGHTLY TOWARD THE FRONT IN ALL INSTALLATIONS.

N. OPEN SIDE OF ENCLOSURE REQUIRES 8'-0" CLEAR WORK AREA IN FRONT OF PAD. AVOID FACING OPEN SIDE TO ADJACENT BUILDINGS OR INACCESSIBLE AREAS.

BILL OF MATERIALS: NONE

NOTES:

(I) GATE HINGE(S) SHALL NOT BE WELDED.

REFERENCE:

a. SEE UG3480, UG3481, UG3482 & UG3483 FOR MINIMUM OPERATING CLEARANCE REQUIREMENTS FOR PAD MOUNTED AND SUBSURFACE EQUIPMENT.

b. SEE UG3484 TO SET TRANSFORMER PADS FOR NOISE CONTROL.

c. SEE DM5612 FOR TRANSFORMER NOISE CRITERIA.

d. PAD LOCATED OR POSITIONED IN RELATION TO ADJACENT BUILDINGS SHALL BE PER UG3483.

TABLE OF CONTENTS

© 1998 - 2020 San Diego Gas & Electric Company. All rights reserved. Removal of this copyright notice without permission is not permitted under law.

REV	CHANGE	DR	BY	DSN	APV	DATE	REV	CHANGE	DR	BY	DSN	APV	DATE
C	FORMATTING	EDM	JIK	-	-	11/5/2020	F						
B	EDITORIAL CHANGES	-	AW	JS	CZH	7/1/2018	E						
A	REVISION	-	-	-	-	1/1/2000	D						

X Indicates Latest Revision | Completely Revised | New Page | Information Removed

SDG&E ELECTRIC UNDERGROUND CONSTRUCTION STANDARDS

TRANSFORMER SOUND ENCLOSURE

UG3478.2

SCOPE: THIS STANDARD IS FOR THE INSTALLATION OF SAFETY WARNING POSTS (COMPOSITE DELINEATOR) USED AS A WARNING BARRIER FOR EQUIPMENT ON PADS AND HANDHOLES.

ATTENTION:

* WARNING POSTS OFFER NO PHYSICAL PROTECTION. THEY ACT AS A SAFETY WARNING BARRIER ONLY AND MAY BE REPLACED WHEN SHEARED OFF OR DAMAGED.

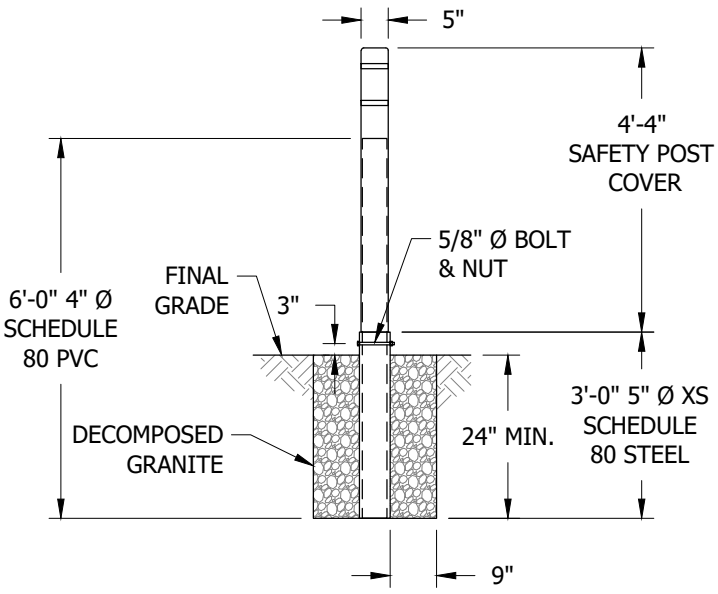

FIGURE 1
REMOVABLE COMPOSITE DELINEATOR

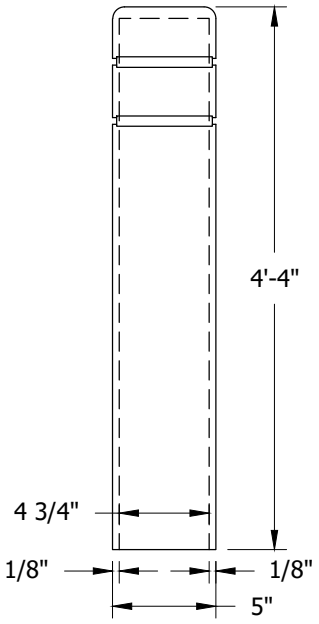

FIGURE 2
REMOVABLE DELINEATOR COVER

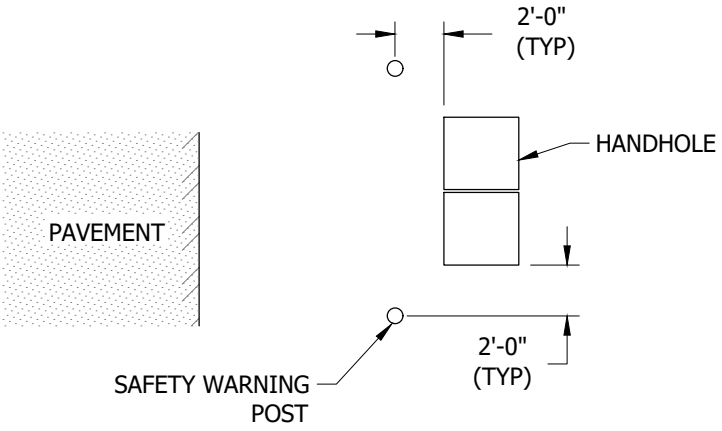

FIGURE 3
REMOVABLE COMPOSITE DELINEATOR
AT HANDHOLE

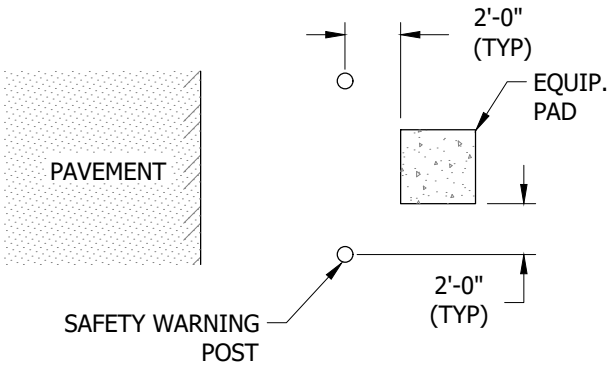

FIGURE 4
REMOVABLE COMPOSITE DELINEATOR
AT EQUIPMENT PAD

© 1998 - 2023 San Diego Gas & Electric Company. All rights reserved. Removal of this copyright notice without permission is not permitted under law.

REV	CHANGE	DR	BY	DSN	APV	DATE	REV	CHANGE	DR	BY	DSN	APV	DATE
C	MOVED FROM UG3481	EDM	JIK	-	-	11/05/2020	F						
B	EDITORIAL CHANGES	-	AW	JS	CZH	07/01/2018	E	DRAWING UPDATE	GLC	ADW	EJA	KRG	08/30/2023
A	REVISION	-	-	-	-	01/01/2000	D	DRAWING UPDATE	EDM	ADW	GLW	FRC	03/01/2022

X Indicates Latest Revision | Completely Revised | New Page | Information Removed

SDG&E ELECTRIC UNDERGROUND CONSTRUCTION STANDARDS

SAFETY WARNING POSTS

UG3479.1

TABLE OF CONTENTS

INSTALLATION: NONE

BILL OF MATERIALS: NONE

NOTES:

I. SAFETY POSTS ARE TO BE USED NEAR COUNTY-MAINTAINED ROADS THAT DO NOT HAVE CONCRETE CURB BETWEEN ROADWAY AND SHOULDER.

REFERENCE: NONE

TABLE OF CONTENTS

© 1998 - 2023 San Diego Gas & Electric Company. All rights reserved. Removal of this copyright notice without permission is not permitted under law.

REV	CHANGE	DR	BY	DSN	APV	DATE	REV	CHANGE	DR	BY	DSN	APV	DATE
C	MOVED FROM UG3481	EDM	JIK	-	-	11/05/2020	F						
B	EDITORIAL CHANGES	-	AW	JS	CZH	07/01/2018	E	DRAWING UPDATE	GLC	ADW	EJA	KRG	08/30/2023
A	REVISION	-	-	-	-	01/01/2000	D	DRAWING UPDATE	EDM	ADW	GLW	FRC	03/01/2022

X Indicates Latest Revision | Completely Revised | New Page | Information Removed

SDG&E ELECTRIC UNDERGROUND CONSTRUCTION STANDARDS

SAFETY WARNING POSTS

UG3479.2

SCOPE: THIS STANDARD ILLUSTRATES BARRIER POST USAGE WHEN NEEDED TO PROTECT SDG&E FACILITIES FROM PASSENGER VEHICLES, TRUCKS, FORK LIFTS, TRAILERS OR OTHER HEAVY MOBILE ITEMS (E.G. DUMPSTERS).

ATTENTION:

* CALL "UNDERGROUND SERVICE ALERT" (U.S.A.) TWO WORKING DAYS BEFORE YOU DIG TO VERIFY THE LOCATION OF UNDERGROUND UTILITIES. CALL TOLL FREE: 1-800-422-4133 OR 811

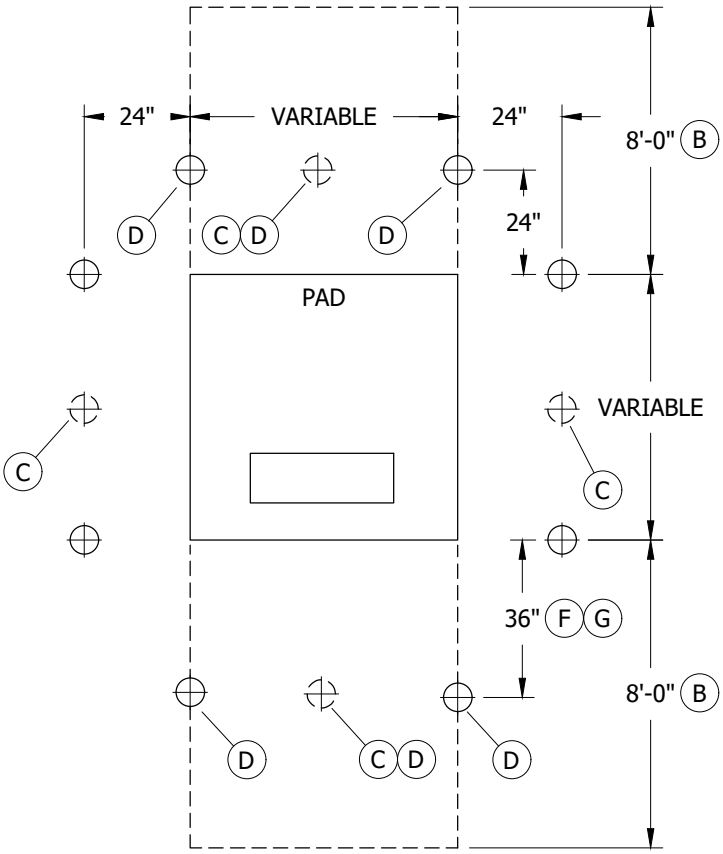

FIGURE 1

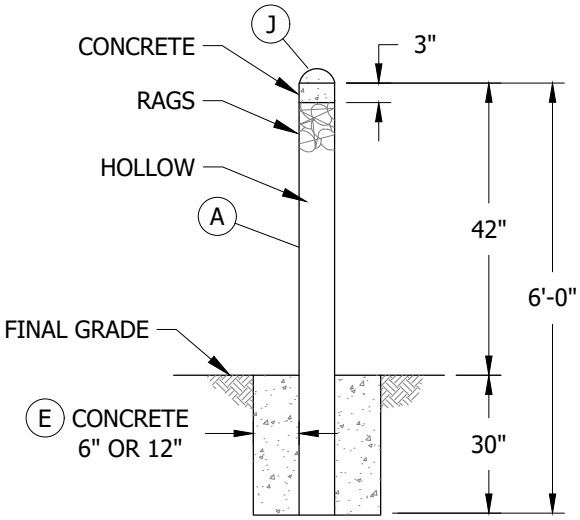

DETAIL 1
NON-REMOVABLE BARRIER POST

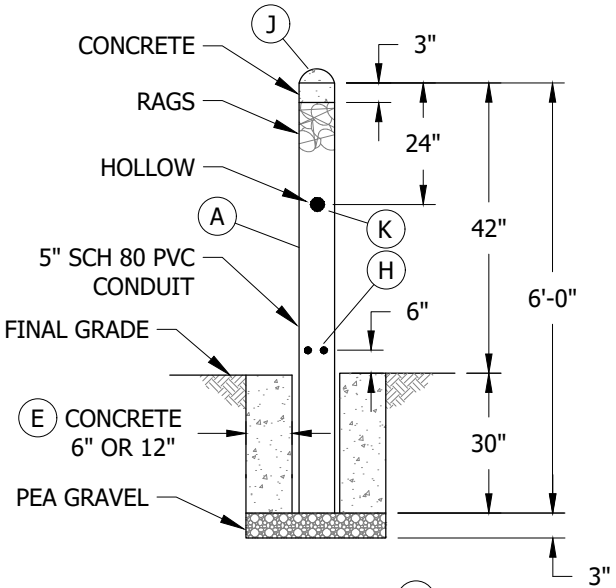

DETAIL 2 (D)
REMOVABLE BARRIER POST

TABLE OF CONTENTS

© 1998 - 2023 San Diego Gas & Electric Company. All rights reserved. Removal of this copyright notice without permission is not permitted under law.

REV	CHANGE	DR	BY	DSN	APV	DATE	REV	CHANGE	DR	BY	DSN	APV	DATE
C	MOVED FROM UG3481	EDM	JIK	-	-	11/05/2020	F						
B	EDITORIAL CHANGES	-	AW	JS	CZH	07/01/2018	E	DRAWING UPDATE	GLC	ADW	EJA	KRG	08/30/2023
A	REVISION	-	-	-	-	01/01/2000	D	DRAWING UPDATE	EDM	ADW	GLW	FRC	03/01/2022

X Indicates Latest Revision | Completely Revised | New Page | Information Removed

SDG&E ELECTRIC UNDERGROUND CONSTRUCTION STANDARDS

EQUIPMENT BARRIER PROTECTION AND CLEARANCE

UG3479.3

INSTALLATION:

(A) USE 4-INCH STEEL PIPE, (NOT GALVANIZED) WITH A MINIMUM WALL THICKNESS OF 3/16-INCH. THE PIPE SHALL BE PRIMED AND PAINTED WHITE.

(B) AN 8-FOOT MINIMUM CLEARANCE FROM ANY ABOVE GROUND OBJECT IS REQUIRED IN FRONT OF PAD WHERE EQUIPMENT DOOR OPENS FOR HOT STICK OPERATION.

(C) WHEN USING THE LARGER 3427 TRANSFORMER PAD OR PAD MOUNTED SWITCH PAD, ADDITIONAL BARRIERS ARE REQUIRED AS SHOWN.

(D) ALL BARRIERS REQUIRED IN FRONT OF EQUIPMENT DOORS MUST BE REMOVABLE.

(E) THE CONCRETE ENCASEMENT SHALL BE A MINIMUM OF 6 INCHES THICK IN STABLE SOIL AND 12 INCHES THICK IN SANDY OR UNSTABLE SOIL.

(F) MAY BE REDUCED TO 24 INCHES IN TIGHT AREAS.

(G) INCREASE DISTANCE AS REQUIRED FOR A THREE-PHASE TRANSFORMER WITH HANDHOLE.

(H) DRILL FOUR 1/4-INCH DIAMETER HOLES AS SHOWN TO PREVENT SUCTION.

(J) A WELDED CAP OR BLANK MAY BE USED IN LIEU OF CONCRETE CAP.

(K) DRILL AN 11/16-INCH HOLE COMPLETELY THROUGH REMOVABLE POST. THIS WILL ALLOW FOR A 5/8-INCH BOLT WHICH MAY BE USED FOR REMOVAL OF THE POST.

BILL OF MATERIALS: NONE

NOTES:

I. CAUTION MUST BE TAKEN WHEN INSTALLING BARRIER POSTS SO THERE IS NO CONTACT WITH UNDERGROUND UTILITIES.

II. DO NOT INSTALL TRAFFIC POSTS IF ABOVE GROUND OBJECTS EXIST WHICH PROTECT PAD MOUNTED EQUIPMENT FROM VEHICULAR TRAFFIC.

REFERENCE:

a. SEE UG3480, UG3481, UG3482 & UG3483 FOR SPECIFIC OPERATING CLEARANCE REQUIREMENTS FOR PAD MOUNTED EQUIPMENT.

b. SEE DM5240.2-.3 FOR CRITERIA TO LOCATE PAD MOUNTED EQUIPMENT IN PUBLIC RIGHT-OF-WAY.

c. SEE DM5240.4 TO DETERMINE WHEN TO INSTALL BARRIER POSTS TO PROTECT PAD MOUNTED EQUIPMENT ALONG SIDE ROADWAYS.

TABLE OF CONTENTS

© 1998 - 2023 San Diego Gas & Electric Company. All rights reserved. Removal of this copyright notice without permission is not permitted under law.

REV	CHANGE	DR	BY	DSN	APV	DATE	REV	CHANGE	DR	BY	DSN	APV	DATE
C	MOVED FROM UG3481	EDM	JIK	-	-	11/05/2020	F						
B	EDITORIAL CHANGES	-	AW	JS	CZH	07/01/2018	E	DRAWING UPDATE	GLC	ADW	EJA	KRG	08/30/2023
A	REVISION	-	-	-	-	01/01/2000	D	DRAWING UPDATE	EDM	ADW	GLW	FRC	03/01/2022

X Indicates Latest Revision | Completely Revised | New Page | Information Removed

SDG&E ELECTRIC UNDERGROUND CONSTRUCTION STANDARDS

EQUIPMENT BARRIER PROTECTION AND CLEARANCE

UG3479.4

SCOPE: THIS STANDARD SHOWS THE MINIMUM RETAINING WALL AND OPERATING CLEARANCES REQUIRED FOR PADS AND SUBSURFACE STRUCTURES.

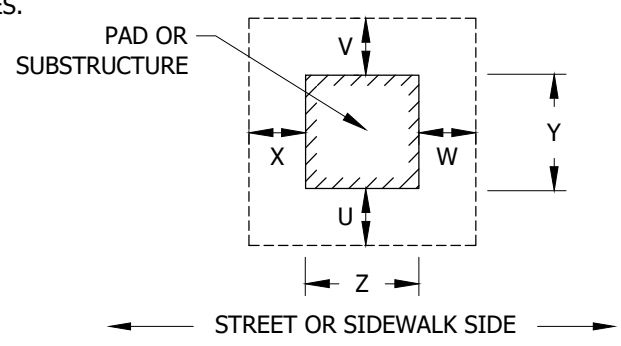

FIGURE 1

TABLE 1

PAD OR SUBSTRUCTURE OPERATING CLEARANCES (VI)								
PAD USAGE		STANDARD PAGE	PAD OR STRUCTURE DIMENSIONS AND MINIMUM OPERATING WIDTH		MINIMUM CLEARANCE DIMENSIONS (c)			
			Z	Y	X	W	V	U
RTU PAD		3409	3'-10" (1168)	4'-0" (1219)	18" (457)	18" (457)	18" (457)	8'-0" (2438)
THREE-PHASE CABLE TERMINATING CABINET 600A TO 200A		3410	7'-3" (2210)	4'-9" (1461)	18" (457)	18" (457)	18" (457)	8'-0" (2438)
THREE-PHASE CAPACITOR		3414	5'-4" (1626)	5'-0" (1524)	8'-0" (2438)	8'-0" (2438)	18" (457)	18" (457)
THREE-PHASE SERVICE RESTORER	PREFERRED	3415	5" (1524)	4'-9" (1461)	18" (457)	18" (457)	18" (457)	8'-0" (2438)
	ALTERNATIVE		5'-4" (1626)	5'-0" (1524)	4'-0" (1219)	8'-0" (2438)	18" (457)	18" (457)
THREE-PHASE CABLE TERMINATING CABINET (200A)		3416	6'-8" (2210)	2'-6" (762)	18" (457)	18" (457)	18" (457)	8'-0" (2438)
THREE-PHASE CABLE TERMINATING CABINET (600A)		3417	4'-0" (1219)	3'-10" (1168)	8'-0" (2438)	8'-0" (2438)	18" (457)	18" (457)
THREE-PHASE PME 3 SWITCH (600A)		3418	5'-10" (1788)	3'-8" (1118)	8'-0" (2438)	8'-0" (2438)	18" (457)	4'-4" (1321)
3-WAY VISTA BOX PAD		3419	5'-4"	5'-1"	3'-0"	8'-0"	18"	18"
SINGLE-PHASE CABLE TERMINATOR (FUTURE TRANSFORMER INSTALLATIONS)		3421	3'-10" (1168)	4'-0" (1219)	18" (457)	18" (457)	18" (457)	8'-0" (2438)
THREE-PHASE FUSE CABINET (VERTICAL & HORIZONTAL MOUNT)		3421	4'-0" (1219)	3'-10" (1168)	8'-0" (457)	8'-0" (457)	18" (457)	18" (2438)
SINGLE-PHASE FUSED SECTIONALIZING CABINET		3421	4'-0" (1219)	3'-10" (1168)	8'-0" (2438)	8'-0" (2438)	18" (457)	18" (457)
SINGLE-PHASE CABLE TERMINATOR		3421	3'-10" (1168)	4'-0" (1219)	18" (457)	18" (457)	18" (457)	8'-0" (2438)
SINGLE-PHASE TRANSFORMER (25-167KVA)		3421	3'-10" (1168)	4'-0" (1219)	18" (457)	18" (457)	18" (457)	8'-0" (2438)
PAD MOUNTED MVI FUSE CABINET		3421	3'-10" (1168)	4'-0" (1219)	48" (1219)	48" (1219)	18" (457)	8'-0" (2438)
THREE-PHASE PME 9 SWITCH (600A)		3423	6'-1" (1854)	6'-6" (1981)	8'-0" (2438)	8'-0" (2438)	4'-4" (457)	4'-4" (1321)
THREE-PHASE PME 10 SWITCH (600A)		3423	6'-1" (1854)	6'-6" (1981)	8'-0" (2438)	8'-0" (2438)	4'-4" (457)	4'-4" (1321)

TABLE OF CONTENTS

© 1998 - 2020 San Diego Gas & Electric Company. All rights reserved. Removal of this copyright notice without permission is not permitted under law.

REV	CHANGE	DR	BY	DSN	APV	DATE	REV	CHANGE	DR	BY	DSN	APV	DATE
C	REVISION REASON	-	-	-	MF/JJ	9/25/2006	F	MOVED FROM 3483	EDM	JIK	-	-	11/5/2020
B	REVISION	-	-	-	JLB/RDJ	1/1/1996	E	EDITORIAL CHANGES	-	AW	JS	CZH	11/12/2019
A	REVISION	-	-	-	JLB/RDJ	1/1/1993	D	REVISION REASON	-	-	-	TR/DW	2/27/2013

TABLE 1 (CONT'D)

PAD OR SUBSTRUCTURE OPERATING CLEARANCES (VI)								
PAD USAGE	STANDARD PAGE	PAD OR STRUCTURE DIMENSIONS AND MINIMUM OPERATING WIDTH		MINIMUM CLEARANCE DIMENSIONS (c)				
		Z	Y	X	W	V	U	
THREE-PHASE PME 11 SWITCH (600A)	3423	6'-1" (1854)	6'-6" (1981)	8'-0" (2438)	8'-0" (2438)	4'-4" (457)	4'-4" (1321)	
THREE-PHASE AUTOMATIC TRANSFER SWITCH (600A S & C)	3423	6'-1" (1854)	6'-6" (1981)	8'-0" (2438)	8'-0" (2438)	18" (457)	6" (1829)	
THREE-PHASE PRIMARY METER CABINET	3425	6'-6" (1981)	4'-11" (1499)	18" (457)	18" (457)	5'-0" (1524)	8'-0" (2438)	
THREE-PHASE TRANSFORMER	3425	6'-6" (1981)	4'-11" (1499)	18" (457)	18" (457)	2'-0" (610)	8'-0" (2438)	
THREE-PHASE TRANSFORMER	3426	6'-6" (1981)	6'-3" (1905)	18" (457)	18" (457)	2'-0" (610)	8'-0" (2438)	
THREE-PHASE LIVEFRONT TRANSFORMER	3427	8'-2" (2489)	7'-8" (2337)	18" (457)	18" (457)	2'-0" (610)	8'-0" (2438)	
THREE-PHASE TRAYER SWITCH 4-WAY	3428	7'-0" (2134)	4'-8" (1422)	4'-4" (1321)	18" (457)	2'-0" (610)	8'-0" (2438)	
THREE-PHASE TRAYER SWITCH 5-WAY	3429	8'-8" (2642)	4'-8" (1422)	4'-4" (1321)	18" (457)	2'-0" (610)	8'-0" (2438)	

TABLE 2

CABLE JUNCTION PEDESTAL (VI)								
STRUCTURE USAGE	STANDARD PAGE	PAD OR STRUCTURE DIMENSIONS AND MINIMUM OPERATING WIDTH		MINIMUM CLEARANCE DIMENSIONS (c)				
		Z	Y	X	W	V	U	
PRIMARY	3523	4'-10" (1473)	2'-6" (762)	18" (457) (V)	18" (457) (V)	18" (457) (V)	8'-0" (2438)	

TABLE 3

SUBSTRUCTURE CLEARANCES FROM ABOVE GROUND OBJECTS (VI)								
STRUCTURE USAGE	STANDARD PAGE	PAD OR STRUCTURE DIMENSIONS AND MINIMUM OPERATING WIDTH		MINIMUM CLEARANCE DIMENSIONS (c)				
		Z	Y	X	W	V	U	
SECONDARY	3312	1'-10" (559)	2'-11" (889)	18" (457)	18" (457)	18" (457)	5'-0" (1524)	
SECONDARY/PRIMARY	3313	2'-8" (813)	3'-8" (1118)	18" (457)	18" (457)	18" (457)	5'-0" (1524)	
SECONDARY/PRIMARY	3314	6'-8" (2032)	3'-8" (1118)	5'-0" (1524)	5'-0" (1524)	18" (457)	5'-0" (1524)	
SECONDARY/PRIMARY	3315	7'-6" (2286)	5'-0" (1524)	5'-0" (1524)	5'-0" (1524)	5'-0" (1524) (VII)	5'-0" (1524)	
SECONDARY/PRIMARY	3316	9'-6" (2896)	6'-0" (1829)	5'-0" (1524)	5'-0" (1524)	5'-0" (1524) (VII)	5'-0" (1524)	
PRIMARY SWITCH ENCLOSURE	3317	10'-0" (3048)	8'-0" (2438)	5'-0" (1524)	5'-0" (1524)	18" (457)	18" (457)	
NECK SECTION, SECONDARY/PRIMARY (3325, 3326 MANHOLE)	3332	10'-0" (1930)	8'-0" (1676)	5'-0" (1524)	5'-0" (1524)	18" (457)	5'-0" (1524)	

TABLE OF CONTENTS

© 1998 - 2020 San Diego Gas & Electric Company. All rights reserved. Removal of this copyright notice without permission is not permitted under law.

REV	CHANGE	DR	BY	DSN	APV	DATE	REV	CHANGE	DR	BY	DSN	APV	DATE
C	REVISION REASON	-	-	-	MF/JJ	9/25/2006	F	MOVED FROM 3483	EDM	JIK	-	-	11/5/2020
B	REVISION	-	-	-	JLB/RDJ	1/1/1996	E	EDITORIAL CHANGES	-	AW	JS	CZH	11/12/2019
A	REVISION	-	-	-	JLB/RDJ	1/1/1993	D	REVISION REASON	-	-	-	TR/DW	2/27/2013

INSTALLATION: REFER TO UG3483

BILL OF MATERIALS: NONE

NOTES:

I. THIS STANDARD DOES NOT APPLY TO EXISTING COMMUNICATION PEDESTALS PROVIDING THEY ARE NO CLOSER THAN 4 INCHES TO THE PAD AND THEY DO NOT OBSTRUCT THE DOORS OR THE 8-FOOT WORK SPACE.

II. THIS PAGE DOES NOT APPLY TO PREFORMED RETAINING WALLS IN UG3484.3.

III. WALL MOUNTED FUSE CABINETS REQUIRE 8-FOOT MINIMUM CLEARANCE IN FRONT OF THE CABINET FOR HOT STICK OPERATION.

IV. THE OPERATING CLEARANCES DESCRIBED IN THIS STANDARD SHALL APPLY TO BUSHES, HEDGES AND OTHER LANDSCAPING MATERIALS. LOW GROUND COVER IS EXCLUDED.

(V) RETAINING WALLS ARE NOT REQUIRED WHEN THE SLOPE REMAINS 6 INCHES BELOW AND PARALLEL TO THE JOINT BETWEEN THE BASE AND COVER OF TERMINATOR. (d)

(VI) THE NUMBERS IN PARENTHESIS IN THE TABLES REPRESENT THE MILLIMETER MEASUREMENT OF THE FEET/INCHES NUMBER ABOVE IT.

(VII) 5-FOOT OPERATING CLEARANCE IS REQUIRED ONLY FOR HOT STICK OPERATION OF LOADBREAK EQUIPMENT (CABLE TAP(S) WITH LOADBREAK ELBOWS LOCATED ON THE STREET SIDE OF HANDHOLE), IF THIS LOADBREAK EQUIPMENT IS NOT PRESENT OR NO FUTURE CABLE TAPS ARE ANTICIPATED IN THIS AREA, MAINTAIN 18-INCH MINIMUM CLEARANCE.

REFERENCE:

a. SEE UG3487 FOR RETAINING WALL REQUIREMENTS AND ONE-PHASE TRANSFORMER PAD LOCATIONS SHOWING CATV AND/OR TELCO LOCATIONS.

b. SEE UG3488 FOR CLEARANCES BETWEEN SDG&E FACILITIES AND OTHER ABOVE GROUND OBJECTS.

(c) SEE UG3483.

(d) SEE UG3523.

TABLE OF CONTENTS

© 1998 - 2020 San Diego Gas & Electric Company. All rights reserved. Removal of this copyright notice without permission is not permitted under law.

REV	CHANGE	DR	BY	DSN	APV	DATE	REV	CHANGE	DR	BY	DSN	APV	DATE
C	REVISION REASON	-	-	-	MF/JJ	9/25/2006	F	MOVED FROM 3483	EDM	JIK	-	-	11/5/2020
B	REVISION	-	-	-	JLB/RDJ	1/1/1996	E	EDITORIAL CHANGES	-	AW	JS	CZH	11/12/2019
A	REVISION	-	-	-	JLB/RDJ	1/1/1993	D	REVISION REASON	-	-	-	TR/DW	2/27/2013

X Indicates Latest Revision | Completely Revised | New Page | Information Removed

SDG&E ELECTRIC UNDERGROUND CONSTRUCTION STANDARDS

CLEARANCE REQUIREMENTS FOR PAD MOUNTED AND SUBSURFACE EQUIPMENT FROM ABOVE GROUND OBJECTS

UG3480.3

SCOPE: THIS STANDARD SHOWS MINIMUM OPERATING CLEARANCE REQUIREMENTS FOR PAD MOUNTED EQUIPMENT.

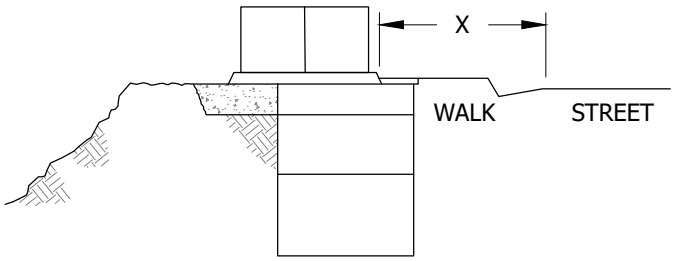

EXAMPLE 1

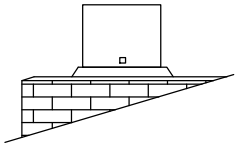

EXAMPLE 2 (I)(VII)

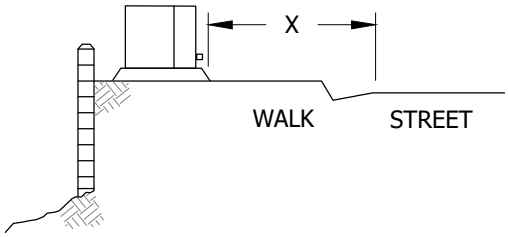

EXAMPLE 3

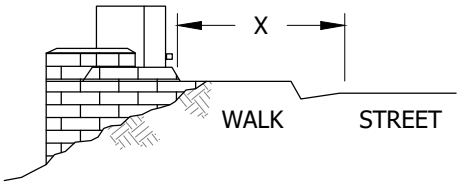

EXAMPLE 4

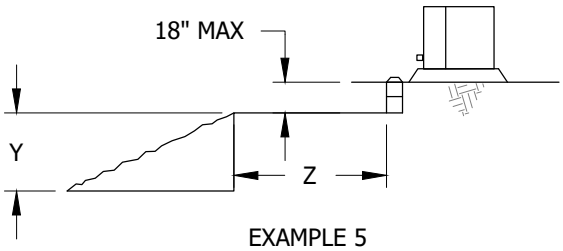

EXAMPLE 5

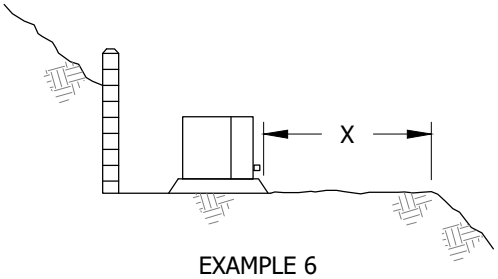

EXAMPLE 6

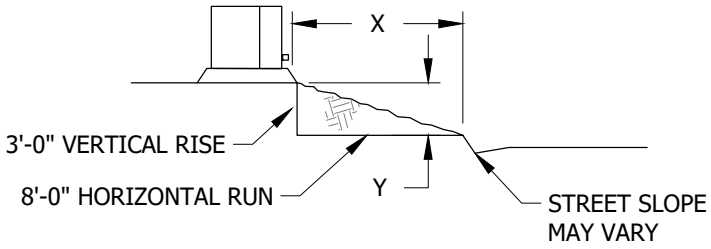

EXAMPLE 7

FIGURE 1
PAD MOUNTED EQUIPMENT HOT STICK OPERATION CLEARANCE EXAMPLES

© 1998 - 2020 San Diego Gas & Electric Company. All rights reserved. Removal of this copyright notice without permission is not permitted under law.

REV	CHANGE	DR	BY	DSN	APV	DATE	REV	CHANGE	DR	BY	DSN	APV	DATE
C	REVISION REASON	-	-	-	MF/JJ	9/25/2006	F	MOVED FROM 3483	EDM	JIK	-	-	11/5/2020
B	REVISION	-	-	-	JLB/RDJ	1/1/1996	E	EDITORIAL CHANGES	-	AW	JS	CZH	11/12/2019
A	REVISION	-	-	-	JLB/RDJ	1/1/1993	D	REVISION REASON	-	-	-	TR/DW	2/27/2013

X Indicates Latest Revision | Completely Revised | New Page | Information Removed

SDG&E ELECTRIC UNDERGROUND CONSTRUCTION STANDARDS

MINIMUM OPERATING CLEARANCE REQUIREMENTS
FOR PAD MOUNTED EQUIPMENT

UG3481.1

TABLE OF CONTENTS

INSTALLATIONS: NONE

BILL OF MATERIALS: NONE

NOTES:

(I) X = IN FRONT OF PAD.

II. X = 8-FOOT MIN. FOR HOT STICK OPERATION.

III. Y = SLOPE OF GRADE IN FRONT OF THE PAD NOT TO EXCEED 8-FOOT HORIZONTAL RUN TO 3-FOOT VERTICAL RISE.

IV. Z = 6-FOOT MIN. FLAT GRADE FOR HOT STICK OPERATION.

V. AN EFFORT SHOULD BE MADE TO KEEP THE X MEASUREMENT TO A FLAT GRADE. IF THIS IS NOT POSSIBLE, THE X MEASUREMENT SHALL NOT EXCEED AN 8-FOOT HORIZONTAL RUN TO 3-FOOT VERTICAL RISE.

VI. AN 8-FOOT CLEARANCE IS REQUIRED IN FRONT OF THE PADMOUNT EQUIPMENT FOR HOT STICK OPERATION. SDG&E HANDHOLES AND MANHOLES MAY OCCUPY OR BE INSTALLED WITHIN THE 8-FOOT CLEARANCE. PROVIDE A 5-FOOT CLEARANCE FROM PADS TO 3314 AND LARGER SUBSTRUCTURES.

(VII) THE SLOPE IN FRONT OF THE PAD SHALL NOT EXCEED AN 8-FOOT HORIZONTAL RUN TO 3-FOOT VERTICAL RISE.

REFERENCE:

a. SEE UG3486 FOR RETAINING WALL REQUIREMENTS AND CLEARANCES FROM REVERSE SUBGRADE RETAINING WALLS.

b. SEE UG3484 FOR INSTALLATION OF PAD MOUNTED EQUIPMENT.

TABLE OF CONTENTS

© 1998 - 2020 San Diego Gas & Electric Company. All rights reserved. Removal of this copyright notice without permission is not permitted under law.

REV	CHANGE	DR	BY	DSN	APV	DATE	REV	CHANGE	DR	BY	DSN	APV	DATE
C	REVISION REASON	-	-	-	MF/JJ	9/25/2006	F	MOVED FROM 3483	EDM	JIK	-	-	11/5/2020
B	REVISION	-	-	-	JLB/RDJ	1/1/1996	E	EDITORIAL CHANGES	-	AW	JS	CZH	11/12/2019
A	REVISION	-	-	-	JLB/RDJ	1/1/1993	D	REVISION REASON	-	-	-	TR/DW	2/27/2013

SCOPE: THIS STANDARD SHOWS MINIMUM OPERATING CLEARANCES FOR SUBSURFACE EQUIPMENT.

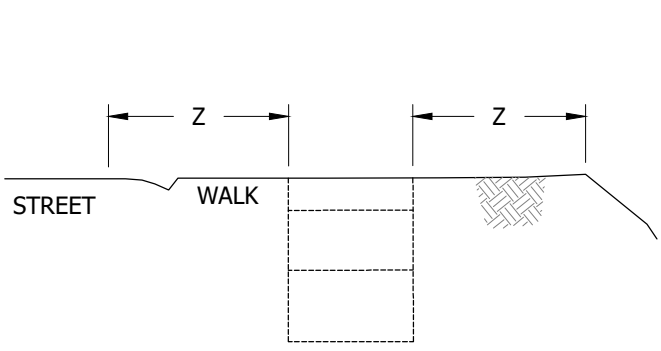

EXAMPLE 1

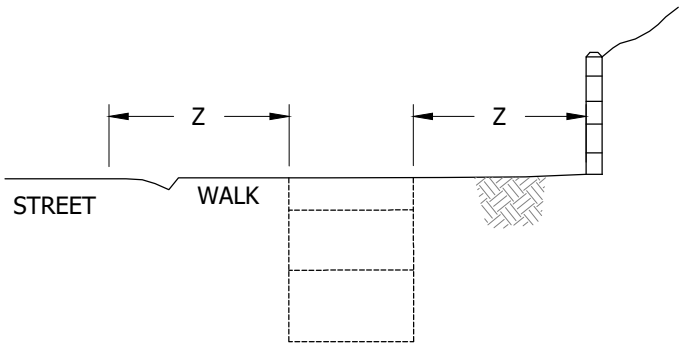

EXAMPLE 2

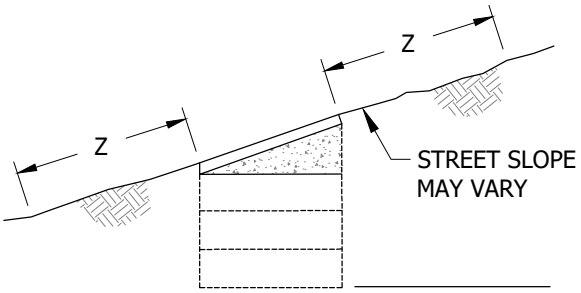

EXAMPLE 3 (II)

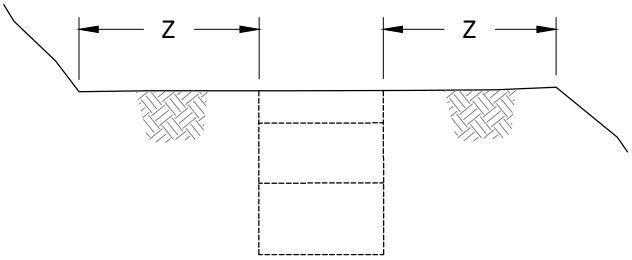

EXAMPLE 4

FIGURE 1
SUBSURFACE EQUIPMENT HOT STICK OPERATION CLEARANCE EXAMPLES (I)

INSTALLATION: NONE

BILL OF MATERIALS: NONE

NOTES:

(I) Z = 5-FOOT MIN. WHEN HOT STICK OPERATION IS REQUIRED, OTHERWISE BASIC CLEARANCES APPLY. (b)

(II) IF THE SUBSTRUCTURE IS NOT TO BE LOCATED IN THE STREET, AN EFFORT SHOULD BE MADE TO KEEP THE Z MEASUREMENT TO A FLAT GRADE. IF THIS IS NOT POSSIBLE, THE Z MEASUREMENT SHALL NOT EXCEED AN 8-FOOT HORIZONTAL RUN TO 3-FOOT VERTICAL RISE.

III. A 5-FOOT CLEARANCE IS REQUIRED IN FRONT OF THE SUBSTRUCTURE FOR HOT STICK OPERATION. SDG&E HANDHOLES AND MANHOLES MAY OCCUPY OR BE INSTALLED WITHIN THE 8-FOOT CLEARANCE REQUIRED IN FRONT OF SDG&E "PAD MOUNTED" EQUIPMENT. PROVIDE A 5-FOOT CLEARANCE FROM PAD TO 3314 AND LARGER SUBSTRUCTURES.

REFERENCE:

a. SEE UG3485 FOR INSTALLATIONS OF SUBSTRUCTURES ON SLOPING GRADES.

(b) SEE "MINIMUM OPERATING CLEARANCE REQUIREMENTS" ON UG3480, UG3481 AND UG3483.

© 1998 - 2023 San Diego Gas & Electric Company. All rights reserved. Removal of this copyright notice without permission is not permitted under law.

REV	CHANGE	DR	BY	DSN	APV	DATE	REV	CHANGE	DR	BY	DSN	APV	DATE
D	REVISION REASON	-	-	-	TR/DW	02/27/2013	G	NOTES UPDATE	GLC	EJA	EJA	KRG	09/05/2023
C	REVISION REASON	-	-	-	MF/JJ	09/25/2006	F	MOVED FROM 3483	EDM	JIK	-	-	11/05/2020
B	REVISION	-	-	-	JLB/RDJ	01/01/1996	E	EDITORIAL CHANGES	-	AW	JS	CZH	11/12/2019

X Indicates Latest Revision | Completely Revised | New Page | Information Removed

SDG&E ELECTRIC UNDERGROUND CONSTRUCTION STANDARDS

MINIMUM OPERATING CLEARANCE REQUIREMENTS
FOR SUBSURFACE EQUIPMENT

UG3482.1

TABLE OF CONTENTS

SCOPE: THIS STANDARD SHOWS MINIMUM OPERATING CLEARANCES FOR PAD MOUNTED AND SUBSURFACE EQUIPMENT.

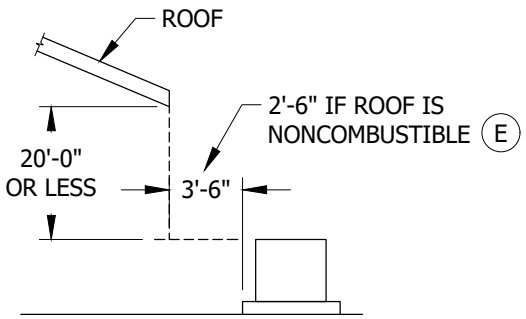

FIGURE 1

INSTALLATION:

A. CLEARANCES SHALL BE MEASURED FROM ALL ABOVE-GROUND OBJECTS. PADS WHERE DIMENSION "U" IS LESS THAN 5 FEET FROM EDGE OF PAVEMENT OR FRONT OF CURB, AND NO ABOVE-GROUND OBJECTS TO PROTECT EQUIPMENT EXIST, SHALL HAVE BARRIER PROTECTION. (b) (h)

B. DIMENSION "V" SHALL BE THE SAME AS DIMENSION "U" WHEN CABLE TAPS ARE ON BOTH SIDES OF THE HANDHOLE. (h)

C. CLEARANCES ARE REQUIRED AT THE SIDE(S) OR END(S) OF SUBSTRUCTURES, PAD MOUNTED EQUIPMENT, ETC., WHERE HOT STICK OPERATION IS REQUIRED. SDG&E HANDHOLES AND MANHOLES MAY OCCUPY OR BE INSTALLED WITHIN THE REQUIRED CLEARANCES. PROVIDE A 5-FOOT CLEARANCE FROM PADS TO 3314 AND LARGER SUBSTRUCTURES.

D. FOR EQUIPMENT CONTAINING OIL & CAPACITORS NEXT TO COMBUSTIBLE BUILDINGS, THE "X", "W", "V" DIMENSIONS SHALL NOT BE LESS THAN 3 FEET FROM BUILDING SURFACES. FOR ALL TRANSFORMERS, DIMENSION "V" MUST BE INCREASED TO 3'-6" FOR COMBUSTIBLE BUILDING SURFACES OR 2'-6" FOR NONCOMBUSTIBLE BUILDING SURFACES ALLOWING ROOM FOR TRANSFORMER COOLING FINS IN EACH INSTALLATION. "X" & "W" DIMENSIONS MAY BE REDUCED TO 2 FEET IF BUILDING SURFACES ARE NONCOMBUSTIBLE AND NOISE CLEARANCE REQUIREMENTS ARE MET FOR TRANSFORMERS. (h) (i)

(E) **"NONCOMBUSTIBLE"** BUILDING SURFACES OR MATERIALS APPROVED BY THE UNIFORM BUILDING CODE AS HAVING A MINIMUM FIRE RATING OF ONE HOUR INCLUDE BUT ARE NOT LIMITED TO:

1. STEEL STUDDED DRYWALL, STEEL STUDDED STUCCO OR OTHER MATERIALS ON STEEL STUDS HAVING MINIMUM FIRE RATING OF ONE HOUR:
2. BRICK, CLAY, TILE, CONCRETE, IRON, STEEL AND STONE.

F. **"COMBUSTIBLE"** BUILDING SURFACES OR MATERIALS INCLUDE BUT ARE NOT LIMITED TO WOOD STUDDED STUCCO AND WOOD STUDDED DRYWALL.

G. IF ROOF OVERHANG IS 20 FEET OR LESS ABOVE TOP OF ANY PAD MOUNTED EQUIPMENT, THE MINIMUM HORIZONTAL CLEARANCE FROM END OF OVERHANG TO THE NEAREST EDGE OF THE PAD SHALL NOT BE LESS THAN 3'-6" OR 2'-6" IF THE OVERHANG IS NONCOMBUSTIBLE AND THE CLEARANCE DOES NOT CREATE A NOISE PROBLEM. IF THE ROOF OVERHANG IS MORE THAN 20 FEET, THE PAD MOUNTED EQUIPMENT MAY BE PLACED UNDER THE OVERHANG. IF IN DOUBT THAT A NOISE PROBLEM MAY DEVELOP, CONTACT DESIGN PLANNING.

H. PADS ARE PERMITTED IN THE SIDEWALKS PROVIDED THE WALK IS WIDER THAN 4 FEET NOT INCLUDING THE CURB. A 4-FOOT USEABLE WALKWAY (NOT INCLUDING THE CURB) MUST BE PROVIDED FOR WHEELCHAIR ACCESS. DO NOT INSTALL PADS IN TRAILS SUCH AS BIKE, JOGGING, WALKING, EQUESTRIAN, ETC.

J. ANY UNDERGROUND FACILITY, SUBSURFACE OR PAD MOUNTED WITH LOADBREAK CAPABILITY, E.G., CABLE TAPS IN HANDHOLES, PAD MOUNTED TRANSFORMERS AND FUSED SWITCHING CABINET, SHALL MAINTAIN A 25-FOOT RADIAL CLEARANCE FROM ANY TANK, VENT OF FILL-TUBE THAT CONTAINS FLAMMABLE LIQUIDS, GASES, VAPORS OR MIXTURES. DIESEL FUEL IS COMBUSTIBLE BUT NOT FLAMMABLE, THEREFORE DIESEL TANKS ARE ALLOWED WITHIN THE 25-FOOT RADIUS. (g)

BILL OF MATERIALS: NONE

© 1998 - 2020 San Diego Gas & Electric Company. All rights reserved. Removal of this copyright notice without permission is not permitted under law.

REV	CHANGE	DR	BY	DSN	APV	DATE	REV	CHANGE	DR	BY	DSN	APV	DATE
C	REVISION REASON	-	-	-	MF/JJ	9/25/2006	F	FORMATTING	EDM	EJA	GLW	CZH	11/5/2020
B	REVISION	-	-	-	JLB/RDJ	1/1/1996	E	EDITORIAL CHANGES	-	AW	JS	MF/JJ	11/12/2019
A	REVISION	-	-	-	JLB/RDJ	1/1/1993	D	REVISION REASON	-	-	-	TR/DW	2/27/2013

X Indicates Latest Revision | Completely Revised | New Page | Information Removed

SDG&E ELECTRIC UNDERGROUND CONSTRUCTION STANDARDS

MINIMUM OPERATING CLEARANCE REQUIREMENTS FOR PAD MOUNTED AND SUBSURFACE EQUIPMENT

UG3483.1

TABLE OF CONTENTS

NOTES: NONE

REFERENCE:

a. SEE UG3478 FOR TRANSFORMER SOUND ENCLOSURE.
b. SEE UG3479 FOR EQUIPMENT BARRIER PROTECTION AND CLEARANCE.
c. SEE UG3484 FOR PAD INSTALLATION OF PAD MOUNTED EQUIPMENT AND FOR SETTING TRANSFORMER PADS FOR NOISE CONTROL.
d. SEE UG3486 FOR RETAINING WALL REQUIREMENTS AND CLEARANCES FROM REVERSE SUBGRADE RETAINING WALLS.
e. SEE UG3489 FOR RETAINING WALLS.
f. SEE DM5612 FOR TRANSFORMER NOISE CLEARANCE REQUIREMENTS.
g. SEE SG316 FOR INSTALLING UNDERGROUND SERVICE LATERAL TO GASOLINE DISPENSING AND SERVICE STATIONS.
h. SEE UG3480 FOR RELATED FIGURE.
i. SEE G.O. 128 RULE 34.3 D.

TABLE OF CONTENTS

© 1998 - 2020 San Diego Gas & Electric Company. All rights reserved. Removal of this copyright notice without permission is not permitted under law.

REV	CHANGE	DR	BY	DSN	APV	DATE	REV	CHANGE	DR	BY	DSN	APV	DATE
C	REVISION REASON	-	-	-	MF/JJ	9/25/2006	F	FORMATTING	EDM	EJA	GLW	CZH	11/5/2020
B	REVISION	-	-	-	JLB/RDJ	1/1/1996	E	EDITORIAL CHANGES	-	AW	JS	MF/JJ	11/12/2019
A	REVISION	-	-	-	JLB/RDJ	1/1/1993	D	REVISION REASON	-	-	-	TR/DW	2/27/2013

SCOPE: THIS STANDARD SHOWS THE INSTALLATION OF PADS USED FOR MOUNTING PAD MOUNTED EQUIPMENT.

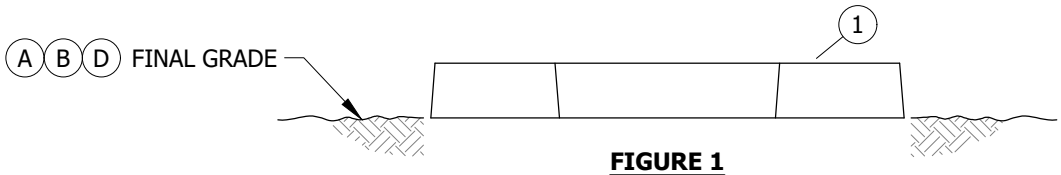

FIGURE 1
PAD SET ON FLAT GRADE

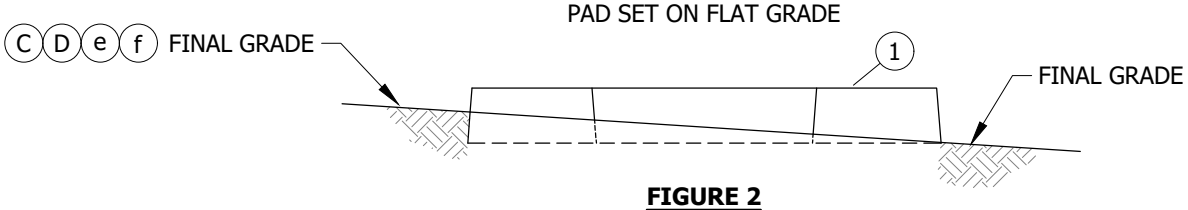

FIGURE 2
PAD SET ON SLOPING GRADE
BEHIND SIDEWALKS

INSTALLATION:

(A) SET PADS TO FINAL GRADE. SET 3416 PAD 6 INCHES ABOVE AND 3 INCHES BELOW FINAL GRADE.

(B) PADS ARE PERMITTED IN SIDEWALK PROVIDED THE WALK IS WIDER THAN 4 FEET NOT INCLUDING THE CURB. IN SIDEWALK OR PAVED AREAS, SET PADS 2 INCHES ABOVE PAVEMENT. SET 3440 PAD 3 INCHES ABOVE PAVEMENT. IN AREAS WHERE THERE IS LIMITED SPACE AND 4 FEET CANNOT BE OBTAINED, PAD MAY BE SET FLUSH WITH THE WALK IN ORDER TO OBTAIN THE REQUIRED 4-FOOT DISTANCE. THIS IS PROVIDED IT IS APPROVED BY GOVERNMENTAL (PERMITTING AGENCIES) AND IT IS NOT A LOW AREA WHERE WATER MAY DRAIN OR COLLECT.

(C) FOR PADS ON SLOPING GRADES BEHIND SIDEWALKS IN PAVED OR UNPAVED AREAS, SET UP TO HALF OF THE PAD BELOW GRADE ON THE HIGH SIDE OF THE SLOPE (DO NOT EXCEED HALF THE PAD). ON THE LOW SIDE OF THE SLOPE SET THE PAD TO THE FINAL GRADE (SEE FIGURE 2).

(D) SET TRANSFORMER PADS FOR NOISE CONTROL AS FOLLOWS.

1. FOR TRANSFORMER PADS WITHIN A PAVED AREA, LEAVE 6 INCHES OF EARTH BENEATH PAD AND INSTALL FELT EXPANSION JOINT AROUND SIDES OF PAD, OR INSTALL FELT EXPANSION JOINT BENEATH AND AROUND SIDES OF PAD.
2. TRANSFORMER PADS LOCATED OVER AN UNDERGROUND PARKING AREA OF A BUILDING MUST BE PLACED BETWEEN WALLS AND NOT OVER BEARING WALLS.

BILL OF MATERIALS:

ITEM	DESCRIPTION	QUANTITY	STANDARD PAGE	STOCK NUMBER	DESIGN UNITS
1	PAD (h)	1	--	REFER TO WORK ORDER	--

NOTES: NONE

REFERENCE:

a. SEE UG3211.3 FOR EQUIPMENT PAD IDENTIFICATION.

b. SEE UG3478 FOR TRANSFORMER SOUND ENCLOSURE.

c. SEE UG3479 FOR EQUIPMENT BARRIER PROTECTION.

d. SEE UG3480, UG3481, UG3482 & UG3483 FOR MINIMUM OPERATING CLEARANCE REQUIREMENTS (PAD PLACEMENT).

(e) SEE UG3486 & UG3487 FOR RETAINING WALL REQUIREMENTS AND CLEARANCES FROM REVERSE SUBGRADE RETAINING WALLS.

© 1998 - 2020 San Diego Gas & Electric Company. All rights reserved. Removal of this copyright notice without permission is not permitted under law.

REV	CHANGE	DR	BY	DSN	APV	DATE	REV	CHANGE	DR	BY	DSN	APV	DATE
C	FORMATTING	EDM	JIK	-	-	11/5/2020	F						
B	EDITORIAL CHANGES	-	AW	JS	CZH	7/1/2018	E						
A	REVISION	-	-	-	-	1/1/1996	D						

TABLE OF CONTENTS

REFERENCE (CONT'D):

(f) SEE UG3489 FOR RETAINING WALL REQUIREMENTS.

g. SEE UG4510 FOR PREFERRED AND ALTERNATE TRENCH GROUND WIRE INSTALLATION.

(h) SEE UG4512 FOR EQUIPMENT GROUNDING INSTALLATION.

i. SEE UG4514 FOR GROUNDING TELCO CONDUCTOR IN PAD MOUNTED EQUIPMENT.

TABLE OF CONTENTS

© 1998 - 2020 San Diego Gas & Electric Company. All rights reserved. Removal of this copyright notice without permission is not permitted under law.

REV	CHANGE	DR	BY	DSN	APV	DATE	REV	CHANGE	DR	BY	DSN	APV	DATE
C	FORMATTING	EDM	JIK	-	-	11/5/2020	F						
B	EDITORIAL CHANGES	-	AW	JS	CZH	7/1/2018	E						
A	REVISION	-	-	-	-	1/1/1996	D						

SCOPE: THIS STANDARD SHOWS THE INSTALLATION AND MATERIAL REQUIRED TO SET EQUIPMENT PAD ON SLOPING GRADES.

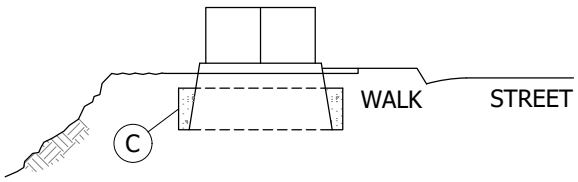

FIGURE 1

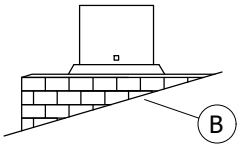

FIGURE 2

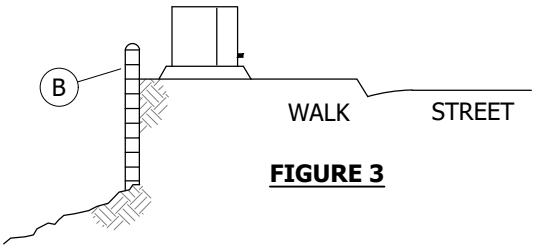

FIGURE 3

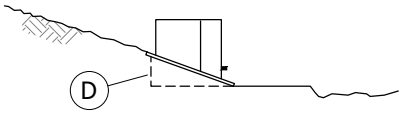

FIGURE 4

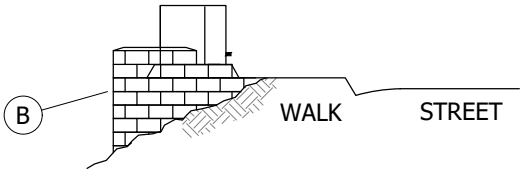

FIGURE 5

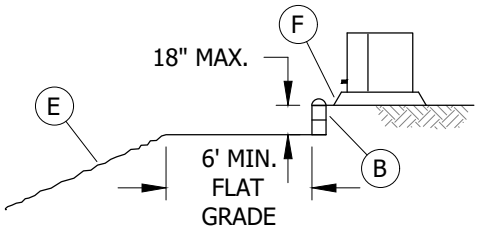

FIGURE 6

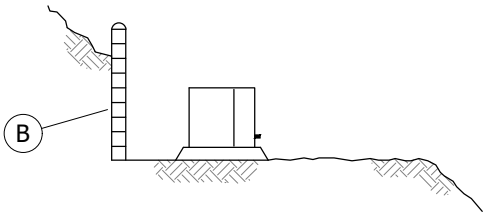

FIGURE 7

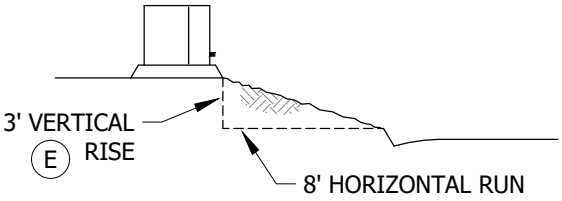

FIGURE 8

INSTALLATION:

A. ALIGN PAD TO FINAL GRADE.

(B) INSTALL CONCRETE BLOCK AS REQUIRED.

(C) FOR 600A THREE-PHASE PAD MOUNTED SWITCH, SLURRY BACKFILL (1 SACK SAND SLURRY) 22 INCHES DEEP AROUND THE 3423 PAD BOX.

(D) INSTALL PREFORMED PLASTIC RETAINING WALLS AS REQUIRED.

(E) SLOPE OF GRADE IN FRONT OF THE PAD NOT TO EXCEED 8-FOOT HORIZONTAL RUN TO 3-FOOT VERTICAL RISE.

(F) BUTT THE FRONT OF THE PAD AGAINST THE WALL.

BILL OF MATERIALS: NONE

NOTES:

I. AN 8-FOOT CLEARANCE IS REQUIRED IN FRONT OF THE PADMOUNT EQUIPMENT FOR HOT STICK OPERATION. COMPANY HANDHOLES AND MANHOLES MAY OCCUPY OR BE INSTALLED WITHIN THE 8-FOOT CLEARANCE. PROVIDE A 5-FOOT CLEARANCE FROM PADS TO 3314 AND LARGER SUBSTRUCTURES.

© 1998 - 2020 San Diego Gas & Electric Company. All rights reserved. Removal of this copyright notice without permission is not permitted under law.

REV	CHANGE	DR	BY	DSN	APV	DATE	REV	CHANGE	DR	BY	DSN	APV	DATE
C	FORMATTING	EDM	JIK	-	-	11/5/2020	F						
B	EDITORIAL CHANGES	-	AW	JS	CZH	7/1/2018	E						
A	REVISION	-	-	-	-	1/1/1996	D						

X Indicates Latest Revision | Completely Revised | New Page | Information Removed

SDG&E ELECTRIC UNDERGROUND CONSTRUCTION STANDARDS

PAD INSTALLATION FOR PAD MOUNTED EQUIPMENT
SLOPING GRADES

UG3484.3

TABLE OF CONTENTS

REFERENCE:

a. SEE UG3480, UG3481, UG3482 & UG3483 FOR MINIMUM OPERATING AND CLEARANCE REQUIREMENTS (PAD PLACEMENT).

b. SEE UG3484 FOR INSTALLATION OF PAD MOUNTED EQUIPMENT.

c. SEE UG3486 & UG3487 FOR RETAINING WALL REQUIREMENTS AND CLEARANCES FROM REVERSE SUBGRADE RETAINING WALLS.

TABLE OF CONTENTS

© 1998 - 2020 San Diego Gas & Electric Company. All rights reserved. Removal of this copyright notice without permission is not permitted under law.

REV	CHANGE	DR	BY	DSN	APV	DATE	REV	CHANGE	DR	BY	DSN	APV	DATE
C	FORMATTING	EDM	JIK	-	-	11/5/2020	F						
B	EDITORIAL CHANGES	-	AW	JS	CZH	7/1/2018	E						
A	REVISION	-	-	-	-	1/1/1996	D						

X Indicates Latest Revision | Completely Revised | New Page | Information Removed

SDG&E ELECTRIC UNDERGROUND CONSTRUCTION STANDARDS

PAD INSTALLATION FOR PAD MOUNTED EQUIPMENT
SLOPING GRADES

SCOPE: THIS STANDARD SHOWS THE PREFORMED PLASTIC RETAINING WALL USED TO PROTECT PAD MOUNTED EQUIPMENT AGAINST CORROSION FROM SOIL CONTACT ON SLOPE.

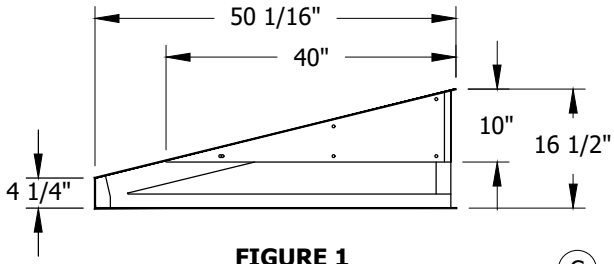

FIGURE 1
SIDE ELEVATION

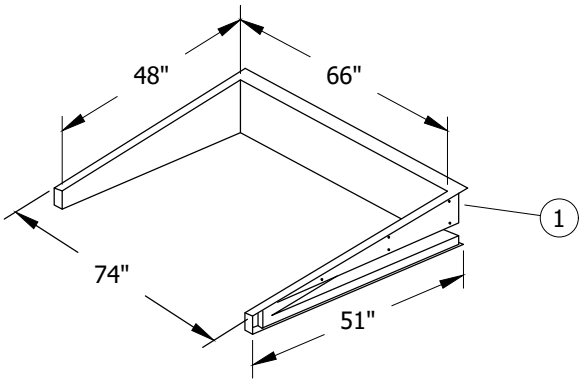

FIGURE 1
ISOMETRIC VIEW

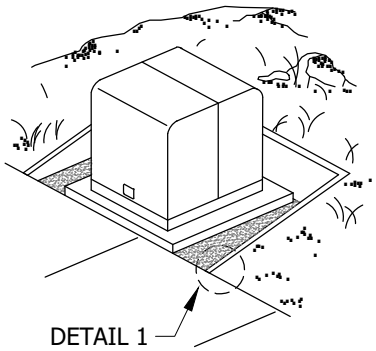

FIGURE 2
TYPICAL INSTALLATION

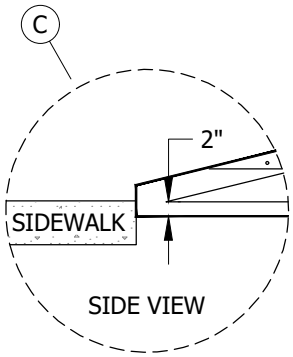

DETAIL 1

TABLE 1 (II)

WALL USAGE		
PAD STD	**PAD USAGE**	**EQUIPMENT STD OR SECTION**
3421	1 PHASE TRANSFORMER/UTILITY EQUIPMENT PAD	3700

INSTALLATION:

A. SET THE PAD. EXCAVATE AROUND THE PAD AREA ALLOWING ROOM FOR THE WALL. EXCAVATION SHALL BE LEVEL ALLOWING AN EXTRA 7 INCHES OUTSIDE THE WALL FOR BACKFILL AND TAMPING.

B. THE BOTTOM PORTION OF THE EXCAVATION SHALL START 2 INCHES BELOW GROUND LEVEL AND CONTINUE INTO THE SLOPING BANK.

(C) SET THE WALL. FILL AND TAMP THE BACKFILL. THE PREFERRED INSTALLATION IS TO BUTT THE 4 1/4-INCH PORTION AGAINST THE SIDEWALK AS SHOWN IN DETAIL A. IF THIS IS NOT POSSIBLE, POUR CONCRETE BETWEEN THE PAD AND SIDEWALK. IN RURAL AREAS WITHOUT SIDEWALKS, CONCRETE IS NOT REQUIRED IN FRONT OF THE PAD AND WALL.

D. CONCRETE OR ASPHALT IS REQUIRED BETWEEN THE WALL AND THE PAD AND SHALL BE A MINIMUM OF 3 1/2 INCHES THICK. SLOPE THE CONCRETE OR ASPHALT SLIGHTLY TOWARD THE FRONT IN ALL INSTALLATIONS.

BILL OF MATERIALS:

ITEM	DESCRIPTION	WEIGHT (LBS)	COLOR	QUANTITY	STANDARD PAGE	STOCK NUMBER	DESIGN UNITS
1	WALL, RETAINING, PLASTIC	90	GOLDEN BROWN (SANDSTONE)	AS REQ'D	--	S413496	RW-PRE

© 1998 - 2020 San Diego Gas & Electric Company. All rights reserved. Removal of this copyright notice without permission is not permitted under law.

REV	CHANGE	DR	BY	DSN	APV	DATE	REV	CHANGE	DR	BY	DSN	APV	DATE
C	FORMATTING	EDM	JIK	-	-	11/5/2020	F						
B	EDITORIAL CHANGES	-	AW	JS	CZH	7/1/2018	E						
A	REVISION	-	-	-	-	1/1/1996	D						

TABLE OF CONTENTS

NOTES:

I. WALL SHALL BE USED ON SLOPING GRADES WHERE A RETAINING WALL OF 14 INCHES OR LESS IS REQUIRED. MAXIMUM SLOPE OF RETAINED EARTH: 4 TO 1 (HORIZONTAL RUN TO VERTICAL RISE).

(II) THIS TYPE WALL TO BE USED ONLY IN INSTALLATIONS PER TABLE 1.

REFERENCE:

a. SEE UG3484 FOR INSTALLATION OF PAD MOUNTED EQUIPMENT.

b. SEE UG3486 FOR CLEARANCES FROM REVERSE SUBGRADE RETAINING WALLS.

c. SEE UG3489 FOR MASONRY RETAINING WALL.

d. SEE UG4512 FOR EQUIPMENT GROUNDING.

TABLE OF CONTENTS

© 1998 - 2020 San Diego Gas & Electric Company. All rights reserved. Removal of this copyright notice without permission is not permitted under law.

REV	CHANGE	DR	BY	DSN	APV	DATE	REV	CHANGE	DR	BY	DSN	APV	DATE
C	FORMATTING	EDM	JIK	-	-	11/5/2020	F						
B	EDITORIAL CHANGES	-	AW	JS	CZH	7/1/2018	E						
A	REVISION	-	-	-	-	1/1/1996	D						

X Indicates Latest Revision | Completely Revised | New Page | Information Removed

SDG&E ELECTRIC UNDERGROUND CONSTRUCTION STANDARDS

PAD INSTALLATION FOR PAD MOUNTED EQUIPMENT
FIBERGLASS RETAINING WALLS

SCOPE: THIS STANDARD SHOWS THE INSTALLATION AND MATERIAL REQUIRED TO SET SUBSTRUCTURES ON SLOPING GRADES.

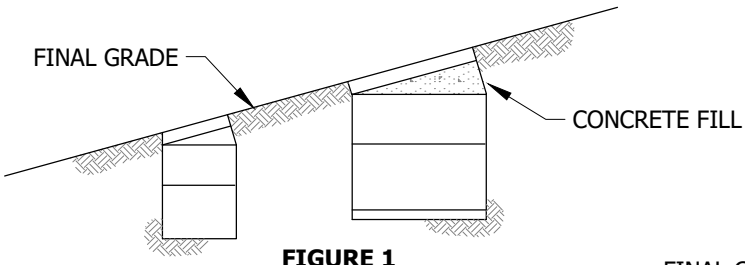

FIGURE 1
SUBSURFACE TRANSFORMER ENCLOSURE
(FIELD MAINTENANCE ONLY)
3399.401 AND 3399.404

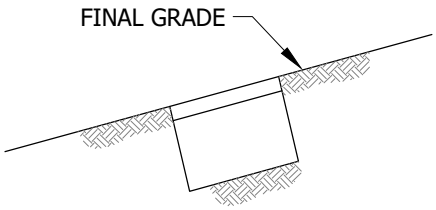

FIGURE 2
NO CONCRETE FILL REQ'D
HANDHOLES 3312, 3313

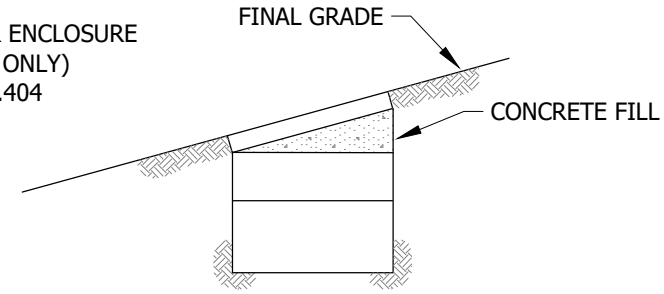

FIGURE 3
MULTI-SECTION HANDHOLES
3399.101, 3314, 3315, 3316

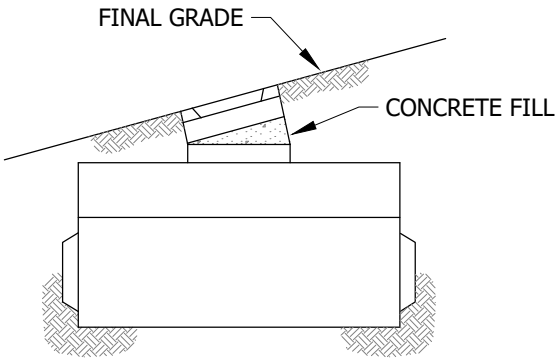

FIGURE 4
MANHOLES - 36" OPENING
(FIELD MAINTENANCE ONLY)
3399.201, 3399.202, 3399.306, 3399.307

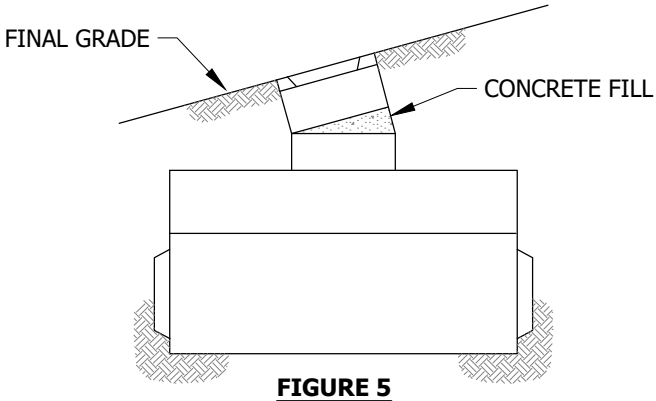

FIGURE 5
MANHOLES - 48" OPENING
3325, 3326, 3399.203, 3399.205, 3399.305

INSTALLATION:

A. ALIGN TOP SECTION TO FINAL GRADE. POUR CONCRETE (4-SACK MIX WITH 3/8" PEA GRAVEL OR AS REQUIRED BY CITY OR COUNTY CODES).

BILL OF MATERIALS: NONE

NOTES: NONE

REFERENCE:

a. SEE UG3480, UG3481, UG3482 & UG3483 FOR MINIMUM OPERATING AND CLEARANCE REQUIREMENTS (SUBSTRUCTURE PLACEMENT).

b. SEE UG3486 & UG3487 FOR RETAINING WALL REQUIREMENTS AND CLEARANCES FROM REVERSE SUBGRADE RETAINING WALLS.

c. SEE UG3489 FOR RETAINING WALLS WHERE BANKS OR EXCESSIVE SLOPES EXIST.

© 1998 - 2020 San Diego Gas & Electric Company. All rights reserved. Removal of this copyright notice without permission is not permitted under law.

REV	CHANGE	DR	BY	DSN	APV	DATE	REV	CHANGE	DR	BY	DSN	APV	DATE
C	FORMATTING	EDM	JIK	-	-	11/5/2020	F						
B	EDITORIAL CHANGES	-	AW	JS	CZH	7/1/2018	E						
A	REVISION	-	-	-	-	1/1/1996	D						

X Indicates Latest Revision | Completely Revised | New Page | Information Removed

SDG&E ELECTRIC UNDERGROUND CONSTRUCTION STANDARDS

SHEET 1 OF 1

SUBSTRUCTURE INSTALLATION ON SLOPING GRADES

UG3485.1

TABLE OF CONTENTS

SCOPE: THIS STANDARD SHOWS WHEN RETAINING WALLS ARE REQUIRED AND MINIMUM CLEARANCE REQUIREMENTS FROM PAD MOUNTED AND/OR SUBSURFACE EQUIPMENT FROM REVERSE SUBGRADE RETAINING WALLS.

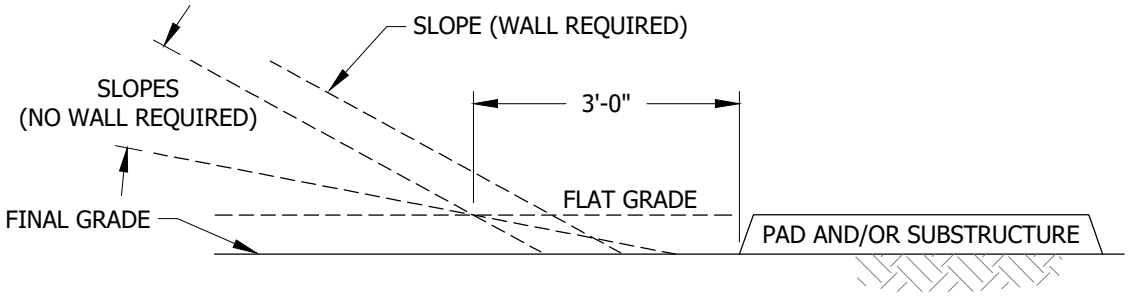

FIGURE 1
WHEN RETAINING WALLS ARE REQUIRED (A)

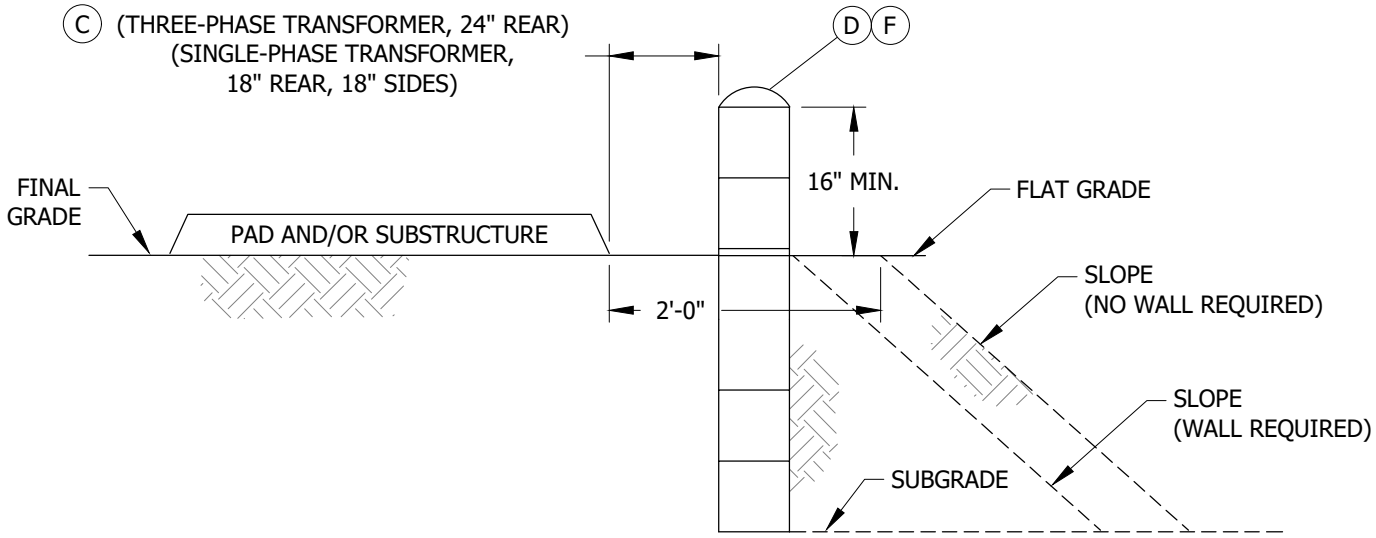

FIGURE 2
MINIMUM CLEARANCE REQUIREMENTS FROM PAD MOUNTED AND/OR SUBSURFACE EQUIPMENT TO REVERSE SUBGRADE RETAINING WALLS

INSTALLATION:

(A) WALLS ARE REQUIRED WHEN SLOPE COMES WITHIN THREE FEET OF A FLAT GRADE ADJACENT TO A PAD OR SUBSTRUCTURE. THE FLAT GRADE IS ESTABLISHED FROM THE TOP OF A PAD. SEE FIGURE 1.

B. SDG&E WILL DETERMINE WHEN WALLS ARE REQUIRED IF THEY ARE NOT INCLUDED ON THE JOB PRINT.

(C) MINIMUM OPERATING CLEARANCE REQUIREMENTS SHALL PREVAIL WHEN HOT STICK OPERATION OF LOADBREAK EQUIPMENT IS REQUIRED. (a)

(D) WALLS ARE REQUIRED WHEN SLOPE COMES WITHIN TWO FEET OF A FLAT GRADE ADJACENT TO A PAD OR SUBSTRUCTURE. THE FLAT GRADE IS ESTABLISHED FROM THE BOTTOM OF A PAD.

E. A MINIMUM OF 90% COMPACTION IS REQUIRED UNDER THE PAD AREA AND THE TWO-FOOT FLAT GRADE AREA ADJACENT TO THE PAD AND/OR SUBSTRUCTURE.

(F) SAFETY FENCING SHALL BE INSTALLED WHEN REQUIRED BY CITY OR COUNTY CODES.

© 1998 - 2020 San Diego Gas & Electric Company. All rights reserved. Removal of this copyright notice without permission is not permitted under law.

REV	CHANGE	DR	BY	DSN	APV	DATE	REV	CHANGE	DR	BY	DSN	APV	DATE
C	FORMATTING	EDM	JIK	-	-	11/5/2020	F						
B	EDITORIAL CHANGES	-	AW	JS	CZH	7/1/2018	E						
A	REVISION	-	-	-	-	1/1/2000	D						

X Indicates Latest Revision | Completely Revised | New Page | Information Removed

SDG&E ELECTRIC UNDERGROUND CONSTRUCTION STANDARDS

RETAINING WALL REQUIREMENTS AND CLEARANCES

UG3486.1

TABLE OF CONTENTS

BILL OF MATERIALS: NONE

NOTES:

I. THIS STANDARD DOES NOT APPLY TO THE PREFORMED PLASTIC RETAINING WALL SHOWN ON UG3484.

REFERENCE:

(a) SEE UG3480, UG3481, UG3482 & UG3483 FOR MINIMUM OPERATING CLEARANCE REQUIREMENT (SUBSTRUCTURE PLACEMENT).

b. SEE UG3484 AND UG3489 FOR RETAINING WALLS.

c. SEE UG3423 FOR SWITCH PAD CLEARANCE REQUIREMENTS.

TABLE OF CONTENTS

© 1998 - 2020 San Diego Gas & Electric Company. All rights reserved. Removal of this copyright notice without permission is not permitted under law.

REV	CHANGE	DR	BY	DSN	APV	DATE	REV	CHANGE	DR	BY	DSN	APV	DATE
C	FORMATTING	EDM	JIK	-	-	11/5/2020	F						
B	EDITORIAL CHANGES	-	AW	JS	CZH	7/1/2018	E						
A	REVISION	-	-	-	-	1/1/2000	D						

SCOPE: THIS STANDARD SHOWS SINGLE-PHASE TRANSFORMER PAD LOCATIONS ADJACENT TO CATV AND/TELCO AND RETAINING WALLS FOR SINGLE-PHASE TRANSFORMERS.

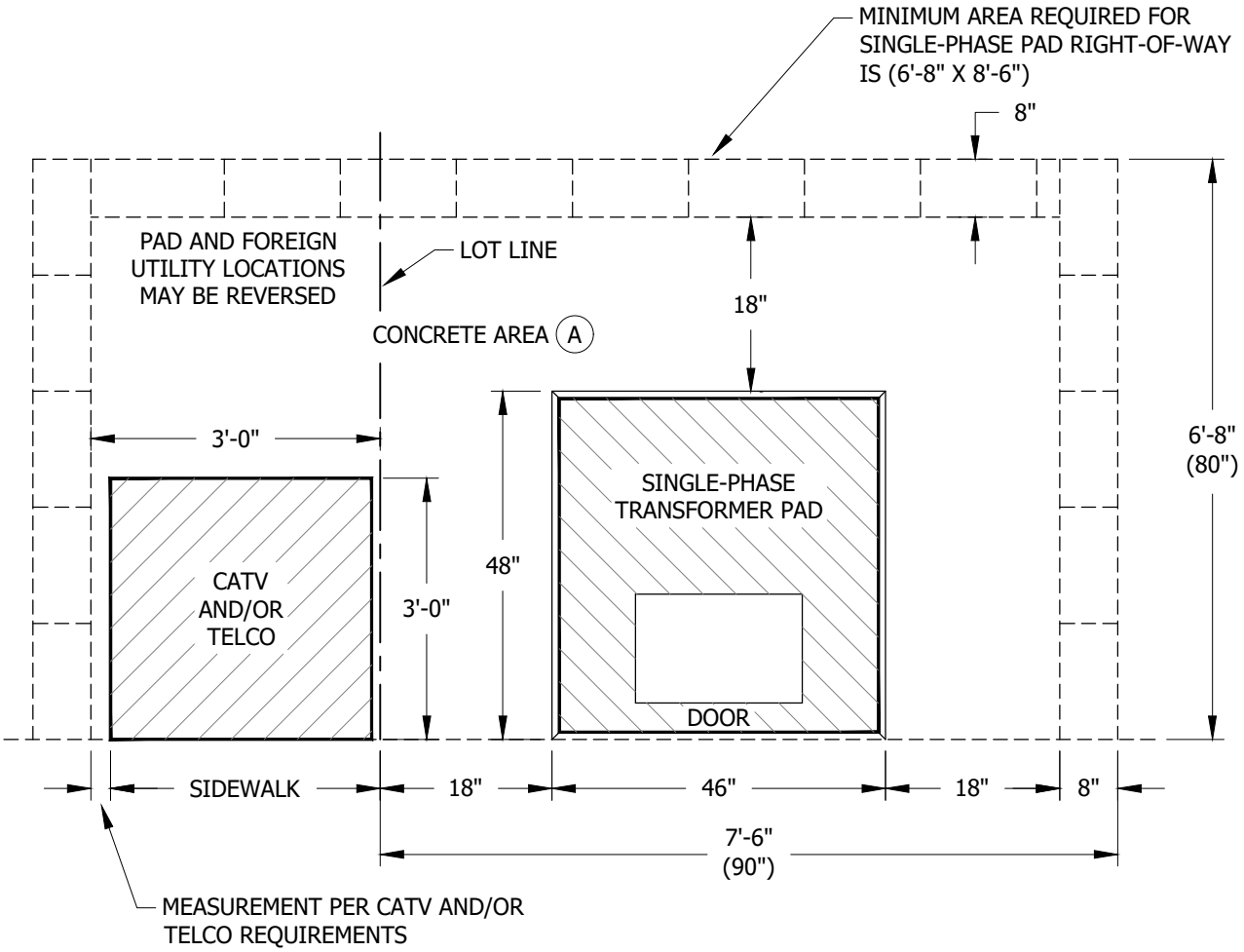

FIGURE 1

INSTALLATION:

(A) THE CONCRETE AREA SHALL BE A MINIMUM OF 3 1/2 INCHES THICK. SLOPE THE CONCRETE TOWARD THE FRONT OR SIDEWALK.

BILL OF MATERIALS: NONE

NOTES: NONE

REFERENCE:

a. SEE UG3480, UG3481, UG3482 & UG3483 FOR PAD CLEARANCE REQUIREMENTS WITHOUT CATV AND/OR TELCO.

b. SEE UG3486 & UG3487 FOR RETAINING WALL REQUIREMENTS AND CLEARANCES FROM REVERSE SUBGRADE RETAINING WALLS.

c. SEE UG3489 FOR RETAINING WALLS.

d. SEE UG4512 FOR EQUIPMENT GROUNDING INSTALLATION.

e. SEE UG3488 CLEARANCES BETWEEN SDG&E FACILITIES AND OTHER ABOVE GROUND OBJECTS.

© 1998 - 2020 San Diego Gas & Electric Company. All rights reserved. Removal of this copyright notice without permission is not permitted under law.

REV	CHANGE	DR	BY	DSN	APV	DATE	REV	CHANGE	DR	BY	DSN	APV	DATE
C	MOVED FROM UG3486	EDM	JIK	-	-	11/5/2020	F						
B	EDITORIAL CHANGES	-	AW	JS	CZH	7/1/2018	E						
A	REVISION	-	-	-	-	1/1/1998	D						

X Indicates Latest Revision | Completely Revised | New Page | Information Removed

SDG&E ELECTRIC UNDERGROUND CONSTRUCTION STANDARDS

RETAINING WALL REQUIREMENTS AND SINGLE-PHASE TRANSFORMER PAD LOCATIONS SHOWING CATV AND/OR TELCO LOCATIONS

UG3487.1

TABLE OF CONTENTS

SCOPE: THE PURPOSE OF THIS DRAWING IS TO ILLUSTRATE THE REQUIRED CLEARANCES FROM ABOVE GROUND OBJECTS AND MINIMUM HOT STICK CLEARANCE.

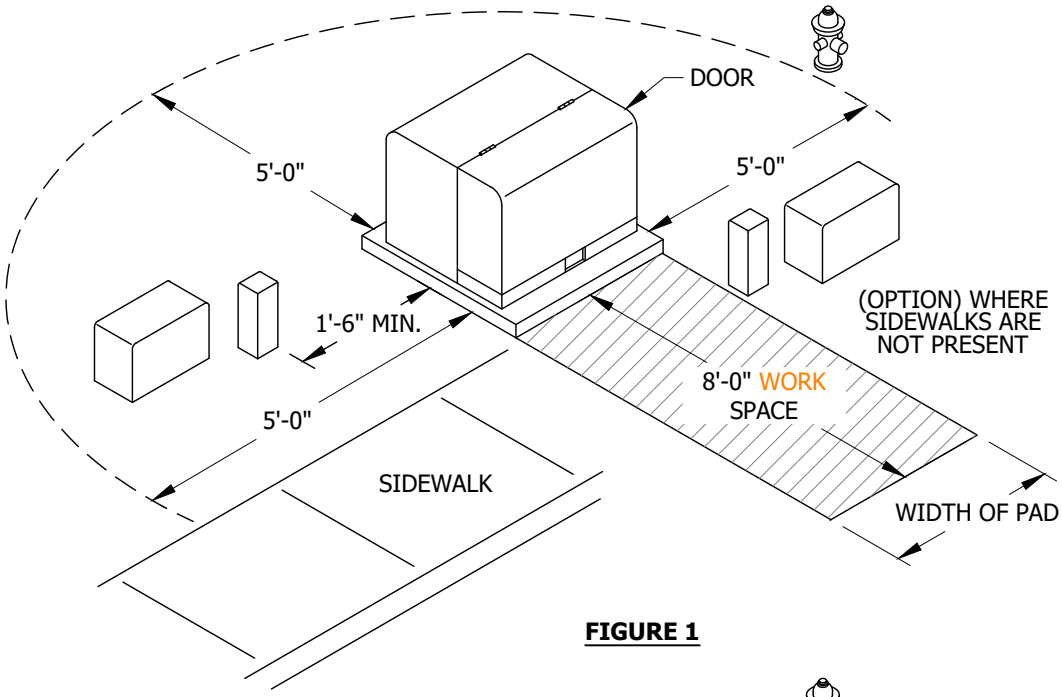

FIGURE 1

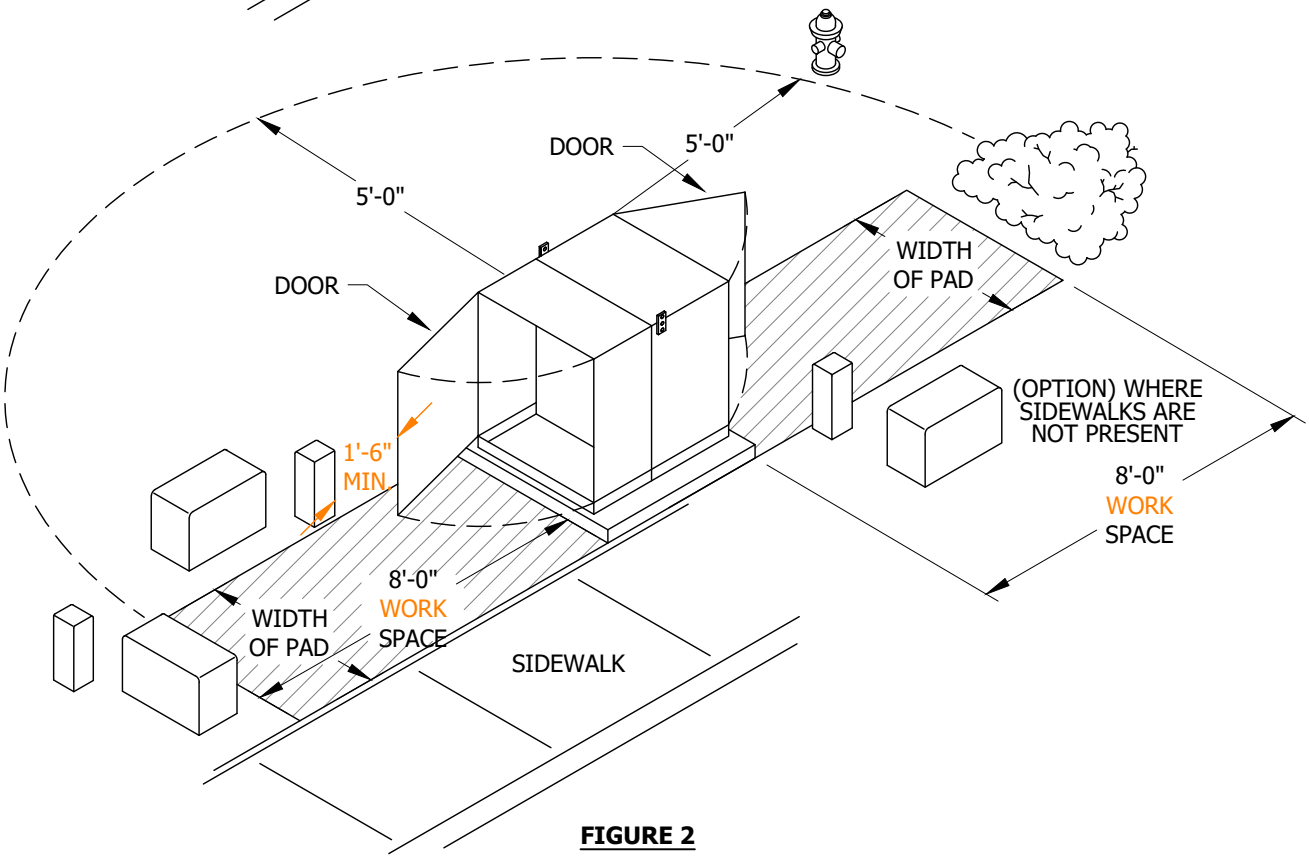

FIGURE 2

© 1998 - 2024 San Diego Gas & Electric Company. All rights reserved. Removal of this copyright notice without permission is not permitted under law.

REV	CHANGE	DR	BY	DSN	APV	DATE	REV	CHANGE	DR	BY	DSN	APV	DATE
C	MOVED FROM UG3486	EDM	JIK	-	-	11/5/2020	F						
B	EDITORIAL CHANGES	-	AW	JS	CZH	7/1/2018	E						
A	REVISION	-	-	-	-	11/16/2006	D	DRAWING UPDATE	NV5	ADW	EJA	JAS	12/30/2024

X Indicates Latest Revision | Completely Revised | New Page | X Information Removed

SDG&E ELECTRIC UNDERGROUND CONSTRUCTION STANDARDS

SHEET 1 OF 2

CLEARANCES BETWEEN SDG&E FACILITIES AND OTHER ABOVE GROUND OBJECTS

UG3488.1

TABLE OF CONTENTS

INSTALLATION: NONE

BILL OF MATERIALS: NONE

NOTES:

I. WET UTILITIES INCLUDING FIRE HYDRANTS, STAND PIPES, ABOVE GROUND WATER METERS, BACK FLOW VALVES AND OTHER ABOVE GROUND WET UTILITY EQUIPMENT SHALL BE A MINIMUM 5 FEET FROM PADMOUNTED SDG&E FACILITIES AND 8 FEET FOR THE WORK SPACE.

REFERENCE:

a. SEE UG3487 FOR RETAINING WALL REQUIREMENTS AND SINGLE-PHASE TRANSFORMER PAD LOCATIONS SHOWING CATV AND/OR TELCO LOCATIONS.

b. SEE UG3002 FOR PEDESTRIAN PATH OF TRAVEL AND ACCESSIBILITY.

TABLE OF CONTENTS

© 1998 - 2024 San Diego Gas & Electric Company. All rights reserved. Removal of this copyright notice without permission is not permitted under law.

REV	CHANGE	DR	BY	DSN	APV	DATE	REV	CHANGE	DR	BY	DSN	APV	DATE
C	MOVED FROM UG3486	EDM	JIK	-	-	11/5/2020	F						
B	EDITORIAL CHANGES	-	AW	JS	CZH	7/1/2018	E						
A	REVISION	-	-	-	-	11/16/2006	D	DRAWING UPDATE	NV5	ADW	EJA	JAS	12/30/2024

SCOPE: THIS STANDARD SHOWS RETAINING WALLS FOR LEVEL BACKFILL TO PROTECT PAD MOUNTED AND SUBSURFACE EQUIPMENT.

ATTENTION:

* SEE FIGURE 14 FOR STEPPED WALL FOOTING DETAILS.

** SEE SHEET 9-10 FOR ADDITIONAL NOTES AND DETAILS.

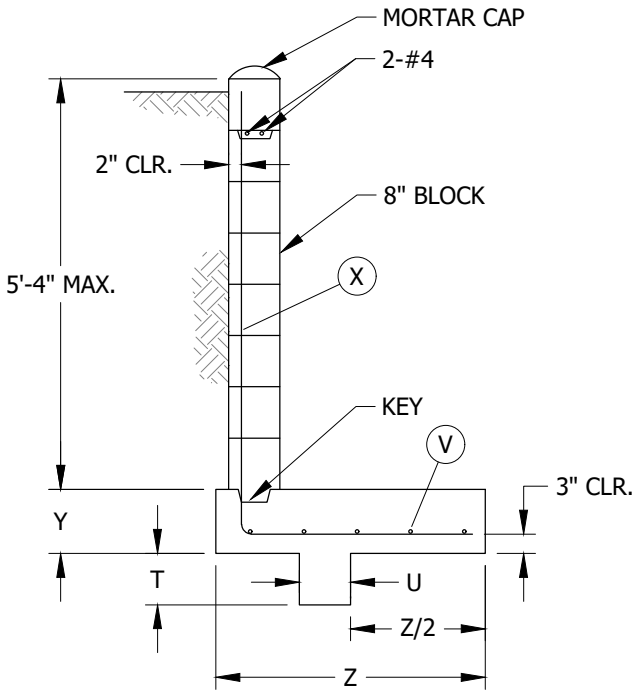

FIGURE 1
C-1 TYPICAL SECTION
5'-4" MAX.

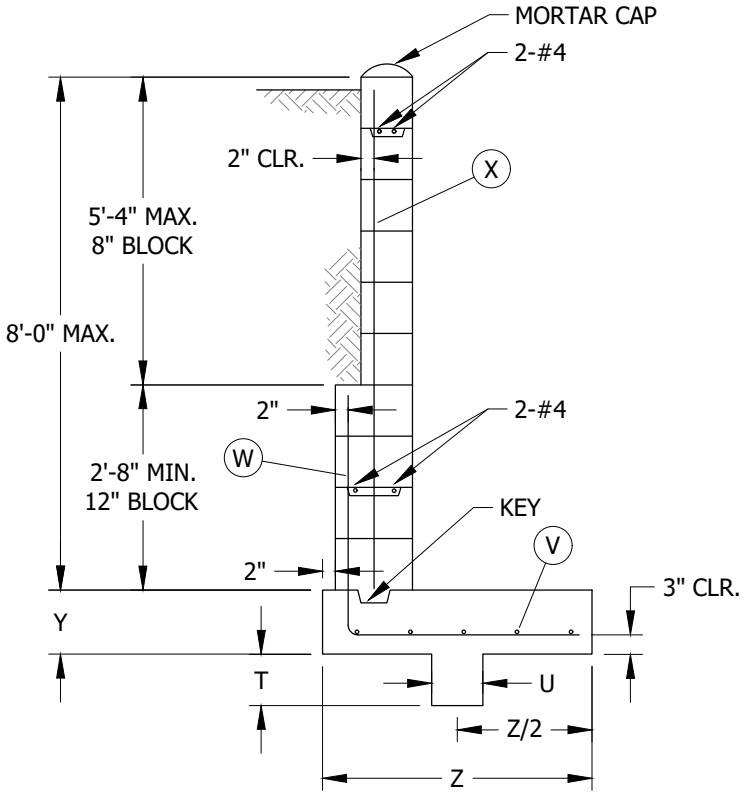

FIGURE 2
C-1 TYPICAL SECTION
OVER 5'-4"

TABLE 1 (C-1)

DIMENSIONS AND REINFORCING STEEL							
WALL HEIGHT	FOUNDATION DEPTH	FOUNDATION HEIGHT	REBAR			FOUNDATION KEY	
	Z (MIN.)	Y (MIN.)	X	W	V	U (IN)	T (IN)
1'-4"	2'-4"	8"	#4 @ 32"	--	4-#4	8	8
2'-0"	2'-4"	8"	#4 @ 32"	--	4-#4	8	8
2'-8"	2'-4"	8"	#4 @ 32"	--	4-#4	8	8
3'-4"	2'-4"	8"	#4 @ 32"	--	4-#4	8	8
4'-0"	3'-6"	10"	#4 @ 16"	--	5-#4	8	8
4'-8"	3'-6"	10"	#4 @ 16"	--	5-#4	8	8
5'-4"	3'-6"	10"	#4 @ 16"	--	5-#4	8	8
6'-0"	5'-4"	1'-0"	#4 @ 16"	#6 @ 16"	6-#4	12	12
6'-8"	5'-4"	1'-0"	#4 @ 16"	#6 @ 16"	6-#4	12	12
7'-4"	5'-4"	1'-0"	#4 @ 16"	#6 @ 16"	6-#4	12	12
8'-0"	5'-4"	1'-0"	#4 @ 16"	#6 @ 16"	6-#4	12	12

© 1998 - 2020 San Diego Gas & Electric Company. All rights reserved. Removal of this copyright notice without permission is not permitted under law.

REV	CHANGE	DR	BY	DSN	APV	DATE	REV	CHANGE	DR	BY	DSN	APV	DATE
C							F						
B	MOVED FROM UG3487	EDM	JIK	-	-	11/5/2020	E						
A	TITLE BLOCK UPDATE	-	B	BR	-	3/8/2017	D						

X Indicates Latest Revision | Completely Revised | New Page | Information Removed

SDG&E ELECTRIC UNDERGROUND CONSTRUCTION STANDARDS

MASONRY RETAINING WALLS
TYPE 1 - LEVEL BACKFILL

UG3489.1

TABLE OF CONTENTS

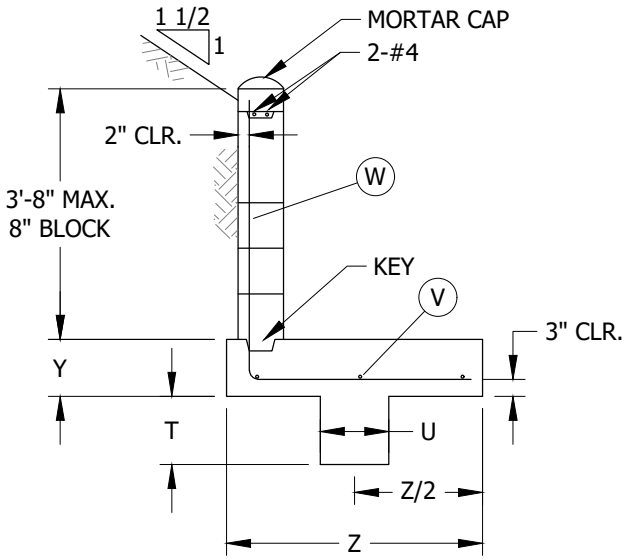

FIGURE 3
C-2 TYPICAL SECTION
3'-8" MAX.

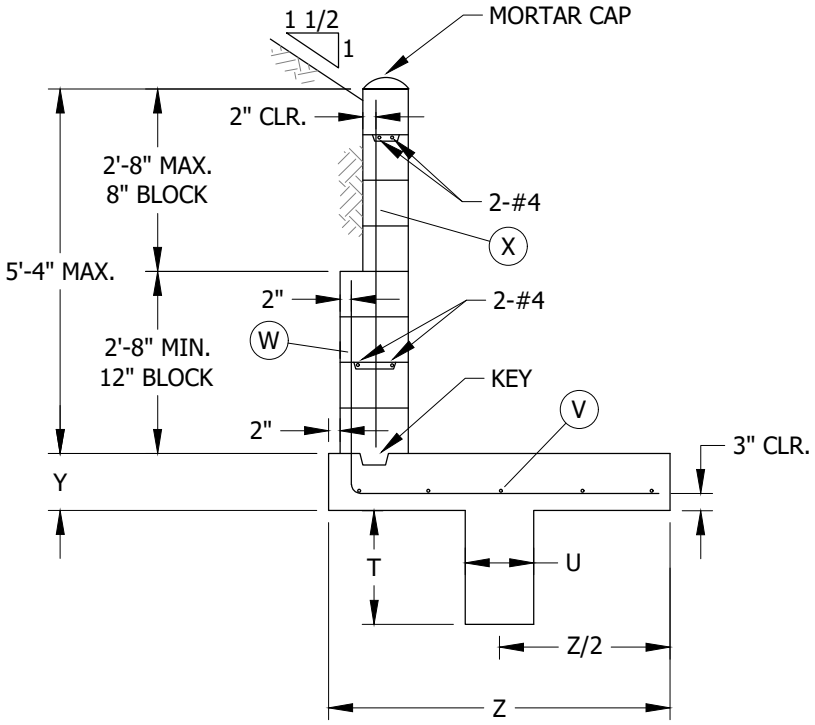

FIGURE 4
C-2 TYPICAL SECTION
OVER 3'-8"

TABLE 2 (C-2)

DIMENSIONS AND REINFORCING STEEL							
WALL HEIGHT	FOUNDATION DEPTH	FOUNDATION HEIGHT	REBAR			FOUNDATION KEY	
	Z (MIN.)	Y (MIN.)	X	W	V	U (IN)	T (IN)
1'-4"	3'-9"	10"	--	#4 @ 16"	3-#4	12	12
2'-0"	3'-9"	10"	--	#4 @ 16"	3-#4	12	12
2'-8"	3'-9"	10"	--	#4 @ 16"	3-#4	12	12
3'-4"	3'-9"	10"	--	#4 @ 16"	3-#4	12	12
4'-0"	5'-0"	10"	#4 @ 16"	#6 @ 16"	5-#4	12	20
4'-8"	5'-0"	10"	#4 @ 16"	#6 @ 16"	5-#4	12	20
5'-4"	5'-0"	10"	#4 @ 16"	#6 @ 16"	5-#4	12	20

© 1998 - 2020 San Diego Gas & Electric Company. All rights reserved. Removal of this copyright notice without permission is not permitted under law.

REV	CHANGE	DR	BY	DSN	APV	DATE	REV	CHANGE	DR	BY	DSN	APV	DATE
C							F						
B	MOVED FROM UG3487	EDM	JIK	-	-	11/5/2020	E						
A	TITLE BLOCK UPDATE	-	B	BR	-	3/8/2017	D						

X Indicates Latest Revision | Completely Revised | New Page | Information Removed

TABLE OF CONTENTS

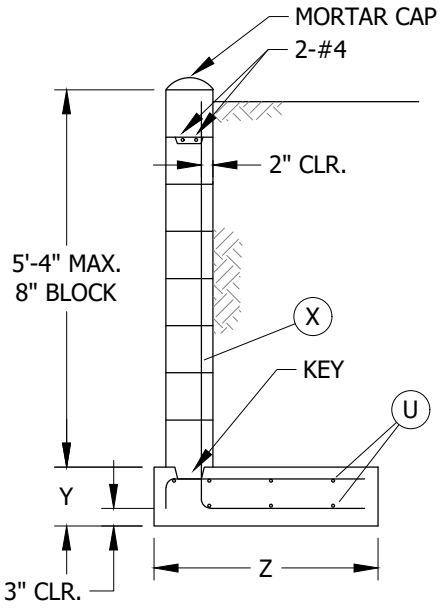

FIGURE 5
C-3 TYPICAL SECTION
5'-4" MAX.

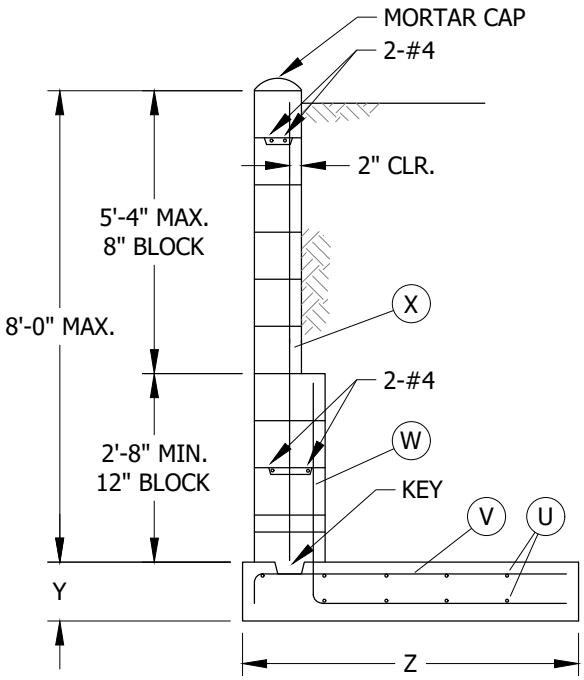

FIGURE 6
C-3 TYPICAL SECTION
OVER 5'-4"

TABLE 3 (C-3)

DIMENSIONS AND REINFORCING STEEL						
WALL HEIGHT	FOUNDATION DEPTH	FOUNDATION HEIGHT	REBAR			
	Z (MIN.)	Y (MIN.)	X	W	V	U
1'-4"	2'-4"	8"	#4 @ 32"	--	#4 @ 32"	5-#4
2'-0"	2'-4"	8"	#4 @ 32"	--	#4 @ 32"	5-#4
2'-8"	2'-4"	8"	#4 @ 32"	--	#4 @ 32"	5-#4
3'-4"	2'-4"	8"	#4 @ 32"	--	#4 @ 32"	5-#4
4'-0"	3'-2"	10"	#4 @ 16"	--	#4 @ 16"	6-#4
4'-8"	3'-2"	10"	#4 @ 16"	--	#4 @ 16"	6-#4
5'-4"	3'-2"	10"	#4 @ 16"	--	#4 @ 16"	6-#4
6'-0"	4'-9"	1'-0"	#4 @ 16"	#6 @ 16"	#6 @ 16"	7-#4
6'-8"	4'-9"	1'-0"	#4 @ 16"	#6 @ 16"	#6 @ 16"	7-#4
7'-4"	4'-9"	1'-0"	#4 @ 16"	#6 @ 16"	#6 @ 16"	7-#4
8'-0"	4'-9"	1'-0"	#4 @ 16"	#6 @ 16"	#6 @ 16"	7-#4

TABLE OF CONTENTS

© 1998 - 2020 San Diego Gas & Electric Company. All rights reserved. Removal of this copyright notice without permission is not permitted under law.

REV	CHANGE	DR	BY	DSN	APV	DATE	REV	CHANGE	DR	BY	DSN	APV	DATE
C							F						
B	MOVED FROM UG3487	EDM	JIK	-	-	11/5/2020	E						
A	TITLE BLOCK UPDATE	-	B	BR	-	3/8/2017	D						

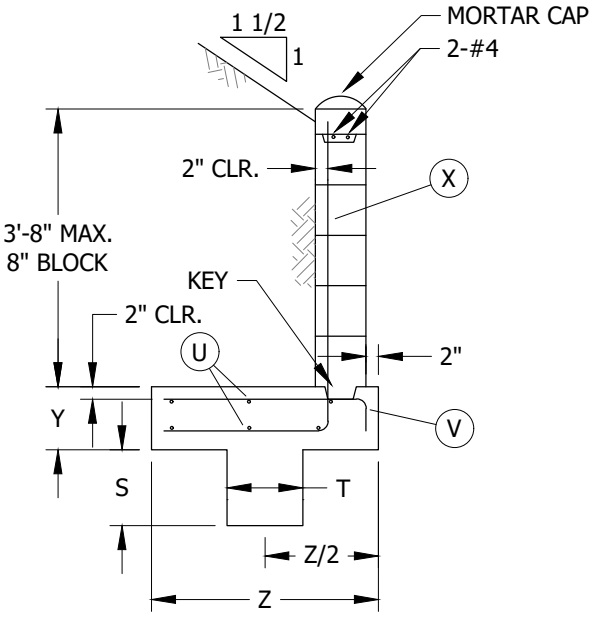

FIGURE 7
C-4 TYPICAL SECTION
3'-8" MAX.

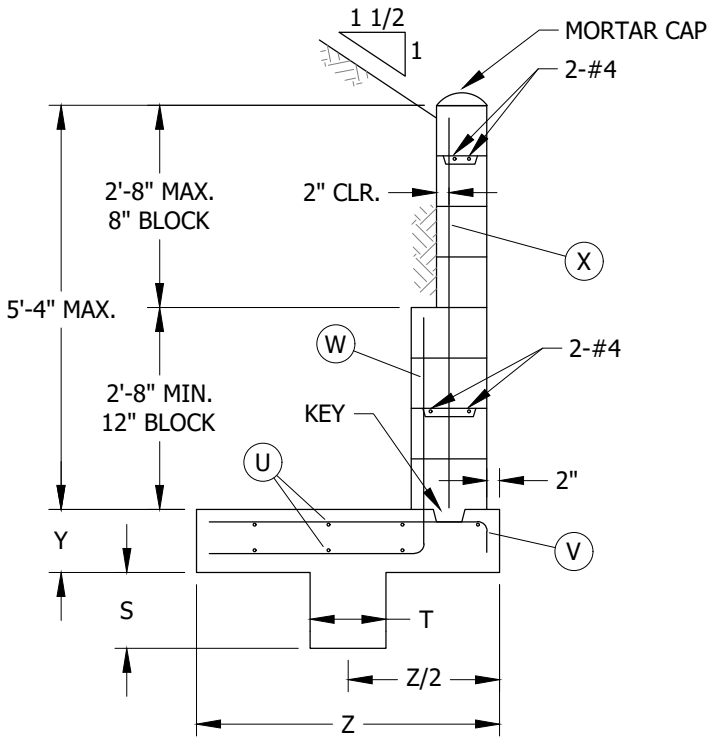

FIGURE 8
C-4 TYPICAL SECTION
OVER 3'-8"

TABLE 4 (C-4)

DIMENSIONS AND REINFORCING STEEL								
WALL HEIGHT	FOUNDATION DEPTH	FOUNDATION HEIGHT	REBAR				FOUNDATION KEY	
	Z (MIN.)	Y (MIN.)	X	W	V	U	T (IN)	S (IN)
1'-4"	3'-0"	8"	#4 @ 16"	--	#6 @ 16"	6-#4	12	12
2'-0"	3'-0"	8"	#4 @ 16"	--	#6 @ 16"	6-#4	12	12
2'-8"	3'-0"	8"	#4 @ 16"	--	#6 @ 16"	6-#4	12	12
3'-4"	3'-0"	8"	#4 @ 16"	--	#6 @ 16"	6-#4	12	12
4'-0"	4'-0"	10"	#4 @ 16"	#6 @ 16"	#6 @ 8"	8-#4	12	12
4'-8"	4'-0"	10"	#4 @ 16"	#6 @ 16"	#6 @ 8"	8-#4	12	12
5'-4"	4'-0"	10"	#4 @ 16"	#6 @ 16"	#6 @ 8"	8-#4	12	12

TABLE OF CONTENTS

© 1998 - 2020 San Diego Gas & Electric Company. All rights reserved. Removal of this copyright notice without permission is not permitted under law.

REV	CHANGE	DR	BY	DSN	APV	DATE	REV	CHANGE	DR	BY	DSN	APV	DATE
C							F						
B	MOVED FROM UG3487	EDM	JIK	-	-	11/5/2020	E						
A	TITLE BLOCK UPDATE	-	B	BR	-	3/8/2017	D						

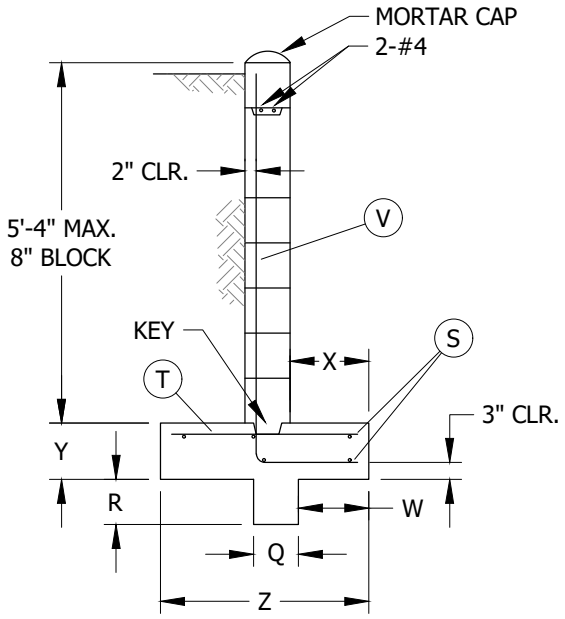

FIGURE 9
C-5 TYPICAL SECTION
5'-4" MAX.

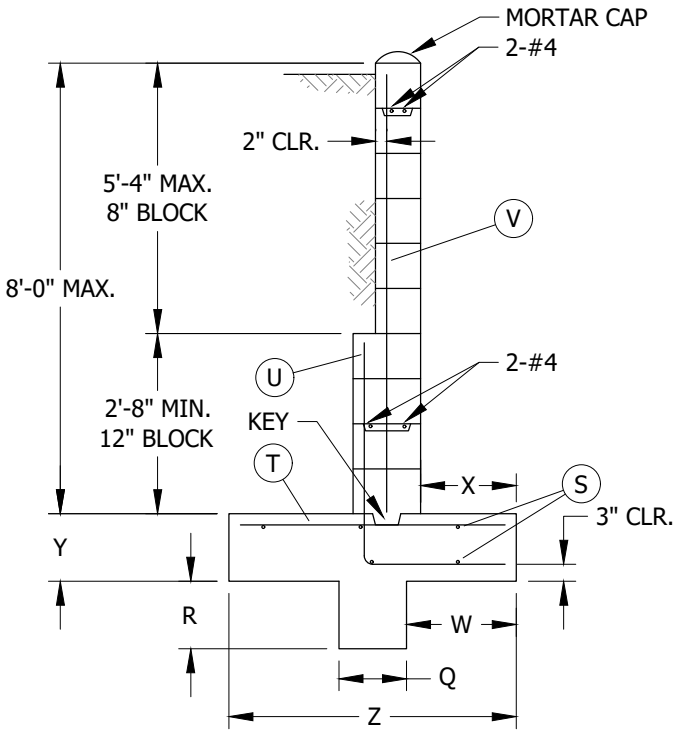

FIGURE 10
C-5 TYPICAL SECTION
OVER 5'-4"

TABLE 5 (C-5)

DIMENSIONS AND REINFORCING STEEL										
WALL HEIGHT	FOUNDATION DEPTH Z (MIN.)	FOUNDATION HEIGHT Y (MIN.)	X	W	REBAR V	REBAR U	REBAR T	REBAR S	FOUNDATION KEY R (IN)	FOUNDATION KEY Q (IN)
1'-4"	2'-1"	8"	9"	8 1/2"	#4 @ 32"	--	#4 @ 32"	5-#4	8	8
2'-0"	2'-1"	8"	9"	8 1/2"	#4 @ 32"	--	#4 @ 32"	5-#4	8	8
2'-8"	2'-1"	8"	9"	8 1/2"	#4 @ 32"	--	#4 @ 32"	5-#4	8	8
3'-4"	2'-1"	8"	9"	8 1/2"	#4 @ 32"	--	#4 @ 32"	5-#4	8	8
4'-0"	3'-1"	10"	1'-2"	1'-1/2"	#4 @ 16"	--	#4 @ 16"	5-#4	8	8
4'-8"	3'-1"	10"	1'-2"	1'-1/2"	#4 @ 16"	--	#4 @ 16"	5-#4	8	8
5'-4"	3'-1"	10"	1'-2"	1'-1/2"	#4 @ 16"	--	#4 @ 16"	5-#4	8	8
6'-0"	4'-3"	1'-0"	1'-5"	1'-7 1/2"	#4 @ 16"	#7 @ 16"	#4 @ 16"	6-#4	12	12
6'-8"	4'-3"	1'-0"	1'-5"	1'-7 1/2"	#4 @ 16"	#7 @ 16"	#4 @ 16"	6-#4	12	12
7'-4"	4'-3"	1'-0"	1'-5"	1'-7 1/2"	#4 @ 16"	#7 @ 16"	#4 @ 16"	6-#4	12	12
8'-0"	4'-3"	1'-0"	1'-5"	1'-7 1/2"	#4 @ 16"	#7 @ 16"	#4 @ 16"	6-#4	12	12

© 1998 - 2020 San Diego Gas & Electric Company. All rights reserved. Removal of this copyright notice without permission is not permitted under law.

REV	CHANGE	DR	BY	DSN	APV	DATE	REV	CHANGE	DR	BY	DSN	APV	DATE
C							F						
B	MOVED FROM UG3487	EDM	JIK	-	-	11/5/2020	E						
A	TITLE BLOCK UPDATE	-	B	BR	-	3/8/2017	D						

X Indicates Latest Revision | Completely Revised | New Page | Information Removed

TABLE OF CONTENTS

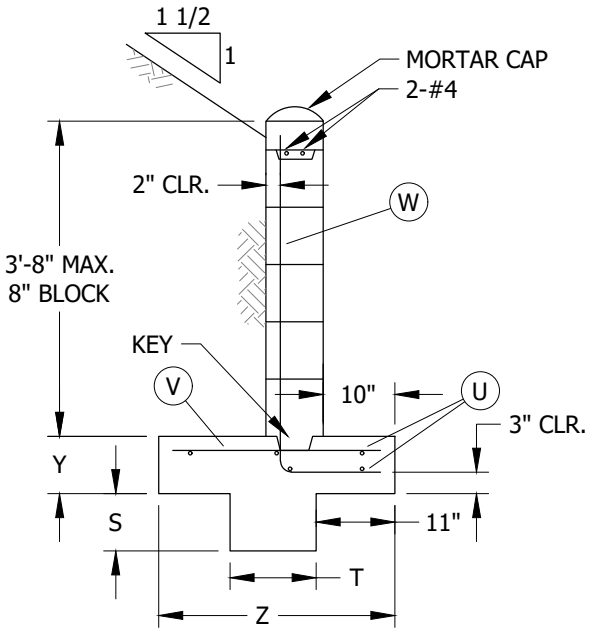

FIGURE 11
C-6 TYPICAL SECTION
3'-8" MAX.

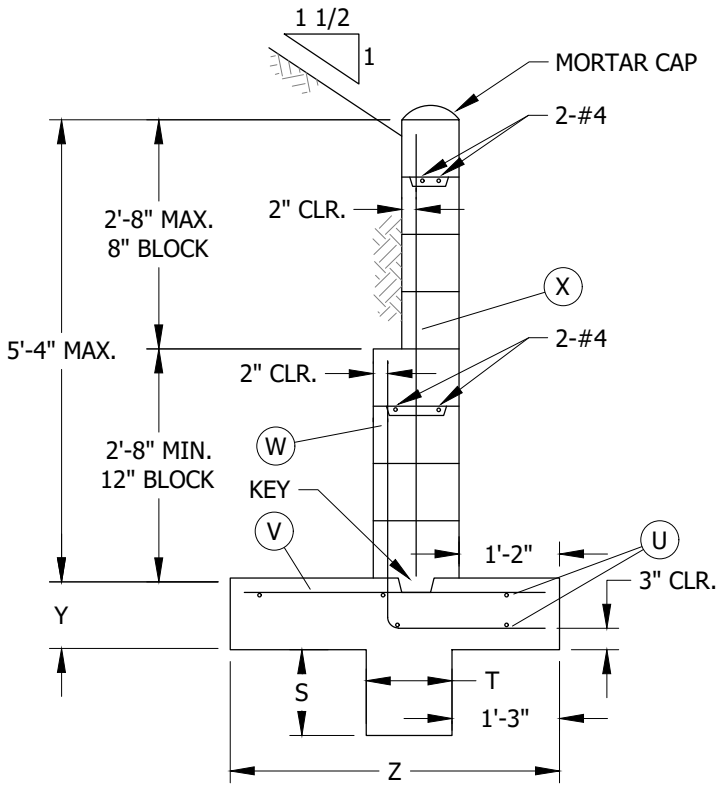

FIGURE 12
C-6 TYPICAL SECTION
OVER 3'-8"

TABLE 6 (C-6)

DIMENSIONS AND REINFORCING STEEL								
WALL HEIGHT	FOUNDATION DEPTH	FOUNDATION HEIGHT	REBAR				FOUNDATION KEY	
	Z (MIN.)	Y (MIN.)	X	W	V	U	T (IN)	S (IN)
1'-4"	2'-9"	8"	--	#4 @ 16"	#5 @ 16"	5-#4	12	8
2'-0"	2'-9"	8"	--	#4 @ 16"	#5 @ 16"	5-#4	12	8
2'-8"	2'-9"	8"	--	#4 @ 16"	#5 @ 16"	5-#4	12	8
3'-4"	2'-9"	8"	--	#4 @ 16"	#5 @ 16"	5-#4	12	8
4'-0"	3'-10"	10"	#4 @ 16"	#6 @ 16"	#5 @ 16"	5-#4	12	12
4'-8"	3'-10"	10"	#4 @ 16"	#6 @ 16"	#5 @ 16"	5-#4	12	12
5'-4"	3'-10"	10"	#4 @ 16"	#6 @ 16"	#5 @ 16"	5-#4	12	12

© 1998 - 2020 San Diego Gas & Electric Company. All rights reserved. Removal of this copyright notice without permission is not permitted under law.

REV	CHANGE	DR	BY	DSN	APV	DATE	REV	CHANGE	DR	BY	DSN	APV	DATE
C							F						
B	MOVED FROM UG3487	EDM	JIK	-	-	11/5/2020	E						
A	TITLE BLOCK UPDATE	-	B	BR	-	3/8/2017	D						

X Indicates Latest Revision | Completely Revised | New Page | Information Removed

TABLE OF CONTENTS

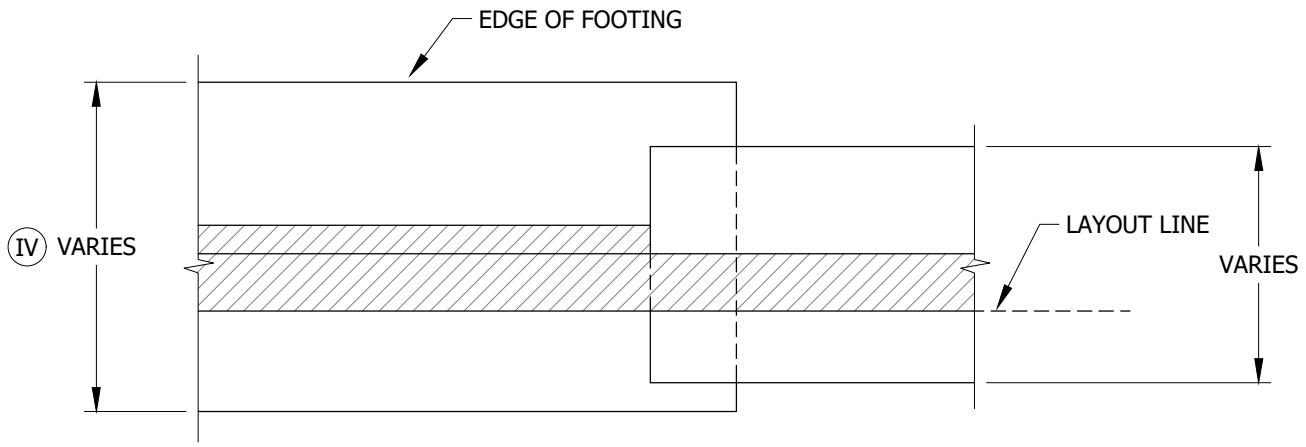

FIGURE 13
PLAN VIEW

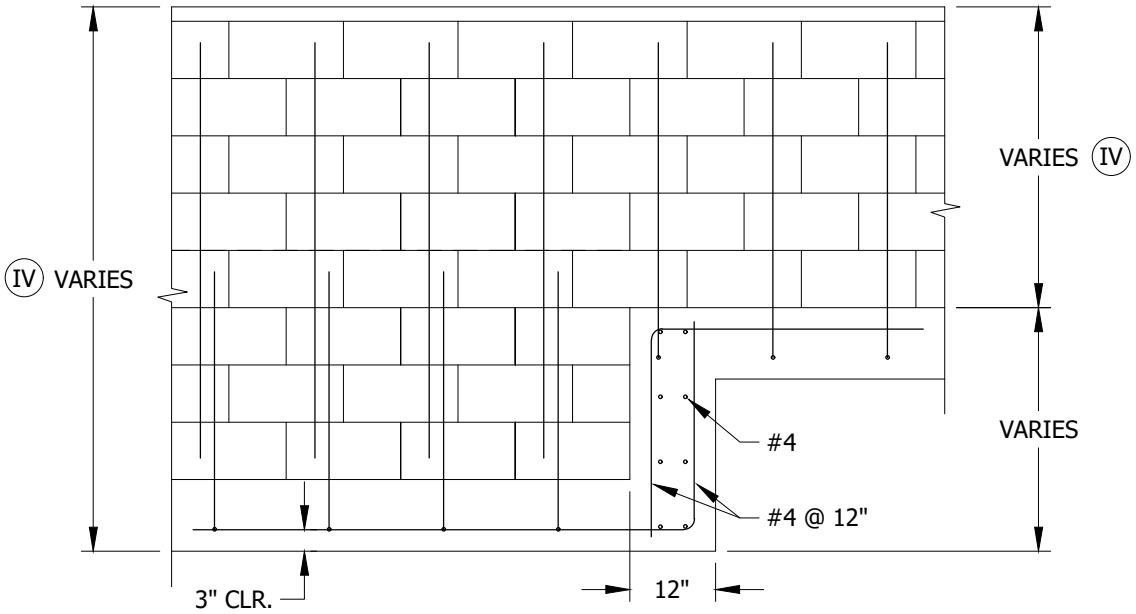

FIGURE 13 V
ELEVATION VIEW

© 1998 - 2020 San Diego Gas & Electric Company. All rights reserved. Removal of this copyright notice without permission is not permitted under law.

REV	CHANGE	DR	BY	DSN	APV	DATE	REV	CHANGE	DR	BY	DSN	APV	DATE
C							F						
B	MOVED FROM UG3487	EDM	JIK	-	-	11/5/2020	E						
A	TITLE BLOCK UPDATE	-	B	BR	-	3/8/2017	D						

X Indicates Latest Revision | Completely Revised | New Page | Information Removed

SDG&E ELECTRIC UNDERGROUND CONSTRUCTION STANDARDS

MASONRY RETAINING WALLS
TYPE 6 - SLOPING BACKFILL

UG3489.7

TABLE OF CONTENTS

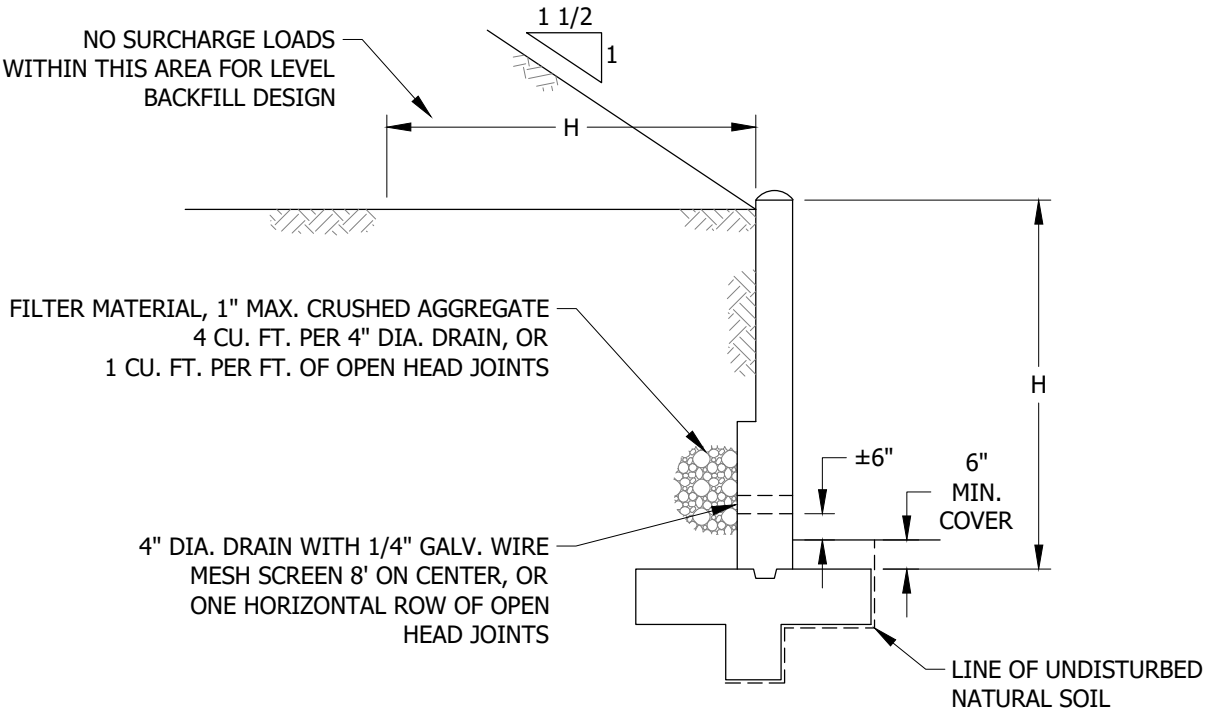

FIGURE 14
TYPICAL SECTION

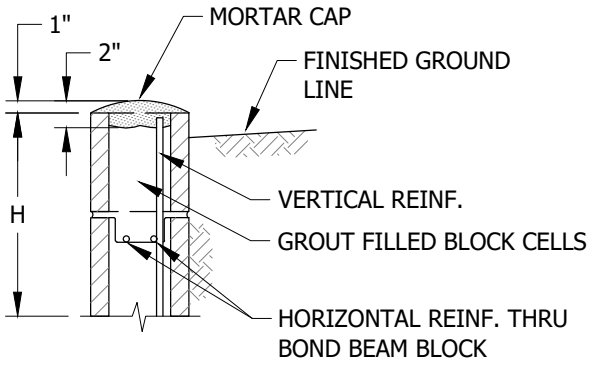

FIGURE 14
CAP DETAIL

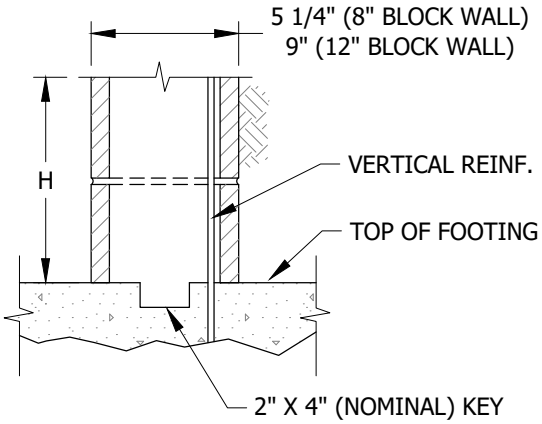

FIGURE 14
KEY DETAIL

© 1998 - 2020 San Diego Gas & Electric Company. All rights reserved. Removal of this copyright notice without permission is not permitted under law.

REV	CHANGE	DR	BY	DSN	APV	DATE	REV	CHANGE	DR	BY	DSN	APV	DATE
C							F						
B	MOVED FROM UG3487	EDM	JIK	-	-	11/5/2020	E						
A	TITLE BLOCK UPDATE	-	B	BR	-	3/8/2017	D						

X Indicates Latest Revision | Completely Revised | New Page | Information Removed

SDG&E ELECTRIC UNDERGROUND CONSTRUCTION STANDARDS

MASONRY RETAINING WALLS
DETAILS

UG3489.8

TABLE OF CONTENTS

INSTALLATION:

A. FILL ALL BLOCK CELLS WITH GROUT.

BILL OF MATERIALS: NONE

NOTES:

I. THIS STANDARD WAS DEVELOPED BASED ON THE SAN DIEGO REGIONAL STANDARD DRAWINGS.

II. ALL MASONRY WALLS SHALL BE CONSTRUCTED WITH CAP, KEY AND DRAINAGE DETAILS AS SHOWN HEREON.

III. 4-INCH DIAMETER DRAIN MAY BE FORMED BY PLACING A BLOCK ON ITS SIDE.

(IV) WALL HEIGHTS AND FOOTING TYPES VARY DEPENDING ON SELECTED RETAINING WALL TYPE AND SITE CONDITIONS.

(V) HORIZONTAL REINFORCEMENT NOT SHOWN.

VI. WALLS ARE TO BE USED ONLY FOR THE LOADING CONDITIONS SHOWN FOR EACH TYPE WALL. THE DESIGN HEIGHTS ARE MEASURED FROM THE TOP OF THE FOUNDATION, NOT FROM FINISHED GRADE AND ARE NOT TO BE EXCEEDED WHEN USING THESE STANDARD DESIGNS. WALLS NOT MEETING THE SPECIFICATIONS IN THIS STANDARD ARE TO BE DESIGNED BY CIVIL/STRUCTURAL ENGINEERING FOR THE SPECIFIC CONDITIONS REQUIRED.

VII. THE CONTRACTOR SHALL PROVIDE AND MAINTAIN ADEQUATE ERECTION, SHORING AND BRACING AS REQUIRED FOR STABILITY OF ALL WALLS AND EMBANKMENTS DURING ALL PHASES OF CONSTRUCTION.

VIII. BEFORE COMMENCING ANY EXCAVATIONS, THE CONTRACTOR SHALL VERIFY THE LOCATION OF ALL UNDERGROUND UTILITIES, VALVE BOXES, VAULTS OR ANY OTHER UNDERGROUND OBSTRUCTIONS, AND NOT PERFORM ANY WORK THAT WILL INTERFERE WITH THEIR SERVICE. NOTIFY SDG&E OF ANY OBSTRUCTIONS FOUND THAT INTERFERE WITH CONSTRUCTION.

IX. TO INSURE PROPER BONDING BETWEEN THE FOOTING AND WALL, A MORTAR KEY SHALL BE FORMED BY EMBEDDING A FLAT 2x4 FLUSH WITH AND AT THE TOP OF THE FRESHLY POURED FOOTING. THE 2x4 SHOULD BE REMOVED AFTER THE CONCRETE HAS STARTED TO HARDEN (APPROXIMATELY 1 HOUR).

XI. WALL DRAINS SHALL BE PROVIDED AS SHOWN IN THIS STANDARD.

XII. NO BACKFILL MATERIAL SHALL BE PLACED AGAINST MASONRY RETAINING WALLS UNTIL GROUT HAS REACHED DESIGN STRENGTH OR UNTIL GROUT HAS CURED FOR A MINIMUM OF 28 DAYS AND BUILDING DEPARTMENT INSPECTION IS COMPLETE. COMPACTION OF BACKFILL MATERIAL BY JETTING OR PONDING WITH WATER WILL NOT BE PERMITTED. EACH LAYER OF BACKFILL SHALL BE MOISTENED AND THOROUGHLY TAMPED, ROLLED OR OTHERWISE COMPACTED UNTIL THE RELATIVE COMPACTING IS NOT LESS THAN 90%.

XIII. SAFETY FENCING SHALL BE INSTALLED AT THE TOP OF THE WALL AS REQUIRED BY THE AGENCY.

XIV. **REINFORCED CONCRETE:**

a. ALL CONCRETE SHALL HAVE A MINIMUM COMPRESSIVE STRENGTH AT 28 DAYS OF 2,000 PSI, MAXIMUM 4-INCH SLUMP (MAX. SLUMP OF 8-INCH PERMITTED WITH ADDITION OF APPROVED PLASTICIZER) AND MAXIMUM 1-INCH AGGREGATE. MAXIMUM WATER/CEMENT RATIO TO BE 0.45. CEMENT SHALL CONFORM TO 'TYPE II MODIFIED' AS DEFINED BY THE MOST CURRENT EDITION OF CALTRANS STANDARD SPECIFICATIONS.

b. ALL REINFORCING STEEL SHALL BE WELL-SECURED IN POSITION PRIOR TO PLACING CONCRETE.

c. BOTTOMS OF FOUNDATIONS SHALL BE CLEANED OF LOOSE MATERIAL AND DAMPENED PRIOR TO PLACING CONCRETE IN FOOTINGS.

d. CONSTRUCTION JOINTS ARE TO BE USED ONLY WHERE SHOWN ON THE APPROVED PLANS. ADDITIONAL JOINTS PROPOSED BY THE CONTRACTOR MUST BE APPROVED BY SDG&E PRIOR TO START OF CONSTRUCTION. THE SURFACE OF ALL CONSTRUCTION JOINTS SHALL BE CLEANED AND ROUGHENED BY REMOVING THE ENTIRE SURFACE AND EXPOSING CLEAN AGGREGATE SOLIDLY EMBEDDED IN MORTAR PRIOR TO PLACING NEW CONCRETE. SURFACE AT JOINTS SHALL BE ROUGHENED TO 1/4-INCH MINIMUM AMPLITUDE.

e. ALL CONCRETE SHALL BE MIXED, DELIVERED, PLACED AND CURED PER THE LATEST EDITION OF ACI 301. MECHANICAL VIBRATORS SHALL BE USED.

TABLE OF CONTENTS

© 1998 - 2020 San Diego Gas & Electric Company. All rights reserved. Removal of this copyright notice without permission is not permitted under law.

REV	CHANGE	DR	BY	DSN	APV	DATE	REV	CHANGE	DR	BY	DSN	APV	DATE
C							F						
B	MOVED FROM UG3487	EDM	JIK	-	-	11/5/2020	E						
A	TITLE BLOCK UPDATE	-	B	BR	-	3/8/2017	D						

X Indicates Latest Revision | Completely Revised | New Page | Information Removed

SDG&E ELECTRIC UNDERGROUND CONSTRUCTION STANDARDS

MASONRY RETAINING WALLS
GENERAL NOTES

NOTES (CONT'D):

XV. **CONCRETE BLOCK MASONRY:**

a. CONCRETE MASONRY UNITS SHALL BE TYPE I MEDIUM WEIGHT UNITS IN CONFORMANCE WITH ASTM C90 (f'm = 1,500 PSI).

b. MORTAR SHALL BE TYPE S IN CONFORMANCE WITH ASTM C270 WITH AN ULTIMATE COMPRESSIVE STRENGTH OF 1,800 PSI.

c. GROUT SHALL HAVE AN ULTIMATE COMPRESSIVE STRENGTH OF 2,000 PSI.

d. ALL CELLS SHALL BE SOLID GROUTED AND CONSOLIDATED WITH A MECHANICAL VIBRATOR.

e. WHEN GROUTING IS STOPPED FOR ONE HOUR OR LONGER, HORIZONTAL CONSTRUCTION JOINTS SHALL BE FORMED BY STOPPING THE GROUT POUR 1 1/2-INCH BELOW THE TOP OF THE UPPERMOST UNIT.

f. APPLY CLEAR WATER REPELLANT SEALER TO ALL EXPOSED SURFACES AFTER REQUIRED MOISTURE CONTENT IS REACHED, IN ACCORDANCE WITH THE MANUFACTURER'S RECOMMENDATIONS (5-YEAR GUARANTEE).

XVI. **REINFORCING STEEL:**

a. REINFORCING STEEL SHALL CONFORM TO ASTM A615, GRADE 60.

b. BAR LAP SPLICE LENGTHS SHALL BE 48 BAR DIAMETERS MINIMUM.

c. FOOTING DOWELS SHALL MATCH VERTICAL REINFORCING IN SIZE, GRADE AND SPACING UNLESS OTHERWISE NOTED.

d. ALL DETAILING, FABRICATION AND ERECTION OF REINFORCING STEEL SHALL CONFORM TO THE LATEST EDITION OF ACI 315, DETAILS AND DETAILING OF CONCRETE REINFORCING.

e. MINIMUM CONCRETE COVER FOR REINFORCING STEEL SHALL BE AS FOLLOWS UNLESS SHOWN OTHERWISE ON DRAWINGS:

TABLE 7

MINIMUM REBAR CONCRETE COVER	
TYPE	**DIMENSION (IN)**
CONCRETE CAST AGAINST EARTH	3
ALL OTHER	2

XVII. **INSPECTIONS:** CALL THE GOVERNING JURISDICTION FOR INSPECTIONS AS FOLLOWS:

a. WHEN THE FOOTING HAS BEEN FORMED AND CLEANED, WITH STEEL TIED SECURELY IN FINAL POSITION AND READY FOR CONCRETE PLACEMENT.

b. WHERE CLEANOUT HOLES ARE NOT PROVIDED, AFTER BLOCK HAS BEEN LAID UP TO A HEIGHT OF 4 FEET OR FULL HEIGHT FOR WALLS UP TO 5 FEET, WITH STEEL IN PLACE, AND BEFORE THE GROUT IS POURED.

c. WHERE CLEANOUT HOLES ARE NOT PROVIDED, AFTER FIRST LIFT IS PROPERLY GROUTED, BLOCK HAS BEEN LAID UP TO TOP OF WALL, STEEL TIED SECURELY IN PLACE, AND BEFORE UPPER LIFT IS GROUTED.

d. WHERE CLEANOUT HOLES ARE PROVIDED, AFTER BLOCK HAS BEEN LAID UP TO TOP OF WALL, WITH STEEL TIED SECURELY IN PLACE, AND BEFORE GROUTING.

e. AFTER GROUTING IS COMPLETE, WALL DRAINAGE IS IN PLACE, AND BEFORE EARTH BACKFILL IS PLACED.

f. FINAL INSPECTION WHEN ALL WORK HAS BEEN COMPLETED.

REFERENCE: NONE

TABLE OF CONTENTS

© 1998 - 2020 San Diego Gas & Electric Company. All rights reserved. Removal of this copyright notice without permission is not permitted under law.

REV	CHANGE	DR	BY	DSN	APV	DATE	REV	CHANGE	DR	BY	DSN	APV	DATE
C							F						
B	MOVED FROM UG3487	EDM	JIK	-	-	11/5/2020	E						
A	TITLE BLOCK UPDATE	-	B	BR	-	3/8/2017	D						

X Indicates Latest Revision | Completely Revised | New Page | Information Removed

SDG&E ELECTRIC UNDERGROUND CONSTRUCTION STANDARDS

MASONRY RETAINING WALLS
GENERAL NOTES

UG3489.10

3500 - PAD/WALL MOUNTED SECTIONALIZING EQUIPMENT

3500 - PAD/WALL MOUNTED SECTIONALIZING EQUIPMENT

MAIN TABLE OF CONTENTS

PAGE	SUBJECT
	FUSE CABINETS
3511	PAD MOUNTED AIRBREAK PME-5 FUSED SWITCH CABINET, 12KV, 200A, THREE-PHASE
3512	SINGLE-PHASE, LOW PROFILE FUSED SWITCHING CABINET - 6,930V
3514	THREE-PHASE FUSE CABINET WITH HORIZONTAL MOUNTED FUSES - 12KV WITH FEED THRU CAPABILITY
3515	THREE-PHASE FUSE CABINET WITH VERTICAL MOUNTED FUSE AND FUSE BYPASS - 12KV WITH FEED THRU CAPABILITY
3516	THREE-PHASE WALL MOUNTED FUSE CABINET - 12KV, 200A
	TERMINATING CABINETS
3517	200A LIVEFRONT TO DEADFRONT TERMINATING CABINET
3518	600A LIVEFRONT TO DEADFRONT TERMINATING CABINET
3522	SINGLE-PHASE, LOW PROFILE CABLE TERMINATING CABINET - 6,930V
3523	THREE-PHASE LOW PROFILE CABLE TERMINATING CABINET, 12KV, 200A
3524	THREE-PHASE LOW PROFILE CABLE TERMINATING CABINET, 12KV, 200A/600A
	SWITCH CABINETS
3550	PAD MOUNTED SWITCH GEAR
3551	4-WAY MANUAL
3552	4-WAY SCADA
3553	4-WAY SCADA HIGH SPEED TRIP COIL
3554	2 SIDED 4-WAY SCADA
3555	5-WAY SCADA
3560	INNOVATIVE SWITCH GEAR
3567	PAD MOUNTED AIRBREAK PME 9, 10 AND 11 SECTIONALIZING SWITCH, 12KV, 600A, THREE-PHASE
3568	INSTALLATION OF PAD MOUNTED AIRBREAK PME 9, 10 AND 11 SECTIONALIZING SWITCH, 12KV, 600A, THREE-PHASE
3580	PAD MOUNTED MVI SWITCH ENCLOSURE
3583	PAD MOUNTED AIRBREAK PME-3 SECTIONALIZING SWITCH CABINET, 12KV, 600A
3584	INSTALLATION OF PAD MOUNTED AIRBREAK PME-3 SECTIONALIZING SWITCH CABINET, 12KV, 600A
3585	PAD MOUNTED 3-WAY 600A SF-6 GAS SWITCH CABINET (VISTA)
3586	INSTALLATION OF PAD MOUNTED 3-WAY 600A SF-6 GAS SWITCH CABINET (VISTA)
3588	INSTALLATION OF PAD MOUNTED AIRBREAK PME-5 FUSED SWITCH CABINET, 12KV, 200A

REV	CHANGE	DRWN	BY	CHKD	APVD	DATE
J	UG3590 AND UG3591 MOVED TO FMO	NV5	MAK	EJA	JAS	11/13/2024
I	REVISED TO 3D FORMAT	NV5	JIK	-	-	05/07/2024
H	UG3525 MOVED TO FMO	EDM	EJA	GLW	KRG	09/07/2022

SDGE™

SDG&E ELECTRIC UNDERGROUND CONSTRUCTION STANDARDS

PAD MOUNTED SECTIONALIZING EQUIPMENT
TABLE OF CONTENTS

SCALE: NOT TO SCALE

DRAWING NO:	SHEET:
UG3501.1	1 OF 1

© 1998 - 2024 San Diego Gas and Electric Company. All rights reserved. Removal of this copyright notice without permission is not permitted under law.

Indicates Latest Revision | Completely Revised | New Page | X Information Removed

SCOPE: THIS STANDARD SHOWS INSTALLATION FOR THE PME-5 FUSE CABINET. APPROVED APPLICATIONS OF THIS STANDARD INCLUDE FEEDER TAPS FOR CERTAIN LOCAL DISTRIBUTION LOADS, AND FIELD MAINTENANCE JOBS REPLACING OLDER PMH-5 (LIVEFRONT) CABINETS.

ATTENTION:

* THIS DEVICE DOES NOT QUALIFY AS A SWITCH, FOR THE PURPOSES OF FEEDER CIRCUIT DESIGN CRITERIA. NOTE THAT ALL TERMINATIONS ON THE PME-5 USE 200A CONNECTORS. FUSING HARDWARE FOR THE PME-5 IS COMMON TO THE PME-9 AND PME-11, AND CAN ACCOMMODATE X-LIMITER CLF, OR SM-4 EXPULSION FUSING, WITH THE REQUIRED MODIFICATIONS.

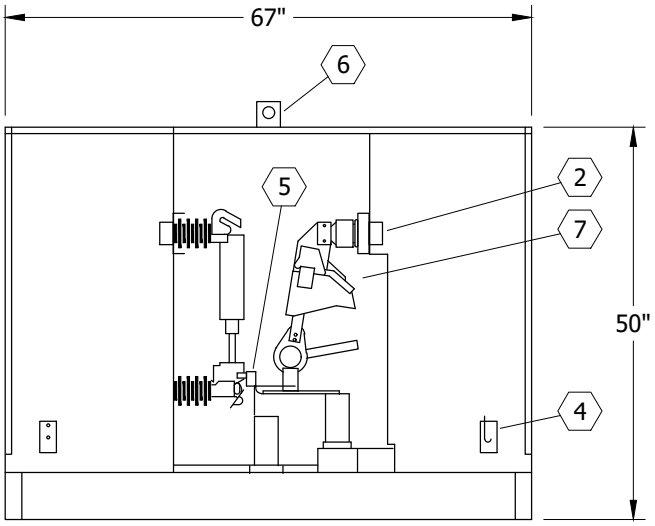

FIGURE 1 (I)
SIDE VIEW
EXPOSED

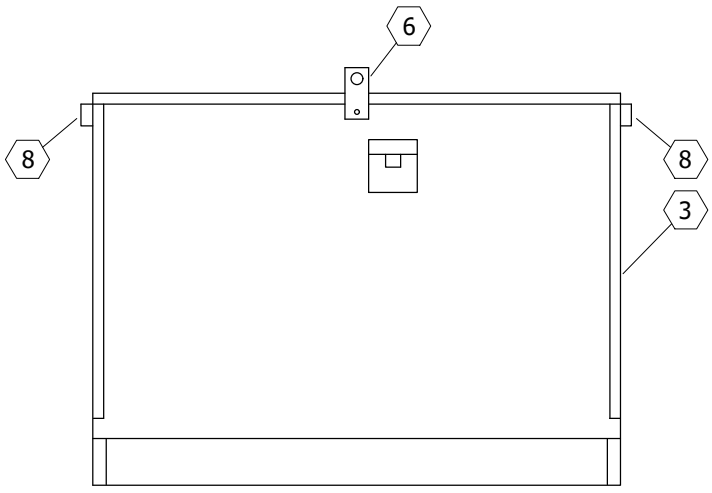

FIGURE 1
SIDE VIEW

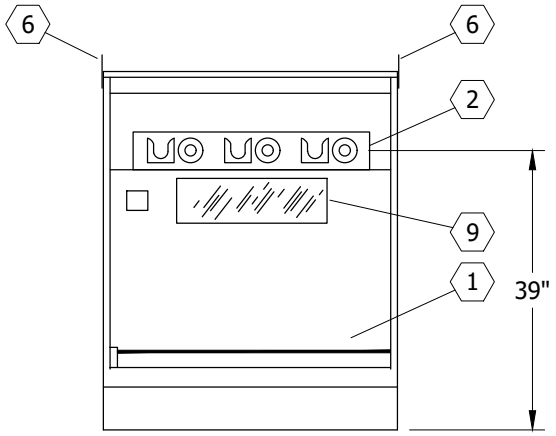

FIGURE 2
COMPARTMENT 1
END VIEW

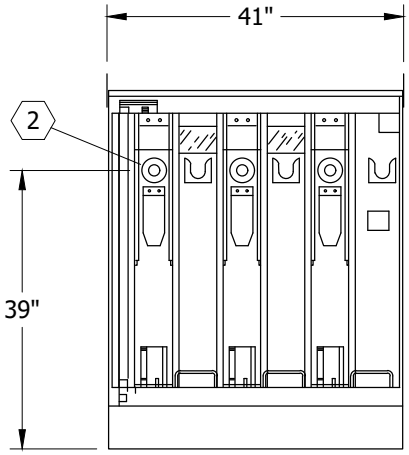

FIGURE 3
COMPARTMENT 2
END VIEW

TABLE OF CONTENTS

© 1998 - 2021 San Diego Gas & Electric Company. All rights reserved. Removal of this copyright notice without permission is not permitted under law.

REV	CHANGE	DR	BY	DSN	APV	DATE	REV	CHANGE	DR	BY	DSN	APV	DATE
C	MOVED FROM UG3587	EDM	JIK	-	-	5/17/2021	F						
B	EDITORIAL CHANGES	-	AW	JS	CZH	7/1/2018	E						
A	REVISION	-	-	-	-	3/1/2002	D						

X Indicates Latest Revision | Completely Revised | New Page | Information Removed

SDG&E ELECTRIC UNDERGROUND CONSTRUCTION STANDARDS

PAD MOUNTED AIRBREAK PME-5 FUSED SWITCH CABINET
12KV, 200A, THREE-PHASE

UG3511.1

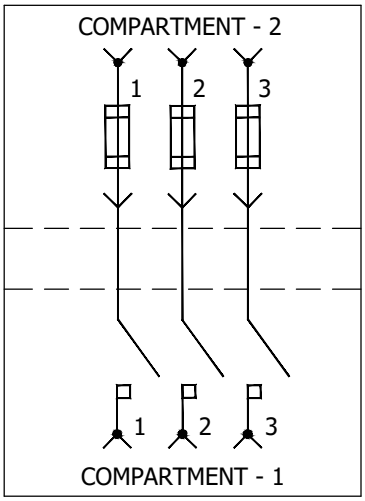

UG MAP SYMBOL

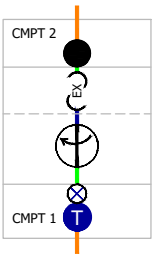

PME-5

FIGURE 4
PME-5
CONNECTION DIAGRAM

TABLE 1

SWITCH PARTS LIST	
ITEM	**DESCRIPTION**
1	BAR, GROUND
2	WELL, BUSHING, 200A
3	NAME PLATE, (ON OUTSIDE OF DOOR)
4	PLATE, GROUNDING
5	BUS, 200A
6	TABS, LIFTING (III)
7	SWITCH, MINI-RUPTER, 200A
8	SWITCH OPERATOR, (SCADA ONLY)
9	LOCKING PROVISION, PENTAHEAD LATCH
10	WINDOW, VIEWING, LEXAN SWITCH (II)

TABLE 2

ELECTRIC RATINGS	
VOLTAGE	14.4KV
B.I.L.	95KV
CURRENT, CONDITIONS	200A
LOADMAKE AND LOADBREAK	200A
MOMENTARY AND FAULT CLOSE (RMS, ASYMMETRICAL)	22,400A
MOMENTARY AND FAULT CLOSE (RMS, SYMMETRICAL)	14,000A

INSTALLATION: NONE

BILL OF MATERIALS: NONE

NOTES:

(I) WEIGHT: 1,100 LBS MAX.

(II) NOT SHOWN IN FIGURES.

(III) REMOVE AFTER INSTALLATION AND REPLACE BOLTS, STORE INSIDE CABINET.

REFERENCE:

a. SEE UG3214 FOR SWITCH IDENTIFICATION.

b. SEE UG3418 FOR BOX PAD INSTALLATION FOR PAD MOUNTED, 600A, 12KV SWITCH.

c. SEE UG3588 FOR SWITCH INSTALLATION.

© 1998 - 2021 San Diego Gas & Electric Company. All rights reserved. Removal of this copyright notice without permission is not permitted under law.

REV	CHANGE	DR	BY	DSN	APV	DATE	REV	CHANGE	DR	BY	DSN	APV	DATE
C	MOVED FROM UG3587	EDM	JIK	-	-	5/17/2021	F						
B	EDITORIAL CHANGES	-	AW	JS	CZH	7/1/2018	E						
A	REVISION	-	-	-	-	3/1/2002	D						

TABLE OF CONTENTS

SCOPE: THIS STANDARD SHOWS PAD MOUNTED SINGLE-PHASE FUSED SWITCHING CABINET AND INSTALLATION REQUIREMENTS FOR FUSING SINGLE-PHASE LOAD IN UNDERGROUND SYSTEM.

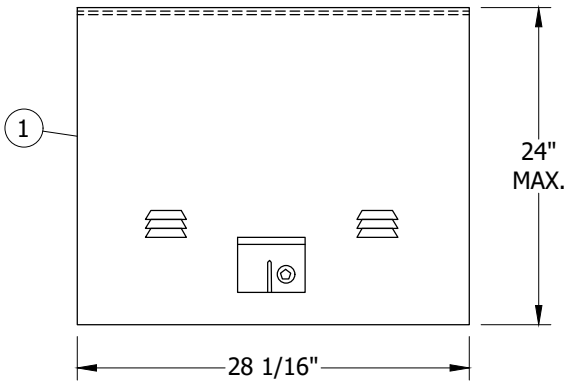

FIGURE 1
FRONT VIEW

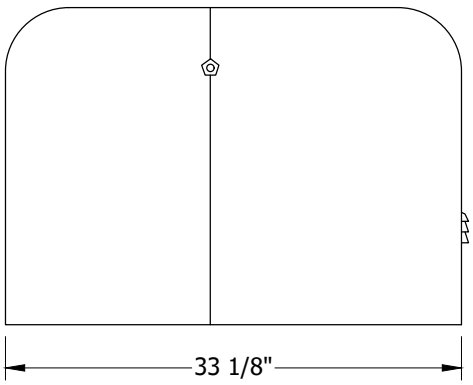

FIGURE 1
SIDE VIEW

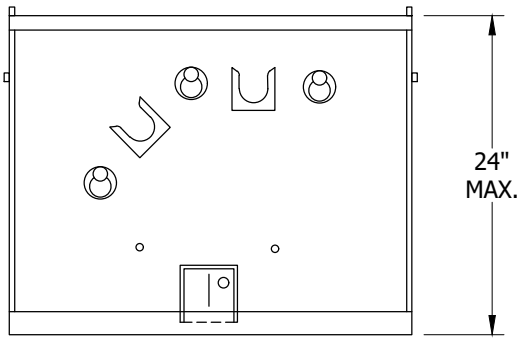

FIGURE 2
FRONT VIEW
EXPOSED

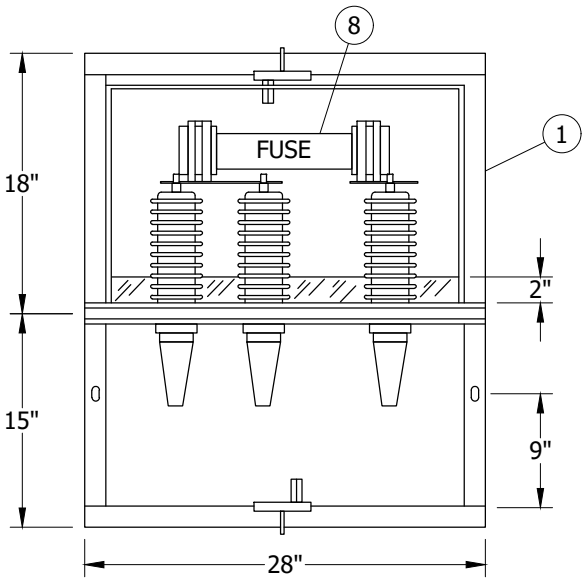

FIGURE 2
PLAN VIEW
EXPOSED

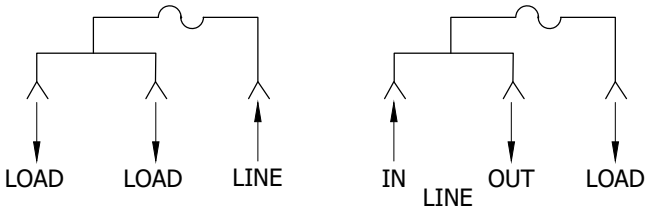

EXAMPLE 1
STANDARD

EXAMPLE 2
REVERSED

FIGURE 3

TABLE 1

RATINGS	
FUSE (KV)	8.3
AMPERES	200
KV-BIL	95

TABLE OF CONTENTS

© 1998 - 2021 San Diego Gas & Electric Company. All rights reserved. Removal of this copyright notice without permission is not permitted under law.

REV	CHANGE	DR	BY	DSN	APV	DATE	REV	CHANGE	DR	BY	DSN	APV	DATE
C							F						
B	FORMATTING	EDM	JIK	-	-	5/17/2021	E						
A	NO CHANGES-REAFFIRMED	-	JC	TR	MDJ	9/17/2015	D						

X Indicates Latest Revision | Completely Revised | New Page | Information Removed

SDG&E ELECTRIC UNDERGROUND CONSTRUCTION STANDARDS

SHEET 1 OF 3

SINGLE-PHASE, LOW PROFILE FUSED SWITCHING CABINET - 6,930V

UG3512.1

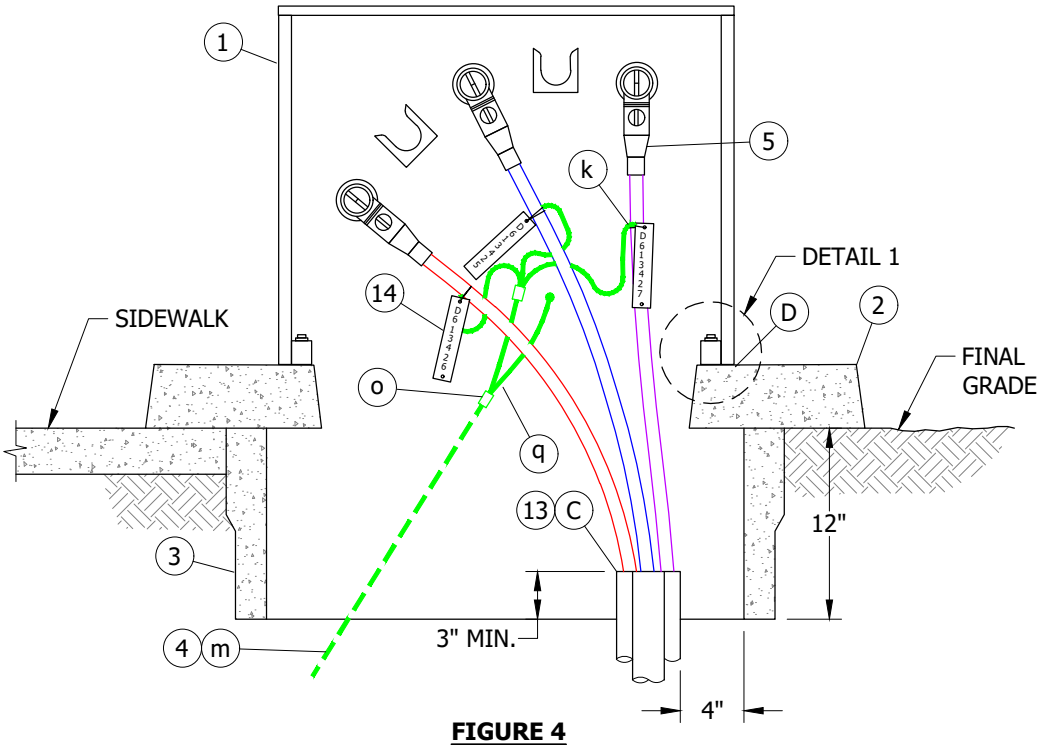

FIGURE 4

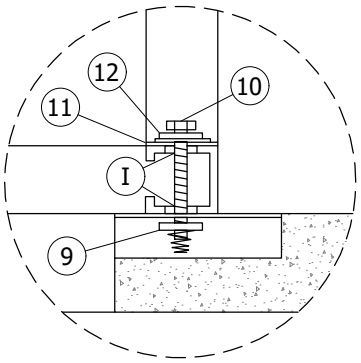

DETAIL 1

INSTALLATION:

A. THIS INSTALLATION IS LIMITED TO A MAXIMUM OF THREE SINGLE-PHASE, #2 AL PRIMARY CABLES.

B. SET PAD AND HANDHOLE, INSTALL EQUIPMENT GROUND.

(C) TERMINATE CONDUITS AS SHOWN AND SEAL CONDUITS WITH SEALING COMPOUND.

(D) BASE OF CABINET SHALL BE CAULKED WHEN NECESSARY TO PREVENT WIRE ENTRY.

(E) KEYLESS LOCKS TO BE ATTACHED TO LATCHING MECHANISM ON FUSE CABINET AND PENTAHEAD BOLTS TO BE THREADED IN COMPLETELY.

BILL OF MATERIALS:

ITEM	DESCRIPTION	QUANTITY	STANDARD PAGE	STOCK NUMBER	DESIGN UNITS
1	CABINET, LOW PROFILE, FUSED	1	-	S190438	FC-1PH
2	TRANSFORMER/UTILITY, SINGLE-PHASE	1	3421	S514240	FC3PAD
3	HANDHOLE	1	3312	S162426	3312-0
4	WIRE, GROUND, TRENCH (m)	AS REQ'D	4510	-	-
5	ELBOW, LOADBREAK, 14.4K, 200A	AS REQ'D	4190-4191	-	-
6	RECEPTACLE, INSULATING (II)	AS REQ'D	4195	S204304	-
7	LOCK, KEYLESS (E) (II)	2	-	S468010	-
8	FUSE	1	4311-4314	-	-
9	NUT, CLAMPING CHANNEL W/SPRING, 1/2"	2	-	S503520	-
10	SCREW, HEX HEAD CAP, BRONZE, 1/2" X 2 1/2"	2	-	S616352	-
11	WASHER, STANDARD FLAT ROUND, BRONZE, 1/2"	2	-	S799488	-
12	WASHER, LOCK, BRONZE, 1/2"	2	-	S796416	-

© 1998 - 2021 San Diego Gas & Electric Company. All rights reserved. Removal of this copyright notice without permission is not permitted under law.

REV	CHANGE	DR	BY	DSN	APV	DATE	REV	CHANGE	DR	BY	DSN	APV	DATE
C							F						
B	FORMATTING	EDM	JIK	-	-	5/17/2021	E						
A	NO CHANGES-REAFFIRMED	-	JC	TR	MDJ	9/17/2015	D						

X Indicates Latest Revision | Completely Revised | New Page | Information Removed

SDG&E ELECTRIC UNDERGROUND CONSTRUCTION STANDARDS

SINGLE-PHASE, LOW PROFILE FUSED SWITCHING CABINET - 6,930V

UG3512.2

TABLE OF CONTENTS

BILL OF MATERIALS (CONT'D):

ITEM	DESCRIPTION	QUANTITY	STANDARD PAGE	STOCK NUMBER	DESIGN UNITS
13	SEALING COMPOUND (C)	AS REQ'D	-	S442976	-
14	TAGS, IDENTIFICATION, CABLE	AS REQ'D	3202	-	-

NOTES:

(I) FUSE CABINET COMES WITH 5/8" X 1" SLOT IN CENTER OF UNISTRUT FRAME (TYP).

(II) NOT SHOWN ON FIGURES.

REFERENCE:

a. SEE UG3202 FOR CABLE IDENTIFICATION.

b. SEE UG3211, UG3212 (PREVIOUS # UG3211.1-.4) FOR STRUCTURE/EQUIPMENT IDENTIFICATION.

c. SEE UG3221 FOR HIGH VOLTAGE DECAL.

d. SEE UG3408 FOR WIRE ENTRY PREVENTION.

e. SEE UG3421 FOR PAD, HANDHOLE AND CONDUIT PLACEMENT.

f. SEE UG3479 FOR BARRIER PROTECTION.

g. SEE UG3480, UG3481, UG3482, AND UG3483 FOR MINIMUM OPERATING AND CLEARANCE REQUIREMENTS (PAD PLACEMENT).

h. SEE UG3484 FOR PAD INSTALLATION OF PAD MOUNTED EQUIPMENT.

i. SEE UG3486, UG3487, AND UG3488 FOR RETAINING WALL REQUIREMENTS AND CLEARANCES FROM REVERSE SUBGRADE RETAINING WALLS.

j. SEE UG3489 FOR RETAINING WALLS.

(k) SEE UG4108 FOR SEALING JACKETED CABLE.

l. SEE UG4302, UG4311, AND UG4312 FOR FUSING.

(m) SEE UG4510 FOR (PREFERRED I) AND (ALTERNATE) TRENCH GROUND WIRE.

n. SEE UG4512 FOR (PREFERRED II) EQUIPMENT GROUNDING INSTALLATION.

(o) SEE UG4512 FOR GROUNDING EQUIPMENT.

p. SEE UG4514 FOR GROUNDING TELCO CONDUCTOR IN PAD MOUNTED EQUIPMENT.

(q) SEE UG4520-UG4521 (PREVIOUS # UG4520.1-.9) FOR GROUNDING PAD MOUNTED EQUIPMENT.

TABLE OF CONTENTS

© 1998 - 2021 San Diego Gas & Electric Company. All rights reserved. Removal of this copyright notice without permission is not permitted under law.

REV	CHANGE	DR	BY	DSN	APV	DATE	REV	CHANGE	DR	BY	DSN	APV	DATE
C							F						
B	FORMATTING	EDM	JIK	-	-	5/17/2021	E						
A	NO CHANGES-REAFFIRMED	-	JC	TR	MDJ	9/17/2015	D						

X Indicates Latest Revision | Completely Revised | New Page | Information Removed

SDG&E ELECTRIC UNDERGROUND CONSTRUCTION STANDARDS

SINGLE-PHASE, LOW PROFILE FUSED SWITCHING CABINET - 6,930V

UG3512.3

SCOPE: THIS STANDARD SHOWS PAD MOUNTED THREE-PHASE FUSE CABINET WITH HORIZONTAL MOUNTED FUSES WITH FEED THRU CAPABILITY AND INSTALLATION REQUIREMENTS USED FOR FUSING WYE AND DELTA LOADS IN UNDERGROUND SYSTEM.

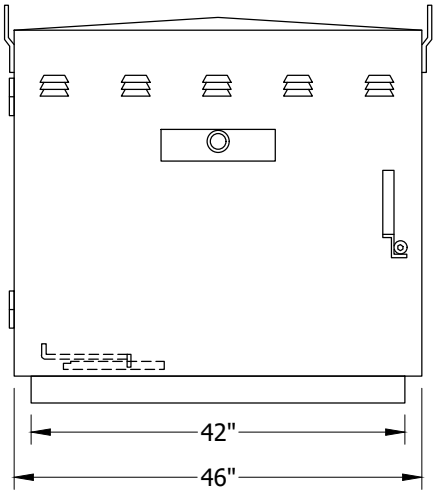

FIGURE 1
FRONT VIEW

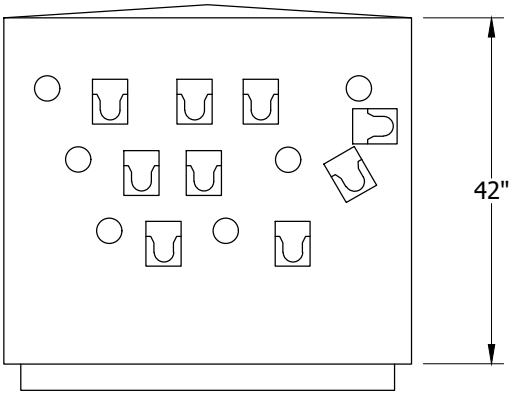

FIGURE 1
FRONT VIEW
EXPOSED

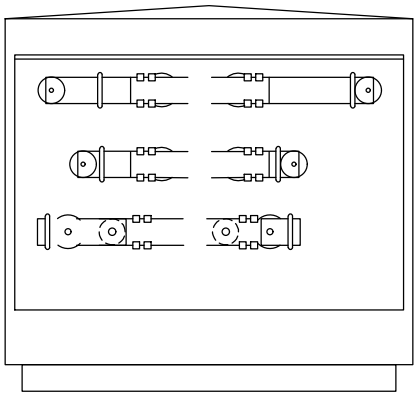

FIGURE 1
REAR VIEW

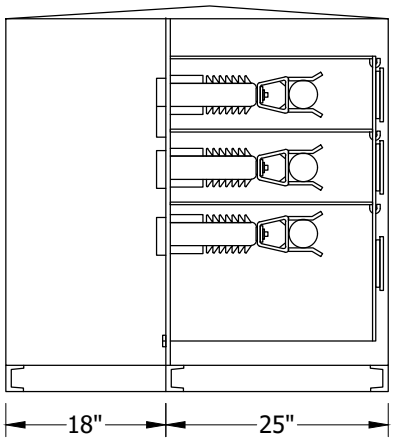

FIGURE 1
SIDE VIEW
EXPOSED

TABLE OF CONTENTS

© 1998 - 2021 San Diego Gas & Electric Company. All rights reserved. Removal of this copyright notice without permission is not permitted under law.

REV	CHANGE	DR	BY	DSN	APV	DATE	REV	CHANGE	DR	BY	DSN	APV	DATE
C							F						
B	FORMATTING	EDM	JIK	-	-	5/17/2021	E						
A	NO CHANGES-REAFFIRMED	-	JC	TR	-	6/3/2015	D						

X Indicates Latest Revision | Completely Revised | New Page | Information Removed

SDG&E ELECTRIC UNDERGROUND CONSTRUCTION STANDARDS

THREE-PHASE, FUSE CABINET WITH
HORIZONTAL MOUNTED FUSES - 12KV
WITH FEED THRU CAPABILITY

UG3514.1

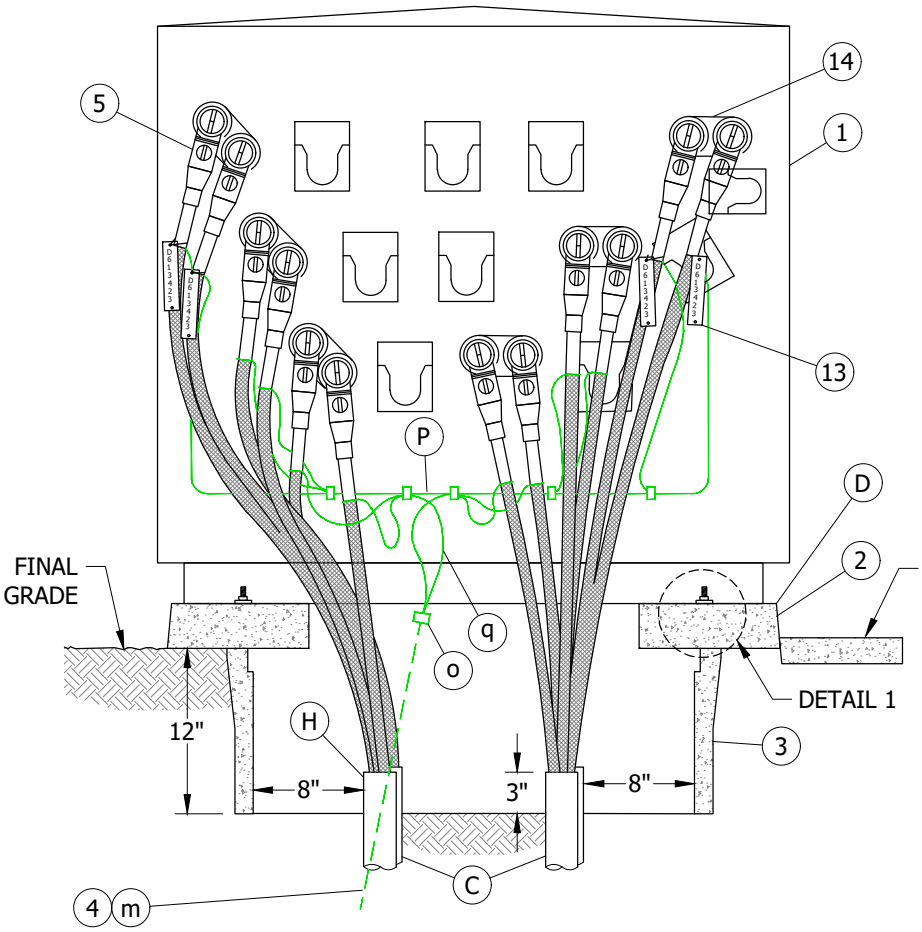

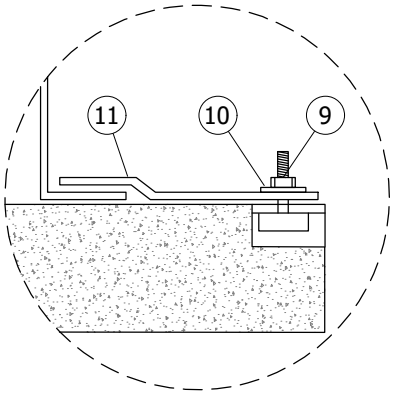

DETAIL 1
HOLD-DOWN ASSEMBLY (TYP.)

UG MAP SYMBOL

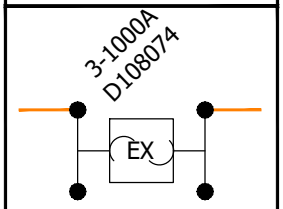

FUSE CABINET

FIGURE 2

INSTALLATION:

A. THIS INSTALLATION IS LIMITED TO A MAXIMUM OF FOUR THREE-PHASE, 2/0 AL CABLES AND SMALLER.

B. SET PAD AND HANDHOLE, INSTALL EQUIPMENT GROUND.

(C) TERMINATE CONDUITS AS SHOWN AND SEAL CONDUITS WITH SEALING COMPOUND.

(D) BASE OF CABINET SHALL BE CAULKED WHEN NECESSARY TO PREVENT WIRE ENTRY.

(E) INSTALL SIX FEED-THRU INSERTS.

(F) INSTALL SINGLE BARREL FUSE ALL THE WAY BACK IN DOUBLE BARREL FUSE CLIPS NEAREST THE INSULATOR.

(G) KEYLESS LOCKS TO BE ATTACHED TO LATCHING MECHANISM ON FUSE CABINET AND PENTAHEAD BOLTS TO BE THREADED IN COMPLETELY.

(H) PREFERRED CONDUIT INSTALLATION IS LINE IN ON LEFT LOAD OUT ON RIGHT.

© 1998 - 2021 San Diego Gas & Electric Company. All rights reserved. Removal of this copyright notice without permission is not permitted under law.

REV	CHANGE	DR	BY	DSN	APV	DATE	REV	CHANGE	DR	BY	DSN	APV	DATE
C							F						
B	FORMATTING	EDM	JIK	-	-	5/17/2021	E						
A	NO CHANGES-REAFFIRMED	-	JC	TR	-	6/3/2015	D						

X Indicates Latest Revision | Completely Revised | New Page | Information Removed

SDG&E ELECTRIC UNDERGROUND CONSTRUCTION STANDARDS

THREE-PHASE, FUSE CABINET WITH
HORIZONTAL MOUNTED FUSES - 12KV
WITH FEED THRU CAPABILITY

UG3514.2

TABLE OF CONTENTS

BILL OF MATERIALS:

ITEM	DESCRIPTION	QUANTITY	STANDARD PAGE	STOCK NUMBER	DESIGN UNITS
1	CABINET, FUSE, THREE-PHASE, HORIZ. MOUNT (G)	1	-	S190454	FC3PFT
2	PAD WITH BOX, TRANSFORMER/UTILITY EQUIPMENT, SINGLE-PHASE	1	3421	S514240	FC3PAD
3	HANDHOLE, 17" X 30"	1	3312	S162426	-
4	WIRE, GROUND, TRENCH (m)	AS REQ'D	4510	-	-
5	ELBOW, LOADBREAK, 14.4KV 200A	AS REQ'D	4190 - 4191	-	-
6	RECEPTACLE, INSULATING (I)	AS REQ'D	4195	S204304	-
7	LOCKS, KEYLESS (G)(I)	2	-	S468010	-
8	FUSE (F)(I)	3	4311 - 4314	-	-
9	NUT, STUD, 1/2" X 1 3/8"	2	-	S507000	-
10	WASHER, STANDARD FLAT ROUND, BRONZE, 1/2"	2	-	S799488	-
11	HOLD DOWN (SUPPLIED WITH CABINET)	2	-	-	-
12	COMPOUND, SEALING (C)(I)	AS REQ'D	-	S442976	-
13	TAGS, IDENTIFICATION, CABLE (C)	AS REQ'D	3202	-	-
14	BUSHING, FEED-THRU LOADBREAK (NOT SUPPLIED WITH CABINET) (E)	6	4195	S544678	FEED-1
15	NUT, STANDARD HEX, STAINLESS STEEL (I)	2	-	S505536	-

NOTES:

(I) NOT SHOWN ON FIGURES.

REFERENCE:

a. SEE UG3202 FOR CABLE IDENTIFICATION.
b. SEE UG3211 FOR STRUCTURE/EQUIPMENT IDENTIFICATION.
c. SEE UG3221 FOR HIGH VOLTAGE DECAL.
d. SEE UG3408 FOR WIRE ENTRY PREVENTION.
e. SEE UG3421 FOR PAD, HANDHOLE AND CONDUIT PLACEMENT.
f. SEE UG3479 FOR BARRIER PROTECTION.
g. SEE UG3480, UG3481, UG3482, AND UG3483 FOR MINIMUM OPERATING CLEARANCE REQUIREMENTS (PAD PLACEMENT).
h. SEE UG3484 FOR INSTALLATION OF PAD MOUNTED EQUIPMENT.
i. SEE UG3486, UG3487, AND UG3488 FOR RETAINING WALL REQUIREMENTS AND CLEARANCES FROM REVERSE SUBGRADE RETAINING WALLS.
j. SEE UG3489 FOR RETAINING WALLS.
k. SEE UG4108 FOR SEALING JACKETED CABLE.
l. SEE UG4302, UG4311, AND UG4312 FOR FUSING.
(m) SEE UG4510 FOR (PREFERRED I) AND (ALTERNATE) TRENCH GROUND WIRE.
n. SEE UG4512 FOR (PREFERRED II) EQUIPMENT GROUNDING INSTALLATION.
(o) SEE UG4512 FOR GROUNDING EQUIPMENT.
(p) SEE UG4514 FOR GROUNDING TELCO CONDUCTOR IN PAD MOUNTED EQUIPMENT.
(q) SEE UG4520 AND UG4521 (PREVIOUS # UG4520.1-.9) FOR GROUNDING PAD MOUNTED EQUIPMENT.

TABLE OF CONTENTS

© 1998 - 2021 San Diego Gas & Electric Company. All rights reserved. Removal of this copyright notice without permission is not permitted under law.

REV	CHANGE	DR	BY	DSN	APV	DATE	REV	CHANGE	DR	BY	DSN	APV	DATE
C							F						
B	FORMATTING	EDM	JIK	-	-	5/17/2021	E						
A	NO CHANGES-REAFFIRMED	-	JC	TR	-	6/3/2015	D						

SCOPE: THIS STANDARD SHOWS PAD MOUNTED THREE-PHASE FUSE CABINET WITH VERTICAL MOUNTED FUSES AND FUSE BYPASS WITH FEED THRU CAPABILITY AND INSTALLATION REQUIREMENTS USED FOR FUSING WYE AND DELTA LOADS IN UNDERGROUND SYSTEM.

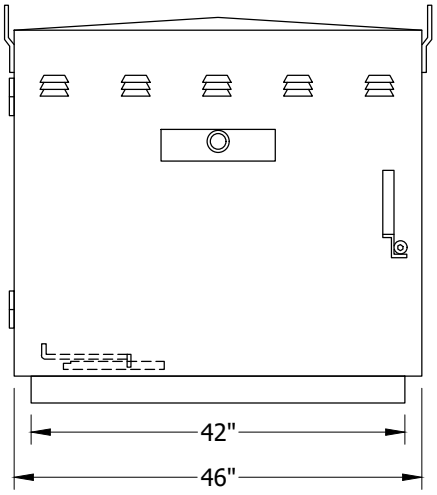

FIGURE 1
FRONT VIEW

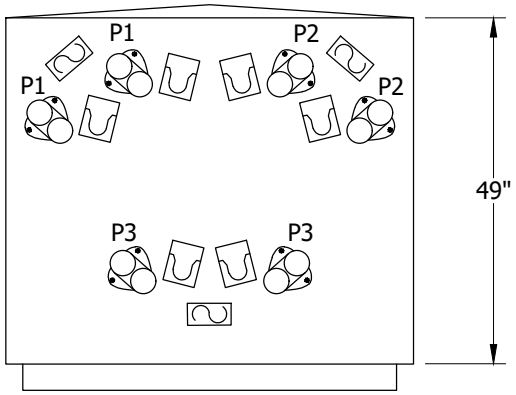

FIGURE 1
FRONT VIEW
EXPOSED

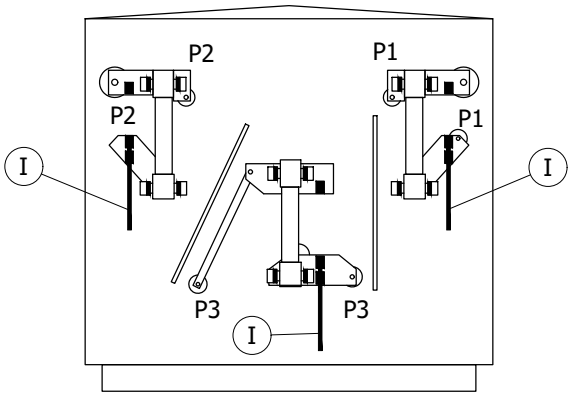

FIGURE 1
REAR VIEW
EXPOSED

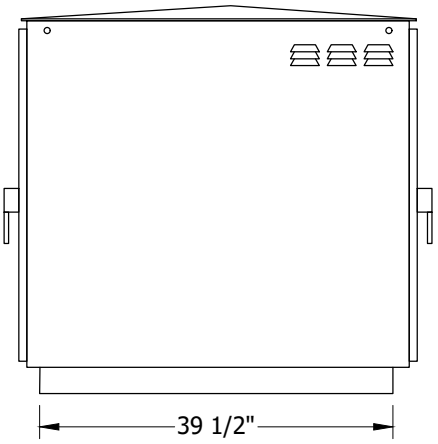

FIGURE 1
SIDE VIEW

TABLE OF CONTENTS

© 1998 - 2021 San Diego Gas & Electric Company. All rights reserved. Removal of this copyright notice without permission is not permitted under law.

REV	CHANGE	DR	BY	DSN	APV	DATE	REV	CHANGE	DR	BY	DSN	APV	DATE
C	FORMATTING	EDM	JIK	-	-	5/17/2021	F						
B	EDITORIAL CHANGES	-	AW	JS	CZH	7/1/2018	E						
A	REVISION	-	-	-	-	12/8/2005	D						

X Indicates Latest Revision | Completely Revised | New Page | Information Removed

SDG&E ELECTRIC UNDERGROUND CONSTRUCTION STANDARDS

THREE-PHASE, FUSE CABINET WITH
VERTICAL MOUNTED FUSE AND FUSE BYPASS - 12KV
WITH FEED THRU CAPABILITY

UG3515.1

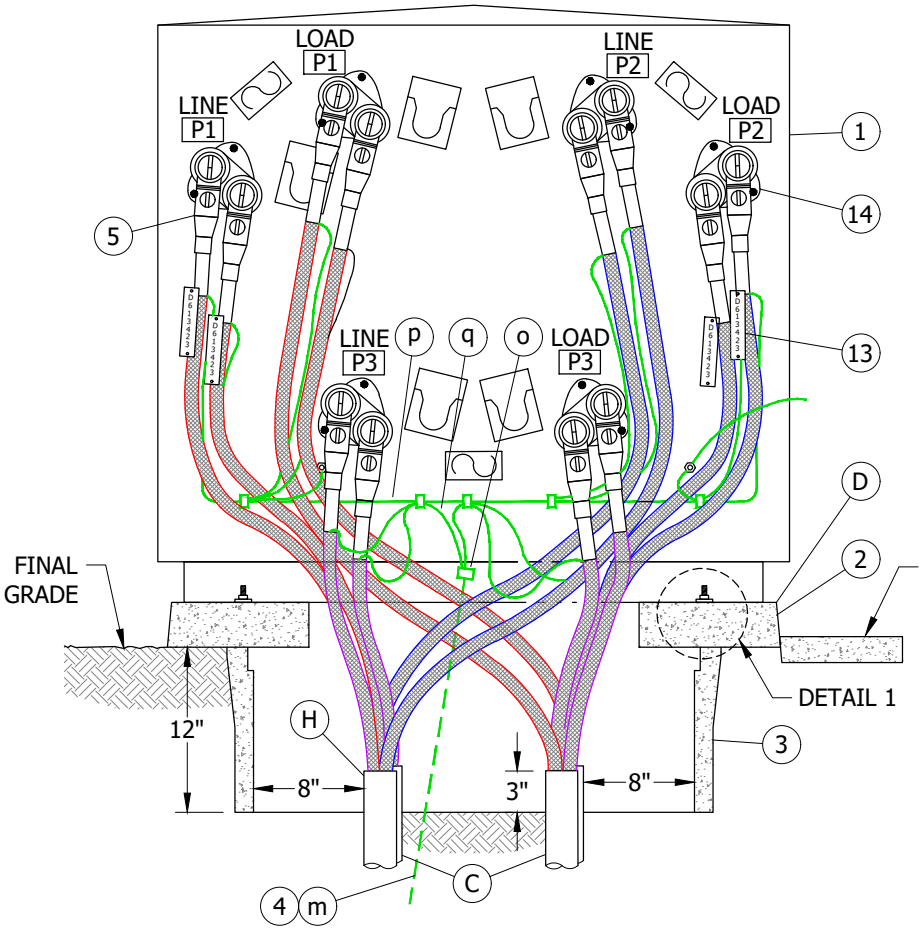

FIGURE 2

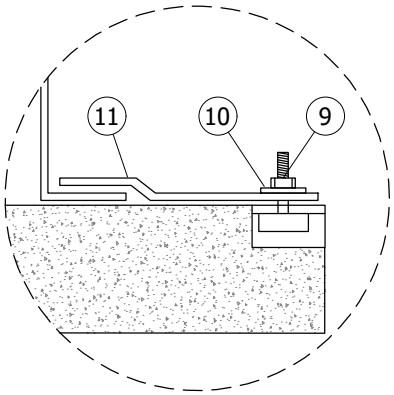

DETAIL 1
HOLD-DOWN ASSEMBLY (TYP.)

UG MAP SYMBOL

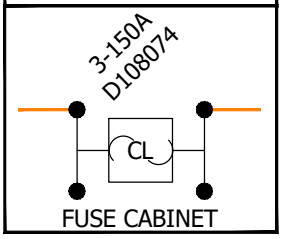

INSTALLATION:

A. THIS INSTALLATION IS LIMITED TO A MAXIMUM OF FOUR THREE-PHASE, 2/0 AL CABLES AND SMALLER.

B. SET PAD AND HANDHOLE, INSTALL EQUIPMENT GROUND.

(C) TERMINATE CONDUITS AS SHOWN AND SEAL CONDUITS WITH SEALING COMPOUND.

(D) BASE OF CABINET SHALL BE CAULKED WHEN NECESSARY TO PREVENT WIRE ENTRY.

(E) INSTALL SIX FEED-THRU INSERTS.

(F) INSTALL SINGLE BARREL FUSE ALL THE WAY BACK IN DOUBLE BARREL FUSE CLIPS NEAREST THE INSULATOR.

(G) KEYLESS LOCKS TO BE ATTACHED TO LATCHING MECHANISM ON FUSE CABINET AND PENTAHEAD BOLTS TO BE THREADED IN COMPLETELY.

(H) PREFERRED CONDUIT INSTALLATION IS LINE IN ON LEFT LOAD OUT ON RIGHT.

BILL OF MATERIALS:

ITEM	DESCRIPTION	QUANTITY	STANDARD PAGE	STOCK NUMBER	DESIGN UNITS
1	CABINET, FUSE, THREE-PHASE, VERTICAL MOUNT (G)	1	-	S190452	FC3PBP
2	PAD WITH BOX, TRANSFORMER/UTILITY EQUIPMENT, SINGLE-PHASE	1	3421	S514240	FC3PAD

© 1998 - 2021 San Diego Gas & Electric Company. All rights reserved. Removal of this copyright notice without permission is not permitted under law.

REV	CHANGE	DR	BY	DSN	APV	DATE	REV	CHANGE	DR	BY	DSN	APV	DATE
C	FORMATTING	EDM	JIK	-	-	5/17/2021	F						
B	EDITORIAL CHANGES	-	AW	JS	CZH	7/1/2018	E						
A	REVISION	-	-	-	-	12/8/2005	D						

X Indicates Latest Revision | Completely Revised | New Page | Information Removed

SDG&E ELECTRIC UNDERGROUND CONSTRUCTION STANDARDS

THREE-PHASE, FUSE CABINET WITH
VERTICAL MOUNTED FUSE AND FUSE BYPASS - 12KV
WITH FEED THRU CAPABILITY

UG3515.2

TABLE OF CONTENTS

BILL OF MATERIALS (CONT'D):

ITEM	DESCRIPTION	QUANTITY	STANDARD PAGE	STOCK NUMBER	DESIGN UNITS
3	HANDHOLE, 17" X 30"	1	3312	S162426	-
4	WIRE, GROUND, TRENCH (m)	AS REQ'D	4510	-	-
5	ELBOW, LOADBREAK, 14.4KV 200A	AS REQ'D	4190 - 4191	-	-
6	RECEPTACLE, INSULATING (II)	AS REQ'D	4195	S204304	-
7	LOCKS, KEYLESS (G) (II)	2	-	S468010	-
8	FUSE (F) (II)	3	4311 - 4314	-	-
9	NUT, STUD, 1/2" X 1 3/8"	2	-	S507000	-
10	WASHER, STANDARD FLAT ROUND, BRONZE, 1/2"	2	-	S799488	-
11	HOLD DOWN (SUPPLIED WITH CABINET)	-	-	-	-
12	COMPOUND, SEALING (C) (II)	AS REQ'D	-	S442976	-
13	TAGS, IDENTIFICATION, CABLE (C)	AS REQ'D	3202	-	-
14	BUSHING, FEED-THRU LOADBREAK (NOT SUPPLIED WITH CABINET) (E)	6	4195	S544678	FEED-1
15	NUT, STANDARD HEX, STAINLESS STEEL (II)	2	-	S505536	-

NOTES:

(I) HOTSTICK OPERABLE KNIFE BLADE SWITCH FOR FUSE BYPASS AND 200A LOOP OPERATIONS.

(II) NOT SHOWN ON FIGURES.

III. CHECK KNIFE BLADES IN OPEN POSITION BEFORE ENERGIZING CABINET.

REFERENCE:

a. SEE UG3202 FOR CABLE IDENTIFICATION.

b. SEE UG3211 FOR STRUCTURE/EQUIPMENT IDENTIFICATION.

c. SEE UG3221 FOR HIGH VOLTAGE DECAL.

d. SEE UG3408 FOR WIRE ENTRY PREVENTION.

e. SEE UG3421 FOR PAD, HANDHOLE AND CONDUIT PLACEMENT.

f. SEE UG3479 FOR BARRIER PROTECTION.

g. SEE UG3480, UG3481, UG3482, AND UG3483 FOR MINIMUM OPERATING CLEARANCE REQUIREMENTS (PAD PLACEMENT).

h. SEE UG3484 FOR INSTALLATION OF PAD MOUNTED EQUIPMENT.

i. SEE UG3486, UG3487, AND UG3488 FOR RETAINING WALL REQUIREMENTS AND CLEARANCES FROM REVERSE SUBGRADE RETAINING WALLS.

j. SEE UG3489 FOR RETAINING WALLS.

k. SEE UG4108 FOR SEALING JACKETED CABLE.

l. SEE UG4302, UG4311, AND UG4312 FOR FUSING.

(m) SEE UG4510 FOR (PREFERRED I) AND (ALTERNATE) TRENCH GROUND WIRE.

n. SEE UG4512 FOR (PREFERRED II) EQUIPMENT GROUNDING INSTALLATION.

(o) SEE UG4512 FOR GROUNDING EQUIPMENT.

(p) SEE UG4514 FOR GROUNDING TELCO CONDUCTOR IN PAD MOUNTED EQUIPMENT.

(q) SEE UG4520 AND UG4521 (PREVIOUS # UG4520.1-.9) FOR GROUNDING PAD MOUNTED EQUIPMENT.

TABLE OF CONTENTS

© 1998 - 2021 San Diego Gas & Electric Company. All rights reserved. Removal of this copyright notice without permission is not permitted under law.

REV	CHANGE	DR	BY	DSN	APV	DATE	REV	CHANGE	DR	BY	DSN	APV	DATE
C	FORMATTING	EDM	JIK	-	-	5/17/2021	F						
B	EDITORIAL CHANGES	-	AW	JS	CZH	7/1/2018	E						
A	REVISION	-	-	-	-	12/8/2005	D						

X Indicates Latest Revision | Completely Revised | New Page | Information Removed

SDG&E ELECTRIC UNDERGROUND CONSTRUCTION STANDARDS

THREE-PHASE, FUSE CABINET WITH
VERTICAL MOUNTED FUSE AND FUSE BYPASS - 12KV
WITH FEED THRU CAPABILITY

UG3515.3

SCOPE: THIS STANDARD SHOWS A 12KV, 200A WALL MOUNTED FUSE CABINET USED FOR FUSING IN TRANSFORMER VAULTS.

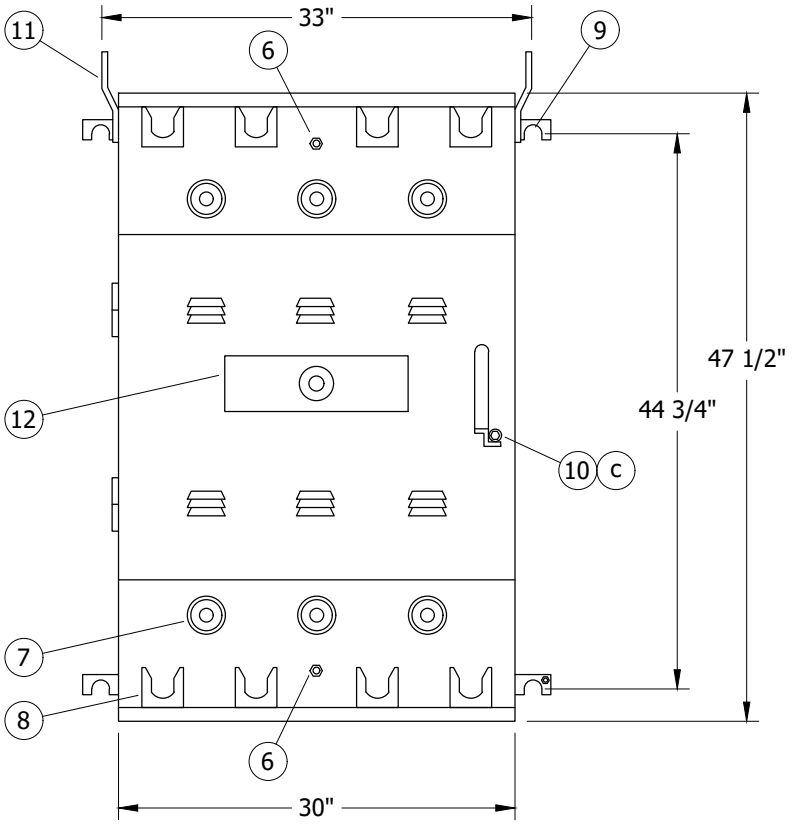

FIGURE 1
FRONT

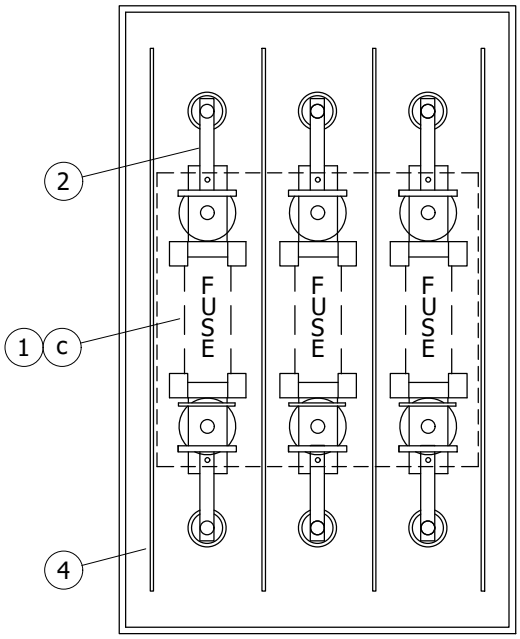

FIGURE 1
FRONT SECTION

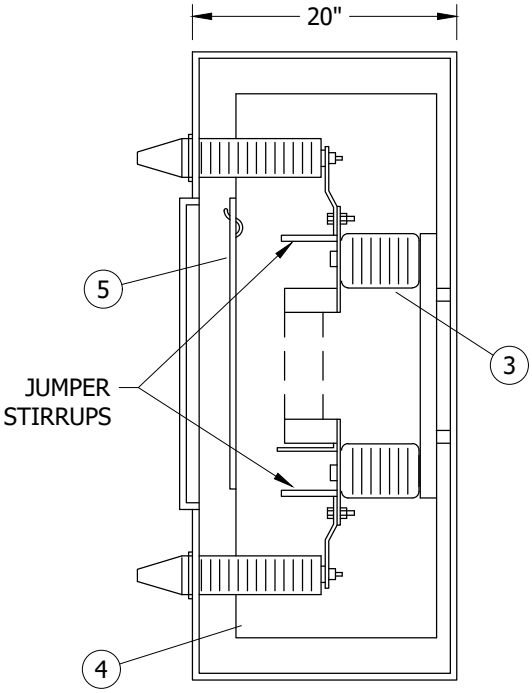

FIGURE 1
SIDE SECTION

TABLE OF CONTENTS

© 1998 - 2021 San Diego Gas & Electric Company. All rights reserved. Removal of this copyright notice without permission is not permitted under law.

REV	CHANGE	DR	BY	DSN	APV	DATE	REV	CHANGE	DR	BY	DSN	APV	DATE
C	MOVED FROM UG3580	EDM	JIK	-	-	5/17/2021	F						
B	EDITORIAL CHANGES	-	AW	JS	CZH	7/1/2018	E						
A	REVISION	-	-	-	-	7/29/2014	D						

X Indicates Latest Revision | Completely Revised | New Page | Information Removed

SDG&E ELECTRIC UNDERGROUND CONSTRUCTION STANDARDS

THREE-PHASE WALL MOUNTED FUSE CABINET
12KV, 200A

UG3516.1

TABLE 1

ELECTRIC RATING	
VOLTAGE	15KV
B.I.L.	110KV
MAX FUSE SIZE	200A

UG MAP SYMBOL

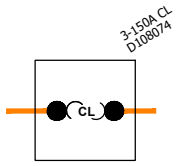

WALL MOUNTED
FUSE CABINET

INSTALLATION:

A. BUSHING WELLS WILL ACCEPT BUSHING PLUGS (S544676) OR FEED-THRU INSERTS (S544678) FOR LOADBREAK CAPABILITY.

B. INSTALL FEED-THRU INSERTS ON LOAD SIDE OF ALL CABINETS.

(C) CABINET DOOR HANDLE DOES NOT REQUIRE A PADLOCK.

BILL OF MATERIALS:

ITEM	DESCRIPTION	WEIGHT (LBS)	QUANTITY	STANDARD PAGE	STOCK NUMBER	DESIGN UNITS
1	CABINET, FUSE, WALL MOUNTED, THREE-PHASE	380	1	--	S190446	FC-VLT
2	BUS, COPPER	--	1	--		
3	BUSHING	--	1	--		
4	BARRIER	--	1	--		
5	BARRIER, REMOVABLE	--	1	--		
6	GROUNDING POSITION	--	1	--		
7	BUSHING WELL	--	1	--		
8	PARKING STAND	--	1	--		
9	BRACKET, MOUNTING	--	1	--		
10	CABINET DOOR HANDLE AND PENTAHEAD BOLT PROVISION (C)	--	1	--		
11	TABS, LIFTING	--	1	--		
12	DECAL, MR OUCH	--	1	--		
13	NAMEPLATE (ON INSIDE OF DOOR) (II)	--	1	--		
14	FUSE, CURRENT LIMITING, 150A (II) (c)	--	1	--	S363687	--

NOTES:

I. WALL MOUNTED FUSE CABINET (S190444) IS DELIVERED FROM THE SUPPLIER WITH ALL THE PARTS LISTED IN THE BILL OF MATERIALS EXCEPT FUSES.

(II) NOT SHOWN ON FIGURES.

REFERENCE:

a. SEE TRANSFORMER VAULTS SPECIFICATIONS BOOK FOR INSTALLATION LOCATION.

b. SEE UG3480, UG3481, UG3482, AND UG3483 FOR CLEARANCE IN FRONT OF CABINET.

(c) SEE UG4302 FOR FUSE APPLICATION GUIDE.

TABLE OF CONTENTS

© 1998 - 2021 San Diego Gas & Electric Company. All rights reserved. Removal of this copyright notice without permission is not permitted under law.

REV	CHANGE	DR	BY	DSN	APV	DATE	REV	CHANGE	DR	BY	DSN	APV	DATE
C	MOVED FROM UG3580	EDM	JIK	-	-	5/17/2021	F						
B	EDITORIAL CHANGES	-	AW	JS	CZH	7/1/2018	E						
A	REVISION	-	-	-	-	7/29/2014	D						

SCOPE: THIS STANDARD SHOWS THE ASSEMBLY OF A 200A CABINET PLATE.

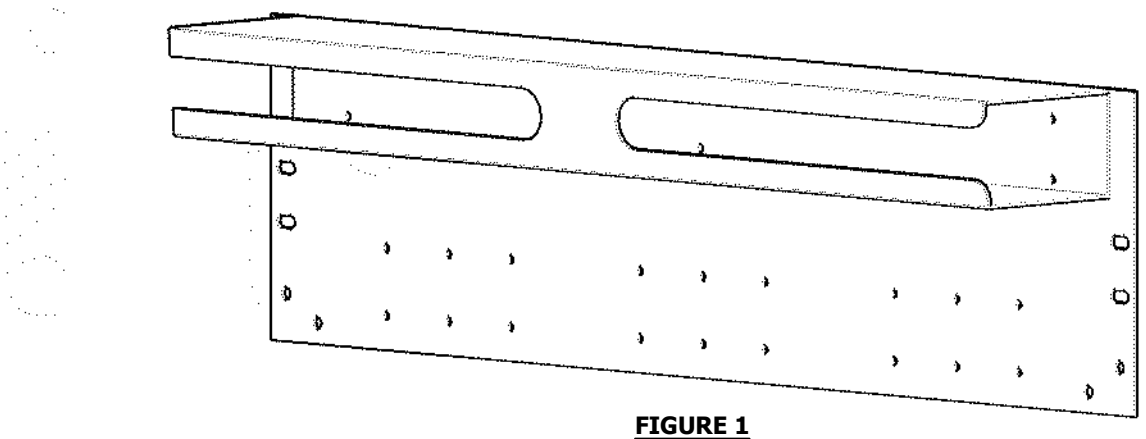

FIGURE 1
200A CABINET PLATE ASSEMBLY
ISOMETRIC VIEW

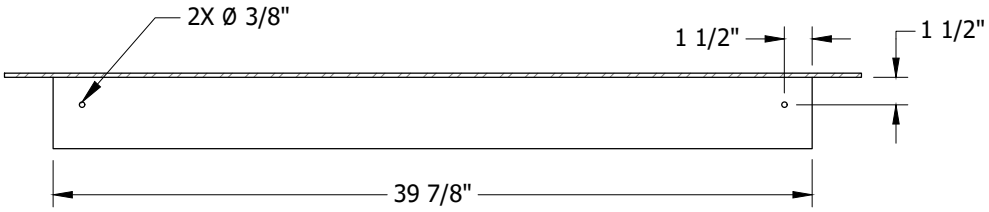

FIGURE 1
200A CABINET PLATE ASSEMBLY
TOP VIEW

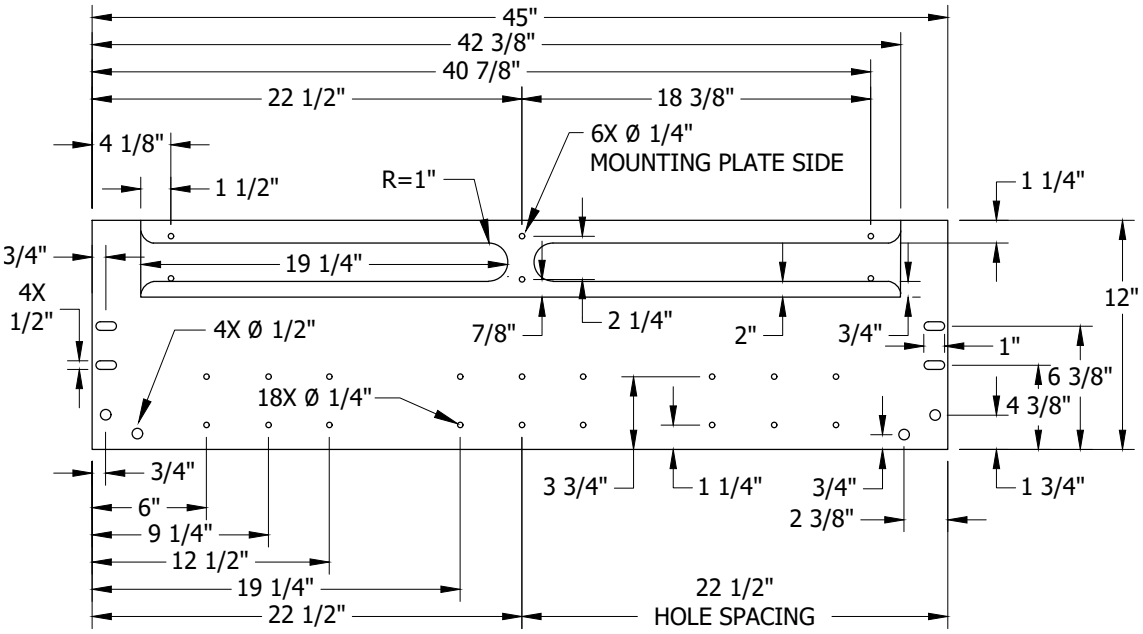

FIGURE 1
200A CABINET PLATE ASSEMBLY
FRONT VIEW

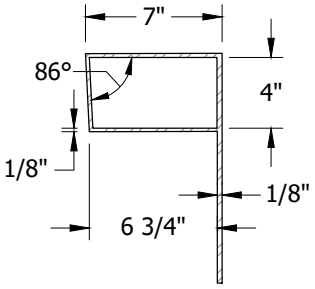

FIGURE 1
200A CABINET PLATE ASSEMBLY
SIDE VIEW

TABLE OF CONTENTS

© 1998 - 2022 San Diego Gas & Electric Company. All rights reserved. Removal of this copyright notice without permission is not permitted under law.

REV	CHANGE	DR	BY	DSN	APV	DATE	REV	CHANGE	DR	BY	DSN	APV	DATE
C	FORMATTING	EDM	JIK	-	-	05/17/2021	F						
B	FIGURE UPDATE	EDM	EJA	GLW	CZH	03/20/2020	E	BILL OF MATERIALS UPDATE	ARC	MBL	JAS	KRG	11/03/2022
A	ORIGINAL	-	GLW	JES	CZH	10/01/2018	D	BILL OF MATERIALS UPDATE	EDM	ADW	GLW	KRG	05/31/2022

X Indicates Latest Revision | Completely Revised | New Page | Information Removed

SDG&E ELECTRIC UNDERGROUND CONSTRUCTION STANDARDS

200A LIVEFRONT TO DEADFRONT TERMINATING CABINET

UG3517.1

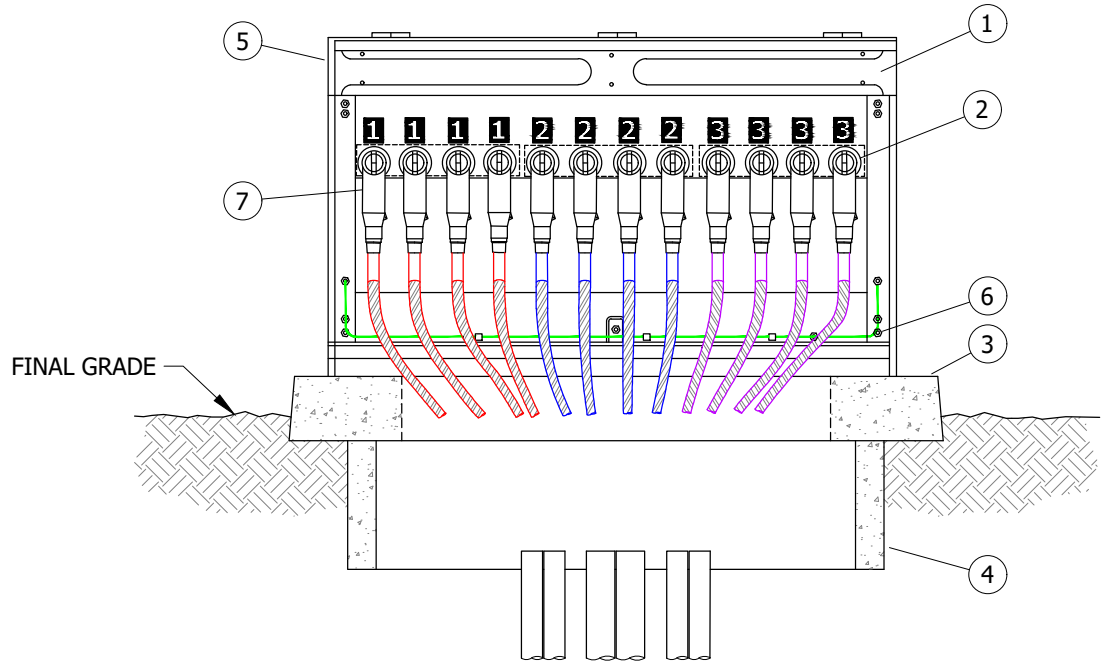

FIGURE 2
200A FRONT VIEW

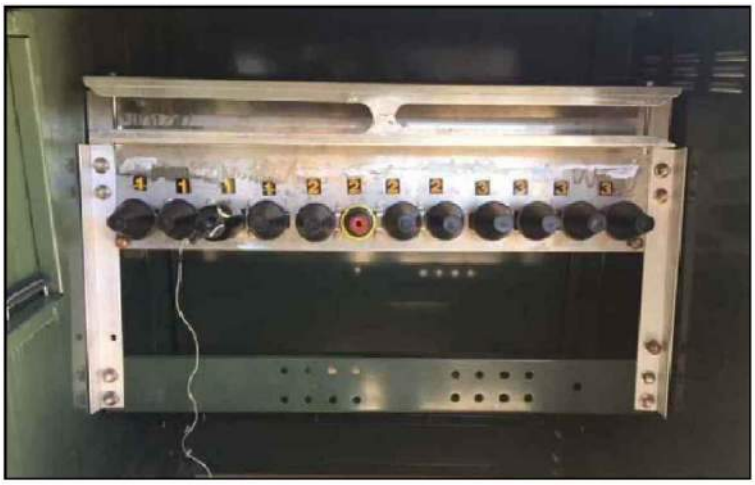

FIGURE 3
PLATE PHOTO



FIGURE 4
4-WAY DEADFRONT

TABLE OF CONTENTS

© 1998 - 2022 San Diego Gas & Electric Company. All rights reserved. Removal of this copyright notice without permission is not permitted under law.

REV	CHANGE	DR	BY	DSN	APV	DATE	REV	CHANGE	DR	BY	DSN	APV	DATE
C	FORMATTING	EDM	JIK	-	-	05/17/2021	F						
B	FIGURE UPDATE	EDM	EJA	GLW	CZH	03/20/2020	E	BILL OF MATERIALS UPDATE	ARC	MBL	JAS	KRG	11/03/2022
A	ORIGINAL	-	GLW	JES	CZH	10/01/2018	D	BILL OF MATERIALS UPDATE	EDM	ADW	GLW	KRG	05/31/2022

X Indicates Latest Revision | Completely Revised | New Page | Information Removed

SDG&E ELECTRIC UNDERGROUND CONSTRUCTION STANDARDS

200A LIVEFRONT TO DEADFRONT TERMINATING CABINET

UG3517.2

INSTALLATION:

A. INSTALL #2, 2/0 OR 2SOL ELBOWS DEPENDING ON THE WIRE BEING INSTALLED.

BILL OF MATERIALS:

ITEM	DESCRIPTION	QUANTITY	STANDARD PAGE	STOCK NUMBER	DESIGN UNITS
1	PLATE, CABINET, 200A	1	--	S168400	BRK200A
2	4 WAY DEADFRONT TERMINATION ASSEMBLY	AS REQ'D	4179	S718338	TAP4NB
3	3421 PAD	1	--	S514240	UG3421-1
4	3312 HANDHOLE (CONCRETE OR PVC BOX) (LEAVE LID IN YARD)	1	--	S162424	3312-0
5	CABINET, MVI/MVS, MULTI USE	1	3580	S190490	DMV-12
6	ASSEMBLY, BOLT, 2"	AS REQ'D	--	S148800	--
7	ELBOWS AND WIRE, 200A	AS REQ'D	--	--	--
8	WIRE, BARE COPPER 4/0 STR, SOFT DRAWN (IV)	AS REQ'D	--	S812764	4/0-SD
9	RECEPTACLE, INSULATION, 200A (IV)	AS REQ'D	4179-4180	S204304	INSREC
10	WIRE, BARE COPPER, #2, 7 STRANDED, SOFT DRAWN (IV)	AS REQ'D	--	S812818 (X)	GDWIRE
11	WIRE, #2 AU, U12.043 (IV)	AS REQ'D	4002	S197656	RJN3/2
12	WIRE, 2/0 AU, U12.061 (IV)	AS REQ'D	4002	S197648	RJN2/0
13	ELBOW, 200A, #2 (IV)	AS REQ'D	4180	S443838	LBE-2A
14	ELBOW, 200A, 2/0 (IV)	AS REQ'D	4180	S443840	LBE2/0

NOTES:

I. WHEN REMOVING ANY LIVEFRONT EQUIPMENT AND INSTALLING THE NEW TERMINATOR CONVERSION CABINET REMOVE THE UNJACKETED CABLE AND INSTALL NEW JACKETED CABLE. DO NOT SPLICE UNJACKETED CABLE.

II. MAKE SURE WHEN MAKING UP THE NEW CABLE THAT THE CABLE IS MADE LONG ENOUGH TO BE INSTALLED ON THE STAND-OFF POSITION IN CASE OF DE-ENERGIZING THE CABLE BECAUSE OF TROUBLE USE THE 600/200A TERMINATOR PAD IF THE WIRE DOESN'T LINE UP IN THE 200A PAD.

III. TERMINATE THE CABLE WITH ENOUGH SLACK TO REACH THE STANDOFF POSITIONS ABOVE THE 4 WAYS.

(IV) NOT SHOWN ON FIGURES.

(X) THIS ITEM IS EXEMPT.

REFERENCE: NONE

TABLE OF CONTENTS

© 1998 - 2022 San Diego Gas & Electric Company. All rights reserved. Removal of this copyright notice without permission is not permitted under law.

REV	CHANGE	DR	BY	DSN	APV	DATE	REV	CHANGE	DR	BY	DSN	APV	DATE
C	FORMATTING	EDM	JIK	-	-	05/17/2021	F						
B	FIGURE UPDATE	EDM	EJA	GLW	CZH	03/20/2020	E	BILL OF MATERIALS UPDATE	ARC	MBL	JAS	KRG	11/03/2022
A	ORIGINAL	-	GLW	JES	CZH	10/01/2018	D	BILL OF MATERIALS UPDATE	EDM	ADW	GLW	KRG	05/31/2022

SCOPE: THIS STANDARD SHOWS THE ASSEMBLY OF A 600A CABINET PLATE.

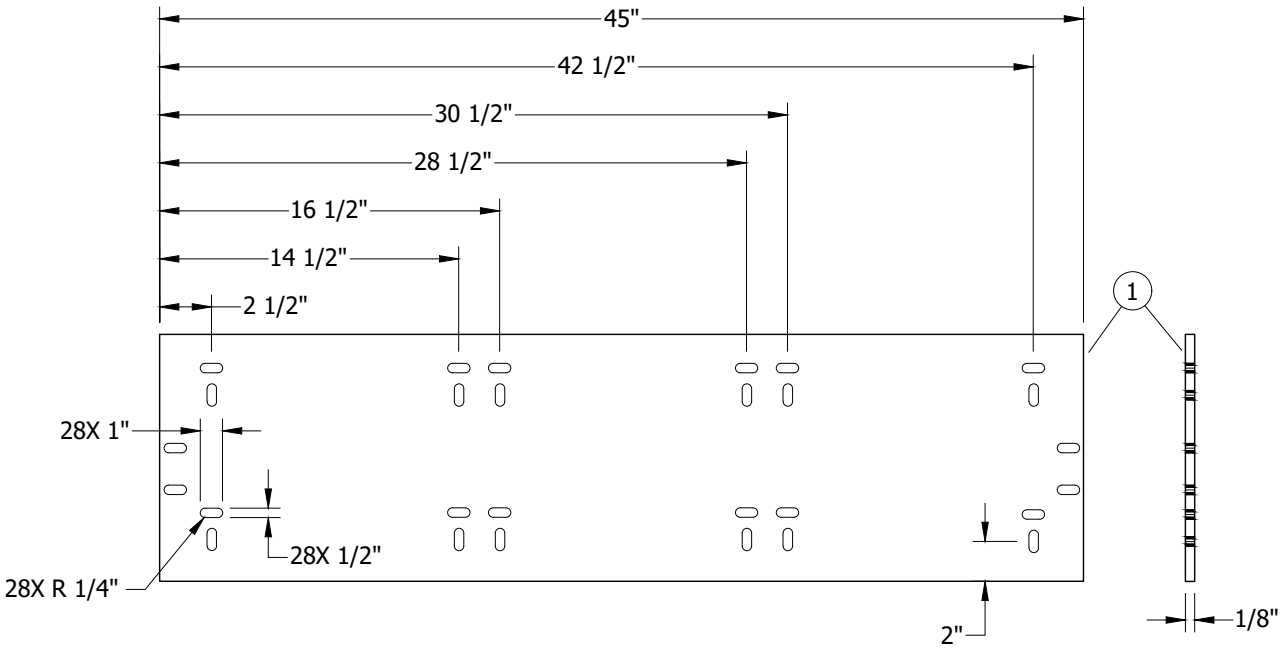

FIGURE 1
600A CABINET PLATE ASSEMBLY



FIGURE 2
600A AND 200A
COMBINATION

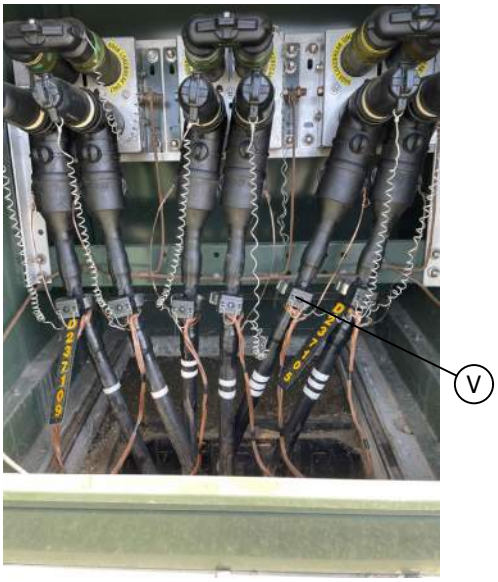

FIGURE 2
WITH LOAD TRACKER
FAULT INDICATORS



FIGURE 2
WITHOUT LOAD TRACKER
FAULT INDICATORS

TABLE OF CONTENTS

© 1998 - 2023 San Diego Gas & Electric Company. All rights reserved. Removal of this copyright notice without permission is not permitted under law.

REV	CHANGE	DR	BY	DSN	APV	DATE	REV	CHANGE	DR	BY	DSN	APV	DATE
C	FORMATTING	EDM	JIK	-	-	05/17/2021	F						
B	FIGURE UPDATE	-	EJA	GLW	CZH	11/12/2019	E	EDITORIAL CHANGES	EDM	EJA	JAS	KRG	04/11/2023
A	ORIGINAL	-	GLW	JES	CZH	10/01/2018	D	EDITORIAL CHANGES	EDM	ADW	GLW	FRC	02/14/2022

X Indicates Latest Revision | Completely Revised | New Page | Information Removed

SDG&E ELECTRIC UNDERGROUND CONSTRUCTION STANDARDS

600A LIVEFRONT TO DEADFRONT TERMINATING CABINET

UG3518.1

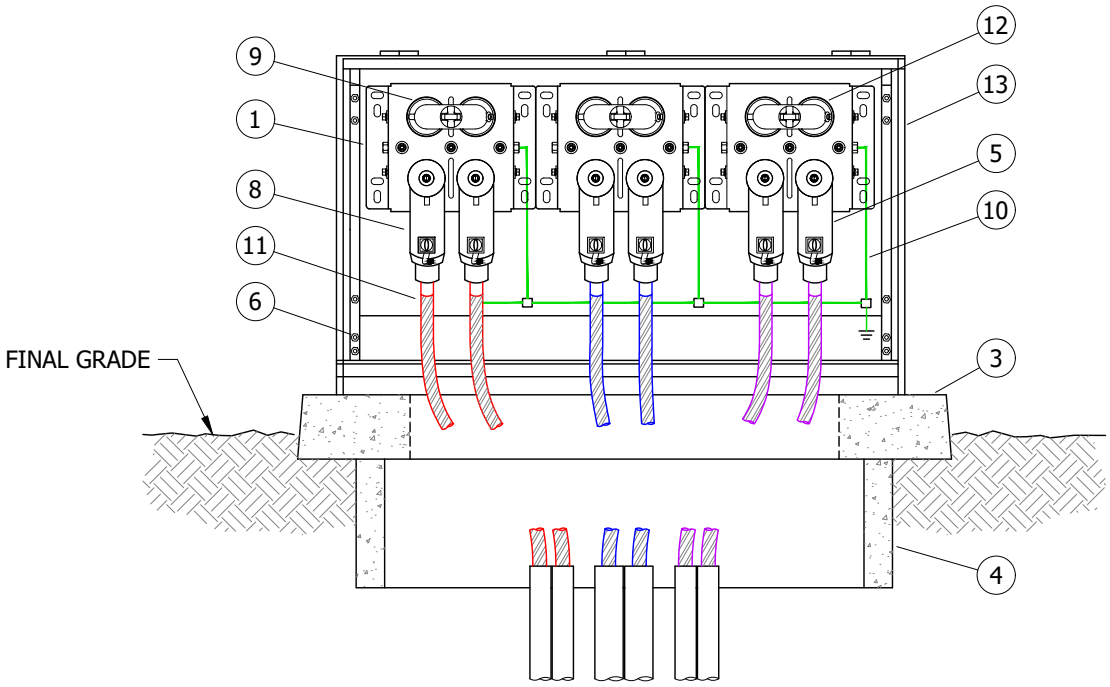

FIGURE 3
600A FRONT VIEW (V)

INSTALLATION:

(A) INSTALL 200A REDUCING TAP WELLS FOR GROUNDING OR 200A CABLE WELLS.

BILL OF MATERIALS:

ITEM	DESCRIPTION	QUANTITY	STANDARD PAGE	STOCK NUMBER	DESIGN UNITS
1	PLATE, CABINET, 304 STAINLESS STEEL, 600A	1	--	S168402	--
2	TAP WELL, REDUCING, 200A (TAP PLUG, ELBOW) (III)	AS REQ'D	4181	S547328	--
3	3421-600A PAD	1	--	S514042	UG3421-2
4	HANDHOLE, CONCRETE, 3312 (OR LARGER) (C)	1	--	S162476	3312-0
5	ELBOW TEE BODY, 15KV, 600A W/ CAPACITIVE TEST POINT	6 EACH	--	S326578	ELBO-T
6	ASSEMBLY, BOLT, 2"	AS REQ'D	--	S148800	--
7	200A ELBOWS AND WIRE (III)	AS REQ'D	--	--	--
8	EXTENSION BUSHING, 600A W/ LOAD TAP PLUG	AS REQ'D	--	S336198	EXLRTP
9	RECEPTACLE, INSULATION, 200A	AS REQ'D	4179-4180	S204304	INSREC
10	WIRE, BARE COPPER, #2, 7 STR., SOFT DRAWN	AS REQ'D	--	S812818 (X)	GDWIRE
11	WIRE, BARE COPPER, 4/0, STR., SOFT DRAWN	AS REQ'D	--	S812764	4/0-SD
12	JUNCTION BAR, 600A CLEER, 15KV, LOADBREAK - SQUARE	3	4198	S439872	CCL-SQ
13	CABINET, MVI/MVS, MULTI USE	1	3580	S190490	DMV12

© 1998 - 2023 San Diego Gas & Electric Company. All rights reserved. Removal of this copyright notice without permission is not permitted under law.

REV	CHANGE	DR	BY	DSN	APV	DATE	REV	CHANGE	DR	BY	DSN	APV	DATE
C	FORMATTING	EDM	JIK	-	-	05/17/2021	F						
B	FIGURE UPDATE	-	EJA	GLW	CZH	11/12/2019	E	EDITORIAL CHANGES	EDM	EJA	JAS	KRG	04/11/2023
A	ORIGINAL	-	GLW	JES	CZH	10/01/2018	D	EDITORIAL CHANGES	EDM	ADW	GLW	FRC	02/14/2022

X Indicates Latest Revision | Completely Revised | New Page | Information Removed

TABLE OF CONTENTS

BILL OF MATERIALS (CONT'D):

ITEM	DESCRIPTION	QUANTITY	STANDARD PAGE	STOCK NUMBER	DESIGN UNITS
14	WIRE, #2 AU, U12.043	AS REQ'D	4004	S197656	RJN3/2
15	WIRE, 2/0 AU, U12.061	AS REQ'D	4004	S197648	RJN2/0
16	WIRE, 1000MCM	AS REQ'D	4004	S197654	RJ1000
17	ELBOW, 200A, #2	AS REQ'D	4180	S443838	LBE-2A
18	ELBOW, 200A, 2/0	AS REQ'D	4180	S443840	LBE2/0
19	INDICATOR, FAULT, LOAD TRACKER (FI) (III)(V)	AS REQ'D	4360	S423714	--

NOTES:

I. WHEN REMOVING ANY LIVEFRONT EQUIPMENT AND INSTALLING THE NEW TERMINATOR CONVERSION CABINET REMOVE THE UNJACKETED CABLE AND INSTALL NEW JACKETED CABLE. DO NOT SPLICE EXISTING 600A CABLE.

II. MAKE SURE WHEN MAKING UP THE NEW CABLE THAT THE CABLE IS MADE LONG ENOUGH TO BE INSTALLED ON THE STAND-OFF POSITION IN CASE OF DE-ENERGIZING THE CABLE BECAUSE OF TROUBLE USE THE 600A/200A TERMINATOR PAD IF THE WIRE DOESN'T LINE UP IN THE 200A PAD.

(III) NOT SHOWN ON FIGURES.

IV. WHEN PIGGY BACKING OFF OF THE 600A TEE BODIES, USE DOUBLE ENDED CONNECTION PLUG. (S544832)

(V) LOAD TRACKER FAULT INDICATOR (FI) IS REQUIRED ON ALL 600A CLEER CONNECTOR INSTALLATIONS.

(X) THIS ITEM IS EXEMPT.

REFERENCE:

a. FOR ELBOWS AND TEE BODIES, SEE UG4183, TABLES 4 AND 5.

b. SEE UG4002 WHEN EXISTING 3-INCH CONDUIT IS ALREADY IN SERVICE.

(c) SEE SECTION 3300: SUBSTRUCTURES.

TABLE OF CONTENTS

© 1998 - 2023 San Diego Gas & Electric Company. All rights reserved. Removal of this copyright notice without permission is not permitted under law.

REV	CHANGE	DR	BY	DSN	APV	DATE	REV	CHANGE	DR	BY	DSN	APV	DATE
C	FORMATTING	EDM	JIK	-	-	05/17/2021	F						
B	FIGURE UPDATE	-	EJA	GLW	CZH	11/12/2019	E	EDITORIAL CHANGES	EDM	EJA	JAS	KRG	04/11/2023
A	ORIGINAL	-	GLW	JES	CZH	10/01/2018	D	EDITORIAL CHANGES	EDM	ADW	GLW	FRC	02/14/2022

SCOPE: THIS STANDARD SHOWS THE PAD MOUNTED, SINGLE-PHASE, LOW PROFILE CABLE TERMINATING CABINET INSTALLATION REQUIREMENTS USED WHEN #2 CABLE IS TERMINATED OR PLANNED TO BE TERMINATED.

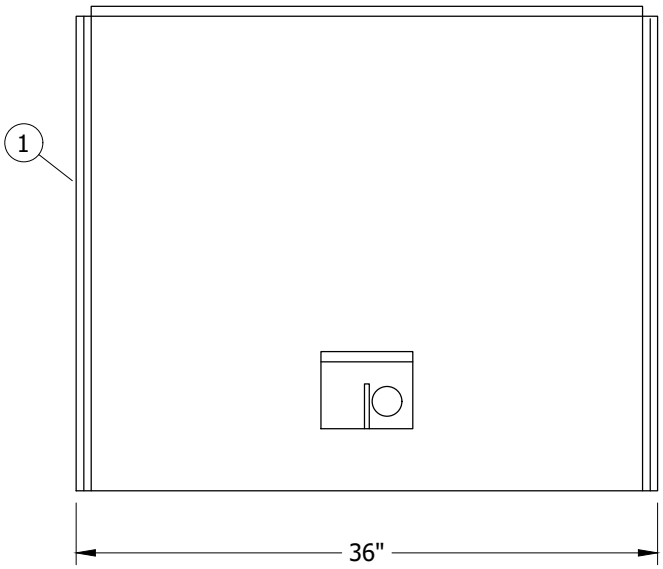

FIGURE 1
FRONT VIEW

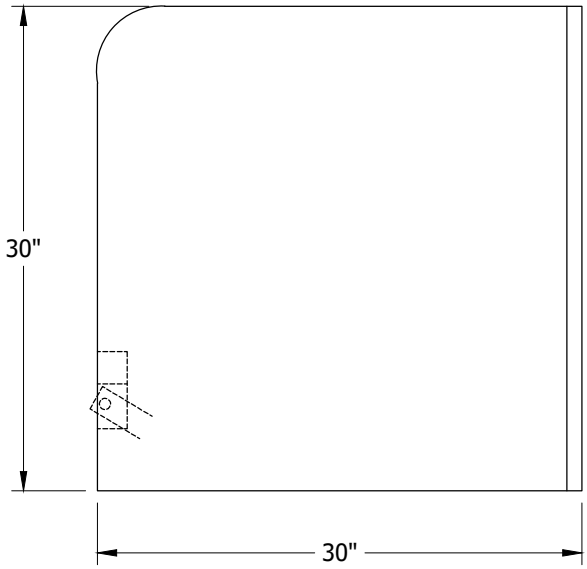

FIGURE 1
SIDE VIEW

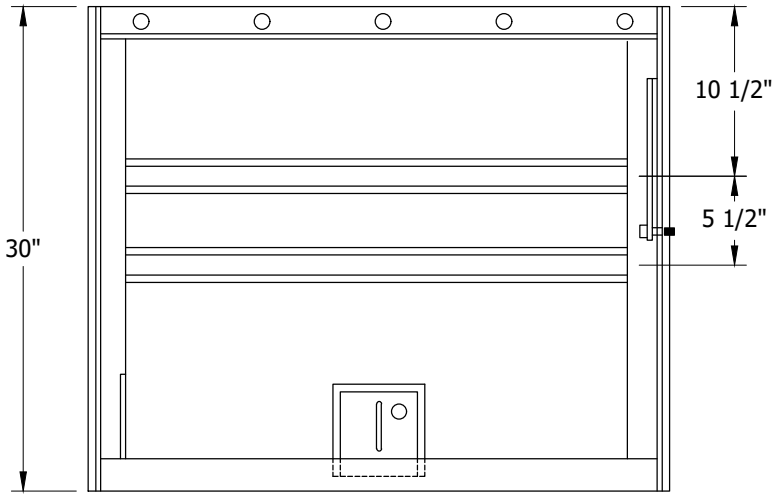

FIGURE 1
FRONT VIEW
EXPOSED

TABLE OF CONTENTS

© 1998 - 2021 San Diego Gas & Electric Company. All rights reserved. Removal of this copyright notice without permission is not permitted under law.

REV	CHANGE	DR	BY	DSN	APV	DATE	REV	CHANGE	DR	BY	DSN	APV	DATE
C	DRAWING UPDATE	-	JS	TR	MDJ	11/28/2016	F	FORMATTING	EDM	JIK	-	-	5/17/2021
B	NO CHANGES-REAFFIRMED	-	JC	TR	JS/MDJ	09/30/2015	E	EDITORIAL CHANGES	-	SL	JES	CZH	10/18/2019
A	EDITORIAL CHANGES	-	JC	IL	MDJ	02/28/2015	D	EDITORIAL CHANGES	-	JS	JS	MDJ	06/26/2017

X Indicates Latest Revision | Completely Revised | New Page | Information Removed

SDG&E ELECTRIC UNDERGROUND CONSTRUCTION STANDARDS

SINGLE-PHASE, LOW PROFILE CABLE TERMINATING CABINET, 6,930V

UG3522.1

TABLE OF CONTENTS

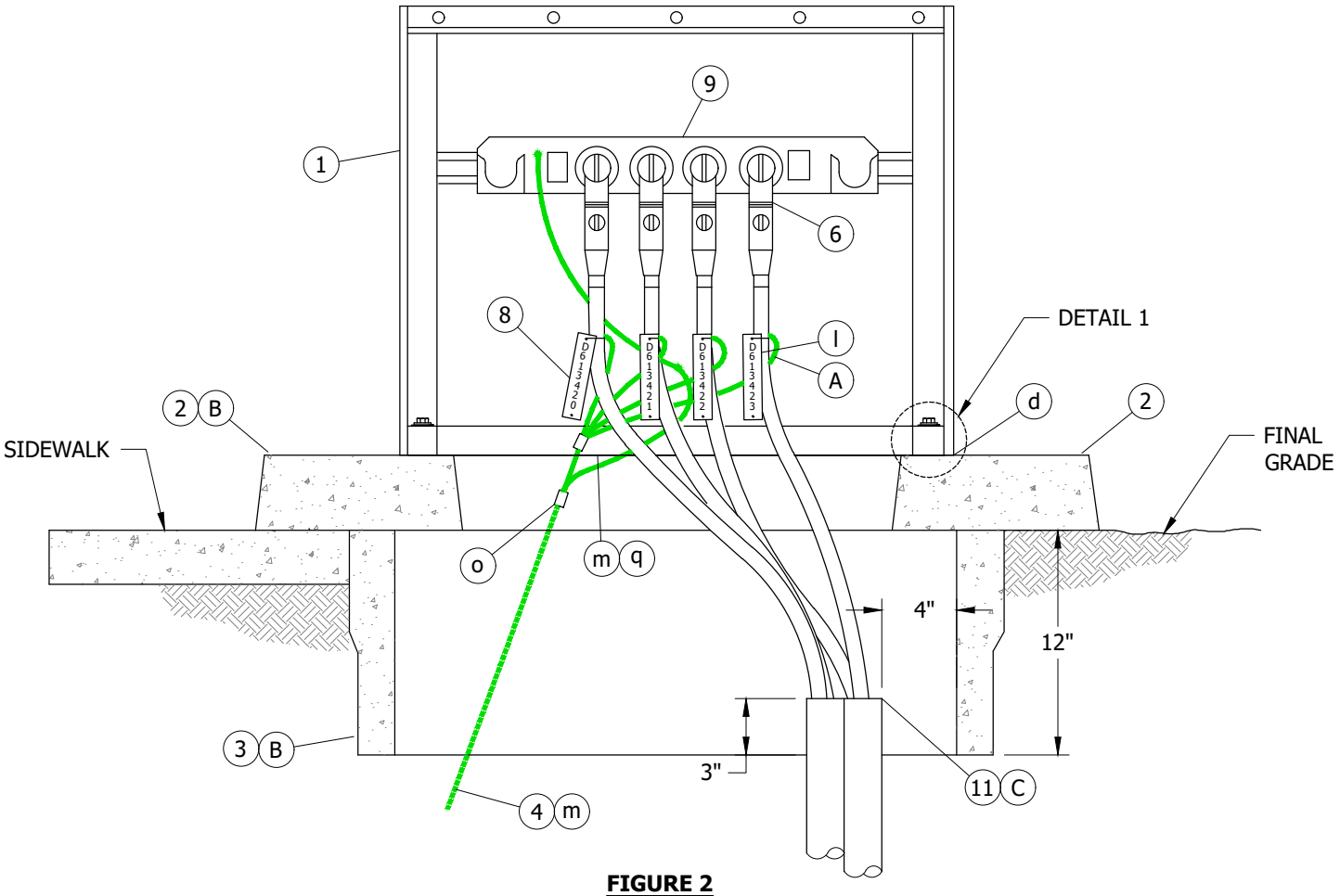

FIGURE 2
CABLE TAP INSTALLATION
W/3421 PAD

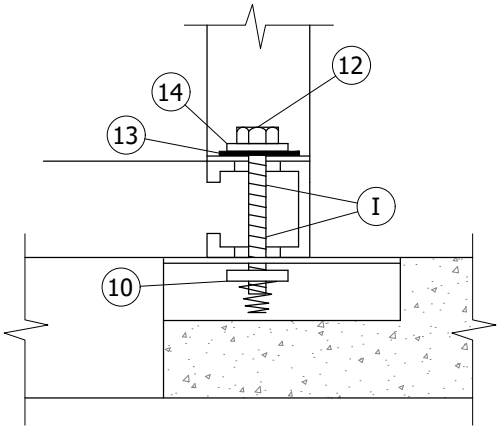

DETAIL 1
HOLD DOWN ASSEMBLY
TYPICAL BOTH SIDES

© 1998 - 2021 San Diego Gas & Electric Company. All rights reserved. Removal of this copyright notice without permission is not permitted under law.

REV	CHANGE	DR	BY	DSN	APV	DATE	REV	CHANGE	DR	BY	DSN	APV	DATE
C	DRAWING UPDATE	-	JS	TR	MDJ	11/28/2016	F	FORMATTING	EDM	JIK	-	-	5/17/2021
B	NO CHANGES-REAFFIRMED	-	JC	TR	JS/MDJ	09/30/2015	E	EDITORIAL CHANGES	-	SL	JES	CZH	10/18/2019
A	EDITORIAL CHANGES	-	JC	IL	MDJ	02/28/2015	D	EDITORIAL CHANGES	-	JS	JS	MDJ	06/26/2017

INSTALLATION:

(A) THIS INSTALLATION IS LIMITED TO A MAXIMUM OF 4 SINGLE-PHASE #2 AL PRIMARY CABLES WITH ONE 3 OR 4 WAY CABLE TAP.
(B) SET PAD AND HANDHOLE, INSTALL EQUIPMENT GROUND.
(C) TERMINATE CONDUITS AS SHOWN AND SEAL CONDUITS WITH SEALING COMPOUND.
(D) KEYLESS LOCK TO BE ATTACHED TO LATCHING MECHANISM ON CABINET AND PENTAHEAD BOLT TO BE THREADED IN COMPLETELY.
(E) FOR FIELD MAINTENANCE INSTALLS USE S732966/TERM-1.

BILL OF MATERIALS:

ITEM	DESCRIPTION	QUANTITY	STANDARD PAGE	STOCK NUMBER	DESIGN UNITS
1	CABINET, LOW PROFILE CABLE TERMINATOR, SINGLE-PHASE (E)	1	3522	S190430	SWTERM
2	PAD, TRANSFORMER/UTLITY EQUIPMENT, SINGLE-PHASE	1	3421	S514240	FC3PAD
3	HANDHOLE	1	3312	S162426	-
4	EQUIPMENT, PAD GROUNDING (m)	1	4512	-	-
5	RECEPTACLE, INSULATING (II)	AS REQ'D	4180	S204304	-
6	ELBOW, LOADBREAK, 14.4KV 200A ELBOW, LOADBREAK, FUSED 6930, 200A	AS REQ'D	4190-4191	-	-
7	LOCK, KEYLESS (D) (II)	1	-	S468010	-
8	TAGS, IDENTIFICATION, CABLE	AS REQ'D	3202	-	-
9	CABLE TAP, 4-WAY	AS REQ'D	4180	-	TAP-4W
	CABLE TAP, 3-WAY				TAP-3W
	PLUG, STAND-OFF				S/OPLG
	BUSHING, FEED-THRU				FEED-B
10	NUT, CLAMPING CHANNEL W/SPRING, 1/2"	2	-	S503520	-
11	COMPOUND, SEALING (C)	AS REQ'D	-	S442976	-
12	SCREW, HEX HEAD CAP, BRONZE, 1/2" X 2 1/2"	2	-	S616352	-
13	WASHER, STANDARD FLAT ROUND, BRONZE, 1/2"	2	-	S799488	-
14	WASHER, LOCK, BRONZE, 1/2"	2	-	S796416	-

TABLE OF CONTENTS

NOTES:

(I) TERMINATOR COMES WITH 5/8" X 1" SLOT IN CENTER OF FRAME UNISTRUT (TYPICAL BOTH SIDES)
(II) NOT SHOWN IN FIGURES.

REFERENCE:

a. SEE UG3202 FOR CABLE IDENTIFICATION.
b. SEE UG3211 FOR STRUCTURE/EQUIPMENT IDENTIFICATION.
c. SEE UG3221 FOR HIGH VOLTAGE DECAL.
(d) SEE UG3408 FOR WIRE ENTRY PREVENTION.
e. SEE UG3421 FOR PAD, HANDHOLE AND CONDUIT PLACEMENT.
f. SEE UG3479 FOR BARRIER PROTECTION.
g. SEE UG3480, UG3481, UG3482, AND UG3483 FOR MINIMUM OPERATING AND CLEARANCE REQUIREMENTS (PAD PLACEMENT).

© 1998 - 2021 San Diego Gas & Electric Company. All rights reserved. Removal of this copyright notice without permission is not permitted under law.

REV	CHANGE	DR	BY	DSN	APV	DATE	REV	CHANGE	DR	BY	DSN	APV	DATE
C	DRAWING UPDATE	-	JS	TR	MDJ	11/28/2016	F	FORMATTING	EDM	JIK	-	-	5/17/2021
B	NO CHANGES-REAFFIRMED	-	JC	TR	JS/MDJ	09/30/2015	E	EDITORIAL CHANGES	-	SL	JES	CZH	10/18/2019
A	EDITORIAL CHANGES	-	JC	IL	MDJ	02/28/2015	D	EDITORIAL CHANGES	-	JS	JS	MDJ	06/26/2017

REFERENCE (CONT'D):

h. SEE UG3484 FOR PAD INSTALLATION OF PAD MOUNTED EQUIPMENT.

i. SEE UG3486, UG3487, AND UG3488 FOR RETAINING WALL REQUIREMENTS AND CLEARANCES FROM REVERSE SUBGRADE RETAINING WALLS.

j. SEE UG3489 FOR RETAINING WALLS.

k. SEE UG3605 AND UG3660 FOR SINGLE-PHASE SUBSURFACE SECTIONALIZING.

(l) SEE UG4108 FOR SEALING JACKETED CABLE.

(m) SEE UG4510 FOR (PREFERRED I) AND (ALTERNATE) TRENCH GROUND WIRE.

n. SEE UG4512 FOR (PREFERRED II) EQUIPMENT GROUNDING INSTALLATION.

(o) SEE UG4512 FOR EQUIPMENT GROUNDING.

p. SEE UG4514 FOR GROUNDING TELCO CONDUCTOR IN PAD MOUNTED EQUIPMENT.

(q) SEE UG4520 AND UG4521 (PREVIOUS # UG4520) FOR GROUNDING PAD MOUNTED EQUIPMENT.

r. SEE UG3675 FOR SINGLE PHASE MVI INSTALLATION.

s. SEE UG4191 FOR FUSED ELBOW INSTALLATION.

TABLE OF CONTENTS

© 1998 - 2021 San Diego Gas & Electric Company. All rights reserved. Removal of this copyright notice without permission is not permitted under law.

REV	CHANGE	DR	BY	DSN	APV	DATE	REV	CHANGE	DR	BY	DSN	APV	DATE
C	DRAWING UPDATE	-	JS	TR	MDJ	11/28/2016	F	FORMATTING	EDM	JIK	-	-	5/17/2021
B	NO CHANGES-REAFFIRMED	-	JC	TR	JS/MDJ	09/30/2015	E	EDITORIAL CHANGES	-	SL	JES	CZH	10/18/2019
A	EDITORIAL CHANGES	-	JC	IL	MDJ	02/28/2015	D	EDITORIAL CHANGES	-	JS	JS	MDJ	06/26/2017

X Indicates Latest Revision | Completely Revised | New Page | Information Removed

SDG&E ELECTRIC UNDERGROUND CONSTRUCTION STANDARDS

SINGLE-PHASE, LOW PROFILE CABLE TERMINATING CABINET, 6,930V

UG3522.4

SCOPE: THIS STANDARD SHOWS THE PAD MOUNTED, THREE-PHASE, LOW PROFILE, DEADFRONT, METAL TERMINATING CABINET.

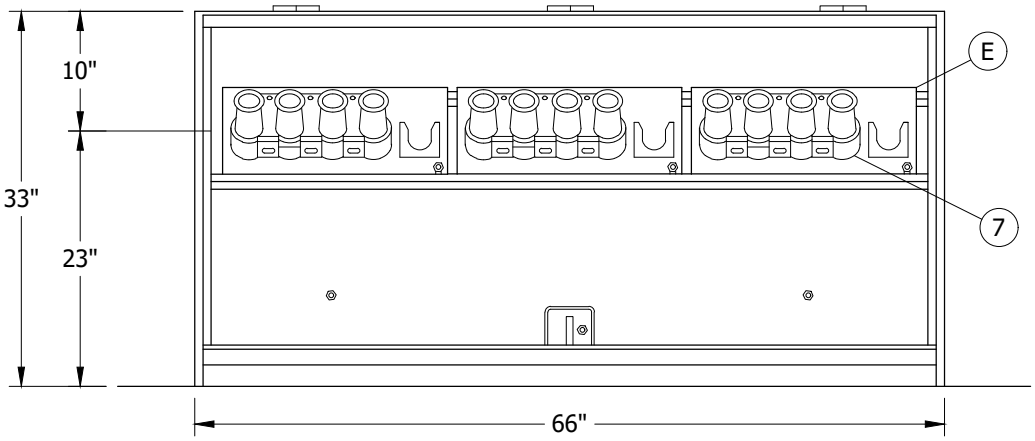

FIGURE 1 (V)
FRONT VIEW

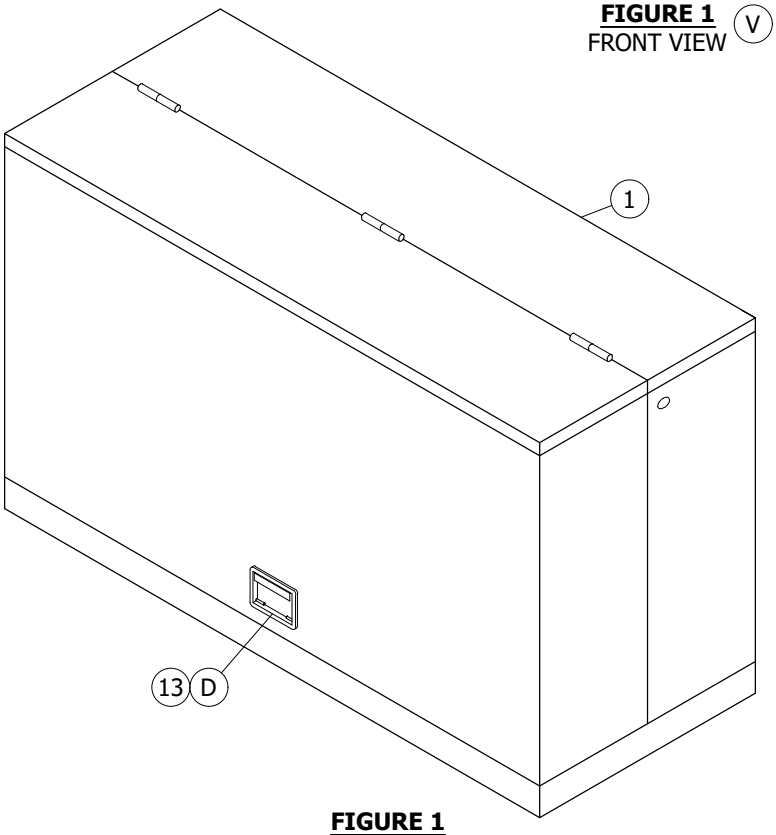

FIGURE 1
ISOMETRIC VIEW

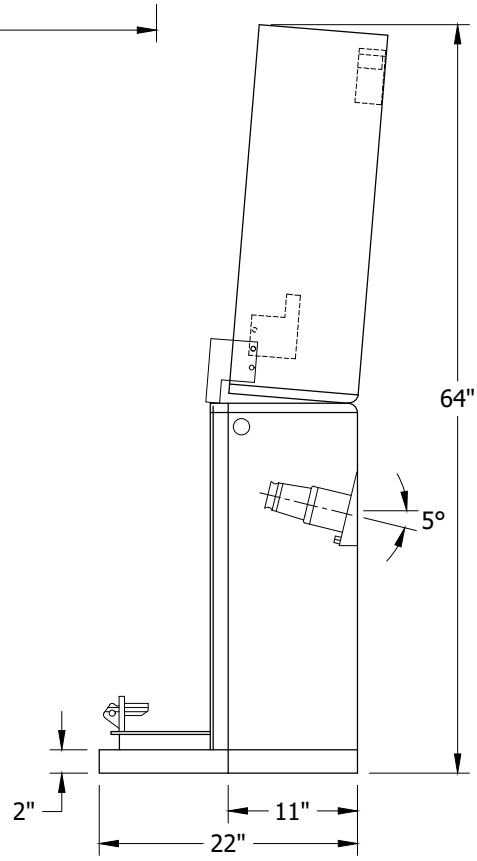

FIGURE 1
SIDE VIEW

TABLE 1

RATINGS	
KV-BIL	95
AMPERES	200
WEIGHT (LBS)	290 MAX.

UG MAP SYMBOL

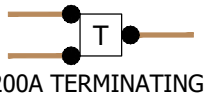

200A TERMINATING CABINET

TABLE OF CONTENTS

© 1998 - 2021 San Diego Gas & Electric Company. All rights reserved. Removal of this copyright notice without permission is not permitted under law.

REV	CHANGE	DR	BY	DSN	APV	DATE	REV	CHANGE	DR	BY	DSN	APV	DATE
C	EDITORIAL CHANGES	EDM	RSL	JES	CZH	12/12/2021	F						
B	FORMATTING	EDM	JIK	-	-	05/17/2021	E						
A	EDITORIAL CHANGES	-	JS	TR	MDJ	08/11/2016	D						

X Indicates Latest Revision | Completely Revised | New Page | Information Removed

SDG&E ELECTRIC UNDERGROUND CONSTRUCTION STANDARDS

THREE-PHASE LOW PROFILE CABLE TERMINATING CABINET
12KV, 200A

UG3523.1

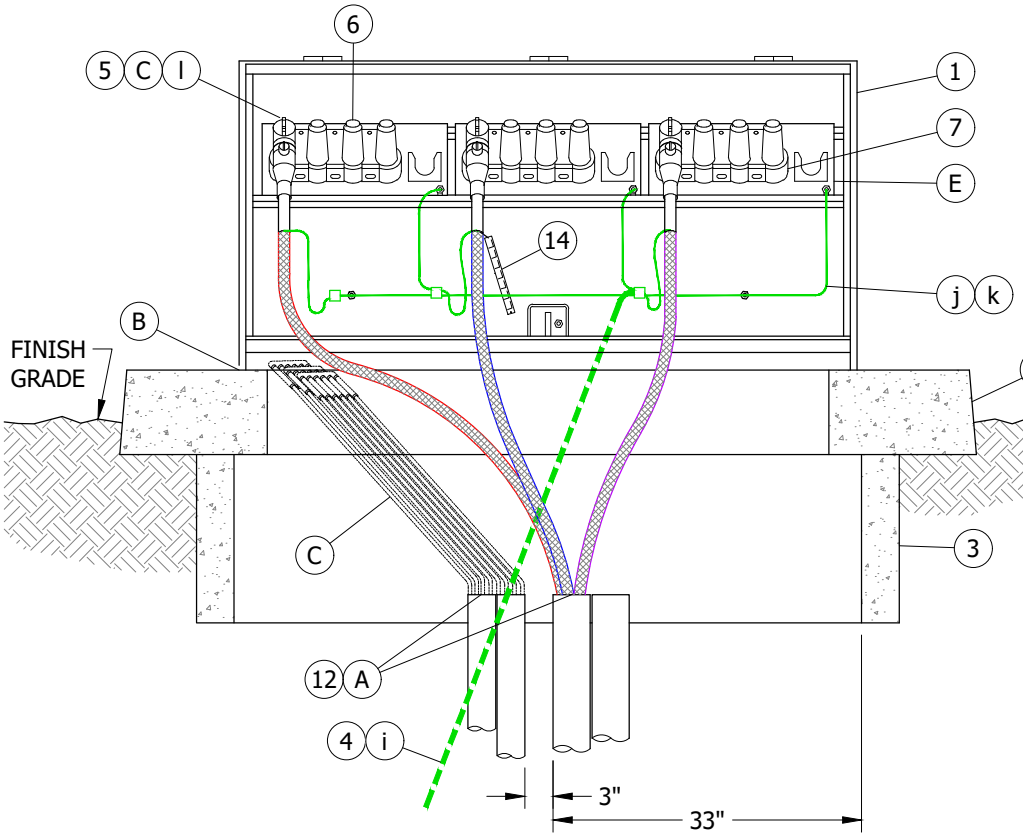

FIGURE 2
CABLE TAP INSTALLATION W/ 3416 PAD (VI)
FRONT VIEW

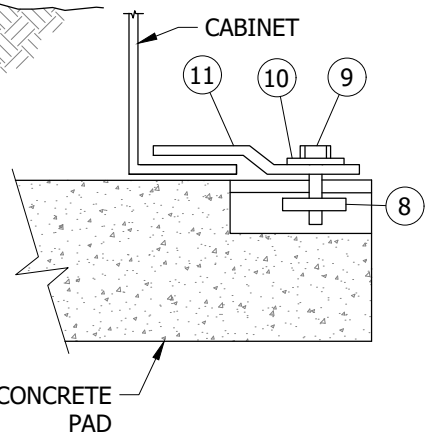

DETAIL 1
HOLD-DOWN ASSEMBLY
TYPICAL BOTH SIDES OF EQUIPMENT PAD

INSTALLATION:

(A) SEAL CONDUITS WITH SEALING COMPOUND.
(B) BASE OF CABINET SHALL BE CAULKED ONLY TO PREVENT POSSIBLE WIRE ENTRY.
(C) FUSED ELBOWS 1 PER CABLE TAP.
(D) KEYLESS LOCK TO BE ATTACHED TO LATCHING MECHANISM ON CABINET AND PENTAHEAD BOLT TO BE THREADED IN COMPLETELY.
(E) CABLE TAP PLATES SUPPLIED WITH CABINET ARE ADJUSTABLE & REMOVABLE.

BILL OF MATERIALS:

ITEM	DESCRIPTION	QUANTITY	STANDARD PAGE	STOCK NUMBER	DESIGN UNITS	MACRO UNITS
1	CABINET, THREE-PHASE TERMINATING	1	--	S732974	CT-CAB	--
2	PAD, 3416	1	3416	S514020	PAD1	3416PAD
3	HANDHOLE, 3311, 14" X 66" X 14"	1	3311	S162660	PAD2	
4	WIRE, TRENCH GROUND (i)	AS REQ'D	4510	--	--	--
5	ELBOW, LOADBREAK, 14.4KV, 200A (C)	AS REQ'D	4191	--	--	--
6	RECEPTACLE, INSULATING	AS REQ'D	4195	S204304	INSREC	--

© 1998 - 2021 San Diego Gas & Electric Company. All rights reserved. Removal of this copyright notice without permission is not permitted under law.

REV	CHANGE	DR	BY	DSN	APV	DATE	REV	CHANGE	DR	BY	DSN	APV	DATE
C	EDITORIAL CHANGES	EDM	RSL	JES	CZH	12/12/2021	F						
B	FORMATTING	EDM	JIK	-	-	05/17/2021	E						
A	EDITORIAL CHANGES	-	JS	TR	MDJ	08/11/2016	D						

TABLE OF CONTENTS

BILL OF MATERIALS (CONT'D):

ITEM	DESCRIPTION	QUANTITY	STANDARD PAGE	STOCK NUMBER	DESIGN UNITS	MACRO UNITS
7	CABLE TAP, 4 WAY ONLY, (WITHOUT BRACKET)	3	4195	--	--	--
8	NUT, CLAMPING CHANNEL, W/ SPRING, 1/2"	4	--	S505520	--	--
9	SCREW, HEX HEAD CAP, BRONZE, 1/2" X 1 1/2"	4	--	S616192	--	--
10	WASHER, STANDARD FLAT ROUND, BRONZE, 1/2"	4	--	S799488	--	--
11	HOLD DOWN (SUPPLIED WITH CABINET)	4	--	-	--	--
12	SEALING COMPOUND (A)	AS REQ'D	--	S442976	--	--
13	LOCK, KEYLESS (D)	1	--	S468010	--	--
14	TAG, CABLE IDENTIFICATION	AS REQ'D	3202	--	--	--

NOTES:

I. THE PAD MOUNTED TERMINATOR IS DESIGNED FOR 2/0 AND SMALLER 15KV CABLES.

II. THIS TERMINATOR MAY ALSO REPLACE LIVEFRONT TERMINATORS, IF SPACE IS AVAILABLE.

III. THIS TERMINATOR AND PAD SHOULD BE LOCATED IN AREAS THAT ARE FLAT AND CONCRETED, SUCH AS AREAS NEXT TO SIDEWALKS AND STREETS, THAT PROVIDE ADEQUATE WORK SPACE AND LIVE-LINE TOOL OPERATION SPACE.

IV. SECONDARY CABLES MAY BE TERMINATED IN THIS TERMINATING FACILITY BY DEVIATION ONLY.

(V) CABLE TAP PLATES ARE SUPPLIED WITH CABINET.

(VI) PAD MOUNTED INSTALLATION WHEN TERMINATING 2/0 AND SMALLER CABLE.

REFERENCE:

a. SEE UG3211 FOR STRUCTURE/EQUIPMENT IDENTIFICATION TAG.

b. SEE UG3408 FOR WIRE ENTRY PREVENTION AND MOISTURE ENTRY.

(c) SEE UG3416 FOR PAD AND HANDHOLE INSTALLATION.

d. SEE UG3479 FOR BARRIERS IF THE SWITCH IS SUBJECT TO VEHICULAR TRAFFIC.

e. SEE UG3480, UG3481, UG3482, AND UG3483 FOR MINIMUM OPERATING CLEARANCE REQUIREMENTS (PAD PLACEMENT).

f. SEE UG3484 FOR PAD INSTALLATION OF PAD MOUNTED EQUIPMENT.

g. SEE UG3486, UG3487, AND UG3488 FOR RETAINING WALL REQUIREMENTS AND CLEARANCES FROM REVERSE SUBGRADE RETAINING WALLS.

h. SEE UG3489 FOR RETAINING WALLS.

(i) SEE UG4510 FOR STANDARD AND ALTERNATE TRENCH GROUND WIRE.

(j) SEE UG4512 FOR EQUIPMENT GROUNDING INSTALLATION.

(k) SEE UG4520-UG4521 FOR GROUNDING PAD MOUNTED EQUIPMENT.

(l) SEE UG4525 FOR GROUNDING CONCENTRIC NEUTRAL TERMINATIONS AND GROUNDING PREMOLDED CONNECTORS

m. SEE UG3202 FOR CABLE IDENTIFICATION.

n. SEE UG3203 FOR PULLING AND MEASURING TAPE, CONDUIT, AND CONDUIT KNOCKOUT IDENTIFICATION.

TABLE OF CONTENTS

© 1998 - 2021 San Diego Gas & Electric Company. All rights reserved. Removal of this copyright notice without permission is not permitted under law.

REV	CHANGE	DR	BY	DSN	APV	DATE	REV	CHANGE	DR	BY	DSN	APV	DATE
C	EDITORIAL CHANGES	EDM	RSL	JES	CZH	12/12/2021	F						
B	FORMATTING	EDM	JIK	-	-	05/17/2021	E						
A	EDITORIAL CHANGES	-	JS	TR	MDJ	08/11/2016	D						

X Indicates Latest Revision | Completely Revised | New Page | Information Removed

SDG&E ELECTRIC UNDERGROUND CONSTRUCTION STANDARDS

THREE-PHASE LOW PROFILE CABLE TERMINATING CABINET
12KV, 200A

UG3523.3

SCOPE: THIS STANDARD SHOWS THE 600A/200A PAD MOUNTED LOW PROFILE TERMINATING CABINET (FOR FIELD MAINTENANCE).

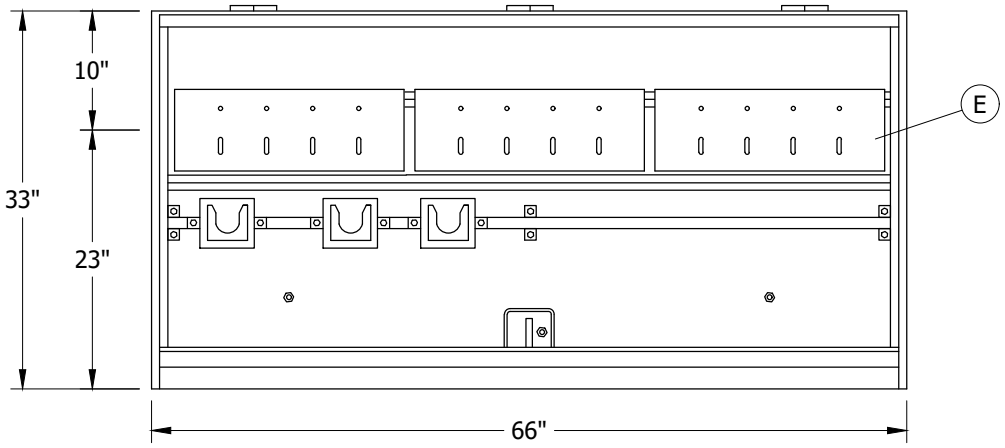

FIGURE 1
FRONT VIEW

TABLE 1

RATINGS	
KV-BIL	95
AMPERES	600
WEIGHT	290 LBS MAX.

UG MAP SYMBOL

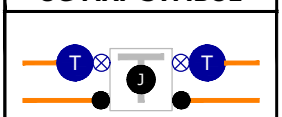

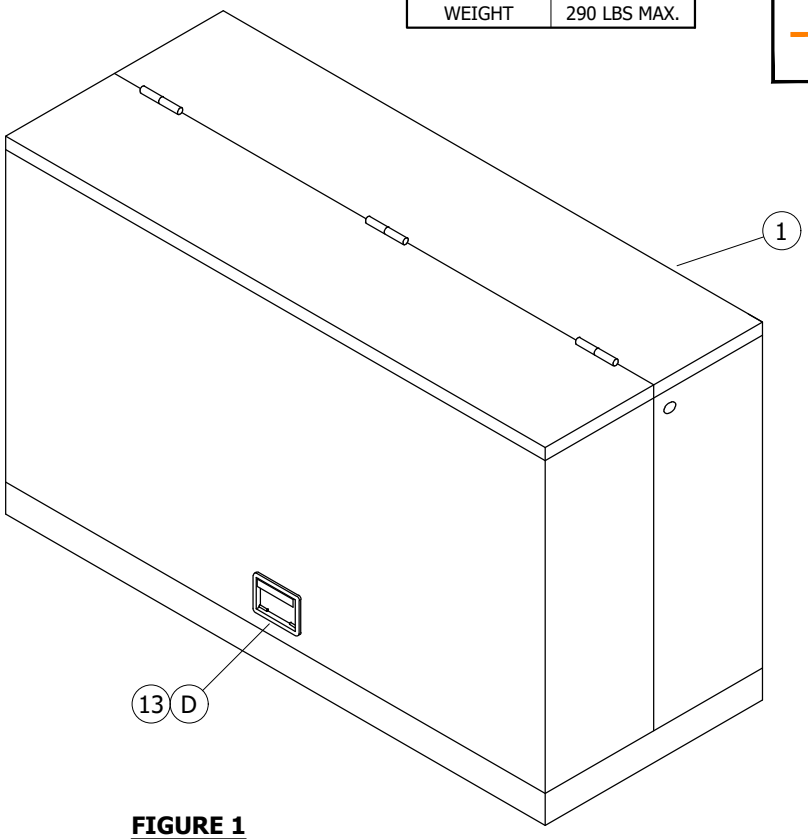

FIGURE 1
ISOMETRIC VIEW

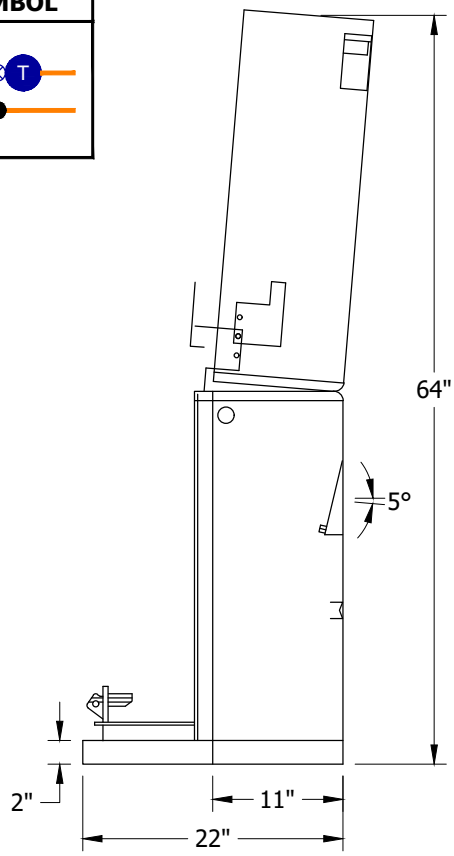

FIGURE 1
SIDE VIEW

© 1998 - 2021 San Diego Gas & Electric Company. All rights reserved. Removal of this copyright notice without permission is not permitted under law.

REV	CHANGE	DR	BY	DSN	APV	DATE	REV	CHANGE	DR	BY	DSN	APV	DATE
C	FORMATTING	EDM	JIK	-	-	5/17/2021	F						
B	EDITORIAL CHANGES	-	AW	JS	CZH	7/1/2018	E						
A	REVISION	-	-	-	-	4/11/2012	D						

X Indicates Latest Revision | Completely Revised | New Page | Information Removed

SDG&E ELECTRIC UNDERGROUND CONSTRUCTION STANDARDS

THREE-PHASE LOW PROFILE CABLE
TERMINATING CABINET 12KV, 600A/200A

UG3524.1

TABLE OF CONTENTS

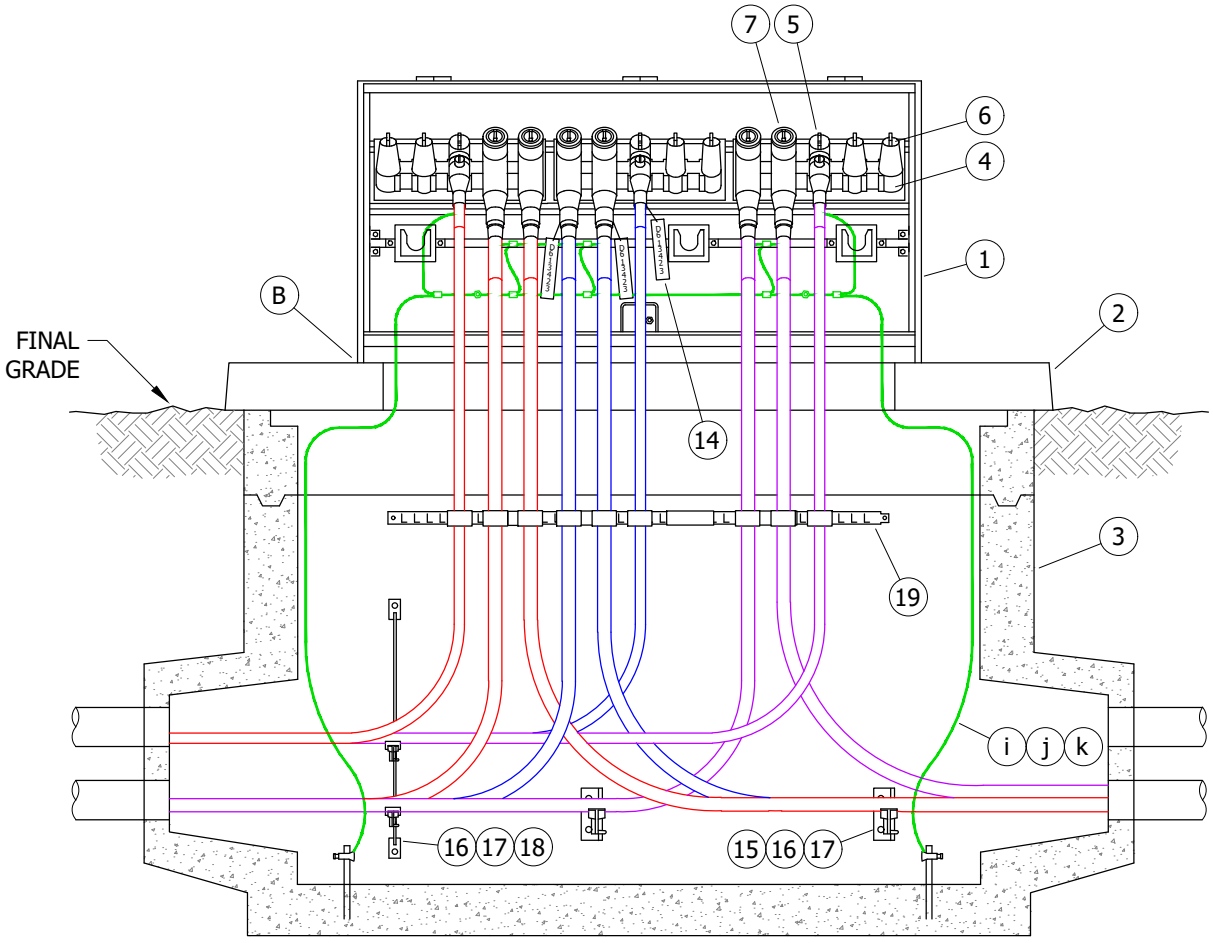

FIGURE 2
FRONT VIEW
600A/200A JUNCTION & CABLE INSTALLATION
WITH 3410 NEW PAD

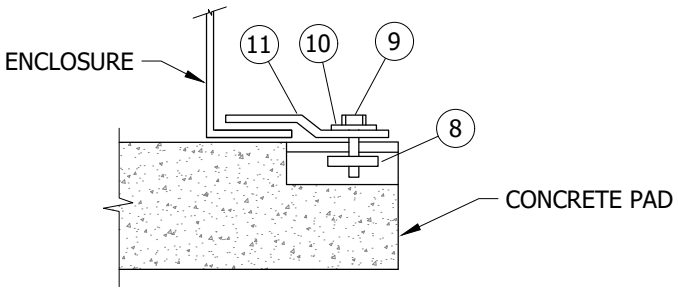

FIGURE 3
HOLD-DOWN ASSEMBLY DETAIL
TYPICAL BOTH SIDES OF EQUIPMENT PAD

© 1998 - 2021 San Diego Gas & Electric Company. All rights reserved. Removal of this copyright notice without permission is not permitted under law.

REV	CHANGE	DR	BY	DSN	APV	DATE	REV	CHANGE	DR	BY	DSN	APV	DATE
C	FORMATTING	EDM	JIK	-	-	5/17/2021	F						
B	EDITORIAL CHANGES	-	AW	JS	CZH	7/1/2018	E						
A	REVISION	-	-	-	-	4/11/2012	D						

X Indicates Latest Revision | Completely Revised | New Page | Information Removed

SDG&E ELECTRIC UNDERGROUND CONSTRUCTION STANDARDS

THREE-PHASE LOW PROFILE CABLE
TERMINATING CABINET 12KV, 600A/200A

UG3524.2

TABLE OF CONTENTS

INSTALLATION:

(A) SEAL CONDUITS WITH SEALING COMPOUND.

(B) BASE OF CABINET SHALL BE CAULKED ONLY TO PREVENT POSSIBLE WIRE ENTRY.

(C) FUSED ELBOWS AND SECONDARIES ARE ACCEPTABLE.

(D) KEYLESS LOCK TO BE ATTACHED TO LATCHING MECHANISM ON CABINET AND PENTAHEAD BOLT TO BE THREADED IN COMPLETELY.

(E) JUNCTION SUPPORT PLATES SUPPLIED WITH CABINET ARE REMOVABLE.

BILL OF MATERIALS:

ITEM	DESCRIPTION	QUANTITY	STANDARD PAGE	STOCK NUMBER	DESIGN UNITS
1	CABINET, THREE-PHASE CABLE TERMINATING	1	3524	S732944	MT-CAB
2	PAD, 3410	1	3410	S514260	3410
3	HANDHOLE, EXISTING	1	-	-	-
4	JUNCTION, 600A/200A	3	4186	S439860	JUN6/2
5	ELBOW, LOADBREAK, 14.4KV, 200A (A)	AS REQ'D	4191	-	-
6	RECEPTABLE, INSULATING	AS REQ'D	4195	S204304	INSREC
7	TEE, ELBOW	AS REQ'D	-	S326578	ELBO-T
8	NUT, CLAMPING CHANNEL, W/SPRING, 1/2"	4	-	S505520	-
9	SCREW, HEX HEAD CAP, BRONZE, 1/2" X 1 1/2"	4	-	S616192	-
10	WASHER, STANDARD FLAT ROUND, BRONZE, 1/2"	4	-	S799488	-
11	HOLD DOWN (SUPPLIED WITH CABINET)	4	-	-	-
12	SEALING COMPOUND (A) (I)	AS REQ'D	-	S442976	-
13	KEYLESS LOCK (D) (I)	1	-	S468010	-
14	CABLE IDENTIFICATION TAGS	AS REQ'D	3202	-	-
15	ADAPTER, FOR CABLE ARMS	AS REQ'D	4177/4178	S102016	-
16	CABLE ARMS, 2, 3 OR 4 POSITIONS	AS REQ'D	4177/4178	-	-
17	CABLE INSULATORS	AS REQ'D	4177/4178	S430592	-
18	HANGER, FOR CABLE ARMS	AS REQ'D	4177/4178	S564480	-
19	HANGER, 30"	2	-	S503520	-

NOTES:

(I) NOT SHOWN ON FIGURES.

REFERENCE:

a. SEE UG3211 FOR STRUCTURE/EQUIPMENT IDENTIFICATION TAG.

b. SEE UG3408 FOR WIRE ENTRY PREVENTION.

c. SEE UG3410 FOR PAD INSTALLATION.

d. SEE UG3479 FOR BARRIERS IF THE SWITCH IS SUBJECT TO VEHICULAR TRAFFIC.

e. SEE UG3480, UG3481, UG3482, AND UG3483 FOR MINIMUM OPERATING CLEARANCE REQUIREMENTS (PAD PLACEMENT).

f. SEE UG3484 FOR PAD INSTALLATION OF PAD MOUNTED EQUIPMENT.

g. SEE UG3486, UG3487, AND UG3488 FOR RETAINING WALL REQUIREMENTS AND CLEARANCES FROM REVERSE SUBGRADE RETAINING WALLS.

h. SEE UG3489 FOR RETAINING WALLS.

(i) SEE UG4512 FOR EQUIPMENT GROUNDING INSTALLATION.

(j) SEE UG4520 AND UG4521 (PREVIOUS # UG4520) FOR GROUNDING PAD MOUNTED EQUIPMENT.

(k) SEE UG4525 FOR GROUNDING CONCENTRIC NEUTRAL TERMINATIONS AND GROUNDING PREMOLDED CONNECTORS.

© 1998 - 2021 San Diego Gas & Electric Company. All rights reserved. Removal of this copyright notice without permission is not permitted under law.

REV	CHANGE	DR	BY	DSN	APV	DATE	REV	CHANGE	DR	BY	DSN	APV	DATE
C	FORMATTING	EDM	JIK	-	-	5/17/2021	F						
B	EDITORIAL CHANGES	-	AW	JS	CZH	7/1/2018	E						
A	REVISION	-	-	-	-	4/11/2012	D						

X Indicates Latest Revision | Completely Revised | New Page | Information Removed

SDG&E ELECTRIC UNDERGROUND CONSTRUCTION STANDARDS

THREE-PHASE LOW PROFILE CABLE TERMINATING CABINET 12KV, 600A/200A

UG3524.3

TABLE OF CONTENTS

SCOPE: THIS STANDARD COVERS PAD MOUNTED 600A, 15KV THREE-PHASE LIQUID INSULATED VACUUM SWITCH GEAR WITH VISIBLE DISCONNECTS.

ATTENTION:

* DUE TO DIVERSE ENVIRONMENTAL CONDITIONS, THE SWITCH GEAR IS CONSTRUCTED OF STAINLESS STEEL. THE LIQUID INSULATION IS NOT SUBJECTED TO ARC CONTAMINATION DURING SWITCHING AND WILL NOT REQUIRE TESTING.

TABLE 1

ELECTRICAL RATINGS	
VOLTAGE	15.5KV
CURRENT, CONTINUES	600A
B.I.L	95KV
MAXIMUM INTERRUPTING CURRENT VFI	12.5KA - (SYMMETRICAL)
MOMENTARY MAKE AND LATCH	20KA - (ASYMMETRICAL)
B.I.L. ACROSS OPEN VFI	125KV

TABLE 2

SWITCH INFORMATION		
TYPE OF SWITCH	**STOCK NUMBER**	**DESIGN UNITS**
4-WAY MANUAL SWITCH	S709052	4WAYTM
4-WAY SCADA SWITCH	S704732	4WAYTS
5-WAY SCADA SWITCH	S704734	5WAYTS
4-WAY SCADA SWITCH 2-SIDED	S704736	4WTPES
4-WAY SCADA SWITCH HSTC	S704738	4WTFTS

TABLE OF CONTENTS

TABLE 3

SWITCH GEAR INTERNAL DESIGNATION LOCATIONS	
DESIGNATION	**LOCATION**
L	LEFT
S	4TH POSITION
T	TAP
R	RIGHT

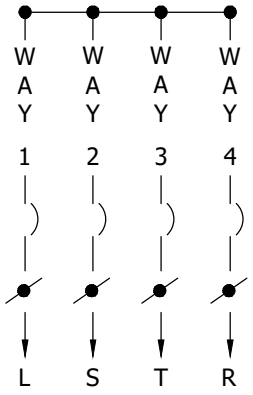

FIGURE 1
4-WAY MANUAL CONNECTION DIAGRAM
(SEE TABLE 3)

UG MAP SYMBOL

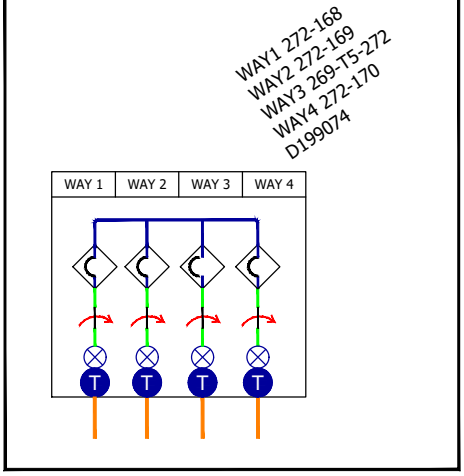

© 1998 - 2021 San Diego Gas & Electric Company. All rights reserved. Removal of this copyright notice without permission is not permitted under law.

REV	CHANGE	DR	BY	DSN	APV	DATE	REV	CHANGE	DR	BY	DSN	APV	DATE
E	TABLE UPDATE	-	JBH	TR	MDJ	08/05/2016	H	REFERENCE UPDATE	EDM	JIK	JES	CZH	07/28/2021
D	REVISION	-	-	-	RR/DW	06/25/2014	G	EDITORIAL CHANGES	EDM	EJA	GLW	CZH	05/16/2021
C	REVISION	-	-	-	RR/DW	02/07/2014	F	EDITORIAL CHANGES	-	DG	JS	MDJ	04/01/2018

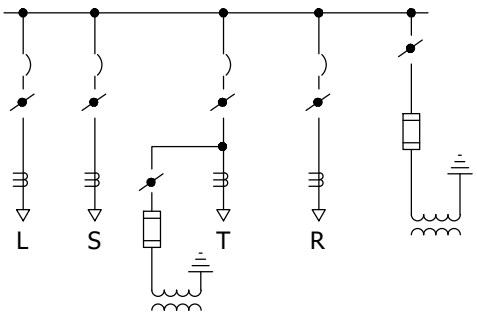

FIGURE 2
4-WAY SCADA CONNECTION DIAGRAM

UG MAP SYMBOL

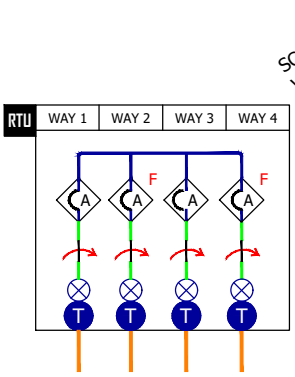

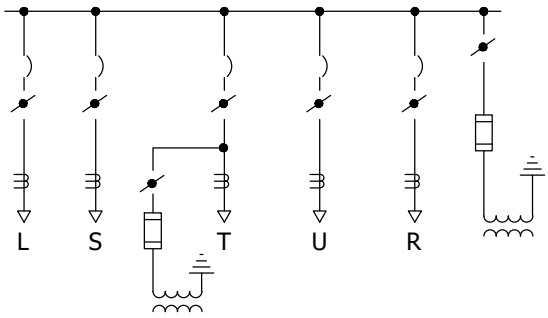

FIGURE 3
5-WAY SCADA CONNECTION DIAGRAM

UG MAP SYMBOL

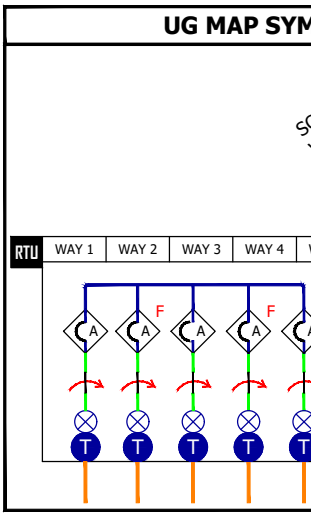

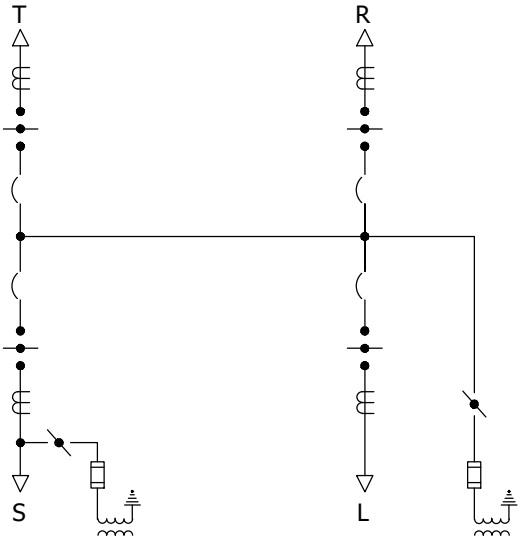

FIGURE 4
4-WAY 2 SIDED SCADA CONNECTION DIAGRAM

UG MAP SYMBOL

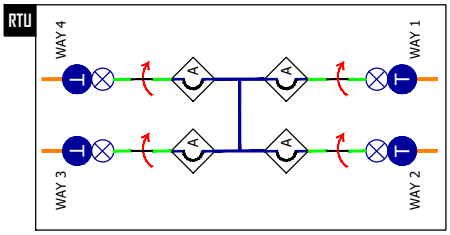

TABLE OF CONTENTS

© 1998 - 2021 San Diego Gas & Electric Company. All rights reserved. Removal of this copyright notice without permission is not permitted under law.

REV	CHANGE	DR	BY	DSN	APV	DATE	REV	CHANGE	DR	BY	DSN	APV	DATE
E	TABLE UPDATE	-	JBH	TR	MDJ	08/05/2016	H	REFERENCE UPDATE	EDM	JIK	JES	CZH	07/28/2021
D	REVISION	-	-	-	RR/DW	06/25/2014	G	EDITORIAL CHANGES	EDM	EJA	GLW	CZH	05/16/2021
C	REVISION	-	-	-	RR/DW	02/07/2014	F	EDITORIAL CHANGES	-	DG	JS	MDJ	04/01/2018

TABLE OF CONTENTS

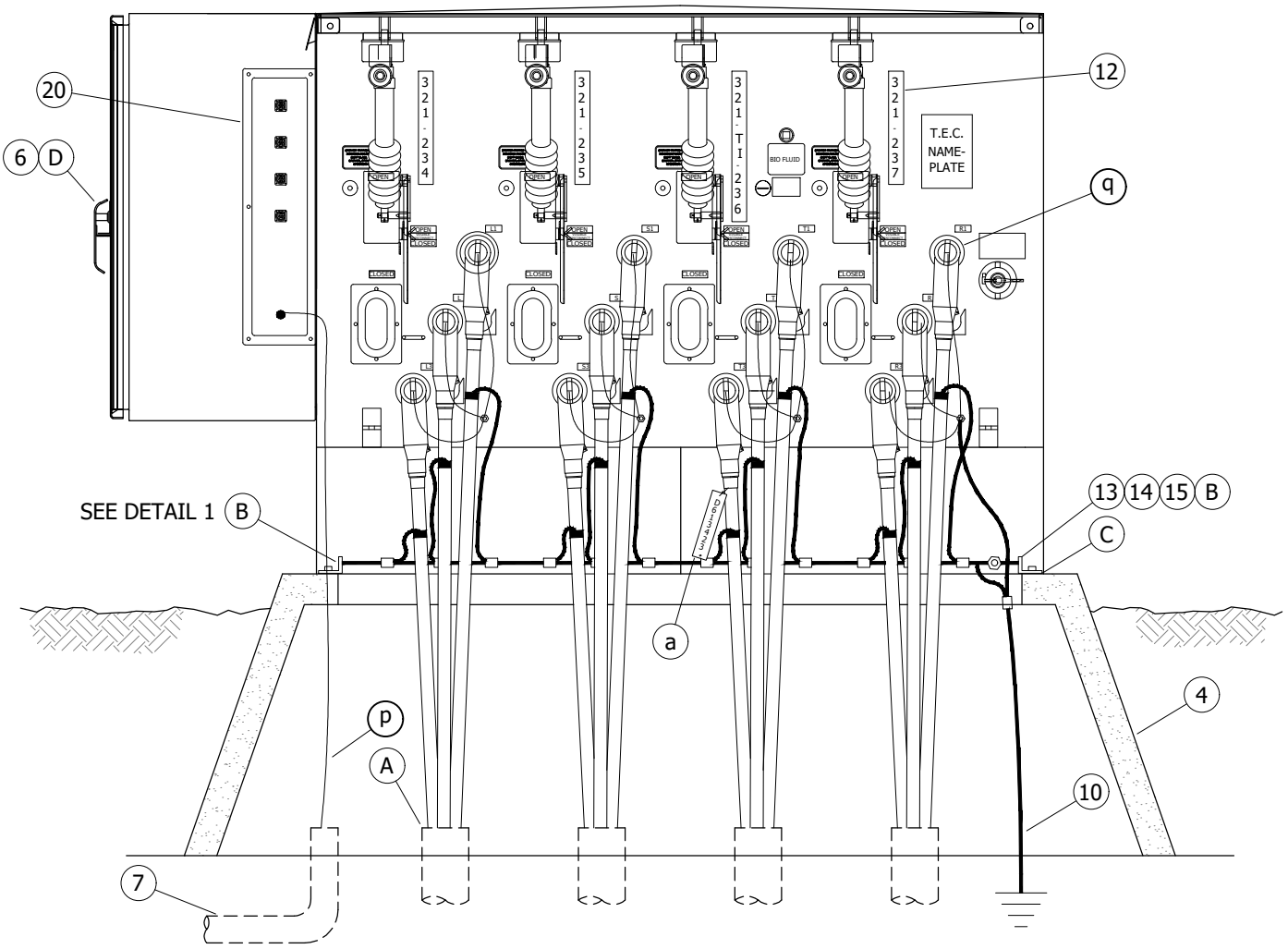

FIGURE 5

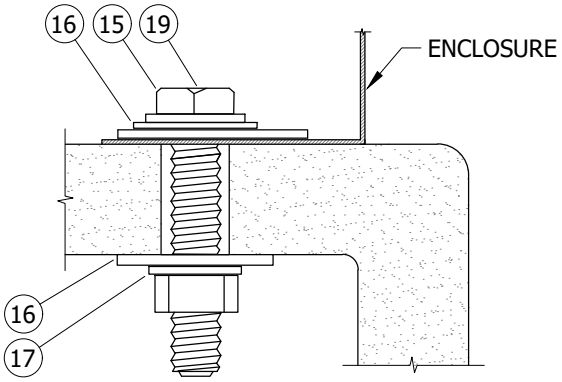

DETAIL 1
HOLD DOWN
(USE STAINLESS STEEL TIE DOWNS PROVIDED)

© 1998 - 2021 San Diego Gas & Electric Company. All rights reserved. Removal of this copyright notice without permission is not permitted under law.

REV	CHANGE	DR	BY	DSN	APV	DATE	REV	CHANGE	DR	BY	DSN	APV	DATE
E	TABLE UPDATE	-	JBH	TR	MDJ	08/05/2016	H	REFERENCE UPDATE	EDM	JIK	JES	CZH	07/28/2021
D	REVISION	-	-	-	RR/DW	06/25/2014	G	EDITORIAL CHANGES	EDM	EJA	GLW	CZH	05/16/2021
C	REVISION	-	-	-	RR/DW	02/07/2014	F	EDITORIAL CHANGES	-	DG	JS	MDJ	04/01/2018

INSTALLATION:

(A) SEAL ALL CONDUITS WITH SEALING COMPOUND.

(B) SET THE SWITCH ON THE BOX PAD. USING A 1/2 INCH DRILL BIT, DRILL THROUGH THE EXISTING HOLES IN THE SILL FLANGE AND THROUGH THE BOX PAD. BOLT DOWN AS SHOWN IN DETAIL 1.

(C) BASE OF CABINET SHALL BE CAULKED ONLY TO PREVENT POSSIBLE WIRE ENTRY.

(D) SECURE THE SWITCH DOORS AND THE SWITCH OPERATING HANDLE COVERS WITH LEVEL 3 LOCKS.

BILL OF MATERIALS:

ITEM	DESCRIPTION	QUANTITY	STANDARD PAGE	STOCK NUMBER	DESIGN UNITS
1	4-WAY MANUAL (IX)	1	--	--	--
	4-WAY SCADA (IX)	1	--	--	--
2	5-WAY SCADA (IX)	1	--	--	--
3	4-WAY SCADA, 2 SIDED (SEE 3423 BOX PAD) (IX)	1	--	--	--
4	BOX PAD	1	3428/3429/3423	AS REQ'D	AS REQ'D
5	CONNECTORS, 12KV 600/200A (IX)	AS REQ'D	4186	--	--
6	PADLOCK	2	--	S514848	4WTFTS
7	SCADA ANTENNA INSTALLATION	--	4640	--	--
8	CONNECTOR POST, 1/0 (IX)	5	--	S262560	SPCONN
9	WIRE, COPPER, 4/0 (IX)	AS REQ'D	4520.8, .9	S812764	4/0-SD
10	WIRE, BARE COPPER, #2 7 STR. SOFT-DRAWN	1	4510	S812818 (X)	TG-E-W
11	SEALING COMPOUND (IX)	AS REQ'D	3948.1	S442976	SEAL-6
12	SWITCH POSITION TAGGING	--	3212.2	--	--
13	EYE BOLT, STAINLESS STEEL, 6" X 1/2"	1	--	S150582	--
14	BRACKET, ANGLE, STAINLESS STEEL, 2" X 3"	2	--	S166072	--
15	BOLT, TIE DOWN, STAINLESS STEEL, 3 1/2" X 1/2" (B)	4	--	S148804	--
16	WASHER, STANDARD FLAT BRONZE, 1/2"	8	--	S799488	--
17	WASHER, LOCK SPRING	4	--	S796416	--
18	CABLE IDENTIFICATION TAGS (IX)	AS REQ'D	3202.3	--	--
19	ANCHOR, CONCRETE, STAINLESS STEEL, 1/2" X 3 3/4" (VIII)	4	--	S107654	CNCANC
20	INTEGRATED REMOTE TERMINAL (SCADA ONLY)	1	--	--	--

NOTES:

APPLICATION:

I. THE FOOTPRINT OF THE SWITCH AND UP FRONT WORK SPACE WILL ALLOW IT TO BE INSTALLED ON THE W SERIES SWITCH FACILITIES INCLUDING 3440, 3441 PADS ON HAND HOLES AND THE TROUGH STYLE SWITCH PADS. IT MAY BE USED WHEN LIMITED RIGHT-OF-WAY ISSUES EXIST FOR CONVERSIONS AND WHERE THERE IS LIMITED SPACE FOR NEW CONSTRUCTION.

II. FOR NEW CONSTRUCTION, THE WAY POSITION MARKED T (THIRD POSITION FROM THE LEFT) SHALL BE USED AS THE OPEN TIE FOR ALL SWITCHES. WHEN REPLACING EXISTING SWITCHES, THE TIE POSITIONS ARE ESTABLISHED AND CONNECTED AS DESIGNED TO AVOID MAJOR RE-CABLING. CONNECT AS BUILT.

III. THE USE OF FUSED ELBOWS WILL BE LIMITED TO ONE FUSED ELBOW ONLY ON THE RIGHT OR LEFT SIDE SWITCH WAY POSITION. NO DEVIATION WILL BE GRANTED FOR MORE THAN ONE FUSED ELBOW IN SWITCH CABINET.

IV. TAPPING THE BACK OF 600A TEES FOR 200A DISTRIBUTION WILL BE LIMITED TO SWITCH CHANGE OUTS WITH EXISTING 200A TAPS.

© 1998 - 2021 San Diego Gas & Electric Company. All rights reserved. Removal of this copyright notice without permission is not permitted under law.

REV	CHANGE	DR	BY	DSN	APV	DATE	REV	CHANGE	DR	BY	DSN	APV	DATE
E	TABLE UPDATE	-	JBH	TR	MDJ	08/05/2016	H	REFERENCE UPDATE	EDM	JIK	JES	CZH	07/28/2021
D	REVISION	-	-	-	RR/DW	06/25/2014	G	EDITORIAL CHANGES	EDM	EJA	GLW	CZH	05/16/2021
C	REVISION	-	-	-	RR/DW	02/07/2014	F	EDITORIAL CHANGES	-	DG	JS	MDJ	04/01/2018

TABLE OF CONTENTS

NOTES (CONT'D):

V. ROUTINE REPLACEMENT OF EXISTING 4-WAY PADMOUNT SWITCHES IS LIMITED TO THE 'W' TYPE CONFIGURATIONS ABOVE 3315 & 3316 HH'S AND THE 'D' TYPE CONFIGURATIONS ABOVE 3311 HH'S.

VI. ANOTHER 'D' CONFIGURATION CONSISTS OF SUBSURFACE SWITCHES MOUNTED ABOVE 3315 HH'S. THESE DO NOT LEND THEMSELVES TO SIMPLE REPLACEMENT OF THE SWITCH. THESE INSTALLATIONS ARE COMMONLY CALLED 'I-BEAM' OR 'RAIL' SWITCHES. A DEVIATION REQUEST IS REQUIRED WHEN ATTEMPTING TO REPLACE THESE WITH A PADMOUNT STYLE SWITCH.

VII. FOR NEW CONSTRUCTION AND CONVERSIONS THIS SWITCH SHOULD NOT BE USED TO TAP FEEDER CABLES. TAPS ON THE BACK OF 600A TEES IMPEDE GROUNDING AND LIMIT USE OF SWITCH POSITIONS DURING ROUTINE SWITCHING PROCEDURES AND OUTAGE SITUATIONS. TAP FEEDER SEGMENTS BETWEEN SWITCH POSITIONS USING 600A TERMINATORS OR TAP THE SWITCH POSITION WITH DISTRIBUTION CABLE ONLY.

(VIII) USE WHEN MOUNTING ON CONCRETE PAD.

(IX) NOT SHOWN ON FIGURES.

(X) THIS ITEM IS EXEMPT.

REFERENCE:

(a) SEE UG3202 FOR CABLE IDENTIFICATION.

b. SEE UG3211 FOR ATTACHING STRUCTURE/EQUIPMENT IDENTIFICATION TAG.

c. SEE UG3221 FOR HIGH VOLTAGE DECAL.

d. SEE UG3408 FOR WIRE ENTRY PREVENTION.

e. SEE UG3428 & UG3429 FOR BOX PAD AND CONDUIT PLACEMENT.

f. SEE UG3479 FOR BARRIERS IF THE SWITCH IS SUBJECT TO VEHICULAR TRAFFIC.

g. SEE UG3480, UG3481, UG3482 & UG3483 FOR MINIMUM OPERATING CLEARANCE REQUIREMENTS.

h. SEE UG3486 & UG3487 FOR RETAINING WALL REQUIREMENTS AND CLEARANCES FROM REVERSE SUBGRADE RETAINING WALLS.

i. SEE UG3489 FOR RETAINING WALLS.

j. SEE UG3212.3 & 4 FOR PAD MOUNTED SWITCH IDENTIFICATION.

k. SEE UG4355 FOR FAULT INDICATOR INSTALLATION.

l. SEE UG4510 FOR (PREFERRED I) AND (ALTERNATE TRENCH GROUND WIRE).

m. SEE UG4520 FOR EQUIPMENT GROUNDING.

n. SEE UG4525 FOR GROUNDING PREMOLDED CONNECTORS.

o. SEE UG4521 (PREVIOUS # UG4520.8-.9) FOR NEUTRAL AND GROUND WIRE SCHEMATIC DIAGRAM.

(p) SEE UG4642 FOR SCADA INSTALLATION.

(q) SEE UG4181 FOR 600A/200A CONNECTIONS.

TABLE OF CONTENTS

© 1998 - 2021 San Diego Gas & Electric Company. All rights reserved. Removal of this copyright notice without permission is not permitted under law.

REV	CHANGE	DR	BY	DSN	APV	DATE	REV	CHANGE	DR	BY	DSN	APV	DATE
E	TABLE UPDATE	-	JBH	TR	MDJ	08/05/2016	H	REFERENCE UPDATE	EDM	JIK	JES	CZH	07/28/2021
D	REVISION	-	-	-	RR/DW	06/25/2014	G	EDITORIAL CHANGES	EDM	EJA	GLW	CZH	05/16/2021
C	REVISION	-	-	-	RR/DW	02/07/2014	F	EDITORIAL CHANGES	-	DG	JS	MDJ	04/01/2018

SCOPE: THIS STANDARD ILLUSTRATES A 4-WAY MANUAL SWITCH.

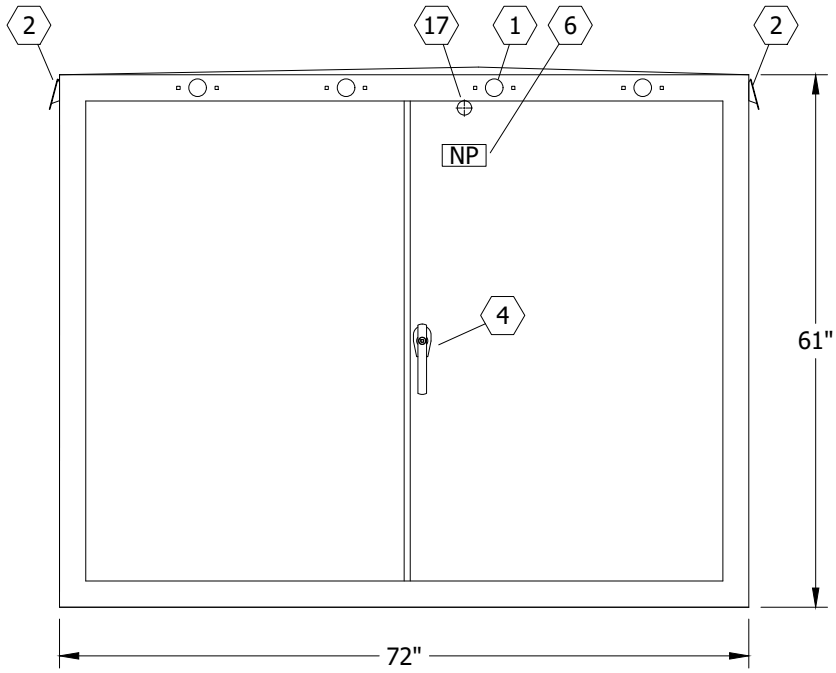

FIGURE 1
FRONT VIEW
SEE TABLE 1

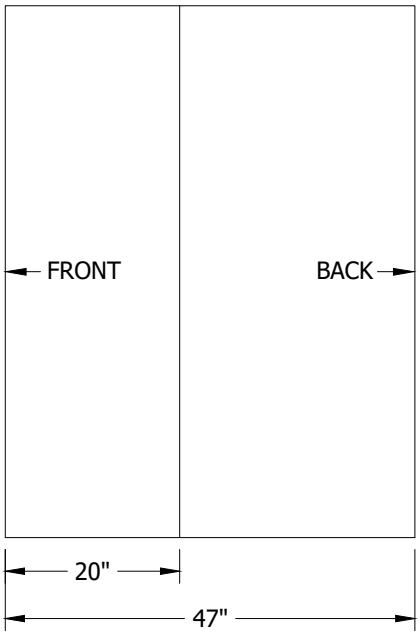

FIGURE 1
SIDE VIEW
SEE TABLE 1

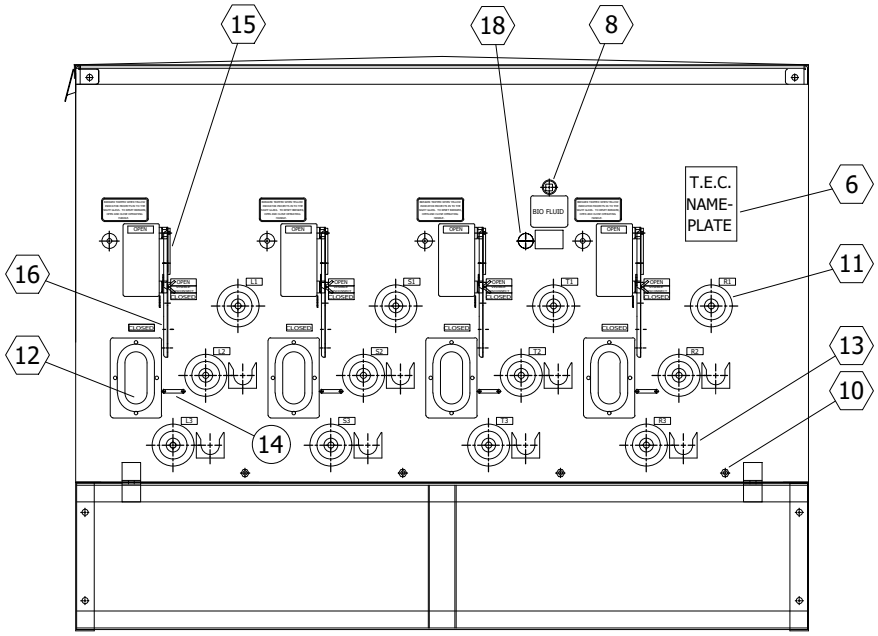

FIGURE 2
FRONT VIEW
CABINET REMOVED
SEE TABLE 1

© 1998 - 2022 San Diego Gas & Electric Company. All rights reserved. Removal of this copyright notice without permission is not permitted under law.

REV	CHANGE	DR	BY	DSN	APV	DATE	REV	CHANGE	DR	BY	DSN	APV	DATE
E	TABLE UPDATE	-	JBH	TR	MDJ	08/05/2016	H	TABLE UPDATE	EDM	ADW	GLW	KRG	06/29/2022
D	REVISION	-	-	-	RR/DW	06/25/2014	G	MOVED FROM UG3550	EDM	JIK	JES	CZH	05/16/2021
C	REVISION	-	-	-	RR/DW	02/07/2014	F	EDITORIAL CHANGES	-	DG	JS	MDJ	04/01/2018

X Indicates Latest Revision | Completely Revised | New Page | Information Removed

SDG&E ELECTRIC UNDERGROUND CONSTRUCTION STANDARDS

SHEET 1 OF 2

4-WAY MANUAL

UG3551.1

TABLE OF CONTENTS

TABLE 1

PARTS LIST	
ITEM	**DESCRIPTION**
1	WINDOW, FAULT INDICATOR
2	EYE, LIFTING
3	CABINET, SCADA
4	HANDLE, CABINET, PAD LOCKABLE
5	FUSE, POWER TRANSFORMER DRY WELL, 8.3KV, 3A CL
6	NAMEPLATE
7	ACTUATOR, DC LINEAR, 24V
8	PLUG, OIL FILL
9	INDICATOR, FAULT TRIP
10	NUTS, EQUIPMENT GROUND, 1/2"
11	BUSHING/CONNECTOR, 600A
12	DISCONNECT, VISIBLE, WINDOW VIEW TRI-PHASE
13	PARKING STAND
14	PROVISION FOR ROPE OPERATION
15	HANDLE, TRI-PHASE VISIBLE DISCONNECT OPERATOR
16	HANDLE, VACUUM SWITCH OPERATING
17	BOLT, PENTA, PAD LOCKABLE
18	LIQUID LEVEL GAUGE, 901A
19	ANTENNA CONNECTION, SCADA
20	DECAL: "PULL TO CLOSE MANUALLY"
21	HANDLE, HIGH SPEED TRIP CLOSE MANUAL

INSTALLATION: NONE

BILL OF MATERIALS: NONE

NOTES:

I. WEIGHT: 4,350 LBS.

REFERENCE:

a. FOR ADDITIONAL INFORMATION, SEE UG3550.

© 1998 - 2022 San Diego Gas & Electric Company. All rights reserved. Removal of this copyright notice without permission is not permitted under law.

REV	CHANGE	DR	BY	DSN	APV	DATE	REV	CHANGE	DR	BY	DSN	APV	DATE
E	TABLE UPDATE	-	JBH	TR	MDJ	08/05/2016	H	TABLE UPDATE	EDM	ADW	GLW	KRG	06/29/2022
D	REVISION	-	-	-	RR/DW	06/25/2014	G	MOVED FROM UG3550	EDM	JIK	JES	CZH	05/16/2021
C	REVISION	-	-	-	RR/DW	02/07/2014	F	EDITORIAL CHANGES	-	DG	JS	MDJ	04/01/2018

SCOPE: THIS STANDARD ILLUSTRATES A 4-WAY SCADA SWITCH.

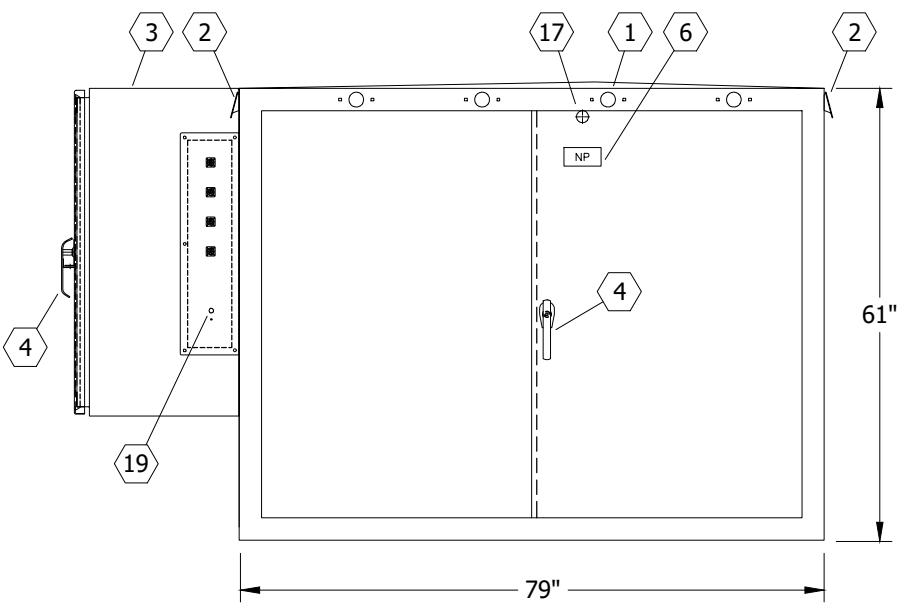

FIGURE 1
FRONT VIEW
SEE TABLE 1

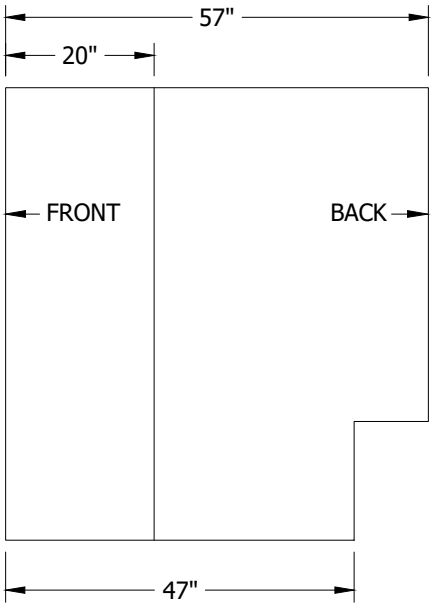

FIGURE 1
SIDE VIEW
SEE TABLE 1

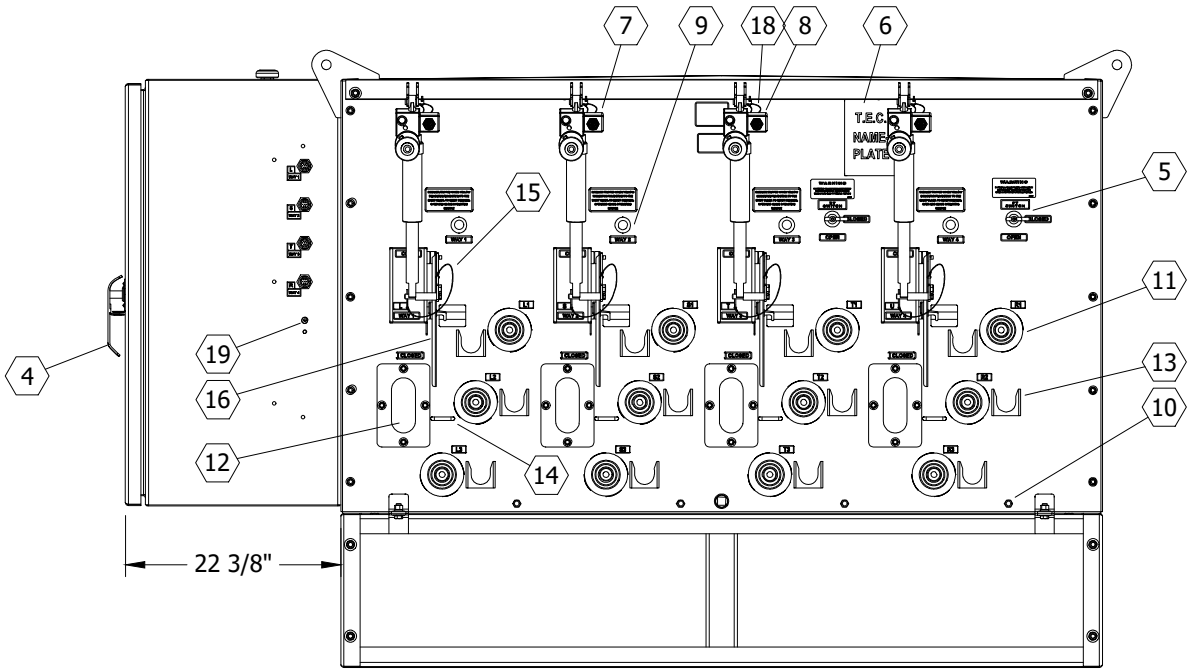

FIGURE 1
FRONT VIEW
CABINET REMOVED
SEE TABLE 1

© 1998 - 2022 San Diego Gas & Electric Company. All rights reserved. Removal of this copyright notice without permission is not permitted under law.

REV	CHANGE	DR	BY	DSN	APV	DATE	REV	CHANGE	DR	BY	DSN	APV	DATE
E	TABLE UPDATE	-	JBH	TR	MDJ	08/05/2016	H	TABLE UPDATE	EDM	ADW	GLW	KRG	06/29/2022
D	REVISION	-	-	-	RR/DW	06/25/2014	G	MOVED FROM UG3550	EDM	JIK	JES	CZH	05/16/2021
C	REVISION	-	-	-	RR/DW	02/07/2014	F	EDITORIAL CHANGES	-	DG	JS	MDJ	04/01/2018

Indicates Latest Revision | Completely Revised | New Page X | Information Removed

SHEET 1 OF 2

SDG&E ELECTRIC UNDERGROUND CONSTRUCTION STANDARDS

4-WAY SCADA

UG3552.1

TABLE OF CONTENTS

TABLE OF CONTENTS

TABLE 1

PARTS LIST	
ITEM	**DESCRIPTION**
1	WINDOW, FAULT INDICATOR
2	EYE, LIFTING
3	CABINET, SCADA
4	HANDLE, CABINET, PAD LOCKABLE
5	FUSE, POWER TRANSFORMER DRY WELL, 8.3KV, 3A CL
6	NAMEPLATE
7	ACTUATOR, DC LINEAR, 24V
8	PLUG, OIL FILL
9	INDICATOR, FAULT TRIP
10	NUTS, EQUIPMENT GROUND, 1/2"
11	BUSHING/CONNECTOR, 600A
12	DISCONNECT, VISIBLE, WINDOW VIEW TRI-PHASE
13	PARKING STAND
14	PROVISION FOR ROPE OPERATION
15	HANDLE, TRI-PHASE VISIBLE DISCONNECT OPERATOR
16	HANDLE, VACUUM SWITCH OPERATING
17	BOLT, PENTA, PAD LOCKABLE
18	LIQUID LEVEL GAUGE, 901A
19	ANTENNA CONNECTION, SCADA
20	DECAL: "PULL TO CLOSE MANUALLY"
21	HANDLE, HIGH SPEED TRIP CLOSE MANUAL

INSTALLATION: NONE

BILL OF MATERIALS: NONE

NOTES:

I. WEIGHT: 5,535 LBS.

REFERENCE:

a. FOR ADDITIONAL INFORMATION, SEE UG3550.

© 1998 - 2022 San Diego Gas & Electric Company. All rights reserved. Removal of this copyright notice without permission is not permitted under law.

REV	CHANGE	DR	BY	DSN	APV	DATE	REV	CHANGE	DR	BY	DSN	APV	DATE
E	TABLE UPDATE	-	JBH	TR	MDJ	08/05/2016	H	TABLE UPDATE	EDM	ADW	GLW	KRG	06/29/2022
D	REVISION	-	-	-	RR/DW	06/25/2014	G	MOVED FROM UG3550	EDM	JIK	JES	CZH	05/16/2021
C	REVISION	-	-	-	RR/DW	02/07/2014	F	EDITORIAL CHANGES	-	DG	JS	MDJ	04/01/2018

SCOPE: THIS STANDARD ILLUSTRATES A 4-WAY SCADA HIGH SPEED TRIP COIL SWITCH.

CAUTION:

* THE 4-WAY SCADA HIGH SPEED TRIP COIL SWITCH IS ONLY TO BE USED FOR RENEWABLE ENERGY/ALTERNATIVE RESOURCES SUCH AS BATTERY STORAGE FACILITIES.

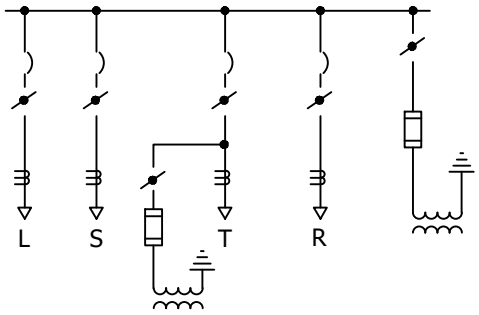

FIGURE 1
4-WAY SCADA HIGH SPEED TRIP COIL
CONNECTION DIAGRAM

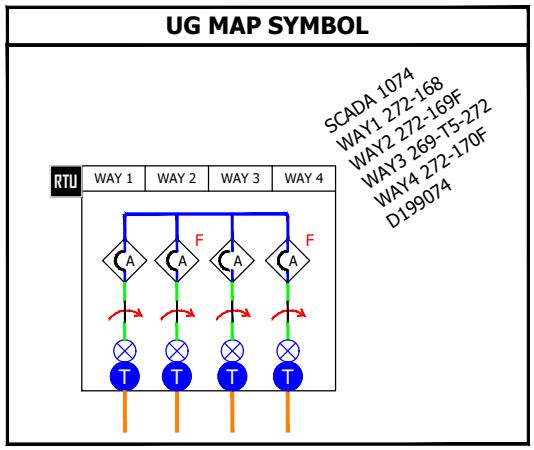

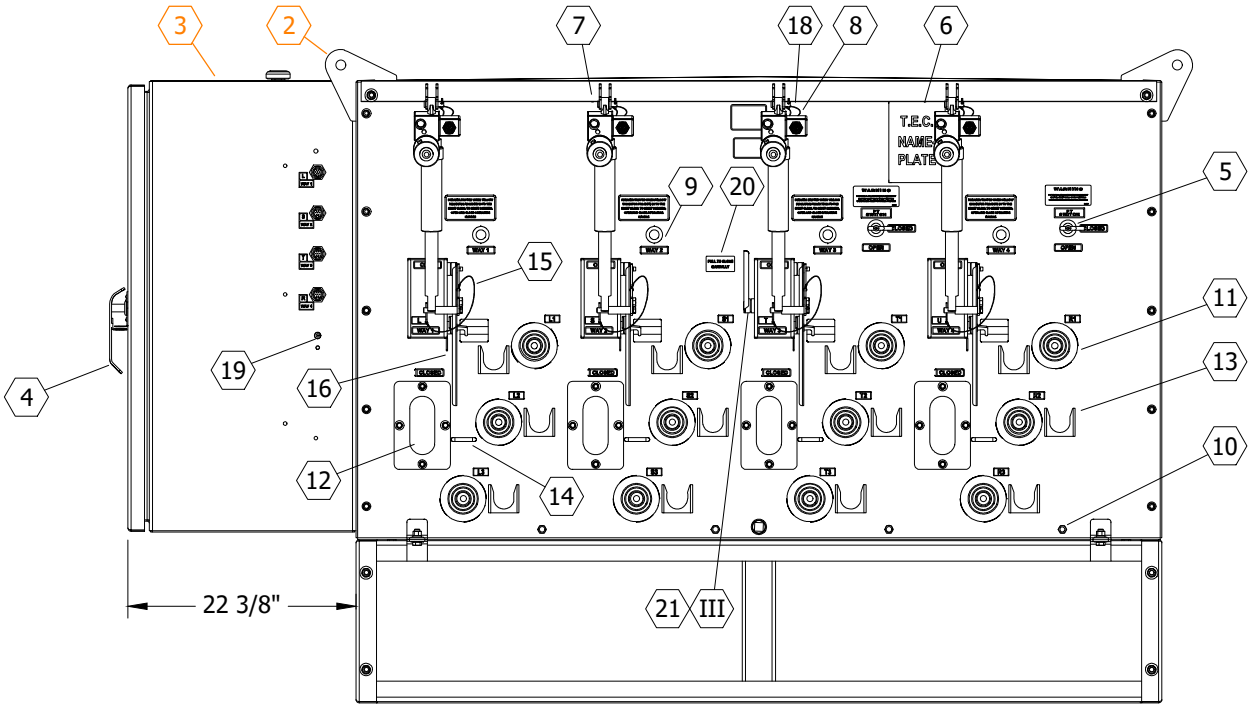

FIGURE 2
FRONT VIEW
CABINET REMOVED
SEE TABLE 1

© 1998 - 2022 San Diego Gas & Electric Company. All rights reserved. Removal of this copyright notice without permission is not permitted under law.

REV	CHANGE	DR	BY	DSN	APV	DATE	REV	CHANGE	DR	BY	DSN	APV	DATE
E	TABLE UPDATE	-	JBH	TR	MDJ	08/05/2016	H	TABLE UPDATE	EDM	ADW	GLW	KRG	06/29/2022
D	REVISION	-	-	-	RR/DW	06/25/2014	G	MOVED FROM UG3550	EDM	JIK	JES	CZH	05/16/2021
C	REVISION	-	-	-	RR/DW	02/07/2014	F	EDITORIAL CHANGES	-	DG	JS	MDJ	04/01/2018

X Indicates Latest Revision | Completely Revised | New Page | Information Removed

SDG&E ELECTRIC UNDERGROUND CONSTRUCTION STANDARDS

4-WAY SCADA
HIGH SPEED TRIP COIL

UG3553.1

TABLE OF CONTENTS

TABLE OF CONTENTS

TABLE 1

PARTS LIST	
ITEM	**DESCRIPTION**
1	WINDOW, FAULT INDICATOR
2	EYE, LIFTING
3	CABINET, SCADA
4	HANDLE, CABINET, PAD LOCKABLE
5	FUSE, POWER TRANSFORMER DRY WELL, 8.3KV, 3A CL
6	NAMEPLATE
7	ACTUATOR, DC LINEAR, 24V
8	PLUG, OIL FILL
9	INDICATOR, FAULT TRIP
10	NUTS, EQUIPMENT GROUND, 1/2"
11	BUSHING/CONNECTOR, 600A
12	DISCONNECT, VISIBLE, WINDOW VIEW TRI-PHASE
13	PARKING STAND
14	PROVISION FOR ROPE OPERATION
15	HANDLE, TRI-PHASE VISIBLE DISCONNECT OPERATOR
16	HANDLE, VACUUM SWITCH OPERATING
17	BOLT, PENTA, PAD LOCKABLE
18	LIQUID LEVEL GAUGE, 901A
19	ANTENNA CONNECTION, SCADA
20	DECAL: "PULL TO CLOSE MANUALLY"
21	HANDLE, HIGH SPEED TRIP CLOSE MANUAL

INSTALLATION: NONE

BILL OF MATERIALS: NONE

NOTES:

I. WEIGHT: 5,535 LBS.

II. ENCLOSURE DIMENSIONS ARE THE SAME AS THE 4-WAY SCADA SWITCH. (a)

(III) WAY THREE CONTAINS A HIGH SPEED CLOSE COIL THAT CAN BE OPERATED VIA THE 487E RELAY OR THE MANUAL CLOSE HANDLE.

REFERENCE:

(a) SEE UG3552.

b. FOR ADDITIONAL INFORMATION, SEE UG3550.

© 1998 - 2022 San Diego Gas & Electric Company. All rights reserved. Removal of this copyright notice without permission is not permitted under law.

REV	CHANGE	DR	BY	DSN	APV	DATE	REV	CHANGE	DR	BY	DSN	APV	DATE
E	TABLE UPDATE	-	JBH	TR	MDJ	08/05/2016	H	TABLE UPDATE	EDM	ADW	GLW	KRG	06/29/2022
D	REVISION	-	-	-	RR/DW	06/25/2014	G	MOVED FROM UG3550	EDM	JIK	JES	CZH	05/16/2021
C	REVISION	-	-	-	RR/DW	02/07/2014	F	EDITORIAL CHANGES	-	DG	JS	MDJ	04/01/2018

SCOPE: THIS STANDARD ILLUSTRATES A 2-SIDED 4-WAY SCADA SWITCH.

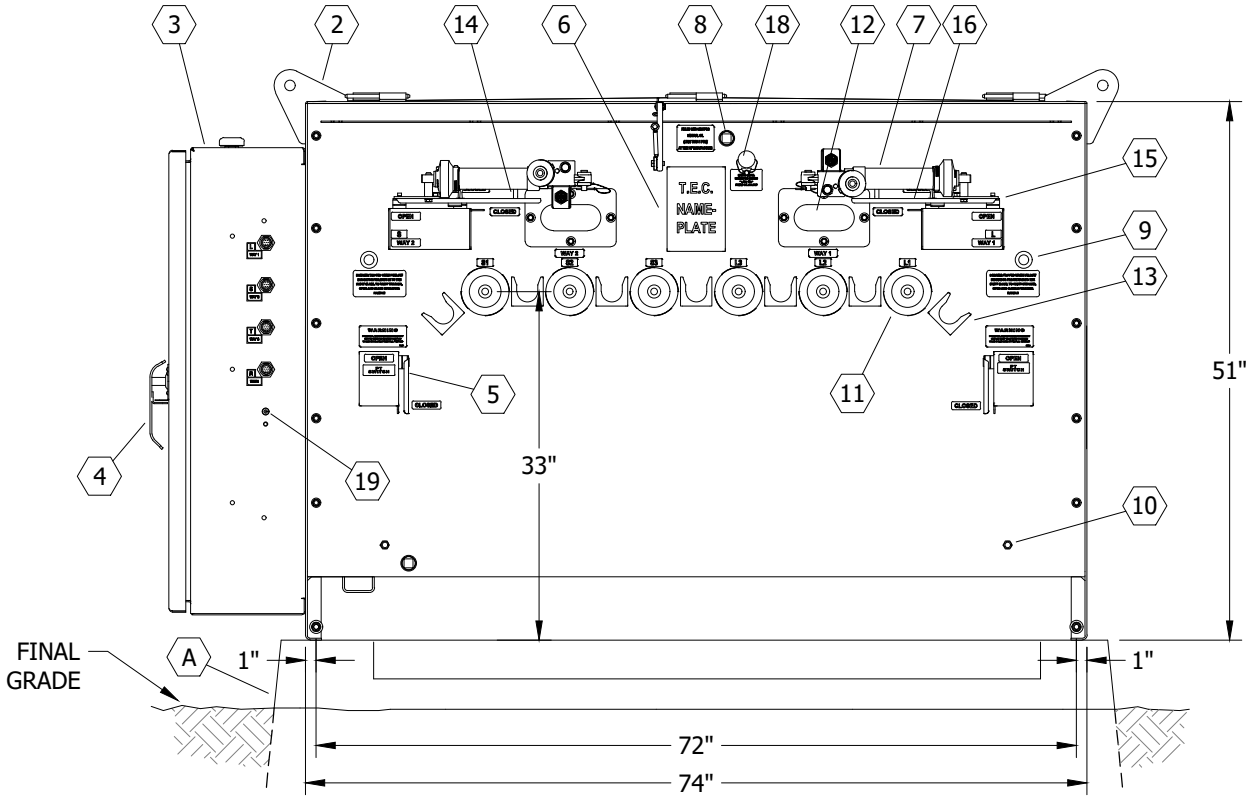

FIGURE 1
FRONT VIEW
CABINET REMOVED
SEE TABLE 1

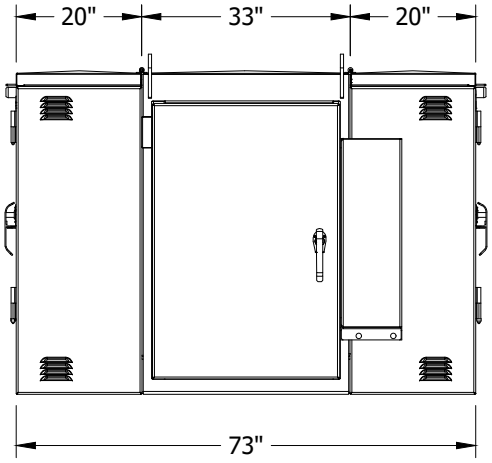

FIGURE 1
SIDE VIEW
SEE TABLE 1

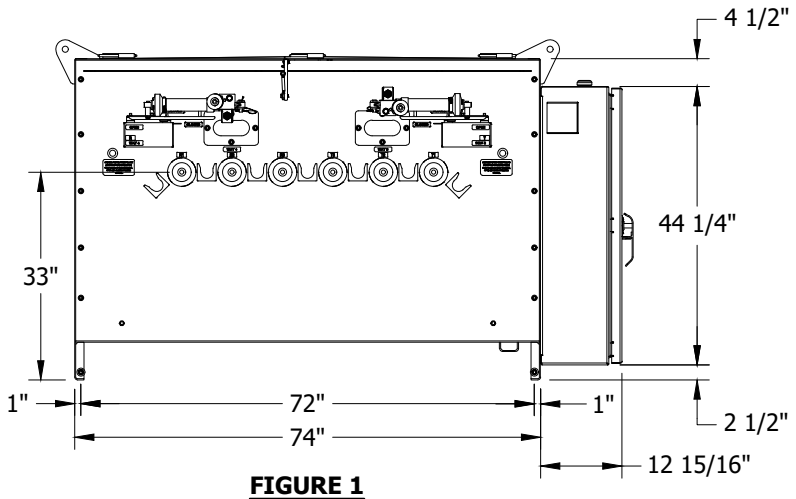

FIGURE 1
REAR VIEW
CABINET REMOVED
SEE TABLE 1

TABLE OF CONTENTS

© 1998 - 2022 San Diego Gas & Electric Company. All rights reserved. Removal of this copyright notice without permission is not permitted under law.

REV	CHANGE	DR	BY	DSN	APV	DATE	REV	CHANGE	DR	BY	DSN	APV	DATE
E	TABLE UPDATE	-	JBH	TR	MDJ	08/05/2016	H	TABLE UPDATE	EDM	ADW	GLW	KRG	06/29/2022
D	REVISION	-	-	-	RR/DW	06/25/2014	G	MOVED FROM UG3550	EDM	EJA	GLW	CZH	05/16/2021
C	REVISION	-	-	-	RR/DW	02/07/2014	F	EDITORIAL CHANGES	-	DG	JS	MDJ	04/01/2018

Indicates Latest Revision | Completely Revised | New Page X | Information Removed

SDG&E ELECTRIC UNDERGROUND CONSTRUCTION STANDARDS

2 SIDED 4-WAY SCADA

UG3554.1

TABLE OF CONTENTS

TABLE 1

PARTS LIST	
ITEM	**DESCRIPTION**
1	WINDOW, FAULT INDICATOR
2	EYE, LIFTING
3	CABINET, SCADA
4	HANDLE, CABINET, PAD LOCKABLE
5	FUSE, POWER TRANSFORMER DRY WELL, 8.3KV, 3A CL
6	NAMEPLATE
7	ACTUATOR, DC LINEAR, 24V
8	PLUG, OIL FILL
9	INDICATOR, FAULT TRIP
10	NUTS, EQUIPMENT GROUND, 1/2"
11	BUSHING/CONNECTOR, 600A
12	DISCONNECT, VISIBLE, WINDOW VIEW TRI-PHASE
13	PARKING STAND
14	PROVISION FOR ROPE OPERATION
15	HANDLE, TRI-PHASE VISIBLE DISCONNECT OPERATOR
16	HANDLE, VACUUM SWITCH OPERATING
17	BOLT, PENTA, PAD LOCKABLE
18	LIQUID LEVEL GAUGE, 901A
19	ANTENNA CONNECTION, SCADA
20	DECAL: "PULL TO CLOSE MANUALLY"
21	HANDLE, HIGH SPEED TRIP CLOSE MANUAL

INSTALLATION: NONE

BILL OF MATERIALS: NONE

NOTES:

I. WEIGHT: 5,545 LBS.

REFERENCE:

a. FOR ADDITIONAL INFORMATION, SEE UG3550.

© 1998 - 2022 San Diego Gas & Electric Company. All rights reserved. Removal of this copyright notice without permission is not permitted under law.

REV	CHANGE	DR	BY	DSN	APV	DATE	REV	CHANGE	DR	BY	DSN	APV	DATE
E	TABLE UPDATE	-	JBH	TR	MDJ	08/05/2016	H	TABLE UPDATE	EDM	ADW	GLW	KRG	06/29/2022
D	REVISION	-	-	-	RR/DW	06/25/2014	G	MOVED FROM UG3550	EDM	EJA	GLW	CZH	05/16/2021
C	REVISION	-	-	-	RR/DW	02/07/2014	F	EDITORIAL CHANGES	-	DG	JS	MDJ	04/01/2018

SCOPE: THIS STANDARD ILLUSTRATES A 5-WAY SCADA SWITCH.

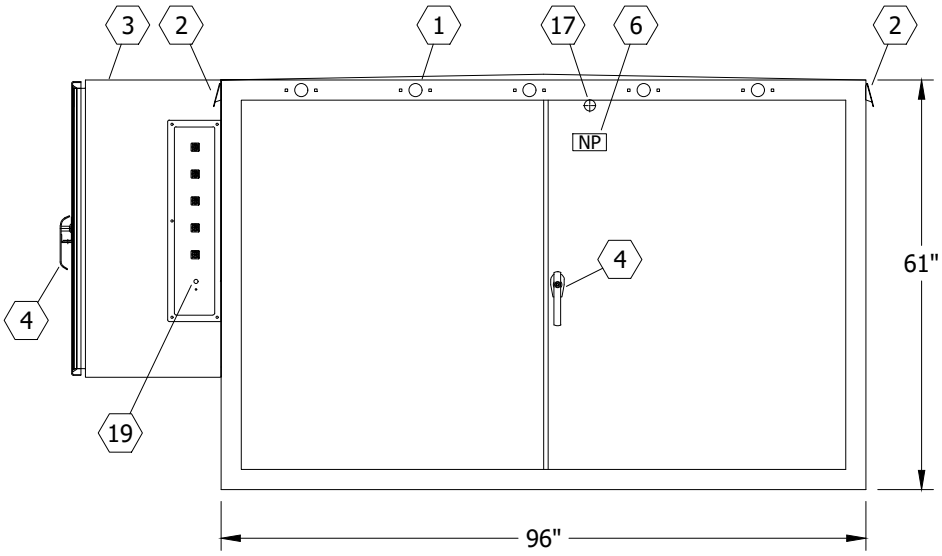

FIGURE 1
FRONT VIEW
SEE TABLE 1

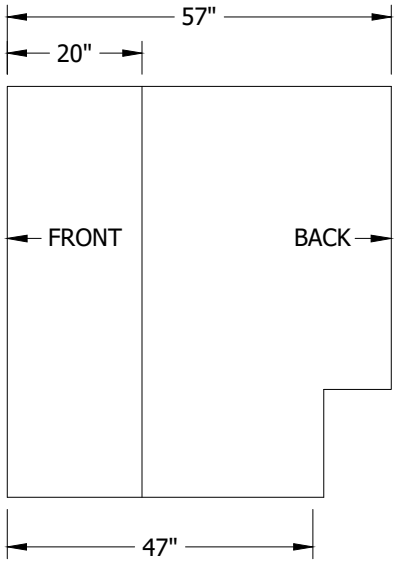

FIGURE 1
SIDE VIEW
SEE TABLE 1

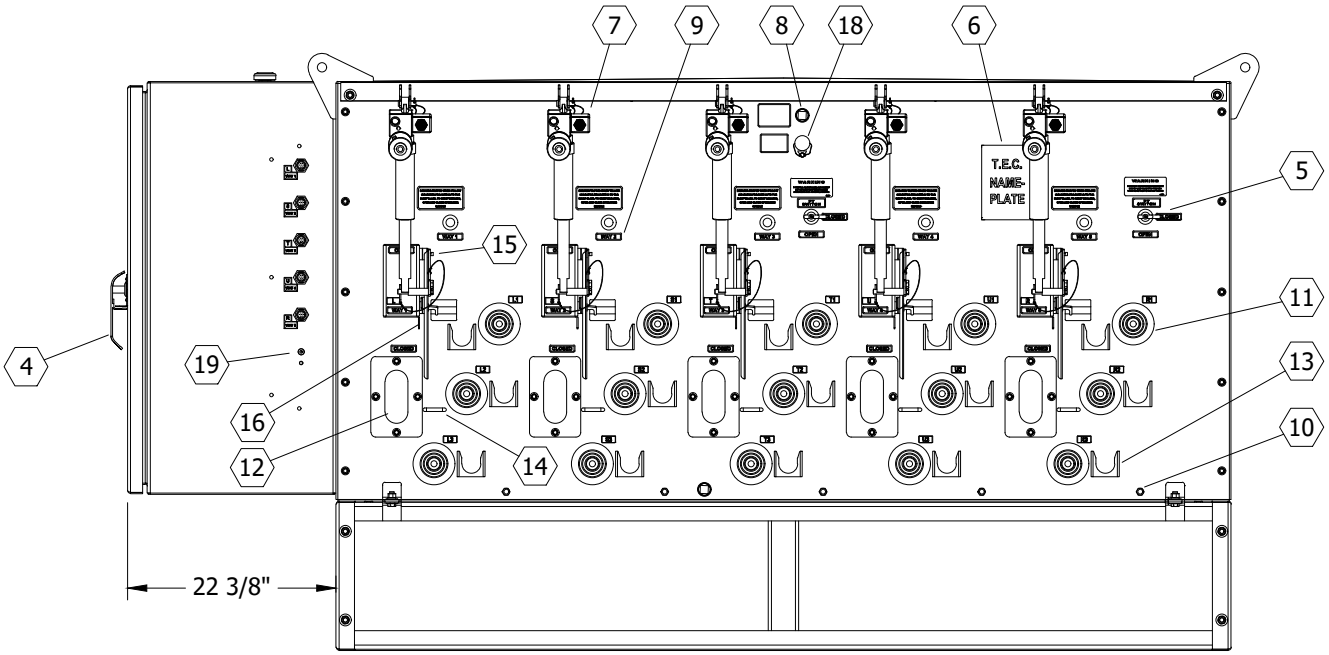

FIGURE 1
FRONT VIEW
CABINET REMOVED
SEE TABLE 1

TABLE OF CONTENTS

© 1998 - 2022 San Diego Gas & Electric Company. All rights reserved. Removal of this copyright notice without permission is not permitted under law.

REV	CHANGE	DR	BY	DSN	APV	DATE	REV	CHANGE	DR	BY	DSN	APV	DATE
E	TABLE UPDATE	-	JBH	TR	MDJ	08/05/2016	H	SCOPE UPDATE	EDM	ADW	GLW	KRG	06/29/2022
D	REVISION	-	-	-	RR/DW	06/25/2014	G	MOVED FROM UG3550	EDM	JIK	JES	CZH	05/16/2021
C	REVISION	-	-	-	RR/DW	02/07/2014	F	EDITORIAL CHANGES	-	DG	JS	MDJ	04/01/2018

X Indicates Latest Revision | Completely Revised | New Page | Information Removed

SDG&E ELECTRIC UNDERGROUND CONSTRUCTION STANDARDS

5-WAY SCADA

UG3555.1

TABLE 1

PARTS LIST	
ITEM	**DESCRIPTION**
1	WINDOW, FAULT INDICATOR
2	EYE, LIFTING
3	CABINET, SCADA
4	HANDLE, CABINET, PAD LOCKABLE
5	FUSE, POWER TRANSFORMER DRY WELL, 8.3KV, 3A CL
6	NAMEPLATE
7	ACTUATOR, DC LINEAR, 24V
8	PLUG, OIL FILL
9	INDICATOR, FAULT TRIP
10	NUTS, EQUIPMENT GROUND, 1/2"
11	BUSHING/CONNECTOR, 600A
12	DISCONNECT, VISIBLE, WINDOW VIEW TRI-PHASE
13	PARKING STAND
14	PROVISION FOR ROPE OPERATION
15	HANDLE, TRI-PHASE VISIBLE DISCONNECT OPERATOR
16	HANDLE, VACUUM SWITCH OPERATING
17	BOLT, PENTA, PAD LOCKABLE
18	LIQUID LEVEL GAUGE, 901A
19	ANTENNA CONNECTION, SCADA
20	DECAL: "PULL TO CLOSE MANUALLY"
21	HANDLE, HIGH SPEED TRIP CLOSE MANUAL

TABLE OF CONTENTS

INSTALLATION: NONE

BILL OF MATERIALS: NONE

NOTES:

I. WEIGHT: 6,450 LBS.

REFERENCE:

a. FOR ADDITIONAL INFORMATION, SEE UG3550.

© 1998 - 2022 San Diego Gas & Electric Company. All rights reserved. Removal of this copyright notice without permission is not permitted under law.

REV	CHANGE	DR	BY	DSN	APV	DATE	REV	CHANGE	DR	BY	DSN	APV	DATE
E	TABLE UPDATE	-	JBH	TR	MDJ	08/05/2016	H	SCOPE UPDATE	EDM	ADW	GLW	KRG	06/29/2022
D	REVISION	-	-	-	RR/DW	06/25/2014	G	MOVED FROM UG3550	EDM	JIK	JES	CZH	05/16/2021
C	REVISION	-	-	-	RR/DW	02/07/2014	F	EDITORIAL CHANGES	-	DG	JS	MDJ	04/01/2018

SCOPE: THIS STANDARD COVERS PAD & WALL MOUNTED (200 & 600 AMP) INNOVATIVE SWITCH GEARS, 15KV THREE PHASE SOLID-DIELECTRIC-IN-AIR, AND COMES AS A VACUUM LOAD-BREAK SWITCH, AS WELL AS A VACUUM FAULT INTERRUPTER WITH VISIBLE DISCONNECTS. DUE TO DIVERSE ENVIRONMENTAL CONDITIONS THE SWITCH GEAR IS CONSTRUCTED OF STAINLESS STEEL AND POWDER COATED.

ATTENTION:

* SINGLE SIDED SWITCHES, NEVER LIFT THE PALLET BY THE PADMOUNT ENCLOSURE. THE BOLTS HOLDING THE ENCLOSURE TO THE PALLET WILL NOT SUPPORT THE WEIGHT OF THE SWITCH TANK AND STAND INSIDE.

** THIS WARNING DOES NOT APPLY TO THE FOUR WAY, TWO SIDED SWITCH AS THE TANK AND CABINET ARE ASSEMBLED TOGETHER BY THE MANUFACTURER.

*** ISG SWITCHES ARE RATED FOR 12KV USAGE. FOR A 4KV RATED SWITCH REMOVE THE 12KV PT AND INSTALL A 4KV PT. CONTACT KEARNY SCADA CREW FOR JOINT MEET TO COMPLETE.

TABLE 1

INNOVATIVE SWITCH GEAR ELECTRICAL RATINGS		
	SCADA	MANUAL
VOLTAGE	15.5KV/4KV	25KV
CURRENT, CONTINUOUS	600 AMP/200 AMP	
B.I.L.	95KV	
MAXIMUM INTERRUPTING CURRENT VACCUM FAULT INTERRUPTER	12.5KA (SYMMETRICAL) 20KA (ASYMMETRICAL) AT 32.5 KA PEAK CURRENT	
MOMENTARY MAKE AND LATCH	12.5KA (SYMMETRICAL) 20KA (ASYMMETRICAL) AT 32.5 KA PEAK CURRENT	
B.I.L. ACROSS OPEN VACUUM FAULT INTERRUPTER	125KV	

INSTALLATION:

SEE SHEET 3560.40

IF VIEWING AS AN ELECTRONIC PDF CLICK HERE TO JUMP TO "INSTALLATIONS".

NOTES:

SEE SHEET 3560.49

IF VIEWING AS AN ELECTRONIC PDF CLICK HERE TO JUMP TO "NOTES".

REFERENCE:

SEE SHEET 3560.50

IF VIEWING AS AN ELECTRONIC PDF CLICK HERE TO JUMP TO "REFERENCES".

TABLE OF CONTENTS

© 1998 - 2021 San Diego Gas & Electric Company. All rights reserved. Removal of this copyright notice without permission is not permitted under law.

REV	CHANGE	DR	BY	DSN	APV	DATE	REV	CHANGE	DR	BY	DSN	APV	DATE
C							F						
B	EDITORIAL CHANGES	PEI	NTB	FRC	CZH	11/23/2020	E						
A	ORIGINAL ISSUE	-	NB	JS	CZH	11/01/2020	D						

X Indicates Latest Revision | Completely Revised | New Page | Information Removed

SDG&E ELECTRIC UNDERGROUND CONSTRUCTION STANDARDS

INNOVATIVE SWTICHGEAR PAD AND WALL-MOUNT

UG3560.1

TABLE OF CONTENTS

PAGE	SUBJECT
3560.3	IN/OUT WALL MOUNT MANUAL 200AMP
3560.6	IN/OUT WALL MOUNT MANUAL 600AMP
3560.9	IN/OUT SINGLE SIDED MANUAL 200AMP
3560.12	IN/OUT SINGLE SIDED SCADA 200AMP
3560.15	IN/OUT SINGLE SIDED MANUAL 600AMP
3560.18	IN/OUT SINGLE SIDED SCADA 600AMP
3560.21	4-WAY SINGLE SIDED MANUAL 600AMP
3560.24	4-WAY SINGLE SIDED SCADA 600AMP
3560.27	5-WAY SINGLE SIDED SCADA 600AMP
3560.30	6-WAY SINGLE SIDED SCADA 600AMP
3560.33	PAD, BOX (USED WITH 6-WAY SINGLE SIDED)
3560.34	4-WAY DOUBLE SIDED MANUAL 600AMP
3560.37	4-WAY DOUBLE SIDED SCADA 600AMP
3560.40	INSTALLATION
3560.49	NOTES
3560.50	REFERENCE

© 1998 - 2021 San Diego Gas & Electric Company. All rights reserved. Removal of this copyright notice without permission is not permitted under law.

REV	CHANGE	DR	BY	DSN	APV	DATE	REV	CHANGE	DR	BY	DSN	APV	DATE
C							F						
B	EDITORIAL CHANGES	PEI	NTB	FRC	CZH	11/23/2020	E						
A	ORIGINAL ISSUE	-	NB	JS	CZH	11/01/2020	D						

Indicates Latest Revision X Completely Revised | New Page | Information Removed

SDG&E ELECTRIC UNDERGROUND CONSTRUCTION STANDARDS

INNOVATIVE SWTICHGEAR PAD AND WALL-MOUNT
TABLE OF CONTENTS

IN/OUT WALL MOUNT 200A MANUAL/ NON-SCADA

ATTENTION:

CURRENTLY ALLOWED TO BE INSTALLED IN MANHOLES AND VAULTS

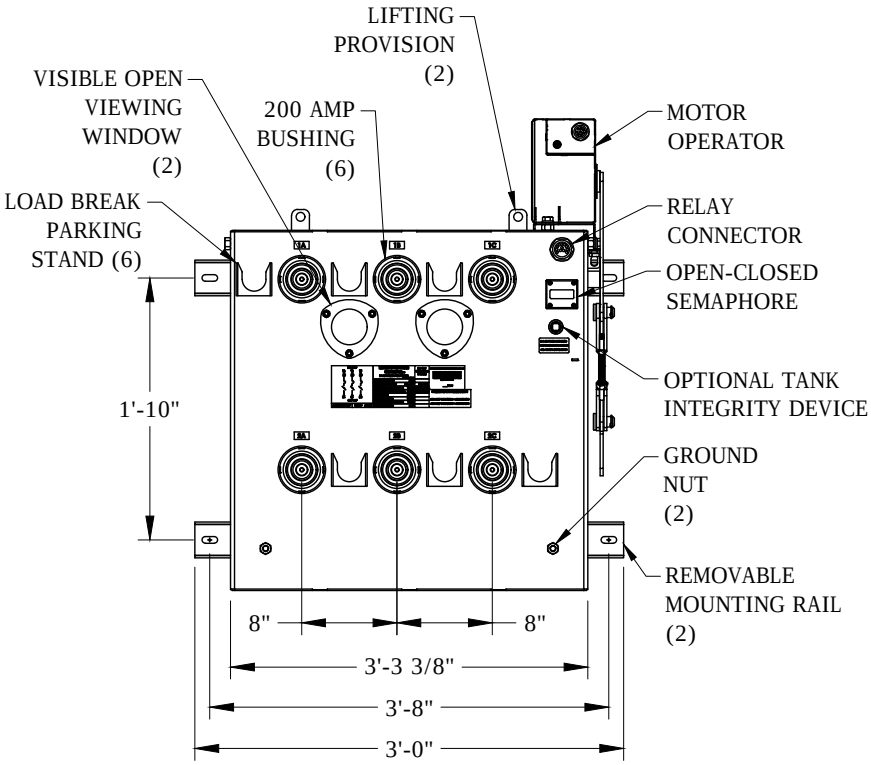

FIGURE 1
FRONT VIEW

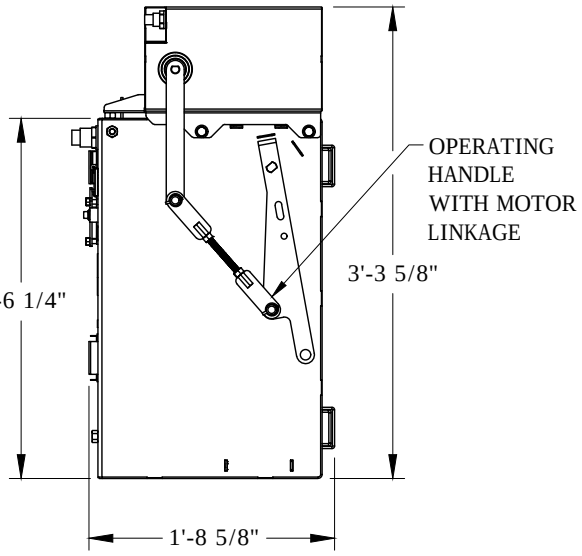

FIGURE 2
SIDE VIEW

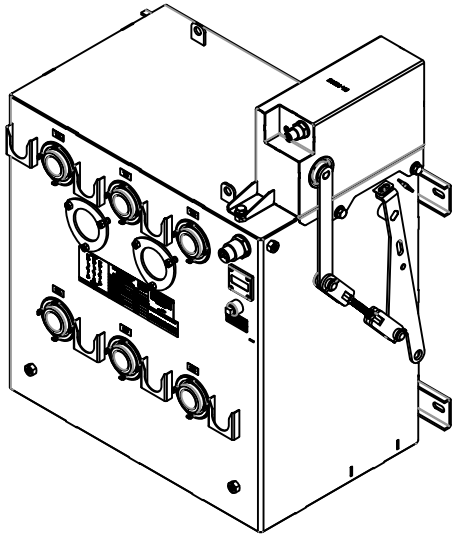

FIGURE 3
ISOMETRIC VIEW

©1998 - 2021 San Diego Gas & Electric Company. All rights reserved. Removal of this copyright notice without permission is not permitted under law.

REV	CHANGE	DR	BY	DSN	APV	DATE	REV	CHANGE	DR	BY	DSN	APV	DATE
C							F						
B	EDITORIAL CHANGES	PEI	NTB	FRC	CZH	11/23/2020	E						
A	ORIGINAL ISSUE	-	NB	JS	CZH	11/01/2020	D						

Indicates Latest Revision X Completely Revised | New Page | Information Removed

TABLE OF CONTENTS

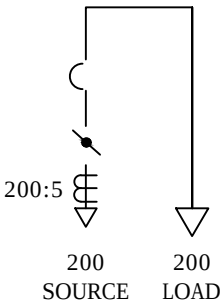

FIGURE 1
IN/OUT WALL MOUNT 200A MANUAL
CONNECTION DIAGRAM

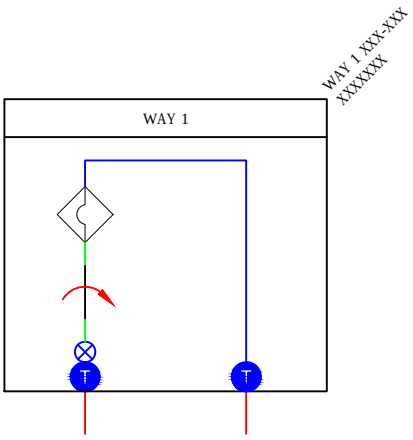

FIGURE 2
MAP SYMBOL

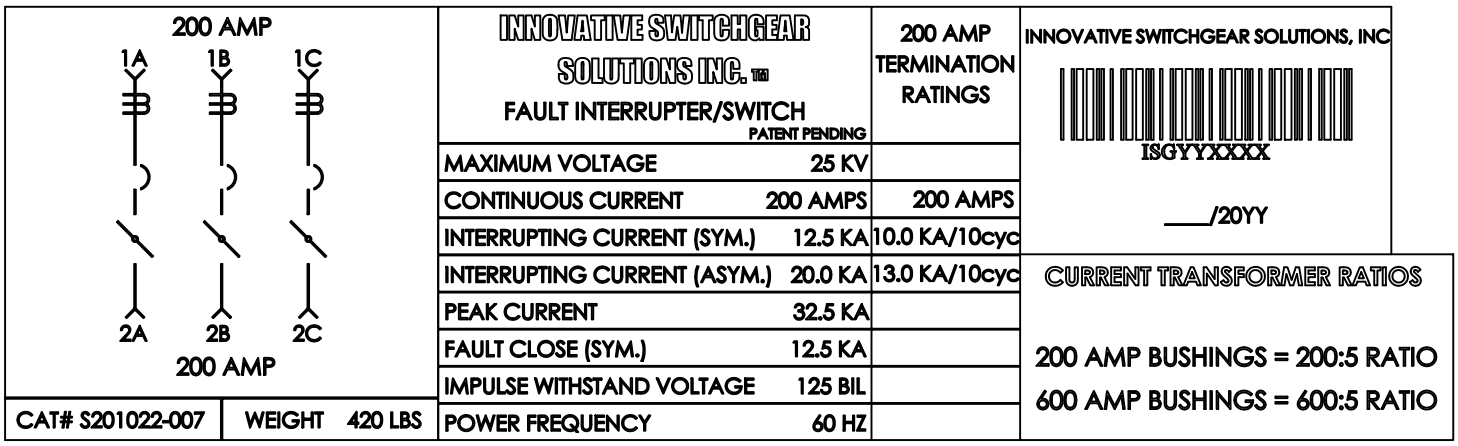

FIGURE 3
MANUFACTURER LABEL

TABLE 1

APPROXIMATE SYSTEM WEIGHTS	
DESCRIPTION	WEIGHT
S201022-007 SWITCH TANK	420 LBS
MOTOR OPERATOR	35 LBS
PENDANT	20 LBS
RELAY	30 LBS

© 1998 - 2021 San Diego Gas & Electric Company. All rights reserved. Removal of this copyright notice without permission is not permitted under law.

REV	CHANGE	DR	BY	DSN	APV	DATE	REV	CHANGE	DR	BY	DSN	APV	DATE
C							F						
B	EDITORIAL CHANGES	PEI	NTB	FRC	CZH	11/23/2020	E						
A	ORIGINAL ISSUE	-	NB	JS	CZH	11/01/2020	D						

Indicates Latest Revision X | Completely Revised | New Page | Information Removed

TABLE OF CONTENTS

IN/OUT WALL MOUNT 200A MANUAL/ NON-SCADA

BILL OF MATERIALS:

ITEM	DESCRIPTION	QUANTITY	STANDARD PAGE	STOCK NUMBER	DESIGN UNITS
1	IN/OUT WALL MOUNT 200A MANUAL (ISG)	1	-	S190460	IS2WFM
2	12KV, 600/200 AMP CONNECTIONS	AS REQ.	4181.19	-	-
3	ELBOW, FUSED, 2 SOLID, 30 AMP (FUSE INCLUDED)	AS REQ.	4191	S321680	CFE2SL
4	1/0 CONNECTOR POST	5	-	S262560	-
5	WIRE, #2 COPPER GROUND TRENCH	1	4510	S812816	TG-E-W
6	BOLT, EYE, STAINLESS STEEL	AS REQ.	-	S150528	-
7	CONNECTOR, SERVICE POST	4	3711.3	S262560	SPCONN
8	NUT, CLAMPING CHANNEL	AS REQ.		S503520	-
9	SCREW, HEX HEAD CAP, BRONZE, 1/2" X 1-1/2"	AS REQ.		S616192	-
10	WASHER, STANDARD FLAT ROUND, BRONZE, 1/2"	AS REQ.		S799488	-
11	WASHER, SPRING, LOCK	AS REQ.		S796416	-
12	BOLT, 3-1/2" X 1/2" STAINLESS STEEL, TIE DOWN	4	-	S148804	-
13	BRACKET, ANGLE, STAINLESS STEEL 2" X 3"	AS REQ.	4520.8	S166072	-
14	ANCHOR, 1/2" X 3-3/4" MOUNTING ON CONCRETE PAD	AS REQ.	-	S107654	-
15	PADLOCK	AS REQ.	-	S514848	-
16	CABLE, #2 AWG, SOLID 1/C	AS REQ.	4003.1	S197600	-
17	5/8" X 14" MACHINE BOLT	AS REQ.	392.1	S154880	-
18	HEADER BOARDS (INCLUDES TIME TO I & R)	AS REQ.	-	-	H-BRDS

TABLE OF CONTENTS

© 1998 - 2021 San Diego Gas & Electric Company. All rights reserved. Removal of this copyright notice without permission is not permitted under law.

REV	CHANGE	DR	BY	DSN	APV	DATE	REV	CHANGE	DR	BY	DSN	APV	DATE
C							F						
B	EDITORIAL CHANGES	PEI	NTB	FRC	CZH	11/23/2020	E						
A	ORIGINAL ISSUE	-	NB	JS	CZH	11/01/2020	D						

Indicates Latest Revision X Completely Revised | New Page | Information Removed

SDG&E ELECTRIC UNDERGROUND CONSTRUCTION STANDARDS

INNOVATIVE SWTICHGEAR PAD AND WALL-MOUNT

UG3560.5

IN/OUT WALL MOUNT 600A MANUAL/ NON-SCADA

ATTENTION:

CURRENTLY ALLOWED TO BE INSTALLED IN MANHOLES AND VAULTS

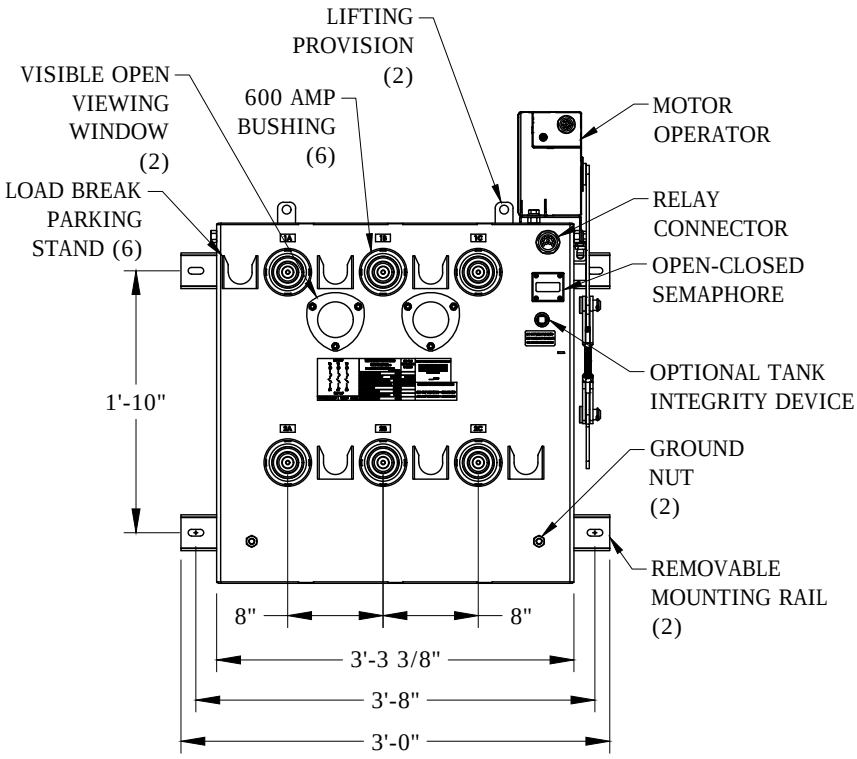

FIGURE 1
FRONT VIEW

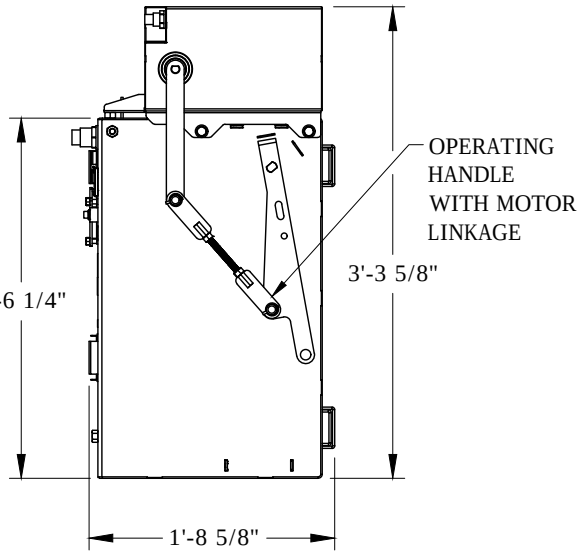

FIGURE 2
SIDE VIEW

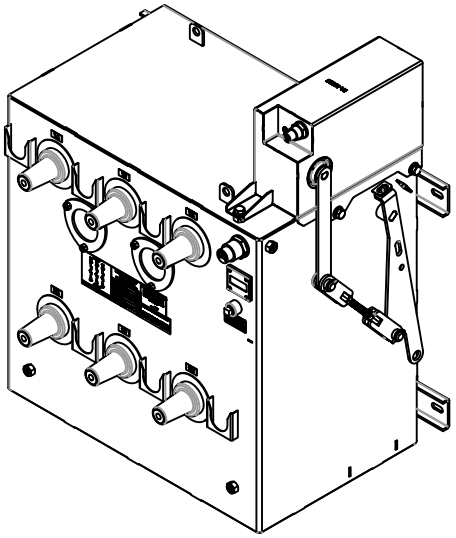

FIGURE 3
ISOMETRIC VIEW

© 1998 - 2021 San Diego Gas & Electric Company. All rights reserved. Removal of this copyright notice without permission is not permitted under law.

REV	CHANGE	DR	BY	DSN	APV	DATE	REV	CHANGE	DR	BY	DSN	APV	DATE
C							F						
B	EDITORIAL CHANGES	PEI	NTB	FRC	CZH	11/23/2020	E						
A	ORIGINAL ISSUE	-	NB	JS	CZH	11/01/2020	D						

Indicates Latest Revision X Completely Revised | New Page | Information Removed

TABLE OF CONTENTS

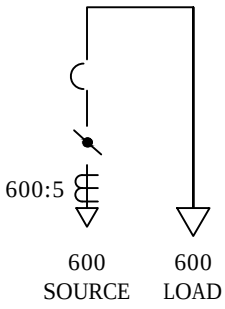

FIGURE 1
IN/OUT WALL MOUNT 600A MANUAL
CONNECTION DIAGRAM

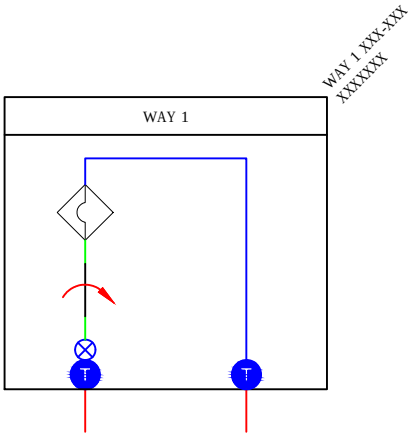

FIGURE 2
MAP SYMBOL

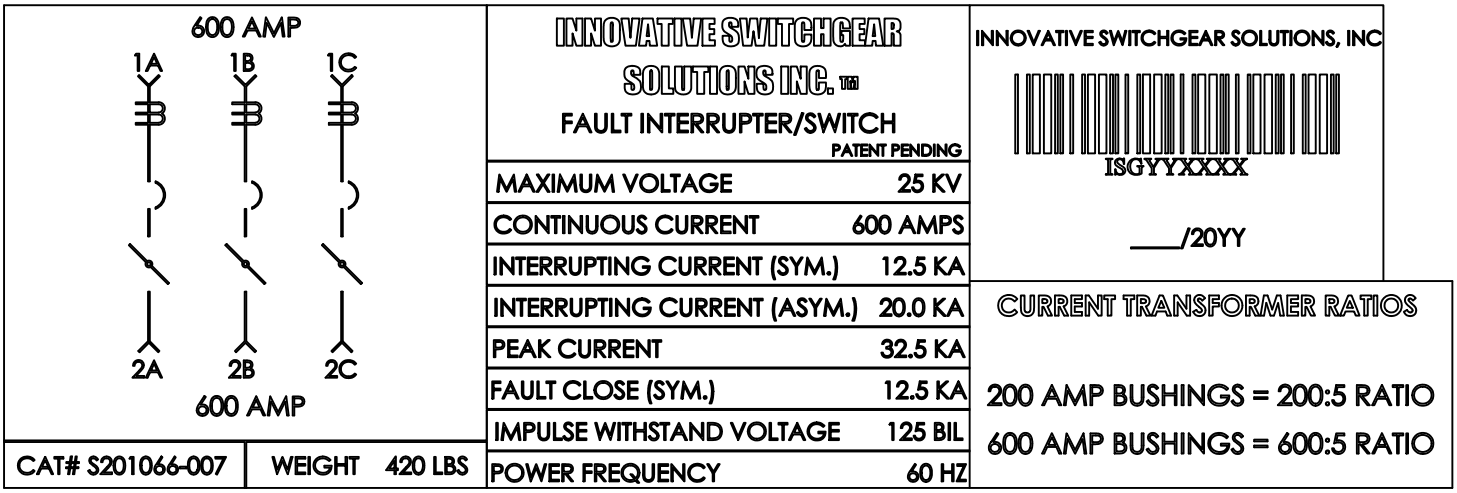

FIGURE 3
MANUFACTURER LABEL

TABLE 1

APPROXIMATE SYSTEM WEIGHTS	
DESCRIPTION	WEIGHT
S201066-007 SWITCH TANK	420 LBS
MOTOR OPERATOR	35 LBS
PENDANT	20 LBS
RELAY	20 LBS

© 1998 - 2021 San Diego Gas & Electric Company. All rights reserved. Removal of this copyright notice without permission is not permitted under law.

REV	CHANGE	DR	BY	DSN	APV	DATE	REV	CHANGE	DR	BY	DSN	APV	DATE
C							F						
B	EDITORIAL CHANGES	PEI	NTB	FRC	CZH	11/23/2020	E						
A	ORIGINAL ISSUE	-	NB	JS	CZH	11/01/2020	D						

Indicates Latest Revision X | Completely Revised | New Page | Information Removed

TABLE OF CONTENTS

IN/OUT WALL MOUNT 600A MANUAL/ NON-SCADA

BILL OF MATERIALS:

ITEM	DESCRIPTION	QUANTITY	STANDARD PAGE	STOCK NUMBER	DESIGN UNITS
1	IN/OUT WALL MOUNT 600A MANUAL (ISG)	1	-	S704750	1S2W6M
2	12KV, 600/200 AMP CONNECTIONS	AS REQ.	4181.19	-	-
3	ELBOW, FUSED, 2 SOLID, 30 AMP (FUSE INCLUDED)	AS REQ.	4191	S321680	CFE2SL
4	1/0 CONNECTOR POST	5	-	S262560	-
5	WIRE, 4/0 COPPER	AS REQ.	4520.8	S812764	4/0-SD
6	WIRE, #2 COPPER GROUND TRENCH	1	4510	S812816	TG-E-W
7	BOLT, EYE, STAINLESS STEEL	AS REQ.	-	S150528	-
8	CONNECTOR, SERVICE POST	4		S262560	SPCONN
9	NUT, CLAMPING CHANNEL	AS REQ.		S503520	-
10	SCREW, HEX HEAD CAP, BRONZE, 1/2" X 1-1/2"	AS REQ.	3711.3	S616192	-
11	WASHER, STANDARD FLAT ROUND, BRONZE, 1/2"	AS REQ.		S799488	-
12	WASHER, SPRING, LOCK	AS REQ.		S796416	-
13	BOLT, 3-1/2" X 1/2" STAINLESS STEEL, TIE DOWN	4	-	S148804	-
14	BRACKET, ANGLE, STAINLESS STEEL 2" X 3"	AS REQ.	4520.8	S166072	-
15	ANCHOR, 1/2" X 3-3/4" MOUNTING ON CONCRETE PAD	AS REQ.	-	S107654	-
16	PADLOCK	AS REQ.	-	S514848	-
17	CABLE, #2 AWG, SOLID 1/C	AS REQ.	4003.1	S197600	-
18	5/8" X 14" MACHINE BOLT	AS REQ.	392.1	S154880	-
19	HEADER BOARDS (INCLUDES TIME TO I & R)	AS REQ.	-	-	H-BRDS

TABLE OF CONTENTS

© 1998 - 2021 San Diego Gas & Electric Company. All rights reserved. Removal of this copyright notice without permission is not permitted under law.

REV	CHANGE	DR	BY	DSN	APV	DATE	REV	CHANGE	DR	BY	DSN	APV	DATE
C							F						
B	EDITORIAL CHANGES	PEI	NTB	FRC	CZH	11/23/2020	E						
A	ORIGINAL ISSUE	-	NB	JS	CZH	11/01/2020	D						

Indicates Latest Revision X Completely Revised | New Page | Information Removed

SDG&E ELECTRIC UNDERGROUND CONSTRUCTION STANDARDS

INNOVATIVE SWTICHGEAR PAD AND WALL-MOUNT

UG3560.8

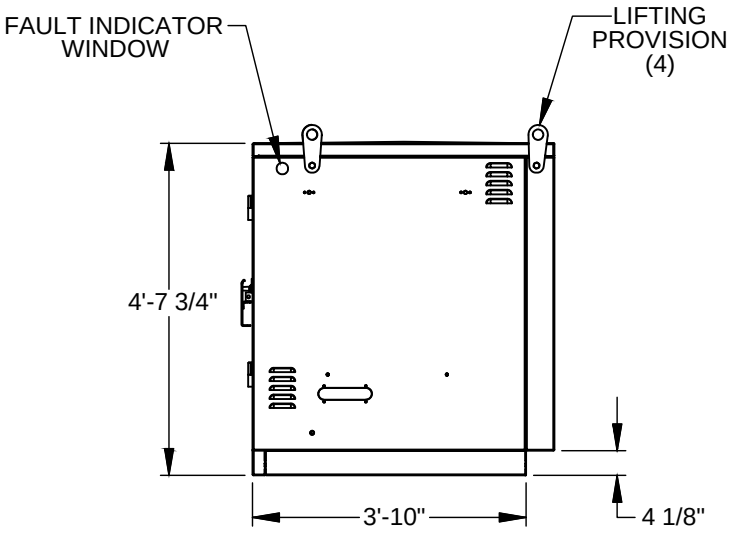

FIGURE 1
SIDE VIEW

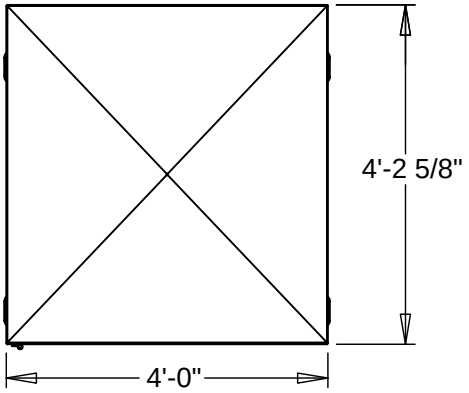

FIGURE 2
TOP VIEW

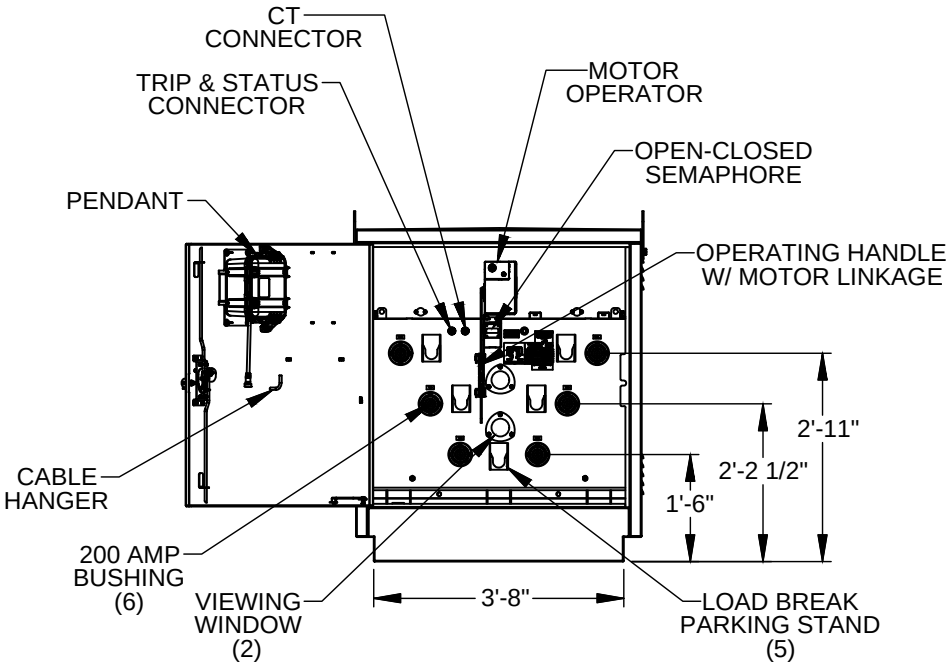

FIGURE 3
FRONT VIEW

TABLE OF CONTENTS

© 1998 - 2021 San Diego Gas & Electric Company. All rights reserved. Removal of this copyright notice without permission is not permitted under law.

REV	CHANGE	DR	BY	DSN	APV	DATE	REV	CHANGE	DR	BY	DSN	APV	DATE
C							F						
B	EDITORIAL CHANGES	PEI	NTB	FRC	CZH	11/23/2020	E						
A	ORIGINAL ISSUE	-	NB	JS	CZH	11/01/2020	D						

Indicates Latest Revision X | Completely Revised | New Page | Information Removed

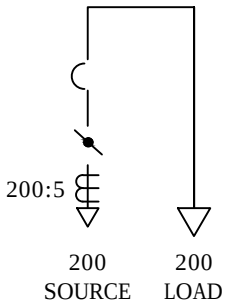

FIGURE 1
IN/OUT SINGLE SIDED PADMOUNT 200A
MANUAL CONNECTION DIAGRAM

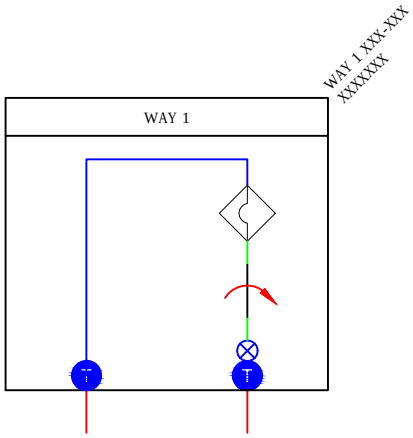

FIGURE 2
MAP SYMBOL

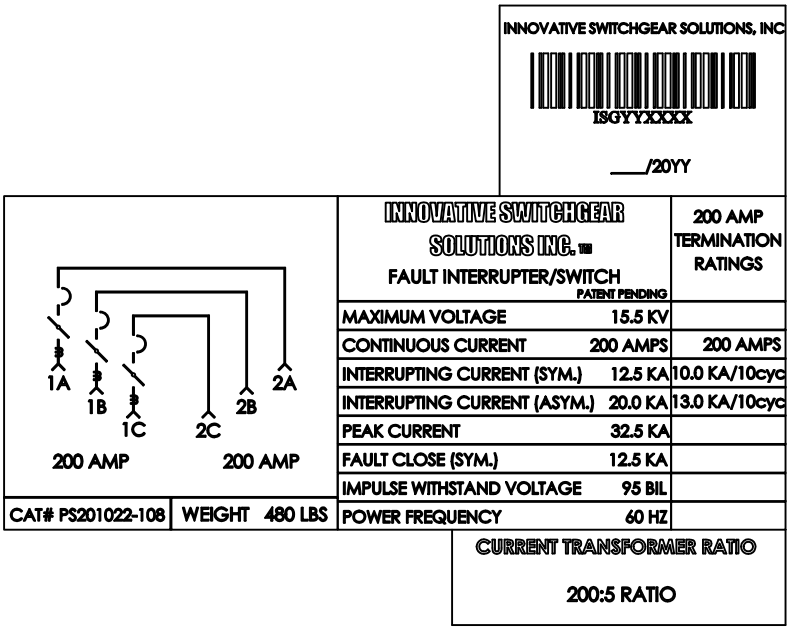

FIGURE 3
MANUFACTURER LABEL

TABLE 1

APPROXIMATE SYSTEM WEIGHTS	
DESCRIPTION	WEIGHT
PS201022-108 SWITCH TANK	480 LBS
ENCLOSURE	550 LBS
MOTOR OPERATOR	35 LBS
PENDANT	20 LBS
RELAY	20 LBS

© 1998 - 2021 San Diego Gas & Electric Company. All rights reserved. Removal of this copyright notice without permission is not permitted under law.

REV	CHANGE	DR	BY	DSN	APV	DATE	REV	CHANGE	DR	BY	DSN	APV	DATE
C							F						
B	EDITORIAL CHANGES	PEI	NTB	FRC	CZH	11/23/2020	E						
A	ORIGINAL ISSUE	-	NB	JS	CZH	11/01/2020	D						

Indicates Latest Revision X | Completely Revised | New Page | Information Removed

TABLE OF CONTENTS

IN/OUT SINGLE SIDED PADMOUNT 200A MANUAL/ NON-SCADA

BILL OF MATERIALS:

ITEM	DESCRIPTION	QUANTITY	STANDARD PAGE	STOCK NUMBER	DESIGN UNITS
1	IN/OUT SINGLE SIDED PADMOUNT 200A MANUAL (ISG)	1	-	S190462	IS2PF2
2	12KV, 600/200 AMP CONNECTIONS	AS REQ.	4181.19	-	-
3	ELBOW, FUSED, 2 SOLID, 30 AMP (FUSE INCLUDED)	AS REQ.	4191	S321680	CFE2SL
4	1/0 CONNECTOR POST	5	-	S262560	-
5	WIRE, #2/7 COPPER GROUND	1	4510	S812818	TG-E-W
6	BOLT, EYE, STAINLESS STEEL	AS REQ.	-	S150528	-
7	CONNECTOR, SERVICE POST	4		S262560	SPCONN
8	NUT, CLAMPING CHANNEL	AS REQ.		S503520	-
9	SCREW, HEX HEAD CAP, BRONZE, 1/2" X 1-1/2"	AS REQ.	3711.3	S616192	-
10	WASHER, STANDARD FLAT ROUND, BRONZE, 1/2"	AS REQ.		S799488	-
11	WASHER, SPRING, LOCK	AS REQ.		S796416	-
12	BOLT, 3-1/2" X 1/2" STAINLESS STEEL, TIE DOWN	4	-	S148804	-
13	BRACKET, ANGLE, STAINLESS STEEL 2" X 3"	AS REQ.	4520.8	S166072	-
14	ANCHOR, 1/2" X 3-3/4" MOUNTING ON CONCRETE PAD	AS REQ.	-	S107654	-
15	SEALANT, CAULKING	1	3408	S631800	-
16	PADLOCK	AS REQ.	-	S514848	-
17	CABLE, #2 AWG, SOLID 1/C	AS REQ.	4003.1	S197600	-
18	5/8" X 14" MACHINE BOLT	AS REQ.	392.1	S154880	-
19	3312 SECONDARY HANDHOLE	AS REQ.	-	S162426	3312-0
20	CONCRETE PAD WITH 3312, SINGLE OR THREE PHASE	AS REQ.	-	S514240	FC3PAD

TABLE OF CONTENTS

© 1998 - 2021 San Diego Gas & Electric Company. All rights reserved. Removal of this copyright notice without permission is not permitted under law.

REV	CHANGE	DR	BY	DSN	APV	DATE	REV	CHANGE	DR	BY	DSN	APV	DATE
C							F						
B	EDITORIAL CHANGES	PEI	NTB	FRC	CZH	11/23/2020	E						
A	ORIGINAL ISSUE	-	NB	JS	CZH	11/01/2020	D						

Indicates Latest Revision X Completely Revised | New Page | Information Removed

SDG&E ELECTRIC UNDERGROUND CONSTRUCTION STANDARDS

INNOVATIVE SWTICHGEAR PAD AND WALL-MOUNT

UG3560.11

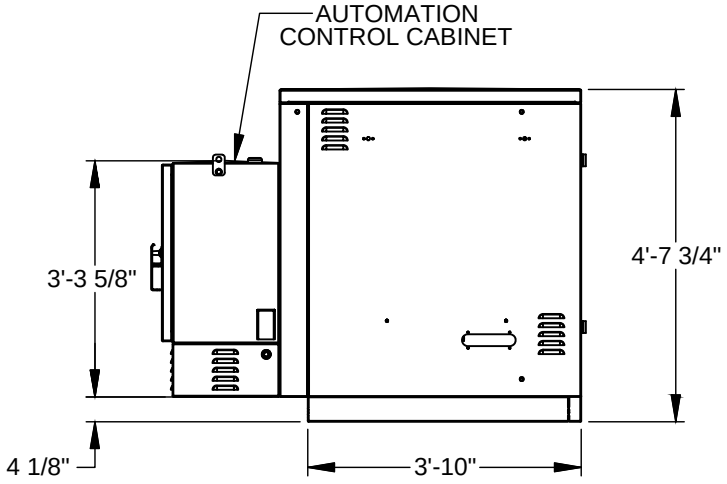

FIGURE 1
SIDE VIEW

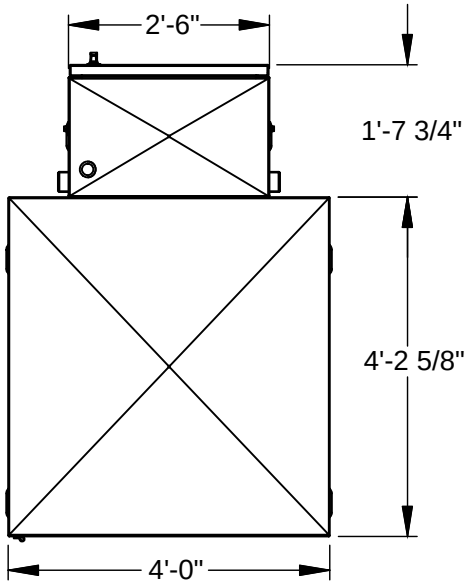

FIGURE 2
TOP VIEW

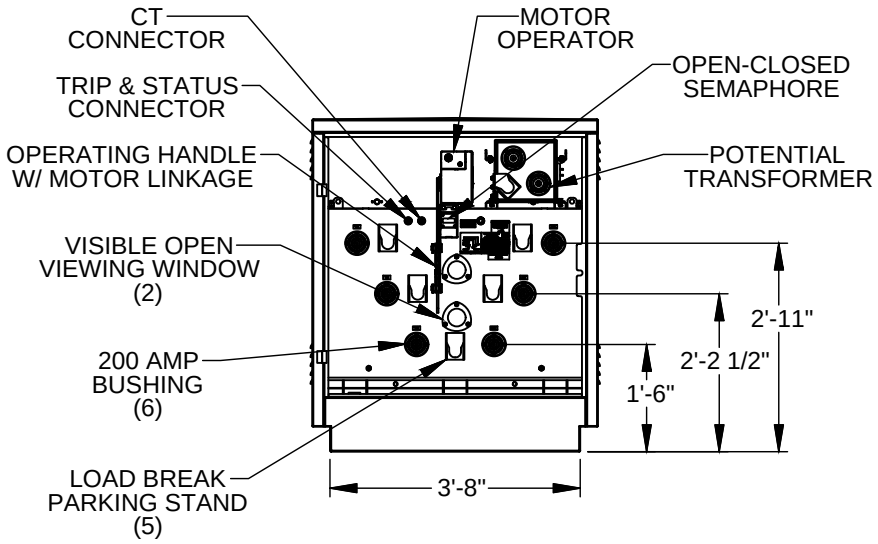

FIGURE 1
FRONT VIEW- DOOR HIDDEN

© 1998 - 2021 San Diego Gas & Electric Company. All rights reserved. Removal of this copyright notice without permission is not permitted under law.

REV	CHANGE	DR	BY	DSN	APV	DATE	REV	CHANGE	DR	BY	DSN	APV	DATE
C							F						
B	EDITORIAL CHANGES	PEI	NTB	FRC	CZH	11/23/2020	E						
A	ORIGINAL ISSUE	-	NB	JS	CZH	11/01/2020	D						

Indicates Latest Revision X | Completely Revised | New Page | Information Removed

SDG&E ELECTRIC UNDERGROUND CONSTRUCTION STANDARDS

INNOVATIVE SWTICHGEAR PAD AND WALL-MOUNT

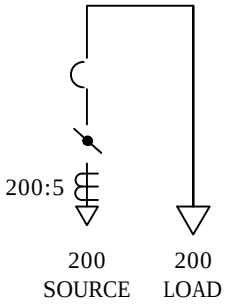

FIGURE 1
IN/OUT SINGLE SIDED PADMOUNT 200A
SCADA CONNECTION DIAGRAM

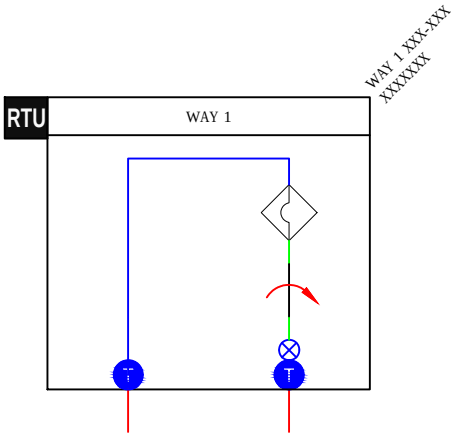

FIGURE 2
MAP SYMBOL

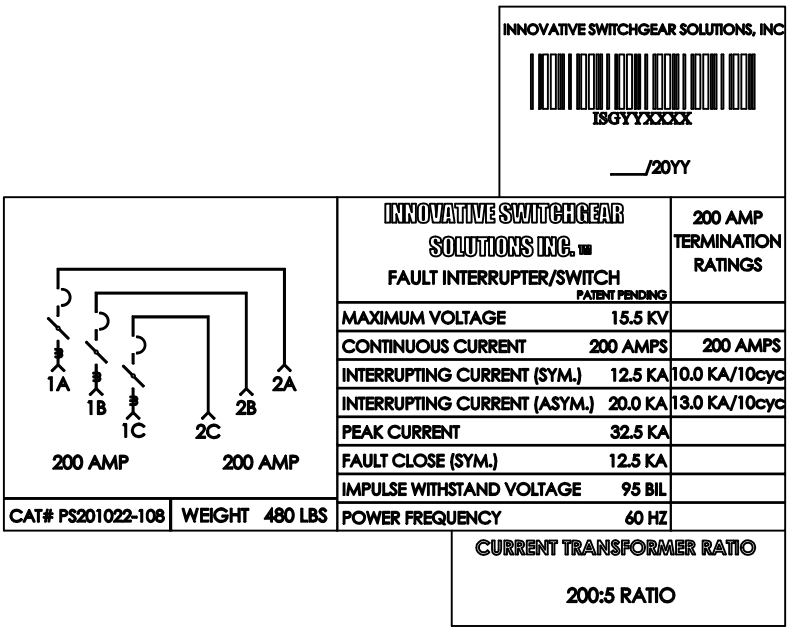

FIGURE 3
MANUFACTURER LABEL

TABLE 1

APPROXIMATE SYSTEM WEIGHTS	
DESCRIPTION	WEIGHT
PS201022-108 SWITCH TANK	480 LBS
ENCLOSURE	550 LBS
POTENTIAL TRANSFORMER	125 LBS
MOTOR OPERATOR	35 LBS
AUTOMATION CONTROL CABINET	400 LBS

TABLE OF CONTENTS

© 1998 - 2021 San Diego Gas & Electric Company. All rights reserved. Removal of this copyright notice without permission is not permitted under law.

REV	CHANGE	DR	BY	DSN	APV	DATE	REV	CHANGE	DR	BY	DSN	APV	DATE
C							F						
B	EDITORIAL CHANGES	PEI	NTB	FRC	CZH	11/23/2020	E						
A	ORIGINAL ISSUE	-	NB	JS	CZH	11/01/2020	D						

Indicates Latest Revision X | Completely Revised | New Page | Information Removed

IN/OUT SINGLE SIDED PADMOUNT 200A SCADA

BILL OF MATERIALS:

ITEM	DESCRIPTION	QUANTITY	STANDARD PAGE	STOCK NUMBER	DESIGN UNITS
1	IN/OUT SINGLE SIDED PADMOUNT 200A SCADA (ISG)	1	-	S190464	ISG21S
2	12KV, 600/200 AMP CONNECTIONS	AS REQ.	4181.19	-	-
3	ELBOW, FUSED, 2 SOLID, 30 AMP (FUSE INCLUDED)	AS REQ.	4191	S321680	CFE2SL
4	1/0 CONNECTOR POST	5	-	S262560	-
5	WIRE, #2/7 COPPER GROUND	1	4510	S812818	TG-E-W
6	BOLT, EYE, STAINLESS STEEL	AS REQ.	-	S150528	-
7	CONNECTOR, SERVICE POST	4		S262560	SPCONN
8	NUT, CLAMPING CHANNEL	AS REQ.		S503520	-
9	SCREW, HEX HEAD CAP, BRONZE, 1/2" X 1-1/2"	AS REQ.	3711.3	S616192	-
10	WASHER, STANDARD FLAT ROUND, BRONZE, 1/2"	AS REQ.		S799488	-
11	WASHER, SPRING, LOCK	AS REQ.		S796416	-
12	BOLT, 3-1/2" X 1/2" STAINLESS STEEL, TIE DOWN	4	-	S148804	-
13	BRACKET, ANGLE, STAINLESS STEEL 2" X 3"	AS REQ.	4520.8	S166072	-
14	ANCHOR, 1/2" X 3-3/4" MOUNTING ON CONCRETE PAD	AS REQ.	-	S107654	-
15	SEALANT, CAULKING	1	3408	S631800	-
16	PADLOCK	AS REQ.	-	S514848	-
17	CABLE, #2 AWG, SOLID 1/C	AS REQ.	4003.1	S197600	-
18	5/8" X 14" MACHINE BOLT	AS REQ.	392.1	S154880	-
19	3112 SECONDARY HANDHOLE	AS REQ.	-	S162426	3312-0
20	CONCRETE PAD WITH 3312, SINGLE OR THREE PHASE	AS REQ.	-	S514240	FC3PAD

TABLE OF CONTENTS

© 1998 - 2021 San Diego Gas & Electric Company. All rights reserved. Removal of this copyright notice without permission is not permitted under law.

REV	CHANGE	DR	BY	DSN	APV	DATE	REV	CHANGE	DR	BY	DSN	APV	DATE
C							F						
B	EDITORIAL CHANGES	PEI	NTB	FRC	CZH	11/23/2020	E						
A	ORIGINAL ISSUE	-	NB	JS	CZH	11/01/2020	D						

Indicates Latest Revision X Completely Revised | New Page | Information Removed

SDG&E ELECTRIC UNDERGROUND CONSTRUCTION STANDARDS

INNOVATIVE SWTICHGEAR PAD AND WALL-MOUNT

UG3560.14

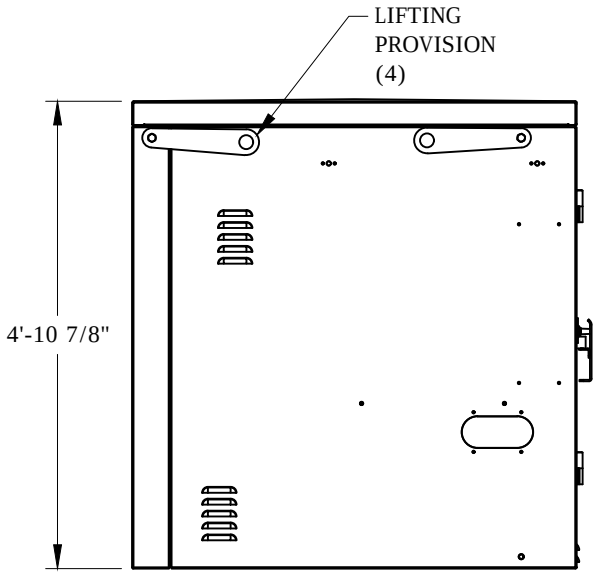

FIGURE 1
SIDE VIEW

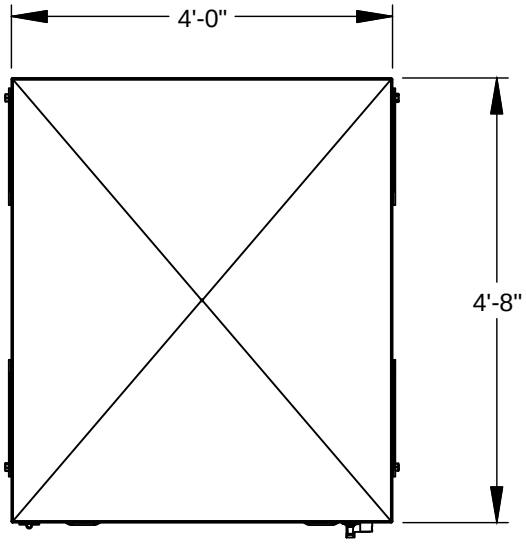

FIGURE 2
TOP VIEW

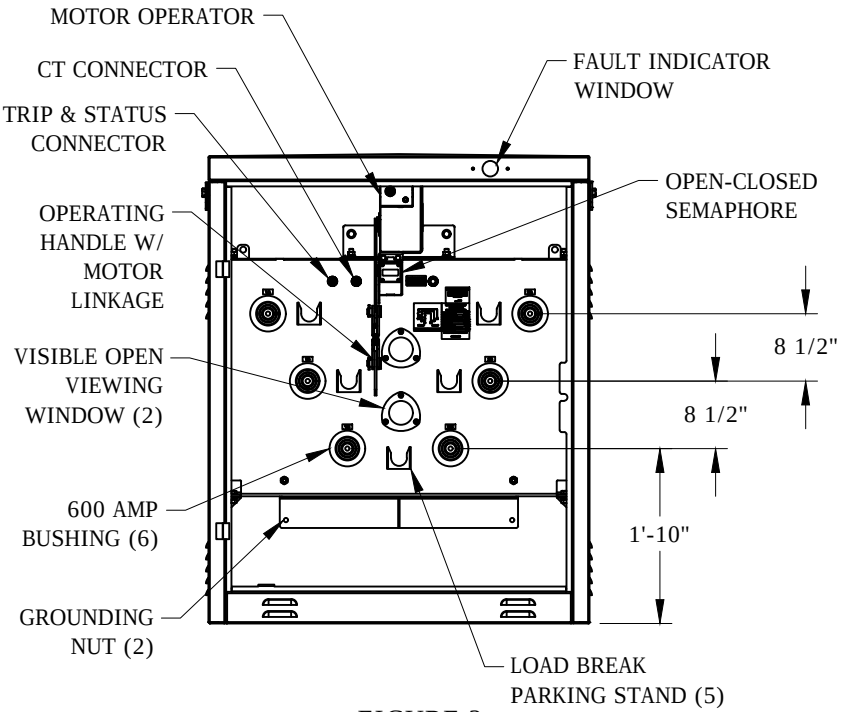

FIGURE 3
FRONT VIEW

© 1998 - 2021 San Diego Gas & Electric Company. All rights reserved. Removal of this copyright notice without permission is not permitted under law.

REV	CHANGE	DR	BY	DSN	APV	DATE	REV	CHANGE	DR	BY	DSN	APV	DATE
C							F						
B	EDITORIAL CHANGES	PEI	NTB	FRC	CZH	11/23/2020	E						
A	ORIGINAL ISSUE	-	NB	JS	CZH	11/01/2020	D						

Indicates Latest Revision X | Completely Revised | New Page | Information Removed

TABLE OF CONTENTS

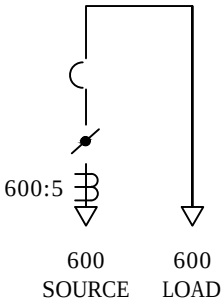

FIGURE 1
IN/OUT SINGLE SIDED PADMOUNT 600A MANUAL
CONNECTION DIAGRAM

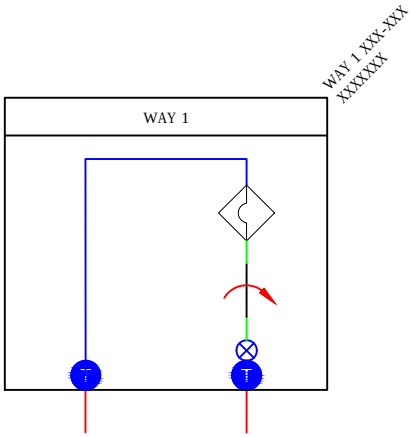

FIGURE 2
MAP SYMBOL

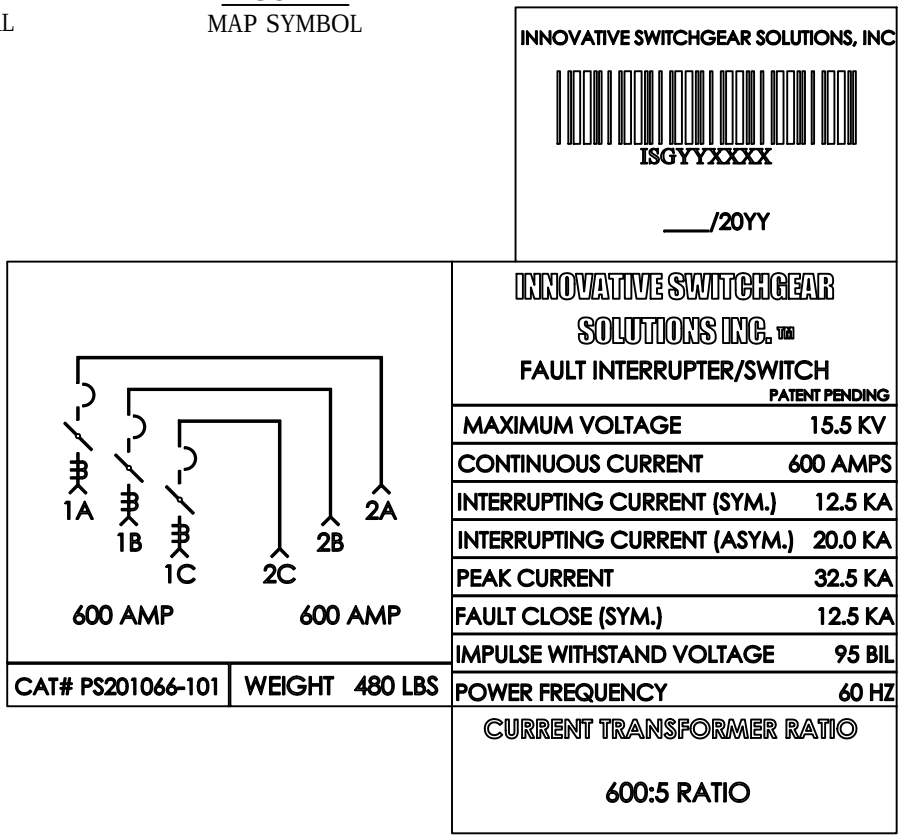

FIGURE 3
MANUFACTURER LABEL

TABLE 1

APPROXIMATE SYSTEM WEIGHTS	
DESCRIPTION	WEIGHT
PS201066-101 SWITCH TANK	480 LBS
ENCLOSURE	715 LBS
MOTOR OPERATOR	35 LBS
RELAY	20 LBS
PENDANT	20 LBS

© 1998 - 2021 San Diego Gas & Electric Company. All rights reserved. Removal of this copyright notice without permission is not permitted under law.

REV	CHANGE	DR	BY	DSN	APV	DATE	REV	CHANGE	DR	BY	DSN	APV	DATE
C							F						
B	EDITORIAL CHANGES	PEI	NTB	FRC	CZH	11/23/2020	E						
A	ORIGINAL ISSUE	-	NB	JS	CZH	11/01/2020	D						

Indicates Latest Revision X | Completely Revised | New Page | Information Removed

TABLE OF CONTENTS

IN/OUT SINGLE SIDED PADMOUNT 600A MANUAL/ NON-SCADA

BILL OF MATERIALS:

ITEM	DESCRIPTION	QUANTITY	STANDARD PAGE	STOCK NUMBER	DESIGN UNITS
1	IN/OUT SINGLE SIDED PADMOUNT 600A MANUAL (ISG)	1	-	S704804	IS6PFM
2	12KV, 600/200 AMP CONNECTIONS	AS REQ.	4181.19	-	-
3	ELBOW, FUSED, 2 SOLID, 30 AMP (FUSE INCLUDED)	AS REQ.	4191	S321680	CFE2SL
4	1/0 CONNECTOR POST	5	-	S262560	-
5	WIRE, 4/0 COPPER	AS REQ.	4520.8	S812764	4/0-SD
6	WIRE, #2 COPPER GROUND TRENCH	1	4510	S812816	TG-E-W
7	BOLT, EYE, STAINLESS STEEL	AS REQ.	-	S150528	-
8	CONNECTOR, SERVICE POST	4	3711.3	S262560	SPCONN
9	NUT, CLAMPING CHANNEL	AS REQ.		S503520	-
10	SCREW, HEX HEAD CAP, BRONZE, 1/2" X 1-1/2"	AS REQ.		S616192	-
11	WASHER, STANDARD FLAT ROUND, BRONZE, 1/2"	AS REQ.		S799488	-
12	WASHER, SPRING, LOCK	AS REQ.		S796416	-
13	BOLT, 3-1/2" X 1/2" STAINLESS STEEL, TIE DOWN	4	-	S148804	-
14	BRACKET, ANGLE, STAINLESS STEEL 2" X 3"	AS REQ.	4520.8	S166072	-
15	ANCHOR, 1/2" X 3-3/4" MOUNTING ON CONCRETE PAD	AS REQ.	-	S107654	-
16	SEALANT, CAULKING	1	3408	S631800	-
17	PADLOCK	AS REQ.	-	S514848	-
18	CABLE, #2 AWG, SOLID 1/C	AS REQ.	4003.1	S197600	-
19	5/8" X 14" MACHINE BOLT	AS REQ.	392.1	S154880	-
20	3312 SECONDARY HANDHOLE	1	3312	S286750 S162424 S596750	3312SH 3312CB 3312RR
22	CONCRETE PAD	AS REQ.	3414	S514280	CAP-PD

TABLE OF CONTENTS

© 1998 - 2021 San Diego Gas & Electric Company. All rights reserved. Removal of this copyright notice without permission is not permitted under law.

REV	CHANGE	DR	BY	DSN	APV	DATE	REV	CHANGE	DR	BY	DSN	APV	DATE
C							F						
B	EDITORIAL CHANGES	PEI	NTB	FRC	CZH	11/23/2020	E						
A	ORIGINAL ISSUE	-	NB	JS	CZH	11/01/2020	D						

Indicates Latest Revision X Completely Revised | New Page | Information Removed

SDG&E ELECTRIC UNDERGROUND CONSTRUCTION STANDARDS

INNOVATIVE SWTICHGEAR PAD AND WALL-MOUNT

UG3560.17

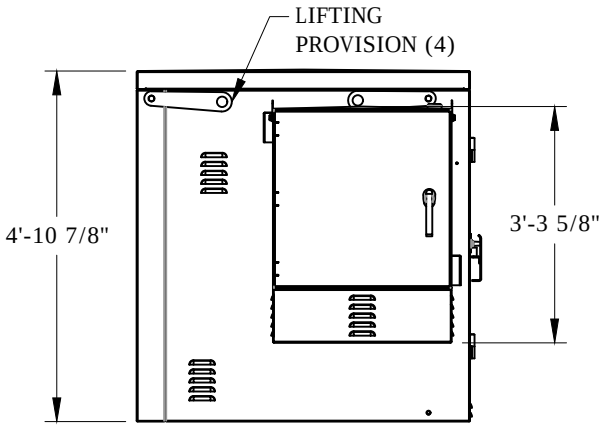

FIGURE 1
SIDE VIEW

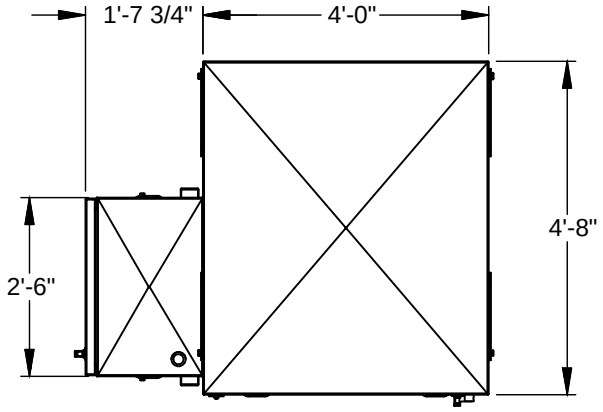

FIGURE 2
TOP VIEW

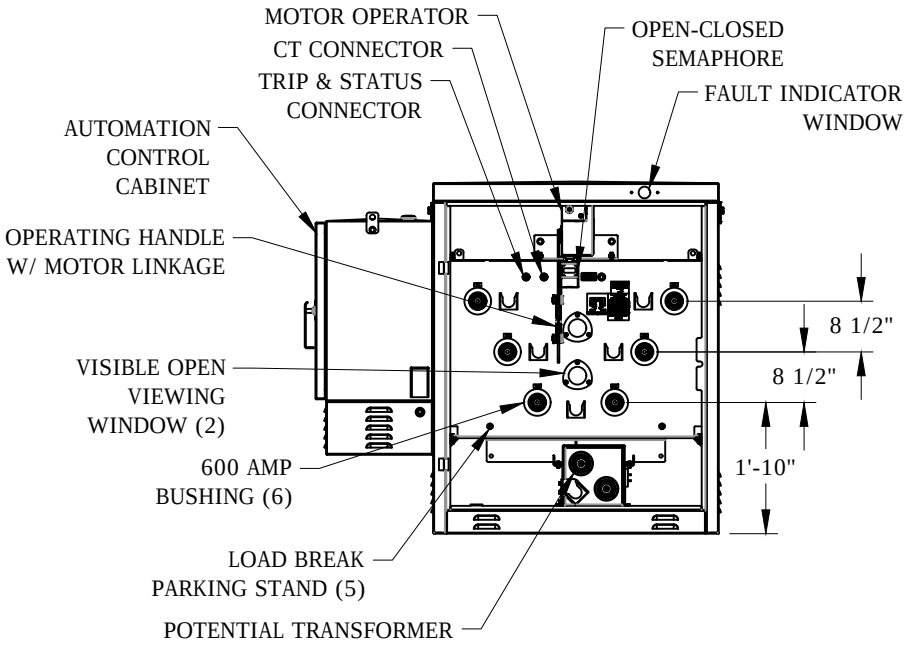

FIGURE 3
FRONT VIEW

TABLE OF CONTENTS

© 1998 - 2021 San Diego Gas & Electric Company. All rights reserved. Removal of this copyright notice without permission is not permitted under law.

REV	CHANGE	DR	BY	DSN	APV	DATE	REV	CHANGE	DR	BY	DSN	APV	DATE
C							F						
B	EDITORIAL CHANGES	PEI	NTB	FRC	CZH	11/23/2020	E						
A	ORIGINAL ISSUE	-	NB	JS	CZH	11/01/2020	D						

Indicates Latest Revision X | Completely Revised | New Page | Information Removed

SDG&E ELECTRIC UNDERGROUND CONSTRUCTION STANDARDS

INNOVATIVE SWTICHGEAR PAD AND WALL-MOUNT

UG3560.18

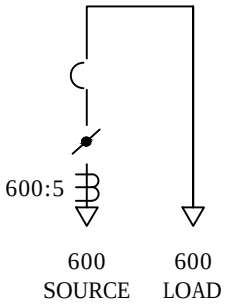

FIGURE 1
IN/OUT SINGLE SIDED PADMOUNT 600A SCADA
CONNECTION DIAGRAM

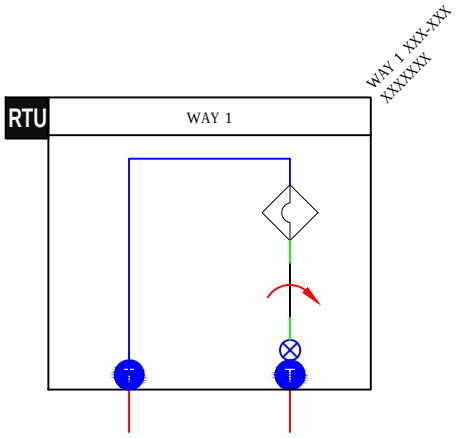

FIGURE 2
MAP SYMBOL

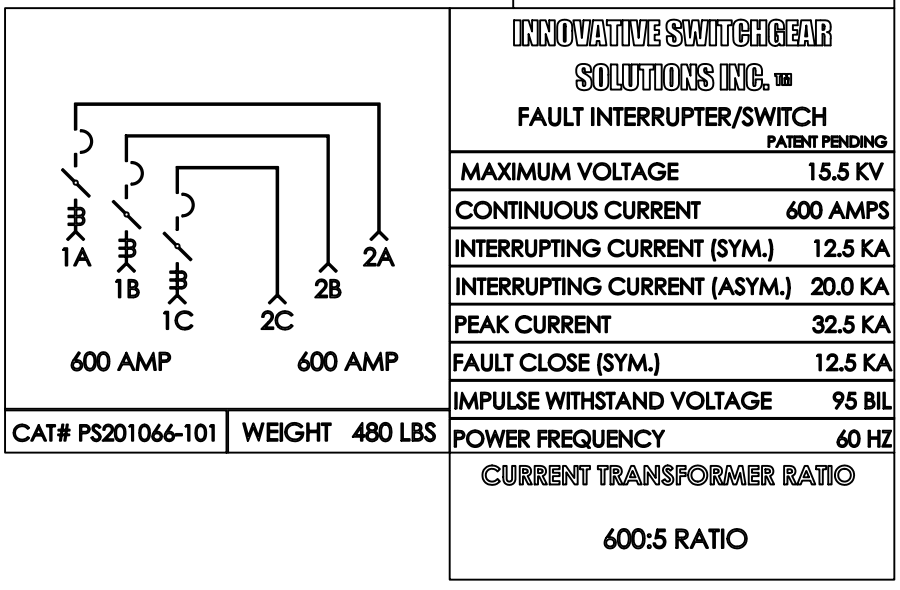

FIGURE 3
MANUFACTURER LABEL

TABLE 1

APPROXIMATE SYSTEM WEIGHTS	
DESCRIPTION	WEIGHT
PS201066-101 SWITCH TANK	480 LBS
ENCLOSURE	715 LBS
MOTOR OPERATOR	35 LBS
POTENTIAL TRANSFORMER	125 LBS
AUTOMATION CONTROL CABINET	400 LBS

TABLE OF CONTENTS

© 1998 - 2021 San Diego Gas & Electric Company. All rights reserved. Removal of this copyright notice without permission is not permitted under law.

REV	CHANGE	DR	BY	DSN	APV	DATE	REV	CHANGE	DR	BY	DSN	APV	DATE
C							F						
B	EDITORIAL CHANGES	PEI	NTB	FRC	CZH	11/23/2020	E						
A	ORIGINAL ISSUE	-	NB	JS	CZH	11/01/2020	D						

Indicates Latest Revision X | Completely Revised | New Page | Information Removed

IN/OUT SINGLE SIDED PADMOUNT 600A SCADA

BILL OF MATERIALS:

ITEM	DESCRIPTION	QUANTITY	STANDARD PAGE	STOCK NUMBER	DESIGN UNITS
1	IN/OUT SINGLE SIDED PADMOUNT 600A SCADA (ISG)	1	-	S704800	ISG61S
2	12KV, 600/200 AMP CONNECTIONS	AS REQ.	4181.19	-	-
3	ELBOW, FUSED, 2 SOLID, 30 AMP (FUSE INCLUDED)	AS REQ.	4191	S321680	CFE2SL
4	1/0 CONNECTOR POST	5	-	S262560	-
5	WIRE, 4/0 COPPER	AS REQ.	4520.8	S812764	4/0-SD
6	WIRE, #2 COPPER GROUND TRENCH	1	4510	S812816	TG-E-W
7	BOLT, EYE, STAINLESS STEEL	AS REQ.	-	S150528	-
8	CONNECTOR, SERVICE POST	4		S262560	SPCONN
9	NUT, CLAMPING CHANNEL	AS REQ.		S503520	-
10	SCREW, HEX HEAD CAP, BRONZE, 1/2" X 1-1/2"	AS REQ.	3711.3	S616192	-
11	WASHER, STANDARD FLAT ROUND, BRONZE, 1/2"	AS REQ.		S799488	-
12	WASHER, SPRING, LOCK	AS REQ.		S796416	-
13	BOLT, 3-1/2" X 1/2" STAINLESS STEEL, TIE DOWN	4	-	S148804	-
14	BRACKET, ANGLE, STAINLESS STEEL 2" X 3"	AS REQ.	4520.8	S166072	-
15	ANCHOR, 1/2" X 3-3/4" MOUNTING ON CONCRETE PAD	AS REQ.	-	S107654	-
16	SEALANT, CAULKING	1	3408	S631800	-
17	PADLOCK	AS REQ.	-	S514848	-
18	CABLE, #2 AWG, SOLID 1/C	AS REQ.	4003.1	S197600	-
19	5/8" X 14" MACHINE BOLT	AS REQ.	392.1	S154880	-
20	CONCRETE PADMOUNT	AS REQ.	3414	S514280	CAP-PD

TABLE OF CONTENTS

© 1998 - 2021 San Diego Gas & Electric Company. All rights reserved. Removal of this copyright notice without permission is not permitted under law.

REV	CHANGE	DR	BY	DSN	APV	DATE	REV	CHANGE	DR	BY	DSN	APV	DATE
C							F						
B	EDITORIAL CHANGES	PEI	NTB	FRC	CZH	11/23/2020	E						
A	ORIGINAL ISSUE	-	NB	JS	CZH	11/01/2020	D						

Indicates Latest Revision X | Completely Revised | New Page | Information Removed

SDG&E ELECTRIC UNDERGROUND CONSTRUCTION STANDARDS

INNOVATIVE SWTICHGEAR PAD AND WALL-MOUNT

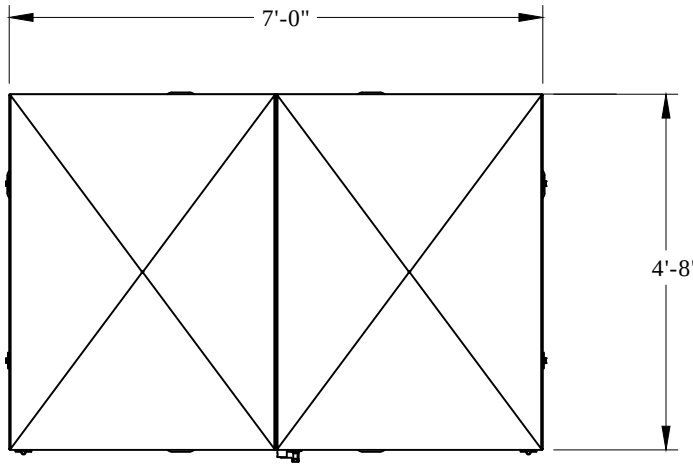

FIGURE 1
TOP VIEW

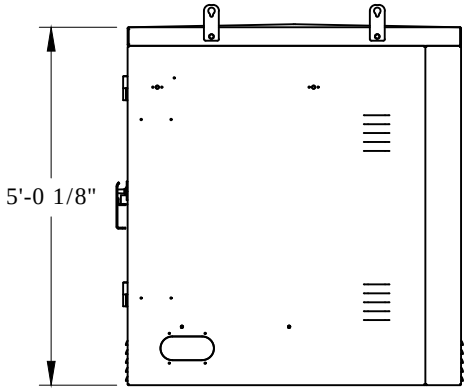

FIGURE 2
SIDE VIEW

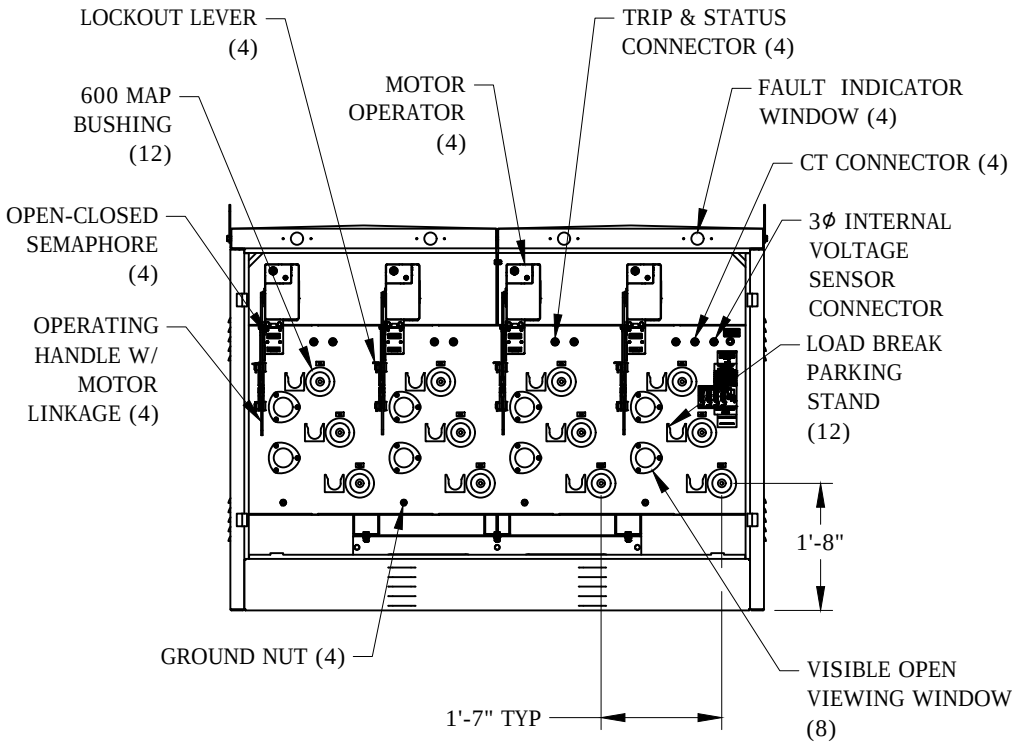

FIGURE 3
FRONT VIEW

© 1998 - 2021 San Diego Gas & Electric Company. All rights reserved. Removal of this copyright notice without permission is not permitted under law.

REV	CHANGE	DR	BY	DSN	APV	DATE	REV	CHANGE	DR	BY	DSN	APV	DATE
C							F						
B	EDITORIAL CHANGES	PEI	NTB	FRC	CZH	11/23/2020	E						
A	ORIGINAL ISSUE	-	NB	JS	CZH	11/01/2020	D						

Indicates Latest Revision X | Completely Revised | New Page | Information Removed

TABLE OF CONTENTS

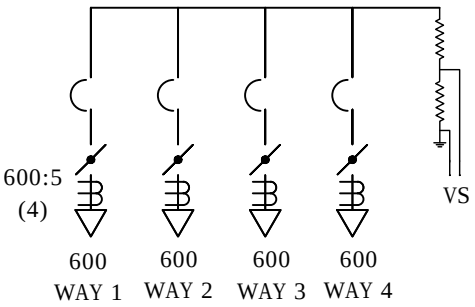

FIGURE 1
4-WAY SINGLE SIDED PADMOUNT 600A MANUAL
CONNECTION DIAGRAM

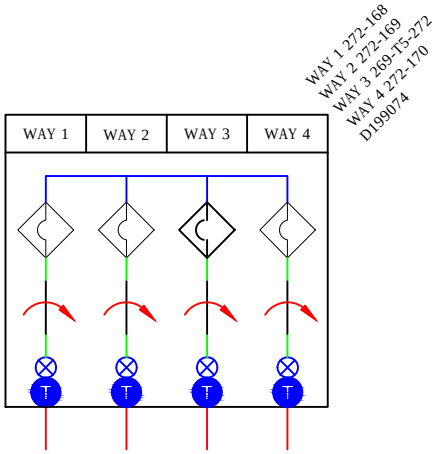

FIGURE 3
MAP SYMBOL

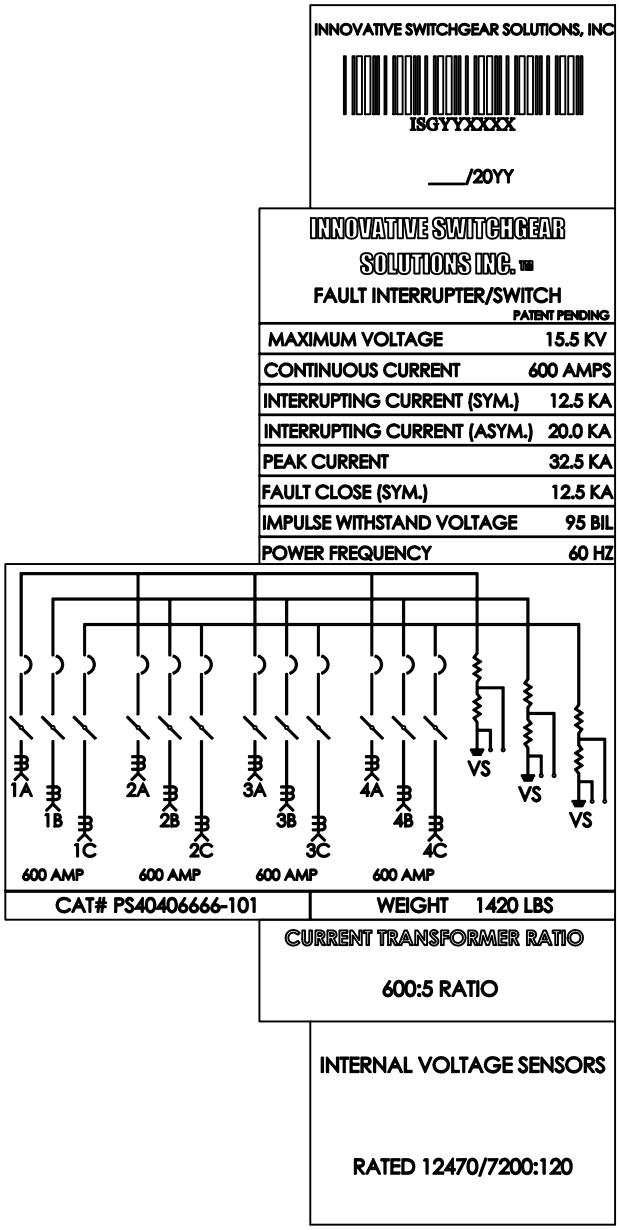

FIGURE 2
MANUFACTURER LABEL

TABLE 1

APPROXIMATE SYSTEM WEIGHTS	
DESCRIPTION	WEIGHT
PS40406666-101 SWITCH TANK	1,420 LBS
MOTOR OPERATORS	35 LBS EACH
STAND	160 LBS
ENCLOSURE	915 LBS
J-BOX	10 LBS
PENDANT	20 LBS

TABLE OF CONTENTS

© 1998 - 2021 San Diego Gas & Electric Company. All rights reserved. Removal of this copyright notice without permission is not permitted under law.

REV	CHANGE	DR	BY	DSN	APV	DATE	REV	CHANGE	DR	BY	DSN	APV	DATE
C							F						
B	EDITORIAL CHANGES	PEI	NTB	FRC	CZH	11/23/2020	E						
A	ORIGINAL ISSUE	-	NB	JS	CZH	11/01/2020	D						

Indicates Latest Revision X Completely Revised | New Page | Information Removed

4-WAY SINGLE SIDED PADMOUNT 600A MANUAL/ NON-SCADA

BILL OF MATERIALS:

ITEM	DESCRIPTION	QUANTITY	STANDARD PAGE	STOCK NUMBER	DESIGN UNITS
1	4-WAY SINGLE SIDED PADMOUNT 600A MANUAL (ISG)	1	-	S709054	ISG4WM
2	12KV, 600/200 AMP CONNECTIONS	AS REQ.	4181.19	-	-
3	ELBOW, FUSED, 2 SOLID, 30 AMP (FUSE INCLUDED)	AS REQ.	4191	S321680	CFE2SL
4	1/0 CONNECTOR POST	5	-	S262560	-
5	WIRE, 4/0 COPPER	AS REQ.	4520.8	S812764	4/0-SD
6	WIRE, #2 COPPER GROUND TRENCH	1	4510	S812816	TG-E-W
7	BOLT, EYE, STAINLESS STEEL	AS REQ.	-	S150528	-
8	CONNECTOR, SERVICE POST	4	3711.3	S262560	SPCONN
9	NUT, CLAMPING CHANNEL	AS REQ.		S503520	-
10	SCREW, HEX HEAD CAP, BRONZE, 1/2" X 1-1/2"	AS REQ.		S616192	-
11	WASHER, STANDARD FLAT ROUND, BRONZE, 1/2"	AS REQ.		S799488	-
12	WASHER, SPRING, LOCK	AS REQ.		S796416	-
13	BOLT, 3-1/2" X 1/2" STAINLESS STEEL, TIE DOWN	4	-	S148804	-
14	BRACKET, ANGLE, STAINLESS STEEL 2" X 3"	AS REQ.	4520.8	S166072	-
15	ANCHOR, 1/2" X 3-3/4" MOUNTING ON CONCRETE PAD	AS REQ.	-	S107654	-
16	SEALANT, CAULKING	1	3408	S631800	-
17	PADLOCK	AS REQ.	-	S514848	-
18	CABLE, #2 AWG, SOLID 1/C	AS REQ.	4003.1	S197600	-
19	5/8" X 14" MACHINE BOLT	AS REQ.	392.1	S154880	-
20	3440 & 3441 CONCRETE SKIRT (CONCRETE SKIRT REQUIRED FOR RETROFIT.)	1	3560.38	S248205	CC-WLK
21	FIBERGLASS PADMOUNT	AS REQ.	3428	S514026 S601600 S656400	3428BP X3428
22	CONCRETE PADMOUNT	AS REQ.	3441	-	-

TABLE OF CONTENTS

© 1998 - 2021 San Diego Gas & Electric Company. All rights reserved. Removal of this copyright notice without permission is not permitted under law.

REV	CHANGE	DR	BY	DSN	APV	DATE	REV	CHANGE	DR	BY	DSN	APV	DATE
C							F						
B	EDITORIAL CHANGES	PEI	NTB	FRC	CZH	11/23/2020	E						
A	ORIGINAL ISSUE	-	NB	JS	CZH	11/01/2020	D						

Indicates Latest Revision X | Completely Revised | New Page | Information Removed

SDG&E ELECTRIC UNDERGROUND CONSTRUCTION STANDARDS

INNOVATIVE SWTICHGEAR PAD AND WALL-MOUNT

UG3560.23

4-WAY SINGLE SIDED PADMOUNT 600A SCADA

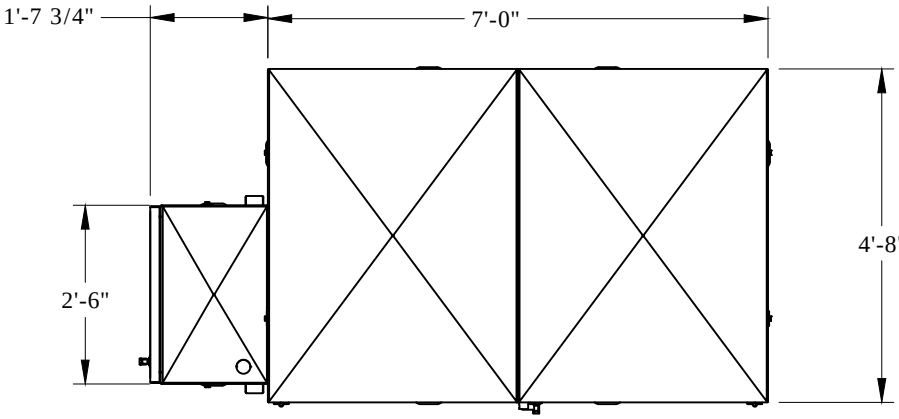

FIGURE 1
TOP VIEW

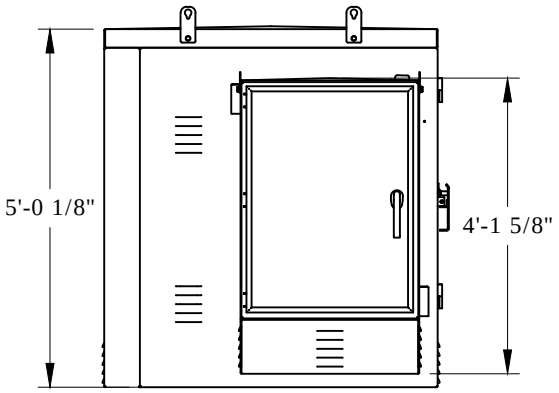

FIGURE 2
SIDE VIEW

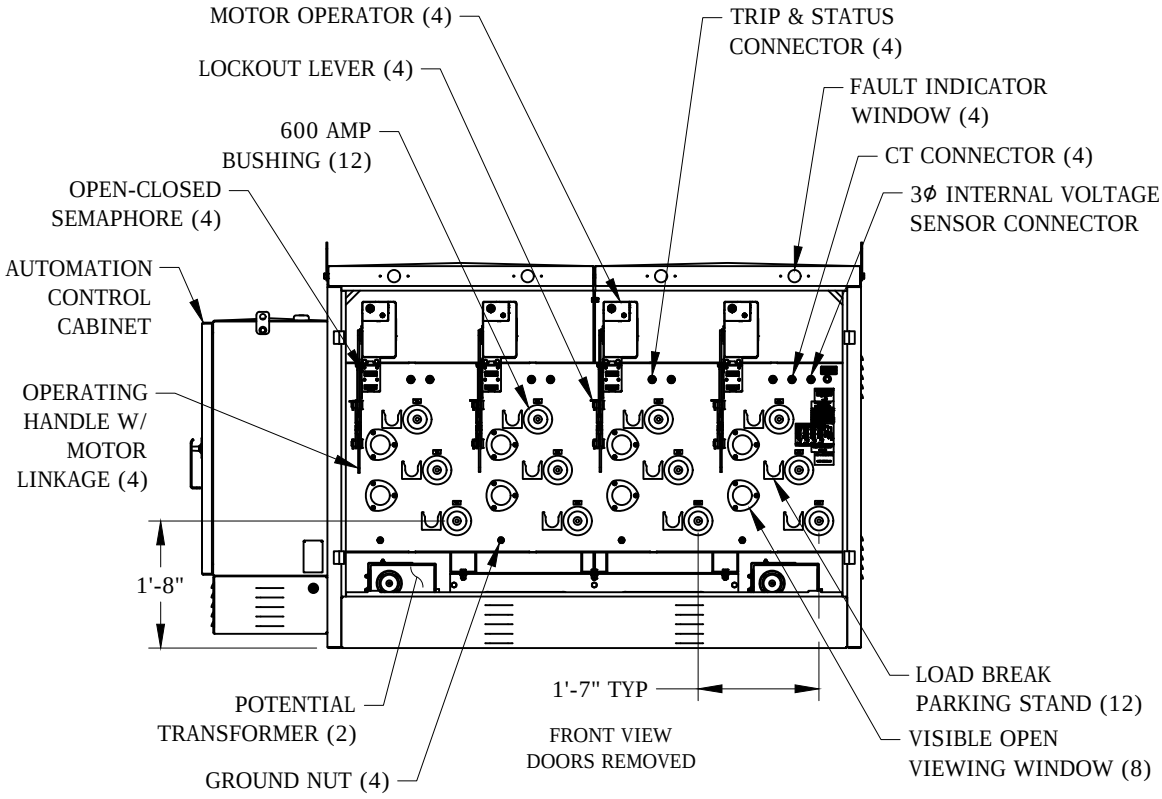

FIGURE 3
FRONT VIEW

© 1998 - 2021 San Diego Gas & Electric Company. All rights reserved. Removal of this copyright notice without permission is not permitted under law.

REV	CHANGE	DR	BY	DSN	APV	DATE	REV	CHANGE	DR	BY	DSN	APV	DATE
C							F						
B	EDITORIAL CHANGES	PEI	NTB	FRC	CZH	11/23/2020	E						
A	ORIGINAL ISSUE	-	NB	JS	CZH	11/01/2020	D						

Indicates Latest Revision X | Completely Revised | New Page | Information Removed

SDG&E ELECTRIC UNDERGROUND CONSTRUCTION STANDARDS

INNOVATIVE SWTICHGEAR PAD AND WALL-MOUNT

UG3560.24

4-WAY SINGLE SIDED PADMOUNT 600A SCADA

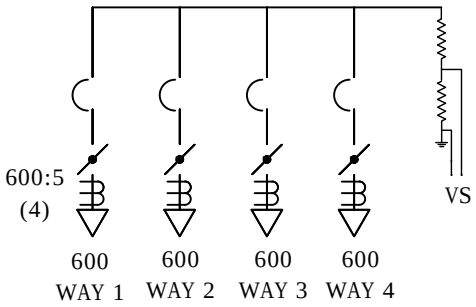

FIGURE 1
4-WAY SINGLE SIDED PADMOUNT 600A SCADA
CONNECTION DIAGRAM

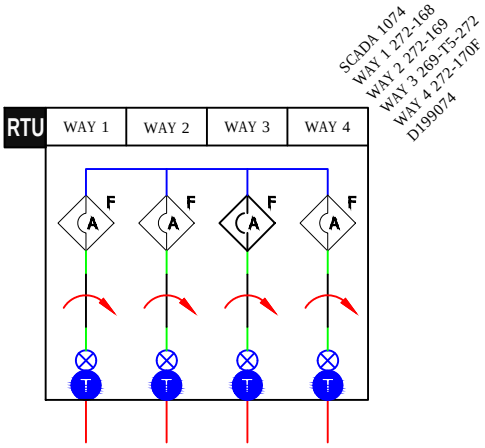

FIGURE 3
MAP SYMBOL

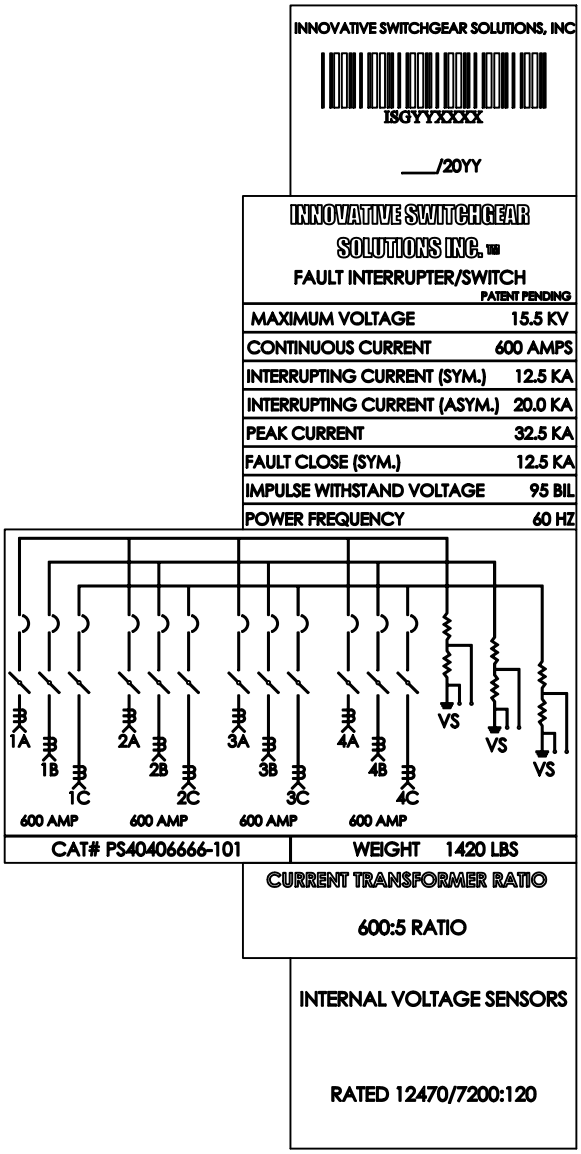

FIGURE 2
MANUFACTURER LABEL

TABLE 1

APPROXIMATE SYSTEM WEIGHTS	
DESCRIPTION	WEIGHT
PS40406666-101 SWITCH TANK	1,420 LBS
MOTOR OPERATORS	35 LBS EACH
STAND	160 LBS
POTENTIAL TRANSFORMER	130 LBS EACH
ENCLOSURE	915 LBS
CONTROL CABINET	500 LBS

TABLE OF CONTENTS

© 1998 - 2021 San Diego Gas & Electric Company. All rights reserved. Removal of this copyright notice without permission is not permitted under law.

REV	CHANGE	DR	BY	DSN	APV	DATE	REV	CHANGE	DR	BY	DSN	APV	DATE
C							F						
B	EDITORIAL CHANGES	PEI	NTB	FRC	CZH	11/23/2020	E						
A	ORIGINAL ISSUE	-	NB	JS	CZH	11/01/2020	D						

Indicates Latest Revision X Completely Revised | New Page | Information Removed

4-WAY SINGLE SIDED PADMOUNT 600A SCADA

BILL OF MATERIALS:

ITEM	DESCRIPTION	QUANTITY	STANDARD PAGE	STOCK NUMBER	DESIGN UNITS
1	4-WAY SINGLE SIDED PADMOUNT 600A SCADA (ISG)	1	-	S704724	ISG4WS
2	12KV, 600/200 AMP CONNECTIONS	AS REQ.	4181.19	-	-
3	ELBOW, FUSED, 2 SOLID, 30 AMP (FUSE INCLUDED)	AS REQ.	4191	S321680	CFE2SL
4	1/0 CONNECTOR POST	5	-	S262560	-
5	WIRE, 4/0 COPPER	AS REQ.	4520.8	S812764	4/0-SD
6	WIRE, #2 COPPER GROUND TRENCH	1	4510	S812816	TG-E-W
7	BOLT, EYE, STAINLESS STEEL	AS REQ.	-	S150528	-
8	CONNECTOR, SERVICE POST	4	3711.3	S262560	SPCONN
9	NUT, CLAMPING CHANNEL	AS REQ.		S503520	-
10	SCREW, HEX HEAD CAP, BRONZE, 1/2" X 1-1/2"	AS REQ.		S616192	-
11	WASHER, STANDARD FLAT ROUND, BRONZE, 1/2"	AS REQ.		S799488	-
12	WASHER, SPRING, LOCK	AS REQ.		S796416	-
13	BOLT, 3-1/2" X 1/2" STAINLESS STEEL, TIE DOWN	4	-	S148804	-
14	BRACKET, ANGLE, STAINLESS STEEL 2" X 3"	AS REQ.	4520.8	S166072	-
15	ANCHOR, 1/2" X 3-3/4" MOUNTING ON CONCRETE PAD	AS REQ.	-	S107654	-
16	SEALANT, CAULKING	1	3408	S631800	-
17	PADLOCK	AS REQ.	-	S514848	-
18	CABLE, #2 AWG, SOLID 1/C	AS REQ.	4003.1	S197600	-
19	5/8" X 14" MACHINE BOLT	AS REQ.	392.1	S154880	-
20	3440 & 3441 CONCRETE SKIRT (CONCRETE SKIRT REQUIRED FOR RETROFIT.)	1	3560.38	S248205	CC-WLK
21	FIBERGLASS PADMOUNT	AS REQ.	3428	S514026 S601600 S656400	3428BP X3428
22	CONCRETE PADMOUNT	AS REQ.	3441	-	-

TABLE OF CONTENTS

© 1998 - 2021 San Diego Gas & Electric Company. All rights reserved. Removal of this copyright notice without permission is not permitted under law.

REV	CHANGE	DR	BY	DSN	APV	DATE	REV	CHANGE	DR	BY	DSN	APV	DATE
C							F						
B	EDITORIAL CHANGES	PEI	NTB	FRC	CZH	11/23/2020	E						
A	ORIGINAL ISSUE	-	NB	JS	CZH	11/01/2020	D						

Indicates Latest Revision X | Completely Revised | New Page | Information Removed

SDG&E ELECTRIC UNDERGROUND CONSTRUCTION STANDARDS

INNOVATIVE SWTICHGEAR PAD AND WALL-MOUNT

UG3560.26

5-WAY SINGLE SIDED PADMOUNT 600A SCADA

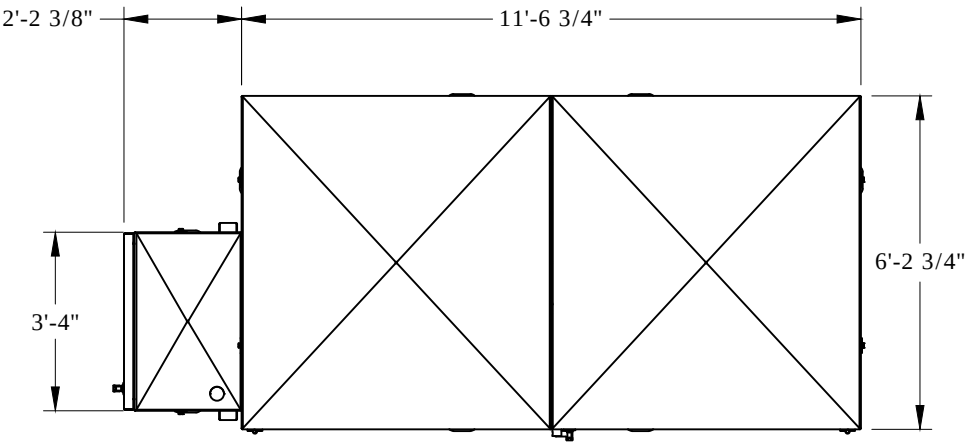

FIGURE 1
TOP VIEW

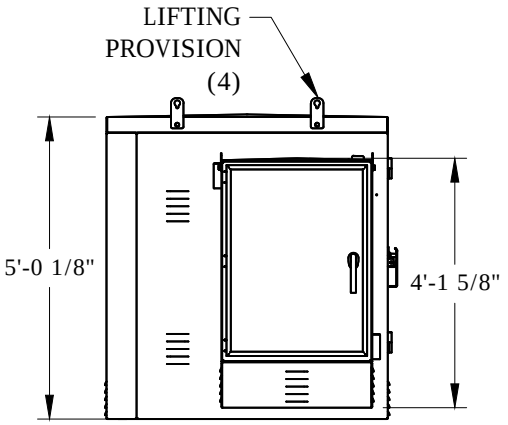

FIGURE 2
SIDE VIEW

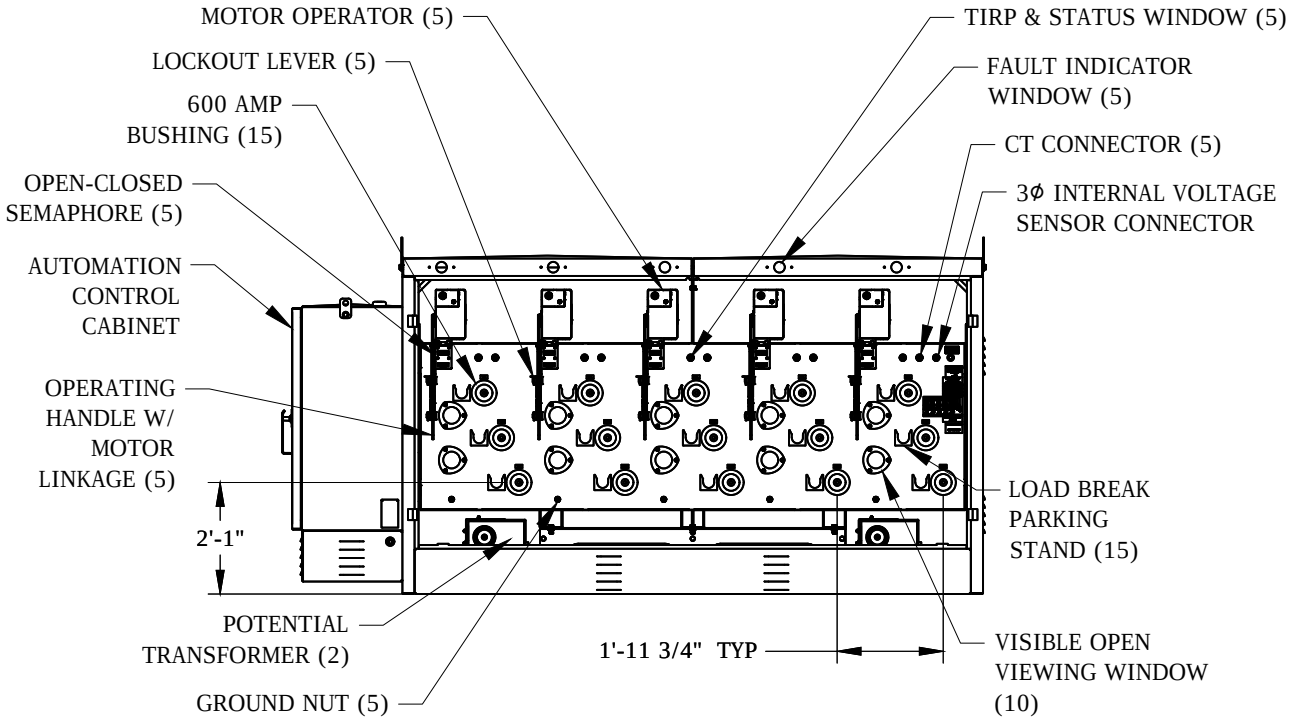

FIGURE 3
FRONT VIEW
DOORS REMOVED

TABLE OF CONTENTS

© 1998 - 2021 San Diego Gas & Electric Company. All rights reserved. Removal of this copyright notice without permission is not permitted under law.

REV	CHANGE	DR	BY	DSN	APV	DATE	REV	CHANGE	DR	BY	DSN	APV	DATE
C							F						
B	EDITORIAL CHANGES	PEI	NTB	FRC	CZH	11/23/2020	E						
A	ORIGINAL ISSUE	-	NB	JS	CZH	11/01/2020	D						

Indicates Latest Revision X | Completely Revised | New Page | Information Removed

SHEET
27 OF 50

SDG&E ELECTRIC UNDERGROUND CONSTRUCTION STANDARDS

INNOVATIVE SWTICHGEAR PAD AND WALL-MOUNT

UG3560.27

5-WAY SINGLE SIDED PADMOUNT 600A SCADA

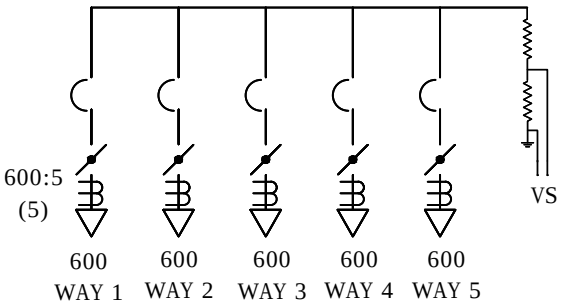

FIGURE 1
5-WAY SINGLE SIDED PADMOUNT 600A SCADA
CONNECTION DIAGRAM

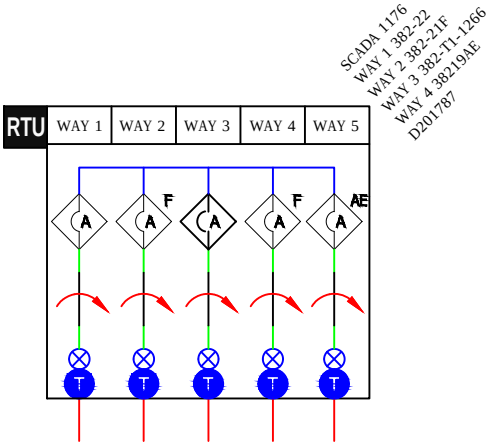

FIGURE 3
MAP SYMBOL

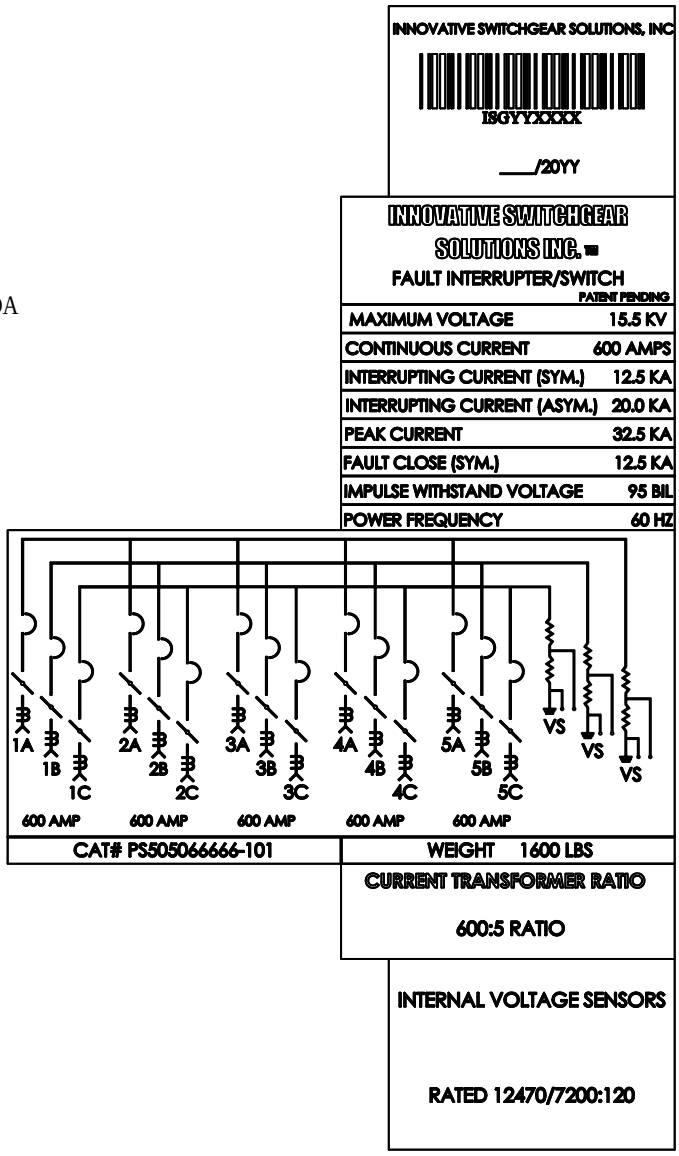

FIGURE 2
MANUFACTURER LABEL

TABLE 1

APPROXIMATE SYSTEM WEIGHTS	
DESCRIPTION	WEIGHT
PS505066666-101 SWITCH TANK	1,600 LBS
MOTOR OPERATORS	35 LBS EACH
STAND	170 LBS
POTENTIAL TRANSFORMERS	130 LBS EACH
ENCLOSURE	1,055 LBS
CONTROL CABINET	500 LBS

© 1998 - 2021 San Diego Gas & Electric Company. All rights reserved. Removal of this copyright notice without permission is not permitted under law.

REV	CHANGE	DR	BY	DSN	APV	DATE	REV	CHANGE	DR	BY	DSN	APV	DATE
C							F						
B	EDITORIAL CHANGES	PEI	NTB	FRC	CZH	11/23/2020	E						
A	ORIGINAL ISSUE	-	NB	JS	CZH	11/01/2020	D						

Indicates Latest Revision X Completely Revised | New Page | Information Removed

TABLE OF CONTENTS

5-WAY SINGLE SIDED PADMOUNT 600A SCADA

BILL OF MATERIALS:

ITEM	DESCRIPTION	QUANTITY	STANDARD PAGE	STOCK NUMBER	DESIGN UNITS
1	5-WAY SINGLE SIDED PADMOUNT 600A SCADA	1	-	S704728	ISG5WS
2	12KV, 600/200 AMP CONNECTIONS	AS REQ.	4181.19	-	-
3	ELBOW, FUSED, 2 SOLID, 30 AMP (FUSE INCLUDED)	AS REQ.	4191	S321680	CFE2SL
4	1/0 CONNECTOR POST	5	-	S262560	-
5	WIRE, 4/0 COPPER	AS REQ.	4520.8	S812764	4/0-SD
6	WIRE, #2 COPPER GROUND TRENCH	1	4510	S812816	TG-E-W
7	BOLT, EYE, STAINLESS STEEL	AS REQ.	-	S150528	-
8	CONNECTOR, SERVICE POST	4		S262560	SPCONN
9	NUT, CLAMPING CHANNEL	AS REQ.		S503520	-
10	SCREW, HEX HEAD CAP, BRONZE, 1/2" X 1-1/2"	AS REQ.	3711.3	S616192	-
11	WASHER, STANDARD FLAT ROUND, BRONZE, 1/2"	AS REQ.		S799488	-
12	WASHER, SPRING, LOCK	AS REQ.		S796416	-
13	BOLT, 3-1/2" X 1/2" STAINLESS STEEL, TIE DOWN	4	-	S148804	-
14	BRACKET, ANGLE, STAINLESS STEEL 2" X 3"	AS REQ.	4520.8	S166072	-
15	ANCHOR, 1/2" X 3-3/4" MOUNTING ON CONCRETE PAD	AS REQ.	-	S107654	-
16	SEALANT, CAULKING	1	3408	S631800	-
17	PADLOCK	AS REQ.	-	S514848	-
18	CABLE, #2 AWG, SOLID 1/C	AS REQ.	4003.1	S197600	-
19	5/8" X 14" MACHINE BOLT	AS REQ.	392.1	S154880	-
20	3440 & 3441 CONCRETE SKIRT	1	3560.38	S248205	CC-WLK
21	FIBERGLASS PADMOUNT	AS REQ.	3429.3	-	-
22	CONCRETE PADMOUNT	AS REQ.	3441	-	-

TABLE OF CONTENTS

© 1998 - 2021 San Diego Gas & Electric Company. All rights reserved. Removal of this copyright notice without permission is not permitted under law.

REV	CHANGE	DR	BY	DSN	APV	DATE	REV	CHANGE	DR	BY	DSN	APV	DATE
C							F						
B	EDITORIAL CHANGES	PEI	NTB	FRC	CZH	11/23/2020	E						
A	ORIGINAL ISSUE	-	NB	JS	CZH	11/01/2020	D						

Indicates Latest Revision X Completely Revised | New Page | Information Removed

SDG&E ELECTRIC UNDERGROUND CONSTRUCTION STANDARDS

INNOVATIVE SWTICHGEAR PAD AND WALL-MOUNT

UG3560.29

6-WAY SINGLE SIDED PADMOUNT 600A SCADA

ATTENTION:

6-WAY ISG SWITCHGEAR: WAYS 1-5 ARE FAULT INTERRUPTING CAPABLE.WAY 6 WILL ONLY BE USED AS A SWITCH OR TIE POSITION.

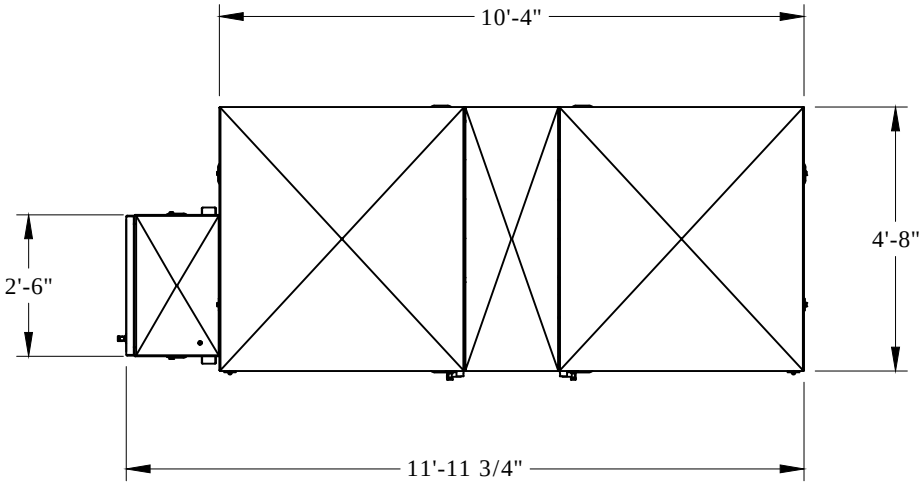

FIGURE 1
TOP VIEW

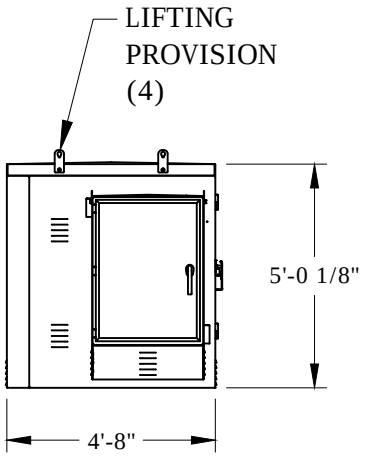

FIGURE 2
SIDE VIEW

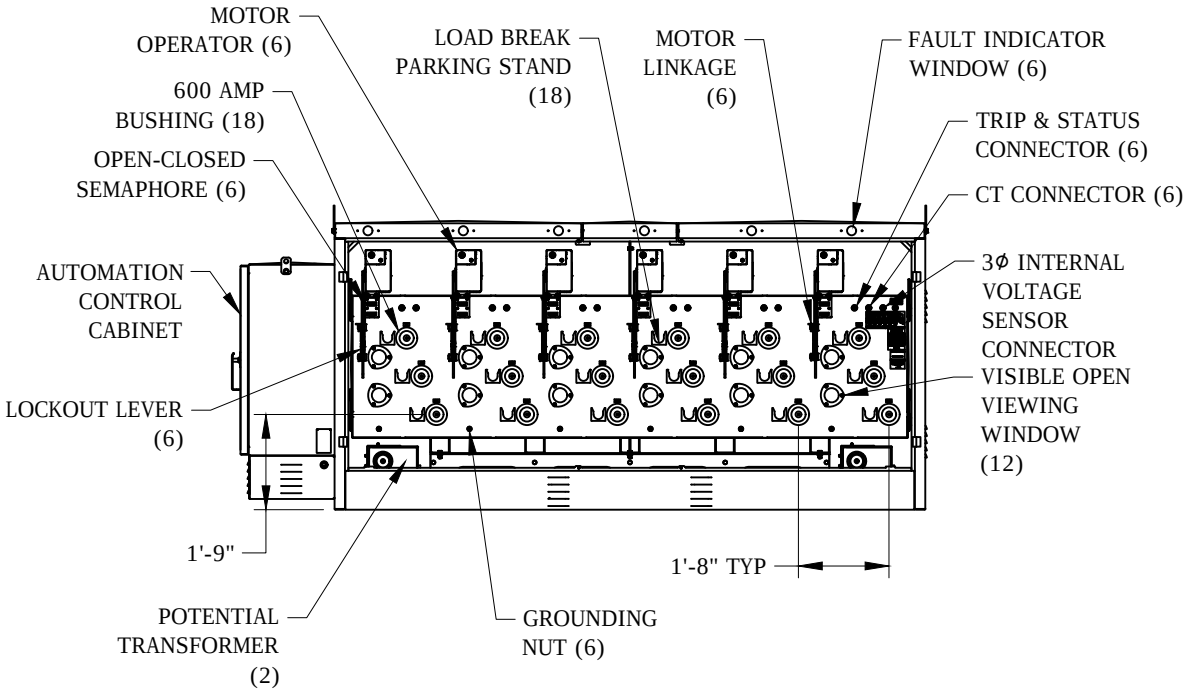

FIGURE 3
FRONT VIEW

© 1998 - 2021 San Diego Gas & Electric Company. All rights reserved. Removal of this copyright notice without permission is not permitted under law.

REV	CHANGE	DR	BY	DSN	APV	DATE	REV	CHANGE	DR	BY	DSN	APV	DATE
C							F						
B	EDITORIAL CHANGES	PEI	NTB	FRC	CZH	11/23/2020	E						
A	ORIGINAL ISSUE	-	NB	JS	CZH	11/01/2020	D						

Indicates Latest Revision X | Completely Revised | New Page | Information Removed

SDG&E ELECTRIC UNDERGROUND CONSTRUCTION STANDARDS

INNOVATIVE SWTICHGEAR PAD AND WALL-MOUNT

UG3560.30

6-WAY SINGLE SIDED PADMOUNT 600A SCADA

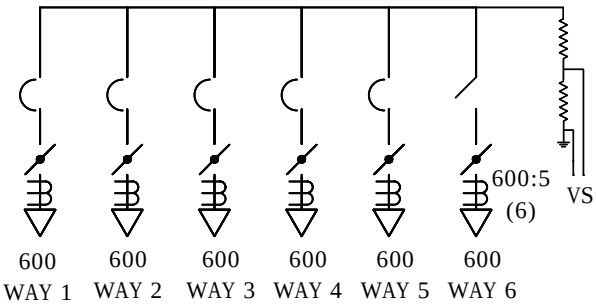

FIGURE 1
6-WAY SINGLE SIDED PADMOUNT 600A SCADA
CONNECTION DIAGRAM

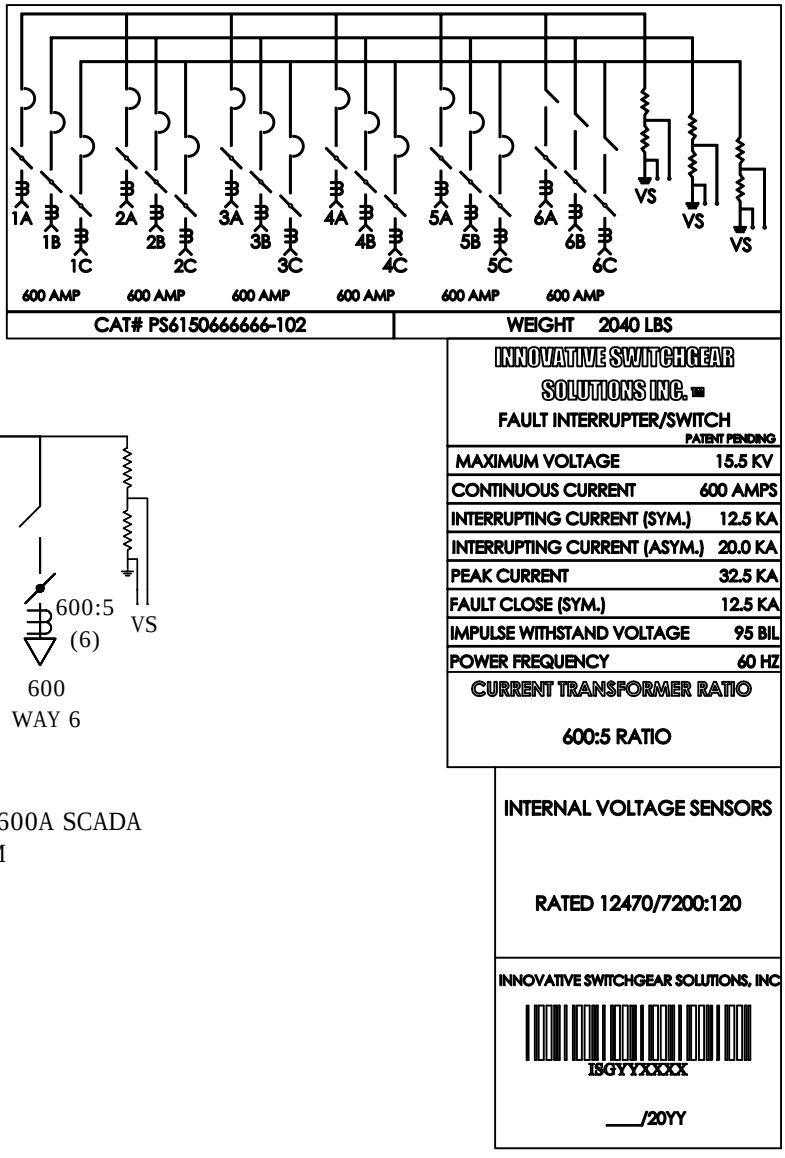

FIGURE 2
MANUFACTURER LABEL

TABLE 1

APPROXIMATE SYSTEM WEIGHTS	
DESCRIPTION	WEIGHT
PS6150666666-102 SWITCH TANK	2,040 LBS
STAND	240 LBS
MOTOR OPERATORS	35 LBS EACH
POTENTIAL TRANSFORMERS	105 LBS EACH
ENCLOSURE	1,215 LBS
AUTOMATION CONTROL CABINET	500 LBS

TABLE OF CONTENTS

©1998 - 2021 San Diego Gas & Electric Company. All rights reserved. Removal of this copyright notice without permission is not permitted under law.

REV	CHANGE	DR	BY	DSN	APV	DATE	REV	CHANGE	DR	BY	DSN	APV	DATE
C							F						
B	EDITORIAL CHANGES	PEI	NTB	FRC	CZH	11/23/2020	E						
A	ORIGINAL ISSUE	-	NB	JS	CZH	11/01/2020	D						

Indicates Latest Revision X | Completely Revised | New Page | Information Removed

6-WAY SINGLE SIDED PADMOUNT 600A SCADA

BILL OF MATERIALS:

ITEM	DESCRIPTION	QUANTITY	STANDARD PAGE	STOCK NUMBER	DESIGN UNITS
1	6-WAY SINGLE SIDED PADMOUNT 600A SCADA	1	-	S704810	ISG6WS
2	12KV, 600/200 AMP CONNECTIONS	AS REQ.	4181.19	-	-
3	ELBOW, FUSED, 2 SOLID, 30 AMP (FUSE INCLUDED)	AS REQ.	4191	S321680	CFE2SL
4	1/0 CONNECTOR POST	5	-	S262560	-
5	WIRE, 4/0 COPPER	AS REQ.	4520.8	S812764	4/0-SD
6	WIRE, #2 COPPER GROUND TRENCH	1	4510	S812816	TG-E-W
7	BOLT, EYE, STAINLESS STEEL	AS REQ.	-	S150528	-
8	CONNECTOR, SERVICE POST	4	3711.3 3679.2	S262560	SPCONN
9	NUT, CLAMPING CHANNEL	AS REQ.		S503520	-
10	SCREW, HEX HEAD CAP, BRONZE, 1/2" X 1-1/2"	AS REQ.		S616192	-
11	WASHER, STANDARD FLAT ROUND, BRONZE, 1/2"	AS REQ.		S799488	-
12	WASHER, SPRING, LOCK	AS REQ.		S796416	-
13	BOLT, 3-1/2" X 1/2" STAINLESS STEEL, TIE DOWN	4	-	S148804	-
14	BRACKET, ANGLE, STAINLESS STEEL 2" X 3"	AS REQ.	4520.8	S166072	-
15	ANCHOR, 1/2" X 3-3/4" MOUNTING ON CONCRETE PAD	AS REQ.	-	S107654	-
16	SEALANT, CAULKING	1	3408	S631800	-
17	PADLOCK	AS REQ.	-	S514848	-
18	CABLE, #2 AWG, SOLID 1/C	AS REQ.	4003.1	S197600	-
19	5/8" X 14" MACHINE BOLT	AS REQ.	392.1	S154880	-
20	FIBERGLASS BOX PAD	AS REQ.	3560.28	S514032	ISG6WY

TABLE OF CONTENTS

© 1998 - 2021 San Diego Gas & Electric Company. All rights reserved. Removal of this copyright notice without permission is not permitted under law.

REV	CHANGE	DR	BY	DSN	APV	DATE	REV	CHANGE	DR	BY	DSN	APV	DATE
C							F						
B	EDITORIAL CHANGES	PEI	NTB	FRC	CZH	11/23/2020	E						
A	ORIGINAL ISSUE	-	NB	JS	CZH	11/01/2020	D						

Indicates Latest Revision X | Completely Revised | New Page | Information Removed

SDG&E ELECTRIC UNDERGROUND CONSTRUCTION STANDARDS

INNOVATIVE SWTICHGEAR PAD AND WALL-MOUNT

UG3560.32

6-WAY SINGLE SIDED PADMOUNT SWITCHGEAR

ATTENTION:

SPECIALTY PAD FOR 6-WAY ISG ONLY

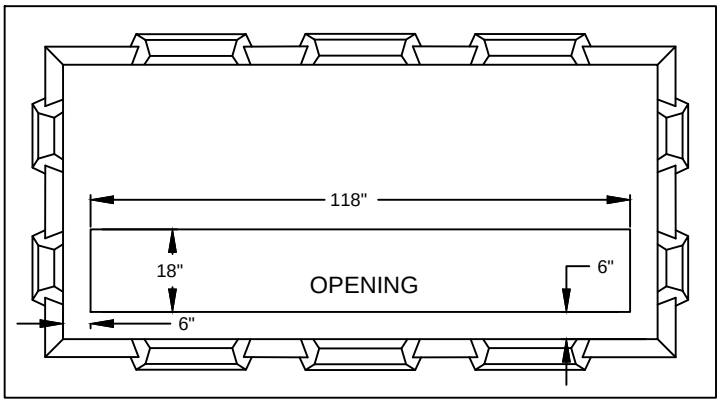

FIGURE 1
TOP VIEW

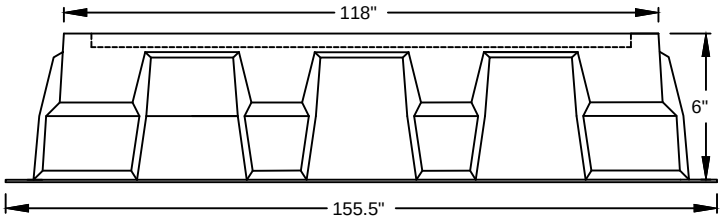

FIGURE 2
FRONT VIEW

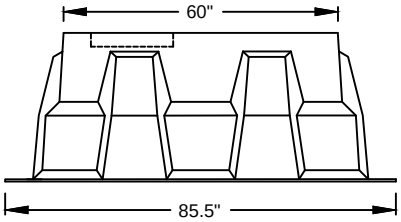

FIGURE 3
SIDE VIEW

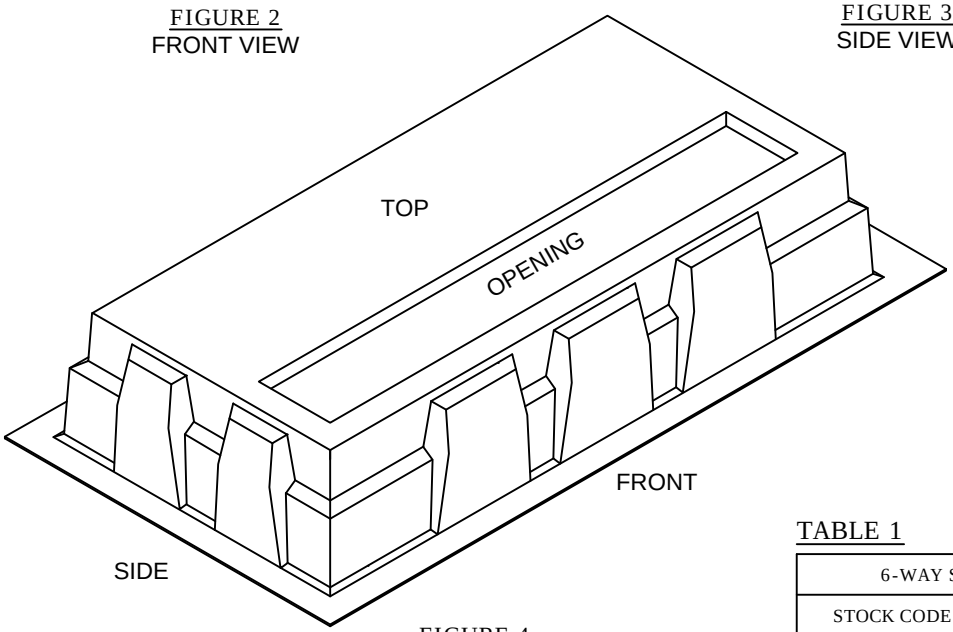

FIGURE 4
ISOMETRIC VIEW

TABLE 1

6-WAY SPECIALTY PAD	
STOCK CODE	AU
S514032	ISG6WY

© 1998 - 2021 San Diego Gas & Electric Company. All rights reserved. Removal of this copyright notice without permission is not permitted under law.

REV	CHANGE	DR	BY	DSN	APV	DATE	REV	CHANGE	DR	BY	DSN	APV	DATE
C							F						
B	EDITORIAL CHANGES	PEI	NTB	FRC	CZH	11/23/2020	E						
A	ORIGINAL ISSUE	-	NB	JS	CZH	11/01/2020	D						

Indicates Latest Revision X | Completely Revised | New Page | Information Removed

SDG&E ELECTRIC UNDERGROUND CONSTRUCTION STANDARDS

INNOVATIVE SWTICHGEAR PAD AND WALL-MOUNT

UG3560.33

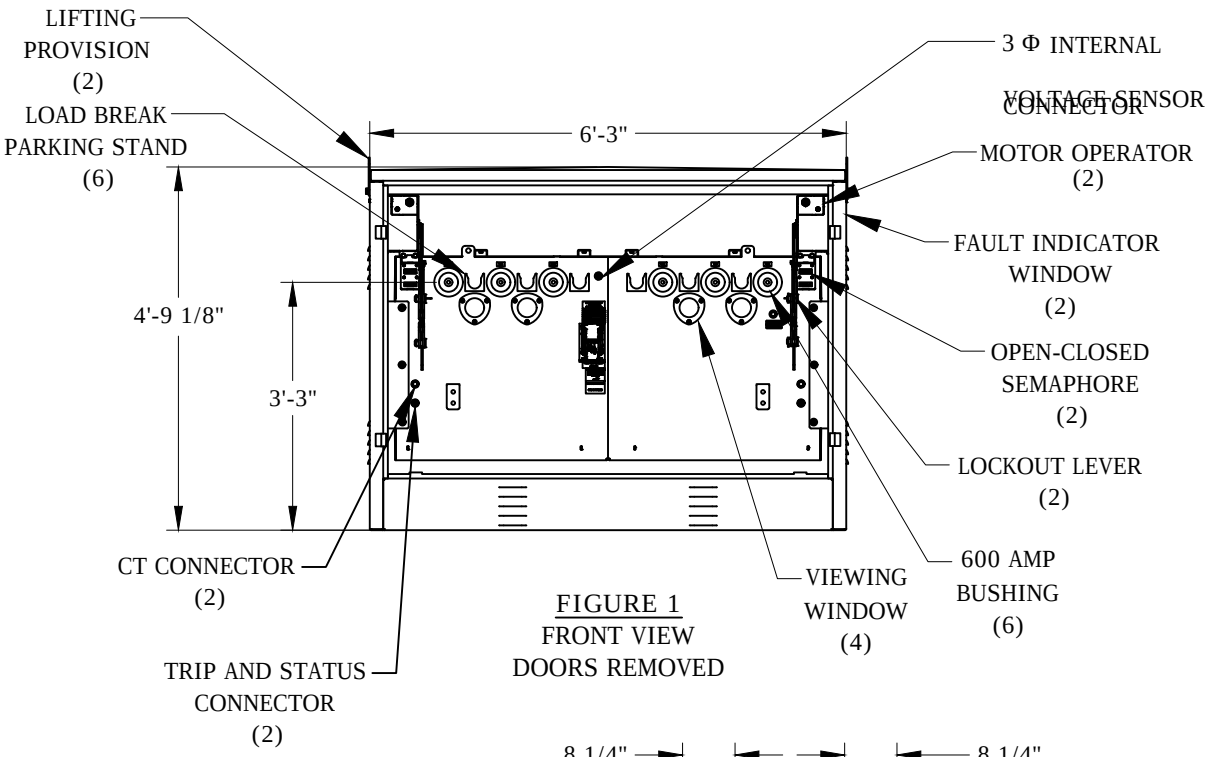

FIGURE 1
FRONT VIEW
DOORS REMOVED

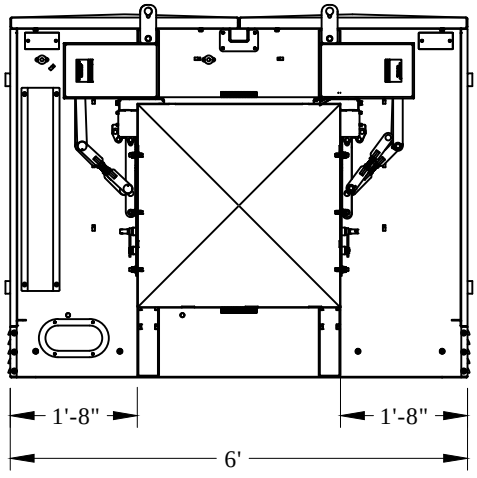

FIGURE 2
SIDE VIEW

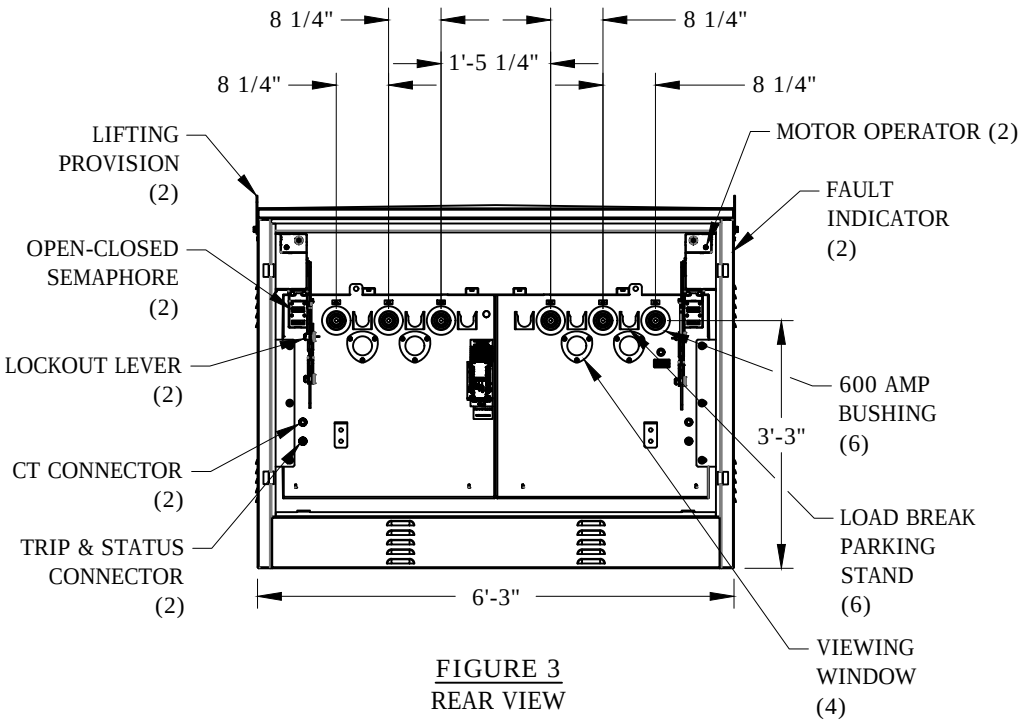

FIGURE 3
REAR VIEW
DOORS REMOVED

TABLE OF CONTENTS

© 1998 - 2021 San Diego Gas & Electric Company. All rights reserved. Removal of this copyright notice without permission is not permitted under law.

REV	CHANGE	DR	BY	DSN	APV	DATE	REV	CHANGE	DR	BY	DSN	APV	DATE
C							F						
B	EDITORIAL CHANGES	PEI	NTB	FRC	CZH	11/23/2020	E						
A	ORIGINAL ISSUE	-	NB	JS	CZH	11/01/2020	D						

Indicates Latest Revision X | Completely Revised | New Page | Information Removed

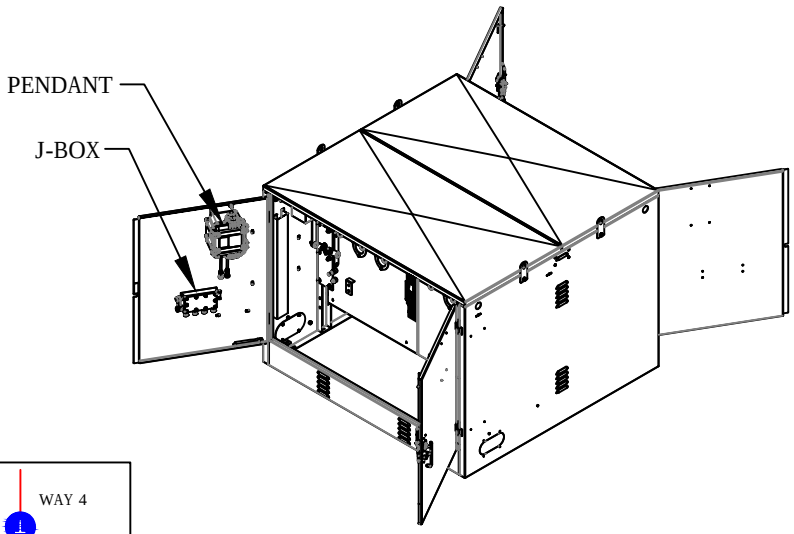

FIGURE 1
ISOMETRIC VIEW

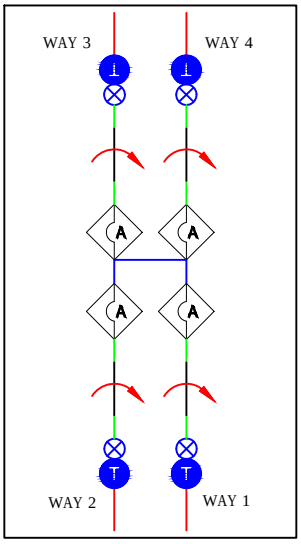

FIGURE 3
MAP SYMBOL

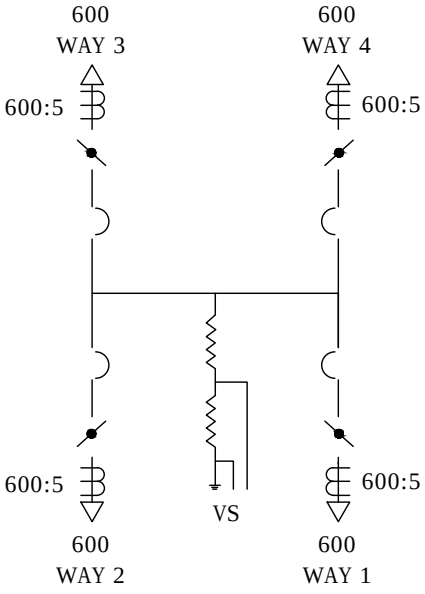

FIGURE 4
4-WAY DOUBLE SIDED PADMOUNT 600A
MANUAL CONNECTION DIAGRAM

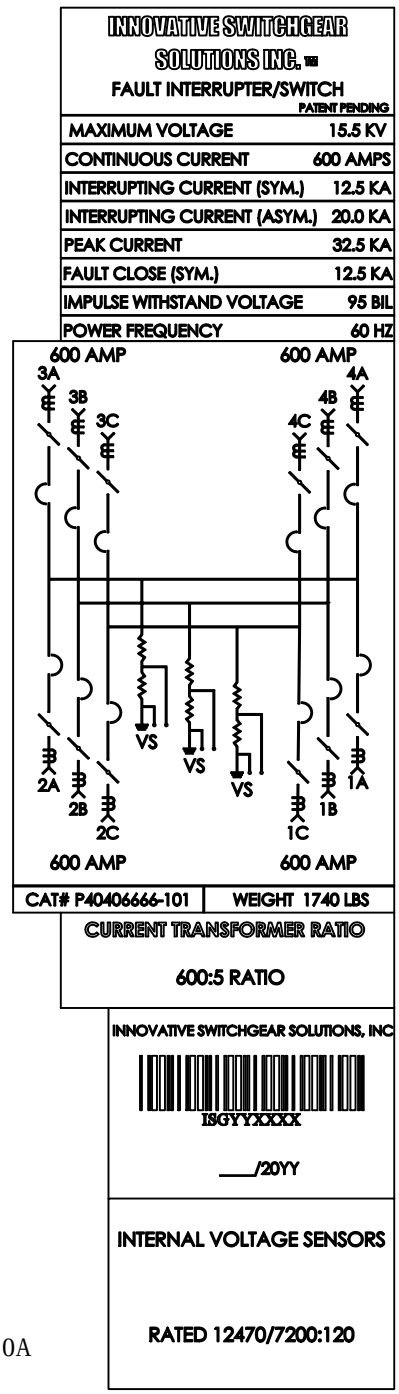

FIGURE 2
MANUFACTURER LABEL

TABLE 1

APPROXIMATE SYSTEM WEIGHTS	
DESCRIPTION	WEIGHT
P40406666-101 SWITCH TANK	1,740 LBS
MOTOR OPERATORS	35 LBS EACH
ENCLOSURE	950 LBS
J-BOX	10 LBS
PENDANT	25 LBS

© 1998 - 2021 San Diego Gas & Electric Company. All rights reserved. Removal of this copyright notice without permission is not permitted under law.

REV	CHANGE	DR	BY	DSN	APV	DATE	REV	CHANGE	DR	BY	DSN	APV	DATE
C							F						
B	EDITORIAL CHANGES	PEI	NTB	FRC	CZH	11/23/2020	E						
A	ORIGINAL ISSUE	-	NB	JS	CZH	11/01/2020	D						

Indicates Latest Revision X | Completely Revised | New Page | Information Removed

TABLE OF CONTENTS

4-WAY DOUBLE SIDED PADMOUNT 600A MANUAL/NON-SCADA

BILL OF MATERIALS:

ITEM	DESCRIPTION	QUANTITY	STANDARD PAGE	STOCK NUMBER	DESIGN UNITS
1	4-WAY DOUBLE SIDED PADMOUNT 600A MANUAL/NON-SCADA	1	-	S704742	IS4P6M
2	12KV, 600/200 AMP CONNECTIONS	AS REQ.	4181.19	-	-
3	ELBOW, FUSED, 2 SOLID, 30 AMP (FUSE INCLUDED)	AS REQ.	4191	S321680	CFE2SL
4	1/0 CONNECTOR POST	5	-	S262560	-
5	WIRE, 4/0 COPPER	AS REQ.	4520.8	S812764	4/0-SD
6	WIRE, #2 COPPER GROUND TRENCH	1	4510	S812816	TG-E-W
7	BOLT, EYE, STAINLESS STEEL	AS REQ.	-	S150528	-
8	CONNECTOR, SERVICE POST	4		S262560	SPCONN
9	NUT, CLAMPING CHANNEL	AS REQ.		S503520	-
10	SCREW, HEX HEAD CAP, BRONZE, 1/2" X 1-1/2"	AS REQ.	3711.3	S616192	-
11	WASHER, STANDARD FLAT ROUND, BRONZE, 1/2"	AS REQ.		S799488	-
12	WASHER, SPRING, LOCK	AS REQ.		S796416	-
13	BOLT, 3-1/2" X 1/2" STAINLESS STEEL, TIE DOWN	4	-	S148804	-
14	BRACKET, ANGLE, STAINLESS STEEL 2" X 3"	AS REQ.	4520.8	S166072	-
15	ANCHOR, 1/2" X 3-3/4" MOUNTING ON CONCRETE PAD	AS REQ.	-	S107654	-
16	5/8" X 14" MACHINE BOLT	AS REQ.	392.1	S154880	-
17	PADLOCK	AS REQ.	-	S514848	-
18	CABLE, #2 AWG, SOLID 1/C	AS REQ.	4003.1	S197600	-
19	FIBERGLASS BOX PAD	AS REQ.	3423.3	S514028	3423BP

TABLE OF CONTENTS

© 1998 - 2021 San Diego Gas & Electric Company. All rights reserved. Removal of this copyright notice without permission is not permitted under law.

REV	CHANGE	DR	BY	DSN	APV	DATE	REV	CHANGE	DR	BY	DSN	APV	DATE
C							F						
B	EDITORIAL CHANGES	PEI	NTB	FRC	CZH	11/23/2020	E						
A	ORIGINAL ISSUE	-	NB	JS	CZH	11/01/2020	D						

Indicates Latest Revision X | Completely Revised | New Page | Information Removed

SDG&E ELECTRIC UNDERGROUND CONSTRUCTION STANDARDS

INNOVATIVE SWTICHGEAR PAD AND WALL-MOUNT

UG3560.36

4-WAY DOUBLE SIDED PADMOUNT 600A SCADA

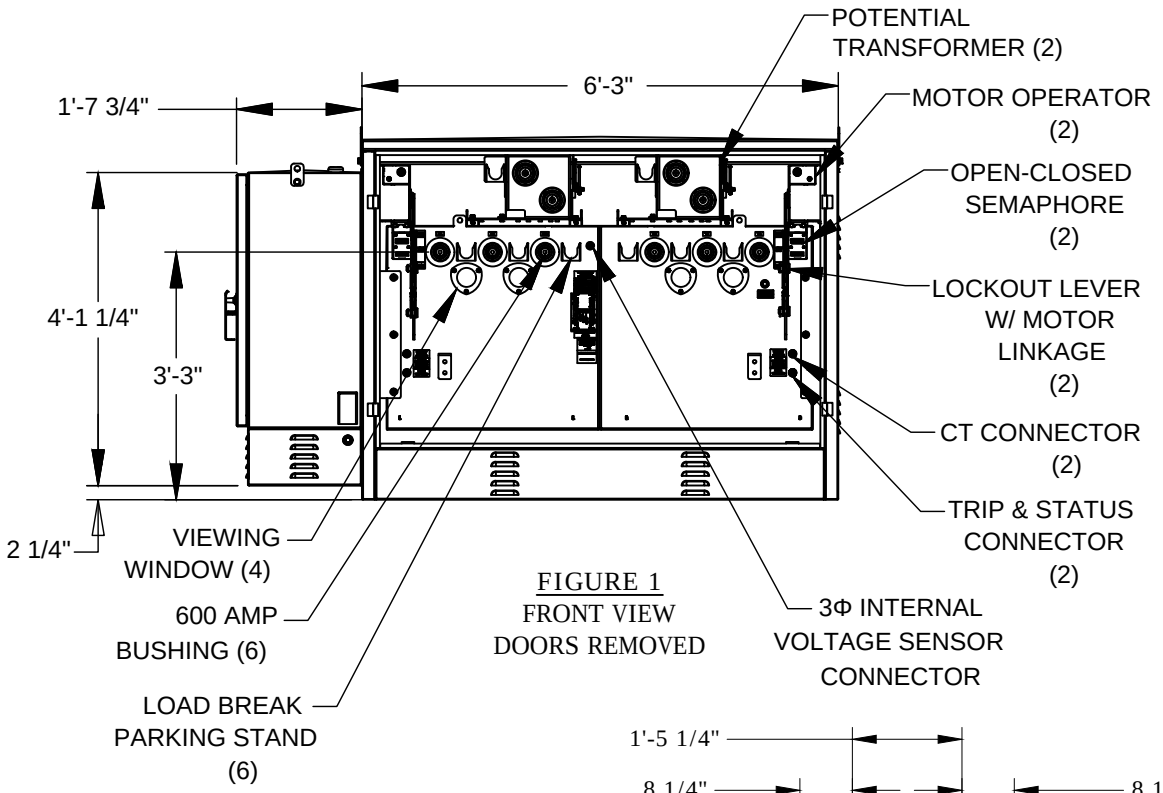

FIGURE 1
FRONT VIEW
DOORS REMOVED

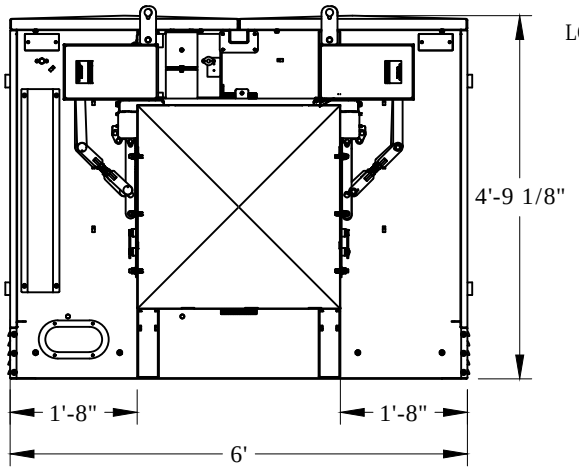

FIGURE 2
SIDE VIEW

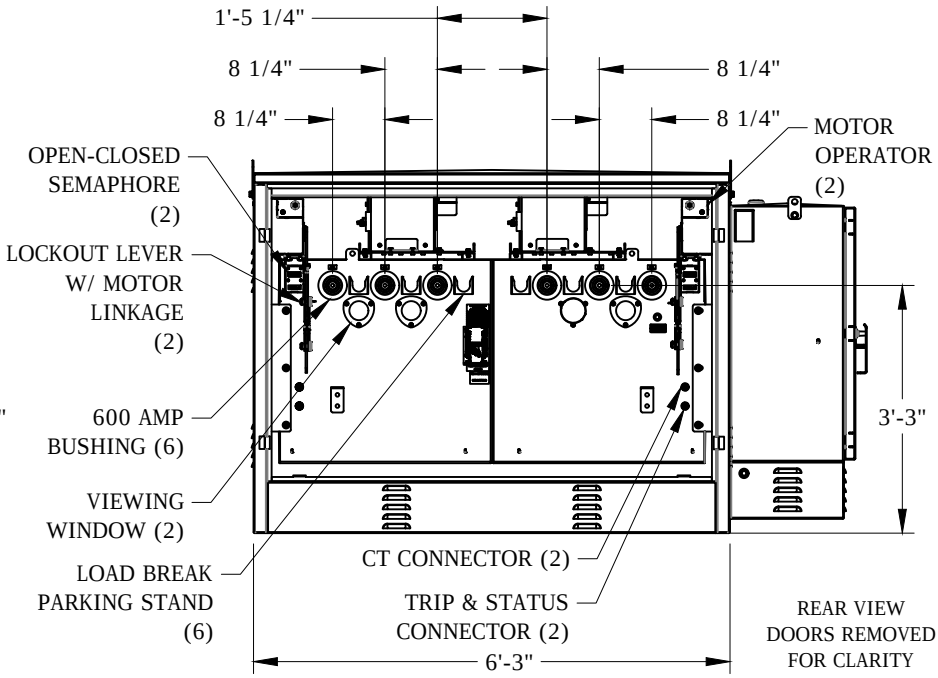

FIGURE 3
REAR VIEW

© 1998 - 2021 San Diego Gas & Electric Company. All rights reserved. Removal of this copyright notice without permission is not permitted under law.

REV	CHANGE	DR	BY	DSN	APV	DATE	REV	CHANGE	DR	BY	DSN	APV	DATE
C							F						
B	EDITORIAL CHANGES	PEI	NTB	FRC	CZH	11/23/2020	E						
A	ORIGINAL ISSUE	-	NB	JS	CZH	11/01/2020	D						

Indicates Latest Revision X | Completely Revised | New Page | Information Removed

4-WAY DOUBLE SIDED PADMOUNT 600A SCADA

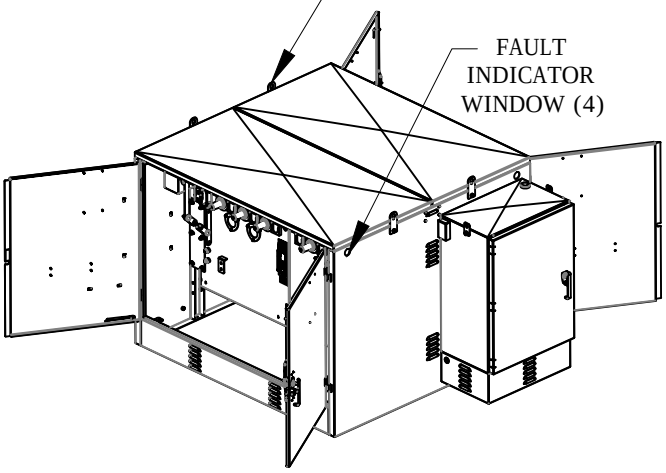

FIGURE 1
ISOMETRIC VIEW

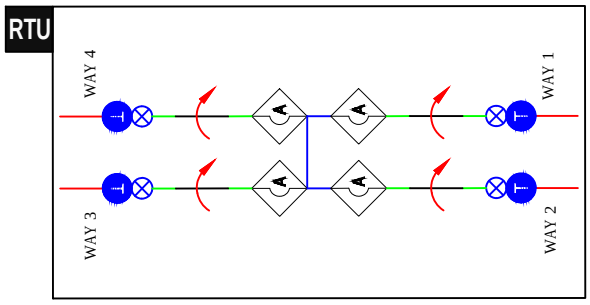

FIGURE 3
MAP SYMBOL

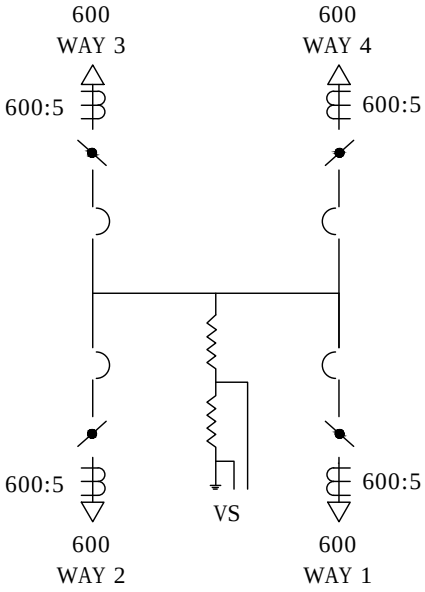

FIGURE 4
4-WAY DOUBLE SIDED PADMOUNT 600A SCADA
CONNECTION DIAGRAM

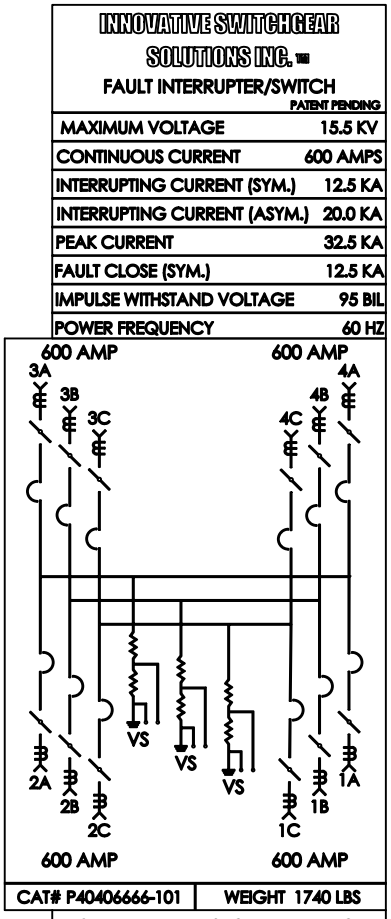

FIGURE 2
MANUFACTURER LABEL

TABLE 1

APPROXIMATE SYSTEM WEIGHTS	
DESCRIPTION	WEIGHT
P40406666-101 SWITCH TANK	1,740 LBS
MOTOR OPERATORS	35 LBS EACH
POTENTIAL TRANSFORMERS	130 LBS EACH
ENCLOSURE	950 LBS
CONTROL CABINET	500 LBS

TABLE OF CONTENTS

© 1998 - 2021 San Diego Gas & Electric Company. All rights reserved. Removal of this copyright notice without permission is not permitted under law.

REV	CHANGE	DR	BY	DSN	APV	DATE	REV	CHANGE	DR	BY	DSN	APV	DATE
C							F						
B	EDITORIAL CHANGES	PEI	NTB	FRC	CZH	11/23/2020	E						
A	ORIGINAL ISSUE	-	NB	JS	CZH	11/01/2020	D						

Indicates Latest Revision | X | Completely Revised | New Page | Information Removed

SDG&E ELECTRIC UNDERGROUND CONSTRUCTION STANDARDS

INNOVATIVE SWTICHGEAR PAD AND WALL-MOUNT

UG3560.38

4-WAY DOUBLE SIDED PADMOUNT 600A SCADA

BILL OF MATERIALS:

ITEM	DESCRIPTION	QUANTITY	STANDARD PAGE	STOCK NUMBER	DESIGN UNITS
1	4-WAY DOUBLE SIDED PADMOUNT 600A SCADA	1	-	S704726	ISG42P
2	12KV, 600/200 AMP CONNECTIONS	AS REQ.	4181.19	-	-
3	ELBOW, FUSED, 2 SOLID, 30 AMP (FUSE INCLUDED)	AS REQ.	4191	S321680	CFE2SL
4	1/0 CONNECTOR POST	5	-	S262560	-
5	WIRE, 4/0 COPPER	AS REQ.	4520.8	S812764	4/0-SD
6	WIRE, #2 COPPER GROUND TRENCH	1	4510	S812816	TG-E-W
7	BOLT, EYE, STAINLESS STEEL	AS REQ.	-	S150528	-
8	CONNECTOR, SERVICE POST	4		S262560	SPCONN
9	NUT, CLAMPING CHANNEL	AS REQ.		S503520	-
10	SCREW, HEX HEAD CAP, BRONZE, 1/2" X 1-1/2"	AS REQ.	3711.3	S616192	-
11	WASHER, STANDARD FLAT ROUND, BRONZE, 1/2"	AS REQ.		S799488	-
12	WASHER, SPRING, LOCK	AS REQ.		S796416	-
13	BOLT, 3-1/2" X 1/2" STAINLESS STEEL, TIE DOWN	4	-	S148804	-
14	BRACKET, ANGLE, STAINLESS STEEL 2" X 3"	AS REQ.	4520.8	S166072	-
15	ANCHOR, 1/2" X 3-3/4" MOUNTING ON CONCRETE PAD	AS REQ.	-	S107654	-
16	5/8" X 14" MACHINE BOLT	AS REQ.	392.1	S154880	-
17	PADLOCK	AS REQ.	-	S514848	-
18	CABLE, #2 AWG, SOLID 1/C	AS REQ.	4003.1	S197600	-
19	FIBERGLASS BOX PAD	AS REQ.	3423.3	S514028	3423BP

TABLE OF CONTENTS

© 1998 - 2021 San Diego Gas & Electric Company. All rights reserved. Removal of this copyright notice without permission is not permitted under law.

REV	CHANGE	DR	BY	DSN	APV	DATE	REV	CHANGE	DR	BY	DSN	APV	DATE
C							F						
B	EDITORIAL CHANGES	PEI	NTB	FRC	CZH	11/23/2020	E						
A	ORIGINAL ISSUE	-	NB	JS	CZH	11/01/2020	D						

Indicates Latest Revision X | Completely Revised | New Page | Information Removed

SDG&E ELECTRIC UNDERGROUND CONSTRUCTION STANDARDS

INNOVATIVE SWTICHGEAR PAD AND WALL-MOUNT

TABLE OF CONTENTS

INSTALLATION:

A. FOR SINGLE PADMOUNT APPLICATIONS, THE SWITH TANK IS SHIPPED INSIDE THE ENCLOSURE ON ITS BACK WITH THE BUSHINGS FACING UP. THE SWITCH STAND AND ANY OPTIONAL ITEMS TO COMPLETE THE PACKAGE WILL BE SHIPPED INSIDE THE PADMOUNT ENCLOSURE. SEE FIGURE 1.



FIGURE 1

B. FOUR INTERNAL AND TWO EXTERNAL BOLTS SECURE THE ENCLOSURE TO THE PALLET. REMOVE THESE BOLTS TO LIFT THE ENCLOSURE FROM THE PALLET. THE DOORS MAY BE OPENED OR REMOVED TO HELP GUIDE THE ENCLOSURE OVER THE EQUIPMENT. SEE FIGURE 2 AND 3.



FIGURE 2



FIGURE 3

© 1998 - 2021 San Diego Gas & Electric Company. All rights reserved. Removal of this copyright notice without permission is not permitted under law.

REV	CHANGE	DR	BY	DSN	APV	DATE	REV	CHANGE	DR	BY	DSN	APV	DATE
C							F						
B	EDITORIAL CHANGES	PEI	NTB	FRC	CZH	11/23/2020	E						
A	ORIGINAL ISSUE	-	NB	JS	CZH	11/01/2020	D						

INSTALLATION (CON'T):

C. THREE LIFTING PROVISIONS ARE PROVIDED ON BOTH ENDS OF THE SWITCH TANK. THESE LIFTING PROVISIONS ROTATE 360 DEGREES. SEE FIGURE 4 AND 5.



FIGURE 4



FIGURE 5

D. MOTOR OPERATOR LINKAGE REQUIRES 20-INCHES OF SPACE IN THE OPEN POSITION TO NOT IMPACT THE PADMOUNT ENCLOSURE DOORS. LEAVE 21 ½ INCHES FROM THE FACE OF THE SWITCH TO THE PADMOUNT ENCLOSURE DOORS. SEE FIGURE 6.

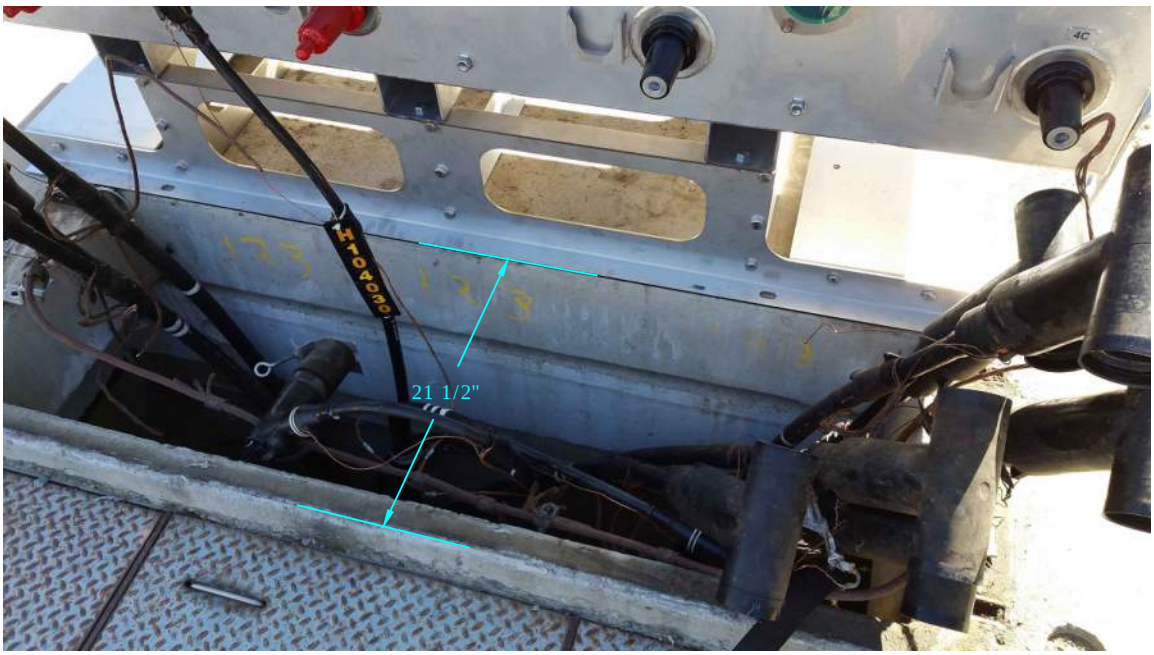

FIGURE 6

©1998 - 2021 San Diego Gas & Electric Company. All rights reserved. Removal of this copyright notice without permission is not permitted under law.

REV	CHANGE	DR	BY	DSN	APV	DATE	REV	CHANGE	DR	BY	DSN	APV	DATE
C							F						
B	EDITORIAL CHANGES	PEI	NTB	FRC	CZH	11/23/2020	E						
A	ORIGINAL ISSUE	-	NB	JS	CZH	11/01/2020	D						

X Indicates Latest Revision | Completely Revised | New Page | Information Removed

INSTALLATION (CON'T):

E. MOTOR OPERATORS AND LINKAGES ARE MATED TO THE SWITCH AND IDENTIFIED AT THE MANUFACTURING PLANT. MOUNT MOTOR OPERATORS WITH CORRESPONDING WAYS AFTER THE CABLE HAS BEEN LANDED AND PRIOR TO MOUNTING THE ENCLOSURE. SEE FIGURE 7 AND 8.



FIGURE 7

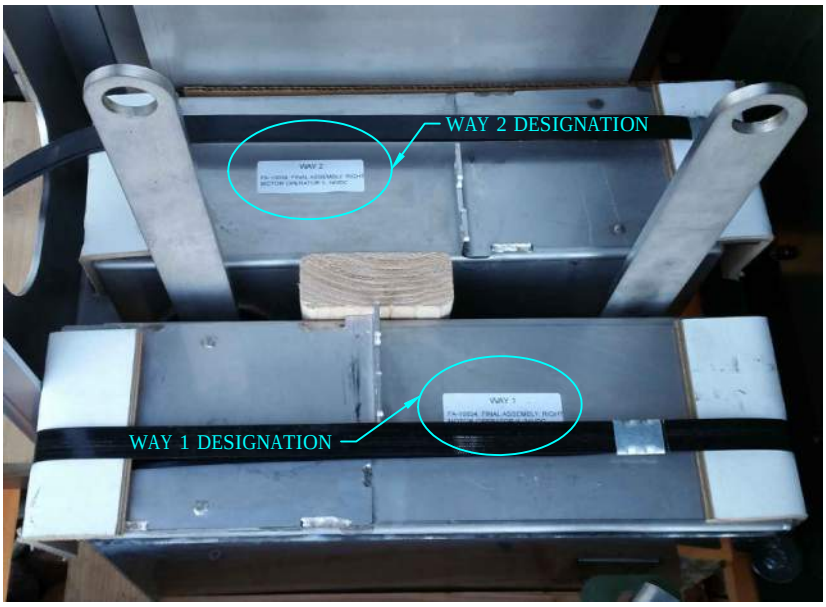

FIGURE 8

F. INNOVATIVE SWITCH GEAR HAS A UNIQUE FEATURE ALLOWING THE ENCLOSURE TO BE REMOVED WHILE THE SWITCH REMAINS INTACT. THIS WILL BETTER FACILITATE IN WIRE PULLING AND SWITCH MAKE-UP. SWITCH STAND AND ENCLOSURE MUST BE SECURED TO THE PAD AND GROUNDED INDIVIDUALLY.

G. ON NON-SCADA UNITS, ONCE THE ENCLOSURE IS SECURE, ATTACH THE CABLES FROM THE JUNCTION BOX TO THE MOTOR OPERATORS. EACH CABLE IS DESIGNATED AND MARKED WITH A WAY POSITION. SEE FIGURE 9.



FIGURE 9

© 1998 - 2021 San Diego Gas & Electric Company. All rights reserved. Removal of this copyright notice without permission is not permitted under law.

REV	CHANGE	DR	BY	DSN	APV	DATE	REV	CHANGE	DR	BY	DSN	APV	DATE
C							F						
B	EDITORIAL CHANGES	PEI	NTB	FRC	CZH	11/23/2020	E						
A	ORIGINAL ISSUE	-	NB	JS	CZH	11/01/2020	D						

TABLE OF CONTENTS

INSTALLATION (CON'T):

H. THE POLYCARBONATE VIEWING WINDOWS FOR THE CLOSED/OPEN VACUUM CONTACT SEMAPHORE ARE COVERED AT THE FACTORY WITH GREEN ULTRAVIOLET PROTECTIVE TAPE. REMOVE THE TAPE UPON COMPLETION OF INSTALLATION. IF THE TAPE IS INADVERTENTLY REMOVED PRIOR TO INSTALLATION, PLEASE COVER THE LENSES OR APPLY ULTRAVIOLET PROTECTIVE TAPE TO KEEP THE WINDOWS FROM YELLOWING. SEE FIGURE 10.



FIGURE 10

J. THE ONE OPERATING HANDLE OPENS THE VACUUM INTERRUPTS FIRST SO THAT THE ELECTRICAL INTERRUPTION IS ALWAYS PERFORMED WITHIN THE VACUUM INTERRUPTS AND THEN THE VISIBLE OPEN ISOLATION POINT (VOIP) SWITCH OPENS.

K. FOR PADMOUNT VVIEW OF THE CONTACTS:

1. FOR SINGLE SIDE PADMOUNT, VAULTMOUNT, AND SUBMERSIBLE, THE VIEW OF THE OPEN CONTACTS IS FROM THE TOP OF THE MECHANISM. SEE FIGURES 11 AND 12 BELOW.

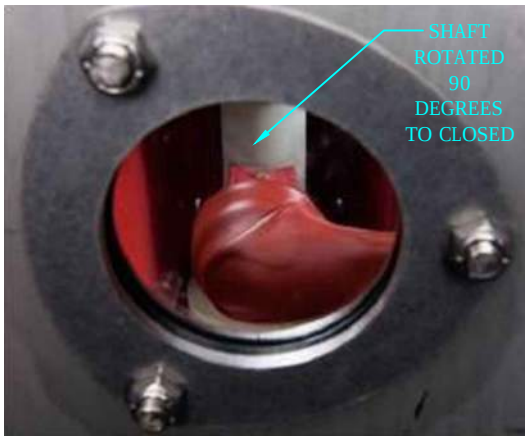

VISIBLE OPEN SHAFT "CLOSED"

FIGURE 11

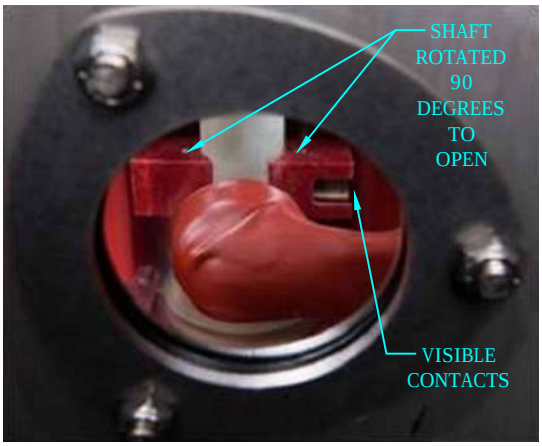

VISIBLE OPEN SHAFT "OPEN", ISOLATED AND VISIBLE

FIGURE 12

© 1998 - 2021 San Diego Gas & Electric Company. All rights reserved. Removal of this copyright notice without permission is not permitted under law.

REV	CHANGE	DR	BY	DSN	APV	DATE	REV	CHANGE	DR	BY	DSN	APV	DATE
C							F						
B	EDITORIAL CHANGES	PEI	NTB	FRC	CZH	11/23/2020	E						
A	ORIGINAL ISSUE	-	NB	JS	CZH	11/01/2020	D						

X Indicates Latest Revision | Completely Revised | New Page | Information Removed

INSTALLATION (CON'T):

2. FOR DOUBLE SIDE PADMOUNT APPLICATIONS, THE VIEW OF THE OPEN CONTACTS IS FROM THE SIDE OF THE MECHANISM, SEE FIGURES 13 AND 14.



VISIBLE OPEN SHAFT
"OPEN"

FIGURE 13



VISIBLE CLOSED SHAFT
"CLOSED"

FIGURE 14

L. PENDANT CONTROLLERS ARE PROVIDED TO POWER AND CONTROL ALL THE MOTOR OPERATORS FROM OUTSIDE THE ENCLOSURE. THESE PORTABLE CONTROLLERS ARE DESIGNED TO PROVIDE FIELD PERSONNEL THE ABILITY TO PLUG INTO A JUNCTION BOX TO DETERMINE STATUS OF ALL THE MOTORS AND TO CONTROL MULTIPLE MOTOR OPERATORS LOCALLY WITH EXTERNAL 120V AC POWER PLUGGED INTO THE PENDANT CONTROL. CAUTION: THE "CONTROL HEALTHY" LIGHT WILL ONLY LIGHT WHEN THE TOGGLE SWITCH IS TURNED ON AN WHEN CONNECTED TO A "PURE SINE WAVE" SOURCE OF 120V AC POWER. SQUARE SINE WAVE OR MODIFIED SINE WAVE INVERTERS WILL NOT POWER THIS DEVICE AND MAY DAMAGE THE CONTROL. SEE FIGURE 15.

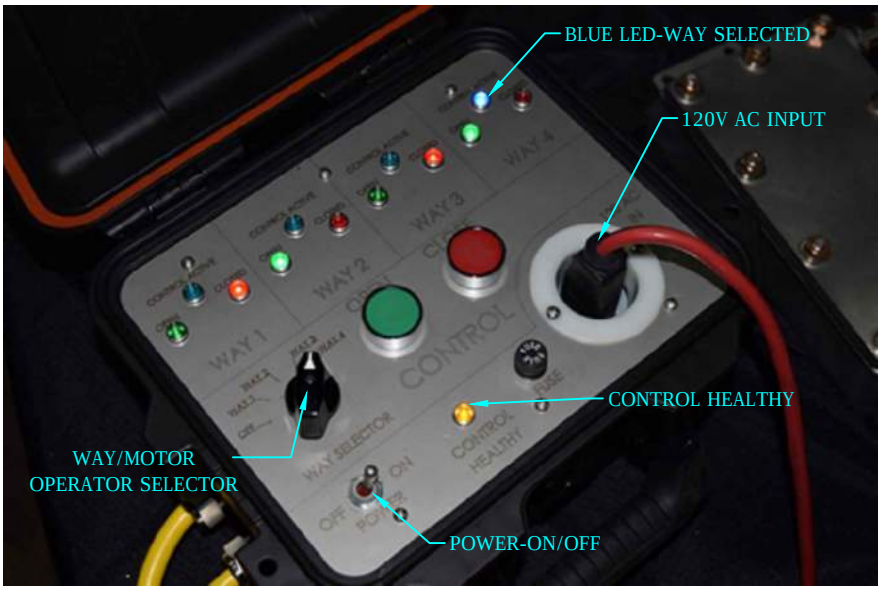

FIGURE 15

© 1998 - 2021 San Diego Gas & Electric Company. All rights reserved. Removal of this copyright notice without permission is not permitted under law.

REV	CHANGE	DR	BY	DSN	APV	DATE	REV	CHANGE	DR	BY	DSN	APV	DATE
C							F						
B	EDITORIAL CHANGES	PEI	NTB	FRC	CZH	11/23/2020	E						
A	ORIGINAL ISSUE	-	NB	JS	CZH	11/01/2020	D						

X Indicates Latest Revision | Completely Revised | New Page | Information Removed

INSTALLATION (CON'T):

M. PENDANT CONTROLLER MUST BE CONNECTED TO THE JUNCTION BOX PICTURED BELOW TO OPERATE MOTOR OPERATORS. JUNCTION BOX CONNECTIONS ARE SEVEN-PIN AND 12-PIN, SO THEY CANNOT BE INSTALLED INCORRECTLY. SEE FIGURE 16.

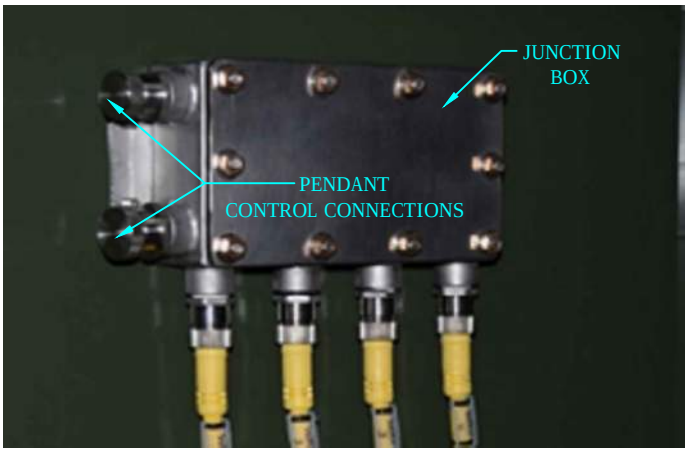

FIGURE 16

N. WITH THE ABILITY TO REMOTELY OPERATE THE MOTOR OPERATIONS ON THE SWITCH. THE ACTUATOR ARMS SHALL NOT BE LOCKED.

SCADA UNITS

O. ALL SOURCE AND TIE POSITIONS SHALL BE PHASE IDENTIFIED WITH THE AP30. THE SWITCH SHALL BE MARKED FOR "A", "B" AND "C" PHASES.

P. THERE ARE TWO REDUNDANT POTENTIAL TRANSFORMERS (PTs) THAT ARE CONNECTED PHASE TO GROUND. PTs TO BE CONNECT ON THE SOURCE SIDE AND TIE POSITION OF THE SWITCH (IF NO TIE EXISTS ON SWITCH, CHOOSE POSITION WITH DOWNSTREAM TIE SWITCH). IF APPLICABLE, ON THE CENTER PHASE POSITION. PHASE CONNECTION TO THE P.T. IS TO BE MADE WITH A FUSED ELBOW AS THE P.T. DOES NOT HAVE ITS OWN PROTECTION. GROUND ELBOW TO BE STRIPPED AND CONNECTED TO A COPPER TAIL AND THEN HARD TAPPED TO THE GROUND RING BUS. SEE FIGURE 17 AND 18.



FIGURE 17



FIGURE 18

© 1998 - 2021 San Diego Gas & Electric Company. All rights reserved. Removal of this copyright notice without permission is not permitted under law.

REV	CHANGE	DR	BY	DSN	APV	DATE	REV	CHANGE	DR	BY	DSN	APV	DATE
C							F						
B	EDITORIAL CHANGES	PEI	NTB	FRC	CZH	11/23/2020	E						
A	ORIGINAL ISSUE	-	NB	JS	CZH	11/01/2020	D						

X Indicates Latest Revision | Completely Revised | New Page | Information Removed

SDG&E ELECTRIC UNDERGROUND CONSTRUCTION STANDARDS

INNOVATIVE SWTICHGEAR PAD AND WALL-MOUNT

UG3560.45

TABLE OF CONTENTS

INSTALLATION (CON'T):

Q. WHEN INSTALLING THE PTs, WE MUST BOND ALL OF THE BASE PLATES OF H2 AND H1 TO GROUND SOURCE/RING BUS. FAILURE TO DO SO WILL RESULT IN THE RING BUS HAVING HIGH VOLTAGE CAPABILITY AND COULD RESULT IN UNFAVORABLE CONSEQUENCES. (ALL RED ARROWS ARE POINTING TO BONDS)



FIGURE 19



FIGURE 20



FIGURE 21

R. WARNING: VOLTAGE SENSORS ARE TO BE GROUNDED PRIOR TO ENERGIZING. VOLTAGE SENSOR ARE TO BE CONNECTED TO THE TIE POSITION OF THE SWITCH. IF APPLICABLE USING A FEED THRU DEVICE ON THE P.T. WILL ALLOW FOR THE VOLTAGE SENSOR AND P.T. TO BE CONNECTED TO THE SAME SWITCH POSITION. SEE FIGURE 22.



FIGURE 22

TABLE OF CONTENTS

© 1998 - 2021 San Diego Gas & Electric Company. All rights reserved. Removal of this copyright notice without permission is not permitted under law.

REV	CHANGE	DR	BY	DSN	APV	DATE	REV	CHANGE	DR	BY	DSN	APV	DATE
C							F						
B	EDITORIAL CHANGES	PEI	NTB	FRC	CZH	11/23/2020	E						
A	ORIGINAL ISSUE	-	NB	JS	CZH	11/01/2020	D						

X Indicates Latest Revision | Completely Revised | New Page | Information Removed

INSTALLATION (CON'T):

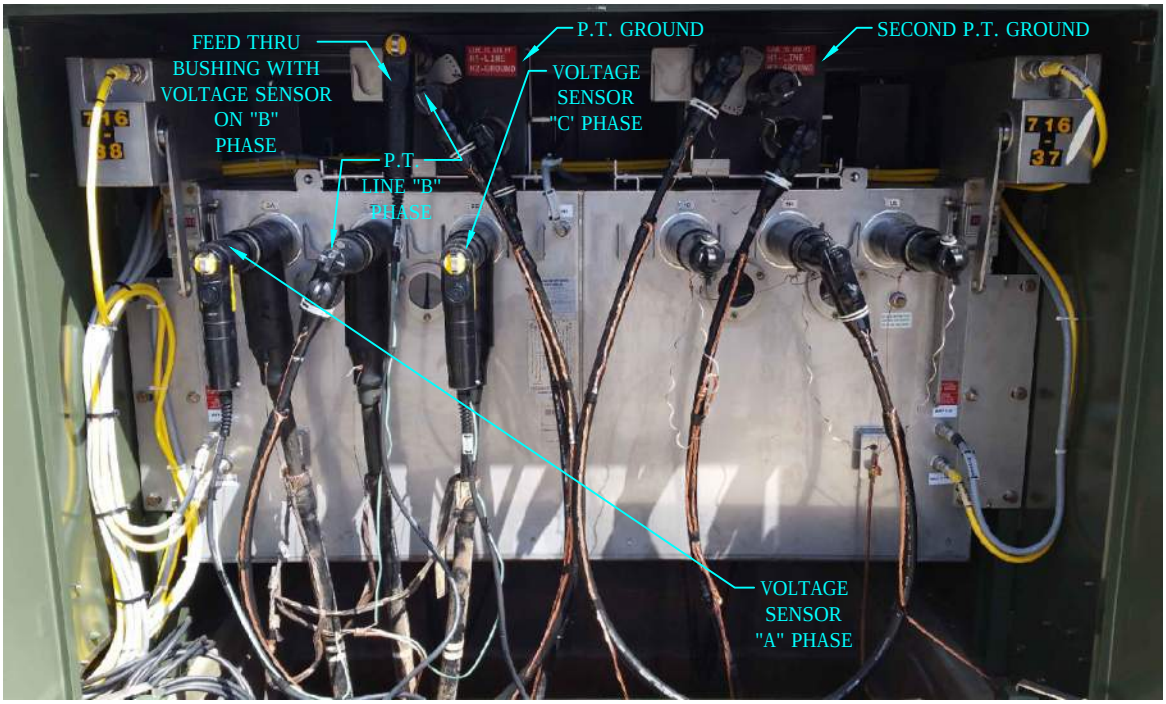

FIGURE 23

S. PRIOR TO ENERGIZING, CHECK TO MAKE SURE MOTOR OPERATOR ACTUATOR ARMS CAN FUNCTION UNOBSTRUCTED. P.T. ELBOWS SHALL BE PLACED ON THE CENTER PHASE POSITION OF THE SWITCH. FAULT INDICATORS SHALL BE POSITIONED AWAY FROM THE TRAVEL OF THE MOTOR OPERATOR ACTUATOR ARMS. SEE FIGURE 24 AND 25.



FIGURE 24

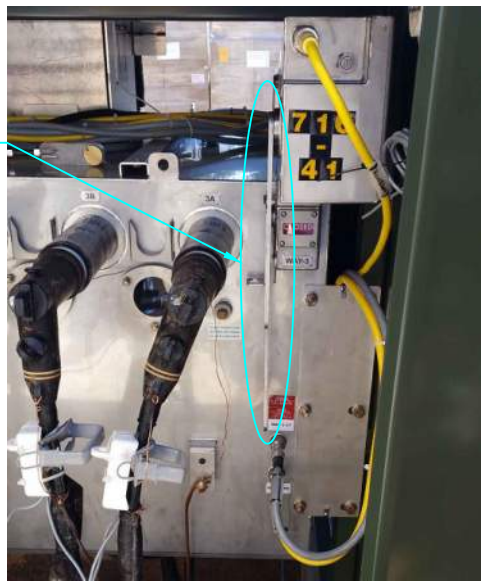

FIGURE 25

© 1998 - 2021 San Diego Gas & Electric Company. All rights reserved. Removal of this copyright notice without permission is not permitted under law.

REV	CHANGE	DR	BY	DSN	APV	DATE	REV	CHANGE	DR	BY	DSN	APV	DATE
C							F						
B	EDITORIAL CHANGES	PEI	NTB	FRC	CZH	11/23/2020	E						
A	ORIGINAL ISSUE	-	NB	JS	CZH	11/01/2020	D						

INSTALLATION (CON'T):

PAD MOUNT OPTIONS

T. SET THE SWITCH ON THE BOX PAD. USING A 1/2 INCH DRILL BIT, DRILL THROUGH THE EXISTING HOLES IN THE SILL FLANGE AND THROUGH THE BOX PAD. BOLT DOWN AS SHOWN IN HOLD DOWN DETAIL. SEE FIGURE 26.

HOLD DOWN DETAILS
(USE STAINLESS STEEL
TIE DOWNS PROVIDED)

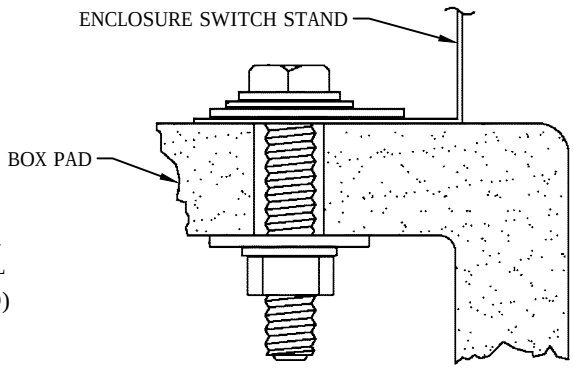

FIGURE 26

U. THE FOOTPRINT OF THE INNOVATIVE SWITCH AND UP FRONT WORK SPACE WILL ALLOW IT TO BE INSTALLED ON THE "W" SERIES SWITCH FACILITIES INCLUDING 3440, 3441 PADS ON HAND HOLES AND THE TROUGH STYLE SWITCH PADS WITH A MODIFICATION. IT MAY BE USED WHEN LIMITED RIGHT OF WAY ISSUES MAY EXIST FOR CONVERSIONS AND LIMITED SPACE FOR NEW CONSTRUCTION. INNOVATIVE SWITCH INSTALLS ON EXISTING "W" PADS MAY NEED TO HAVE THE SKIRT EXTENDED TO ACCEPT THE LARGER SWITCH FOOT PRINT. SEE FIGURE 27, 28 AND 29.



FIGURE 27

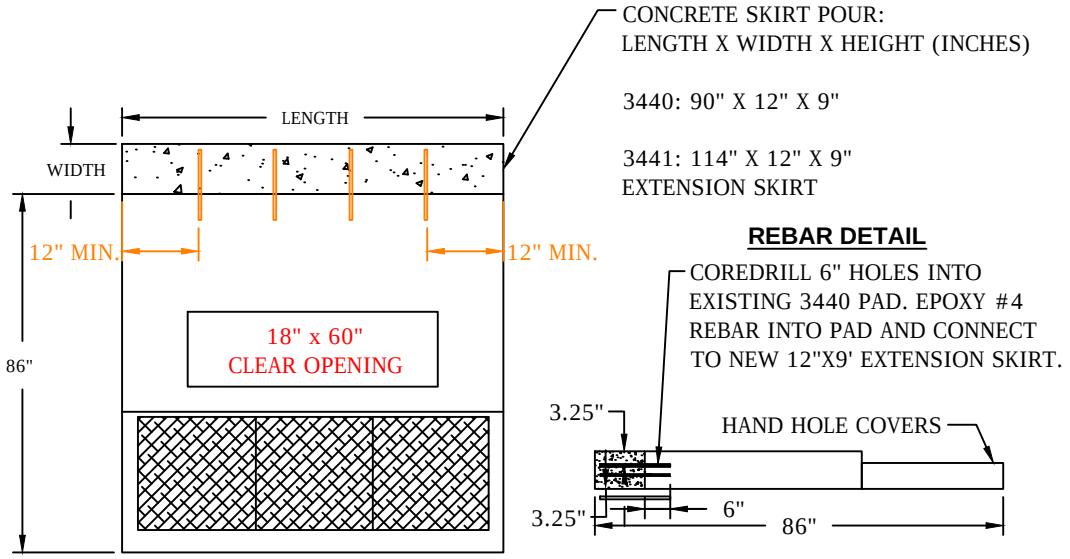

FIGURE 28
TOP VIEW

FIGURE 29
SIDE VIEW

© 1998 - 2021 San Diego Gas & Electric Company. All rights reserved. Removal of this copyright notice without permission is not permitted under law.

REV	CHANGE	DR	BY	DSN	APV	DATE	REV	CHANGE	DR	BY	DSN	APV	DATE
C							F						
B	EDITORIAL CHANGES	PEI	NTB	FRC	CZH	11/23/2020	E						
A	ORIGINAL ISSUE	-	NB	JS	CZH	11/01/2020	D						

X Indicates Latest Revision | Completely Revised | New Page | Information Removed

SDG&E ELECTRIC UNDERGROUND CONSTRUCTION STANDARDS

SHEET
48 OF 50

INNOVATIVE SWTICHGEAR PAD AND WALL-MOUNT

UG3560.48

TABLE OF CONTENTS

NOTES:

I. WHEN REPLACING EXISTING SWITCHES, THE TIE POSITIONS ARE ESTABLISHED AND CONNECTED AS DESIGNED TO AVOID MAJOR RE-CABLING, CONNECT AS-BUILT. NEW INSTALLATIONS WILL FOLLOW THE DESIGN MANUAL.

II. INNOVATIVE SWITCHGEAR'S PRODUCTS DO NOT CONTAIN ANY OIL OR SF6 GAS FOR THE ELECTRICAL ARC INTERRUPTION OR FOR COMPONENT INSULATION. INNOVATIVE SWITCHGEAR CONTAINS ONLY MECHANISMS, INSULATED BUS WORK AND DRY AIR. DO NOT REMOVE THE PRESSURE TEST PLUG ON THIS VESSEL. EACH UNIT HAS BEEN PRESSURE TESTED AND PERMANENTLY FACTORY SEALED. THE SWITCH TANK IS FILLED WITH THREE TO FIVE POUNDS OF DRY AIR TO KEEP THE STRUCTURAL INTEGRITY OF THE TANK AT SEA LEVEL.

III. THE USE OF FUSED ELBOWS WILL BE FOR THE ADDITION OF POTENTIAL TRANSFORMERS FOR SCADA APPLICATIONS AND LIMITED TO TWO FUSED ELBOW ONLY ONE PER SWITCH WAY POSITION. NO DEVIATION WILL BE GRANTED FOR MORE THAN TWO FUSED ELBOWS IN THE INNOVATIVE SWITCH CABINET. THE 30A FUSED ELBOW (S321680) AND 10 FEET OF #2 CABLE (197600) WILL BE MADE BY LINE CREWS (KEARNY MAY ALSO AS NEEDED) TO INSTALL SCADA INSTALLATIONS. PT PLACEMENT WILL BE DETERMINED BY KEARNY (FOR DOUBLE-SIDED UNITS, THE PTS MAY BE PLACED ON THE OPPOSITE SIDE SO THAT THE PTS ARE ALWAYS ON THE SAME SIDE OF THE BUSHINGS REQUIRING FUSED ELBOWS).

IV. TAPPING THE BACK OF 600 AMP TEES FOR 200 AMP DISTRIBUTION WILL BE LIMITED TO SWITCH CHANGE OUTS WITH EXISTING 200 AMP TAPS.

V. FOR NEW CONSTRUCTION AND CONVERSIONS THIS INNOVATE SWITCH SHOULD NOT BE USED TO TAP FEEDER CABLES. TAPS ON THE BACK OF 600 AMP TEES IMPEDE GROUNDING AND LIMIT USE OF SWITCH POSITIONS DURING ROUTING SWITCHING PROCEDURES AND OUTAGE SITUATIONS. TAP FEEDER SEGMENTS BETWEEN SWITCH POSITIONS USING 600 AMP TERMINATORS OR TAP THE SWITCH POSITION WITH DISTRIBUTION CABLE ONLY.

VI. ROUTINE REPLACEMENT OF EXISTING 4 WAY PADMOUNT SWITCHES IS LIMITED TO THE 'W' TYPE CONFIGURATIONS ABOVE 3315 & 3316 HAND HOLES AND THE 'D' TYPE CONFIGURATIONS ABOVE 3311 HAND HOLES. FOR “W” INSTALLED EQUIPMENT, 12” DEPTH SKIRT IS REQUIRED ALONG REAR OF PAD.

VII. ANOTHER 'D' CONFIGURATION CONSISTS OF SUBSURFACE SWITCHES MOUNTED ABOVE 3315 HAND HOLES. THESE DO NOT LEND THEMSELVES TO SIMPLE REPLACEMENT OF THE SWITCH. THESE INSTALLATIONS ARE COMMONLY CALLED "I -BEAM" OR "RAIL" SWITCHES. A DEVIATION REQUEST OS REQUIRED WHEN ATTEMPTING TO REPLACE THESE WITH A PADMOUNT STYLE SWITCH.

VIII. ALL ISG MANUAL SWITCHES ARE “SCADA-READY (CAPABLE OF BEING RETROFITTED TO SCADA)” AND POTENTIALLY FAULT INTERRUPTING USING OTHER CONTROLLERS/RELAYS.

IX. IF INSTALLING ON 3440/3441 PAD, PLEASE REFER TO THE 12" EXTENSION FIGURES 16A-C.

XI. ALL MANUAL SWITCHES CAN BE USED ON 12 AND 4 KV APPLICATIONS

XII. FOR THE 4 WAY DOUBLE SIDED SWITCH APPLICATIONS FOR REPLACEMENT OF PME-9 AND PME-11 SWITCHES, THE ISG UNITS HAVE 600A BUSHINGS ON AL POSITIONS.

XIII. ISG MANUAL SWITCHES REFER TO MOTORIZED OPERATORS INSTALLED AND CAN BE OPERATED WITH THE LEVER VIA HOOKSTICK. ISG SCADA REFERS TO THE CONTROLLER WITH THE FAULT INTERRUPTING AND COMMUNICATIVE FEATURES TO INCLUDE MOTOR OPERATORS. ISG NON-SCADA REFERS TO MANUAL SWITCHES, BUT MAY BE RETROFITTED TO INCLUDE NON-COMMUNICATIVE RELAYS/CONTROLLERS.

XIV. REGARDING THE 6 WAY ISG SWITCHGEAR: WAYS 1-5 ARE FAULT INTERRUPTING CAPABLE. WAY 6 WILL ONLY BE USED AS A SWITCH OR TIE POSITION.

TABLE OF CONTENTS

© 1998 - 2021 San Diego Gas & Electric Company. All rights reserved. Removal of this copyright notice without permission is not permitted under law.

REV	CHANGE	DR	BY	DSN	APV	DATE	REV	CHANGE	DR	BY	DSN	APV	DATE
C							F						
B	EDITORIAL CHANGES	PEI	NTB	FRC	CZH	11/23/2020	E						
A	ORIGINAL ISSUE	-	NB	JS	CZH	11/01/2020	D						

X Indicates Latest Revision | Completely Revised | New Page | Information Removed

SDG&E ELECTRIC UNDERGROUND CONSTRUCTION STANDARDS

INNOVATIVE SWTICHGEAR PAD AND WALL-MOUNT

UG3560.49

REFERENCE:

a. CABLE IDENTIFICATION, SEE UNDERGROUND STANDARD 3202.

b. ATTACHING STRUCTURE/EQUIPMENT IDENTIFICATION TAG, SEE UNDERGROUND STANDARD 3211.

c. HIGH VOLTAGE DECAL, SEE UNDERGROUND STANDARD 3221.

d. WIRE ENTRY PREVENTION, SEE UNDERGROUND STANDARD 3408.

e. BOX PAD AND CONDUIT PLACEMENT, SEE UNDERGROUND STANDARD 3428/3429.

f. BARRIERS IF THE SWITCH IS SUBJECT TO VEHICULAR TRAFFIC, SEE UNDERGROUND STANDARD 3481.

g. MINIMUM OPERATING CLEARANCE REQUIREMENTS, SEE UNDERGROUND STANDARD 3483.

h. RETAINING WALL REQUIREMENTS AND CLEARANCES FROM REVERSE SUBGRADE RETAINING WALLS, SEE UNDERGROUND STANDARD 3486.

i. RETAINING WALLS, SEE UNDERGROUND STANDARD 3487.

j. PAD-MOUNTED SWITCH IDENTIFICATION, SEE UNDERGROUND STANDARD 3212.2.

k. FAULT INDICATOR INSTALLATION, SEE UNDERGROUND STANDARD 4355.

l. (PREFERRED 1) AND (ALTERNATE TRENCH GROUND WIRE), SEE UNDERGROUND STANDARD 4510.

m. EQUIPMENT GROUNDING, SEE UNDERGROUND STANDARD 4520.

n. GROUNDING PREMOLDED CONNECTORS, SEE UNDERGROUND STANDARD 4525.

o. NEUTRAL AND GROUND WIRE SCHEMATIC DIAGRAM, SEE UNDERGROUND STANDARD 4520.8 & 4520.9.

p. SCADA INSTALLATION, SEE UNDERGROUND STANDARD 4640.4 & 4640.5.

TABLE OF CONTENTS

©1998 - 2021 San Diego Gas & Electric Company. All rights reserved. Removal of this copyright notice without permission is not permitted under law.

REV	CHANGE	DR	BY	DSN	APV	DATE	REV	CHANGE	DR	BY	DSN	APV	DATE
C							F						
B	EDITORIAL CHANGES	PEI	NTB	FRC	CZH	11/23/2020	E						
A	ORIGINAL ISSUE	-	NB	JS	CZH	11/01/2020	D						

X Indicates Latest Revision | Completely Revised | New Page | Information Removed

SDG&E ELECTRIC UNDERGROUND CONSTRUCTION STANDARDS

INNOVATIVE SWTICHGEAR PAD AND WALL-MOUNT

UG3560.50

SCOPE: THIS STANDARD SHOWS A TYPICAL 12KV, 600 AMP AIRBREAK PME-9, 10 & 11 SECTIONALIZING SWITCH.

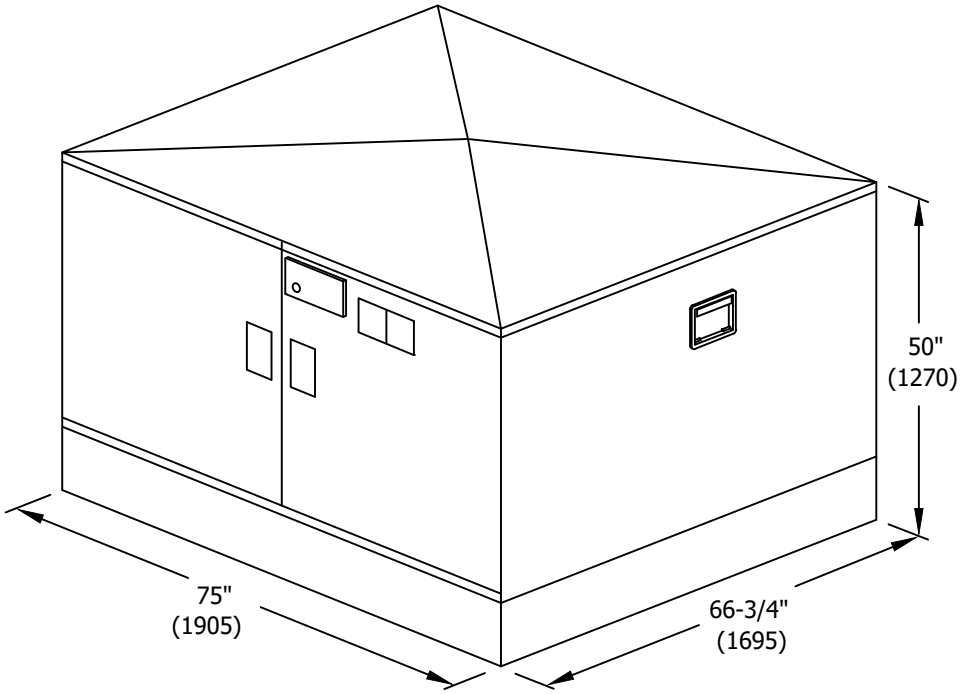

FIGURE 1
PME-9

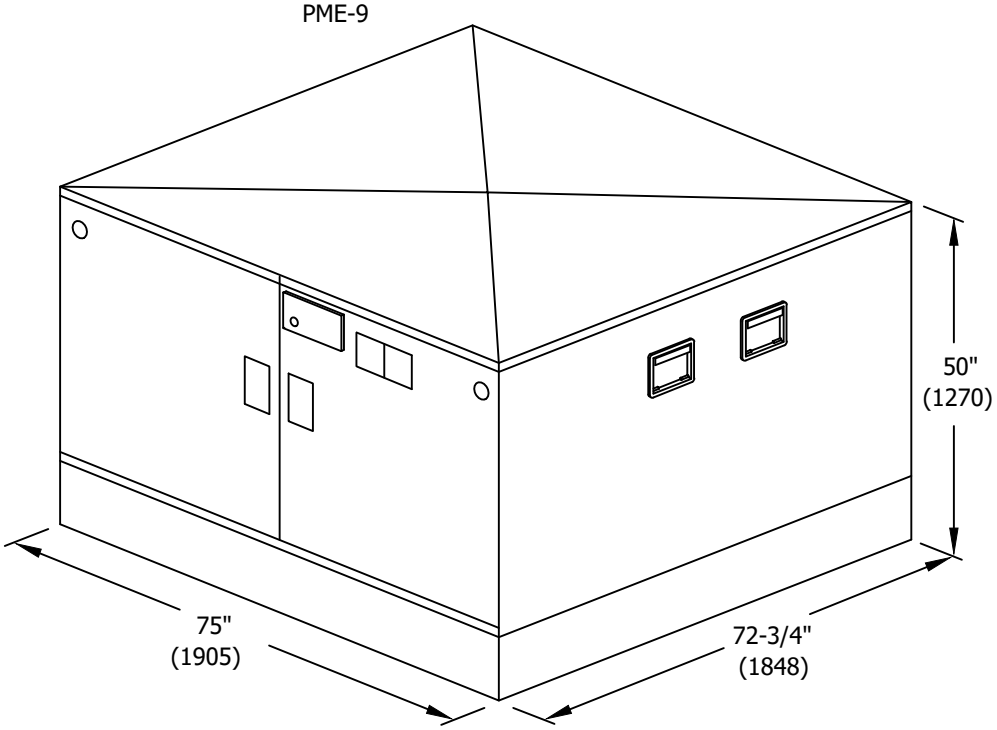

FIGURE 2
PME-10 & PME-11

© 1998 - 2023 San Diego Gas & Electric Company. All rights reserved. Removal of this copyright notice without permission is not permitted under law.

REV	CHANGE	DR	BY	DSN	APV	DATE	REV	CHANGE	DR	BY	DSN	APV	DATE
C	EDITORIAL CHANGES	GLC	EJA	EJA	KRG	11/09/2022	F						
B	EDITORIAL CHANGES	-	AW	JS	CZH	7/1/2018	E						
A	REVISION	-	-	-	-	1/1/2000	D						

X Indicates Latest Revision | Completely Revised | New Page | Information Removed

SDG&E ELECTRIC UNDERGROUND CONSTRUCTION STANDARDS

PAD-MOUNTED AIRBREAK PME-9, 10 & 11
SECTIONALIZING SWITCH 12KV, 600 AMP, THREE-PHASE

UG3567.1

TABLE OF CONTENTS

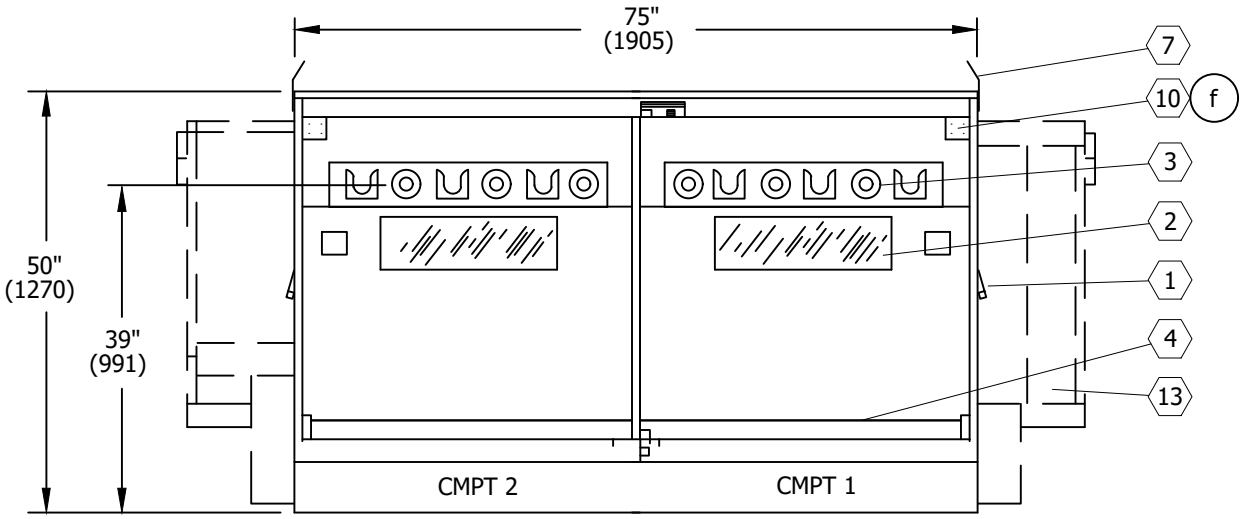

FIGURE 3
VIEW OF COMPARTMENT 1 & 2

TABLE 1

MAXIMUM WEIGHT FOR SCADA EQUIPPED SWITCHES	
SWITCH	**WEIGHT**
PME-9	2420 LBS. (1098 KG)
PME-10	2475 LBS. (1123 KG)
PME-11	2525 LBS. (1145 KG)

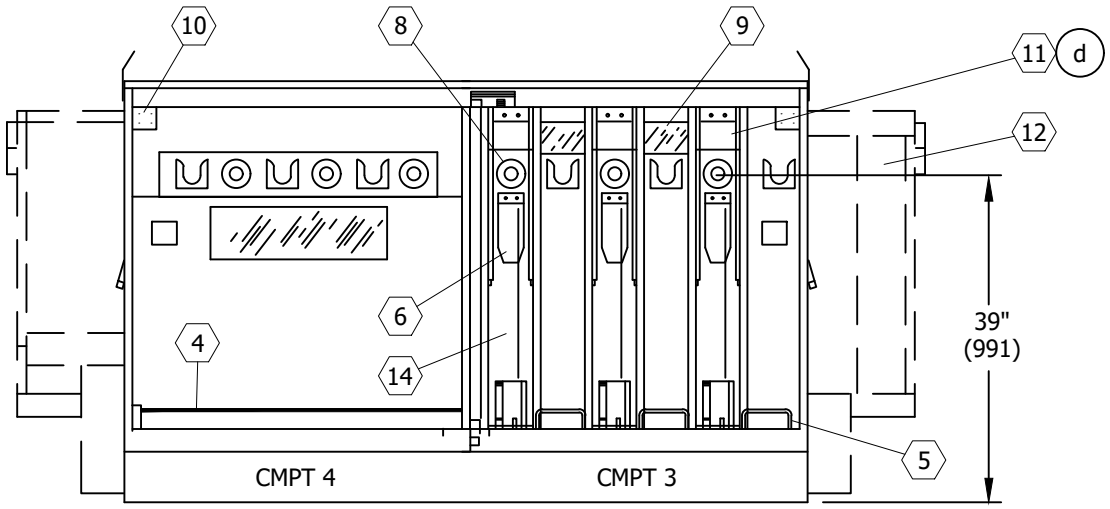

FIGURE 4
VIEW OF COMPARTMENT 3 & 4

TABLE OF CONTENTS

© 1998 - 2023 San Diego Gas & Electric Company. All rights reserved. Removal of this copyright notice without permission is not permitted under law.

REV	CHANGE	DR	BY	DSN	APV	DATE	REV	CHANGE	DR	BY	DSN	APV	DATE
C	EDITORIAL CHANGES	GLC	EJA	EJA	KRG	11/09/2022	F						
B	EDITORIAL CHANGES	-	AW	JS	CZH	7/1/2018	E						
A	REVISION	-	-	-	-	1/1/2000	D						

EQUIPMENT RATINGS:	
VOLTAGE	14.4
B.I.L.	95
CURRENT, CONDITIONS (GANG OPERATED)	600 AMP
LOADMAKE AND LOADBREAK (GANG OPERATED)	600 AMP
MOMENTARY AND FAULT CLOSE (RMS, SYMMETRICAL)	14,000 AMP

CONNECTION DIAGRAM	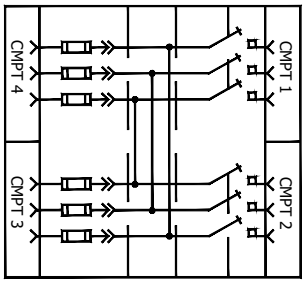	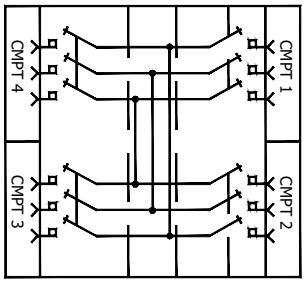	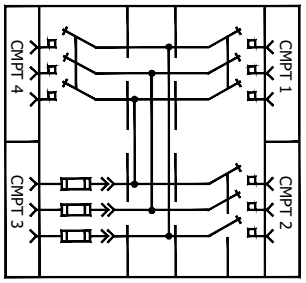
SWITCH TYPE	PME-9	PME-10	PME-11
MAP SYMBOLS	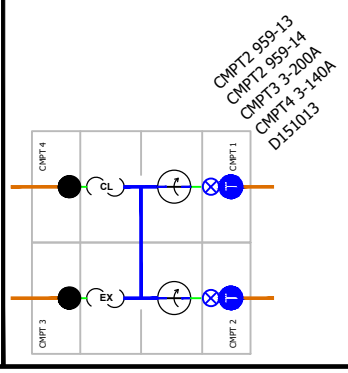	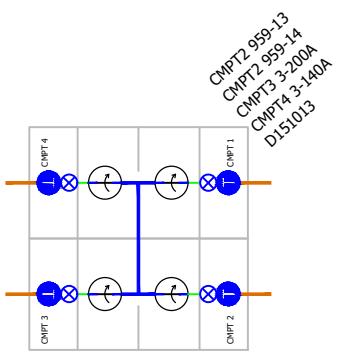	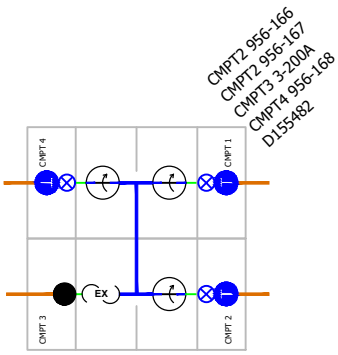

TABLE 2

ITEM	DESCRIPTION
1	FOLDING SWITCH OPERATING HANDLE
2	LEXAN VIEWING WINDOW (600 AMP SWITCH)
3	600 AMP STUD BUSHING
4	GROUND ROD (FOR PERSONAL GROUNDS ONLY)
5	GROUND RODS & CABLE GUIDES FOR FUSES
6	INTERLOCK TO REQUIRE REMOVAL OF THE LBE ACCESS TO FUSE
7	LIFTING TABS (REMOVE AFTER INSTALLATION AND REPLACE BOLTS, STORE INSIDE CABINET)
8	200 AMP BUSHING WELLS
9	LEXAN VIEWING WINDOW (BLOWN FUSE INDICATOR)
10	FAULT INDICATOR MOUNTING BRACKET
11	FUSE COMPARTMENT
12	LOW VOLTAGE COMPARTMENT (SCADA ONLY)
13	SWITCH OPERATOR (SCADA ONLY)
14	TRANSFUSER DOOR

© 1998 - 2023 San Diego Gas & Electric Company. All rights reserved. Removal of this copyright notice without permission is not permitted under law.

REV	CHANGE	DR	BY	DSN	APV	DATE	REV	CHANGE	DR	BY	DSN	APV	DATE
C	EDITORIAL CHANGES	GLC	EJA	EJA	KRG	11/09/2022	F						
B	EDITORIAL CHANGES	-	AW	JS	CZH	7/1/2018	E						
A	REVISION	-	-	-	-	1/1/2000	D						

X Indicates Latest Revision | Completely Revised | New Page | Information Removed

SHEET 3 OF 4

SDG&E ELECTRIC UNDERGROUND CONSTRUCTION STANDARDS

PAD-MOUNTED AIRBREAK PME-9, 10 & 11
SECTIONALIZING SWITCH 12KV, 600 AMP, THREE-PHASE

UG3567.3

TABLE OF CONTENTS

INSTALLATION: NONE

BILL OF MATERIALS: NONE

NOTES:

I. PAD-MOUNTED SWITCH (STOCK NUMBERS PME-9 #S708970, PME-10 #S708972 AND PME-11 #S708974) ARE DELIVERED FROM THE SUPPLIER WITH ALL THE PARTS LISTED EXCEPT FOR FUSES AND 200A LOAD BREAK BUSHING INSERTS.

REFERENCE:

a. SEE STANDARD 3212.2 FOR SWITCH IDENTIFICATION.

b. SEE STANDARD 3423 FOR BOX PAD AND CONDUIT PLACEMENT.

c. SEE STANDARD 3568 FOR SWITCH INSTALLATION.

(d) SEE STANDARD 4302 FOR FUSE APPLICATION GUIDE.

e. SEE STANDARD 4355.3 FOR FAULT INDICATOR INSTALLATION.

(f) SEE DESIGN STANDARD 6113 FOR AUTOMATIC FAULT INDICATOR APPLICATION.

TABLE OF CONTENTS

© 1998 - 2023 San Diego Gas & Electric Company. All rights reserved. Removal of this copyright notice without permission is not permitted under law.

REV	CHANGE	DR	BY	DSN	APV	DATE	REV	CHANGE	DR	BY	DSN	APV	DATE
C	EDITORIAL CHANGES	GLC	EJA	EJA	KRG	11/09/2022	F						
B	EDITORIAL CHANGES	-	AW	JS	CZH	7/1/2018	E						
A	REVISION	-	-	-	-	1/1/2000	D						

X Indicates Latest Revision | Completely Revised | New Page | Information Removed

SDG&E ELECTRIC UNDERGROUND CONSTRUCTION STANDARDS

PAD-MOUNTED AIRBREAK PME-9, 10 & 11
SECTIONALIZING SWITCH 12KV, 600 AMP, THREE-PHASE

UG3567.4

SCOPE: THIS STANDARD SHOWS THE INSTALLATION FOR PAD MOUNTED, 12KV, 600A, AIR BREAK, PME 9, 10 AND 11 SECTIONALIZING SWITCH CABINET.

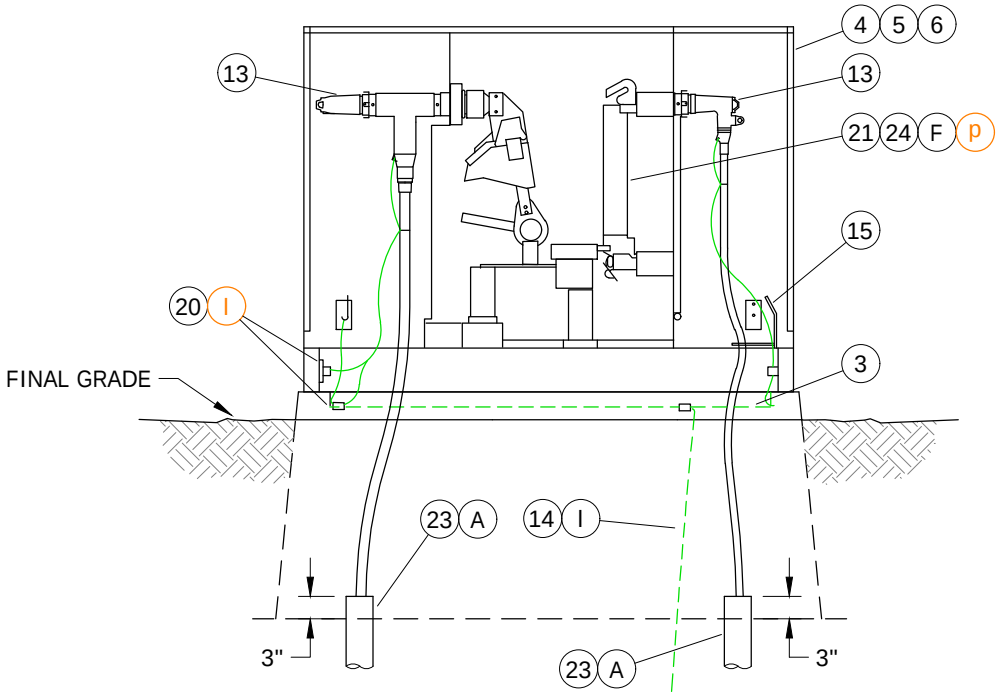

FIGURE 1

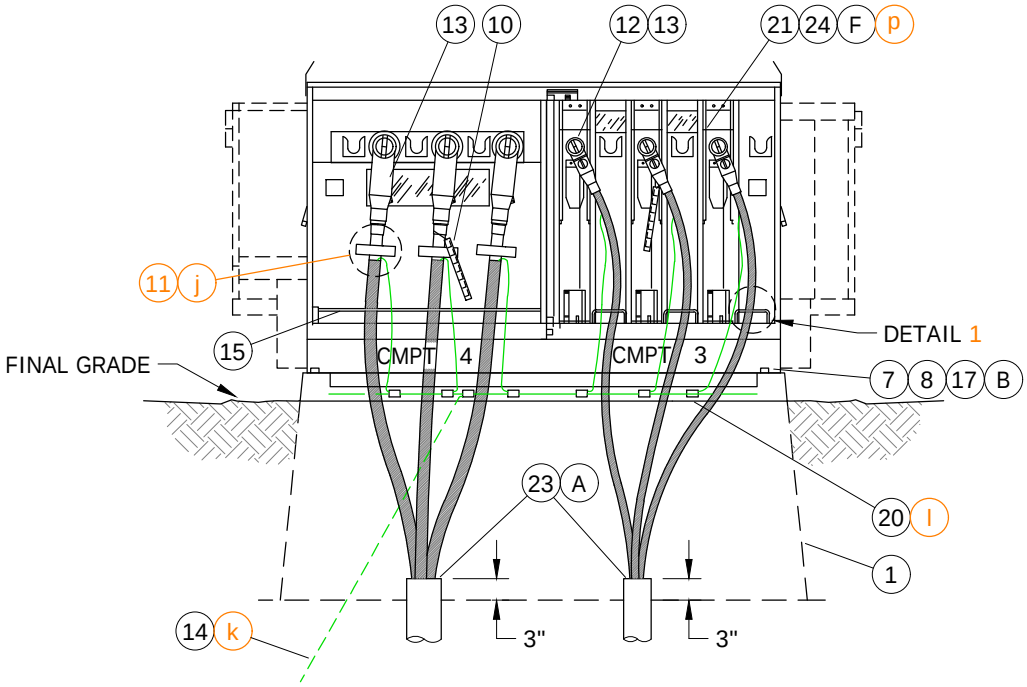

FIGURE 2
VIEW OF COMPARTMENT 3 AND 4

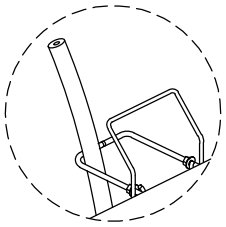

DETAIL 1
CABLE GUIDE

© 1998 - 2024 San Diego Gas & Electric Company. All rights reserved. Removal of this copyright notice without permission is not permitted under law.

REV	CHANGE	DR	BY	DSN	APV	DATE	REV	CHANGE	DR	BY	DSN	APV	DATE
C	FORMATTING	EDM	JIK	-	-	5/17/2021	F						
B	EDITORIAL CHANGES	-	AW	JS	CZH	7/1/2018	E						
A	REVISION	-	-	-	-	1/1/2000	D	BILL OF MATERIALS UPDATE	GLC	EJA	FRC	KRG	6/21/2024

X	Indicates Latest Revision		Completely Revised		New Page	X	Information Removed

SDG&E ELECTRIC UNDERGROUND CONSTRUCTION STANDARDS

INSTALLATION OF PAD MOUNTED AIR BREAK PME 9, 10 AND 11 SECTIONALIZING SWITCH CABINET, 12KV, 600A, THREE-PHASE

UG3568.1

TABLE OF CONTENTS

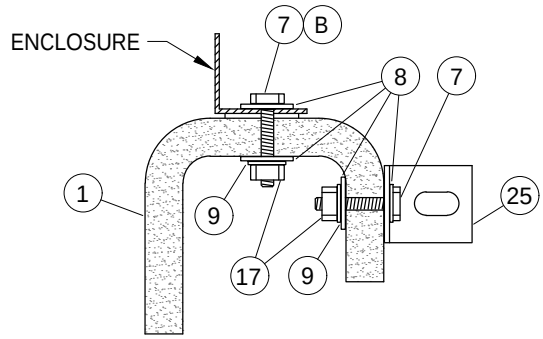

FIGURE 3
HOLD-DOWN DETAIL AND RING BUSS SUPPORT

INSTALLATION:

(A) SEAL CONDUITS WITH SEALING COMPOUND.

(B) SET THE SWITCH ON THE BOX PAD. USING A 1/2-INCH DRILL BIT, DRILL THROUGH THE EXISTING HOLES IN THE SILL FLANGE AND THROUGH THE BOX PAD. BOLT DOWN AS SHOWN IN HOLD DOWN DETAIL.

C. BASE OF CABINET SHALL BE CAULKED ONLY TO PREVENT POSSIBLE WIRE ENTRY.

D. INSTALL RING BUSS SO THAT IT DOES NOT INTERFERE WITH TRANSFUSER DOORS.

E. SECURE THE SWITCH DOORS AND THE SWITCH OPERATING HANDLE COVERS WITH PME LOCKS.

(F) INSTALL CURRENT LIMITING OR SME-4Z FUSES PER FUSE REQUEST.

G. FOR THE PME-10 ONLY. WHEN ONLY THREE OF THE FOUR SWITCH POSITION WILL BE UTILIZED, PULL CABLES IN COMPARTMENTS 1, 2 AND 4 FIRST.

TABLE OF CONTENTS

BILL OF MATERIALS:

ITEM	DESCRIPTION	QUANTITY	STANDARD PAGE	STOCK NUMBER	DESIGN UNITS
1	PAD, BOX, 32", 78" X 73"	1	3423	S514028	3423BP
2	PADLOCK, 30 SERIES, ALLOY, ELECTRIC (III)	6	-	S514848	-
3	WIRE, CU, #4/0, THW, 19 STR, BARE	AS REQ'D	-	S812764	-
4	SWITCH, PME-9, SS, FUSE CABINET	AS REQ'D	3568	S709002	SFC/09
5	SWITCH, PME-10, SS, FUSE CABINET	AS REQ'D	3568	S709004	SFC/10
6	SWITCH, PME-11, SS, FUSE CABINET	AS REQ'D	3568	S709006	SFC/11
7	SCREW, HEX HEAD, BRONZE, 1/2" X 1-1/2"	4	-	S616192 (X)	-
8	WASHER, FLAT ROUND, BRONZE, 1/2"	8	-	S799488 (X)	-
9	WASHER, LOCK SPRING, BRONZE, 1/2"	4	-	S796416 (X)	-
10	TAGS, CABLE IDENTIFICATION	AS REQ'D	-	-	-

© 1998 - 2024 San Diego Gas & Electric Company. All rights reserved. Removal of this copyright notice without permission is not permitted under law.

REV	CHANGE	DR	BY	DSN	APV	DATE	REV	CHANGE	DR	BY	DSN	APV	DATE
C	FORMATTING	EDM	JIK	-	-	5/17/2021	F						
B	EDITORIAL CHANGES	-	AW	JS	CZH	7/1/2018	E						
A	REVISION	-	-	-	-	1/1/2000	D	BILL OF MATERIALS UPDATE	GLC	EJA	FRC	KRG	6/21/2024

BILL OF MATERIALS (CONT'D):

ITEM	DESCRIPTION	QUANTITY	STANDARD PAGE	STOCK NUMBER	DESIGN UNITS
11	INDICATOR, FAULT, LOAD TRACKER, LARGE	AS REQ'D	-	S423714	DULTFI
	INDICATOR, FAULT, LOAD TRACKER, SMALL	AS REQ'D	-	S423718	RFOS
12	PLUG, LOADBREAK BUSHING INSERT, 200A	AS REQ'D	4181	S544676	BSHPLG
13	CONNECTOR, 12KV, 600A/200A LOADBREAK	AS REQ'D	4181	-	-
14	WIRE, CU, #2, 7 STR, BARE	1	4510	S812818 (X)	TG-E-W
15	ROD, GROUND, COPPERWELD, 5/8"	-	-	S603074 (X)	-
16	DECALS (III)	AS REQ'D	3240	-	-
17	NUT, HEX, BRONZE, 1/2"	4	-	S506112 (X)	-
18	INTENTIONALLY LEFT BLANK				
19	NUT, STUD, GLV, 1/2" X 1-3/8" (III)	4	-	S507000 (X)	-
20	CONNECTOR, COMPRESSION	AS REQ'D	-	-	-
21	FUSE, CURRENT LIMITING, X-LIMITER, 140A (P)(IV)	AS REQ'D	4312	S365730	XL-140
22	INTENTIONALLY LEFT BLANK				
23	SEALANT, MASTIC TAPE, 10', 3-3/4" X 1/8"	AS REQ'D	-	S442976 (X)	-
24	KIT, RETROFIT, CURRENT LIMITING, SME-4Z	1	-	S442944	CL-SM4
25	BRACKET, 90 DEGREE ANGLE, SS, 2" X 3"	4	-	S166072 (X)	-

NOTES:

I. INSTALL SWITCH WITH SWITCH OPERATING HANDLE DOORS OR MOTOR OPERATORS FACING THE STREET WITH COMPARTMENTS 1 AND 2 ON THE RIGHT WHEN FACING THE SWITCH.

(II) INTENTIONALLY LEFT BLANK.

(III) NOT SHOWN ON FIGURES.

(IV) FUSING REQUEST AS REQUIRED.

(X) THIS ITEM IS EXEMPT.

REFERENCE:

a. SEE UG3202 FOR CABLE IDENTIFICATION.

b. SEE UG3211 FOR STRUCTURE/EQUIPMENT IDENTIFICATION - SUBSURFACE AND PAD MOUNTED.

c. SEE UG3221 FOR PAD MOUNTED EQUIPMENT - HIGH VOLTAGE DECALS.

d. SEE UG3408 FOR PAD MOUNTED EQUIPMENT WIRE ENTRY PREVENTION.

e. SEE UG3423 FOR BOX PAD W/ TEMPORARY COVER FOR PADMOUNT 4-WAY DOUBLE-SIDED SWITCHES.

f. SEE UG3479 FOR EQUIPMENT BARRIER PROTECTION AND CLEARANCE.

g. SEE UG3480, UG3481, AND UG3483 FOR MINIMUM OPERATING CLEARANCE REQUIREMENTS.

h. SEE UG3486, UG3487, AND UG3488 FOR RETAINING WALL REQUIREMENTS AND CLEARANCES FROM REVERSE SUBGRADE RETAINING WALLS.

i. SEE UG4302 FOR FUSE APPLICATION GUIDE.

(j) SEE UG4360 FOR LOAD TRACKER FAULT INDICATOR.

TABLE OF CONTENTS

© 1998 - 2024 San Diego Gas & Electric Company. All rights reserved. Removal of this copyright notice without permission is not permitted under law.

REV	CHANGE	DR	BY	DSN	APV	DATE	REV	CHANGE	DR	BY	DSN	APV	DATE
C	FORMATTING	EDM	JIK	-	-	5/17/2021	F						
B	EDITORIAL CHANGES	-	AW	JS	CZH	7/1/2018	E						
A	REVISION	-	-	-	-	1/1/2000	D	BILL OF MATERIALS UPDATE	GLC	EJA	FRC	KRG	6/21/2024

REFERENCE (CONT'D):

k. SEE UG4510 FOR (PREFERRED I) AND (ALTERNATE TRENCH GROUND WIRE).

l. SEE UG4520 FOR GROUNDING PAD MOUNTED EQUIPMENT.

m. SEE UG4525 FOR CONCENTRIC NEUTRAL TERMINATIONS AND GROUNDING REMOLDED CONNECTORS.

n. SEE UG4530 FOR NEUTRAL AND GROUND WIRE SCHEMATIC DIAGRAM.

o. SEE DM6113 FOR AUTOMATIC FAULT INDICATOR APPLICATION.

p. SEE UG4310 FOR CURRENT-LIMITING TO SM-4 FUSE CONVERSION FOR PME SWITCH.

TABLE OF CONTENTS

© 1998 - 2024 San Diego Gas & Electric Company. All rights reserved. Removal of this copyright notice without permission is not permitted under law.

REV	CHANGE	DR	BY	DSN	APV	DATE	REV	CHANGE	DR	BY	DSN	APV	DATE
C	FORMATTING	EDM	JIK	-	-	5/17/2021	F						
B	EDITORIAL CHANGES	-	AW	JS	CZH	7/1/2018	E						
A	REVISION	-	-	-	-	1/1/2000	D	BILL OF MATERIALS UPDATE	GLC	EJA	FRC	KRG	6/21/2024

X	Indicates Latest Revision		Completely Revised		New Page	X	Information Removed	

SDG&E ELECTRIC UNDERGROUND CONSTRUCTION STANDARDS

INSTALLATION OF PAD MOUNTED AIR BREAK PME 9, 10 AND 11 SECTIONALIZING SWITCH CABINET, 12KV, 600A, THREE-PHASE

SCOPE: THIS STANDARD COVERS THE USE OF THE ELASTIMOLD 200/200A MOLDED VACUUM INTERRUPTER HOUSED IN THE DURHAM MVI ENCLOSURE; IT CAN REPLACE A STANDARD FUSE CABINET ON A 3421 EQUIPMENT PAD.



FIGURE 1 (I)

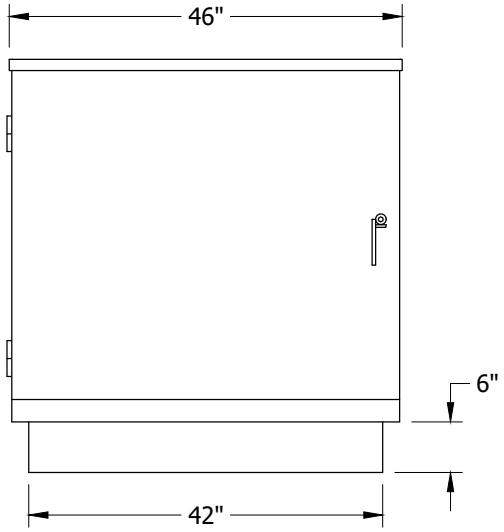

FIGURE 2
FRONT VIEW

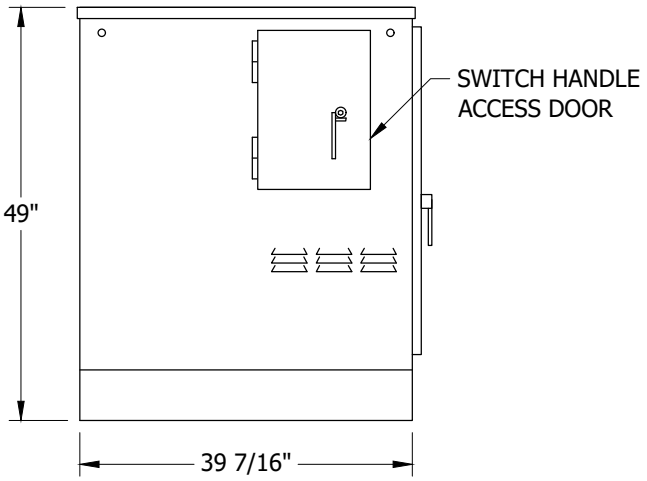

FIGURE 2
SIDE VIEW

TABLE OF CONTENTS

© 1998 - 2021 San Diego Gas & Electric Company. All rights reserved. Removal of this copyright notice without permission is not permitted under law.

REV	CHANGE	DR	BY	DSN	APV	DATE	REV	CHANGE	DR	BY	DSN	APV	DATE
C	MOVED FROM UG3516	EDM	JIK	-	-	05/17/2021	F						
B	EDITORIAL CHANGES	-	AW	JS	CZH	07/01/2018	E						
A	REVISION	-	-	-	-	07/12/2011	D	BILL OF MATERIALS UPDATE	EDM	RSL	JES	CZH	12/12/2021

X Indicates Latest Revision | Completely Revised | New Page | Information Removed

SDG&E ELECTRIC UNDERGROUND CONSTRUCTION STANDARDS

PAD MOUNTED MVI SWITCH ENCLOSURE

UG3580.1



FIGURE 3

UG MAP SYMBOL
168-531 D103541 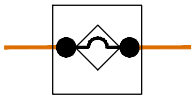 MVI FUSE CABINET

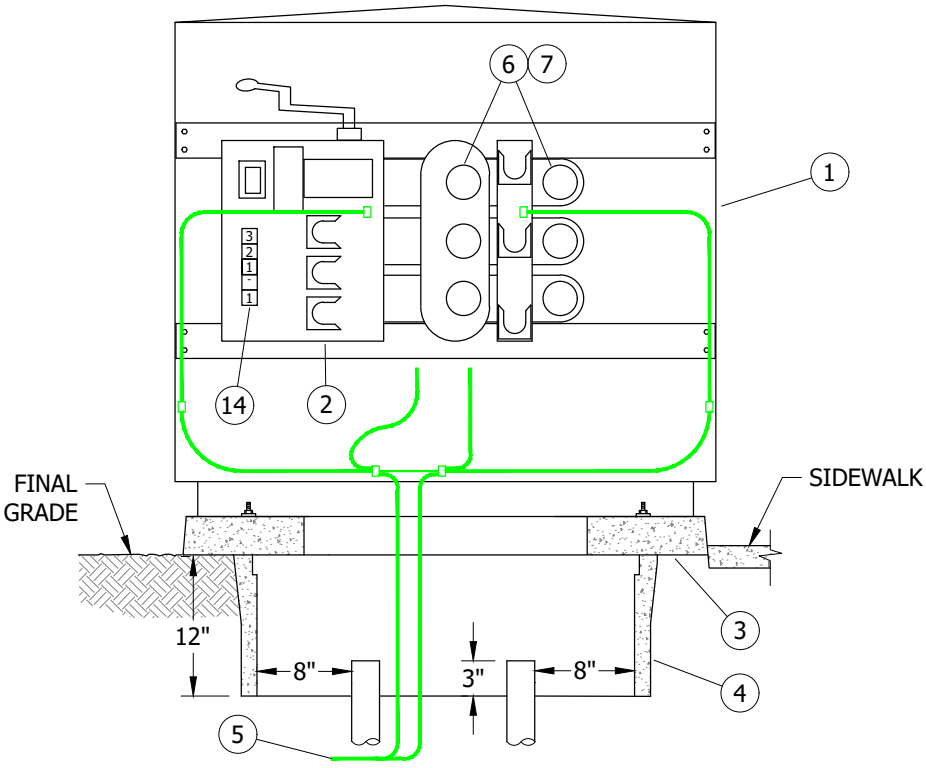

FIGURE 4

TABLE OF CONTENTS

INSTALLATION:

A. THIS INSTALLATION IS LIMITED TO ONE THREE-PHASE RUN IN AND OUT; THE MVI WILL NOT ACCOMMODATE FEED THRU BUSHINGS.

B. PREFERRED CONDUIT PLACEMENT AND CABLE CONNECTION IS LINE ON THE LEFT AND LOAD ON THE RIGHT FACING THE SWITCH.

C. MVI MUST BE PRE-PROGRAMMED FOR EACH FACILITY LOCATION BY KEARNY BEFORE THE UNIT IS INSTALLED AND ENERGIZED.

D. CABINET HAS 4 LIFTING 1/2 X 13 THREAD INSERTS FOR LIFTING BOLTS WHEN INSTALLING THE CABINET AND MVI.

E. INSTALLING THE MVI IN THE DURHAM PAD MOUNTING CABINET: UN-BOLT AND REMOVE THE LID OF THE CABINET AND UN-PIN SWITCH HANDLE FOR EASY INSTALLATION. BOLT MVI IN THE FAR LEFT BOLT HOLES, WITH THE SWITCH HANDLE FACING THE SIDE SWITCHING DOOR. (SWITCH HANDLE MAY REQUIRE BENDING UP ONE-INCH TO CLEAR SIDE DOOR HARDWARE).

(F) 6 BUSHING PLUGS REQUIRE BONDING TO THE MVI SWITCH; THE MVI MUST BE GROUNDED TO THE CABINET AND THE TRENCH GROUNDS. CONCENTRIC NEUTRALS SHALL BE CONNECTED TO THE TRENCH GROUND, CABINET AND MVI.

G. ADDITIONAL TAGGING OF FACILITY NUMBERS ON INSIDE OF DOOR AND CIRCUIT SWITCH NUMBER ON THE MVI SWITCH.

H. SIDE AND FRONT DOOR SHALL BE LOCKED WITH KEYLESS LOCKS.

J. USE THE 4-WAY ADJUSTABLE JUNCTION TAP FOR STANDOFF GROUNDING (S305712).

© 1998 - 2021 San Diego Gas & Electric Company. All rights reserved. Removal of this copyright notice without permission is not permitted under law.

REV	CHANGE	DR	BY	DSN	APV	DATE	REV	CHANGE	DR	BY	DSN	APV	DATE
C	MOVED FROM UG3516	EDM	JIK	-	-	05/17/2021	F						
B	EDITORIAL CHANGES	-	AW	JS	CZH	07/01/2018	E						
A	REVISION	-	-	-	-	07/12/2011	D	BILL OF MATERIALS UPDATE	EDM	RSL	JES	CZH	12/12/2021

BILL OF MATERIALS:

ITEM	DESCRIPTION	QUANTITY	STANDARD PAGE	STOCK NUMBER	DESIGN UNITS
1	CABINET, ENCLOSURE, FOR MVI/MVS	1	--	S190490	DMV12
2	MVI, 3-Ø 200A LINE, 200A LOAD	1	--	S708410	S23PFI
3	PAD\W-BOX, TRANSFORMER\UTILITY EQUIPMENT, SINGLE-PHASE	1	3421	S514240	FC3PAD
4	HANDHOLE, 17" X 30"	1	3312	S162426	TERM3F
5	WIRE, GROUND, TRENCH, COPPER, #2	AS REQ'D	4510	--	--
6	ELBOW, LOADBREAK, 14.4KV, 200A	AS REQ'D	4190 - 4191	--	--
7	PLUG, BUSHING (F)	6	4180	S544676	BSHPLG
8	LOCKS, KEYLESS (II)	2	--	S468010	--
9	NUT, STUD, 1/2" X 1 3/8" (II)	2	--	S507000 (X)	--
10	WASHER, STANDARD FLAT ROUND, BRONZE, 1/2" (II)	2	--	S799488	--
11	HOLD DOWN (SUPPLIED WITH CABINET) (II)	2	--	--	--
12	SEALING COMPOUND (II)	AS REQ'D	--	S442976	--
13	TAGS, IDENTIFICATION, CABLE	AS REQ'D	3202	--	--
14	TAGS, IDENTIFICATION, SWITCH	AS REQ'D	--	--	--
15	NUT, STANDARD HEX, STAINLESS STEEL (II)	2	--	S505536	--

NOTES:

(I) THIS APPLICATION OFFERS THE ABILITY TO PROGRAM AN INTERRUPTION CURRENT CURVE AND A THREE-PHASE SWITCH FOR HIGHER LOAD AND RELIABILITY ISSUES OF EXISTING FACILITIES. THE THREE-PHASE SWITCH WILL ALSO REDUCE THE POSSIBILITY OF FERRO-RESONANCE DURING SERVICE RESTORATION.

(II) NOT SHOWN ON FIGURES.

(X) THIS ITEM IS EXEMPT.

REFERENCE:

a. FOR CABLE IDENTIFICATION, SEE UG3202.
b. FOR STRUCTURE/EQUIPMENT IDENTIFICATION, SEE UG3211.
c. FOR HIGH VOLTAGE DECAL, SEE UG3221.
d. FOR WIRE ENTRY PREVENTION, SEE UG3408.
e. FOR RETAINING WALLS, SEE UG3489.
f. FOR SEALING JACKETED CABLE, SEE UG4108.
g. FOR (PREFERRED I) AND (ALTERNATE) TRENCH GROUND WIRE, SEE UG4510.
h. FOR EQUIPMENT GROUNDING, SEE UG4512.
i. FOR GROUNDING PAD MOUNTED EQUIPMENT, SEE UG4520 AND UG4521.
j. FOR GROUNDING HARDWARE AND CONNECTIONS, SEE UG4505.
k. FOR MVI SPECIFICATIONS, SEE UG3675.

TABLE OF CONTENTS

© 1998 - 2021 San Diego Gas & Electric Company. All rights reserved. Removal of this copyright notice without permission is not permitted under law.

REV	CHANGE	DR	BY	DSN	APV	DATE	REV	CHANGE	DR	BY	DSN	APV	DATE
C	MOVED FROM UG3516	EDM	JIK	-	-	05/17/2021	F						
B	EDITORIAL CHANGES	-	AW	JS	CZH	07/01/2018	E						
A	REVISION	-	-	-	-	07/12/2011	D	BILL OF MATERIALS UPDATE	EDM	RSL	JES	CZH	12/12/2021

SCOPE: THIS STANDARD SHOWS A 12KV, 600A AIR BREAK PME 3 SECTIONALIZING SWITCH CABINET.

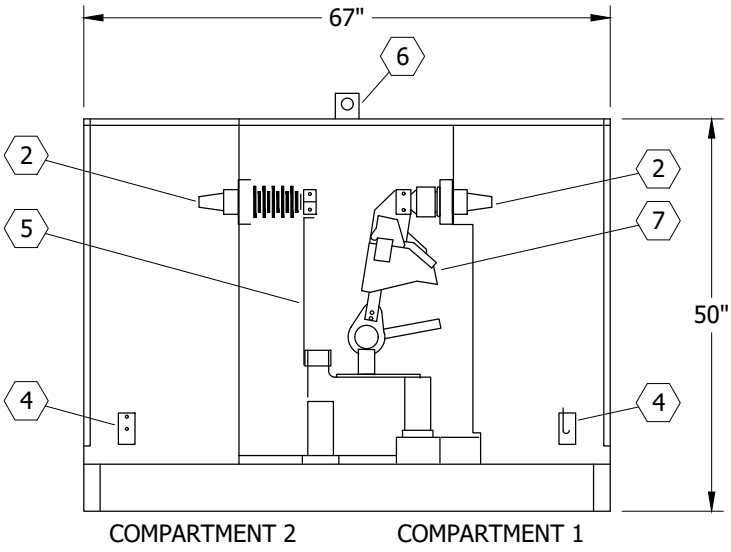

FIGURE 1 (I)
SIDE VIEW

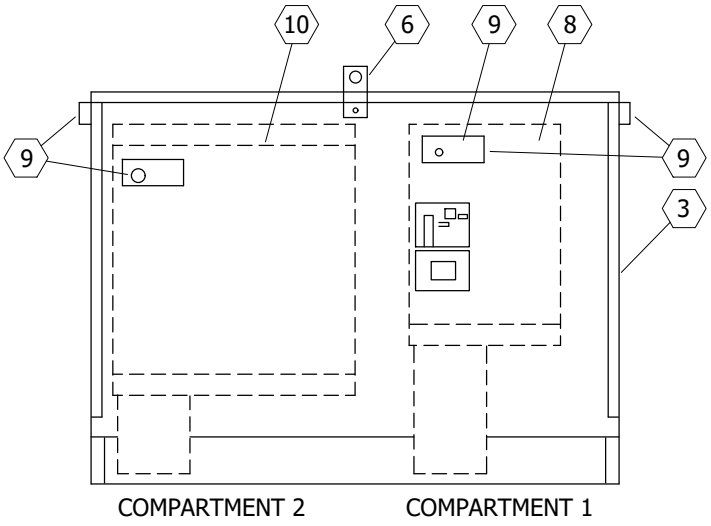

FIGURE 1
SIDE VIEW

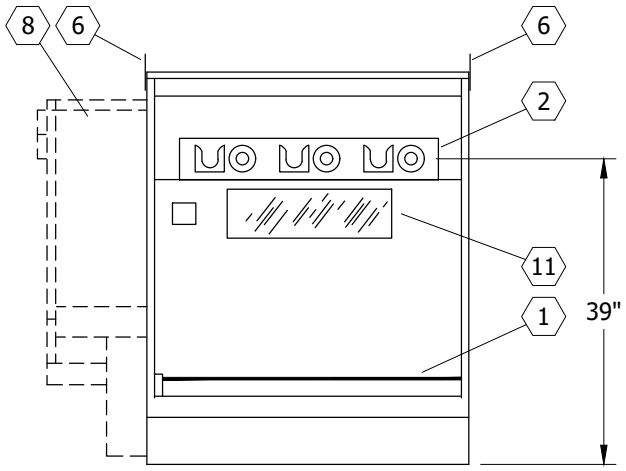

FIGURE 1
COMPARTMENT 1
END VIEW

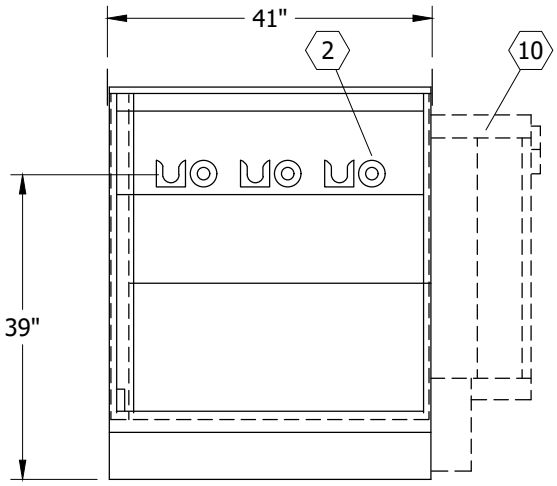

FIGURE 1
COMPARTMENT 2
END VIEW

TABLE OF CONTENTS

© 1998 - 2021 San Diego Gas & Electric Company. All rights reserved. Removal of this copyright notice without permission is not permitted under law.

REV	CHANGE	DR	BY	DSN	APV	DATE	REV	CHANGE	DR	BY	DSN	APV	DATE
C	FORMATTING	EDM	JIK	-	-	5/17/2021	F						
B	EDITORIAL CHANGES	-	AW	JS	CZH	7/1/2018	E						
A	REVISION	-	-	-	-	1/1/2000	D						

X Indicates Latest Revision | Completely Revised | New Page | Information Removed

SDG&E ELECTRIC UNDERGROUND CONSTRUCTION STANDARDS

PAD MOUNTED AIR BREAK PME 3 SECTIONALIZING SWITCH CABINET
12KV, 600A

UG3583.1

TABLE 1

ELECTRIC RATINGS	
VOLTAGE	14.4KV
B.I.L.	95KV
CURRENT, CONDITIONS	600A
LOADMAKE AND LOADBREAK	600A
MOMENTARY AND FAULT CLOSE (RMS, ASYMMETRICAL)	22,400A
MOMENTARY AND FAULT CLOSE (RMS, SYMMETRICAL)	14,000A

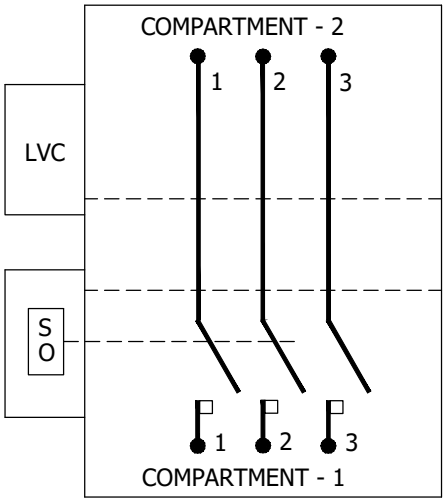

UG MAP SYMBOL

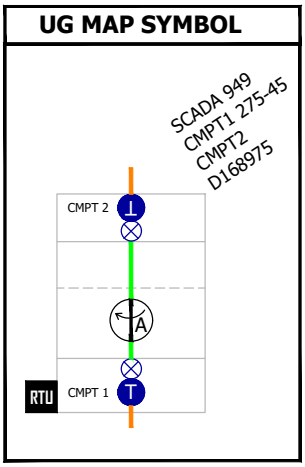

FIGURE 2
PME 3
CONNECTION DIAGRAM

SWITCH PARTS LIST	
ITEM	**DESCRIPTION**
1	BAR, GROUND
2	BUSHING, 600A
3	PLATE, NAME (ON OUTSIDE OF DOOR)
4	PLATE, GROUNDING
5	BUS, 600A
6	TABS, LIFTING (II)
7	SWITCH, 600A MINI-RUPTER
8	OPERATOR, SWITCH (SCADA ONLY)
9	PROVISION, PENTAHEAD LATCH LOCKING
10	COMPARTMENT, LOW VOLTAGE (SCADA ONLY)
11	WINDOW, LEXAN SWITCH VIEWING

INSTALLATION: NONE

BILL OF MATERIALS: NONE

© 1998 - 2021 San Diego Gas & Electric Company. All rights reserved. Removal of this copyright notice without permission is not permitted under law.

REV	CHANGE	DR	BY	DSN	APV	DATE	REV	CHANGE	DR	BY	DSN	APV	DATE
C	FORMATTING	EDM	JIK	-	-	5/17/2021	F						
B	EDITORIAL CHANGES	-	AW	JS	CZH	7/1/2018	E						
A	REVISION	-	-	-	-	1/1/2000	D						

TABLE OF CONTENTS

NOTES:

(I) WEIGHT: 1,040 LBS MAX.

(II) REMOVE AFTER INSTALLATION, REPLACE BOLTS AND STORE INSIDE CABINET.

REFERENCE:

a. SEE UG3214 FOR SWITCH IDENTIFICATION.

b. SEE UG3418 FOR BOX PAD INSTALLATION FOR PAD MOUNTED 600A, 12KV SWITCH.

c. SEE UG3584 FOR SWITCH INSTALLATION.

d. SEE UG4355 FOR FAULT INDICATOR INSTALLATION.

e. SEE DM6113 FOR AUTOMATIC FAULT INDICATOR APPLICATION.

TABLE OF CONTENTS

© 1998 - 2021 San Diego Gas & Electric Company. All rights reserved. Removal of this copyright notice without permission is not permitted under law.

REV	CHANGE	DR	BY	DSN	APV	DATE	REV	CHANGE	DR	BY	DSN	APV	DATE
C	FORMATTING	EDM	JIK	-	-	5/17/2021	F						
B	EDITORIAL CHANGES	-	AW	JS	CZH	7/1/2018	E						
A	REVISION	-	-	-	-	1/1/2000	D						

X Indicates Latest Revision | Completely Revised | New Page | Information Removed

SDG&E ELECTRIC UNDERGROUND CONSTRUCTION STANDARDS

PAD MOUNTED AIR BREAK PME 3 SECTIONALIZING SWITCH CABINET
12KV, 600A

UG3583.3

SCOPE: THIS STANDARD SHOWS THE INSTALLATION FOR PAD MOUNTED AIR BREAK 12KV, 600A PME 3 SECTIONALIZING SWITCH CABINET.

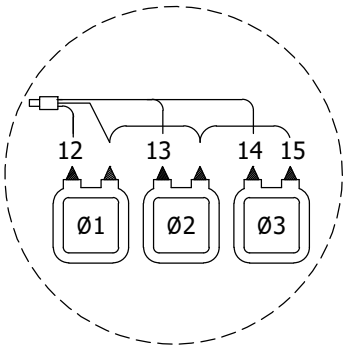

DETAIL 1
CURRENT SENSORS TO BE INSTALLED BY SCADA CREW, SCADA ONLY

FIGURE 1
COMPARTMENT 1
END VIEW

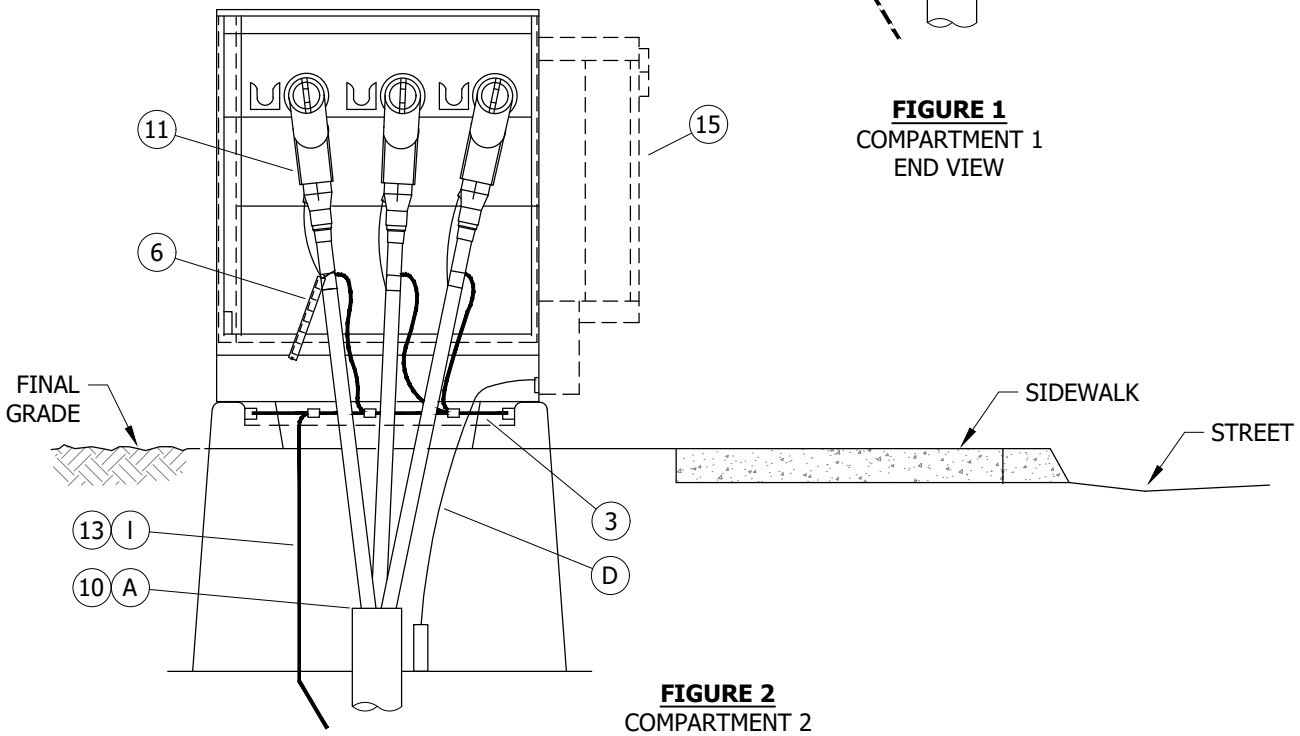

FIGURE 2
COMPARTMENT 2
END VIEW

TABLE OF CONTENTS

© 1998 - 2021 San Diego Gas & Electric Company. All rights reserved. Removal of this copyright notice without permission is not permitted under law.

REV	CHANGE	DR	BY	DSN	APV	DATE	REV	CHANGE	DR	BY	DSN	APV	DATE
C	FORMATTING	EDM	JIK	-	-	5/17/2021	F						
B	EDITORIAL CHANGES	-	AW	JS	CZH	7/1/2018	E						
A	REVISION	-	-	-	-	3/1/2002	D						

X Indicates Latest Revision | Completely Revised | New Page | Information Removed

SDG&E ELECTRIC UNDERGROUND CONSTRUCTION STANDARDS

INSTALLATION OF PAD MOUNTED AIRBREAK PME 3
SECTIONALIZING SWITCH CABINET, 12KV, 600A

UG3584.1

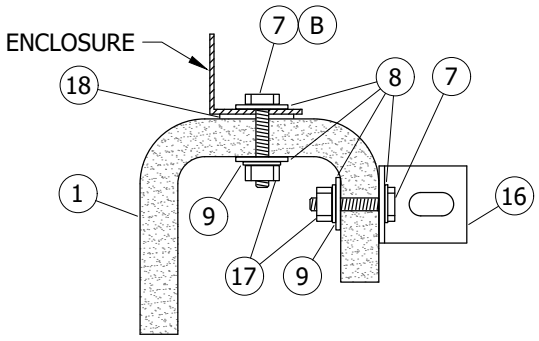

FIGURE 3
HOLD-DOWN DETAIL AND RING BUSS SUPPORT

INSTALLATION:

(A) SEAL CONDUITS WITH SEALING COMPOUND.

(B) BASE OF CABINET SHALL BE CAULKED ONLY TO PREVENT WIRE ENTRY.

C. SECURE ALL OF THE SWITCH DOORS WITH PENTAHEAD BOLTS AND SCHLAGE PME SERIES LOCKS.

(D) SUPERVISORY OR ANTENNA CABLE AS REQUIRED FOR SCADA.

(E) DO NOT CONNECT CONCENTRIC TO GROUND BAR.

(F) CURRENT SENSORS TO BE INSTALLED BY SCADA CREW.

(G) INSTALL CONDUITS SO THAT THE FEED IS CONNECTED TO THE SWITCH IN COMPARTMENT 1. COMPARTMENT 1 SHALL BE ON THE RIGHT SIDE AS ONE FACES THE CABINET FROM THE STREET OR SIDEWALK.

BILL OF MATERIALS:

ITEM	DESCRIPTION	QUANTITY	STANDARD PAGE	STOCK NUMBER	DESIGN UNITS
1	BOX PAD, FOR PME 3, AIR BREAK SWITCH	1	3418	S514040	3418BP
2	PADLOCK (I)(G)	AS REQ'D	-	S514848	PME-3C
3	WIRE, THW 4/0 (D)	AS REQ'D	4530	S808224	THW4/0
4	SWITCH, PME 3, MANUAL	AS REQ'D	3584	S708968	PME-03
	SWITCH, PME 3, SCADA	AS REQ'D	3584	S708980	PME-3S
5	GROUND BAR	AS REQ'D	-	-	-
6	IDENTIFICATION TAGS	AS REQ'D	3202/3213-3218	-	-
7	SCREW, HEX HEAD CAP, BRONZE, 1/2" X 1 1/2"	4	-	S616192	-
8	WASHER, STANDARD FLAT ROUND, BRONZE, 1/2"	8	-	S799488	-
9	SPRING, WASHER LOCK	4	-	S796416	-
10	SEALING COMPOUND	AS REQ'D	-	S442976	-
11	CONNECTORS, 12KV, CAMLINK OPERABLE, 600A	AS REQ'D	4187	-	C-LINK
12	CURRENT SENSORS (SCADA ONLY)	-	-	-	-
13	WIRE, TRENCH GROUND	AS REQ'D	4510	-	TG-T-W
14	SWITCH OPERATOR (SCADA ONLY)	-	-	-	-
15	RTU (SCADA ONLY)	-	-	-	-
16	BRACKET, STAINLESS STEEL, 2" X 3"	4	-	S166072	-
17	NUT, 1/2" HEX BRONZE	4	-	S506112	-
18	GASKET (BY MANUFACTURER)	-	-	-	-
19	CONNECTOR, COMPRESSION (I)	AS REQ'D	-	-	-

TABLE OF CONTENTS

© 1998 - 2021 San Diego Gas & Electric Company. All rights reserved. Removal of this copyright notice without permission is not permitted under law.

REV	CHANGE	DR	BY	DSN	APV	DATE	REV	CHANGE	DR	BY	DSN	APV	DATE
C	FORMATTING	EDM	JIK	-	-	5/17/2021	F						
B	EDITORIAL CHANGES	-	AW	JS	CZH	7/1/2018	E						
A	REVISION	-	-	-	-	3/1/2002	D						

NOTES:

(I) NOT SHOWN OF FIGURES.

REFERENCE:

a. SEE UG3211 FOR STRUCTURE/EQUIPMENT IDENTIFICATION TAG.

b. SEE UG3213, UG3214, UG3215, UG3216, UG3217, AND UG3218 FOR SWITCH IDENTIFICATION.

c. SEE UG3408 FOR WIRE ENTRY PREVENTION AND MOISTURE ENTRY.

(d) SEE UG3418 FOR BOX PAD INSTALLATION.

e. SEE UG3479 FOR BARRIERS IF THE SWITCH IS SUBJECT TO VEHICULAR TRAFFIC.

f. SEE UG3480, UG3481, UG3482, AND UG3483 FOR MINIMUM OPERATING CLEARANCE REQUIREMENTS (PAD PLACEMENT).

g. SEE UG3484 FOR PAD INSTALLATION OF PAD MOUNTED EQUIPMENT.

h. SEE UG3486, UG3487, AND UG3488 FOR RETAINING WALL REQUIREMENTS AND CLEARANCES FROM REVERSE SUBGRADE RETAINING WALLS.

i. SEE UG3489 FOR RETAINING WALLS.

j. SEE UG3583 FOR PAD MOUNTED PME 3 SECTIONALIZING SWITCH.

k. SEE UG4108 FOR INSTRUCTIONS TO SEAL JACKETED CABLE.

(l) SEE UG4510 FOR (PREFERRED I) AND (ALTERNATE TRENCH GROUND WIRE).

m. SEE UG4512 FOR EQUIPMENT GROUNDING INSTALLATION.

n. SEE UG4520 AND UG4521 (PREVIOUS # UG4520.1-.9) FOR GROUNDING PAD MOUNTED EQUIPMENT.

o. SEE UG4525 FOR CONCENTRIC NEUTRAL TERMINATIONS AND GROUNDING PREMOLDED CONNECTORS.

p. SEE UG4530 FOR NEUTRAL AND GROUND WIRE SCHEMATIC DIAGRAM.

q. SEE UG4187 FOR CAM-LINK CONNECTION.

TABLE OF CONTENTS

© 1998 - 2021 San Diego Gas & Electric Company. All rights reserved. Removal of this copyright notice without permission is not permitted under law.

REV	CHANGE	DR	BY	DSN	APV	DATE	REV	CHANGE	DR	BY	DSN	APV	DATE
C	FORMATTING	EDM	JIK	-	-	5/17/2021	F						
B	EDITORIAL CHANGES	-	AW	JS	CZH	7/1/2018	E						
A	REVISION	-	-	-	-	3/1/2002	D						

X Indicates Latest Revision | Completely Revised | New Page | Information Removed

SDG&E ELECTRIC UNDERGROUND CONSTRUCTION STANDARDS

INSTALLATION OF PAD MOUNTED AIRBREAK PME 3 SECTIONALIZING SWITCH CABINET, 12KV, 600A

UG3584.3

SCOPE: THIS STANDARD SHOWS THE PAD MOUNTED 3-WAY 12KV 600A SF-6 GAS SWITCH CABINET.

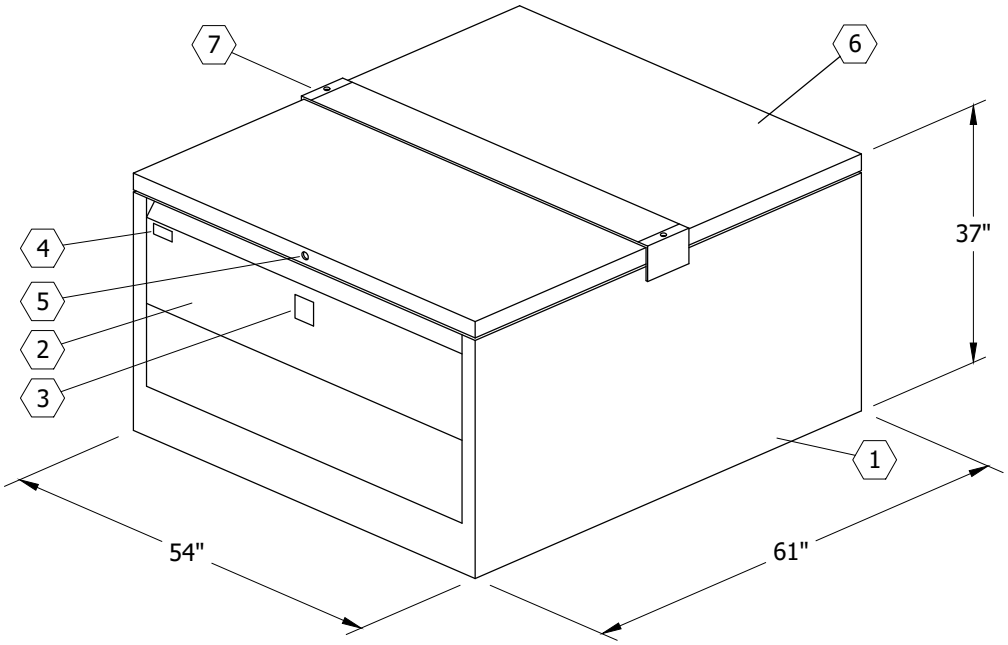

FIGURE 1
ISOMETRIC VIEW

TABLE 1

EQUIPMENT	WEIGHT (LBS)
MANUAL SWITCH	825
SCADA SWITCH	1050
ENCLOSURE	370

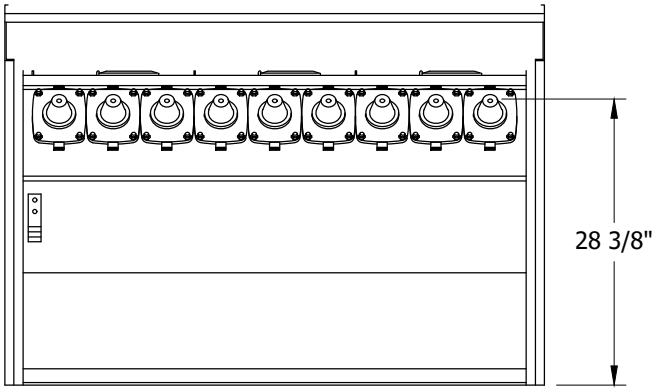

FIGURE 1
FRONT VIEW

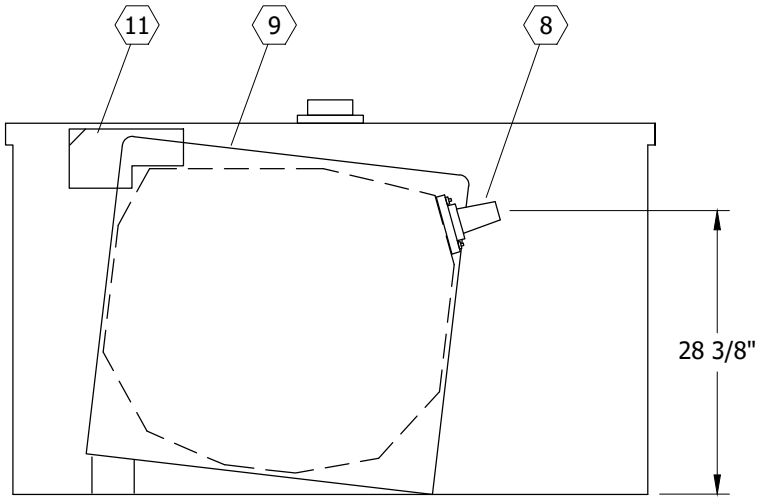

FIGURE 1
SIDE VIEW

TABLE OF CONTENTS

© 1998 - 2021 San Diego Gas & Electric Company. All rights reserved. Removal of this copyright notice without permission is not permitted under law.

REV	CHANGE	DR	BY	DSN	APV	DATE	REV	CHANGE	DR	BY	DSN	APV	DATE
C	FORMATTING	EDM	JIK	-	-	5/17/2021	F						
B	EDITORIAL CHANGES	-	AW	JS	CZH	7/1/2018	E						
A	REVISION	-	-	-	-	3/1/2002	D						

X Indicates Latest Revision | Completely Revised | New Page | Information Removed

SDG&E ELECTRIC UNDERGROUND CONSTRUCTION STANDARDS

PAD MOUNTED 3-WAY 600A SF-6 GAS SWITCH CABINET (VISTA)

UG3585.1

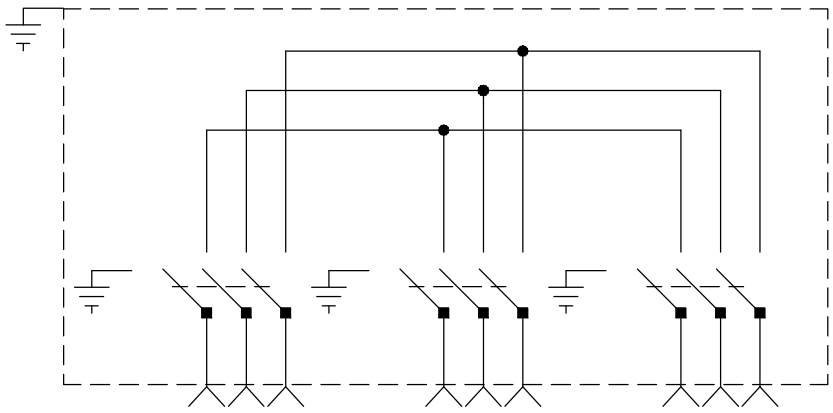

FIGURE 2
CONNECTION DIAGRAM

UG MAP SYMBOL

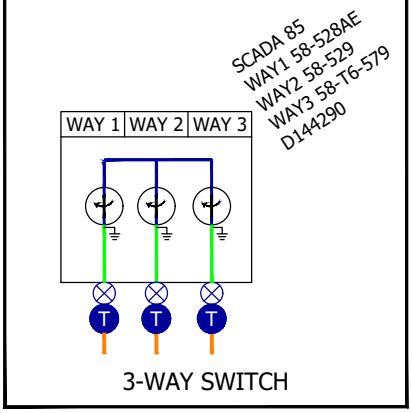

3-WAY SWITCH

TABLE 2

ELECTRIC RATING	
VOLTAGE	14.4KV
B.I.L.	95KV
CURRENT, CONDITIONS	600A
LOADMAKE AND LOADBREAK	600A
MOMENTARY AND FAULT CLOSE (RMS, SYMMETRICAL)	12,500A

TABLE 3

SWITCH STOCK NUMBER		
600A	**STOCK NUMBER**	**DESIGN UNIT**
(STAINLESS STEEL)	S709046	3WAY-V
SCADA 3-WAY	S704698	3WAYVS

TABLE 4

GAS SWITCH PARTS LIST	
ITEM	**DESCRIPTION**
1	ENCLOSURE, PAD MOUNTED
2	PANEL, REMOVABLE
3	SIGN, WARNING
4	NAME PLATE
5	LOCKING MECHANISM, PENTAHEAD BOLT
6	LIFT-UP ROOF, HINGED
7	TAB, RETRACTABLE LIFTING
8	BUSHING, 600A
9	TANK, SUBMERSIBLE, STAINLESS STEEL, SF-6, INSULATED
10	WINDOWS, FAULT INDICATOR (I)
11	MOTOR OPERATOR, "SCADA ONLY"

INSTALLATION: NONE

BILL OF MATERIALS: NONE

NOTES:

(I) NOT SHOWN ON FIGURES.

REFERENCE: NONE

© 1998 - 2021 San Diego Gas & Electric Company. All rights reserved. Removal of this copyright notice without permission is not permitted under law.

REV	CHANGE	DR	BY	DSN	APV	DATE	REV	CHANGE	DR	BY	DSN	APV	DATE
C	FORMATTING	EDM	JIK	-	-	5/17/2021	F						
B	EDITORIAL CHANGES	-	AW	JS	CZH	7/1/2018	E						
A	REVISION	-	-	-	-	3/1/2002	D						

TABLE OF CONTENTS

SCOPE: THIS STANDARD SHOWS THE INSTALLATION FOR PAD MOUNTED 3-WAY 600A SF-6 GAS SWITCH CABINET (VISTA).

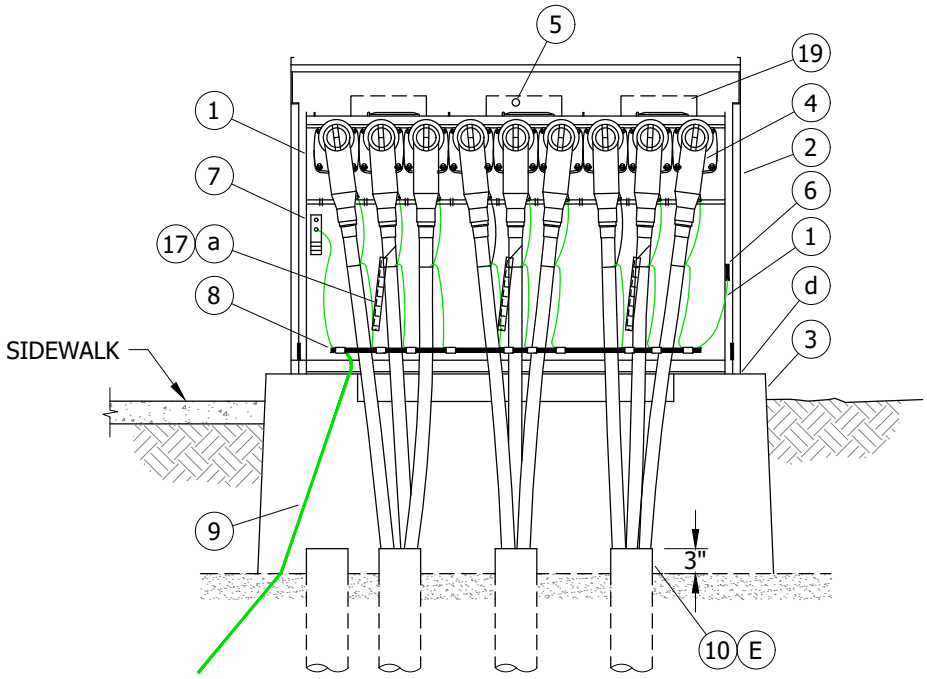

FIGURE 1
FRONT VIEW

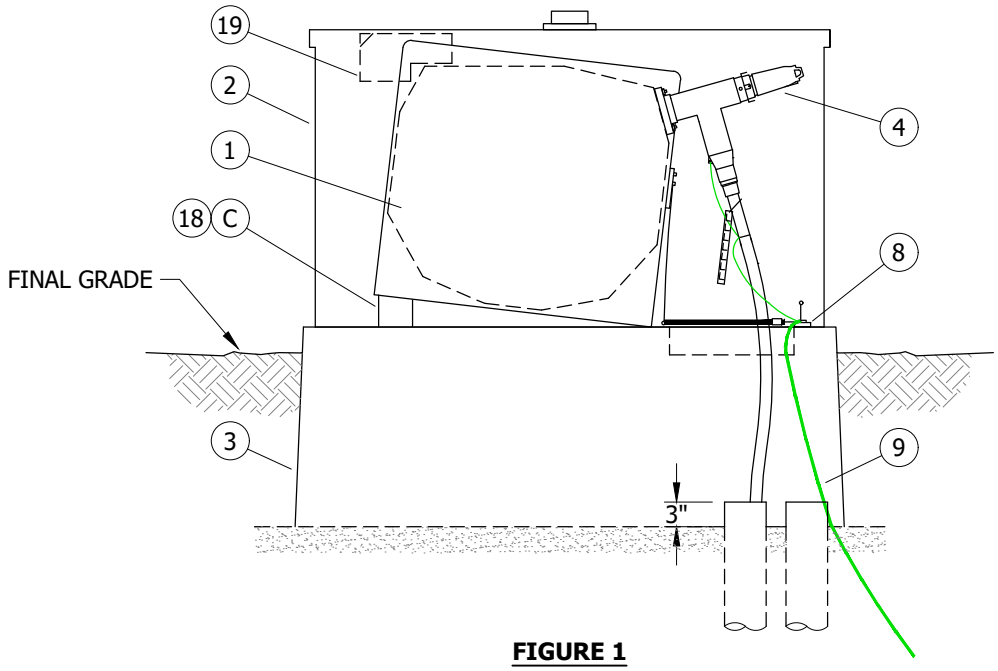

FIGURE 1
SIDE VIEW

TABLE OF CONTENTS

© 1998 - 2021 San Diego Gas & Electric Company. All rights reserved. Removal of this copyright notice without permission is not permitted under law.

REV	CHANGE	DR	BY	DSN	APV	DATE	REV	CHANGE	DR	BY	DSN	APV	DATE
C	FORMATTING	EDM	JIK	-	-	5/17/2021	F						
B	EDITORIAL CHANGES	-	AW	JS	CZH	7/1/2018	E						
A	REVISION	-	-	-	-	3/1/2002	D						

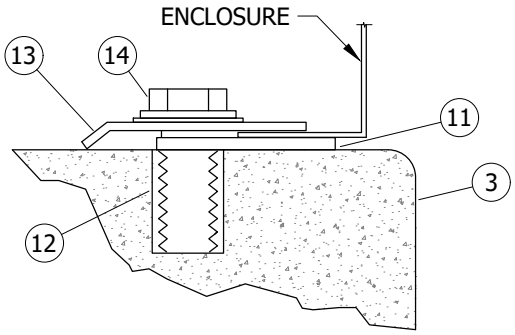

FIGURE 2 (II)
HOLD DOWN DETAIL

INSTALLATION:

A. THE SWITCH AND ENCLOSURE ARE SHIPPED ON ONE PALLET BUT ARE TWO SEPARATE ITEMS.

B. DO NOT ATTEMPT TO LIFT THE SWITCH AND SWITCH ENCLOSURE AT ONE TIME, DAMAGE WILL OCCUR TO THE ENCLOSURE LIFTING DEVICES.

(C) DO NOT REMOVE THE GALVANIZED REAR SWITCH MOUNTING BRACKET SUPPLIED BY THE MANUFACTURER.

D. MOUNT SWITCH TO PAD USING 1/2" X 1 1/2" BRONZE CAP SCREWS.

(E) SEAL CONDUIT WITH SEALING COMPOUND.

F. LOADBREAK ELBOWS SHALL NOT BE LANDED ON THE BACK OF THE 600A TEES EXCEPT FOR 1 LOADBREAK ELBOW FOR A SINGLE-PHASE TRANSFORMER (6930). THREE LOADBREAK ELBOWS MAY BE INSTALLED WHEN CONNECTED TO SWITCH WITH NO 600A TEES.

G. SCADA INSTALLATIONS REQUIRE AN ADDITIONAL PAD FOR THE RTU. AN ADDITIONAL 120V SOURCE MUST BE PROVIDED TO THE RTU.

(H) SCADA SWITCHES INCLUDE THE RTU AND CABLES, CONTROL CABLES ARE 45 FEET IN LENGTH. RTU PAD SHALL BE NO MORE THAN 30 FEET FROM SWITCH.

BILL OF MATERIALS:

ITEM	DESCRIPTION	QUANTITY	STANDARD PAGE	STOCK NUMBER	DESIGN UNITS
1	SWITCH, 3-WAY, 600A	1	3585	S709046 S704698	3WAY-V
	SWITCH, SCADA, 3-WAY, 600A (H)	1			3WAYVS
2	ENCLOSURE, PAD MOUNT	1			-
3	BOX PAD	1	3419	S513904	3419BP
4	CONNECTORS, 12KV, 600/200A	AS REQ'D	-	-	-
5	PADLOCK (C)	2	-	S514848	4WTFTS
6	ENCLOSURE, GROUND PAD	-	-	-	-
7	SWITCH, GROUND PAD	-	-	-	-
8	RING BUSS, 4/0 COPPER	-	-	-	-
9	GROUND, TRENCH, COPPER, #2	1	4510	-	TG-E-Q
10	SEALING COMPOUND	AS REQ'D	3948	S442976	-
11	GASKET, BY MANUFACTURER	-	-	-	-
12	INSERT, 1/2" X 13, BY PAD MANUFACTURER	-	-	-	-

© 1998 - 2021 San Diego Gas & Electric Company. All rights reserved. Removal of this copyright notice without permission is not permitted under law.

REV	CHANGE	DR	BY	DSN	APV	DATE	REV	CHANGE	DR	BY	DSN	APV	DATE
C	FORMATTING	EDM	JIK	-	-	5/17/2021	F						
B	EDITORIAL CHANGES	-	AW	JS	CZH	7/1/2018	E						
A	REVISION	-	-	-	-	3/1/2002	D						

BILL OF MATERIALS (CONT'D):

ITEM	DESCRIPTION	QUANTITY	STANDARD PAGE	STOCK NUMBER	DESIGN UNITS
13	HOLD DOWN, BY MANUFACTURER	-	-	-	-
14	SCREW, HEX HEAD CAP, BRONZE, 1/2" X 1 1/2"	6	-	S616192	-
15	WASHER, STANDARD FLAT, BRONZE, 1/2" (III)	6	-	S799488	-
16	WASHER, LOCK SPRING (III)	6	-	S796416	-
17	TAGS, CABLE IDENTIFICATION	AS REQ'D	3202	-	-
18	BRACKET, REAR SWITCH MOUNTING	2	-	-	-
19	MOTOR OPERATOR, "SCADA ONLY"	3	3586	-	-

NOTES:

I. SCADA SWITCH REQUIRES SEPARATE PAD MOUNTED RTU AND EXTERNAL 120V POWER SOURCE.

(II) 1/2 X 13 THREADED INSERTS INSTALLED IN 3419 PAD.

(III) NOT SHOWN ON FIGURES.

REFERENCE:

(a) SEE UG3202 FOR CABLE IDENTIFICATION.

b. SEE UG3211 FOR ATTACHING STRUCTURE/EQUIPMENT IDENTIFICATION TAG.

c. SEE UG3221 FOR HIGH VOLTAGE DECAL.

(d) SEE UG3408 FOR WIRE ENTRY PREVENTION.

e. SEE UG3419 FOR BOX PAD AND CONDUIT PLACEMENT.

f. SEE UG3479 FOR BARRIERS IF THE SWITCH IS SUBJECT TO VEHICULAR TRAFFIC.

g. SEE UG3480, UG3481, UG3482, AND UG3483 FOR MINIMUM OPERATING CLEARANCE REQUIREMENTS.

h. SEE UG3486, UG3487, AND UG3488 FOR RETAINING WALL REQUIREMENTS AND CLEARANCES FROM REVERSE SUBGRADE RETAINING WALLS.

i. SEE UG3489 FOR RETAINING WALLS.

j. SEE UG3409 RTU PAD.

k. SEE UG4355 FOR FAULT INDICATOR INSTALLATION.

l. SEE UG4510 FOR PREFERRED I AND ALTERNATE TRENCH GROUND WIRE.

m. SEE UG4520 AND UG4521 (PREVIOUS # UG4520) FOR EQUIPMENT GROUNDING.

n. SEE UG4525 FOR GROUNDING PREMOLDED CONNECTORS.

o. SEE UG4530 FOR NEUTRAL AND GROUND WIRE SCHEMATIC DIAGRAM.

p. SEE DM6113 FOR AUTOMATIC FAULT INDICATOR APPLICATION.

TABLE OF CONTENTS

© 1998 - 2021 San Diego Gas & Electric Company. All rights reserved. Removal of this copyright notice without permission is not permitted under law.

REV	CHANGE	DR	BY	DSN	APV	DATE	REV	CHANGE	DR	BY	DSN	APV	DATE
C	FORMATTING	EDM	JIK	-	-	5/17/2021	F						
B	EDITORIAL CHANGES	-	AW	JS	CZH	7/1/2018	E						
A	REVISION	-	-	-	-	3/1/2002	D						

SCOPE: THIS STANDARD SHOWS THE INSTALLATION FOR PAD MOUNTED AIRBREAK 12KV, 200A, PME-5 FUSED SWITCH CABINET.

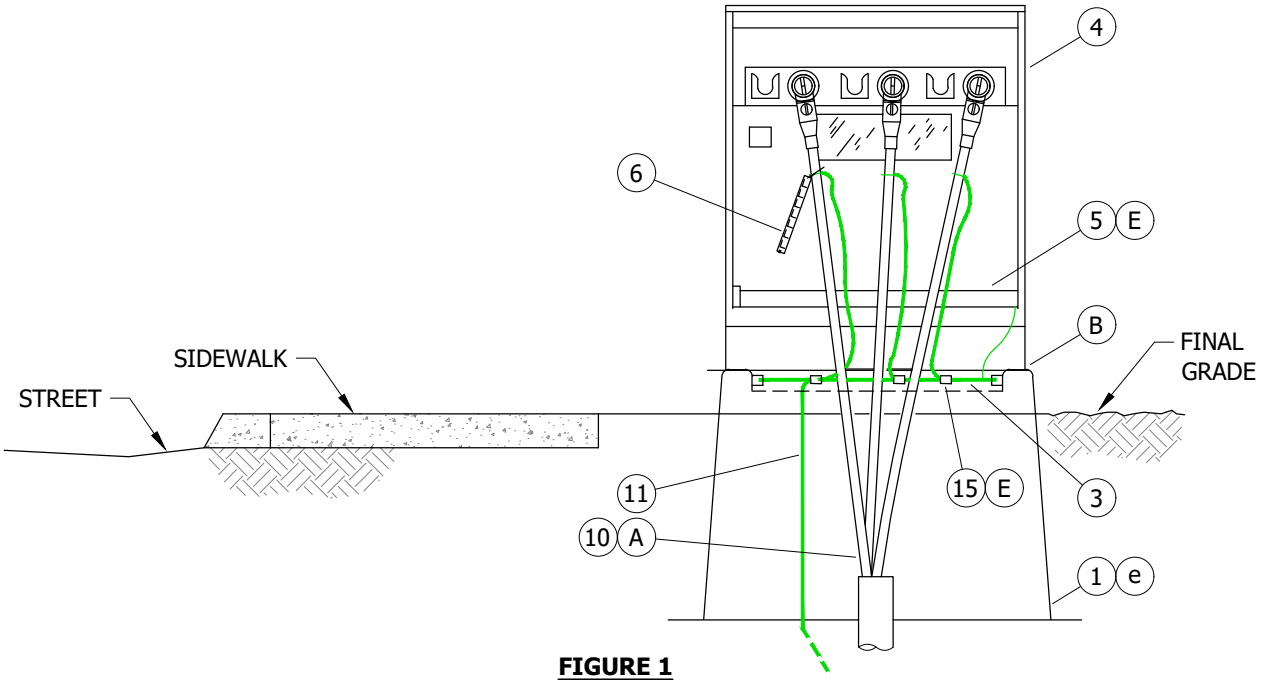

FIGURE 1
COMPARTMENT 1
END VIEW

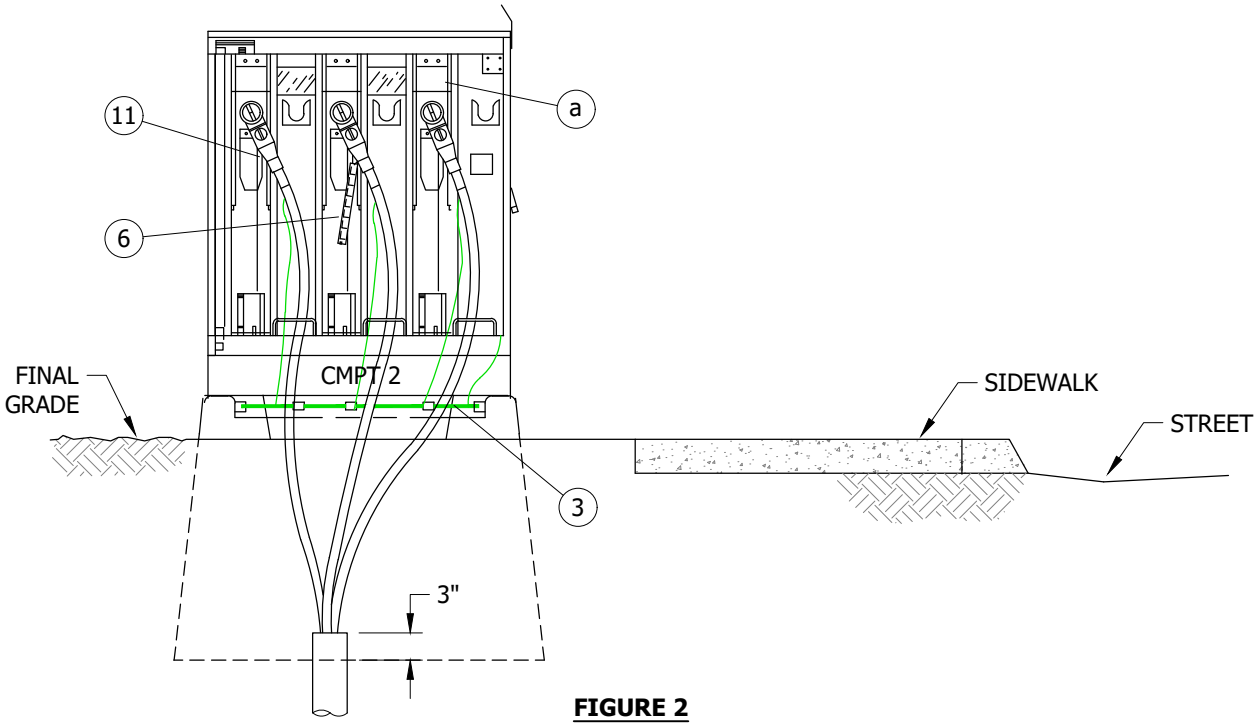

FIGURE 2
COMPARTMENT 2
END VIEW

TABLE OF CONTENTS

© 1998 - 2021 San Diego Gas & Electric Company. All rights reserved. Removal of this copyright notice without permission is not permitted under law.

REV	CHANGE	DR	BY	DSN	APV	DATE	REV	CHANGE	DR	BY	DSN	APV	DATE
C	FORMATTING	EDM	JIK	-	-	5/17/2021	F						
B	EDITORIAL CHANGES	-	AW	JS	CZH	7/1/2018	E						
A	REVISION	-	-	-	-	10/28/2008	D						

X Indicates Latest Revision | Completely Revised | New Page | Information Removed

SDG&E ELECTRIC UNDERGROUND CONSTRUCTION STANDARDS

INSTALLATION OF PAD MOUNTED AIRBREAK PME-5 FUSED SWITCH CABINET
12KV, 200A

UG3588.1

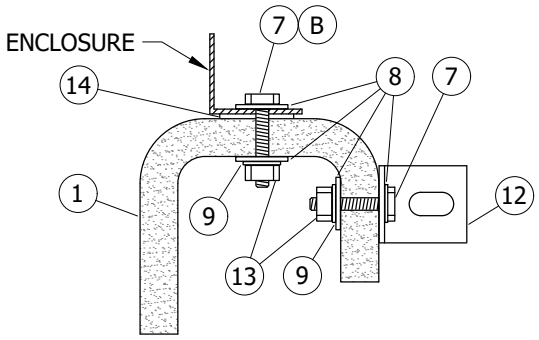

FIGURE 3
HOLD-DOWN DETAIL AND RING BUSS SUPPORT

INSTALLATION:

(A) SEAL CONDUITS WITH SEALING COMPOUND.

(B) BASE OF CABINET SHALL BE CAULKED ONLY TO PREVENT WIRE ENTRY.

C. SECURE ALL OF THE SWITCH DOORS WITH PENTAHEAD BOLTS AND 30 SERIES LOCKS.

(D) DO NOT CONNECT CONCENTRIC TO GROUND BAR.

(E) INSTALL CONDUITS SO THAT THE FEED IS CONNECTED TO THE SWITCH IN COMPARTMENT 1. COMPARTMENT 1 SHALL BE ON THE RIGHT SIDE AS ONE FACES THE CABINET FROM THE STREET OR SIDEWALK.

BILL OF MATERIALS:

ITEM	DESCRIPTION	QUANTITY	STANDARD PAGE	STOCK NUMBER	DESIGN UNITS
1	BOX PAD, FOR PME 3, AIR BREAK SWITCH	1	3418	S514040	3418BP
2	PADLOCK (I)	AS REQ'D	-	S514848	4WTFTS
3	WIRE, 4/0 THW (D)	AS REQ'D	4530	S808224	THW4/0
4	SWITCH, PME-5	AS REQ'D	3511	S708969	PME-05
5	GROUND BAR	AS REQ'D	-	-	-
6	TAGS, IDENTIFICATION	AS REQ'D	3202/3213-3218	-	-
7	SCREW, HEX HEAD CAP, BRONZE, 1/2" X 1 1/2"	4	-	S616192	-
8	WASHER, STANDARD FLAT ROUND, BRONZE, 1/2"	8	-	S799488	-
9	WASHER, LOCK SPRING	4	-	S796416	-
10	SEALING COMPOUND	AS REQ'D	-	S442976	-
11	WIRE, TRENCH GROUND	AS REQ'D	4510	-	TG-E-W
12	BRACKET, STAINLESS STEEL, 2" X 3"	4	-	S166072	-
13	NUT, HEX, BRONZE, 1/2"	4	-	S506112	-
14	GASKET, BY MANUFACTURER	-	-	-	-
15	CONNECTOR, COMPRESSION	AS REQ'D	-	-	-

TABLE OF CONTENTS

© 1998 - 2021 San Diego Gas & Electric Company. All rights reserved. Removal of this copyright notice without permission is not permitted under law.

REV	CHANGE	DR	BY	DSN	APV	DATE	REV	CHANGE	DR	BY	DSN	APV	DATE
C	FORMATTING	EDM	JIK	-	-	5/17/2021	F						
B	EDITORIAL CHANGES	-	AW	JS	CZH	7/1/2018	E						
A	REVISION	-	-	-	-	10/28/2008	D						

NOTES:

(I) NOT SHOWN OF FIGURES.

REFERENCE:

(a) SEE UG4310 FOR SM-4 FUSE CONVERSION.

b. SEE UG3211 FOR STRUCTURE/EQUIPMENT IDENTIFICATION TAG.

c. SEE UG3213, UG3214, UG3215, UG3216, UG3217, AND UG3218 FOR SWITCH IDENTIFICATION.

d. SEE UG3408 FOR WIRE ENTRY PREVENTION AND MOISTURE ENTRY.

(e) SEE UG3418 FOR BOX PAD INSTALLATION.

f. SEE UG3479 FOR BARRIERS IF THE SWITCH IS SUBJECT TO VEHICULAR TRAFFIC.

g. SEE UG3480, UG3481, UG3482, AND UG3483 FOR MINIMUM OPERATING CLEARANCE REQUIREMENTS (PAD PLACEMENT).

h. SEE UG3484 FOR PAD INSTALLATION OF PAD MOUNTED EQUIPMENT.

i. SEE UG3486, UG3487, AND UG3488 FOR RETAINING WALL REQUIREMENTS AND CLEARANCES FROM SUBGRADE RETAINING WALLS.

j. SEE UG3489 FOR RETAINING WALLS.

k. SEE UG3511 FOR PAD MOUNTED, PME-5, 200A, FUSED SWITCH.

l. SEE UG4108 FOR INSTRUCTIONS TO SEAL JACKETED CABLE.

m. SEE UG4510 FOR (PREFERRED I) AND (ALTERNATE TRENCH GROUND WIRE).

n. SEE UG4512 FOR EQUIPMENT GROUNDING INSTALLATION.

o. SEE UG4520 AND UG4521 (PREVIOUS # UG4520) FOR GROUNDING PAD MOUNTED EQUIPMENT.

p. SEE UG4525 FOR CONCENTRIC NEUTRAL TERMINATIONS AND GROUNDING PREMOLDED CONNECTORS.

q. SEE UG4530 FOR NEUTRAL AND GROUND WIRE SCHEMATIC DIAGRAM.

TABLE OF CONTENTS

© 1998 - 2021 San Diego Gas & Electric Company. All rights reserved. Removal of this copyright notice without permission is not permitted under law.

REV	CHANGE	DR	BY	DSN	APV	DATE	REV	CHANGE	DR	BY	DSN	APV	DATE
C	FORMATTING	EDM	JIK	-	-	5/17/2021	F						
B	EDITORIAL CHANGES	-	AW	JS	CZH	7/1/2018	E						
A	REVISION	-	-	-	-	10/28/2008	D						

X Indicates Latest Revision | Completely Revised | New Page | Information Removed

SDG&E ELECTRIC UNDERGROUND CONSTRUCTION STANDARDS

INSTALLATION OF PAD MOUNTED AIRBREAK PME-5 FUSED SWITCH CABINET 12KV, 200A

UG3588.3

3600 - SUBSURFACE SECTIONALIZING EQUIPMENT

3600 - SUBSURFACE SECTIONALIZING EQUIPMENT

MAIN TABLE OF CONTENTS

PAGE	SUBJECT
3605	SUBSTRUCTURE USE AND LIMITATIONS REFERENCE SHEET
3644	EQUIPMENT INSTALLATIONS IN SUBSTRUCTURES
3645	UNOBSTRUCTED SPACE
3646	CABLE AND CONNECTOR PLACEMENT
3647	EQUIPMENT DIMENSIONS AND PLACEMENT
3648	EQUIPMENT ASSEMBLIES
3649	EQUIPMENT COMBINATION GUIDELINES (INCLUDING WALK IN VAULTS)
3660	SECTIONALIZING HANDHOLE - 200A, 6.9KV SINGLE-PHASE
3669	600A SUBSURFACE/SURFACE OPERABLE 4-WAY SF-6 GAS SWITCH (VISTA)
3670	600A 6-WAY SF-6 GAS SWITCH (VISTA) WITH THREE FAULT INTERRUPTERS
3671	INSTALLATION OF SUBSURFACE/SURFACE OPERABLE SWITCH IN A 3317 HANDHOLE
3672	G & W G-RAM 4-WAY GAS SWITCH WITH GROUNDING POSITIONS
3675	SUBSURFACE APPLICATION OF ELASTIMOLD VACUUM SWITCH/INTERRUPTER
3677	TRAYER VAULT-MOUNTED SWITCH GEAR
3678	TRAYER 3-WAY SUBMERSIBLE LIQUID INSULATED VACUUM SWITCHGEAR
3679	TRAYER 4-WAY GROUNDED VACUUM SWITCH
3680	INNOVATIVE SWITCH GEAR SUBMERSIBLE AND VAULT MOUNT

© 1998 - 2021 San Diego Gas & Electric Company. All rights reserved. Removal of this copyright notice without permission is not permitted under law.

REV	CHANGE	DR	BY	DSN	APV	DATE	REV	CHANGE	DR	BY	DSN	APV	DATE
C	FORMATTING	EDM	JIK	-	-	12/28/2021	F						
B	ADDED 3680	-	DG	JS	CZH	05/01/2018	E						
A	ADDED 3679	-	DS	TR	MDJ	05/13/2016	D						

X Indicates Latest Revision | Completely Revised | New Page | Information Removed

SDG&E ELECTRIC UNDERGROUND CONSTRUCTION STANDARDS

SHEET 1 OF 1

SUBSURFACE SECTIONALIZING EQUIPMENT
TABLE OF CONTENTS

UG3601.1

SCOPE: THIS STANDARD SHOWS THE REFERENCE SHEET ON SUBSTRUCTURE USE AND LIMITATIONS.

TABLE 1

STRUCTURE USE AND LIMITATIONS			
SUBSTRUCTURE	**DIMENSIONS**	**TYPE**	**MAJOR USE OF LIMITATION**
3309.1	36" X 24 1/4" X 18"	SINGLE-PHASE HANDHOLE	ALLOWS FOR A MAX OF 3 CONNECTORS WITH 8 TERMINAL POSITIONS EACH. THE 8 RUNS SHALL NOT EXCEED ONE RUN 500 KCMIL, 3 RUNS 350 KCMIL, 2 RUNS 3/0 AND ONE STREET LIGHT RUN.
3309.2	36" X 24 1/4" X 26"	SINGLE-PHASE HANDHOLE	ALLOWS FOR A MAX OF 3 CONNECTORS WITH 7 TERMINAL POSITIONS EACH. THE 7 RUNS SHALL NOT EXCEED 2 RUNS 500 KCMIL, 2 RUNS 350 KCMIL, 2 RUNS 3/0 AND ONE STREET LIGHT RUN.
3309.2	36" X 24 1/4" X 26"	THREE-PHASE HANDHOLE	ALLOWS FOR A MAX OF 4 CONNECTORS WITH 7 TERMINAL POSITIONS EACH. THIS SHALL NOT EXCEED 5 RUNS THREE-PHASE CONSISTING OF ONE RUN 350 KCMIL AND 4 RUNS 3/0 AND ONE STREET LIGHT RUN.
3311	14" X 66" X 14"	HANDHOLE	FOR PRIMARY AND SECONDARY CABLE TRAINING BETWEEN TWO SINGLE-PHASE PADMOUNT TRANSFORMERS CONNECTED IN AN OPEN DELTA BANK.
3311	14" X 108" X 14"	HANDHOLE	FOR PRIMARY AND SECONDARY CABLE TRAINING BETWEEN THREE SINGLE-PHASE PADMOUNT TRANSFORMERS FOR CLOSED DELTA BANK, WHEN HKR TRANSFORMER CANNOT BE USED.
3312	17" X 30" X 12"	HANDHOLE-1 BODY SECONDARY AND UNDER PAD	MAY BE USED FOR REPLACEMENT OF EXISTING FACILITIES. ALL EQUIPMENT FACILITIES REQUIRING 30" X 17" BOX UNDER PAD MOUNTED EQUIPMENT.
3313	24" X 36" X 24"	HANDHOLE SECONDARY	ALLOWS A MAXIMUM OF FOUR RUNS OF 350 KCMIL SINGLE-PHASE OR THREE-PHASE PLUS SERVICES SMALLER THAN 350, OR A MAXIMUM OF THREE RUNS OF 500 KCMIL SINGLE-PHASE OR THREE-PHASE. NO PRIMARY AND SECONDARY ALLOWED TOGETHER. NO 1000 KCMIL ALLOWED.
3313	24" X 36" X 24"	HANDHOLE PRIMARY	ALLOWS SINGLE-PHASE (6.9KV OR 12KV) PRIMARY CABLE DEADBREAK CONNECTIONS FOR TWO RUNS (200A TEE CONNECTOR WITH DEADBREAK ELBOWS ONLY, NOT A STRAIGHT SPLICE) OR ONE 3-WAY CABLE TAP AND LOADBREAK ELBOWS WITH THREE CABLE RUNS MAXIMUM. #2 SOLID IS THE MAXIMUM CABLE ON EACH INSTALLATION. NO FUSED ELBOWS OR 4-WAY CABLE TAPS ALLOWED. NO SECONDARY ALLOWED.
3314	36" X 6" X 48"	HANDHOLE PRIMARY & SECONDARY	FOR THREE-PHASE #2/0 OR SMALLER PRIMARY CABLE PLUS SECONDARIES (500 KCMIL MAX). AN UNOBSTRUCTED SPACE OF 18" X 42" MUST BE MAINTAINED. EXAMPLE: A MAXIMUM INSTALLATION WOULD BE THREE 4-WAY CABLE TAPS WITH LOADBREAK ELBOWS ON ONE WALL AND TWO RUNS OF 3/C - 2/0 ON OPPOSITE WALL. ONE OF THESE RUNS CAN HAVE THREE STRAIGHT SPLICES (UG3646, FIGURE 1). THIS WOULD NOT ALLOW ANY SECONDARIES, FUSED OR ELBOWS. TO OBTAIN REQUIRED UNOBSTRUCTED SPACE, THE 3/C - 2/0 SPLICES AND STRAIGHT RUN MUST BE RACKED ON THE SMALL CABLE HOOKS, SEE UG4178. (a)(b)(d)
3315	4'-0" X 6'-6"X 6'-7"	HANDHOLE PRIMARY & SECONDARY	FOR ALL SIZES OF PRIMARY AND UP TO 500 KCMIL SECONDARY CABLES MAX. AN UNOBSTRUCTED SPACE OF 18" X 48" MUST BE MAINTAINED. EXAMPLE: MAXIMUM INSTALLATION CONSISTS OF 3-350 KCMIL OR LARGER ELBOW TEE SPLICED THREE-PHASE PRIMARY CIRCUITS ON OPPOSITE WALLS, EACH ONE TAPPED WITH ONE THREE-PHASE DISTRIBUTION RUN. THE THREE TEE COMBINATION SHALL ONLY BE USED TO FEED A SWITCHED TIE POSITION.
3316	5'-0" X 8'-6" X 7'-0"	HANDHOLE PRIMARY & SECONDARY	FOR ALL SIZES OF PRIMARY AND UP TO 500 KCMIL SECONDARY CABLES MAX. AN UNOBSTRUCTED SPACE OF 22" X 72" MUST BE MAINTAINED. EXAMPLE: MAXIMUM INSTALLATION CONSISTS OF 3-350 KCMIL OR LARGER ELBOW TEE SPLICED THREE-PHASE PRIMARY CIRCUITS ON OPPOSITE WALLS, EACH ONE TAPPED WITH ONE THREE-PHASE DISTRIBUTION RUN. IN THE SAME HANDHOLE, 6-200A TEES WITH 12 DEADBREAK ELBOWS OR 600V CONNECTORS ON OPPOSITE WALLS. THE THREE TEE COMBINATION SHALL ONLY BE USED TO FEED A SWITCHED TIE POSITION.
3317 (SWITCH ENCLOSURE)	6'-0" X 8'-0" X 7'-0"	HANDHOLE PRIMARY & SECONDARY	FOR ALL SIZES OF PRIMARY CABLE CONNECTED TO SWITCH. SECONDARY CABLE IS LIMITED TO A FEED TO SUMP PUMP AND/OR SCADA. AN UNOBSTRUCTED SPACE OF 36" X 70" MUST BE MAINTAINED. NO CABLE MAY PASS THROUGH OR BE SPLICED IN STRUCTURE.

TABLE OF CONTENTS

© 1998 - 2021 San Diego Gas & Electric Company. All rights reserved. Removal of this copyright notice without permission is not permitted under law.

REV	CHANGE	DR	BY	DSN	APV	DATE	REV	CHANGE	DR	BY	DSN	APV	DATE
C	FORMATTING	EDM	JIK	-	-	12/28/2021	F						
B	EDITORIAL CHANGES	-	AW	JS	CZH	07/01/2018	E						
A	REVISION	-	-	-	-	03/01/2002	D						

X Indicates Latest Revision | Completely Revised | New Page | Information Removed

SDG&E ELECTRIC UNDERGROUND CONSTRUCTION STANDARDS

SUBSTRUCTURE USE AND LIMITATIONS REFERENCE SHEET

UG3605.1

TABLE 1 (CONT'D)

STRUCTURE USE AND LIMITATIONS			
SUBSTRUCTURE	**DIMENSIONS**	**TYPE**	**MAJOR USE OF LIMITATION**
3325	8'-0" X 14'-0" X 9'-6"	MANHOLE PRIMARY & SECONDARY	FOR ALL SIZES OF PRIMARY AND UP TO 500 KCMIL SECONDARY CABLES MAX. AN UNOBSTRUCTED SPACE OF 36" X 10" FOR 14-FOOT MANHOLE OR 36" X 16' FOR 20-FOOT MANHOLE MUST BE MAINTAINED. EXAMPLE: MAXIMUM INSTALLATION CONSISTS OF ONE 4-WAY SWITCH IN A 14-FOOT LONG MANHOLE AND TWO 4-WAY SWITCHES IN A 20-FOOT LONG MANHOLE. A 20-FOOT LONG MANHOLE IS THE MAXIMUM ALLOWABLE SIZE. NO CABLE TAPS ALLOWED. ALWAYS MAINTAIN AN UNOBSTRUCTED SPACE, AS MENTIONED ABOVE, TO ALLOW ACCESSIBILITY TO CABLE, EQUIPMENT, AND CONDUIT. (b)(c)
3326	8'-0" X 20'-0" X 9'-6"		

INSTALLATION:

A. TO AVOID CUTTING THE CONDUIT BENDS, SUBSTRUCTURES AND/OR CABLE POLES WHICH REQUIRE A 90 DEGREE BEND SHALL BE LOCATED FAR ENOUGH AWAY FROM EACH OTHER TO ALLOW ROOM ENOUGH FOR THE TWO 90 DEGREE BENDS. THIS WILL VARY DEPENDING ON THE SIZE OF THE 90 DEGREE BEND.

B. IN EACH SUBSTRUCTURE, AS MANY CONDUIT KNOCKOUTS MAY BE USED AS NEEDED, PROVIDING PROPER INSTALLATION IS FOLLOWED AND REQUIRED UNOBSTRUCTED SPACE IS MAINTAINED. INSTALL CONDUITS USING THE LOWER SET OF KNOCKOUTS FIRST, UNLESS OTHERWISE SPECIFIED ON JOB PRINT. IF ONLY ONE CONDUIT IS REQUIRED, USE THE BOTTOM OUTSIDE (CLOSEST TO THE WALL) KNOCKOUT.

(C) **ONE RUN**: CABLE IN CONDUIT RUNNING FROM ONE LOCATION TO ANOTHER LOCATION.

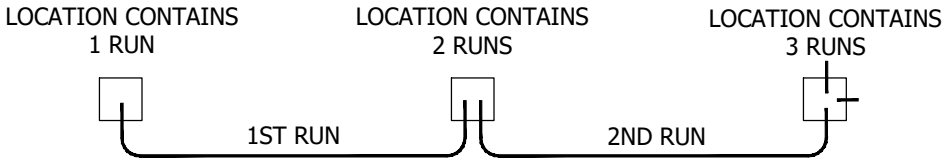

FIGURE 1 (C)
EXAMPLE

BILL OF MATERIALS: NONE

NOTES: NONE

REFERENCE:

(a) SEE UG4178.
(b) FOR EQUIPMENT COMBINATION GUIDELINES, SEE UG3649.
(c) FOR MINIMUM BENDING RADII, SEE UG4008.
(d) SEE UG3646.

TABLE OF CONTENTS

© 1998 - 2021 San Diego Gas & Electric Company. All rights reserved. Removal of this copyright notice without permission is not permitted under law.

REV	CHANGE	DR	BY	DSN	APV	DATE	REV	CHANGE	DR	BY	DSN	APV	DATE
C	FORMATTING	EDM	JIK	-	-	12/28/2021	F						
B	EDITORIAL CHANGES	-	AW	JS	CZH	07/01/2018	E						
A	REVISION	-	-	-	-	03/01/2002	D						

SCOPE: THIS STANDARD DESCRIBES THE SPACE LIMITATIONS AND PROPER CABLE AND EQUIPMENT INSTALLATION STANDARDS IN SUBSTRUCTURES.

INSTALLATION: NONE

BILL OF MATERIALS: NONE

NOTES:

THERE ARE FIVE STANDARDS PERTAINING TO THE PROPER INSTALLATION OF EQUIPMENT IN SUBSTRUCTURES:

I. **UNOBSTRUCTED SPACE - UG3645**
   a. UNOBSTRUCTED SPACE REQUIREMENTS FOR EACH SUBSTRUCTURE.

II. **CABLE AND CONNECTOR PLACEMENT - UG3646**
   a. PROPER CABLE AND CONDUIT INSTALLATION.

III. **EQUIPMENT DIMENSIONS AND PLACEMENT - UG3647**
   a. PROPER INSTALLATION AND APPLICATION OF CABLE RACKING.

IV. **EQUIPMENT ASSEMBLIES - UG3648**
   a. THE COMMON EQUIPMENT ASSEMBLIES ILLUSTRATED AND DIMENSIONED FOR EASE OF DESIGN AND INSTALLATION IN SUBSTRUCTURES.

V. **EQUIPMENT COMBINATION GUIDELINES (INCLUDING WALK IN VAULTS) - UG3649**
   a. THIS STANDARD PRESENTS ILLUSTRATIONS OF THE MOST COMMON EQUIPMENT CONFIGURATIONS THAT ARE ALLOWED OR NOT ALLOWED IN VARIOUS SUBSTRUCTURES.

REFERENCE: NONE

TABLE OF CONTENTS

REV	CHANGE	DRWN	BY	CHKD	APVD	DATE
D	REVISED TO 3D FORMAT/ DRAWING UPDATE	NV5	JIK	EJA	JAS	11/05/2024
C	FORMATTING	EDM	JIK	-	-	12/28/2021
B	EDITORIAL CHANGES	-	AW	JS	CZH	07/01/2018

© 1998 - 2024 San Diego Gas and Electric Company. All rights reserved. Removal of this copyright notice without permission is not permitted under law.

SDG&E ELECTRIC UNDERGROUND CONSTRUCTION STANDARDS

EQUIPMENT INSTALLATIONS IN SUBSTRUCTURES

SCALE: NOT TO SCALE

DRAWING NO: UG3644.1

SHEET: 1 OF 1

X Indicates Latest Revision | Completely Revised | New Page | Information Removed

SCOPE: THIS STANDARD SHOWS THE MINIMUM UNOBSTRUCTED SPACE REQUIRED INSIDE A SUBSTRUCTURE TO ALLOW PERSONNEL TO PERFORM WORK SAFELY AND FREE FROM ANY OBSTRUCTIONS.

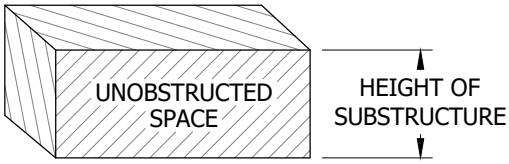

FIGURE 1
UNOBSTRUCTED SPACE

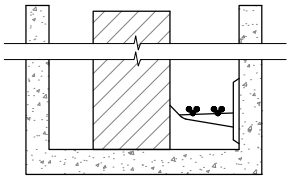

FIGURE 2
CORRECT UNOBSTRUCTED SPACE
END VIEW

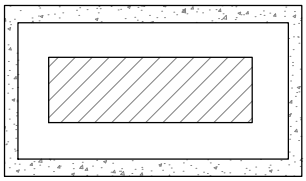

FIGURE 2
CORRECT UNOBSTRUCTED SPACE
PLAN VIEW

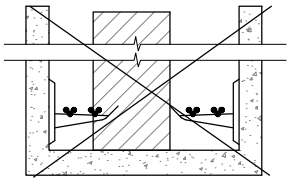

FIGURE 3
INCORRECT UNOBSTRUCTED SPACE
END VIEW

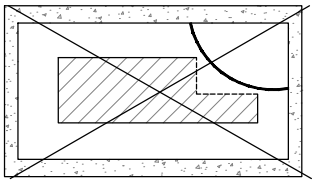

FIGURE 3
INCORRECT UNOBSTRUCTED SPACE
PLAN VIEW

TABLE 1

UNOBSTRUCTED SPACE REQUIREMENTS	
SUBSTRUCTURE	**UNOBSTRUCTED SPACE**
3314	18" X 42"
3315	18" X 48"
3316	22" X 72"
3316 AND SUBSURFACE/SURFACE OPERABLE SWITCH	20" X 60"
3325 (14'-0" LONG)	36" X 10'-0"
3326 (20'-0" LONG)	36" X 16'-0"

INSTALLATION: NONE

BILL OF MATERIALS: NONE

NOTES:

I. AN UNOBSTRUCTED SPACE MUST BE MAINTAINED IN EACH SUBSTRUCTURE TO ALLOW PERSONNEL TO SAFELY ENTER OR EXIT THE SUBSTRUCTURE AND PERFORM WORK.

II. AN UNOBSTRUCTED SPACE SHOULD BE IN THE CENTER OF A SUBSTRUCTURE WHENEVER POSSIBLE.

III. THE UNOBSTRUCTED SPACE MAY BE REDUCED DURING CONSTRUCTION FOR PULLING, TRAINING AND TERMINATING CABLES, ETC., BUT NO PORTION OF THE FINAL UNOBSTRUCTED SPACE MAY BE REDUCED BY CABLES, CABLE RACKS, ETC.

REFERENCE: NONE

© 1998 - 2021 San Diego Gas & Electric Company. All rights reserved. Removal of this copyright notice without permission is not permitted under law.

REV	CHANGE	DR	BY	DSN	APV	DATE	REV	CHANGE	DR	BY	DSN	APV	DATE
C	FORMATTING	EDM	JIK	-	-	12/28/2021	F						
B	EDITORIAL CHANGES	-	AW	JS	CZH	07/01/2018	E						
A	REVISION	-	-	-	-	01/01/1996	D						

X Indicates Latest Revision | Completely Revised | New Page | Information Removed

SDG&E ELECTRIC UNDERGROUND CONSTRUCTION STANDARDS

SHEET 1 OF 1

UNOBSTRUCTED SPACE

UG3645.1

TABLE OF CONTENTS

SCOPE: THIS STANDARD SHOWS CABLE PLACEMENT IN 3314 AND 3315 SUBSTRUCTURES TO ASSURE PROPER CABLE TRAINING.

ATTENTION:

* CABLE PULLED STRAIGHT THROUGH MUST ENTER AND EXIT THE SAME CONDUIT POSITION ON OPPOSITE ENDS. (m)

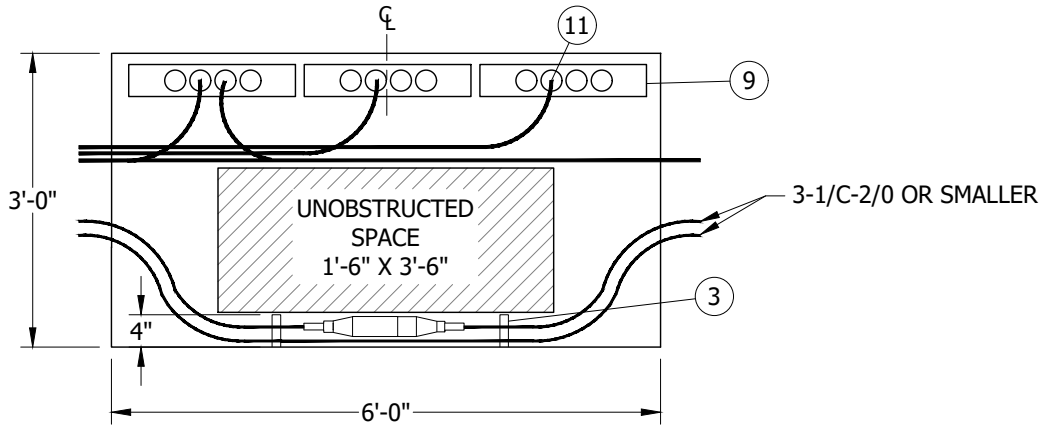

FIGURE 1
3314 HANDHOLE
PLAN VIEW

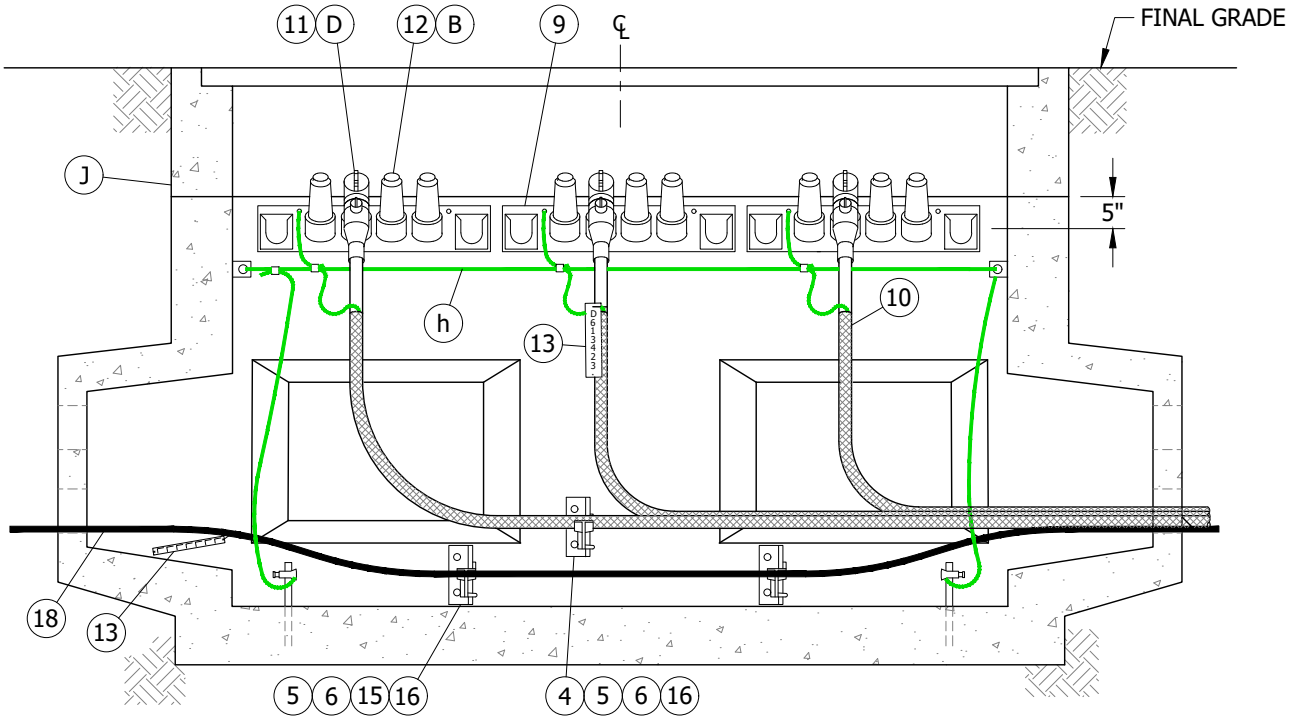

FIGURE 2
SECTION VIEW
3314 HANDHOLE

© 1998 - 2022 San Diego Gas & Electric Company. All rights reserved. Removal of this copyright notice without permission is not permitted under law.

REV	CHANGE	DR	BY	DSN	APV	DATE	REV	CHANGE	DR	BY	DSN	APV	DATE
C	FIGURE UPDATE	EDM	ADW	JES	CZH	07/13/2020	F						
B	EDITORIAL CHANGES	-	AW	JS	CZH	07/01/2018	E						
A	REVISION	-	-	-	-	01/01/1994	D	BILL OF MATERIALS UPDATE	EDM	EJA	GLW	FRC	01/24/2022

X Indicates Latest Revision | Completely Revised | New Page | Information Removed

SDG&E ELECTRIC UNDERGROUND CONSTRUCTION STANDARDS

CABLE AND CONNECTOR PLACEMENT

UG3646.1

TABLE OF CONTENTS

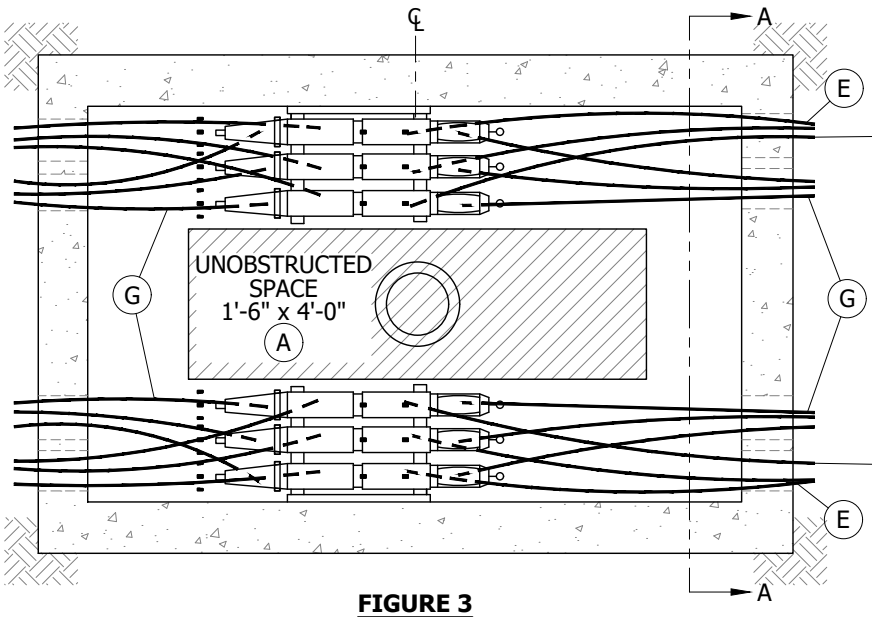

FIGURE 3
3315 HANDHOLE
PLAN VIEW

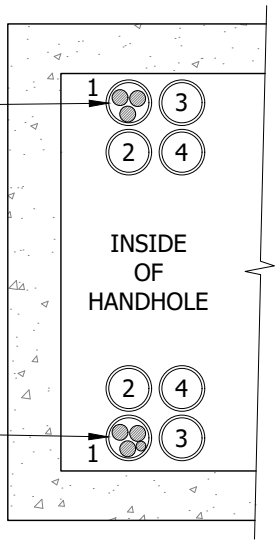

FIGURE 3
VIEW A-A
TYPICAL BOTH ENDS

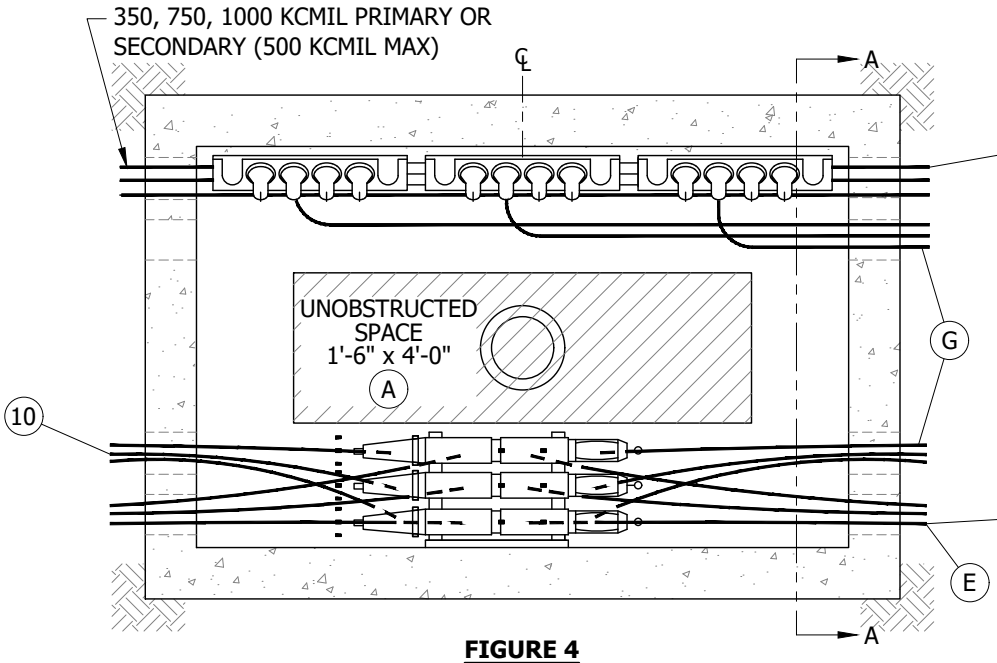

FIGURE 4
3315 HANDHOLE
CABLE TAP AND 600A "T" COMBINATION
PLAN VIEW

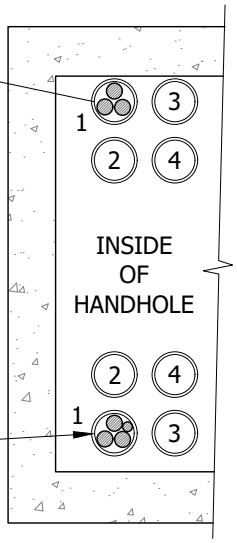

FIGURE 4
VIEW A-A
TYPICAL BOTH ENDS

TABLE OF CONTENTS

© 1998 - 2022 San Diego Gas & Electric Company. All rights reserved. Removal of this copyright notice without permission is not permitted under law.

REV	CHANGE	DR	BY	DSN	APV	DATE	REV	CHANGE	DR	BY	DSN	APV	DATE
C	FIGURE UPDATE	EDM	ADW	JES	CZH	07/13/2020	F						
B	EDITORIAL CHANGES	-	AW	JS	CZH	07/01/2018	E						
A	REVISION	-	-	-	-	01/01/1994	D	BILL OF MATERIALS UPDATE	EDM	EJA	GLW	FRC	01/24/2022

X Indicates Latest Revision | Completely Revised | New Page | Information Removed

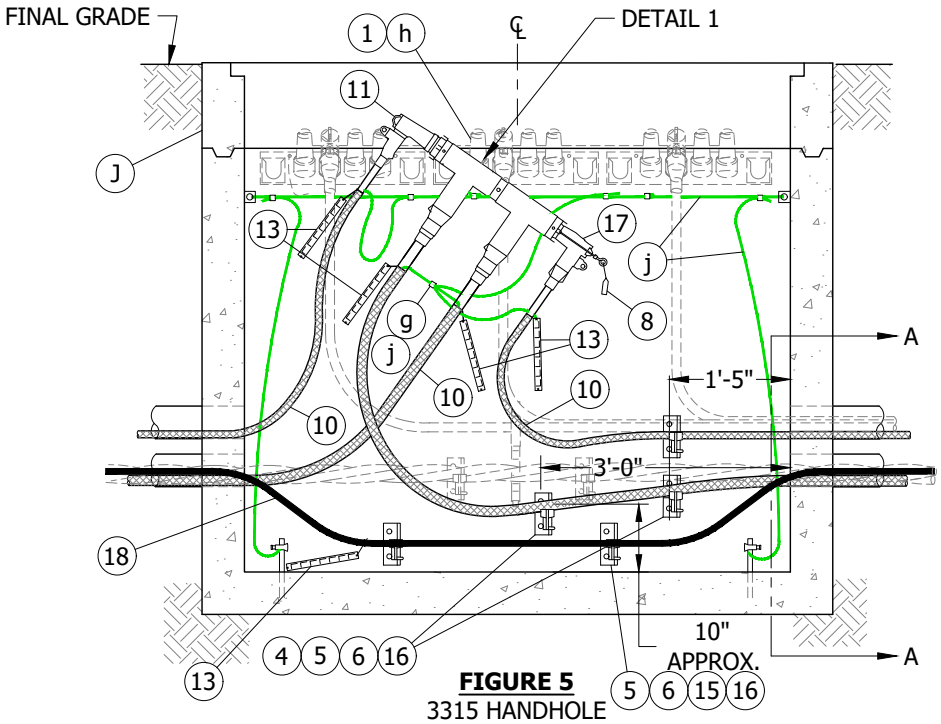

FIGURE 5
3315 HANDHOLE
CABLE TAP AND 600A "T" COMBINATION
SECTION VIEW

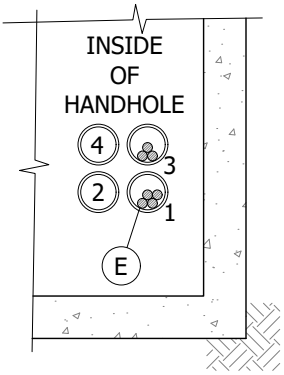

FIGURE 5
VIEW A-A
TYPICAL BOTH ENDS

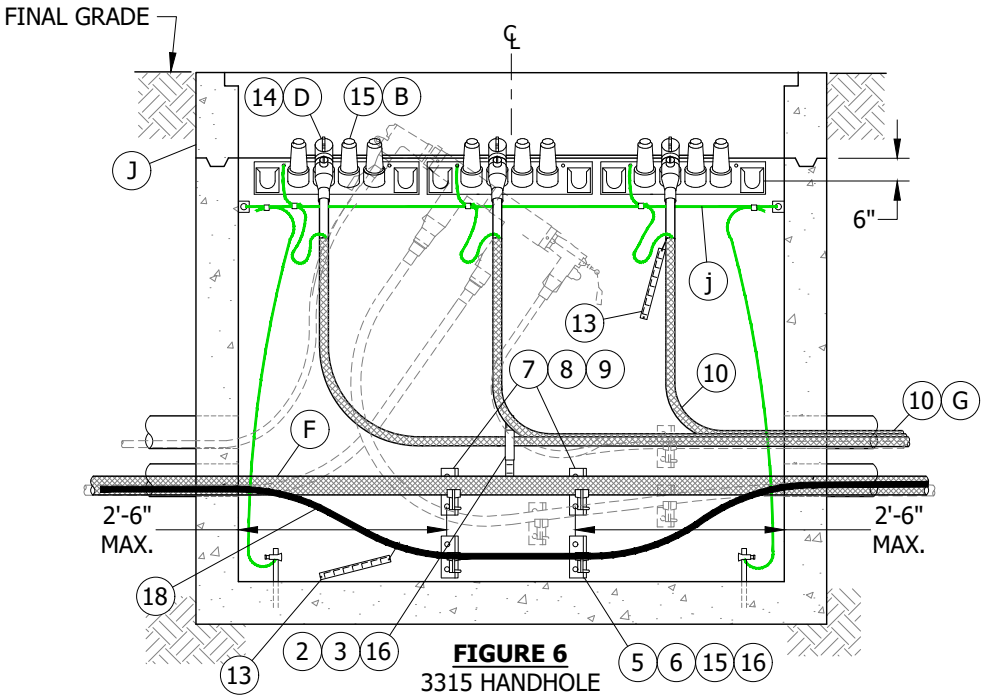

FIGURE 6
3315 HANDHOLE
CABLE TAP COMBINATION - WALL OPPOSITE 600A TEES
SECTION VIEW

TABLE OF CONTENTS

© 1998 - 2022 San Diego Gas & Electric Company. All rights reserved. Removal of this copyright notice without permission is not permitted under law.

REV	CHANGE	DR	BY	DSN	APV	DATE	REV	CHANGE	DR	BY	DSN	APV	DATE
C	FIGURE UPDATE	EDM	ADW	JES	CZH	07/13/2020	F						
B	EDITORIAL CHANGES	-	AW	JS	CZH	07/01/2018	E						
A	REVISION	-	-	-	-	01/01/1994	D	BILL OF MATERIALS UPDATE	EDM	EJA	GLW	FRC	01/24/2022

X Indicates Latest Revision | Completely Revised | New Page | Information Removed

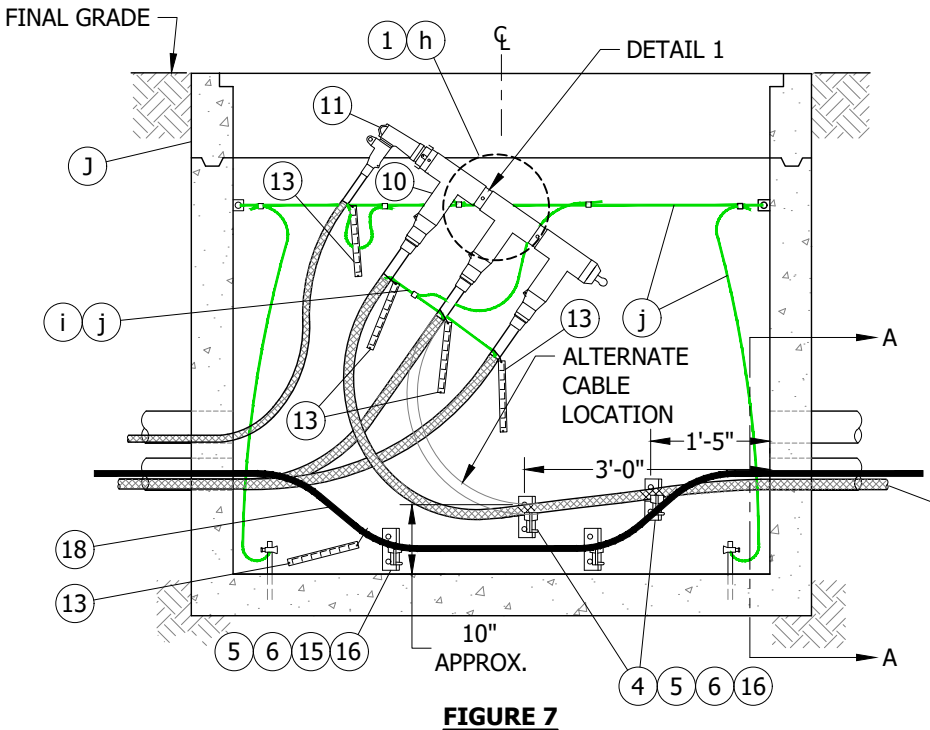

FIGURE 7
3315 HANDHOLE
SECTION VIEW

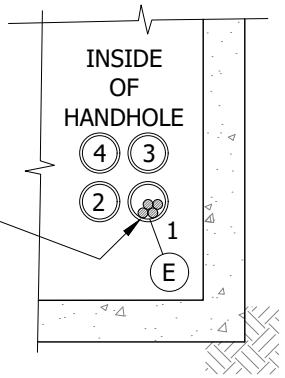

FIGURE 7
VIEW A-A
TYPICAL BOTH ENDS

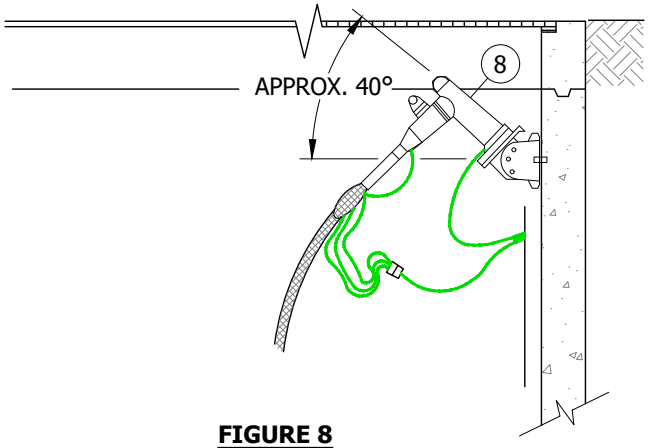

FIGURE 8
3314, 3315 & 3316 HANDHOLES
CABLE TAP ANGLE
SIDE VIEW

ATTENTION:

* BEFORE DESIGNING THE INSTALLATION OF HANDHOLES, IT IS IMPORTANT TO FIRST DETERMINE ON WHICH SIDE THE CABLE TAPS WILL BE PLACED, THEN INSTALL THE OTHER CABLES ACCORDINGLY. DO NOT INSTALL CABLE TAPS ON HANDHOLE ENDS. (m)

© 1998 - 2022 San Diego Gas & Electric Company. All rights reserved. Removal of this copyright notice without permission is not permitted under law.

REV	CHANGE	DR	BY	DSN	APV	DATE	REV	CHANGE	DR	BY	DSN	APV	DATE
C	FIGURE UPDATE	EDM	ADW	JES	CZH	07/13/2020	F						
B	EDITORIAL CHANGES	-	AW	JS	CZH	07/01/2018	E						
A	REVISION	-	-	-	-	01/01/1994	D	BILL OF MATERIALS UPDATE	EDM	EJA	GLW	FRC	01/24/2022

X Indicates Latest Revision | Completely Revised | New Page | Information Removed

TABLE OF CONTENTS

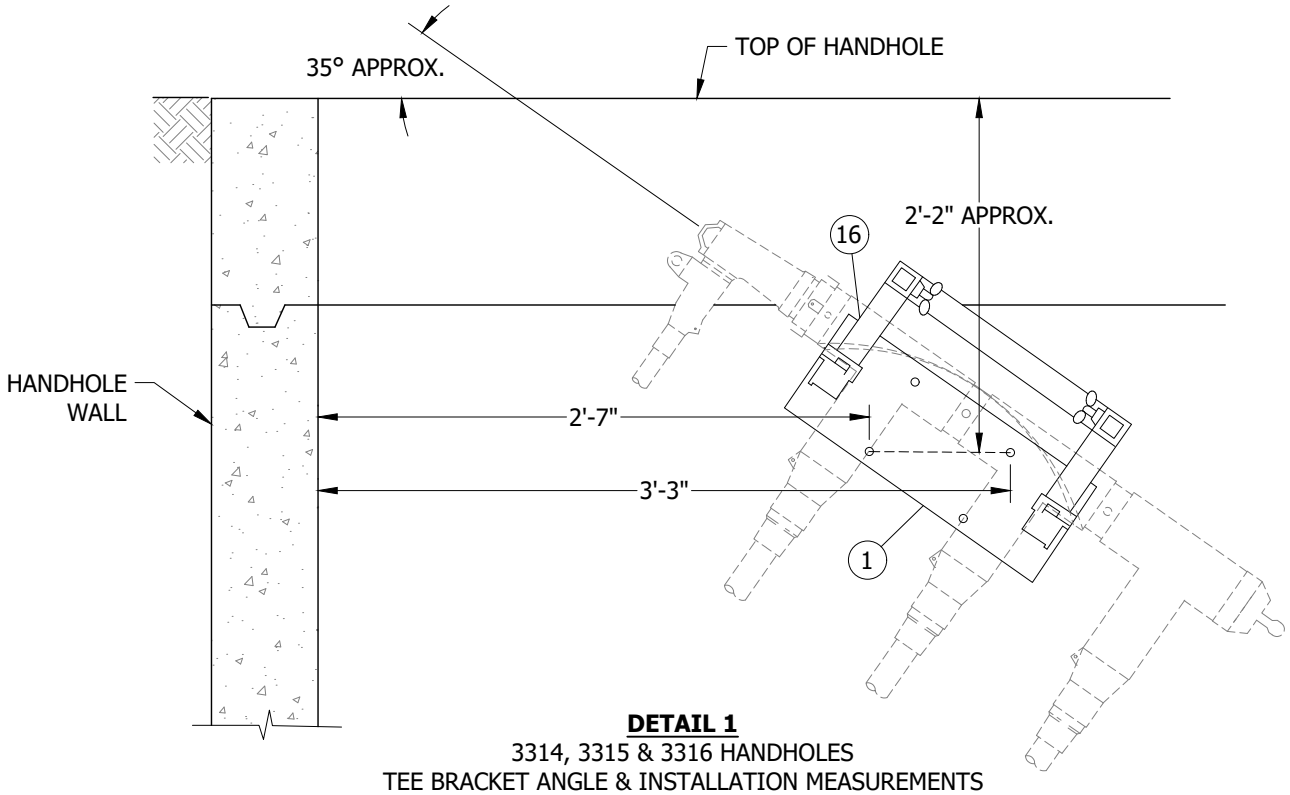

DETAIL 1
3314, 3315 & 3316 HANDHOLES
TEE BRACKET ANGLE & INSTALLATION MEASUREMENTS
FRONT VIEW

ATTENTION:

* THIS ILLUSTRATION APPLIES TP 2-WAY OR 3-WAY 600A TEE COMBINATION. MAY BE INSTALLED AT EITHER END.

INSTALLATION:

(A) LEAVE AN UNOBSTRUCTED SPACE FREE OF CABLE INTRUSION BY CABLING AROUND WALLS. UNUSED CONDUITS MUST BE ACCESSIBLE FOR FUTURE CABLES. LEAVE ADEQUATE SPACE FOR BLOWING PULL ROPES IN CONDUITS AND/OR CABLE PULLING.

(B) AS TAP POSITIONS ARE USED, REDUCE QUANTITY OF ITEM 15 ACCORDINGLY.

C. NOTE ORIENTATION OF ELBOW TEES AND CABLE LOOPS TO ALLOW FOR CABLE EXPANSION TO PREVENT DAMAGE.

(D) LOADBREAK ELBOWS SHOULD ALWAYS BE POSITIONED VERTICALLY TO ALLOW FOR MAXIMUM ELECTRICAL GROUND CLEARANCE TO ADJACENT ELBOWS WHEN SWITCHING ENERGIZED. CABLES BE INSERTED STRAIGHT INTO ELBOWS SO AS NOT TO ALLOW BENDING OF ELBOW ENTRANCE. ELBOWS SHOULD BE INSTALLED AT APPROXIMATELY 40 DEGREE ANGLE.

(E) 350, 750 OR 1000 KCMIL CABLES TO BE TERMINATED WITH 600A TEE CONNECTORS SHALL BE ON THE WALL OPPOSITE ANY CABLE TAPS. THIS CABLE SHALL BE IN THE BOTTOM OUTSIDE CONDUIT ENTERING AND LEAVING AND SHALL BE RACKED OR TERMINATED ON THE SAME WALL OF THE CONDUIT BANK THAT THE CABLE ENTERS AND LEAVES (POSITION 1). USE POSITIONS 3 AND 4 FOR SMALLER CABLES (SEE FIGURES 4 AND 5).

(F) 350, 750 AND 1000 KCMIL PRIMARY OR CABLES PULLED STRAIGHT THROUGH WITHOUT ANY TERMINATIONS SHALL BE PULLED IN THE BOTTOM CONDUITS (POSITION 1 AND 2) AND SHALL BE RACKED ON THE SAME WALL OF THE DUCT BANK THAT THE CABLE ENTERS AND LEAVES. (DO NOT INSTALL ON THE SAME SIDE AS 600A TEES).

(G) #2 OR 2/0 PRIMARY CABLES OR SECONDARY (500 KCMIL MAX.) MAY BE PULLED IN ANY CONDUIT NOT USED FOR LARGER CABLES AS DESCRIBED IN INSTALLATION NOTES 'E' AND 'F'. IF CONDUITS ARE NOT BEING USED AS DESCRIBED IN THESE NOTES, LEAVE THEM EMPTY FOR FUTURE LARGER SIZED CABLES UNLESS THERE IS NO POSSIBLE FUTURE LOAD. (E) (F)

© 1998 - 2022 San Diego Gas & Electric Company. All rights reserved. Removal of this copyright notice without permission is not permitted under law.

REV	CHANGE	DR	BY	DSN	APV	DATE	REV	CHANGE	DR	BY	DSN	APV	DATE
C	FIGURE UPDATE	EDM	ADW	JES	CZH	07/13/2020	F						
B	EDITORIAL CHANGES	-	AW	JS	CZH	07/01/2018	E						
A	REVISION	-	-	-	-	01/01/1994	D	BILL OF MATERIALS UPDATE	EDM	EJA	GLW	FRC	01/24/2022

X Indicates Latest Revision | Completely Revised | New Page | Information Removed

SDG&E ELECTRIC UNDERGROUND CONSTRUCTION STANDARDS

CABLE AND CONNECTOR PLACEMENT

UG3646.5

TABLE OF CONTENTS

INSTALLATION (CONT'D.):

H. DO NOT USE UNISTRUT FOR MOUNTING CABLE TAPS.

(J) DO NOT INSTALL EQUIPMENT ON 12-INCH TOP SECTION OF HANDHOLES AS THIS SECTION IS USED FOR FINAL GRADE ADJUSTMENTS.

K. FOR MAINTENANCE OR TROUBLE SITUATIONS THAT INVOLVE CABLE WITH FIBER OPTIC CABLE IN THE SAME CONDUIT, CUT THE FIBER IN THE CLEAR AND ALWAYS REINSTALL NEW POWER CABLE WITH MAXCELL SLEEVE AND FIBER OPTIC. (n)

1. MAXCELL SLEEVE SHALL HAVE TWENTY FEET OF SLACK BEYOND THE CONDUIT.

L. IF A CONDUIT HAS FIBER OPTIC CABLE ALREADY INSTALLED AND IS NEEDED FOR UG CABLE, INSTALL NEW CABLE WITH MAXCELL SLEEVE AND FIBER OPTIC.

M. FIBER OPTIC CABLE WILL BE INSTALLED BY SDG&E CREWS.

N. TELECOMMUNICATION CREWS TO MAKE FIBER OPTIC CABLE TERMINATIONS.

BILL OF MATERIALS:

ITEM	DESCRIPTION	QUANTITY	STANDARD PAGE	STOCK NUMBER	DESIGN UNITS
1	TEE BRACKET, INSULATORS INCLUDED (f)	1	4177/4178	S166675	T/BRKT
2	HANGER, 15"	AS REQ'D	4177/4178	S564512	-
3	CABLE HOOK, 2 1/2"	AS REQ'D	4177/4178	S415110	-
4	INSULATOR, CABLE	AS REQ'D	4177/4178	S430592	-
5	ADAPTER, CABLE ARM	AS REQ'D	4177/4178	S102016	-
6	ARM, CABLE, 3-WAY	AS REQ'D	4177/4178	S110528	-
7	CONNECTOR ASSEMBLY, 200/600A	AS REQ'D	4181	-	-
8	TAG, DO NOT OPERATE ENERGIZED	3	3232	S547966	-
9	CABLE TAP, 12KV, 3-WAY OR 4-WAY	3	4195	-	-
10	CABLE, #2 OR #2/0 PECN	AS REQ'D	4003	-	-
11	ELBOW, LOADBREAK, 12KV	AS REQ'D	4190	-	-
12	CAP, INSULTING RECEPTACLE	AS REQ'D	4195	S204304	INSREC
13	TAGS, CABLE IDENTIFICATION	AS REQ'D	3202	-	-
14	ELBOW, DEADBREAK, 12KV	AS REQ'D	4196	-	-
15	ARM. CABLE, 4-WAY (B)	AS REQ'D	4177/4178	S110560	-
16	STRAP, TIE (f)	AS REQ'D	4177/4178	S738440	-
17	INSULATOR, UNISTRUT (REPLACEMENT ITEM)	AS REQ'D	4177/4178	S430560	-
18	CABLE, FIBER OPTIC	AS REQ'D	4600	-	-

NOTES: NONE

REFERENCE:

a. SEE UG3211 FOR STRUCTURE/EQUIPMENT IDENTIFICATION.

b. SEE UG3374 FOR CONDUIT TERMINATION.

c. SEE UG3480, UG3481, UG3482, AND UG3483 FOR MINIMUM OPERATING AND CLEARANCE REQUIREMENTS.

d. SEE UG3484 FOR PAD INSTALLATION OF PAD MOUNTED EQUIPMENT.

e. SEE UG3486, UG3487, AND UG3488 FOR RETAINING WALL REQUIREMENTS AND CLEARANCES FROM REVERSE SUBGRADE RETAINING WALLS.

TABLE OF CONTENTS

© 1998 - 2022 San Diego Gas & Electric Company. All rights reserved. Removal of this copyright notice without permission is not permitted under law.

REV	CHANGE	DR	BY	DSN	APV	DATE	REV	CHANGE	DR	BY	DSN	APV	DATE
C	FIGURE UPDATE	EDM	ADW	JES	CZH	07/13/2020	F						
B	EDITORIAL CHANGES	-	AW	JS	CZH	07/01/2018	E						
A	REVISION	-	-	-	-	01/01/1994	D	BILL OF MATERIALS UPDATE	EDM	EJA	GLW	FRC	01/24/2022

REFERENCE (CONT'D):

(f) SEE UG3489 FOR RETAINING WALLS.

(g) SEE UG4174 AND UG4176 FOR CONCENTRIC NEUTRAL/COMPRESSION CONNECTOR APPLICATION CHART.

(h) SEE UG4177 AND 4178 FOR TEE BRACKET AND STAND OFF BAR.

(i) SEE UG4530 FOR NEUTRAL AND GROUND WIRE SCHEMATIC DIAGRAM.

(j) SEE UG4540 FOR GROUNDING SUBSTRUCTURES AND EQUIPMENT.

k. SEE UG4550 FOR GROUNDING TELCO CONDUCTOR IN HANDHOLES.

l. SEE DM5721 FOR CONDUIT POSITION WITHIN SUBSTRUCTURES.

(m) SEE UG3647 FOR PLACEMENT OF CABLE TAPS.

(n) CONTACT STEVEN HUNDLEY, PROJ. MGR - 111
EMAIL: SHUNDLEY@SDGE.COM
WORK PHONE: 619.676.7790
CELL: 619.929.8705

TABLE OF CONTENTS

© 1998 - 2022 San Diego Gas & Electric Company. All rights reserved. Removal of this copyright notice without permission is not permitted under law.

REV	CHANGE	DR	BY	DSN	APV	DATE	REV	CHANGE	DR	BY	DSN	APV	DATE
C	FIGURE UPDATE	EDM	ADW	JES	CZH	07/13/2020	F						
B	EDITORIAL CHANGES	-	AW	JS	CZH	07/01/2018	E						
A	REVISION	-	-	-	-	01/01/1994	D	BILL OF MATERIALS UPDATE	EDM	EJA	GLW	FRC	01/24/2022

SCOPE: THIS STANDARD SHOWS CABLE PLACEMENT IN 3316 STRUCTURES TO ENSURE PROPER CABLE TRAINING.

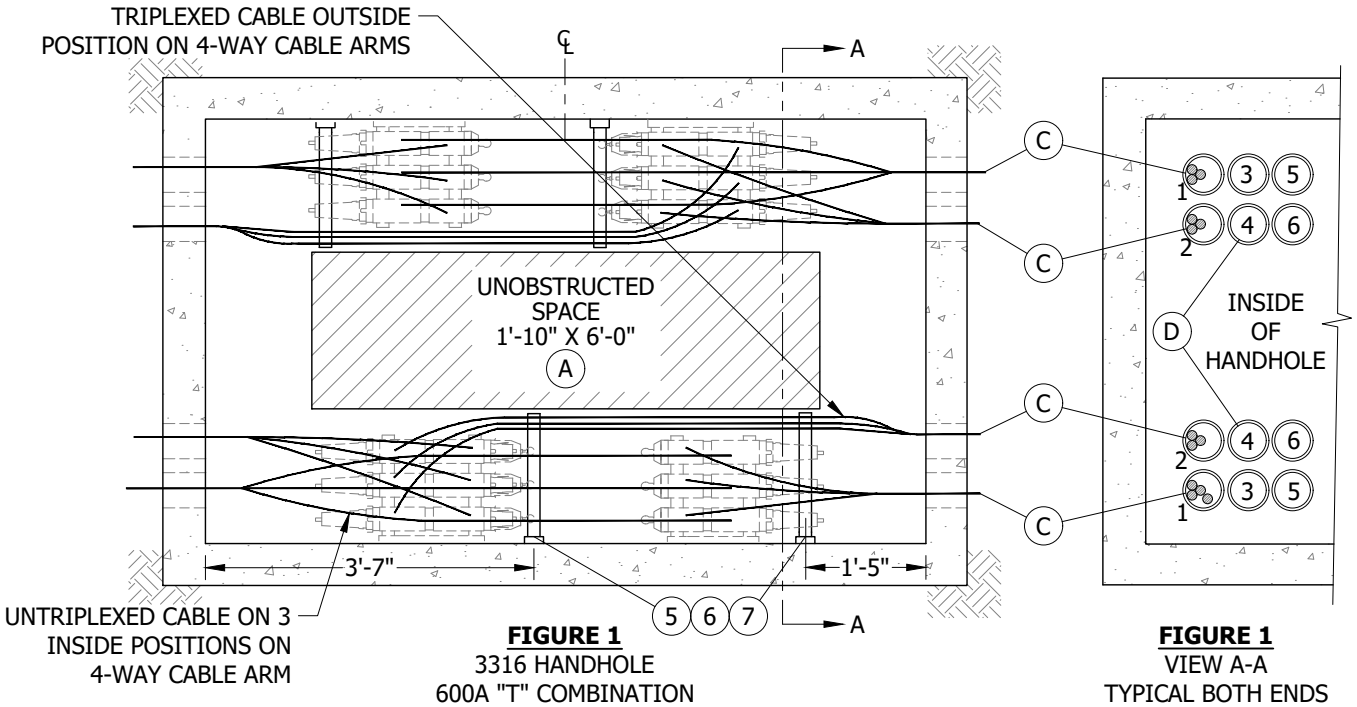

FIGURE 1
3316 HANDHOLE
600A "T" COMBINATION
PLAN VIEW

FIGURE 1
VIEW A-A
TYPICAL BOTH ENDS

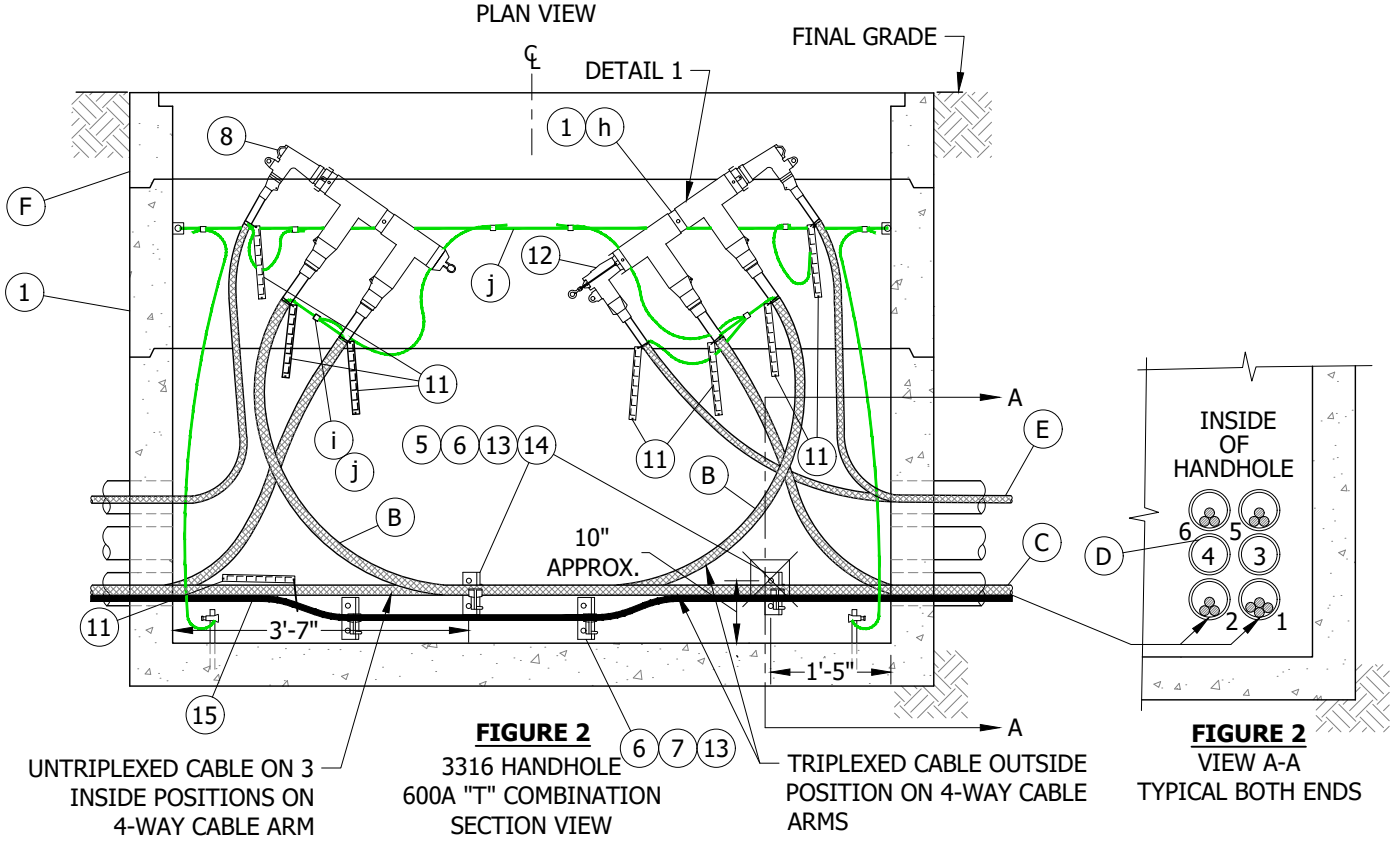

FIGURE 2
3316 HANDHOLE
600A "T" COMBINATION
SECTION VIEW

FIGURE 2
VIEW A-A
TYPICAL BOTH ENDS

© 1998 - 2022 San Diego Gas & Electric Company. All rights reserved. Removal of this copyright notice without permission is not permitted under law.

REV	CHANGE	DR	BY	DSN	APV	DATE	REV	CHANGE	DR	BY	DSN	APV	DATE
C	FIGURE UPDATE	EDM	ADW	JES	CZH	07/13/2020	F						
B	EDITORIAL CHANGES	-	AW	JS	CZH	07/01/2018	E						
A	REVISION	-	-	-	-	01/01/1994	D	BILL OF MATERIALS UPDATE	EDM	EJA	GLW	FRC	01/24/2022

X Indicates Latest Revision | Completely Revised | New Page | Information Removed

SDG&E ELECTRIC UNDERGROUND CONSTRUCTION STANDARDS

SHEET 8 OF 12

CABLE AND CONNECTOR PLACEMENT

UG3646.8

TABLE OF CONTENTS

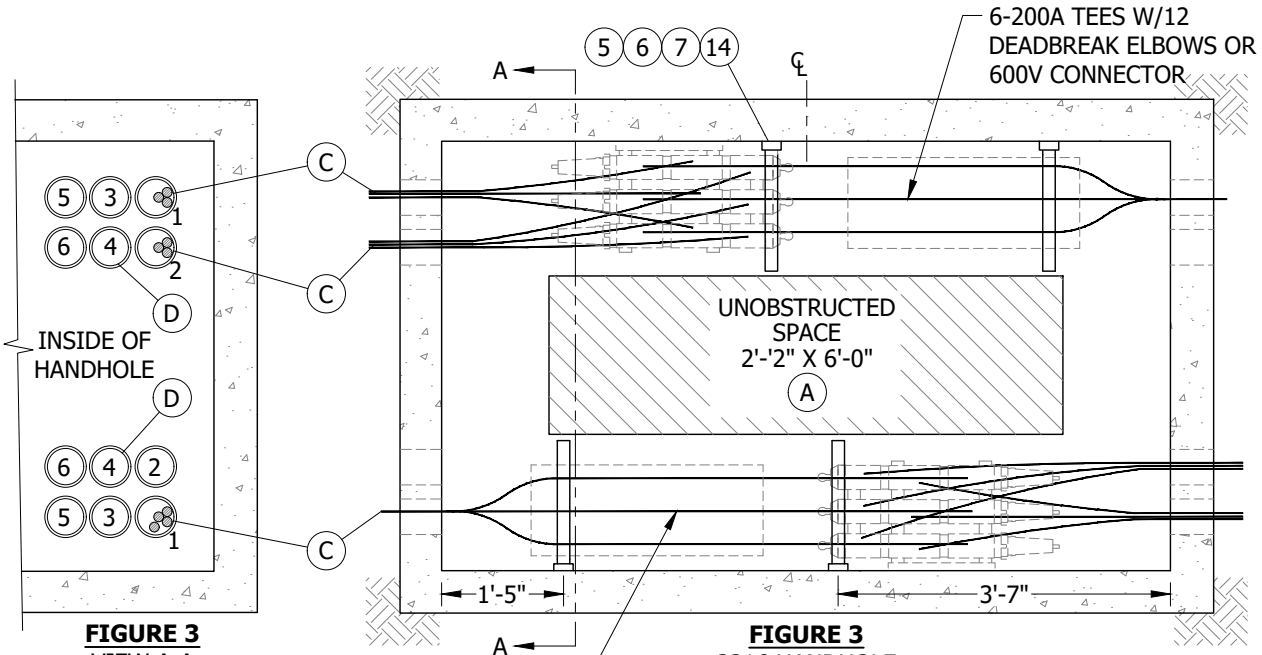

FIGURE 3
VIEW A-A
TYPICAL BOTH ENDS

6-200A TEES W/12
DEADBREAK ELBOWS OR
600V CONNECTOR

FIGURE 3
3316 HANDHOLE
600A "T" COMBINATION
PLAN VIEW

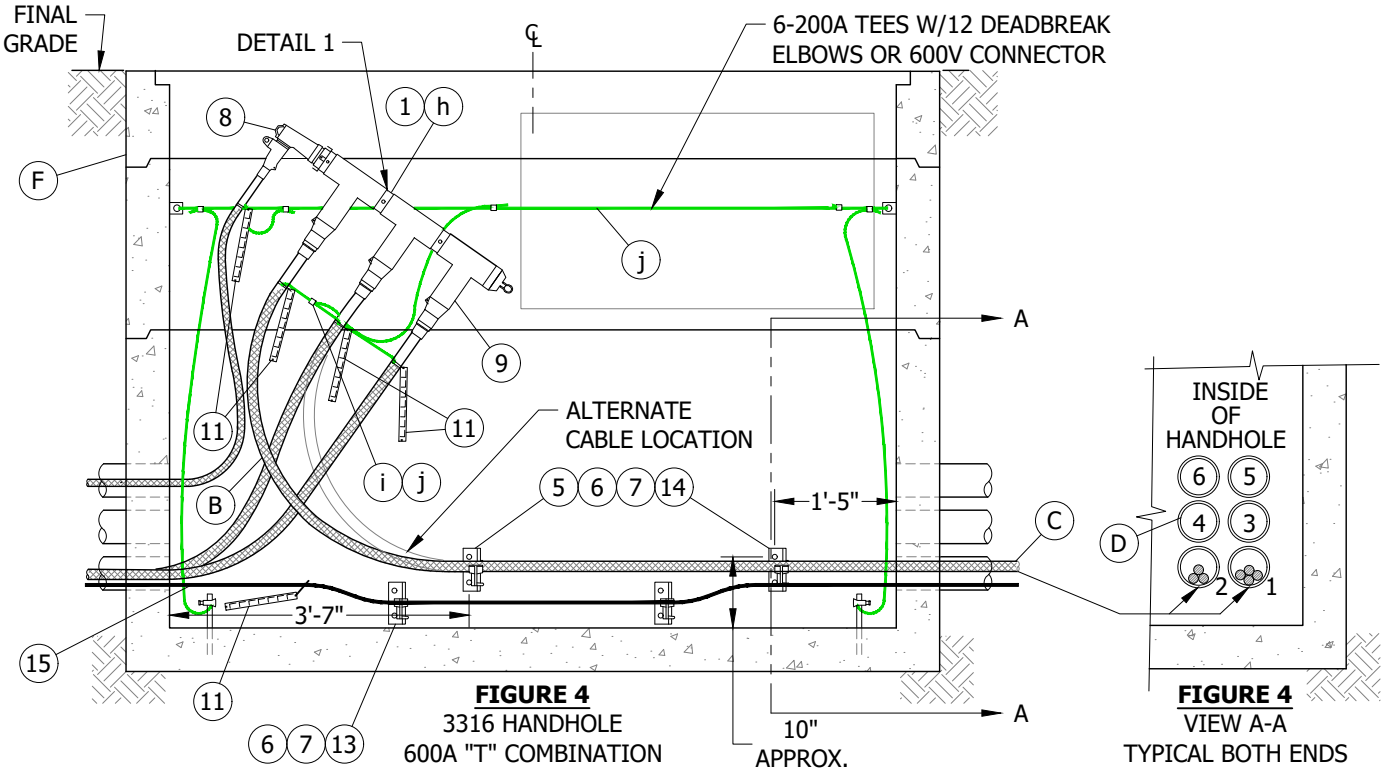

FIGURE 4
3316 HANDHOLE
600A "T" COMBINATION
SECTION VIEW

FIGURE 4
VIEW A-A
TYPICAL BOTH ENDS

ATTENTION:

* CABLE PULLED STRAIGHT THROUGH MUST ENTER AND EXIT CONDUIT POSITIONS ON OPPOSITE ENDS.

© 1998 - 2022 San Diego Gas & Electric Company. All rights reserved. Removal of this copyright notice without permission is not permitted under law.

REV	CHANGE	DR	BY	DSN	APV	DATE	REV	CHANGE	DR	BY	DSN	APV	DATE
C	FIGURE UPDATE	EDM	ADW	JES	CZH	07/13/2020	F						
B	EDITORIAL CHANGES	-	AW	JS	CZH	07/01/2018	E						
A	REVISION	-	-	-	-	01/01/1994	D	BILL OF MATERIALS UPDATE	EDM	EJA	GLW	FRC	01/24/2022

X Indicates Latest Revision | Completely Revised | New Page | Information Removed

SDG&E ELECTRIC UNDERGROUND CONSTRUCTION STANDARDS

SHEET
9 OF 12

CABLE AND CONNECTOR PLACEMENT

UG3646.9

TABLE OF CONTENTS

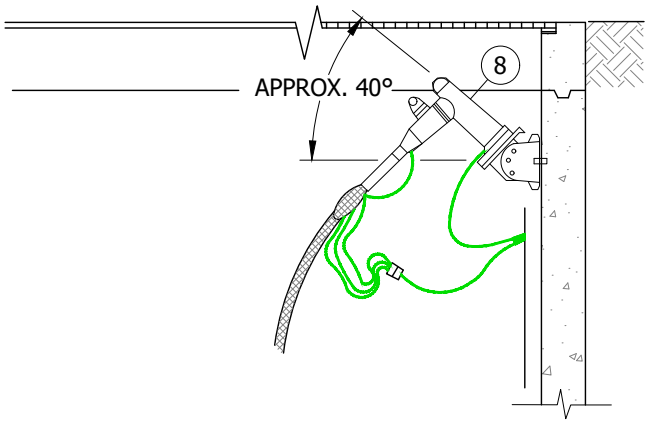

FIGURE 5
3314, 3315 & 3316 HANDHOLES
CABLE TAP ANGLE
SIDE VIEW

ATTENTION:

* BEFORE DESIGNING THE INSTALLATION OF HANDHOLES, IT IS IMPORTANT TO FIRST DETERMINE ON WHICH SIDE THE CABLE TAPS WILL BE PLACED, THEN INSTALL THE OTHER CABLES ACCORDINGLY. DO NOT INSTALL CABLE TAPS ON HANDHOLE ENDS. (1)

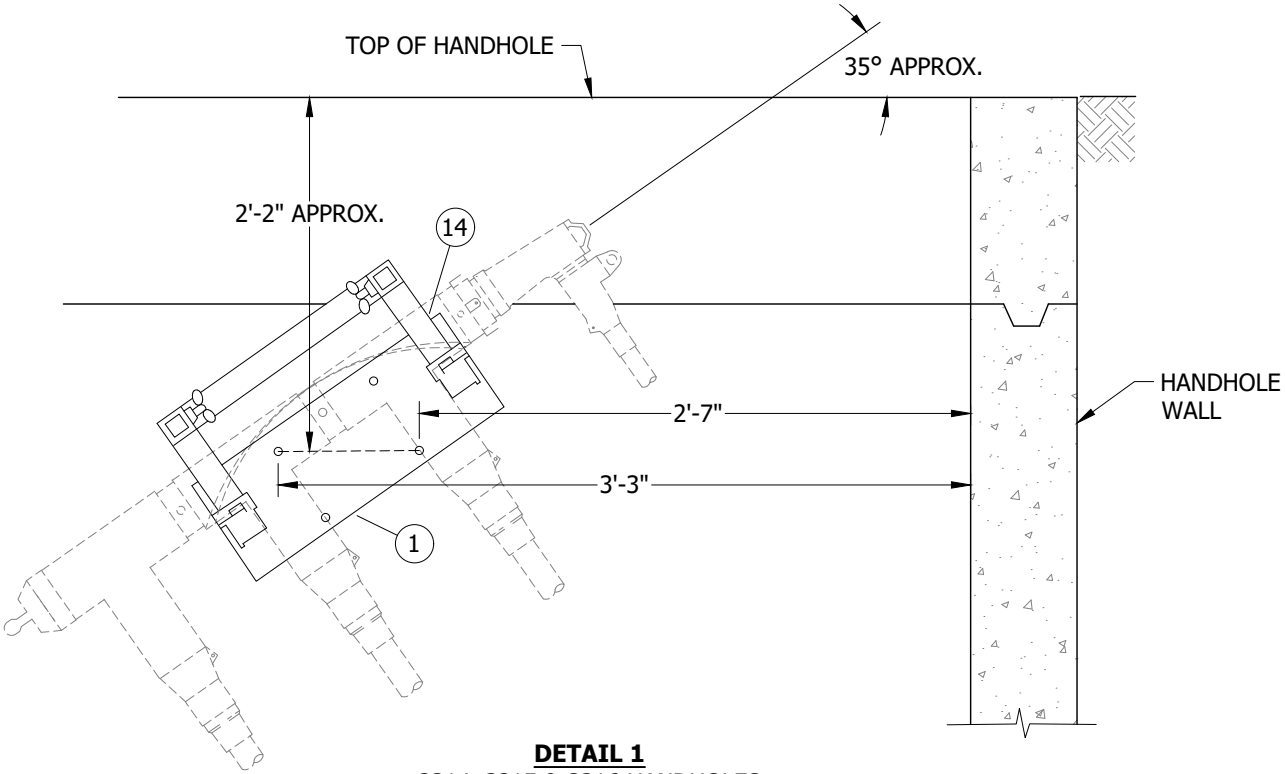

DETAIL 1
3314, 3315 & 3316 HANDHOLES
TEE BRACKET ANGLE & INSTALLATION MEASUREMENTS
FRONT VIEW

ATTENTION:

* THIS ILLUSTRATION APPLIES TP 2-WAY OR 3-WAY 600A TEE COMBINATION. (MAY BE INSTALLED AT EITHER END.)

© 1998 - 2022 San Diego Gas & Electric Company. All rights reserved. Removal of this copyright notice without permission is not permitted under law.

REV	CHANGE	DR	BY	DSN	APV	DATE	REV	CHANGE	DR	BY	DSN	APV	DATE
C	FIGURE UPDATE	EDM	ADW	JES	CZH	07/13/2020	F						
B	EDITORIAL CHANGES	-	AW	JS	CZH	07/01/2018	E						
A	REVISION	-	-	-	-	01/01/1994	D	BILL OF MATERIALS UPDATE	EDM	EJA	GLW	FRC	01/24/2022

INSTALLATION:

(A) LEAVE AN UNOBSTRUCTED SPACE FREE OF CABLE INTRUSION BY CABLING AROUND WALLS. UNUSED CONDUITS MUST BE ACCESSIBLE FOR FUTURE CABLES. LEAVE ADEQUATE SPACE FOR BLOWING PULL ROPES IN CONDUITS AND/OR CABLE PULLING.

(B) NOTE ORIENTATION OF ELBOW TEES AND CABLE LOOPS TO ALLOW FOR CABLE EXPANSION AND TO PREVENT DAMAGE.

(C) THE CABLES TERMINATED ON THE TEE BRACKET SHALL BE RACKED OR TERMINATED ON THE SAME WALL OF THE CONDUIT BANK THAT THE CABLE ENTERS AND LEAVES (POSITION 1 & 2).

(D) USE POSITION #4 FOR SPARE FEEDER CONDUIT.

(E) #2 OR 2/0 PRIMARY CABLES MAY BE PULLED IN ANY CONDUIT NOT USED FOR LARGER CABLES AS DESCRIBED IN INSTALLATION NOTES "C" AND "D". IF CONDUITS ARE NOT BEING USED AS DESCRIBED IN THESE NOTES, LEAVE THEM EMPTY FOR FUTURE LARGER SIZED CABLES UNLESS THERE IS NO POSSIBLE FUTURE LOAD. (C)(D)

(F) DO NOT INSTALL EQUIPMENT ON TOP SECTION OF HANDHOLES AS THIS IS USED FOR FINAL GRADE ADJUSTMENT.

G. FOR MAINTENANCE OR TROUBLE SITUATIONS THAT INVOLVE FIBER OPTIC CABLES, ALWAYS REINSTALL FIBER OPTIC. IF A CONDUIT HAS FIBER OPTIC CABLES ALREADY INSTALLED AND IS NEEDED FOR UG CABLE, INSTALL FIBER OPTIC CABLES WITH NEW CABLE.

BILL OF MATERIALS:

ITEM	DESCRIPTION	QUANTITY	STANDARD PAGE	STOCK NUMBER	DESIGN UNITS
1	TEE BRACKET	1	4177/4178	S166675	-
2	CLAMP, GROUND ROD (I)	2	-	S230018 (X)	-
3	WIRE, BARE COPPER, #2 (I)	AS REQ'D	-	S812818 (X)	-
4	WIRE, BARE COPPER, #1/0 (I)	AS REQ'D	-	S812752	-
5	INSULATOR, CABLE	AS REQ'D	4177/4178	S430592	-
6	ADAPTOR, CABLE ARM	AS REQ'D	4177/4178	S102016	-
7	ARM, CABLE, 3-WAY	AS REQ'D	4177/4178	S110528	-
8	ELBOW, LOADBREAK, 12KV	AS REQ'D	4190	-	-
9	CONNECTOR ASSEMBLY, 200/600A	AS REQ'D	4181	-	-
10	TAG, DO NOT OPERATE ENERGIZED (I)	12	3232	S647966	-
11	TAGS, CABLE IDENTIFICATION	AS REQ'D	3202	-	-
12	ELBOW, DEADBREAK, 12KV	AS REQ'D	4196	-	-
13	ARM, CABLE, 4-WAY	AS REQ'D	4177/4178	S110560	-
14	TIE STRAP	AS REQ'D	4177/4178	S738440	-
15	CABLE, FIBER OPTIC	AS REQ'D	4600	-	-

NOTES:

(I) NOT SHOWN ON FIGURES

(X) THIS ITEM IS EXEMPT.

REFERENCE:

a. SEE UG3211 FOR STRUCTURE/EQUIPMENT IDENTIFICATION.

b. SEE UG3374 FOR CONDUIT TERMINATION.

c. SEE UG3480, UG3481, UG3482, AND UG3483 FOR MINIMUM OPERATING AND CLEARANCE REQUIREMENTS.

d. SEE UG3484 FOR PAD INSTALLATION OF PAD MOUNTED EQUIPMENT.

e. SEE UG3486, UG3487, AND UG3488 FOR RETAINING WALL REQUIREMENTS AND CLEARANCES FROM REVERSE SUBGRADE RETAINING WALLS.

f. SEE UG3489 FOR RETAINING WALLS.

© 1998 - 2022 San Diego Gas & Electric Company. All rights reserved. Removal of this copyright notice without permission is not permitted under law.

REV	CHANGE	DR	BY	DSN	APV	DATE	REV	CHANGE	DR	BY	DSN	APV	DATE
C	FIGURE UPDATE	EDM	ADW	JES	CZH	07/13/2020	F						
B	EDITORIAL CHANGES	-	AW	JS	CZH	07/01/2018	E						
A	REVISION	-	-	-	-	01/01/1994	D	BILL OF MATERIALS UPDATE	EDM	EJA	GLW	FRC	01/24/2022

TABLE OF CONTENTS

REFERENCE (CONT'D):

g. SEE UG4174 AND UG4176 FOR CONCENTRIC NEUTRAL/COMPRESSION CONNECTOR APPLICATION CHART.

(h) SEE UG4177 AND UG4178 FOR TEE BRACKET AND STAND OFF BAR.

(i) SEE UG4530 FOR NEUTRAL AND GROUND WIRE SCHEMATIC DIAGRAM.

(j) SEE UG4540 FOR GROUNDING SUBSTRUCTURES AND EQUIPMENT.

k. SEE UG4550 FOR GROUNDING TELCO CONDUCTOR IN HANDHOLES.

(l) SEE UG3647 FOR CABLE TAPS.

TABLE OF CONTENTS

© 1998 - 2022 San Diego Gas & Electric Company. All rights reserved. Removal of this copyright notice without permission is not permitted under law.

REV	CHANGE	DR	BY	DSN	APV	DATE	REV	CHANGE	DR	BY	DSN	APV	DATE
C	FIGURE UPDATE	EDM	ADW	JES	CZH	07/13/2020	F						
B	EDITORIAL CHANGES	-	AW	JS	CZH	07/01/2018	E						
A	REVISION	-	-	-	-	01/01/1994	D	BILL OF MATERIALS UPDATE	EDM	EJA	GLW	FRC	01/24/2022

X Indicates Latest Revision | Completely Revised | New Page | Information Removed

SDG&E ELECTRIC UNDERGROUND CONSTRUCTION STANDARDS

CABLE AND CONNECTOR PLACEMENT

UG3646.12

SCOPE: THIS STANDARD SHOWS CABLE TAP PLACEMENT AND DIMENSIONAL AREA NEEDED TO INSTALL COMPONENTS SO THAT AN UNOBSTRUCTED SPACE IN THE MIDDLE OF THE SUBSTRUCTURE IS PROVIDED IN A 3314, 3315 OR 3316 HANDHOLE.

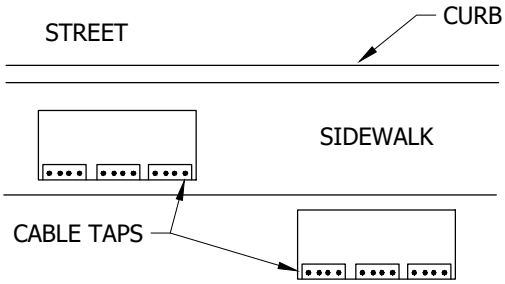

FIGURE 1

FIGURE 2

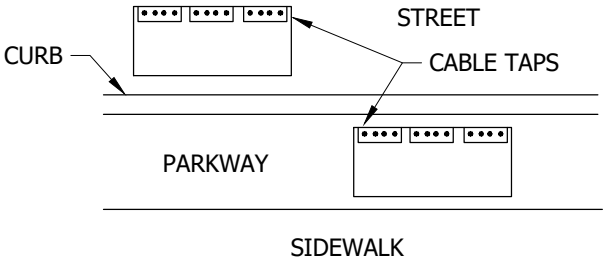

FIGURE 3

CABLE RACKING

FIGURE 4

INSTALLATION:

A. USE FIGURES 1-4 TO DETERMINE THE WALL ON WHICH TO INSTALL CABLE TAPS IN A 3314, 3315 OR 3316 HANDHOLE. IF FIELD CONDITIONS DO NOT ALLOW A 5 FOOT MINIMUM CLEARANCE FOR HOT STICK OPERATION OF THE CABLE TAPS, CABLE TAPS MAY BE LOCATED ON THE OPPOSITE WALL TO OBTAIN THE 5 FOOT MINIMUM CLEARANCE. THIS SHOULD BE DONE IN THE DESIGN STAGE OF THE JOB.

(B) DO NOT INSTALL CABLE TAPS ON UNISTRUT IN SUBSTRUCTURE.

C. ON CABLE HANGERS WITH CABLE HOOKS, LEAVE ONE HOLE OPEN BETWEEN EACH HOOK.

TABLE 1

CABLE TAP & ELBOW DISTANCES BETWEEN WALL AND OUTER PORTION OF CABLE RADIUS (X)

DESCRIPTION	DISTANCE "A" (MAXIMUM FROM WALL)	DRAWING
LOADBREAK ELBOW ON A CABLE TAP	1'-2"	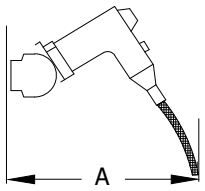
LOADBREAK ELBOW ON STANDOFF PLUG (THIS IS A PERMANENT INSTALLATION FOR THE LOOP SYSTEM)	1'-5"	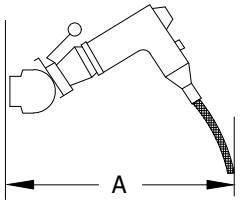
FUSED ELBOW ON CABLE TAP	1'-5"	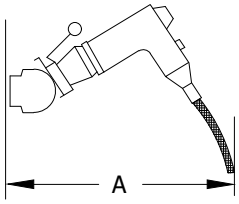

TABLE OF CONTENTS

© 1998 - 2021 San Diego Gas & Electric Company. All rights reserved. Removal of this copyright notice without permission is not permitted under law.

REV	CHANGE	DR	BY	DSN	APV	DATE	REV	CHANGE	DR	BY	DSN	APV	DATE
C	TABLE UPDATE	EDM	EJA	GLW	CZH	07/27/2021	F						
B	EDITORIAL CHANGES	-	AW	JS	CZH	07/01/2018	E						
A	REVISION	-	-	-	-	01/01/1989	D						

TABLE 2

DISTANCES REQUIRED FROM FACE OF WALL AND MAXIMUM CABLE SIZE			
DESCRIPTION	**DISTANCE "A" (MAXIMUM FROM WALL)**	**DRAWING**	**MAXIMUM CABLING**
SMALL CABLE HOOK & HANGER HOOK STOCK NUMBER S415432 (X) HANGER STOCK NUMBERS: 12" HANGER S677288 (X) 24" HANGER S677290 (X) 36" HANGER S677292 (X)	4"	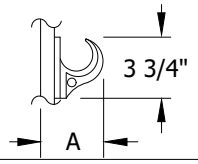	SECONDARY 3-500 & 1-350 KCMIL PRIMARY 1/C-ALL SIZES OR 3-1/C-2/0 (ALL 200 AMP CONNECTORS WILL FIT IN THIS HOOK)
LARGE CABLE HOOK & HANGER HOOK STOCK NUMBER S610948 (X) HANGER STOCK NUMBERS: 12" HANGER S677288 (X) 24" HANGER S677290 (X) 36" HANGER S677292 (X)	6"	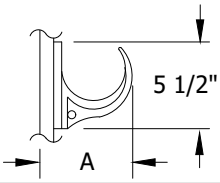	SECONDARY 3-1000 & 1-500 KCMIL PRIMARY 3-1/C-350 KCMIL, 750 KCMIL AND 1000 KCMIL
2-WAY CABLE ARM & HANGER ARM STOCK NUMBER S110564 (X) HANGER AS NEEDED	7 1/2"	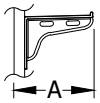	PRIMARY & SECONDARY 1/C, 3-1/C OR 4-1/C ALL SIZES
3-WAY CABLE ARM & HANGER ARM STOCK NUMBER S110570 (X) HANGER AS NEEDED	9 3/4"	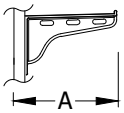	PRIMARY & SECONDARY 1/C, 3-1/C OR 4-1/C ALL SIZES
4-WAY CABLE ARM & HANGER ARM STOCK NUMBER S110576 (X) HANGER AS NEEDED	1'-0 1/4"	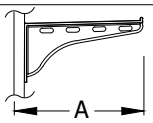	PRIMARY & SECONDARY 1/C, 3-1/C OR 4-1/C ALL SIZES
ADAPTOR FOR CABLE ARMS AS NEEDED STOCK NUMBERS 14" S110582 (X) 20" S110590 (X)	1'-3 7/8" 1'-9 1/2"	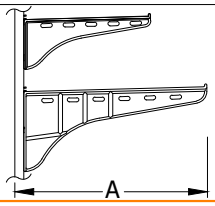	PRIMARY & SECONDARY 1/C, 3-1/C OR 4-1/C ALL SIZES
TEE BRACKET STOCK NUMBER S166675	1'-3"	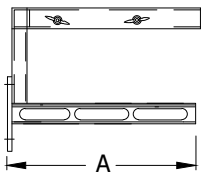	PRIMARY 3-1/C-350 KCMIL, 750 KCMIL AND 1000 KCMIL

BILL OF MATERIALS: NONE

NOTES:

I. EACH NOTCH IN THE CABLE ARM WILL ALLOW EITHER 1/C, 3-1/C OR 4-1/C CABLES.

II. DO NOT INSTALL EQUIPMENT ON TOP SECTION OF HANDHOLES AS THIS SECTION IS USED FOR FINAL GRADE ADJUSTMENTS.

(X) THIS ITEM IS EXEMPT.

REFERENCE:

a. FOR CABLE HANGERS AND ACCESSORIES, SEE STANDARD 4178.

b. FOR TEE BRACKET AND STAND OFF BAR, SEE STANDARD 4178.

© 1998 - 2021 San Diego Gas & Electric Company. All rights reserved. Removal of this copyright notice without permission is not permitted under law.

REV	CHANGE	DR	BY	DSN	APV	DATE	REV	CHANGE	DR	BY	DSN	APV	DATE
C	TABLE UPDATE	EDM	EJA	GLW	CZH	07/27/2021	F						
B	EDITORIAL CHANGES	-	AW	JS	CZH	07/01/2018	E						
A	REVISION	-	-	-	-	01/01/1989	D						

SCOPE: THIS STANDARD SHOWS COMMON EQUIPMENT ASSEMBLIES USED IN SUBSTRUCTURE CONSTRUCTION.

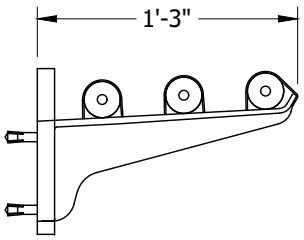

FIGURE 1
3315 AND 3316 HANDHOLE OR (A)
MANHOLE INSTALLATIONS
SIDE VIEW

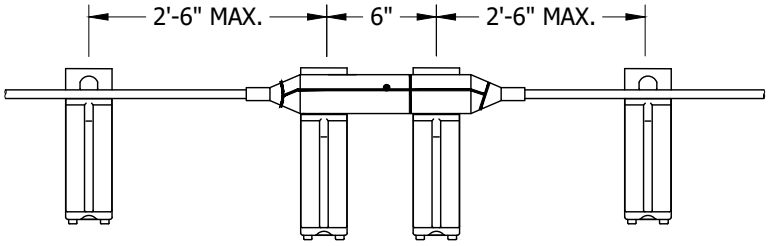

FIGURE 1
3315 AND 3316 HANDHOLE OR (A)
MANHOLE INSTALLATIONS
FRONT VIEW

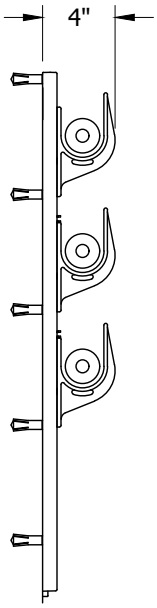

FIGURE 2
3314 HANDHOLE INSTALLATION (B)
SIDE VIEW

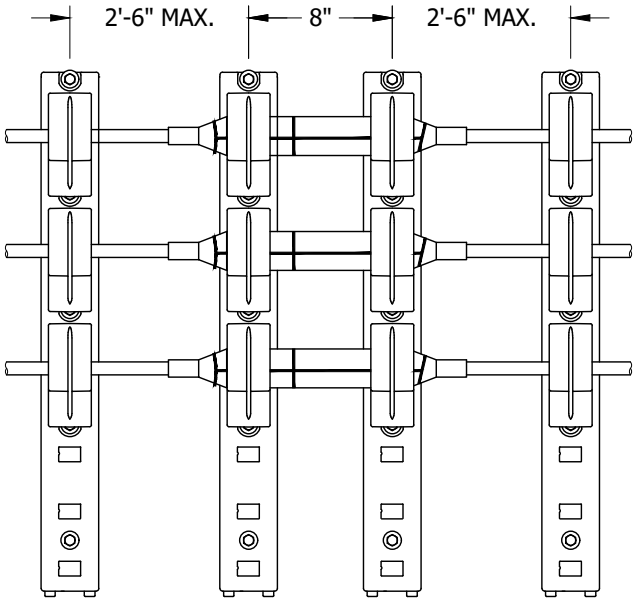

FIGURE 2
3314 HANDHOLE INSTALLATION (B)
FRONT VIEW

TABLE OF CONTENTS

© 1998 - 2025 San Diego Gas & Electric Company. All rights reserved. Removal of this copyright notice without permission is not permitted under law.

REV	CHANGE	DR	BY	DSN	APV	DATE	REV	CHANGE	DR	BY	DSN	APV	DATE
C	FORMATTING	EDM	JIK	-	-	12/28/2021	F						
B	EDITORIAL CHANGES	-	AW	JS	CZH	07/01/2018	E						
A	REVISION	-	-	-	-	01/01/1987	D	DRAWING UPDATE	NV5	ADW	JAS	JAS	01/16/25

X Indicates Latest Revision | Completely Revised | New Page | Information Removed

SDG&E ELECTRIC UNDERGROUND CONSTRUCTION STANDARDS

EQUIPMENT ASSEMBLIES

UG3648.1

TABLE OF CONTENTS

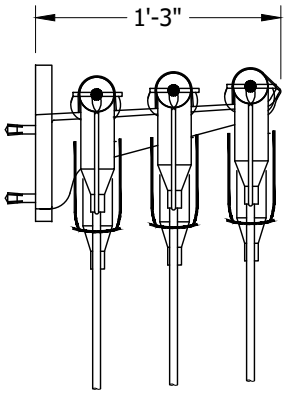

FIGURE 3
3315 AND 3316 HANDHOLE OR MANHOLE INSTALLATIONS
SIDE VIEW (C)

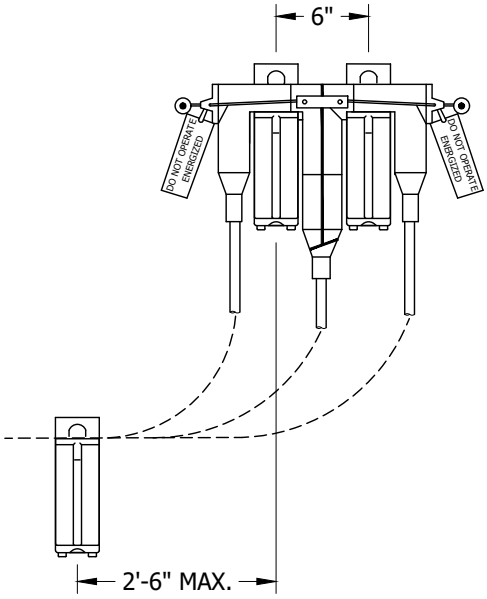

FIGURE 3
3315 AND 3316 HANDHOLE OR MANHOLE INSTALLATIONS
FRONT VIEW (C)

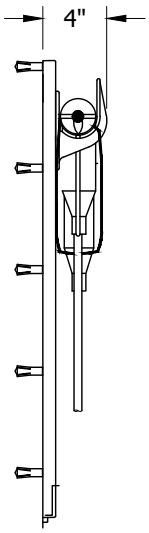

FIGURE 4
3314 HANDHOLE INSTALLATION
SIDE VIEW (D)

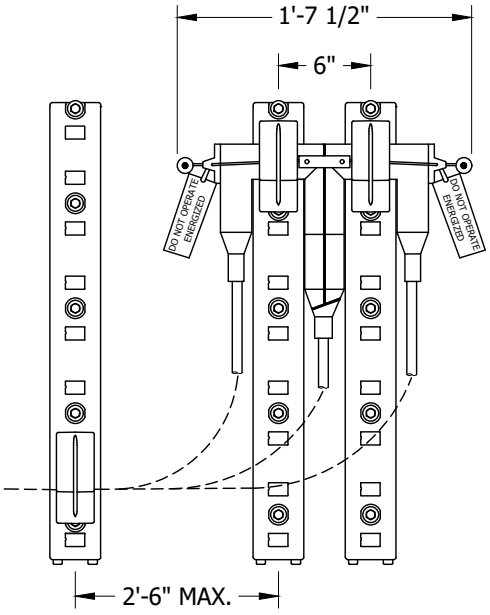

FIGURE 4
3314 HANDHOLE INSTALLATION
FRONT VIEW (D)

© 1998 - 2025 San Diego Gas & Electric Company. All rights reserved. Removal of this copyright notice without permission is not permitted under law.

REV	CHANGE	DR	BY	DSN	APV	DATE	REV	CHANGE	DR	BY	DSN	APV	DATE
C	FORMATTING	EDM	JIK	-	-	12/28/2021	F						
B	EDITORIAL CHANGES	-	AW	JS	CZH	07/01/2018	E						
A	REVISION	-	-	-	-	01/01/1987	D	DRAWING UPDATE	NV5	ADW	JAS	JAS	01/16/25

X Indicates Latest Revision | Completely Revised | New Page | Information Removed

SDG&E ELECTRIC UNDERGROUND CONSTRUCTION STANDARDS

EQUIPMENT ASSEMBLIES

UG3648.2

INSTALLATION:

EQUIPMENT ASSEMBLIES

(A) 3315 AND 3316 HANDHOLE OR MANHOLE INSTALLATIONS: 3-1/C CABLE WITH 200A SPLICES INSTALLED ON ADAPTORS AND 3-WAY CABLE ARMS. HANGERS (S677288 (X) AND S110564 (X)) MAY BE USED WHEN MORE THAN ONE LEVEL OF CABLE IS REQUIRED.

(B) 3314 HANDHOLE INSTALLATION: THIS INSTALLATION IS NORMALLY USED IN A 3314 TO OBTAIN UNOBSTRUCTED SPACE. 3-1/C CABLE WITH 200A SPLICES INSTALLED ON HANGERS AND SMALL CABLE HOOKS, (S677292 (X) AND S415432 (X)). (a)

(C) 3315 AND 3316 HANDHOLE OR MANHOLE INSTALLATIONS: 3-1/C CABLE WITH 200A TEES AND DEADBREAK ELBOWS INSTALLED ON ADAPTORS AND 3-WAY CABLE ARMS. HANGERS (S677288 (X) AND S110564 (X)) MAY BE USED WHEN MORE THAN ONE LEVEL OF CABLE IS REQUIRED. FIBER CABLE ARM'S MAY BE TRIMMED TO FIT BETWEEN DEADBREAK CONNECTORS. (a)

(D) 3314 HANDHOLE INSTALLATION: THIS INSTALLATION IS NORMALLY USED IN A 3314 TO OBTAIN UNOBSTRUCTED SPACE. 1Ø WYE (I.E. 6.9KV) CABLE WITH 200A TEES AND DEADBREAK ELBOWS INSTALLED ON HANGERS AND SMALL CABLE HOOKS (S415432 (X)). TRIM AS NEEDED.

BILL OF MATERIALS: NONE

NOTES:

(X) THIS ITEM IS EXEMPT.

REFERENCE:

(a) SEE UG4177 FOR CABLE HANGERS AND ACCESSORIES AND UG4178 FOR HEAVY DUTY NON-METALLIC CABLE RACK.

TABLE OF CONTENTS

© 1998 - 2025 San Diego Gas & Electric Company. All rights reserved. Removal of this copyright notice without permission is not permitted under law.

REV	CHANGE	DR	BY	DSN	APV	DATE	REV	CHANGE	DR	BY	DSN	APV	DATE
C	FORMATTING	EDM	JIK	-	-	12/28/2021	F						
B	EDITORIAL CHANGES	-	AW	JS	CZH	07/01/2018	E						
A	REVISION	-	-	-	-	01/01/1987	D	DRAWING UPDATE	NV5	ADW	JAS	JAS	01/16/25

X Indicates Latest Revision	Completely Revised	New Page	Information Removed	
SDG&E ELECTRIC UNDERGROUND CONSTRUCTION STANDARDS				
SHEET 3 OF 3	EQUIPMENT ASSEMBLIES			UG3648.3

SCOPE: THIS STANDARD SHOWS THE MAXIMUM EQUIPMENT COMBINATIONS THAT CAN BE UTILIZED IN A 3314, 3315, 3316 OR 3324 SUBSTRUCTURE.

ATTENTION:

* FIND THE COMBINATION THAT REPRESENTS THE INSTALLATION, THEN CHECK THE LEGEND FOR COINCIDING SYMBOL AND REFERENCE TO THE EQUIPMENT ASSEMBLY OR CABLE HANGER STANDARDS PAGE.

** ONLY INSTALL THE THREE TEE COMBINATIONS SHOWN IN THESE STANDARDS TO FEED A SWITCHED TIE POSITION.

TABLE 1

LEGEND					
SIZE	**PLAN VIEW**	**FRONT VIEW**	**SIDE VIEW**	**DESCRIPTION**	**STANDARD PAGE**
200A	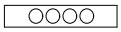	--	--	LOADBREAK CABLE TAP	4195
	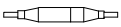	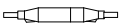		DEADBREAK ELBOW TEE	4196
				DEABREAK ELBOW TEE	
600A				600A EXTENSION SPLICE	4185
	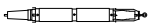	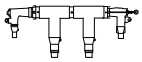		600A TEES WITH LOADBREAK ELBOW OR 200A RECEPTACLES, ALSO WITH OR WITHOUT DEADBREAK ELBOWS IN A HANDHOLE	4182
	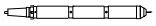	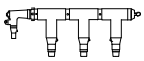		600A TEES WITH LOADBREAK ELBOWS OR 200A INSULATING RECEPTACLES, ALSO WITHOUT DEADBREAK ELBOWS IN A HANDHOLE	
		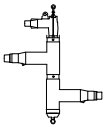		600A TEES WITH OR WITHOUT DEADBREAK ELBOWS IN A MANHOLE	
		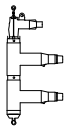			
		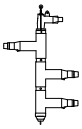			
		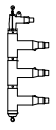			

© 1998 - 2021 San Diego Gas & Electric Company. All rights reserved. Removal of this copyright notice without permission is not permitted under law.

REV	CHANGE	DR	BY	DSN	APV	DATE	REV	CHANGE	DR	BY	DSN	APV	DATE
C	FIGURE UPDATE	-	EJA	GLW	CZH	11/09/2020	F						
B	EDITIORIAL CHANGES	-	AW	JS	CZH	07/01/2018	E						
A	REVISION	-	-	-	-	01/01/1996	D	FORMATTING	EDM	JIK	-	-	12/28/2021

TABLE OF CONTENTS

TABLE 1 (CONT'D)

LEGEND					
SIZE	**PLAN VIEW**	**FRONT VIEW**	**SIDE VIEW**	**DESCRIPTION**	**STANDARD PAGE**
200A & 600A	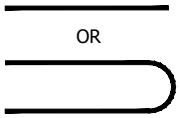			SECONDARY OR PRIMARY CABLE PULLED STRAIGHT THROUGH WITHOUT ANY SPLICES	--
600V		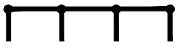	--	600V SECONDARY CONNECTOR	4175
--	--	--	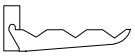	ADAPTER AND 2, 3, OR 4 WAY CABLE ARMS	4177/4178
	--	--	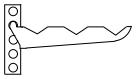	HANGER AND 2, 3, OR 4 WAY CABLE ARMS	
	--	--		HANGER AND SMALL CABLE HOOK	
	--	--		HANGER AND LARGE CABLE HOOK	
	--	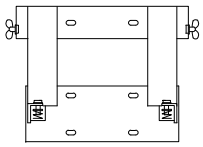	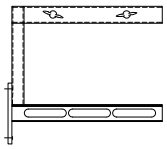	TEE BRACKET	
	--	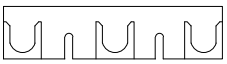	--	STAND OFF BAR	
		--	--	PADMOUNTED SWITCH AREA	3560

TABLE OF CONTENTS

© 1998 - 2021 San Diego Gas & Electric Company. All rights reserved. Removal of this copyright notice without permission is not permitted under law.

REV	CHANGE	DR	BY	DSN	APV	DATE	REV	CHANGE	DR	BY	DSN	APV	DATE
C	FIGURE UPDATE	-	EJA	GLW	CZH	11/09/2020	F						
B	EDITIORIAL CHANGES	-	AW	JS	CZH	07/01/2018	E						
A	REVISION	-	-	-	-	01/01/1996	D	FORMATTING	EDM	JIK	-	-	12/28/2021

INSTALLATION:

A. THE ALLOWED INSTALLATIONS SHOWN ARE TYPICAL. OTHER CONFIGURATIONS MAY BE DESIGNED PROVIDED EQUIPMENT LIMITATIONS AND THE UNOBSTRUCTED SPACE REQUIREMENT IS PROVIDED TO ALLOW PERSONNEL TO PERFORM WORK SAFELY AND ALLOW ACCESS INTO THE HANDHOLE AND TO THE CONDUITS.

B. #2 OR 2/0 PRIMARY CABLES OR SECONDARY (500 KCMIL MAX.) MAY BE PULLED IN ANY CONDUIT NOT USED FOR LARGER CABLES.

C. CABLE PULLED STRAIGHT THROUGH SHOULD BE PULLED INTO BOTTOM CONDUITS WHEN CONDUITS ARE AVAILABLE AND MUST ENTER AND EXIT THE SAME CONDUIT POSITIONS ON OPPOSITE ENDS OF THE SUBSTRUCTURE.

D. THE "NOT ALLOWED" EQUIPMENT COMBINATION GUIDELINES SHOWN ARE DUE TO:

1. NOT ENOUGH ROOM TO ALLOW PROPER CABLE BENDING RADIUS
2. NOT ENOUGH "UNOBSTRUCTED SPACE" OR "CLEAR PERSONNEL ACCESS OPENING"
3. TOO MANY CABLES TO ALLOW PROPER CABLE TRAINING
4. MORE CABLES THAN CABLE KNOCKOUTS PROVIDED

E. DRAWINGS ARE NOT TO SCALE.

(F) IN THE 3314, 3315 AND 3316, DO NOT INSTALL CABLE TAPS ON THE HANDHOLE ENDS.

(1) ONLY USE SIDE WALLS WHEN THERE ARE NO END KNOCKOUTS AVAILABLE OR THERE IS NOT ENOUGH ROOM TO INSTALL A 90 DEGREE BEND OR SWEEP.

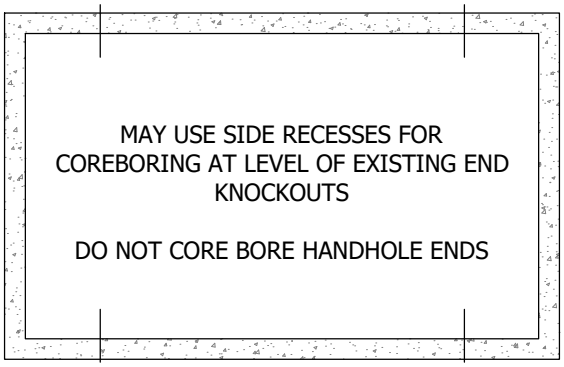

CONFIGURATION 1

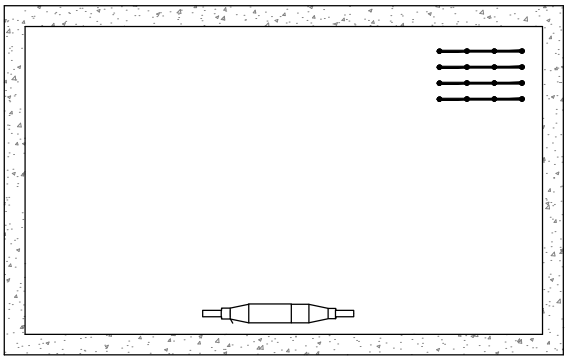

CONFIGURATION 2

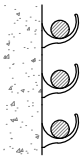

CONFIGURATION 2
SIDE VIEW

FIGURE 1 (F)(F1)
3314
ALLOWED
FOR THREE-PHASE 2/0 AND SMALLER PRIMARY CABLES AND
UP TO 500 KCMIL SECONDARY CABLES MAXIMUM.
PLAN VIEW

© 1998 - 2021 San Diego Gas & Electric Company. All rights reserved. Removal of this copyright notice without permission is not permitted under law.

REV	CHANGE	DR	BY	DSN	APV	DATE	REV	CHANGE	DR	BY	DSN	APV	DATE
C	FIGURE UPDATE	-	EJA	GLW	CZH	11/09/2020	F						
B	EDITIORIAL CHANGES	-	AW	JS	CZH	07/01/2018	E						
A	REVISION	-	-	-	-	01/01/1996	D	FORMATTING	EDM	JIK	-	-	12/28/2021

X Indicates Latest Revision | Completely Revised | New Page | Information Removed

SDG&E ELECTRIC UNDERGROUND CONSTRUCTION STANDARDS

EQUIPMENT COMBINATION GUIDELINES

UG3649.3

TABLE OF CONTENTS

INSTALLATION (CONT'D):

(G) WHEN A FUSED ELBOW OR LOADBREAK ELBOW ON STAND OFF PLUG (INSTALLATION FOR LOOP SYSTEM) IS INSTALLED ON THE CENTER CABLE TAP, NO OTHER CABLE OR CONNECTORS WILL BE ALLOWED ON THE OPPOSITE WALL FROM THE CENTER CABLE TAP DUE TO THE LACK OF SPACE.

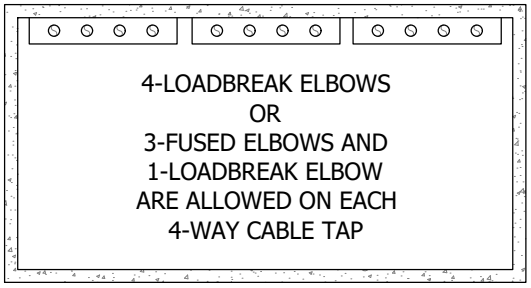

CONFIGURATION 1
ALLOWED

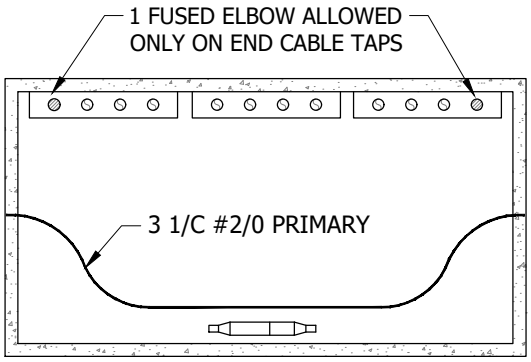

CONFIGURATION 2
ALLOWED

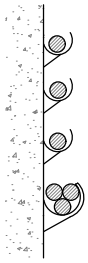

CONFIGURATION 2
SIDE VIEW

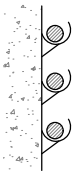

CONFIGURATION 3
SIDE VIEW

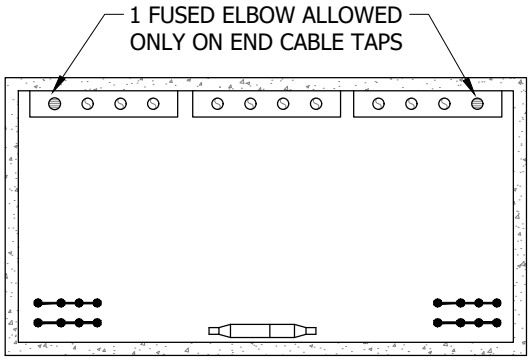

CONFIGURATION 3
WITH OR WITHOUT SECONDARY

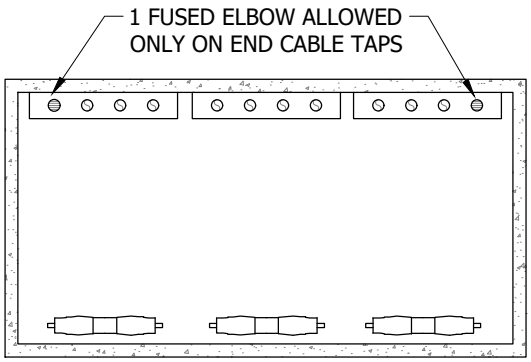

CONFIGURATION 4
ALLOWED

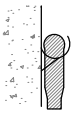

CONFIGURATION 4
SIDE VIEW

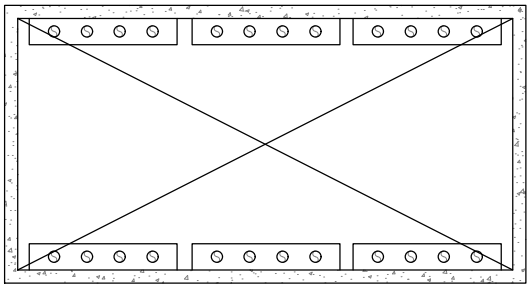

CONFIGURATION 5
NOT ALLOWED

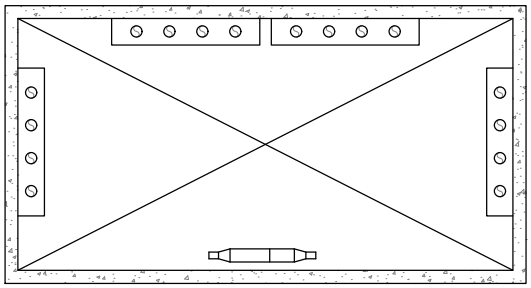

CONFIGURATION 6
NOT ALLOWED
4 OR MORE CABLE TAPS
WITH OR WITHOUT SPLICE

FIGURE 2 (G)
3314
FOR THREE-PHASE 2/0 AND SMALLER PRIMARY CABLES AND UP TO 500 KCMIL SECONDARY CABLES MAXIMUM
PLAN VIEW

© 1998 - 2021 San Diego Gas & Electric Company. All rights reserved. Removal of this copyright notice without permission is not permitted under law.

REV	CHANGE	DR	BY	DSN	APV	DATE	REV	CHANGE	DR	BY	DSN	APV	DATE
C	FIGURE UPDATE	-	EJA	GLW	CZH	11/09/2020	F						
B	EDITIORIAL CHANGES	-	AW	JS	CZH	07/01/2018	E						
A	REVISION	-	-	-	-	01/01/1996	D	FORMATTING	EDM	JIK	-	-	12/28/2021

TABLE OF CONTENTS

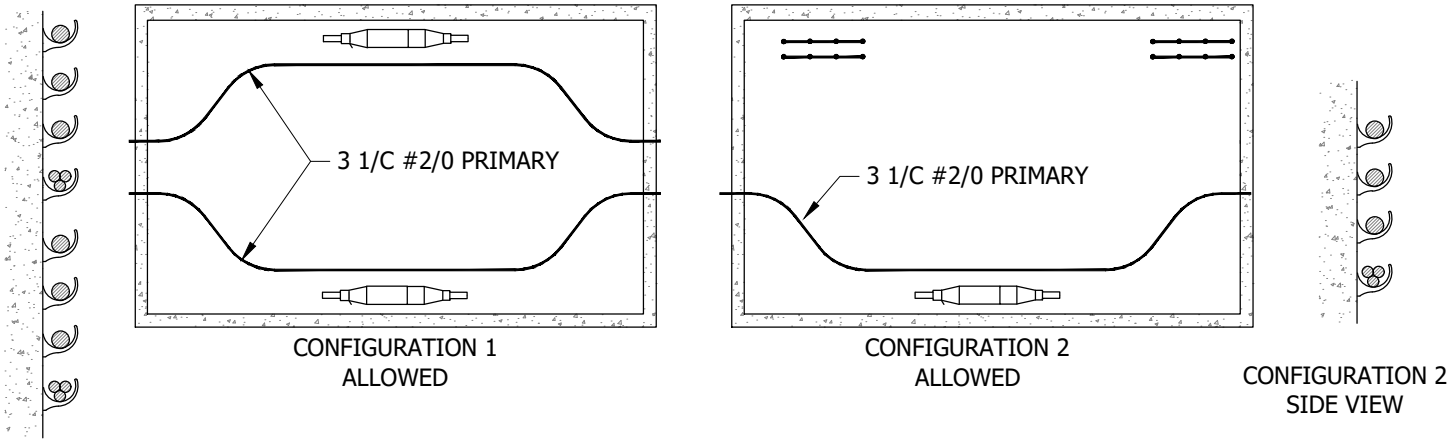

CONFIGURATION 1 ALLOWED

CONFIGURATION 2 ALLOWED

CONFIGURATION 2 SIDE VIEW

CONFIGURATION 1 SIDE VIEW

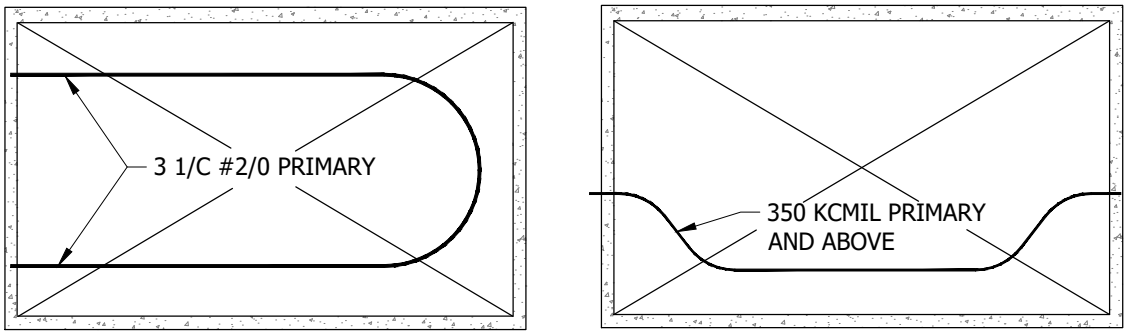

CONFIGURATION 3 NOT ALLOWED

CONFIGURATION 4 NOT ALLOWED WITH OR WITHOUT SPLICES

FIGURE 3 (G)
3314
FOR THREE-PHASE 2/0 AND SMALLER PRIMARY CABLES AND UP TO 500 KCMIL SECONDARY CABLES MAXIMUM
PLAN VIEW

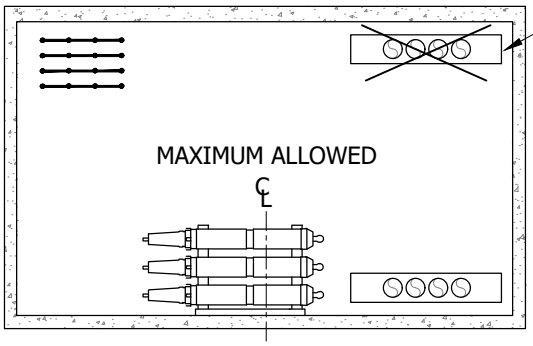

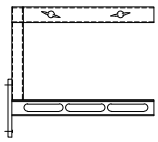

FIGURE 5
TEE BRACKET SN/166675 AU T/BRKT

FIGURE 4 (G)
3314
FOR THREE-PHASE 750 AND SMALLER PRIMARY CABLES AND UP TO 500 KCMIL SECONDARY CABLES MAXIMUM
ONLY FOR EXISTING HANDHOLES WITH 750 KCMIL MAXIMUM INSTALLED ON A TEE BRACKET
PLAN VIEW

© 1998 - 2021 San Diego Gas & Electric Company. All rights reserved. Removal of this copyright notice without permission is not permitted under law.

REV	CHANGE	DR	BY	DSN	APV	DATE	REV	CHANGE	DR	BY	DSN	APV	DATE
C	FIGURE UPDATE	-	EJA	GLW	CZH	11/09/2020	F						
B	EDITIORIAL CHANGES	-	AW	JS	CZH	07/01/2018	E						
A	REVISION	-	-	-	-	01/01/1996	D	FORMATTING	EDM	JIK	-	-	12/28/2021

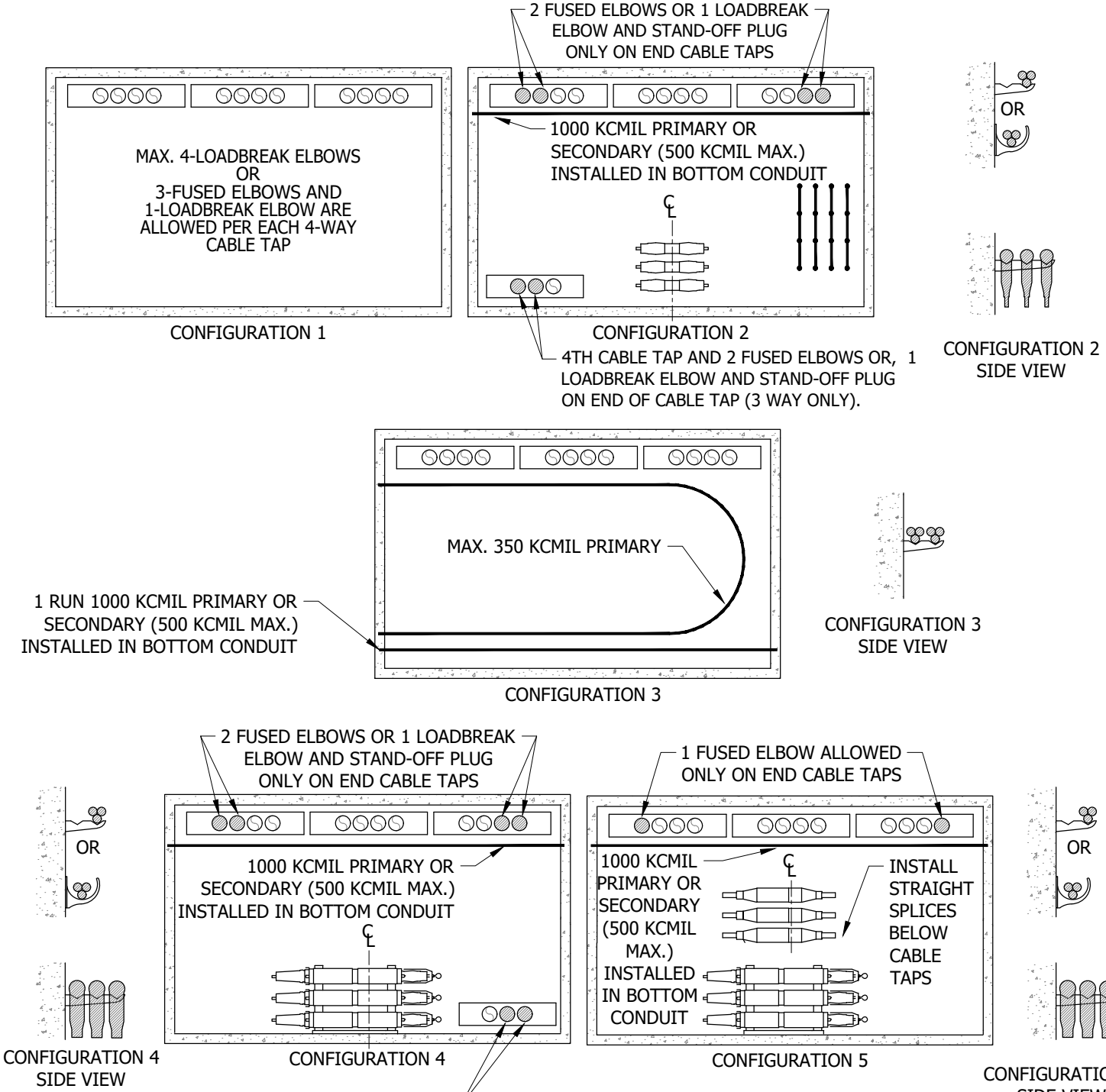

FIGURE 6 (G)
3315
ALLOWED
FOR ALL SIZES OF PRIMARY CABLES AND UP TO 500 KCMIL SECONDARY CABLES MAXIMUM
PLAN VIEW

TABLE OF CONTENTS

© 1998 - 2021 San Diego Gas & Electric Company. All rights reserved. Removal of this copyright notice without permission is not permitted under law.

REV	CHANGE	DR	BY	DSN	APV	DATE	REV	CHANGE	DR	BY	DSN	APV	DATE
C	FIGURE UPDATE	-	EJA	GLW	CZH	11/09/2020	F						
B	EDITIORIAL CHANGES	-	AW	JS	CZH	07/01/2018	E						
A	REVISION	-	-	-	-	01/01/1996	D	FORMATTING	EDM	JIK	-	-	12/28/2021

X Indicates Latest Revision | Completely Revised | New Page | Information Removed

SDG&E ELECTRIC UNDERGROUND CONSTRUCTION STANDARDS

EQUIPMENT COMBINATION GUIDELINES

UG3649.6

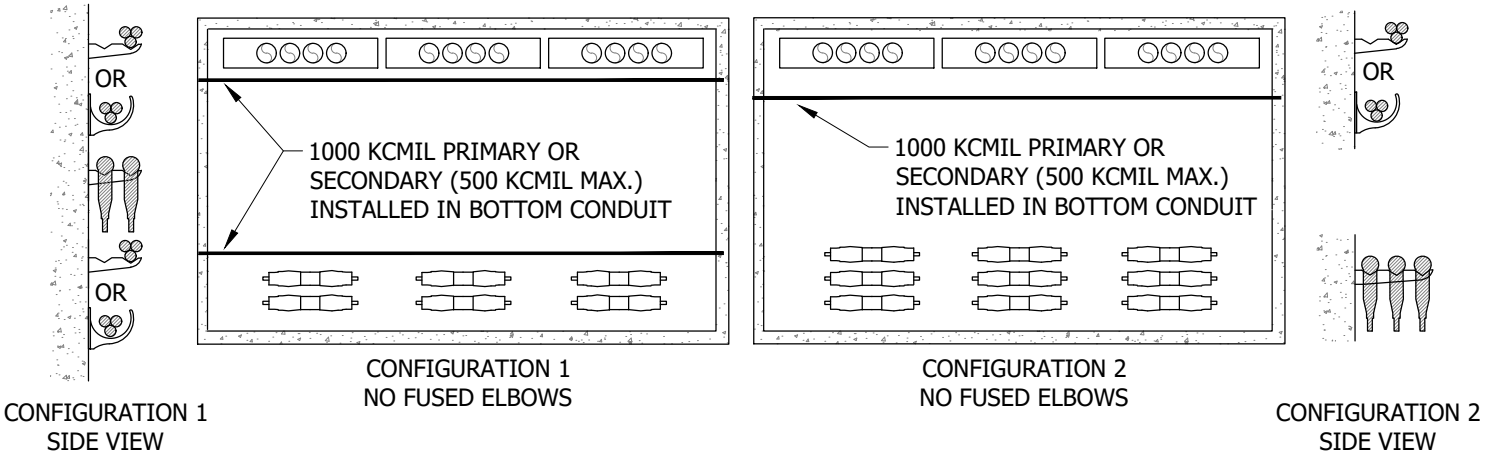

CONFIGURATION 1
SIDE VIEW

CONFIGURATION 1
NO FUSED ELBOWS

CONFIGURATION 2
NO FUSED ELBOWS

CONFIGURATION 2
SIDE VIEW

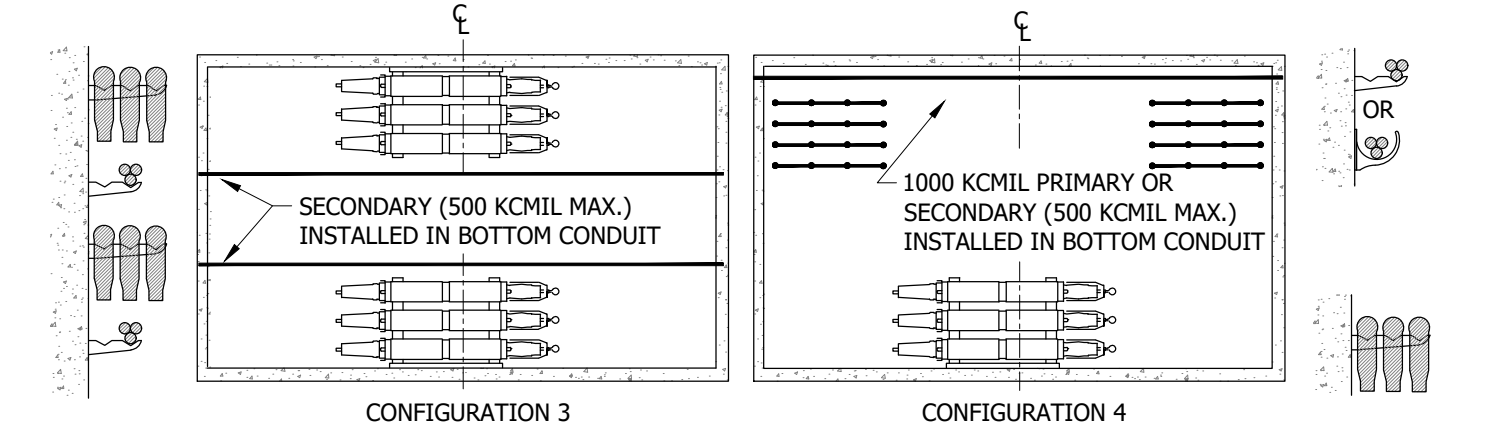

CONFIGURATION 3
SIDE VIEW

CONFIGURATION 3

CONFIGURATION 4

CONFIGURATION 4
SIDE VIEW

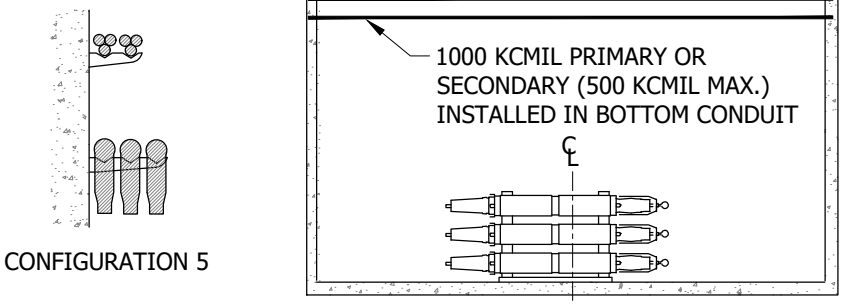

CONFIGURATION 5

CONFIGURATION 5

FIGURE 7 (G)
3315
ALLOWED
FOR ALL SIZES OF PRIMARY CABLES AND UP TO 500 KCMIL SECONDARY CABLES MAXIMUM
PLAN VIEW

© 1998 - 2021 San Diego Gas & Electric Company. All rights reserved. Removal of this copyright notice without permission is not permitted under law.

REV	CHANGE	DR	BY	DSN	APV	DATE	REV	CHANGE	DR	BY	DSN	APV	DATE
C	FIGURE UPDATE	-	EJA	GLW	CZH	11/09/2020	F						
B	EDITIORIAL CHANGES	-	AW	JS	CZH	07/01/2018	E						
A	REVISION	-	-	-	-	01/01/1996	D	FORMATTING	EDM	JIK	-	-	12/28/2021

X Indicates Latest Revision | Completely Revised | New Page | Information Removed

TABLE OF CONTENTS

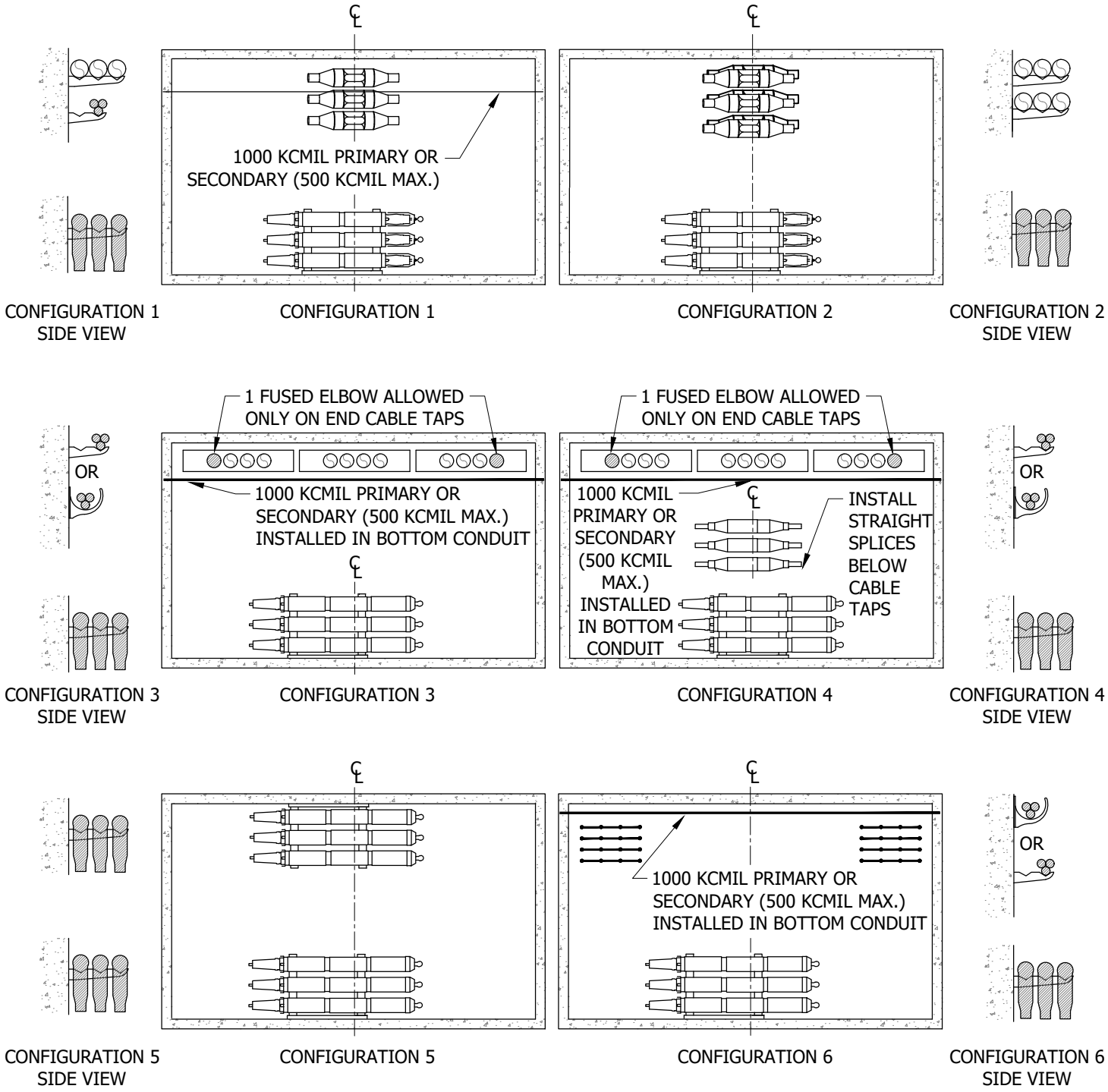

FIGURE 8 (G)
3315
ALLOWED
FOR ALL SIZES OF PRIMARY CABLES AND UP TO 500 KCMIL SECONDARY CABLES MAXIMUM
PLAN VIEW

© 1998 - 2021 San Diego Gas & Electric Company. All rights reserved. Removal of this copyright notice without permission is not permitted under law.

REV	CHANGE	DR	BY	DSN	APV	DATE	REV	CHANGE	DR	BY	DSN	APV	DATE
C	FIGURE UPDATE	-	EJA	GLW	CZH	11/09/2020	F						
B	EDITIORIAL CHANGES	-	AW	JS	CZH	07/01/2018	E						
A	REVISION	-	-	-	-	01/01/1996	D	FORMATTING	EDM	JIK	-	-	12/28/2021

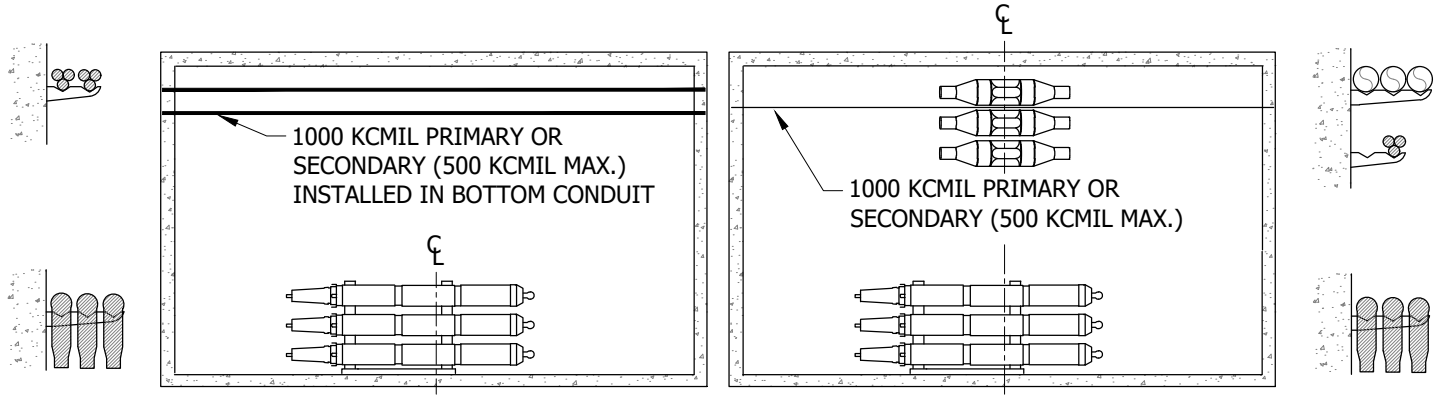

CONFIGURATION 1
SIDE VIEW

CONFIGURATION 1

CONFIGURATION 2

CONFIGURATION 2
SIDE VIEW

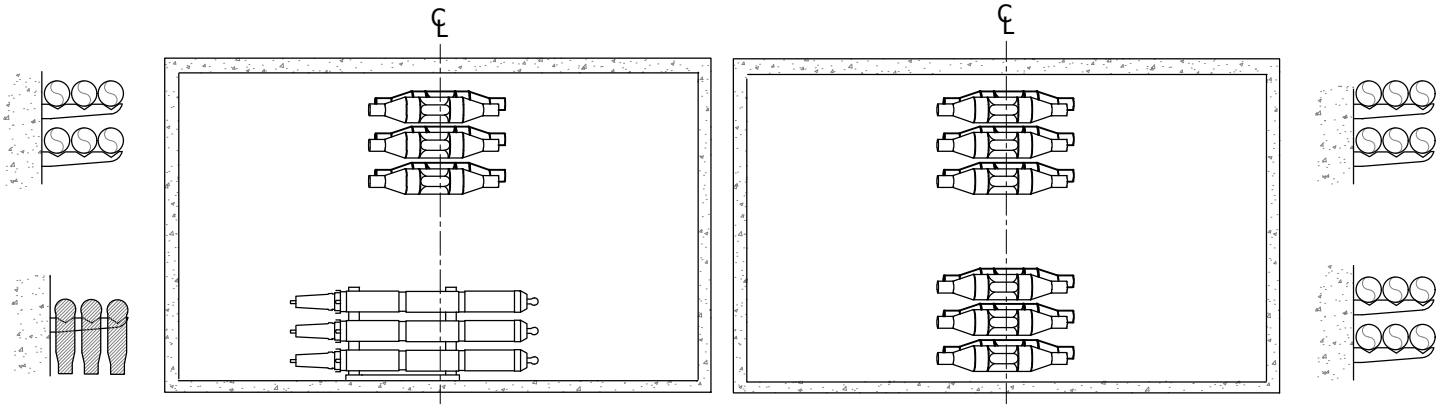

CONFIGURATION 3
SIDE VIEW

CONFIGURATION 3

CONFIGURATION 4

CONFIGURATION 4
SIDE VIEW

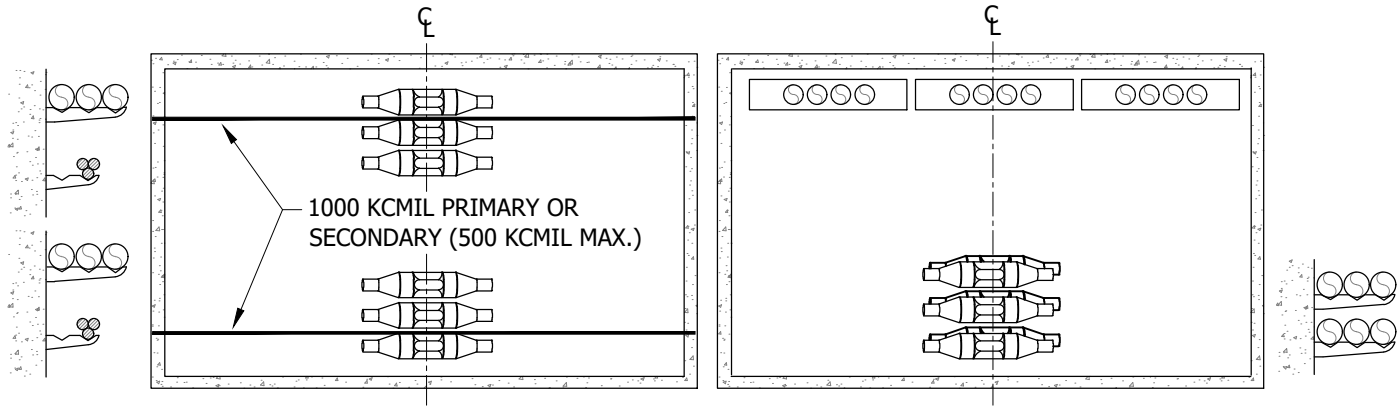

CONFIGURATION 5
SIDE VIEW

CONFIGURATION 5

CONFIGURATION 6

CONFIGURATION 6
SIDE VIEW

FIGURE 9 (G)
3315
ALLOWED
FOR ALL SIZES OF PRIMARY CABLES AND UP TO 500 KCMIL SECONDARY CABLES MAXIMUM
PLAN VIEW

TABLE OF CONTENTS

© 1998 - 2021 San Diego Gas & Electric Company. All rights reserved. Removal of this copyright notice without permission is not permitted under law.

REV	CHANGE	DR	BY	DSN	APV	DATE	REV	CHANGE	DR	BY	DSN	APV	DATE
C	FIGURE UPDATE	-	EJA	GLW	CZH	11/09/2020	F						
B	EDITIORIAL CHANGES	-	AW	JS	CZH	07/01/2018	E						
A	REVISION	-	-	-	-	01/01/1996	D	FORMATTING	EDM	JIK	-	-	12/28/2021

X Indicates Latest Revision | Completely Revised | New Page | Information Removed



CONFIGURATION 1
SIDE VIEW

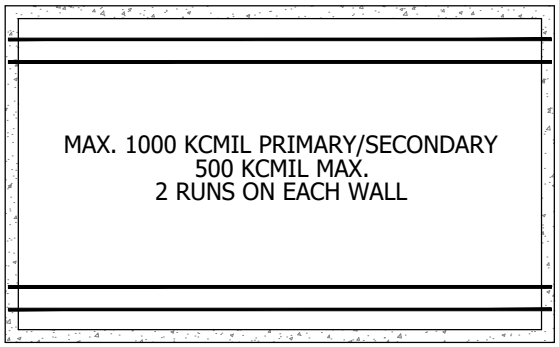

CONFIGURATION 1
ALLOWED

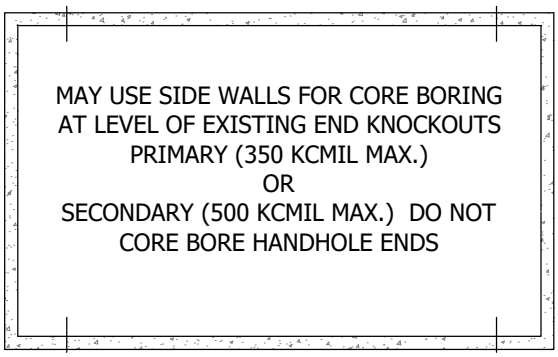

CONFIGURATION 2 (F1)
ALLOWED

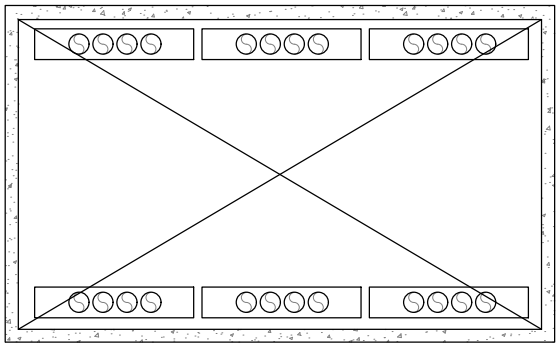

CONFIGURATION 3
NOT ALLOWED

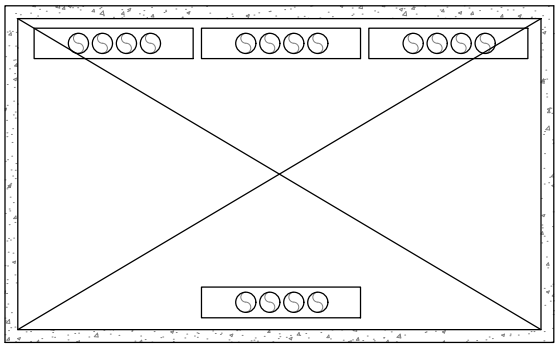

CONFIGURATION 4
NOT ALLOWED

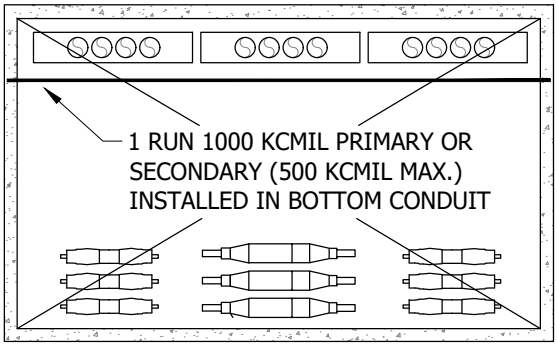

CONFIGURATION 5
NO FUSED ELBOWS
NOT ALLOWED

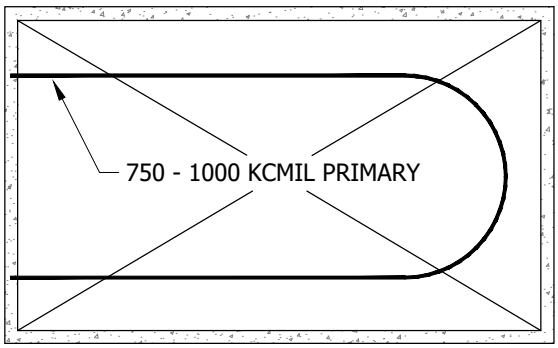

CONFIGURATION 6
NOT ALLOWED

FIGURE 10 (G)
3315
FOR ALL SIZES OF PRIMARY CABLES AND UP TO 500 KCMIL SECONDARY CABLES MAXIMUM
PLAN VIEW

© 1998 - 2021 San Diego Gas & Electric Company. All rights reserved. Removal of this copyright notice without permission is not permitted under law.

REV	CHANGE	DR	BY	DSN	APV	DATE	REV	CHANGE	DR	BY	DSN	APV	DATE
C	FIGURE UPDATE	-	EJA	GLW	CZH	11/09/2020	F						
B	EDITIORIAL CHANGES	-	AW	JS	CZH	07/01/2018	E						
A	REVISION	-	-	-	-	01/01/1996	D	FORMATTING	EDM	JIK	-	-	12/28/2021

X Indicates Latest Revision | Completely Revised | New Page | Information Removed

TABLE OF CONTENTS

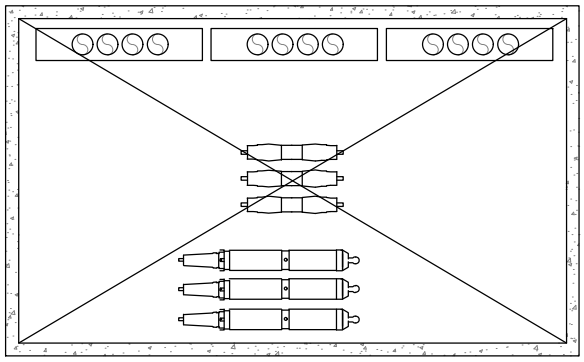

CONFIGURATION 1

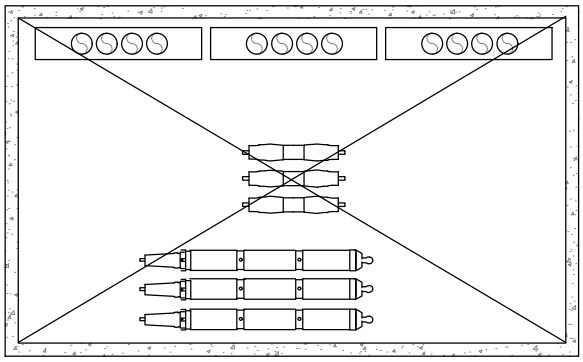

CONFIGURATION 2

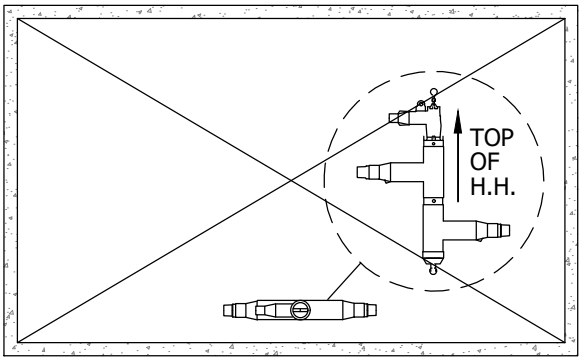

CONFIGURATION 3

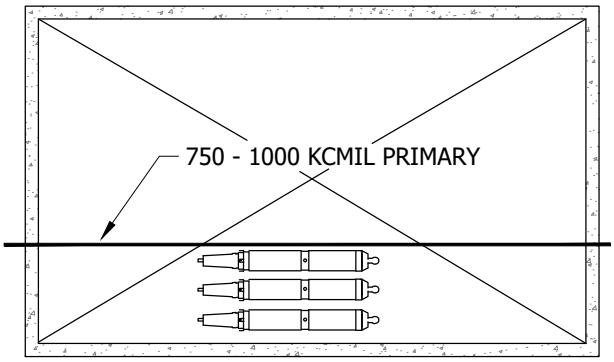

CONFIGURATION 4

FIGURE 11
3315
NOT ALLOWED
FOR ALL SIZES OF PRIMARY CABLES AND UP TO 500 KCMIL SECONDARY CABLES MAXIMUM
PLAN VIEW

© 1998 - 2021 San Diego Gas & Electric Company. All rights reserved. Removal of this copyright notice without permission is not permitted under law.

REV	CHANGE	DR	BY	DSN	APV	DATE	REV	CHANGE	DR	BY	DSN	APV	DATE
C	FIGURE UPDATE	-	EJA	GLW	CZH	11/09/2020	F						
B	EDITIORIAL CHANGES	-	AW	JS	CZH	07/01/2018	E						
A	REVISION	-	-	-	-	01/01/1996	D	FORMATTING	EDM	JIK	-	-	12/28/2021

X Indicates Latest Revision | Completely Revised | New Page | Information Removed

SDG&E ELECTRIC UNDERGROUND CONSTRUCTION STANDARDS

SHEET 11 OF 22

EQUIPMENT COMBINATION GUIDELINES

UG3649.11

TABLE OF CONTENTS

INSTALLATION (CONT'D):

(H) ONLY 3 CABLE TAPS ALLOWED ON EITHER WALL WHEN HANDHOLE REQUIRES A TRAFFIC COVER. TAPS MUST BE GROUPED TOGETHER AND CENTERED ON THE WALL.

J. WHEN ONLY ONE SET OF 600A TEES ARE INSTALLED, USE THE BOTTOM OUTSIDE CONDUIT CLOSEST TO THE WALL.

(K) THERE IS NO LIMITATION TO THE NUMBER OF FUSED ELBOWS ALLOWED IN 3316 HANDHOLES.

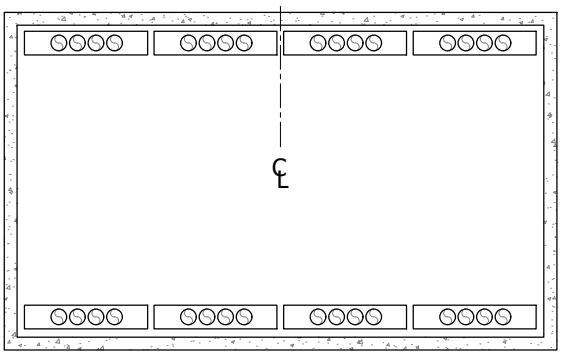

CONFIGURATION 1

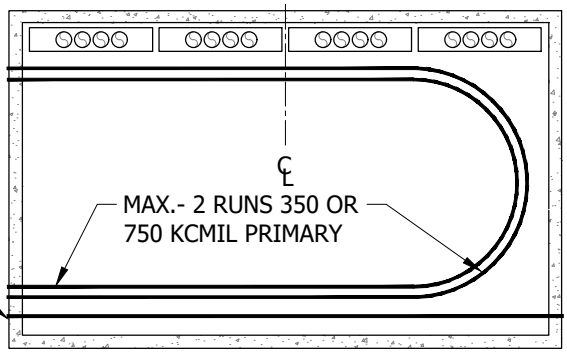

CONFIGURATION 2

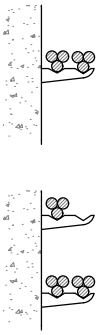

CONFIGURATION 2
SIDE VIEW

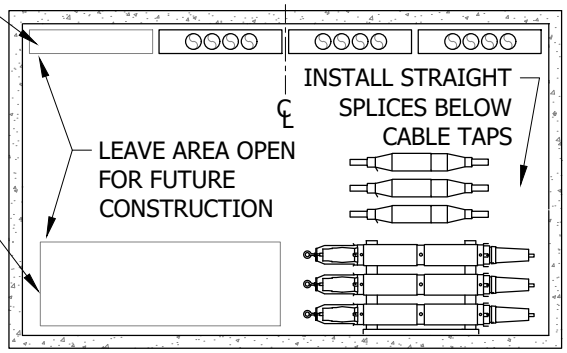

CONFIGURATION 3

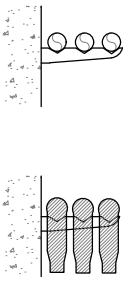

CONFIGURATION 3
SIDE VIEW

FIGURE 12 (H)(K)
3316
ALLOWED
FOR ALL SIZES OF PRIMARY CABLES AND UP TO 500 KCMIL SECONDARY CABLES MAXIMUM
PLAN VIEW

© 1998 - 2021 San Diego Gas & Electric Company. All rights reserved. Removal of this copyright notice without permission is not permitted under law.

REV	CHANGE	DR	BY	DSN	APV	DATE	REV	CHANGE	DR	BY	DSN	APV	DATE
C	FIGURE UPDATE	-	EJA	GLW	CZH	11/09/2020	F						
B	EDITIORIAL CHANGES	-	AW	JS	CZH	07/01/2018	E						
A	REVISION	-	-	-	-	01/01/1996	D	FORMATTING	EDM	JIK	-	-	12/28/2021

X Indicates Latest Revision | Completely Revised | New Page | Information Removed

TABLE OF CONTENTS

INSTALLATION (CONT'D):

(L) ONLY 3 CABLE TAPS ALLOWED ON EITHER WALL WHEN HANDHOLE REQUIRES A TRAFFIC COVER. TAPS MUST BE GROUPED TOGETHER AND CENTERED ON THE WALL.

M. WHEN ONLY ONE SET OF 600A TEES ARE INSTALLED, USE THE BOTTOM OUTSIDE CONDUIT CLOSEST TO THE WALL.

(N) #2 OR 2/0 PRIMARY CABLES OR SECONDARY (500 KCMIL MAX.) MAY BE PULLED IN ANY CONDUIT NOT USED FOR LARGER CABLES.

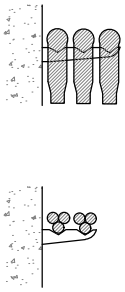

CONFIGURATION 1
SIDE VIEW

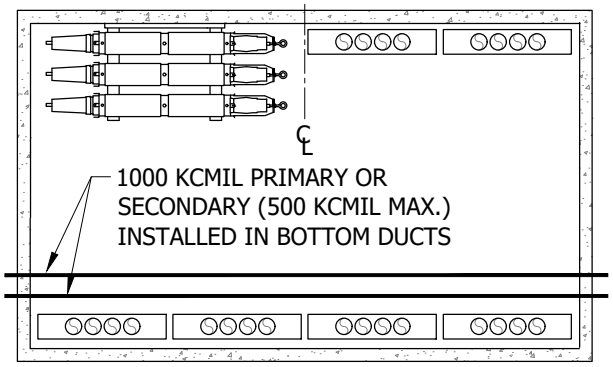

CONFIGURATION 1

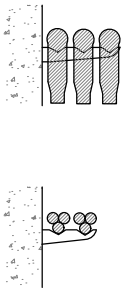

CONFIGURATION 2
SIDE VIEW

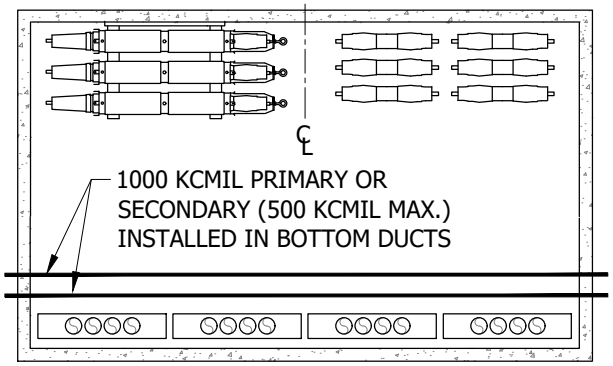

CONFIGURATION 2

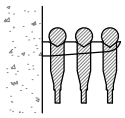

CONFIGURATION 2
SIDE VIEW

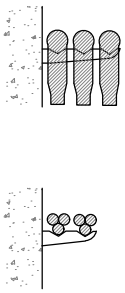

CONFIGURATION 3
SIDE VIEW

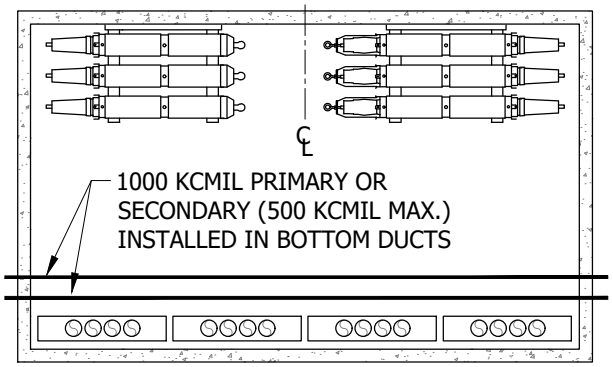

CONFIGURATION 3

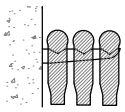

CONFIGURATION 3
SIDE VIEW

FIGURE 13 (L)(N)
3316
ALLOWED
FOR ALL SIZES OF PRIMARY CABLES AND UP TO 500 KCMIL SECONDARY CABLES MAXIMUM
PLAN VIEW

TABLE OF CONTENTS

© 1998 - 2021 San Diego Gas & Electric Company. All rights reserved. Removal of this copyright notice without permission is not permitted under law.

REV	CHANGE	DR	BY	DSN	APV	DATE	REV	CHANGE	DR	BY	DSN	APV	DATE
C	FIGURE UPDATE	-	EJA	GLW	CZH	11/09/2020	F						
B	EDITIORIAL CHANGES	-	AW	JS	CZH	07/01/2018	E						
A	REVISION	-	-	-	-	01/01/1996	D	FORMATTING	EDM	JIK	-	-	12/28/2021

INSTALLATION (CONT'D):

(O) ONLY 3 CABLE TAPS ALLOWED ON EITHER WALL WHEN HANDHOLE REQUIRES A TRAFFIC COVER. TAPS MUST BE GROUPED TOGETHER AND CENTERED ON THE WALL.

(P) WHEN ONLY TWO SETS OF 600A TEES ARE REQUIRED, INSTALL THEM ON ONE WALL. LEAVE THE OPPOSITE WALL OPEN FOR FUTURE CONSTRUCTION.

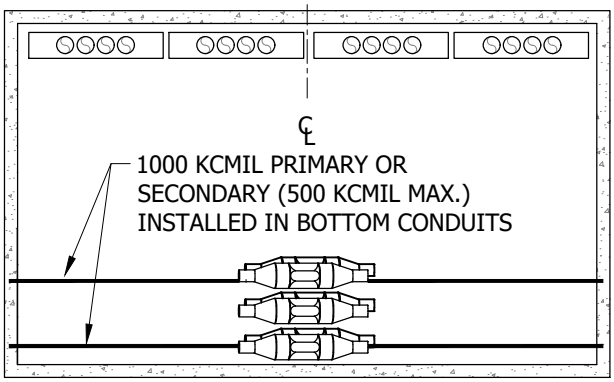

CONFIGURATION 1 (O)

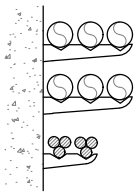

CONFIGURATION 1
SIDE VIEW

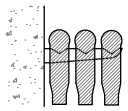

CONFIGURATION 2
SIDE VIEW

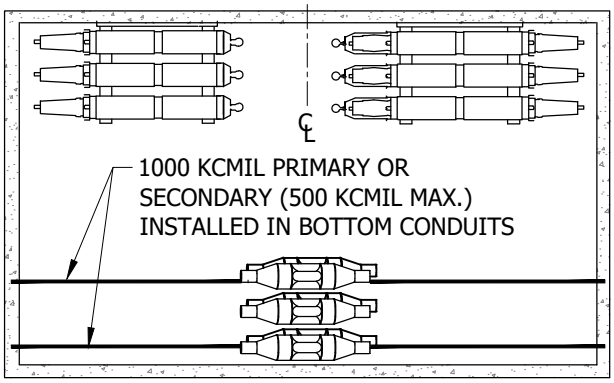

CONFIGURATION 2

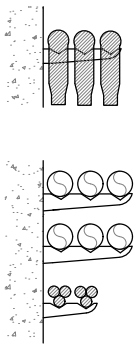

CONFIGURATION 2
SIDE VIEW

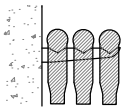

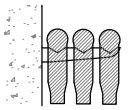

CONFIGURATION 3
SIDE VIEW

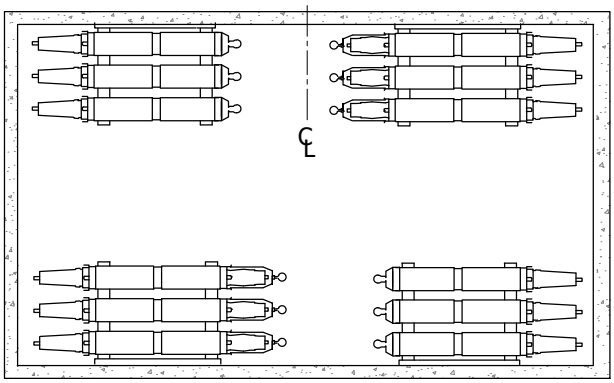

CONFIGURATION 3

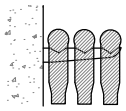

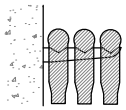

CONFIGURATION 3
SIDE VIEW

FIGURE 14 (P)
3316
ALLOWED
FOR ALL SIZES OF PRIMARY CABLES AND UP TO 500 KCMIL SECONDARY CABLES MAXIMUM
PLAN VIEW

© 1998 - 2021 San Diego Gas & Electric Company. All rights reserved. Removal of this copyright notice without permission is not permitted under law.

REV	CHANGE	DR	BY	DSN	APV	DATE	REV	CHANGE	DR	BY	DSN	APV	DATE
C	FIGURE UPDATE	-	EJA	GLW	CZH	11/09/2020	F						
B	EDITIORIAL CHANGES	-	AW	JS	CZH	07/01/2018	E						
A	REVISION	-	-	-	-	01/01/1996	D	FORMATTING	EDM	JIK	-	-	12/28/2021

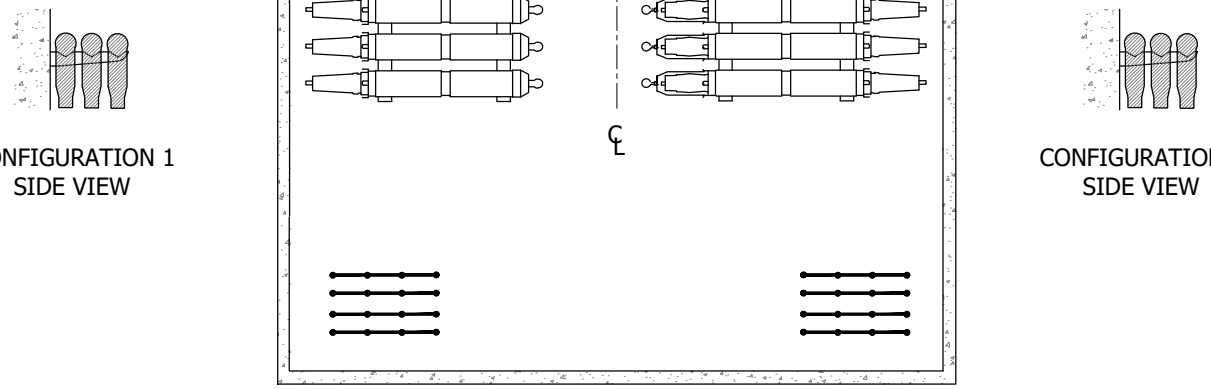

FIGURE 15 (P)
3316
ALLOWED
FOR ALL SIZES OF PRIMARY CABLES AND UP TO 500 KCMIL SECONDARY CABLES MAXIMUM
PLAN VIEW

© 1998 - 2021 San Diego Gas & Electric Company. All rights reserved. Removal of this copyright notice without permission is not permitted under law.

REV	CHANGE	DR	BY	DSN	APV	DATE	REV	CHANGE	DR	BY	DSN	APV	DATE
C	FIGURE UPDATE	-	EJA	GLW	CZH	11/09/2020	F						
B	EDITIORIAL CHANGES	-	AW	JS	CZH	07/01/2018	E						
A	REVISION	-	-	-	-	01/01/1996	D	FORMATTING	EDM	JIK	-	-	12/28/2021

X Indicates Latest Revision | Completely Revised | New Page | Information Removed

TABLE OF CONTENTS

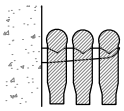

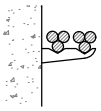

CONFIGURATION 1
SIDE VIEW

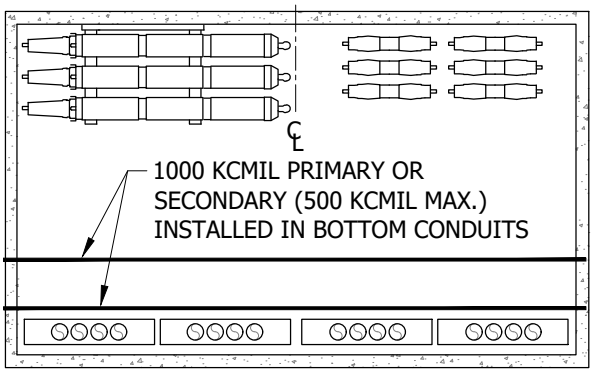

CONFIGURATION 1

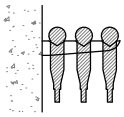

CONFIGURATION 1
SIDE VIEW

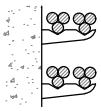

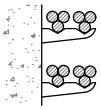

CONFIGURATION 2
SIDE VIEW

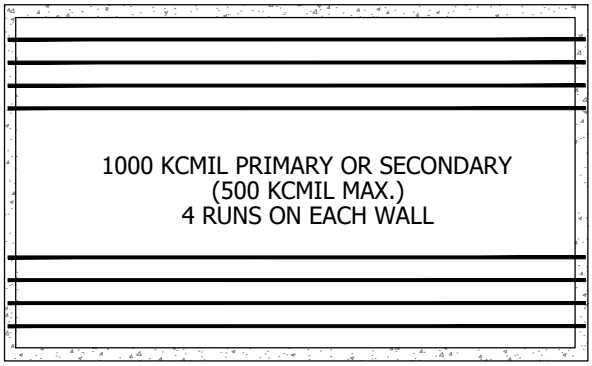

CONFIGURATION 2

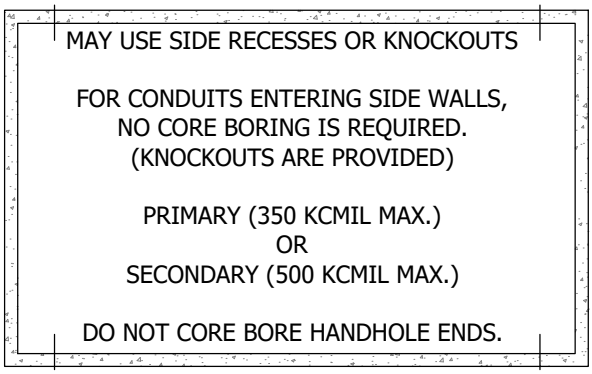

CONFIGURATION 3 (F1)

FIGURE 16 (P)
3316
ALLOWED
FOR ALL SIZES OF PRIMARY CABLES AND UP TO 500 KCMIL SECONDARY CABLES MAXIMUM
PLAN VIEW

© 1998 - 2021 San Diego Gas & Electric Company. All rights reserved. Removal of this copyright notice without permission is not permitted under law.

REV	CHANGE	DR	BY	DSN	APV	DATE	REV	CHANGE	DR	BY	DSN	APV	DATE
C	FIGURE UPDATE	-	EJA	GLW	CZH	11/09/2020	F						
B	EDITIORIAL CHANGES	-	AW	JS	CZH	07/01/2018	E						
A	REVISION	-	-	-	-	01/01/1996	D	FORMATTING	EDM	JIK	-	-	12/28/2021

X Indicates Latest Revision | Completely Revised | New Page | Information Removed

TABLE OF CONTENTS

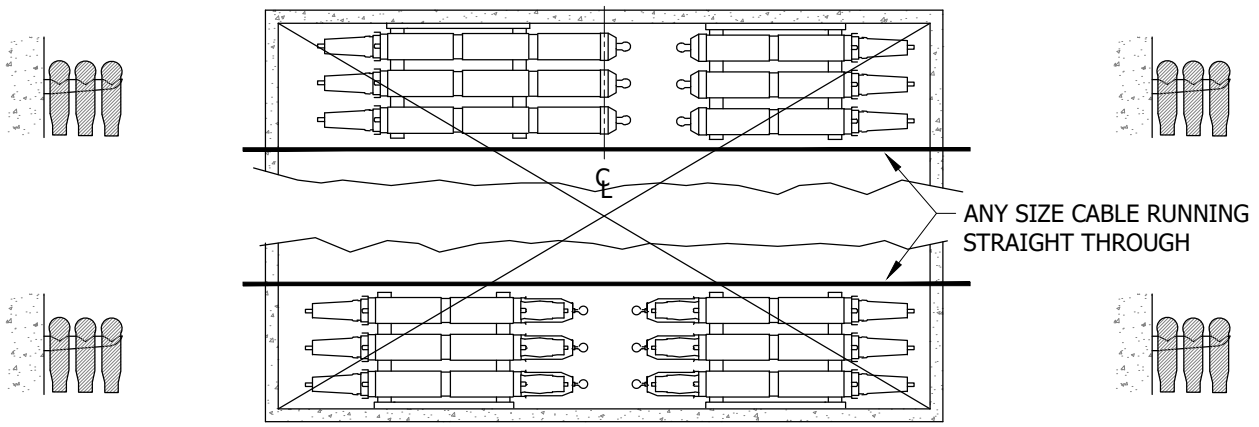

CONFIGURATION 1
SIDE VIEW

CONFIGURATION 1

CONFIGURATION 1
SIDE VIEW

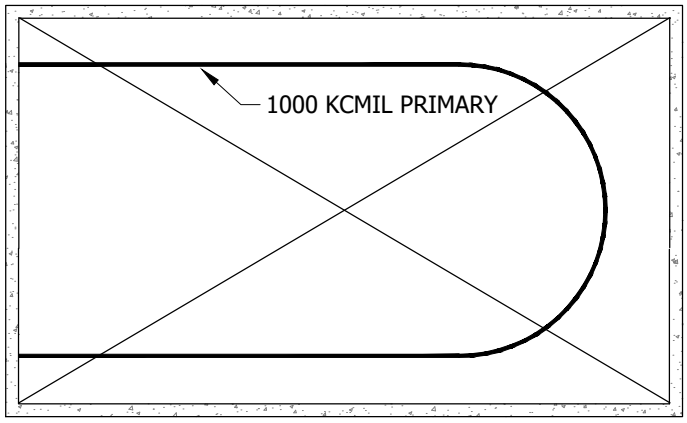

CONFIGURATION 2

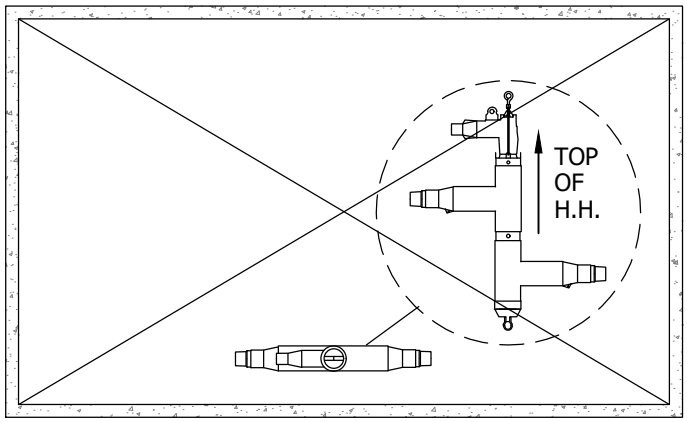

CONFIGURATION 3

FIGURE 17 (P)
3316
NOT ALLOWED
PLAN VIEW

TABLE OF CONTENTS

© 1998 - 2021 San Diego Gas & Electric Company. All rights reserved. Removal of this copyright notice without permission is not permitted under law.

REV	CHANGE	DR	BY	DSN	APV	DATE	REV	CHANGE	DR	BY	DSN	APV	DATE
C	FIGURE UPDATE	-	EJA	GLW	CZH	11/09/2020	F						
B	EDITIORIAL CHANGES	-	AW	JS	CZH	07/01/2018	E						
A	REVISION	-	-	-	-	01/01/1996	D	FORMATTING	EDM	JIK	-	-	12/28/2021

TABLE OF CONTENTS

PROPERTY SIDE

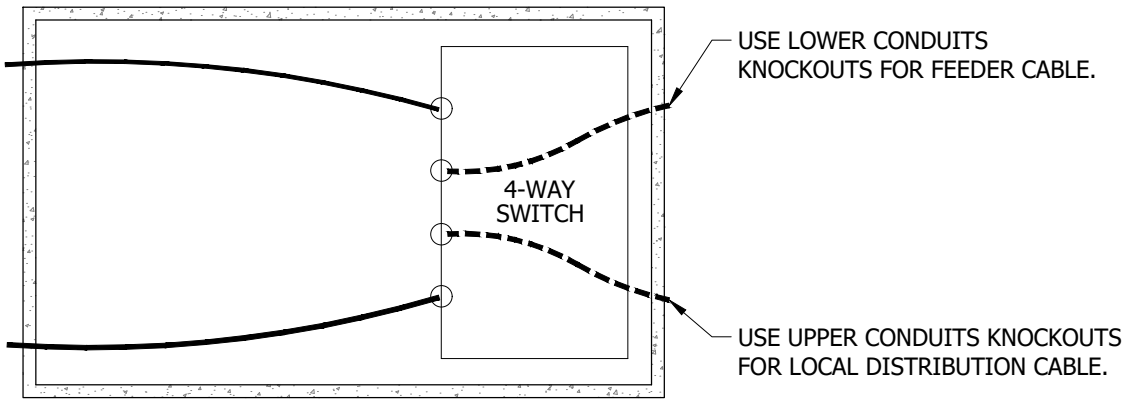

CONFIGURATION 1

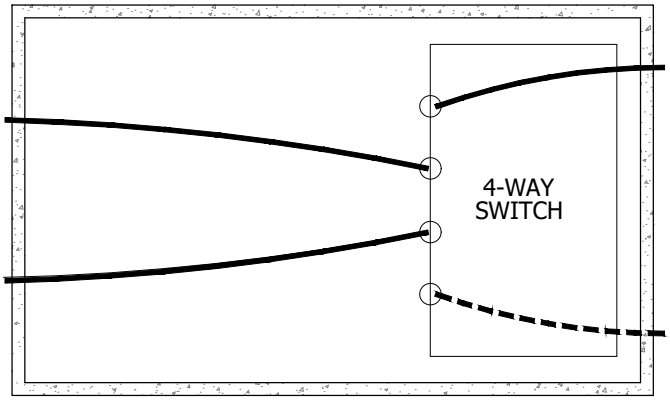

CONFIGURATION 2

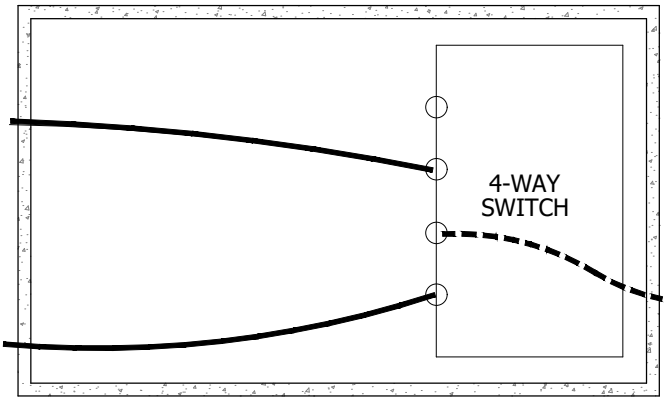

CONFIGURATION 3

FIGURE 18 (P)(a)
3317
WITH SUBSURFACE/SURFACE OPERABLE SWITCH FOR ALL SIZES PRIMARY.
NO SECONDARY OTHER THAN SUMP PUMP AND/OR SCADA FEED
PLAN VIEW

© 1998 - 2021 San Diego Gas & Electric Company. All rights reserved. Removal of this copyright notice without permission is not permitted under law.

REV	CHANGE	DR	BY	DSN	APV	DATE	REV	CHANGE	DR	BY	DSN	APV	DATE
C	FIGURE UPDATE	-	EJA	GLW	CZH	11/09/2020	F						
B	EDITIORIAL CHANGES	-	AW	JS	CZH	07/01/2018	E						
A	REVISION	-	-	-	-	01/01/1996	D	FORMATTING	EDM	JIK	-	-	12/28/2021

X Indicates Latest Revision | Completely Revised | New Page | Information Removed

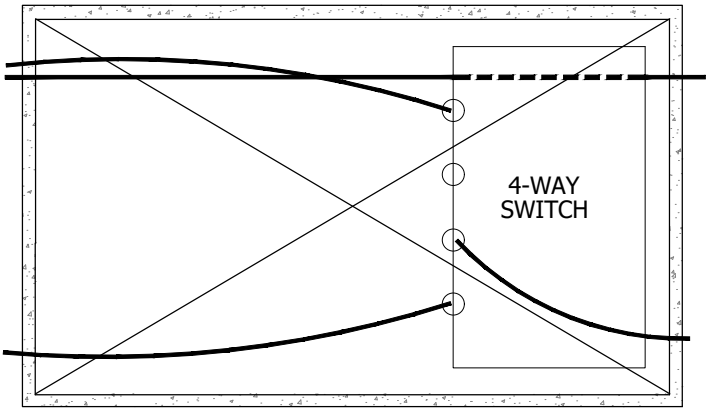

CONFIGURATION 1

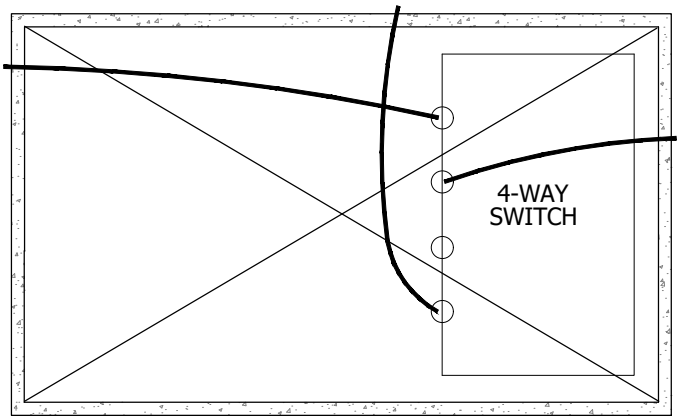

CONFIGURATION 2

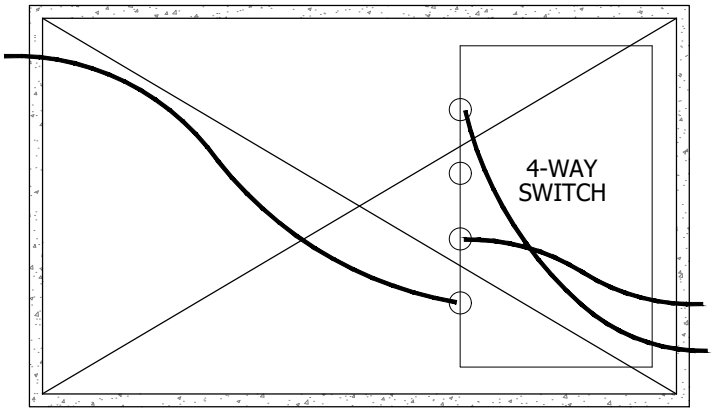

CONFIGURATION 3

FIGURE 19 (P)
3317
NOT ALLOWED
WITH SUBSURFACE/SURFACE OPERABLE SWITCH FOR ALL SIZES PRIMARY.
NO SECONDARY OTHER THAN SUMP PUMP AND/OR SCADA FEED
PLAN VIEW

© 1998 - 2021 San Diego Gas & Electric Company. All rights reserved. Removal of this copyright notice without permission is not permitted under law.

REV	CHANGE	DR	BY	DSN	APV	DATE	REV	CHANGE	DR	BY	DSN	APV	DATE
C	FIGURE UPDATE	-	EJA	GLW	CZH	11/09/2020	F						
B	EDITIORIAL CHANGES	-	AW	JS	CZH	07/01/2018	E						
A	REVISION	-	-	-	-	01/01/1996	D	FORMATTING	EDM	JIK	-	-	12/28/2021

X Indicates Latest Revision | Completely Revised | New Page | Information Removed

TABLE OF CONTENTS

INSTALLATION (CONT'D):

(Q) WHEN CABLE ENTERS THE MANHOLE AND MAKES AN IMMEDIATE 90 DEGREE BEND AS SHOWN IN FIGURE 20, IT MUST BE UNTRIPLEXED AND INSTALLED IN THE THREE OUTSIDE POSITIONS NEAREST THE END OF A 4-WAY STEP (SEE DETAIL 1).

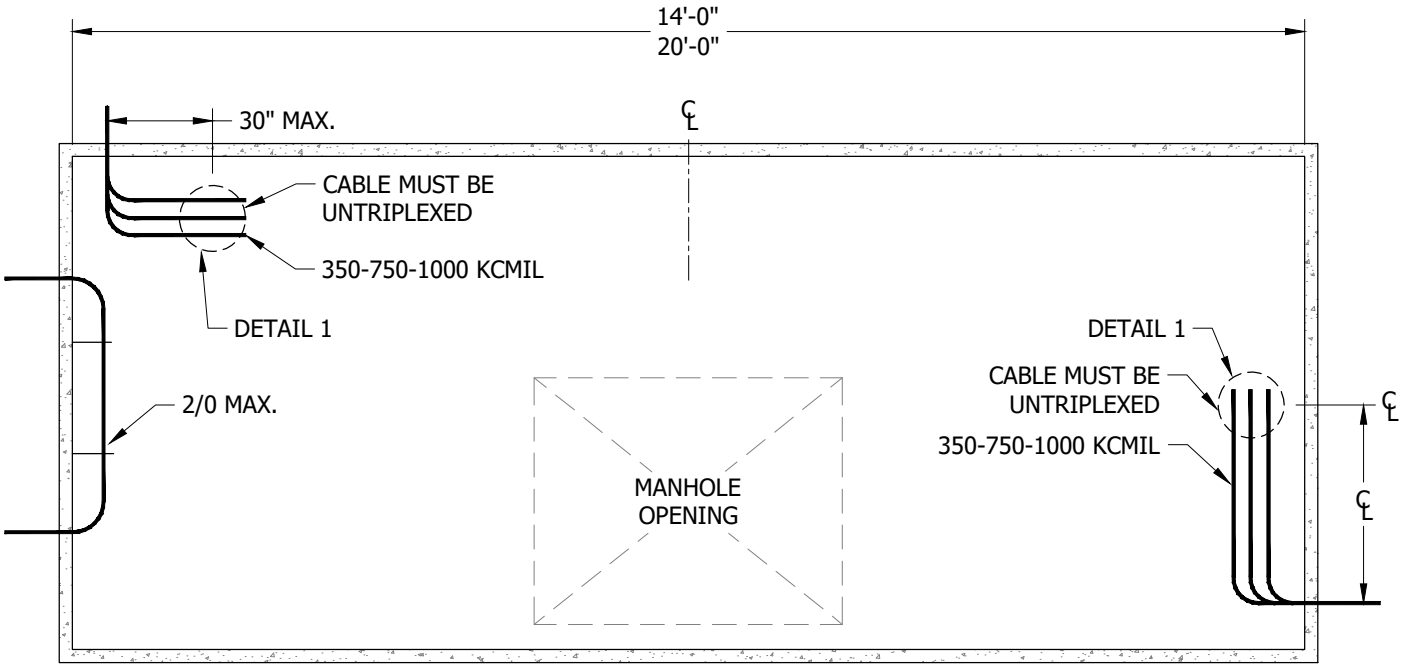

FIGURE 20 (Q)
3325/3326
ALLOWED
FOR ALL SIZES OF PRIMARY CABLES AND UP TO 500 KCMIL SECONDARY CABLES MAXIMUM.
THE PREFERRED INSTALLATION FOR SECONDARY CABLE & CONNECTIONS IS IN A HANDHOLE, USE A 3312 OR 3313 AND BYPASS THE MANHOLE IF POSSIBLE
PLAN VIEW

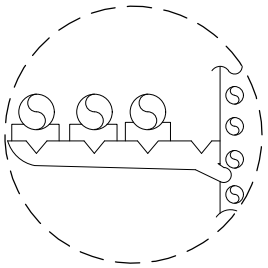

DETAIL 1
UNTRIPLEXED CABLE
SIDE VIEW

TABLE OF CONTENTS

© 1998 - 2021 San Diego Gas & Electric Company. All rights reserved. Removal of this copyright notice without permission is not permitted under law.

REV	CHANGE	DR	BY	DSN	APV	DATE	REV	CHANGE	DR	BY	DSN	APV	DATE
C	FIGURE UPDATE	-	EJA	GLW	CZH	11/09/2020	F						
B	EDITIORIAL CHANGES	-	AW	JS	CZH	07/01/2018	E						
A	REVISION	-	-	-	-	01/01/1996	D	FORMATTING	EDM	JIK	-	-	12/28/2021

INSTALLATION (CONT'D):

R. CABLES PULLED STRAIGHT THROUGH THE MANHOLE MAY BE POSITIONED ADJACENT TO THE SPLICED CABLES.

(S) ONLY USE A 20-FOOT MANHOLE WHEN TWO 4-WAY SWITCHES ARE REQUIRED.

1. 14-FOOT: 6 SETS OF STRAIGHT SPLICES OR 600A TEES (3 ON EACH WALL).
2. 20-FOOT: 10 SETS OF STRAIGHT SPLICES OR 600A TEES (5 ON EACH WALL).

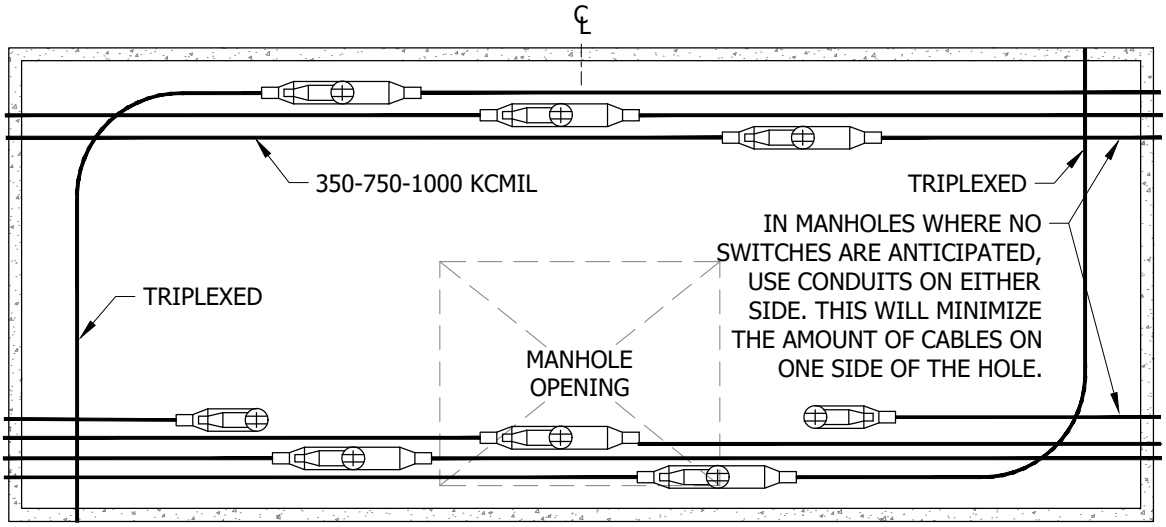

CONFIGURATION 1

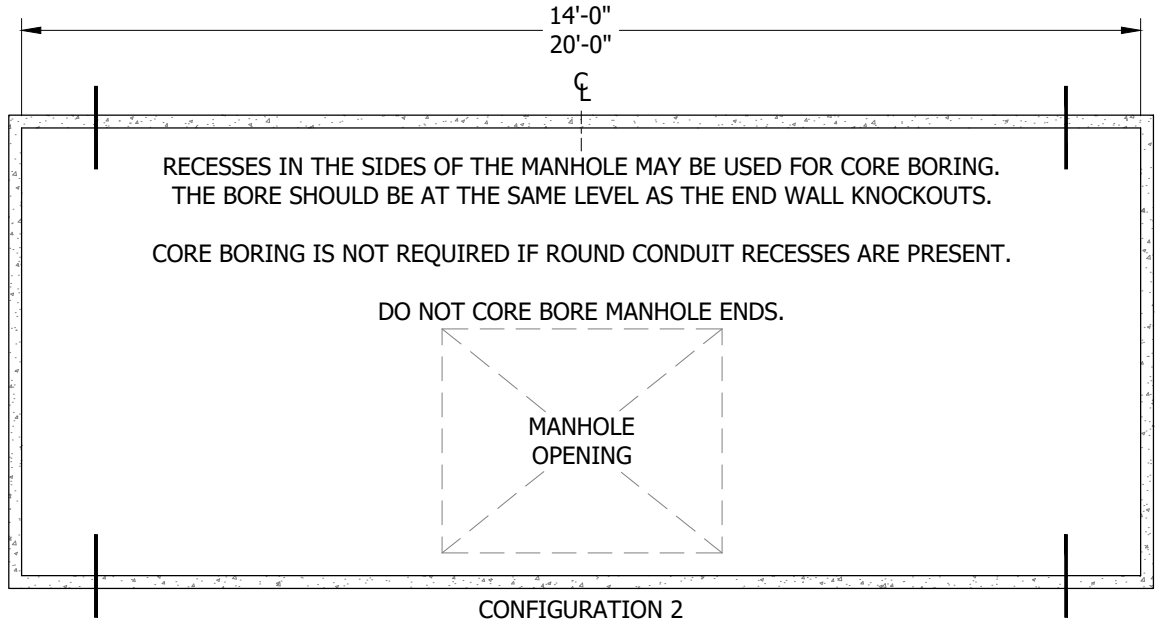

CONFIGURATION 2

FIGURE 21 (S)
3325/3326
ALLOWED
FOR ALL SIZES OF PRIMARY CABLES AND UP TO 500 KCMIL SECONDARY CABLES MAXIMUM
PLAN VIEW

© 1998 - 2021 San Diego Gas & Electric Company. All rights reserved. Removal of this copyright notice without permission is not permitted under law.

REV	CHANGE	DR	BY	DSN	APV	DATE	REV	CHANGE	DR	BY	DSN	APV	DATE
C	FIGURE UPDATE	-	EJA	GLW	CZH	11/09/2020	F						
B	EDITIORIAL CHANGES	-	AW	JS	CZH	07/01/2018	E						
A	REVISION	-	-	-	-	01/01/1996	D	FORMATTING	EDM	JIK	-	-	12/28/2021

X Indicates Latest Revision | Completely Revised | New Page | Information Removed

TABLE OF CONTENTS

INSTALLATION (CONT'D):

T. THE 6 WAY SWITCH SCADA AND FAULT INTERRUPTERS IS THE PREFERRED SWITCH FOR VAULTS.

(U) FOUR AND SIX WAY VISTA SWITCHES MAY BE INSTALLED IN DRY VAULTS WITHOUT A DEVIATION REQUEST.

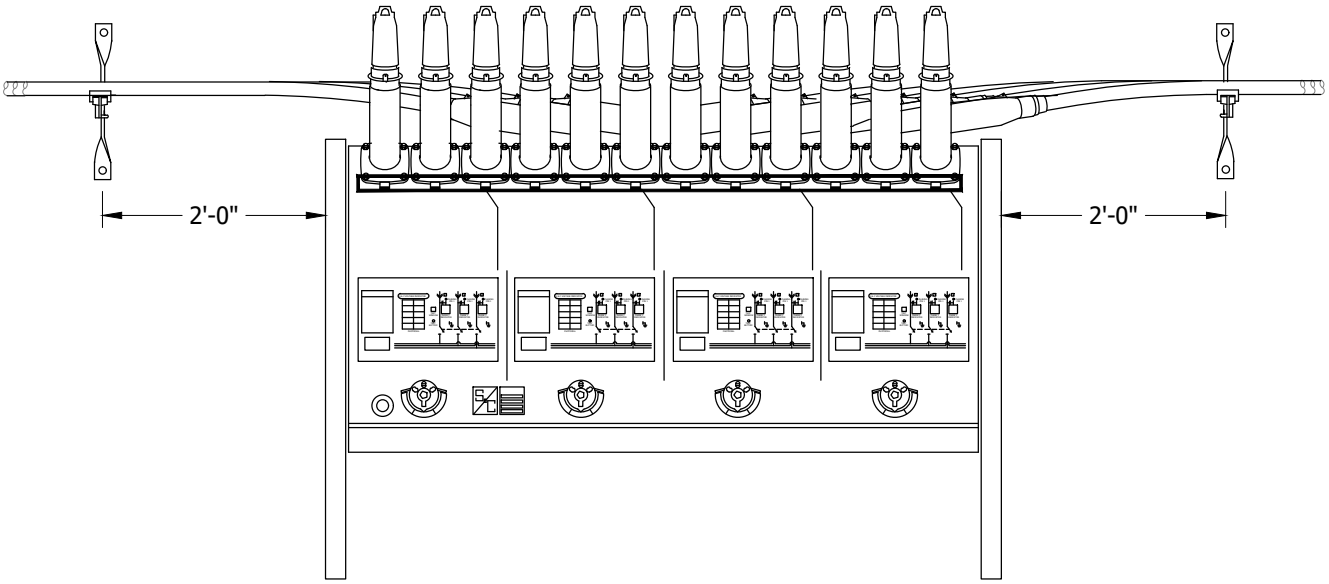

FIGURE 22
TYPICAL 4-WAY MANUAL OR SCADA SWITCH (U)
FRONT VIEW

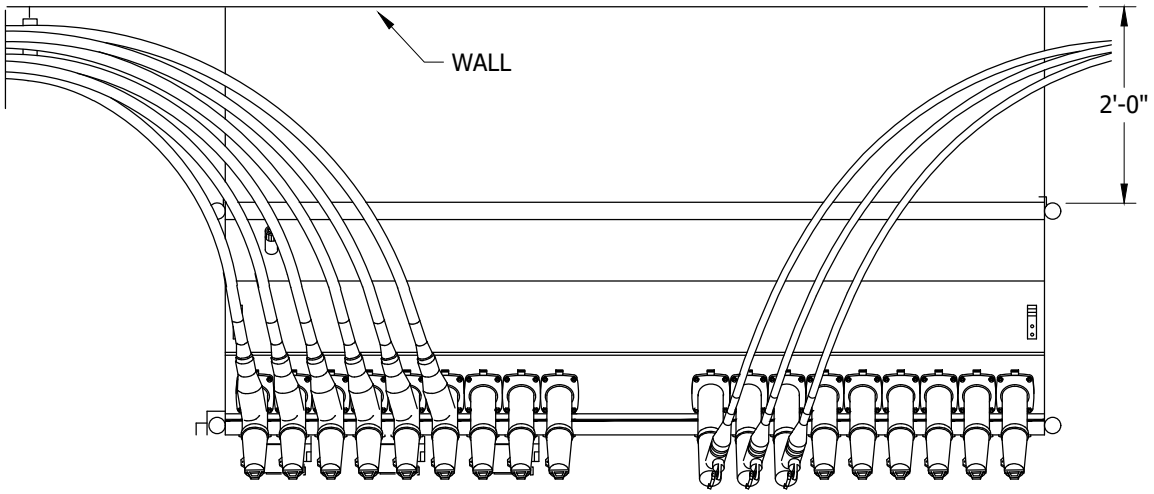

FIGURE 23
WALK-IN VAULTS
TYPICAL 6-WAY SCADA SWITCH (U)
PLAN VIEW

BILL OF MATERIALS: NONE

NOTES: NONE

REFERENCE:

(a) FOR PREFERRED CONDUITS, SEE UG3671.

© 1998 - 2021 San Diego Gas & Electric Company. All rights reserved. Removal of this copyright notice without permission is not permitted under law.

REV	CHANGE	DR	BY	DSN	APV	DATE	REV	CHANGE	DR	BY	DSN	APV	DATE
C	FIGURE UPDATE	-	EJA	GLW	CZH	11/09/2020	F						
B	EDITIORIAL CHANGES	-	AW	JS	CZH	07/01/2018	E						
A	REVISION	-	-	-	-	01/01/1996	D	FORMATTING	EDM	JIK	-	-	12/28/2021

X Indicates Latest Revision | Completely Revised | New Page | Information Removed

TABLE OF CONTENTS

SCOPE: TO PROVIDE A SUBSURFACE TERMINATING POINT WITH 3-WAY CABLE TAP, FOR SINGLE-PHASE 6.9KV SUPPLY AND BRANCH LOADS. FOR ALTERNATE INSTALLATION, SEE PAD MOUNTED UG3522.

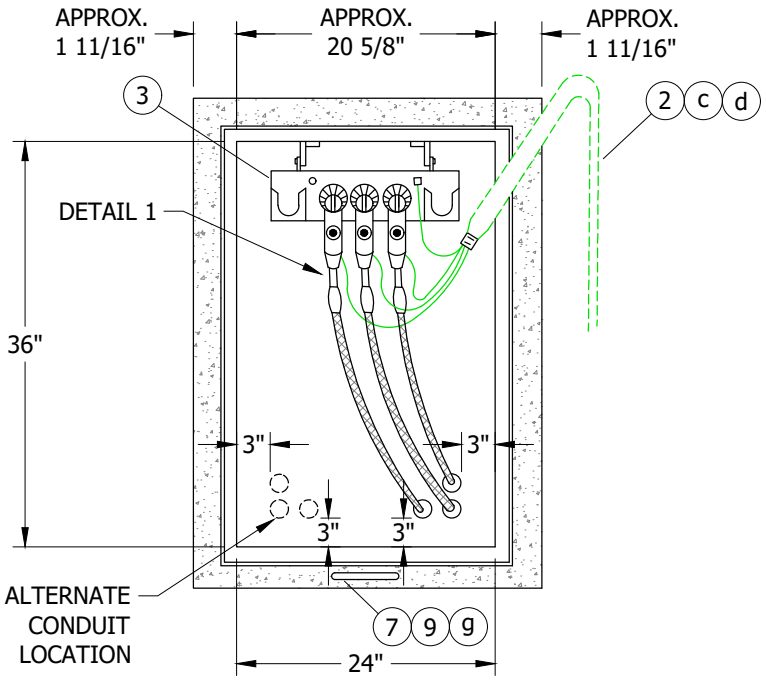

FIGURE 1

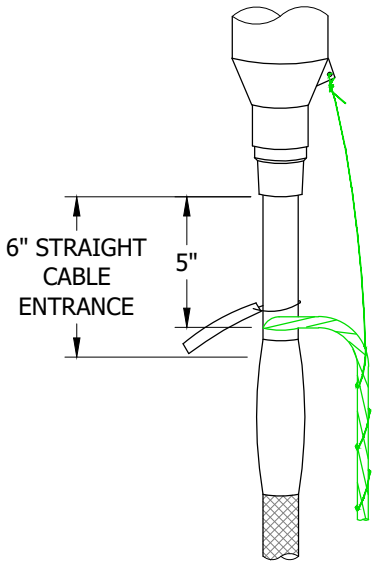

DETAIL 1

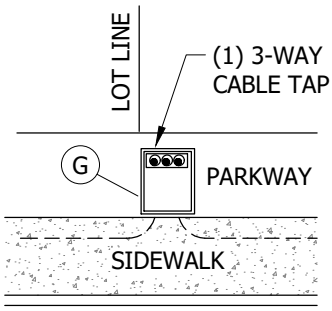

FIGURE 2
TYPICAL INSTALLATION

FIGURE 3

© 1998 - 2021 San Diego Gas & Electric Company. All rights reserved. Removal of this copyright notice without permission is not permitted under law.

REV	CHANGE	DR	BY	DSN	APV	DATE	REV	CHANGE	DR	BY	DSN	APV	DATE
C	FORMATTING	EDM	JIK	-	-	12/28/2021	F						
B	EDITORIAL CHANGES	-	AW	JS	CZH	07/01/2018	E						
A	REVISION	-	-	-	-	01/01/1996	D						

X Indicates Latest Revision | Completely Revised | New Page | Information Removed

SDG&E ELECTRIC UNDERGROUND CONSTRUCTION STANDARDS

SHEET 1 OF 3

SECTIONALIZING HANDHOLE 200A, 6.9KV SINGLE PHASE

UG3660.1

TABLE OF CONTENTS

INSTALLATION:

(A) **FOUR WAY RACKS, AND FUSED ELBOWS ARE NOT ALLOWED.**

(B) ELBOWS SHALL ALWAYS BE TRAINED VERTICALLY TO ALLOW FOR MAXIMUM ELECTRICAL GROUND CLEARANCE TO ADJACENT ELBOWS WHEN SWITCHING ENERGIZED. (f)

C. NO SECONDARY ALLOWED WITH THIS INSTALLATION.

(D) WHEN TAP POSITION IS UNUSED, INSTALL INSULATING RECEPTACLE.

(E) APPLY SILICONE GREASE TO THE PENTAHEAD BOLTS WHEN SECURING THE COVERS TO REDUCE REMOVAL OR INSTALLATION DIFFICULTIES. (h)

(F) CABLE TAP ANGLE SHALL BE ADJUSTED (45 DEGREES UP FROM HORIZONTAL ON FLAT TERRAIN) TO ALLOW FOR STRAIGHT INSERTION OF ELBOW INTO BUSHING WITH HOT STICK.

(G) IF RIGHT OF WAY OR OBSTRUCTIONS CAUSE A PROBLEM, THE HANDHOLE MAY BE TURNED TO WHERE THE LONG SIDE OF THE HANDHOLE PARALLELS THE SIDEWALK OR PROPERTY LINE. IF THE HANDHOLE HOUSES A CABLE TAP, THE HANDHOLE IS NOT TO BE TURNED AND THE TYPICAL PLAN VIEW OUTLINED IN THIS STANDARD MUST BE FOLLOWED (CABLE TAP IS MOUNTED ON THE END OF THE 5-FOOT CLEARANCE FOR HOT STICK OPERATION WOULD BE ON THE SIDEWALK SIDE).

BILL OF MATERIALS:

ITEM	DESCRIPTION	QUANTITY	STANDARD PAGE	STOCK NUMBER	DESIGN UNITS
1	HANDHOLE, 24" X 36"	1	3313	--	3313PC
2	GROUNDING EQUIPMENT (c)(d)	AS REQ'D	4540	--	--
3	CABLE TAP, 12KV, 3-WAY	1	--	S718312	TAP-3W
4	ELBOW, LOADBREAK 12KV AND/OR INSULATING RECEPTACLE	AS REQ'D	4180/4190/4191/4195	--	--
5	TAGS, CABLE IDENTIFICATION	AS REQ'D	3202	--	--
6	ANCHOR BOLT, CONCRETE	2	--	S107654	CNCANC
7	STRUCTURE IDENTIFICATION	1	3211	--	--
8	AQUA-SEAL OR EQUIVALENT	AS REQ'D	--	S442996	--
9	EPOXY	AS REQ'D	--	S213244	--

NOTES:

I. BEFORE BEGINNING THE INSTALLATION, STUDY ANY KIT INSTRUCTION AND FOLLOW THE DIMENSIONS ON INSTALLATION DRAWING.

II. CUT CONDUIT, INSTALL AQUA SEAL AROUND CABLE AND CONDUIT, SET HANDHOLE, INSTALL GROUND GRID AND COMPACT SOIL TO 90 PERCENT AROUND BOX AREA. (e)

III. INSTALL CABLE RACK AND TRAIN CABLES TO MAKE SURE THAT YOU HAVE 6 INCHES OF STRAIGHT CABLE WHERE IT ENTERS THE ELBOWS. ALSO HAVE AT LEAST 10 TIMES THE CABLE DIAMETER AS MINIMUM BENDING RADIUS.

IV. INSTALL ELBOWS ON CABLES AND SEAT EACH ONE ONTO THE RACK WITH A HOT STICK. MAKE SURE THERE IS A LIGHT COATING OF SILICONE INSIDE THE ELBOW AND ALSO ON THE RACK BUSHING PER MANUFACTURER'S INSTRUCTIONS. (f)

V. REMOVE EACH CAPACITIVE TEST CAP, LUBE CAP AND TEST POINT WITH A LIGHT COATING OF SILICONE GREASE, INSTALL CAP AND ROTATE 5 TIMES CLOCKWISE. LUBING WILL ALLOW EASIER REMOVAL OF THE CAP AND PREVENT CORROSION OF THE TEST POINT.

VI. INSTALL CABLE TAGS AND STRUCTURE IDENTIFICATION. (g)

VII. INSTALL CONCENTRIC NEUTRAL GROUNDS AS SHOWN ON SKETCH LEAVING ENOUGH SLACK TO OPERATE ELBOW.

VIII. BOLT DOWN LID WITH 1/2-INCH PENTAHEAD BOLTS AFTER APPLYING INHIBITOR ON THREADS OF EACH BOLT. (h)

IX. INSTALL STRUCTURE IDENTIFICATION TAG WITH EPOXY. (g)

© 1998 - 2021 San Diego Gas & Electric Company. All rights reserved. Removal of this copyright notice without permission is not permitted under law.

REV	CHANGE	DR	BY	DSN	APV	DATE	REV	CHANGE	DR	BY	DSN	APV	DATE
C	FORMATTING	EDM	JIK	-	-	12/28/2021	F						
B	EDITORIAL CHANGES	-	AW	JS	CZH	07/01/2018	E						
A	REVISION	-	-	-	-	01/01/1996	D						

X Indicates Latest Revision | Completely Revised | New Page | Information Removed

SDG&E ELECTRIC UNDERGROUND CONSTRUCTION STANDARDS

SECTIONALIZING HANDHOLE 200A, 6.9KV SINGLE PHASE

UG3660.2

TABLE OF CONTENTS

REFERENCE:

a. FOR PAD MOUNTED SINGLE-PHASE SECTIONALIZING, SEE UG3522.

b. FOR CONCENTRIC NEUTRAL/COMPRESSION CONNECTOR APPLICATION CHART, SEE UG4174 AND UG4176.

(c) FOR (PREFERRED I) AND (ALTERNATE) TRENCH GROUND WIRE, SEE UG4510.

(d) FOR GROUNDING SUBSTRUCTURES AND EQUIPMENT WHEN DIFFERENT PARTIES ARE RESPONSIBLE FOR THE CONDUIT AND PAD INSTALLATION, SEE UG4540.

(e) FOR SETTING TO FINAL GRADE IF SLOPED, SEE UG3305.

(f) SEE UG4190-UG4191.

(g) SEE UG3211, UG3202, AND G.O. 128, 35.1.

(h) SEE G.O. 128, 32.7.

(i) FOR 1-INCH BASE, SEE UG3370 OR UG3371.

TABLE OF CONTENTS

© 1998 - 2021 San Diego Gas & Electric Company. All rights reserved. Removal of this copyright notice without permission is not permitted under law.

REV	CHANGE	DR	BY	DSN	APV	DATE	REV	CHANGE	DR	BY	DSN	APV	DATE
C	FORMATTING	EDM	JIK	-	-	12/28/2021	F						
B	EDITORIAL CHANGES	-	AW	JS	CZH	07/01/2018	E						
A	REVISION	-	-	-	-	01/01/1996	D						

X Indicates Latest Revision	Completely Revised	New Page	Information Removed	

SDG&E ELECTRIC UNDERGROUND CONSTRUCTION STANDARDS

SECTIONALIZING HANDHOLE 200A, 6.9KV SINGLE PHASE

UG3660.3

SCOPE: THIS STANDARD SHOWS A SUBSURFACE/SURFACE OPERABLE 600A (VISTA) SF-6 GAS SWITCH.

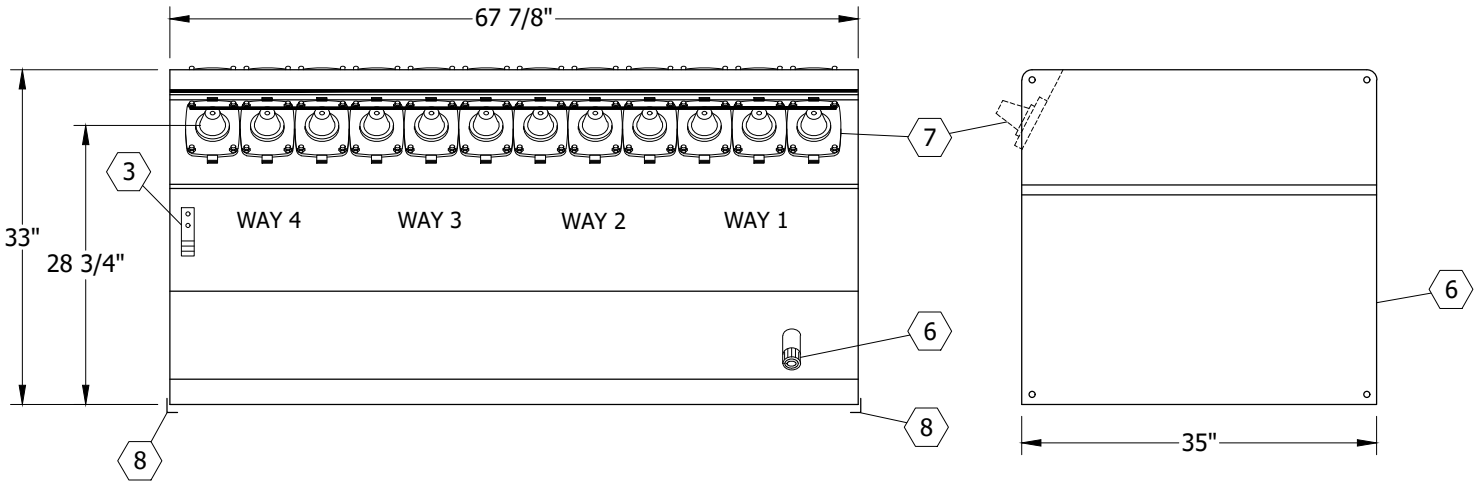

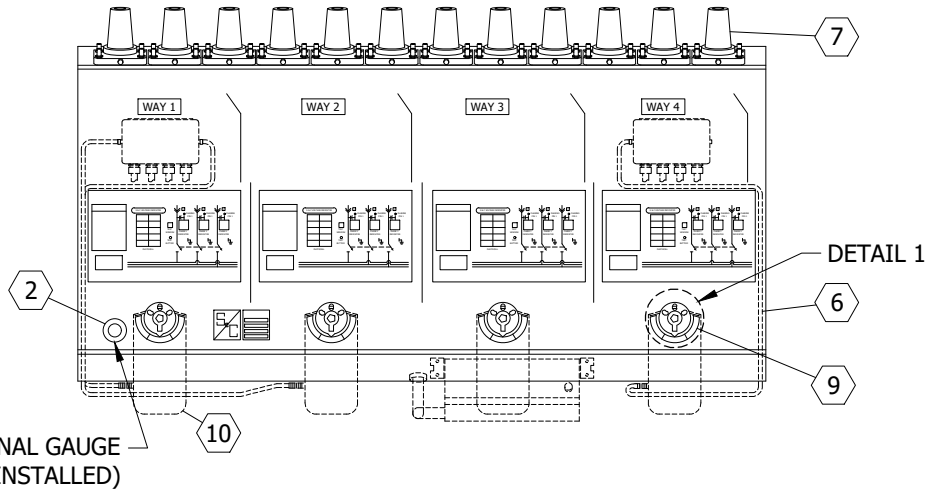

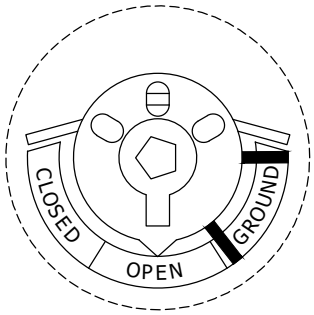

DETAIL 1

FIGURE 1
SEE TABLES 3 & 4

TABLE 1

ELECTRICAL RATINGS	
VOLTAGE	15.5KV
BIL	95KV
CURRENT, CONTINUOUS	600A
LOADMAKE AND LOADBREAK	600A
MOMENTARY AND FAULT CLOSE (RMS, SYMMETRICAL)	12,500A

TABLE 2

SF-6 GAS SWITCH			
600A		STOCK NUMBER	DESIGN UNITS
4-WAY	STEEL	S708998	4WY-V
	STAINLESS	S704700	4WY-SV

TABLE OF CONTENTS

© 1998 - 2021 San Diego Gas & Electric Company. All rights reserved. Removal of this copyright notice without permission is not permitted under law.

REV	CHANGE	DR	BY	DSN	APV	DATE	REV	CHANGE	DR	BY	DSN	APV	DATE
C	MOVED FROM UG3670	EDM	JIK	-	-	12/28/2021	F						
B	REFERENCES UPDATE	-	DG	TR	MDJ	06/01/2016	E						
A	DRAWING UPDATE	-	DG	TR	MDJ	05/31/2016	D						

X Indicates Latest Revision | Completely Revised | New Page | Information Removed

SDG&E ELECTRIC UNDERGROUND CONSTRUCTION STANDARDS

SHEET 1 OF 2

600A SUBSURFACE/SURFACE OPERABLE
4-WAY SF-6 GAS SWITCH (VISTA)

UG3669.1

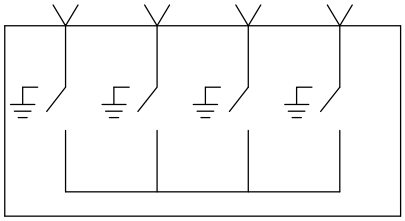

FIGURE 2
4-WAY ONE LINE DIAGRAM

TABLE 3

SWITCH PARTS LIST	
ITEM	**DESCRIPTION**
1	OPERATING PANEL AND CONNECTION DIAGRAM
2	SF-6 FILL VALVE
3	GROUND LUG
4	NAME PLATE
5	PRESSURE GAUGE (UNDERWINDOW)
6	PRESSURE RELIEF VALVE
7	600A BUSHING ASSEMBLY
8	MOUNTING ANGLES
9	OPERATING MECHANISMS
10	MOTOR OPERATORS (SCADA ONLY)

TABLE 4

SF-6 GAS SWITCH	
ITEM	**WEIGHT (LBS)**
MANUAL	1,100
SCADA	1,300

TABLE OF CONTENTS

INSTALLATION:

A. 4-WAY VISTA SWITCH SHALL BE INSTALLED WITH THE OPERATING MECHANISMS UP FOR THE 3317. BOLT THE SWITCH TO THE SUPPORTS SUPPLIED WITH THE 3317 HANDHOLE. FOR VAULT INSTALLATION USE 54-INCH STAINLESS STEEL LEGS (S457180). BOLT SWITCH TO THE WALL USING THE 24-INCH BRACKET SUPPLIED WITH LEG KIT.

BILL OF MATERIALS: NONE

NOTES:

I. PRESSURE GAUGE IS LOCATED UNDER THE LEFT HAND SIDE WINDOW. IT IS TEMPERATURE AND ALTITUDE COMPENSATED.

II. SWITCHES ARE DELIVERED FROM THE SUPPLIERS WITH ALL THE PARTS LISTED IN THE PARTS LIST.

III. OPERATION SELECTOR PREVENTS INADVERTENT OPERATION FROM THE CLOSED POSITION DIRECTLY TO THE GROUND POSITION AND VICE VERSA.

IV. THE SWITCHES SHALL BE USED WITH POLYETHYLENE CABLES AND 600A ELBOW TEES.

REFERENCE:

a. FOR SWITCH IDENTIFICATION, SEE UG3213, UG3214, UG3215, UG3216, UG3217, AND UG3218.

b. FOR EQUIPMENT COMBINATION GUIDELINES FOR SWITCHES IN MANHOLES, SEE UG3649.

c. FOR SWITCH INSTALLATION IN A 3317 HANDHOLE, SEE UG3671.

d. FOR SWITCH CONNECTIONS, SEE UG4181.

e. FOR SWITCH APPLICATION, SEE DM6111.

© 1998 - 2021 San Diego Gas & Electric Company. All rights reserved. Removal of this copyright notice without permission is not permitted under law.

REV	CHANGE	DR	BY	DSN	APV	DATE	REV	CHANGE	DR	BY	DSN	APV	DATE
C	MOVED FROM UG3670	EDM	JIK	-	-	12/28/2021	F						
B	REFERENCES UPDATE	-	DG	TR	MDJ	06/01/2016	E						
A	DRAWING UPDATE	-	DG	TR	MDJ	05/31/2016	D						

SCOPE: THIS STANDARD SHOWS A VISTA 6-WAY SWITCH (3-600A SWITCHES W/3-600A FAULT INTERRUPTERS). FOR DRY VAULT INSTALLATION ONLY. NO DEVIATION REQUEST REQUIRED.

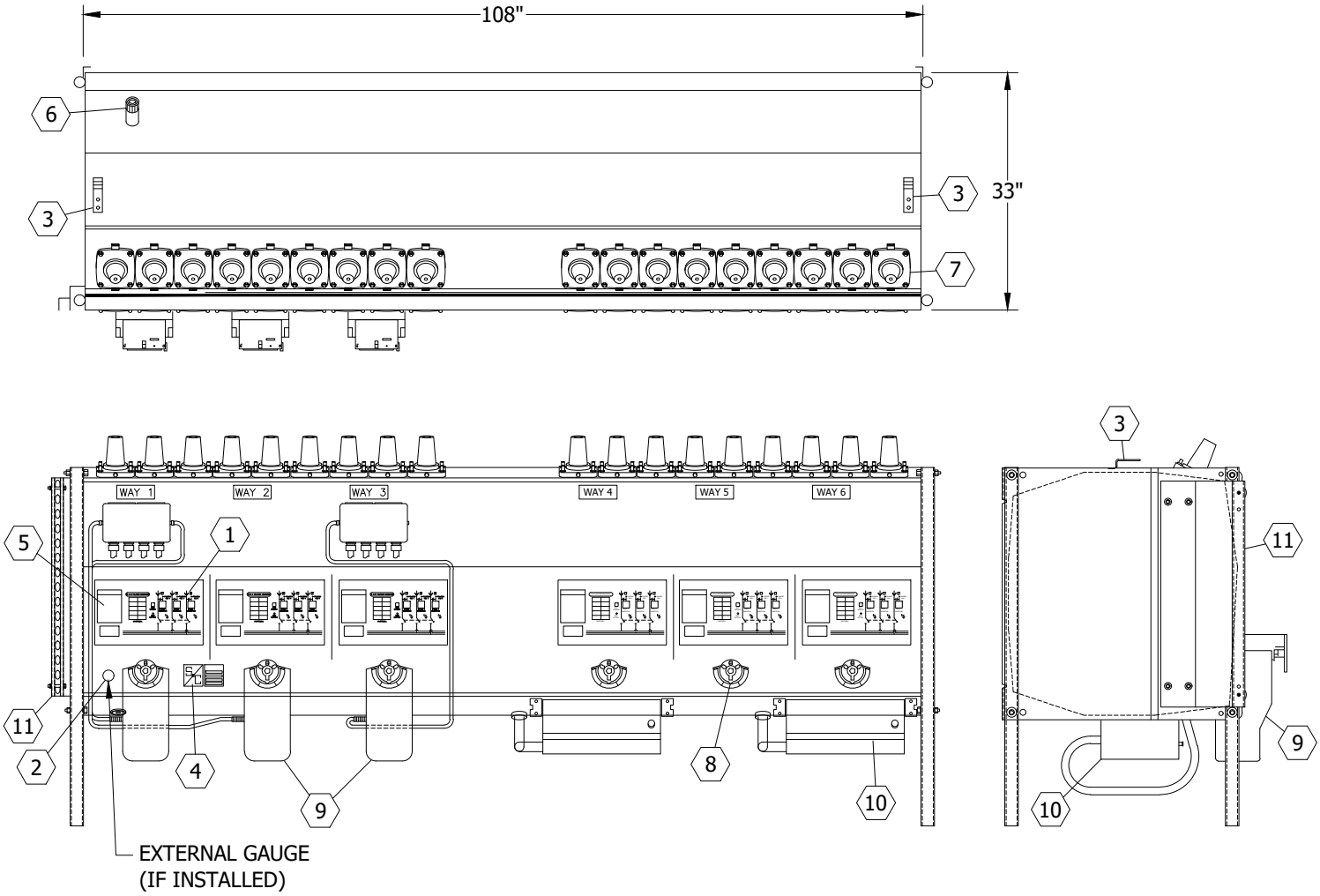

FIGURE 1
WEIGHT: 1,700 LBS

TABLE 1

ELECTRICAL RATINGS	
VOLTAGE	15.5KV
BIL	95KV
CURRENT, CONTINUOUS	600A
LOADMAKE AND LOADBREAK	600A
MOMENTARY AND FAULT CLOSE (RMS, SYMMETRICAL)	16,000A
FAULT INTERRUPTER (LOAD DROPPING)	600A

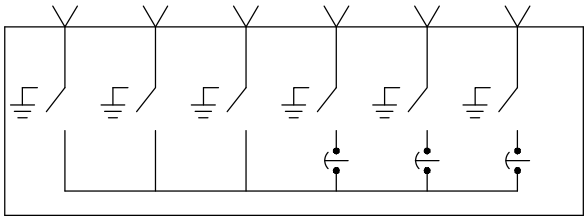

FIGURE 2
6-WAY ONE LINE DIAGRAM

TABLE 2

SF-6 GAS SWITCH		
600A	**STOCK NUMBER**	**DESIGN UNITS**
6-WAY (STAINLESS STEEL)	S708986	633-V

© 1998 - 2021 San Diego Gas & Electric Company. All rights reserved. Removal of this copyright notice without permission is not permitted under law.

REV	CHANGE	DR	BY	DSN	APV	DATE	REV	CHANGE	DR	BY	DSN	APV	DATE
C	FORMATTING	EDM	JIK	-	-	12/28/2021	F						
B	REFERENCES UPDATE	-	DG	TR	MDJ	06/01/2016	E						
A	DRAWING UPDATE	-	DG	TR	MDJ	05/31/2016	D						

X Indicates Latest Revision | Completely Revised | New Page | Information Removed

SDG&E ELECTRIC UNDERGROUND CONSTRUCTION STANDARDS

600A 6-WAY SF-6 GAS SWITCH (VISTA)
W/3 - FAULT INTERRUPTERS

UG3670.1

TABLE OF CONTENTS

TABLE 3

SWITCH PARTS LIST			
ITEM	DESCRIPTION	ITEM	DESCRIPTION
1	OPERATING PANEL AND CONNECTION DIAGRAM	7	600A BUSHING ASSEMBLY
2	SF-6 FILL VALVE	8	OPERATING MECHANISMS
3	GROUND LUG	9	MOTOR OPERATORS
4	NAME PLATE	10	OVER CURRENT CONTROLS
5	PRESSURE GAUGE (UNDERWINDOW)	11	CONTROL CABLE SUPPORT
6	PRESSURE RELIEF VALVE	--	--

INSTALLATION:

A. THE 6-WAY SWITCH SHALL BE INSTALLED ON 54-INCH LEGS AND BOLTED TO THE WALL WITH THE 24-INCH STAND-OFF BRACKET SUPPLIED WITH THE SWITCH LEG KIT. ATTACH THE BRACKETS TO THE SWITCH USING THE TOP LEG BOLTS (S457180).

B. A SWITCH LEG KIT IS INCLUDED IN THE 6-WAY VISTA SWITCH AU. FOR A 4-WAY SWITCH INSTALLED IN A VAULT THE SWITCH LEGS MUST BE ORDERED SEPARATELY (S457180 VS-LEG).

C. LOADBREAK ELBOWS SHALL NOT BE CONNECTED TO THE BACK OF THE 600A TEES. 200A LOADBREAK ELBOWS MAY BE CONNECTED TO THE FAULT INTERRUPTERS PROVIDING THERE ARE NO 600A CONNECTORS AT THAT POSITION.

D. SCADA RTU AND ALL CONTROL CABLES ARE INCLUDED WITH SWITCH. CONTROL CABLES ARE 50 FEET LONG.

BILL OF MATERIALS: NONE

NOTES:

I. PRESSURE GAUGE IS LOCATED UNDER THE LEFT HAND SIDE WINDOW. IT IS TEMPERATURE AND ALTITUDE COMPENSATED.

II. SWITCHES ARE DELIVERED FROM THE SUPPLIERS WITH ALL THE PARTS LISTED IN THE PARTS LIST.

III. OPERATION SELECTOR PREVENTS INADVERTENT OPERATION FROM THE CLOSED POSITION DIRECTLY TO THE GROUND POSITION AND VICE VERSA.

IV. THE SWITCHES SHALL BE USED WITH POLYETHYLENE CABLES AND 600A ELBOW TEES.

REFERENCE:

a. FOR SWITCH IDENTIFICATION, SEE UG3213, UG3214, UG3215, UG3216, UG3217, AND UG3218.

b. FOR EQUIPMENT COMBINATION GUIDELINES FOR SWITCHES IN MANHOLES, SEE UG3649.

c. FOR 4-WAY SWITCH INSTALLATION IN A 3317 HANDHOLE, SEE UG3671.

d. FOR SWITCH CONNECTIONS, SEE UG4181.

e. FOR SWITCH APPLICATION, SEE DM6111.

TABLE OF CONTENTS

© 1998 - 2021 San Diego Gas & Electric Company. All rights reserved. Removal of this copyright notice without permission is not permitted under law.

REV	CHANGE	DR	BY	DSN	APV	DATE	REV	CHANGE	DR	BY	DSN	APV	DATE
C	FORMATTING	EDM	JIK	-	-	12/28/2021	F						
B	REFERENCES UPDATE	-	DG	TR	MDJ	06/01/2016	E						
A	DRAWING UPDATE	-	DG	TR	MDJ	05/31/2016	D						

SCOPE: THIS STANDARD SHOWS THE TYPICAL INSTALLATION OF A SUBSURFACE/SURFACE OPERABLE SWITCH IN A 3317 HANDHOLE.

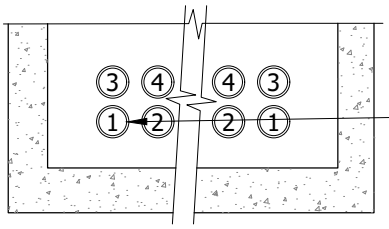

FIGURE 1
INSIDE OF HANDHOLE
PREFERRED DUCTS

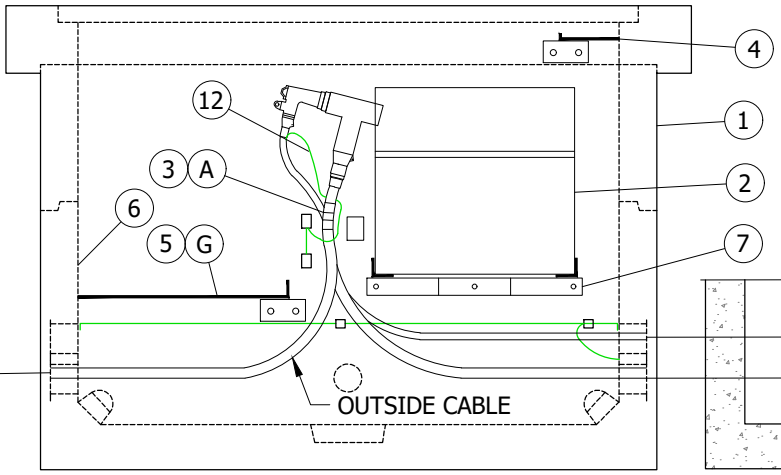

FIGURE 2
SIDE VIEW

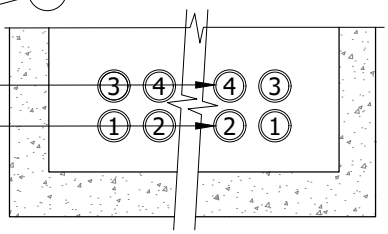

FIGURE 3
INSIDE OF HANDHOLE
PREFERRED DUCTS

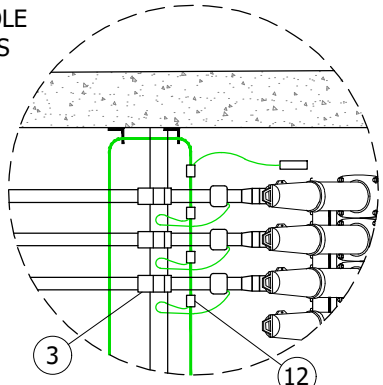

DETAIL 1

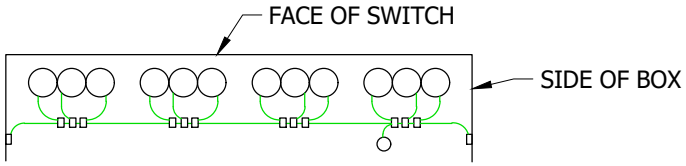

FIGURE 4

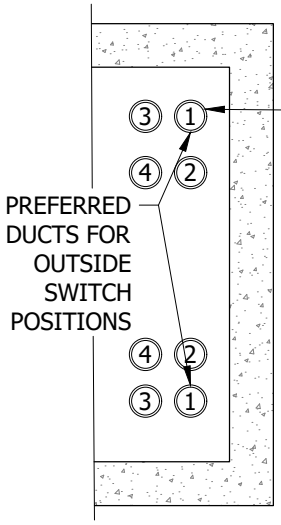

FIGURE 5
INSIDE OF HANDHOLE

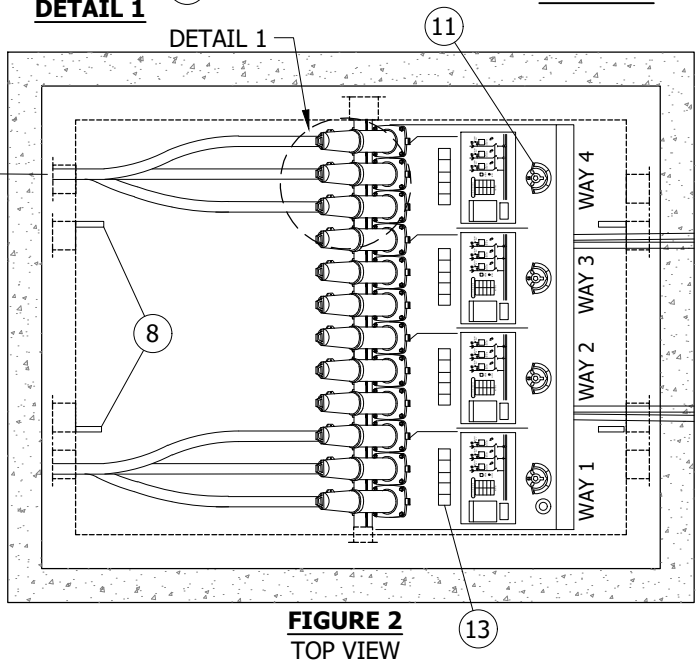

FIGURE 2
TOP VIEW

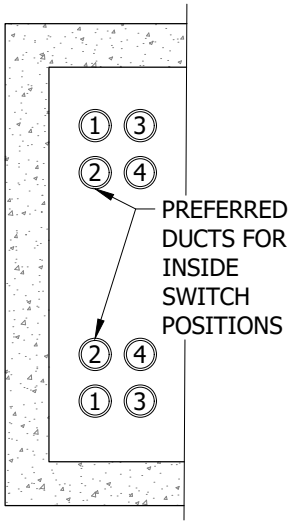

FIGURE 6
INSIDE OF HANDHOLE

© 1998 - 2021 San Diego Gas & Electric Company. All rights reserved. Removal of this copyright notice without permission is not permitted under law.

REV	CHANGE	DR	BY	DSN	APV	DATE	REV	CHANGE	DR	BY	DSN	APV	DATE
C	FORMATTING	EDM	JIK	-	-	12/28/2021	F						
B	REVISION	-	-	-	RW/VCR	01/12/2001	E						
A	REVISION	-	-	-	RW/VCR	10/23/2000	D						

X Indicates Latest Revision | Completely Revised | New Page | Information Removed

SDG&E ELECTRIC UNDERGROUND CONSTRUCTION STANDARDS

INSTALLATION OF SUBSURFACE/SURFACE
OPERABLE SWITCH IN A 3317 HANDHOLE

UG3671.1

TABLE OF CONTENTS

INSTALLATION:

(A) MBS-6 MOUNTING BRACKETS SHALL BE BOLTED TO THE TOP OF THE CABLE SUPPORT BRACKET.

B. BOLT THE SWITCH TO THE SWITCH SUPPORT ANGLES.

C. NO SECONDARY ALLOWED IN THIS INSTALLATION OTHER THAN THE FEED TO THE SUMP PUMP OR SCADA.

D. 200A CABLES SHALL BE PULLED IN UPPER CONDUITS (3 AND 4).

E. DO NOT PIGGYBACK 600A TEES (ONE ON TOP OF THE OTHER) AT ANY TIME ON THE SWITCH BUSHINGS.

F. INSTALL SWITCH IDENTIFICATION NUMBER AND CABLE I.D. AS SHOWN IN UG3200.

(G) LOWER STEEL GRATING IS REMOVABLE FOR CABLE PULLING.

H. LOADBREAK ELBOWS SHALL NOT BE LANDED ON THE BACK OF THE 600A TEES EXCEPT FOR 1 LOADBREAK ELBOW FOR A SINGLE-PHASE TRANSFORMER (6930). THREE LOADBREAK ELBOWS MAY BE INSTALLED WHEN CONNECTED TO SWITCH WITH NO 600A TEES.

BILL OF MATERIALS:

ITEM	DESCRIPTION	QUANTITY	STANDARD PAGE	STOCK NUMBER	DESIGN UNITS
1	HANDHOLE, 6'-0" X 8'-0"	1	3317	S334430	3317SE
2	SWITCH, 12KV, SUBSURFACE/SURFACE, OPERABLE	1	3669/3670	S708998	4WY-V
3	BRACKET, MOUNTING MBS-6	AS REQ'D	--	S165530	--
4	GRATING, UPPER STEEL	1	--	--	--
5	GRATING, LOWER STEEL	1	--	--	--
6	GROUND CONNECTION	--	--	--	--
7	SWITCH SUPPORT	--	--	--	--
8	PULLING IRONS	--	--	--	--
9	INDICATORS, AUTOMATIC FAULT (II)	AS REQ'D	4352	--	--
10	ANCHOR, CONCRETE, STAINLESS STEEL (II)	AS REQ'D	--	--	--
11	PADLOCK, SCHLAGE ELECTRIC SERIES	8	--	S514848	--
12	CONNECTOR, COMPRESSION	AS REQ'D	4174/4176	--	--
13	DECALS	AS REQ'D	3213-3218	--	--

NOTES:

I. OTHER CONFIGURATIONS MAY BE DESIGNED PROVIDED CABLES DO NOT CROSS FROM ONE SIDE OF THE STRUCTURE TO THE OTHER.

(II) NOT SHOWN ON FIGURES.

REFERENCE:

a. FOR SUBSURFACE SWITCH, SEE UG3669 AND UG3670.

b. FOR INSTALLING SWITCH IDENTIFICATION NUMBERS, SEE UG3213, UG3214, UG3215, UG3216, UG3217, AND UG3218.

c. FOR INSTALLING CABLE I.D. TAGS, SEE UG3202.

d. FOR CONDUIT INSTALLATION PRACTICES, SEE UG3374.

e. FOR SUMP PUMP INSTALLATION, SEE UG3660.

f. FOR 12KV 200A AND 600A CONNECTOR ASSEMBLIES, SEE UG4181.

g. FOR NEUTRAL AND GROUND WIRE DIAGRAM, SEE UG4530.

h. FOR GROUNDING STRUCTURES AND EQUIPMENT, SEE UG4540.

© 1998 - 2021 San Diego Gas & Electric Company. All rights reserved. Removal of this copyright notice without permission is not permitted under law.

REV	CHANGE	DR	BY	DSN	APV	DATE	REV	CHANGE	DR	BY	DSN	APV	DATE
C	FORMATTING	EDM	JIK	-	-	12/28/2021	F						
B	REVISION	-	-	-	RW/VCR	01/12/2001	E						
A	REVISION	-	-	-	RW/VCR	10/23/2000	D						

TABLE OF CONTENTS

REFERENCE (CONT'D):

i. FOR SWITCH APPLICATION, SEE DM6111.

j. FOR AUTOMATIC FAULT INDICATOR APPLICATION, SEE DM6113.

TABLE OF CONTENTS

© 1998 - 2021 San Diego Gas & Electric Company. All rights reserved. Removal of this copyright notice without permission is not permitted under law.

REV	CHANGE	DR	BY	DSN	APV	DATE	REV	CHANGE	DR	BY	DSN	APV	DATE
C	FORMATTING	EDM	JIK	-	-	12/28/2021	F						
B	REVISION	-	-	-	RW/VCR	01/12/2001	E						
A	REVISION	-	-	-	RW/VCR	10/23/2000	D						

X Indicates Latest Revision | Completely Revised | New Page | Information Removed

SDG&E ELECTRIC UNDERGROUND CONSTRUCTION STANDARDS

INSTALLATION OF SUBSURFACE/SURFACE OPERABLE SWITCH IN A 3317 HANDHOLE

UG3671.3

SCOPE: THIS STANDARD SHOWS THE G&W G-RAM SUB SURFACE STAINLESS STEEL GAS INSULATED 4-WAY SWITCH. EACH SWITCH WAY POSITION CAN BE GROUNDED INDEPENDENTLY.

ATTENTION:

* THE G-RAM IS THE REPLACEMENT FOR BOTH GAS AND OIL SWITCHES WHEN THEY CANNOT BE PAD MOUNTED.

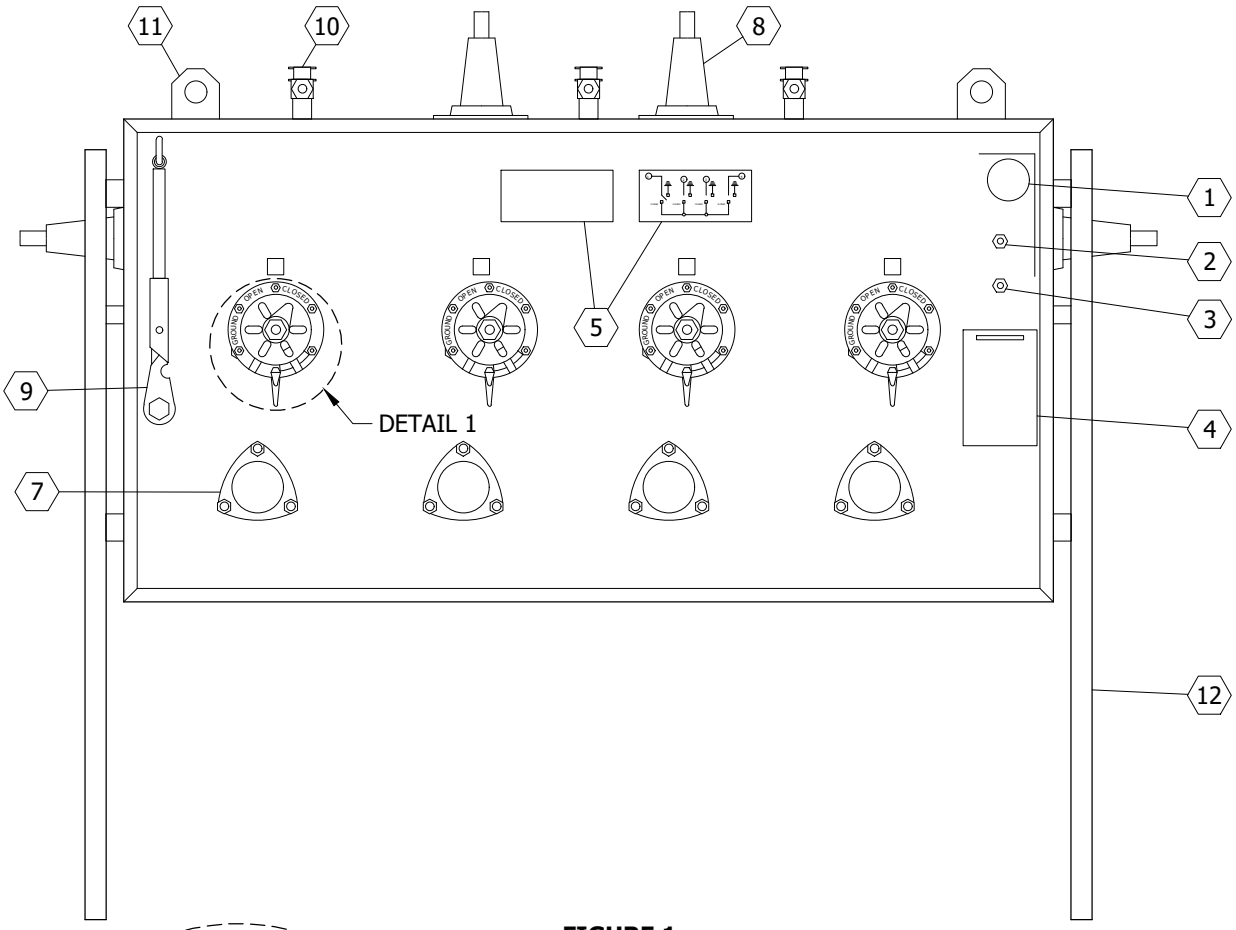

FIGURE 1

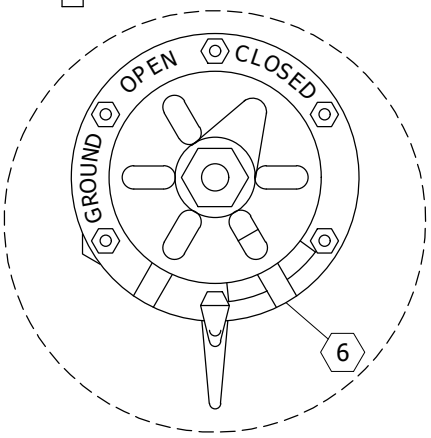

DETAIL 1

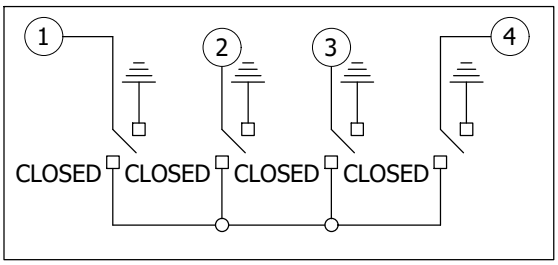

FIGURE 2
CONNECTION DIAGRAM

TABLE OF CONTENTS

© 1998 - 2021 San Diego Gas & Electric Company. All rights reserved. Removal of this copyright notice without permission is not permitted under law.

REV	CHANGE	DR	BY	DSN	APV	DATE	REV	CHANGE	DR	BY	DSN	APV	DATE
C	FORMATTING	EDM	JIK	-	-	12/28/2021	F						
B	EDITORIAL CHANGES	-	AW	JS	CZH	07/01/2018	E						
A	REVISION	-	-	-	TR/JJ	05/20/2005	D						

X Indicates Latest Revision | Completely Revised | New Page | Information Removed

SDG&E ELECTRIC UNDERGROUND CONSTRUCTION STANDARDS

G & W G-RAM 4-WAY GAS SWITCH WITH GROUNDING POSITIONS

UG3672.1

TABLE 1

PARTS LIST	
ITEM	**DESCRIPTION**
1	PRESSURE GAUGE
2	FILL VALVE
3	PROVISION FOR LOW PRESSURE WARNING
4	SF6 TEMPERATURE AND PRESSURE CHART
5	NAME PLATE AND ONE LINE DIAGRAM
6	OPERATING SHAFT AND LOCKING ASSY.
7	CONTACT POSITION VIEWING WINDOW
8	600A BUSHING CONNECTION
9	OPERATING HANDLE
10	EQUIPMENT GROUNDING POINTS
11	EQUIPMENT LIFTING POINTS
12	SUPPORT LEGS

TABLE 2

SWITCH ELECTRICAL RATING	
DESCRIPTION	**RATING**
VOLTAGE	15.5KV
BIL	110KV
CURRENT, CONTINUOUS	600A
LOAD MAKE, LOADBREAK CURRENT	600A
NOT FAULT CLOSE RATED	--

INSTALLATION:

A. THE G-RAM 4-WAY SWITCH IS FOR INSTALLATION IN 3324, 3325, 3326 MANHOLES. SMALLER MANHOLES WILL REQUIRE A DEVIATION REQUEST.

B. FOR SUB-SURFACE INSTALLATION THE G-RAM 4-WAY SWITCH SHALL BE BOLTED TO THE WALL WITH STAINLESS STEEL ANGLE BRACKETS AND SUPPORTED WITH (4) 54-INCH STAINLESS STEEL LEGS (S457168), 8 5/8-INCH BOLTS X 3 1/2-INCH STAINLESS STEEL BOLTS (S156750) AND 1/2-INCH WASHERS STAINLESS STEEL.

BILL OF MATERIALS:

ITEM	DESCRIPTION	QUANTITY	STANDARD PAGE	STOCK NUMBER	DESIGN UNITS
1	4-WAY, 600A, STAINLESS STEEL	1	--	S708780	GR-RAM
	PADLOCK, SCHLAGE ELECTRIC SERIES	8	--	S514848	
2	DECALS	AS REQ'D	3213-3218	--	--
3	CONNECTOR, COMPRESSION	AS REQ'D	4174/4176	--	--
4	FAULT INDICATORS	AS REQ'D	4352	--	--
5	SUPPORT LEGS	4	--	S457168	SWL-54
6	CONNECTORS, 600A, 600A/200A OR 200A	AS REQ'D	4181	--	AS NEEDED

NOTES:

I. PLACE SWITCH ON OPPOSITE SIDE OF MANHOLE OPENING.

II. THE OPERATION SELECTOR PREVENTS INADVERTENT OPERATION FROM THE CLOSED POSITION TO THE OPEN POSITION AND OPEN TO GROUND POSITION.

III. THE G-RAM IS A MANUALLY OPERATED SWITCH AND NOT SCADA ADAPTABLE.

IV. REMOTE SWITCHING OPERATIONS USING THE 1/2 RATCHET FROM THE REMOTE SWITCH OPERATIONS KIT, REQUIRES REMOTE ADAPTER S327-48R, THIS TOOL IS AVAILABLE FROM ELECTRIC DISTRIBUTION STANDARDS.

© 1998 - 2021 San Diego Gas & Electric Company. All rights reserved. Removal of this copyright notice without permission is not permitted under law.

REV	CHANGE	DR	BY	DSN	APV	DATE	REV	CHANGE	DR	BY	DSN	APV	DATE
C	FORMATTING	EDM	JIK	-	-	12/28/2021	F						
B	EDITORIAL CHANGES	-	AW	JS	CZH	07/01/2018	E						
A	REVISION	-	-	-	TR/JJ	05/20/2005	D						

TABLE OF CONTENTS

REFERENCE:

a. FOR SWITCH IDENTIFICATION, SEE UG3213, UG3214, UG3215, UG3216, UG3217, AND UG3218.

b. FOR NEUTRAL AND GROUNDING WIRE DIAGRAM, SEE UG4530.

c. FOR CONNECTOR ASSEMBLIES, SEE UG4181.

d. FOR EQUIPMENT COMBINATION GUIDELINES, SEE UG3649.

TABLE OF CONTENTS

© 1998 - 2021 San Diego Gas & Electric Company. All rights reserved. Removal of this copyright notice without permission is not permitted under law.

REV	CHANGE	DR	BY	DSN	APV	DATE	REV	CHANGE	DR	BY	DSN	APV	DATE
C	FORMATTING	EDM	JIK	-	-	12/28/2021	F						
B	EDITORIAL CHANGES	-	AW	JS	CZH	07/01/2018	E						
A	REVISION	-	-	-	TR/JJ	05/20/2005	D						

SHEET 3 OF 3	X Indicates Latest Revision	Completely Revised	New Page	Information Removed
	SDG&E ELECTRIC UNDERGROUND CONSTRUCTION STANDARDS			
	G & W G-RAM 4-WAY GAS SWITCH WITH GROUNDING POSITIONS			UG3672.3

SCOPE: THIS STANDARD COVERS THE ELASTIMOLD® MOLDED VACUUM SWITCH (MVS) AND INTERRUPTER (MVI).

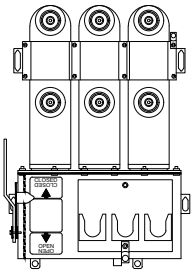

FIGURE 1
THREE-PHASE
MOLDED VACUUM SWITCH (MVS)
APPROX. 135 LB.

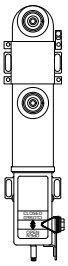

FIGURE 2
SINGLE-PHASE
MOLDED VACUUM SWITCH (MVS)
APPROX. 30 LB.

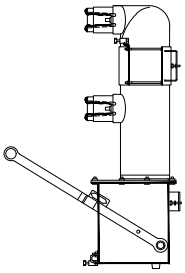

FIGURES 1 & 2
MOLDED VACUUM SWITCH (MVS)
SIDE VIEW

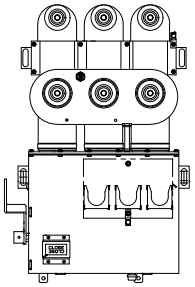

FIGURE 3
THREE-PHASE
MOLDED VACUUM INTERRUPTER (MVI)
APPROX. 145 LB.

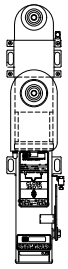

FIGURE 4
SINGLE-PHASE
MOLDED VACUUM INTERRUPTER (MVI)
APPROX. 45 LB.

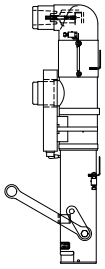

FIGURES 3 & 4
MOLDED VACUUM INTERRUPTER (MVI)
SIDE VIEW

TABLE OF CONTENTS

TABLE 1

ELASTIMOLD MVS AND MVI ELECTRICAL RATINGS	
CONTINUOUS CURRENT	200A
BASIC INSULATION LEVEL (BIL)	95kV
VOLTAGE CLASS	15.5kV
ASYMMETRICAL MOMENTARY AND 3 OPERATION FAULT CLOSE	20kA
SYMMETRICAL 1 SECOND FAULTING RATING	12.5kA
CAPACITOR OR CABLE CHARGING INTERRUPTING	40A
AMBIENT TEMPERATURE RANGE	-30°C TO + 40°C

TABLE 2

MVS AND MVI STOCK NUMBERS			
DESCRIPTION		STOCK NUMBER	DESIGN UNITS
MVS, 1-0, 200A LINE, 200A LOAD		S708400	S21P
MVI, 1-0, 200A LINE, 200A LOAD	(I)	S708402	S21PFI
MVS, 3-0, 200A LINE, 200A LOAD		S708412	S23P
MVI, 3-0, 200A LINE, 200A LOAD	(I)	S708410	S23PFI
MVS, 3-0, 600A LINE, 200A LOAD		S708414	S63P
MVI, 3-0, 600A LINE, 200A LOAD	(I)	S708416	S63PFI
MVI, 3-0, 600A LINE, 600A LOAD	(I)	S708418	S66PFI

TABLE 3

MVS AND MVI MAP SYMBOLS	
SWITCH TYPE	MAP SYMBOL
MVS	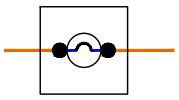
	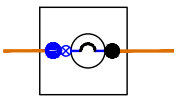
MV1	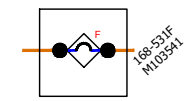
	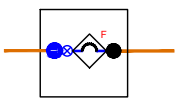
	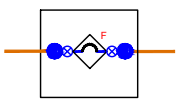

© 1998 - 2021 San Diego Gas & Electric Company. All rights reserved. Removal of this copyright notice without permission is not permitted under law.

REV	CHANGE	DR	BY	DSN	APV	DATE	REV	CHANGE	DR	BY	DSN	APV	DATE
C							F						
B	TABLE UPDATE	EDM	EJA	GLW	CZH	07/04/2021	E						
A	REVISION	-	-	-	WT/MC	05/10/2010	D						

X Indicates Latest Revision | Completely Revised | New Page | Information Removed

SDG&E ELECTRIC UNDERGROUND CONSTRUCTION STANDARDS

SUBSURFACE APPLICATION OF ELASTIMOLD MOLDED VACUUM SWITCH/INTERRUPTER

UG3675.1

INSTALLATION:

A. **MVS** (MOLDED VACUUM SWITCH) - A SINGLE-PHASE OR THREE-PHASE SOLID DIELECTRIC VACUUM SWITCH CAPABLE OF MAKING, CARRYING, AND INTERRUPTING LOAD CURRENT UP TO 200A AT 15.5KV. THE SWITCH IS INSULATED IN EPDM RUBBER AND REQUIRES NO MAINTENANCE.

B. **MVI** (MOLDED VACUUM INTERRUPTER) - A SINGLE-PHASE OR THREE-PHASE SOLID DIELECTRIC VACUUM SWITCH CAPABLE OF MAKING AND CARRYING LOAD CURRENT UP TO 200A AT 15.5KV, AND AUTOMATICALLY INTERRUPTING FAULT CURRENT UP TO 12.5KA. THESE UNITS ARE SELF POWERED AND INCLUDE CURRENT SENSING AND ELECTRONIC CONTROLS TO PROVIDE OVER-CURRENT PROTECTION. THE SWITCH IS INSULATED IN EPDM RUBBER AND REQUIRES NO MAINTENANCE. A FUSING REQUEST MUST BE SUBMITTED TO ELECTRIC DISTRIBUTION PLANNING WHO WILL THEN FORWARD THE REQUEST TO THE FUSING COORDINATION GROUP FOR A TRIP SELECTION OF LESS THAN 200A. SYSTEM PROTECTION WILL REVIEW FOR A TRIP SELECTION OF 200A OR ABOVE. ONLY STOCKED AT KEARNY.

ATTENTION:

* PRIOR TO INSTALLATION, THE MVI MUST BE PROGRAMMED BY A QUALIFIED KEARNY SCADA TECHNICIAN. CONTACT THE KEARNY CONSTRUCTION SUPERVISOR TO PICK-UP OR HAVE THE DEVICE DELIVERED.

C. THE MVS/MVI SERIES SWITCHES MAY BE APPLIED IN SUBMERSIBLE APPLICATIONS. THEY ARE FOR WALK IN VAULTS AND MANHOLES THAT HAVE WORK SPACE TO STAND-OFF THE LOAD-SIDE ELBOWS, AND HOOK STICK OR REMOTE RIGGING ABILITY TO OPERATE THE SWITCH FROM OUTSIDE THE STRUCTURE. CAN BE INSTALLED IN HANDHOLES AS LONG AS THE SWITCH CAN BE OPEN/CLOSED FROM OUTSIDE THE STRUCTURE, AND THE ELBOWS CAN BE REMOVED USING A SHOTGUN.

D. REMOTE RIGGING INSTALLATION: WHEN MVI AND MVS SWITCHES ARE INSTALLED AND REQUIRE REMOTE RIGGING, SEE UG3675.3 FOR REMOTE RIGGING POINT INSTALLATION.

CAUTION:

* OPERATING THE LOAD-SIDE, LOAD-BREAK ELBOWS IS A DE-ENERGIZED OPERATION ONLY WHEN THE SWITCH IS OPEN AND TESTED DE-ENERGIZED ON THAT SIDE.

E. **DIMENSIONS** - THE THREE-PHASE SWITCH (MVS OR MVI) REQUIRES A MINIMUM OF 24" X 30" TO MOUNT ON A WALL OR FLOOR THE SINGLE-PHASE SWITCH (MVS OR MVI) REQUIRES A MINIMUM OF 26" X 8". **A MINIMUM OF 8FT CLEAR WORKING SPACE IS REQUIRED IN FRONT OF THE SWITCH ELBOWS.**

F. SUB-SURFACE INSTALLATION FOR WALK IN VAULTS AND MANHOLES. CAN BE APPLIED AT 12KV OR 4KV.

G. CAN BE INSTALLED IN HANDHOLES AS LONG AS THE SWITCH CAN BE OPEN/CLOSED FROM OUTSIDE STRUCTURE, AND THE ELBOWS CAN BE REMOVED USING A SHOTGUN. REQUIRED WORKING SPACE DIMENSIONS MUST BE RESPECTED.

H. SWITCH CAN BE MOUNTED ON THE FLOOR OR WALL, HORIZONTAL OR VERTICAL USING HILTI 1/2 INCH DRIVE IN STUDS.

J. PROVISIONS MUST BE PROVIDED FOR REMOTE RIGGING (ROPE OPERATION) IF THE SWITCH CANNOT BE OPERATED USING A HOOK STICK FROM OUTSIDE THE STRUCTURE. SEE UG3675.3

K. ALL BUSHING PLUGS MUST BE BONDED TO THE SWITCH BODY GROUND.

L. FOR GROUNDING INSTRUCTIONS SEE UG4530.2.

M. LOCK SWITCH HANDLE WHEN IN FINAL POSITION (OPEN OR CLOSED). USE NON-FERROUS LOCK STOCK # S468010.

BILL OF MATERIALS: NONE

NOTES:

(I) STOCKED AT KEARNY ONLY.

REFERENCE: NONE

TABLE OF CONTENTS

© 1998 - 2021 San Diego Gas & Electric Company. All rights reserved. Removal of this copyright notice without permission is not permitted under law.

REV	CHANGE	DR	BY	DSN	APV	DATE	REV	CHANGE	DR	BY	DSN	APV	DATE
C							F						
B	TABLE UPDATE	EDM	EJA	GLW	CZH	07/04/2021	E						
A	REVISION	-	-	-	WT/MC	05/10/2010	D						

SCOPE: REMOTE RIGGING HARDWARE INSTALLATION FOR MVI AND MVS SWITCHES.

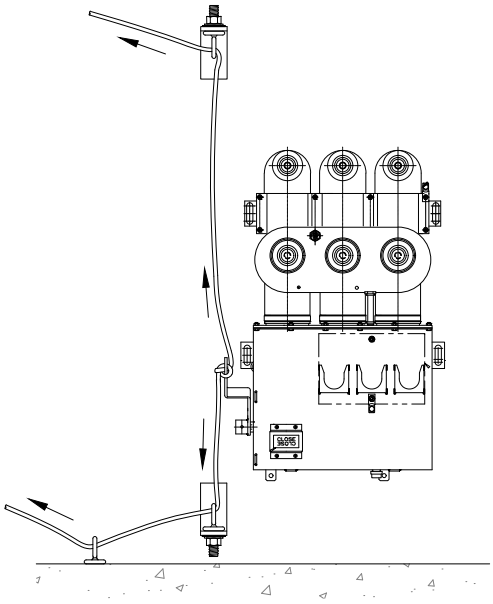

FIGURE 1
REMOTE RIGGING
ARRANGEMENTS (EXAMPLE)
FRONT VIEW

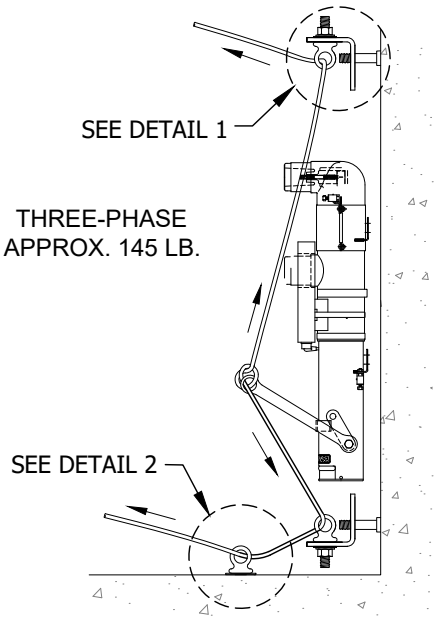

FIGURE 1
REMOTE RIGGING
ARRANGEMENTS (EXAMPLE)
SIDE VIEW

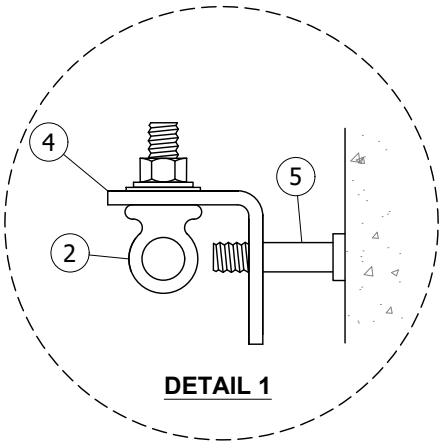

DETAIL 1

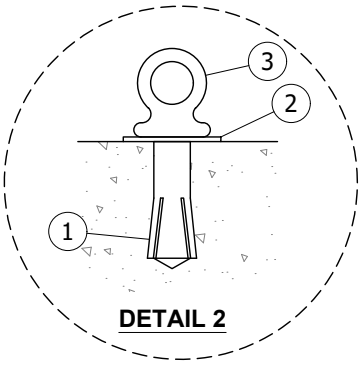

DETAIL 2

INSTALLATION:

A. APPLY EYE BOLTS AS NEEDED TO OPEN AND CLOSE MVI AND MVS SWITCHES FOR REMOTE OPERATION WITH ROPE.

B. ADDITIONAL POINTS MAY BE ADDED WITH L BRACKETS FOR ROPE RIGGING TO THE SURFACE OPENING OR DOOR ACCESS.

C. SEE THE DRIVE IN ANCHOR INSTALLATION IN CONSTRUCTION STANDARD 4178.4, REQUIRES 5/8 INCH CONCRETE DRILL AND DRIVE IN ANCHOR SETTING TOOL S746758. THE STAINLESS STEEL EYE BOLT WILL THREAD INTO THE ANCHOR.

BILL OF MATERIALS:

ITEM	DESCRIPTION	QUANTITY	STANDARD PAGE	STOCK NUMBER	DESIGN UNITS
1	DROP IN ANCHOR STAINLESS STEEL	AS REQ'D	4178.4	S108864 (X)	--
2	EYE BOLT, 1 1/2" X 1/2", STAINLESS STEEL	AS REQ'D	4505	S152722 (X)	--
3	WASHER, 1/2", STAINLESS STEEL	AS REQ'D	4505	S799680	--
4	L BRACKET, STAINLESS STEEL, 2" X 3"	AS REQ'D	4505	S166072	--
5	ANCHOR, CONCRETE, STAINLESS STEEL, 1/2" X 3 1/2"	AS REQ'D	4505	S107654	--

NOTES:

(X) THIS ITEM IS EXEMPT.

REFERENCE: NONE

© 1998 - 2021 San Diego Gas & Electric Company. All rights reserved. Removal of this copyright notice without permission is not permitted under law.

REV	CHANGE	DR	BY	DSN	APV	DATE	REV	CHANGE	DR	BY	DSN	APV	DATE
C							F						
B	TABLE UPDATE	EDM	EJA	GLW	CZH	07/04/2021	E						
A	REVISION	-	-	-	WT/MC	05/10/2010	D						

X Indicates Latest Revision | Completely Revised | New Page | Information Removed

SDG&E ELECTRIC UNDERGROUND CONSTRUCTION STANDARDS

SUBSURFACE APPLICATION OF ELASTIMOLD
MOLDED VACUUM SWITCH/INTERRUPTER

UG3675.3

TABLE OF CONTENTS

SCOPE: THIS STANDARD SHOWS A TILT MOUNT ADAPTER FOR SINGLE-PHASE MVI AND MVS.

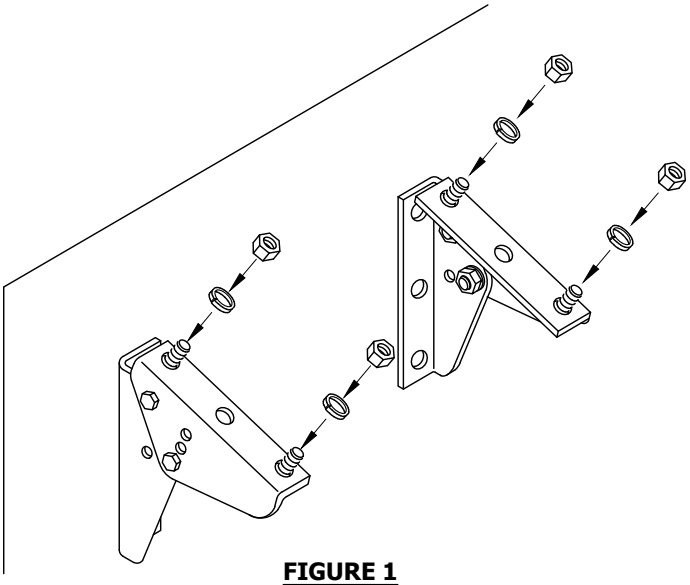

FIGURE 1
ISOMETRIC VIEW

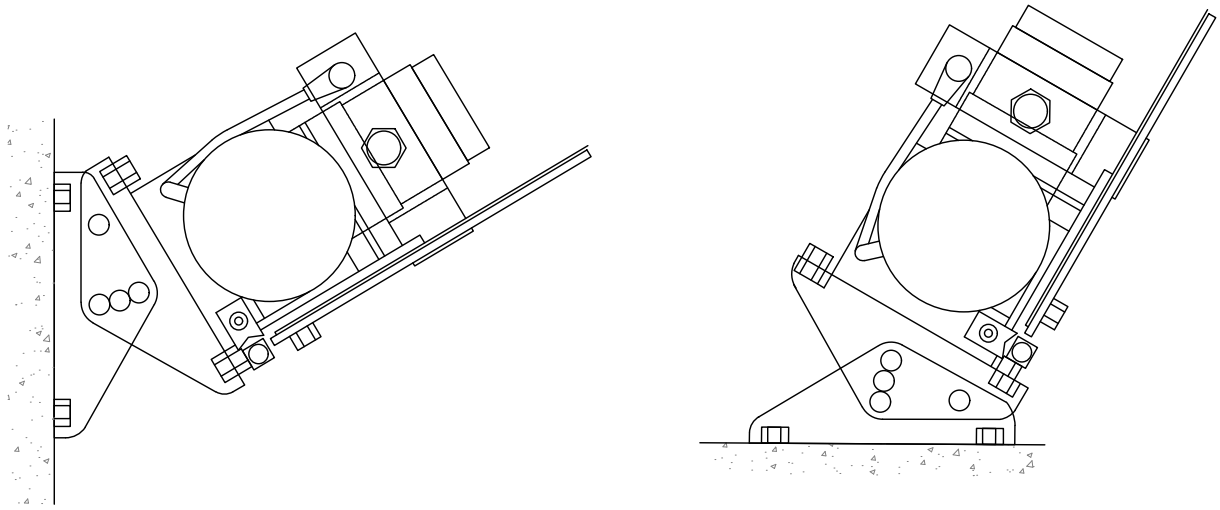

FIGURE 2
SIDE VIEWS

INSTALLATION: NONE

BILL OF MATERIALS:

ITEM	DESCRIPTION	QUANTITY	STANDARD PAGE	STOCK NUMBER	DESIGN UNITS
1	BRACKET SINGLE-PHASE MVI/MVS	2	-	S164636	TMA-EM
2	ANC 1/2" X 3 1/2" STAINLESS STEEL	4	-	S107654	CNCANC

NOTES: NONE

REFERENCE: NONE

© 1998 - 2021 San Diego Gas & Electric Company. All rights reserved. Removal of this copyright notice without permission is not permitted under law.

REV	CHANGE	DR	BY	DSN	APV	DATE	REV	CHANGE	DR	BY	DSN	APV	DATE
C							F						
B	TABLE UPDATE	EDM	EJA	GLW	CZH	07/04/2021	E						
A	REVISION	-	-	-	WT/MC	05/10/2010	D						

X Indicates Latest Revision | Completely Revised | New Page | Information Removed

SDG&E ELECTRIC UNDERGROUND CONSTRUCTION STANDARDS

SUBSURFACE APPLICATION OF ELASTIMOLD
MOLDED VACUUM SWITCH/INTERRUPTER

UG3675.4

TABLE OF CONTENTS

SCOPE: THIS STANDARD COVERS TRAYER ENGINEERING'S VAULT MOUNTED 600A, 15KV THREE-PHASE LIQUID INSULATED VACUUM SWITCH GEAR WITH VISIBLE DISCONNECTS. DUE TO DIVERSE ENVIRONMENTAL CONDITIONS THE SWITCH GEAR IS CONSTRUCTED OF STAINLESS STEEL. THE LIQUID INSULATION IS NOT SUBJECTED TO ARC CONTAMINATION DURING SWITCHING AND WILL NOT REQUIRE TESTING.

ATTENTION:

* THE TRAYER VAULT MOUNT SWITCH MAY BE INSTALLED IN THE WALK IN VAULT APPLICATION FOR ALL NEW CONSTRUCTION AS NEEDED FOR BOTH MANUAL AND SCADA FACILITIES.

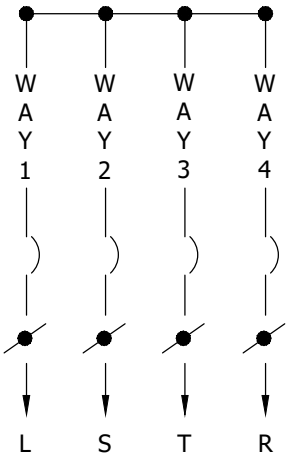

FIGURE 1
4-WAY MANUAL
CONNECTION DIAGRAM (II)
SEE TABLE 2

UG MAP SYMBOL

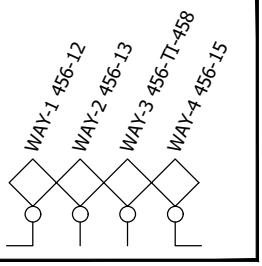

TABLE 1

ELECTRICAL RATINGS	
VOLTAGE	15.5KV
CURRENT, CONTINUOUS	600A
B.I.L.	95KV
MAXIMUM INTERRUPTING CURRENT VFI	16KA - SYMMETRICAL
MOMENTARY MAKE AND LATCH	20KA - ASYMMETRICAL
B.I.L. ACROSS OPEN VFI	125KV

TABLE 2

INTERNAL TRAYER DESIGNATION	
SYMBOL	**DEFINITION**
L	LEFT
S	4TH POSITION
T	TAP
R	RIGHT

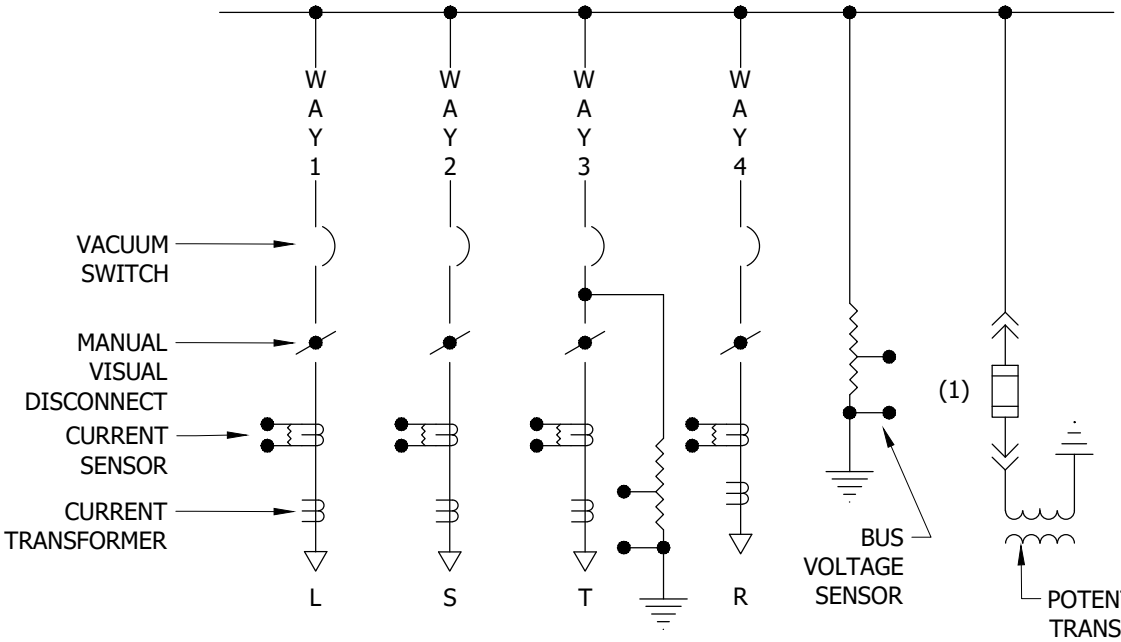

UG MAP SYMBOL

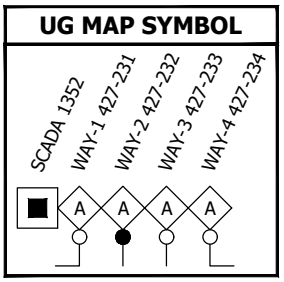

FIGURE 2
4-WAY SCADA VAULT-MOUNT
CONNECTION DIAGRAM
SEE TABLE 2

TABLE OF CONTENTS

© 1998 - 2021 San Diego Gas & Electric Company. All rights reserved. Removal of this copyright notice without permission is not permitted under law.

REV	CHANGE	DR	BY	DSN	APV	DATE	REV	CHANGE	DR	BY	DSN	APV	DATE
C	FORMATTING	EDM	JIK	-	-	12/28/2021	F						
B	EDITORIAL CHANGES	-	AW	JS	CZH	07/01/2018	E						
A	EDITORIAL CHANGES	-	DG	JS	MDJ	04/01/2018	D						

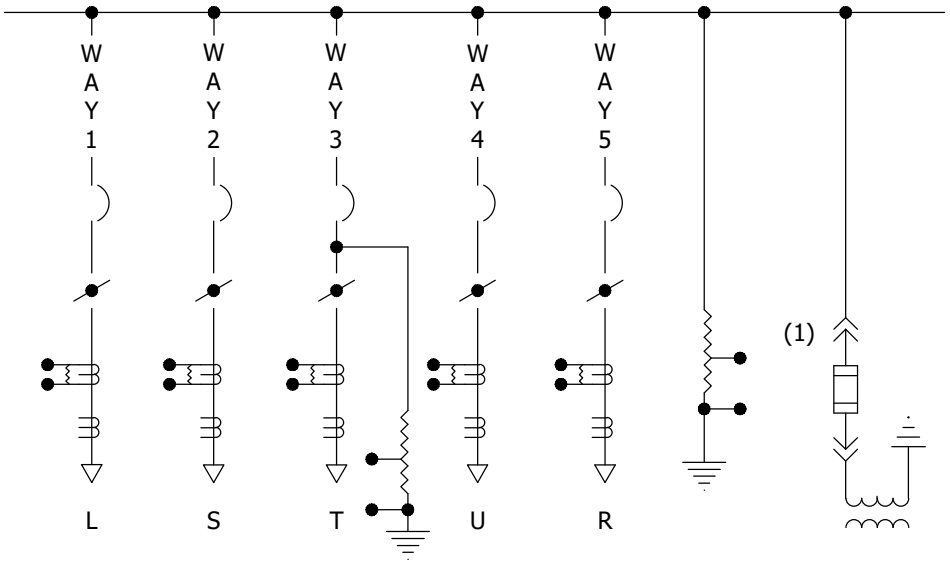

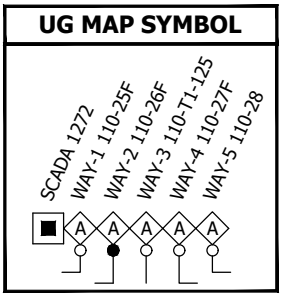

FIGURE 3
5-WAY SCADA VAULT-MOUNT
CONNECTION DIAGRAM
SEE TABLE 2

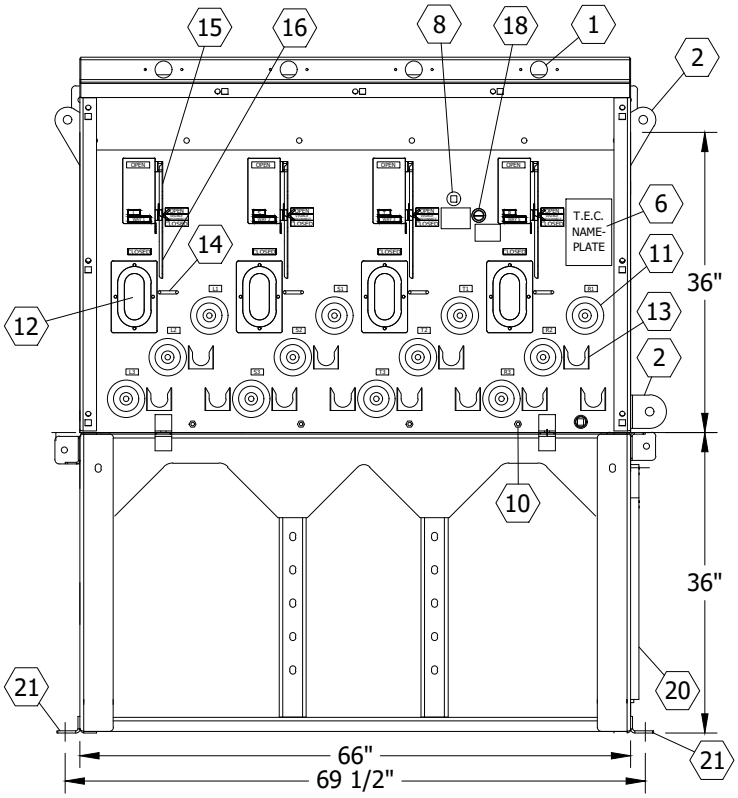

FIGURE 4
4-WAY MANUAL
FRONT VIEW
SEE TABLE 3

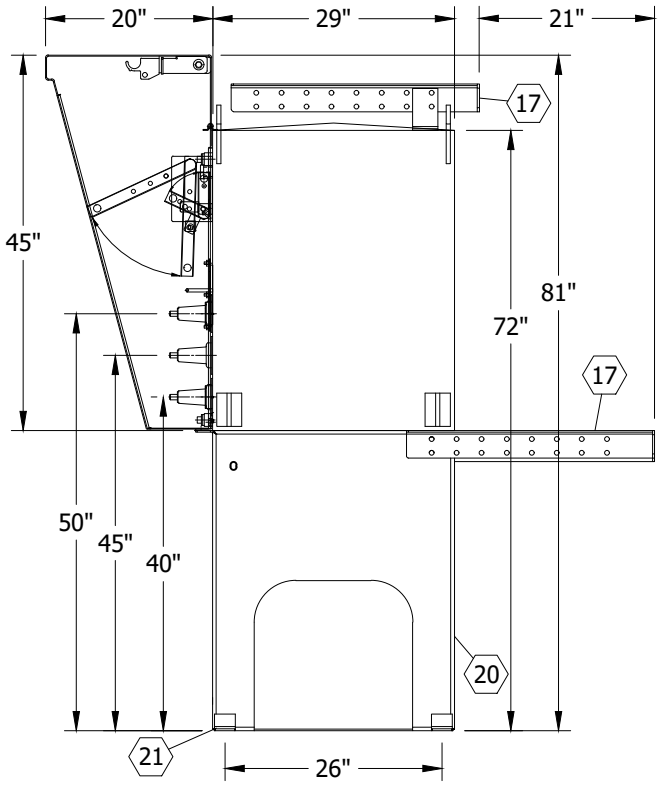

FIGURE 4
4-WAY MANUAL
SIDE VIEW
SEE TABLE 3

TABLE OF CONTENTS

© 1998 - 2021 San Diego Gas & Electric Company. All rights reserved. Removal of this copyright notice without permission is not permitted under law.

REV	CHANGE	DR	BY	DSN	APV	DATE	REV	CHANGE	DR	BY	DSN	APV	DATE
C	FORMATTING	EDM	JIK	-	-	12/28/2021	F						
B	EDITORIAL CHANGES	-	AW	JS	CZH	07/01/2018	E						
A	EDITORIAL CHANGES	-	DG	JS	MDJ	04/01/2018	D						

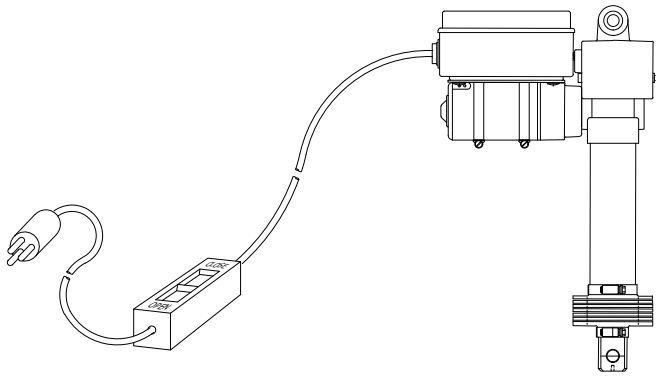

FIGURE 5
LINEAR ACTUATOR (III)



FIGURE 6
4-WAY MANUAL WITH (III)
LINEAR ACTUATOR

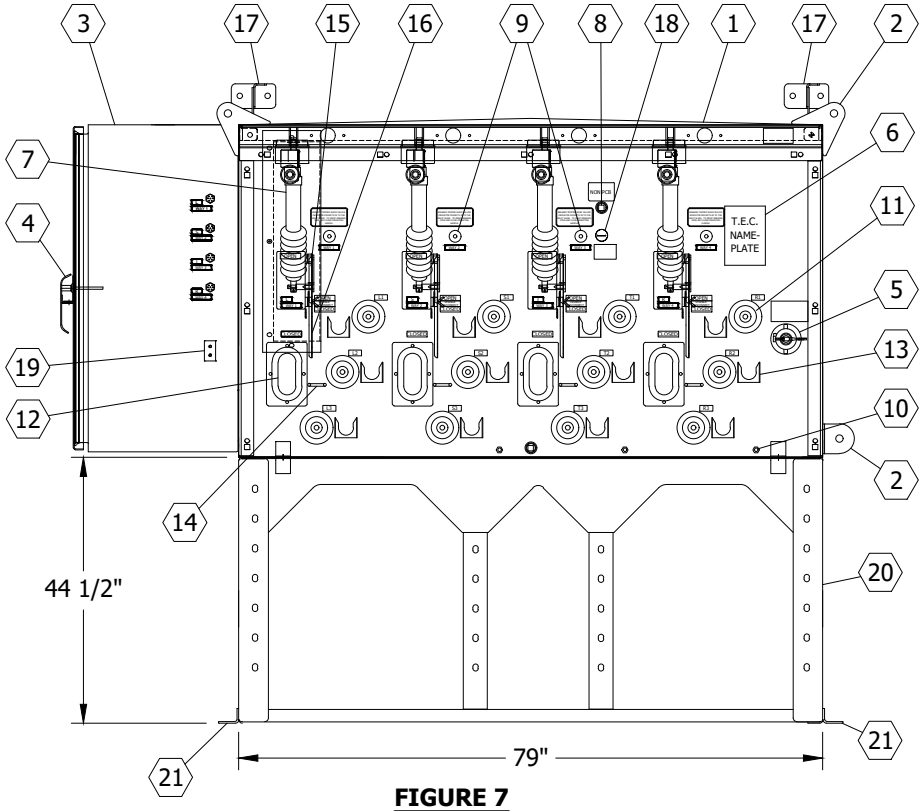

FIGURE 7
4-WAY SCADA
FRONT VIEW
SEE TABLE 3

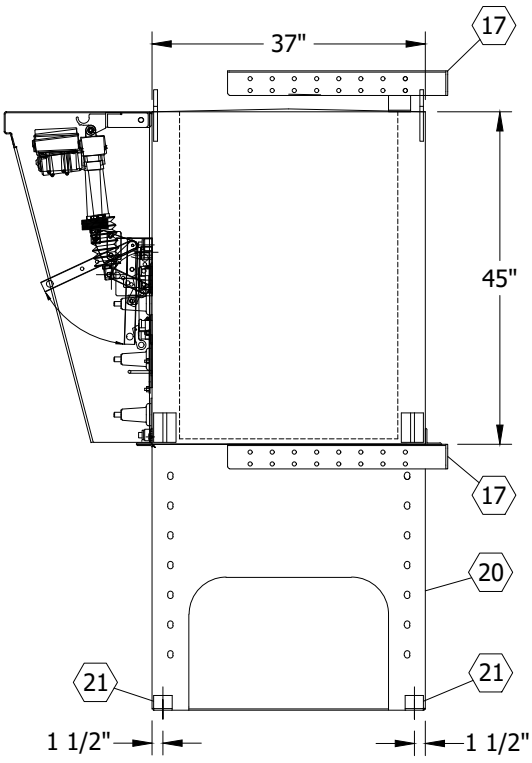

FIGURE 7
4-WAY SCADA
SIDE VIEW
SEE TABLE 3

TABLE OF CONTENTS

© 1998 - 2021 San Diego Gas & Electric Company. All rights reserved. Removal of this copyright notice without permission is not permitted under law.

REV	CHANGE	DR	BY	DSN	APV	DATE	REV	CHANGE	DR	BY	DSN	APV	DATE
C	FORMATTING	EDM	JIK	-	-	12/28/2021	F						
B	EDITORIAL CHANGES	-	AW	JS	CZH	07/01/2018	E						
A	EDITORIAL CHANGES	-	DG	JS	MDJ	04/01/2018	D						

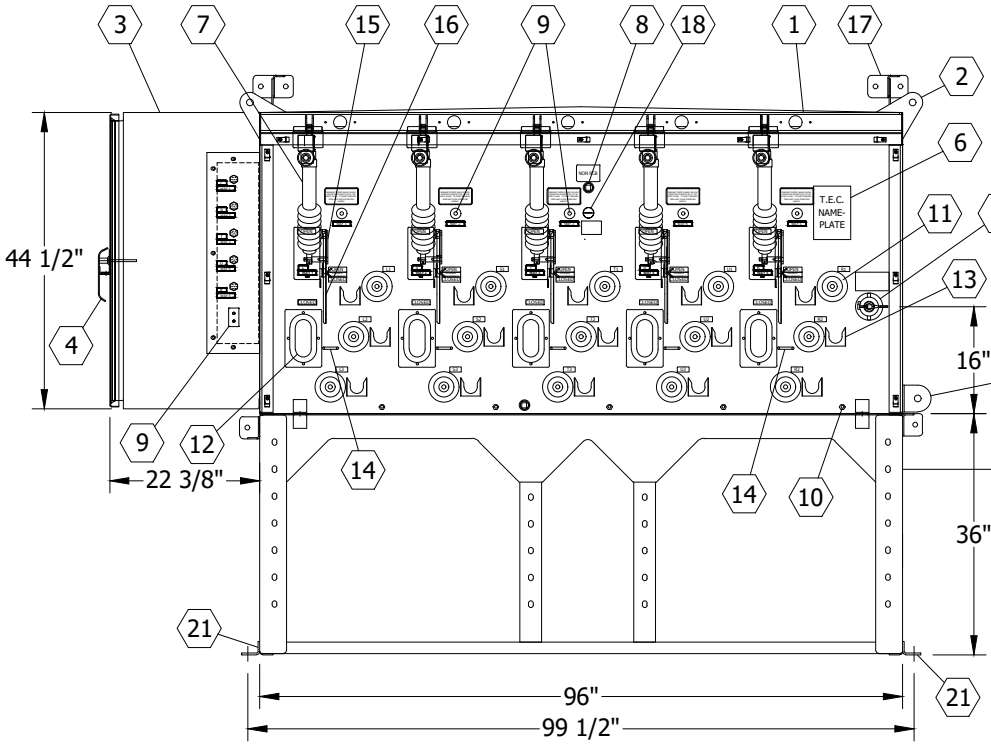

FIGURE 8
5-WAY SCADA
FRONT VIEW
SEE TABLE 3

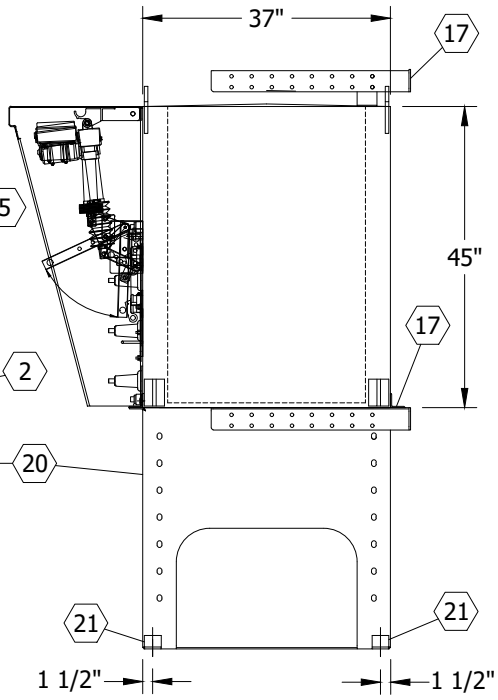

FIGURE 8
5-WAY SCADA
SIDE VIEW
SEE TABLE 3



FIGURE 9

© 1998 - 2021 San Diego Gas & Electric Company. All rights reserved. Removal of this copyright notice without permission is not permitted under law.

REV	CHANGE	DR	BY	DSN	APV	DATE	REV	CHANGE	DR	BY	DSN	APV	DATE
C	FORMATTING	EDM	JIK	-	-	12/28/2021	F						
B	EDITORIAL CHANGES	-	AW	JS	CZH	07/01/2018	E						
A	EDITORIAL CHANGES	-	DG	JS	MDJ	04/01/2018	D						

TABLE 3

TRAYER SWITCH DETAILS	
ITEM	**DESCRIPTION**
1	FAULT INDICATOR WINDOW
2	LIFTING EYE
3	SCADA CABINET
4	CABINET HANDLE, PAD LOCKABLE
5	POWER TRANSFORMER DRY WELL FUSE, 8.3KV, 3A CL
6	NAME PLATE
7	24V DC LINEAR ACTUATOR
8	OIL FILL PLUG
9	FAULT TRIP INDICATOR
10	EQUIPMENT GROUND NUTS, 1/2"
11	600A BUSHING/CONNECTOR
12	WINDOW VIEW TRI-PHASE VISIBLE DISCONNECT
13	PARKING STAND
14	PROVISION FOR ROPE OPERATION
15	TRI PHASE VISIBLE DISCONNECT OPERATOR HANDLE
16	VACUUM SWITCH OPERATING HANDLE
17	WALL MOUNTING BRACKET
18	LIQUID LEVEL GAUGE, TRAYER 901A
19	ANTENNA CONNECTION, SCADA
20	SWITCH BASE
21	FLOOR ATTACHMENTS

TABLE OF CONTENTS

INSTALLATION:

A. ALL CONDUITS THAT ENTER FROM THE OUTSIDE SHALL BE SEALED WITH DUCT PLUGS. CONDUITS SHALL ALSO BE SEALED FROM FACILITIES THAT TRANSITION TO THE VAULT. CONDUITS WITH CABLE SHALL BE SEALED WITH THE TYCO RAYFLATE SYSTEM. (j) (k)

B. SWITCHES MUST BE ATTACHED TO THE FLOOR AND THE WALL. THE WALL ANCHOR MOUNT BRACKETS ARE ADJUSTABLE FOR CABLE TRAINING AND CABLE TRANSITION BEHIND THE SWITCH IF NECESSARY.

C. THE DRILLING PATTERN ON THE SWITCH STAND MATCHES THE UNDERGROUND DEVICES PLASTIC CABLE RACKS FOR ATTACHMENT OF CABLE HOOKS AND ARMS.

D. EACH 4-WAY MANUAL TRAYER SWITCH COMES WITH A MOTOR ACTUATOR FOR REMOTE SWITCHING. THE UNIT MAY BE MOVED TO ANY POSITION FOR REMOTE SWITCHING OPERATIONS. IT MAY BE POWERED BY THE INTERNAL 120V SOURCE OF THE VAULT OR A GENERATOR FOR EXTENDED OUTAGES.

E. THE 4/0 GROUND MAY RING THE SWITCH STAND JUST BELOW THE SWITCH USING THE 2-INCH X 3-INCH STAINLESS STEEL (L) BRACKETS AND 1/2-INCH X 6-INCH PULLING AND 1 1/2-INCH X 1/2-INCH STAINLESS STEEL SHOULDER BOLT. THE STAND HAS MULTIPLE 1/2-INCH HOLES ON ALL SIDES FOR ATTACHMENT POINTS. THE 4/0 RING GROUND MUST BE ATTACHED TO THE VAULT GROUND SYSTEM. (h)

F. THE SCADA RTU CABINET MUST HAVE A MINIMUM OF 48 INCHES FROM THE WALL FOR WORK SPACE. THE STANDARD 8-FOOT WORK SPACE MUST BE MAINTAINED IN FRONT OF THE SWITCH FOR LIVE LINE TOOL OPERATIONS. (b)

© 1998 - 2021 San Diego Gas & Electric Company. All rights reserved. Removal of this copyright notice without permission is not permitted under law.

REV	CHANGE	DR	BY	DSN	APV	DATE	REV	CHANGE	DR	BY	DSN	APV	DATE
C	FORMATTING	EDM	JIK	-	-	12/28/2021	F						
B	EDITORIAL CHANGES	-	AW	JS	CZH	07/01/2018	E						
A	EDITORIAL CHANGES	-	DG	JS	MDJ	04/01/2018	D						

INSTALLATION (CONT'D):

G. SEE UG3214 FOR TAGGING OF THE WAY POSITIONS ON THE FACE OF THE SWITCH.

H. LOCKS: ALL MANUAL SWITCHES SHALL BE LOCKED, SCADA SWITCH POSITIONS THAT ARE NOT OCCUPIED SHALL BE LOCKED. LOCKS SHALL BE AVAILABLE FOR THE LOCK OUT AND TAGGING FOR ALL D.S.O. OPERATIONS.

J. THE USE OF FUSED ELBOWS WILL BE LIMITED TO ONE FUSED ELBOW ONLY ON THE RIGHT OR LEFT SIDE SWITCH WAY POSITION. NO DEVIATION WILL BE GRANTED FOR MORE THAN ONE FUSE ELBOW IN THE TRAYER SWITCH.

K. TAPPING THE BACK OF 600A TEES FOR 200A DISTRIBUTION WILL BE LIMITED TO SWITCH CHANGE OUTS WITH EXISTING 200A TAPS.

BILL OF MATERIALS:

ITEM	DESCRIPTION	WEIGHT (LBS)	QUANTITY	STANDARD PAGE	STOCK NUMBER	DESIGN UNITS
1	4-WAY MANUAL	2,845	1	--	S704730	4WYTMV
	4-WAY SCADA	5,320	1	--	S704712	4WYTSV
	5-WAY SCADA	6,170	1	--	S704714	5WYTSV
2	ANCHOR, WALL (V)	--	4	--	SUPPLIED WITH SWITCH	
3	CONNECTORS, 12KV, 600/200A (V)	--	AS REQ'D	4186	--	--
4	PADLOCK (V)	--	AS REQ'D	--	S514848	--
5	ANCHOR, CONCRETE, STAINLESS STEEL (V)	--	12	4177/4178	S107654	CNCANC
6	POST, CONNECTOR, 1/0 (V)	--	5	--	S262560	USPCON
7	WIRE, 4/0, COPPER (V)	--	AS REQ'D	4521	S812764	4/0-SD
8	GROUND, TRENCH, 4/0, COPPER (V)	--	AS REQ'D	4510	S812818 (X)	TG-E-W
9	SEALING COMPOUND (V)	--	AS REQ'D	3948	S442976	SEAL-6
10	TAG, SWITCH POSITION (V)	--	--	3214	--	--
11	EYE BOLT, 6" X 1/2", STAINLESS (V)	--	2	--	S150582	--
12	BRACKET, ANGLE, STAINLESS STEEL, 2" X 3" (V)	--	4	4505	S166072	--
13	EYE BOLT, STAINLESS STEEL, 1 1/2" X 1/2" (V)	--	2	--	S152722 (X)	--
14	WASHER, STANDARD FLAT, BRONZE, 1/2" (V)	--	8	--	S799488	--
15	WASHER, LOCK SPRING (V)	--	4	--	S796416	--
16	CABLE IDENTIFICATION (V)	--	AS REQ'D	3202	--	--

NOTES:

I. WHEN PLANNING AND DESIGNING EXISTING WALK IN VAULTS FOR RETROFITTING NEW SWITCHES OR TRANSFORMERS SOME OF THE SMALLER VAULTS WILL REQUIRE MEASURING THE OPENINGS THAT EQUIPMENT IS DELIVERED THROUGH AND THE PLACEMENT OF EQUIPMENT FOR OPERATION AS SOME EQUIPMENT MAY NOT FIT OLDER FACILITIES.

(II) THE WAY POSITION MARKED T (THE 3RD POSITION FROM THE LEFT) SHALL BE THE OPEN TIE POSITION FOR ALL TRAYER SWITCHES

(III) EACH 4-WAY MANUAL SWITCH COMES WITH A 120V PIN-IN MOVABLE LINEAR ACTUATOR. IT MAY BE PLUGGED IN AT THE VAULT OR GENERATOR.

(IV) WHEN A TRAYER SCADA SWITCH IS FIRST ENERGIZED, THE SWITCH POSITIONS MUST BE MANUALLY OPERATED UNTIL THE KEARNY CREW INSTALLS ALL SCADA EQUIPMENT AND PROGRAMS THE SWITCH. THIS WILL REQUIRE THE CREW OPERATOR TO:

1. REMOVE THE YELLOW CONTROL CORD FROM THE LINEAR ACTUATOR
2. UN-PIN THE LINEAR ACTUATOR FROM THE VACUUM SWITCH HANDLE
3. DE-COUPLE THE LINEAR ACTUATOR FROM THE VACUUM SWITCH HANDLE
4. (4) REVERSE THE DIRECTION OF THE LINEAR ACTUATOR BY UN-PINNING AND RE-PINNING AT IT'S HINGE POINT (REFER TO FIGURE 10).

TABLE OF CONTENTS

© 1998 - 2021 San Diego Gas & Electric Company. All rights reserved. Removal of this copyright notice without permission is not permitted under law.

REV	CHANGE	DR	BY	DSN	APV	DATE	REV	CHANGE	DR	BY	DSN	APV	DATE
C	FORMATTING	EDM	JIK	-	-	12/28/2021	F						
B	EDITORIAL CHANGES	-	AW	JS	CZH	07/01/2018	E						
A	EDITORIAL CHANGES	-	DG	JS	MDJ	04/01/2018	D						

NOTES (CONT'D):



FIGURE 10 (V4)

5. TRAYER VAULT MOUNT SCADA SWITCHES COME WITH A REMOTE WAY POSITION PLUG-IN HAND HELD OPERATOR, WHEN THE UNIT IS PLACED ON LOCAL CONTROL FOR VAULT OPERATIONS IF REQUESTED BY THE SWITCHING CENTER DSO. IT CAN BE FOUND IN THE LOW VOLTAGE CONTROL CABINET DOOR. CONTROL POWER MUST BE AVAILABLE FOR THIS TO WORK, OTHERWISE SWITCHING MUST BE DONE MANUALLY.

(V) NOT SHOWN ON FIGURES.

(X) THIS ITEM IS EXEMPT.

REFERENCE:

a. FOR CABLE IDENTIFICATION, SEE UG3202.

(b) FOR MINIMUM OPERATING CLEARANCE REQUIREMENTS, SEE UG3480, UG3481, UG3482, AND UG3483.

c. FOR PAD MOUNTED SWITCH IDENTIFICATION, SEE UG3214.

d. FOR FAULT INDICATOR INSTALLATION, SEE UG4355.

e. FOR (STANDARD) AND (ALTERNATE TRENCH GROUND WIRE), SEE UG4510.

© 1998 - 2021 San Diego Gas & Electric Company. All rights reserved. Removal of this copyright notice without permission is not permitted under law.

REV	CHANGE	DR	BY	DSN	APV	DATE	REV	CHANGE	DR	BY	DSN	APV	DATE
C	FORMATTING	EDM	JIK	-	-	12/28/2021	F						
B	EDITORIAL CHANGES	-	AW	JS	CZH	07/01/2018	E						
A	EDITORIAL CHANGES	-	DG	JS	MDJ	04/01/2018	D						

REFERENCE (CONT'D):

f. FOR EQUIPMENT GROUNDING, SEE UG4520 AND UG4521.
g. FOR GROUNDING PREMOLDED CONNECTORS, SEE UG4525.
(h) FOR NEUTRAL AND GROUND WIRE SCHEMATIC DIAGRAM, SEE UG4521.
i. FOR SCADA INSTALLATION, SEE UG4640.
(j) FOR ELEVATION OF CUSTOMER FACILITIES PREVENTING WATER ENTRY, SEE UG3960.
(k) SEE UG3948.
l. FOR 600/200A CONNECTION APPLICATION, SEE UG4181.
m. SEE UG3214.

TABLE OF CONTENTS

© 1998 - 2021 San Diego Gas & Electric Company. All rights reserved. Removal of this copyright notice without permission is not permitted under law.

REV	CHANGE	DR	BY	DSN	APV	DATE	REV	CHANGE	DR	BY	DSN	APV	DATE
C	FORMATTING	EDM	JIK	-	-	12/28/2021	F						
B	EDITORIAL CHANGES	-	AW	JS	CZH	07/01/2018	E						
A	EDITORIAL CHANGES	-	DG	JS	MDJ	04/01/2018	D						

X Indicates Latest Revision | Completely Revised | New Page | Information Removed

SDG&E ELECTRIC UNDERGROUND CONSTRUCTION STANDARDS

TRAYER VAULT-MOUNTED SWITCH GEAR

UG3677.8

SCOPE: THIS STANDARD COVERS THE TRAYER 3-WAY MANUAL SUBMERSIBLE SWITCH, IT MAY BE INSTALLED IN SUB-SURFACE LOCATIONS, WALK-IN VAULTS, MANHOLES AND ANY STRUCTURE WITH LIMITED SPACE ISSUES.

ATTENTION:

* SOME APPLICATIONS WILL REQUIRE A DEVIATION FOR INSTALLATION. THIS SWITCH MAY BE MOUNTED IN A VERTICAL POSITION. THIS SWITCH SHOULD FIT IN STRUCTURES IN THE FMO3399 WITH THE 36-INCH OR LARGER ROUND OPENINGS IN SOME LOCATIONS. IT MAY BE REQUIRED TO REMOVE THE TOP SECTION TO GET TO THE 36-INCH OPENING.

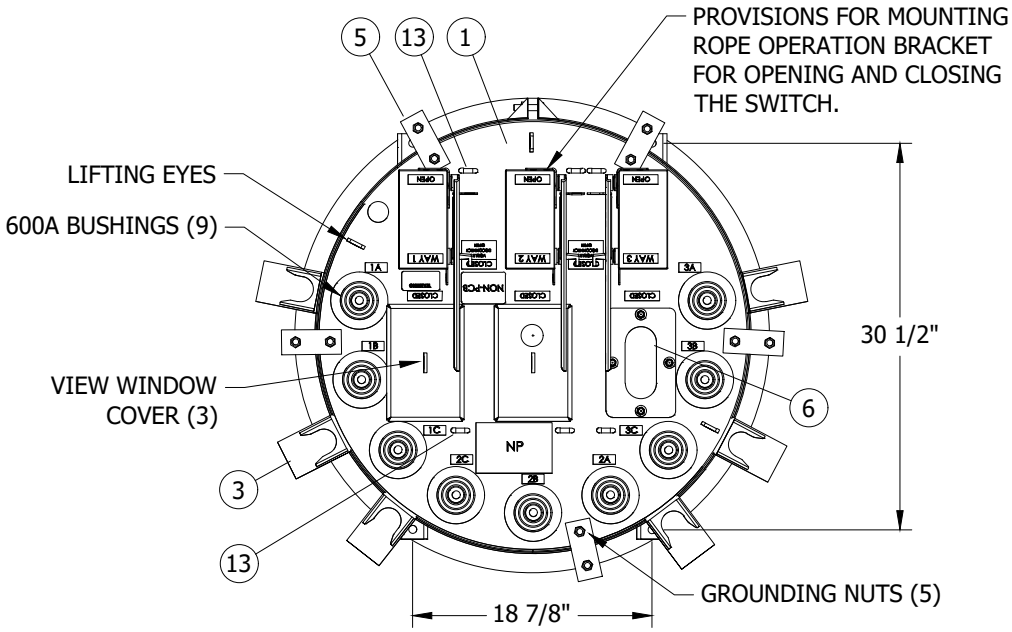

FIGURE 1 (I)
PLAN VIEW

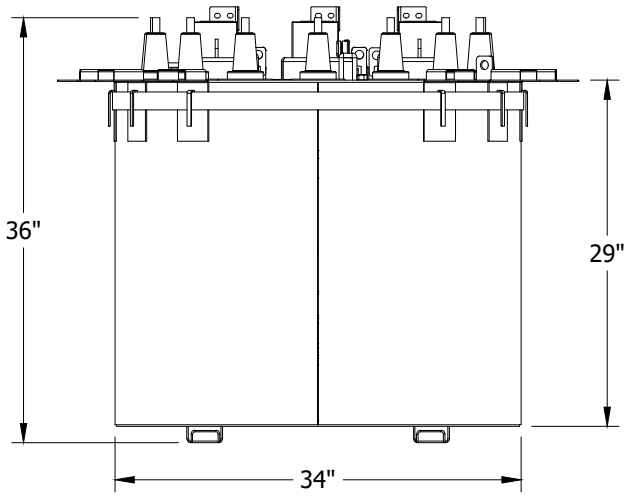

FIGURE 1
SIDE VIEW

© 1998 - 2021 San Diego Gas & Electric Company. All rights reserved. Removal of this copyright notice without permission is not permitted under law.

REV	CHANGE	DR	BY	DSN	APV	DATE	REV	CHANGE	DR	BY	DSN	APV	DATE
C	FORMATTING	EDM	JIK	-	-	12/28/2021	F						
B	EDITORIAL CHANGES	-	AW	JS	CZH	07/01/2018	E						
A	REVISION	-	-	-	TR/DW	03/18/2014	D						

X Indicates Latest Revision | Completely Revised | New Page | Information Removed

SDG&E ELECTRIC UNDERGROUND CONSTRUCTION STANDARDS

TRAYER 3-WAY SUBMERSIBLE LIQUID INSULATED VACUUM SWITCHGEAR

UG3678.1

TABLE OF CONTENTS

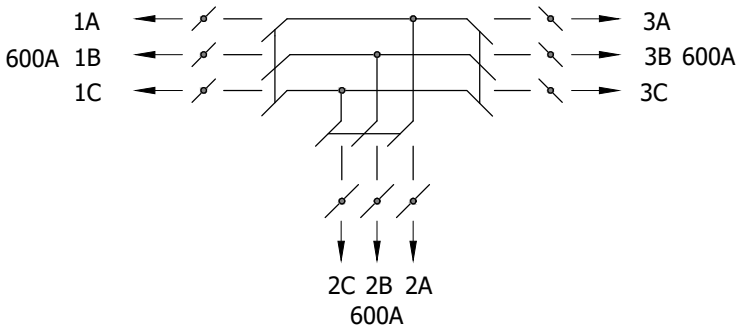

UG MAP SYMBOL



3-WAY TRAYER
MANUAL

FIGURE 2
WIRING DIAGRAM

INSTALLATION:

A. **FOR 36-INCH OPENING:** REMOVE THE STAND OFF BUSHING BAND AND PUSH THE SUPPORTS IN FOR PREPARATION TO LOWER SWITCH INTO STRUCTURE.

B. SWITCH **SHALL ONLY** BE LIFTED USING SPECIFIED MANUFACTURER'S LIFT POINTS.

C. IT IS REQUIRED THAT THE UNIT BE BOLTED TO THE FLOOR OF THE STRUCTURE. IF USING THE MOUNTING BRACKET SWITCH MUST BE BOLTED TO THE BRACKET AND BRACKET BOLTED TO THE FLOOR.

D. USE ONLY EQUIPMENT GROUND POINTS SPECIFIED IN THE STANDARD.

E. THE SWITCH COMES WITH (6) 200A STAND OFF POSITIONS, LOOSEN THE NUT AND BOLT AND ADJUST THE STAND OFF BRACKETS AS NEEDED, RE-TIGHTEN THE BOLT AND NUT ON THE SUPPORT BAND.

F. EACH VISUAL OPEN HAS A COVER TO KEEP THE VIEW PORT CLEAN, IT CAN ONLY BE REMOVED WHEN THE SWITCH IS IN THE OPEN POSITION.

G. THE SWITCH HAS RIGGING POINTS FOR REMOTE OPERATION, THESE CAN ALSO BE APPLIED TO THE WALLS, FLOOR AND CEILING AS NEEDED. (j)

H. BUSHING PLUGS MAY BE APPLIED ON THE BACK OF THE TEE'S FOR EACH WAY POSITION FOR TESTING AND GROUNDING AS NEEDED. CHECK WORK SPACE FOR LIVE LINE TOOL OPERATION.

TABLE OF CONTENTS

© 1998 - 2021 San Diego Gas & Electric Company. All rights reserved. Removal of this copyright notice without permission is not permitted under law.

REV	CHANGE	DR	BY	DSN	APV	DATE	REV	CHANGE	DR	BY	DSN	APV	DATE
C	FORMATTING	EDM	JIK	-	-	12/28/2021	F						
B	EDITORIAL CHANGES	-	AW	JS	CZH	07/01/2018	E						
A	REVISION	-	-	-	TR/DW	03/18/2014	D						

INSTALLATION (CONT'D):

(J) 3316/3317 APPLICATION OF SUBMERSIBLE TRAYER SWITCH

1. REQUIRES DEVIATION FOR THIS INSTALLATION.
2. THIS INSTALLATION HAS OPERATION LIMITATIONS AND MUST BE DE-ENERGIZED TO WORK ON.
3. NO OTHER CABLE OR EQUIPMENT MAY BE INSTALLED IN THIS STRUCTURE.
4. WHEN BOX IS SET SUMP SHOULD BE OPEN NOT COVERED BY SWITCH.
5. CONDUITS SHOULD USE TOP KNOCK OUTS FOR BETTER CABLE TRAINING.

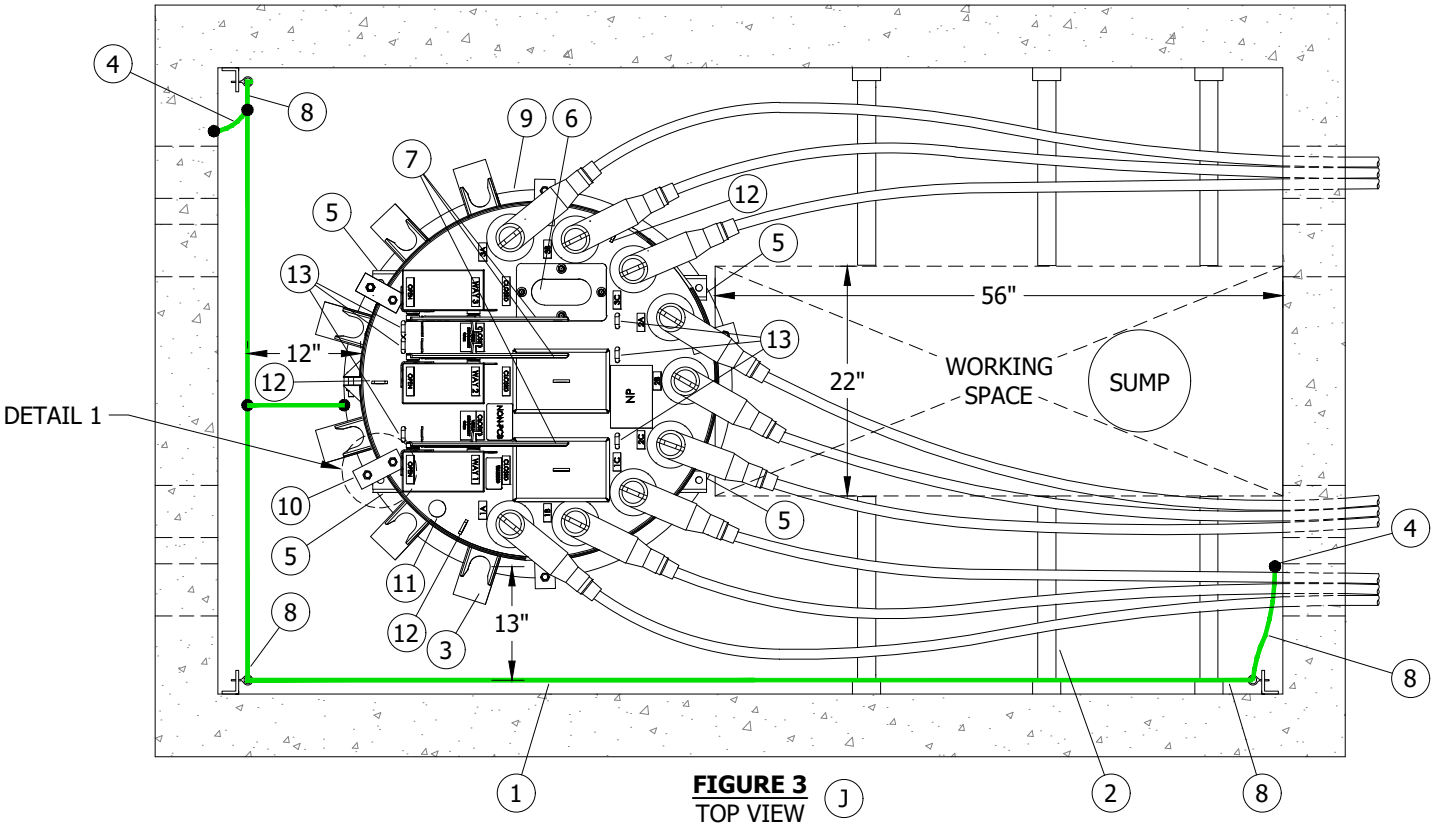

FIGURE 3 (J)
TOP VIEW

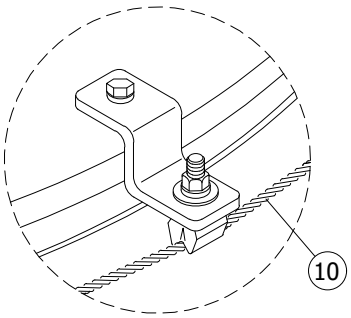

DETAIL 1

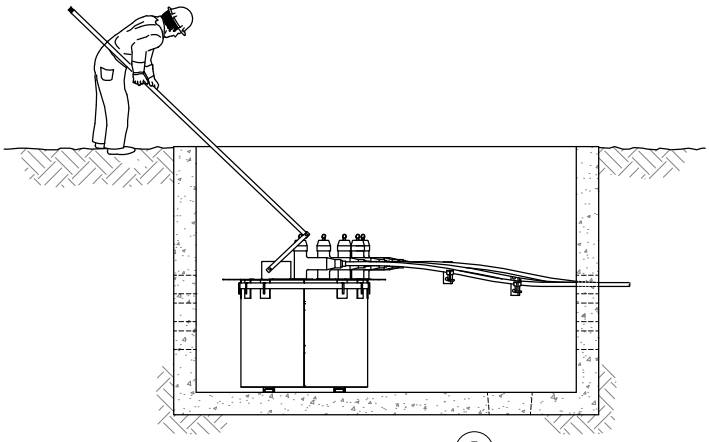

FIGURE 4 (J)

© 1998 - 2021 San Diego Gas & Electric Company. All rights reserved. Removal of this copyright notice without permission is not permitted under law.

REV	CHANGE	DR	BY	DSN	APV	DATE	REV	CHANGE	DR	BY	DSN	APV	DATE
C	FORMATTING	EDM	JIK	-	-	12/28/2021	F						
B	EDITORIAL CHANGES	-	AW	JS	CZH	07/01/2018	E						
A	REVISION	-	-	-	TR/DW	03/18/2014	D						

TABLE OF CONTENTS

INSTALLATION (CONT'D):

(K) TRAYER 3-WAY IN A MANHOLE.

1. THE BUSHINGS SHOULD ALWAYS FACE THE WALL FOR CLEAR CABLE TRAINING AND SWITCH OPERATIONS.
2. THE SWITCH SHALL BE LOCATED 12 INCHES TO 18 INCHES OFF THE WALL TO ALLOW OTHER CABLE RUN CLEARANCES BEHIND THE SWITCH.
3. THE SWITCH SHALL BE BOLTED TO THE FLOOR USING THE EXTENSION BRACKETS ON THE BOTTOM.
4. SWITCH WAY POSITION 2 BUSHINGS SHALL HAVE THE 12-INCH TEE EXTENSIONS APPLIED TO PROVIDE CABLE SEPARATION AND CLEAR ACCESS TO THE TEE'S FOR GROUNDING OPERATIONS IF REQUIRED. THE TEE EXTENSION ALLOWS THE WAY POSITION 2 CABLES TO BE RACKED AT A HIGH LEVEL.
5. USE THE UNDERGROUND DEVICES FIBER CABLE STEPS AND HOOKS TO SECURE THE CABLE.

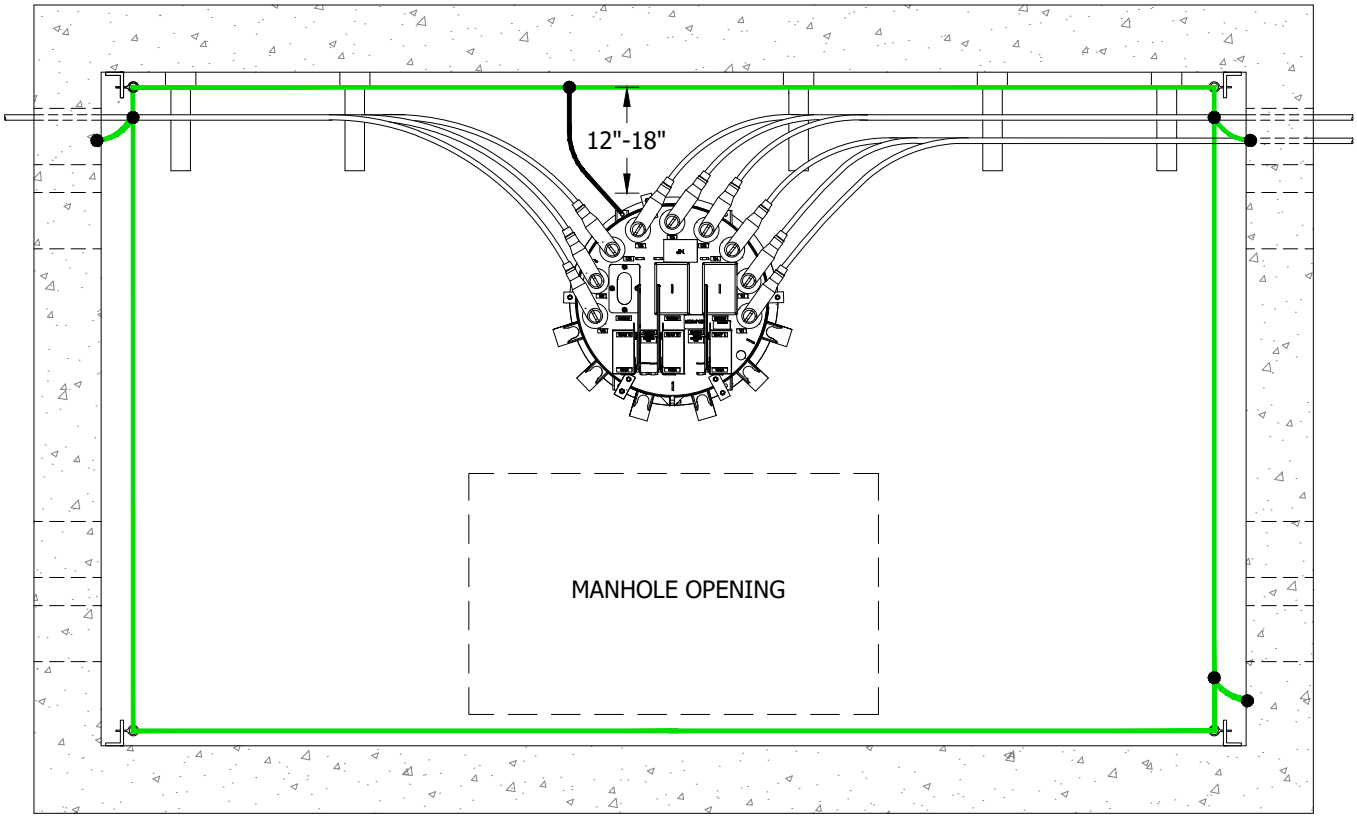

FIGURE 5 (K)
TOP VIEW

TABLE OF CONTENTS

© 1998 - 2021 San Diego Gas & Electric Company. All rights reserved. Removal of this copyright notice without permission is not permitted under law.

REV	CHANGE	DR	BY	DSN	APV	DATE	REV	CHANGE	DR	BY	DSN	APV	DATE
C	FORMATTING	EDM	JIK	-	-	12/28/2021	F						
B	EDITORIAL CHANGES	-	AW	JS	CZH	07/01/2018	E						
A	REVISION	-	-	-	TR/DW	03/18/2014	D						

X Indicates Latest Revision | Completely Revised | New Page | Information Removed

SDG&E ELECTRIC UNDERGROUND CONSTRUCTION STANDARDS

TRAYER 3-WAY SUBMERSIBLE LIQUID INSULATED VACUUM SWITCHGEAR

UG3678.4

BILL OF MATERIALS:

ITEM	DESCRIPTION	QUANTITY	STANDARD PAGE	STOCK NUMBER	DESIGN UNITS
1	3-WAY TRAYER MANUAL	1	--	S708570	3WAYTM
2	DEVICES, UG, CABLE RACKS (II)	AS REQ'D	4178	--	--
3	ADJUSTABLE STAND OFF PARKING	6	--	--	--
4	CONNECTION, GROUND POINT (II)	--	4540/4505	--	--
5	MOUNTING RAILS, PULL OUT BOLT DOWN TO FLOOR	4	4177/4178	S107654	CNCANC
6	WINDOW, VISIBLE DISCONNECT VIEW	--	--	--	--
7	SWITCH HANDLE (II)	--	--	--	--
8	GROUND HARDWIRE (II)	AS REQ'D	4505	--	--
9	SOFT DRAWN COPPER, 4/0 (II)	AS REQ'D	--	S812764	4/0-SD
10	GROUND, MOUNTING BRACKET (II)	--	--	--	--
11	INDICATOR, LIQUID LEVEL (II)	--	--	--	--
12	BRACKETS, LIFT POINT (II)	3	--	--	--
13	PROVISIONS, FOR ROPE OPERATIONS	6	--	--	--
14	HANDHOLE, 3316, TRAFFIC (II)	1	3316	S400312	3316TC
15	HANDHOLE, 3317, PARKWAY (II)	1	3317	S334430	3317SE
16	BUSHING EXTENSION (II)	3	4181	S336704	BUSH-X
17	PLUG, ELBOW TAP (II)	6	4181	S547328	BTP650
18	CABLE ADAPTER (II)	6	4181	--	--
19	CONNECTOR LUG (II)	6	4181	--	--
20	ELBOW TEE (II)	6	4181	S326578	BLBO-T
21	BOLT, BRONZE EYE (II)	6	4505	S471232	TL1/0
22	GROUND, SPLIT BOLT STUD (II)	6	4505	S262560	USPCON
23	SCHLAGE, PAD LOCK (II)	3	--	S514848	4WTFTS
24	FAULT INDICATOR (II)	AS REQ'D	4352	--	--
25	BUSS, STRUCTURE GROUND RING (II)	AS REQ'D	4540	S812818 (X)	GOWIRE

TABLE OF CONTENTS

NOTES:

(I) **OPERATION DESCRIPTION**

a. 600A
b. 3-WAY MANUAL OPERATION, WITH VISIBLE OPEN ON EACH POSITION
c. 14.4KV VOLTAGE
d. 14,300 SYM AMPS MOMENTARY
e. 20,000 ASY MAKE AND LATCH
f. WEIGHT: 1,245 LBS
g. STAINLESS STEEL
h. APPROX. LIQUID VOLUME: 112 GALLONS
i. NON PCB MINERAL OIL LIQUID INSULATION

© 1998 - 2021 San Diego Gas & Electric Company. All rights reserved. Removal of this copyright notice without permission is not permitted under law.

REV	CHANGE	DR	BY	DSN	APV	DATE	REV	CHANGE	DR	BY	DSN	APV	DATE
C	FORMATTING	EDM	JIK	-	-	12/28/2021	F						
B	EDITORIAL CHANGES	-	AW	JS	CZH	07/01/2018	E						
A	REVISION	-	-	-	TR/DW	03/18/2014	D						

X Indicates Latest Revision | Completely Revised | New Page | Information Removed

SDG&E ELECTRIC UNDERGROUND CONSTRUCTION STANDARDS

TRAYER 3-WAY SUBMERSIBLE LIQUID INSULATED VACUUM SWITCHGEAR

UG3678.5

NOTES (CONT'D):

(II) NOT SHOWN IN FIGURES.

(X) THIS ITEM IS EXEMPT.

REFERENCE:

a. FOR SWITCH IDENTIFICATION, SEE UG3215.

b. FOR EQUIPMENT COMBINATION GUIDELINES FOR SWITCHES IN MANHOLES, SEE UG3649.

c. FOR WIRE INFORMATION, SEE UG4003.

d. FOR SEALING JACKETED CABLE, SEE UG4108.

e. FOR SWITCH CONNECTIONS, SEE UG4181.

f. FOR (PREFERRED II) EQUIPMENT GROUNDING INSTALLATION, SEE UG4512.

g. FOR NEUTRAL AND GROUND WIRE SCHEMATIC DIAGRAM, SEE UG4521.

h. FOR CONCENTRIC NEUTRAL TERMINATIONS AND GROUNDING PREMOLDED CONNECTORS, SEE UG4525.

i. FOR SWITCH APPLICATION, SEE DM6111.

(j) FOR RIGHTING, SEE UG3675.

TABLE OF CONTENTS

© 1998 - 2021 San Diego Gas & Electric Company. All rights reserved. Removal of this copyright notice without permission is not permitted under law.

REV	CHANGE	DR	BY	DSN	APV	DATE	REV	CHANGE	DR	BY	DSN	APV	DATE
C	FORMATTING	EDM	JIK	-	-	12/28/2021	F						
B	EDITORIAL CHANGES	-	AW	JS	CZH	07/01/2018	E						
A	REVISION	-	-	-	TR/DW	03/18/2014	D						

SCOPE: THIS STANDARD SHOWS THE TRAYER SUBSURFACE STAINLESS STEEL LIQUID INSULATED VACUUM 4-WAY SWITCH. EACH WAY POSITION CAN BE GROUNDED INDEPENDENTLY.

ATTENTION:

* THE TRAYER SUBSURFACE IS THE REPLACEMENT FOR BOTH GAS AND OIL SWITCHES WHEN THEY CANNOT BE PAD MOUNTED.

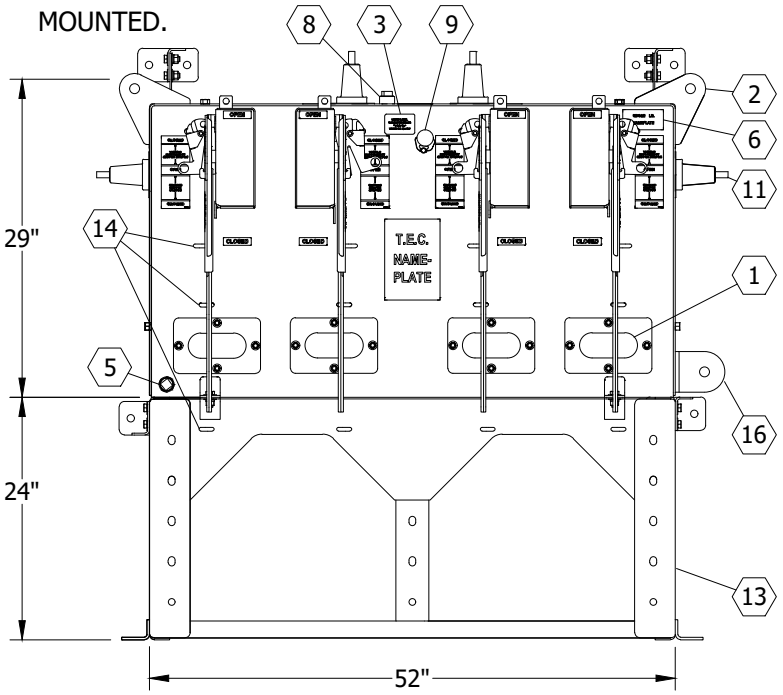

FIGURE 1
FRONT VIEW

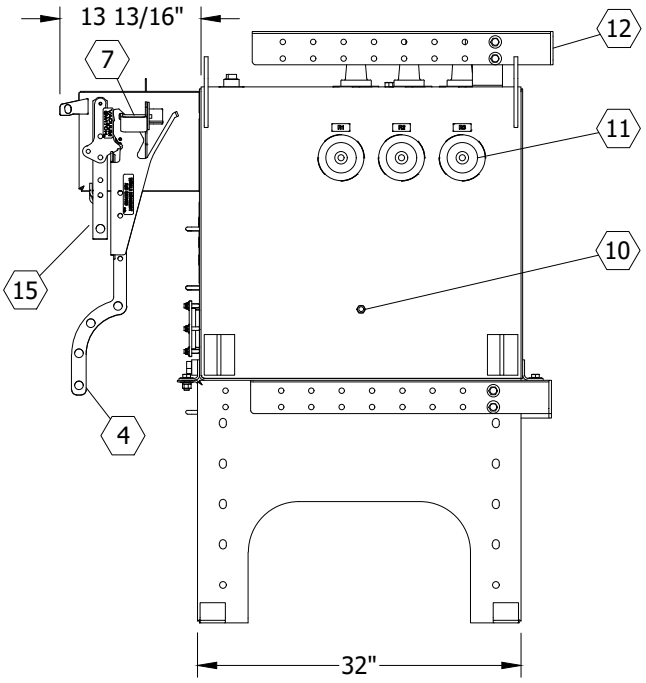

FIGURE 1
SIDE VIEW

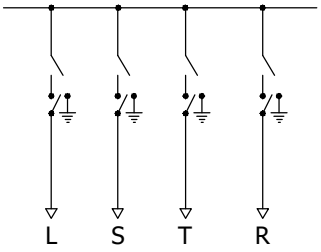

FIGURE 2
ONE LINE DIAGRAM
SEE TABLE 1

UG MAP SYMBOL

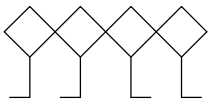

4-WAY MANUAL TRAYER

TABLE 1

INTERNAL TRAYER DESIGNATION	
SYMBOL	**DESIGNATION**
L	LEFT
S	4TH POSITION
T	TAP
R	RIGHT

TABLE 2

SWITCH OPERATION DESCRIPTION	
DESCRIPTION	**RATING**
VOLTAGE	25KV
B.I.L.	125KV
CURRENT, CONTINUOUS	600A
LOAD MAKE, LOAD BREAK CURRENT	600A
MOMENTARY MAKE AND LATCH	20KA - ASY
WEIGHT	2,445LBS

TABLE 3

SWITCH PARTS LIST					
ITEM	**DESCRIPTION**	**QTY**	**ITEM**	**DESCRIPTION**	**QTY**
1	VIEW WINDOW FOR VISIBLE DISCONNECT	--	9	LIQUID LEVEL GAUGE	--
2	HEAVY LIFTING EYE	4	10	EQUIPMENT GROUNDING POINT	--
3	DECAL FOR LOW OIL	--	11	600A BUSHING CONNECTION	--
4	TRI-PHASE VISIBLE DISCONNECT OPERATING HANDLE	--	12	ADJUSTABLE WALL ANCHOR	4
5	OIL DRAIN PLUG	--	13	SUPPORT STAND	--
6	SDG&E NAME PLATE	--	14	PROVISION FOR ROPE OPERATOR	12
7	INTERLOCKING MECHANISM	--	15	VACUUM SWITCH OPERATING HANDLE	--
8	OIL FILL PLUG	--	16	HEAVY LIFTING EYE BOTTOM MOUNT	2

© 1998 - 2021 San Diego Gas & Electric Company. All rights reserved. Removal of this copyright notice without permission is not permitted under law.

REV	CHANGE	DR	BY	DSN	APV	DATE	REV	CHANGE	DR	BY	DSN	APV	DATE
C	FORMATTING	EDM	JIK	-	-	12/28/2021	F						
B	EDITORIAL CHANGES	-	DG	JS	MDJ	04/01/2018	E						
A	ORIGINAL ISSUE	-	DG	TR	MDJ	05/13/2016	D						

X Indicates Latest Revision | Completely Revised | New Page | Information Removed

SDG&E ELECTRIC UNDERGROUND CONSTRUCTION STANDARDS

TRAYER 4-WAY GROUNDED VACUUM SWITCH

UG3679.1

TABLE OF CONTENTS

INSTALLATION:

A. THE TRAYER 4-WAY SWITCH IS FOR INSTALLATION IN 3324, 3325, & 3326 MANHOLES. SMALLER MANHOLES WILL REQUIRE A DEVIATION REQUEST.

B. FOR SUB-SURFACE INSTALLATION THE TRAYER 4-WAY SWITCH SHALL BE BOLTED TO THE WALL WITH STAINLESS STEEL ANGLE BRACKETS AND SUPPORTED WITH 24-INCH STAINLESS STEEL STAND PROVIDED, 8-5/8-INCH BOLTS X 3-1/2-INCH STAINLESS STEEL BOLTS (S156750) AND 1/2-INCH WASHERS, STAINLESS STEEL.

C. STAND MUST BE REMOVED FROM SWITCH AND LOWERED INTO PLACE INSIDE STRUCTURE. SWITCH SHALL THEN BE LOWERED INTO STRUCTURE AND PLACED ON TOP OF STAND AND REASSEMBLED USING PROVIDED HARDWARE.

BILL OF MATERIALS:

ITEM	DESCRIPTION	QUANTITY	STANDARD PAGE	STOCK NUMBER	DESIGN UNITS
1	600A 4-WAY STAINLESS STEEL	1	--	S704740	4WTMSS
	MASTERLOCK 3 LONG SHANK	AS REQ'D	--	S514914	
2	DECALS	AS REQ'D	3212-3218	--	--
3	CONNECTOR, COMPRESSION (VIII)	AS REQ'D	4174/4176	--	--
4	FAULT INDICATORS (VIII)	AS REQ'D	4352	--	--
5	CONNECTORS, 600A, 600A/200A OR 200A (VIII)	AS REQ'D	4181	--	AS NEEDED

NOTES:

I. WHEN REMOVING TANK FROM STAND, ENSURE TO HAVE BLOCKS/SUPPORTS UNDER THE FRONT END OF THE SWITCH TO PREVENT TANK FROM BEING FLUSH WITH THE GROUND. WITHOUT BLOCKS/SUPPORTS, DAMAGE WILL OCCUR TO THE DISCONNECT SWITCH HANDLES.

II. PLACE SWITCH ON OPPOSITE SIDE OF MANHOLE OPENING.

III. THE OPERATION SELECTOR PREVENTS INADVERTENT OPERATION FROM THE CLOSED POSITION TO THE OPEN POSITION AND OPEN TO GROUND POSITION.

IV. SWITCH IS DESIGNED TO BE OPERATED REMOTELY FOR SINGLE SWITCH OPERATIONS. THIS SWITCH IS NOT TO BE OPERATED MULTIPLE TIMES IN SHORT DURATIONS WHICH COULD RESULT IN DAMAGE TO THE GEARING.

V. THE TRAYER IS A MANUALLY OPERATED SWITCH AND NOT SCADA ADAPTABLE.

VI. PERFORM REMOTE SWITCHING OPERATIONS USING THE TRAYER MANUAL SWITCH BAG AND BLOCKS KIT. THIS TOOL IS AVAILABLE AT EACH ELECTRIC DISTRIBUTION DISTRICT.

VII. FOR NEW CONSTRUCTION AND CONVERSIONS, THIS TRAYER SWITCH SHOULD NOT BE USED TO TAP FEEDER CABLES. TAPS ON THE BACK OF 600A TEES IMPEDE GROUNDING AND LIMIT USE OF SWITCH POSITIONS DURING ROUTINE SWITCHING PROCEDURES AND OUTAGE SITUATIONS. TAP FEEDER SEGMENTS BETWEEN SWITCH POSITIONS USING 600A TERMINATORS OR TAP THE SWITCH POSITION WITH DISTRIBUTION CABLE ONLY.

(VIII) NOT SHOWN ON FIGURES.

REFERENCE:

a. FOR SWITCH IDENTIFICATION, SEE UG3215.

b. FOR NEUTRAL AND GROUNDING WIRE DIAGRAM, SEE UG4530.

c. FOR CONNECTOR ASSEMBLIES, SEE UG4181.

d. FOR EQUIPMENT COMBINATION GUIDELINES, SEE UG3649.

e. FOR REMOTE SWITCHING PROCEDURES, SEE ESP221.

TABLE OF CONTENTS

© 1998 - 2021 San Diego Gas & Electric Company. All rights reserved. Removal of this copyright notice without permission is not permitted under law.

REV	CHANGE	DR	BY	DSN	APV	DATE	REV	CHANGE	DR	BY	DSN	APV	DATE
C	FORMATTING	EDM	JIK	-	-	12/28/2021	F						
B	EDITORIAL CHANGES	-	DG	JS	MDJ	04/01/2018	E						
A	ORIGINAL ISSUE	-	DG	TR	MDJ	05/13/2016	D						

SCOPE: THIS STANDARD COVERS INNOVATIVE SWITCHGEAR'S SUBMERSIBLE AND VAULT MOUNT 600A, 15KV THREE-PHASE SOLID-DIELECTRIC-IN-AIR, AND COMES AS A VACUUM LOADBREAK SWITCH, AS WELL AS A VACUUM FAULT INTERRUPTER WITH VISIBLE DISCONNECTS. DUE TO DIVERSE ENVIRONMENTAL CONDITIONS THE SWITCHGEAR IS CONSTRUCTED OF STAINLESS STEEL AND POWDER COATED.

ATTENTION:

* THIS IS AN INITIAL CONSTRUCTION STANDARD RELEASE. AS SWITCHES ARE INSTALLED, MORE DETAILS WILL BE UPDATED FOR EACH TYPE OF SWITCH BELOW. PLEASE COORDINATE WITH EDE FOR INQUIRIES.

TABLE 1

INNOVATIVE SWITCHGEAR ELECTRICAL RATINGS		
	SCADA	**MANUAL**
VOLTAGE	15.5KV/4KV	25KV
CURRENT, CONTINUOUS	600A/200A	--
B.I.L.	95KV	--
MAXIMUM INTERRUPTING CURRENT VACUUM FAULT INTERRUPTER	12.5KA (SYMMETRICAL)	--
	20KA (ASYMMETRICAL) AT 32.5KA PEAK CURRENT	--
MOMENTARY MAKE AND LATCH	12.5KA (SYMMETRICAL)	--
	20KA (ASYMMETRICAL) AT 32.5KA PEAK CURRENT	--
B.I.L. ACROSS OPEN VACUUM FAULT INTERRUPTER	125KV	--

© 1998 - 2021 San Diego Gas & Electric Company. All rights reserved. Removal of this copyright notice without permission is not permitted under law.

REV	CHANGE	DR	BY	DSN	APV	DATE	REV	CHANGE	DR	BY	DSN	APV	DATE
C	FORMATTING	EDM	JIK	-	-	12/28/2021	F						
B	EDITORIAL CHANGES	EPI	NTB	FRC	CZH	01/31/2021	E						
A	ORIGINAL ISSUE	-	DG	JS	CZH	05/03/2018	D						

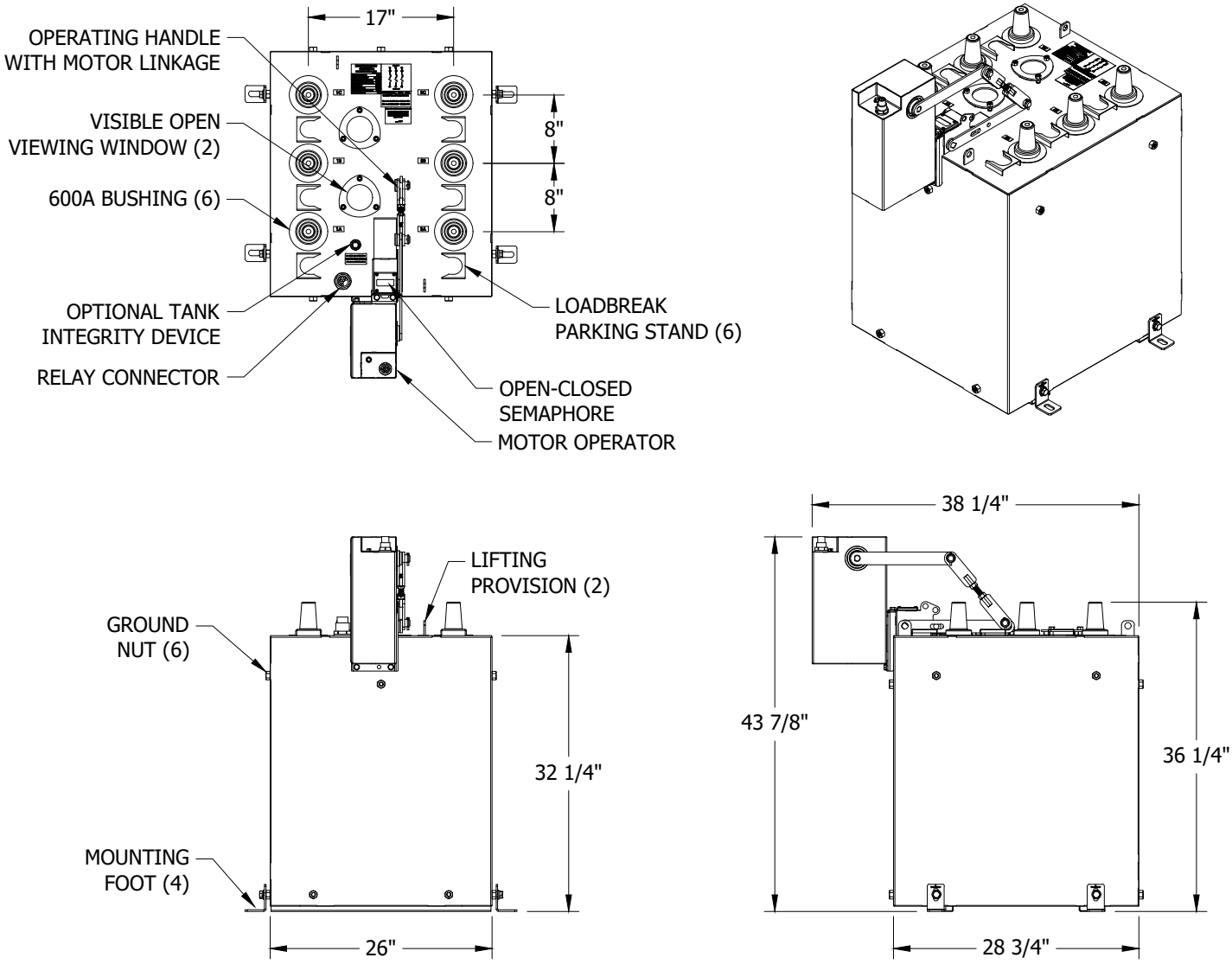

FIGURE 1
TWO-WAY SUBMERSIBLE 600A MANUAL/NON-SCADA
SEE TABLE 2

TABLE 2

TWO-WAY SUBMERSIBLE 600A MANUAL/NON-SCADA PACKAGE		
DESCRIPTION	**QUANTITY**	**APPROX. SYSTEM WEIGHT (LBS)**
S201066-008 SWITCH TANK	1	420
CT SHORTING PLUG	1	--
MOTOR OPERATOR WITH HANDLE LINKAGE	1	35 EACH
JUNCTION CONTROL BOX	1	--
PENDANT CONTROL	1	--
50-FOOT CABLES	2	--

© 1998 - 2021 San Diego Gas & Electric Company. All rights reserved. Removal of this copyright notice without permission is not permitted under law.

REV	CHANGE	DR	BY	DSN	APV	DATE	REV	CHANGE	DR	BY	DSN	APV	DATE
C	FORMATTING	EDM	JIK	-	-	12/28/2021	F						
B	EDITORIAL CHANGES	EPI	NTB	FRC	CZH	01/31/2021	E						
A	ORIGINAL ISSUE	-	DG	JS	CZH	05/03/2018	D						

INNOVATIVE SWITCHGEAR SOLUTIONS INC. ™ FAULT INTERRUPTER/SWITCH PATENT PENDING	
MAXIMUM VOLTAGE	25 KV
CONTINUOUS CURRENT	600 AMPS
INTERRUPTING CURRENT (SYM.)	12.5 KA
INTERRUPTING CURRENT (ASYM.)	20.0 KA
PEAK CURRENT	32.5 KA
FAULT CLOSE (SYM.)	12.5 KA
IMPULSE WITHSTAND VOLTAGE	125 BIL
POWER FREQUENCY	60 HZ

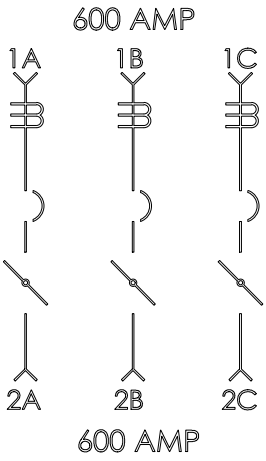

CAT# S201066-008	WEIGHT 420 LBS

CURRENT TRANSFORMER RATIOS

200 AMP BUSHINGS = 200:5 RATIO

600 AMP BUSHINGS = 600:5 RATIO

INNOVATIVE SWITCHGEAR SOLUTIONS, INC

ISGYYXXXX

____/20YY

FIGURE 2
TWO-WAY SUBMERSIBLE 600A MANUAL/NON-SCADA
SEE TABLE 2

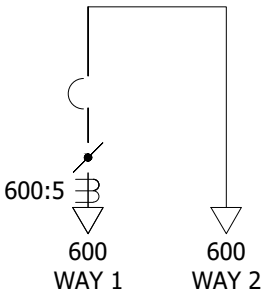

FIGURE 3
TWO-WAY SUBMERSIBLE 600A MANUAL
CONNECTION DIAGRAM

© 1998 - 2021 San Diego Gas & Electric Company. All rights reserved. Removal of this copyright notice without permission is not permitted under law.

REV	CHANGE	DR	BY	DSN	APV	DATE	REV	CHANGE	DR	BY	DSN	APV	DATE
C	FORMATTING	EDM	JIK	-	-	12/28/2021	F						
B	EDITORIAL CHANGES	EPI	NTB	FRC	CZH	01/31/2021	E						
A	ORIGINAL ISSUE	-	DG	JS	CZH	05/03/2018	D						

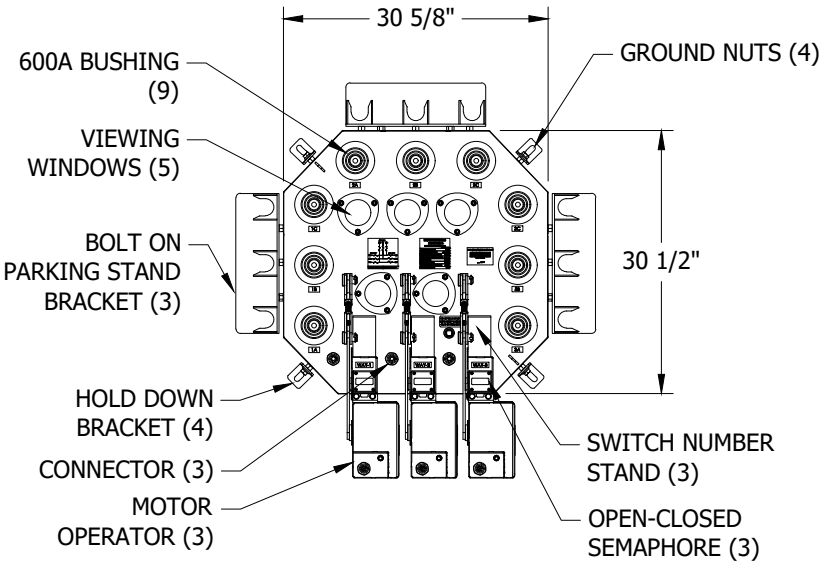

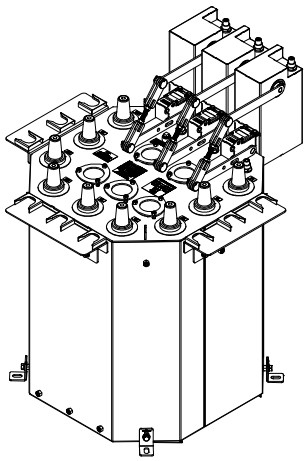

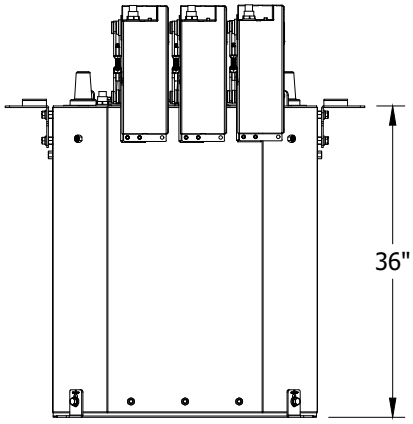

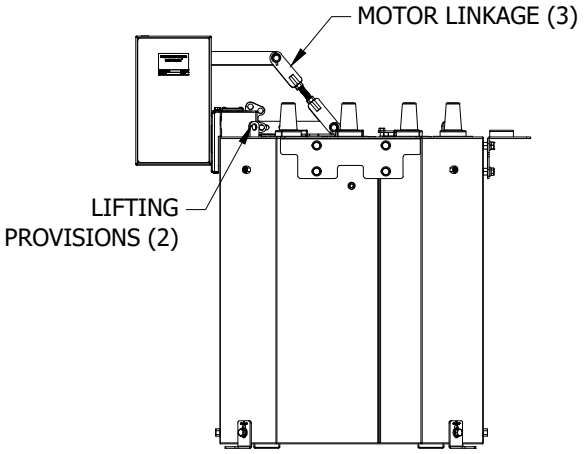

FIGURE 4
THREE-WAY SUBMERSIBLE 600A MANUAL/NON-SCADA
SEE TABLE 3

TABLE 3

THREE-WAY SUBMERSIBLE 600A MANUAL/NON-SCADA APPROX. SYSTEM WEIGHTS	
DESCRIPTION	**WEIGHT (LBS)**
SWITCH TANK	620

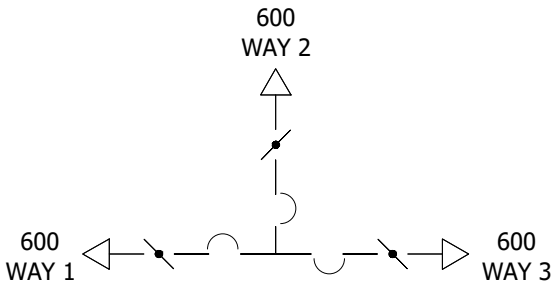

FIGURE 5
THREE-WAY SUBMERSIBLE 600A MANUAL
CONNECTION DIAGRAM

© 1998 - 2021 San Diego Gas & Electric Company. All rights reserved. Removal of this copyright notice without permission is not permitted under law.

REV	CHANGE	DR	BY	DSN	APV	DATE	REV	CHANGE	DR	BY	DSN	APV	DATE
C	FORMATTING	EDM	JIK	-	-	12/28/2021	F						
B	EDITORIAL CHANGES	EPI	NTB	FRC	CZH	01/31/2021	E						
A	ORIGINAL ISSUE	-	DG	JS	CZH	05/03/2018	D						

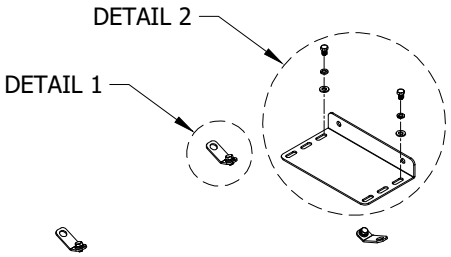

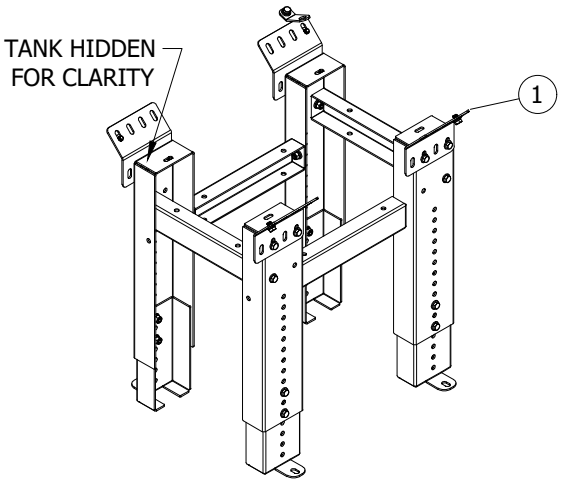

FIGURE 6
THREE-WAY SUBMERSIBLE STAND
ISO VIEW

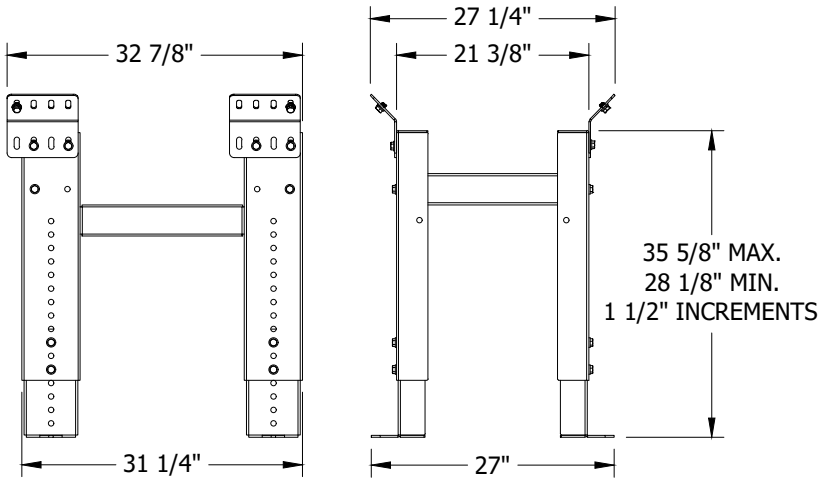

FIGURE 6
THREE-WAY SUBMERSIBLE STAND

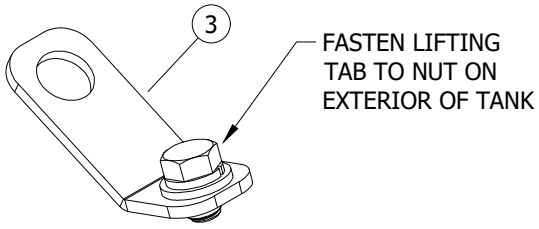

DETAIL 1

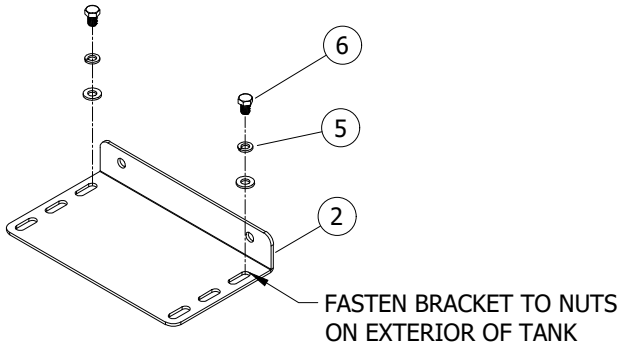

DETAIL 2

BILL OF MATERIALS (FIGURE 6):

ITEM	DESCRIPTION	WEIGHT (LBS)	QUANTITY	STANDARD PAGE	STOCK NUMBER	DESIGN UNITS
1	STAND SET, QUAD CHANNEL, ADJUSTABLE, SIDE MOUNT, OCTAGONAL 3-WAY	160	1	--	SS-10003	--
2	BRACKET, 3-WAY NO VO, TO WALL	10	1	--	SMP-10693	--
3	LIFTING EYE, BOLT ON 1/2" NUT	--	4	--	SMP-10263	--
4	WASHER, FLAT, 18-8, 1/2" SAE, MMC# 96659A110	--	10	--	PP-10218	--
5	WASHER, LOCK, 18-8 SS, 1/2" SIZE, .87"OD, .12" MIN THICK, MMC#92146A033 OR EQUIV	--	10	--	PP-10097	--
6	SCREW, HC, 1/2"-13, 3/4"L, SILICON BRONZE, ALLIED BOLT#14136	--	10	--	PP-10402	--

© 1998 - 2021 San Diego Gas & Electric Company. All rights reserved. Removal of this copyright notice without permission is not permitted under law.

REV	CHANGE	DR	BY	DSN	APV	DATE	REV	CHANGE	DR	BY	DSN	APV	DATE
C	FORMATTING	EDM	JIK	-	-	12/28/2021	F						
B	EDITORIAL CHANGES	EPI	NTB	FRC	CZH	01/31/2021	E						
A	ORIGINAL ISSUE	-	DG	JS	CZH	05/03/2018	D						

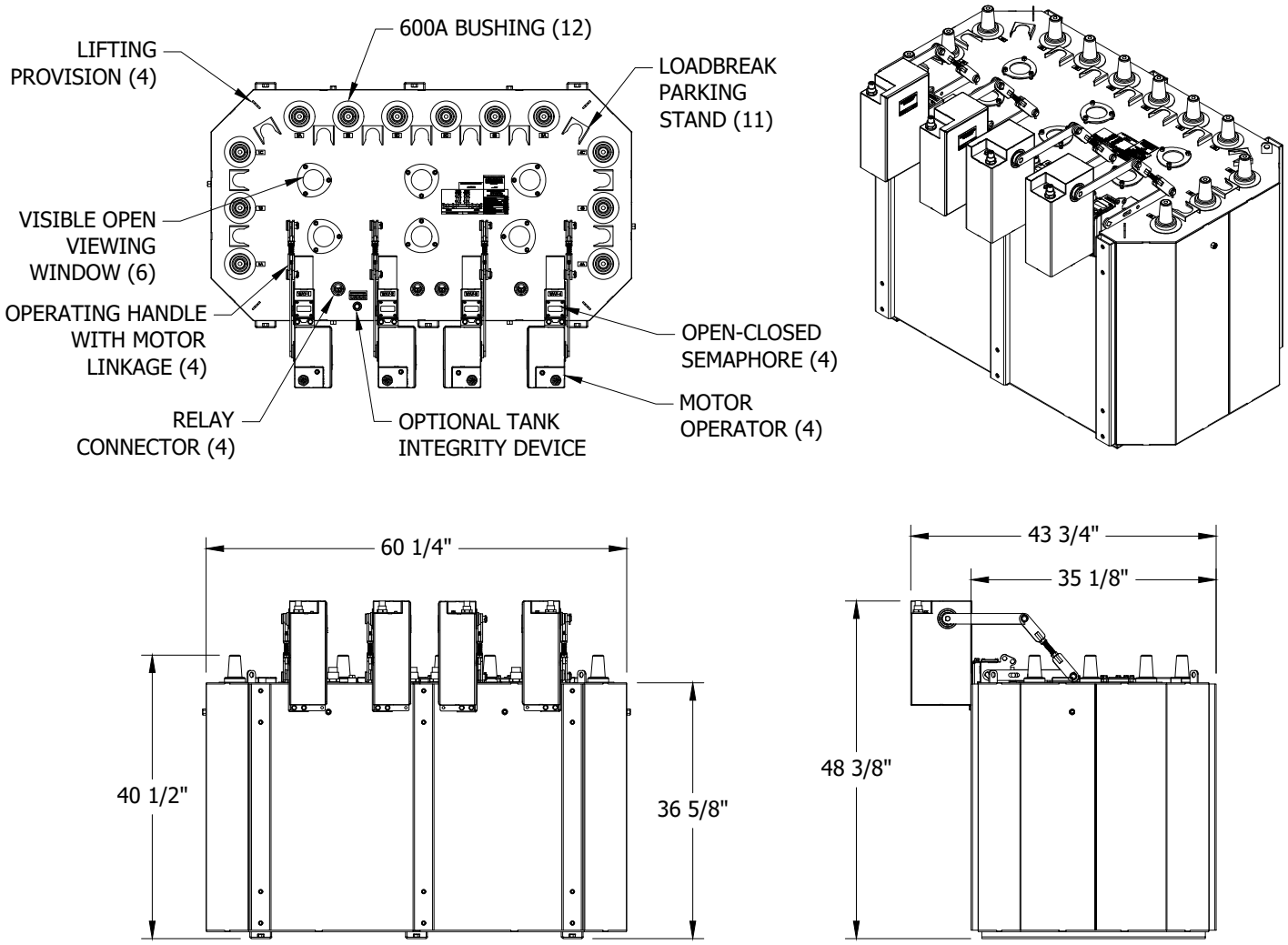

FIGURE 7
FOUR-WAY SUBMERSIBLE 600A MANUAL/NON-SCADA
SEE TABLE 4

TABLE 4

FOUR-WAY SUBMERSIBLE 600A MANUAL/NON-SCADA PACKAGE		
DESCRIPTION	**QUANTITY**	**APPROX. SYSTEM WEIGHT (LBS)**
S40406666-008 SWITCHGEAR	1	--
MOTOR OPERATORS	4	--
PENDANT CONTROL	1	--
JUNCTION BOX	1	--
CT SHORTING PLUGS	4	--
SWITCH TANK	--	1,200

© 1998 - 2021 San Diego Gas & Electric Company. All rights reserved. Removal of this copyright notice without permission is not permitted under law.

REV	CHANGE	DR	BY	DSN	APV	DATE	REV	CHANGE	DR	BY	DSN	APV	DATE
C	FORMATTING	EDM	JIK	-	-	12/28/2021	F						
B	EDITORIAL CHANGES	EPI	NTB	FRC	CZH	01/31/2021	E						
A	ORIGINAL ISSUE	-	DG	JS	CZH	05/03/2018	D						

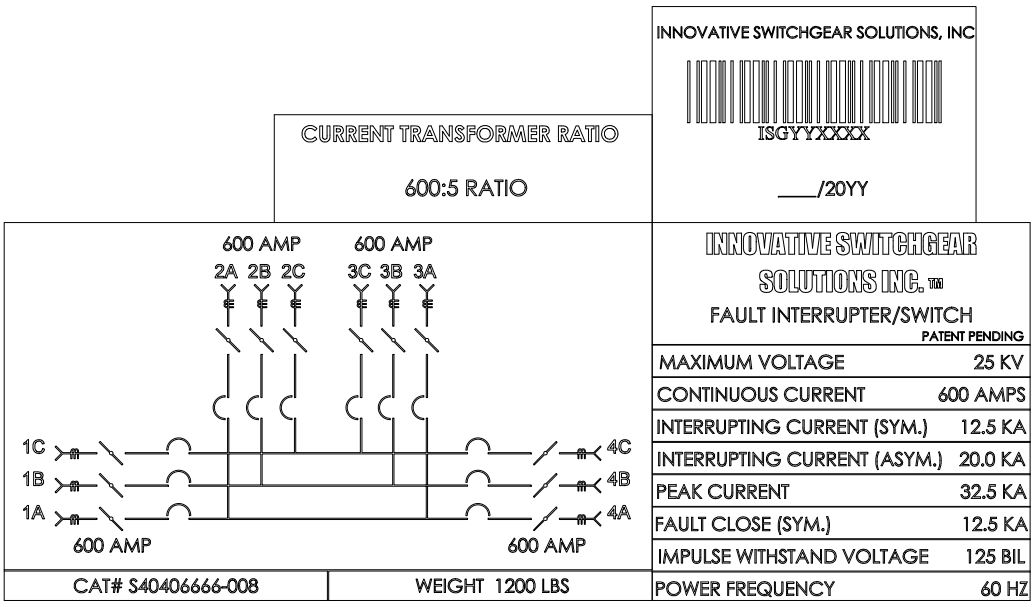

FIGURE 8
FOUR-WAY SUBMERSIBLE 600A MANUAL/NON-SCADA
SEE TABLE 4

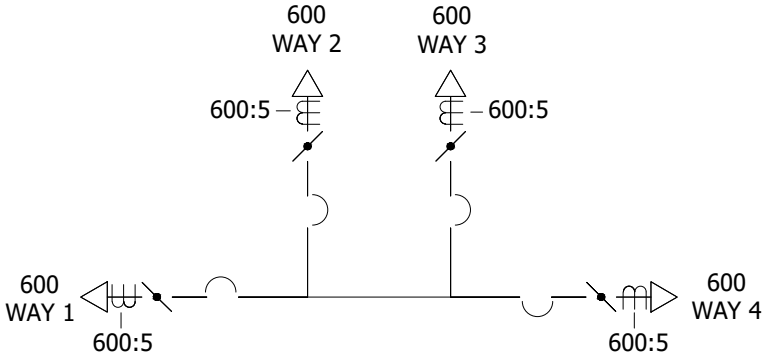

FIGURE 9
FOUR-WAY SUBMERSIBLE 600A MANUAL
CONNECTION DIAGRAM

© 1998 - 2021 San Diego Gas & Electric Company. All rights reserved. Removal of this copyright notice without permission is not permitted under law.

REV	CHANGE	DR	BY	DSN	APV	DATE	REV	CHANGE	DR	BY	DSN	APV	DATE
C	FORMATTING	EDM	JIK	-	-	12/28/2021	F						
B	EDITORIAL CHANGES	EPI	NTB	FRC	CZH	01/31/2021	E						
A	ORIGINAL ISSUE	-	DG	JS	CZH	05/03/2018	D						

X Indicates Latest Revision | Completely Revised | New Page | Information Removed

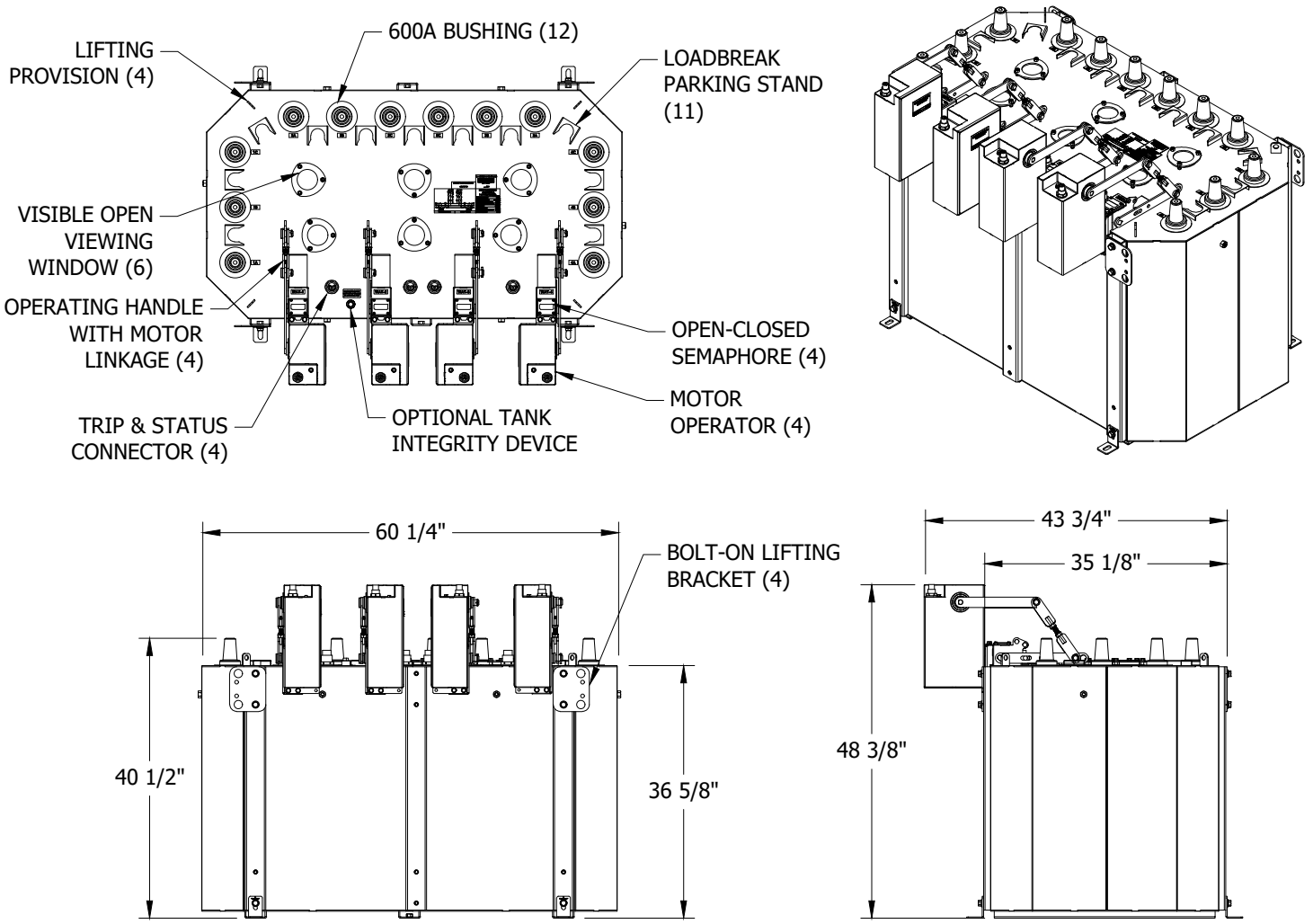

FIGURE 10
FOUR-WAY SUBMERSIBLE 600A SCADA 12KV W/ PEDESTAL
SEE TABLE 5

TABLE 5

FOUR-WAY SUBMERSIBLE 600A SCADA 12KV W/ PEDESTAL PACKAGE APPROX. SYSTEMS WEIGHTS	
DESCRIPTION	**WEIGHT (LBS)**
SWITCH TANK	1,200
MOTOR OPERATORS	35 EACH
LIFTING BRACKETS	2 EACH
POTENTIAL TRANSFORMERS WITH CRADLE	145 EACH
CONTROL CABINET WITH PEDESTAL	585

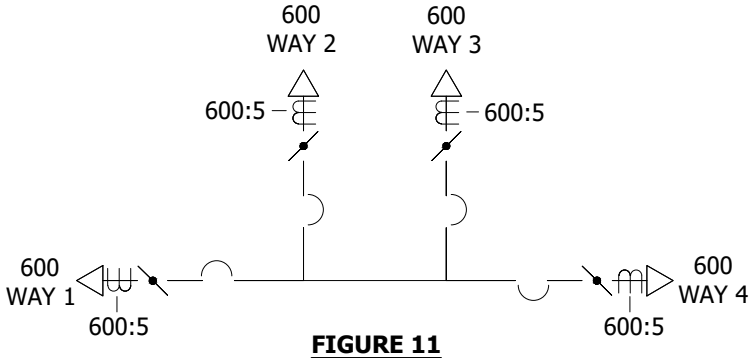

FIGURE 11
FOUR-WAY SUBMERSIBLE 600A SCADA
CONNECTION DIAGRAM

© 1998 - 2021 San Diego Gas & Electric Company. All rights reserved. Removal of this copyright notice without permission is not permitted under law.

REV	CHANGE	DR	BY	DSN	APV	DATE	REV	CHANGE	DR	BY	DSN	APV	DATE
C	FORMATTING	EDM	JIK	-	-	12/28/2021	F						
B	EDITORIAL CHANGES	EPI	NTB	FRC	CZH	01/31/2021	E						
A	ORIGINAL ISSUE	-	DG	JS	CZH	05/03/2018	D						

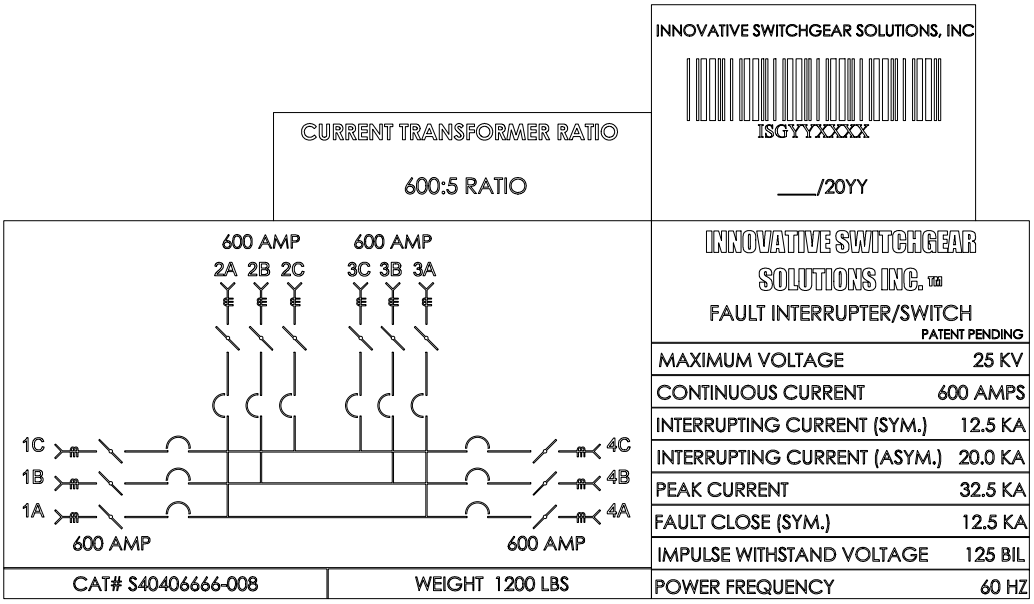

FIGURE 12
FOUR-WAY SUBMERSIBLE 600A SCADA 12KV W/ PEDESTAL
SEE TABLE 6

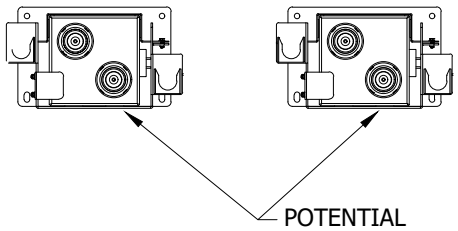

FIGURE 13
FOUR-WAY SUBMERSIBLE 600A SCADA 12KV W/ PEDESTAL
SEE TABLE 6

TABLE 6

FOUR-WAY SUBMERSIBLE 600A SCADA 12KV W/ PEDESTAL APPROX. SYSTEM WEIGHTS	
DESCRIPTION	**WEIGHT (LBS)**
SWITCH TANK	420
MOTOR OPERATOR	35 EACH

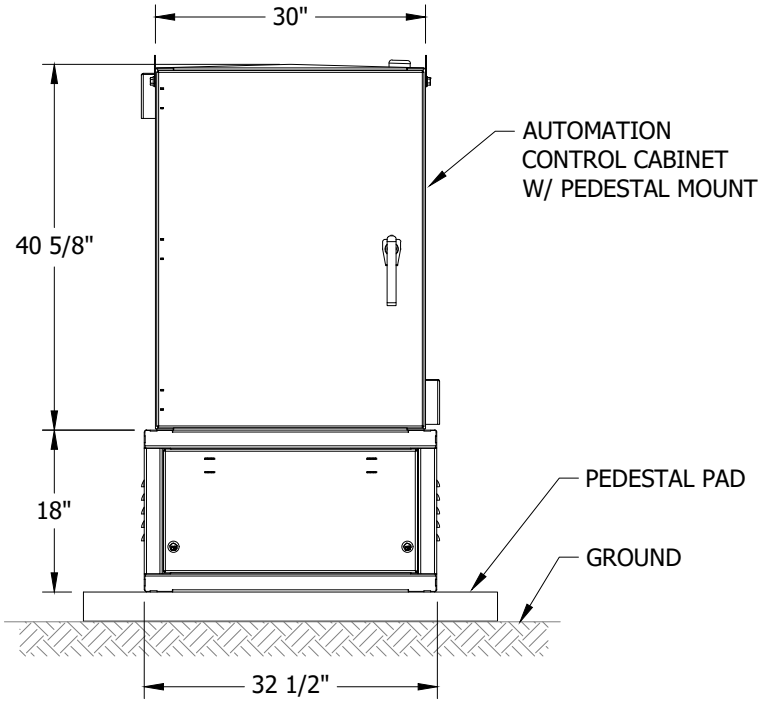

FIGURE 14
FOUR-WAY SUBMERSIBLE 600A SCADA 12KV W/ PEDESTAL
SEE TABLE 6

© 1998 - 2021 San Diego Gas & Electric Company. All rights reserved. Removal of this copyright notice without permission is not permitted under law.

REV	CHANGE	DR	BY	DSN	APV	DATE	REV	CHANGE	DR	BY	DSN	APV	DATE
C	FORMATTING	EDM	JIK	-	-	12/28/2021	F						
B	EDITORIAL CHANGES	EPI	NTB	FRC	CZH	01/31/2021	E						
A	ORIGINAL ISSUE	-	DG	JS	CZH	05/03/2018	D						

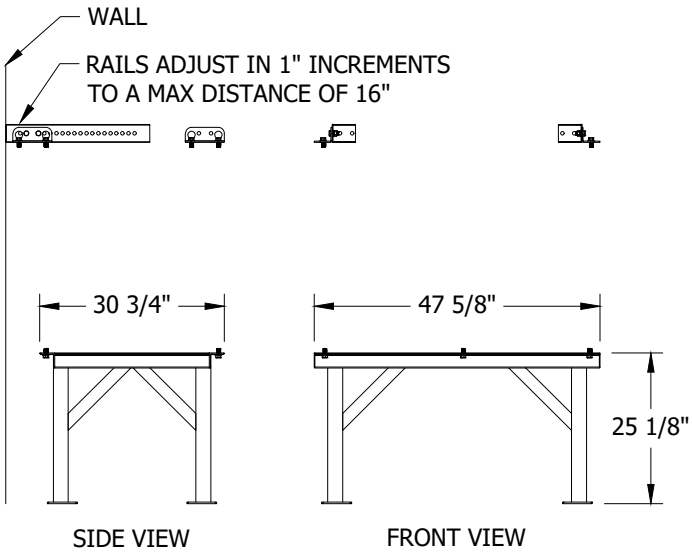

FIGURE 15
FOUR-WAY SUBMERSIBLE STAND (MANUAL & SCADA)

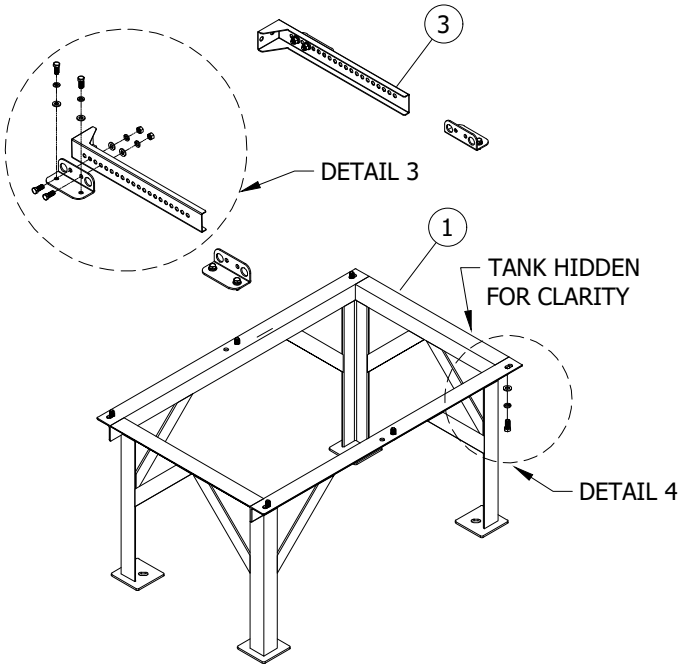

FIGURE 15
FOUR-WAY SUBMERSIBLE STAND (MANUAL & SCADA)
ISO VIEW

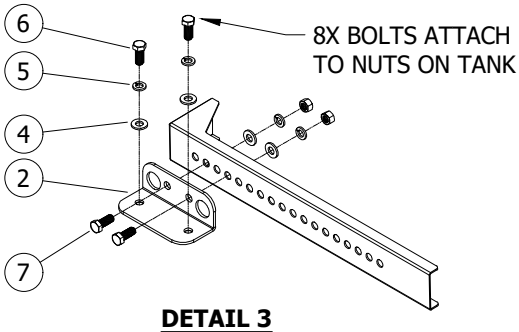

DETAIL 3

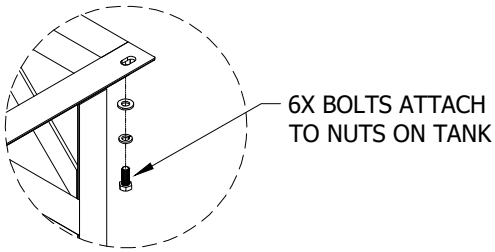

DETAIL 4

BILL OF MATERIALS (FIGURE 15):

ITEM	DESCRIPTION	WEIGHT (LBS)	QUANTITY	STANDARD PAGE	STOCK NUMBER	DESIGN UNITS
1	ASSY, STAND, 4-WAY , SUB, 304 S/S, FOR S40406666-_0_	105	1	--	SMA-20188	--
2	BRACKET, LIFTING, WALL MOUNT	2 EACH	4	--	SMP-10887	--
3	BRACKET, WALL ATTACHMENT	5 EACH	2	--	SMP-10888	--
4	WASHER, FLAT, 18-8, 1/2" SAE, MMC# 96659A110	--	18	--	PP-10218	--
5	WASHER, LOCK, 18-8 SS, 1/2" SIZE, .87"OD, .12" MIN THICK, MMC#92146A033 OR EQUIV	--	18	--	PP-10097	--
6	SCREW, HEX CAP, 1/2-13, 1 1/4"L, SILICON BRONZE	--	14	--	PP-10400	--
7	SCREW, HC 18-8, 1/2-13 X 1 1/4" MMC#92240A714	--	4	--	PP-10215	--
8	NUT, 1/2-13, SILICON BRONZE, FASTENAL #74967	--	4	--	PP-10366	--

© 1998 - 2021 San Diego Gas & Electric Company. All rights reserved. Removal of this copyright notice without permission is not permitted under law.

REV	CHANGE	DR	BY	DSN	APV	DATE	REV	CHANGE	DR	BY	DSN	APV	DATE
C	FORMATTING	EDM	JIK	-	-	12/28/2021	F						
B	EDITORIAL CHANGES	EPI	NTB	FRC	CZH	01/31/2021	E						
A	ORIGINAL ISSUE	-	DG	JS	CZH	05/03/2018	D						

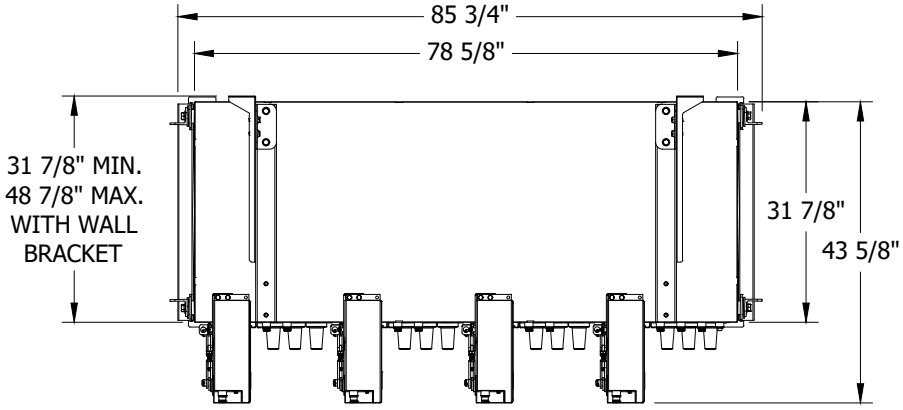

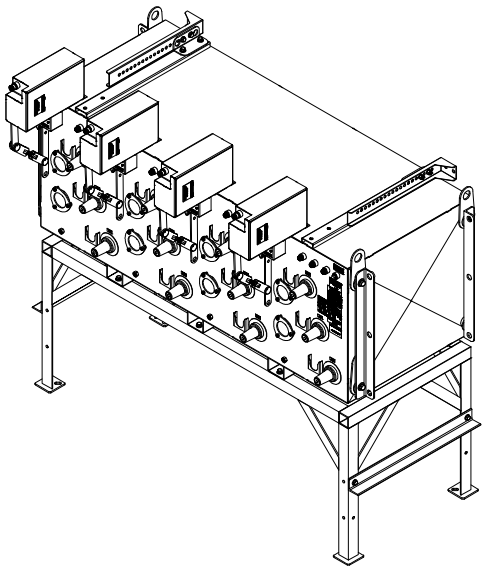

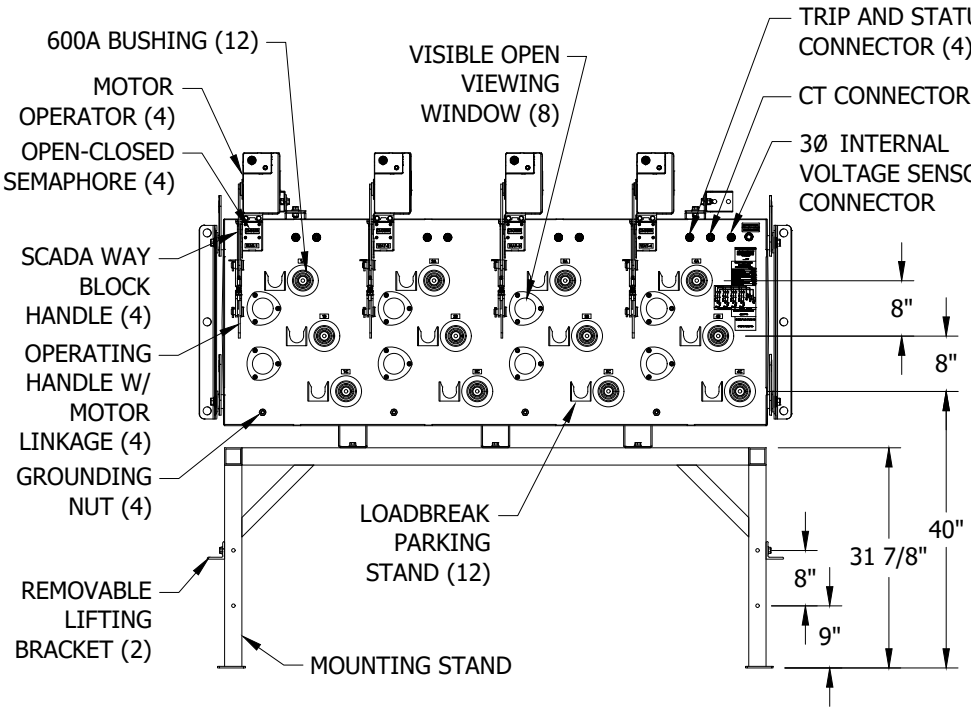

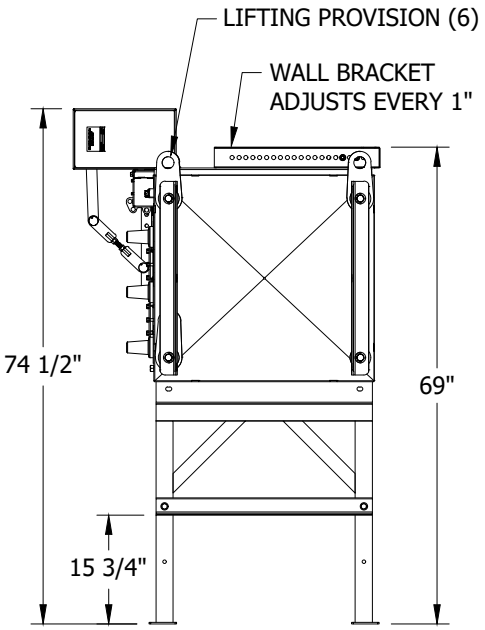

FIGURE 16
FOUR-WAY VAULT MOUNT 600A MANUAL/NON-SCADA
SEE TABLES 7 AND 8

TABLE 7

FOUR-WAY VAULT MOUNT 600A MANUAL/NON-SCADA APPROX. SYSTEM WEIGHTS	
DESCRIPTION	**WEIGHT (LBS)**
SWITCH TANK	1,420
STAND AND BRACKETS	195
MOTOR OPERATORS	35 EACH

TABLE 8

VOLTAGE RATING	
ITEM	**VOLTAGE**
INTERNAL VS	12.47/7.2KV LINE TO GROUND

© 1998 - 2021 San Diego Gas & Electric Company. All rights reserved. Removal of this copyright notice without permission is not permitted under law.

REV	CHANGE	DR	BY	DSN	APV	DATE	REV	CHANGE	DR	BY	DSN	APV	DATE
C	FORMATTING	EDM	JIK	-	-	12/28/2021	F						
B	EDITORIAL CHANGES	EPI	NTB	FRC	CZH	01/31/2021	E						
A	ORIGINAL ISSUE	-	DG	JS	CZH	05/03/2018	D						

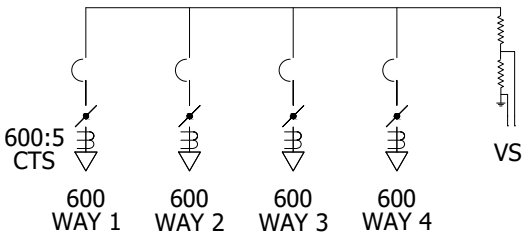

FIGURE 17
FOUR-WAY VAULT MOUNT 600A MANUAL/NON-SCADA
CONNECTION DIAGRAM

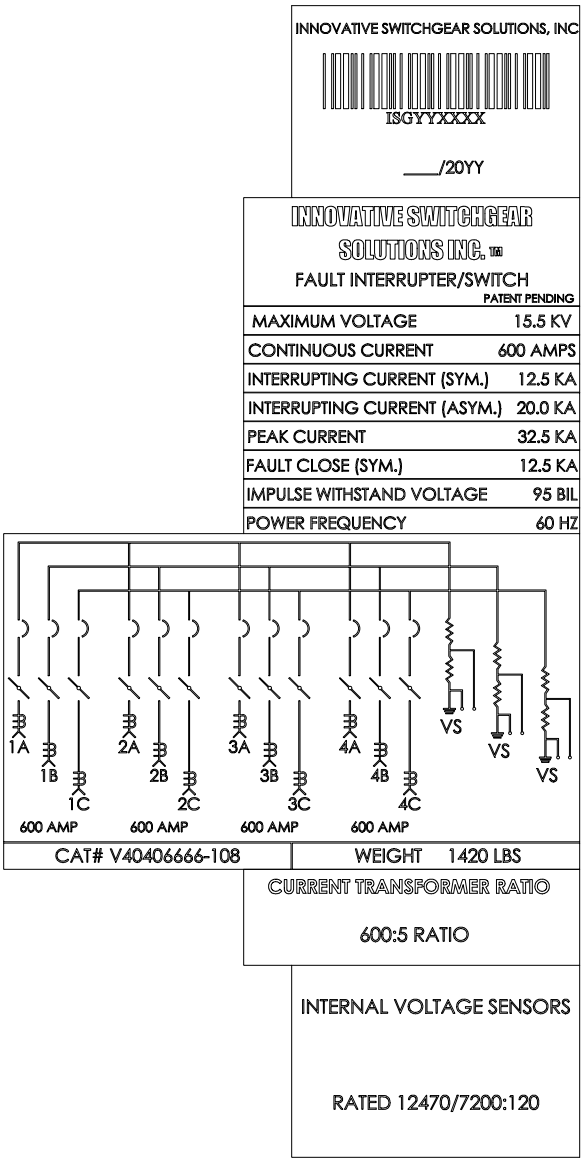

FIGURE 18
FOUR-WAY VAULT MOUNT 600A MANUAL/NON-SCADA
SEE TABLES 7 AND 8

© 1998 - 2021 San Diego Gas & Electric Company. All rights reserved. Removal of this copyright notice without permission is not permitted under law.

REV	CHANGE	DR	BY	DSN	APV	DATE	REV	CHANGE	DR	BY	DSN	APV	DATE
C	FORMATTING	EDM	JIK	-	-	12/28/2021	F						
B	EDITORIAL CHANGES	EPI	NTB	FRC	CZH	01/31/2021	E						
A	ORIGINAL ISSUE	-	DG	JS	CZH	05/03/2018	D						

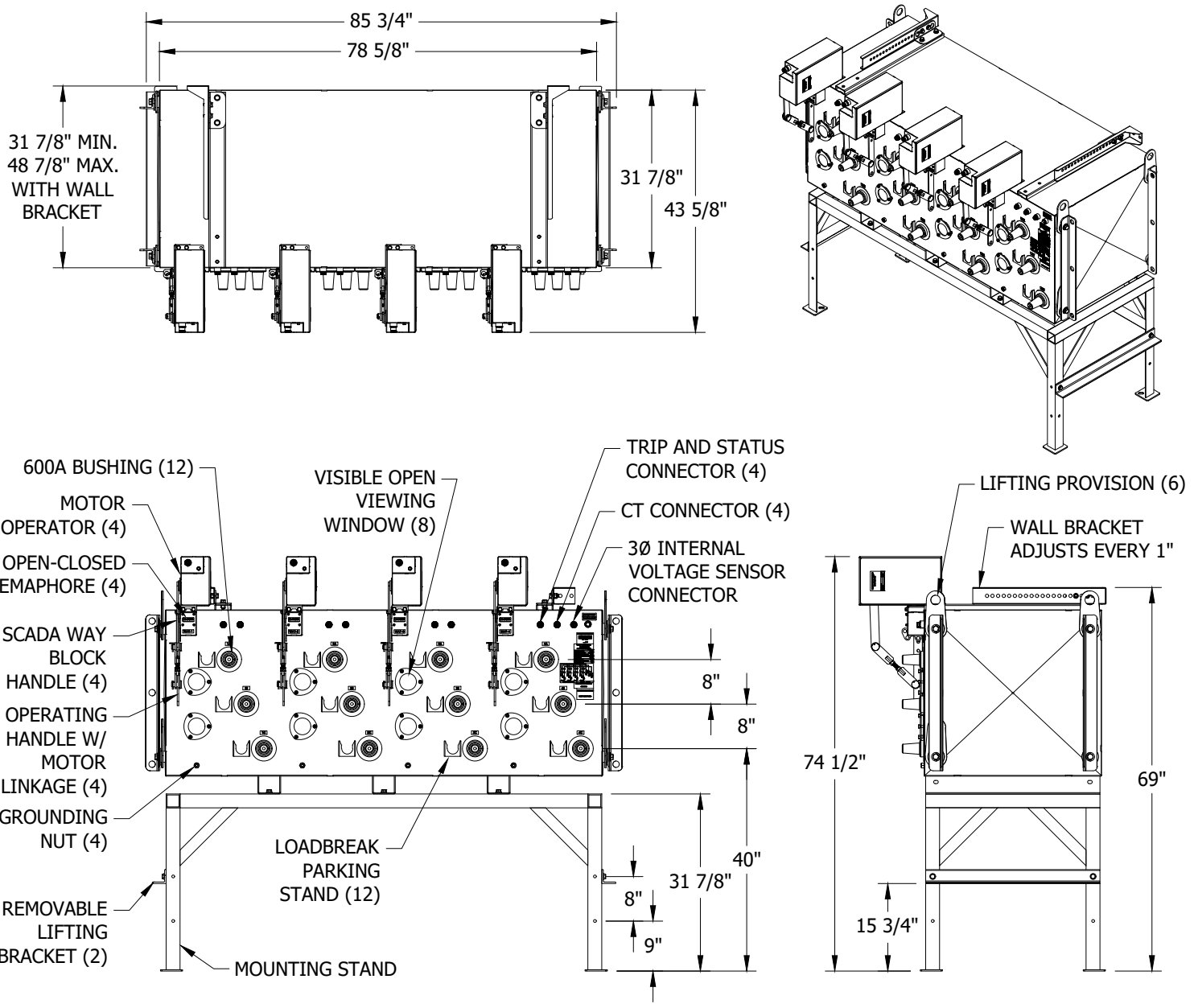

FIGURE 19
FOUR-WAY VAULT MOUNT 600A SCADA 12KV
SEE TABLES 9 AND 10

TABLE 9

FOUR-WAY VAULT MOUNT 600A SCADA 12KV APPROX. SYSTEM WEIGHTS	
DESCRIPTION	**WEIGHT (LBS)**
SWITCH TANK	1,420
STAND AND BRACKETS	195
MOTOR OPERATORS	35 EACH
CONTROL CABINET	500
POTENTIAL TRANSFORMERS	130 EACH

TABLE 10

VOLTAGE RATING	
ITEM	**VOLTAGE**
PT	12.47/7.2KV LINE TO GROUND
INTERNAL VS	12.47/7.2KV LINE TO GROUND EXTERNAL
EXTERNAL VS	12.47/7.2KV LINE TO GROUND

© 1998 - 2021 San Diego Gas & Electric Company. All rights reserved. Removal of this copyright notice without permission is not permitted under law.

REV	CHANGE	DR	BY	DSN	APV	DATE	REV	CHANGE	DR	BY	DSN	APV	DATE
C	FORMATTING	EDM	JIK	-	-	12/28/2021	F						
B	EDITORIAL CHANGES	EPI	NTB	FRC	CZH	01/31/2021	E						
A	ORIGINAL ISSUE	-	DG	JS	CZH	05/03/2018	D						

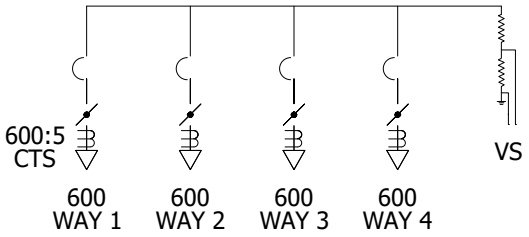

FIGURE 20
FOUR-WAY VAULT MOUNT 600A SCADA 12KV
CONNECTION DIAGRAM

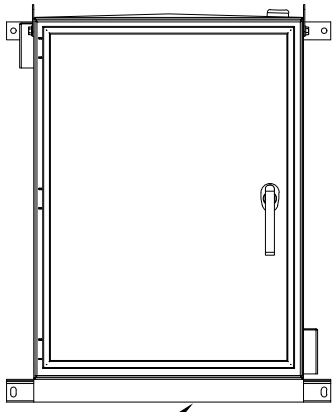

CONTROL CABINET WITH
WALL MOUNTING PROVISION

FIGURE 21
FOUR-WAY VAULT MOUNT 600A SCADA 12KV
SEE TABLES 9 AND 10

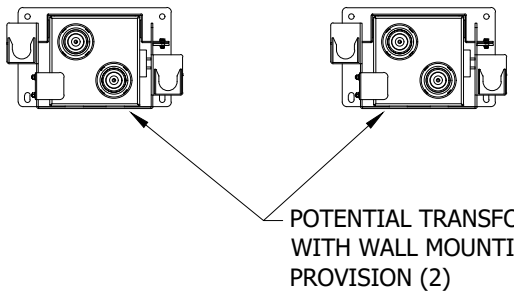

POTENTIAL TRANSFORMER
WITH WALL MOUNTING
PROVISION (2)

FIGURE 22
FOUR-WAY VAULT MOUNT 600A SCADA 12KV
SEE TABLES 9 AND 10

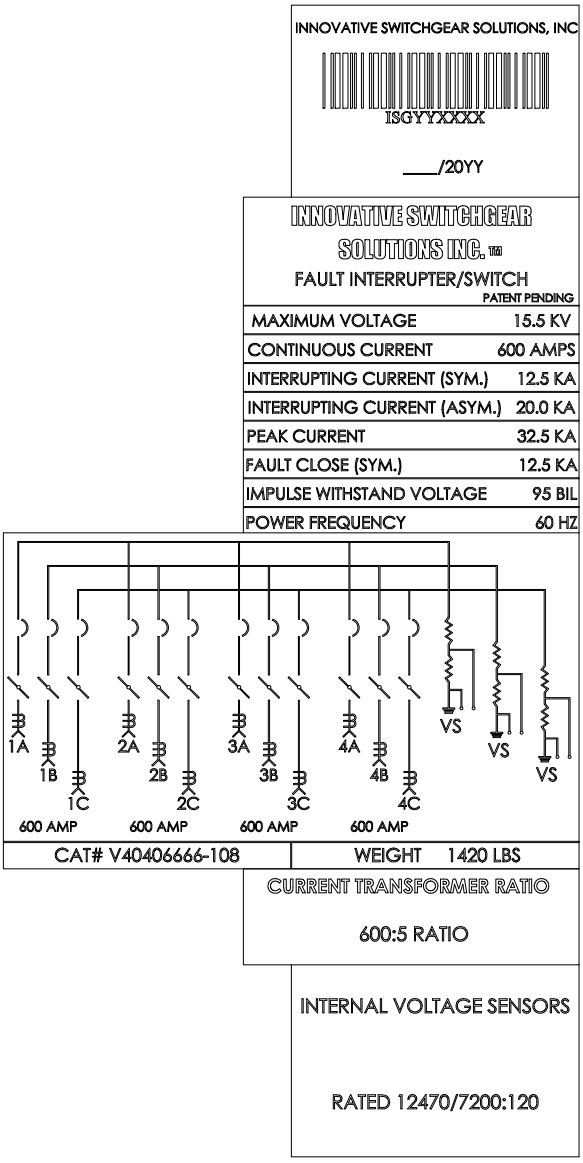

FIGURE 23
FOUR-WAY VAULT MOUNT 600A SCADA 12KV
SEE TABLES 9 AND 10

© 1998 - 2021 San Diego Gas & Electric Company. All rights reserved. Removal of this copyright notice without permission is not permitted under law.

REV	CHANGE	DR	BY	DSN	APV	DATE	REV	CHANGE	DR	BY	DSN	APV	DATE
C	FORMATTING	EDM	JIK	-	-	12/28/2021	F						
B	EDITORIAL CHANGES	EPI	NTB	FRC	CZH	01/31/2021	E						
A	ORIGINAL ISSUE	-	DG	JS	CZH	05/03/2018	D						

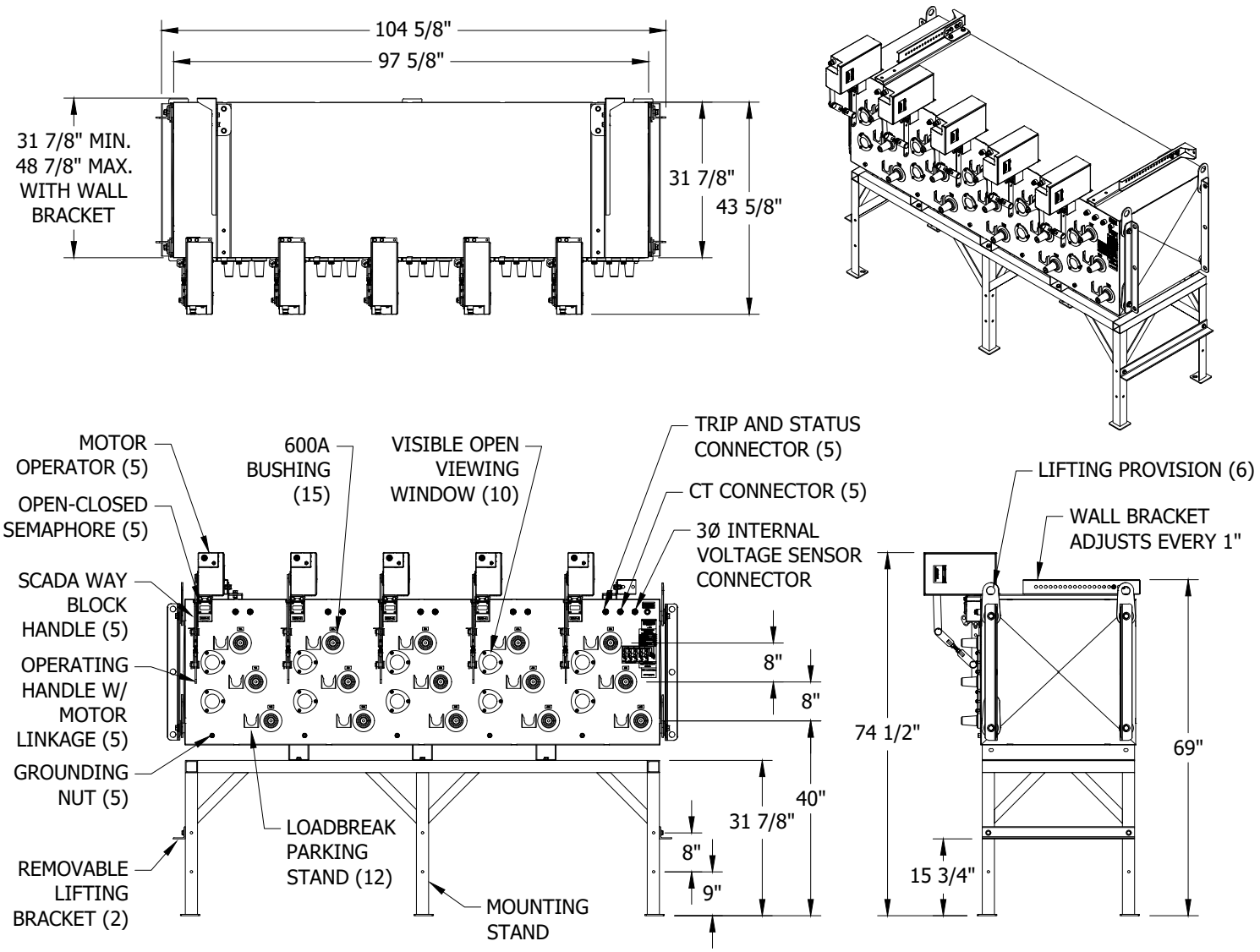

FIGURE 24
FIVE-WAY VAULT MOUNT 600A SCADA 12KV
SEE TABLES 11 AND 12

TABLE 11

FIVE-WAY VAULT MOUNT 600A SCADA 12KV APPROX. SYSTEM WEIGHTS	
DESCRIPTION	**WEIGHT (LBS)**
SWITCH TANK	1,750
STAND AND BRACKETS	240
MOTOR OPERATORS	35 EACH
CONTROL CABINET	500
POTENTIAL TRANSFORMERS	130 EACH

TABLE 12

VOLTAGE RATING	
ITEM	**VOLTAGE**
PT	12.47/7.2KV LINE TO GROUND
INTERNAL VS	
EXTERNAL VS	

© 1998 - 2021 San Diego Gas & Electric Company. All rights reserved. Removal of this copyright notice without permission is not permitted under law.

REV	CHANGE	DR	BY	DSN	APV	DATE	REV	CHANGE	DR	BY	DSN	APV	DATE
C	FORMATTING	EDM	JIK	-	-	12/28/2021	F						
B	EDITORIAL CHANGES	EPI	NTB	FRC	CZH	01/31/2021	E						
A	ORIGINAL ISSUE	-	DG	JS	CZH	05/03/2018	D						

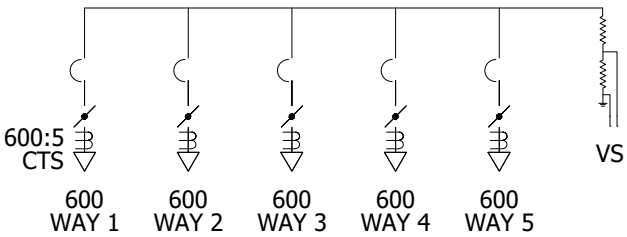

FIGURE 25
FIVE-WAY VAULT MOUNT 600A SCADA 12KV
CONNECTION DIAGRAM

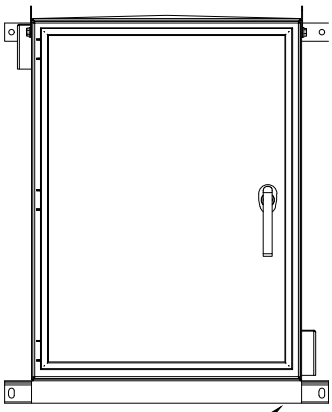

CONTROL CABINET WITH WALL
MOUNTING PROVISION (2)

FIGURE 26
FIVE-WAY VAULT MOUNT 600A SCADA 12KV
SEE TABLES 13 AND 14

TABLE 13

FIVE-WAY VAULT MOUNT 600A SCADA 12KV APPROX. SYSTEM WEIGHTS	
DESCRIPTION	**WEIGHT (LBS)**
SWITCH TANK	1,420
STAND AND BRACKETS	195
MOTOR OPERATORS	35 EACH
CONTROL CABINET	500
POTENTIAL TRANSFORMERS	130 EACH

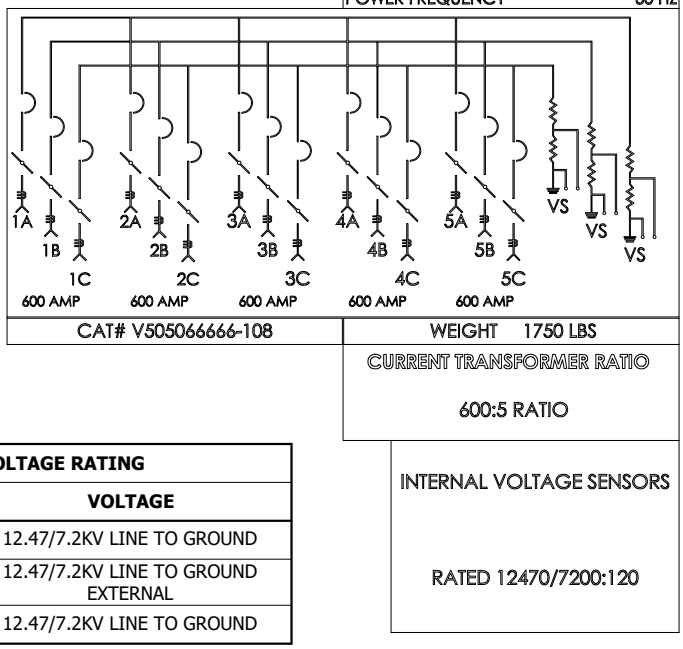

TABLE 14

VOLTAGE RATING	
ITEM	**VOLTAGE**
PT	12.47/7.2KV LINE TO GROUND
INTERNAL VS	12.47/7.2KV LINE TO GROUND EXTERNAL
EXTERNAL VS	12.47/7.2KV LINE TO GROUND

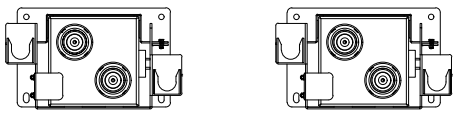

POTENTIAL TRANSFORMER
WITH WALL MOUNTING
PROVISION (2)

FIGURE 27
FIVE-WAY VAULT MOUNT 600A SCADA 12KV
SEE TABLES 13 AND 14

FIGURE 28
FOUR-WAY VAULT MOUNT 600A SCADA 12KV
SEE TABLES 13 AND 14

© 1998 - 2021 San Diego Gas & Electric Company. All rights reserved. Removal of this copyright notice without permission is not permitted under law.

REV	CHANGE	DR	BY	DSN	APV	DATE	REV	CHANGE	DR	BY	DSN	APV	DATE
C	FORMATTING	EDM	JIK	-	-	12/28/2021	F						
B	EDITORIAL CHANGES	EPI	NTB	FRC	CZH	01/31/2021	E						
A	ORIGINAL ISSUE	-	DG	JS	CZH	05/03/2018	D						

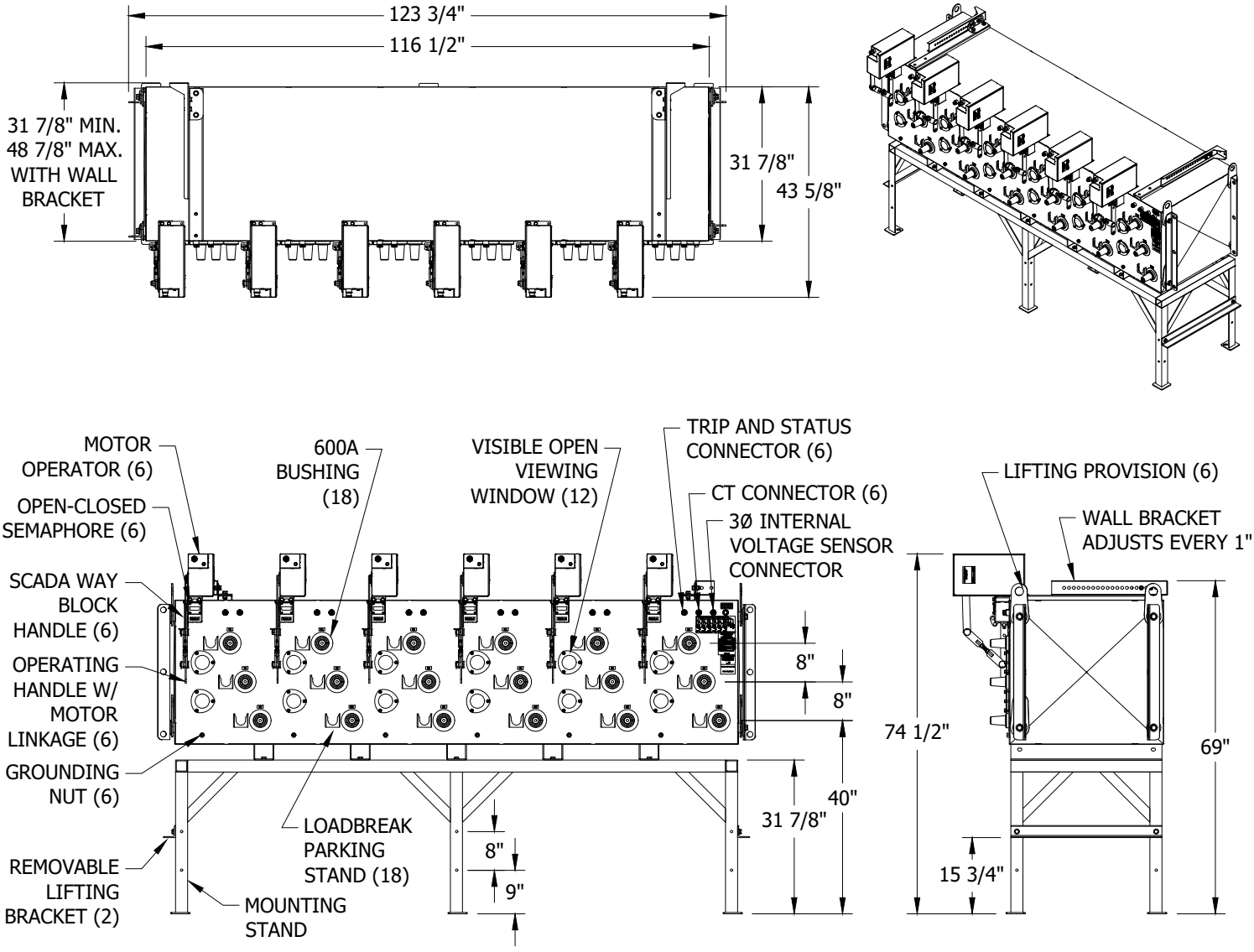

FIGURE 29
SIX-WAY VAULT MOUNT 600A SCADA 12KV
SEE TABLES 15 AND 16

TABLE 15

SIX-WAY VAULT MOUNT 600A SCADA 12KV APPROX. SYSTEM WEIGHTS	
DESCRIPTION	**WEIGHT (LBS)**
SWITCH TANK	2,040
STAND AND BRACKETS	325
MOTOR OPERATORS	35 EACH
AUTOMATION CONTROL CABINET	500
POTENTIAL TRANSFORMERS WITH CRADLE	145 EACH

TABLE 16

VOLTAGE RATING	
ITEM	**VOLTAGE**
PT	12.47/7.2KV LINE TO GROUND
INTERNAL VS	
EXTERNAL VS	

© 1998 - 2021 San Diego Gas & Electric Company. All rights reserved. Removal of this copyright notice without permission is not permitted under law.

REV	CHANGE	DR	BY	DSN	APV	DATE	REV	CHANGE	DR	BY	DSN	APV	DATE
C	FORMATTING	EDM	JIK	-	-	12/28/2021	F						
B	EDITORIAL CHANGES	EPI	NTB	FRC	CZH	01/31/2021	E						
A	ORIGINAL ISSUE	-	DG	JS	CZH	05/03/2018	D						

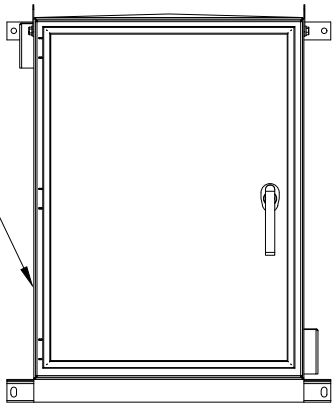

FIGURE 30
SIX-WAY VAULT MOUNT 600A SCADA 12KV

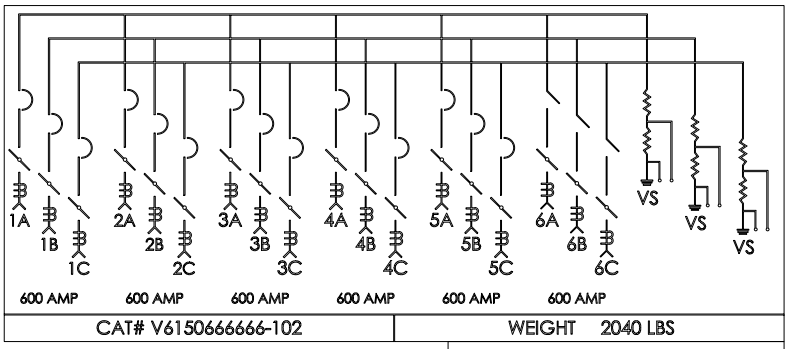

CAT# V6150666666-102	WEIGHT 2040 LBS

INNOVATIVE SWITCHGEAR SOLUTIONS INC.™
FAULT INTERRUPTER/SWITCH
PATENT PENDING

MAXIMUM VOLTAGE	15.5 KV
CONTINUOUS CURRENT	600 AMPS
INTERRUPTING CURRENT (SYM.)	12.5 KA
INTERRUPTING CURRENT (ASYM.)	20.0 KA
PEAK CURRENT	32.5 KA
FAULT CLOSE (SYM.)	12.5 KA
IMPULSE WITHSTAND VOLTAGE	95 BIL
POWER FREQUENCY	60 HZ

CURRENT TRANSFORMER RATIO

600:5 RATIO

INNOVATIVE SWITCHGEAR SOLUTIONS, INC

ISGYYXXXX

____/20YY

INTERNAL VOLTAGE SENSORS

RATED 12470/7200:120

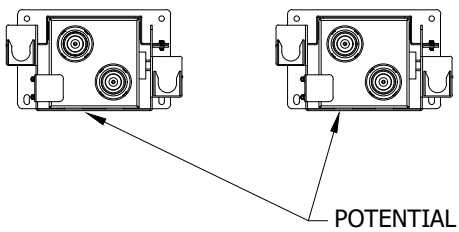

FIGURE 31
SIX-WAY VAULT MOUNT 600A SCADA 12KV

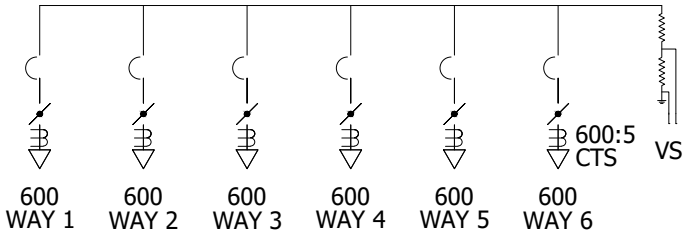

FIGURE 32
SIX-WAY VAULT MOUNT 600A SCADA 12KV
CONNECTION DIAGRAM
SEE TABLES 15 AND 16

FIGURE 33
SIX-WAY VAULT MOUNT 600A SCADA 12KV
SEE TABLES 15 AND 16

© 1998 - 2021 San Diego Gas & Electric Company. All rights reserved. Removal of this copyright notice without permission is not permitted under law.

REV	CHANGE	DR	BY	DSN	APV	DATE	REV	CHANGE	DR	BY	DSN	APV	DATE
C	FORMATTING	EDM	JIK	-	-	12/28/2021	F						
B	EDITORIAL CHANGES	EPI	NTB	FRC	CZH	01/31/2021	E						
A	ORIGINAL ISSUE	-	DG	JS	CZH	05/03/2018	D						

X Indicates Latest Revision | Completely Revised | New Page | Information Removed

ATTENTION:

* CURRENTLY UNDER EVALUATION, DO NOT USE WITHOUT APPROVAL FROM EDE.

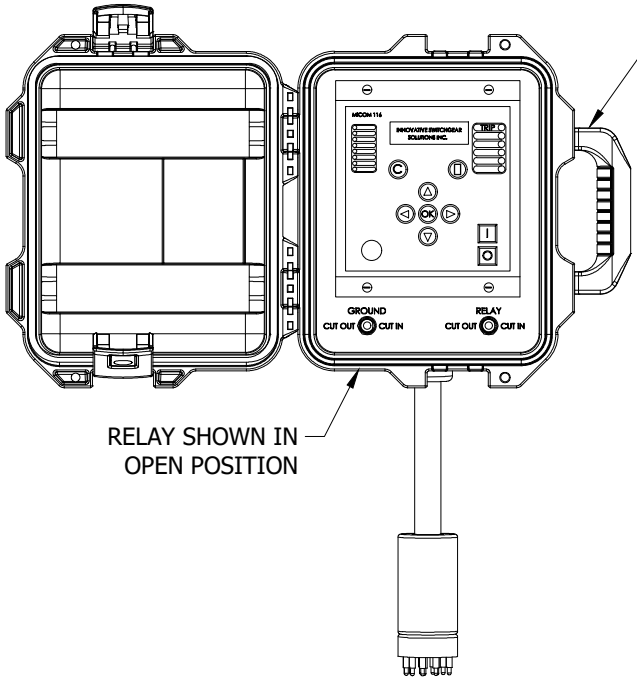

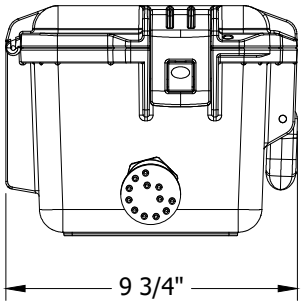

FIGURE 34
SCHNEIDER P116 5A RELAY

© 1998 - 2021 San Diego Gas & Electric Company. All rights reserved. Removal of this copyright notice without permission is not permitted under law.

REV	CHANGE	DR	BY	DSN	APV	DATE	REV	CHANGE	DR	BY	DSN	APV	DATE
C	FORMATTING	EDM	JIK	-	-	12/28/2021	F						
B	EDITORIAL CHANGES	EPI	NTB	FRC	CZH	01/31/2021	E						
A	ORIGINAL ISSUE	-	DG	JS	CZH	05/03/2018	D						

INSTALLATION:

PAD APPLICATIONS USED AS REFERENCE UNTIL UNITS ARE INSTALLED.

(A) FOR SINGLE PADMOUNT APPLICATIONS, THE SWITCH TANK IS SHIPPED INSIDE THE ENCLOSURE ON ITS BACK WITH THE BUSHINGS FACING UP. THE SWITCH STAND AND ANY OPTIONAL ITEMS TO COMPLETE THE PACKAGE WILL BE SHIPPED INSIDE THE PADMOUNT ENCLOSURE. SEE FIGURE 35.



FIGURE 35 (A)

(B) FOR INTERNAL AND TWO EXTERNAL BOLTS SECURE THE ENCLOSURE TO THE PALLET. REMOVE THESE BOLTS TO LIFT THE ENCLOSURE FROM THE PALLET. THE DOORS MAY BE OPENED OR REMOVED TO HELP GUIDE THE ENCLOSURE OVER THE EQUIPMENT. SEE FIGURE 36 AND 37.



FIGURE 36 (B)



FIGURE 37 (B)

© 1998 - 2021 San Diego Gas & Electric Company. All rights reserved. Removal of this copyright notice without permission is not permitted under law.

REV	CHANGE	DR	BY	DSN	APV	DATE	REV	CHANGE	DR	BY	DSN	APV	DATE
C	FORMATTING	EDM	JIK	-	-	12/28/2021	F						
B	EDITORIAL CHANGES	EPI	NTB	FRC	CZH	01/31/2021	E						
A	ORIGINAL ISSUE	-	DG	JS	CZH	05/03/2018	D						

INSTALLATION (CONT'D):

(C) THREE LIFTING PROVISIONS ARE PROVIDED ON BOTH ENDS OF THE SWITCH TANK. THESE LIFTING PROVISIONS ROTATE 360 DEGREES. SEE FIGURE 38 AND 39.



FIGURE 38 (C)



FIGURE 39 (C)

(D) MOTOR OPERATOR LINKAGE REQUIRES 20 INCHES OF SPACE IN THE OPEN POSITION TO NOT IMPACT THE PADMOUNT ENCLOSURE DOORS. LEAVE 21 1/2 INCHES FROM THE FACE OF THE SWITCH TO THE PADMOUNT ENCLOSURE DOORS. SEE FIGURE 40.

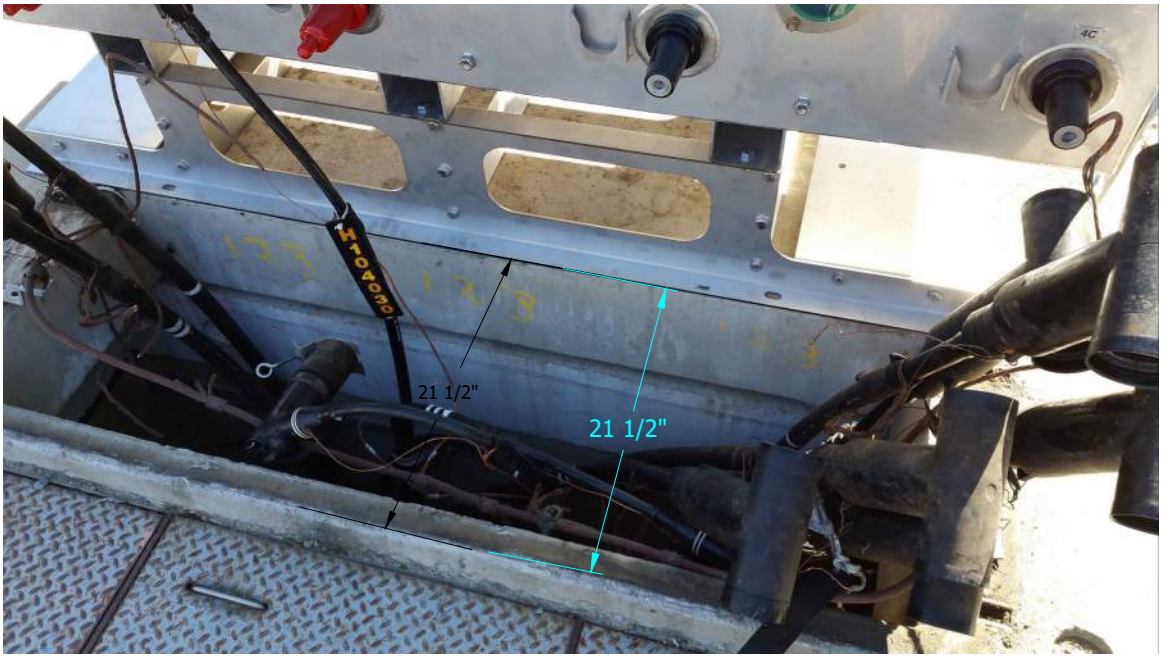

FIGURE 40 (D)

© 1998 - 2021 San Diego Gas & Electric Company. All rights reserved. Removal of this copyright notice without permission is not permitted under law.

REV	CHANGE	DR	BY	DSN	APV	DATE	REV	CHANGE	DR	BY	DSN	APV	DATE
C	FORMATTING	EDM	JIK	-	-	12/28/2021	F						
B	EDITORIAL CHANGES	EPI	NTB	FRC	CZH	01/31/2021	E						
A	ORIGINAL ISSUE	-	DG	JS	CZH	05/03/2018	D						

INSTALLATION (CONT'D):

(E) MOTOR OPERATORS AND LINKAGES ARE MATED TO THE SWITCH AND IDENTIFIED AT THE MANUFACTURING PLANT. MOUNT MOTOR OPERATORS WITH CORRESPONDING WAYS AFTER THE CABLE HAS BEEN LANDED AND PRIOR TO MOUNTING THE ENCLOSURE. SEE FIGURE 41 AND 42.

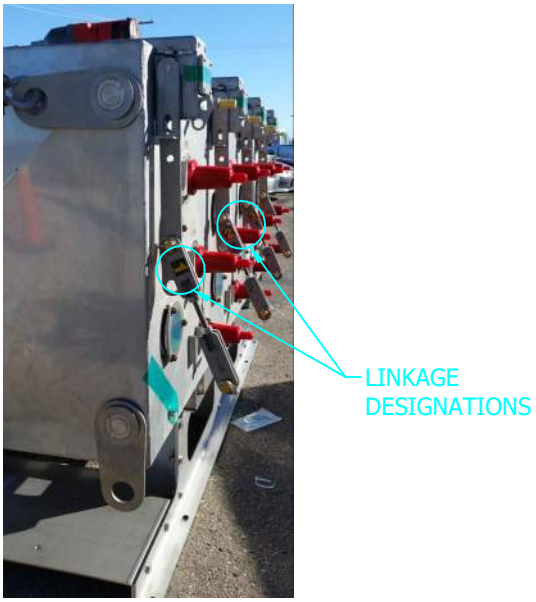

FIGURE 41 (E)

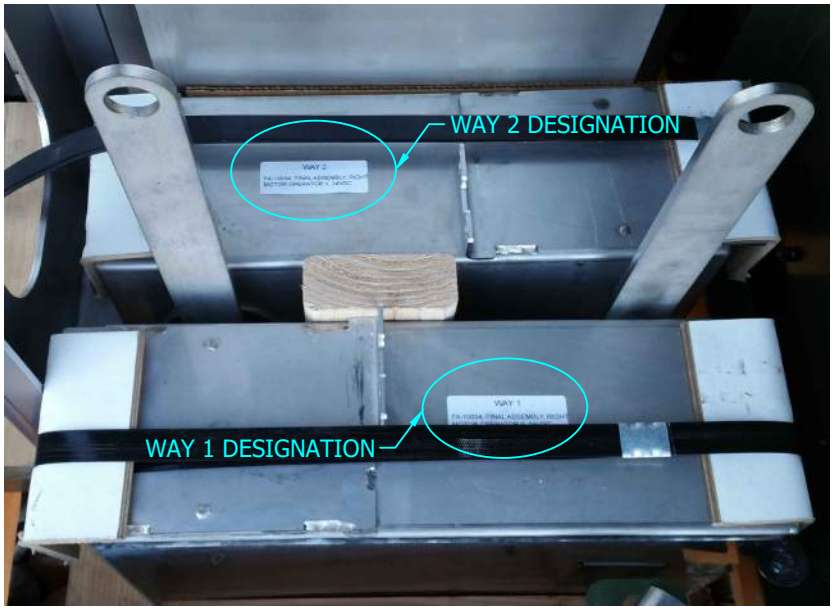

FIGURE 42 (E)

F. INNOVATIVE SWITCHGEAR HAS A UNIQUE FEATURE ALLOWING THE ENCLOSURE TO BE REMOVED WHILE THE SWITCH REMAINS INTACT. THIS WILL BETTER FACILITATE IN WIRE PULLING AND SWITCH MAKE-UP. SWITCH STAND AND ENCLOSURE MUST BE SECURED TO THE PAD AND GROUNDED INDIVIDUALLY.

(G) ON NON-SCADA UNITS, ONCE THE ENCLOSURE IS SECURE, ATTACH THE CABLES FROM THE JUNCTION BOX TO THE MOTOR OPERATORS. EACH CABLE IS DESIGNATED AND MARKED WITH A WAY POSITION. SEE FIGURE 43.



FIGURE 43 (G)

© 1998 - 2021 San Diego Gas & Electric Company. All rights reserved. Removal of this copyright notice without permission is not permitted under law.

REV	CHANGE	DR	BY	DSN	APV	DATE	REV	CHANGE	DR	BY	DSN	APV	DATE
C	FORMATTING	EDM	JIK	-	-	12/28/2021	F						
B	EDITORIAL CHANGES	EPI	NTB	FRC	CZH	01/31/2021	E						
A	ORIGINAL ISSUE	-	DG	JS	CZH	05/03/2018	D						

INSTALLATION (CONT'D):

(H) THE POLYCARBONATE VIEWING WINDOWS FOR THE CLOSED/OPEN VACUUM CONTACT SEMAPHORE ARE COVERED AT THE FACTORY WITH GREEN ULTRAVIOLET PROTECTIVE TAPE. REMOVE THE TAPE UPON COMPLETION OF INSTALLATION. IF THE TAPE IS INADVERTENTLY REMOVED PRIOR TO INSTALLATION, PLEASE COVER THE LENSES OR APPLY ULTRAVIOLET PROTECTIVE TAPE TO KEEP THE WINDOWS FROM YELLOWING. SEE FIGURE 44.



FIGURE 44 (H)

J. THE ONE OPERATING HANDLE OPENS THE VACUUM INTERRUPTS FIRST SO THAT THE ELECTRICAL INTERRUPTION IS ALWAYS PERFORMED WITHIN THE VACUUM INTERRUPTS AND THE THE VISIBLE OPEN ISOLATION POINT (VOIP) SWITCH OPENS.

© 1998 - 2021 San Diego Gas & Electric Company. All rights reserved. Removal of this copyright notice without permission is not permitted under law.

REV	CHANGE	DR	BY	DSN	APV	DATE	REV	CHANGE	DR	BY	DSN	APV	DATE
C	FORMATTING	EDM	JIK	-	-	12/28/2021	F						
B	EDITORIAL CHANGES	EPI	NTB	FRC	CZH	01/31/2021	E						
A	ORIGINAL ISSUE	-	DG	JS	CZH	05/03/2018	D						

INSTALLATION (CONT'D):

K. FOR VIEW OF THE CONTACTS:

(1) FOR SINGLE SIDE PADMOUNT, VAULT MOUNT, AND SUBMERSIBLE, THE VIEW OF THE OPEN CONTACTS IS FROM THE TOP OF THE MECHANISM. SEE FIGURES 45 AND 46 BELOW.

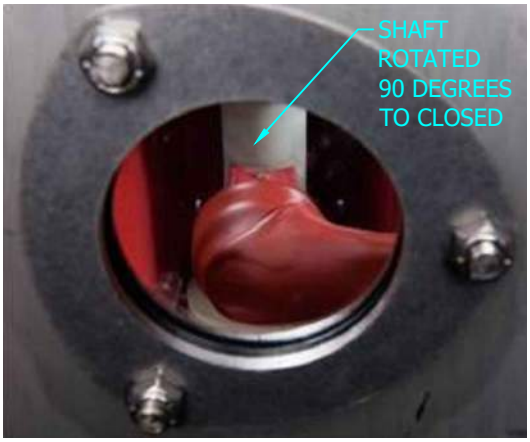

FIGURE 45
VISIBLE OPEN SHAFT (K1)
"CLOSED"

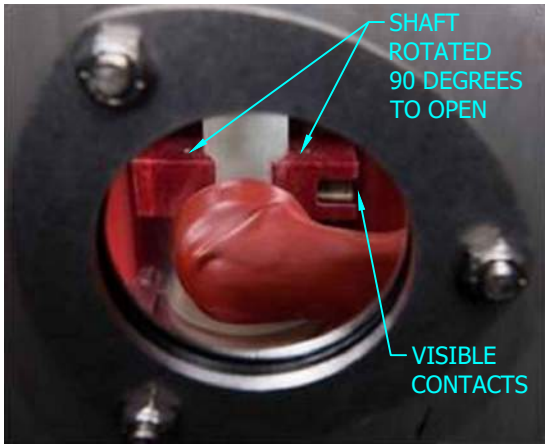

FIGURE 46
VISIBLE OPEN SHAFT "OPEN", (K1)
ISOLATED AND VISIBLE

(2) FOR DOUBLE SIDE PADMOUNT APPLICATIONS, THE VIEW OF THE OPEN CONTACTS IS FROM THE SIDE OF THE MECHANISM, SEE FIGURES 47 AND 48.



FIGURE 47
VISIBLE OPEN SHAFT (K2)
"OPEN"



FIGURE 48
VISIBLE CLOSED SHAFT (K2)
"CLOSED"

© 1998 - 2021 San Diego Gas & Electric Company. All rights reserved. Removal of this copyright notice without permission is not permitted under law.

REV	CHANGE	DR	BY	DSN	APV	DATE	REV	CHANGE	DR	BY	DSN	APV	DATE
C	FORMATTING	EDM	JIK	-	-	12/28/2021	F						
B	EDITORIAL CHANGES	EPI	NTB	FRC	CZH	01/31/2021	E						
A	ORIGINAL ISSUE	-	DG	JS	CZH	05/03/2018	D						

X Indicates Latest Revision | Completely Revised | New Page | Information Removed

INSTALLATION (CONT'D):

(L) PENDANT CONTROLLERS ARE PROVIDED TO POWER AND CONTROL ALL THE MOTOR OPERATORS FROM OUTSIDE THE ENCLOSURE. THESE PORTABLE CONTROLLERS ARE DESIGNED TO PROVIDE FIELD PERSONNEL THE ABILITY TO PLUG INTO A JUNCTION BOX TO DETERMINE STATUS OF ALL THE MOTORS AND TO CONTROL MULTIPLE MOTOR OPERATORS LOCALLY WITH EXTERNAL 120V AC POWER PLUGGED INTO THE PENDANT CONTROL. SEE FIGURE 49.

CAUTION:

* THE "CONTROL HEALTHY" LIGHT WILL ONLY LIGHT WHEN THE TOGGLE SWITCH IS TURNED ON AND WHEN CONNECTED TO A "PURE SINCE WAVE" SOURCE OF 120V AC POWER. SQUARE SINE WAVE OR MODIFIED SINE WAVE INVERTERS WILL NOT POWER THIS DEVICE AND MAY DAMAGE THE CONTROL.



FIGURE 49 (L)

(M) PENDANT CONTROLLER MUST BE CONNECTED TO THE JUNCTION BOX PICTURED BELOW TO OPERATE MOTOR OPERATORS. JUNCTION BOX CONNECTIONS ARE SEVEN-PIN AND 12-PIN, SO THEY CANNOT BE INSTALLED INCORRECTLY. SEE FIGURE 50.

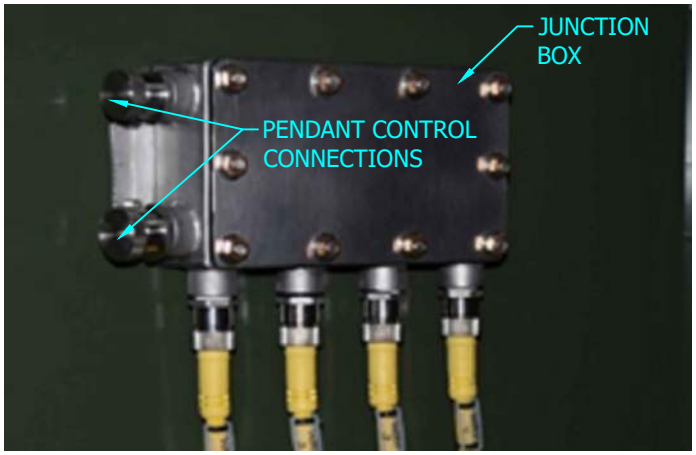

FIGURE 50 (M)

© 1998 - 2021 San Diego Gas & Electric Company. All rights reserved. Removal of this copyright notice without permission is not permitted under law.

REV	CHANGE	DR	BY	DSN	APV	DATE	REV	CHANGE	DR	BY	DSN	APV	DATE
C	FORMATTING	EDM	JIK	-	-	12/28/2021	F						
B	EDITORIAL CHANGES	EPI	NTB	FRC	CZH	01/31/2021	E						
A	ORIGINAL ISSUE	-	DG	JS	CZH	05/03/2018	D						

INSTALLATION (CONT'D):

N. WITH THE ABILITY TO REMOTELY OPERATE THE MOTOR OPERATIONS ON THE SWITCH. THE ACTUATOR ARMS SHALL NOT BE LOCKED.

SCADA UNITS

O. ALL SOURCE AND TIE POSITIONS SHALL BE PHASE IDENTIFIED WITH THE AP30. THE SWITCH SHALL BE MARKED FOR "A", "B" AND "C" PHASES.

(P) THERE ARE TWO REDUNDANT POTENTIAL TRANSFORMERS (PTS) THAT ARE CONNECTED PHASE TO GROUND. PTS TO BE CONNECT ON THE SOURCE SIDE AND TIE POSITION OF THE SWITCH (IF NO TIE EXISTS ON SWITCH, CHOOSE POSITION WITH DOWNSTREAM TIE SWITCH). IF APPLICABLE, ON THE CENTER PHASE POSITION. PHASE CONNECTION TO THE P.T. IS TO BE MADE WITH A FUSED ELBOW AS THE P.T. DOES NOT HAVE ITS OWN PROTECTION. GROUND ELBOW TO BE STRIPPED AND CONNECTED TO A COPPER TAIL AND THEN HARD TAPPED TO THE GROUND RING BUS. SEE FIGURE 51 AND 52.



FIGURE 51 (P)



FIGURE 52 (P)

(Q) WHEN INSTALLING THE PTS, WE MUST BOND ALL OF THE BASE PLATES OF H2 AND H1 TO GROUND SOURCE/RING BUS. FAILURE TO DO SO WILL RESULT IN THE RING BUS HAVING HIGH VOLTAGE CAPABILITY AND COULD RESULT IN UNFAVORABLE CONSEQUENCES.



FIGURE 53 (Q)



FIGURE 54 (Q)



FIGURE 55 (Q)

© 1998 - 2021 San Diego Gas & Electric Company. All rights reserved. Removal of this copyright notice without permission is not permitted under law.

REV	CHANGE	DR	BY	DSN	APV	DATE	REV	CHANGE	DR	BY	DSN	APV	DATE
C	FORMATTING	EDM	JIK	-	-	12/28/2021	F						
B	EDITORIAL CHANGES	EPI	NTB	FRC	CZH	01/31/2021	E						
A	ORIGINAL ISSUE	-	DG	JS	CZH	05/03/2018	D						

INSTALLATION (CONT'D):

ATTENTION:

* VOLTAGE SENSORS ARE TO BE GROUNDED PRIOR TO ENERGIZING.

(R) VOLTAGE SENSOR ARE TO BE CONNECTED TO THE TIE POSITION OF THE SWITCH. IF APPLICABLE USING A FEED THRU DEVICE ON THE P.T. WILL ALLOW FOR THE VOLTAGE SENSOR AND P.T. TO BE CONNECTED TO THE SAME SWITCH POSITION. SEE FIGURE 56.

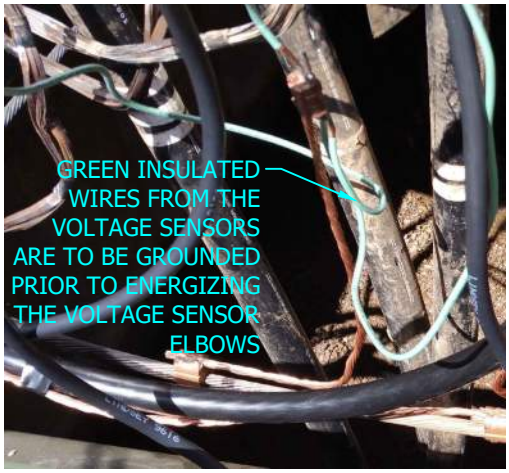

FIGURE 56 (R)

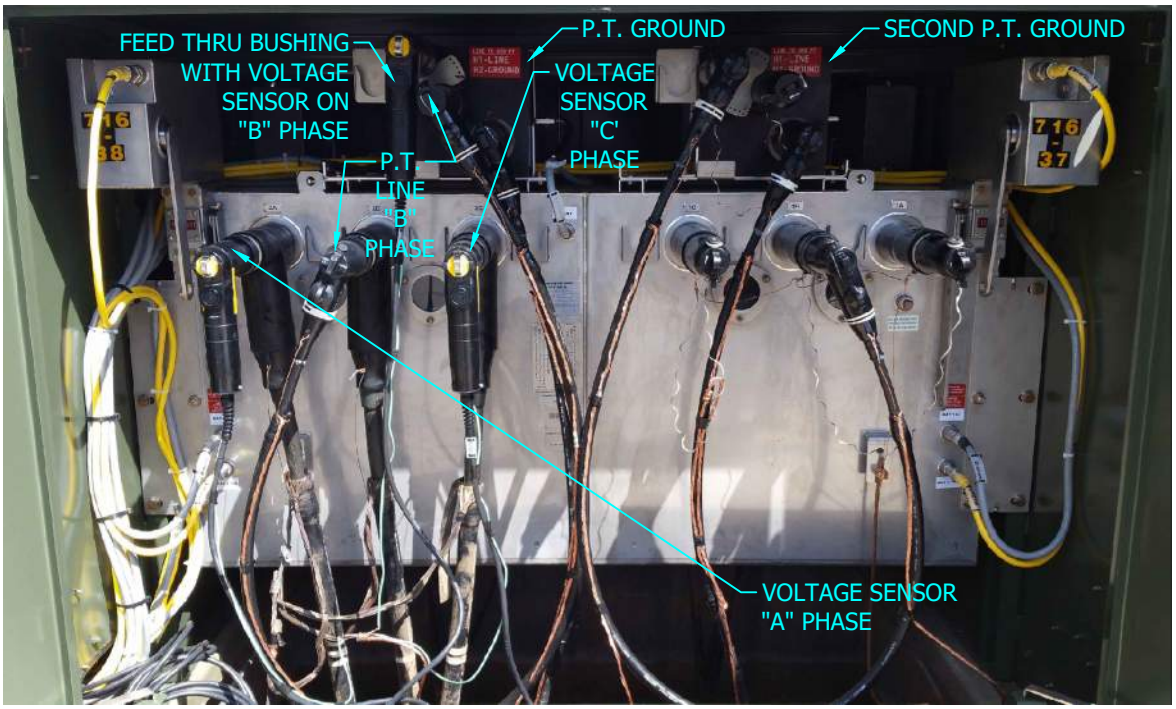

FIGURE 57 (R)

© 1998 - 2021 San Diego Gas & Electric Company. All rights reserved. Removal of this copyright notice without permission is not permitted under law.

REV	CHANGE	DR	BY	DSN	APV	DATE	REV	CHANGE	DR	BY	DSN	APV	DATE
C	FORMATTING	EDM	JIK	-	-	12/28/2021	F						
B	EDITORIAL CHANGES	EPI	NTB	FRC	CZH	01/31/2021	E						
A	ORIGINAL ISSUE	-	DG	JS	CZH	05/03/2018	D						

INSTALLATION (CONT'D):

(S) PRIOR TO ENERGIZING, CHECK TO MAKE SURE MOTOR OPERATOR ACTUATOR ARMS CAN FUNCTION UNOBSTRUCTED. P.T. ELBOWS SHALL BE PLACED ON THE CENTER PHASE POSITION OF THE SWITCH. FAULT INDICATORS SHALL BE POSITIONED AWAY FROM THE TRAVEL OF THE MOTOR OPERATOR ACTUATOR ARMS. SEE FIGURE 58 AND 59.



P.T. ELBOW SHALL BE PLACED ON THE CENTER PHASE TO ALLOW THE MOTOR ACTUATOR THE NECESSARY CLEARANCE TO OPERATE

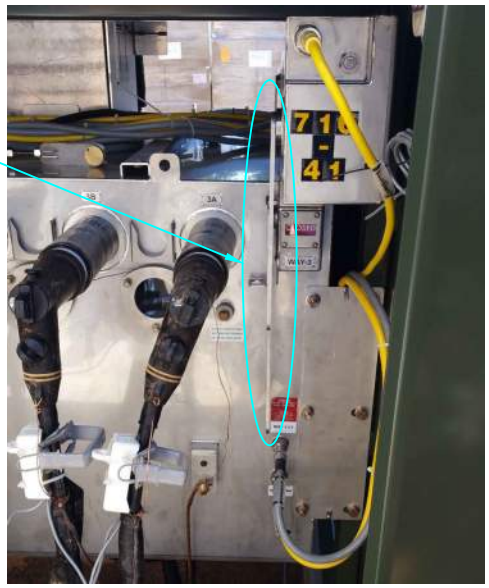

FIGURE 58 (S)

FIGURE 59 (S)

PADMOUNT OPTIONS

(T) SET THE SWITCH ON THE BOX PAD. USING A 1/2-INCH DRILL BIT, DRILL THROUGH THE EXISTING HOLES IN THE SILL FLANGE AND THROUGH THE BOX PAD. BOLT DOWN AS SHOWN IN HOLD DOWN DETAIL. SEE DETAIL 5.

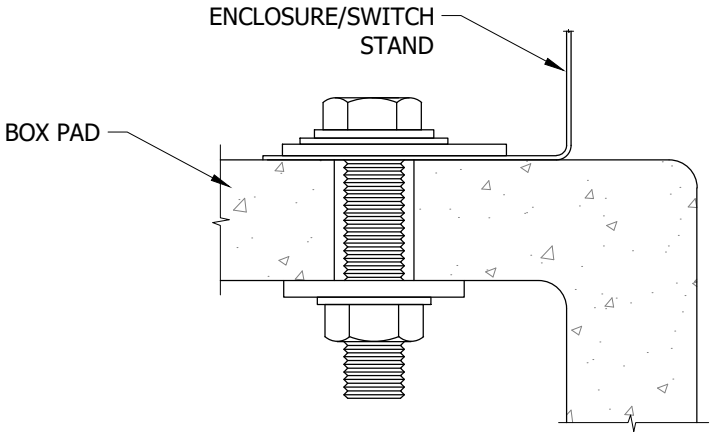

DETAIL 5 (T)
HOLD DOWN DETAILS
(USE STAINLESS STEEL TIE DOWNS PROVIDED)

© 1998 - 2021 San Diego Gas & Electric Company. All rights reserved. Removal of this copyright notice without permission is not permitted under law.

REV	CHANGE	DR	BY	DSN	APV	DATE	REV	CHANGE	DR	BY	DSN	APV	DATE
C	FORMATTING	EDM	JIK	-	-	12/28/2021	F						
B	EDITORIAL CHANGES	EPI	NTB	FRC	CZH	01/31/2021	E						
A	ORIGINAL ISSUE	-	DG	JS	CZH	05/03/2018	D						

BILL OF MATERIALS:

ITEM	DESCRIPTION	QUANTITY	STANDARD PAGE	STOCK NUMBER	DESIGN UNITS
1	TWO-WAY SUBMERSIBLE, 600A MANUAL/NON-SCADA	1	--	S704752	IS2S6M
	THREE-WAY SUBMERSIBLE, 600A MANUAL/NON-SCADA			S704754	IS3S6M
	STAND, THREE-WAY SUBMERSIBLE			S677220	IS3SDM
	FOUR-WAY SUBMERSIBLE, 600A MANUAL/NON-SCADA			S704756	IS4S6M
	FOUR-WAY SUBMERSIBLE, 600A SCADA, 12KV W/ PEDESTAL			S704816	IS4S6S
	STAND, FOUR-WAY SUBMERSIBLE (MANUAL & SCADA)			S677222	IS4SDM
	FOUR-WAY VAULT MOUNT, 600A MANUAL/NON-SCADA			S704758	IS4V6M
	FOUR-WAY VAULT MOUNT, 600A SCADA, 12KV			S709302	IS4V6S
	FIVE-WAY VAULT MOUNT, 600A SCADA, 12KV			S704760	IS5V6S
	SIX-WAY VAULT MOUNT, 600A SCADA, 12KV			S704762	IS6V6S
	SCHNEIDER P116 5A RELAY (WALL-MOUNT)(SEE FIGURE 34)			S588400	SCR5S
2	MANHOLES	AS REQ'D	3325-3327	--	--
	DRY VAULTS	AS REQ'D	--	--	--
	HANDHOLES	AS REQ'D	3314-3317	--	--
3	CABLE, #2 AWG, SOLID 1/C"	AS REQ'D	4003	S197600	--
4	CONNECTIONS, 12KV, 600/200A	AS REQ'D	4181	--	--
5	ELBOW, FUSED, 2 SOLID, 30A (FUSE INCLUDED)	AS REQ'D	4191	S321680	CFE2SL
6	CONNECTOR POST, 1/0	5	--	S262560	--
7	WIRE, 4/0 COPPER	AS REQ'D	4521	S812764	4/0-SD
8	WIRE, #2 COPPER, GROUND TRENCH	1	4510	S812818 (X)	TG-E-W
9	BOLT, EYE, STAINLESS STEEL	AS REQ'D	--	S150528	--
10	CONNECTOR, SERVICE POST	AS REQ'D	3711	S262560	SPCONN
11	NUT, CLAMPING CHANNEL	AS REQ'D		S503520	--
12	SCREW, HEX HEAD CAP, BRONZE, 1/2" X 1 1/2"	AS REQ'D		S616192	--
13	WASHER, STANDARD FLAT ROUND, BRONZE, 1/2"	AS REQ'D		S799488	--
14	WASHER, SPRING, LOCK	AS REQ'D		S796416	--
15	BOLT, 3 1/2" X 1/2" STAINLESS STEEL, TIE DOWN	4	--	S148804	--
16	BRACKET, ANGLE, STAINLESS STEEL, 2" X 3"	AS REQ'D	4505	S166072	--
17	ANCHOR, 1/2" X 3 3/4" MOUNTING ON CONCRETE PAD	AS REQ'D	--	S107654	--
18	SEALING COMPOUND	AS REQ'D	3948	S442976	--
19	PADLOCK	AS REQ'D	--	S514848	--
20	SWITCH POSITION TAGGING	--	3215	--	--
21	CABLE IDENTIFICATION	AS REQ'D	3202	--	--

© 1998 - 2021 San Diego Gas & Electric Company. All rights reserved. Removal of this copyright notice without permission is not permitted under law.

REV	CHANGE	DR	BY	DSN	APV	DATE	REV	CHANGE	DR	BY	DSN	APV	DATE
C	FORMATTING	EDM	JIK	-	-	12/28/2021	F						
B	EDITORIAL CHANGES	EPI	NTB	FRC	CZH	01/31/2021	E						
A	ORIGINAL ISSUE	-	DG	JS	CZH	05/03/2018	D						

X Indicates Latest Revision | Completely Revised | New Page | Information Removed

NOTES:

I. WHEN REPLACING EXISTING SWITCHES, THE TIE POSITIONS ARE ESTABLISHED AND CONNECTED AS DESIGNED TO AVOID MAJOR RE-CABLING, CONNECT AS-BUILT. NEW INSTALLATIONS WILL FOLLOW THE DESIGN MANUAL.

II. INNOVATIVE SWITCHGEAR'S PRODUCTS DO NOT CONTAIN ANY OIL OR SF6 GAS FOR THE ELECTRICAL ARC INTERRUPTION OR FOR COMPONENT INSULATION. INNOVATIVE SWITCHGEAR CONTAINS ONLY MECHANISMS, INSULATED BUS WORK AND DRY AIR. DO NOT REMOVE THE PRESSURE TEST PLUG ON THIS VESSEL. EACH UNIT HAS BEEN PRESSURE TESTED AND PERMANENTLY FACTORY SEALED. THE SWITCH TANK IS FILLED WITH THREE TO FIVE POUNDS OF DRY AIR TO KEEP THE STRUCTURAL INTEGRITY OF THE TANK AT SEA LEVEL.

III. THE USE OF FUSED ELBOWS WILL BE FOR THE ADDITION OF POTENTIAL TRANSFORMERS FOR SCADA APPLICATIONS AND LIMITED TO TWO FUSED ELBOW ONLY ONE PER SWITCH WAY POSITION. NO DEVIATION WILL BE GRANTED FOR MORE THAN TWO FUSED ELBOWS IN THE INNOVATIVE SWITCH CABINET. THE 30A FUSED ELBOW (S321680) AND 10 FEET/LENGTH FROM PT TO OPENING OF SUBSTRUCTURE OF #2 CABLE (S197600) WILL BE MADE IN HOUSE BY LINE CREW (OR BY KEARNY AS NECESSARY) TO INSTALL SCADA INSTALLATIONS.

IV. TAPPING THE BACK OF 600A TEES FOR 200A DISTRIBUTION WILL BE LIMITED TO SWITCH CHANGE OUTS WITH EXISTING 200A TAPS.

V. FOR NEW CONSTRUCTION AND CONVERSIONS THIS INNOVATE SWITCH SHOULD NOT BE USED TO TAP FEEDER CABLES. TAPS ON THE BACK OF 600A TEES IMPEDE GROUNDING AND LIMIT USE OF SWITCH POSITIONS DURING ROUTING SWITCHING PROCEDURES AND OUTAGE SITUATIONS. TAP FEEDER SEGMENTS BETWEEN SWITCH POSITIONS USING 600A TERMINATORS OR TAP THE SWITCH POSITION WITH DISTRIBUTION CABLE ONLY.

VI. ALL ISG MANUAL SWITCHES ARE "SCADA-READY (CAPABLE OF BEING RETROFITTED TO SCADA)" AND POTENTIALLY FAULT INTERRUPTING USING OTHER CONTROLLERS/RELAYS.

VII. ALL MANUAL SWITCHES CAN BE USED ON 12KV AND 4KV APPLICATIONS.

VIII. ISG MANUAL SWITCHES REFER TO MOTORIZED OPERATORS INSTALLED AND CAN BE OPERATED WITH THE LEVER VIA HOOKSTICK. ISG SCADA REFERS TO THE CONTROLLER WITH THE FAULT INTERRUPTING AND COMMUNICATIVE FEATURES TO INCLUDE MOTOR OPERATORS. ISG NON-SCADA REFERS TO MANUAL SWITCHES, BUT CAPABLE OF RETROFITTING WITH NON-COMMUNICATIVE RELAYS/CONTROLLERS.

IX. REGARDING THE 6 WAY ISG SWITCHGEAR; WAYS 1-5 ARE FAULT INTERRUPTING CAPABLE. WAY 6 WILL ONLY BE USED AS A SWITCH OR TIE POSITION.

(X) THIS ITEM IS EXEMPT.

XI. THE 3 AND 4 WAY SUBMERSIBLE SWITCHES CAN BE INSTALLED ON THEIR BACKS SO THAT THE BUSHINGS ARE POINTED VERTICALLY. THE STANDS AVAILABLE ARE OPTIONAL AND ALLOW FOR A HORIZONTALLY MOUNTED SWITCH/BUSHING CONFIGURATION TO BE USED AS NEEDED.

XII. FOR EASE OF OPERATION AND STATUS OF AN ISG SUBMERSIBLE SWITCH, THE PENDANT CONTROLLER IN A MANHOLE SHOULD BE INSTALLED NEAR THE TOP PORTION (ROOF) OF THE MANHOLE.

a. PREFERRED METHOD WILL BE ATTACHED TO THE BOTTOM SIDE OF THE TOP SECTION NEAR THE LID. THIS WILL ALLOW FOR EASY ACCESS TO THE PENDANT CONTROLLER WITHOUT REMOVING THE TOP SECTION AND IF NECESSARY, WAITING FOR FLOODED STRUCTURES TO BE PUMPED.

b. ALTERNATIVE METHOD WILL BE ATTACHED ON THE TOP SIDE OF THE MANHOLE, JUST OUTSIDE OF THE TOP SECTION PORTION. THIS WILL ALLOW FOR ANOTHER METHOD OF EASIER ACCESS TO THE PENDANT CONTROLLER WITHOUT WAITING FOR FLOODED STRUCTURES TO BE PUMPED.

XIII. RESTRICTIONS/LIMITATIONS

a. ALL SUBMERSIBLE SWITCHGEAR WILL BE LIMITED TO MANHOLES CURRENTLY.

b. VAULT MOUNTED SWITCHGEAR ARE LIMITED TO DRY TYPE VAULTS ONLY.

XIV. ALL SWITCH PAGES WITH PARENTHESIS "()" AROUND A NUMBER REFLECT THE QUANTITY OF THE IDENTIFIED EQUIPMENT FROM THE MANUFACTURER. THERE ARE ALSO INTERNAL "BILL OF MATERIALS" WITHIN SOME OF THE SPECIFIC SWITCH TYPES REFERENCING FROM THE MANUFACTURER.

© 1998 - 2021 San Diego Gas & Electric Company. All rights reserved. Removal of this copyright notice without permission is not permitted under law.

REV	CHANGE	DR	BY	DSN	APV	DATE	REV	CHANGE	DR	BY	DSN	APV	DATE
C	FORMATTING	EDM	JIK	-	-	12/28/2021	F						
B	EDITORIAL CHANGES	EPI	NTB	FRC	CZH	01/31/2021	E						
A	ORIGINAL ISSUE	-	DG	JS	CZH	05/03/2018	D						

X Indicates Latest Revision | Completely Revised | New Page | Information Removed

NOTES (CONT'D):

XV. FOR SUBMERSIBLE SWITCHES, DO NOT ASSEMBLE THE STAND TO THE SWITCH UNTIL AFTER INSTALLATION WITHIN THE SUBSTRUCTURE.

XVI. OLDER MANHOLES MAY NOT HAVE THE 4'-0" X 5'-0" OPENING THAT IS INTENDED FOR MOST SUBMERSIBLE APPLICATIONS (4 AND 5-WAY). PLEASE CONTACT EDE CONSTRUCTION STANDARDS ADMINISTRATORS TO DETERMINE MANHOLE TOP SECTION REPLACEMENT.

XVII. FOR SUBMERSIBLE SWITCHES WITHIN SUBSTRUCTURES (MANHOLES AND HANDHOLES), THE PENDANT CONTROLLER SHOULD BE MOUNTED NEAR THE OPENING OF THE SUBSTRUCTURE. LOCKS WILL NOT BE REQUIRED ON SUBMERSIBLE SWITCH POSITIONS SO THAT USE OF THE PENDANT CONTROLLER CAN BE DONE FOR SECTIONALIZING/ISOLATING CAPABILITIES.

REFERENCE:

a. FOR CABLE IDENTIFICATION, SEE UG3202.

b. FOR ATTACHING STRUCTURE/EQUIPMENT IDENTIFICATION TAG, SEE UG3211.

c. FOR HIGH VOLTAGE DECAL, SEE UG3221.

d. FOR WIRE ENTRY PREVENTION, SEE UG3408.

e. FOR BARRIERS IF THE SWITCH IS SUBJECT TO VEHICULAR TRAFFIC, SEE UG3479.

f. FOR MINIMUM OPERATING CLEARANCE REQUIREMENTS, SEE UG3480, UG3481, UG3482, AND UG3483.

g. FOR RETAINING WALL REQUIREMENTS AND CLEARANCES FROM REVERSE SUBGRADE RETAINING WALLS, SEE UG3486, UG3487, AND UG3488.

h. FOR RETAINING WALLS, SEE UG3489.

i. FOR FAULT INDICATOR INSTALLATION, SEE UG4355.

j. FOR (PREFERRED 1) AND (ALTERNATE TRENCH GROUND WIRE), SEE UG4510.

k. FOR EQUIPMENT GROUNDING, SEE UG4520 AND UG4521.

l. FOR GROUNDING PREMOLDED CONNECTORS, SEE UG4525.

m. FOR NEUTRAL AND GROUND WIRE SCHEMATIC DIAGRAM, SEE UG4521.

n. FOR SCADA INSTALLATION, SEE UG4641.

© 1998 - 2021 San Diego Gas & Electric Company. All rights reserved. Removal of this copyright notice without permission is not permitted under law.

REV	CHANGE	DR	BY	DSN	APV	DATE	REV	CHANGE	DR	BY	DSN	APV	DATE
C	FORMATTING	EDM	JIK	-	-	12/28/2021	F						
B	EDITORIAL CHANGES	EPI	NTB	FRC	CZH	01/31/2021	E						
A	ORIGINAL ISSUE	-	DG	JS	CZH	05/03/2018	D						

X Indicates Latest Revision | Completely Revised | New Page | Information Removed

PAGE(S)	SUBJECT
3702.1	TRANSFORMER PREFIXES, VOLTAGE DESCRIPTIONS
3702.2	TRANSFORMER PREFIXES, PAD-MOUNTED, DEAD FRONT/SINGLE-PHASE
3702.3	TRANSFORMER PREFIXES, SUBSURFACE/SINGLE-PHASE
3702.4	STAINLESS STEEL TRANSFORMER PREFIXES, PAD-MOUNTED, DEAD FRONT/THREE-PHASE
3702.5	STAINLESS STEEL TRANSFORMER PREFIXES, PAD-MOUNTED, LIVE FRONT/THREE-PHASE
3703	DISTRIBUTION TRANSFORMER APPLICATIONS
3704	"BAY-O-NET" FUSE OPERATING INSTRUCTIONS FOR THREE-PHASE AND SINGLE-PHASE DEAD FRONT, PAD-MOUNTED TRANSFORMERS
3706	ALLOWABLE LOAD CURRENT SINGLE-PHASE AND THREE-PHASE COMMERCIAL TRANSFORMERS
3706.1	ALLOWABLE LOAD CURRENT SINGLE-PHASE AND THREE-PHASE RESIDENTIAL TRANSFORMERS
3706.2	TRANSFORMER LOADING GUIDE FOR THREE-PHASE STATIONS WITH SINGLE-PHASE TRANSFORMERS
3708	SINGLE-PHASE, TYPE "XD", 480V TO 120V, WALL MOUNTED TRANSFORMER INSTALLATION
3709	SINGLE-PHASE TYPE "N" 6930 TO 120V 1.5 KVA
3711.1 & .2	SINGLE-PHASE, 6930 VOLT, TYPE "SDS", LOW PROFILE PAD-MOUNTED TRANSFORMER INSTALLATION
3711.3 & .4	SINGLE-PHASE, 6930 VOLT, TYPE "NTS" LOW PROFILE PAD-MOUNTED TRANSFORMER INSTALLATION
3712	SINGLE-PHASE, 12KV, TYPE "HDS", "HTS" OR "HJS" DEAD FRONT, PAD-MOUNTED TRANSFORMER INSTALLATION
3713	2 SINGLE-PHASE, TYPE "HDS" OR "HTS" DEAD FRONT, PAD-MOUNTED TRANSFORMERS FOR OPEN DELTA BANK INSTALLATION
3714	3 SINGLE-PHASE, TYPE "HDS" OR "HTS", DEAD FRONT PAD-MOUNTED TRANSFORMERS FOR CLOSED DELTA BANK INSTALLATION
3715	TWO SINGLE-PHASE, Y TYPE SDS DEAD FRONT PAD-MOUNT TRANSFORMERS FOR OPEN DELTA BANK INSTALLATION THREE SINGLE-PHASE, Y TYPE SDS DEAD FRONT PAD-MOUNT TRANSFORMERS FOR CLOSED DELTA BANK INSTALLATION
3751	THREE-PHASE 12KV, TYPE "HZS", "HBS", "PZS", "HMS", "HNS", OR "HKS" RADIAL/LOOP, DEAD FRONT, PAD-MOUNTED TRANSFORMER INSTALLATION
3752	THREE-PHASE, 12KV, TYPE "HNS" RADIAL, DEAD FRONT PAD-MOUNTED TRANSFORMER INSTALLATION
3753	THREE-PHASE STEP-DOWN TYPE "HPS", RADIAL DEAD FRONT PAD-MOUNTED TRANSFORMER INSTALLATION
3755	THREE-PHASE STEP-DOWN, TYPE "HPB", RADIAL/LOOP, DEAD FRONT, PAD-MOUNTED TRANSFORMER INSTALLATION
3756	THREE-PHASE 12KV, TYPE "HYS" RADIAL, DEAD FRONT, PAD-MOUNTED TRANSFORMER INSTALLATION
3757	THREE-PHASE 12KV, TYPE 75KVA "HBSC" COMPACT RADIAL, DEAD FRONT, PAD MOUNTED TRANSFORMER INSTALLATION
3760	GROUND FAULT DETECTION TRANSFORMER (NGD)
3770	SINGLE-PHASE, 6930 VOLT, TYPE "NCS" PAD-MOUNTED TRANSFORMER INSTALLATION
3771	SINGLE-PHASE, 12000 VOLT, TYPE "HCS" PAD-MOUNTED TRANSFORMER INSTALLATION

MAIN TABLE OF CONTENTS

© 1998 - 2020 San Diego Gas & Electric Company. All rights reserved. Removal of this copyright notice without permission is not permitted under law.

REV	CHANGE	DR	BY	DSN	APV	DATE	REV	CHANGE	DR	BY	DSN	APV	DATE
C	ADDITION OF 3757	-	KR	JS	MDJ	03/31/2017	F	EDITORIAL CHANGES	PEI	VMV	FRC	CZH	08/27/2020
B	ADDITION OF 3756	-	KR	JS	MDJ	03/13/2017	E	EDITORIAL CHANGES	-	JK	JS	CZH	05/18/2018
A	ORIGINAL ISSUE	-	JS	TR	MDJ	06/10/2016	D	ADDITION OF 3702.1	-	KR	JS	MDJ	10/27/2017

Indicates Latest Revision | Completely Revised | New Page X | Information Removed

SDG&E ELECTRIC UNDERGROUND CONSTRUCTION STANDARDS

TRANSFORMERS
TABLE OF CONTENTS

UG3701.1

SCOPE: THIS STANDARD IDENTIFIES SINGLE-PHASE AND THREE-PHASE TRANSFORMERS BY PREFIX.

ATTENTION:

* DATA ON THIS PAGE WAS PREPARED TO AID IN UNDERSTANDING THE VOLTAGE RATINGS USED IN THE FOLLOWING "TRANSFORMER PREFIXES" STANDARDS PAGES.

DEFINITIONS:

SINGLE PHASE AND THREE PHASE TRANSFORMERS HAVE HIGH VOLTAGE RATINGS AS FOLLOWS:

- **4160GRDY/2400:** INDICATES A WINDING OF 2,400V SUITABLE FOR LINE-TO-LINE CONNECTION ON A 2,400V SYSTEM OR LINE-TO-NEUTRAL CONNECTION ON A 4,160V 4-WIRE WYE SYSTEM.
- **12000GRDY/6930:** INDICATES A WINDING OF 6,930V SUITABLE FOR LINE-TO-NEUTRAL CONNECTION ONLY ON A 12KV EFFECTIVELY GROUNDED SYSTEM.
- **2400:** INDICATES A WINDING OF 2,400V SUITABLE FOR LINE-TO-LINE CONNECTION ON A 2,400V DELTA SYSTEM.
- **4160:** INDICATES A WINDING OF 4,160V SUITABLE FOR A LINE-TO-LINE CONNECTION ON A 4,160V WYE SYSTEM.
- **12000:** INDICATES A WINDING OF 12KV SUITABLE FOR A LINE-TO-LINE CONNECTION ON A 12KV DELTA SYSTEM.

SINGLE PHASE TRANSFORMERS HAVE LOW VOLTAGE RATINGS AS FOLLOWS:

- **120/240:** INDICATES A SECONDARY WINDING SUITABLE FOR 240V SERIES OPERATION, THREE-WIRE OPERATION OR FOR 120V TWO-WIRE, MULTIPLE OPERATION.
- **480/240:** INDICATES A SECONDARY WINDING SUITABLE FOR 480V SERIES OPERATION, THREE-WIRE OPERATION, BUT NOT FOR 240V TWO-WIRE, MULTIPLE OPERATION.
- **240/120:** INDICATES A SECONDARY WINDING SUITABLE FOR 240V SERIES OPERATION OR THREE-WIRE OPERATION, BUT NOT FOR 120V TWO-WIRE, MULTIPLE OPERATION.

THREE PHASE TRANSFORMERS HAVE LOW VOLTAGE RATINGS AS FOLLOWS:

- **240/120:** INDICATES A SECONDARY WINDING SUITABLE FOR 240V SERIES OPERATION OR THREE-WIRE OPERATION, BUT NOT FOR 120V TWO-WIRE, MULTIPLE OPERATION.
- **208Y/120:** THIS INDICATES THE TRANSFORMER IS SUITABLE FOR FOUR-WIRE OPERATION ON 120/208Y VOLTS SYSTEM ONLY.
- **480Y/277:** THIS INDICATES THAT THE TRANSFORMER IS SUITABLE FOR FOUR-WIRE OPERATION ON A 277/480Y VOLT SYSTEM OR THREE-WIRE OPERATION ON A 480V SYSTEM.
- **4160Y/2400:** THIS INDICATES THAT THE TRANSFORMER IS SUITABLE FOR FOUR-WIRE OPERATION ON A 2,400/4,160Y VOLT SYSTEM OR THREE-WIRE OPERATION ON A 4,160V SYSTEM.
- **12470GRDY/6930:** THIS INDICATES THAT THE TRANSFORMER IS SUITABLE FOR FOUR WIRE OPERATION ON A 7,200/ 12,470Y VOLT SYSTEM OR THREE-WIRE OPERATION ON A 12.47KVSYSTEM.
- **480:** THIS INDICATES THAT THE TRANSFORMER IS SUITABLE FOR THREE-WIRE DELTA OPERATION AT ITS RATED VOLTAGE.
- **240X480:** INDICATES A WINDING SUITABLE FOR THREE-WIRE SERIES OPERATION AT 480V DELTA OR FOR THREE-WIRE PARALLEL OPERATION AT 240V DELTA BUT NOT FOR BOTH VOLTAGES SIMULTANEOUSLY.
- **2400/4160Y/2400:** INDICATES A WINDING SUITABLE FOR THREE-WIRE DELTA OPERATION AT 2,400V OR FOUR-WIRE OPERATION ON A 4,160V WYE SYSTEM WITH FULLY INSULATED NEUTRAL AVAILABLE.
- **2400/4160GRDY/2400:** INDICATES A WINDING HAVING REDUCED INSULATION FOR WYE CONNECTION ON A 4,160V SYSTEM WITH THE TRANSFORMER NEUTRAL GROUNDED, OR FOR DELTA CONNECTIONS ON A 2,400V SYSTEM.

INSTALLATION: NONE

BILL OF MATERIALS: NONE

NOTES: NONE

REFERENCE: NONE

TABLE OF CONTENTS

© 1998 - 2021 San Diego Gas & Electric Company. All rights reserved. Removal of this copyright notice without permission is not permitted under law.

REV	CHANGE	DR	BY	DSN	APV	DATE	REV	CHANGE	DR	BY	DSN	APV	DATE
C	EDITORIAL CHANGES	-	KR	JS	MDJ	10/25/2017	F						
B	EDITORIAL CHANGES	-	PS	JS	MDJ	01/25/2017	E	EDITORIAL CHANGES	EDM	RSL	GLW	CZH	08/24/2021
A	ORIGINAL ISSUE	-	-	PEA	ROJ	01/01/1986	D	EDITORIAL CHANGES	-	KR	JS	MDJ	01/25/2018

SCOPE: THIS STANDARD IDENTIFIES PREFIXES FOR SINGLE-PHASE, PAD MOUNTED DEADFRONT AND SUBSURFACE TRANSFORMERS.

TABLE 1

TRANSFORMER PREFIXES

PREFIX	VOLTAGE		DESCRIPTION	KVA	TAPS	STOCK NUMBER	DESIGN UNITS
	PRIMARY	SECONDARY					
XD	240/480	120/240	SINGLE-PHASE SECONDARY DRY TYPE - WALL MOUNTED	2	--	S757888 (F)	XD-002
				3	--	S757920 (F)	XD-003
WDS	2400 DELTA Δ	240/120	BAY-O-NET FUSE ASSEMBLY WITH ISOLATION LINK STAINLESS STEEL (b)	25	(A)	S755210	WDS-25
				50		S755212	WDS-50
				75		S755214	WDS-75
SDS (C)	4160 GRDY/2400 X 12000 GRDY/6930	240/120	BAY-O-NET FUSE ASSEMBLY WITH ISOLATION LINK STAINLESS STEEL (D)(b)	25	--	S761520	SDS-25
				50	--	S761522	SDS-50
				75	--	S761524	SDS-75
N	12000 GRDY/6930	120	SINGLE-PHASE SECONDARY DRY TYPE - WALL MOUNTED	1.5	--	S757880 (F)	N-1.5
NCS (C)	12000 GRDY/6930	240/120	BAY-O-NET FUSE ASSEMBLY WITH ISOLATION LINK STAINLESS STEEL (b)	25		S750312	NCS-25
				50		S750350	NCS-50
				100		S750352	NCS100
NTS (C)	12000 GRDY/6930	240/120	BAY-O-NET FUSE ASSEMBLY WITH ISOLATION LINK STAINLESS STEEL (b)	25	(A)	S764230	NTS-25
				50		S764232	NTS-50
				75		S764234	NTS-75
				100		S764236	NTS100
NGD	12000 GRDY/6930	0	CURRENT LIMITING	1.0	--	S758302 (F)	NGD-10
HCS	12000	240/120	BAY-O-NET FUSE ASSEMBLY WITH ISOLATION LINK STAINLESS STEEL (b)	25		S751300	HCS-25
				50		S751302	HCS-50
				100		S751304	HCS100
				167		S751306	HCS167
HTS (C)	12000	240/120	BAY-O-NET FUSE ASSEMBLY WITH ISOLATION LINK STAINLESS STEEL (b)	25	(A)	S765106	HTS25
				50		S761108	HTS50
				75		S765108	HTS75
				100		S765110	HTS100
				167		S761110	HTS167
				250		S765104	HTS250
HJS	12000	480/240	BAY-O-NET FUSE ASSEMBLY WITH ISOLATION LINK STAINLESS STEEL (b)	25	--	S760262	HJS-25
				50	--	S760264	HJS-50

TABLE OF CONTENTS

© 1998 - 2021 San Diego Gas & Electric Company. All rights reserved. Removal of this copyright notice without permission is not permitted under law.

REV	CHANGE	DR	BY	DSN	APV	DATE	REV	CHANGE	DR	BY	DSN	APV	DATE
C	EDITORIAL CHANGES	-	KR	JS	MDJ	10/25/2017	F						
B	EDITORIAL CHANGES	-	PS	JS	MDJ	01/25/2017	E	EDITORIAL CHANGES	EDM	RSL	GLW	CZH	08/24/2021
A	ORIGINAL ISSUE	-	-	PEA	ROJ	01/01/1986	D	EDITORIAL CHANGES	-	KR	JS	MDJ	01/25/2018

ATTENTION:

* DEVIATION REQUEST IS REQUIRED FOR HST INSTALLATIONS. (C)

TABLE 2

SINGLE-PHASE SUBSURFACE							
PREFIX	VOLTAGE		DESCRIPTION	KVA	TAPS	STOCK NUMBER	DESIGN UNITS
	PRIMARY	SECONDARY					
HST (B)(E)	12000	208Y/120 120/240	CURRENT-LIMITING FUSES OR SUBMERSIBLE BAY-O-NET FUSE W/ ISOLATION LINK STAINLESS STEEL	25	(A)	S764213	HST-25
				50		S764215	HST-50
				100		S764219	HST100

INSTALLATION:

(A) TWO 2 1/2 PERCENT TAPS ABOVE AND BELOW.

(B) THE HST TRANSFORMERS COME WITH FOUR SECONDARY TERMINALS (WIRES) WHICH ALLOW EXTERNAL WIRING FOR 240/120 OR 208Y/120V.

(C) HTS, HJS, HCS, NCS, WDS SINGLE-PHASE TRANSFORMERS ARE FITTED WITH BUSHING WELLS THAT REQUIRE SEPARATELY INSTALLED BUSHING PLUGS OR FEED-THRU INSERTS (SEE UG3712, UG3713, UG3751 AND UG3755). BUSHINGS PLUGS OR FEED-THRU INSERTS ARE NOT SUPPLIED WITH TRANSFORMER. NTS IS SUPPLIED WITH ONE INSERT PRE-INSTALLED, AND SDS IS SUPPLIED WITH TWO INSERTS PRE-INSTALLED.

(D) BAY-O-NET FUSES MUST BE RESIZED WHEN TRANSFORMER IS CUT FROM 4 TO 12KV.

(E) REQUIRES DEVIATION.

(F) SPECIAL ORDER (MAY REQUIRE 20 WEEKS LEAD TIME TO RECEIVE ITEMS).

BILL OF MATERIALS: NONE

NOTES: NONE

REFERENCE:

a. FOR SINGLE AND THREE-PHASE POLE MOUNTED, STREETLIGHT AND SUBSTATION TRANSFORMERS, SEE OVERHEAD STANDARDS BOOK.

b. FOR FUSING, SEE UG4311, UG4312, UG4313, AND UG4314.

(C) FOR DEVIATION REQUEST FORM AND PROCEDURE, SEE UG3005.

TABLE OF CONTENTS

© 1998 - 2021 San Diego Gas & Electric Company. All rights reserved. Removal of this copyright notice without permission is not permitted under law.

REV	CHANGE	DR	BY	DSN	APV	DATE	REV	CHANGE	DR	BY	DSN	APV	DATE
C	EDITORIAL CHANGES	-	KR	JS	MDJ	10/25/2017	F						
B	EDITORIAL CHANGES	-	PS	JS	MDJ	01/25/2017	E	EDITORIAL CHANGES	EDM	RSL	GLW	CZH	08/24/2021
A	ORIGINAL ISSUE	-	-	PEA	ROJ	01/01/1986	D	EDITORIAL CHANGES	-	KR	JS	MDJ	01/25/2018

SCOPE: THIS STANDARD IDENTIFIES TRANSFORMER PREFIXES FOR THREE-PHASE, PAD MOUNTED DEADFRONT AND PAD MOUNTED LIVEFRONT.

TABLE 1

THREE-PHASE PAD MOUNTED STAINLESS STEEL DEAD FRONT

PREFIX	VOLTAGE		DESCRIPTION		KVA	TAPS	STOCK NUMBER	DESIGN UNITS
	PRIMARY	SECONDARY						
PZS (C)	4160X12000	208Y/120 THREE-PHASE 4 WIRE	RADIAL/LOOP PROTECTIVE LINKS, BAY-O-NET FUSES (D)(b)	D.E.W.L.	75	--	S761347	PZS-75
					150	--	S761300	PZS150
				FAULT SENSING	300	--	S765096	PZS300
					500	--	S761332 (F)	PZS500
PXS (C)	4160X12000	240x480 THREE-PHASE 3 WIRE	D.E.W.L. BAY-O-NET FUSES AND PROTECTIVE LINKS, RADIAL/LOOP (D)(b)(II)		75	--	S764252	PXS-75
					225	--	S764260	PXS225
HBSC	12000	208Y/120 THREE-PHASE 4 WIRE	RADIAL ONLY, COMPACT, BAY-O-NET FUSES		75	A	S765102	HBSC75
HBS (C)			D.E.W.L. BAY-O-NET FUSES AND PROTECTIVE LINKS, RADIAL/LOOP (b)		75		S761360	HBS-75
					150		S761362	HBS150
					300		S761320	HBS300
					500		S761326	HBS500
					750		S761334	HBS750
					1,000		S761282	HBS1.0
					1,500		S761288	HBS1.5
HKS (C)	12000	240/120 THREE-PHASE 4 WIRE	D.E.W.L. BAY-O-NET FUSES AND PROTECTIVE LINKS, RADIAL/LOOP (b)		75	--	S761340	HKS-75
					225	--	S761306	HKS225
HNS (C)	12000	480Y/277 THREE-PHASE 3 OR 4 WIRE	RADIAL/LOOP PROTECTIVE LINKS, BAY-O-NET FUSES	D.E.W.L.	150	A	S761354	HNS150
					300		S761356	HNS300
					500		S761328	HNS500
				FAULT SENSING	750		S761336	HNS750
					1,000		S761284	HNS1.0
			(b)	HIGH AMPERE	1,500		S761290	HNS1.5
			RADIAL/LOOP PROTECTIVE LINKS, HIGH AMPERE BAY-O-NET FUSES		2,000		S761302	HNS2.0
					2,500		S761314	HNS2.5
HPS (C)	12000	2400/4160Y/ 2400 OR 2400/4160GRDY/ 2400 3 OR 4 WIRE	RADIAL/LOOP PROTECTIVE LINKS BAY-O-NET FUSES (b)	D.E.W.L.	225		S761310	HPS225
					500		S761330	HPS500
				FAULT SENSING	750		S761338	HPS750
					1,000		S761286	HPS1.0
				HIGH AMPERE	1,500		S761292	HPS1.5
					2,000		S761304	HPS2.0
					2,500		S761316	HPS2.5
HHS	12000GRDY/ 6930	12470GRDY/7200	THREE-PHASE AUTO TRANSFORMER, RADIAL (BOOSTER) 600A DEADBREAK PRIMARY AND SECONDARY BUSHINGS		3,750	--	S761324	HS3750
HYS (C)(III)	12000GRDY/ 6930	480 THREE-PHASE 3 WIRE	BAY-O-NET FUSES AND CL FUSES, RADIAL ONLY (b)		300	A	S765130 (E)	HYS30
					1,000		S765132 (E)	HYS100
					2,000		S765134 (E)	HYS200
					3,000		S765120 (E)	HYS300

TABLE OF CONTENTS

© 1998 - 2021 San Diego Gas & Electric Company. All rights reserved. Removal of this copyright notice without permission is not permitted under law.

REV	CHANGE	DR	BY	DSN	APV	DATE	REV	CHANGE	DR	BY	DSN	APV	DATE
C	EDITORIAL CHANGES	-	KR	JS	MDJ	10/25/2017	F						
B	EDITORIAL CHANGES	-	PS	JS	MDJ	01/25/2017	E	EDITORIAL CHANGES	EDM	RSL	GLW	CZH	08/24/2021
A	ORIGINAL ISSUE	-	-	PEA	ROJ	01/01/1986	D	EDITORIAL CHANGES	-	KR	JS	MDJ	01/25/2018

TABLE 2

THREE-PHASE PAD MOUNTED STAINLESS STEEL - LIVEFRONT							
PREFIX	VOLTAGE		DESCRIPTION	KVA	TAPS	STOCK NUMBER	DESIGN UNITS
	PRIMARY	SECONDARY					
HLS (B)	12000	480Y/277 THREE-PHASE 3 OR 4 WIRE	EXTERNALLY FUSED	3,000	(A)	S761318	HLS3.0

INSTALLATION:

(A) TWO 2 1/2 PERCENT TAPS ABOVE AND BELOW.

(B) OLDER STYLE TRANSFORMERS MAY HAVE BOTH UPPER AND LOWER PLATES NEXT TO THE FUSES FOR THE PURPOSE OF TERMINATING CABLES. CABLES SHOULD NOT BE TERMINATED ON THE LOWER PLATES. LOWER PLATES HAVE BEEN REMOVED ON NEWER STYLE TRANSFORMERS.

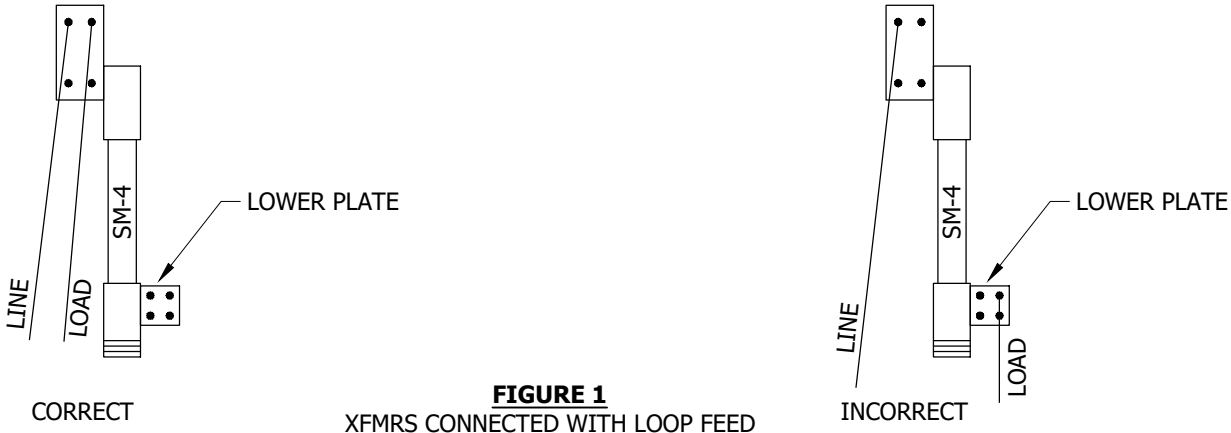

FIGURE 1
XFMRS CONNECTED WITH LOOP FEED
SM-4 FUSE IS FOR TRANSFORMER FUSING ONLY AND (B) NOT FOR "LOOP" LOAD

(C) PZS, PXS, HBS, HKS, HNS, HPS, HYS THREE-PHASE TRANSFORMERS ARE FITTED WITH BUSHING WELLS THAT REQUIRE SEPARATELY INSTALLED BUSHING PLUGS OR FEED-THRU INSERTS (SEE STANDARDS UG3712, UG3713, UG3751, UG3755, AND UG3756). BUSHING PLUGS OR FEED-THRU INSERTS ARE NOT SUPPLIED WITH TRANSFORMER.

(D) BAY-O-NET FUSES MUST BE RESIZED WHEN TRANSFORMER IS CUT FROM 4 TO 12KV.

(E) SPECIAL ORDER (MAY REQUIRE 20 WEEKS LEAD TIME TO RECEIVE ITEMS).

(F) REQUIRES DEVIATION.

BILL OF MATERIALS: NONE

NOTES:

I. D.E.W.L. IS DEFINED AS "DUAL ELEMENT WEAKLINK".

(II) THE PXS PAD MOUNTED TRANSFORMER IS A 3-PHASE, 480V, THREE WIRE DELTA SERVICE APPLICATION. THIS WILL COVER CONVERSIONS OF OLDER THREE WIRE, 480V CLOSED DELTA SERVICES TO PAD MOUNTED FACILITIES. IF THE CUSTOMER HAS A CORNER GROUND, THEY MUST COORDINATE WITH SDG&E TO IDENTIFY CORRECT CORNER GROUND APPLICATION.

(III) TO BE USED ONLY FOR BATTERY PROJECTS WHEN HO BUSHING IS REQUIRED.

REFERENCE:

a. FOR SINGLE AND THREE-PHASE POLE MOUNTED, STREETLIGHT AND SUBSTATION TRANSFORMERS, SEE OVERHEAD STANDARDS BOOK.

b. FOR FUSING, SEE UG4311, UG4312, UG4313, AND UG4314.

© 1998 - 2021 San Diego Gas & Electric Company. All rights reserved. Removal of this copyright notice without permission is not permitted under law.

REV	CHANGE	DR	BY	DSN	APV	DATE	REV	CHANGE	DR	BY	DSN	APV	DATE
C	EDITORIAL CHANGES	-	KR	JS	MDJ	10/25/2017	F						
B	EDITORIAL CHANGES	-	PS	JS	MDJ	01/25/2017	E	EDITORIAL CHANGES	EDM	RSL	GLW	CZH	08/24/2021
A	ORIGINAL ISSUE	-	-	PEA	ROJ	01/01/1986	D	EDITORIAL CHANGES	-	KR	JS	MDJ	01/25/2018

TABLE OF CONTENTS

SCOPE: THIS STANDARD IS A GUIDE FOR SELECTING TRANSFORMER(S), BY PREFIX, FOR REPLACEMENT OF EXISTING UNITS IN FIELD, AND DETERMINING THOSE THAT ARE OBSOLETE.

TABLE 1

SINGLE-PHASE INSTALLATIONS (PADMOUNT)				
VOLTAGE		EXISTING FIELD UNITS	REPLACEMENT UNITS (C)	NOT TO BE USED OR REORDERED
PRIMARY	SECONDARY			
240/480	120/240	XD	XD	--
2,400	240/120	SDD, SDS, SID, WDD, WEP, WEQ	SDS	SDD, SID, WDD, WEQ
6,930	240/120	NDD, NDL, NDP, NDS, NEP, NSD, NSL, SDD, SDS, SID, WDD	NTS, NCS (B)	NDD, NDL, NDP, NEP, NSD, NSL, SDD, SID, WDD, NDS
6,930 W/SECONDARY TAPS	240/120 W/SECONDARY TAPS	NEP, NTD, NTP, NTQ, NTS	NTS, NCS (B)	NTD, NTP, NTQ, NEP
12,000	240/120	HDD, HDL, HDS, HEP, HSL, HP, HQ	HTS, HCS	HDD, HDL, HP, HSL, HQ, HEP
12,000 W/SECONDARY TAPS	240/120 W/SECONDARY TAPS	HEP, HEQ, HP, HTD, HTL, HTS	HTS, HCS	HEQ, HP, HTD, HTL, HEP
12,000	480/240	HJD, HJL, HJP, HJS	HJS	HJD, HJL, HJP
SINGLE-PHASE INSTALLATIONS (SUBSURFACE)				
2,400	240/120	WS, WSV, WUS	WUS	WSV, WS
6,930	240/120	NES	NES (B)	--
12,000	120/240	HSS	HST (E)	HSS
12,000 W/SECONDARY TAPS	120/240 W/SECONDARY TAPS	HST	HST (E)	--
THREE-PHASE INSTALLATIONS (PADMOUNT)				
4,160	208Y/120	PZB, PZR, PZS, WGP, WZP, WZR	PZS	PZB, PZR, WGP, WZP, WZR
4,160	240X480 (A)	WXP, PXB	PXS	WXP, PXB
12,000	208Y/120	HAB, HAL, HAP, HAQ, HBP, HBS, HGP, HHP, HZB, HZL, HZP, HZQ, HZR, HZS	HBS	HAB, HAL, HAP, HAQ, HBP, HGP, HHP, HZB, HZL, HZP, HZQ, HZR, HZS
12,000	240/120	HKB, HKR, HKS	HKS	HKB, HKR
		1Ø BANK: HDD, HDL, HDS, HEP, HSL, HP, HQ, HTD	1Ø BANK: HTS	1Ø BANK: HDD, HDL, HSL, HP, HQ, HTD, HDS, HEP
12,000	480/240	HDP, HFP	1Ø BANK: HJS	HDP, HFP
12,000	240X480 (A)	HLP, HXP WIRED 240V	HKS 240/120	HLP, HXP
		HLP, HXP WIRED 480V	HNS 480/277	HLP, HXP, HMS

TABLE OF CONTENTS

© 1998 - 2021 San Diego Gas & Electric Company. All rights reserved. Removal of this copyright notice without permission is not permitted under law.

REV	CHANGE	DR	BY	DSN	APV	DATE	REV	CHANGE	DR	BY	DSN	APV	DATE
C	EDITORIAL CHANGES	-	AW	JS	CZH	07/03/2018	F						
B	EDITORIAL CHANGES	-	KR	JS	MDJ	09/28/2017	E						
A	ORIGINAL ISSUE	-	JS	TR	MDJ	05/23/2016	D	INFORMATION MOVED TO FMO	EDM	EJA	GLW	CZH	06/14/2021

Indicates Latest Revision | Completely Revised | New Page X | Information Removed

SDG&E ELECTRIC UNDERGROUND CONSTRUCTION STANDARDS

DISTRIBUTION TRANSFORMER APPLICATIONS

UG3703.1

TABLE 1 (CONT'D)

THREE-PHASE INSTALLATIONS (PADMOUNT) (CONT'D)				
VOLTAGE		EXISTING FIELD UNITS	REPLACEMENT UNITS	NOT TO BE USED OR REORDERED
PRIMARY	SECONDARY			
12,000	480Y/277	HMB, HML, HMP, HMS, HNB, HNL, HNR, HNS, HUP	HNS	HMB, HML, HMP, HMS, HNB, HNL, HNR, HUP
12,000	4,160Y/2,400	HOP, HPB, HPR, HPP, HPS, HSV	HPS	HOP, HPB, HPP, HPR, HSV
12,000	12,470Y/7,200	HHR, HSV, HHS	HHS (D)	HHR, HSV
THREE-PHASE INSTALLATIONS (SUBSURFACE)				
12,000	208Y/120	HAS	HAS (D)	1Ø BANK: HSS
		1Ø BANK: HSS, HST	1Ø BANK: HST (E)	
12,000	240/120	1Ø BANK: HSS, HST	1Ø BANK: HST (E)	1Ø BANK: HSS

INSTALLATION:

(A) 240X480 INDICATES A WINDING SUITABLE FOR THREE-WIRE SERIES OPERATION AT 480V DELTA OR FOR THREE-WIRE PARALLEL OPERATION AT 240V DELTA BUT NOT FOR BOTH VOLTAGES SIMULTANEOUSLY.

(B) 6,930V 'N' TYPE SINGLE-PHASE TRANSFORMERS, WITH SECONDARY TAPS, CAN BE USED TO REPLACE 7,200V 'Y' TYPE SINGLE-PHASE TRANSFORMERS ON 7,200V SYSTEMS. WE STILL HAVE A FEW 7,200V BRANCH LINES IN THE SYSTEM. 7,200V SYSTEMS CAN BE IDENTIFIED BY THE UPSTREAM BOOSTER STATION. BOOSTER STATIONS ARE CODED WITH A 'B' SUFFIX, I.E. 275-472B. 'Y' TYPE 7,200V TRANSFORMERS (YEP, YDP, ETC.) WERE THE PREFERRED TRANSFORMER FOR 7,200V SYSTEMS. HOWEVER, WE NO LONGER STOCK, OR INSTALL, 'Y' TYPE SINGLE-PHASE TRANSFORMERS. WHEN REPLACING SINGLE-PHASE 'Y' TRANSFORMERS FIRST DETERMINE IF YOU'RE ON A 7,200V SYSTEM OR A 6,930V SYSTEM. IF YOU'RE ON A 7,200V SYSTEM, INSTALL AN 'N' TYPE TRANSFORMER WITH SECONDARY TAPS (NTS, NCS). THE FIELD CREW CAN TAP DOWN THE SECONDARY VOLTAGE, AS NEEDED, TO COMPENSATE FOR ANY SECONDARY VOLTAGE BOOST. IF YOU'RE ON A 6,930V SYSTEM (NO BOOSTER STATION) REPLACE A 'Y' TRANSFORMER WITH AN 'N' TYPE TRANSFORMER (NTS) - SECONDARY TAPS ARE NOT NEEDED.

(C) WHEN REPLACING LIVEFRONT TRANSFORMERS EVERY EFFORT SHOULD BE MADE TO UPGRADE TO DEADFRONT. EACH SITUATION SHOULD BE EVALUATED INDEPENDENTLY. WHEN IN DOUBT CONTACT YOUR LOCAL ELECTRIC CONSTRUCTION SUPERVISOR (ECS) IN THE DISTRICT. THE ECS WILL LET YOU KNOW IF CONVERTING IS FEASIBLE AND TELL YOU PRECISELY WHAT ADDITIONAL AND/OR SPECIAL MATERIAL WILL BE NEEDED.

(D) SPECIAL ORDER ITEM: CONTACT STANDARDS FOR INFORMATION AND LEAD TIMES. TRANSFORMER TABLES FOR THESE UNITS CAN BE FOUND IN THE UG FIELD MAINTENANCE ONLY MANUAL.

(E) DEVIATION REQUIRED TO INSTALL THIS TRANSFORMER.

BILL OF MATERIALS: NONE

NOTES: NONE

REFERENCE: NONE

TABLE OF CONTENTS

© 1998 - 2021 San Diego Gas & Electric Company. All rights reserved. Removal of this copyright notice without permission is not permitted under law.

REV	CHANGE	DR	BY	DSN	APV	DATE	REV	CHANGE	DR	BY	DSN	APV	DATE
C	EDITORIAL CHANGES	-	AW	JS	CZH	07/03/2018	F						
B	EDITORIAL CHANGES	-	KR	JS	MDJ	09/28/2017	E						
A	ORIGINAL ISSUE	-	JS	TR	MDJ	05/23/2016	D	INFORMATION MOVED TO FMO	EDM	EJA	GLW	CZH	06/14/2021

PURPOSE:

OVERLOAD AND FAULT PROTECTION FOR THREE-PHASE AND SINGLE-PHASE DEADFRONT PAD-MOUNTED TRANSFORMERS.

FOR USE WITH:

4KV AND 12KV - THREE-PHASE AND SINGLE-PHASE RADIAL OR LOOP FEED DEADFRONT PAD-MOUNTED TRANSFORMERS THROUGH 2500 KVA.

FOR BAYONET FUSE OPERATION: SEE ELECTRIC STANDARD PRACTICE 213 AND 214.

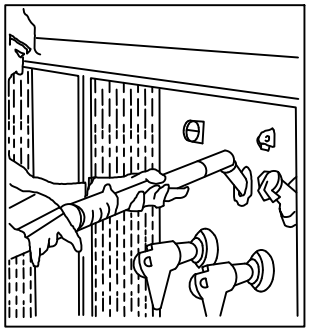

NOTE: OPERATE VENT BEFORE OPERATING BAYONET FUSES.

1. ATTACH UNIVERSAL HOT STICK TOOL, OR HOOK STICK TO FUSE HANDLE EYE - STAND TO ONE SIDE - UNLOCK HANDLE.

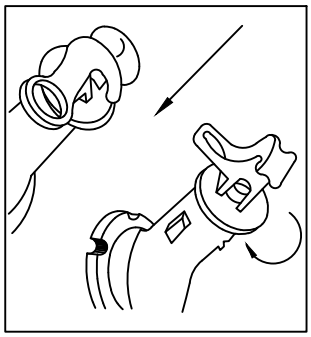

2. PUSH DOWN AND ROTATE THE HANDLE 90° IN THE TUBE. DURING THIS PROCEDURE INTERNAL TANK PRESSURE ESCAPES AND INSIDE AND OUTSIDE PRESSURES ARE EQUALIZED. THE 90° ROTATION OF THE FUSE HOLDER BREAKS ANY ADHESION BETWEEN THE SEAL GASKET AND THE OUTER TUBE ASSEMBLY.

TABLE OF CONTENTS

© 1998 - 2018 San Diego Gas & Electric Company. All rights reserved. Removal of this copyright notice without permission is not permitted under law.

REV	CHANGE	BY	DSGN	APPV	DATE	REV	CHANGE	BY	DSGN	APPV	DATE
C						F					
B	EDITORIAL CHANGES	AW	JS	CZH	7/3/2018	E					
A	REVISION			TR/JW	7/8/2004	D					

X Indicates Latest Revision | Completely Revised | New Page | Information Removed

SDG&E ELECTRIC UNDERGROUND CONSTRUCTION STANDARD

"BAY-O-NET" FUSE OPERATING INSTRUCTIONS FOR THREE-PHASE AND SINGLE-PHASE DEADFRONT PADMOUNTED TRANSFORMERS

UG3704.1

DE-ENERGIZED PADMOUNTED TRANSFORMERS:

CONTINUED FROM PAGE 3704.01

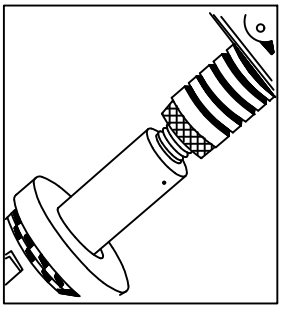

3. PULL OUT THE FUSE HOLDER THREE INCHES AND STOP! WAIT A FEW SECONDS FOR THE OIL TO DRAIN INTO THE TANK. THE INNER FUSE HOLDER ASSEMBLY CAN NOW BE REMOVED WITHOUT DRIPPING EXCESS OIL BY KEEPING THE FUSE HOLDER RUBBING AGAINST THE TOP OF THE CUTOUT, AS SHOWN, AND EXTRACTING IT VERY SLOWLY. THE TOTAL LENGTH OF THE INNER FUSE HOLDER ASSEMBLY, INCLUDING FUSE CARTRIDGE, IS FOURTEEN INCHES.

BAY-O-NET FUSE REPLACEMENT (ALL STEPS MUST BE DONE IN THE SEQUENCE DESCRIBED BELOW)

1. UNSCREW FUSE CARTRIDGE FROM INNER FUSE HOLDER.
2. UNSCREW FUSE CARTRIDGE CAP.
3. REMOVE FUSE LINK (IT MAY BE NECESSARY TO STRAIGHTEN THE TULIP TIP END THAT WAS BENT BY THE FUSE CARTRIDGE CAP BEFORE FUSE LINK CAN BE REMOVED FROM FUSE CARTRIDGE).
4. INSPECT FUSE CARTRIDGE BORE TO MAKE SURE IT IS CLEAR.
5. INSERT NEW FUSE LINK INTO CARTRIDGE FROM EITHER END.
6. TIGHTEN FUSE CARTRIDGE ONTO INNER FUSE HOLDER WITH TULIP TIP AT OPPOSITE END OF INNER FUSE HOLDER.
7. SCREW CARTRIDGE CAP INTO OTHER END OF CARTRIDGE (IMPORTANT THAT THIS STEP BE LAST).
8. WHEN THE INNER FUSE HOLDER ASSEMBLY IS INSERTED AS FAR AS POSSIBLE, PUSH DOWN, AND ROTATE THE LOCKING HANDLE, HOOKING IT OVER THE SHOULDER OF THE OUTER TUBE ASSEMBLY. WHEN HANDLE IS IN LOCKED POSITION, MAKE SURE THE STAINLESS STEEL COVER WASHER IS SEATED AGAINST THE SHOULDER OF THE OUTER TUBE ASSEMBLY.

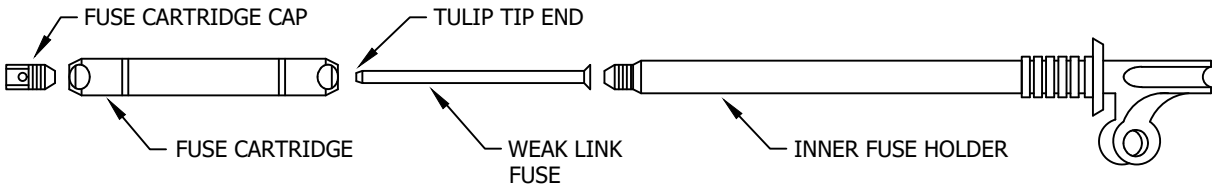

SEE STANDARDS PAGE 4311.5 FOR FUSE SIZE AND STOCK NUMBER.

REPLACEMENT FUSE HOLDER, FUSE CARTRIDGE AND FUSE CARTRIDGE CAP

STOCK NUMBER
412685

© 1998 - 2018 San Diego Gas & Electric Company. All rights reserved. Removal of this copyright notice without permission is not permitted under law.

REV	CHANGE	BY	DSGN	APPV	DATE	REV	CHANGE	BY	DSGN	APPV	DATE
C						F					
B	EDITORIAL CHANGES	AW	JS	CZH	7/3/2018	E					
A	REVISION			TR/JW	7/8/2004	D					

X Indicates Latest Revision | Completely Revised | New Page | Information Removed

SDG&E ELECTRIC UNDERGROUND CONSTRUCTION STANDARD

"BAY-O-NET" FUSE OPERATING INSTRUCTIONS FOR THREE-PHASE AND SINGLE-PHASE DEADFRONT PADMOUNTED TRANSFORMERS

UG3704.2

TABLE OF CONTENTS

HIGH AMPERE BAY-O-NET FUSES

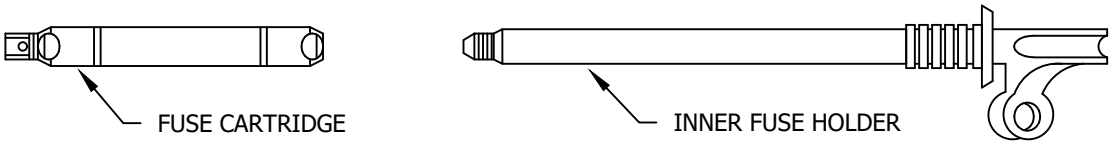

STOCK NUMBER	
100 AMP	366140
125 AMP	366142

HIGH AMPERE BAY-O-NET FUSE CARTRIDGE REPLACEMENT PROCEDURE FOLLOW THE STEPS IN THE SEQUENCE LISTED BELOW:

1. UNSCREW THE FUSE CARTRIDGE FROM INNER FUSE HOLDER.
2. DISCARD THE FUSE CARTRIDGE. DO NOT ATTEMPT TO REPLACE THE FUSE IN THE CARTRIDGE.
3. TIGHTEN A NEW FUSE CARTRIDGE ONTO THE INNER FUSE HOLDER.
4. PLACE IT INTO THE "BAY-O-NET" OUTER TUBE ASSEMBLY AND SLAM HOME.
5. WHEN THE INNER FUSE HOLDER ASSEMBLY IS INSERTED AS FAR AS POSSIBLE, PUSH DOWN, AND ROTATE THE LOCKING HANDLE, HOOKING IT OVER THE SHOULDER OF THE OUTER TUBE ASSEMBLY. WHEN HANDLE IS IN LOCKED POSITION, MAKE SURE THE STAINLESS STEEL COVER WASHER IS SEATED AGAINST THE SHOULDER OF THE OUTER TUBE ASSEMBLY.

TABLE OF CONTENTS

© 1998 - 2018 San Diego Gas & Electric Company. All rights reserved. Removal of this copyright notice without permission is not permitted under law.

REV	CHANGE	BY	DSGN	APPV	DATE	REV	CHANGE	BY	DSGN	APPV	DATE
C						F					
B	EDITORIAL CHANGES	AW	JS	CZH	7/3/2018	E					
A	REVISION			TR/JW	7/8/2004	D					

X Indicates Latest Revision | Completely Revised | New Page | Information Removed

SDG&E ELECTRIC UNDERGROUND CONSTRUCTION STANDARD

"BAY-O-NET" FUSE OPERATING INSTRUCTIONS FOR THREE-PHASE AND SINGLE-PHASE DEADFRONT PADMOUNTED TRANSFORMERS

UG3704.3

SCOPE: THIS STANDARD LISTS THE ALLOWABLE LOAD CURRENT IN AMPERES FOR SINGLE-PHASE AND THREE-PHASE COMMERCIAL TRANSFORMERS. IF TRANSFORMER LOAD EXCEEDS VALUE SHOWN IN TABLE, REPLACE THE TRANSFORMER.

SINGLE-PHASE TRANSFORMERS

KVA RATING	COMMERCIAL ALLOWABLE LOAD CURRENT (IN AMPERES) AT THE LINE-TO-LINE VOLTAGES LISTED BELOW			
	240V	480V	2400V	4160V
10	61	31	6	4
15	92	46	9	5
25	153	77	15	9
37.5	230	115	23	13
50	306	153	31	18
75	459	230	46	27
100	613	306	61	35
167	1,023	511	102	59

THREE-PHASE TRANSFORMERS

KVA RATING	COMMERCIAL ALLOWABLE LOAD CURRENT (IN AMPERES) AT THE LINE-TO-LINE VOLTAGES LISTED BELOW				
	208V	240V	480V	2400V	4160V
45	184	159	80	16	9
75	306	265	133	27	15
112.5	459	398	199	40	23
150	612	530	265	53	35
225	918	796	398	80	52
300	1,224	1,061	530	106	61
500	2,040	1,768	884	177	102
750	3,060	2,652	1,326	265	153
1,000	4,080	3,536	1,768	354	204
1,500	6,120	5,304	2,652	530	306
2,000	8,161	7,073	3,536	707	466
2,500	10,201	8,841	4,420	884	510
3,000	12,241	10,609	6,062	1,061	612

TABLE OF CONTENTS

NOTES:

I. LOAD VALUES IN THE TABLE ABOVE DO NOT CONSIDER VOLTAGE PROBLEMS THAT MAY OCCUR AT THOSE VALUES. VOLTAGE PROBLEMS SHOULD BE REFERRED TO THE C & O ENGINEER.

LOAD VALUES BASED ON ANSI/IEEE C57.91-1981

© 1998 - 2018 San Diego Gas & Electric Company. All rights reserved. Removal of this copyright notice without permission is not permitted under law.

REV	CHANGE	BY	DSGN	APPV	DATE	REV	CHANGE	BY	DSGN	APPV	DATE
C						F					
B	EDITORIAL CHANGES	AW	JS	CZH	7/3/2018	E					
A	REVISION				1/1/1996	D					

X Indicates Latest Revision | Completely Revised | New Page | Information Removed

SDG&E ELECTRIC UNDERGROUND CONSTRUCTION STANDARD

ALLOWABLE LOAD CURRENT SINGLE-PHASE AND THREE-PHASE COMMERCIAL TRANSFORMERS

UG3706.1

SCOPE: THIS STANDARD PROVIDES THE DIVISION OF SINGLE-PHASE LOAD CURRENT OF A THREE-PHASE STATION WHEN IT IS COMPOSED OF SINGLE-PHASE PAD-MOUNT TRANSFORMERS.

A: CLOSED-DELTA BANKS

SINGLE-PHASE LOAD CURRENT IN EACH TRANSFORMER OF AN UG DELTA-DELTA BANK			
SIZE OF TRANSFORMERS IN BANK (KVA)		% OF SINGLE-PHASE CURRENT	
1	2&3	1	2&3
15	15	67	33
25	15	78	22
50	15	87	13
75	15	91	9
100	15	93	7
25	25	67	33
50	25	79	21
75	25	86	14
100	25	88	12
50	50	67	33
75	50	76	24
100	50	79	21
75	75	67	33
100	75	71	29
100	100	67	33

B: OPEN-DELTA BANKS

SINCE BOTH TRANSFORMERS CARRY THE THREE-PHASE LOAD, AND ONE CARRIES THE SINGLE-PHASE LOAD IN ADDITION, THE LATTER TRANSFORMER MUST BE THE LARGER UNIT. IT MUST CARRY THE VECTORIAL SUM OF THE SINGLE-PHASE LOAD PLUS 58 PERCENT OF THE THREE-PHASE LOAD. FOR EXAMPLE, IF IT IS DESIRED TO CARRY A SINGLE-PHASE LOAD OF 30 KVA AND A THREE-PHASE LOAD OF 12 KVA, WITH THE SAME POWER FACTOR, THE TRANSFORMER LOADS CAN BE DETERMINED AS FOLLOWS:

	LARGE TRANSFORMER LOAD	SMALL TRANSFORMER LOAD
SINGLE-PHASE LOAD	30 KVA	-
THREE-PHASE LOAD (0.58 X 12)	7	7
TOTAL LOAD	37 KVA	7 KVA

NOTES:

II. FOR A MORE COMPLETE DESCRIPTION OF THE DIVISION OF CURRENTS IN A THREE-PHASE STATION, CONSULT OVERHEAD STANDARD 1105.

© 1998 - 2018 San Diego Gas & Electric Company. All rights reserved. Removal of this copyright notice without permission is not permitted under law.

REV	CHANGE	BY	DSGN	APPV	DATE	REV	CHANGE	BY	DSGN	APPV	DATE
C						F					
B	EDITORIAL CHANGES	AW	JS	CZH	7/3/2018	E					
A	REVISION				1/1/1996	D					

X Indicates Latest Revision | Completely Revised | New Page | Information Removed

SDG&E ELECTRIC UNDERGROUND CONSTRUCTION STANDARD

SHEET 2 OF 2

TRANSFORMER LOADING GUIDE FOR THREE-PHASE STATIONS WITH SINGLE-PHASE TRANSFORMERS

UG3706.2

TABLE OF CONTENTS

SCOPE: THIS STANDARD SHOWS THE METHOD OF INSTALLING AN 'XD' DRY TYPE TRANSFORMER IN THE 480V SECONDARY COMPARTMENT OF A PAD-MOUNTED, THREE-PHASE TRANSFORMER.

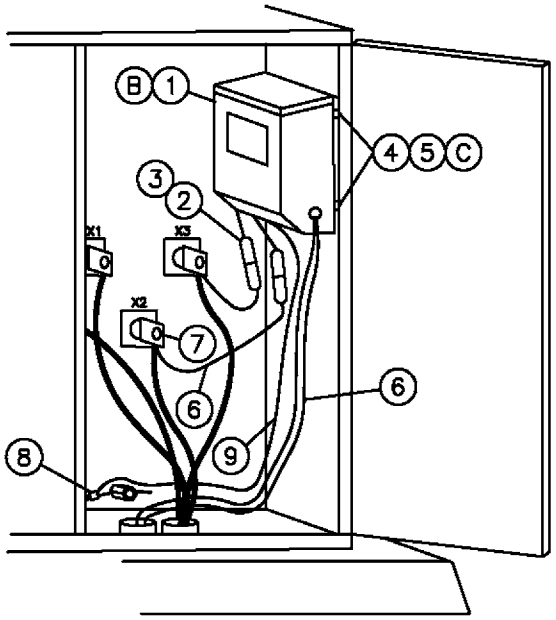

BILL OF MATERIAL:

ITEM	DESCRIPTION		QUANTITY 2KVA	QUANTITY 3KVA	CONSTR. STD.	STOCK NUMBER	ASSEMBLY UNITS
1	TRANSFORMER, 'XD', DRY TYPE		1	–	3702	757888	XD-002
			–	1		757920	XD-003
2	KIT, CONNECTOR, FUSED		2	2	–	443392	–
3	FUSE, MIDGET TYPE, SINGLE ELEMENT, 500 VOLT	5 AMP	2	–	–	368170	–
		7 AMP	–	2	–	368172	–
4	BOLT, CARRIAGE, 5/16" X 1 1/2" (C)		4	4	–	149664	–
5	NUT, HEX, 5/16", 1 ROUND AND 1 LOCK WASHER		4	4	–	506688	–
6	WIRE, #8, 600V, AL INSULATED		6'	6'	4002	196176	–
7	SECONDARY CONNECTIONS		2	2	4168, 4171	–	–
8	CONNECTOR, COMPRESSION (SIZE AS REQ'D)		AS REQ'D		4172	–	–
9	WIRE, BARE STRANDED CU, #2 (D)		AS REQ'D		–	812816	–

INSTALLATION:

A. USE THIS CONSTRUCTION TO AVOID SETTING AN ADDITIONAL TRANSFORMER FOR SMALL 240/120V METERED OR UNMETERED LOADS. DO NOT EXCEED THE NAME PLATE RATING OF TRANSFORMER.

(B) MOUNT 'XD' TRANSFORMER TO ENCLOSURE WALL IN UPPER SECONDARY COMPARTMENT SO AS NOT TO CROWD SECONDARY TERMINALS OR CONDUCTORS. MAINTAIN 1-1/2 INCH MINIMUM CLEARANCE FROM 'XD' TRANSFORMER TO 480V SECONDARY TERMINALS.

(C) TO MOUNT 'XD' TRANSFORMER, DRILL FOUR 3/8 INCH HOLES IN OUTSIDE CABINET WALL. APPLY RUST INHIBITOR AND SAME COLOR PAINT AS TRANSFORMER CABINET ON ALL HOLES DRILLED IN CABINET. FOR TAMPER RESISTANCE, INSTALL CARRIAGE BOLTS WITH HEADS ON OUTSIDE OF TRANSFORMER CABINET WALL.

(D) GROUND 'XD' TRANSFORMER CASE TO PAD GROUND WIRE IF GROUND LUG IS PROVIDED INSIDE 'XD' TRANSFORMER ACCESS PLATE.

© 1998 - 2005 San Diego Gas & Electric Company. All rights reserved. Removal of this copyright notice without permission is not permitted under law.

Indicates Latest Revision | Completely Revised | New Page | Information Removed

3708	SDG&E ELECTRIC STANDARDS SINGLE-PHASE, TYPE 'XD', 480V TO 240/120V, WALL MOUNTED TRANSFORMER INSTALLATION	REVISION DATE 1-1-98 APPD [signature] / CAK

TABLE OF CONTENTS

SCOPE: THIS STANDARD SHOWS THE N–1.5 KVA TRANSFORMER AND THE METHODS OF INSTALLATION FOR CONTROL POWER IN AN EQUIPMENT CABINET.

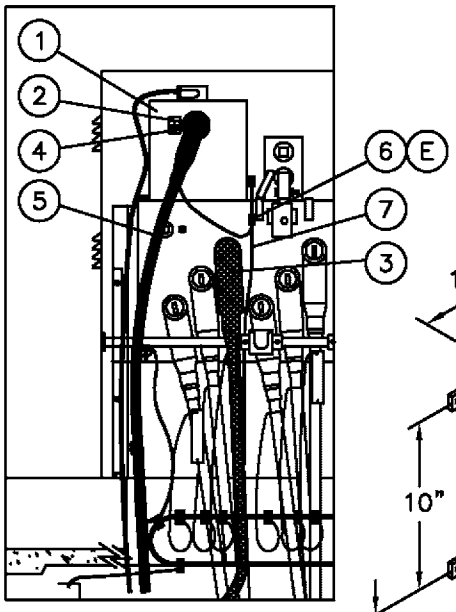

PAD–MOUNTED SWITCH

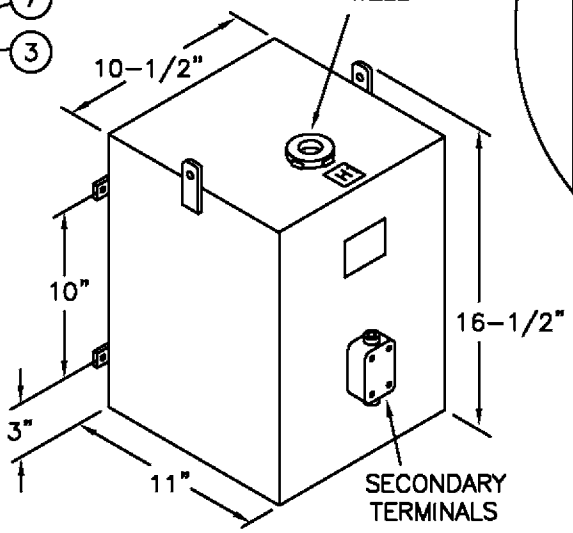

1.5 KVA "N" TRANSFORMER

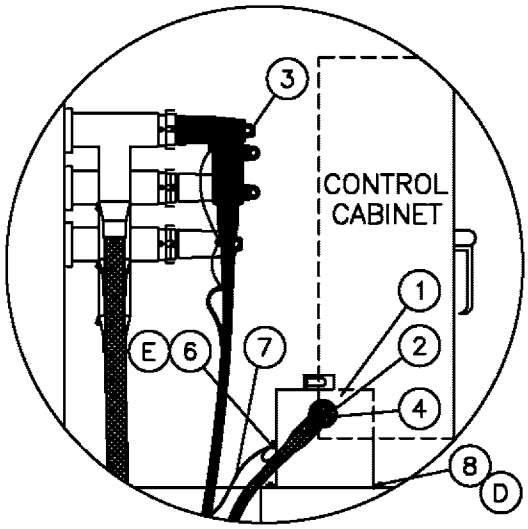

PAD–MOUNTED SERVICE RESTORER

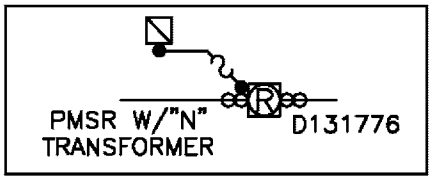

UNDERGROUND OPERATING MAP SYMBOL

BILL OF MATERIAL:

ITEM	DESCRIPTION	QUANTITY	CONSTR. STD OR PAGE NO.	STOCK NUMBER	ASSEMBLY UNITS
1	TRANSFORMER "N" DRY TYPE	1	3502	757880	N–1.5
2	BUSHING PLUG 200A LB (INCLUDED IN AU)	1	4180	544676	–
3	FUSED ELBOW LOADBREAK #2 AL	1	4191.3	443850	FE–2AL
4	ELBOW LOADBREAK #2 AL	1	4191.1	443838	LBE–2A
5	WHIP CABLE AL PECN–PEJ 1/C #2	10 FT.	4002.2	197600	WIP–#2
6	CONNECTOR, COMPRESSION SIZE AS REQUIRED	AS REQ'D	4172	–	–
7	WIRE, BARE STRANDED CU, #2	AS REQ'D	–	812816	–
8	ANCHOR, CONCRETE STAINLESS STEEL, 1/4" X 2–1/4"	4	–	107660	–

INSTALLATION:

A. THE N–1.5 TRANSFORMER IS NOT TO BE INSTALLED IN A MANHOLE OR HANDHOLE.

B. USE THIS TRANSFORMER TO AVOID SETTING AN ADDITIONAL PAD–MOUNT TRANSFORMER FOR SMALL 120V NON–REVENUE LOADS.

C. "N" TRANSFORMERS HAVE NO INTERNAL PROTECTION, THE FEED POINT SHOULD INCLUDE A 30 AMP FUSED ELBOW.

D. WHEN INSTALLING THE "N" TRANSFORMER ON THE PAD INSIDE OF A PAD–MOUNTED SERVICE RESTORER, PLACE ONE OR TWO EXTRA 1/4 INCH ROUND WASHERS ON THE ANCHOR BOLTS BEFORE INSTALLING THE CONCRETE PAD AND THE TRANSFORMER.

E. GROUND THE "N" TRANSFORMER CASE TO THE EQUIPMENT AND CABLE GROUND SYSTEM.

F. INSTALL "N" TRANSFORMER ON LINE SIDE OF PMSR.

©1998 - 2005 San Diego Gas & Electric Company. All rights reserved. Removal of this copyright notice without permission is not permitted under law.

Indicates Latest Revision	Completely Revised	New Page	Information Removed

REVISION	SDG&E ELECTRIC STANDARDS	
DATE 3–1–02 APPD	SINGLE–PHASE TYPE "N" 6930 TO 120V 1.5 KVA	3709

TABLE OF CONTENTS

SCOPE: THIS STANDARD SHOWS THE CONSTRUCTION THAT SHALL BE USED FOR INSTALLING SINGLE-PHASE, DUAL VOLTAGE LOW PROFILE PAD-MOUNT TRANSFORMER TYPES "SDS".

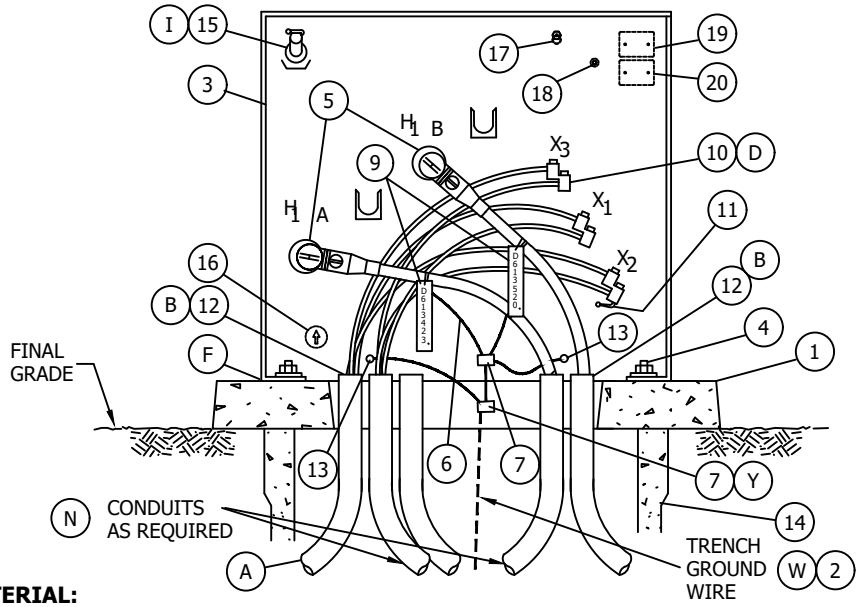

BILL OF MATERIAL:

ITEM	DESCRIPTION	KVA	TAPS	QUANTITY	CONST STD OR PG NO.	STOCK NUMBER	ASSEMBLY UNITS
1	PAD, TRANSFORMER, SINGLE-PHASE	-	-	1	3421	S514240	
2	TRENCH GROUND WIRE (W)	-	-	AS REQ'D	4510	-	
3	TRANSFORMER, (SDS)	-	-	1	3702.2	-	
		25	-	-	-	S761520	SDS-25
		50	-	-	-	S761522	SDS-50
		75	-	-	-	S761524	SDS-75
4	HOLD DOWN DEVICE - (SUPPLIED WITH CABINET)	-	-	2	-	-	
5	ELBOW, LOADBREAK, 12KV (WITH WHITE-BLACK-WHITE BAND W/BUSHING PLUG) (C)	-	-	2	4191	-	
				2	4192.1	S544676	
6	CONCENTRIC NEUTRAL TAILS	-	-	2	-	-	
7	CONNECTOR, COMPRESSION	-	-	AS REQ'D	4172	-	
8	KEYLESS LOCK, (NOT SHOWN ABOVE) (H)	-	-	1	-	S468010	
9	CABLE IDENTIFICATION TAGS	-	-	AS REQ'D	3202	-	
10	SECONDARY CONNECTIONS (D)	-	-	AS REQ'D	4167	-	
11	NEUTRAL GROUND STRAP (ON TRANSFORMER)	-	-	1	-	-	
12	SEALING COMPOUND	-	-	AS REQ'D	-	S442976	
13	SERVICE POST CONNECTOR	-	-	2	-	S262560	
14	3312 BOX USE AS NEEDED	-	-	AS REQ'D	3312	S162462	
15	BAY-O-NET FUSE SEE FUSE TABLE 4311.5	-	-	AS REQ'D	4311.5		
16	DUAL VOLTAGE SWITCH						
17	PRESSURE RELIEF VALVE						
18	OIL LEVEL PLUG						
19	DIAGRAM NAME PLATE						
20	BAR CODE STOCK NUMBER PLATE						

© 1998 - 2018 San Diego Gas & Electric Company. All rights reserved. Removal of this copyright notice without permission is not permitted under law.

REV	CHANGE	BY	DSGN	APPV	DATE	REV	CHANGE	BY	DSGN	APPV	DATE
C						F					
B						E					
A	EDITORIAL CHANGES		TR	DW	9/26/2013	D					

X Indicates Latest Revision | Completely Revised | New Page | Information Removed

SDG&E ELECTRIC UNDERGROUND CONSTRUCTION STANDARD

SINGLE-PHASE, DUAL VOLTAGE SDS
4160GRDY/2400 X 12000GRDY/6930
LOW PROFILE PAD-MOUNT TRANSFORMER INSTALLATION

UG3711.1

TABLE OF CONTENTS

INSTALLATION:

(A) THIS INSTALLATION IS LIMITED TO 2 SINGLE-PHASE #2 PRIMARY CABLES, ONE IN AND ONE OUT.

(B) TERMINATE PRIMARY AND SECONDARY CONDUITS FLUSH WITH TOP OF PAD. SEAL SECONDARY AND PRIMARY CONDUITS WITH SEALING COMPOUND. SEAL SERVICE LATERAL CONDUITS PER STANDARD 3948 (G.O. 128 RULE 31.6.).

(C) WHEN INSTALLATION IS AT END OF CIRCUIT, CHANGE QUANTITY TO ONE ELBOW (STANDARD 4191 AND ONE ONE RECEPTACLE (STOCK NUMBER S204304).

(D) SET SCREW CONNECTORS ARE NOT PROVIDED WITH TRANSFORMER, SEE STANDARD 4167 FOR INSTALLATION AND STOCK NUMBERS. ALWAYS MAKE CERTAIN SECONDARY CONNECTIONS ARE TIGHT BEFORE ENERGIZING TRANSFORMER.

(F) TRANSFORMER SHALL BE SOLIDLY SECURED TO PAD TO PREVENT UNAUTHORIZED MOVEMENT OR ENTRY. THE BASE SHALL BE CAULKED WHEN NECESSARY TO PREVENT WIRE ENTRY (STANDARD 3408).

(H) KEYLESS LOCK (ITEM 8) TO BE ATTACHED TO LATCHING MECHANISM ON TRANSFORMER AND PENTAHEAD BOLT THREADED IN COMPLETELY.

(I) WHEN CHANGING SDS FROM 2.4KV TO 6.9KV FOLLOW BAY-O-NET FUSE CHART LISTED:

SDS	2.4KV	6.9KV
25KVA	15 AMP	6 AMP
50KVA	40 AMP	12 AMP
75KVA	50 AMP	15 AMP

SERIES/MULTIPLE PRIMARY TRANSFORMERS ARE SUPPLIED WITH 2.4KV FUSE.

REFERENCE:

J. SEE STANDARD 3202 FOR CABLE IDENTIFICATION.

K. SEE STANDARD 3212 FOR TRANSFORMER IDENTIFICATION.

L. SEE STANDARD 3221 FOR HIGH VOLTAGE DECAL.

M. SEE STANDARD 3408 FOR WIRE ENTRY PREVENTION.

(N) SEE STANDARD 3421 FOR PAD AND CONDUIT PLACEMENT.

O. SEE STANDARD 3481 FOR BARRIER PROTECTION.

P. SEE STANDARD 3483 FOR MINIMUM OPERATING AND CLEARANCE REQUIREMENTS (PAD PLACEMENT).

Q. SEE STANDARD 3484 FOR PAD INSTALLATION OF PAD-MOUNTED EQUIPMENT.

R. SEE STANDARD 3486 FOR RETAINING WALL REQUIREMENTS AND CLEARANCES FROM REVERSE SUBGRADE RETAINING WALLS.

S. SEE STANDARD 3487 FOR RETAINING WALL.

T. SEE STANDARD 3702 FOR TRANSFORMER PREFIXES.

U. SEE STANDARD 3703 FOR TRANSFORMER APPLICATIONS.

(V) SEE STANDARD 3948 FOR SEALING SERVICE LATERAL CONDUITS.

(W) SEE STANDARD 4510 FOR (PREFERRED I) AND (ALTERNATE) TRENCH GROUND WIRE.

X. SEE STANDARD PAGE 4512.1 FOR (PREFERRED II) EQUIPMENT GROUNDING INSTALLATION.

(Y) SEE STANDARD 4512.2 FOR EQUIPMENT GROUNDING.

Z. SEE STANDARD 4514 FOR GROUNDING TELCO CONDUCTOR IN PADMOUNTED EQUIPMENT.

TABLE OF CONTENTS

© 1998 - 2018 San Diego Gas & Electric Company. All rights reserved. Removal of this copyright notice without permission is not permitted under law.

REV	CHANGE	BY	DSGN	APPV	DATE	REV	CHANGE	BY	DSGN	APPV	DATE
C						F					
B						E					
A	EDITORIAL CHANGES		TR	DW	9/26/2013	D					

X Indicates Latest Revision | Completely Revised | New Page | Information Removed

SDG&E ELECTRIC UNDERGROUND CONSTRUCTION STANDARD

SINGLE-PHASE, DUAL VOLTAGE SDS
4160GRDY/2400 X 12000GRDY/6930
LOW PROFILE PAD-MOUNT TRANSFORMER INSTALLATION

UG3711.2

SCOPE: THIS STANDARD SHOWS THE CONSTRUCTION THAT SHALL BE USED FOR INSTALLING SINGLE-PHASE, 6930 VOLT LOW PROFILE PAD-MOUNT TRANSFORMERS TYPE "NTS", WITH VOLTAGE TAP CHANGER.

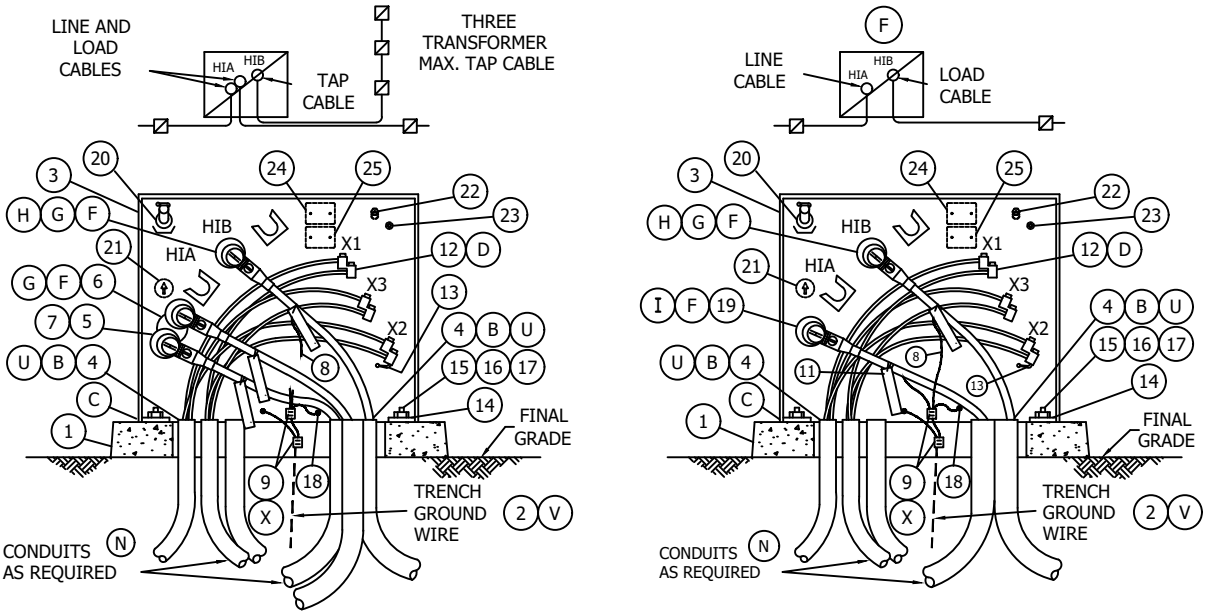

BILL OF MATERIAL:

ITEM	DESCRIPTION	KVA	TAPS	QUANTITY	CONST STD.	STOCK NUMBER	ASSEMBLY UNITS
1	PAD, TRANSFORMER SINGLE-PHASE	-	-	1	3421	S514240	3421-1
2	TRENCH GROUND WIRE (V)	-	-	AS REQ'D	4510	-	-
3	TRANSFORMER, (NTS) (G)(F)	-	-	1	3702.2	-	-
		25	(B)	-	-	S764230	NTS-25
		50	(B)	-	-	S764232	NTS-50
		75	(B)	-	-	S764234	NTS-75
		100	(B)	-	-	S764236	NTS100
4	SEALING COMPOUND (B)(U)	-	-	AS REQ'D	-	S442976	-
5	CAP, INSULATING RECEPTACLE (H)	-	-	AS REQ'D	4192	S204304	INSREC
6	FEED-THRU INSERT (H)(G)(F)	-	-	1	4192	S544678	FEED-I
7	ELBOW, LOADBREAK, 12KV (WITH WHITE-BLACK-WHITE BAND) (H)	-	-	3	4191	-	-
8	CONCENTRIC NEUTRAL TAILS	-	-	AS REQ'D	4172.1	-	-
9	CONNECTOR, COMPRESSION	-	-	AS REQ'D	4172	-	-
10	KEYLESS LOCK, (NOT SHOWN ABOVE) (A)	-	-	1	-	S468010	-
11	CABLE IDENTIFICATION TAGS	-	-	AS REQ'D	3202	-	-
12	CONNECTIONS, SECONDARY (D)	-	-	AS REQ'D	4167	-	-
13	NEUTRAL GROUND STRAP (ON TRANSFORMER)	-	-	1	-	-	-
14	HOLD DOWN DEVICE (SUPPLIED WITH TRANSFORMER)	-	-	2	-	-	-
15	NUT, CLAMPING CHANNEL	-	-	2	-	S503520	-

TABLE OF CONTENTS

© 1998 - 2018 San Diego Gas & Electric Company. All rights reserved. Removal of this copyright notice without permission is not permitted under law.

REV	CHANGE	BY	DSGN	APPV	DATE	REV	CHANGE	BY	DSGN	APPV	DATE
C						F					
B						E					
A	EDITORIAL CHANGES		TR	DW	9/26/2013	D					

X Indicates Latest Revision | Completely Revised | New Page | Information Removed

SDG&E ELECTRIC UNDERGROUND CONSTRUCTION STANDARD

SINGLE-PHASE, 6930 VOLT, TYPE "NTS"
LOW PROFILE PAD-MOUNT TRANSFORMER INSTALLATION

UG3711.3

BILL OF MATERIAL: (CON'T)

ITEM	DESCRIPTION	KVA	TAPS	QUANTITY	CONST STD.	STOCK NUMBER	ASSEMBLY UNITS
16	SCREW, HEX HEAD CAP, BRONZE, 1/2" X 1-1/2"	-	-	2	-	S616192	-
17	WASHER, STANDARD FLAT ROUND, BRONZE, 1/2"	-	-	2	-	S799488	-
18	SERVICE POST CONNECTOR	-	-	2	-	S262560	-
19	BUSHING PLUG	-	-	1	4192	S544676	BSHPLG
20	BAY-O-NET FUSE SEE FUSE TABLE 4311.5	-	-	AS REQ'D	4311.5	-	-
21	NO LOAD TAP CHANGER	-	-	1	-	-	-
22	PRESSURE RELIEF VALVE	-	-	1	-	-	-
23	OIL LEVEL PLUG	-	-	1	-	-	-
24	DIAGRAM NAME PLATE	-	-	1	-	-	-
25	BAR CODE STOCK NUMBER PLATE	-	-	1	-	-	-

INSTALLATION:

(A) KEYLESS LOCK, ITEM 10, TO BE ATTACHED TO LATCHING MECHANISM ON TRANSFORMER AND PENTAHEAD BOLT THREADED IN COMPLETELY.

(B) TERMINATE PRIMARY AND SECONDARY CONDUITS FLUSH WITH TOP OF PAD. SEAL SECONDARY AND PRIMARY CONDUITS WITH SEALING COMPOUND OR EQUIVALENT. SEAL SERVICE LATERAL CONDUITS PER STANDARD 3948 (G.O. 128 RULE 31.6).

(C) BASE SHALL BE CAULKED WHEN NECESSARY TO PREVENT WIRE ENTRY (STANDARD 3408).

(D) SET SCREW CONNECTORS ARE NOT PROVIDED WITH TRANSFORMER. SEE STANDARD 4167 FOR INSTALLATION AND STOCK NUMBERS. ALWAYS MAKE CERTAIN SECONDARY CONNECTIONS ARE TIGHT BEFORE ENERGIZING TRANSFORMER.

(F) THIS INSTALLATION ALLOWS UP TO THREE SINGLE-PHASE PRIMARY CABLES. THE "NTS" TRANSFORMER IS FITTED WITH ONE BUSHING WELL ON BUSHING "HIA" AND ONE INTEGRAL BUSHING ON BUSHING "HIB". A FEED-THRU INSERT IS REQUIRED ON BUSHING "HIA", ITEM 6 IN THE BILL OF MATERIAL.

(G) INSTALL THE LINE AND LOAD CABLES ON THE FEED THRU BUSHING "HIA". INSTALL THE TAP CABLE 0N THE INTEGRAL BUSHING "HIB". THE TAP CABLE MAY FEED UP TO THREE TRANSFORMERS MAXIMUM.

(H) REDUCE LOADBREAK ELBOW QUANTITY AND INSTALL INSULATING RECEPTACLE IF ALL THREE CABLES ARE NOT INSTALLED SIMULTANEOUSLY.

(I) INSTALL A BUSHING PLUG ON "HIA" BUSHING WELL WHEN THE TRANSFORMER USES ONE PRIMARY LINE CABLE IN AND ONE PRIMARY LOAD CABLE OUT.

TABLE OF CONTENTS

© 1998 - 2018 San Diego Gas & Electric Company. All rights reserved. Removal of this copyright notice without permission is not permitted under law.

REV	CHANGE	BY	DSGN	APPV	DATE	REV	CHANGE	BY	DSGN	APPV	DATE
C						F					
B						E					
A	EDITORIAL CHANGES		TR	DW	9/26/2013	D					

X Indicates Latest Revision | Completely Revised | New Page | Information Removed

SDG&E ELECTRIC UNDERGROUND CONSTRUCTION STANDARD

SINGLE-PHASE, 6930 VOLT, TYPE "NTS"
LOW PROFILE PAD-MOUNT TRANSFORMER INSTALLATION

UG3711.4

REFERENCE:

J. SEE STANDARD 3202 FOR CABLE IDENTIFICATION.

K. SEE STANDARD 3212 FOR TRANSFORMER IDENTIFICATION.

L. SEE STANDARD 3221 FOR HIGH VOLTAGE DECAL.

M. SEE STANDARD 3408 FOR WIRE ENTRY PREVENTION.

(N) SEE STANDARD 3421 FOR PAD AND CONDUIT REQUIREMENTS.

O. SEE STANDARD 3481 FOR BARRIER PROTECTION.

P. SEE STANDARD 3483 FOR MINIMUM OPERATING AND CLEARANCE REQUIREMENTS (PAD PLACEMENT).

Q. SEE STANDARD 3484 FOR PAD INSTALLATION OF PAD-MOUNTED EQUIPMENT.

R. SEE STANDARD 3486 FOR RETAINING WALL REQUIREMENTS AND CLEARANCES FROM REVERSE SUBGRADE RETAINING WALL.

S. SEE STANDARD 3487 FOR RETAINING WALLS.

(T) SEE STANDARD 3702 FOR TRANSFORMER PREFIXES.

(U) SEE STANDARD 3948 FOR SEALING SERVICE LATERAL CONDUITS.

(V) SEE STANDARD 4510 FOR (PREFERRED I) AND (ALTERNATE) TRENCH GROUND WIRE.

W. SEE STANDARD PAGE 4512.1 FOR (PREFERRED II) EQUIPMENT GROUNDING INSTALLATION.

(X) SEE STANDARD 4512.2 FOR EQUIPMENT GROUNDING.

Y. SEE STANDARD 4514 FOR GROUNDING TELCO CONDUCTOR IN PAD-MOUNTED EQUIPMENT.

TABLE OF CONTENTS

© 1998 - 2018 San Diego Gas & Electric Company. All rights reserved. Removal of this copyright notice without permission is not permitted under law.

REV	CHANGE	BY	DSGN	APPV	DATE	REV	CHANGE	BY	DSGN	APPV	DATE
C						F					
B						E					
A	EDITORIAL CHANGES		TR	DW	9/26/2013	D					

X Indicates Latest Revision | Completely Revised | New Page | Information Removed

SDG&E ELECTRIC UNDERGROUND CONSTRUCTION STANDARD

SHEET 5 OF 5

SINGLE-PHASE, 6930 VOLT, TYPE "NTS"
LOW PROFILE PAD-MOUNT TRANSFORMER INSTALLATION

UG3711.5

SCOPE: THIS STANDARD SHOWS THE CONSTRUCTION THAT SHALL BE USED FOR INSTALLING SINGLE–PHASE, 12KV, DEAD FRONT, PAD–MOUNT TRANSFORMER, TYPES "HDS", "HJS", "HTS".

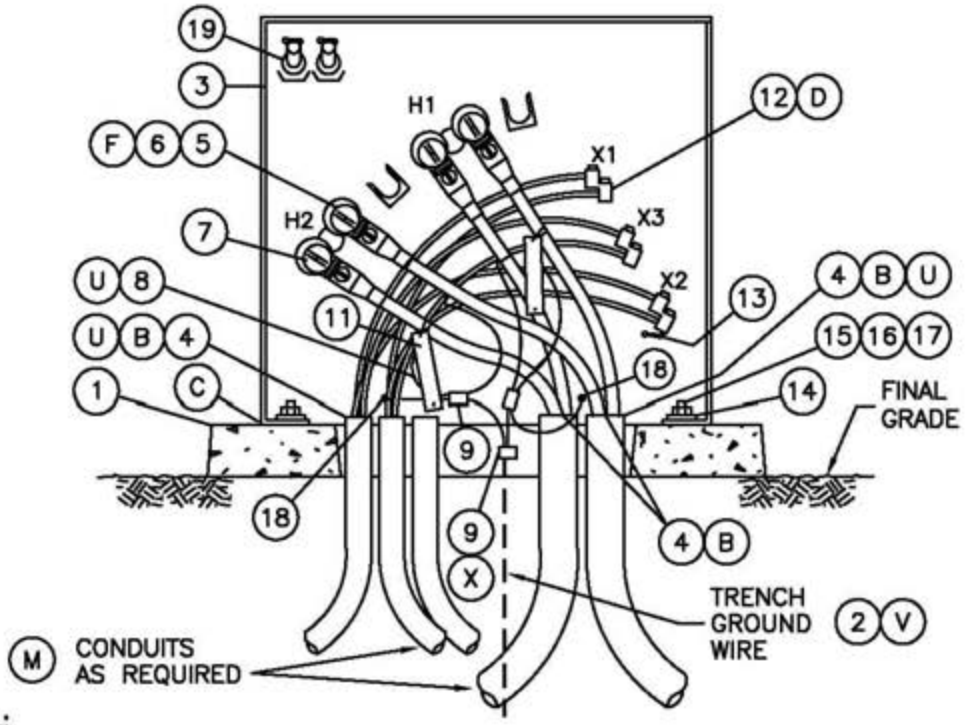

BILL OF MATERIAL:

ITEM	DESCRIPTION	QUANTITY	CONST STD OR PG NO.	STOCK NUMBER	ASSEMBLY UNITS
1	PAD, TRANSFORMER, SINGLE–PHASE	1	3421	514240	3421–1
2	TRENCH GROUND WIRE (V)	AS REQ'D	4510	–	–
3	TRANSFORMER, (HDL, HTL, HJD OR HSL) (G) (F)	1	3702	–	–
4	SEALING COMPOUND (B) (4)	AS REQ'D	–	442976	–
5	BUSHING PLUG (RADIAL FEED) (F)	AS REQ'D	4192	544676	BSHPLG
6	FEED–THRU INSERT (LOOP FEED) (F)	AS REQ'D	4192	544678	FEED–I
7	ELBOW, LOADBREAK, 12KV (WITH WHITE–BLACK–WHITE BAND)	AS REQ'D	4191	–	–
8	CONCENTRIC NEUTRAL TAILS	AS REQ'D	–	–	–
9	CONNECTOR, COMPRESSION	AS REQ'D	4172	–	–
10	KEYLESS LOCK, (NOT SHOWN ABOVE) (A)	1	–	468010	–
11	CABLE IDENTIFICATION TAGS	AS REQ'D	3202	–	–
12	CONNECTIONS, SECONDARY (D)	AS REQ'D	4167	–	–
13	NEUTRAL GROUND STRAP (ON TRANSFORMER)	1	–	–	–
14	HOLD DOWN DEVICE – (SUPPLIED WITH TRANSFORMER)	2	–	–	–
15	NUT, CLAMPING CHANNEL	2	–	503520	–
16	SCREW, HEX HEAD CAP, BRONZE, 1/2" X 1–1/2"	2	–	616192	–
17	WASHER, STANDARD FLAT ROUND, BRONZE, 1/2"	2	–	799488	–
18	SERVICE POST CONNECTOR	2	–	262560	–
19	BAY–O–NET FUSES	2	–	–	–

© 1998 - 2005 San Diego Gas & Electric Company. All rights reserved. Removal of this copyright notice without permission is not permitted under law.

Indicates Latest Revision	Completely Revised	New Page	Information Removed

	SDG&E ELECTRIC STANDARDS	REVISION
3712.1	SINGLE–PHASE, 12KV, TYPE "HDS", "HJS", "HTS" DEAD FRONT PAD–MOUNT TRANSFORMER INSTALLATION	DATE 5–24–04 APPD BJT/VCK

TABLE OF CONTENTS

INSTALLATION:

(A) KEYLESS LOCK (ITEM 10) TO BE ATTACHED TO LATCHING MECHANISM ON TRANSFORMER AND PENTAHEAD BOLT THREADED IN COMPLETELY.

(B) TERMINATE PRIMARY AND SECONDARY CONDUITS FLUSH WITH TOP OF PAD. SEAL SECONDARY AND PRIMARY CONDUITS WITH SEALING COMPOUND. SEAL SERVICE LATERAL CONDUITS PER STANDARD 3948 (G.O. 128 RULE 31.6).

(C) BASE SHALL BE CAULKED WHEN NECESSARY TO PREVENT WIRE ENTRY (STANDARD 3408).

(D) SET SCREW CONNECTORS ARE NOT PROVIDED WITH TRANSFORMER, SEE STANDARD 4167 FOR INSTALLATION AND STOCK NUMBERS. ALWAYS MAKE CERTAIN SECONDARY CONNECTIONS ARE TIGHT BEFORE ENERGIZING TRANSFORMER.

(F) THESE INSTALLATIONS USE EITHER TWO OR FOUR SINGLE-PHASE #2 PRIMARY CABLES. THE TRANSFORMERS ARE FITTED WITH BUSHING WELLS THAT REQUIRE SEPARATELY INSTALLED BUSHING INSERTS. FOR THE RADIAL FEED APPLICATION, TWO BUSHING PLUGS ARE REQUIRED, ITEM 5 IN THE BILL OF MATERIAL. FOR THE LOOP FEED APPLICATION, FEED-THRU INSERTS ARE REQUIRED, ITEM 6 IN THE BILL OF MATERIAL.

REFERENCE:

I. SEE STANDARD 3202 FOR CABLE IDENTIFICATION.

J. SEE STANDARD 3212 FOR TRANSFORMER IDENTIFICATION.

K. SEE STANDARD 3221 FOR HIGH VOLTAGE DECAL.

L. SEE STANDARD 3408 FOR WIRE ENTRY PREVENTION.

(M) SEE STANDARD 3421 FOR PAD AND CONDUIT REQUIREMENTS.

N. SEE STANDARD 3481 FOR BARRIER PROTECTION.

O. SEE STANDARD 3483 FOR MINIMUM OPERATING AND CLEARANCE REQUIREMENTS (PAD PLACEMENT).

P. SEE STANDARD 3484 FOR PAD INSTALLATION OF PAD-MOUNTED EQUIPMENT.

Q. SEE STANDARD 3486 FOR RETAINING WALL REQUIREMENTS AND CLEARANCES FROM REVERSE SUBGRADE RETAINING WALLS.

R. SEE STANDARD 3487 FOR RETAINING WALLS.

S. SEE STANDARD 3702 FOR TRANSFORMER PREFIXES.

T. SEE STANDARD 3703 FOR TRANSFORMER APPLICATIONS.

(U) SEE STANDARD 3948 FOR SEALING SERVICE LATERAL CONDUITS.

(V) SEE STANDARD 4510 FOR (PREFERRED I) AND (ALTERNATE) TRENCH GROUND WIRE.

W. SEE STANDARD PAGE 4512.1 FOR (PREFERRED II) EQUIPMENT GROUNDING INSTALLATION.

(X) SEE STANDARD 4512.2 FOR EQUIPMENT GROUNDING.

Y. SEE STANDARD 4514 FOR GROUNDING TELCO CONDUCTOR IN PADMOUNTED EQUIPMENT.

© 1998 - 2005 San Diego Gas & Electric Company. All rights reserved. Removal of this copyright notice without permission is not permitted under law.

TABLE OF CONTENTS

SCOPE: THIS STANDARD SHOWS THE CONSTRUCTION THAT SHALL BE USED FOR INSTALLING TWO SINGLE-PHASE, DEADFRONT TYPE "HDS", OR "HTS" TRANSFORMERS FOR AN OPEN DELTA BANK THREE-PHASE INSTALLATION.

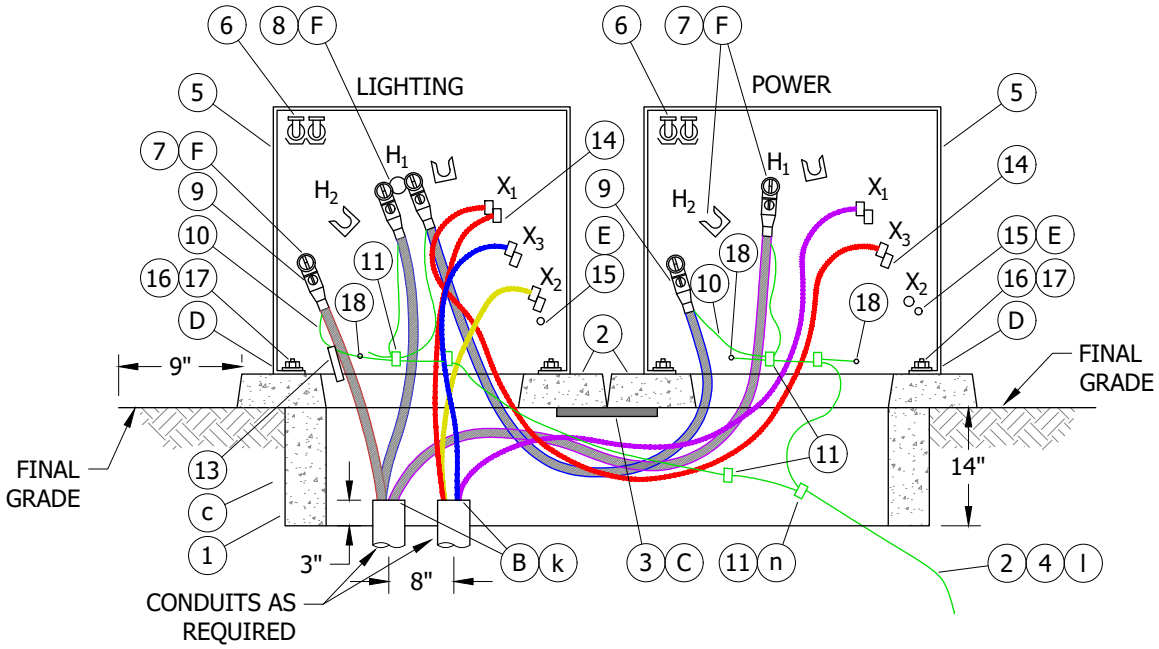

FIGURE 1

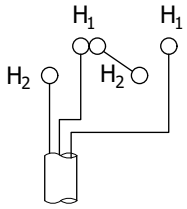

FIGURE 2
PRIMARY TERMINAL CONNECTIONS

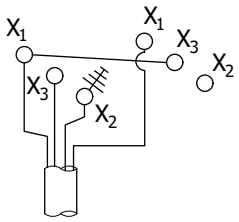

FIGURE 3
SECONDARY TERMINAL CONNECTIONS

INSTALLATION:

(A) KEYLESS LOCK TO BE ATTACHED TO LATCHING MECHANISM ON TRANSFORMERS AND PENTAHEAD BOLTS THREADED IN COMPLETELY.

(B) **TERMINATE PRIMARY AND SECONDARY CONDUITS AS SHOWN ON FIGURES 1-3.**

(C) INSERT ITEM 3 (FLOOR PLATE) PRIOR TO SETTING PADS.

(D) BASE SHALL BE CAULKED WHEN NECESSARY TO PREVENT WIRE ENTRY. (d)

(E) **ON THE POWER TRANSFORMER, REMOVE SECONDARY GROUND STRAP, MAKE SURE GROUND STRAP IS ATTACHED TO THE TANK ON THE LIGHTING TRANSFORMER.**

(F) THIS INSTALLATION USES THREE-PHASE #2 OR #2/0 PRIMARY CABLES. THE "HDS" AND "HTS" TRANSFORMERS ARE FITTED WITH BUSHING WELLS THAT REQUIRE SEPARATELY INSTALLED BUSHING INSERTS.

BILL OF MATERIALS:

ITEM	DESCRIPTION	QUANTITY	STANDARD PAGE	STOCK NUMBER	DESIGN UNITS
1	HANDHOLE, 14" X 66" X 14"	1	3311	S162660	--
2	PAD, TRANSFORMER	2	3421	S514240	3421-1
3	PLATE, FLOOR, 3/8", GALV., 12" X 24"	1	--	MACHINE SHOP	--
4	WIRE, TRENCH GROUND (l)	AS REQ'D	4510	--	--
5	TRANSFORMERS, (HDL, HTL OR HSL) (F)	2	3702	--	--
6	FUSE, BAY-O-NET	2	--	--	--

© 1998 - 2022 San Diego Gas & Electric Company. All rights reserved. Removal of this copyright notice without permission is not permitted under law.

REV	CHANGE	DR	BY	DSN	APV	DATE	REV	CHANGE	DR	BY	DSN	APV	DATE
C	REFERENCE UPDATE	EDM	EJA	GLW	KRG	10/21/2022	F						
B	REVISION	-	-	-	RSW/VCR	05/27/2004	E						
A	REVISION	-	-	-	RSW/VCR	03/01/2002	D						

X Indicates Latest Revision | Completely Revised | New Page | Information Removed

SDG&E ELECTRIC UNDERGROUND CONSTRUCTION STANDARDS

TWO SINGLE-PHASE, TYPE "HDS", OR "HTS" DEADFRONT PADMOUNT TRANFORMERS FOR OPEN DELTA BANK INSTALLATION

UG3713.1

TABLE OF CONTENTS

BILL OF MATERIALS (CONT'D):

ITEM	DESCRIPTION	QUANTITY	STANDARD PAGE	STOCK NUMBER	DESIGN UNITS
7	BUSHING PLUG	3	4195	S544676	BSHPLG
8	INSERT, FEED-THRU	1	4195	S544678	FEED-I
9	ELBOW, LOADBREAK, 12KV (WITH WHITE-BLACK-WHITE BAND)	AS REQ'D	4190/4191	--	--
10	TAILS, CONCENTRIC NEUTRAL	AS REQ'D	4176	--	--
11	CONNECTOR, COMPRESSION	AS REQ'D	4174/4176	--	--
12	KEYLESS LOCK (A)(I)	2	--	S468010	--
13	CABLE IDENTIFICATION	AS REQ'D	3202	--	--
14	CONNECTIONS, SLIP-FIT	AS REQ'D	4167/4168	S269990	--
15	NEUTRAL GROUND STRAP (ON TRANSFORMER) (E)	2	--	--	--
16	HOLD DOWN DEVICE (SUPPLIED WITH TRANSFORMER)	4	--	--	--
17	NUT, CLAMPING CHANNEL	4	--	S503520	--
18	CONNECTOR, SERVICE POST	4	--	S262560	--

NOTES:

(I) NOT SHOWN ON FIGURES

REFERENCE:

a. SEE UG3202 FOR CABLE IDENTIFICATION.

b. SEE UG3213, UG3214, UG3215, UG3216, UG3217, AND UG3218 (PREVIOUS # UG3212) FOR TRANSFORMER IDENTIFICATION.

(c) SEE UG3365 AND UG3366 (PREVIOUS # UG3365) FOR SLURRY BACKFILL.

(d) SEE UG3408.

e. SEE UG3479 FOR TRANSFORMER BARRIER PROTECTION.

f. SEE UG3480, UG3481, UG3482, AND UG3483 FOR MINIMUM OPERATING CLEARANCE REQUIREMENTS.

g. SEE UG3484 FOR PAD INSTALLATION OF PAD MOUNTED EQUIPMENT.

h. SEE UG3486, UG3487, AND UG3488 FOR RETAINING WALL REQUIREMENTS AND CLEARANCES FROM REVERSE SUBGRADE RETAINING WALLS.

i. SEE UG3489 FOR RETAINING WALLS.

j. SEE UG3702 FOR TRANSFORMER RATING AND SIZE. SEE THE WORK ORDER FOR TRANSFORMER PREFIXES.

(k) SEE UG3948 FOR SEALING SERVICE LATERAL CONDUITS.

(l) SEE UG4510 FOR (PREFERRED I) AND (ALTERNATE) TRENCH GROUND WIRE.

m. SEE UG4512 FOR (PREFERRED II) EQUIPMENT GROUNDING INSTALLATION.

(n) SEE UG4512 FOR EQUIPMENT GROUNDING.

o. SEE UG4514 FOR GROUNDING TELCO CONDUCTOR IN PAD MOUNTED EQUIPMENT.

TABLE OF CONTENTS

© 1998 - 2022 San Diego Gas & Electric Company. All rights reserved. Removal of this copyright notice without permission is not permitted under law.

REV	CHANGE	DR	BY	DSN	APV	DATE	REV	CHANGE	DR	BY	DSN	APV	DATE
C	REFERENCE UPDATE	EDM	EJA	GLW	KRG	10/21/2022	F						
B	REVISION	-	-	-	RSW/VCR	05/27/2004	E						
A	REVISION	-	-	-	RSW/VCR	03/01/2002	D						

X Indicates Latest Revision | Completely Revised | New Page | Information Removed

SDG&E ELECTRIC UNDERGROUND CONSTRUCTION STANDARDS

TWO SINGLE-PHASE, TYPE "HDS", OR "HTS" DEADFRONT PADMOUNT TRANFORMERS FOR OPEN DELTA BANK INSTALLATION

UG3713.2

SCOPE: THIS STANDARD SHOWS THE CONSTRUCTION THAT SHALL BE USED FOR INSTALLING THREE SINGLE-PHASE, DEAD FRONT TYPE "HDS" OR "HTS" TRANSFORMERS FOR A CLOSED DELTA BANK THREE-PHASE INSTALLATION.

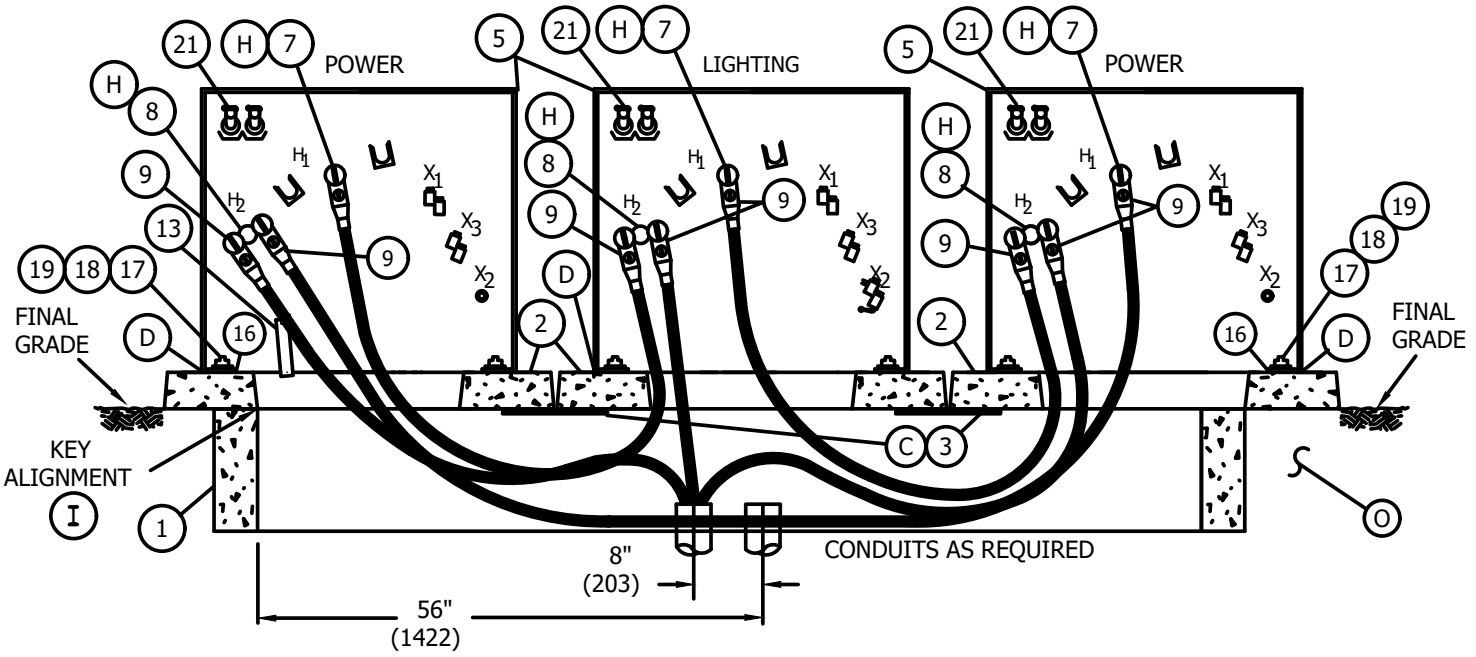

PRIMARY INSTALLATION

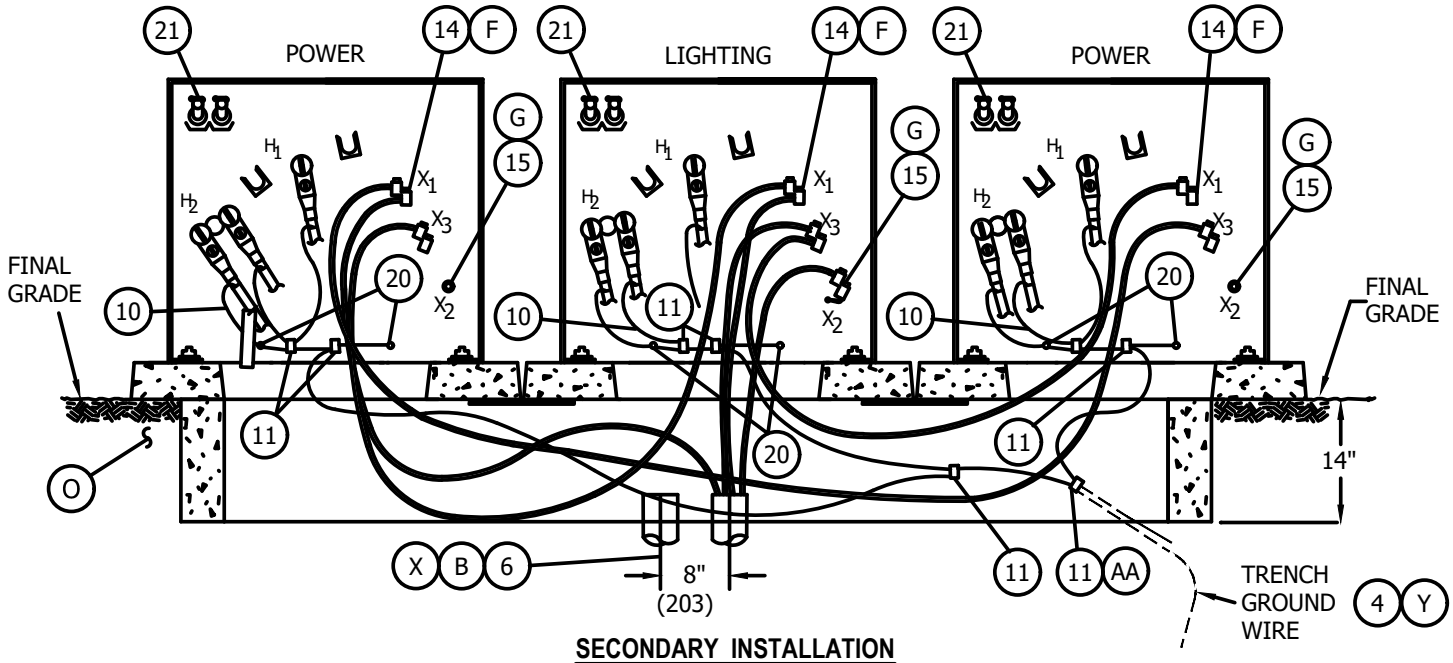

SECONDARY INSTALLATION

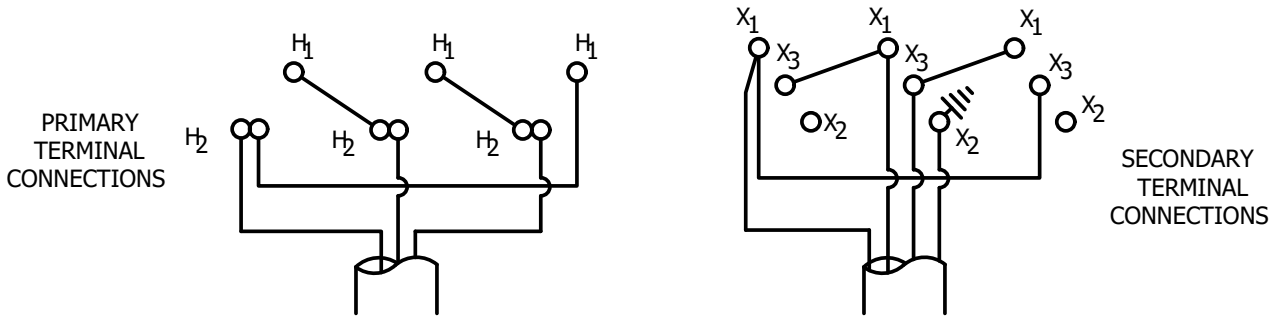

©1998 - 2005 San Diego Gas & Electric Company. All rights reserved. Removal of this copyright notice without permission is not permitted under law.

X Indicates Latest Revision	Completely Revised	New Page	Information Removed

3714.1	SDG&E ELECTRIC STANDARDS THREE SINGLE-PHASE, TYPE "HDS" OR "HTS" DEAD FRONT PAD-MOUNT TRANSFORMERS FOR CLOSED DELTA BANK INSTALLATION	REVISION DATE 5-28-04 APPD

TABLE OF CONTENTS

BILL OF MATERIAL:

ITEM	DESCRIPTION	QUANTITY	CONST STD. OR PAGE NO.	STOCK NUMBER	ASSEMBLY UNITS
1	HANDHOLE, 14" X 108" X 14"	1	3311	162662	-
2	PAD, TRANSFORMER	3	3421	514240	3421-1
3	PLATE, FLOOR, 3/8" GALV, 12" X 24"	2	-	MACHINE SHOP	-
4	TRENCH GROUND WIRE (Y)	AS REQ'D	4510	-	-
5	TRANSFORMERS, (HDL, HTL OR HSL) (H)	3	3702	-	-
6	SEALING COMPOUND (B) (X)	AS REQ'D	-	442976	-
7	BUSHING PLUG	3	4192	544676	BSHPLG
8	FEED-THRU INSERT	3	4192	544678	FEED-I
9	ELBOW, LOADBREAK, 12KV (WITH WHITE-BLACK-WHITE BAND)	9	4191	-	-
10	CONCENTRIC NEUTRAL TAILS	AS REQ'D	-	-	-
11	CONNECTOR, COMPRESSION	AS REQ'D	4172	-	-
12	KEYLESS LOCK (NOT SHOWN ABOVE) (A)	3	-	468101	-
13	CABLE IDENTIFICATION	AS REQ'D	3202	-	-
14	CONNECTIONS, SECONDARY (F)	AS REQ'D	4167	-	-
15	NEUTRAL GROUND STRAP (SUPPLIED WITH TRANSFORMER) (G)	3	-	-	-
16	HOLD DOWN DEVICE (SUPPLIED WITH TRANSFORMER)	6	-	-	-
17	NUT, CLAMPING CHANNEL	6	-	503520	-
18	SCREW, HEX HEAD CAP, BRONZE, 1/2" X 1-1/2"	6	-	616192	-
19	WASHER, STANDARD FLAT ROUND, BRONZE, 1/2"	6	-	799488	-
20	SERVICE POST CONNECTOR	6	-	262560	-
21	BAY-O-NET FUSE	2	-	-	-

INSTALLATION:

(A) KEYLESS LOCK, ITEM 12, TO BE ATTACHED TO LATCHING MECHANISM ON TRANSFORMERS AND PENTAHEAD BOLTS THREADED IN COMPLETELY.

(B) TERMINATE PRIMARY AND SECONDARY CONDUITS AS SHOWN ON PAGE 3714.1. SEAL SECONDARY AND PRIMARY CONDUITS WITH SEALING COMPOUND OR EQUIVALENT. SEAL SERVICE LATERAL CONDUITS PER STANDARD 3948 (G.O. 128 RULE 31.6).

(C) INSERT ITEM 3 (FLOOR PLATES), PRIOR TO SETTING PADS.

(D) BASE SHALL BE CAULKED WHEN NECESSARY TO PREVENT WIRE ENTRY (SEE STANDARD 3408).

(F) SLIP-FIT CONNECTORS ARE NOT PROVIDED WITH TRANSFORMERS, SEE STANDARD 4167 FOR INSTALLATION AND STOCK NUMBERS. ALWAYS MAKE CERTAIN ALL CONNECTIONS ARE TIGHT BEFORE ENERGIZED TRANSFORMER.

(G) ON THE POWER TRANSFORMERS, REMOVE SECONDARY GROUND STRAPS, MAKE SURE GROUND STRAP IS ATTACHED TO THE TANK ON THE LIGHTING TRANSFORMER.

(H) THIS INSTALLATION USES THREE-PHASE #2 OR #2/0 PRIMARY CABLES. THE "HDL", "HTL", "HDS AND HTS" TRANSFORMERS ARE FITTED WITH BUSHING WELLS THAT REQUIRE SEPARATELY INSTALLED BUSHING INSERTS.

(I) MAKE SURE THE INSIDE WINDOW OPENING ON THE LEFT POWER TRANSFORMER IS STRAIGHT IN LINE WITH THE INSIDE OF THE HANDHOLE OPENING TO ALLOW ROOM FOR CABLE PULLING & TRAINING.

REFERENCE:

M. SEE STANDARD 3202 FOR CABLE IDENTIFICATION.

N. SEE STANDARD 3212 FOR TRANSFORMER IDENTIFICATION.

(O) SEE STANDARD 3365 FOR SLURRY BACKFILL.

(P) SEE STANDARD 3421 FOR PAD AND CONDUIT REQUIREMENTS.

Q. SEE STANDARD 3481 FOR TRANSFORMER BARRIER PROTECTION.

R. SEE STANDARD 3483 FOR MINIMUM OPERATING CLEARANCE REQUIREMENTS.

S. SEE STANDARD 3484 FOR PAD INSTALLATION OF PAD-MOUNTED EQUIPMENT.

T. SEE STANDARD 3486 FOR RETAINING WALL REQUIREMENTS AND CLEARANCES FROM REVERSE SUBGRADE RETAINING WALLS.

U. SEE STANDARD 3487 FOR RETAINING WALLS.

V. SEE STANDARD 3702 FOR TRANSFORMER RATING AND SIZE. SEE THE WORK ORDER FOR TRANSFORMER PREFIXES.

W. SEE STANDARD 3703 FOR TRANSFORMER APPLICATIONS.

(X) SEE STANDARD 3948 FOR SEALING SERVICE LATERAL CONDUITS.

(Y) SEE STANDARD 4510 FOR (PREFERRED I) AND (ALTERNATE) TRENCH GROUND WIRE.

Z. SEE STANDARD PAGE 4512.1 FOR (PREFERRED II) EQUIPMENT GROUNDING INSTALLATION.

(AA) SEE STANDARD 4512.2 FOR EQUIPMENT GROUNDING.

B.B. SEE STANDARD 4514 FOR GROUNDING TELCO CONDUCTOR IN PAD-MOUNTED EQUIPMENT.

© 1998 - 2010 San Diego Gas & Electric Company. All rights reserved. Removal of this copyright notice without permission is not permitted under law.

Indicates Latest Revision | Completely Revised | New Page | Information Removed

REVISION
DATE 3-1-02
APPD

SDG&E ELECTRIC STANDARDS

THREE SINGLE-PHASE, TYPE "HDS" OR HTS"
DEAD FRONT PAD-MOUNT TRANSFORMERS FOR
CLOSED DELTA BANK INSTALLATION

3714.2

TABLE OF CONTENTS

SCOPE: THIS STANDARD SHOWS THE SDS TRANSFORMER FOR THREE–PHASE INSTALLATION.

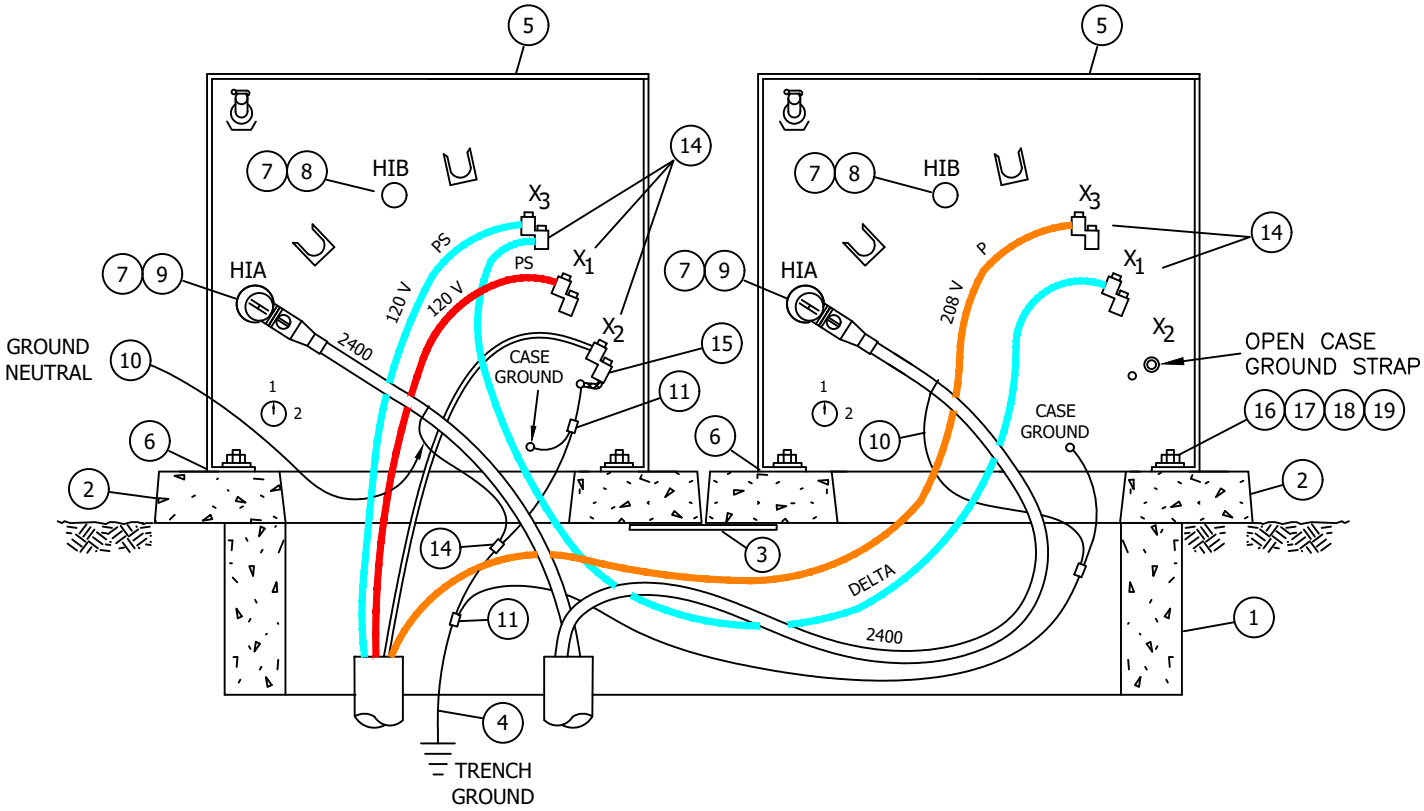

SDS OPEN Y OPEN DELTA XFMR ADDITIVE POLARITY

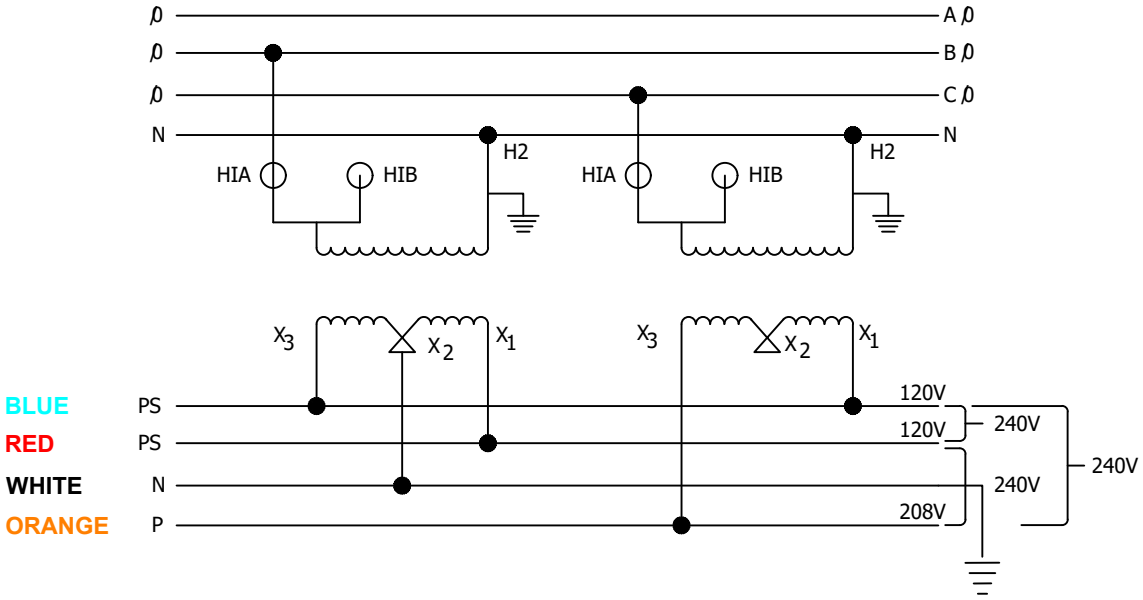

© 1998 - 2005 San Diego Gas & Electric Company. All rights reserved. Removal of this copyright notice without permission is not permitted under law.

	Indicates Latest Revision		Completely Revised	X	New Page		Information Removed

3715.1	SDG&E ELECTRIC STANDARDS TWO SINGLE-PHASE, Y TYPE SDS DEAD FRONT PAD-MOUNT TRANSFORMERS FOR OPEN DELTA BANK INSTALLATION	REVISION DATE 3-18-05 APPD TR / JJ

TABLE OF CONTENTS

BILL OF MATERIAL:

ITEM	DESCRIPTION	QUANTITY	CONST STD OR PG NO.	STOCK NUMBER	ASSEMBLY UNITS
1	HANDHOLE, 14" X 66" X 14"	1	3311	162660	-
2	PAD TRANSFORMER	2	3421	514240	3421-1
3	PLATE, FLOOR, 3/8" GALV, 12" X 24"	1	-	MACHINE SHOP	-
4	TRENCH GROUND WIRE (X)	AS REQ'D	4510	-	-
5	TRANSFORMERS, (SDS) (H)	2	3702.2	-	-
6	SEALING COMPOUND (B) (W)	AS REQ'D	-	442976	-
7	BUSHING PLUG	2	4192	544676	BSHPLG
8	INSULATING CAP	2	4192	204304	-
9	ELBOW, LOADBREAK, 12KV (WITH WHITE-BLACK-WHITE BAND)	2	4191	-	-
10	CONCENTRIC NEUTRAL TAILS	AS REQ'D	4172.1	-	-
11	CONNECTOR, COMPRESSION	AS REQ'D	4172	-	-
12	KEYLESS LOCK, (NOT SHOWN ABOVE) (A)	2	-	468010	-
13	CABLE IDENTIFICATION	AS REQ'D	3202	-	-
14	CONNECTIONS, SECONDARY (F)	AS REQ'D	4167	-	-
15	NEUTRAL GROUND STRAP (ON TRANSFORMER) (G)	2	-	-	-
16	HOLD DOWN DEVICE - (SUPPLIED WITH TRANSFORMER)	4	-	-	-
17	NUT, CLAMPING CHANNEL	4	-	503520	-
18	SCREW, HEX HEAD CAP, BRONZE, 1/2" X 1-1/2"	4	-	616192	-
19	WASHER, STANDARD FLAT ROUND, BRONZE, 1/2"	4	-	799488	-
20	SERVICE POST CONNECTOR	4	-	262560	-
21	BAY-0-NET FUSE	2	-	-	-

INSTALLATION:

(A) KEYLESS LOCK, ITEM 12, TO BE ATTACHED TO LATCHING MECHANISM ON TRANSFORMERS AND PENTAHEAD BOLTS THREADED IN COMPLETELY.

(B) TERMINATE PRIMARY AND SECONDARY CONDUITS AS SHOWN ON PAGE 3713.1. SEAL SECONDARY AND PRIMARY CONDUITS WITH SEALING COMPOUND OR EQUIVALENT. SEAL SERVICE LATERAL CONDUITS PER STANDARD 3948 (G.O. 128 RULE 31.6).

(C) INSERT ITEM 3 (FLOOR PLATE), PRIOR TO SETTING PADS.

(D) BASE SHALL BE CAULKED WHEN NECESSARY TO PREVENT WIRE ENTRY (SEE STANDARD 3408).

(F) SLIP-FIT CONNECTORS ARE NOT PROVIDED WITH TRANSFORMERS. SEE STANDARD 4167 FOR INSTALLATIONS AND STOCK NUMBERS. ALWAYS MAKE CERTAIN SECONDARY CONNECTIONS ARE TIGHT BEFORE ENERGIZING TRANSFORMER.

(G) ON THE POWER TRANSFORMER, REMOVE SECONDARY GROUND STRAP, NO Z BAR IS REQUIRED. MAKE SURE GROUND STRAP IS ATTACHED TO THE TANK ON THE LIGHTING TRANSFORMER.

(H) THIS INSTALLATION USES TWO-PHASE #2 OR #2/0 PRIMARY CABLES.

(I) CHECK TRANSFORMER NAME PLATE FOR POLARITY.

(J) CHECK HIGH VOLTAGE SWITCH FOR CORRECT SYSTEM VOLTAGE.

© 1998 - 2005 San Diego Gas & Electric Company. All rights reserved. Removal of this copyright notice without permission is not permitted under law.

REFERENCE:

M. SEE STANDARD 3202 FOR CABLE IDENTIFICATION.

N. SEE STANDARD 3212 FOR TRANSFORMER IDENTIFICATION.

(O) SEE STANDARD 3365 FOR SLURRY BACKFILL.

(P) SEE STANDARD 3421 FOR PAD AND CONDUIT REQUIREMENTS.

Q. SEE STANDARD 3481 FOR TRANSFORMER BARRIER PROTECTION.

R. SEE STANDARD 3483 FOR MINIMUM OPERATING CLEARANCE REQUIREMENTS.

S. SEE STANDARD 3484 FOR PAD INSTALLATION OF PAD-MOUNTED EQUIPMENT.

T. SEE STANDARD 3486 FOR RETAINING WALL REQUIREMENTS AND CLEARANCES FROM REVERSE SUBGRADE RETAINING WALLS.

U. SEE STANDARD 3487 FOR RETAINING WALLS.

V. SEE STANDARD 3702 FOR TRANSFORMER RATING AND SIZE. SEE THE WORK ORDER FOR TRANSFORMER PREFIXES.

(W) SEE STANDARD 3948 FOR SEALING SERVICE LATERAL CONDUITS.

(X) SEE STANDARD 4510 FOR (PREFERRED I) AND (ALTERNATE) TRENCH GROUND WIRE.

Y. SEE STANDARD PAGE 4512.1 FOR (PREFERRED II) EQUIPMENT GROUNDING INSTALLATION.

(Z) SEE STANDARD 4512.2 FOR EQUIPMENT GROUNDING.

TABLE OF CONTENTS

© 1998 - 2005 San Diego Gas & Electric Company. All rights reserved. Removal of this copyright notice without permission is not permitted under law.

SCOPE: THIS STANDARD SHOWS THE CONSTRUCTION THAT SHALL BE USED FOR INSTALLING THREE SINGLE-PHASE, DEAD FRONT Y TYPE SDS TRANSFORMERS FOR A CLOSED DELTA BANK THREE-PHASE INSTALLATION.

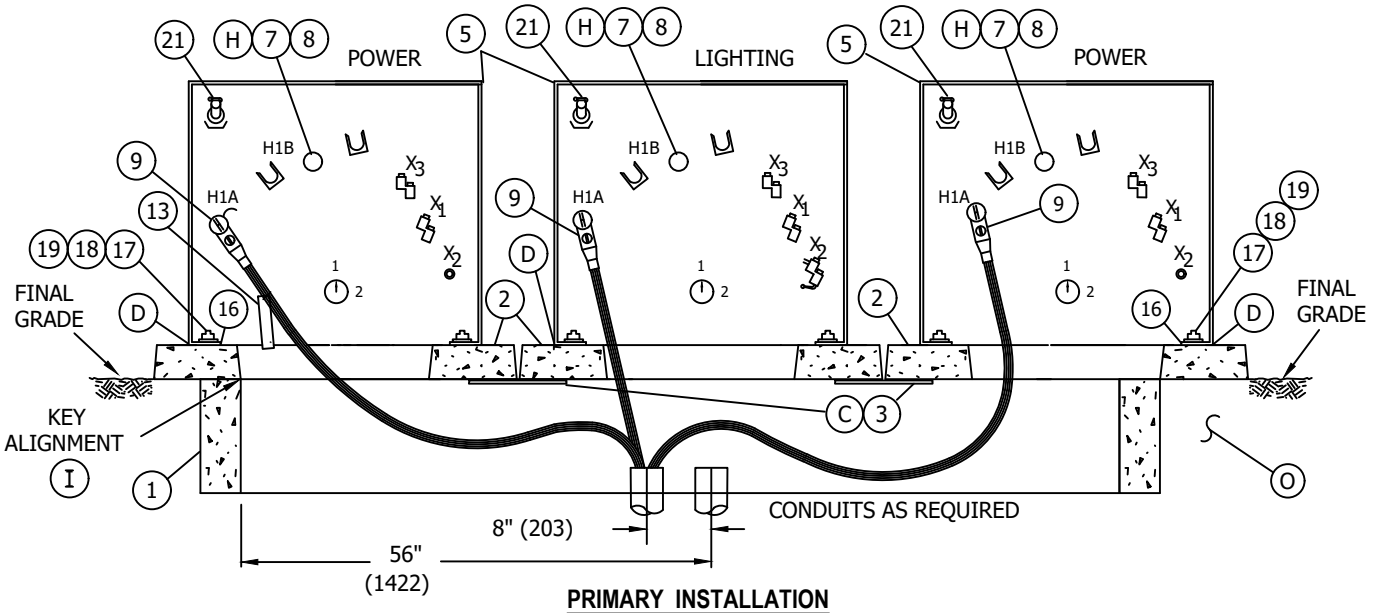

PRIMARY INSTALLATION

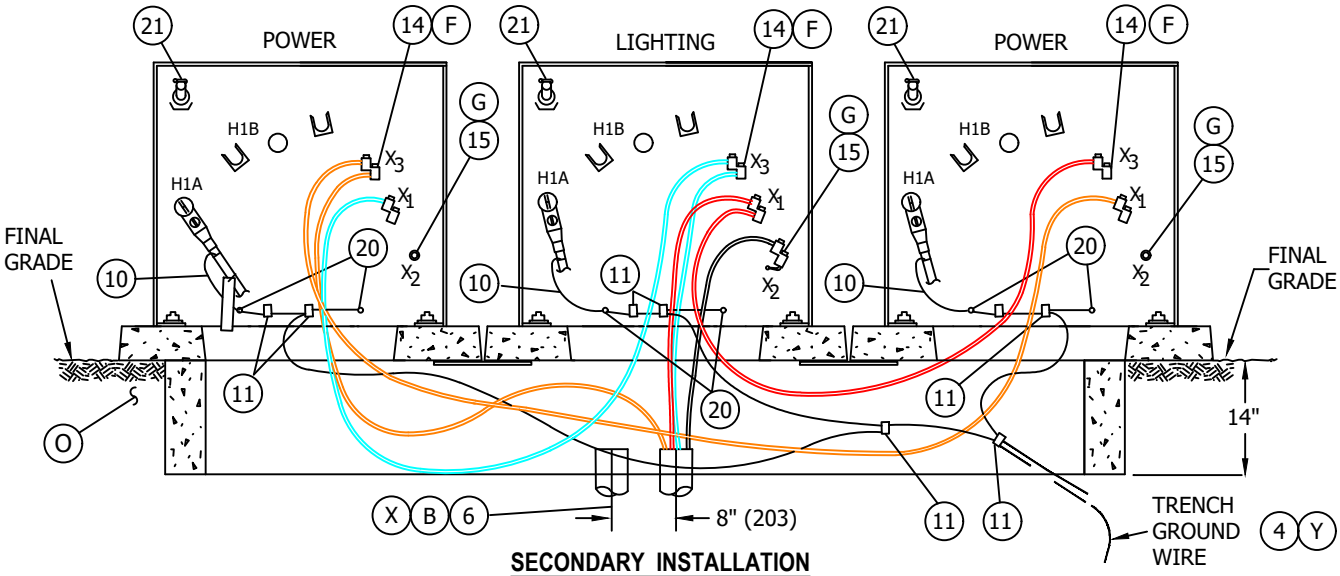

SECONDARY INSTALLATION

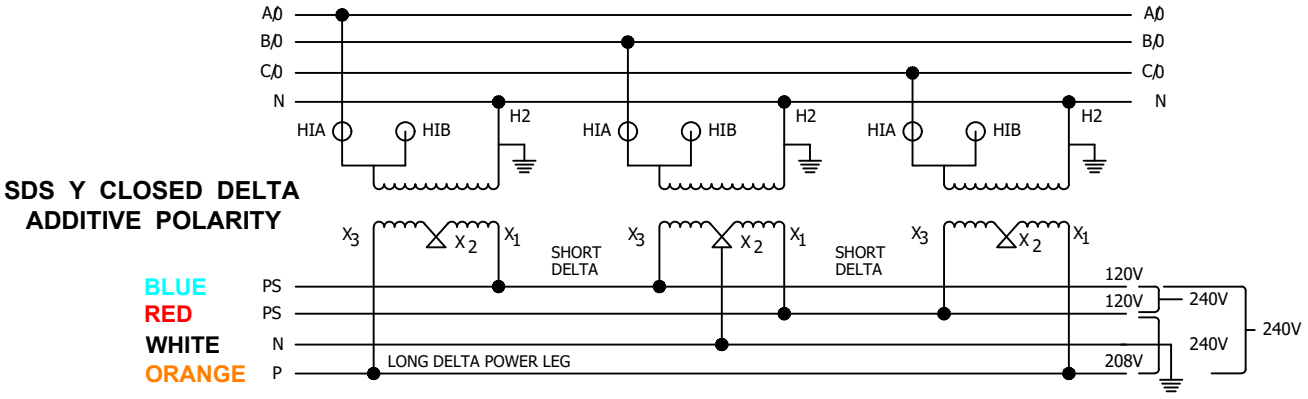

© 1998 - 2005 San Diego Gas & Electric Company. All rights reserved. Removal of this copyright notice without permission is not permitted under law.

	Indicates Latest Revision		Completely Revised	X	New Page		Information Removed

REVISION DATE 2-24-05 APPD TR / JJ	SDG&E ELECTRIC STANDARDS THREE SINGLE-PHASE, Y TYPE SDS DEAD FRONT PAD-MOUNT TRANSFORMERS FOR CLOSED DELTA BANK INSTALLATION	3715.4

TABLE OF CONTENTS

BILL OF MATERIAL:

ITEM	DESCRIPTION	QUANTITY	CONST STD. OR PAGE NO.	STOCK NUMBER	ASSEMBLY UNITS
1	HANDHOLE, 14" X 108" X 14"	1	3311	162662	-
2	PAD, TRANSFORMER	3	3421	514240	3421-1
3	PLATE, FLOOR, 3/8" GALV, 12" X 24"	2	-	MACHINE SHOP	-
4	TRENCH GROUND WIRE (Y)	AS REQ'D	4510	-	-
5	TRANSFORMERS, SDS (H)	3	3702	-	-
6	SEALING COMPOUND (B) (X)	AS REQ'D	-	442976	-
7	BUSHING PLUG	3	4192	544676	BSHPLG
8	CAP INSULATING	3	4192	204304	FEED-I
9	ELBOW, LOADBREAK, 12KV (WITH WHITE-BLACK-WHITE BAND)	3	4191	-	-
10	CONCENTRIC NEUTRAL TAILS	AS REQ'D	-	-	-
11	CONNECTOR, COMPRESSION	AS REQ'D	4172	-	-
12	KEYLESS LOCK (NOT SHOWN ABOVE) (A)	3	-	468101	-
13	CABLE IDENTIFICATION	AS REQ'D	3202	-	-
14	CONNECTIONS, SECONDARY (F)	AS REQ'D	4167	-	-
15	NEUTRAL GROUND STRAP (SUPPLIED WITH TRANSFORMER) (G)	3	-	-	-
16	HOLD DOWN DEVICE (SUPPLIED WITH TRANSFORMER)	6	-	-	-
17	NUT, CLAMPING CHANNEL	6	-	503520	-
18	SCREW, HEX HEAD CAP, BRONZE, 1/2" X 1-1/2"	6	-	616192	-
19	WASHER, STANDARD FLAT ROUND, BRONZE, 1/2"	6	-	799488	-
20	SERVICE POST CONNECTOR	6	-	262560	-
21	BAY-O-NET FUSE	3	-	-	-

INSTALLATION:

(A) KEYLESS LOCK, ITEM 12, TO BE ATTACHED TO LATCHING MECHANISM ON TRANSFORMERS AND PENTAHEAD BOLTS THREADED IN COMPLETELY.

(B) TERMINATE PRIMARY AND SECONDARY CONDUITS AS SHOWN ON PAGE 3714.1. SEAL SECONDARY AND PRIMARY CONDUITS WITH SEALING COMPOUND OR EQUIVALENT. SEAL SERVICE LATERAL CONDUITS PER STANDARD 3948 (G.O. 128 RULE 31.6).

(C) INSERT ITEM 3 (FLOOR PLATES), PRIOR TO SETTING PADS.

(D) BASE SHALL BE CAULKED WHEN NECESSARY TO PREVENT WIRE ENTRY (SEE STANDARD 3408).

(F) SLIP-FIT CONNECTORS ARE NOT PROVIDED WITH TRANSFORMERS, SEE STANDARD 4167 FOR INSTALLATION AND STOCK NUMBERS. ALWAYS MAKE CERTAIN ALL CONNECTIONS ARE TIGHT BEFORE ENERGIZED TRANSFORMER.

(G) ON THE POWER TRANSFORMERS, REMOVE SECONDARY GROUND STRAPS, NO Z BAR IS REQUIRED. MAKE SURE GROUND STRAP IS ATTACHED TO THE TANK ON THE LIGHTING TRANSFORMER.

(H) THIS INSTALLATION USES THREE-PHASE #2 OR #2/0 PRIMARY CABLES.

(I) MAKE SURE THE INSIDE WINDOW OPENING ON THE LEFT POWER TRANSFORMER IS STRAIGHT IN LINE WITH THE INSIDE OF THE HANDHOLE OPENING TO ALLOW ROOM FOR CABLE PULLING & TRAINING.

(J) CHECK TRANSFORMER NAME PLATE FOR POLARITY.

(K) CHECK HIGH VOLTAGE SWITCH FOR CORRECT SYSTEM VOLTAGE.

© 1998 - 2014 San Diego Gas & Electric Company. All rights reserved. Removal of this copyright notice without permission is not permitted under law.

TABLE OF CONTENTS

REFERENCE:

M. SEE STANDARD 3202 FOR CABLE IDENTIFICATION.

N. SEE STANDARD 3212 FOR TRANSFORMER IDENTIFICATION.

(O) SEE STANDARD 3365 FOR SLURRY BACKFILL.

(P) SEE STANDARD 3421 FOR PAD AND CONDUIT REQUIREMENTS.

Q. SEE STANDARD 3481 FOR TRANSFORMER BARRIER PROTECTION.

R. SEE STANDARD 3483 FOR MINIMUM OPERATING CLEARANCE REQUIREMENTS.

S. SEE STANDARD 3484 FOR PAD INSTALLATION OF PAD-MOUNTED EQUIPMENT.

T. SEE STANDARD 3486 FOR RETAINING WALL REQUIREMENTS AND CLEARANCES FROM REVERSE SUBGRADE RETAINING WALLS.

U. SEE STANDARD 3487 FOR RETAINING WALLS.

V. SEE STANDARD 3702 FOR TRANSFORMER RATING AND SIZE. SEE THE WORK ORDER FOR TRANSFORMER PREFIXES.

W. SEE STANDARD 3703 FOR TRANSFORMER APPLICATIONS.

(X) SEE STANDARD 3948 FOR SEALING SERVICE LATERAL CONDUITS.

(Y) SEE STANDARD 4510 FOR (PREFERRED I) AND (ALTERNATE) TRENCH GROUND WIRE.

Z. SEE STANDARD PAGE 4512.1 FOR (PREFERRED II) EQUIPMENT GROUNDING INSTALLATION.

TABLE OF CONTENTS

© 1998 - 2005 San Diego Gas & Electric Company. All rights reserved. Removal of this copyright notice without permission is not permitted under law.

SCOPE: THIS STANDARD SHOWS THE CONNECTION USED FOR INSTALLING THREE–PHASE, 12KV RADIAL/LOOP FEED DEAD FRONT PAD–MOUNTED TRANSFORMERS.

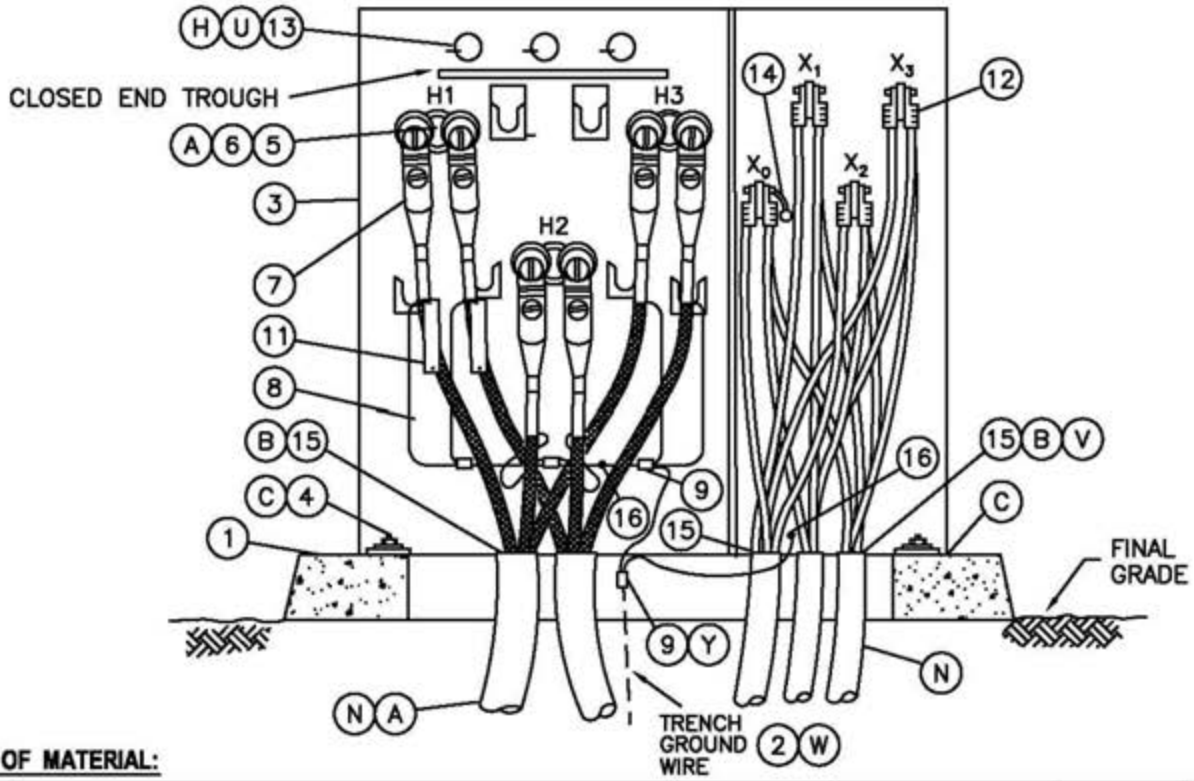

BILL OF MATERIAL:

ITEM	DESCRIPTION	QUANTITY	CONST STD. OR PG NO	STOCK NUMBER	ASSEMBLY UNITS
1	PAD, TRANSFORMER, THREE–PHASE	1	3425,3426,3427	–	–
2	TRENCH GROUND WIRE (W)	AS REQ'D	4510	–	–
3	TRANSFORMER, (THRU 1500 KVA) (F)	1	3702	–	–
4	HOLD DOWN DEVICE – (SUPPLIED WITH CABINET)	2	–	–	–
5	BUSHING PLUG (RADIAL FEED) (A)	3	4192	544676	BSHPLG
6	FEED–THRU INSERT (LOOP FEED) (A)	3	4192	544678	FEED–I
7	ELBOW, LOADBREAK, 12KV (WITH WHITE–BLACK–WHITE BAND)	AS REQ'D	4191	–	–
8	CONCENTRIC NEUTRAL TAILS	–	4172.1	–	–
9	CONNECTOR, COMPRESSION	AS REQ'D	4172	–	–
10	KEYLESS LOCK, (NOT SHOWN ABOVE) (G)	1	–	468010	–
11	CABLE IDENTIFICATION TAGS	AS REQ'D	3202	–	–
12	SECONDARY CONNECTIONS	AS REQ'D	4168, 4171	–	–
13	FUSE, "BAY–O–NET" (U)	3	4311	–	–
14	NEUTRAL GROUND STRAP (ON TRANSFORMER)	1	–	–	–
15	SEALING COMPOUND (B)(V)	AS REQ'D	–	442976	–
16	SERVICE POST CONNECTOR	2	–	262560	–

© 1998 - 2005 San Diego Gas & Electric Company. All rights reserved. Removal of this copyright notice without permission is not permitted under law.

X Indicates Latest Revision	Completely Revised	New Page	Information Removed

3751.1	SDG&E ELECTRIC STANDARDS THREE–PHASE 12KV, TYPE "HZS", "HBS", "PZS", "HMS", "HNS", OR "HKS" RADIAL/LOOP, DEAD FRONT, PAD–MOUNTED TRANSFORMER INSTALLATION	REVISION DATE 5–10–05 APPD MF / JJ

TABLE OF CONTENTS

INSTALLATION:

(A) THIS INSTALLATION USES FROM 3 TO 6 SINGLE-PHASE CONDUCTOR #2 OR 2/0 PRIMARY CABLES. THE TRANSFORMER IS FITTED WITH BUSHING WELLS THAT REQUIRE SEPARATELY INSTALLED BUSHING INSERTS. FOR THE RADIAL APPLICATION, THREE BUSHING PLUGS ARE REQUIRED, ITEM 5 IN THE BILL OF MATERIAL. FOR THE LOOP FEED APPLICATION, THREE FEED-THRU INSERTS ARE REQUIRED, ITEM 6 IN THE BILL OF MATERIAL.

(B) TERMINATE PRIMARY AND SECONDARY CONDUITS FLUSH WITH TOP OF PAD. SEAL SECONDARY AND PRIMARY CONDUITS WITH SEALING COMPOUND. SEAL SERVICE LATERAL CONDUITS PER STANDARD 3948 (G.O 128 RULE 31.6).

(C) TRANSFORMER SHALL BE SOLIDLY SECURED TO PAD TO PREVENT UNAUTHORIZED MOVEMENT OR ENTRY. THE BASE SHALL BE CAULKED WHEN NECESSARY TO PREVENT WIRE ENTRY.

(F) TRANSFORMER RATING AND SIZE PER WORK ORDER.

(G) KEYLESS LOCK (ITEM 10) TO BE ATTACHED TO LATCHING MECHANISM ON TRANSFORMER AFTER PENTAHEAD BOLT IS THREADED IN COMPLETELY.

(H) WHEN CHANGING PZS FROM 4KV TO 12KV FOLLOW BAY-O-NET FUSE CHART LISTED:

PZS	4KV	12KV
75KVA	25 AMP	6 AMP
150KVA	30 AMP	12 AMP
500KVA	100 AMP	40 AMP

SERIES/MULTIPLE PRIMARY TRANSFORMERS ARE SUPPLIED WITH 4160 VOLT FUSE.

REFERENCE:

J. SEE STANDARD 3202 FOR CABLE IDENTIFICATION.

K. SEE STANDARD 3212 FOR TRANSFORMER IDENTIFICATION.

L. SEE STANDARD 3221 FOR HIGH VOLTAGE DECAL.

M. SEE STANDARD 3408 FOR WIRE ENTRY PREVENTION.

(N) SEE STANDARD 3425, 3426 OR 3427 FOR PAD, HANDHOLE AND CONDUIT PLACEMENT.

O. SEE STANDARD 3481 FOR BARRIER PROTECTION.

P. SEE STANDARD 3483 FOR MINIMUM OPERATING AND CLEARANCE REQUIREMENTS (PAD PLACEMENT).

Q. SEE STANDARD 3484 FOR PAD INSTALLATION OF PAD-MOUNTED EQUIPMENT.

R. SEE STANDARD 3486 FOR RETAINING WALL REQUIREMENTS AND CLEARANCES FROM REVERSE SUBGRADE RETAINING WALLS.

S. SEE STANDARD 3487 FOR RETAINING WALLS.

T. SEE STANDARD 3702 FOR TRANSFORMER PREFIXES.

(U) SEE STANDARD 3704 FOR "BAY-O-NET" FUSE OPERATING INSTRUCTIONS.

(V) SEE STANDARD 3948 FOR SEALING SERVICE LATERAL CONDUITS.

(W) SEE STANDARD 4510 FOR (PREFERRED I) AND (ALTERNATE) TRENCH GROUND WIRE.

X. SEE STANDARD PAGE 4512.1 FOR (PREFERRED II) EQUIPMENT GROUNDING INSTALLATION.

(Y) SEE STANDARD 4512.2 FOR EQUIPMENT GROUNDING.

Z. SEE STANDARD 4514 FOR GROUNDING TELCO CONDUCTOR IN PAD-MOUNTED EQUIPMENT.

© 1998 - 2005 San Diego Gas & Electric Company. All rights reserved. Removal of this copyright notice without permission is not permitted under law.

TABLE OF CONTENTS

SCOPE: THIS STANDARD SHOWS THE CONNECTION USED FOR INSTALLING THREE-PHASE, 12KV RADIAL FEED DEAD FRONT PAD-MOUNTED TRANSFORMER.

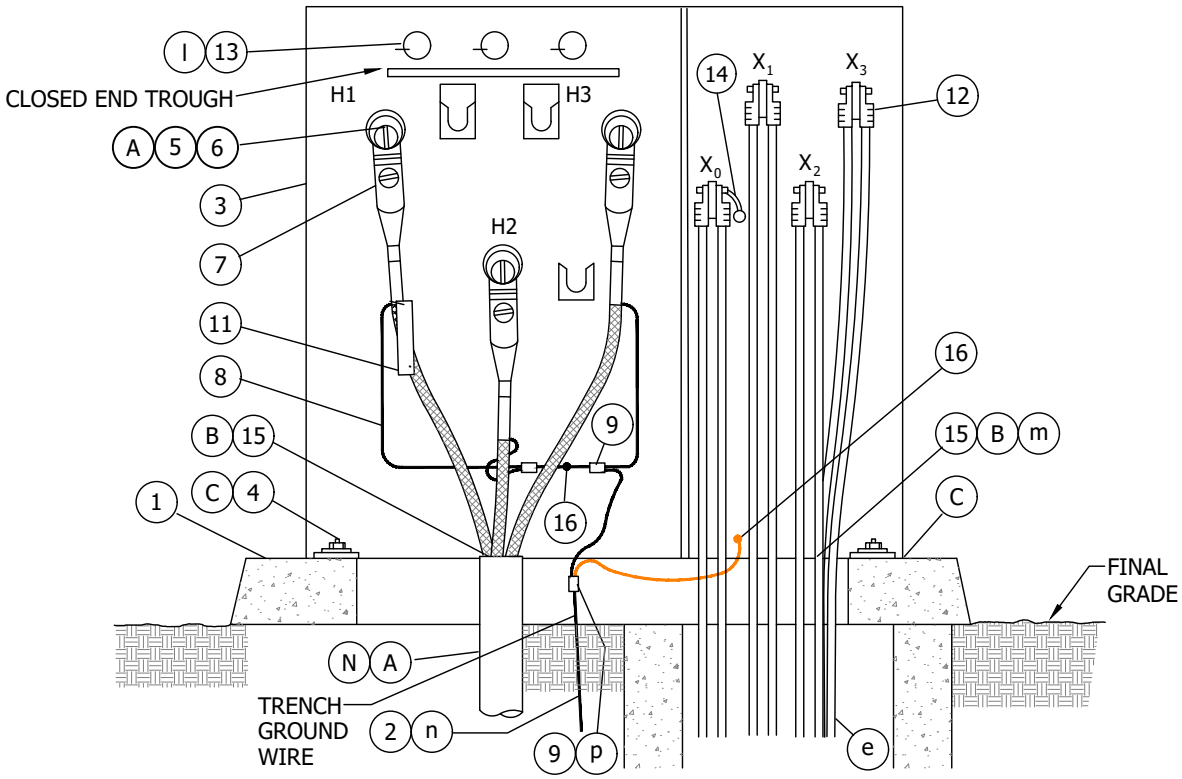

FIGURE 1

INSTALLATION:

(A) THIS INSTALLATION USES THREE-PHASE PRIMARY CABLE IN EITHER RADIAL OR LOOP CONFIGURATION. THE TRANSFORMER IS FITTED WITH 3 BUSHINGS WELLS. INSTALL BUSHING PLUGS FOR RADIAL OR FEED-THRU INSERTS FOR LOOP CONFIGURATION.

(B) TERMINATE PRIMARY CONDUIT FLUSH WITH TOP OF PAD. SEAL SECONDARY AND PRIMARY CONDUITS WITH SEALING COMPOUND. SEAL SERVICE LATERAL CONDUITS PER STANDARD 3948 (G.O. 128 RULE 31.6).

(C) TRANSFORMER SHALL BE SOLIDLY SECURED TO PAD TO PREVENT UNAUTHORIZED MOVEMENT OR ENTRY. THE BASE SHALL BE CAULKED WHEN NECESSARY TO PREVENT WIRE ENTRY.

(D) TRANSFORMER RATING AND SIZE PER WORK ORDER.

(E) KEYLESS LOCK (ITEM 10) TO BE ATTACHED TO LATCHING MECHANISM ON TRANSFORMER AFTER PENTAHEAD BOLT IS THREADED IN COMPLETELY.

TABLE OF CONTENTS

© 1998 - 2019 San Diego Gas & Electric Company. All rights reserved. Removal of this copyright notice without permission is not permitted under law.

REV	CHANGE	BY	DSGN	APPV	DATE	REV	CHANGE	BY	DSGN	APPV	DATE
C						F					
B	FIGURE UPDATE	ADW	JES	CZH	11/11/2019	E					
A	TABLE UPDATE	-	-	JJ/MF	10/05/2005	D					

X Indicates Latest Revision | Completely Revised | New Page | Information Removed

SDG&E ELECTRIC UNDERGROUND CONSTRUCTION STANDARDS

THREE-PHASE 12KV, TYPE "HNS"
RADIAL, DEAD FRONT,
PAD-MOUNTED TRANSFORMER INSTALLATION

UG3752.1

BILL OF MATERIALS:

ITEM	DESCRIPTION	QUANTITY	STANDARD PAGE	STOCK NUMBER	ASSEMBLY UNITS
1	PAD, TRANSFORMER, THREE-PHASE	1	3427	-	-
2	TRENCH GROUND WIRE (n)	AS REQ'D	4510	-	-
3	TRANSFORMER, (500-2,500 KVA) (D)	1	3702	-	-
4	HOLD DOWN DEVICE - (SUPPLIED WITH CABINET0	2	-	-	-
5	BUSHING PLUG (RADIAL FEED)	AS REQ'D	4192.1	S544676	BSHPLG
6	FEED-THRU INSERT (LOOP FEED)	AS REQ'D	4192.1	S544678	FEED-I
7	ELBOW, LOADBREAK, 12KV (WITH WHITE-BLACK-WHITE BAND)	AS REQ'D	4191	-	-
8	CONCENTRIC NEUTRAL TAILS	-	4172.1	-	-
9	CONNECTOR, COMPRESSION	AS REQ'D	4172	-	-
10	KEYLESS LOCK, (NOT SHOWN ABOVE) (E)	1	-	S468010	-
11	CABLE IDENTIFICATION TAGS	AS REQ'D	3202	-	-
12	SECONDARY CONNECTIONS	AS REQ'D	4168, 4171	-	-
13	FUSE, "BAY-O-NET" (l)	3	4311	-	-
14	NEUTRAL GROUND STRAP (ON TRANSFORMER)	1	-	-	-
15	SEALING COMPOUND (B)(m)	AS REQ'D	-	S442976	-
16	SERVICE POST CONNECTOR	2	-	S262560	-

NOTES: NONE

REFERENCE:

a. SEE STANDARD 3202 FOR CABLE IDENTIFICATION.
b. SEE STANDARD 3212 FOR TRANSFORMER IDENTIFICATION.
c. SEE STANDARD 3221 FOR HIGH VOLTAGE DECAL.
d. SEE STANDARD 3408 FOR WIRE ENTRY PREVENTION.
(e) SEE STANDARD 3425, 3426 OR 3427 FOR PAD, HANDHOLE AND CONDUIT PLACEMENT.
f. SEE STANDARD 3481 FOR BARRIER PROTECTION.
g. SEE STANDARD 3483 FOR MINIMUM OPERATING AND CLEARANCE REQUIREMENTS (PAD PLACEMENT).
h. SEE STANDARD 3484 FOR PAD INSTALLATION OF PAD-MOUNTED EQUIPMENT.
i. SEE STANDARD 3486 FOR RETAINING WALL REQUIREMENTS AND CLEARANCES FROM REVERSE SUBGRADE RETAINING WALLS.
j. SEE STANDARD 3487 FOR RETAINING WALLS.
k. SEE STANDARD 3702 FOR TRANSFORMER PREFIXES.
(l) SEE STANDARD 3704 FOR "BAY-O-NET" FUSE OPERATING INSTRUCTIONS.
(m) SEE STANDARD 3948 FOR SEALING SERVICE LATERAL CONDUITS.
(n) SEE STANDARD 4510 FOR (PREFERRED I) AND (ALTERNATE) TRENCH GROUND WIRE.
o. SEE STANDARD PAGE 4512.1 FOR (PREFERRED II) EQUIPMENT GROUNDING INSTALLATION.
(p) SEE STANDARD 4512.2 FOR EQUIPMENT GROUNDING.
q. SEE STANDARD 4514 FOR GROUNDING TELCO CONDUCTOR IN PAD-MOUNTED EQUIPMENT.

© 1998 - 2019 San Diego Gas & Electric Company. All rights reserved. Removal of this copyright notice without permission is not permitted under law.

REV	CHANGE	BY	DSGN	APPV	DATE	REV	CHANGE	BY	DSGN	APPV	DATE
C						F					
B	FIGURE UPDATE	ADW	JES	CZH	11/11/2019	E					
A	TABLE UPDATE	-	-	JJ/MF	10/05/2005	D					

X Indicates Latest Revision | Completely Revised | New Page | Information Removed

SDG&E ELECTRIC UNDERGROUND CONSTRUCTION STANDARDS

THREE-PHASE 12KV, TYPE "HNS"
RADIAL, DEAD FRONT,
PAD-MOUNTED TRANSFORMER INSTALLATION

UG3752.2

TABLE OF CONTENTS

SCOPE: THIS STANDARD SHOWS THE METHOD OF INSTALLATING A THREE-PHASE, STEP-DOWN TYPE "HPS" RADIAL/LOOP FEED DEAD FRONT PAD-MOUNTED TRANSFORMER.

225 KVA

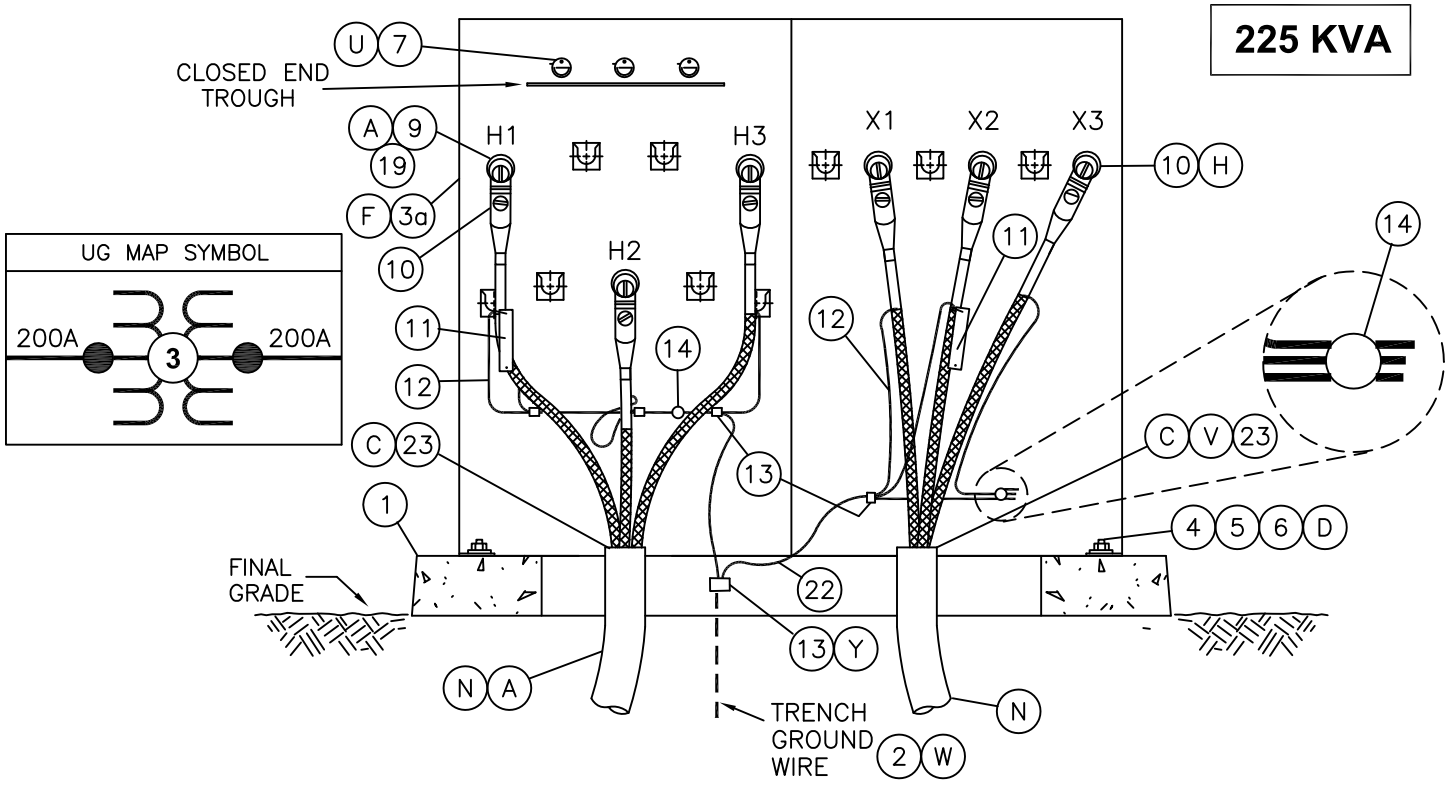

SCOPE: THIS STANDARD SHOWS THE METHOD OF INSTALLATING A THREE-PHASE, STEP-DOWN TYPE "HPS" RADIAL/LOOP FEED DEAD FRONT PAD-MOUNTED TRANSFORMER.

500-2500 KVA

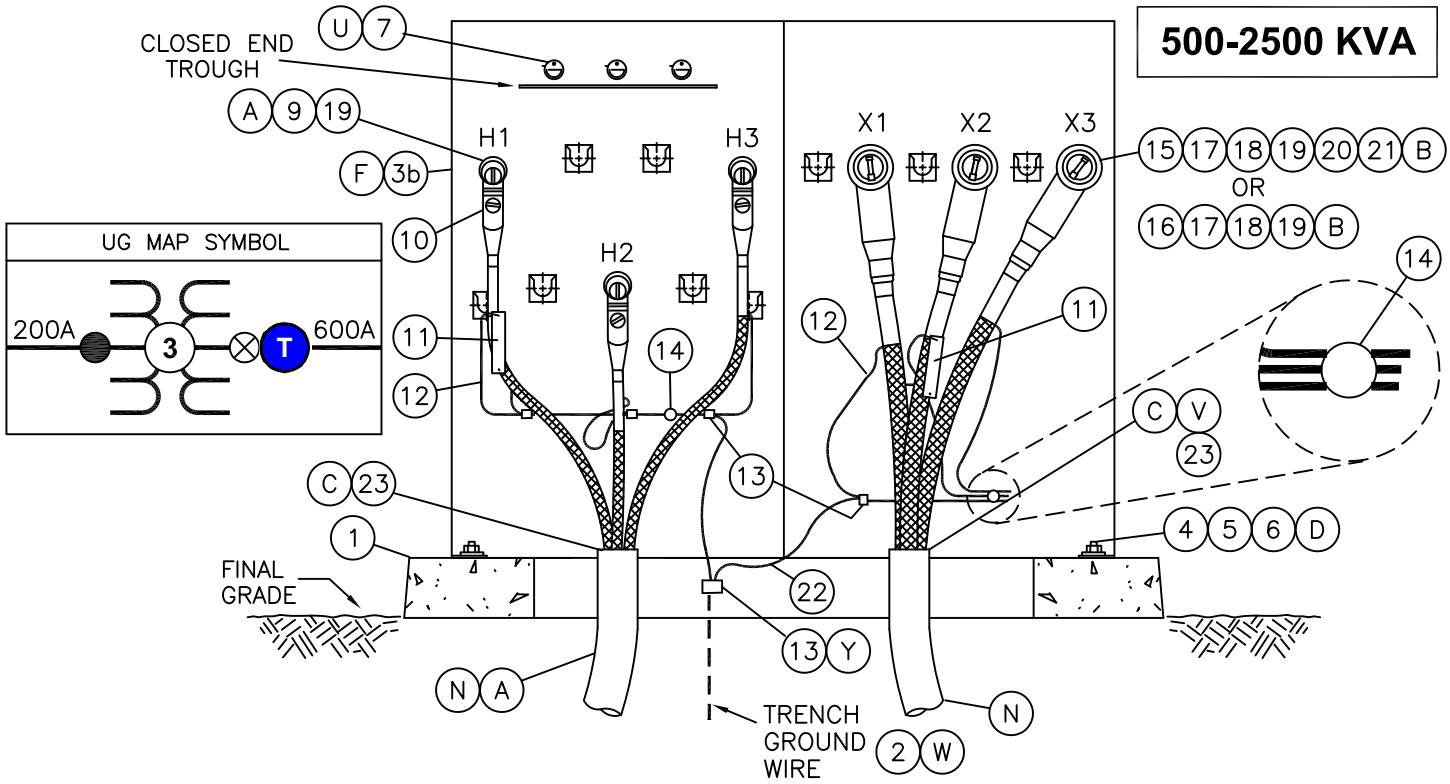

© 1998 - 2012 San Diego Gas & Electric Company. All rights reserved. Removal of this copyright notice without permission is not permitted under law.

	X	Indicates Latest Revision		Completely Revised		New Page		Information Removed

3753.1	SDG&E ELECTRIC STANDARDS THREE-PHASE STEP-DOWN, TYPE "HPS", RADIAL, DEAD FRONT, PAD-MOUNTED TRANSFORMER INSTALLATION	REVISION DATE 11-8-2011 APPD TR/MJC

TABLE OF CONTENTS

BILL OF MATERIAL:

ITEM	DESCRIPTION	QUANTITY			STANDARD OR STOCK NUMBER	ASSEMBLY UNITS
		PRIMARY	SECONDARY			
			200A	600A		
1	PAD, TRANSFORMER, THREE-PHASE	1	–	–	3427	–
2	TRENCH GROUND WIRE (W)	AS REQ'D	–	–	4510	–
3a	TRANSFORMER, 225 KVA (H) (F)	1	–	–	3702	–
3b	TRANSFORMER, 500-2500 KVA (B) (F)	1	–	–	3702	–
4	NUT, CLAMPING CHANEL	2	–	–	503520	–
5	SCREW, HEX HEAD CAP, BRONZE, 1/2" X 1 1/2"	2	–	–	616192	–
6	WASHER, FLAT, ROUND, BRONZE, 1/2"	2	–	–	799488	–
7	FUSE, "BAY-O-NET" (SUPPLIED WITH TRANSFORMER) (U)	3	–	–	4311	–
8	KEYLESS LOCK (NOT SHOWN) (G)	1	–	–	468010	–
9	BUSHING WELL & BUSHING (RADIAL ONLY) (A)	3	–	–	–	–
10	ELBOW, LOADBREAK, 12KV (WITH WHITE-BLACK-WHITE BAND) (A) (B) RADIAL FEED	3	3	AS REQ'D	4191	–
11	CABLE IDENTIFICATION TAGS	AS REQ'D			3202	–
12	CONCENTRIC NEUTRAL TAILS (OR EQUIVALENT WIRE SIZE)	–	–	–	4172.1	–
13	CONNECTOR, COMPRESSION (SIZE AS REQ'D)	AS REQ'D			4172.2	–
14	SERVICE POST CONNECTOR (AND 1/2" STAINLESS STEEL SPRING WASHER AS REQ'D)	1	–	–	262560	–
		–	1	1	262656	–
15	ELBOW, TEE, 600A (B)	–	–	AS REQ'D	326578	ELBO-T
16	BUSHING EXTENSION (B)	–	–	AS REQ'D	336204	BUSH-X
17	600/200 AMP REDUCING TAP WELL (B)	–	–	3	719600	REDTAP
18	LOADBREAK BUSHING PLUG (B)	–	–	3	544676	BSHPLG
19	200 AMP INSULATING RECEPTICAL (A) (B)	AS REQ'D	–	AS REQ'D	204304	INSREC
20	CONDUCTOR CONNECTOR (B) 350 AL	–	–	AS REQ'D	258698	SPD350
	750 AL	–	–	AS REQ'D	258704	SPD750
	1000 AL	–	–	AS REQ'D	258702	SP1000
21	CABLE ADAPTER (B) 350 AL	–	–	AS REQ'D	102027	ADP350
	750 AL	–	–	AS REQ'D	102034	APD750
	1000 AL	–	–	AS REQ'D	102050	AD1MIL
22	WIRE, BARE STRANDED COPPER, #2	AS REQ'D			812816	GDWIRE
23	SEALING COMPOUND (C) (V)	AS REQ'D			442976	–

© 1998 - 2005 San Diego Gas & Electric Company. All rights reserved. Removal of this copyright notice without permission is not permitted under law.

Indicates Latest Revision | Completely Revised | X New Page | Information Removed

REVISION
DATE 5-11-05
APPD MF / JJ

SDG&E ELECTRIC STANDARDS

THREE-PHASE STEP-DOWN, TYPE "HPS", RADIAL, DEAD FRONT, PAD-MOUNTED TRANSFORMER INSTALLATION

3753.2

TABLE OF CONTENTS

INSTALLATION:

(A) PRIMARY SIDE OF TRANSFORMER USES 3 CONDUCTOR #2 OR 2/0 PRIMARY CABLES. THE TRANSFORMER IS FITTED WITH BUSHING WELLS AND BUSHING INSERTS. THIS TRANSFORMER IS TO BE USED IN RADIAL APPLICATIONS ONLY.

(B) 500 THRU 2500 KVA TRANSFORMER HAVE 600 AMP DEADBREAK BUSHINGS ON THE SECONDARY SIDE. THESE BUSHINGS WILL ACCEPT EITHER 600 OR 200 AMP CONNECTIONS, DEPENDING ON ON THE SIZE OF CABLE BEING INSTALLED.

(C) TERMINATE PRIMARY AND SECONDARY CONDUITS FLUSH WITH TOP OF PAD. SEAL PRIMARY CONDUITS WITH SEALING COMPOUND. SEAL SERVICE LATERAL CONDUITS PER STANDARD 3948 (G.O. 128 RULE 31.6).

(D) TRANSFORMER SHALL BE SOLIDLY SECURED TO PAD TO PREVENT UNAUTHORIZED MOVEMENT OR ENTRY. THE BASE SHALL BE CAULKED WHEN NECESSARY TO PREVENT WIRE ENTRY.

(F) TRANSFORMER RATING AND SIZE PER WORK ORDER.

(G) KEYLESS LOCK (ITEM 8) TO BE ATTACHED TO LATCHING MECHANISM ON TRANSFORMER AFTER PENTAHEAD BOLT IS THREADED IN COMPLETELY. PENTAHEAD BOLTS MAY NOT BE AVAILABLE ON SOME RE-FURBISHED TRANSFORMERS.

H. 225 KVA TRANSFORMERS HAVE 200 AMP LOAD BREAK BUSHINGS ON THE SECONDARY SIDE. THESE BUSHINGS ACCEPT LOAD BREAK ELBOWS APPROPRIATE FOR THE SIZE OF CABLE BEING INSTALLED.

REFERENCE:

J. SEE STANDARD 3202 FOR CABLE IDENTIFICATION.

K. SEE STANDARD 3212 FOR TRANSFORMER IDENTIFICATION.

L. SEE STANDARD 3221 FOR HIGH VOLTAGE DECAL.

M. SEE STANDARD 3408 FOR WIRE ENTRY PREVENTION.

(N) SEE STANDARD 3425 OR 3426 FOR PAD AND CONDUIT PLACEMENT.

O. SEE STANDARD 3481 FOR BARRIER PROTECTION.

P. SEE STANDARD 3483 MINIMUM OPERATING AND CLEARANCE REQUIREMENTS (PAD PLACEMENT).

Q. SEE STANDARD 3484 FOR PAD INSTALLATION OF PAD-MOUNTED EQUIPMENT.

R. SEE STANDARD 3486 FOR RETAINING WALL REQUIREMENTS AND CLEARANCES FROM REVERSE SUBGRADE RETAINING WALLS.

S. SEE STANDARD 3487 FOR RETAINING WALLS.

T. SEE STANDARD 3702 FOR TRANSFORMER PREFIXES.

(U) SEE STANDARD 3704 FOR HIGH AMPERE "BAY-O-NET" FUSE OPERATING INSTRUCTIONS.

(V) SEE STANDARD 3948 FOR SEALING SERVICE LATERAL CONDUITS.

(W) SEE STANDARD 4510 FOR (PREFERRED I) AND (ALTERNATE) TRENCH GROUND WIRE.

X. SEE STANDARD PAGE 4512.1 FOR (PREFERRED II) EQUIPMENT GROUNDING INSTALLATION.

(Y) SEE STANDARD 4512.2 FOR EQUIPMENT GROUNDING.

Z. SEE STANDARD 4514 FOR GROUNDING TELCO CONDUCTOR IN PAD-MOUNTED EQUIPMENT.

© 1998 - 2005 San Diego Gas & Electric Company. All rights reserved. Removal of this copyright notice without permission is not permitted under law.

	Indicates Latest Revision		Completely Revised	X	New Page		Information Removed

	SDG&E ELECTRIC STANDARDS	
3753.3	THREE-PHASE STEPDOWN, TYPE "HPS", RADIAL, DEAD FRONT, PAD-MOUNTED TRANSFORMER INSTALLATION	REVISION DATE 5-11-05 APPD MF / JJ

TABLE OF CONTENTS

SCOPE: THIS STANDARD SHOWS THE METHOD OF INSTALLATING A THREE–PHASE, STEP–DOWN TYPE "HPB" RADIAL/LOOP FEED DEAD FRONT PAD–MOUNTED TRANSFORMER.

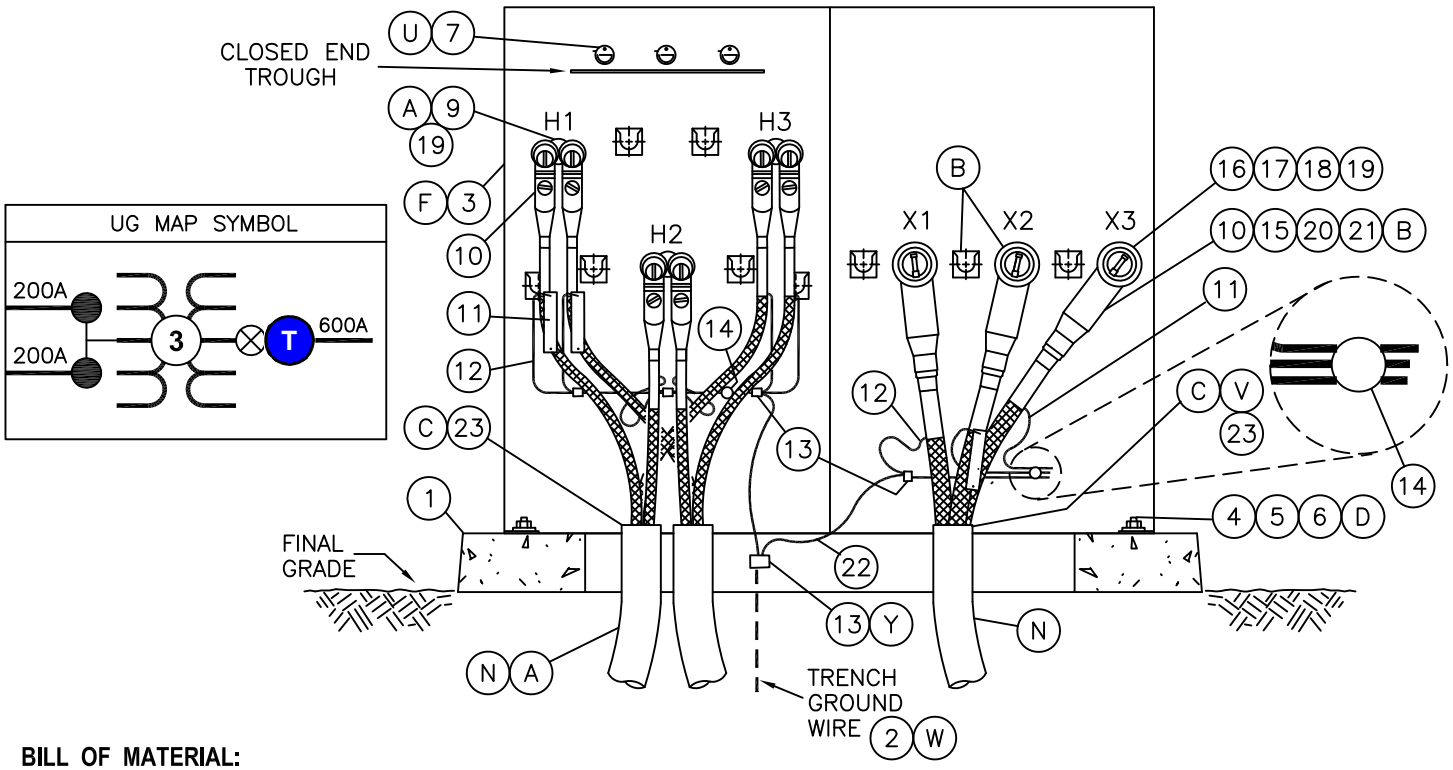

BILL OF MATERIAL:

ITEM	DESCRIPTION		QUANTITY PRIMARY	QUANTITY SECONDARY 200A	QUANTITY SECONDARY 600A	STANDARD OR STOCK NUMBER
1	PAD, TRANSFORMER, THREE–PHASE		1	–	–	3425, 3426
2	TRENCH GROUND WIRE (W)		AS REQ'D	–	–	4510
3	TRANSFORMER, INCLUDING HOLDDOWN DEVICE (F)		1	–	–	3702
4	NUT, CLAMPING CHANEL		2	–	–	503520
5	SCREW, HEX HEAD CAP, BRONZE, 1/2" X 1 1/2"		2	–	–	616192
6	WASHER, FLAT, ROUND, BRONZE, 1/2"		2	–	–	799488
7	FUSE, "BAY–O–NET" (SUPPLIED WITH TRANSFORMER) (U)		3	–	–	4311
8	KEYLESS LOCK (NOT SHOWN) (G)		1	–	–	468010
9	FEED–THRU INSERT (RADIAL OR LOOP FEED) (A)		3	–	–	544678
10	ELBOW, LOADBREAK, 12KV (WITH WHITE–BLACK–WHITE BAND) (A B)	RADIAL FEED	3	3	AS REQ'D	4191
		LOOP FEED	6	3	AS REQ'D	
11	CABLE IDENTIFICATION TAGS		AS REQ'D			3202
12	CONCENTRIC NEUTRAL TAILS (OR EQUIVALENT WIRE SIZE)		–	–	–	4172.1
13	CONNECTOR, COMPRESSION (SIZE AS REQ'D)		AS REQ'D			4172.2
14	SERVICE POST CONNECTOR (AND 1/2" STAINLESS STEEL SPRING WASHER AS REQ'D)		1	–	–	262560
			–	1	1	262656

© 1998 - 2012 San Diego Gas & Electric Company. All rights reserved. Removal of this copyright notice without permission is not permitted under law.

Indicates Latest Revision	Completely Revised	New Page	Information Removed

3755.1	SDG&E ELECTRIC STANDARDS THREE–PHASE STEP–DOWN, TYPE "HPB", RADIAL/LOOP, DEAD FRONT, PAD–MOUNTED TRANSFORMER INSTALLATION	REVISION DATE 11–8–2011 APPD TR/MJC

TABLE OF CONTENTS

BILL OF MATERIAL: (CONT'D)

ITEM	DESCRIPTION		QUANTITY PRIMARY	QUANTITY SECONDARY 200A	QUANTITY SECONDARY 600A	STANDARD OR STOCK NUMBER	ASSEMBLY UNITS
15	ELBOW, TEE, 600A (B)		–	–	AS REQ'D	326578	ELBO–T
16	BUSHING EXTENSION (B)		–	–	AS REQ'D	336204	BUSH–X
17	600/200 AMP REDUCING TAP WELL (B)		–	–	3	719600	REDTAP
18	LOADBREAK BUSHING PLUG (B)		–	–	3	544676	BSHPLG
19	200 AMP INSULATING RECEPTICAL (A)(B)		AS REQ'D	–	AS REQ'D	204304	INSREC
20	CONDUCTOR CONNECTOR (B)	350 AL	–	–	AS REQ'D	258698	SPD350
		750 AL	–	–	AS REQ'D	258704	SPD750
		1000 AL	–	–	AS REQ'D	258702	SP1000
21	CABLE ADAPTER (B)	350 AL	–	–	AS REQ'D	102027	ADP350
		750 AL	–	–	AS REQ'D	102034	APD750
		1000 AL	–	–	AS REQ'D	102050	AD1MIL
22	WIRE, BARE STRANDED COPPER, #2		AS REQ'D			812816	GDWIRE
23	SEALING COMPOUND (C)(V)		AS REQ'D			442976	–

INSTALLATION:

(A) PRIMARY SIDE OF TRANSFORMER USES FROM 3 TO 6 SINGLE CONDUCTOR #2 OR 2/0 PRIMARY CABLES. THE TRANSFORMER IF FITTED WITH BUSHING WELLS THAT REQUIRE SEPARATELY INSTALLED BUSHING INSERTS. FOR THE RADIAL OR LOOP FEED APPLICATION, THREE FEED–THRU INSERTS ARE REQUIRED. FOR RADIAL APPLICATION USE 200 AMP INSULATING RECEPTACLES ON SPARE POSITIONS.

(B) SECONDARY SIDE OF TRANSFORMER HAVE 600 AMP BUSHINGS ON TRANSFORMERS RATED 500 KVA AND ABOVE. THE 600 AMP BUSHINGS MAY REQUIRE EITHER 200 OR 600 AMP CONNECTIONS DEPENDING ON LOAD REQUIREMENTS. THE 200 AMP CONNECTIONS INSTALLED ON 600 AMP BUSHINGS REQUIRE BUSHING EXTENSIONS, REDUCING TAP WELLS, LOADBREAK BUSHING PLUGS AND LOADBREAK ELBOWS. THE 600 AMP CONNECTIONS REQUIRE 600 AMP TEES, REDUCING TAP WELLS, LOADBREAK BUSHING PLUGS AND INSULATING RECEPTACLES. TRANSFORMERS RATED LESS THAN 500 KVA HAVE 200 AMP LOADBREAK BUSHINGS. THESE INSTALLATIONS REQUIRE 200 AMP LOADBREAK ELBOWS. 200 AMP BUSHING PARKING STANDS ARE PROVIDED ON ALL TRANSFORMERS.

(C) TERMINATE PRIMARY AND SECONDARY CONDUITS FLUSH WITH TOP OF PAD. SEAL PRIMARY CONDUITS WITH SEALING COMPOUND. SEAL SERVICE LATERAL CONDUITS PER STANDARD 3948 (G.O. 128 RULE 31.6).

(D) TRANSFORMER SHALL BE SOLIDLY SECURED TO PAD TO PREVENT UNAUTHORIZED MOVEMENT OR ENTRY. THE BASE SHALL BE CAULKED WHEN NECESSARY TO PREVENT WIRE ENTRY.

(F) TRANSFORMER RATING AND SIZE PER WORK ORDER.

(G) KEYLESS LOCK (ITEM 8) TO BE ATTACHED TO LATCHING MECHANISM ON TRANSFORMER AFTER PENTAHEAD BOLT IS THREADED IN COMPLETELY. PENTAHEAD BOLTS MAY NOT BE AVAILABLE ON SOME RE–FURBISHED TRANSFORMERS.

© 1998 - 2005 San Diego Gas & Electric Company. All rights reserved. Removal of this copyright notice without permission is not permitted under law.

TABLE OF CONTENTS

REFERENCE:

J. SEE STANDARD 3202 FOR CABLE IDENTIFICATION.

K. SEE STANDARD 3212 FOR TRANSFORMER IDENTIFICATION.

L. SEE STANDARD 3221 FOR HIGH VOLTAGE DECAL.

M. SEE STANDARD 3408 FOR WIRE ENTRY PREVENTION.

(N) SEE STANDARD 3425 OR 3426 FOR PAD AND CONDUIT PLACEMENT.

O. SEE STANDARD 3481 FOR BARRIER PROTECTION.

P. SEE STANDARD 3483 MINIMUM OPERATING AND CLEARANCE REQUIREMENTS (PAD PLACEMENT).

Q. SEE STANDARD 3484 FOR PAD INSTALLATION OF PAD-MOUNTED EQUIPMENT.

R. SEE STANDARD 3486 FOR RETAINING WALL REQUIREMENTS AND CLEARANCES FROM REVERSE SUBGRADE RETAINING WALLS.

S. SEE STANDARD 3487 FOR RETAINING WALLS.

T. SEE STANDARD 3702 FOR TRANSFORMER PREFIXES.

(U) SEE STANDARD 3704 FOR "BAY-O-NET" FUSE OPERATING INSTRUCTIONS.

(V) SEE STANDARD 3948 FOR SEALING SERVICE LATERAL CONDUITS.

(W) SEE STANDARD 4510 FOR (PREFERRED I) AND (ALTERNATE) TRENCH GROUND WIRE.

X. SEE STANDARD PAGE 4512.1 FOR (PREFERRED II) EQUIPMENT GROUNDING INSTALLATION.

(Y) SEE STANDARD 4512.2 FOR EQUIPMENT GROUNDING.

Z. SEE STANDARD 4514 FOR GROUNDING TELCO CONDUCTOR IN PAD-MOUNTED EQUIPMENT.

TABLE OF CONTENTS

© 1998 - 2005 San Diego Gas & Electric Company. All rights reserved. Removal of this copyright notice without permission is not permitted under law.

	Indicates Latest Revision		Completely Revised		New Page		Information Removed

	SDG&E ELECTRIC STANDARDS	
3755.3	THREE-PHASE STEPDOWN, TYPE "HPB", RADIAL/LOOP, DEAD FRONT, PAD-MOUNTED TRANSFORMER INSTALLATION	REVISION DATE 1-1-91 APPD JLB/RDG

SCOPE: THIS STANDARD SHOWS THE CONNECTION USED FOR INSTALLING THREE-PHASE, 12KV RADIAL DEAD FRONT PAD-MOUNTED TRANSFORMERS, TYPE "HYS".

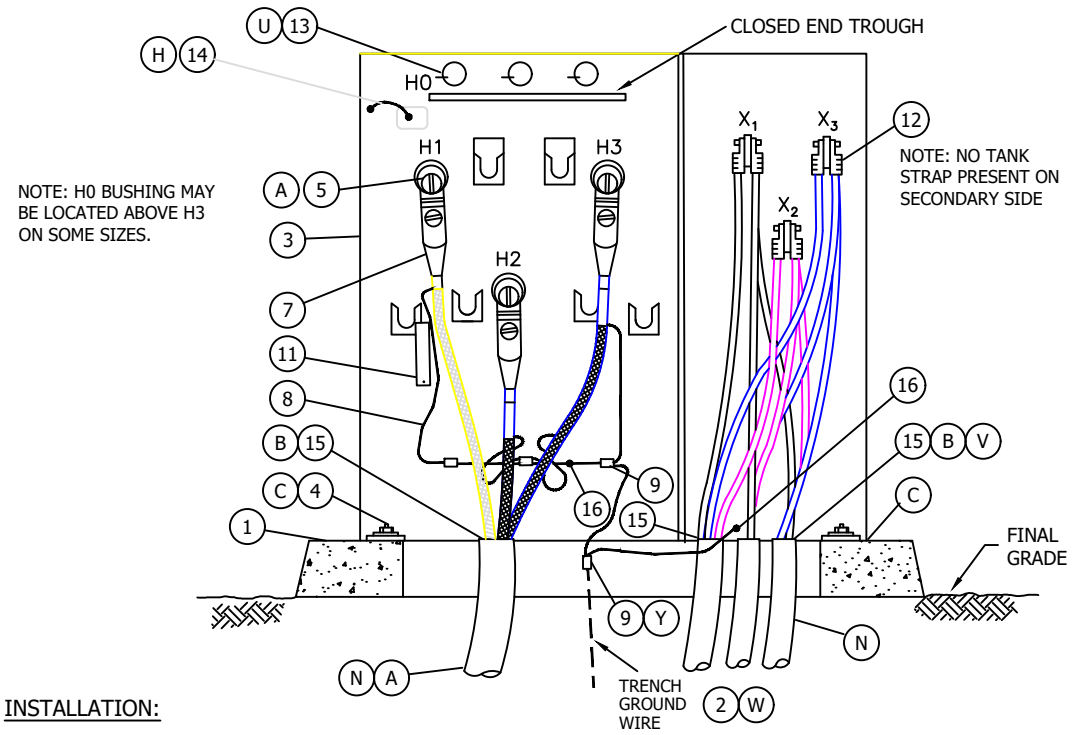

INSTALLATION:

(A) THIS INSTALLATION USES FROM 3 TO 6 SINGLE-PHASE CONDUCTOR #2 OR 2/0 PRIMARY CABLES. THE TRANSFORMER IS FITTED WITH BUSHING WELLS THAT REQUIRE SEPARATELY INSTALLED BUSHING INSERTS. FOR THE RADIAL APPLICATION, THREE BUSHING PLUGS ARE REQUIRED, ITEM 5 IN THE BILL OF MATERIAL. FOR THE LOOP FEED APPLICATION, THREE FEED-THRU INSERTS ARE REQUIRED, ITEM 6 IN THE BILL OF MATERIAL.

(B) TERMINATE PRIMARY AND SECONDARY CONDUITS FLUSH WITH TOP OF PAD. SEAL SECONDARY AND PRIMARY CONDUITS WITH SEALING COMPOUND. SEAL SERVICE LATERAL CONDUITS PER STANDARD 3948 (G.O 128 RULE 31.6).

(C) TRANSFORMER SHALL BE SOLIDLY SECURED TO PAD TO PREVENT UNAUTHORIZED MOVEMENT OR ENTRY. THE BASE SHALL BE CAULKED WHEN NECESSARY TO PREVENT WIRE ENTRY.

(D) TRANSFORMER RATING AND SIZE PER WORK ORDER.

(E) KEYLESS LOCK (ITEM 10) TO BE ATTACHED TO LATCHING MECHANISM ON TRANSFORMER AFTER PENTAHEAD BOLT IS THREADED IN COMPLETELY.

(F) PARTIAL RANGE CURRENT LIMITING FUSES ARE UNDER OIL IN THE TANK IN LIEU OF ISOLATION SEE TABLE BELOW FOR SIZES. KEARNY TO RE-FUSE AT THE KEARNY SHOP.

KVA	AMPS	PART NUMBER	STOCK NUMBER
300	65	HTSS242065	S365770
1000	150	HTSS242150	S365774
2000	250	(2) HTSS242125	S365772

(H) DO NOT OPEN PRIMARY GROUND WHILE TRANSFORMER IS ENERGIZED.

© 1998 - 2016 San Diego Gas & Electric Company. All rights reserved. Removal of this copyright notice without permission is not permitted under law.

REV	CHANGE	BY	DSGN	APPV	DATE	REV	CHANGE	BY	DSGN	APPV	DATE
C						F					
B						E					
A	ORIGINAL ISSUE	PS	JS	MDJ	3/13/2017	D					

Indicates Latest Revision | Completely Revised X | New Page | Information Removed

SDG&E ELECTRIC UNDERGROUND CONSTRUCTION STANDARD

THREE-PHASE 12KV, TYPE "HYS" RADIAL, DEAD FRONT, PAD-MOUNTED TRANSFORMER INSTALLATION

UG 3756.1

TABLE OF CONTENTS

BILL OF MATERIAL:

ITEM	DESCRIPTION	QUANTITY	CONST STD. OR PAGE NO	STOCK NUMBER	ASSEMBLY UNITS
1	PAD, TRANSFORMER, THREE-PHASE	1	3425,3426,3427	--	--
2	TRENCH GROUND WIRE (W)	AS REQ'D	4510	--	--
3	TRANSFORMER (D)	1	3702	--	--
4	HOLD DOWN DEVICE - (SUPPLIED WITH CABINET)	2	--	--	--
5	BUSHING PLUG (RADIAL FEED) (A)	3	4192	544678	FEED-I
7	ELBOW, LOADBREAK, 12KV (WITH WHITE-BLACK-WHITE BAND)	AS REQ'D	4191	--	--
8	CONCENTRIC NEUTRAL TAILS	--	4172.1	--	--
9	CONNECTOR, COMPRESSION	AS REQ'D	4172	--	--
10	KEYLESS LOCK, (NOT SHOWN ABOVE) (E)	1	--	468010	--
11	CABLE IDENTIFICATION TAGS	AS REQ'D	3202	--	--
12	SECONDARY CONNECTIONS	AS REQ'D	4168, 4171	--	--
13	FUSE, "BAY-O-NET" (U)	3	4311	--	--
14	NEUTRAL GROUND STRAP (ON TRANSFORMER)	1	--	--	--
15	SEALING COMPOUND (B) (V)	AS REQ'D	--	442976	--
16	SERVICE POST CONNECTOR	2	--	262560	--

REFERENCE:

J. SEE STANDARD 3202 FOR CABLE IDENTIFICATION.
K. SEE STANDARD 3212 FOR TRANSFORMER IDENTIFICATION.
I. SEE STANDARD 3221 FOR HIGH VOLTAGE DECAL.
M. SEE STANDARD 3408 FOR WIRE ENTRY PREVENTION.
(N) SEE STANDARD 3425. 3426 OR 3427 FOR PAD, HANDHOLE AND CONDUIT PLACEMENT.
O. SEE STANDARD 3481 FOR BARRIER PROTECTION.
P. SEE STANDARD 3483 FOR MINIMUM OPERATING AND CLEARANCE REQUIREMENTS (PAD PLACEMENT).
Q. SEE STANDARD 3484 FOR PAD INSTALLATION OF PAD-MOUNTED EQUIPMENT.
R. SEE STANDARD 3486 FOR RETAINING WALL REQUIREMENTS AND CLEARANCES FROM REVERSE SUBGRADE RETAINING WALLS.
S. SEE STANDARD 3487 FOR RETAINING WALLS.
T. SEE STANDARD 3702 FOR TRANSFORMER PREFIXES.
(U) SEE STANDARD 3704 FOR "BAY-O-NET" FUSE OPERATING INSTRUCTIONS.
(V) SEE STANDARD 3948 FOR SEALING SERVICE LATERAL CONDUITS.
(W) SEE STANDARD 4510 FOR (PREFERRED I) AND (ALTERNATE) TRENCH GROUND WIRE.
X. SEE STANDARD PAGE 4512.1 FOR (PREFERRED II) EQUIPMENT GROUNDING INSTALLATION.
(Y) SEE STANDARD 4512.2 FOR EQUIPMENT GROUNDING.
Z. SEE STANDARD 4514 FOR GROUNDING TELCO CONDUCTOR IN PAD-MOUNTED EQUIPMENT.

TABLE OF CONTENTS

© 1998 - 2016 San Diego Gas & Electric Company. All rights reserved. Removal of this copyright notice without permission is not permitted under law.

REV	CHANGE	BY	DSGN	APPV	DATE	REV	CHANGE	BY	DSGN	APPV	DATE
C						F					
B						E					
A	ORIGINAL ISSUE	PS	JS	MDJ	3/13/2017	D					

Indicates Latest Revision | Completely Revised | X New Page | Information Removed

SDG&E ELECTRIC UNDERGROUND CONSTRUCTION STANDARD

THREE-PHASE 12KV, TYPE "HYS" RADIAL, DEAD FRONT, PAD-MOUNTED TRANSFORMER INSTALLATION

UG 3756.2

SCOPE: THIS STANDARD SHOWS THE CONNECTION USED FOR INSTALLING A THREE-PHASE, 75 KVA HBSC "COMPACT" 12KV RADIAL FEED DEAD FRONT PAD-MOUNTED TRANSFORMER.

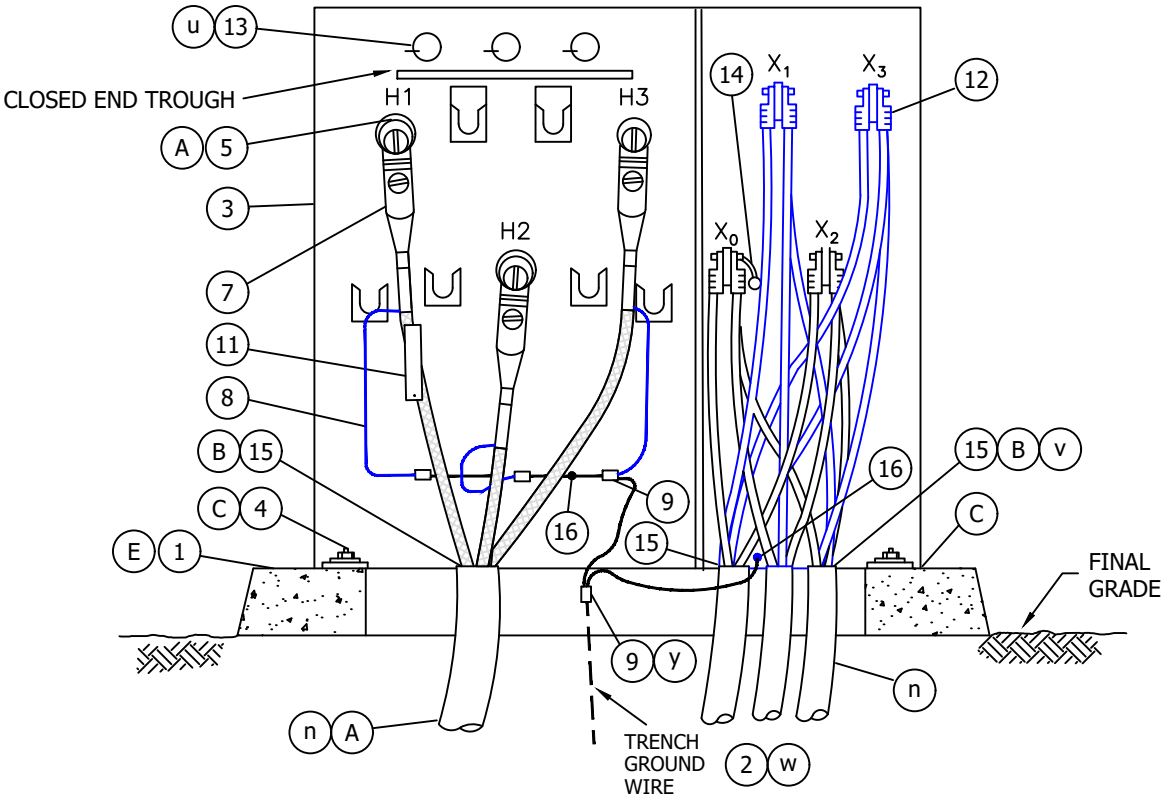

INSTALLATION:

(A) THIS INSTALLATION USES FROM 3 TO 6 SINGLE-PHASE CONDUCTOR #2 OR 2/0 PRIMARY CABLES. THE TRANSFORMER IS FITTED WITH BUSHING WELLS THAT REQUIRE SEPARATELY INSTALLED BUSHING INSERTS. FOR THE RADIAL APPLICATION, THREE BUSHING PLUGS ARE REQUIRED, ITEM 5 IN THE BILL OF MATERIAL.

(B) TERMINATE PRIMARY AND SECONDARY CONDUITS FLUSH WITH TOP OF PAD. SEAL SECONDARY AND PRIMARY CONDUITS WITH SEALING COMPOUND. SEAL SERVICE LATERAL CONDUITS PER STANDARD 3948 (G.O 128 RULE 31.6).

(C) TRANSFORMER SHALL BE SOLIDLY SECURED TO PAD TO PREVENT UNAUTHORIZED MOVEMENT OR ENTRY. THE BASE SHALL BE CAULKED WHEN NECESSARY TO PREVENT WIRE ENTRY.

(D) KEYLESS LOCK (ITEM 10) TO BE ATTACHED TO LATCHING MECHANISM ON TRANSFORMER AFTER PENTAHEAD BOLT IS THREADED IN COMPLETELY.

(E) THIS TRANSFORMER IS INSTALLED ON A 3421 SINGLE PHASE PAD.

TABLE OF CONTENTS

© 1998 - 2016 San Diego Gas & Electric Company. All rights reserved. Removal of this copyright notice without permission is not permitted under law.

REV	CHANGE	BY	DSGN	APPV	DATE	REV	CHANGE	BY	DSGN	APPV	DATE
C						F					
B						E					
A	ORIGINAL ISSUE	KR	JS	MDJ	3/31/2017	D					

Indicates Latest Revision | Completely Revised | X New Page | Information Removed

SDG&E ELECTRIC UNDERGROUND CONSTRUCTION STANDARDS

SHEET 1 OF 2

THREE-PHASE 12KV, TYPE 75KVA "HBSC" COMPACT RADIAL, DEAD FRONT, PAD MOUNTED TRANSFORMER INSTALLATION

UG 3757.1

BILL OF MATERIAL:

ITEM	DESCRIPTION	QUANTITY	CONST STD. OR PG NO.	STOCK NUMBER	ASSEMBLY UNITS
1	PAD, TRANSFORMER, SINGLE-PHASE	1	3421	S514240	3421-1
2	TRANSFORMER GROUND WIRE (w)	AS REQ'D	4510	--	--
3	TRANSFORMER (75kVA)	1	3702	S765102	HBSC75
4	HOLD DOWN DEVICE - (SUPPLIED WITH CABINET)	2	--	--	--
5	BUSHING PLUG (RADIAL FEED) (A)	3	4192	S544676	BSHPLG
7	ELBOW, LOADBREAK, 12KV (WITH WHITE-BLACK-WHITE BAND)	AS REQ'D	4191	--	--
8	CONCENTRIC NEUTRAL TAILS	--	4172.1	--	--
9	CONNECTOR, COMPRESSION	AS REQ'D	4172	--	--
10	KEYLESS LOCK, (NOT SHOWN ABOVE) (g)	1	--	S468010	--
11	CABLE IDENTIFICATION TAGS	AS REQ'D	3202	--	--
12	SECONDARY CONNECTIONS	AS REQ'D	4168, 4171	--	--
13	FUSE, "BAY-O-NET" (u)	3	4311	--	--
14	NEUTRAL GROUND STRAP (ON TRANSFORMER)	1	--	--	--
15	SEALING COMPOUND (B)(v)	AS REQ'D	--	S442976	--
16	SERVICE POST CONNECTOR	2	--	S262560	--

REFERENCE:

j. SEE STANDARD 3202 FOR CABLE IDENTIFICATION.

k. SEE STANDARD 3212 FOR TRANSFORMER IDENTIFICATION.

l. SEE STANDARD 3221 FOR HIGH VOLTAGE DECAL.

m. SEE STANDARD 3408 FOR WIRE ENTRY PREVENTION.

(n) SEE STANDARD 3421 FOR PAD, HANDHOLE AND CONDUIT PLACEMENT.

o. SEE STANDARD 3481 FOR BARRIER PROTECTION.

p. SEE STANDARD 3483 FOR MINIMUM OPERATING AND CLEARANCE REQUIREMENTS (PAD PLACEMENT).

q. SEE STANDARD 3484 FOR PAD INSTALLATION OF PAD-MOUNTED EQUIPMENT.

r. SEE STANDARD 3486 FOR RETAINING WALL REQUIREMENTS AND CLEARANCES FROM REVERSE SUBGRADE RETAINING WALLS.

s. SEE STANDARD 3487 FOR RETAINING WALLS.

t. SEE STANDARD 3702 FOR TRANSFORMER PREFIXES.

(u) SEE STANDARD 3704 FOR "BAY-O-NET" FUSE OPERATING INSTRUCTIONS.

(v) SEE STANDARD 3948 FOR SEALING SERVICE LATERAL CONDUITS.

(w) SEE STANDARD 4510 FOR (PREFERRED I) AND (ALTERNATE) TRENCH GROUND WIRE.

x. SEE STANDARD PAGE 4512.1 FOR (PREFERRED II) EQUIPMENT GROUNDING INSTALLATION.

(y) SEE STANDARD 4512.2 FOR EQUIPMENT GROUNDING.

z. SEE STANDARD 4514 FOR GROUNDING TELCO CONDUCTOR IN PAD-MOUNTED EQUIPMENT.

TABLE OF CONTENTS

© 1998 - 2016 San Diego Gas & Electric Company. All rights reserved. Removal of this copyright notice without permission is not permitted under law.

REV	CHANGE	BY	DSGN	APPV	DATE	REV	CHANGE	BY	DSGN	APPV	DATE
C						F					
B						E					
A	ORIGINAL ISSUE	KR	JS	MDJ	3/31/2017	D					

Indicates Latest Revision | Completely Revised | X New Page | Information Removed

SHEET 2 OF 2

SDG&E ELECTRIC UNDERGROUND CONSTRUCTION STANDARDS

THREE-PHASE 12KV, TYPE 75KVA "HBSC" COMPACT RADIAL, DEAD FRONT, PAD MOUNTED TRANSFORMER INSTALLATION

UG 3757.2

SCOPE: THIS STANDARD SHOWS THE NGD TRANSFORMER. THIS TRANSFORMER SHALL BE USED WHEN THE CUSTOMER REQUIRES GROUND FAULT INFORMATION.

NOTE: THIS TRANSFORMER PROVIDES NO USABLE VOLTAGE.

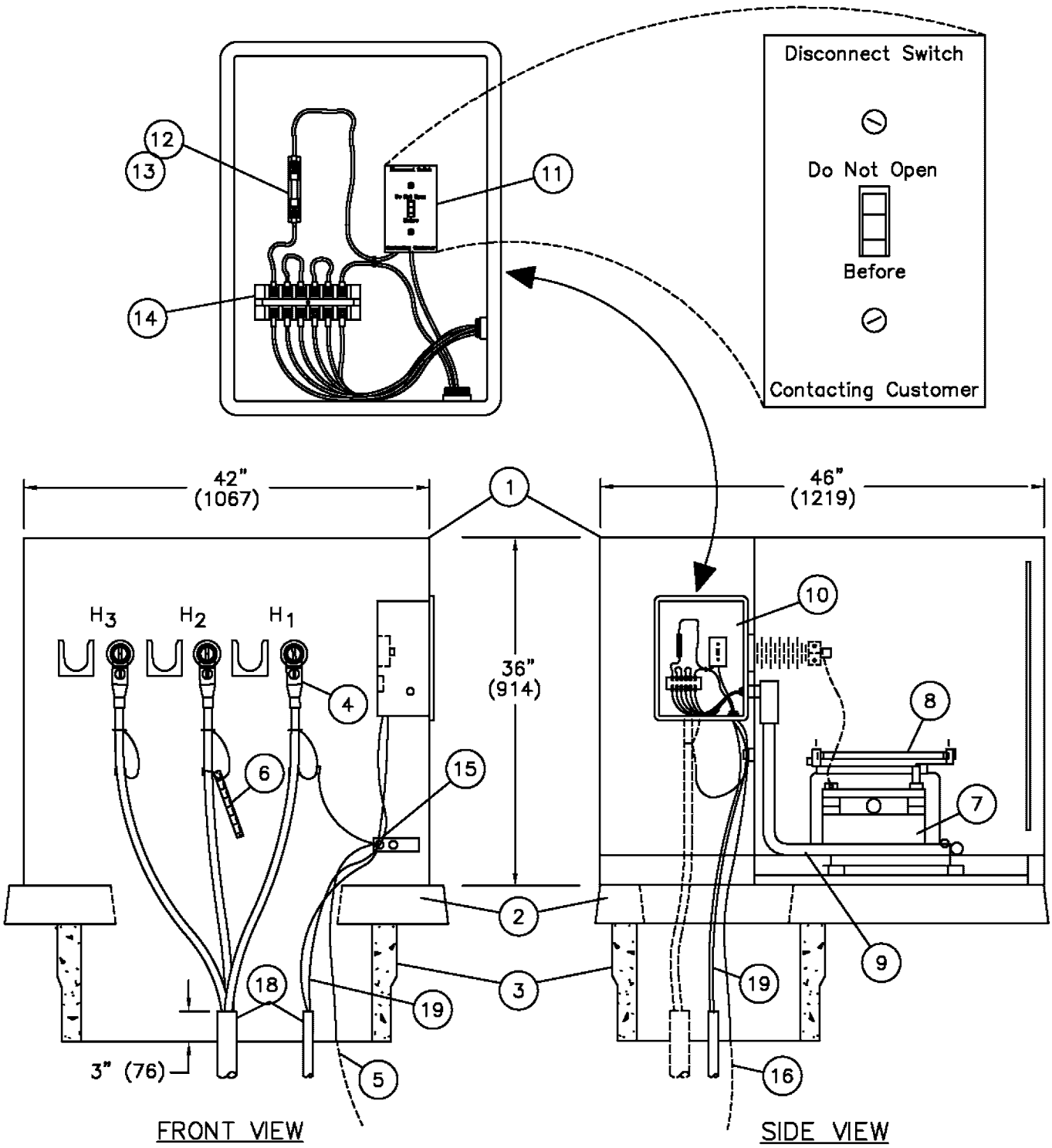

© 1998 - 2005 San Diego Gas & Electric Company. All rights reserved. Removal of this copyright notice without permission is not permitted under law.

	Indicates Latest Revision	Completely Revised	New Page	Information Removed

3760.1	SDG&E ELECTRIC STANDARDS GROUND FAULT DETECTION TRANSFORMER (NGD)	REVISION DATE 3-1-02 APPD

TABLE OF CONTENTS

TABLE OF CONTENTS

WIRING DIAGRAM

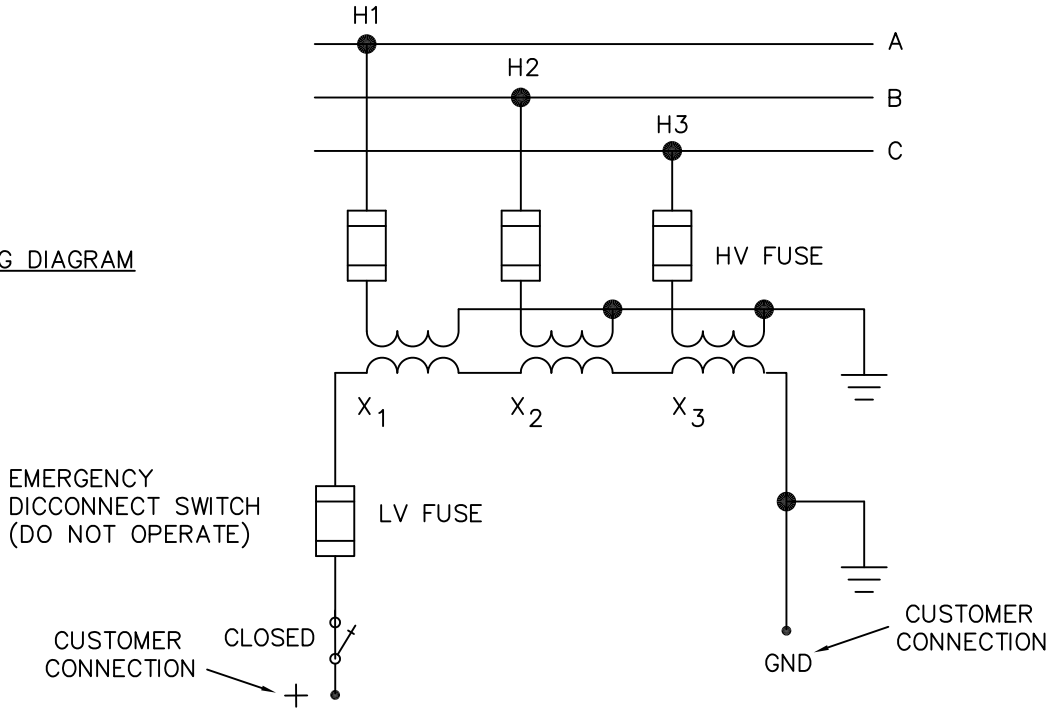

BILL OF MATERIAL:

ITEM	DESCRIPTION	QUANTITY	CONSTR. STD OR PAGE NO.	STOCK NUMBER	ASSEMBLY UNITS
1	TRANSFORMER	1	3760.1	S758302	NGD–01
2	EQUIPMENT PAD	1	3421.3	S51420	FC3PAD
3	HANDHOLE 17430	1	3312	S16426	–
4	ELBOW LOADBREAK	3	4191	–	–
5	TRENCH GROUND	1	4510.1	–	TG–TW
6	CABLE IDENTIFICATION TAG	AS REQ'D	3202	–	–
7	POTENTIAL TRANSFORMER	3	–	–	–
8	CURRENT LIMITING FUSE				–
9	SECONDARY CONDUIT	1	–	–	–
10	SECONDARY COMPARTMENT	1	–	–	–
11	DICCONNECT SWITCH	1	–	–	–
12	FUSE HOLDER		–	–	–
13	FUSE 10 AMP	1	–	S363968	–
14	SECONDARY TERMINATION	1	–	–	–
15	SERVICE POST CONNECTOR	1	–	S262656	–
16	CUSTOM CONDUIT	1	–	–	–
17	KEYLESS LOCK	2	–	S468010	–
18	SEALING COMPOUND	AS REQ'D		S442976	–
19	SERVICE CONDUCTORS	AS REQ'D	BY CUSTOMER	–	–

© 1998 - 2005 San Diego Gas & Electric Company. All rights reserved. Removal of this copyright notice without permission is not permitted under law.

Indicates Latest Revision | Completely Revised | New Page | Information Removed

REVISION
DATE 3–1–02
APPD

SDG&E ELECTRIC STANDARDS

GROUND FAULT DETECTION
TRANSFORMER (NGD)

3760.2

INSTALLATION:

(A) PRIMARY SIDE OF TRANSFORMER USES 3 CONDUCTOR #2 PRIMARY CABLES. THE TRANSFORMER IS FITTED WITH BUSHING WELLS AND BUSHING INSERTS. THIS TRANSFORMER IS TO BE USED IN RADIAL APPLICATIONS ONLY.

(B) SECONDARY CONNECTIONS ARE MADE IN THE SECONDARY COMPARTMENT ACCESSED FROM THE SIDE OF THE TRANSFORMER. REFER TO THE WIRING DIAGRAM.

(C) TERMINATE PRIMARY AND SECONDARY CONDUITS 3 INCHES ABOVE THE BOTTOM OF THE 3312. SEAL SECONDARY AND PRIMARY CONDUITS WITH SEALING COMPOUND.

(D) THE TRANSFORMER SHALL BE SOLIDLY SECURED TO PAD TO PREVENT UNAUTHORIZED MOVEMENT OR ENTRY. THE BASE SHALL BE CAULKED WHEN NECESSARY TO PREVENT WIRE ENTRY.

(E) SECURE THE TRANSFORMER WITH PENTAHEAD BOLTS AND KEYLESS LOCKS AS NECESSARY.

NOTE: GROUND THE CUSTOMERS GROUND CONDUCTOR (GREEN WIRE) TO THE SERVICE POST CONNECTOR IN THE PRIMARY COMPARTMENT.

WARNING: NEVER OPERATE THE DISCONNECT SWITCH IN THE SECONDARY COMPARTMENT WITHOUT CONTACTING THE CUSTOMER FIRST.

REFERENCE:

J. SEE STANDARD 3202 FOR CABLE IDENTIFICATION.

K. SEE STANDARD 3212 FOR TRANSFORMER IDENTIFICATION.

L. SEE STANDARD 3221 FOR HIGH VOLTAGE DECAL.

M. SEE STANDARD 3408 FOR WIRE ENTRY PREVENTION.

N. SEE STANDARD 3421 FOR PAD, HANDHOLE PLACEMENT.

O. SEE STANDARD 3481 FOR BARRIER PROTECTION.

P. SEE STANDARD 3483 FOR MINIMUM OPERATING AND CLEARANCE REQUIREMENTS (PAD PLACEMENT).

Q. SEE STANDARD 3484 FOR PAD INSTALLATION OF PAD-MOUNTED EQUIPMENT.

R. SEE STANDARD 3486 FOR RETAINING WALL REQUIREMENTS AND CLEARANCES FROM REVERSE SUBGRADE RETAINING WALLS.

S. SEE STANDARD 3487 FOR RETAINING WALLS.

T. SEE STANDARD 3702 FOR TRANSFORMER PREFIXES.

(U) SEE STANDARD 3948 FOR SEALING SERVICE LATERAL CONDUITS.

(V) SEE STANDARD 4510 FOR (PREFERRED I) AND (ALTERNATE) TRENCH GROUND WIRE.

(W) SEE STANDARD PAGE 4512.1 FOR (PREFERRED II) EQUIPMENT GROUNDING INSTALLATION.

X. SEE STANDARD 4512.2 FOR EQUIPMENT GROUNDING.

(Y) SEE STANDARD 4514 FOR GROUNDING TELCO CONDUCTOR IN PAD-MOUNTED EQUIPMENT.

TABLE OF CONTENTS

© 1998 - 2005 San Diego Gas & Electric Company. All rights reserved. Removal of this copyright notice without permission is not permitted under law.

	Indicates Latest Revision		Completely Revised		New Page		Information Removed

	SDG&E ELECTRIC STANDARDS	REVISION
3760.3	GROUND FAULT DETECTION TRANSFORMER (NGD)	DATE 3-1-02 APPD

SCOPE: THIS TRANSFORMER SHOULD BE RESTRICTED TO THE REPLACEMENT OF EXISTING LIVE-FRONT TRANSFORMERS WITH MORE THAN TWO PHASES OR MORE THAN TWO CONDUCTORS PER PHASE PASSING THROUGH. A DEVIATION IS REQUIRED FOR ALL OTHER INSTALLATIONS. SOME APPLICATIONS MAY REQUIRE A 3523 TERMINATOR TO BE INSTALLED.

THIS STANDARD SHOWS SOME TYPICAL CONFIGURATIONS USING THE NCS TRANSFORMER AND THE ELASTIMOLD ADJUSTABLE JUNCTION TAPS.

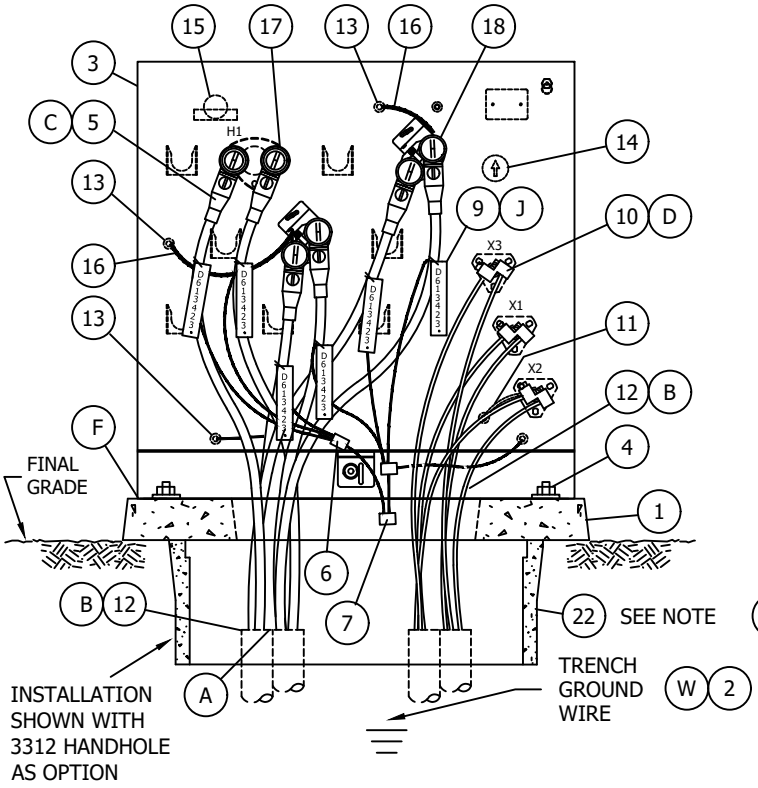

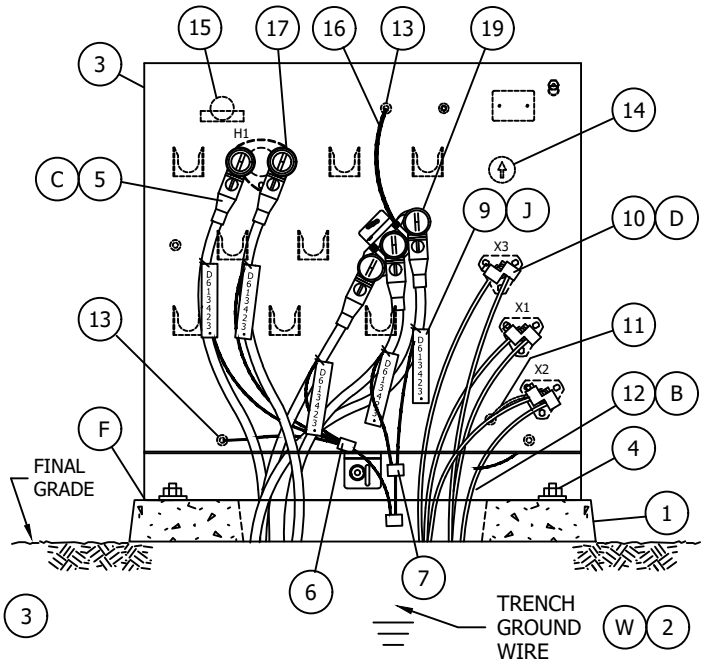

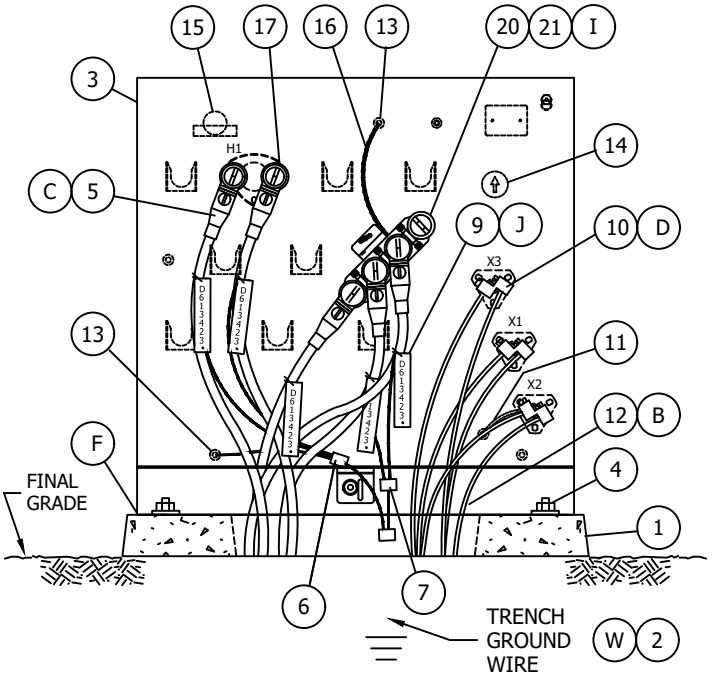



ACTUAL FIELD INSTALLATION OF SKETCH IN THE DEPICTION ON THE LEFT.

© 1998 - 2010 San Diego Gas & Electric Company. All rights reserved. Removal of this copyright notice without permission is not permitted under law.

	Indicates Latest Revision		Completely Revised	X	New Page		Information Removed

REVISION	SDG&E ELECTRIC STANDARDS	
DATE 11-18-08 APPD TR / MC	SINGLE-PHASE, 6930 VOLT, TYPE "NCS" PAD-MOUNT TRANSFORMER INSTALLATION	3770.1

TABLE OF CONTENTS

BILL OF MATERIAL:

ITEM	DESCRIPTION	QUANTITY	CONST STD OR PG NO.	STOCK NUMBER	ASSEMBLY UNITS
1	PAD, TRANSFORMER, SINGLE-PHASE	1	3421	514240	3421.1
2	TRENCH GROUND WIRE (W)	AS REQ'D	4510	--	
3	TRANSFORMER, (NCS)	1	3702	S750312	NCS-25
				S750350	NCS-50
				S750352	NCS-100
4	HOLD DOWN DEVICE - (SUPPLIED WITH CABINET)	2	--	--	
5	ELBOW, LOADBREAK, 12KV (WITH WHITE-BLACK-WHITE BAND) (C)	AS REQ'D	4191	--	
6	CONCENTRIC NEUTRAL TAILS	AS REQ'D	--	--	
7	CONNECTOR, COMPRESSION	AS REQ'D	4172	--	
8	KEYLESS LOCK, (NOT SHOWN ABOVE) (H)	1	--	468010	
9	CABLE IDENTIFICATION TAGS (J)	AS REQ'D	3202	--	
10	SECONDARY CONNECTIONS (D)	AS REQ'D	4167	--	
11	NEUTRAL GROUND STRAP (SUPPLIED WITH TRANSFORMER)	1	--	--	
12	CONDUIT SEALING SYSTEM (B)	AS REQ'D	--	442976	
13	SERVICE POST CONNECTOR	4	--	262560	
14	VOLTAGE TAP CHANGER SWITCH	1	--	--	
15	BAYONET FUSE	1	--	--	
16	GROUND WIRE	AS REQ'D	--	--	
17	FEED-THRU INSERT BUSHING	1	4192	544678	FEED-I
18	2-WAY ADJUSTABLE JUNCTION TAP	AS REQ'D	--	182002	2WYAFT
19	3-WAY ADJUSTABLE JUNCTION TAP	AS REQ'D	--	305710	3WYAFT
20	4-WAY ADJUSTABLE JUNCTION TAP	AS REQ'D	--	305712	4WYAFT
21	CAP, INSULATING RECEPTACLE (I)	AS REQ'D	3202	204304	INSREC
22	3312 HANHOLE	AS REQ'D	3421.1, .2	162462	FC3PAD
23		1			
24		1			
25		1			

NOTES:

1. EXISTING CABLES CAN BE SPLICED TO FACILITATE THE LOADBREAK ELBOWS FOR THIS INSTALLATION.
2. REPLACE EXISTING PAD, IF EXISTING PAD IS NOT CURRENT 44" X 46" 3421 PAD.
3. INSTALL A 3312 HANDHOLE TO FACILITATE CABLE TRAINING IF NEEDED, LOWER CONDUITS AS NEEDED FOR CABLE TRAINING.

© 1998 - 2010 San Diego Gas & Electric Company. All rights reserved. Removal of this copyright notice without permission is not permitted under law.

TABLE OF CONTENTS

INSTALLATION:

(A) MAXIMUM NUMBER OF PRIMARY CABLES SHOULD NOT EXCEED 8 CONDUCTORS.

(B) TERMINATE PRIMARY AND SECONDARY CONDUITS FLUSH WITH TOP OF PAD. SEAL SECONDARY AND PRIMARY CONDUITS WITH EITHER CONDUIT BREAK-OUT BOOTS OR RAYFLATE. INFLATABLE DUCT SEAL PACKAGE AS DESCRIBED IN 3948. SEAL SERVICE LATERAL CONDUITS PER STANDARD 3948 (G.O. 128 RULE 31.6.).

(C) PROVIDE AS MANY LOADBREAK ELBOWS AS REQUIRED TO TERMINATE ALL PRIMARY CONNECTORS.

(D) SET SCREW CONNECTORS ARE NOT PROVIDED WITH TRANSFORMER, SEE STANDARD 4167 FOR INSTALLATION AND STOCK NUMBERS. ALWAYS MAKE CERTAIN SECONDARY CONNECTIONS ARE TIGHT BEFORE ENERGIZING TRANSFORMER.

(F) TRANSFORMER SHALL BE SOLIDLY SECURED TO PAD TO PREVENT UNAUTHORIZED MOVEMENT OR ENTRY. THE BASE SHALL BE CAULKED WHEN NECESSARY TO PREVENT WIRE ENTRY (STANDARD 3408).

(H) KEYLESS LOCK (ITEM 8) TO BE ATTACHED TO LATCHING MECHANISM ON TRANSFORMER AND PENTAHEAD BOLT THREADED IN COMPLETELY.

(I) REDUCE LOADBREAK ELBOW QUANTITY AND INSTALL INSULATING RECEPTACLE IF CABLES ARE NOT INSTALLED SIMULTANEOUSLY.

REFERENCE:

(J) SEE STANDARD 3202 FOR CABLE IDENTIFICATION.

K SEE STANDARD 3212 FOR TRANSFORMER IDENTIFICATION.

L SEE STANDARD 3221 FOR HIGH VOLTAGE DECAL.

M SEE STANDARD 3408 FOR WIRE ENTRY PREVENTION.

N SEE STANDARD 3421 FOR PAD AND CONDUIT PLACEMENT.

O SEE STANDARD 3481 FOR BARRIER PROTECTION.

P SEE STANDARD 3483 FOR MINIMUM OPERATING AND CLEARANCE REQUIREMENTS (PAD PLACEMENT).

Q SEE STANDARD 3484 FOR PAD INSTALLATION OF PAD-MOUNTED EQUIPMENT.

R SEE STANDARD 3486 FOR RETAINING WALL REQUIREMENTS AND CLEARANCES FROM REVERSE SUBGRADE RETAINING WALLS.

S SEE STANDARD 3487 FOR RETAINING WALL.

T SEE STANDARD 3702 FOR TRANSFORMER PREFIXES.

U SEE STANDARD 3703 FOR TRANSFORMER APPLICATIONS.

(V) SEE STANDARD 3948 FOR SEALING SERVICE LATERAL CONDUITS.

(W) SEE STANDARD 4510 FOR (PREFERRED I) AND (ALTERNATE) TRENCH GROUND WIRE.

X SEE STANDARD PAGE 4512.1 FOR (PREFERRED II) EQUIPMENT GROUNDING INSTALLATION.

(Y) SEE STANDARD 4512.2 FOR EQUIPMENT GROUNDING.

Z SEE STANDARD 4514 FOR GROUNDING TELCO CONDUCTOR IN PADMOUNTED EQUIPMENT.

TABLE OF CONTENTS

© 1998 - 2008 San Diego Gas & Electric Company. All rights reserved. Removal of this copyright notice without permission is not permitted under law.

	Indicates Latest Revision		Completely Revised	X	New Page		Information Removed

REVISION DATE 11-6-08 APPD TR / MC	SDG&E ELECTRIC STANDARDS SINGLE-PHASE, 6930 VOLT, TYPE "NCS" PAD-MOUNT TRANSFORMER INSTALLATION	3770.3

SCOPE: THIS TRANSFORMER SHOULD BE RESTRICTED TO THE REPLACEMENT OF EXISTING LIVE-FRONT TRANSFORMERS WITH MORE THAN TWO PHASES OR MORE THAN TWO CONDUCTORS PER PHASE PASSING THROUGH. A DEVIATION IS REQUIRED FOR ALL OTHER INSTALLATIONS. SOME APPLICATIONS MAY REQUIRE A 3523 TERMINATOR TO BE INSTALLED.

THIS STANDARD SHOWS SOME TYPICAL CONFIGURATIONS USING THE HCS TRANSFORMER AND THE ELASTIMOLD ADJUSTABLE JUNCTION TAPS.

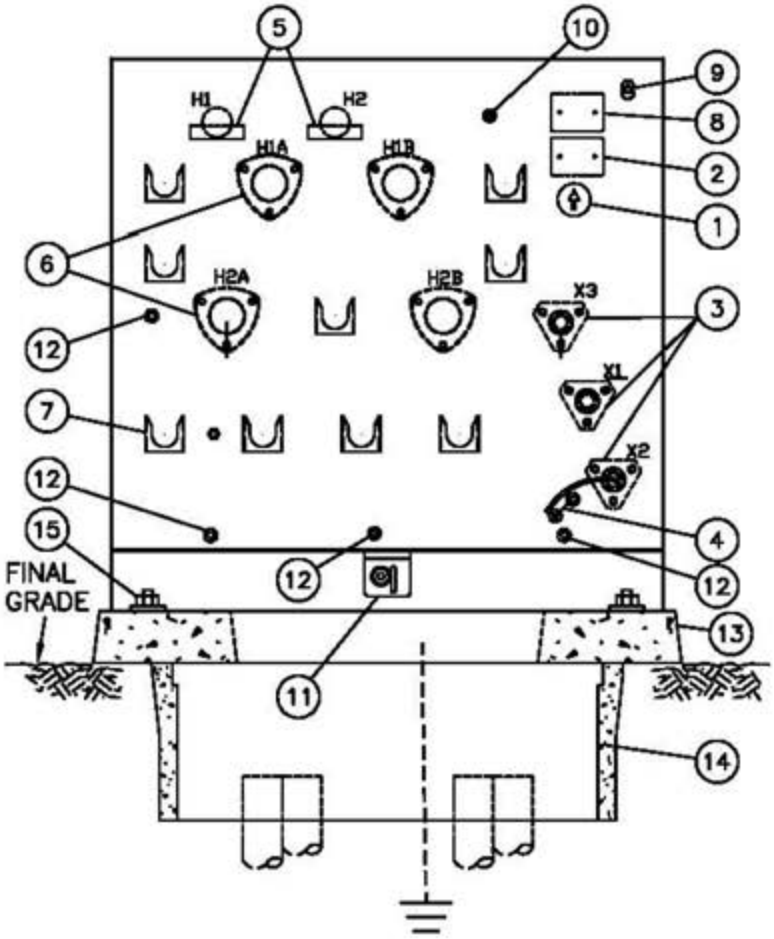

1. No-load Tap changer
2. Stock number plate
3. Secondary stud bushings
4. Tank ground strap
5. Bayonet fuses
6. Bushing wells H1A, H1B and H2A, H2B
7. Standoff support brackets
8. Diagram Nameplate
9. Pressure Relief Valve
10. Fill plug
11. Compartment lift tab and penta bolt and lock provision
12. Ground nut points
13. 3421 pad
14. 3312 handhole
15. Transformer tie down unistrut stud, 1/2" nut & washer



ACTUAL FIELD INSTALLATION OF SKETCH IN THE DEPICTION ON THE TOP.

© 1998 - 2013 San Diego Gas & Electric Company. All rights reserved. Removal of this copyright notice without permission is not permitted under law.

	Indicates Latest Revision		Completely Revised	X	New Page		Information Removed

REVISION DATE 9-25-2013 APPD TR / DW	SDG&E ELECTRIC STANDARDS SINGLE-PHASE DELTA, 12000 VOLT, TYPE "HCS" PAD-MOUNT TRANSFORMER INSTALLATION	3771.1

TABLE OF CONTENTS

BILL OF MATERIAL:

ITEM	DESCRIPTION	QUANTITY	CONST STD OR PG NO.	STOCK NUMBER	ASSEMBLY UNITS
1	PAD, TRANSFORMER, SINGLE-PHASE	1	3421	S514240	3421.1
2	TRENCH GROUND WIRE (W)	AS REQ'D	4510	--	
3	TRANSFORMER, (HCS)	1	3702 & 3771	S751300	HCS-25
				S751302	HCS-50
				S751304	HCS100
				S751306	HCS167
4	HOLD DOWN DEVICE - (SUPPLIED WITH CABINET)	2	--	--	
5	ELBOW, LOADBREAK, 12KV (WITH WHITE-BLACK-WHITE BAND) (C)	AS REQ'D	4191	--	
6	CONCENTRIC NEUTRAL TAILS	AS REQ'D	--	--	
7	CONNECTOR, COMPRESSION	AS REQ'D	4172	--	
8	KEYLESS LOCK, (NOT SHOWN ABOVE) (H)	1	--	S468010	
9	CABLE IDENTIFICATION TAGS (J)	AS REQ'D	3202	--	
10	SECONDARY CONNECTIONS (D)	AS REQ'D	4167	--	
11	NEUTRAL GROUND STRAP (SUPPLIED WITH TRANSFORMER)	1	--	--	
12	CONDUIT SEALING SYSTEM (B)	AS REQ'D	--	S442976	
13	SERVICE POST CONNECTOR	3	--	S262560	
14	NO-LOAD TAP CHANGER	1	--	--	
15	BAYONET FUSE SEE STD. 4311.5	AS REQ'D	4311.5	--	
16	GROUND WIRE	AS REQ'D	--	--	
17	FEED-THRU INSERT BUSHING	AS REQ'D	4192	S544678	FEED-I
18	2-WAY ADJUSTABLE JUNCTION TAP	AS REQ'D	--	S182002	2WYAFT
19	3-WAY ADJUSTABLE JUNCTION TAP	AS REQ'D	--	S305710	3WYAFT
20	BUSHING PLUG	AS REQ'D	4192	S544676	BSHPL6
21	CAP, INSULATING RECEPTACLE (I)	AS REQ'D	3202	S204304	INSREC
22	3312 HANHOLE	AS REQ'D	3421.1, .2	S162462	FC3PAD
23		1			
24		1			
25		1			

NOTES:

1. EXISTING CABLES CAN BE SPLICED TO FACILITATE THE LOADBREAK ELBOWS FOR THIS INSTALLATION.
2. REPLACE EXISTING PAD, IF EXISTING PAD IS NOT CURRENT 44" X 46" 3421 PAD.
3. INSTALL A 3312 HANDHOLE TO FACILITATE CABLE TRAINING IF NEEDED, LOWER CONDUITS AS NEEDED FOR CABLE TRAINING.

© 1998 - 2013 San Diego Gas & Electric Company. All rights reserved. Removal of this copyright notice without permission is not permitted under law.

Indicates Latest Revision	Completely Revised	X	New Page	Information Removed

	SDG&E ELECTRIC STANDARDS	REVISION
3771.2	SINGLE-PHASE DELTA, 12000 VOLT, TYPE "HCS" PAD-MOUNT TRANSFORMER INSTALLATION	DATE 9-25-2013 APPD TR / DW

TABLE OF CONTENTS

INSTALLATION:

(A) MAXIMUM NUMBER OF PRIMARY CABLES SHOULD NOT EXCEED 9 CONDUCTORS.

(B) TERMINATE PRIMARY AND SECONDARY CONDUITS FLUSH WITH TOP OF PAD. SEAL SECONDARY AND PRIMARY CONDUITS WITH EITHER CONDUIT BREAK-OUT BOOTS OR RAYFLATE. INFLATABLE DUCT SEAL PACKAGE AS DESCRIBED IN 3948. SEAL SERVICE LATERAL CONDUITS PER STANDARD 3948 (G.O. 128 RULE 31.6.).

(C) PROVIDE AS MANY LOADBREAK ELBOWS AS REQUIRED TO TERMINATE ALL PRIMARY CONNECTORS.

(D) SET SCREW CONNECTORS ARE NOT PROVIDED WITH TRANSFORMER, SEE STANDARD 4167 FOR INSTALLATION AND STOCK NUMBERS. ALWAYS MAKE CERTAIN SECONDARY CONNECTIONS ARE TIGHT BEFORE ENERGIZING TRANSFORMER.

(F) TRANSFORMER SHALL BE SOLIDLY SECURED TO PAD TO PREVENT UNAUTHORIZED MOVEMENT OR ENTRY. THE BASE SHALL BE CAULKED WHEN NECESSARY TO PREVENT WIRE ENTRY (STANDARD 3408).

(H) KEYLESS LOCK (ITEM 8) TO BE ATTACHED TO LATCHING MECHANISM ON TRANSFORMER AND PENTAHEAD BOLT THREADED IN COMPLETELY.

(I) REDUCE LOADBREAK ELBOW QUANTITY AND INSTALL INSULATING RECEPTACLE IF CABLES ARE NOT INSTALLED SIMULTANEOUSLY.

REFERENCE:

(J) SEE STANDARD 3202 FOR CABLE IDENTIFICATION.

K. SEE STANDARD 3212 FOR TRANSFORMER IDENTIFICATION.

L. SEE STANDARD 3221 FOR HIGH VOLTAGE DECAL.

M. SEE STANDARD 3408 FOR WIRE ENTRY PREVENTION.

N. SEE STANDARD 3421 FOR PAD AND CONDUIT PLACEMENT.

O. SEE STANDARD 3481 FOR BARRIER PROTECTION.

P. SEE STANDARD 3483 FOR MINIMUM OPERATING AND CLEARANCE REQUIREMENTS (PAD PLACEMENT).

Q. SEE STANDARD 3484 FOR PAD INSTALLATION OF PAD-MOUNTED EQUIPMENT.

R. SEE STANDARD 3486 FOR RETAINING WALL REQUIREMENTS AND CLEARANCES FROM REVERSE SUBGRADE RETAINING WALLS.

S. SEE STANDARD 3487 FOR RETAINING WALL.

T. SEE STANDARD 3702 FOR TRANSFORMER PREFIXES.

U. SEE STANDARD 3703 FOR TRANSFORMER APPLICATIONS.

(V) SEE STANDARD 3948 FOR SEALING SERVICE LATERAL CONDUITS.

(W) SEE STANDARD 4510 FOR (PREFERRED I) AND (ALTERNATE) TRENCH GROUND WIRE.

X. SEE STANDARD PAGE 4512.1 FOR (PREFERRED II) EQUIPMENT GROUNDING INSTALLATION.

(Y) SEE STANDARD 4512.2 FOR EQUIPMENT GROUNDING.

Z. SEE STANDARD 4514 FOR GROUNDING TELCO CONDUCTOR IN PADMOUNTED EQUIPMENT.

© 1998 - 2013 San Diego Gas & Electric Company. All rights reserved. Removal of this copyright notice without permission is not permitted under law.

Indicates Latest Revision	Completely Revised	X	New Page	Information Removed

REVISION DATE 9-18-2013 APPD TR / DW	SDG&E ELECTRIC STANDARDS SINGLE-PHASE DELTA, 12000 VOLT, TYPE "HCS" PAD-MOUNT TRANSFORMER INSTALLATION	3771.3

TABLE OF CONTENTS

MAIN TABLE OF CONTENTS

PAGE	SUBJECT
3815	INSTALLATION OF SCADA 4KV PAD MOUNTED CAPACITOR
3821	INSTALLATION OF SCADA 600 & 1200 KVAR PAD MOUNTED CAPACITOR

REV	CHANGE	DRWN	BY	CHKD	APVD	DATE
C	REVISED TO 3D FORMAT	NV5	JIK	-	-	05/07/2024
B	FORMATTING	EDM	JIK	-	-	06/18/2021
A	EDITORIAL CHANGES	-	JK	JS	CZH	05/18/2018

© 1998 - 2024 San Diego Gas and Electric Company. All rights reserved. Removal of this copyright notice without permission is not permitted under law.

SDG&E ELECTRIC UNDERGROUND CONSTRUCTION STANDARDS

CAPACITORS
TABLE OF CONTENTS

SCALE: NOT TO SCALE

DRAWING NO: UG3801.1

SHEET: 1 OF 1

X Indicates Latest Revision | Completely Revised | New Page | Information Removed

SCOPE: THIS STANDARD SHOWS THE EQUIPMENT AND INSTALLATION REQUIREMENTS FOR THE PAD MOUNTED 4KV CAPACITOR, WITH SCADA, 150 & 300 KVAR.

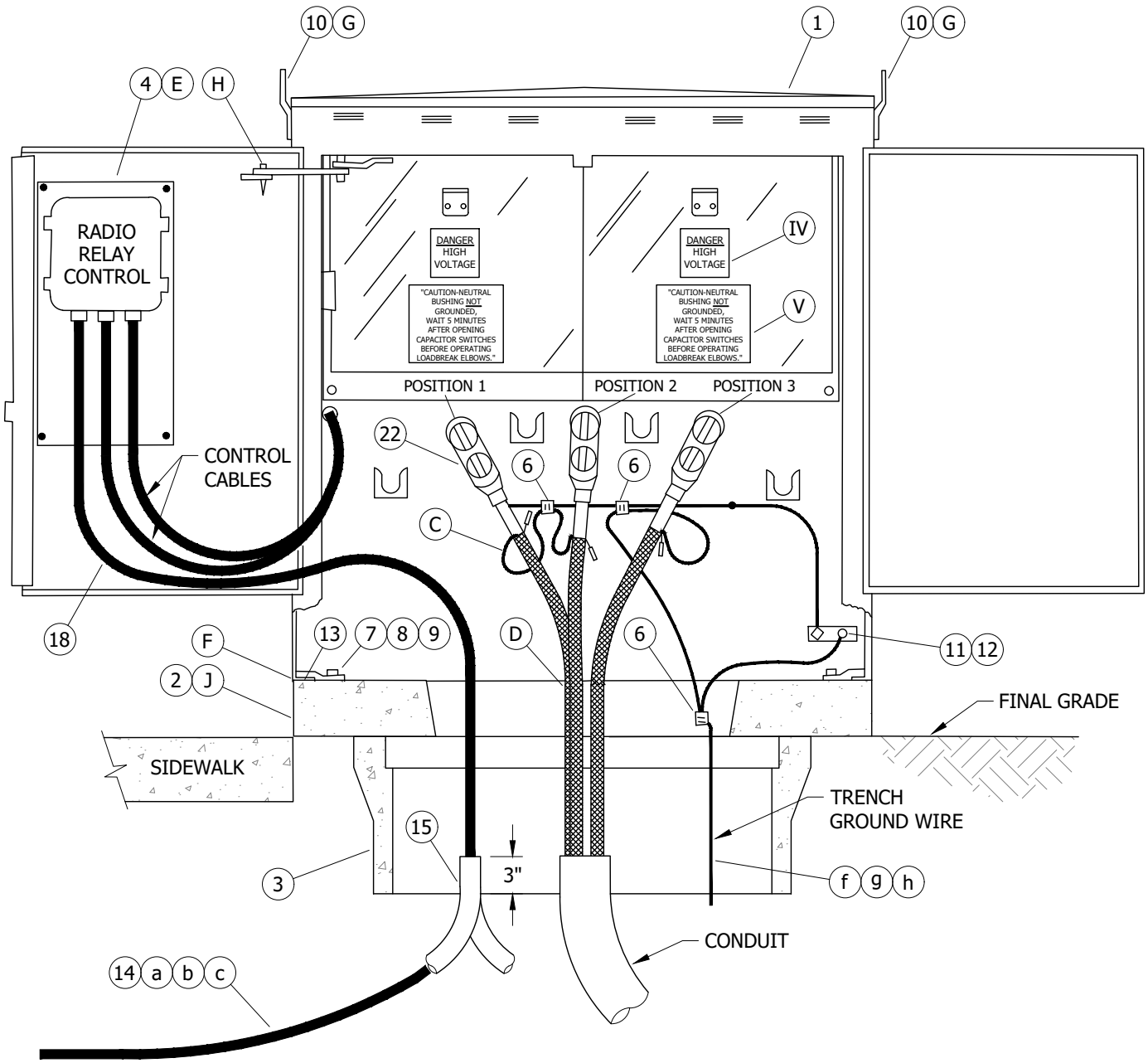

FIGURE 1 (VI)

© 1998 - 2021 San Diego Gas & Electric Company. All rights reserved. Removal of this copyright notice without permission is not permitted under law.

REV	CHANGE	DR	BY	DSN	APV	DATE	REV	CHANGE	DR	BY	DSN	APV	DATE
C	REVISION	-	-	-	TR/DW	5/29/2014	F						
B	REVISION	-	-	-	TR/DW	5/28/2014	E						
A	REVISION	-	-	-	TR/DW	4/29/2014	D	FORMATTING	EDM	JIK	-	-	06/18/2021

X Indicates Latest Revision | Completely Revised | New Page | Information Removed

SDG&E ELECTRIC UNDERGROUND CONSTRUCTION STANDARDS

INSTALLATION OF SCADA
4KV PAD MOUNTED CAPACITOR

UG3815.1

TABLE OF CONTENTS

INSTALLATION:

A. CHECK AND TIGHTEN ALL CONNECTIONS ON CAPACITOR BEFORE INSTALLATION.

B. INSTALL PAD TO FINAL GRADE.

(C) WHEN A SYSTEM NEUTRAL OR GROUNDING BANK NEUTRAL IS PRESENT, FOR UNDERGROUND OR CABLE POLE APPLICATIONS, THE CONCENTRIC NEUTRALS SHALL BE CONNECTED TO THE NEUTRAL. (d) (e)

(D) TERMINATE CONDUIT 3 INCHES ABOVE GROUND LEVEL IN BOX.

(E) SCADA CONTROL AND RADIO; INSTALLED BY KEARNY CREWS.

(F) BASE OF CABINET SHALL BE CAULKED WHEN NECESSARY TO PREVENT WIRE ENTRY.

(G) REMOVE LIFTING EYES AND STORE INSIDE THE CABINET ON THE CONTROL SIDE. IF EYES ARE NOT REMOVED, THEY MAY ENCROACH ON PRIVATE PROPERTY RIGHT-OF-WAY OR CAUSE HAZARD TO THE PUBLIC.

(H) WHEN OPERATING CAPACITOR CONTROL SWITCH, REMOVE THE PIN IN THE DOOR ASSEMBLY SO IT WILL OPEN AT 180 DEGREE ANGLE (ALLOWING OPERATION OF THE SWITCH WITHOUT STANDING IN FRONT OF THE CAPACITOR).

(J) THE 3426 PAD MAY BE SUBSTITUTED FOR THE 3414 PAD IF RIGHT-OF-WAY PERMITS.

BILL OF MATERIALS:

ITEM	DESCRIPTION		QUANTITY	STANDARD PAGE	STOCK NUMBER	DESIGN UNITS
1	CAPACITOR, SCADA, PAD MOUNTED	150KVAR	1	--	S206236	CAP415
		300KVAR	1	--	S206240	CAP430
2	PAD, CAPACITOR (IF NEW)	(J)	1	--	S514280	CAP-PD
3	BOX, 3312	(VII)	1	3312	S162426	3312-0
4	CONTROL, CAPACITOR, SCADA (PROGRAMMABLE)	(E)	1	--	S274880	SEL-UC
5	LOCKS, KEYLESS	(IX)	2	--	S468010	--
6	CONNECTOR, COMPRESSION, COPPER		3	4174	S257760	--
7	NUT, CLAMPING CHANNEL		2	--	S503520	--
8	SCREW, HEX HEAD CAP, BRONZE, 1/2" X 1 1/2"		2	--	S616192	--
9	WASHER, STANDARD FLAT ROUND, BRONZE, 1/2"		2	--	S799488	--
10	EYES, LIFTING, (REMOVABLE)	(G)	2	--	--	--
11	CONNECTOR, SERVICE POST		1	--	S262560	--
12	NUT, STANDARD HEX, BRONZE, 1/2"		1	--	S506112	--
13	HOLD DOWN (SUPPLIED WITH CABINET)		2	--	--	--
14	PIPE, POLYETHYLENE, 1"		AS REQ'D	--	S249630	1"PE
	PIPE, PVC, 3"			--	--	--
15	CONDUIT, 3"	(VIII)	1	3373	S322048	1DB3-B
16	ANTENNA, SCADA	(IX) (E)	--	4645	S109570	ANTENA
17	ADAPTER, ANTENNA	(IX) (E)	1	4645	S102017	--
18	CABLE, COAX	(E)	AS REQ'D	--	S191906	CABANT
19	CONNECTS, COAX CABLE	(IX) (E)	AS REQ'D	--	S254170	CABCON
20	RADIO, MDS	(IX) (E)	1	4642	S749500	MDSRAD
21	RADIO, MDS, SPREAD SPECT.	(IX) (E)	1	4642	S749504	SPREAD
22	ELBOW, LOADBREAK (IF NEW)		3	4190	--	--

TABLE OF CONTENTS

© 1998 - 2021 San Diego Gas & Electric Company. All rights reserved. Removal of this copyright notice without permission is not permitted under law.

REV	CHANGE	DR	BY	DSN	APV	DATE	REV	CHANGE	DR	BY	DSN	APV	DATE
C	REVISION	-	-	-	TR/DW	5/29/2014	F						
B	REVISION	-	-	-	TR/DW	5/28/2014	E						
A	REVISION	-	-	-	TR/DW	4/29/2014	D	FORMATTING	EDM	JIK	-	-	06/18/2021

NOTES:

I. ALL NEW PAD MOUNTED CAPACITORS PURCHASED AFTER 5/14/12 WILL BE SCADA ENABLED UNITS, EQUIPPED WITH THREE VACUUM SWITCHES, LINE VOLTAGE SENSORS AND A NEUTRAL VOLTAGE SENSOR. THE CONTROL UNIT REQUIRES AN ANTENNA. ALL UNITS SHALL HAVE THE SUFFIX "CW" TO THE STATION ID AS ALL WILL BE SCADA/SWITCHED PAD MOUNTED CAPACITOR STATIONS. THE INSTALLATION OF THE 3312 HAND HOLE UNDER THE PAD SHALL BE REQUIRED FOR ALL NEW CONSTRUCTION OF SCADA CAPACITORS.

II. THE LOADBREAK ELBOWS ARE LOCATED ON THE SIDE OF THE CAPACITOR CABINET WITH THE SIGN "CONTROL INSIDE" ON THE DOOR.

III. PHASE IDENTIFICATION MUST BE MARKED USING THE AP 20 OR 30 AT ALL LOCATIONS. POSITION 1 SHALL BE CONNECTED TO A PHASE, POSITION 2 SHALL BE CONNECTED TO B PHASE AND POSITION 3 MUST BE CONNECTED TO C PHASE.

(IV) DECAL: "DANGER HIGH VOLTAGE"

(V) DECAL: "CAUTION-NEUTRAL BUSHING NOT GROUNDED WAIT 5 MINUTES AFTER OPENING CAPACITOR SWITCHES BEFORE OPERATING LOADBREAK ELBOWS"

(VI) SWEEP TO CLEAR SIDE FOR PLACEMENT OF ANTENNA POLE TO 50'-0" MAXIMUM.

(VII) LOCATED UNDER PAD (REQUIRED FOR NEW CONSTRUCTION).

(VIII) FOR STUB ONLY INSTALLATION OR ALTERNATIVE LOCATION (IF APPLICABLE).

(IX) NOT SHOWN ON FIGURES.

REFERENCE:

(a) SEE UG3373.

(b) SEE UG4645.

(c) SEE UG3821.

(d) FOR TRENCH GROUNDING, SEE UG4510.

(e) FOR CABLE POLE GROUNDING, SEE OH1002.

(f) FOR (PREFERRED) AND (ALTERNATE) TRENCH GROUND WIRE, SEE UG4510.

(g) FOR EQUIPMENT GROUNDING INSTALLATION, SEE UG4512.

(h) FOR EQUIPMENT GROUNDING, SEE UG4512.

TABLE OF CONTENTS

© 1998 - 2021 San Diego Gas & Electric Company. All rights reserved. Removal of this copyright notice without permission is not permitted under law.

REV	CHANGE	DR	BY	DSN	APV	DATE	REV	CHANGE	DR	BY	DSN	APV	DATE
C	REVISION	-	-	-	TR/DW	5/29/2014	F						
B	REVISION	-	-	-	TR/DW	5/28/2014	E						
A	REVISION	-	-	-	TR/DW	4/29/2014	D	FORMATTING	EDM	JIK	-	-	06/18/2021

SCOPE: SHOWS SCADA CAPACITOR INTERIOR AND LOCATION OF EQUIPMENT IN THE UNIT. LINE SENSORS, NEUTRAL SENSOR, X-LIMITER FUSES, VACUUM SWITCHES, CONTROL, CONTROL WIRING HARNESS, 120V POTENTIAL TRANSFORMER AND 50 & 100KVAR CAPACITOR CELLS.

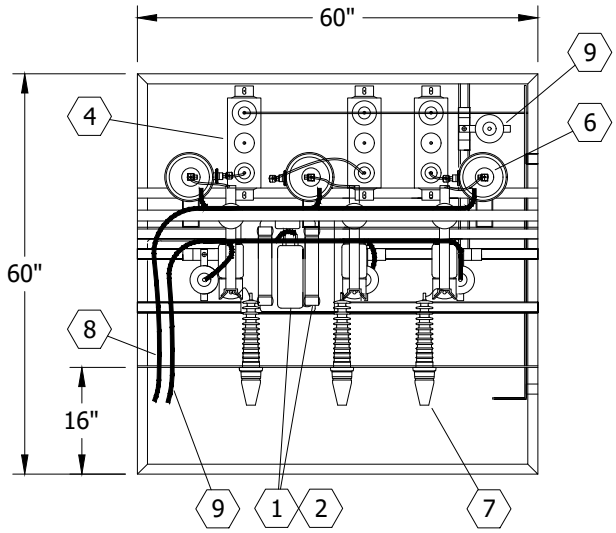

FIGURE 1
TOP VIEW
(SEE TABLE 1)

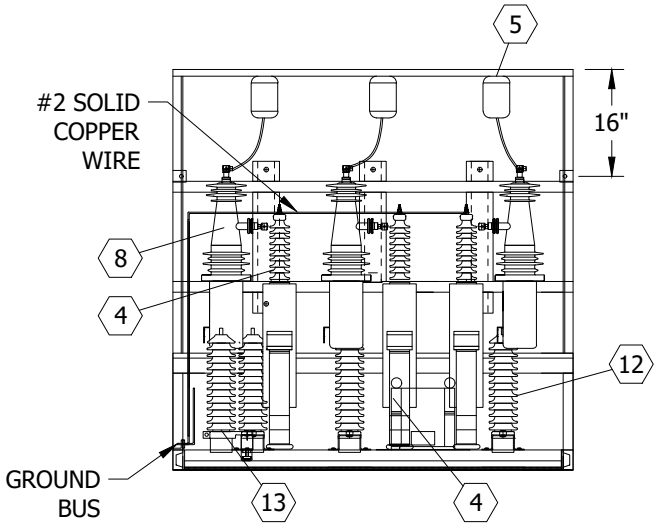

FIGURE 2
REAR VIEW
(SEE TABLE 1)

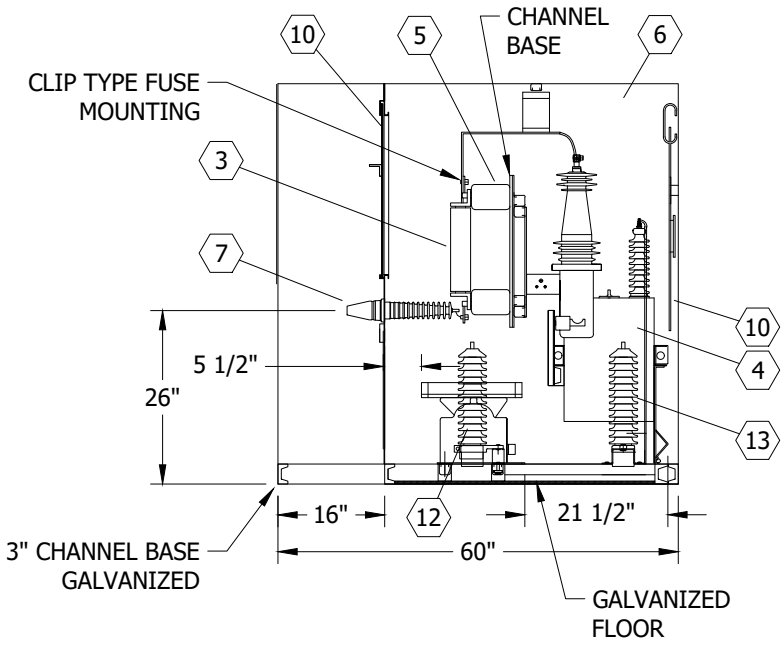

FIGURE 3
SIDE VIEW
(SEE TABLE 1)

TABLE OF CONTENTS

© 1998 - 2021 San Diego Gas & Electric Company. All rights reserved. Removal of this copyright notice without permission is not permitted under law.

REV	CHANGE	DR	BY	DSN	APV	DATE	REV	CHANGE	DR	BY	DSN	APV	DATE
C	REVISION	-	-	-	TR/DW	5/29/2014	F						
B	REVISION	-	-	-	TR/DW	5/28/2014	E						
A	REVISION	-	-	-	TR/DW	4/29/2014	D	FORMATTING	EDM	JIK	-	-	06/18/2021

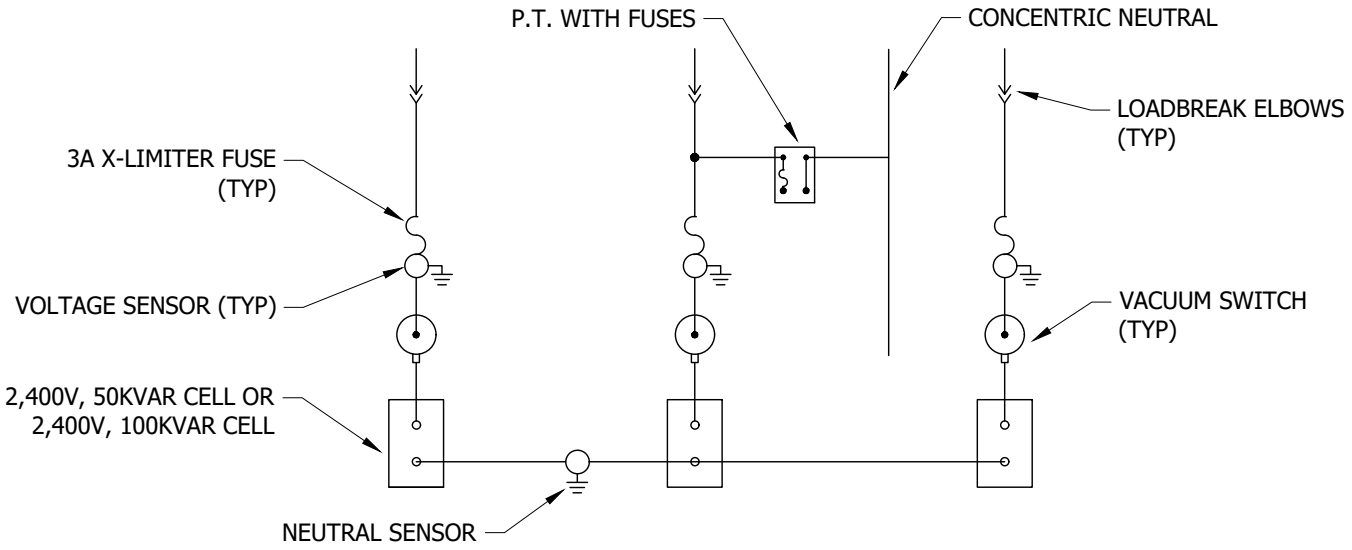

FIGURE 4
CAPACITOR DIAGRAM

INSTALLATION: NONE

BILL OF MATERIALS: NONE

TABLE 1

CAPACITOR PARTS LIST					
ITEM	**DESCRIPTION**		**QUANTITY**	**STANDARD PAGE**	**STOCK NUMBER**
1	TRANSFORMER, (P.T.), 2,400/4,160 Y		1	--	--
2	FUSE, CURRENT-LIMITING, 0.5A, 14.4KV - GE TYPE J-1		1	--	S366456
3	FUSE, COMBINED TECHNOLOGIES	150KVAR, 30A	3	--	--
		300KVAR, 60A	3	--	--
4	CELLS, CAPACITOR, 2,400V	50KVAR	3	--	--
		100KVAR	3	--	--
5	INSULATOR, POST, 110KV BIL		9	--	--
6	SWITCH, VACUUM, CAPACITOR, 15KV, 200A		3	--	S708420
7	PLUG, BUSHING, 14.4KV, 200A		3	4195	S544676
8	HARNESS, WIRING, VACUUM SWITCH/P.T.		1	--	--
9	HARNESS, WIRING, VOLTAGE/NEUTRAL SENSOR		1	--	--
10	BARRIER, ACRYLIC, CLEAR, 1/4" (REMOVABLE)		4	--	--
11	ROD, COPPER, 3/8", 9" LONG (III)		1	--	--
12	SENSOR, LINE VOLTAGE		3	--	--
13	SENSOR, NEUTRAL VOLTAGE		1	--	--
14	CONTROL (III)		1	--	--
15	WIRE, COPPER, #2 STR. (III)		--	--	--
16	NUTS, GROUND, 1/2" - 13 (III)		3	--	--

TABLE OF CONTENTS

© 1998 - 2021 San Diego Gas & Electric Company. All rights reserved. Removal of this copyright notice without permission is not permitted under law.

REV	CHANGE	DR	BY	DSN	APV	DATE	REV	CHANGE	DR	BY	DSN	APV	DATE
C	REVISION	-	-	-	TR/DW	5/29/2014	F						
B	REVISION	-	-	-	TR/DW	5/28/2014	E						
A	REVISION	-	-	-	TR/DW	4/29/2014	D	FORMATTING	EDM	JIK	-	-	06/18/2021

NOTES:

I. PAD MOUNTED SCADA CAPACITOR 150KVAR (S206236) AND 300KVAR (S206240) ARE DELIVERED FROM THE SUPPLIER WITH ALL THE PARTS LISTED IN THE PART LIST, INCLUDING FUSES, EXCEPT CONTROL AND RADIO.

II. VACUUM SWITCH CAN BE OPENED MANUALLY OR ELECTRICALLY. VACUUM SWITCH CAN ONLY BE CLOSED ELECTRICALLY.

(III) NOT SHOWN ON FIGURES.

REFERENCE:

a. FOR THE INSTALLATION INSTRUCTIONS, SEE UG3821.

b. FOR FUSING, SEE UG4302 AND UG4309.

c. FOR CONNECTING CAPACITOR TO SYSTEM, SEE DM5811.

TABLE OF CONTENTS

© 1998 - 2021 San Diego Gas & Electric Company. All rights reserved. Removal of this copyright notice without permission is not permitted under law.

REV	CHANGE	DR	BY	DSN	APV	DATE	REV	CHANGE	DR	BY	DSN	APV	DATE
C	REVISION	-	-	-	TR/DW	5/29/2014	F						
B	REVISION	-	-	-	TR/DW	5/28/2014	E						
A	REVISION	-	-	-	TR/DW	4/29/2014	D	FORMATTING	EDM	JIK	-	-	06/18/2021

SCOPE: THIS STANDARD SHOWS THE PAD INSTALLATION, UNDER PAD BOX AND WORK SPACE.

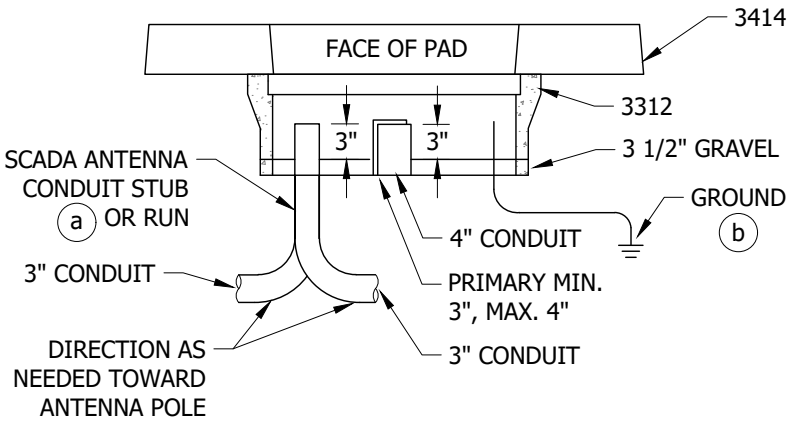

FIGURE 1
PAD INSTALLATION

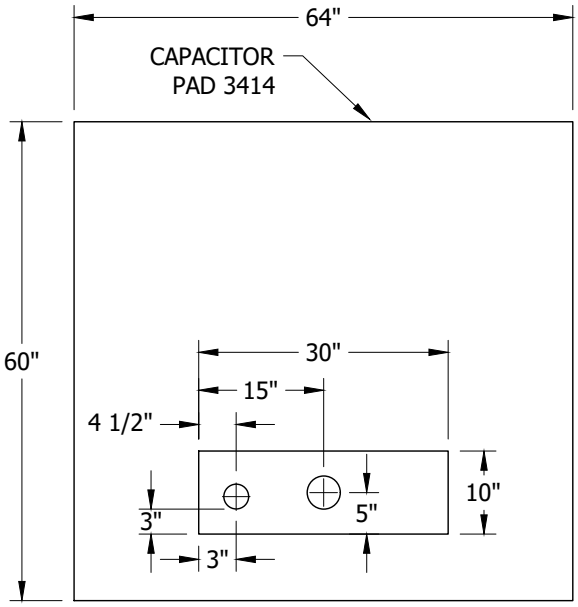

FIGURE 2
PAD

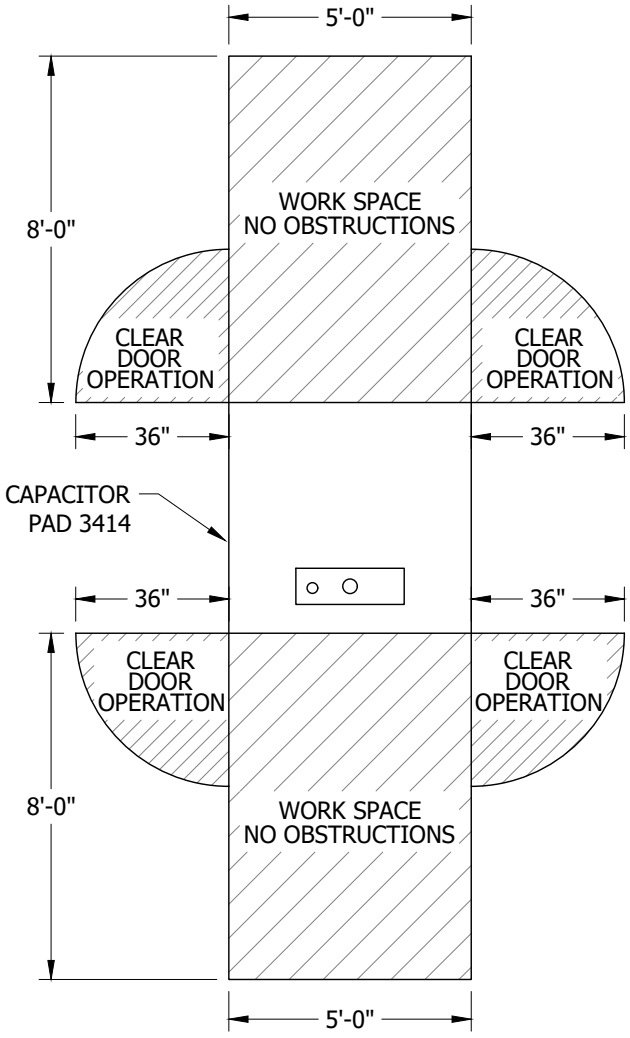

FIGURE 3
WORK SPACE

INSTALLATION: NONE

BILL OF MATERIALS: NONE

NOTES: NONE

REFERENCE:

(a) SEE UG4645.

(b) SEE UG4510.

© 1998 - 2021 San Diego Gas & Electric Company. All rights reserved. Removal of this copyright notice without permission is not permitted under law.

REV	CHANGE	DR	BY	DSN	APV	DATE	REV	CHANGE	DR	BY	DSN	APV	DATE
C	REVISION	-	-	-	TR/DW	5/29/2014	F						
B	REVISION	-	-	-	TR/DW	5/28/2014	E						
A	REVISION	-	-	-	TR/DW	4/29/2014	D	FORMATTING	EDM	JIK	-	-	06/18/2021

SCOPE: THIS STANDARD SHOWS THE PAD AND ANTENNA POLE PLACEMENT AND CLEARANCES.

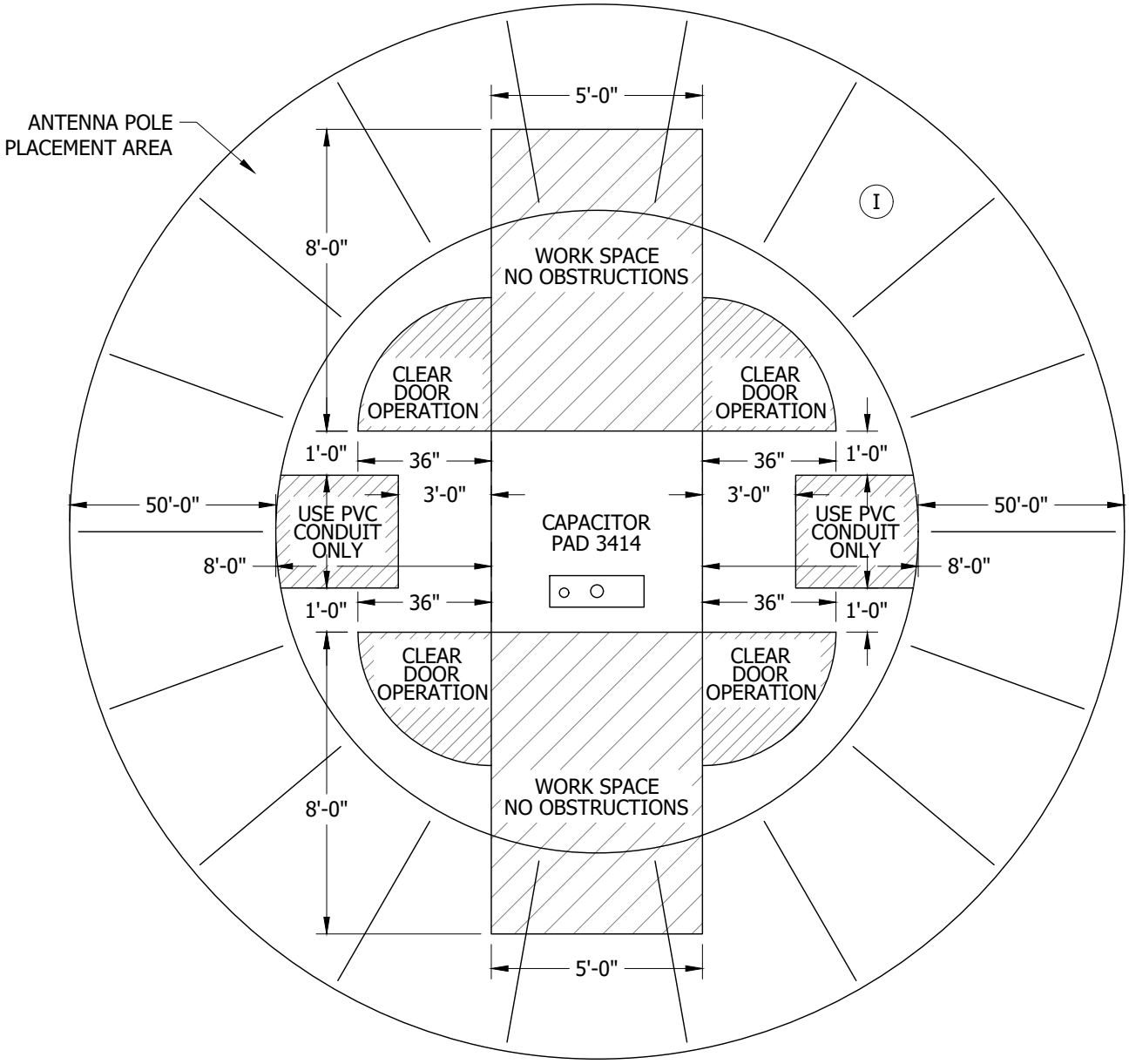

FIGURE 1

INSTALLATION: NONE

BILL OF MATERIALS: NONE

NOTES:

(I) USE PVC OR POLYETHYLENE CONDUIT.

II. ANTENNA POLE SHALL BE LOCATED AS SHOWN (NON-CABLE POLE INSTALLATION ONLY).

REFERENCE: NONE

© 1998 - 2021 San Diego Gas & Electric Company. All rights reserved. Removal of this copyright notice without permission is not permitted under law.

REV	CHANGE	DR	BY	DSN	APV	DATE	REV	CHANGE	DR	BY	DSN	APV	DATE
C	REVISION	-	-	-	TR/DW	5/29/2014	F						
B	REVISION	-	-	-	TR/DW	5/28/2014	E						
A	REVISION	-	-	-	TR/DW	4/29/2014	D	FORMATTING	EDM	JIK	-	-	06/18/2021

X Indicates Latest Revision | Completely Revised | New Page | Information Removed

SDG&E ELECTRIC UNDERGROUND CONSTRUCTION STANDARDS

INSTALLATION OF SCADA
4KV PAD MOUNTED CAPACITOR,
PAD AND ANTENNA POLE

UG3815.8

TABLE OF CONTENTS

SCOPE: THIS PAGE COVERS CAPACITOR POLE TO PAD MOUNT DESIGN OPTION FOR USE IN THE HRFA. ALL AVIAN PROTECTION REQUIRED SHALL BE INSTALLED AS NEEDED.

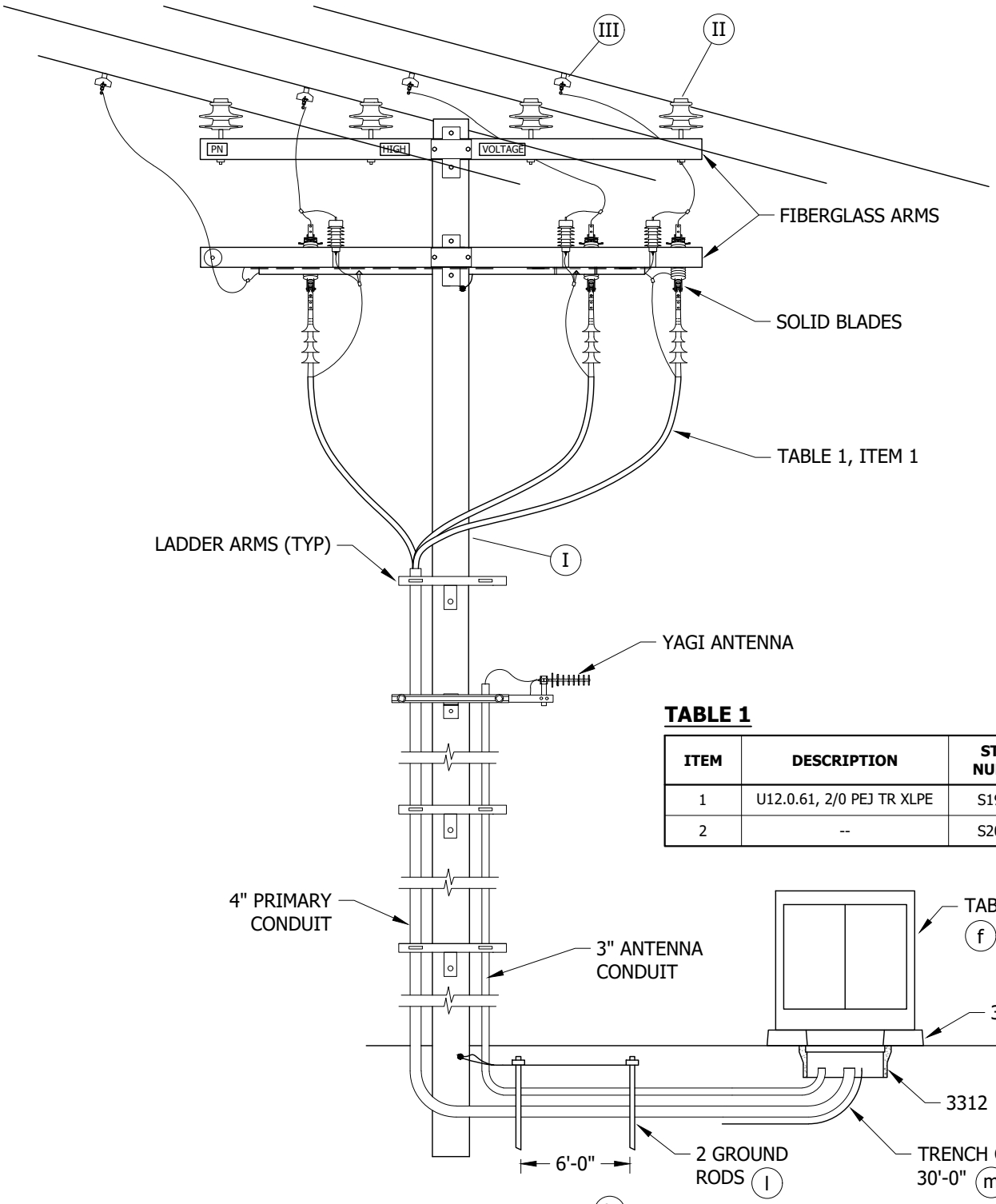

TABLE 1

ITEM	DESCRIPTION	STOCK NUMBER
1	U12.0.61, 2/0 PEJ TR XLPE	S197606
2	--	S206232

FIGURE 1 k

© 1998 - 2021 San Diego Gas & Electric Company. All rights reserved. Removal of this copyright notice without permission is not permitted under law.

REV	CHANGE	DR	BY	DSN	APV	DATE	REV	CHANGE	DR	BY	DSN	APV	DATE
C	REVISION	-	-	-	TR/DW	5/29/2014	F						
B	REVISION	-	-	-	TR/DW	5/28/2014	E						
A	REVISION	-	-	-	TR/DW	4/29/2014	D	FORMATTING	EDM	JIK	-	-	06/18/2021

X Indicates Latest Revision | Completely Revised | New Page | Information Removed

SDG&E ELECTRIC UNDERGROUND CONSTRUCTION STANDARDS

SHEET 9 OF 10

INSTALLATION OF SCADA PAD MOUNTED 4KV CAPACITOR FOR HRFA APPLICATIONS

UG3815.9

TABLE OF CONTENTS

INSTALLATION: NONE

BILL OF MATERIALS: NONE

NOTES:

(I) IF ADDING ADDITIONAL POLE, INSTALL STEEL. IF WOOD POLE IS IN GOOD CONDITION IT MAY USED.

(II) CLAMP TOP OPTIONAL IF STRANDED CONDUCTOR.

(III) WEDGE TAP STIRRUPS REQUIRED.

REFERENCE:

a. FOR TAGGING PAD, SEE UG3211.

b. FOR WIRE ENTRY PREVENTION, SEE UG3408.

c. FOR CAPACITOR PAD AND CONDUIT PLACEMENT, SEE UG3414.

d. FOR EQUIPMENT BARRIER PROTECTION AND CLEARANCE, SEE UG3479.

e. FOR MINIMUM OPERATING AND CLEARANCE REQUIREMENT, SEE UG3480, UG3481, UG3482 & UG3483.

(f) FOR PAD MOUNTED CAPACITOR, SEE UG3821.

g. FOR FUSING, INCLUDING LEGACY DESIGNS, SEE UG4302 AND UG4309.

h. FOR GROUNDING TELCO CONDUCTOR IN PAD MOUNTED EQUIPMENT, SEE UG4514.

i. FOR CONNECTING CAPACITOR TO SYSTEM, SEE DM5811.

j. FOR SCADA PROJECT CHECKLIST, SEE DM6115.

(k) FOR CABLE POLE STANDARD, SEE OH1440.

(l) SEE OH1002.

(m) SEE UG4510.

TABLE OF CONTENTS

© 1998 - 2021 San Diego Gas & Electric Company. All rights reserved. Removal of this copyright notice without permission is not permitted under law.

REV	CHANGE	DR	BY	DSN	APV	DATE	REV	CHANGE	DR	BY	DSN	APV	DATE
C	REVISION	-	-	-	TR/DW	5/29/2014	F						
B	REVISION	-	-	-	TR/DW	5/28/2014	E						
A	REVISION	-	-	-	TR/DW	4/29/2014	D	FORMATTING	EDM	JIK	-	-	06/18/2021

SCOPE: THIS STANDARD SHOWS THE EQUIPMENT AND INSTALLATION REQUIREMENTS FOR THE PAD MOUNTED 600 AND 1200KVAR 12KV CAPACITOR, WITH SCADA.

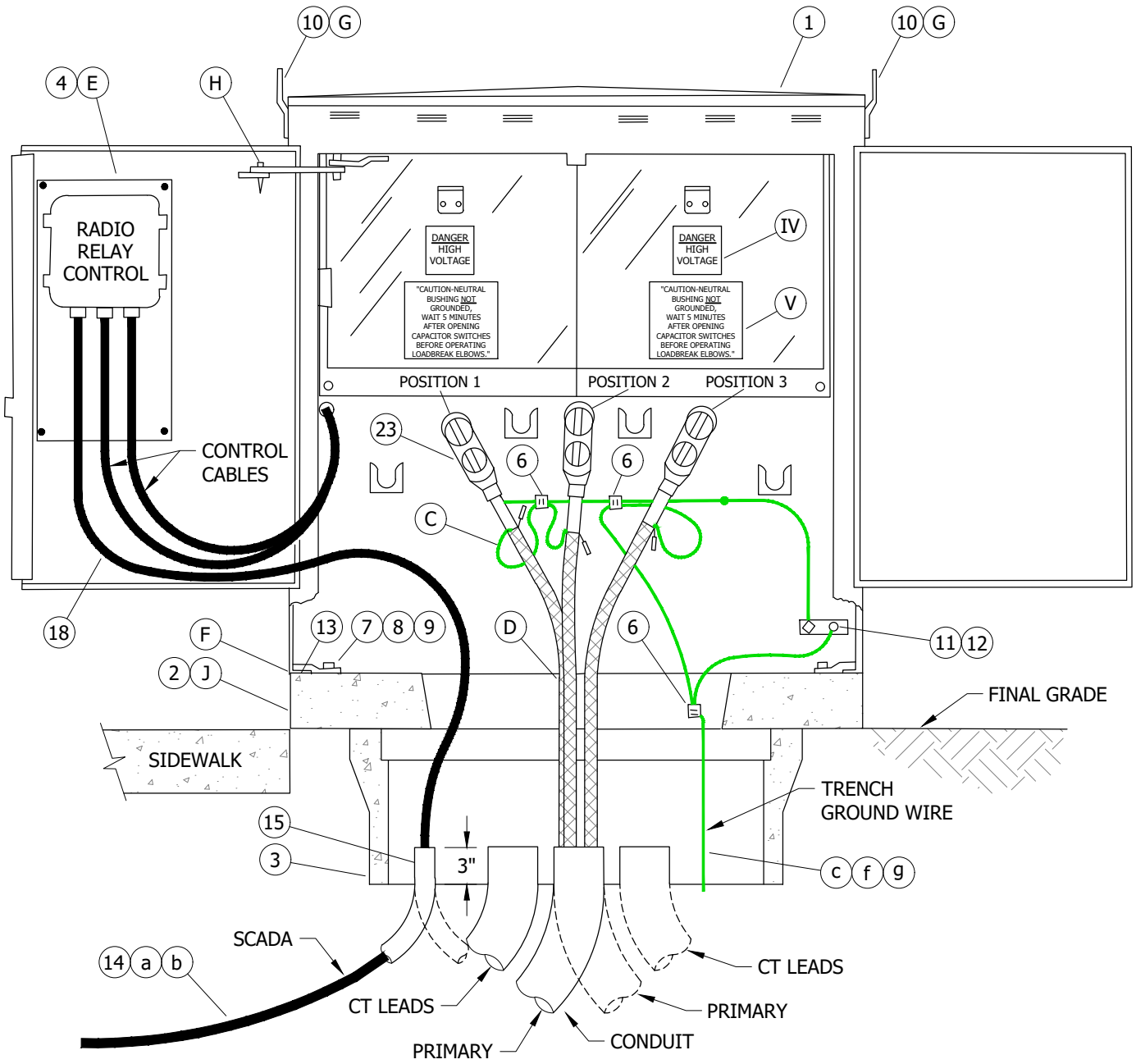

FIGURE 1 (VI)

© 1998 - 2023 San Diego Gas & Electric Company. All rights reserved. Removal of this copyright notice without permission is not permitted under law.

REV	CHANGE	DR	BY	DSN	APV	DATE	REV	CHANGE	DR	BY	DSN	APV	DATE
C	FORMATTING	EDM	JIK	-	-	06/18/2021	F	TABLE UPDATE	GLC	EJA	EJA	KRG	09/05/2023
B	EDITORIAL CHANGES	-	JC	TR	MDJ	09/23/2015	E	BILL OF MATERIALS UPDATE	EDM	RSL	JES	KRG	05/31/2022
A	REVISED	-	-	TR	DW	06/12/2014	D	NOTES UPDATE	EDM	EJA	GLW	CZH	10/01/2021

X Indicates Latest Revision | Completely Revised | New Page | Information Removed

SDG&E ELECTRIC UNDERGROUND CONSTRUCTION STANDARDS

INSTALLATION OF SCADA
600 & 1200 KVAR 12KV PAD MOUNTED CAPACITOR

UG3821.1

TABLE OF CONTENTS

INSTALLATION:

A. CHECK AND TIGHTEN ALL CONNECTIONS ON CAPACITOR BEFORE INSTALLATION.

B. INSTALL PAD TO FINAL GRADE.

(C) WHEN A SYSTEM NEUTRAL OR GROUNDING BANK NEUTRAL IS PRESENT, FOR UNDERGROUND OR CABLE POLE APPLICATIONS, THE CONCENTRIC NEUTRALS SHALL BE CONNECTED TO THE NEUTRAL. (d) (e)

(D) TERMINATE CONDUIT 3 INCHES ABOVE GROUND LEVEL IN BOX.

(E) SCADA CONTROL AND RADIO; INSTALLED BY KEARNY CREWS.

(F) BASE OF CABINET SHALL BE CAULKED WHEN NECESSARY TO PREVENT WIRE ENTRY.

(G) REMOVE LIFTING EYES AND STORE INSIDE THE CABINET ON THE CONTROL SIDE. IF EYES ARE NOT REMOVED, THEY MAY ENCROACH ON PRIVATE PROPERTY RIGHT-OF-WAY OR CAUSE HAZARD TO THE PUBLIC.

(H) WHEN OPERATING CAPACITOR CONTROL SWITCH, REMOVE THE PIN IN THE DOOR ASSEMBLY SO IT WILL OPEN AT 180 DEGREE ANGLE (ALLOWING OPERATION OF THE SWITCH WITHOUT STANDING IN FRONT OF THE CAPACITOR).

(J) THE 3426 PAD MAY BE SUBSTITUTED FOR THE 3414 PAD IF RIGHT-OF-WAY PERMITS.

BILL OF MATERIALS:

ITEM	DESCRIPTION		QUANTITY	STANDARD PAGE	STOCK NUMBER	DESIGN UNITS
1	CAPACITOR, SCADA, 1,200KVAR PAD MOUNTED	600KVAR	1	--	S206226	CAP-4SD
		1,200KVAR	1	--	S206224	CAP-SD
2	PAD, CAPACITOR (IF NEW)	(J)	1	--	S514280	CAP-PD
3	BOX, 3312	(VII)	1	3312	S162430	3312-0
4	CONTROL, CAPACITOR, SCADA (PROGRAMMABLE)	(E)	1	--	S274880	SEL-UC
5	LOCKS, KEYLESS	(IX)	2	--	S468010	--
6	CONNECTOR, COMPRESSION, COPPER		3	4174	S257760	--
7	NUT, CLAMPING, FOR SHALLOW CHANNEL		2	--	S503520	--
8	SCREW, HEX HEAD CAP, BRONZE, 1/2" X 1 1/2"		2	--	S616192	--
9	WASHER, STANDARD FLAT ROUND, BRONZE, 1/2"		2	--	S799488	--
10	EYES, LIFTING, (REMOVABLE)	(G)	2	--	--	--
11	CONNECTOR, SERVICE POST		1	--	S262560	--
12	NUT, STANDARD HEX, BRONZE, 1/2"		1	--	S506112	--
13	HOLD DOWN (SUPPLIED WITH CABINET)		2	--	--	--
14	PIPE, POLYETHYLENE, 1"		AS REQ'D	--	S249630	1"PE
	PVC, 3"			--	--	--
15	ELBOW, 3", 90 DEGREE	(VIII)	1	3373	S322048	1DB3-B
16	ANTENNA, SCADA	(E) (IX)	--	4645	S109570	ANTENA
17	ADAPTER, ANTENNA	(E) (IX)	1	4645	S102017	--
18	CABLE, COAX	(E)	AS REQ'D	--	S191906	CABANT
19	CONNECTS, COAX CABLE	(E) (IX)	AS REQ'D	--	S254170	CABCON
20	RADIO, MDS	(E) (IX)	1	4642	S749500	MDSRAD
21	RADIO, MDS, SPREAD SPECTRUM	(E) (IX)	1	4642	S749504	SPREAD
22	CT'S, UG T BODY, LYNDSEY 600A, WITH 100'-0" LEADS	(IX)	3	--	--	--
23	ELBOW, LOADBREAK, 2/0 (IF NEW)		3	4190	S443480	LBE2/0

TABLE OF CONTENTS

© 1998 - 2023 San Diego Gas & Electric Company. All rights reserved. Removal of this copyright notice without permission is not permitted under law.

REV	CHANGE	DR	BY	DSN	APV	DATE	REV	CHANGE	DR	BY	DSN	APV	DATE
C	FORMATTING	EDM	JIK	-	-	06/18/2021	F	TABLE UPDATE	GLC	EJA	EJA	KRG	09/05/2023
B	EDITORIAL CHANGES	-	JC	TR	MDJ	09/23/2015	E	BILL OF MATERIALS UPDATE	EDM	RSL	JES	KRG	05/31/2022
A	REVISED	-	-	TR	DW	06/12/2014	D	NOTES UPDATE	EDM	EJA	GLW	CZH	10/01/2021

NOTES:

I. PHASE IDENTIFICATION MUST BE MARKED USING THE AP 20 OR 30 AT ALL LOCATIONS. POSITION 1 SHALL BE CONNECTED TO A PHASE, POSITION 2 SHALL BE CONNECTED TO B PHASE AND POSITION 3 MUST BE CONNECTED TO C PHASE.

II. ALL NEW PAD MOUNTED CAPACITORS PURCHASED AFTER 5/14/12 WILL BE SCADA ENABLED UNITS, EQUIPPED WITH THREE VACUUM SWITCHES, LINE VOLTAGE SENSORS AND A NEUTRAL VOLTAGE SENSOR. THE CONTROL UNIT REQUIRES AN ANTENNA. ALL UNITS SHALL HAVE THE SUFFIX "CW" TO THE STATION ID AS ALL WILL BE SCADA/SWITCHED PAD MOUNTED CAPACITOR STATIONS. THE INSTALLATION OF THE 3312 HAND HOLE UNDER THE PAD SHALL BE REQUIRED FOR ALL NEW CONSTRUCTION OF SCADA CAPACITORS.

III. THE LOADBREAK ELBOWS ARE LOCATED ON THE SIDE OF THE CAPACITOR CABINET WITH THE SIGN "CONTROL INSIDE" ON THE DOOR.

(IV) DECAL: "DANGER HIGH VOLTAGE"

(V) DECAL: "CAUTION-NEUTRAL BUSHING NOT GROUNDED WAIT 5 MINUTES AFTER OPENING CAPACITOR SWITCHES BEFORE OPERATING LOADBREAK ELBOWS"

(VI) SWEEP TO CLEAR SIDE FOR PLACEMENT OF ANTENNA POLE TO 50'-0" MAXIMUM.

(VII) LOCATED UNDER PAD (REQUIRED FOR NEW CONSTRUCTION).

(VIII) FOR STUB ONLY INSTALLATION OR ALTERNATIVE LOCATION (IF APPLICABLE).

(IX) NOT SHOWN ON FIGURES.

REFERENCE:

(a) FOR CONDUIT AND CONDUIT FITTINGS, SEE UG3373.

(b) FOR ANTENNA POLE W/ ANTENNA, SEE UG4645.

(c) FOR EQUIPMENT GROUNDING, SEE UG4512.

(d) FOR TRENCH GROUNDING, SEE UG4510.

(e) FOR CABLE POLE GROUNDING, SEE OH1002.

(f) FOR (PREFERRED) AND (ALTERNATE) TRENCH GROUND WIRE, SEE UG4510.

(g) FOR EQUIPMENT GROUNDING INSTALLATION, SEE UG4512.

TABLE OF CONTENTS

© 1998 - 2023 San Diego Gas & Electric Company. All rights reserved. Removal of this copyright notice without permission is not permitted under law.

REV	CHANGE	DR	BY	DSN	APV	DATE	REV	CHANGE	DR	BY	DSN	APV	DATE
C	FORMATTING	EDM	JIK	-	-	06/18/2021	F	TABLE UPDATE	GLC	EJA	EJA	KRG	09/05/2023
B	EDITORIAL CHANGES	-	JC	TR	MDJ	09/23/2015	E	BILL OF MATERIALS UPDATE	EDM	RSL	JES	KRG	05/31/2022
A	REVISED	-	-	TR	DW	06/12/2014	D	NOTES UPDATE	EDM	EJA	GLW	CZH	10/01/2021

X Indicates Latest Revision | Completely Revised | New Page | Information Removed

SDG&E ELECTRIC UNDERGROUND CONSTRUCTION STANDARDS

INSTALLATION OF SCADA
600 & 1200 KVAR 12KV PAD MOUNTED CAPACITOR

UG3821.3

SCOPE: SHOWS SCADA CAPACITOR INTERIOR AND LOCATION OF EQUIPMENT IN THE UNIT. LINE SENSORS, NEUTRAL SENSOR, X-LIMITER FUSES, VACUUM SWITCHES, CONTROL, CONTROL WIRING HARNESS, 120V POTENTIAL TRANSFORMER AND 400KVAR CAPACITOR CELLS.

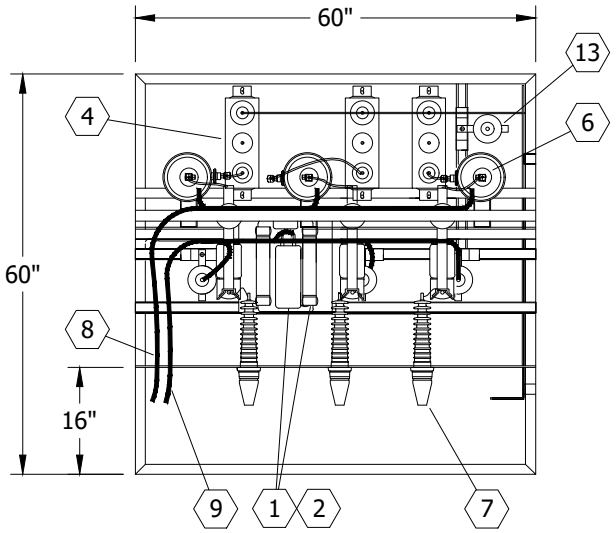

FIGURE 1
SCADA CAPACITOR INTERIOR
TOP VIEW
(SEE TABLE 1)

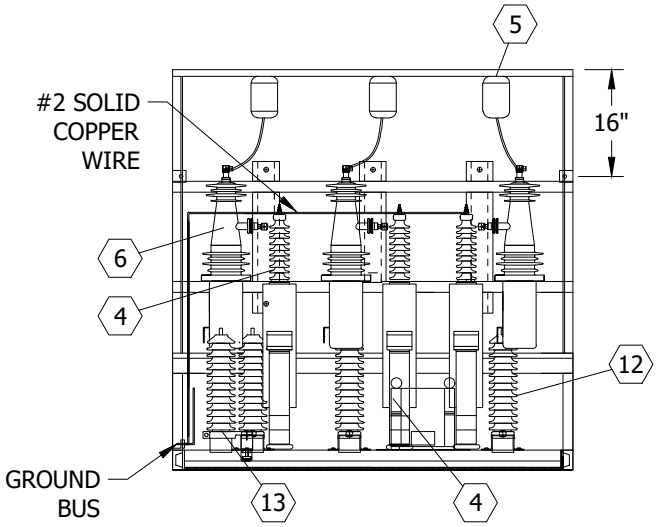

FIGURE 2
SCADA CAPACITOR INTERIOR
REAR VIEW
(SEE TABLE 1)

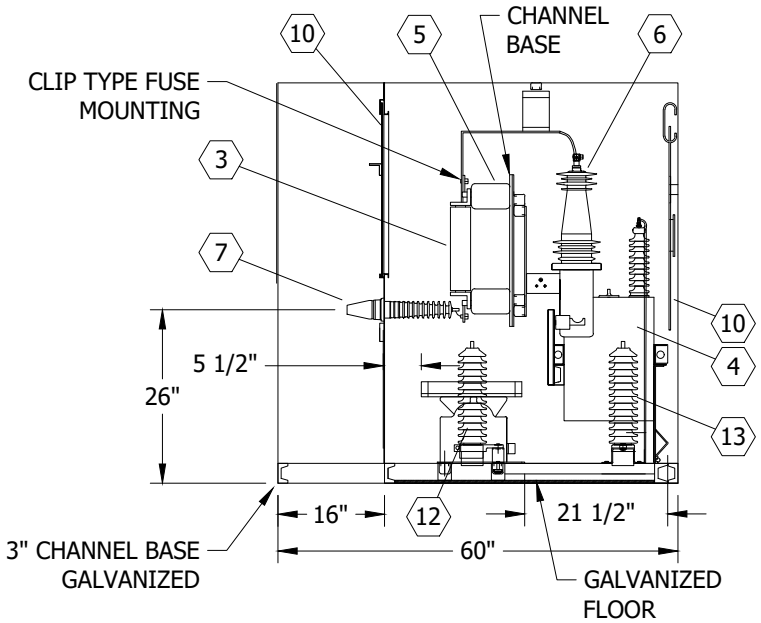

FIGURE 3
SCADA CAPACITOR INTERIOR
SIDE VIEW
(SEE TABLE 1)

TABLE OF CONTENTS

© 1998 - 2023 San Diego Gas & Electric Company. All rights reserved. Removal of this copyright notice without permission is not permitted under law.

REV	CHANGE	DR	BY	DSN	APV	DATE	REV	CHANGE	DR	BY	DSN	APV	DATE
C	FORMATTING	EDM	JIK	-	-	06/18/2021	F	TABLE UPDATE	GLC	EJA	EJA	KRG	09/05/2023
B	EDITORIAL CHANGES	-	JC	TR	MDJ	09/23/2015	E	BILL OF MATERIALS UPDATE	EDM	RSL	JES	KRG	05/31/2022
A	REVISED	-	-	TR	DW	06/12/2014	D	NOTES UPDATE	EDM	EJA	GLW	CZH	10/01/2021

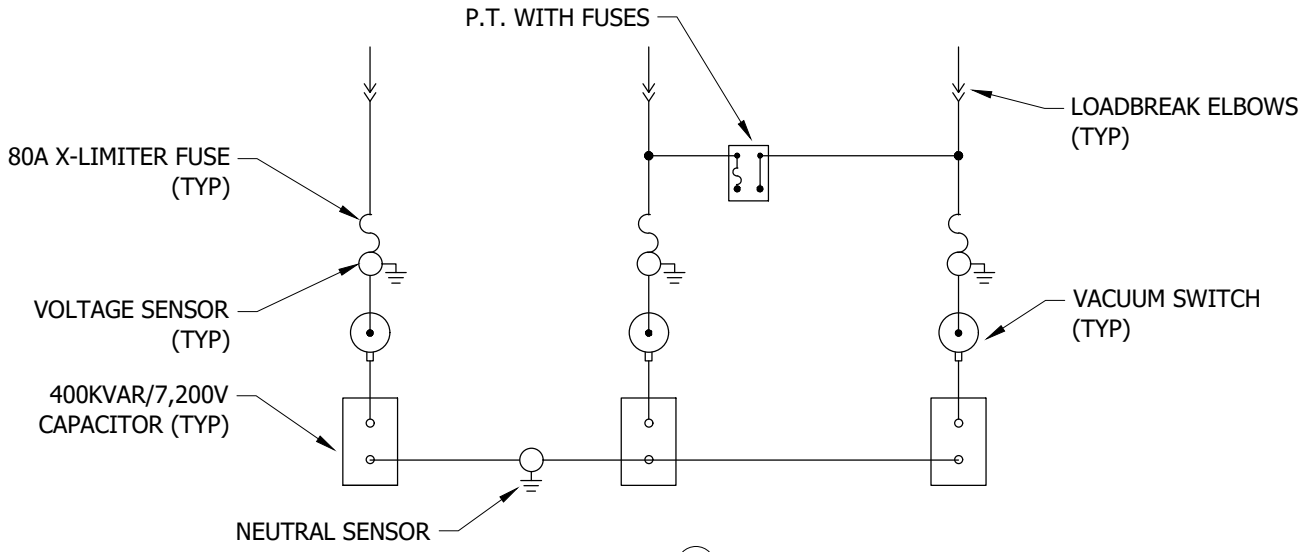

FIGURE 4 (I)
CAPACITOR DIAGRAM

INSTALLATION: NONE

BILL OF MATERIALS: NONE

TABLE 1

CAPACITOR PARTS LIST					
ITEM	**DESCRIPTION**		**QUANTITY**	**STANDARD PAGE**	**STOCK NUMBER**
1	TRANSFORMER, (P.T.), 12KV/120V		1	4309	S762714
2	FUSE, POWER, 0.5E A, 15.5KV, SIZE B, TYPE J-1		2	--	S366456
3	FUSE, COMBINED TECHNOLOGIES, 15.5KV, TYPE X-LIMITER (CURRENT LIMITING)	80A	3	4309	S365695
		40A	3	4309	--
4	CAPACITOR, 400KVAR, 7,200V, SINGLE-PHASE		3	--	S207348
5	INSULATOR, POST, 110KV BIL		9	4309	--
6	SWITCH, VACUUM, CAPACITOR, 15KV, 200A		3	--	S708420
7	PLUG, BUSHING, 14.4KV, 200A		3	4195	S544676
8	HARNESS, WIRING, VACUUM SWITCH/P.T.		1	--	--
9	HARNESS, WIRING, VOLTAGE/NEUTRAL SENSOR		1	--	--
10	BARRIER, ACRYLIC, CLEAR, 1/4" (REMOVABLE)		4	--	--
11	ROD, COPPER, 3/8", 9" LONG	(III)	1	--	--
12	SENSOR, LINE VOLTAGE		3	--	--
13	SENSOR, NEUTRAL VOLTAGE		1	--	--
14	CONTROL	(III)	1	--	--
15	WIRE, COPPER, #2 STR.	(III)	--	--	--
16	NUTS, GROUND, 1/2" - 13	(III)	3	--	--

TABLE OF CONTENTS

© 1998 - 2023 San Diego Gas & Electric Company. All rights reserved. Removal of this copyright notice without permission is not permitted under law.

REV	CHANGE	DR	BY	DSN	APV	DATE	REV	CHANGE	DR	BY	DSN	APV	DATE
C	FORMATTING	EDM	JIK	-	-	06/18/2021	F	TABLE UPDATE	GLC	EJA	EJA	KRG	09/05/2023
B	EDITORIAL CHANGES	-	JC	TR	MDJ	09/23/2015	E	BILL OF MATERIALS UPDATE	EDM	RSL	JES	KRG	05/31/2022
A	REVISED	-	-	TR	DW	06/12/2014	D	NOTES UPDATE	EDM	EJA	GLW	CZH	10/01/2021

NOTES:

(I) PAD MOUNTED SCADA CAPACITOR (S206224) IS DELIVERED FROM THE SUPPLIER WITH ALL THE PARTS LISTED IN TABLE 1, INCLUDING FUSES, EXCEPT CONTROL AND RADIO.

(II) VACUUM SWITCH CAN BE OPENED MANUALLY OR ELECTRICALLY. VACUUM SWITCH CAN ONLY BE CLOSED ELECTRICALLY.

(III) NOT SHOWN ON FIGURES.

REFERENCE:

a. FOR FUSING, SEE UG4302 AND UG4309.

b. FOR CONNECTING CAPACITOR TO SYSTEM, SEE DM5811.

TABLE OF CONTENTS

© 1998 - 2023 San Diego Gas & Electric Company. All rights reserved. Removal of this copyright notice without permission is not permitted under law.

REV	CHANGE	DR	BY	DSN	APV	DATE	REV	CHANGE	DR	BY	DSN	APV	DATE
C	FORMATTING	EDM	JIK	-	-	06/18/2021	F	TABLE UPDATE	GLC	EJA	EJA	KRG	09/05/2023
B	EDITORIAL CHANGES	-	JC	TR	MDJ	09/23/2015	E	BILL OF MATERIALS UPDATE	EDM	RSL	JES	KRG	05/31/2022
A	REVISED	-	-	TR	DW	06/12/2014	D	NOTES UPDATE	EDM	EJA	GLW	CZH	10/01/2021

X Indicates Latest Revision	Completely Revised	New Page	Information Removed	

SDG&E ELECTRIC UNDERGROUND CONSTRUCTION STANDARDS

INSTALLATION OF SCADA
600 & 1200 KVAR 12KV PAD MOUNTED CAPACITOR, EQUIPMENT

SCOPE: THIS STANDARD SHOWS THE PAD INSTALLATION, UNDER PAD BOX AND WORK SPACE.

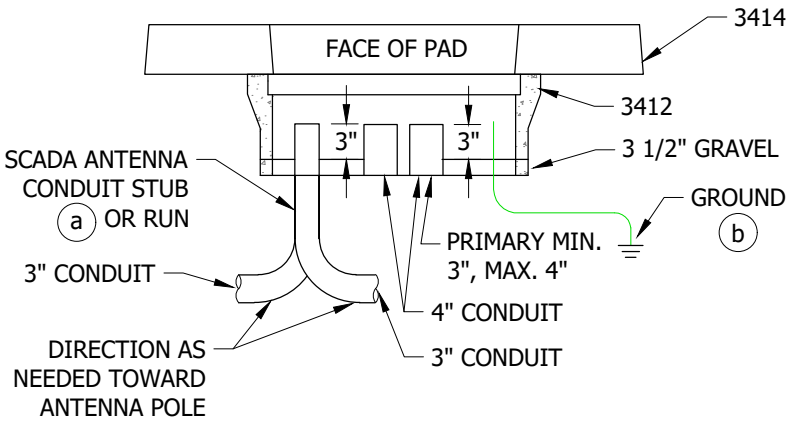

FIGURE 1
PAD INSTALLATION

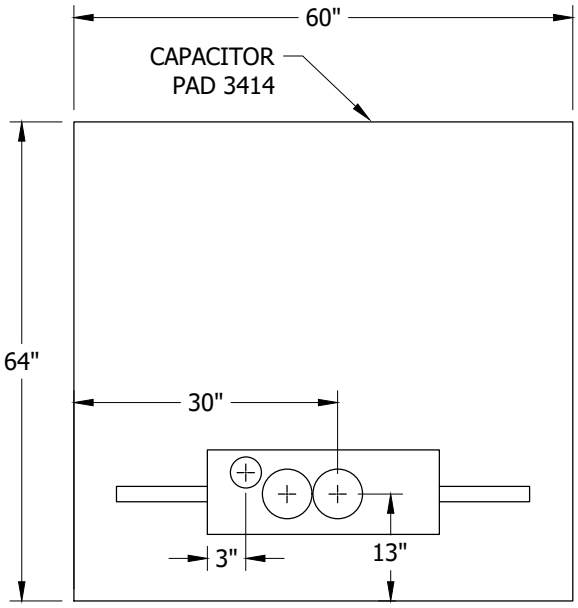

FIGURE 2
PAD

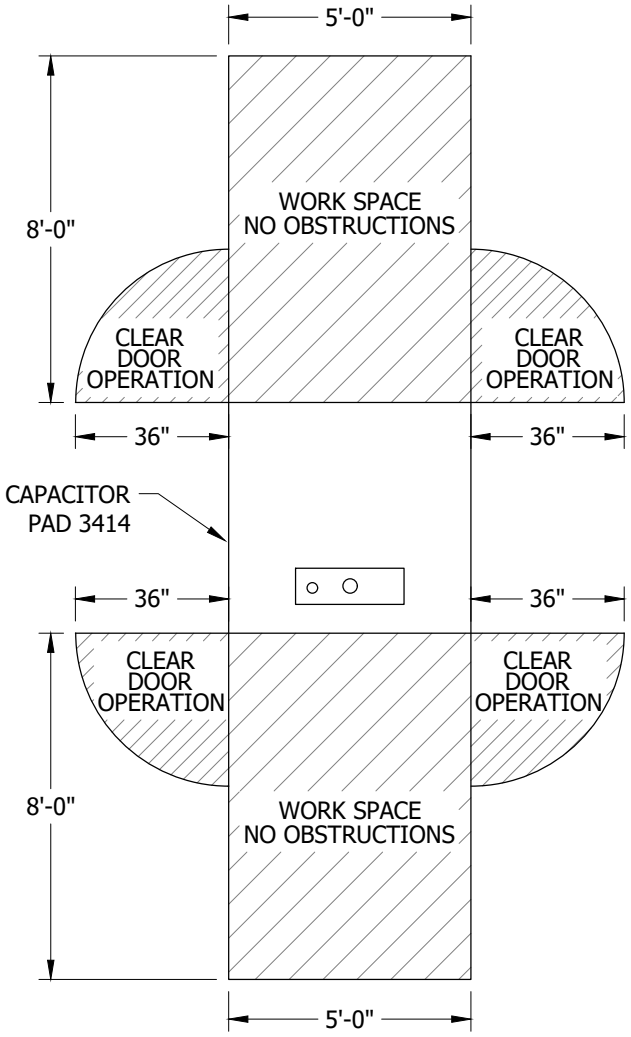

FIGURE 3
WORK SPACE

INSTALLATION: NONE

BILL OF MATERIALS: NONE

NOTES: NONE

REFERENCE:

(a) SEE UG4645.

(b) SEE UG4510.

© 1998 - 2023 San Diego Gas & Electric Company. All rights reserved. Removal of this copyright notice without permission is not permitted under law.

REV	CHANGE	DR	BY	DSN	APV	DATE	REV	CHANGE	DR	BY	DSN	APV	DATE
C	FORMATTING	EDM	JIK	-	-	06/18/2021	F	TABLE UPDATE	GLC	EJA	EJA	KRG	09/05/2023
B	EDITORIAL CHANGES	-	JC	TR	MDJ	09/23/2015	E	BILL OF MATERIALS UPDATE	EDM	RSL	JES	KRG	05/31/2022
A	REVISED	-	-	TR	DW	06/12/2014	D	NOTES UPDATE	EDM	EJA	GLW	CZH	10/01/2021

TABLE OF CONTENTS

SCOPE: THIS STANDARD SHOWS THE PAD AND ANTENNA POLE PLACEMENT AND CLEARANCES.

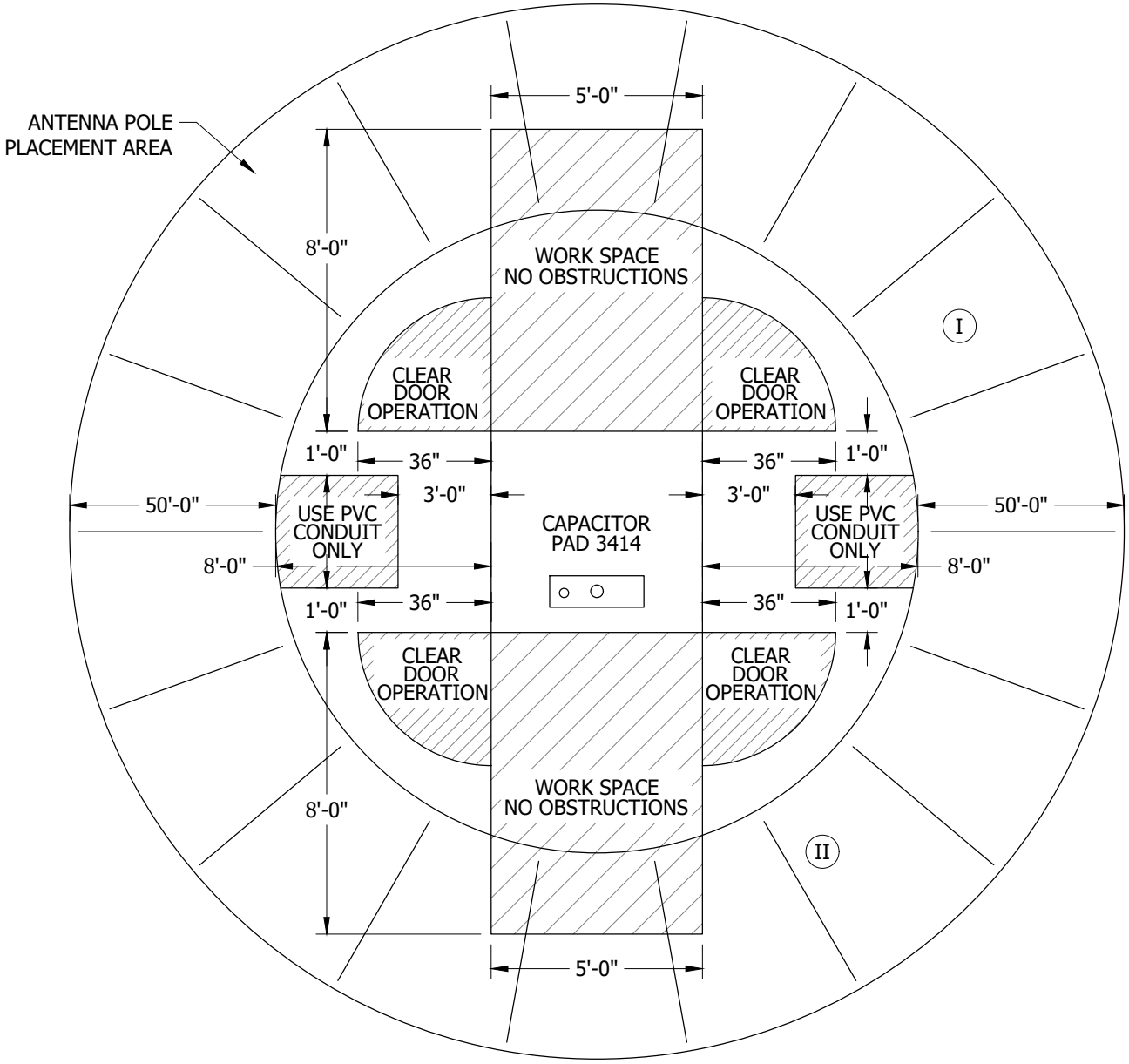

FIGURE 1

INSTALLATION: NONE

BILL OF MATERIALS: NONE

NOTES:

(I) USE PVC OR POLYETHYLENE CONDUIT.

(II) ANTENNA POLE SHALL BE LOCATED AS SHOWN (NON-CABLE POLE INSTALLATION ONLY).

REFERENCE: NONE

© 1998 - 2023 San Diego Gas & Electric Company. All rights reserved. Removal of this copyright notice without permission is not permitted under law.

REV	CHANGE	DR	BY	DSN	APV	DATE	REV	CHANGE	DR	BY	DSN	APV	DATE
C	FORMATTING	EDM	JIK	-	-	06/18/2021	F	TABLE UPDATE	GLC	EJA	EJA	KRG	09/05/2023
B	EDITORIAL CHANGES	-	JC	TR	MDJ	09/23/2015	E	BILL OF MATERIALS UPDATE	EDM	RSL	JES	KRG	05/31/2022
A	REVISED	-	-	TR	DW	06/12/2014	D	NOTES UPDATE	EDM	EJA	GLW	CZH	10/01/2021

X Indicates Latest Revision | Completely Revised | New Page | Information Removed

SDG&E ELECTRIC UNDERGROUND CONSTRUCTION STANDARDS

INSTALLATION OF SCADA
600 & 1200 KVAR 12KV PAD MOUNTED CAPACITOR,
PAD AND ANTENNA POLE

UG3821.8

TABLE OF CONTENTS

SCOPE: THIS PAGE COVERS CAPACITOR POLE TO PADMOUNT DESIGN OPTION FOR FTZ/HRFA. ALL AVIAN PROTECTION REQUIRED SHALL BE INSTALLED AS NEEDED.

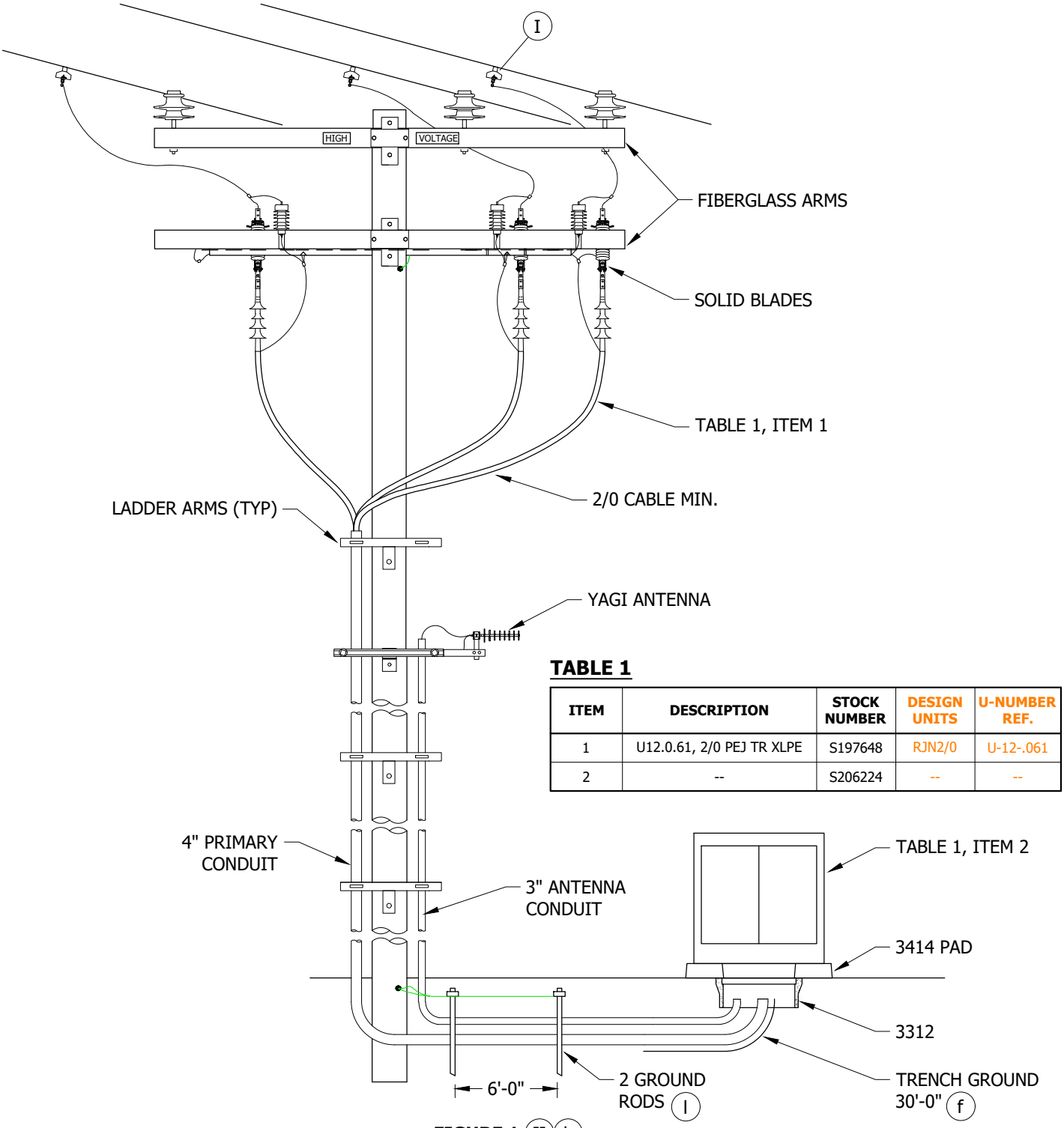

TABLE 1

ITEM	DESCRIPTION	STOCK NUMBER	DESIGN UNITS	U-NUMBER REF.
1	U12.0.61, 2/0 PEJ TR XLPE	S197648	RJN2/0	U-12-.061
2	--	S206224	--	--

FIGURE 1 II k

© 1998 - 2023 San Diego Gas & Electric Company. All rights reserved. Removal of this copyright notice without permission is not permitted under law.

REV	CHANGE	DR	BY	DSN	APV	DATE	REV	CHANGE	DR	BY	DSN	APV	DATE
C	FORMATTING	EDM	JIK	-	-	06/18/2021	F	TABLE UPDATE	GLC	EJA	EJA	KRG	09/05/2023
B	EDITORIAL CHANGES	-	JC	TR	MDJ	09/23/2015	E	BILL OF MATERIALS UPDATE	EDM	RSL	JES	KRG	05/31/2022
A	REVISED	-	-	TR	DW	06/12/2014	D	NOTES UPDATE	EDM	EJA	GLW	CZH	10/01/2021

X Indicates Latest Revision | Completely Revised | New Page | Information Removed

SDG&E ELECTRIC UNDERGROUND CONSTRUCTION STANDARDS

INSTALLATION OF SCADA PAD MOUNTED
600 & 1200 KVAR 12KV CAPACITOR FOR HFA APPLICATIONS

UG3821.9

TABLE OF CONTENTS

INSTALLATION: NONE

BILL OF MATERIALS: NONE

NOTES:

(I) WEDGE TAP STIRRUPS REQUIRED.

(II) IF ADDING ADDITIONAL POLE, INSTALL STEEL. IF WOOD POLE IS IN GOOD CONDITION IT MAY USED.

REFERENCE:

a. FOR TAGGING PAD, SEE UG3211.

b. FOR WIRE ENTRY PREVENTION, SEE UG3408.

c. FOR CAPACITOR PAD AND CONDUIT PLACEMENT, SEE UG3414.

d. FOR EQUIPMENT BARRIER PROTECTION AND CLEARANCE, SEE UG3479.

e. FOR MINIMUM OPERATING AND CLEARANCE REQUIREMENTS, SEE UG3480, UG3481, UG3482 AND UG3483.

(f) SEE UG4510.

g. FOR FUSING, INCLUDING LEGACY DESIGNS, SEE UG4302 AND UG4309.

h. FOR GROUNDING TELCO CONDUCTOR IN PAD MOUNTED EQUIPMENT, SEE UG4514.

i. FOR CONNECTING CAPACITOR TO SYSTEM, SEE DM5811.

j. FOR SCADA PROJECT CHECKLIST, SEE DM6115.3.

(k) FOR CABLE POLE STANDARD, SEE OH1440.

(l) SEE OH1002.

TABLE OF CONTENTS

© 1998 - 2023 San Diego Gas & Electric Company. All rights reserved. Removal of this copyright notice without permission is not permitted under law.

REV	CHANGE	DR	BY	DSN	APV	DATE	REV	CHANGE	DR	BY	DSN	APV	DATE
C	FORMATTING	EDM	JIK	-	-	06/18/2021	F	TABLE UPDATE	GLC	EJA	EJA	KRG	09/05/2023
B	EDITORIAL CHANGES	-	JC	TR	MDJ	09/23/2015	E	BILL OF MATERIALS UPDATE	EDM	RSL	JES	KRG	05/31/2022
A	REVISED	-	-	TR	DW	06/12/2014	D	NOTES UPDATE	EDM	EJA	GLW	CZH	10/01/2021

X Indicates Latest Revision | Completely Revised | New Page | Information Removed

SHEET 10 OF 10

SDG&E ELECTRIC UNDERGROUND CONSTRUCTION STANDARDS

INSTALLATION OF SCADA PAD MOUNTED
600 & 1200 KVAR 12KV CAPACITOR FOR HFA APPLICATIONS

UG3821.10

MAIN TABLE OF CONTENTS

PAGE	SUBJECT
	GENERAL
3903	CATHODIC PROTECTION STATION - UNDERGROUND INSTALLATION
3904	SECONDARY TEST PROCEDURE
	SERVICES
3941	RESIDENTIAL RISER AND CONDUIT
3942	UNDERGROUND ELECTRIC SERVICE LATERAL - CUSTOMER INSTALLED CONDUIT, RESIDENTIAL OR COMMERCIAL
3944	UNDERGROUND SERVICE FROM OVERHEAD FACILITIES (LOW VOLTAGE), MATERIAL REQUIREMENTS
3948	SEALING SERVICE LATERAL CONDUIT, INSTRUCTIONS
3950	FIELD HEATING SERVICE LATERAL CONDUITS
3960	ELEVATION OF CUSTOMER FACILITIES PREVENTING WATER ENTRY

REV	CHANGE	DRWN	BY	CHKD	APVD	DATE
C	REVISED TO 3D FORMAT	NV5	JIK	-	-	05/30/2024
B	FORMATTING	EDM	JIK	-	-	09/16/2021
A	REVISION	-	-	-	LSM/JDJ	03/30/2007

SDG&E ELECTRIC UNDERGROUND CONSTRUCTION STANDARDS

SECONDARIES, SERVICES
TABLE OF CONTENTS

SCALE: NOT TO SCALE

DRAWING NO: UG3901.1

SHEET: 1 OF 1

© 1998 - 2024 San Diego Gas and Electric Company. All rights reserved. Removal of this copyright notice without permission is not permitted under law.

X Indicates Latest Revision | Completely Revised | New Page | Information Removed

SCOPE: THIS STANDARD SHOWS THE PLACEMENT AND INSTALLATION OF AN SDG&E UNDERGROUND CATHODIC PROTECTION STATION.

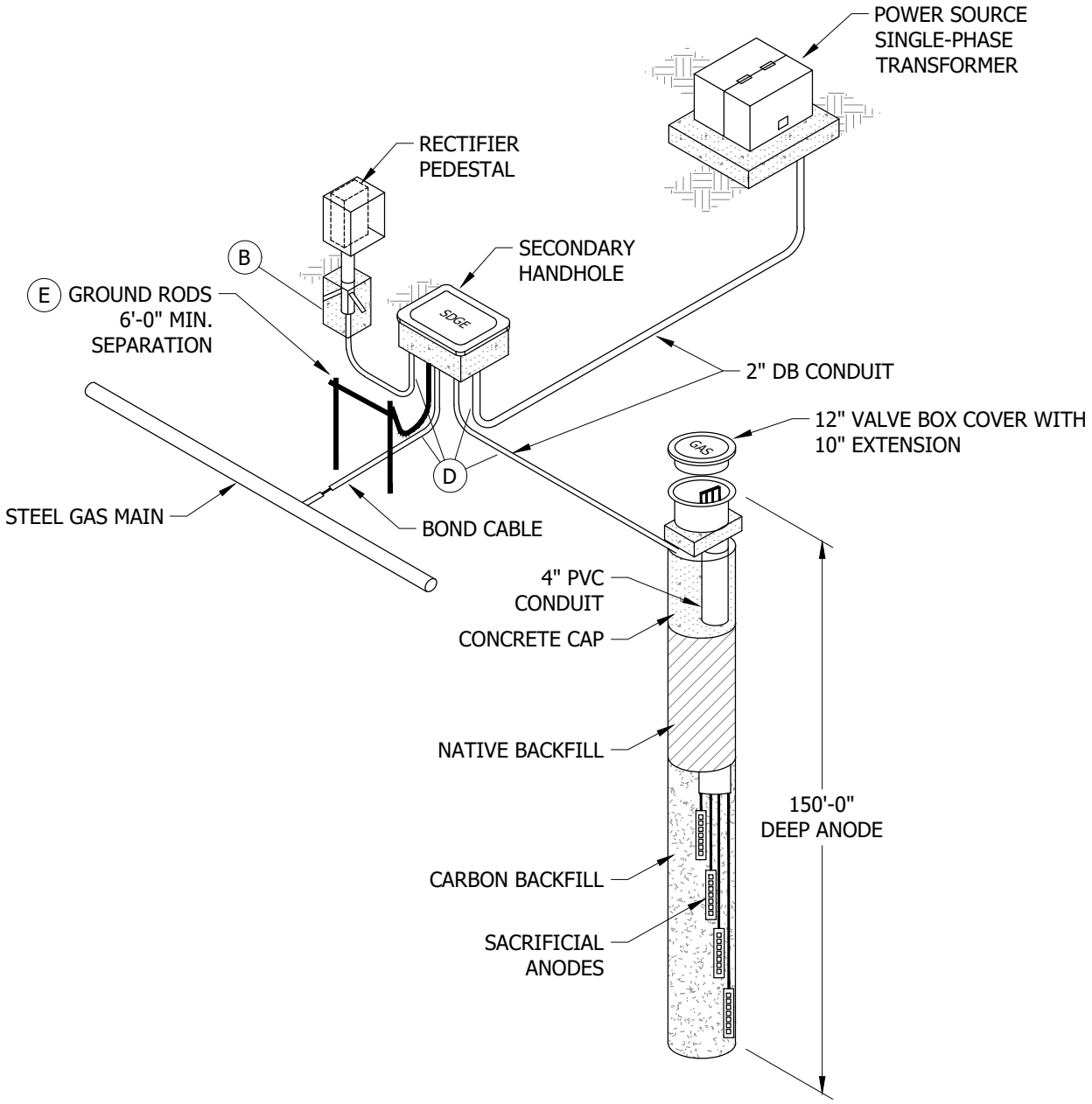

FIGURE 1

© 1998 - 2021 San Diego Gas & Electric Company. All rights reserved. Removal of this copyright notice without permission is not permitted under law.

REV	CHANGE	DR	BY	DSN	APV	DATE	REV	CHANGE	DR	BY	DSN	APV	DATE
C							F						
B	FORMATTING	EDM	JIK	-	-	09/16/2021	E						
A	REVISION	-	-	RW	ROG	01/01/1996	D						

X Indicates Latest Revision | Completely Revised | New Page | Information Removed

SDG&E ELECTRIC UNDERGROUND CONSTRUCTION STANDARDS

CATHODIC PROTECTION STATION - UNDERGROUND INSTALLATION

UG3903.1

TABLE OF CONTENTS

INSTALLATION:

A. PLACE PEDESTAL AS INDICATED IN LOCATION PLAN ABOVE AND AS CLOSE AS PRACTICAL. NO CLOSER THAN 2 FEET TO EDGE OF PADMOUNT TRANSFORMER PAD.

(B) THE CONCRETE BASE SHALL BE READYCRETE OR EQUIPMENT. THE TOP OF CONCRETE SHALL BE AT GRADE LEVEL (NOT ABOVE GRADE). THE DEPTH OF THE CONCRETE MAY VARY.

C. GROUND 120V NEUTRAL TO GROUND LUG IN BOTTOM OF RECTIFIER ENCLOSURE.

(D) USE CONDUIT AS REQUIRED, NO LARGER THAN 2 INCHES.

(E) ROD AND WIRE DEPTH SHALL BE 6 INCHES MINIMUM UNDER CONCRETE OR FINISHED GRADE, 12 INCHES FOR OPEN GROUND AND 18 INCHES MINIMUM IN AREAS SUBJECT TO PLOWING.

F. PRIME AND PAINT INSTALLATION TO MATCH TRANSFORMER.

BILL OF MATERIALS: NONE

NOTES: NONE

REFERENCE: NONE

TABLE OF CONTENTS

© 1998 - 2021 San Diego Gas & Electric Company. All rights reserved. Removal of this copyright notice without permission is not permitted under law.

REV	CHANGE	DR	BY	DSN	APV	DATE	REV	CHANGE	DR	BY	DSN	APV	DATE
C							F						
B	FORMATTING	EDM	JIK	-	-	09/16/2021	E						
A	REVISION	-	-	RW	ROG	01/01/1996	D						

X Indicates Latest Revision | Completely Revised | New Page | Information Removed

SDG&E ELECTRIC UNDERGROUND CONSTRUCTION STANDARDS

CATHODIC PROTECTION STATION - UNDERGROUND INSTALLATION

UG3903.2

SCOPE: THIS STANDARD DESCRIBES THE PROCEDURE TO CONNECT SECONDARY CONDUCTORS TO AN ENERGIZED SOURCE.

INSTALLATION:

THE FOLLOWING METHOD SHALL BE USED WHEN CONNECTING SECONDARY CONDUCTORS TO AN ENERGIZED SOURCE.

A. INSPECT CONDITION OF CONDUCTORS ON LOAD END. ENSURE NO LOAD CONDITION AND PROPER INSTALLATION. NEUTRAL SHALL BE GROUNDED ON LOAD END.

B. APPLY CONNECTOR TERMINALS TO CONDUCTORS THAT ARE TO BE ENERGIZED.

C. WITH USE OF VOLTAGE TESTER (M & S 733600), CHECK POTENTIAL FROM ENERGIZED SOURCE TO ALL SECONDARY CONDUCTORS TO BE ENERGIZED.

   CORRECT METER READS:

   1. ENERGIZED SOURCE TO ALL P.S. LEGS, ZERO "0" VOLTAGE READS.
   2. ENERGIZED SOURCE TO NEUTRAL CONDUCTOR, RATED PHASE TO GROUND VOLTAGE, E.G. 120V, 240V, 277V.

D. AFTER CORRECT TEST READS ARE ATTAINED, CONNECT SECONDARY IN FOLLOWING MANNER:

   1. CONNECT SECONDARY NEUTRAL.
   2. CONNECT ONE P.S. LEG.
   3. TEST EACH REMAINING P.S. LEG TO CORRESPONDING ENERGIZED TERMINAL FOR ZERO "0" VOLTAGE READS BEFORE CONNECTING CONDUCTOR TO THAT TERMIANAL.

E. AFTER ABOVE STEPS ARE COMPLETED, TEST FOR CORRECT VOLTAGE AT LOAD END OF SECONDARY CONDUCTORS.

BILL OF MATERIALS: NONE

NOTES: NONE

REFERENCE: NONE

TABLE OF CONTENTS

REV	CHANGE	DRWN	BY	CHKD	APVD	DATE
C	REVISED TO 3D FORMAT	NV5	JIK	-	-	06/17/2024
B	FORMATTING	EDM	JIK	-	-	09/16/2021
A	REVISION	-	JWK	-	-	01/01/1991

SDG&E ELECTRIC UNDERGROUND CONSTRUCTION STANDARDS

SECONDARY TEST PROCEDURE

SCALE: NOT TO SCALE

DRAWING NO: UG3904.1

SHEET: 1 OF 1

© 1998 - 2024 San Diego Gas and Electric Company. All rights reserved. Removal of this copyright notice without permission is not permitted under law.

X Indicates Latest Revision | Completely Revised | New Page | Information Removed

SCOPE: THIS STANDARD SHOWS 2-INCH CONDUIT TERMINATION AT CUSTOMERS CONDUIT RISER.

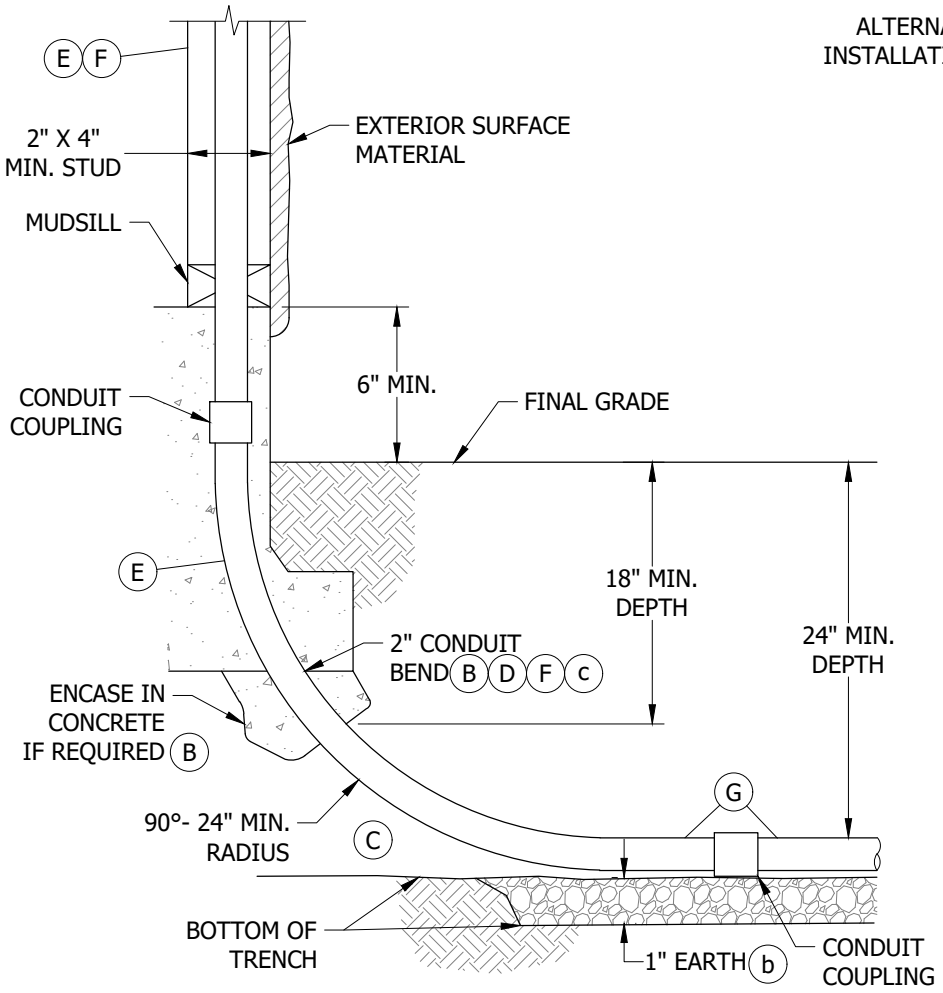

FIGURE 1
TYPICAL ELEVATION

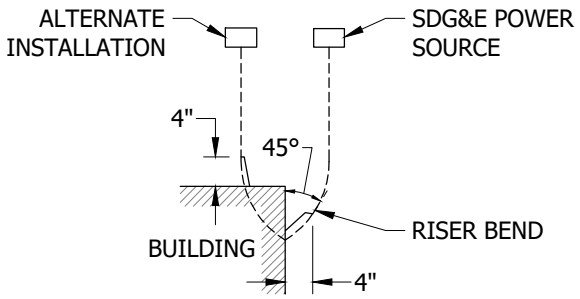

FIGURE 2
TYPICAL PLAN

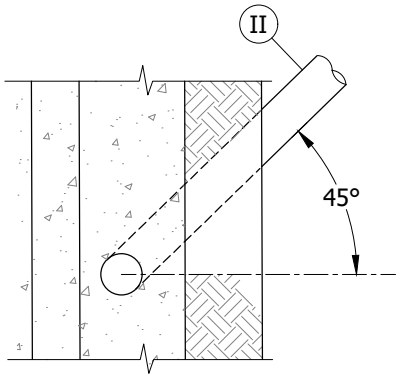

FIGURE 3
PLAN

INSTALLATION:

A. VERIFY METER AND SERVICE LOCATION WITH SDG&E BEFORE INSTALLATION.

(B) ONE OF THE FOLLOWING IS REQUIRED DOWN TO 18-INCH DEPTH ON PRIVATE PROPERTY: (f)

1. STEEL CONDUIT.
2. SCHEDULE 40 PVC OR SCHEDULE 80 PVC CONDUIT WITH A MINIMUM WALL THICKNESS OF .15 INCHES.
3. AT LEAST A 3-INCH LAYER OF CONCRETE ABOVE AND 2 INCHES ON EACH SIDE OF CONDUIT.

(C) WHEN TRENCH IS BUTTED UP AGAINST BUILDING, END OF TRENCH SHALL BE EXCAVATED AT A ONE-TO-ONE SLOPE IF UNDERMINING IS SUSPECTED AT BUILDING.

(D) 90 DEGREE BEND MUST BE INSTALLED DEEP ENOUGH TO CONNECT TO CONDUIT ON BOTTOM OF TRENCH.

(E) TYPE AND SCHEDULE OF CONDUIT AS PER BUILDING INSPECTORS REQUIREMENTS. FLEX CONDUIT IS NOT PERMITTED.

(F) SIZE AND NUMBER OF CONDUIT RUNS TO BE DESIGNATED BY SDG&E.

(G) CONDUIT MANUFACTURER MUST BE SDG&E APPROVED.

© 1998 - 2021 San Diego Gas & Electric Company. All rights reserved. Removal of this copyright notice without permission is not permitted under law.

REV	CHANGE	DR	BY	DSN	APV	DATE	REV	CHANGE	DR	BY	DSN	APV	DATE
C							F						
B	FORMATTING	EDM	JIK	-	-	09/16/2021	E						
A	REVISION	-	-	-	LSM/MPB	12/10/2002	D						

X Indicates Latest Revision | Completely Revised | New Page | Information Removed

SDG&E ELECTRIC UNDERGROUND CONSTRUCTION STANDARDS

RESIDENTIAL RISER AND CONDUIT

SHEET 1 OF 2

UG3941.1

TABLE OF CONTENTS

BILL OF MATERIALS: NONE

NOTES:

I. A STRAIGHT PIECE OF 2-INCH CONDUIT AND A 90 DEGREE 24-INCH MINIMUM RADIUS IS REQUIRED.

(II) POINT CONDUIT STUB IN DIRECTION OF SUPPLY SOURCE NORMALLY AT 45 DEGREE ANGLE FROM OUTER FACE OF BUILDING WALL.

REFERENCE:

a. SEE UG3367 FOR TRENCH PARALLELING FOUNDATIONS.

(b) SEE UG3370 OR UG3371 FOR TRENCH DEPTHS, SHADING AND BACKFILL REQUIREMENTS.

(c) SEE UG3942 FOR MINIMUM BENDING RADIUS.

d. SEE UG3948 FOR SEALING CONDUITS.

e. SEE UG3950 FOR FIELD HEATING SERVICE LATERAL CONDUITS.

(f) SEE G.O. 128 RULE 33.4D.

TABLE OF CONTENTS

© 1998 - 2021 San Diego Gas & Electric Company. All rights reserved. Removal of this copyright notice without permission is not permitted under law.

REV	CHANGE	DR	BY	DSN	APV	DATE	REV	CHANGE	DR	BY	DSN	APV	DATE
C							F						
B	FORMATTING	EDM	JIK	-	-	09/16/2021	E						
A	REVISION	-	-	-	LSM/MPB	12/10/2002	D						

X Indicates Latest Revision | Completely Revised | New Page | Information Removed

SDG&E ELECTRIC UNDERGROUND CONSTRUCTION STANDARDS

RESIDENTIAL RISER AND CONDUIT

UG3941.2

SCOPE: THIS STANDARD SHOWS CUSTOMER INSTALLED CONDUIT FOR A RESIDENTIAL OR COMMERCIAL SERVICE LATERAL.

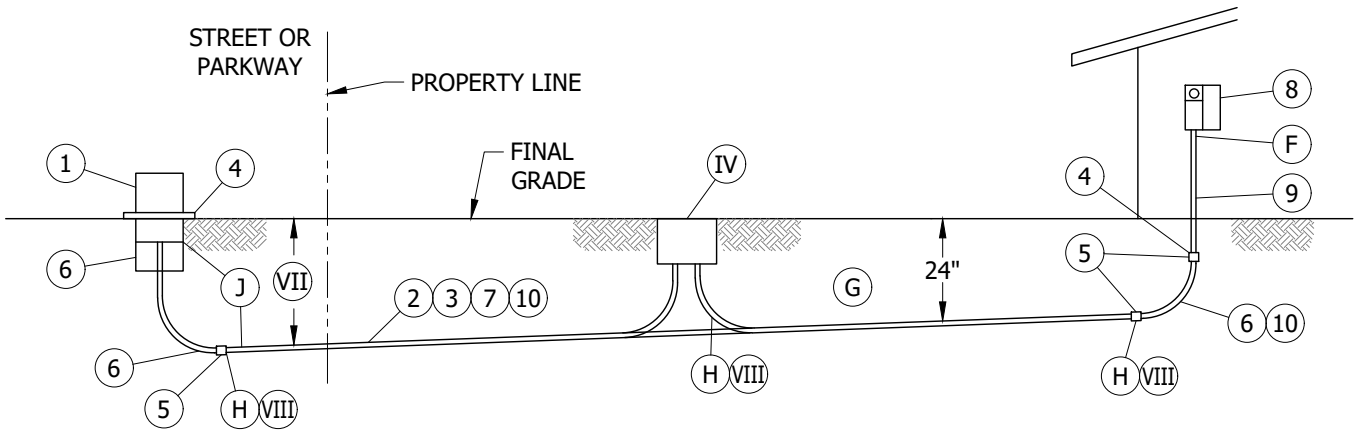

FIGURE 1
(REFER TO TABLE 3)

TABLE 1

CUSTOMER INSTALLED SERVICE RISER BEND AND SERVICE LATERAL CONDUIT SIZE FOR 3 OR 4-WIRE RUN				
CUSTOMER INSTALLED SERVICE EQUIPMENT OR BUS AMPACITY (AMPS) (I)	QTY.	RESIDENTIAL & MULTI-FAMILY (IN) (II)	QTY.	COMMERCIAL & INDUSTRIAL (IN) (II)
0-200 (VI)	1	3 (C)	1	3 (C)
201-400 1 Ø	1	3 (III)	1	3
201-400 3 Ø	1	4	1	4
401-800	2	4 (k) (V)	2	4
801-1,200	3	4	3	5
1,201-1,600	3	4	4	5
1,601-2,000	4	4	5	5
2,001-2,500	5	4	6	5
2,501-3,000	4	5	7	5
3,001-3,500	5	5	8	5
3,501-4,000	7	5	10	5

TABLE 2

BENDING RADIUS	
CONDUIT RISER BEND SIZE (IN) (C)	MINIMUM BEND RADIUS (IN) (6) (7)
2	24
3	36
4	36
5	36

TABLE 3

ITEM	DESCRIPTION	RESPONSIBLE PARTY
1	SOURCE: MANHOLE, HANDHOLE OR PADMOUNT TRANSFORMER	SDG&E UNDERGROUND DISTRIBUTION SYSTEM
2	SERVICE LATERAL CONDUCTORS AND CONNECTORS FROM SDG&E UNDERGROUND DISTRIBUTION SYSTEM, ITEM 1, TO CUSTOMER'S SERVICE TERMINATING FACILITY, ITEM 8. SDG&E WILL MAKE CONNECTIONS.	SDG&E WILL FURNISH, INSTALL, OWN AND MAINTAIN - (SUBJECT TO INSTALLATION CHARGES CONSULT SDG&E PLANNER)
3	A CLEAR ROUTE ON ANY PROPERTY, THAT IS CLEAR OF OBSTRUCTIONS WHICH WOULD INHIBIT CONSTRUCTION OF SERVICE FACILITIES. SERVICE LATERAL CONDUIT FROM SOURCE (ITEM 1) TO TERMINATING FACILITY (ITEM 8). CONDUIT SIZE SHALL BE BASED ON AMPERE CAPACITY OF BUS OR SERVICE EQUIPMENT, WHICHEVER IS GREATER AND DISTANCE FROM TRANSFORMER TO TERMINATING FACILITY (ITEM 8). CONDUIT MATERIAL FROM ITEM 1 TO ITEM 8 SHALL BE APPROVED NONMETALLIC CONDUIT. (I) BETWEEN ITEM 6 AND ITEM 8 CONDUIT INSTALLER MUST PROVIDE 3/4-INCH PULLING AND MEASURING TAPE IN EACH CONDUIT. PULLING TAPE MUST BE APPROVED BY SDG&E AND HAVE A MINIMUM AVERAGE TENSILE STRENGTH OF 2,500 LBS, AND BE WOVEN POLYESTER HIGH STRENGTH, CONTINUOUS FILAMENT, PRE-LUBRICATED WITH FOOTAGE MARKING. PULLING TAPE TAILS OF 24 INCHES SHALL BE SECURED AT EACH END OF CONDUIT. PULLING TAPE SHALL BE PULLED BEHIND MANDREL. WHEN PULLING AND MEASURING TAPE IS INSTALLED IT SHALL BE ONE CONTINUOUS LENGTH WITHOUT KNOTS FOR ACCURATE MEASUREMENT FOR CONDUCTOR INSTALLATION AND PULLING OF CONDUCTORS OR WINCH LINES. LEAVE AT LEAST 2 FEET BEYOND EACH END OF CONDUIT RUN. FLEX CONDUIT IS NOT PERMITTED. (O)	CUSTOMER SHALL FURNISH, INSTALL, OWN AND MAINTAIN AT THEIR EXPENSE

© 1998 - 2021 San Diego Gas & Electric Company. All rights reserved. Removal of this copyright notice without permission is not permitted under law.

REV	CHANGE	DR	BY	DSN	APV	DATE	REV	CHANGE	DR	BY	DSN	APV	DATE
C							F						
B	FORMATTING	EDM	JIK	-	-	09/16/2021	E						
A	REVISON	-	-	TR/BRB	MJC	05/19/2011	D						

X Indicates Latest Revision | Completely Revised | New Page | Information Removed

SDG&E ELECTRIC UNDERGROUND CONSTRUCTION STANDARDS

UNDERGROUND ELECTRIC SERVICE LATERAL
CUSTOMER INSTALLED CONDUIT, RESIDENTIAL OR COMMERCIAL

UG3942.1

TABLE OF CONTENTS

TABLE 3 (CONT'D)

ITEM	DESCRIPTION	RESPONSIBLE PARTY
4	TRENCH, BACKFILL, PAVEMENT REPAIR, AND STRUCTURES SHALL BE IN ACCORDANCE WITH SDG&E AND LOCAL GOVERNMENTAL AUTHORITY REQUIREMENTS. CUSTOMER TO OBTAIN EXCAVATION PERMIT FOR TRENCHING IN STREET RIGHT-OF-WAY AS REQUIRED BY LOCAL GOVERNMENTAL AUTHORITY. SDG&E INSPECTION IS REQUIRED PRIOR TO BACKFILLING TRENCH.	CUSTOMER SHALL FURNISH, INSTALL, OWN AND MAINTAIN AT THEIR EXPENSE
5	ADAPTER COUPLINGS FOR CONNECTING BENDS TO STRAIGHT CONDUIT.	
6	CONDUIT RISER BEND.	
7	SIZE AND NUMBER OF CONDUIT RUNS TO BE DESIGNATED BY SDG&E.	
8	SERVICE TERMINATING ENCLOSURE. (m)	
9	TYPE AND SCHEDULE OF CONDUIT ON OR WITHIN A BUILDING OR STRUCTURE TO BE INSTALLED PER BUILDING INSPECTORS REQUIREMENTS AND MUST BE LISTED AND LABELED. NORMALLY SCHEDULE 40 PVC IS ALLOWED INSIDE A BUILDING WALL AND SCHEDULE 80 PVC IS REQUIRED WHEN EXPOSED ON AN EXTERIOR WALL. CONSULT WITH APPROPRIATE INSPECTION AUTHORITY. FLEX CONDUIT IS NOT PERMITTED.	
10	CONDUIT MANUFACTURER MUST BE SDG&E APPROVED.	

INSTALLATION:

A. CONTACT PROJECT MANAGEMENT AT NEAREST SDG&E REGIONAL OFFICE FOR A SERVICE AND METER LOCATION PRIOR TO START OF CONSTRUCTION.

B. SERVICE LATERAL CONDUIT SPECIFIED IN CONDUIT TABLE IS LIMITED TO 150-FOOT MAXIMUM LENGTH, WITH NOT MORE THAN 3-90 DEGREE HORIZONTAL OR VERTICAL BENDS OR 270 DEGREES TOTAL DEFLECTION THROUGH SERVICE RUN. PLANNER AND ELECTRIC CONSTRUCTION APPROVAL IS REQUIRED IF LIMITATIONS ARE EXCEEDED. (n)

(C) A 3-WIRE, 100A SINGLE-PHASE MAIN CAN BE SERVED BY A 2-INCH CONDUIT. A 3-WIRE 200A OR LESS, SINGLE-PHASE MAIN FOR TEMPORARY CONSTRUCTION POWER CAN BE SERVED BY A 2-INCH CONDUIT. (o)

D. ENGINEERS AND ARCHITECTS PROPOSALS FOR ALL SWITCHBOARDS 1,000A OR LARGER, SHALL BE SUBMITTED TO THE NEAREST PROJECT MANAGEMENT OFFICE FOR STUDY AND APPROVAL BY SDG&E'S DISTRIBUTION PLANNING AND SERVICE STANDARDS SECTIONS.

E. MAINTENANCE OF CUSTOMER'S SERVICE LATERAL CONDUITS OUTSIDE BUILDING WALL WILL BE UNDERTAKEN BY SDG&E UNDER EMERGENCY CONDITIONS AND MAY BE DONE AT CUSTOMER'S EXPENSE. CONSULT NEAREST SDG&E REGIONAL OFFICE. (p)

(F) CONDUITS SHALL BE SEALED. (q)

(G) 24-INCH MINIMUM COVER OVER CONDUIT IS REQUIRED FOR ALL NORMAL INSTALLATIONS ON PRIVATE PROPERTY AND 30-INCH MINIMUM COVER IN RIGHT-OF-WAY OR PUBLIC PROPERTY. IN ALL INSTALLATIONS WHERE MINIMUM COVER CANNOT BE MET THE FOLLOWING CAN BE USED: (r)

1. STEEL CONDUIT.
2. SCHEDULE 40 PVC OR SCHEDULE 80 PVC CONDUIT WITH A MINIMUM WALL THICKNESS OF 0.15 INCHES.
3. AT LEAST A 3-INCH LAYER OF CONCRETE ABOVE AND 2 INCHES ON EACH SIDE OF CONDUIT. REDUCED DEPTHS MUST BE APPROVED BY CUSTOMER PROJECT PLANNER AND SDG&E INSPECTOR.

(H) TRENCH MUST HAVE EVEN SLOPING GRADE TO ALLOW ROOM FOR A 90 DEGREE BEND INTO BOTTOM OF ANY CUSTOMER OWNED OR SDG&E FACILITY. DO NOT CUT BENDS. TRENCH DEPTH IS TO BE DETERMINED AT "PRE-CONSTRUCTION MEETING".

(J) WHEN TRENCHING TO AN EXISTING FACILITY, APPLICANT/CONTRACTOR SHALL COMPLETE TRENCH AND INSTALLATION OF CONDUIT UP TO EXISTING FACILITY UNLESS IT IS DETERMINED BY AN AUTHORIZED SDG&E EMPLOYEE THAT SUCH AN INSTALLATION PERFORMED BY APPLICANT/CONTRACTOR WOULD EXPOSE WORKERS TO OR CREATE A HAZARD. IN THIS CASE, SDG&E WOULD PERFORM TRENCHING AS INDICATED ON WORK ORDER. DIGGING UNDER PAD MOUNTED EQUIPMENT AND INSTALLATION OF CONDUIT INTO PAD MOUNTED EQUIPMENT WILL ALWAYS BE THE RESPONSIBILITY OF SDG&E.

L. SERVICE CONDUIT WILL ONLY BE ALLOWED UNDERNEATH BUILDING BEING SERVED BY CABLE IN CONDUIT. NO CONDUIT IS ALLOWED UNDER ONE BUILDING TO SERVE ANOTHER BUILDING.

BILL OF MATERIALS: NONE

© 1998 - 2021 San Diego Gas & Electric Company. All rights reserved. Removal of this copyright notice without permission is not permitted under law.

REV	CHANGE	DR	BY	DSN	APV	DATE	REV	CHANGE	DR	BY	DSN	APV	DATE
C							F						
B	FORMATTING	EDM	JIK	-	-	09/16/2021	E						
A	REVISON	-	-	TR/BRB	MJC	05/19/2011	D						

X Indicates Latest Revision | Completely Revised | New Page | Information Removed

SDG&E ELECTRIC UNDERGROUND CONSTRUCTION STANDARDS

UNDERGROUND ELECTRIC SERVICE LATERAL
CUSTOMER INSTALLED CONDUIT, RESIDENTIAL OR COMMERCIAL

UG3942.2

TABLE OF CONTENTS

NOTES:

(I) AMPACITY RANGE BASED ON 75 DEGREE C ALUMINUM WIRE.

(II) THESE ARE MINIMUM REQUIREMENTS. CONDUIT REQUIREMENTS MAY INCREASE WITH DIFFERENT ESTIMATED DEMANDS AND LENGTH OF SERVICE, DUE TO VOLTAGE DROP AND/OR FLICKER. FUTURE LOADS SHOULD ALSO BE CONSIDERED.

(III) INCLUDES 300A RESIDENTIAL SERVICE EQUIPMENT.

(IV) IF CUSTOMER INSTALLS A HANDHOLE, THE LID SHALL BE MARKED "SDG&E". (k)

(V) 2, 3-INCH CONDUITS MINIMUM FOR MULTI-FAMILY 600A SERVICES.

(VI) 225A RESIDENTIAL.

(VII) DEPTH OF TRENCH IS DETERMINED BY TYPE OF SUBSTRUCTURE AT SOURCE. VERIFY WITH SDG&E INSPECTOR PRIOR TO EXCAVATION.

(VIII) INSTALL CONDUIT ON EVEN SLOPING GRADE FROM CONDUIT RISER BEND TO SDG&E SOURCE.

REFERENCE:

a. SEE UG3367 FOR TRENCH PARALLELING FOUNDATIONS.

b. SEE UG3372 FOR CONDUIT SIZING.

c. SEE UG3373 FOR SDG&E CONDUIT FITTINGS.

d. SEE UG3376 FOR CONCRETE SLURRY REQUIREMENTS.

e. SEE UG3421, UG3425, UG3426, AND UG3427 FOR CONDUIT PLACEMENT.

f. SEE UG3941 FOR RESIDENTIAL RISER AND CONDUIT.

g. SEE UG3944 FOR MATERIAL REQUIREMENTS OF AN U.G. SERVICE FROM O.H. FACILITIES.

h. SEE UG3948 FOR SEALING CONDUITS.

i. SEE OH1404UG4204 FOR CABLE POLE CONDUIT REQUIREMENTS.

j. SEE UG3950 FOR FIELD HEATING SERVICE LATERAL CONDUIT.

(k) SEE SG707 FOR SPECIAL APPLICATIONS.

(l) IN ACCORDANCE WITH UG3373.

(m) SEE SG703, SG704, SG705, SG706, SG707, AND SG708.

(n) IF GREATER THAN 150 FEET, REFER TO UG4005, UG4006, AND UG4007.

(o) ITEM 3 SHALL BE SAME SIZE AND TYPE MATERIAL STOCKED BY SDG&E AS SHOWN ON UG3373.

(p) REPLACEMENT OR ENLARGEMENT OF SERVICE LATERAL CONDUITS DUE TO RELOCATION OR INCREASED LOAD WILL BE ACCOMPLISHED BY CUSTOMER UNDER PROVISIONS ON SG305.

(q) SEE UG3948 (G.O. 128, RULE 31.6).

(r) SEE G.O. 128.

TABLE OF CONTENTS

© 1998 - 2021 San Diego Gas & Electric Company. All rights reserved. Removal of this copyright notice without permission is not permitted under law.

REV	CHANGE	DR	BY	DSN	APV	DATE	REV	CHANGE	DR	BY	DSN	APV	DATE
C							F						
B	FORMATTING	EDM	JIK	-	-	09/16/2021	E						
A	REVISON	-	-	TR/BRB	MJC	05/19/2011	D						

X Indicates Latest Revision | Completely Revised | New Page | Information Removed

SDG&E ELECTRIC UNDERGROUND CONSTRUCTION STANDARDS

UNDERGROUND ELECTRIC SERVICE LATERAL
CUSTOMER INSTALLED CONDUIT, RESIDENTIAL OR COMMERCIAL

UG3942.3

SCOPE: THIS STANDARD SHOWS WHO PROVIDES, INSTALLS, OWNS AND MAINTAINS MATERIAL AND LABOR REQUIRED FOR A SINGLE LOW VOLTAGE SERVICE FED FROM OVERHEAD FACILITIES.

ATTENTION:

* CONTACT THE SDG&E INSPECTOR FOR INSTRUCTIONS ON TRENCHING NEAR THE POLE.

** SDG&E INSPECTION IS REQUIRED PRIOR TO BACKFILLING TRENCH.

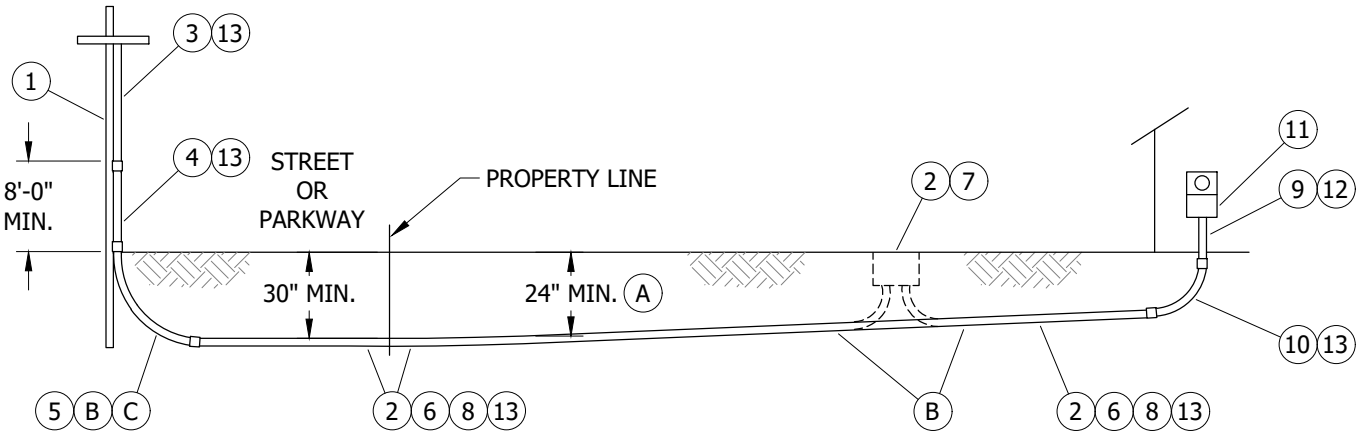

FIGURE 1

TABLE 1

ITEM	DESCRIPTION	RESPONSIBLE PARTY
1	SOURCE POLE AS DESIGNATED BY SDG&E PLANNER.	SDG&E OVERHEAD DISTRIBUTION SYSTEM
2	SERVICE LATERAL CONDUCTOR AND CONNECTORS. SDG&E TO FURNISH MATERIAL AT CUSTOMERS EXPENSE INSTALL, OWN AND MAINTAIN.	SDG&E TO FURNISH, INSTALL, OWN AND MAINTAIN - SUBJECT TO INSTALLATION CHARGES CONSULT SDG&E PLANNER
3	PVC CONDUIT SCHEDULE 40.	CUSTOMER TO PROVIDE, SDG&E TO INSTALL, OWN AND MAINTAIN
4	PVC CONDUIT SCHEDULE 80.	
5	PVC CONDUIT BEND. THE LARGER RADIUS AT THE POLE IS NECESSARY TO ALLOW FOR VERTICAL CABLE PULLING TENSION. SEE TABLE 2.	CUSTOMER SHALL FURNISH, INSTALL, OWN AND MAINTAIN AT THEIR EXPENSE
6	A CLEAR ROUTE ON ANY PRIVATE PROPERTY, THAT IS CLEAR OF OBSTRUCTIONS WHICH WOULD INHIBIT THE CONSTRUCTION OF SERVICE FACILITIES. SERVICE LATERAL CONDUIT FROM SOURCE (ITEM 1) TO TERMINATING FACILITY (ITEM 11). CONDUIT SIZE SHALL BE BASED ON AMPERE CAPACITY OF BUS OR SERVICE EQUIPMENT, WHICHEVER IS GREATER AND DISTANCE FROM TRANSFORMER TO TERMINATING FACILITY (ITEM 11).	
7	SECONDARY HANDHOLE. VERIFY IF REQUIRED WITH SDG&E PLANNER. IF HANDHOLE IS REQUIRED, THE LID SHALL BE MARKED "SDG&E".	
8	TRENCH, BACKFILL, PAVEMENT REPAIR AND PROTECTIVE STRUCTURES SHALL BE IN ACCORDANCE WITH SDG&E AND LOCAL GOVERNMENTAL AUTHORITY REQUIREMENTS. CUSTOMER TO OBTAIN EXCAVATION PERMIT FOR TRENCHING IN STREET RIGHT-OF-WAY AS REQUIRED BY LOCAL GOVERNMENTAL AUTHORITY.	
9	ITEMS 3, 4, 5, & 6 SHALL BE NONMETALLIC FROM ITEM 5 AND ITEM 9. THE CONDUIT INSTALLER MUST PROVIDE A 3/4-INCH PULLING AND MEASURING TAPE IN EACH CONDUIT. THE PULLING TAPE MUST BE APPROVED BY SDG&E AND HAVE A MINIMUM AVERAGE TENSILE STRENGTH OF 2,500 LBS, AND BE WOVEN POLYESTER HIGH STRENGTH, CONTINUOUS FILAMENT, PRE-LUBRICATED WITH FOOTAGE MARKING. PULLING TAPE TAILS OF 24 INCHES SHALL BE SECURED AT EACH END OF THE CONDUIT. THE PULLING TAPE TAILS OF 24 INCHES SHALL BE SECURED AT EACH END OF THE CONDUIT. THE PULLING TAPE SHALL BE PULLED IN BEHIND THE MANDREL. WHEN THE PULLING AND MEASURING TAPE IS INSTALLED IT SHALL BE ONE CONTINUOUS LENGTH WITHOUT KNOTS FOR THE ACCURATE MEASUREMENT FOR CONDUCTOR INSTALLATION AND THE PULLING OF CONDUCTORS OR WINCH LINES. LEAVE AT LEAST 2 FEET BEYOND EACH END OF CONDUIT RUN. FLEX CONDUIT IS NOT PERMITTED. (j)	

TABLE OF CONTENTS

© 1998 - 2021 San Diego Gas & Electric Company. All rights reserved. Removal of this copyright notice without permission is not permitted under law.

REV	CHANGE	DR	BY	DSN	APV	DATE	REV	CHANGE	DR	BY	DSN	APV	DATE
C	FORMATTING	EDM	JIK	-	-	09/16/2021	F						
B	REVISION	-	-	TR	MJC	06/28/2011	E						
A	REVISION	-	-	PSW	ROG	03/06/2003	D						

TABLE 1 (CONT'D)

ITEM	DESCRIPTION	RESPONSIBLE PARTY
10	CONDUIT RISER BEND. (k)	CUSTOMER SHALL FURNISH, INSTALL, OWN AND MAINTAIN AT THEIR EXPENSE
11	SERVICE TERMINATING ENCLOSURE. (l)	
12	TYPE AND SCHEDULE OF CONDUIT ON OR WITHIN THE BUILDING TO BE INSTALLED PER BUILDING INSPECTORS REQUIREMENTS AND MUST BE LISTED AND LABELED. NORMALLY SCHEDULE 40 PVC IS ALLOWED INSIDE A BUILDING WALL AND SCHEDULE 80 PVC IS REQUIRED WHEN EXPOSED ON AN EXTERIOR WALL. CONSULT WITH APPROPRIATE BUILDING INSPECTOR. FLEX CONDUIT IS NOT PERMITTED.	
13	CONDUIT MANUFACTURER MUST BE SDG&E APPROVED.	

TABLE 2

SCHEDULE 80 PVC CONDUIT MINIMUM RADIUS OF BEND	
PIPE SIZE (IN)	RADIUS (IN)
3	36
4	48
5	48

INSTALLATION:

(A) A 24-INCH MINIMUM COVER OVER THE CONDUIT SHALL BE FOLLOWED FOR ALL NORMAL INSTALLATIONS ON PRIVATE PROPERTY, 30-INCH MINIMUM COVER IN RIGHT-OF-WAY OR PUBLIC PROPERTY. ONE OF THE FOLLOWING IS REQUIRED IN ALL INSTALLATIONS WHERE THE MINIMUM COVER CANNOT BE MET: (m) (n)

1. STEEL
2. SCHEDULE 40 PVC OR SCHEDULE 80 PVC CONDUIT WITH A MINIMUM WALL THICKNESS OF 0.15 INCHES.
3. A 3-INCH LAYER OF CONCRETE (2 SACK 3/8" ROCK) ABOVE AND 2 INCHES ON EACH SIDE OF THE CONDUIT. REDUCED DEPTHS MUST BE APPROVED BY BOTH THE CUSTOMER PROJECT PLANNER AND SDG&E INSPECTOR.

(B) THE TRENCH MUST HAVE AN EVEN SLOPING GRADE TO ALLOW FOR A 90 DEGREE BEND INTO THE BOTTOM OF ANY CUSTOMER OWNED OR SDG&E FACILITY, **DO NOT CUT BENDS.** THE TRENCH DEPTH IS TO BE DETERMINED AT THE "PRECONSTRUCTION MEETING".

(C) WHEN TRENCHING TO AN EXISTING FACILITY, THE APPLICANT/CONTRACTOR SHALL COMPLETE THE TRENCH AND INSTALLATION OF CONDUIT UP TO THE EXISTING FACILITY UNLESS IT IS DETERMINED BY ANY AUTHORIZED SDG&E EMPLOYEE THAT SUCH AN INSTALLATION PERFORMED BY THE APPLICANT/CONTRACTOR WOULD EXPOSE WORKERS TO OR CREATE A HAZARD. IN THIS CASE, SDG&E WOULD PERFORM TRENCHING AS INDICATED ON WORK ORDER. DIGGING UNDER ENERGIZED PAD MOUNTED EQUIPMENT AND INSTALLATION OF CONDUIT INTO ENERGIZED PAD MOUNTED EQUIPMENT WILL ALWAYS BE THE RESPONSIBILITY OF SDG&E.

BILL OF MATERIALS: NONE

NOTES: NONE

REFERENCE:

a. SEE UG3367 FOR TRENCH PARALLELING FOUNDATIONS.
b. SEE UG3373 FOR SDG&E CONDUIT AND FITTINGS.
c. SEE UG3376 FOR CONCRETE SLURRY REQUIREMENTS.
d. SEE UG3421, UG3425, UG3426 AND UG3427 FOR CONDUIT PLACEMENT.
e. SEE UG3941 FOR RESIDENTIAL RISER AND CONDUIT.

© 1998 - 2021 San Diego Gas & Electric Company. All rights reserved. Removal of this copyright notice without permission is not permitted under law.

REV	CHANGE	DR	BY	DSN	APV	DATE	REV	CHANGE	DR	BY	DSN	APV	DATE
C	FORMATTING	EDM	JIK	-	-	09/16/2021	F						
B	REVISION	-	-	TR	MJC	06/28/2011	E						
A	REVISION	-	-	PSW	ROG	03/06/2003	D						

TABLE OF CONTENTS

REFERENCE (CONT'D):

f. SEE UG3942 FOR MATERIAL REQUIREMENTS OF AN U.G. SERVICE FROM U.G. FACILITIES.
g. SEE UG3948 FOR SEALING CONDUITS.
h. SEE OH1404UG4204 FOR CABLE POLE CONDUIT REQUIREMENTS.
i. SEE UG3950 FOR FIELD HEATING SERVICE LATERAL CONDUITS.
(j) SEE UG3373 AND UG4204.
(k) MINIMUM BENDING RADIUS PER SG305.
(l) SEE SG703, SG704, SG705, SG706, SG707, AND SG708.
(m) SEE UG3370.
(n) SEE G.O. 128 FOR REQUIREMENTS.

TABLE OF CONTENTS

© 1998 - 2021 San Diego Gas & Electric Company. All rights reserved. Removal of this copyright notice without permission is not permitted under law.

REV	CHANGE	DR	BY	DSN	APV	DATE	REV	CHANGE	DR	BY	DSN	APV	DATE
C	FORMATTING	EDM	JIK	-	-	09/16/2021	F						
B	REVISION	-	-	TR	MJC	06/28/2011	E						
A	REVISION	-	-	PSW	ROG	03/06/2003	D						

X Indicates Latest Revision | Completely Revised | New Page | Information Removed

SDG&E ELECTRIC UNDREGROUND CONSTRUCTION STANDARDS

UNDERGROUND SERVICE FROM OVERHEAD FACILITIES (LOW VOLTAGE), MATERIAL REQUIREMENTS

SCOPE: THIS STANDARD SHOWS INSTALLATION AND MATERIAL REQUIREMENTS FOR SEALING SERVICE LATERAL CONDUITS.

ATTENTION:

* DO NOT USE SEALANT AFTER EXPIRATION DATE.

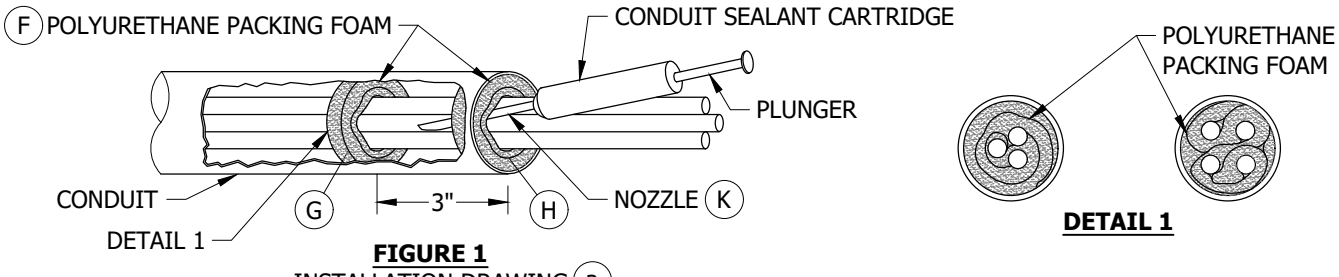

FIGURE 1
INSTALLATION DRAWING (a)
CONDUIT SEALANT AND PACKING FOAM

INSTALLATION:

SEALING COMPOUND:

A. BEFORE APPLYING SEALING COMPOUND THE INSIDE AND OUTSIDE SHOULD BE AS CLEAN AND DRY AS POSSIBLE. DRY OUT ANY WATER WITH COMPRESSOR, RAGS, HAND PUMP, ETC.

B. IN CONDUITS WHERE CABLES ARE PRESENT, WRAP A STRIP OF SEALING COMPOUND AROUND CONDUIT WHERE CABLES ENTER. OVERLAP SEALING COMPOUND ENDS 1/4-INCH AND PRESS EDGES FIRMLY TOGETHER.

C. IN CONDUITS THAT ARE EMPTY (FOR FUTURE CABLE PULLING) AND WATER MAY OCCUR, SECURE PULL ROPE AND INSTALL SEALING COMPOUND AND GRAY TAPE SECURELY TO PREVENT WATER ENTRY. SEAL AT SUBSTRUCTURE END OF CONDUIT.

CONDUIT SEALANT AND PACKING FOAM:

D. BEFORE INSTALLATION OF SEALANT AND FOAM, CABLES SHOULD SHOULD BE TERMINATED IF POSSIBLE TO AVOID ANY MOVEMENT THAT MAY CAUSE CRACKING OF SEALANT AND SUBSEQUENT WATER LEAKAGE.

E. ON EXISTING 3/4-INCH SIDA AND 1-INCH CONDUIT, SKIP INSTALLATION F, G, AND H. PACKING FOAM IS NOT REQUIRED, SEALANT WILL EXPAND ENOUGH TO MAKE A GOOD SEAL.

(F) WRAP PACKING FOAM AROUND CABLES AT THE CONDUIT ENTRANCE AS SHOWN IN FIGURE 1. USE AS MANY FOAM STRIPS AS NEEDED TO ASSURE THERE ARE NO GAPS BETWEEN FOAM, CABLES, AND CONDUIT.

(G) WITH A BLUNT OBJECT, PUSH PACKING FOAM BACK INSIDE CONDUIT 3 INCHES.

(H) WRAP ANOTHER LAYER OF PACKING FOAM AROUND CABLES AT CONDUIT ENTRANCE THE SAME WAY AS FIRST LAYER. THIS FORMS A VOID INSIDE CONDUIT THAT WILL BE FILLED WITH SEALANT.

J. CONDUIT IS NOW READY FOR INSTALLATION OF CONDUIT SEALANT. CAREFULLY READ INSTRUCTIONS ON SEALANT PACKAGE BEFORE USING. SAFETY GLASSES AND PROTECTIVE GLOVES SHALL BE WORN DURING INSTALLATION OF SEALANT.

CAUTION:

* AS NOTED ON SEALANT PACKAGE, CARTRIDGE WILL DEVELOP INTERNAL PRESSURE AFTER MIXING. THIS OCCURS IN 20-30 SECONDS AT WHICH POINT SEALANT BEGINS EXPANDING SO WORK QUICKLY WHEN SCREWING ON NOZZLE TO CARTRIDGE.

** DO NOT LEAVE ANY UNUSED SEALANT INSIDE OF CARTRIDGE. CONTENTS MAY STILL BE UNDER PRESSURE AND COULD RUPTURE CARTRIDGE.

(K) AFTER SEALANT IS MIXED AND NOZZLE IS ATTACHED, PUSH NOZZLE OF CARTRIDGE THROUGH TOP LAYER OF PACKING FOAM AND DEPRESS PLUNGER TO FORCE MIXED SEALANT FROM CARTRIDGE. LEAVE CARTRIDGE AND NOZZLE IN CONDUIT A FEW MINUTES TO ASSURE ALL SEALANT HAS EVACUATED TUBE.

L. REMOVE NOZZLE OF CARTRIDGE AND ALLOW SEALANT TO CURE. AFTER SEALANT HAS CURED, CHECK AROUND EDGE OF TOP LAYER OF PACKING FOAM TO SEE IF SEALANT HAS PROPERLY EXPANDED AND SEALED CONDUIT.

TABLE OF CONTENTS

© 1998 - 2021 San Diego Gas & Electric Company. All rights reserved. Removal of this copyright notice without permission is not permitted under law.

REV	CHANGE	DR	BY	DSN	APV	DATE	REV	CHANGE	DR	BY	DSN	APV	DATE
C	REVISION	-	-	TR	JJ	11/16/2006	F						
B	REVISION	-	-	TR	JJ	01/26/2006	E						
A	REVISION	-	-	PSW/JLB	ROG	01/01/1996	D	FORMATTING	EDM	JIK	-	-	09/16/2021

INSTALLATION (CONT'D):

MAINTENANCE:

M. IF CABLE IS TO BE REPLACED, SEALANT CAN BE REMOVED BY CHIPPING OUT OF CONDUIT WITH A LONG SCREWDRIVER OR OTHER BLUNT OBJECT.

BILL OF MATERIALS:

ITEM	DESCRIPTION	QUANTITY	STANDARD PAGE	STOCK NUMBER	DESIGN UNITS
1	SEALANT, CONDUIT, SEMCO PR-821, (2 OZ)	AS REQ'D	--	S631892	SEAL-2
2	SEALANT, CONDUIT, SEMCO PR-821, (6 OZ)	AS REQ'D	--	S631890	SEAL-6
3	FOAM, POLYURETHANE PACKING	AS REQ'D	--	S511680	--
4	COMPOUND, SEALING	AS REQ'D	--	S442976	--
5	TAPE, GRAY	AS REQ'D	--	S721120	--
6	GLASSES, SAFETY	AS REQ'D	--	S383800	--
7	GLOVES, DISPOSABLE	AS REQ'D	--	S385300	--

NOTES:

I. CONDUIT SEALANT IS A TWO PART POLYURETHANE WHICH WHEN EXPANDS TO 8 TIMES ITS LIQUID STATE TO FORM A DENSE, TOUGH FOAM. FOAM CURES TO 60 PERCENT OF IT'S FULL STRENGTH IN 8-10 MINUTES AND TO FULL STRENGTH IN 12 HOURS.

II. CONDUIT SEALANT MAY ALSO BE USED ON SECONDARY AND JACKETED PRIMARY CABLES WHERE THERE MAY BE A WATER PROBLEM.

III. WHENEVER A PAD OR SUBSTRUCTURE IS HIGHER IN ELEVATION THAN ELECTRIC VAULTS, BASEMENTS, ETC., CONDUITS MUST BE SEALED WHETHER THEY ARE PRIMARY, SECONDARY, OR SERVICE LATERALS.

IV. A HANDHOLE SHALL BE INSTALLED AT BASE OF METER PANEL FOR CONDITIONS DESCRIBED BELOW. (Vd)

V. SEAL CONDUITS WITH MATERIAL AS SPECIFIED BY THE FOLLOWING CRITERIA.

a. USE CONDUIT SEALANT AND PACKING FOAM WHEN FIELD CONDITIONS INDICATE THAT WATER MAY ENTER SERVICE LATERAL CONDUIT (WITH CABLE) AT CABLE ENTRANCE AND SUBSEQUENTLY INTO CUSTOMER'S SERVICE PANEL.

b. USE SEALING COMPOUND ON SERVICE LATERAL CONDUIT (WITH CABLE) WHERE NO WATER ENTRY PROBLEMS ARE SUSPECTED. CONDUIT(S) SHALL BE SEALED ONLY AT SUBSTRUCTURE OR TRANSFORMER BY CONNECTION CREW.

c. USE SEALING COMPOUND AND GRAY TAPE WHEN FIELD CONDITIONS INDICATE THAT WATER MAY ENTER SERVICE THE SERVICE LATERAL CONDUIT (WITHOUT CABLE) AT CONDUIT ENTRANCE AND SUBSEQUENTLY INTO CUSTOMER'S SERVICE PANEL.

(d) **EXAMPLE:** THE SERVICE PANEL IS AT AN APPRECIABLY LOWER ELEVATION THAN THE SUBSTRUCTURE OR TRANSFORMER. CONDUIT(S) SHALL BE SEALED IN HANDHOLE AT BASE OF SERVICE PANEL, IN THE SERVICE PANEL AND AT THE SOURCE SUBSTRUCTURE OR TRANSFORMER BY THE CONNECTION CREW.

e. USE THE SEALING COMPOUND AND GRAY TAPE ON SERVICE LATERAL CONDUIT (WITHOUT CABLE) WHERE NO WATER PROBLEMS ARE SUSPECTED. CONDUIT(S) SHALL BE SEALED ONLY AT SUBSTRUCTURE OR TRANSFORMER BY THE CONNECTION CREW.

VI. SHELF LIFE/EXPIRATION DATE: SHELF LIFE IS 12 MONTHS WHEN STORED IN ORIGINAL AND UNOPENED CONTAINERS BELOW 80 DEGREES F. PROLONGED STORAGE AT TEMPERATURES ABOVE 100 DEGREES F MAY ALTER EXPANSION RATIO OF THE FOAM.

REFERENCE:

(a) SEE G.O. 128, RULE 31.6 ON SEALING SERVICE LATERALS.

TABLE OF CONTENTS

© 1998 - 2021 San Diego Gas & Electric Company. All rights reserved. Removal of this copyright notice without permission is not permitted under law.

REV	CHANGE	DR	BY	DSN	APV	DATE	REV	CHANGE	DR	BY	DSN	APV	DATE
C	REVISION	-	-	TR	JJ	11/16/2006	F						
B	REVISION	-	-	TR	JJ	01/26/2006	E						
A	REVISION	-	-	PSW/JLB	ROG	01/01/1996	D	FORMATTING	EDM	JIK	-	-	09/16/2021

SCOPE: THIS STANDARD COVERS CONDUIT SEALING WITH TYCO RAYFLATE AND CONDUCTOR BREAKOUT BOOTS. THE APPLICATION OF THESE PRODUCTS IS DESIGNED TO PREVENT WATER ENTRY INTO CUSTOMER AND SDG&E FACILITIES, WHEN SDG&E SERVICE POINT IS A HIGHER ELEVATION THAN CUSTOMERS SERVICE POINT OF ENTRY.

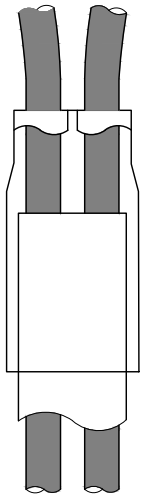

FIGURE 1

TABLE 1

TYCO NUMBER	CONDUIT SIZE (IN)	CONDUCTOR NUMBER	CONDUCTOR SIZE	STOCK NUMBER
CBR-3-3-A	2 AND 3	3	NO. 2 TO 350	S160650
CBR-4-3-A	3 AND 4	4	NO. 3/0 TO 350	S160652
CBR-4-4-A	4	4	NO. 350 TO 500	S160654
CBR-4-4-A	5	4	NO. 750, 1000	S160654

INSTALLATION:

A. SELECT SIZE OF CBR TO SEAL CABLE AND CONDUIT.

B. ONCE CABLE IS INSTALLED, CLEAN CABLE AND CONDUIT SURFACES.

C. FOLLOW MANUFACTURER'S INSTRUCTIONS FOR INSTALLATION.

ATTENTION:

* APPLY HEAT SLOW AND EVENLY TO PREVENT DISTORTION OF CONDUIT.

BILL OF MATERIALS: NONE

NOTES:

CABLE BREAKOUTS (CBR):

I. CABLE BREAKOUT BOOTS ARE DESIGNED TO KEEP WATER OUT ONLY AND SHOULD ALWAYS BE USED AT HIGHER ELEVATION IN TRANSFORMERS AND SECONDARY HANDHOLES.

REFERENCE: NONE

TABLE OF CONTENTS

© 1998 - 2021 San Diego Gas & Electric Company. All rights reserved. Removal of this copyright notice without permission is not permitted under law.

REV	CHANGE	DR	BY	DSN	APV	DATE	REV	CHANGE	DR	BY	DSN	APV	DATE
C	REVISION	-	-	TR	JJ	11/16/2006	F						
B	REVISION	-	-	TR	JJ	01/26/2006	E						
A	REVISION	-	-	PSW/JLB	ROG	01/01/1996	D	FORMATTING	EDM	JIK	-	-	09/16/2021

SCOPE: THE RAYFLATE DUCT SEALING SYSTEM HAS BEEN DESIGNED FOR USE IN CONJUNCTION WITH PLASTIC, CONCRETE OR STEEL DUCTS WITH SINGLE OR MULTIPLE CONDUCTORS. THE RDSS SEALING SYSTEM SHOULD PREVENT WATER ENTRY INTO CUSTOMER VAULTS, METER ROOMS, MANHOLES, AND HANDHOLES. THE RAYFLATE BLADDER IS A FLEXIBLE METALLIC LAMINATED HIGH TEMPERATURE SEALANT.

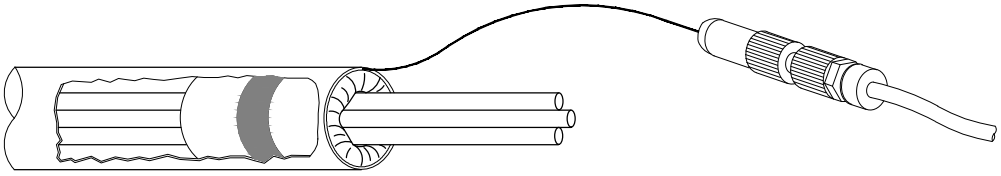

FIGURE 1

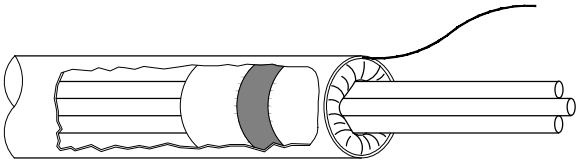

FIGURE 2

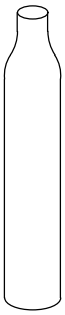

FIGURE 3

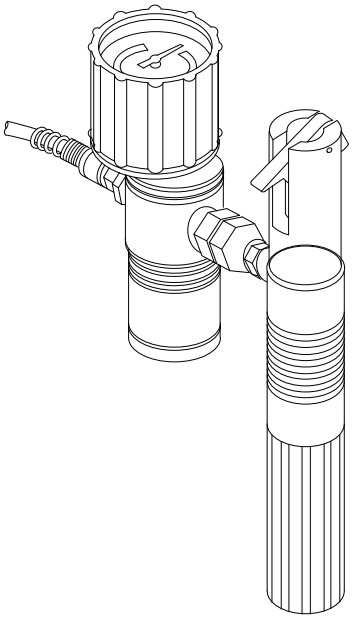

TABLE 1

CONDUIT SIZE, WITH 1 CONDUCTOR (IN)	RAYFLATE DUCT SEAL	STOCK NUMBER	ADD-CLIP FOR MULTIPLE CONDUCTORS	STOCK NUMBER
2	RDSS-60	S632070	RDSS-CLIP-75	S477542
3	RDSS-75	S632072	RDSS-CLIP-75	S477542
4	RDSS-100	S632074	RDSS-CLIP-100	S477544
5	RDSS-125	S632076	RDSS-CLIP-125	S477546
CO2 CARTRIDGE	E7515-0160	S209412	-	-

INSTALLATION:

A. FOLLOW MANUFACTURER'S INSTRUCTION FOR INSTALLATION OF RDSS BLADDER.

B. CLEAN ALL SURFACES OF CABLE AND CONDUITS TO BE SEALED.

C. SEALING SYSTEM CAN SEAL SINGLE CONDUCTOR UNJACKETED CONCENTRIC OR JACKETED CABLE, DUPLEX, TRIPLEX, AND QUAD CONDUCTORS, PRIMARY AND SECONDARY.

D. FOR MULTIPLE CONDUCTORS USE THE CORRECT RDSS-CLIP TO SEAL BETWEEN CONDUCTORS TO MAKE A POSITIVE SEAL WHEN APPLYING RDSS INFLATABLE BLADDER. SEE TABLE 1.

E. RDSS-IT-16 INFLATION TOOL IS USED TO INFLATE BLADDER. TOOL IS POWERED BY A CO2 CARTRIDGE. BLADDER IS INFLATED TO 45 PSI IN GREEN ZONE ON GAUGE. CO2 REPLACEMENT IS S209412.

BILL OF MATERIALS: NONE

NOTES: NONE

REFERENCE: NONE

© 1998 - 2021 San Diego Gas & Electric Company. All rights reserved. Removal of this copyright notice without permission is not permitted under law.

REV	CHANGE	DR	BY	DSN	APV	DATE	REV	CHANGE	DR	BY	DSN	APV	DATE
C	REVISION	-	-	TR	JJ	11/16/2006	F						
B	REVISION	-	-	TR	JJ	01/26/2006	E						
A	REVISION	-	-	PSW/JLB	ROG	01/01/1996	D	FORMATTING	EDM	JIK	-	-	09/16/2021

X Indicates Latest Revision | Completely Revised | New Page | Information Removed

SDG&E ELECTRIC UNDERGROUND CONSTRUCTION STANDARDS

SEALING SERVICE LATERAL CONDUIT, INSTRUCTIONS

UG3948.4

TABLE OF CONTENTS

SCOPE: THIS STANDARD PROVIDES THE REQUIREMENTS AND CONDITIONS ALLOWING FIELD HEATING OF SERVICE LATERAL CONDUITS INSTALLED ABOVE GRADE ONLY.

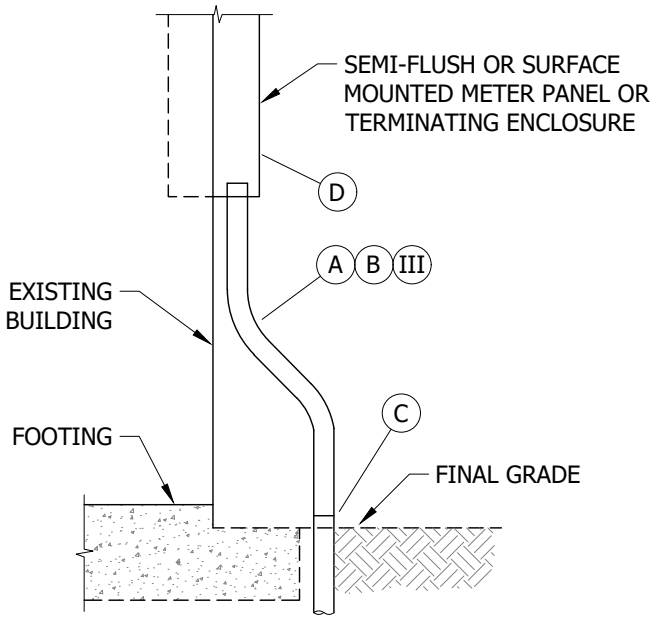

FIGURE 1
VERTICAL OFFSET
SIDE VIEW

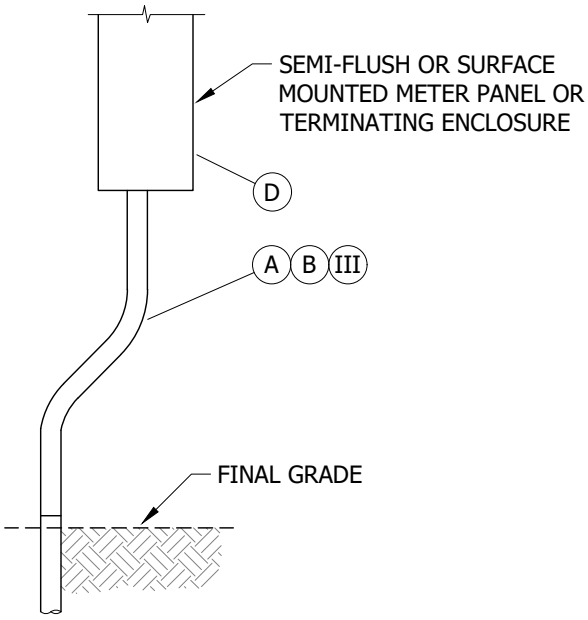

FIGURE 2
HORIZONTAL OFFSET
FRONT VIEW

INSTALLATION:

(A) ONLY MANUFACTURER RECOGNIZED FIELD CONDUIT HEATING EQUIPMENT SHALL BE USED. DEGRADATION OF THE CONDUIT'S SHAPE, WRINKLES, DISCOLORATION, BURN MARKS, OR PAINT IS NOT ALLOWED. SDG&E'S INSPECTOR WILL DETERMINE IF THE HEATED CONDUIT IS ACCEPTABLE.

(B) 45 DEGREES MAXIMUM ALLOWABLE DEFLECTION ON RISER. THE DEFLECTION IN RISER IS INCLUDED IN THE MAXIMUM 270 DEGREE TOTAL DEFLECTION IN THE SERVICE LATERAL CONDUIT RUN.

(C) WHEN CONVERTING AN EXISTING SERVICE TO UNDERGROUND, MANDREL NEW CONDUIT TO THE TOP OF THE ELBOW EXTENDING TO GRADE PRIOR TO CONNECTING THE RISER CONDUIT. ALLOW ENOUGH PULL ROPE TO EXTEND THROUGH RISER, WITH A MINIMUM 12-INCH TAIL TO BE LEFT IN THE TERMINATING ENCLOSURE.

(D) NEW SERVICES REQUIRE MANDRELING OF ALL NEW CONDUIT, INCLUDING THE CONDUIT RISER.

BILL OF MATERIALS: NONE

NOTES:

I. THIS STANDARD PROVIDES A MEANS TO AVOID EXCAVATING INTO AN EXISTING BUILDING FOOTING WHEN CONVERTING EXISTING OVERHEAD SERVICES TO UNDERGROUND (SEE FIGURE 1). IT ALSO APPLIES TO EXISTING OR NEW SERVICES WHEN A HORIZONTAL OFFSET IS REQUIRED DUE TO FIELD CONDITIONS (SEE FIGURE 2).

II. THIS STANDARD IS NOT INTENDED TO CORRECT POOR WORKMANSHIP. CARE SHOULD BE TAKEN TO INSTALL SERVICE EQUIPMENT IN A MANNER ALLOWING THE SERVICE LATERAL CONDUIT RISER TO EXIT THE GROUND AND RUN STRAIGHT UP INTO THE TERMINATING ENCLOSURE EXCEPT WHERE PRE-EXISTING FIELD CONDITIONS EXIST.

(III) THIS STANDARD APPLIES TO 2-INCH, 3-INCH, AND 4-INCH CONDUIT SIZES ONLY.

REFERENCE:

a. SEE UG3373 FOR CONDUIT AND CONDUIT FITTINGS - EB, AND POLYETHYLENE.

© 1998 - 2024 San Diego Gas & Electric Company. All rights reserved. Removal of this copyright notice without permission is not permitted under law.

REV	CHANGE	DR	BY	DSN	APV	DATE	REV	CHANGE	DR	BY	DSN	APV	DATE
C	DRAWING UPDATE	NV5	ADW	EJA	JAS	08/16/2024	F						
B	FORMATTING	EDM	JIK	-	-	09/16/2021	E						
A	REVISION	-	-	-	LSM/MPB	12/21/2002	D						

X Indicates Latest Revision | Completely Revised | New Page | Information Removed

SDG&E ELECTRIC UNDERGROUND CONSTRUCTION STANDARDS

SHEET 1 OF 1

FIELD HEATING SERVICE LATERAL CONDUITS

UG3950.1

TABLE OF CONTENTS

SCOPE: THE STANDARD COVERS THE ELEVATION OF CUSTOMER PRIMARY AND SECONDARY SERVICE LATERALS WHEN THEY ARE LOWER THAN THAT OF THE SDG&E FACILITY THAT SERVES THEM AND PREVENTING WATER ENTRY.

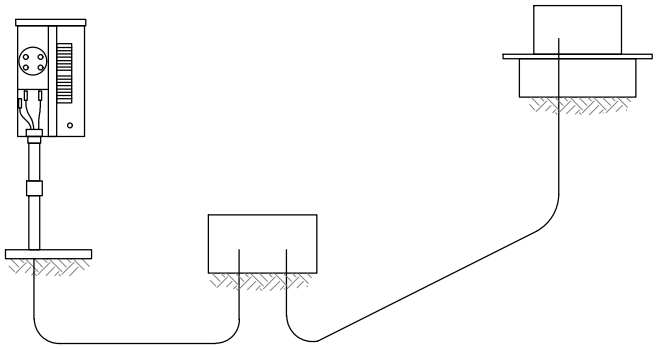

FIGURE 1 (A)

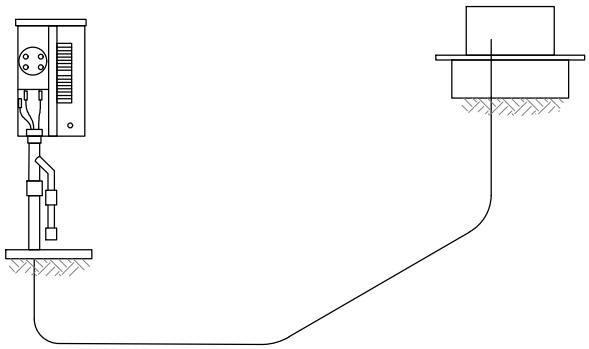

FIGURE 2 (I)

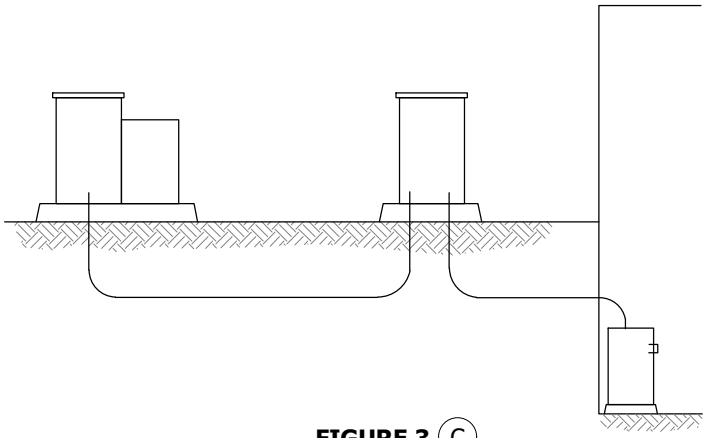

FIGURE 3 (C)

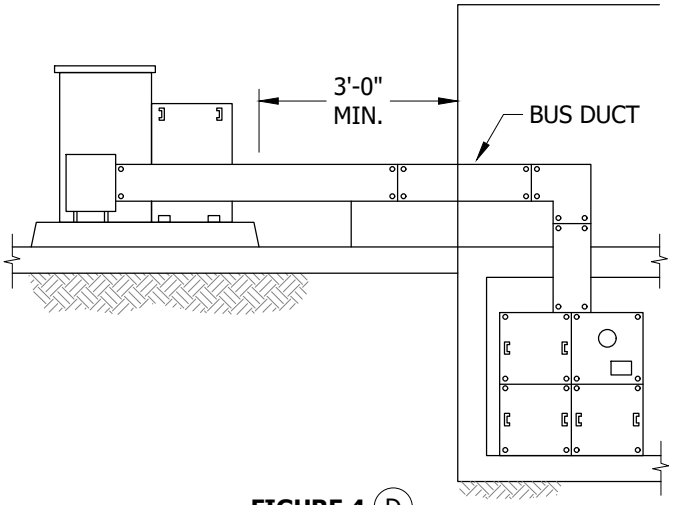

FIGURE 4 (D)

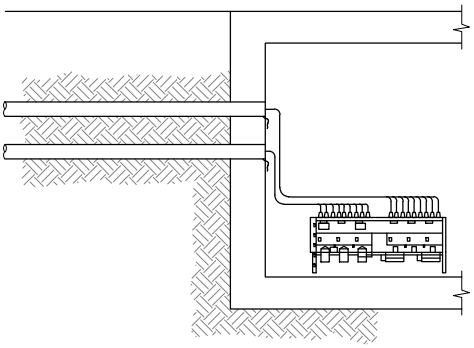

FIGURE 5 (II) (F)

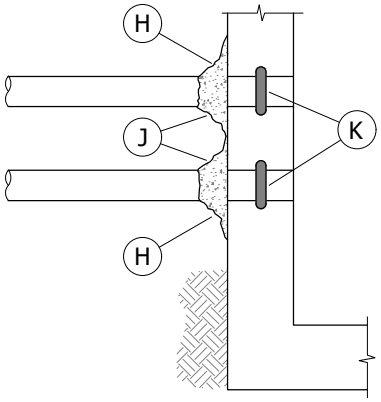

FIGURE 6 (F)

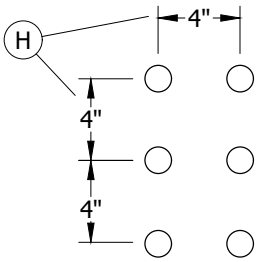

FIGURE 7 (F)

© 1998 - 2021 San Diego Gas & Electric Company. All rights reserved. Removal of this copyright notice without permission is not permitted under law.

REV	CHANGE	DR	BY	DSN	APV	DATE	REV	CHANGE	DR	BY	DSN	APV	DATE
C							F						
B	FORMATTING	EDM	JIK	-	-	09/16/2021	E						
A	REVISION	-	-	TR	JDJ	03/30/2007	D						

X Indicates Latest Revision | Completely Revised | New Page | Information Removed

SDG&E ELECTRIC UNDERGROUND CONSTRUCTION STANDARDS

SHEET 1 OF 2

ELEVATION OF CUSTOMER FACILITIES
PREVENTING WATER ENTRY

UG3960.1

TABLE OF CONTENTS

INSTALLATION:

(A) **RESIDENTIAL AND LIGHT COMMERCIAL:** WHEN ELEVATION OF SDG&E FACILITY SERVING CUSTOMER PANEL IS GREATER THAN 10 FEET ABOVE, AN ADDITIONAL SECONDARY HANDHOLE SHALL BE INSTALLED AS CLOSE AS POSSIBLE TO CUSTOMER PANEL AND SERVICE LATERAL TO CUSTOMER PANEL IS TO BE SEALED. THIS WILL PREVENT WATER ENTRY DUE TO WATER HEAD PRESSURE IN CONDUIT CREATED BY ELEVATION OF HIGHER FACILITY. (a)

B. **EXTERIOR WALL FLUSH, SEMIFLUSH OR SURFACE MOUNTED SERVICE EQUIPMENT:** WHEN ELEVATION CHANGE IS GREATER THAN 10 FEET AND WATER ENTRY IS AN ISSUE A SAFETY OVER FLOW FITTING MAY BE INSTALLED IN CUSTOMER RISER BELOW PANEL. (I) (b)

(C) **LARGER THREE-PHASE CUSTOMERS USING CABLE:** WHEN ELEVATION CHANGE IS GREATER THAN 10 FEET OR PANEL IS LOCATED IN CUSTOMER SUB-STRUCTURE, A SECONDARY OUTDOOR PULL SECTION OR TERMINATOR MAY BE LOCATED NEXT TO POINT OF ELEVATION TRANSITION TO PREVENT WATER ENTRY.

(D) **TRANSFORMER WITH BUS DUCT:** IF TRANSFORMER IS WITH 3 FEET OF BUILDING STRUCTURE, USE WEATHER PROOF BUS DUCT TO MAKE A TRANSITION THROUGH WALL AND DOWN IN TO SUB-STRUCTURE TO PREVENT WATER ENTRY.

E. TO PREVENT WATER ENTRY, WHEN CONDUIT IS INSTALLED ALL JOINTS SHALL BE FULLY GLUED 360 DEGREES FOR STRENGTH AND A WATER TIGHT SEAL. CONDUITS SHALL BE PROTECTED DURING BACK FILLING WITH SOIL TO PREVENT ROCK DAMAGE, CRUSHING/COMPRESSING, CRACKING, KINKING OR PULLING OUT OF THE FORMS AND STRUCTURES. CEMENT SLURRY CONDUITS SHALL HAVE DUCT SEPARATORS AND BE SECURED IN TRENCH TO PREVENT CONDUIT PACKAGE FROM FLOATING DURING THE BACK FILL PROCESS THAT CAN DAMAGE THE CONDUIT AND CREATE POTENTIAL FUTURE LEAKS.

(F) WHEN WATER TABLE RISES, WE KNOW WATER WILL MIGRATE IN TRENCHES AND DISTURBED SOIL. LARGE BUILDING WITH SURROUNDING DISTURBED SOIL. WILL ALLOW WATER TO ACCUMULATE AROUND SUB-STRUCTURE AND ANY COLD/CASTING JOINT, CRACKS, SAW CUTS, OR PVC CONDUIT TRANSITION THROUGH CEMENT, WILL CAUSE LEAKS. (H) (J) (K)

G. UNOCCUPIED CONDUITS TRANSITIONING FROM ONE SUB-STRUCTURE TO ANOTHER MAY BE PLUGGED AT BOTH ENDS WITH EXPANDABLE DUCT PLUGS. CONDUITS WITH CONDUCTORS CAN USE THE TYCO SEALING SYSTEM. (c)

(H) NOTE CONDUIT SEPARATION, THIS ALLOWS A HIGH QUALITY POLYMER SEALANT TO BE APPLIED 360 DEGREES AROUND CONDUIT ON OUTSIDE OF FOUNDATION.

(J) AFTER CONDUIT IS SEALED WATER PROOF MASTIC SEALANT IS APPLIED TO CONCRETE AND AREA AROUND CONDUIT TO PREVENT WATER ENTRY.

(K) DURING PROCESS OF BUILDING FORMS FOR FOUNDATION, INSIDE THE AREA THE CONDUIT TRANSITIONS THROUGH, APPLY A ONE-INCH THICK AND ONE-INCH WIDE LAYER OF SEALANT MASTIC AROUND CONDUIT IN CENTER OF FORM BEFORE CONCRETE IS POURED.

TABLE OF CONTENTS

BILL OF MATERIALS: NONE

NOTES:

(I) THIS INSTALLATION IS FOR EXTERIOR WALL MOUNTED PANEL USE ONLY. IT IS INSTALLER'S RESPONSIBILITY TO FOLLOW ALL APPLICABLE STATE AND LOCAL ELECTRICAL CODES.

(II) WHEN PVC CONDUIT TRANSITION THROUGH CONCRETE, THE SMOOTH SURFACE OF THE PVC AND CONCRETE CAN CREATE A COLD JOINT AND THE HYDRAULIC ACTION AND PRESSURE OF WATER AROUND A FOUNDATION CAN LEAK.

REFERENCE:

(a) SEE UG3605, FIGURE 1 FOR CORRECT BOX SIZE.

(b) SEE SG304 FOR INSTALLATION INSTRUCTIONS.

(c) SEE UG3948 FOR APPLICATION AND INSTALLATION INSTRUCTIONS.

© 1998 - 2021 San Diego Gas & Electric Company. All rights reserved. Removal of this copyright notice without permission is not permitted under law.

REV	CHANGE	DR	BY	DSN	APV	DATE	REV	CHANGE	DR	BY	DSN	APV	DATE
C							F						
B	FORMATTING	EDM	JIK	-	-	09/16/2021	E						
A	REVISION	-	-	TR	JDJ	03/30/2007	D						

X Indicates Latest Revision | Completely Revised | New Page | Information Removed

SDG&E ELECTRIC UNDERGROUND CONSTRUCTION STANDARDS

ELEVATION OF CUSTOMER FACILITIES PREVENTING WATER ENTRY

UG3960.2

MAIN TABLE OF CONTENTS

PAGE	SUBJECT
4002	600V ALUMINUM CABLE SIZES
4003	600V COPPER CABLE SIZES
4004	12KV CABLE SIZES
4005	CABLE PULLING TENSIONS, PRIMARY AND SECONDARY
4006	CABLE PULLING GRIPS, PRIMARY AND SECONDARY
4007	CABLE PULLING EYES, PRIMARY
4008	MINIMUM BENDING RADIUS FOR U.G. ALUMINUM/COPPER CABLES
4010	CABLE PULLING COMPOUND
4011	CABLE TAIL LENGTH REQUIREMENTS
4012	CABLE AMPACITIES

REV	CHANGE	DRWN	BY	CHKD	APVD	DATE
D	REVISED TO 3D FORMAT	NV5	JIK	-	-	05/07/2024
C	UG4009 REMOVED	EDM	EJA	GLW	KRG	05/31/2022
B	FORMATTING	EDM	JIK	-	-	09/16/2021

© 1998 - 2024 San Diego Gas and Electric Company. All rights reserved. Removal of this copyright notice without permission is not permitted under law.

SDG&E ELECTRIC UNDERGROUND CONSTRUCTION STANDARDS

CABLES
TABLE OF CONTENTS

SCALE: NOT TO SCALE

DRAWING NO: UG4001.1

SHEET: 1 OF 1

X Indicates Latest Revision | Completely Revised | New Page | Information Removed

SCOPE: THIS STANDARD LISTS LOW VOLTAGE ALUMINUM CABLES.

TABLE 1

600V ALUMINUM CROSS-LINKED POLYETHYLENE												
WIRE SIZE	CONDUIT MIN. SIZE (IN)	REEL FOOTAGE	REEL CODE			REEL MAT'L	STOCK NUMBER	U-NUMBER REFERENCE	SECONDARY WORK		SERVICE WORK	
			FD (IN)	IT (IN)	DD (IN)				DESIGN UNITS	SAP CU	DESIGN UNITS	SAP CU
2-#8 (B) (b) (f)	3	2,000	30	18	10	WOOD	S196176	U-10.011	U/2-#8	U/2-#8	U/2-#8	U/2-#8SV
2-#2 1-#4	3	2,000	35	28	18	COIL	S197504	U-10.02	U1P-#2	U1P-#2	U1P-#2	U1P-#2SV
2-1/0 1-#2	3	2,000	40	28	18	COIL	S197472	U-10.04	U1P1/0	U1P1/0	U1P1/0	U1P1/0SV
2-3/0 1-1/0	3	1,300	40	28	18	COIL	S197536	U-10.06	U1P3/0	U1P3/0	U1P3/0	U1P3/0SV
3-3/0 1-1/0	3	2,000	58	32	21	WOOD	S197592	U-10.06	U3P3/0	U3P3/0	U3P3/0	U3P3/0SV
2-350KCMIL 1-3/0	3	1,200	58	32	24	WOOD	S197568	U-10.08	U1P350	U1P350	U1P350	U1P350SV
3-350KCMIL 1-3/0	3	1,000	58	32	28	WOOD	S197594	U-10.082	U3P350	U3P350	U3P350	U3P350SV
2-500KCMIL (A) 1-350KCMIL	3	2,000	84	45	42	STEEL	S197450	U-10.09	U1P500	U1P500	U1P500	U1P500
3-500KCMIL 1-350KCMIL	4	2,000	84	45	42	STEEL	S197596	U-10.092	U3P500	U3P500	U3P500	U3P500SV
3-1000KCMIL 1-750KCMIL	5	1,000	84	36	42	STEEL	S197598	U-10.095	3P1000	3P1000	3P1000	3P1000

TABLE 2

ABBREVIATIONS		
TOPIC	ABBREVIATION	DEFINITION
	KCMIL	THOUSAND CIRCULAR MILLS
REEL CODE	FD	FLANGE DIAMETER
	IT	INSIDE TRAVERSE WIDTH
	DD	DRUM DIAMETER

INSTALLATION:

(A) 2-500 KCMIL AND 1-350 KCMIL REQUIRE 3-INCH CONDUIT MIN.

(B) 2-#8 WIRE USED FOR STREET LIGHTING SHALL BE INSTALLED IN 1-INCH POLYETHYLENE (PE) CONDUIT. 2-#8 WIRE FROM A RISER POLE TO THE FIRST LOCATION SHALL BE INSTALLED IN 2-INCH CONDUIT.

C. CABLE ENDS SHALL BE SEALED WITH SEALING COMPOUND AND VINYL PLASTIC TAPE TO PREVENT MOISTURE ENTRY.

BILL OF MATERIALS: NONE

NOTES: NONE

REFERENCE:

a. FOR SDG&E CONDUIT AND CONDUIT FITTINGS, SEE UG3373.

(b) FOR SPLICING OR REPAIRING FLEXIBLE CONDUIT, SEE UG3383.

c. FOR SERVICE LATERAL CONDUIT REQUIREMENTS, SEE UG3942.

d. FOR CABLE POLE CONDUIT REQUIREMENTS, SEE OH1404UG4204.

e. FOR CABLE PULLING LIMITATIONS, SEE UG4005.

(f) FOR CABLE POLE RISER INSTALLATION, SEE OH1404UG4204.

© 1998 - 2022 San Diego Gas & Electric Company. All rights reserved. Removal of this copyright notice without permission is not permitted under law.

REV	CHANGE	DR	BY	DSN	APV	DATE	REV	CHANGE	DR	BY	DSN	APV	DATE
C	REVISION	-	-	TR	DW	02/24/2014	F						
B	REVISION	-	-	KN	DW	01/22/2014	E	EDITORIAL CHANGES	GLC	FRC	FRC	FRC	02/15/2022
A	REVISION	-	-	TR	MJC	09/10/2010	D	FORMATTING	EDM	JIK	-	-	09/16/2021

TABLE OF CONTENTS

SCOPE: THIS STANDARD LISTS LOW VOLTAGE COPPER CABLES.

ATTENTION:

* THIS CABLE IS NOT TO BE USED IN NEW INSTALLATIONS OR WHEN A CUSTOMER INCREASES THEIR PANEL SIZE AND THE ALUMINUM CABLE REQUIRED TO SERVE THE PANEL WILL NOT FIT IN EXISTING CONDUIT. AVAILABILITY OF THIS CABLE DOES NOT ELIMINATE THE REQUIREMENT FOR A CONDUIT UPGRADE TO MEET REQUIREMENTS OF THE NEW PANEL. THIS CABLE IS ONLY TO BE USED TO REPLACE EXISTING ALUMINUM CABLE IN SIDA CONDUITS WHEN LARGER ALUMINUM CABLE IS REQUIRED TO CORRECT SDG&E LOW VOLTAGE PROBLEMS AND THE LARGER CABLE WILL NOT FIT IN EXISTING CONDUITS.

TABLE 1

600V COMPACT COPPER CROSS-LINKED POLYETHYLENE											
WIRE SIZE	CONDUIT MIN. SIZE (IN)	REEL FOOTAGE	REEL CODE			REEL MAT'L	WEIGHT (LBS/1,000 FT)	STOCK NUMBER	AMPACITY (AMPS)	U-NUMBER REFERENCE	DESIGN UNIT
			FD (IN)	IT (IN)	DD (IN)						
2-1/0	1 1/4 SIDA	2,000	45	28	21	WOOD	870	S197510	170	-	TCU1/0
1-#2											
2-250	2 SIDA	1,000	48	28	24	WOOD	2,240	S197512	315	-	TCU250
1-#4/0											

TABLE 2

ABBREVIATIONS		
TOPIC	ABBREVIATION	DEFINITION
	KCMIL	THOUSAND CIRCULAR MILLS
REEL CODE	FD	FLANGE DIAMETER
	IT	INSIDE TRAVERSE WIDTH
	DD	DRUM DIAMETER

INSTALLATION:

A. CABLE ENDS SHALL BE SEALED WITH SEALING COMPOUND AND VINYL PLASTIC TAPE TO PREVENT MOISTURE ENTRY.

BILL OF MATERIALS: NONE

NOTES: NONE

REFERENCE:

a. SEE UG3373 FOR CONDUIT AND CONDUIT FITTINGS - EB, & POLYETHYLENE.
b. SEE FMO UG3383 FOR CONDUIT SPLICING INSTALLATION FOR CABLE-IN-CONDUIT (PID & SIDA).
c. SEE UG3942 FOR UNDERGROUND ELECTRIC SERVICE LATERAL - CUSTOMER INSTALLED CONDUIT, RESIDENTIAL OR COMMERCIAL.
d. SEE UG4204 FOR CABLE POLE RISER INSTALLATION.

TABLE OF CONTENTS

REV	CHANGE	DRWN	BY	CHKD	APVD	DATE
E	REVISED TO 3D FORMAT	NV5	JIK	ADW	JAS	11/05/2024
D	MOVED FROM UG4002	EDM	JIK	-	-	09/16/2021
C	REVISION	-	-	TR	DW	02/24/2014

SDGE

SDG&E ELECTRIC UNDERGROUND CONSTRUCTION STANDARDS

600V COPPER CABLE SIZES

SCALE: NOT TO SCALE

DRAWING NO: UG4003.1

SHEET: 1 OF 1

© 1998 - 2024 San Diego Gas and Electric Company. All rights reserved. Removal of this copyright notice without permission is not permitted under law.

X Indicates Latest Revision | Completely Revised | New Page | Information Removed

SCOPE: THIS STANDARD LISTS HIGH VOLTAGE CABLES.

TABLE 1

ALUMINUM									
WIRE SIZE	CONDUIT MIN. SIZE (IN)	REEL FOOTAGE	REEL CODE			REEL MAT'L	STOCK NUMBER	DESIGN UNITS	U-NUMBER REFERENCE
			FD (IN)	IT (IN)	DD (IN)				
1/C #2 SOL TRXLPECN-PEJ	3	4,300	58	32	28	WOOD	S197644	RJN1#2	U-12.041
2-1/C #2 SOL TRXLPECN-PEJ	3	2,150	58	32	28	WOOD	S197646	RJN2#2	U-12.042
3-1/C #2 SOL TRXLPECN-PEJ (C)	4	2,000	84	45	42	STEEL	S197656	RJN3/2	U-12.043
3-1/C 2/0 STR TRXLPECN-PEJ (C)	4	2,000	84	45	42	STEEL	S197648	RJN2/0	U-12.061
3-1/C 350 KCMIL STR TRXLPECN-PEJ (B)	5	600 (A) 1,200	90	45	42	STEEL	S197650	RJN350	U-12.08
3-1/C 750 KCMIL COMP EAM-PEJ	4	1,200	96	45	42	STEEL	S197640	RCPJ750	U-13.1
3-1/C 1000 KCMIL STR TRXLPECN-PEJ	5	600 (A) 1,100	96	60	42	STEEL	S197654	RJ1000	U-12.096
COPPER									
3-1/C 750 KCMIL COMP EAM-PEJ	4	1,100	96	45	42	STEEL	S197642	RCPC750	U-13.2
3-1/C 1000 KCMIL STR TRXLPECN-PEJ	5	780	96	60	42	STEEL	S197652	R1000CU	U-13.5

TABLE 2

BARE COPPER					
WIRE SIZE	FT PER LBS	WEIGHT (LBS/1,000 FT)	STOCK NUMBER	DESIGN UNITS	U/M
#2, 7 STR SOFT DRAWN	4.7	212	S812818 (X)	GDWIRE	LBS
1/0 STR SOFT DRAWN	3	333	S812852	-	LBS
4/0 STR SOFT DRAWN	1	1,000	S812764	-	LBS

TABLE 3

ABBREVIATIONS		
TOPIC	ABBREVIATION	DEFINITION
	1/C	ONE CONDUCTOR
	3/C	THREE CONDUCTOR
	TRXLPECN-PEJ	TREE RETARDANT CROSS-LINKED POLYETHYLENE INSULATION, CONCENTRIC NEUTRAL, POLYETHYLENE JACKET
	EAM-PEJ	ETHYLENE ALKENE COPOLYMER INSULATION, FLAT STRAP NEUTRAL, POLYETHYLENE JACKET
	SOL	SOLID
	STR	STRANDED
	COMP	COMPACT STRANDED
	KCMIL	THOUSAND CIRCULAR MILLS
	U/M	UNIT OF MEASURE
REEL CODE	FD	FLANGE DIAMETER
	IT	INSIDE TRAVERSE WIDTH
	DD	DRUM DIAMETER

TABLE OF CONTENTS

© 1998 - 2022 San Diego Gas & Electric Company. All rights reserved. Removal of this copyright notice without permission is not permitted under law.

REV	CHANGE	DR	BY	DSN	APV	DATE	REV	CHANGE	DR	BY	DSN	APV	DATE
C	REVISION	-	-	TR	DW	02/24/2014	F						
B	REVISION	-	-	KN	DW	01/22/2014	E	TABLE UPDATE	EDM	RSL	JAS	KRG	10/21/2022
A	REVISION	-	-	TR	MJC	09/10/2010	D	MOVED FROM UG4002	EDM	JIK	-	-	09/16/2021

INSTALLATION:

(A) FOR SPECIAL PURCHASE ONLY.

(B) MAY BE INSTALLED IN EXISTING 4-INCH CONDUITS. (d)

(C) MAY BE INSTALLED IN EXISTING 3-INCH CONDUITS. WHEN 2/0 CABLE IS PULLED INTO EXISTING 3-INCH CONDUITS. REMOVE CABLE JACKET WHERE CABLE PULLING GRIP IS INSTALLED (APPROX. 3 FEET). (d)

D. THESE CABLES TO BE INSTALLED THREE IN PARALLEL ONLY.

BILL OF MATERIALS: NONE

NOTES:

(X) THIS ITEM IS EXEMPT.

REFERENCE:

a. FOR CABLES NO LONGER PURCHASED, SEE FMO UG4099 (FIELD MAINTENANCE ONLY).

b. FOR CABLE PULLING LIMITATIONS, SEE UG4005.

c. FOR CABLE END SEALS, SEE UG4109.

(d) SEE UG3372.

TABLE OF CONTENTS

© 1998 - 2022 San Diego Gas & Electric Company. All rights reserved. Removal of this copyright notice without permission is not permitted under law.

REV	CHANGE	DR	BY	DSN	APV	DATE	REV	CHANGE	DR	BY	DSN	APV	DATE
C	REVISION	-	-	TR	DW	02/24/2014	F						
B	REVISION	-	-	KN	DW	01/22/2014	E	TABLE UPDATE	EDM	RSL	JAS	KRG	10/21/2022
A	REVISION	-	-	TR	MJC	09/10/2010	D	MOVED FROM UG4002	EDM	JIK	-	-	09/16/2021

X Indicates Latest Revision | Completely Revised | New Page | Information Removed

SDG&E ELECTRIC UNDERGROUND CONSTRUCTION STANDARDS

12KV CABLE SIZES

UG4004.2

SCOPE: THIS STANDARD SHOWS MAXIMUM CABLE PULLING TENSIONS AND CONDUCTOR CHARACTERISTICS.

TABLE 1

MAXIMUM PULLING TENSIONS UNDERGROUND ELECTRICAL CABLES

CONDUCTOR SIZE (AWG/KCMIL)	CABLE TYPE	CONDUCTOR TYPE	STOCK NUMBER	WEIGHT (LBS/1,000 FT)	MAX. TENSION (LBS) (A)		AREA PHASE CONDUCTOR (CIRC MIL)
					GRIP	EYE (B)	
PRIMARY CABLES							
1/C #2 SOL	TRXLPECN-PEJ	AL	S197644	440	530	--	66,360
2 - 1/C #2 SOL			S197646	880	1,000	--	66,360
3 - 1/C #2 SOL			S197656	1,220		--	66,360
3 - 1/C 2/0			S197648	1,670		--	133,100
3 - 1/C 350			S197650	3,335		5,600	350,000
3 - 1/C 750 COMP	EAM-PEJ		S197640	4,600		7,000	750,000
1/C 1000	TRXLPECN-PEJ		S197658	2,140	--		1,000,000
3 - 1/C 1000			S197654	7,320	1,000		
3 - 1/C 750 COMP	EAM-PEJ	CU	S197642	9,640			750,000
3 - 1/C 1000	TRXLPECN-PEJ		S197652	13,600			1,000,000
SECONDARY CABLES							
2 - #8	XLPE	AL	S196176	69	364	--	16,510
2 - #2 & 1 - #4			S197504	256	1,000	--	66,360
2 - 1/0 & 1 - #2			S197472	395		--	105,600
2 - 3/0 & 1 - 1/0			S197536	588		--	167,800
3 - 3/0 & 1 - 1/0			S197592	810		--	
2 - 350 & 1 - 3/0			S197568	1,090		--	350,000
3 - 350 & 1 - 3/0			S197594	1,520		--	
2 - 500 & 1 - 350			S197450	1,621		--	500,000
3 - 500 & 1 - 350			S197596	2,215		--	
3 - 1000 & 1 - 750			S197598	4,300		--	1,000,000
2 - 1/0 & 1 - #2		CU	S197510	870		--	105,600
2 - 250 & 1 - 4/0			S197512	2,240		--	250,000

TABLE OF CONTENTS

INSTALLATION:

(A) WHEN CALCULATING PULLING TENSION, DO NOT EXCEED MAXIMUM TENSION LIMITS.

(B) CABLE PULLING EYES ARE ONLY AVAILABLE FOR 350, 750, AND 1000 KCMIL ALUMINUM (XLPE-PEJ) AND 750 AND 1000 KCMIL COPPER (XLPE-PEJ) PRIMARY CABLES. ALL OTHER CABLES SHALL BE LIMITED TO GRIP TENSION SPECIFIED.

C. THE MAXIMUM PULLING TENSION OF THE PULLING EQUIPMENT IS 7,000 LBS.

D. SINGLE CONDUCTOR 1000 KCMIL AL CABLES ARE TO BE INSTALLED THREE IN PARALLEL ONLY USING NON-CRIMP PULLING EYES AND WIRE BRIDLE.

E. MAXIMUM COMBINED WORKING LOAD FOR WIRE BRIDLE FOR ATTACHING THREE-PHASE SINGLE CONDUCTOR PULLING EYES IS 9,000 LBS.

BILL OF MATERIALS: NONE

NOTES: NONE

REFERENCE: NONE

© 1998 - 2023 San Diego Gas & Electric Company. All rights reserved. Removal of this copyright notice without permission is not permitted under law.

REV	CHANGE	DR	BY	DSN	APV	DATE	REV	CHANGE	DR	BY	DSN	APV	DATE
D	REVISION	-	-	JE	MJC	05/10/2010	G	TABLE UPDATE	ARC	ADW	GLW	KRG	05/08/2023
C	REVISION	-	-	JE	JJ	11/29/2005	F	MOVED FROM UG4003	EDM	JIK	-	-	09/16/2021
B	REVISION	-	-	JE	JJ	11/17/2005	E	REVISION	-	-	TR	DW	02/24/2014

SCOPE: THIS STANDARD DESCRIBES THE METHOD TO BE USED WHEN CALCULATING PRIMARY CABLE PULLING TENSIONS USING A SET OF FORMULAS MANUALLY.

ATTENTION:

* FOR ALL CALCULATIONS, THE COEFFICIENT OF FRICTION SHOULD BE 0.30 AND THE USE OF CABLE PULLING LUBRICANT IS REQUIRED FOR JACKETED CABLE.

DEFINITIONS:

- **CABLE PULLING TENSION:** THE FORCE REQUIRED (IN POUNDS) TO PULL A CABLE THROUGH A CONDUIT. MAXIMUM CABLE TENSIONS HAVE BEEN SET TO PROTECT THE CABLE FROM DAMAGE DUE TO EXCESSIVE PULLING FORCE.
- **CABLE SIDEWALL PRESSURE (SWBP):** THE PRESSURE EXERTED BY THE CABLE ON THE SIDEWALL OF THE CONDUIT WHEN GOING THROUGH ITS BENDS. THIS PRESSURE IS CAUSED BY THE TENSION AND WEIGHT OF THE CABLE WHICH TENDS TO FORCE IT AGAINST THE CONDUIT WALL. THIS SWBP CAN BE ESTIMATED USING THE TENSION IN CABLE AT BEND EXIT, DIVIDED BY THE INSIDE RADIUS OF BEND (FT).

INSTALLATION:

A. THE NOMINAL (CENTERLINE) RADIUS OF THE BEND MAY BE USED TO CALCULATE SIDEWALL BEARING PRESSURE.

TABLE 1

MAXIMUM ALLOWABLE SIDEWALL BEARING PRESSURE	
CONDUITS	**LBS/FT**
CONCRETE ENCASED	1,250
DIRECT BURIED	300

B. SEE SHEET 1 TABLE 1 FOR MAXIMUM TENSION WHEN PULLING CABLES USE CASKET GRIP.

C. SEE SHEET 1 TABLE 1 FOR MAXIMUM TENSION WHEN PULLING CABLES USING PULLING EYE.

PULLING TENSION CALCULATIONS

(D) THE INTENT OF THE FOLLOWING EQUATIONS IS TO HELP DETERMINE TENSIONS FOR A TYPICAL CABLE INSTALLATION. IN ORDER TO USE THESE FORMULAS, THE CABLE PULL SHOULD BE DIVIDED INTO SPECIFIC SECTIONS. PLEASE TAKE NOTE THAT THE TENSION OBTAINED WHEN PULLING IN ONE DIRECTION OFTEN DIFFERS FROM THE TENSION OBTAINED WHEN PULLING IN THE OPPOSITE DIRECTION, THIS IS DUE TO THE SLOPE OF THE PULL AND THE LOCATION OF THE BENDS.

(1) ANGLE THETA (DEG) MEASURED FROM HORIZONTAL AXIS.

(2) THE VALUE OF K (THE CURVE CONSTANT) IS DETERMINED BY THE ANGLE, IN DEGREES, OF THE CURVE SECTION. E.G. $T_2 = T_1 K$

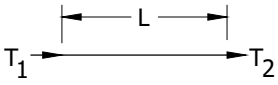

$T_2 = T_1 + L\ W\ C$

EQUATION 1
STRAIGHT SECTION
CASE 1: HORIZONTAL

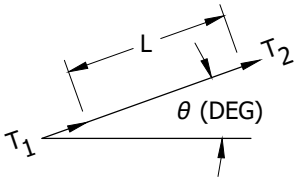

$T_2 = T_1 + L\ W\ [SIN\ \theta\ + COS\ \theta]$

EQUATION 2 (D1)
STRAIGHT SECTION
CASE 2: INCLINE UPWARD

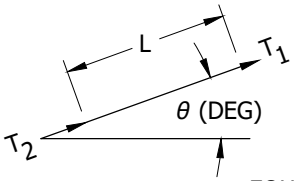

$T_2 = T_1 + L\ W\ [SIN\ \theta\ - COS\ \theta]$

EQUATION 3 (D1)
STRAIGHT SECTION
CASE 3: INCLINE DOWNWARD

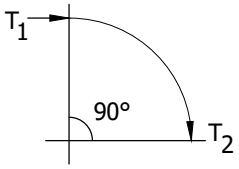

$T_{OUT} = T_{IN}\ K,$

EQUATION 3 (D2)
CURVE SECTION

FIGURE 1 (D) (E)
TYPICAL CABLE INSTALLATION TENSION EQUATIONS

© 1998 - 2023 San Diego Gas & Electric Company. All rights reserved. Removal of this copyright notice without permission is not permitted under law.

REV	CHANGE	DR	BY	DSN	APV	DATE	REV	CHANGE	DR	BY	DSN	APV	DATE
D	REVISION	-	-	JE	MJC	05/10/2010	G	TABLE UPDATE	ARC	ADW	GLW	KRG	05/08/2023
C	REVISION	-	-	JE	JJ	11/29/2005	F	MOVED FROM UG4003	EDM	JIK	-	-	09/16/2021
B	REVISION	-	-	JE	JJ	11/17/2005	E	REVISION	-	-	TR	DW	02/24/2014

TABLE OF CONTENTS

INSTALLATION (CONT'D):

(E) THE COMPLETE PULLING EQUATIONS ARE MORE COMPLEX THAN THOSE ON SHEET 2 AND INCLUDE WEIGHT CORRECTION FACTORS FOR STRAIGHT AND INCLINED PULLS. USE OF THESE EQUATIONS IS TOO TIME CONSUMING FOR EVERY PULL. IF MORE COMPLEX CALCULATION IS NEEDED, USE THE INTELLICADD PROGRAM FOR CABLE PULLING. THIS PROGRAM MAKES FAST AND CONVENIENT CALCULATIONS ON A PC. (D)

1. INITIAL TENSION: ASSUME 50 LBS REEL TENSION AT THE BEGINNING OF ALL PULLS, E.G. BOTTOM OF FIRST ELBOW OF PADMOUNT EQUIPMENT OR FEED-IN POINT OF SUBSTRUCTURES.

TABLE 2

LEGEND	
VARIABLE AND FUNCTION	**DESCRIPTION**
T	PULLING TENSION AT A POINT "X" (T = TENSION AT POINT NUMBER 1)
L	LENGTH OF STRAIGHT SECTION "X" (L = LENGTH OF STRAIGHT SECTION NUMBER 1)
W	WEIGHT OF CABLE IN LBS FOOT (LBS/FT) SHEET 1 TABLE 1 LISTS CABLE WEIGHT IN LBS/1,000 FT TO FIND LBS/FT DIVIDE BY 1,000, E.G. W (1/C #2 SOL XLPECN-PEJ AL) = $\frac{440}{1,000}$ = .44 LBS/FT)
C	0.30 (COEFFICIENT OF FRICTION)
θ	GREEK ALPHABET LETTER USED TO IDENTIFY OR NAME AN ANGLE. PRONOUNCED "THETA".
K	CURVE CONSTANT
SIN	ABBREVIATION FOR SINE, A TRIGONOMETRY RATIO RELATED TO ANGLES. (SIN θ = *SINE OF THE ANGLE THETA)*
COS	ABBREVIATION FOR COSINE, A TRIGONOMETRY RATIO RELATED TO ANGLES. (COS θ = *COSINE OF THE ANGLE THETA)*

TABLE 3

CURVE CONSTANTS TABLE		
θ ANGLE (DEG)	**SIN *θ***	**COS *θ***
2	.035	.999
3	.052	.999
4	.070	.998
5	.087	.996
6	.105	.995
7	.129	.993
8	.139	.990
9	.156	.988
10	.174	.985
11	.191	.982
12	.208	.978
13	.225	.974
14	.242	.970
15	.259	.966

TABLE 4

CURVE CONSTANTS TABLE	
ANGLE (DEG)	**K VALUE**
11.25	1.05
22.5	1.10
33.75	1.16
45	1.22
56.25	1.28
67.5	1.34
78.75	1.41
90	1.48

F. DO NOT EXCEED MAXIMUM LIMITS FOR PULLING EYE OR GRIP, OR SIDEWALL PRESSURE WHEN CALCULATING PULLING TENSION ON SHEET 1.

G. SIDEWALL PRESSURE IS CALCULATED AT THE EXIT OF THE BEND.

H. TO OBTAIN LOWEST TENSION, USE AS FEW CURVED SECTIONS AS POSSIBLE WITH MAXIMUM POSSIBLE RADIUS OF CURVATURE.

J. PULLING TENSIONS SHALL BE CALCULATED FOR PULLING FROM EACH END OF THE CONDUIT RUN. THE CUSTOMER PROJECT PLANNER SHALL SPECIFY THE DIRECTION OF PULL, NOT TO EXCEED THE CABLE OR CONDUIT LIMITS. THE DIRECTION USUALLY RESULTING IN THE MINIMUM TENSION IS WHEN FEED-IN END IS NEAREST THE CURED SECTIONS. **ASSUME CABLE WILL BE PULLED UP THE CABLE POLE WHEN CONDUIT RISER IS USED.**

K. FOR PRIMARY OR SECONDARY CABLE WHERE PULLING TENSIONS ARE CALCULATED FOR BOTH DIRECTIONS: OCCASIONALLY THE CALCULATIONS FROM ONE DIRECTION APPLIES TO A PARTICULAR SITUATION WHILE THE OTHER DIRECTION CALCS ARE TOO STRINGENT. WHEN THIS HAPPENS, THE DIRECTION WITH THE LOWEST TENSION WOULD APPLY AND MUST BE NOTED ON THE JOB PRINT. CARE SHOULD BE TAKEN TO ENSURE NO OBSTACLES EXIST FOR PULLING IN THIS DIRECTION. NOTE VEHICLE ACCESS, WALLS, TRAFFIC, ETC.

TABLE OF CONTENTS

© 1998 - 2023 San Diego Gas & Electric Company. All rights reserved. Removal of this copyright notice without permission is not permitted under law.

REV	CHANGE	DR	BY	DSN	APV	DATE	REV	CHANGE	DR	BY	DSN	APV	DATE
D	REVISION	-	-	JE	MJC	05/10/2010	G	TABLE UPDATE	ARC	ADW	GLW	KRG	05/08/2023
C	REVISION	-	-	JE	JJ	11/29/2005	F	MOVED FROM UG4003	EDM	JIK	-	-	09/16/2021
B	REVISION	-	-	JE	JJ	11/17/2005	E	REVISION	-	-	TR	DW	02/24/2014

INSTALLATION (CONT'D):

(L) SAMPLE CALCULATION TO DETERMINE PULLING TENSION AND DIRECTION OF FEED:

GIVEN: 1/C #2 SOL AL (XPLECN-PEJ) CABLE
1DB2" CONDUIT
90° = ANGULAR CHANGE IN DIRECTION BETWEEN T3 & T4
L1 = 200'
L2 = 120'
θ = 5°

UNDERSTOOD: C = 0.30

NEEDED: VALUE FOR K (AT 90°)
VALUE FOR SIN 5°
VALUE FOR COS 5°
VALUE FOR W (LBS/FT) FOR CABLE INDICATED

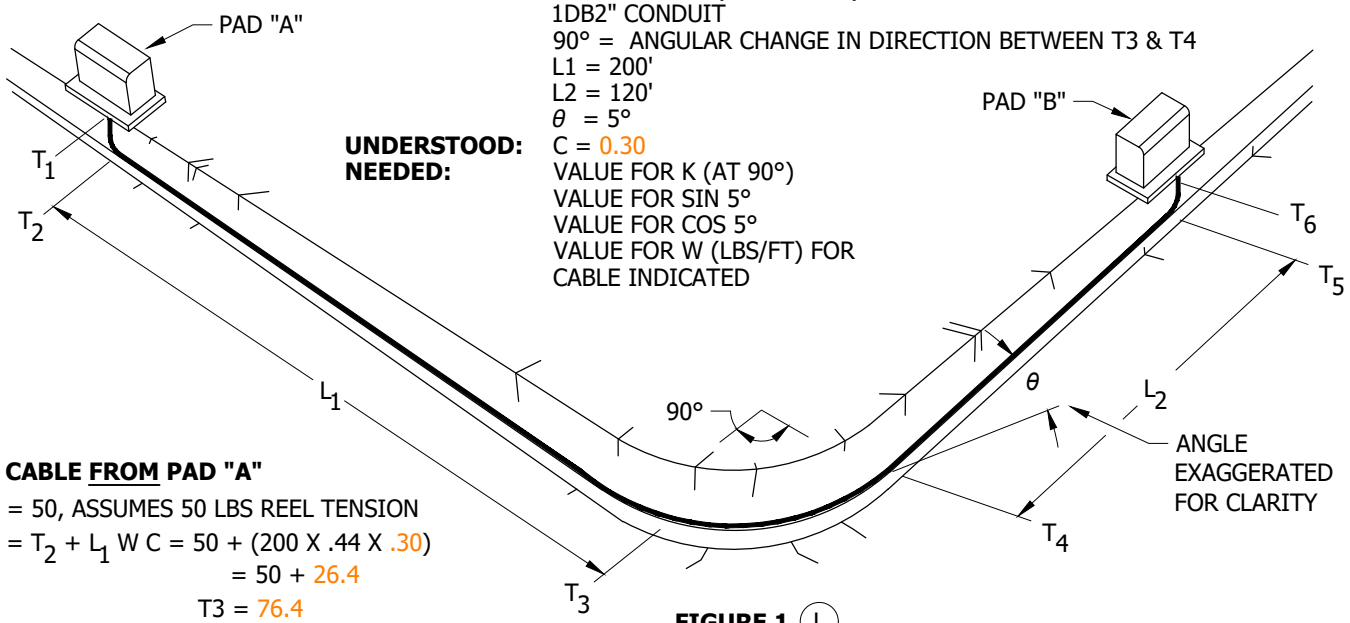

FIGURE 1 (L)

FEED CABLE FROM PAD "A"

T_2 = 50, ASSUMES 50 LBS REEL TENSION

$T_3 = T_2 + L_1$ W C = 50 + (200 X .44 X .30)
= 50 + 26.4
T3 = 76.4

$T_4 = T_3$ K (FOR 90°) = 76.4 X 1.48 = 113.072

$T_5 = T_4 + L_2$ W [SIN θ + C COS θ] = 113.072 + (120 X .44 [.087 + (.30 X .996)])
= 113.072 + (52.8 [.087 + 0.299])
= 113.072 + (52.8 [0.386])
= 113.072 + (52.8 X 0.386)
= 113.072 + 20.370
T_5 = 133.44

$T_6 = T_5$ K (FOR 90°) = 133.44 X 1.48 = 197.494

$T_{TOTAL} = T_6$ = 197 LBS

FEED CABLE FROM PAD "B"

T_5 = 50, ASSUMES 50 LBS REEL TENSION

$T_4 = T_5 - L_2$ W [SIN θ - C COS θ] = 50 - (120 X .44 [.087 - (.30 X .996)])
= 50 - (52.8 [.087 - 0.299])
= 50 - (52.8 [- 0.212])
= 50 - (52.8 X - 0.212)
= 50 - (-11.194)
= 50 + 11.194
T_4 = 61.194 = 61.19

$T_3 = T_4$ K = 61.19 X 1.48 = 90.56

$T_2 = T_3 + L_1$ W C = 90.56 + (200 X .44 X .30)
= 90.56 + 26.4
T_2 = 116.96

$T_1 = T_2$ K = 116.96 X 1.48 = 173.10

$T_{TOTAL} = T_1$ = 173 LBS

RESULTS: TENSION IS WITHIN ACCEPTABLE LIMITS USING PULLING GRIP (OR EYE) AND PULLING FROM EITHER DIRECTION. SWBP AT ELBOWS IS ALSO WITHIN ACCEPTABLE LIMITS FOR DB2" CONDUIT.

CONCLUSION: OKAY TO MAKE THE PULL. SINCE TENSION PULLING FROM PAD "B" IS LOWER, THAT IS THE PREFERRED DIRECTION OF PULL.

© 1998 - 2023 San Diego Gas & Electric Company. All rights reserved. Removal of this copyright notice without permission is not permitted under law.

REV	CHANGE	DR	BY	DSN	APV	DATE	REV	CHANGE	DR	BY	DSN	APV	DATE
D	REVISION	-	-	JE	MJC	05/10/2010	G	TABLE UPDATE	ARC	ADW	GLW	KRG	05/08/2023
C	REVISION	-	-	JE	JJ	11/29/2005	F	MOVED FROM UG4003	EDM	JIK	-	-	09/16/2021
B	REVISION	-	-	JE	JJ	11/17/2005	E	REVISION	-	-	TR	DW	02/24/2014

INSTALLATION (CONT'D):

EXAMPLE:

(M) MAXIMUM DISTANCE FOR L1 WHEN THE PULL IS FROM PAD OR STRUCTURE TO CABLE POLE PRIMARY LEVEL. THIS ASSUMES NO HORIZONTAL BENDS OR SWEEPS.

(1) MAXIMUM ALLOWABLE PULLING TENSION OF THE GRIP THAT WILL NOT DAMAGE THE CABLE.

(2) MAXIMUM SIDEWALL PRESSURE OF DB 4'-0" RADIUS BEND (300 X 4 = 1,200).

(3) MAXIMUM SIDEWALL PRESSURE OF EB 4'-0" RADIUS BEND (1,250 X 4 = 5,000).

4. L_1 LIMITED BY VERTICAL PULLING FORCE UP CABLE POLE.

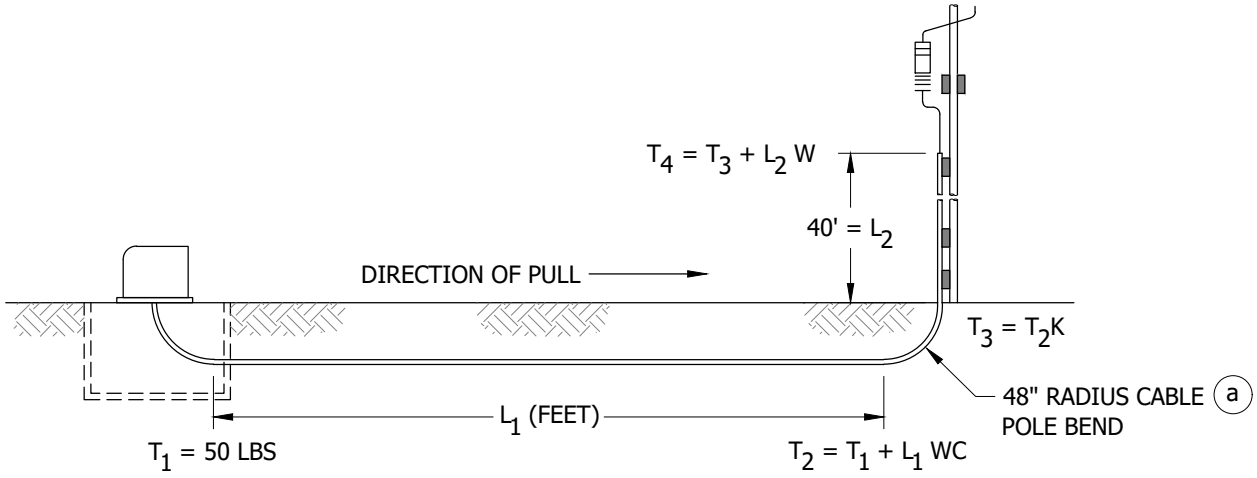

FIGURE 2 (M)

TABLE 5

MAXIMUM PULLING DISTANCE (FT)							
SIZE OF CABLE	**3-1/C #2 SOL TRXLPECN-PEJ 197656**	**2/0 TRXLPECN-PEJ 197648**	**350 TRXLPECN-PEJ 197650**	**750 COMP EAM-PEJ 197640**	**750 COMP EAM-PEJ COPPER 197642**	**1000 TRXLPECN-PEJ 197654**	**1000 TRXLPECN-PEJ COPPER 197652**
MAX. DISTANCE USING GRIP (M1) (1,000 LBS)	1,420	1,159	535	363	126	195	63
MAX. DISTANCE USING EYE (M2) DB (1,200 LBS)	--	--	670	461	173	256	96
MAX. DISTANCE USING EYE (M3) EB (5,000 LBS)	--	--	1,200 (A)	1,200 (A)	1,061	1,100 (A)	725

TABLE OF CONTENTS

© 1998 - 2023 San Diego Gas & Electric Company. All rights reserved. Removal of this copyright notice without permission is not permitted under law.

REV	CHANGE	DR	BY	DSN	APV	DATE	REV	CHANGE	DR	BY	DSN	APV	DATE
D	REVISION	-	-	JE	MJC	05/10/2010	G	TABLE UPDATE	ARC	ADW	GLW	KRG	05/08/2023
C	REVISION	-	-	JE	JJ	11/29/2005	F	MOVED FROM UG4003	EDM	JIK	-	-	09/16/2021
B	REVISION	-	-	JE	JJ	11/17/2005	E	REVISION	-	-	TR	DW	02/24/2014

INSTALLATION (CONT'D):

EXAMPLE:

(N) MAXIMUM DISTANCE FOR L1 WHEN THE PULL IS FROM STRUCTURE TO STRUCTURE OR PAD TO STRUCTURE. THIS ASSUMES NO HORIZONTAL BENDS OR SWEEPS.

(1) MAXIMUM ALLOWABLE PULLING TENSION OF THE GRIP THAT WILL NOT DAMAGE THE CABLE.

(2) MAXIMUM ALLOWABLE PULLING TENSION IS 5,600 LBS.

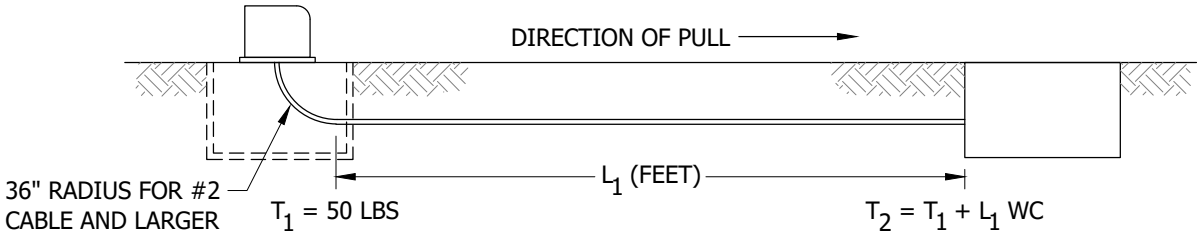

FIGURE 3 (N)
PREFERRED

TABLE 6

MAXIMUM PULLING DISTANCE (FT)							
SIZE OF CABLE	**3-1/C #2 SOL TRXLPECN-PEJ 197656**	**2/0 TRXLPECN-PEJ 197648**	**350 TRXLPECN-PEJ 197650**	**750 COMP EAM-PEJ 197640**	**750 COMP EAM-PEJ COPPER 197642**	**1000 TRXLPECN-PEJ 197654**	**1000 TRXLPECN-PEJ COPPER 197652**
MAX. DISTANCE USING GRIP (N1) (1,000 LBS)	2,080 (A)	1,895	950	688	328	432	232
MAX. DISTANCE USING EYE	--	--	1,200 (N2)	1,200	1,100	1,100	780 (A)

TABLE OF CONTENTS

© 1998 - 2023 San Diego Gas & Electric Company. All rights reserved. Removal of this copyright notice without permission is not permitted under law.

REV	CHANGE	DR	BY	DSN	APV	DATE	REV	CHANGE	DR	BY	DSN	APV	DATE
D	REVISION	-	-	JE	MJC	05/10/2010	G	TABLE UPDATE	ARC	ADW	GLW	KRG	05/08/2023
C	REVISION	-	-	JE	JJ	11/29/2005	F	MOVED FROM UG4003	EDM	JIK	-	-	09/16/2021
B	REVISION	-	-	JE	JJ	11/17/2005	E	REVISION	-	-	TR	DW	02/24/2014

INSTALLATION (CONT'D):

EXAMPLE:

(O) MAXIMUM DISTANCE FOR L_1 WHEN THE PULL IS FROM STRUCTURE TO PAD, OR PAD TO PAD. THIS ASSUMES NO HORIZONTAL BENDS OR SWEEPS.

(1) MAXIMUM SIDEWALL PRESSURE OF DB 3'-0" RADIUS BEND (300 X 3 = 900).

(2) MAXIMUM ALLOWABLE PULLING TENSION OF THE EYE THAT WILL NOT DAMAGE THE CABLE.

(3) MAXIMUM SIDEWALL PRESSURE OF EB 3'-0" RADIUS BEND (1,250 X 3 = 3,750).

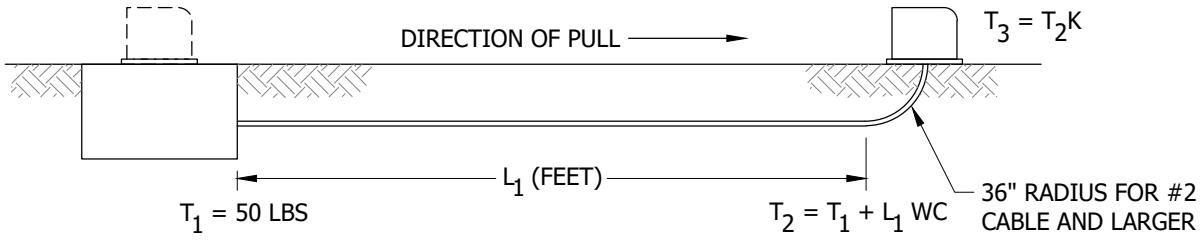

FIGURE 3 (O)
ALTERNATE
NOT PREFERRED DIRECTION

TABLE 7

MAXIMUM PULLING DISTANCE (FT)							
SIZE OF CABLE	**3-1/C #2 SOL TRXLPECN-PEJ 197656**	**2/0 TRXLPECN-PEJ 197648**	**350 TRXLPECN-PEJ 197650**	**750 COMP EAM-PEJ 197640**	**750 COMP EAM-PEJ COPPER 197642**	**1000 TRXLPECN-PEJ 197654**	**1000 TRXLPECN-PEJ COPPER 197652**
MAX. DISTANCE USING GRIP (O1) (900 LBS)	1,348	1,114	558	404	193	254	136
MAX. DISTANCE USING GRIP (O2) (1,000 LBS)	1,151	1,249	625	453	216	285	153
MAX. DISTANCE USING EYE (O3) (3,750 LBS)	--	--	1,200 (A)	1,200 (A)	858	1,100 (A)	608

NOTES:

(A) CONSTRAINED BY REEL FOOTAGE

BILL OF MATERIALS: NONE

REFERENCE:

(a) SEE UG4204.

TABLE OF CONTENTS

© 1998 - 2023 San Diego Gas & Electric Company. All rights reserved. Removal of this copyright notice without permission is not permitted under law.

REV	CHANGE	DR	BY	DSN	APV	DATE	REV	CHANGE	DR	BY	DSN	APV	DATE
D	REVISION	-	-	JE	MJC	05/10/2010	G	TABLE UPDATE	ARC	ADW	GLW	KRG	05/08/2023
C	REVISION	-	-	JE	JJ	11/29/2005	F	MOVED FROM UG4003	EDM	JIK	-	-	09/16/2021
B	REVISION	-	-	JE	JJ	11/17/2005	E	REVISION	-	-	TR	DW	02/24/2014

SCOPE: THIS STANDARD LISTS PROPER CABLE PULLING GRIPS AND CABLE PULLING EYES TO BE USED FOR PULLING UNDERGROUND CABLE.

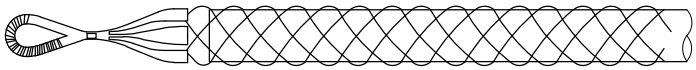

FIGURE 1
CABLE PULLING GRIPS

TABLE 1

CABLE PULLING GRIPS							
CONDUCTOR SIZE AWG/KCMIL	**CABLE TYPE**	**CONDUCTOR TYPE**	**U-NO "REF."**	**GRIP RANGE**	**GRIP STYLE**	**KELLUMS PART NUMBER**	**STOCK NUMBER**
SECONDARY CABLES							
2 - #8	--	--	U10.011	1/2" - 5/8"	SHORT	033-03-001	S393370
2 - #2 & 1 - #4	--	--	U10.02	3/4" - 1"	SHORT	033-03-003	S393371
2 - 1/0 & 1 - #2	--	--	U10.04	1" - 1 1/4"	SHORT	033-03-004	S393372
2 - 3/0 & 1 - 1/0	--	--	U10.06	1" - 1 1/4"	SHORT	033-03-004	S393372
2 - 3/0 & 1 - 1/0	--	--	U10.062	1 1/4" - 1 1/2"	SHORT	033-03-005	S393373
2 - 350 & 1 - 3/0	--	--	U10.08	1 1/2" - 2"	STD	033-03-024	S393472
3 - 350 & 1 - 3/0	--	--	U10.082	1 1/2" - 2"	STD	033-03-024	S393472
2 - 500 & 1 - 350	--	--	U10.092	2" - 2 1/2"	STD	033-03-025	S393504
3 - 1000 & 1 - 750	--	--	U10.095	3 1/2" - 4"	STD	033-03-028	S393552
PRIMARY CABLES							
1/C #2 SOL	XLPECN-PEJ	AL	U12.041	3/4" - 1"	SHORT	033-03-033	S393371
2 - 1/C #2 SOL	XLPECN-PEJ		U12.042	3/4" - 1"	STD	--	--
3 - 1/C #2 SOL	XLPECN-PEJ		U12.043	2" - 2 1/2"	STD	033-03-025	S393504
3 - 1/C 2/0 STR	XLPECN-PEJ		U12.061	2" - 2 1/2"	STD	033-03-025	S393504
3 - 1/C 350 STR	XLPECN-PEJ		U12.08	2 1/2" - 3"	STD	033-03-026	S393536
3 - 1/C 750 STR	EPR-PEJ		U13.1	3 1/2" - 4"	STD	033-03-028	S393552
3 - 1/C 1000 STR	XLPECN-PEJ		U12.096	3 1/2" - 4"	STD	033-03-028	S393552
3 - 1/C 1000 STR	XLPECN-PEJ	CU	U13.5	3 1/2" - 4"	STD	033-03-026	S393552

INSTALLATION: NONE

BILL OF MATERIALS: NONE

NOTES: NONE

REFERENCE: NONE

© 1998 - 2021 San Diego Gas & Electric Company. All rights reserved. Removal of this copyright notice without permission is not permitted under law.

REV	CHANGE	DR	BY	DSN	APV	DATE	REV	CHANGE	DR	BY	DSN	APV	DATE
C	REVISION	-	-	JE	JJ	11/29/2005	F	MOVED FROM UG4003	EDM	JIK	-	-	09/16/2021
B	REVISION	-	-	JE	JJ	11/17/2005	E	REVISION	-	-	TR	DW	02/24/2014
A	REVISION	-	-	AS	VCR	01/01/2000	D	REVISION	-	-	JE	MJC	05/10/2010

X Indicates Latest Revision | Completely Revised | New Page | Information Removed

TABLE OF CONTENTS

SCOPE: THIS STANDARD SHOWS THE CABLE PULLING EYES.

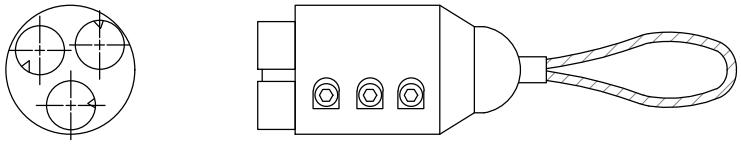

END VIEW SIDE VIEW

FIGURE 1
CABLE PULLING EYES

TABLE 1

PRIMARY CABLE PULLING EYES			
CONDUCTOR SIZE (AWG/KCMIL)	**CABLE TYPE** (A)	**U-NO "REF."**	**ENSLEY PART NUMBER** (B)
3-350	XLPECN-PEJ	U12.08	14-E11
3-1/C 1000 STR	XLPECN-PEJ	U12.096	14-E7
		U13.5	

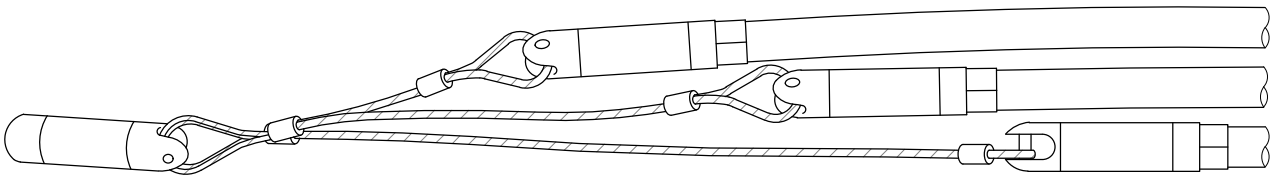

FIGURE 2

TABLE 2

THREE CONDUCTOR PULLING EYE			
CONDUCTOR SIZE (AWG/KCMIL)	**CABLE TYPE**	**U-NO "REF."**	**PART NUMBER**
3-1/C 1000 STR	XLPECN-PEJ	U12.097	CONTACT STANDARDS FOR INFORMATION

INSTALLATION:

(A) CABLE PULLING EYES SHALL NOT BE USED TO PULL SECONDARY CABLE.

(B) ENSLEY 3 CONDUCTOR PULLING EYE NO LONGER COMMERCIALLY AVAILABLE.

BILL OF MATERIALS: NONE

NOTES: NONE

REFERENCE:

a. SEE UG4005 FOR PROPER APPLICATION OF CABLE PULLING EYE.

b. SEE CONSTRUCTION MANAGEMENT STANDARD PRACTICES MANUAL, PRACTICE NUMBER 215 FOR INSTALLATION PRACTICES FOR THE PULLING EYE.

© 1998 - 2021 San Diego Gas & Electric Company. All rights reserved. Removal of this copyright notice without permission is not permitted under law.

REV	CHANGE	DR	BY	DSN	APV	DATE	REV	CHANGE	DR	BY	DSN	APV	DATE
C	REVISION	-	-	JE	JJ	11/29/2005	F	MOVED FROM UG4003	EDM	JIK	-	-	09/16/2021
B	REVISION	-	-	JE	JJ	11/17/2005	E	REVISION	-	-	TR	DW	02/24/2014
A	REVISION	-	-	AS	VCR	01/01/2000	D	REVISION	-	-	JE	MJC	05/10/2010

SCOPE: PROVIDE MINIMUM BENDING RADII FOR U.G. ALUMINUM AND COPPER CABLE TO INSURE INTEGRITY OF INSULATION SYSTEM.

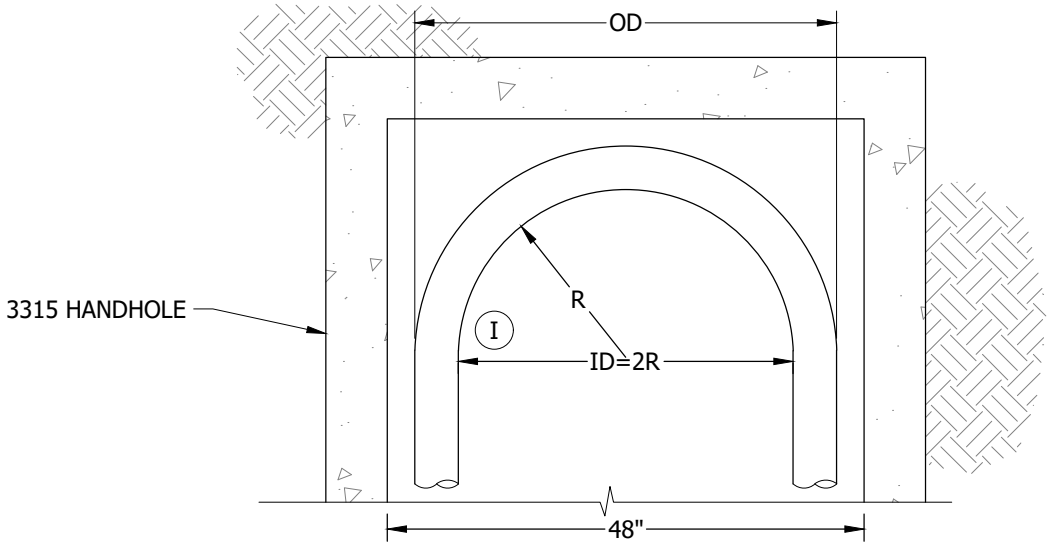

FIGURE 1 (A)

TABLE 1

MINIMUM BENDING RADIUS R (IN) (I)		
CABLE SIZE	**ONE CONDUCTOR (IN) (II)**	**TRIPLEX (IN)**
2 AL	6 1/4	15 1/4
2/0 AL	7	17 1/2
350 AL	8 3/4	21 3/4
750 AL	11	27 3/4
1000 AL	12	30 1/4
750 COMP AL	9 3/4	24 1/4
750 COMP CU	9 3/4	24 1/4
1000 CU	16	30 1/4

TABLE 2

JACKETED CABLE DIAMETER		
CABLE TYPE	**CABLE SIZE**	**DIAMETER (IN)**
1/C	#2	1.008
	#2/0	1.153
	350	1.438
	750 COMP	1.600
	750	1.832
	1000	1.997
TRIPLEXED	#2	2.172
	#2/0	2.485
	350	3.099
	750 COMP	3.448
	750	3.948
	1000	4.304

INSTALLATION:

EXAMPLE:

(A) 2/0 TRIPLEX (JACKETED) IN 3315 HANDHOLE

OD = (2)(R)+(2)(CABLE DIA) = MINIMUM OUTSIDE DIAMETER

=(2)(17 1/2")+(2)(2.485)

=39.97

BILL OF MATERIALS: NONE

NOTES:

(I) RADIUS IS TO INSIDE BEND, NOT FROM CENTERLINE TO CENTERLINE. SEE FIGURE 1.

(II) ONE CONDUCTOR ALSO APPLIES TO INDIVIDUAL TRIPLEXED CABLES WHEN THEY ARE UNTRIPLEXED.

REFERENCE: NONE

© 1998 - 2021 San Diego Gas & Electric Company. All rights reserved. Removal of this copyright notice without permission is not permitted under law.

REV	CHANGE	DR	BY	DSN	APV	DATE	REV	CHANGE	DR	BY	DSN	APV	DATE
C							F						
B	MOVED FROM UG4004	EDM	JIK	-	-	09/16/2021	E						
A	REVISION	-	-	JE	MJC	09/07/2010	D						

X Indicates Latest Revision | Completely Revised | New Page | Information Removed

SDG&E ELECTRIC UNDERGROUND CONSTRUCTION STANDARDS

SHEET 1 OF 1

MINIMUM BENDING RADIUS FOR U.G. ALUMINUM CABLES/COPPER CABLES

UG4008.1

TABLE OF CONTENTS

SCOPE: THIS STANDARD SHOWS CABLE PULLING COMPOUND USED WHEN PULLING SECONDARY AND PRIMARY CABLES INTO CONDUIT.

INSTALLATION:

A. ALWAYS USE COMPOUND ON PRIMARY JACKETED OR SECONDARY CABLE DURING CABLE PULLING FOR THE PROTECTION OF CABLE JACKETING AND TO REDUCE FRICTION.

B. COMPOUND IS NOT TO BE CONSIDERED DURING DESIGN PROCESS TO ALLOW A LONGER PULL THAN PERMITTED OTHERWISE.

C. APPLY COMPOUND DIRECTLY ONTO CABLE(S) AS IT IS ENTERING CONDUIT. FRONT END PACKS (LUBRICANT IN PLASTIC BAGS) ARE TO BE PLACED INTO THE CONDUIT DIRECTLY IN FRONT OF THE CABLE PRIOR TO CABLE PULLING. FOLLOW INSTRUCTIONS ON PACKAGE.

BILL OF MATERIALS:

ITEM	DESCRIPTION	QUANTITY	STANDARD PAGE	STOCK NUMBER	DESIGN UNITS
1	COMPOUND, CABLE PULLING, 1 CASE OF 6, 1/2 GALLON FRONT END PACKS	AS REQ'D	--	S247380	--
2	COMPOUND, CABLE PULLING, 5 GALLON	AS REQ'D	--	S247384	--

NOTES: NONE

REFERENCE: NONE

TABLE OF CONTENTS

© 1998 - 2021 San Diego Gas & Electric Company. All rights reserved. Removal of this copyright notice without permission is not permitted under law.

REV	CHANGE	DR	BY	DSN	APV	DATE	REV	CHANGE	DR	BY	DSN	APV	DATE
C							F						
B	MOVED FROM UG4006	EDM	JIK	-	-	09/16/2021	E						
A	REVISION	-	-	-	JLB/ROG	01/01/1993	D						

X Indicates Latest Revision | Completely Revised | New Page | Information Removed

SDG&E ELECTRIC UNDERGROUND CONSTRUCTION STANDARDS

SHEET 1 OF 1

CABLE PULLING COMPOUND

UG4010.1

SCOPE: THIS STANDARD ESTABLISHES CABLE TAIL LENGTH REQUIRED TO LOCATE AND TERMINATE UNDERGROUND CABLE IN EQUIPMENT OR ON CABLE POLES. IT PROVIDES THE NECESSARY ADDITIONAL CABLE FOOTAGE (CABLE TAIL LENGTH) TO THE TOTAL CABLE REQUIREMENTS.

DEFINITIONS:

- **CABLE TAIL LENGTH:** ADDITIONAL CABLE FOOTAGE REQUIRED BEYOND LATERAL DISTANCE TO ALLOW FOR THE TRENCH DEPTH (Y) AND CABLE TERMINATION (Z).
- **LATERAL DISTANCE:** HORIZONTAL SEPARATION (X) BETWEEN POINTS OF CABLE ENTRY INTO UNDERGROUND EQUIPMENT. THIS IS NORMALLY REPRESENTED AS TRENCH LENGTH BETWEEN ADJACENT PIECES OF EQUIPMENT.

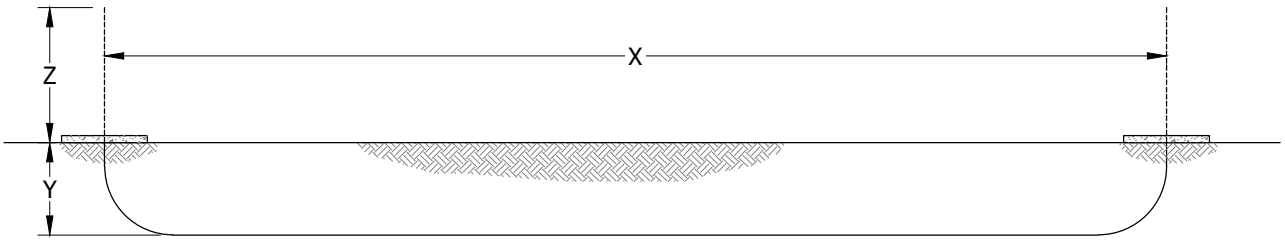

FIGURE 1

TABLE 1

STANDARD CABLE TAIL LENGTHS FOR CABLE POLES		
DESIGN CONFIGURATION	**ILLUSTRATIONS**	**CABLE TAIL LENGTHS (FT)**
PRIMARY CABLE SECONDARY CABLE	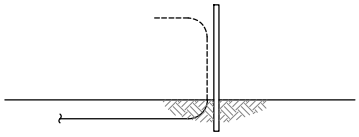	CALCULATION OF CABLE TAIL LENGTHS FOR CABLE POLES IS BASED ON THE MEASUREMENT FROM GROUND LINE TO TOP OF CONDUIT PLUS 8 FEET OF CABLE
STANDARD CABLE TAIL LENGTHS FOR PADMOUNTS		
SINGLE-PHASE TERMINATOR 3522	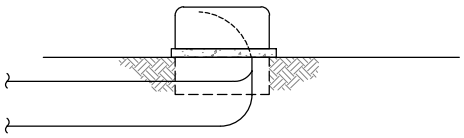	6 7 WITH HANDHOLE
THREE-PHASE TERMINATOR 3520 OR 3521	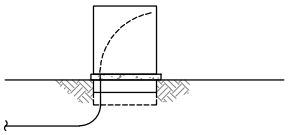	8
SINGLE-PHASE FUSE CABINET 3512	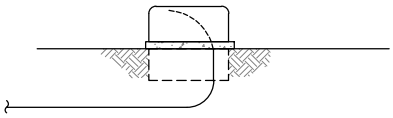	6

TABLE OF CONTENTS

© 1998 - 2021 San Diego Gas & Electric Company. All rights reserved. Removal of this copyright notice without permission is not permitted under law.

REV	CHANGE	DR	BY	DSN	APV	DATE	REV	CHANGE	DR	BY	DSN	APV	DATE
C	MOVED FROM UG4008	EDM	JIK	-	-	09/16/2021	F						
B	REVISION	-	-	JE	MC	08/26/2008	E						
A	REVISION	-	-	JLB	ROG	01/01/1990	D						

TABLE 1 (CONT'D)

STANDARD CABLE TAIL LENGTHS FOR CABLE POLES		
DESIGN CONFIGURATION	**ILLUSTRATIONS**	**CABLE TAIL LENGTHS (FT)**
THREE-PHASE FUSE CABINET 3513	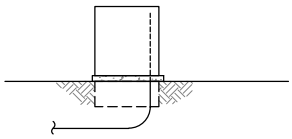	8
SINGLE-PHASE LIVEFRONT OR DEADFRONT TRANSFORMER 3711 OR 3712	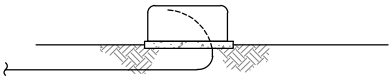	6
SINGLE-PHASE DEADFRONT, CLOSED DELTA TRANSFORMER BANK AND HANDHOLE 3714	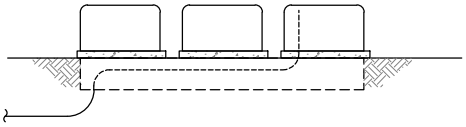	14
SINGLE-PHASE DEADFRONT, OPEN DELTA TRANSFORMER WITH HANDHOLE 3713	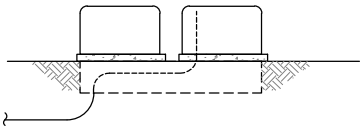	11
THREE-PHASE DEADFRONT TRANSFORMER	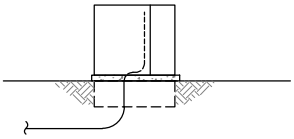	7
THREE-PHASE LIVEFRONT TRANSFORMER (225 TO 1,000KVA)	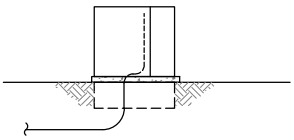	10
THREE-PHASE LIVEFRONT TRANSFORMER (1,500 TO 2,500KVA)	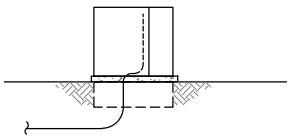	13
STANDARD CABLE TAIL LENGTHS FOR HANDHOLES		
3312	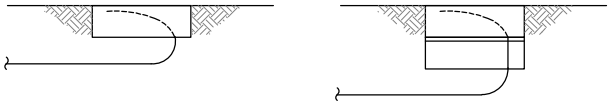	6
3312	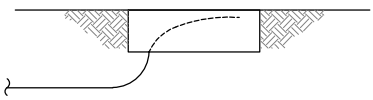	7 (DOUBLE BODY) 7

TABLE OF CONTENTS

© 1998 - 2021 San Diego Gas & Electric Company. All rights reserved. Removal of this copyright notice without permission is not permitted under law.

REV	CHANGE	DR	BY	DSN	APV	DATE	REV	CHANGE	DR	BY	DSN	APV	DATE
C	MOVED FROM UG4008	EDM	JIK	-	-	09/16/2021	F						
B	REVISION	-	-	JE	MC	08/26/2008	E						
A	REVISION	-	-	JLB	ROG	01/01/1990	D						

TABLE 1 (CONT'D)

STANDARD CABLE TAIL LENGTHS FOR HANDHOLES		
DESIGN CONFIGURATION	**ILLUSTRATIONS**	**CABLE TAIL LENGTHS (FT)**
3314	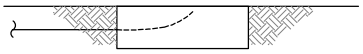	8
	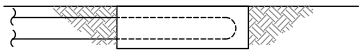	19
3314 WITH CABLE TAPS	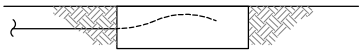	9
3315	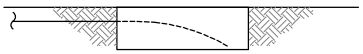	8
3315 WITH CABLE TAPS	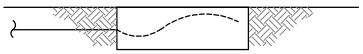	10
3315 WITH PAD MOUNTED SWITCH 3549	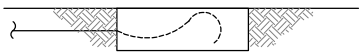	12
3316	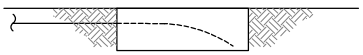	13
	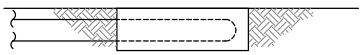	25
3316 WITH CABLE TAPS	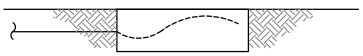	16
3316 WITH PAD MOUNTED SWITCH	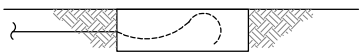	14

TABLE OF CONTENTS

© 1998 - 2021 San Diego Gas & Electric Company. All rights reserved. Removal of this copyright notice without permission is not permitted under law.

REV	CHANGE	DR	BY	DSN	APV	DATE	REV	CHANGE	DR	BY	DSN	APV	DATE
C	MOVED FROM UG4008	EDM	JIK	-	-	09/16/2021	F						
B	REVISION	-	-	JE	MC	08/26/2008	E						
A	REVISION	-	-	JLB	ROG	01/01/1990	D						

TABLE 1 (CONT'D)

STANDARD CABLE TAIL LENGTHS FOR HANDHOLES		
DESIGN CONFIGURATION	**ILLUSTRATIONS**	**CABLE TAIL LENGTHS (FT)**
3316 WITH SUBSURFACE SWITCH 3670	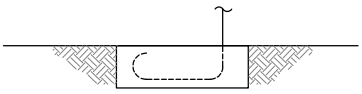	30
	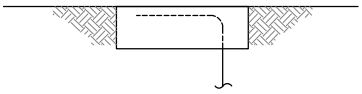	16
STANDARD CABLE TAIL LENGTHS FOR MANHOLES		
3322 EXISTING		25
	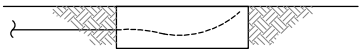	11
3322 #2/0 AND BELOW EXISTING	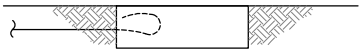	8
3322 350 KCMIL AND ABOVE EXISTING	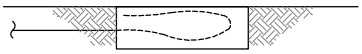	30
3322 WITH SWITCH EXISTING	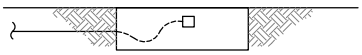	12
3322 WITH SWITCH EXISTING	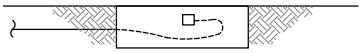	19
3324 14'-0"	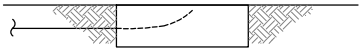	16

TABLE OF CONTENTS

© 1998 - 2021 San Diego Gas & Electric Company. All rights reserved. Removal of this copyright notice without permission is not permitted under law.

REV	CHANGE	DR	BY	DSN	APV	DATE	REV	CHANGE	DR	BY	DSN	APV	DATE
C	MOVED FROM UG4008	EDM	JIK	-	-	09/16/2021	F						
B	REVISION	-	-	JE	MC	08/26/2008	E						
A	REVISION	-	-	JLB	ROG	01/01/1990	D						

TABLE 1 (CONT'D)

STANDARD CABLE TAIL LENGTHS FOR MANHOLES		
DESIGN CONFIGURATION	**ILLUSTRATIONS**	**CABLE TAIL LENGTHS (FT)**
3324 14'-0" 2/0 AND BELOW	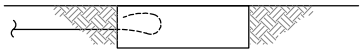	10
3324 20'-0"	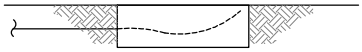	22
3324 20'-0" 350 KCMIL AND ABOVE EXISTING	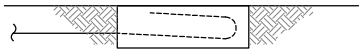	50
3324 14'-0" ONE SWITCH EXISTING	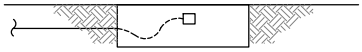	16
3324 14'-0" ONE SWITCH EXISTING	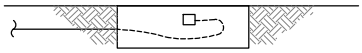	19
3324 20'-0" ONE SWITCH EXISTING	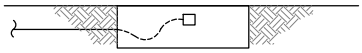	22
3324 20'-0" ONE SWITCH EXISTING	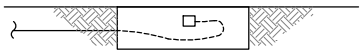	40
3324 20'-0" TWO SWITCHES	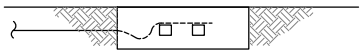	34
3324 26'-0" TWO SWITCHES EXISTING	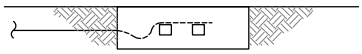	40
3324 26'-0" TWO SWITCHES EXISTING	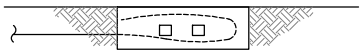	65

INSTALLATION: NONE

BILL OF MATERIALS: NONE

NOTES: NONE

REFERENCE: NONE

© 1998 - 2021 San Diego Gas & Electric Company. All rights reserved. Removal of this copyright notice without permission is not permitted under law.

REV	CHANGE	DR	BY	DSN	APV	DATE	REV	CHANGE	DR	BY	DSN	APV	DATE
C	MOVED FROM UG4008	EDM	JIK	-	-	09/16/2021	F						
B	REVISION	-	-	JE	MC	08/26/2008	E						
A	REVISION	-	-	JLB	ROG	01/01/1990	D						

TABLE OF CONTENTS

SCOPE: THIS STANDARD LISTS THE AMPACITY LIMITATIONS FOR UNDERGROUND CABLES IN NORMAL LOADING SITUATIONS.

INSTALLATION: NONE

BILL OF MATERIALS: NONE

NOTES:

I. THE TABLES PROVIDE THE ALLOWED CABLE AMPACITY ASSUMING ALL CABLES ARE EQUALLY LOADED, ARE THE SAME SIZE AND ARE SPACED 7 1/2 INCHES APART UNLESS OTHERWISE STATED. FOR A MORE ACCURATE DESIGN RATING OR EMERGENCY OVERLOAD RATING, CONTACT DISTRICT ENGINEERING OR DESIGN PLANNING.

ALUMINUM CABLES

II. 15KV ALUMINUM CABLE, EB CONDUIT (CONCRETE ENCASED). AMPACITIES ARE PER RUN (FOR EACH PHASE).

TABLE 1

AMPACITY LIMITATIONS													
CABLE SIZE	CONCRETE ENCASED CONDUIT SIZE (IN)	NUMBER OF CONDUCTORS (1/C)	NUMBER OF RUNS, XLPE						NUMBER OF RUNS, HMWPE				
			1	2	3	4	5	6	2	3	4	5	6
1000	5	3	--	580	530	490	460	430	--	--	--	--	--
750	5	3	--	500	455	425	395	375	--	--	--	--	--
350	5	3	--	320	300	280	260	250	--	--	--	--	--
2/0	5	3	--	175	160	155	145	140	155	145	140	130	125
#2	5	3	--	130	120	110	105	100	115	105	100	95	90
#2	5	1	--	135	130	125	120	115	120	115	110	105	100

III. 15KV ALUMINUM CABLE, DB CONDUIT (DIRECT BURIED). AMPACITIES ARE PER RUN (FOR EACH PHASE).

TABLE 2

AMPACITY LIMITATIONS														
CABLE SIZE	DIRECT BURIED CONDUIT SIZE (IN)	NUMBER OF CONDUCTORS (1/C)	NUMBER OF RUNS, XLPE						NUMBER OF RUNS, HMWPE					
			1	2	3	4	5	6	1	2	3	4	5	6
1000	5	3	620	--	--	--	--	--	--	--	--	--	--	--
750	5	3	530	--	--	--	--	--	--	--	--	--	--	--
350	5	3	340	--	--	--	--	--	--	--	--	--	--	--
2/0	4	3	170	160 (IX)	150 (IX)	145	140	130	155	140	135	130	125	120
#2	4	3	125	115 (IX)	110 (IX)	100	95	90	110	100	95	90	90	85
#2	2	1	130	120 (IX)	115 (IX)	115	110	105	115	110	105	105	100	95

© 1998 - 2021 San Diego Gas & Electric Company. All rights reserved. Removal of this copyright notice without permission is not permitted under law.

REV	CHANGE	DR	BY	DSN	APV	DATE	REV	CHANGE	DR	BY	DSN	APV	DATE
C							F						
B	MOVED FROM UG4011	EDM	JIK	-	-	09/16/2021	E						
A	REVISION	-	-	JLB	ROG	01/01/1992	D						

X Indicates Latest Revision | Completely Revised | New Page | Information Removed

NOTES (CONT'D):

IV. 600V SECONDARY ALUMINUM CABLE, DB CONDUIT (DIRECT BURIED). TOTAL AMPACITY FOR EACH PHASE (WITH 7 1/2 INCHES CENTERLINE TO CENTERLINE SPACING BETWEEN CONDUITS).

TABLE 3

AMPACITY LIMITATIONS													
CABLE SIZE	DIRECT BURIED CONDUIT SIZE (IN)	NUMBER OF CONDUCTORS (1/C)	NUMBER OF RUNS										
			1	2	3	4	5	6	7	8	9	10	11	12
1000	5	3	605	1,104	1,527	1,892	2,335	2,526	2,821	3,080	3,339	3,550	3,707	3,828
500	4	3	397	736	1,029	1,288	1,595	1,746	1,953	2,144	2,313	2,470	2,607	2,712
350	3	2	318	600	852	1,076	1,285	1,482	1,673	1,840	2,016	2,160	2,266	2,376
350	3	3	313	586	822	1,036	1,230	1,416	1,589	1,760	1,908	2,040	2,145	2,232
3/0	2	2	202	386	552	704	875	984	1,113	1,232	1,250	1,440	1,518	1,608
3/0	3	3	199	376	534	676	810	936	1,057	1,160	1,269	1,350	1,419	1,500
1/0	2	2	152	292	420	536	645	750	854	944	1,044	1,130	1,188	1,248
#2	2	2	113	218	315	404	490	570	651	720	792	860	913	960
#8	1	1	47	92	135	176	215	252	287	320	306	380	407	432

V. 600V SECONDARY ALUMINUM CABLE, DB CONDUIT (DIRECT BURIED). TOTAL AMPACITY FOR EACH PHASE (WITHOUT 7 1/2 INCHES CENTERLINE TO CENTERLINE SPACING BETWEEN CONDUITS).

TABLE 4

AMPACITY LIMITATIONS						
CABLE SIZE	DIRECT BURIED CONDUIT SIZE (IN)	NUMBER OF CONDUCTORS (1/C)	NUMBER OF RUNS			
			1	2	3	4
1000	5	3	--	1,092	1,476	1,848
500	4	3	--	724	996	1,244
350	3	2	--	588	816	1,036
350	3	3	--	572	789	992
3/0	2	2	--	376	531	664
3/0	3	3	--	370	516	644
1/0	2	2	--	287	405	506
#2	2	2	--	214	303	384
#8	1	1	--	92	132	168

TABLE OF CONTENTS

© 1998 - 2021 San Diego Gas & Electric Company. All rights reserved. Removal of this copyright notice without permission is not permitted under law.

REV	CHANGE	DR	BY	DSN	APV	DATE	REV	CHANGE	DR	BY	DSN	APV	DATE
C							F						
B	MOVED FROM UG4011	EDM	JIK	-	-	09/16/2021	E						
A	REVISION	-	-	JLB	ROG	01/01/1992	D						

X Indicates Latest Revision | Completely Revised | New Page | Information Removed

NOTES (CONT'D):

COPPER CABLES

VI. 15KV COPPER CABLE, EB CONDUIT (CONCRETE ENCASED). AMPACITIES ARE PER RUN (FOR EACH PHASE).

TABLE 5

AMPACITY LIMITATIONS								
CABLE SIZE	CONCRETE ENCASED CONDUIT SIZE (IN)	NUMBER OF CONDUCTORS (1/C)	NUMBER OF RUNS					
			1	2	3	4	5	6
1000 (PILC)	4	3/C	--	580	535	495	455	435
500 (PILC)	3	3/C	--	395	370	345	325	310
500 (PECN) (VIII)	5	3	--	450	410	390	365	340
4/0 (VIII)	5	3	--	275	255	240	225	220
#2 (VIII)	4	3	--	130	125	120	115	110
#2 (VIII)	4	1	--	155	150	145	140	135

VII. 15KV COPPER CABLE, DB CONDUIT (DIRECT BURIED). AMPACITIES ARE PER RUN (FOR EACH PHASE).

TABLE 6

AMPACITY LIMITATIONS								
CABLE SIZE	DIRECT BURIED CONDUIT SIZE (IN)	NUMBER OF CONDUCTORS (1/C)	NUMBER OF RUNS					
			1	2	3	4	5	6
1000 (PILC)	4	3/C	615	--	--	--	--	--
500 (PILC)	3	3/C	420	--	--	--	--	--
500 (PECN) (VIII)	5	3	470	--	--	--	--	--
4/0 (VIII)	5	3	285	--	--	--	--	--
#2 (VIII)	3	3	145	135 (IX)	125 (IX)	120	115	105
#2 (VIII)	3	1	175	165 (IX)	155 (IX)	145	140	130

(VIII) NO LONGER PURCHASED.

(IX) CABLE AMPACITY WITHOUT 7 1/2-INCH CENTERLINE TO CENTERLINE SPACING BETWEEN CONDUITS.

REFERENCE:

a. SEE DM5521 FOR FEEDER CABLE AMPACITIES BASED ON THERMAL LOADING LIMITS.

b. SEE DM5522 FOR CABLE AMPACITY PROGRAM.

© 1998 - 2021 San Diego Gas & Electric Company. All rights reserved. Removal of this copyright notice without permission is not permitted under law.

REV	CHANGE	DR	BY	DSN	APV	DATE	REV	CHANGE	DR	BY	DSN	APV	DATE
C							F						
B	MOVED FROM UG4011	EDM	JIK	-	-	09/16/2021	E						
A	REVISION	-	-	JLB	ROG	01/01/1992	D						

X Indicates Latest Revision | Completely Revised | New Page | Information Removed

PAGE	SUBJECT
4106	ALUMINUM CONDUCTOR PREPARATION FOR TERMINATIONS
4108	INSTRUCTIONS FOR SEALING JACKETED CABLE
4109	CABLE END SEALS
4110	LOADBREAK ELBOW - PRIMARY NEUTRAL TERMINATION
4111	OUTDOOR CABLE TERMINALS FOR POLYETHYLENE CABLES
4121	LIVEFRONT CABLE TERMINATIONS, POLYETHYLENE CABLES (NEW CABLES)
4127	15KV CABLE PREPARATION FOR SUBSTATION METAL-CLAD SWITCHGEAR
4147	750 COMPACT EAM TO 500 PILC SPLICE
4148	CONDUCTOR PILC ADAPTER FOR USE WITH 600A ELBOW TEE'S
4167	SLIP-FIT CONNECTORS
4168	LAY-IN SECONDARY CONNECTORS
4169	SECONDARY EXTENSION PLATE FOR PAD-MOUNT TRANSFORMER
4170	600V SECONDARY BOLTED CONNECTION AT TRANSFORMER OR BUS
4171	TRANSFORMER TERMINAL AND BUS COMPRESSION TERMINALS FOR ALUMINUM CONDUCTORS
4172	STACKING ADAPTERS
4173	PIN ADAPTERS
4174	COMPRESSION AND TERMINAL COMPRESSION CONNECTORS
4175	0-600V CONNECTORS FOR #8 THROUGH 500 KCMIL ALUMINUM OR COPPER CONDUCTORS & HANDHOLE INSTALLATION
4176	CONCENTRIC NEUTRAL/COMPRESSION CONNECTOR APPLICATION CHART
4177	CABLE HANGERS AND ACCESSORIES
4178	HEAVY DUTY NON-METALLIC CABLE RACK
4179	12KV, 200A CONNECTOR ASSEMBLIES IDENTIFICATION CHART
4180	12KV, 200A PREMOLDED SPLICE AND CONNECTOR ASSEMBLIES - IDENTIFICATION CHART
4181	12KV, 200 AND 600A CONNECTOR ASSEMBLIES, CONNECTORS, SPLICES, ACCESSORIES & DESIGN UNITS IDENTIFICATION CHART
4182	12KV, 600/200A SPLICES, CONNECTORS AND ACCESSORIES
4184	VAULT STRETCHER CONNECTOR, DEADBREAK
4185	600A EXTENSION SPLICE
4186	12KV 600 TO 200A JUNCTION
4187	CAM-LINK OPERABLE 600A CONNECTOR
4188	600A T EXTENSION
4189	BUSHING 15K R-800 DOUBLE INTERFACE
4190	LOADBREAK ELBOW CONNECTOR - 12,000V AND BELOW
4191	200A 6930V LOADBREAK 6.9KV, 7.2KV, OR 12KV FUSED ELBOW CONNECTOR
4192	200A 15KV LOADBREAK ELBOW EXTENSION
4193	200A LOADBREAK CABLE RACK
4195	200A LOADBREAK ACCESSORIES, 12KV
4196	200A DEADBREAK CONNECTORS, 12KV
4197	200A DEADBREAK ACCESSORIES, 12KV
4198	N-JUNCTION CLEER 600A 25KV & SQUARE CLEER 600A 25KV

MAIN TABLE OF CONTENTS

REV	CHANGE	DRWN	BY	CHKD	APVD	DATE
L	UPDATING 4147	NV5	EJA	JAS	JAS	12/09/2024
K	ADDED 4189	EDM	ADW	JAS	KRG	11/18/2024
J	REVISED TO 3D FORMAT	NV5	JIK	-	-	05/07/2024

© 1998 - 2024 San Diego Gas and Electric Company. All rights reserved. Removal of this copyright notice without permission is not permitted under law.

SDG&E ELECTRIC UNDERGROUND CONSTRUCTION STANDARDS

TERMINATIONS, SPLICING CONNECTIONS
TABLE OF CONTENTS

SCALE: NOT TO SCALE

DRAWING NO:	SHEET:
UG4101.1	1 OF 1

X Indicates Latest Revision | Completely Revised | New Page | Information Removed

SCOPE: THIS STANDARD DESCRIBES INSTRUCTIONS FOR INSTALLING ALUMINUM CONNECTORS.

ATTENTION:

* DO NOT POSITION ALUMINUM CONDUCTOR BELOW COPPER TO PREVENT COPPER SALTS FROM RUNNING ONTO ALUMINUM CONDUCTOR.

INSTALLATION:

A. COMPRESSION CONNECTION - WHERE A CONNECTOR IS COMPRESSED ONTO A CONDUCTOR. (a)
   1. WIRE BRUSH THE CONDUCTOR(S) TO CLEAN OFF THE OXIDATION.
   2. USE CONNECTOR PREFILLED WITH INHIBITOR BY MANUFACTURER.
   3. CRIMP WITH PROPER DIE AND PROPER NUMBER OF INDENTS.

B. BOLTED CONNECTION - WHERE A CONNECTOR IS BOLTED TO A CONDUCTOR OR FLAT TERMINAL PAD. A BOLTED CONNECTOR REQUIRES CARE WHEN INSTALLING FOR RELIABILITY: (a)
   1. WIRE BRUSH THE CONDUCTOR(S), BOLTED CONNECTOR (UNLESS PREINHIBITED) AND FLAT PADS WITH INHIBITOR (STOCK NUMBER S247200(X)). THE INTENT IS TO WIRE BRUSH/INHIBIT ALL MATING SURFACES, ALUMINUM AND COPPER, TO PREVENT DAMAGE TO ALUMINUM FROM CORROSION IN BOLTED JOINT.
   2. BOLT WITH PROPER HARDWARE SILICON BRONZE STAINLESS STEEL FASTENERS FROM SDG&E STOCK (FLAT ROUND WASHERS, HEX HEAD NUTS, CAP SCREWS) AND BELLEVILLE WASHERS. TORQUE STAINLESS STEEL FASTENERS AS FOLLOWS:
      3/8-INCH = 25 FT. LB.
      1/2-INCH = 40 FT. LB.

C. USE TRANSITION PLATE IF BOLTED TO UNTINNED COPPER FLAT PAD. (b)

BILL OF MATERIALS: NONE

NOTES:

I. **COMPRESSED AND BOLTED ALUMINUM CONNECTORS**:
   a. THE INSTALLATION OF ALUMINUM CONDUCTORS HAS ALWAYS REQUIRED MORE CARE THAN COPPER, DUE TO THE OXIDIZING AND COLD FLOW CHARACTERISTICS OF ALUMINUM WHICH CAN CAUSE PREMATURE CONNECTOR FAILURE IF NOT PROPERLY INSTALLED.

(X) THIS ITEM IS EXEMPT

REFERENCE:

(a) SEE UG4121, UG4171, UG4172, UG4173, UG4182, UG4190, AND UG4196 FOR CABLE TERMINATIONS/CONNECTIONS.
(b) SEE UG4168 FOR LAY-IN SECONDARY CONNECTORS.

TABLE OF CONTENTS

REV	CHANGE	DRWN	BY	CHKD	APVD	DATE
C	REVISED TO 3D FORMAT	NV5	JIK	ADW	JAS	11/08/2024
B	FORMATTING	EDM	JIK	-	-	06/02/2020
A	REVISION	-	-	-	RSW/VCR	08/31/2000

SDGE

SDG&E ELECTRIC UNDERGROUND CONSTRUCTION STANDARDS

ALUMINUM CONDUCTOR PREPARATION FOR TERMINATIONS

SCALE: NOT TO SCALE

DRAWING NO: UG4106.1

SHEET: 1 OF 1

© 1998 - 2024 San Diego Gas and Electric Company. All rights reserved. Removal of this copyright notice without permission is not permitted under law.

X Indicates Latest Revision | Completely Revised | New Page | X Information Removed

SCOPE: THIS STANDARD SHOWS METHODS OF SEALING JACKETED CONCENTRIC NEUTRAL TYPE CABLES WHEN TERMINATING FOR SUBSURFACE OR ABOVE GROUND INSTALLATION APPLICATIONS. ALSO SHOWN ARE MEASUREMENTS OF CONCENTRIC NEUTRAL TERMINATIONS FROM PREMOLDED COMPONENTS/COLD SHRINK OR PORCELAIN POTHEADS.

TABLE 1

ITEM	DESCRIPTION	QUANTITY	STOCK NUMBER
1	ELEC-TRO CUT OR EQUIVALENT (80 GRIT)	AS REQ'D	S239682
2	ELEC-TRO CUT OR EQUIVALENT (180 GRIT)	AS REQ'D	S239684
3	AQUA-SEAL OR EQUIVALENT	AS REQ'D	S442976
4	GLASS TAPE, 1/2"	AS REQ'D	S720256
5	VINYL PLASTIC TAPE, 3/4"	AS REQ'D	S720580
6	SLEEVES, HEAT SHRINK (4-2/0 SIZE)	AS REQ'D	S777984
7	SLEEVES, HEAT SHRINK (350 SIZE)	AS REQ'D	S778016
8	SLEEVES, HEAT SHRINK (750-1000 SIZE)	AS REQ'D	S778020

INSTALLATION:

SUBSURFACE INSTALLATION:

(A) SCORE AND CLEAN A MINIMUM OF 2 INCHES, THE CONCENTRIC NEUTRAL JACKET WITH ELEC-TRO CUT CLOTH BEFORE REMOVING THE JACKETING.

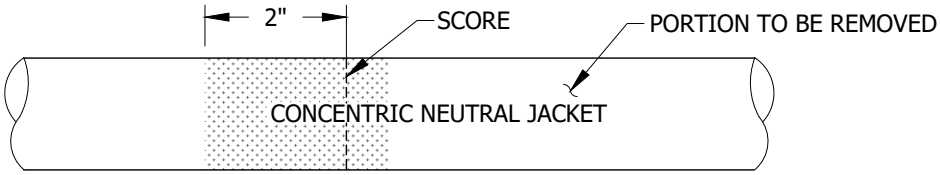

FIGURE 1 (A)

(B) REMOVE CONCENTRIC NEUTRAL JACKET AS REQUIRED.

(C) PULL THE CONCENTRIC NEUTRAL WIRES BACK AND AWAY FROM THE SEMICONDUCTING INSULATION SHIELD.

(D) CLEAN THE SEMICONDUCTING MATERIAL FOR A MINIMUM OF 2 1/2 INCHES NEXT TO THE CONCENTRIC NEUTRAL JACKET WITH ELEC-TRO CUT CLOTH. **DO NOT USE SOLVENT IN THIS AREA.**

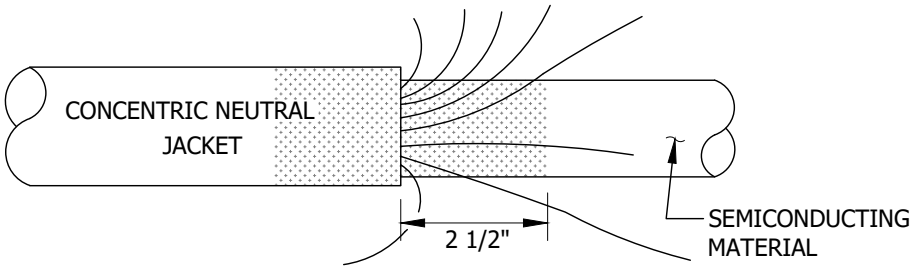

FIGURE 2 (B) (C) (D)

© 1998 - 2020 San Diego Gas & Electric Company. All rights reserved. Removal of this copyright notice without permission is not permitted under law.

REV	CHANGE	DR	BY	DSN	APV	DATE	REV	CHANGE	DR	BY	DSN	APV	DATE
C	REVISION	-	-	-	RSW/RDJ	1/1/1996	F						
B	REVISION	-	-	-	JLB/RDJ	1/1/1993	E	FORMATTING	EDM	JIK	-	-	06/02/2020
A	REVISION	-	-	-	JLB/RDJ	1/1/1992	D	REVISION	-	-	-	TR/MC	8/26/2008

X Indicates Latest Revision | Completely Revised | New Page | Information Removed

SDG&E ELECTRIC UNDEGROUND CONSTRUCTION STANDARDS

INSTRUCTIONS FOR SEALING JACKETED CABLE

UG4108.1

TABLE OF CONTENTS

INSTALLATION (CONT'D):

(E) APPLY A 2 INCH WIDE STRIP OF SEALING COMPOUND OVER THE SEMICONDUCTING MATERIAL NEXT TO THE CONCENTRIC NEUTRAL JACKET.

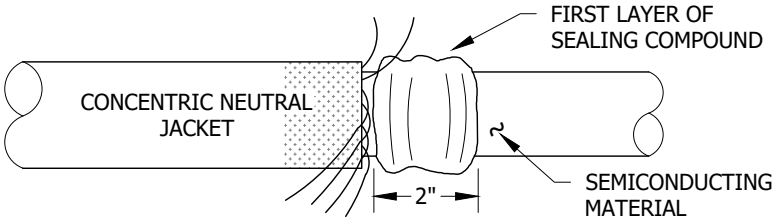

FIGURE 3 (E)

(F) BEND CONCENTRIC NEUTRAL WIRES BACK INTO PLACE AROUND THE CABLE AND PRESS THEM INTO THE SEALING COMPOUND.

(G) APPLY A SECOND 2 INCH WIDE LAYER OF SEALING COMPOUND. 1 INCH OF THIS STRIP WILL GO OVER THE CONCENTRIC NEUTRAL JACKET AND 1 INCH OVER THE CONCENTRIC NEUTRAL WIRES & A PORTION OF THE FIRST LAYER OF SEALING COMPOUND.

(H) AT THE EDGE OF THE FIRST LAYER OF SEALING COMPOUND TOWARD THE CUT END OF THE CABLE, APPLY 3 LAYERS OF 1/2 INCH GLASS TAPE OVER THE SEALING COMPOUND. APPLY 3 LAYERS OF 3/4 INCH VINYL PLASTIC TAPE OVER THE GLASS TAPE. DO NOT LEAVE ANY POCKETS UNDER THE TAPE FOR WATER TO COLLECT.

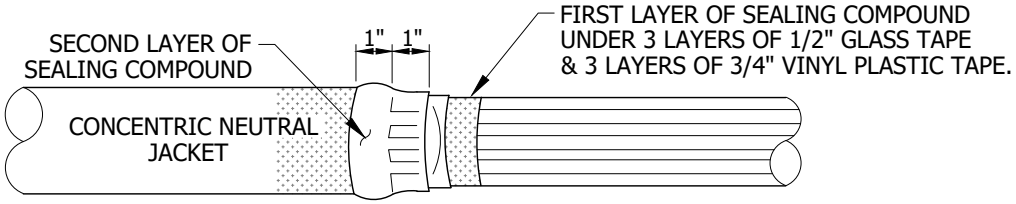

FIGURE 4 (F)(G)(H)

J. APPLY HEAT SHRINK TUBE OR VINYL PLASTIC TAPE AS DESCRIBED IN J1 AND J2.

(1) APPLY A HEAT SHRINK TUBE OVER THE SEALING COMPOUND, GLASS TAPE, VINYL PLASTIC TAPE & CONCENTRIC NEUTRAL JACKET. APPLY HEAT ALLOWING THE EDGE OF THE HEAT SHRINK TUBE TO BE CENTERED ON THE 3/4 INCH VINYL PLASTIC TAPE. DO NOT APPLY HEAT TO SEMI-CONDUCTING MATERIAL. DO NOT ALLOW HEAT SHRINK MATERIAL TO COME IN CONTACT WITH SEMI-CONDUCTING MATERIAL.

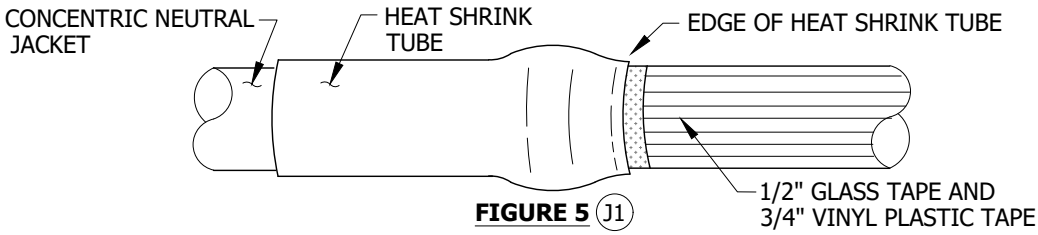

FIGURE 5 (J1)

(2) VINYL PLASTIC TAPE MAY BE USED INSTEAD OF A HEAT SHRINK TUBE DESCRIBED IN STEP (J1). APPLY 3 LAYERS OF VINYL PLASTIC TAPE COVERING AT LEAST HALF THE CONCENTRIC NEUTRAL BINDING TAPE AND EXTEND AT LEAST 2 INCHES OVER THE CONCENTRIC NEUTRAL JACKET.

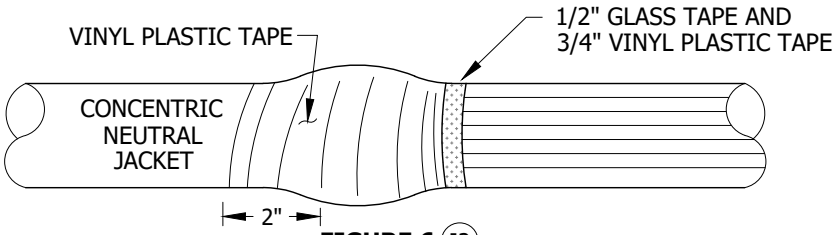

FIGURE 6 (J2)

© 1998 - 2020 San Diego Gas & Electric Company. All rights reserved. Removal of this copyright notice without permission is not permitted under law.

REV	CHANGE	DR	BY	DSN	APV	DATE	REV	CHANGE	DR	BY	DSN	APV	DATE
C	REVISION	-	-	-	RSW/RDJ	1/1/1996	F						
B	REVISION	-	-	-	JLB/RDJ	1/1/1993	E	FORMATTING	EDM	JIK	-	-	06/02/2020
A	REVISION	-	-	-	JLB/RDJ	1/1/1992	D	REVISION	-	-	-	TR/MC	8/26/2008

X Indicates Latest Revision | Completely Revised | New Page | Information Removed

SDG&E ELECTRIC UNDEGROUND CONSTRUCTION STANDARDS

INSTRUCTIONS FOR SEALING JACKETED CABLE

UG4108.2

TABLE OF CONTENTS

INSTALLATION (CONT'D):

ABOVE GROUND INSTALLATION:

(K) SCORE AND CLEAN A MINIMUM OF 2 INCHES, THE CONCENTRIC NEUTRAL JACKET WITH ELEC-TRO CUT CLOTH BEFORE REMOVING THE JACKETING.

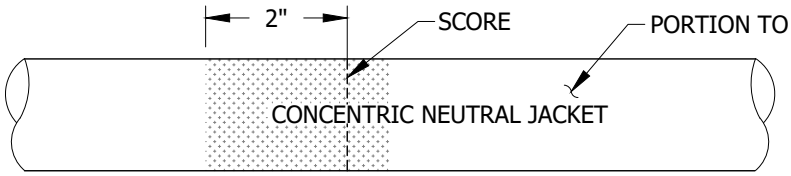

FIGURE 7 (K)

(L) REMOVE THE CONCENTRIC NEUTRAL JACKET AS REQUIRED.

(M) APPLY 3 LAYERS OF 1/2 INCH GLASS TAPE OVER THE CONCENTRIC NEUTRAL 1 INCH AWAY FROM THE CONCENTRIC NEUTRAL JACKET AND APPLY 3 LAYERS OF VINYL PLASTIC TAPE OVER THE GLASS TAPE FORMING A PERMANENT BINDING.

(N) BEND THE CONCENTRIC NEUTRAL OVER THE GLASS & VINYL TAPE AND TWIST TOGETHER.

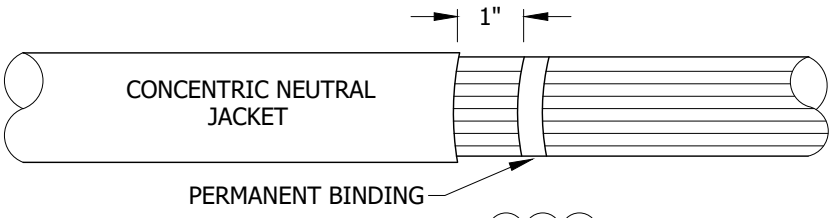

FIGURE 8 (L)(M)(N)

(O) APPLY A 2 INCH WIDE STRIP OF SEALING COMPOUND, 1 INCH OVER THE CONCENTRIC NEUTRAL JACKET AND 1 INCH OVER THE SEMICONDUCTING MATERIAL AND CONCENTRIC NEUTRALS. TIGHTLY PUSH THE SEALING COMPOUND AROUND THE CONCENTRIC NEUTRAL WIRES.

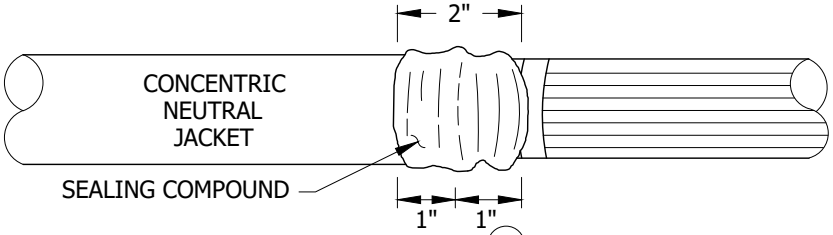

FIGURE 9 (O)

P. APPLY HEAT SHRINK TUBE OR VINYL PLASTIC TAPE AS DESCRIBED IN P1 AND P2.

(1) PRESS THE AQUA SEAL IN TO THE CONCENTRIC NEUTRAL WIRES TO THE EDGE OF THE CLOTH TAPE. PLACE THE EDGE OF THE HEAT SHRINK TUBE ON THE CLOTH TAPE, APPLY EVEN HEAT TO THE EDGE OF THE TUBE SO IT SHRINKS DOWN ON THE CLOTH TAPE. **AVOID** EXCESS HEAT ON THE SEMI CONDUCTING MATERIAL, AVOID HEAT SHRINK MATERIAL CONTACTING THE SEMI CONDUCTING MATERIAL. CONTINUE TO APPLY EVEN HEAT ON SHRINK TUBE MOVING TOWARD THE JACKET AND MAKE SURE THE TUBE SHRINKS ONTO THE SEALING COMPOUND AND THE OUTER CABLE JACKETING.

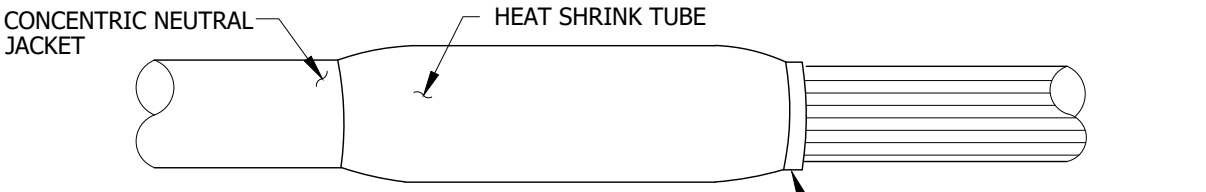

FIGURE 10 (P1)

© 1998 - 2020 San Diego Gas & Electric Company. All rights reserved. Removal of this copyright notice without permission is not permitted under law.

REV	CHANGE	DR	BY	DSN	APV	DATE	REV	CHANGE	DR	BY	DSN	APV	DATE
C	REVISION	-	-	-	RSW/RDJ	1/1/1996	F						
B	REVISION	-	-	-	JLB/RDJ	1/1/1993	E	FORMATTING	EDM	JIK	-	-	06/02/2020
A	REVISION	-	-	-	JLB/RDJ	1/1/1992	D	REVISION	-	-	-	TR/MC	8/26/2008

X Indicates Latest Revision | Completely Revised | New Page | Information Removed

TABLE OF CONTENTS

INSTALLATION (CONT'D):

(2) VINYL PLASTIC TAPE MAY BE USED INSTEAD OF A HEAT SHRINK TUBE DESCRIBED IN STEP (P1). APPLY 3 LAYERS OF VINYL PLASTIC TAPE COVERING THE SEALING COMPOUND AND EXTENDING AT LEAST 2 INCHES OVER THE CONCENTRIC NEUTRAL JACKET.

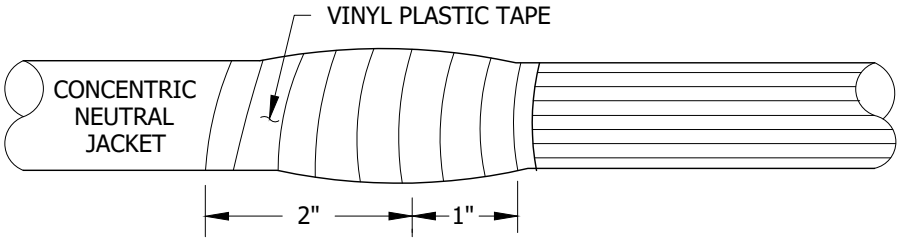

FIGURE 11 (P2)

BILL OF MATERIALS: NONE

NOTES:

(I) DUE TO THE FACT THAT OVERHEAD FAULT INDICATORS ARE REQUIRED ON CABLE POLES, THE 5 INCH SPACE BELOW THE TERMINAL (POTHEAD) IS NOT REQUIRED. FOLLOW THE MANUFACTURERS INSTRUCTIONS WHICH SEALS THE CABLE JACKET FROM MOISTURE.

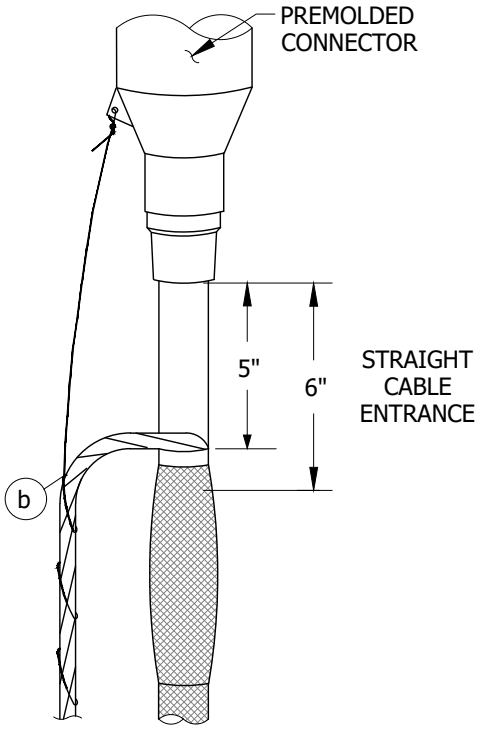

FIGURE 12
200 AMP & 600 AMP CABLE

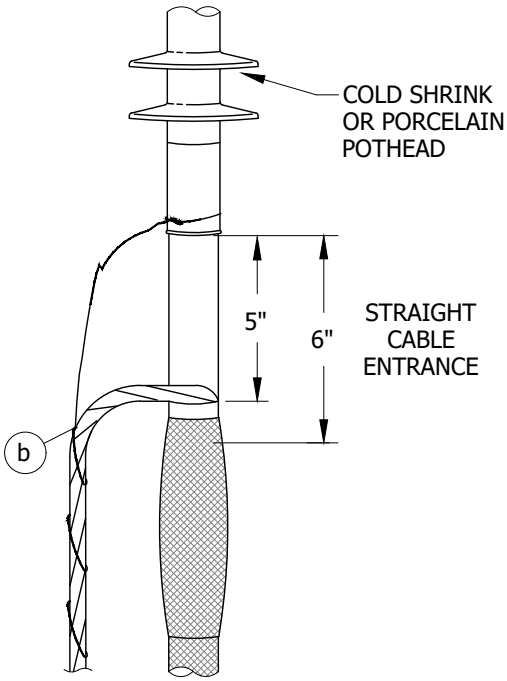

FIGURE 13
200 AMP & 600 AMP CABLE

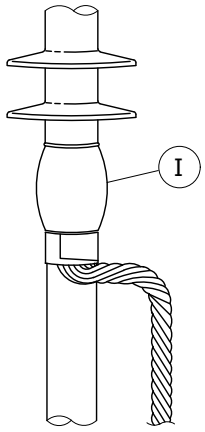

FIGURE 14
CABLE POLE APPLICATION
200 AMP & 600 AMP CABLE

REFERENCE:

a. SEE UG4176 FOR CONCENTRIC NEUTRAL WIRE SIZE CHART.

(b) SEE UG4525 FOR GROUNDING PREMOLDED CONNECTORS.

c. SEE UG4174 FOR COPPER COMPRESSION CONNECTORS.

© 1998 - 2020 San Diego Gas & Electric Company. All rights reserved. Removal of this copyright notice without permission is not permitted under law.

REV	CHANGE	DR	BY	DSN	APV	DATE	REV	CHANGE	DR	BY	DSN	APV	DATE
C	REVISION	-	-	-	RSW/RDJ	1/1/1996	F						
B	REVISION	-	-	-	JLB/RDJ	1/1/1993	E	FORMATTING	EDM	JIK	-	-	06/02/2020
A	REVISION	-	-	-	JLB/RDJ	1/1/1992	D	REVISION	-	-	-	TR/MC	8/26/2008

X Indicates Latest Revision | Completely Revised | New Page | Information Removed

TABLE OF CONTENTS

SCOPE: THIS STANDARD SHOWS THE APPROVED METHOD FOR SEALING CABLE ENDS TO PREVENT THE ENTRY OF WATER INTO 12KV CABLES.

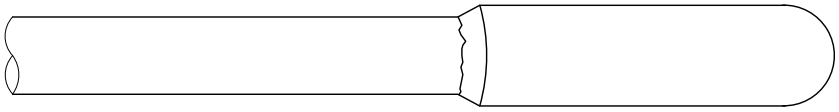

FIGURE 1
CABLE END SEAL

TABLE 1

CABLE END SEAL	
STOCK NUMBER	**CABLE SIZE**
S627240 X	#2, #2/0
S627242 X	350, 750
S627246 X	1000 KCMIL

INSTALLATION:

A. SEAL ENDS OF ALL PRIMARY CABLES IMMEDIATELY AFTER PULLING UNLESS YOU ARE GOING TO CONNECT CABLES RIGHT AWAY. THIS APPLIES TO CABLE ON REELS AND TO CABLE IN SUBSTRUCTURES. AS AN ADDITIONAL PRECAUTION, AFTER CABLES IN SUBSTRUCTURES HAVE BEEN SEALED, TIE THE ENDS UP AS HIGH AS POSSIBLE ABOVE THE FLOOR.

B. FOR CABLE POLE RUNS OF 1000 KCMIL CABLE AND FOR OTHER RUNS OF 1000 KCMIL CABLE, WHEN A FEEDER TUBE IS USED IT IS NECESSARY TO REMOVE THE CABLE JACKET BEYOND THE END OF THE PULLING GRIP (SEE FIGURE 2). IF THE ENSLEY CABLE EYE IS USED REFER TO STANDARD PRACTICE #215.

C. WHEN USING END CAPS OVER CONCENTRIC NEUTRALS, IT IS NECESSARY TO APPLY A PAD OF SEALING COMPOUND OVER THE END OF THE CABLE AND AT THE JACKET CUTBACK TO ENSURE AN ADEQUATE WATER SEAL (SEE FIGURES 3 AND 4).

D. PREPARE CABLE

1. SQUARE CUT CABLE.
2. THOROUGHLY CLEAN CABLE END FOR APPROXIMATELY SIX INCHES.

E. APPLY COLD SHRINK END CAP

1. SLIP END CAP OVER CABLE END AS FAR AS POSSIBLE.
2. PULL CORE COMPLETELY OUT OF END CAP. THE CAP WILL SHRINK AROUND THE CABLE.

F. REMOVAL

1. LIFT THE EDGE OF THE CAP AND SLICE THE MATERIAL ALONG THE LENGTH OF THE CAP.
2. PULL THE CAP OFF THE CABLE.

TABLE OF CONTENTS

© 1998 - 2020 San Diego Gas & Electric Company. All rights reserved. Removal of this copyright notice without permission is not permitted under law.

REV	CHANGE	DR	BY	DSN	APV	DATE	REV	CHANGE	DR	BY	DSN	APV	DATE
C	FORMATTING	EDM	JIK	-	-	06/02/2020	F						
B	REVISION	--	--	--	TR/JJ	7/28/2005	E						
A	REVISION	--	--	--	JLB/RDJ	1/1/1993	D						

INSTALLATION (CONT'D):

INSTALLATION INSTRUCTIONS FOR CABLE POLE RUNS AND WHEN FEEDER TUBE IS USED:

(G) PREPARE CABLES WITH STAGGERED JACKET CUTBACK.

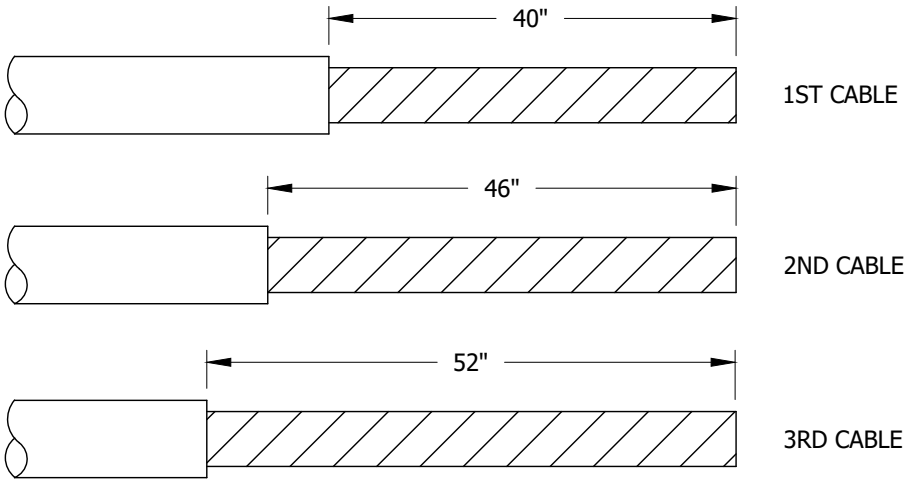

FIGURE 2 (G)
JACKET CUTBACK DIMENSIONS

(H) PLACE PAD OF SEALING COMPOUND OVER AND BACK ONE INCH ONTO END OF CABLE AND PLACE A ONE INCH BAND OF SEALING COMPOUND JUST AHEAD OF JACKET CUTOFF.

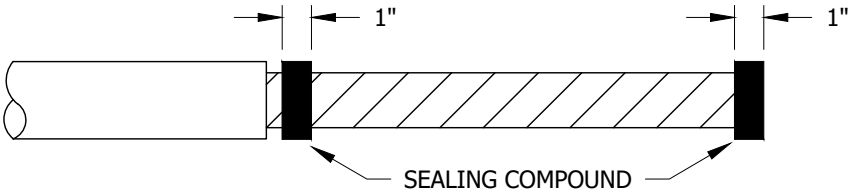

FIGURE 3 (H)

(J) INSTALL CABLE END SEAL OVER CABLE END AND ONE-HALF OF LARGE HEAT SHRINK TUBE (S778020) TO SEAL JACKET.

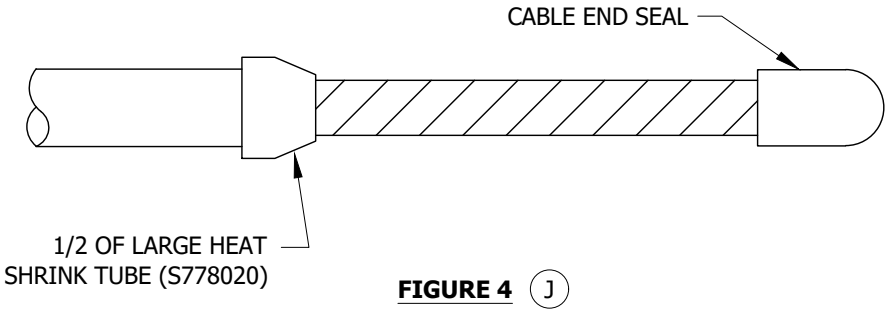

FIGURE 4 (J)

BILL OF MATERIALS: NONE

NOTES:

(X) THIS ITEM IS EXEMPT.

REFERENCE: NONE

© 1998 - 2020 San Diego Gas & Electric Company. All rights reserved. Removal of this copyright notice without permission is not permitted under law.

REV	CHANGE	DR	BY	DSN	APV	DATE	REV	CHANGE	DR	BY	DSN	APV	DATE
C	FORMATTING	EDM	JIK	-	-	06/02/2020	F						
B	REVISION	--	--	--	TR/JJ	7/28/2005	E						
A	REVISION	--	--	--	JLB/RDJ	1/1/1993	D						

X Indicates Latest Revision | Completely Revised | New Page | Information Removed

SDG&E ELECTRIC UNDERGROUND CONSTRUCTION STANDARDS

CABLE END SEALS

UG4109.2

TABLE OF CONTENTS

SCOPE: THIS STANDARD SHOWS THE PRIMARY NEUTRAL INSTALLATION FOR SUBSURFACE TRANSFORMERS FITTED WITH LOADBREAK ELBOWS.

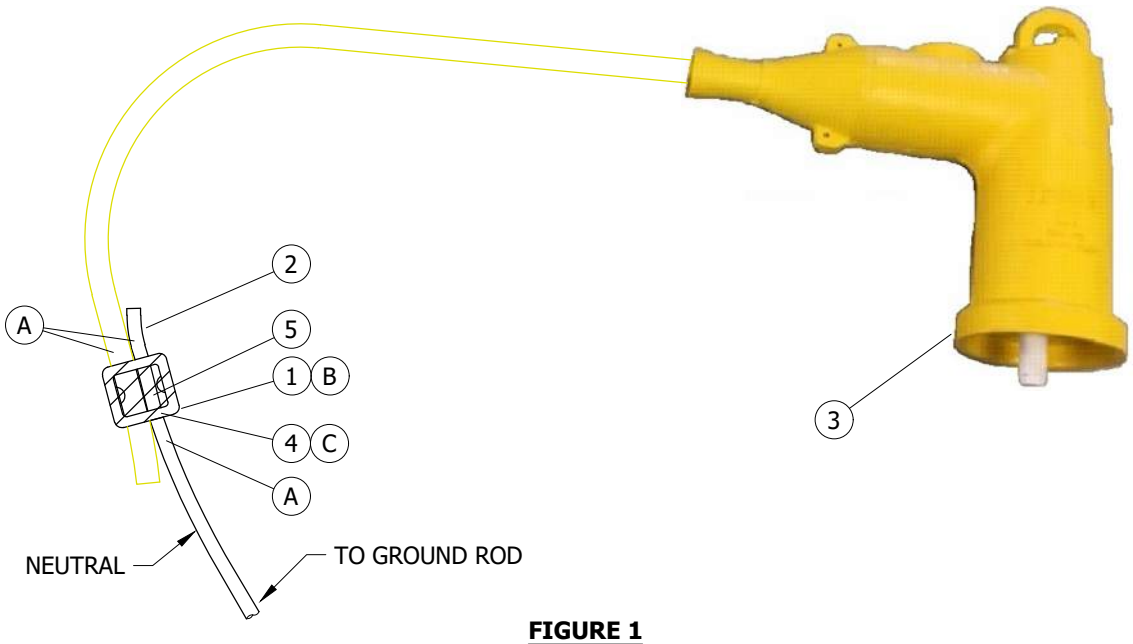

FIGURE 1

INSTALLATION:

(A) CLEAN SURFACE WITH SOLVENT
(B) TWO HALF LAP LAYERS
(C) THREE HALF LAP LAYERS

BILL OF MATERIALS:

ITEM	DESCRIPTION	QUANTITY	STANDARD PAGE	STOCK NUMBER	DESIGN UNITS
1	VINYL PLASTIC TAPE, 3/4"	AS REQ'D	--	S720580	--
2	#2 CU THW WIRE	AS REQ'D	--	S808162 (X)	--
3	ELBOW, GROUNDING, 1/0	1	4191	S603600	--
4	H.V. INSULATING TAPE, 3/4"	AS REQ'D	--	S720480	--
5	COMPRESSION CONNECTOR	1	4172	S257760	--

NOTES:

(X) THIS ITEM IS EXEMPT.

REFERENCE:

a. SEE FMO UG3799.205 AND FMO UG3799.206 FOR SUBSURFACE TRANSFORMERS.

TABLE OF CONTENTS

© 1998 - 2022 San Diego Gas & Electric Company. All rights reserved. Removal of this copyright notice without permission is not permitted under law.

REV	CHANGE	DR	BY	DSN	APV	DATE	REV	CHANGE	DR	BY	DSN	APV	DATE
C	DRAWING UPDATE	EDM	EJA	GLW	KRG	05/31/2022	F						
B	FIGURE UPDATE	EDM	EJA	GLW	CZH	06/02/2020	E						
A	REVISION	-	-	-	JLB/RDJ	01/01/1993	D						

X Indicates Latest Revision | Completely Revised | New Page | Information Removed

SDG&E ELECTRIC UNDERGROUND CONSTRUCTION STANDARDS

SHEET 1 OF 1

LOADBREAK ELBOW - PRIMARY NEUTRAL TERMINATION

UG4110.1

SCOPE: THIS STANDARD SHOWS CABLE TERMINALS USED FOR OUTDOOR PRIMARY CABLE TERMINATIONS.

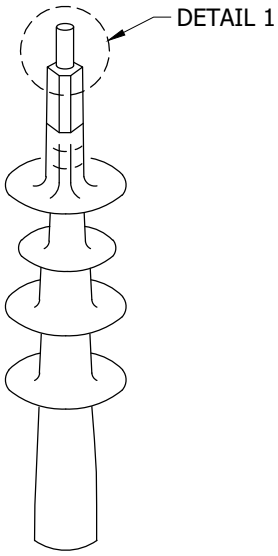

FIGURE 1
3M, JOSLYN, RAYCHEM

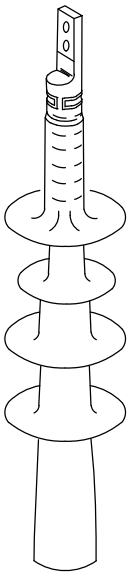

FIGURE 2
3M, JOSLYN, RAYCHEM (D)

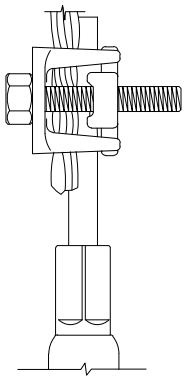

DETAIL 1

TABLE 1

CABLE POLYETHYLENE	TERMINAL		FIGURE NUMBER	AERIAL LUG CATALOG NUMBER/ STOCK NUMBER	COMPRESSION CONNECTOR		COMPRESSION DIE	DESIGN UNITS
	CATALOG NUMBER	STOCK NUMBER			CATALOG NUMBER	STOCK NUMBER		
2 SOL AL	5641 JPT15J1 TFT151E	S732918	1	-- (C)	8898-6	S729930	BG	CP-#2N
2/0 AL	5641 JPT15J1 TFT151E	S732918	1	-- (C)	X5U20-6	S729934	840	CP2/0N
350 KCMIL AL	5642 TFT-152E	S727140	1	S262336	PTB-350-2.5	S729938	316	CP350N
	5642 TFT-152E	S727140	2	--	AHL350	S728864	317	T350L
750 KCMIL COMP AL	5642 TFT-152E	S727140	1	S262432	PTL-750-2.5	S729940	301	CP750C
	5642 TFT-152E	S727140	2	--	CAL750NLP	S729280	301	T750L
1000 KCMIL AL	5644 JPT15J4	S727138	1	S262370 (X)	PTL-1000-2.5	S729944	301	C1000N
	5644 TFT-154E	S727138	2	--	CAL1000NLP	S729282	301	T1000L
1000 KCMIL CU	5644	S727138	2	--	--	S265850	P44ART	T1KLCU

TABLE OF CONTENTS

© 1998 - 2023 San Diego Gas & Electric Company. All rights reserved. Removal of this copyright notice without permission is not permitted under law.

REV	CHANGE	DR	BY	DSN	APV	DATE	REV	CHANGE	DR	BY	DSN	APV	DATE
C	REVISION	-	-	-	TR/JJ	07/14/2005	F	INSTALLATION UPDATE	EDM	EJA	EJA	KRG	08/30/2023
B	REVISION	-	-	-	TR/JJ	06/28/2005	E	EDITORIAL CHANGES	EDM	EIA	GLW	CZH	07/29/2021
A	REVISION	-	-	-	JCE/VCR	03/01/2002	D	FIGURE UPDATE	EDM	EJA	GLW	CZH	10/09/2020

INSTALLATION:

(A) SUPPLIED WITH CABLE TERMINAL KIT.

(B) FOR 350, 750 AND 1000 KCMIL CABLE POLE TERMINALS, INSTALL TOP PORTION OF COMPRESSION CONNECTOR IN BOTTOM POSITION OF THE 2-BOLT CONNECTOR (AERIAL LUG).

(C) AERIAL LUG NOT REQUIRED.

(D) FOR SUBSTATION APPLICATION

BILL OF MATERIALS: NONE

NOTES:

(X) THIS ITEM IS EXEMPT.

REFERENCE:

a. FOR CONTAMINATION DISTRICTS, SEE OH287UG3140.

b. FOR CABLE TERMINAL MOUNTING INFORMATION, SEE OH1407UG4207.

TABLE OF CONTENTS

© 1998 - 2023 San Diego Gas & Electric Company. All rights reserved. Removal of this copyright notice without permission is not permitted under law.

REV	CHANGE	DR	BY	DSN	APV	DATE	REV	CHANGE	DR	BY	DSN	APV	DATE
C	REVISION	-	-	-	TR/JJ	07/14/2005	F	INSTALLATION UPDATE	EDM	EJA	EJA	KRG	08/30/2023
B	REVISION	-	-	-	TR/JJ	06/28/2005	E	EDITORIAL CHANGES	EDM	EIA	GLW	CZH	07/29/2021
A	REVISION	-	-	-	JCE/VCR	03/01/2002	D	FIGURE UPDATE	EDM	EJA	GLW	CZH	10/09/2020

SCOPE: THIS STANDARD SHOWS LIVEFRONT TERMINATION ON HIGH VOLTAGE CABLE FOR EXISTING FACILITIES.

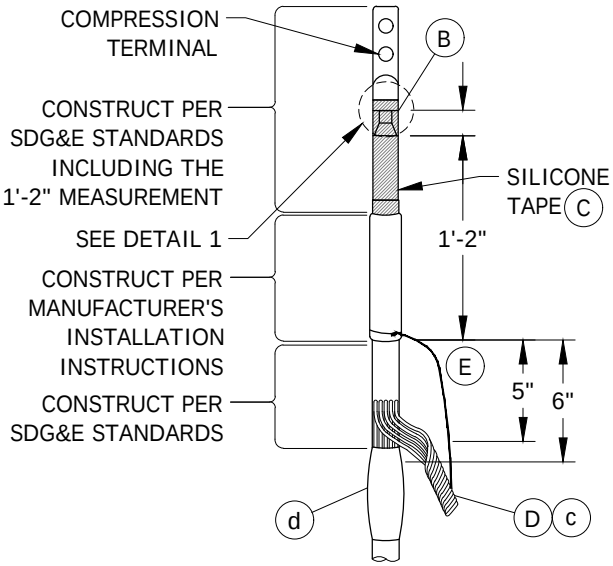

FIGURE 1

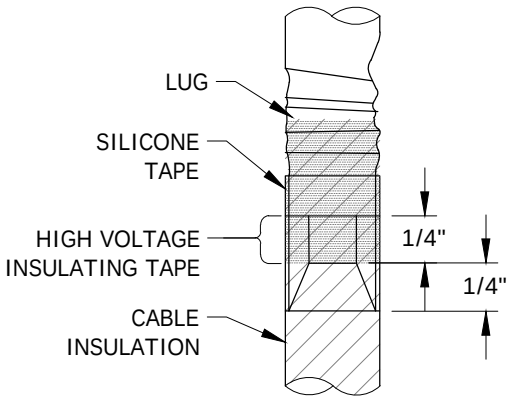

DETAIL 1

TABLE 1

AL 175 MIL XLPE CABLES				
CONDUCTOR SIZE/MATERIAL	COMPRESSION TERMINAL		STRESS RELIEF KIT	
	STOCK NUMBER	DESIGN UNITS	CATALOG NUMBER	STOCK NUMBER
#2 SOL AL	S728688	SC-#02	5671	S732978
#2/0 AL	S728696	SC-2/0		
350 KCMIL AL	S728864	SC-350	5672	S732972
750 KCMIL AL	S729280	SC-750		
1000 KCMIL AL	S729282	SC1000		

TABLE 2

CU 220 MIL HMWPE CABLES				
CONDUCTOR SIZE/MATERIAL	COMPRESSION TERMINAL		STRESS RELIEF KIT	
	STOCK NUMBER	DESIGN UNITS	CATALOG NUMBER	STOCK NUMBER
#4 CU	S259040	SC-#4C	5671	S732978
#2 CU	S259008	SC-#2C		
#4/0 CU	S729792	SC4/0C	5672	S732972
50 KCMIL CU	S729856	SC500C		
1000 KCMIL CU	S265850	SC-1KC		

INSTALLATION:

A. CONSTRUCT STRESS RELIEF KIT INSTALLATION AS SHOWN IN SKETCH. DESIGN UNIT INCLUDES COMPRESSION TERMINAL AND STRESS RELIEF KIT.

(B) BEVEL TOP EDGE OF CABLE INSULATION BACK 1/4". FOR ALUMINUM CABLES LEAVE 1/4" BARE CONDUCTOR BELOW COMPRESSION TERMINAL AND SEAL THE CABLE INSULATION TO THE TERMINAL WITH A MINIMUM OF THREE HALF-LAP LAYERS OF HIGH VOLTAGE INSULATING TAPE (STOCK NUMBER S720480). FOR COPPER CABLES LEAVE 1/2" GAP.

(C) USE MODERATE OR SLIGHT TENSION TO APPLY SILICONE TAPE (STOCK NUMBER S720384). HALF-LAP TAPE STARTING ABOUT 1/2" BELOW TOP OF STRESS RELIEF KIT AND ENDING 1/4 WAY UP THE LUG. DO NOT END TAPE INSIDE THE CRIMP OF THE COMPRESSION TERMINAL, BECAUSE IT MAY COLLECT MOISTURE.

(D) GROUND STRESS RELIEF KIT. USE A PIECE OF NO. 14 SOLID COPPER WIRE (STOCK NO. S812934) OR A SURPLUS PIECE OF CONCENTRIC NEUTRAL TAIL THAT IS LONG ENOUGH TO REACH THE NEAREST COMPRESSION CONNECTOR. DO NOT USE ANY CONCENTRIC NEUTRAL ATTACHED TO THE CABLE UNLESS THE CABLE IS 2/0 OR 2 SOLID TRIPLEX.

TABLE OF CONTENTS

©1998 - 2023 San Diego Gas & Electric Company. All rights reserved. Removal of this copyright notice without permission is not permitted under law.

REV	CHANGE	DR	BY	DSN	APV	DATE	REV	CHANGE	DR	BY	DSN	APV	DATE
C	TABLE UPDATE	GLC	MBL	JAS	KRG	11/28/2023	F						
B	FORMATTING	EDM	JIK	-	-	06/02/2020	E						
A	REVISION	-	-	-	JJ/TR	5/26/2005	D						

X Indicates Latest Revision | Completely Revised | New Page | Information Removed

SDG&E ELECTRIC UNDERGROUND CONSTRUCTION STANDARDS

LIVE FRONT CABLE TERMINATIONS,
POLYETHYLENE CABLES (NEW CABLES)

UG4121.1

INSTALLATION (CONT'D):

(E) FOR INSTALLATIONS IN EXISTING LIVE FRONT EQUIPMENT, INSTALL THE CONCENTRIC NEUTRAL AT THE SAME HEIGHT AS EXISTING CABLES AND DELETE THE 5 INCH MEASUREMENT.

BILL OF MATERIALS: NONE

NOTES: NONE

REFERENCE:

a. SEE UG4111 FOR OUTDOOR TERMINATIONS.

b. SEE UG4122 FOR INDOOR CABLE TERMINATIONS FOR EXISTING CABLES.

(c) SEE UG4525 FOR CONCENTRIC NEUTRAL TERMINATIONS AND GROUNDING PREMODELED CONNECTORS.

(d) SEE UG4108 FOR INSTRUCTIONS ON SEALING JACKETED CABLE AND CONCENTRIC NEUTRAL MEASUREMENTS FROM CONNECTORS.

e. SEE UG4199.203/UG4199.204 FOR LIVE FRONT CABLE TERMINATIONS ON "FIELD MAINTENANCE ONLY" CABLES.

TABLE OF CONTENTS

© 1998 - 2023 San Diego Gas & Electric Company. All rights reserved. Removal of this copyright notice without permission is not permitted under law.

REV	CHANGE	DR	BY	DSN	APV	DATE	REV	CHANGE	DR	BY	DSN	APV	DATE
C	TABLE UPDATE	GLC	MBL	JAS	KRG	11/28/2023	F						
B	FORMATTING	EDM	JIK	-	-	06/02/2020	E						
A	REVISION	-	-	-	JJ/TR	5/26/2005	D						

X Indicates Latest Revision | Completely Revised | New Page | Information Removed

SDG&E ELECTRIC UNDERGROUND CONSTRUCTION STANDARDS

LIVE FRONT CABLE TERMINATIONS,
POLYETHYLENE CABLES (NEW CABLES)

UG4121.2

SCOPE: THIS STANDARD SHOWS LIVEFRONT TERMINATION FOR SUBSTATION METAL-CLAD SWITCHGEAR.

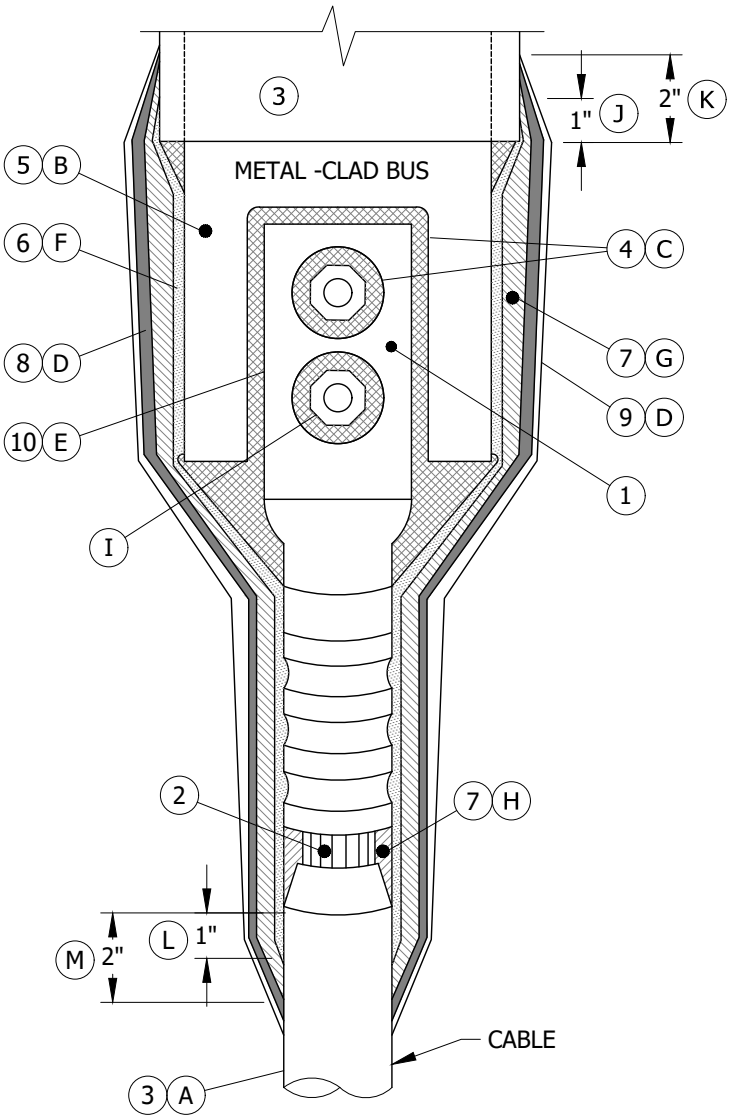

FIGURE 1

INSTALLATION:

A CLEAN SURFACE WITH SOLVENT.
B ONE LOOSELY APPLIED HALF-LAPPED LAYER.
C APPLY TO SHARP CORNERS.
D TWO HALF-LAPPED LAYERS.
E TRANSITION PLATE IS REQUIRED FOR ALL ALUMINUM INSTALLATIONS.
F FOUR HALF-LAPPED LAYERS.
G FOURTEEN HALF-LAPPED LAYERS.

© 1998 - 2020 San Diego Gas & Electric Company. All rights reserved. Removal of this copyright notice without permission is not permitted under law.

REV	CHANGE	DR	BY	DSN	APV	DATE	REV	CHANGE	DR	BY	DSN	APV	DATE
C							F						
B	FORMATTING	EDM	JIK	-	-	06/02/2020	E						
A	REVISION	-	-	-	JLB/RDJ	1/1/1994	D						

X Indicates Latest Revision | Completely Revised | New Page | Information Removed

SDG&E ELECTRIC UNDERGROUND CONSTRUCTION STANDARDS

15 KV CABLE PREPARATION FOR SUBSTATION METAL-CLAD SWITCHGEAR

UG4127.1

TABLE OF CONTENTS

INSTALLATION (CONT'D):

(H) AS REQUIRED TO FILL VOID.
(J) TERMINATE 3/4" VARNISH CAMBRIC TAPE 1" UP ONTO FACTORY INSULATION.
(K) TERMINATE HIGH VOLTAGE INSULATING TAPE 2" UP ONTO FACTORY INSULATION.
(L) TERMINATE 3/4" VARNISH CAMBRIC TAPE 1" BELOW BEVEL ON CABLE.
(M) TERMINATE HIGH VOLTAGE INSULATING TAPE 2" BELOW BEVEL ON CABLE.

BILL OF MATERIALS:

ITEM	DESCRIPTION	QUANTITY	STANDARD PAGE	STOCK NUMBER	DESIGN UNITS
1	COMPRESSION TERMINAL	-	4121	-	-
2	CONDUCTOR	-	-	-	-
3	FACTORY XLPE INSULATION	-	-	-	-
4	DUCT SIL	-	-	S247490 (X)	-
5	VARNISH CAMBRIC TAPE, 1 1/2"	-	-	S721056	-
6	VARNISH CAMBRIC TAPE, 3/4"	-	-	S721024	-
7	HIGH VOLTAGE INSULATING TAPE	-	-	S720480	-
8	VINYL PLASTIC TAPE	-	-	S720580	-
9	SILICONE TAPE, 1"	-	-	S720384	-
10	TRANSITION PLATE, ALUMINUM TO COPPER	-	4168	S543208	-

NOTES:

(I) ALL NUTS AND BOLTS INSTALLED IN SUBSTATIONS SHALL BE GALVANIZED.
(X) THIS ITEM IS EXEMPT.

REFERENCE: NONE

TABLE OF CONTENTS

© 1998 - 2020 San Diego Gas & Electric Company. All rights reserved. Removal of this copyright notice without permission is not permitted under law.

REV	CHANGE	DR	BY	DSN	APV	DATE	REV	CHANGE	DR	BY	DSN	APV	DATE
C							F						
B	FORMATTING	EDM	JIK	-	-	06/02/2020	E						
A	REVISION	-	-	-	JLB/RDJ	1/1/1994	D						

X Indicates Latest Revision | Completely Revised | New Page | Information Removed

SDG&E ELECTRIC UNDERGROUND CONSTRUCTION STANDARDS

15 KV CABLE PREPARATION FOR SUBSTATION METAL-CLAD SWITCHGEAR

UG4127.2

SCOPE: THIS STANDARD COVERS CONDUCTORS TO SPLICING OF 750 COMPACT EAM TO 500 PILC 15KV CONDUCTORS.

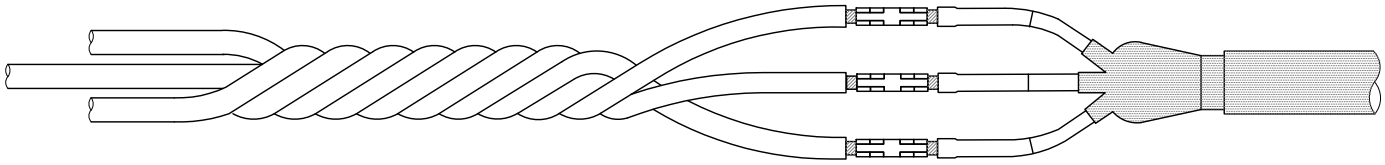

FIGURE 1
750C/500 SLEEVE
DIE 936 YRB 390304

TABLE 1

FIGURE 1		
MANUFACTURER TYCO NUMBER	**STOCK NUMBER**	**DESIGN UNIT**
HVS-T-15835S	-	-
SLEEVE 750-500AL-CU-AL UNDERGROUND CABLE	S652292 (X)	-

INSTALLATION:

A. CUT CABLES TO CORRECT LENGTH, INSTALL CABLE SUPPORTS, PREPARE CABLES FOR TERMINATION AND FOLLOW MANUFACTURER'S INSTRUCTIONS FOR APPLICATION.

BILL OF MATERIALS: NONE

NOTES:

I. IF THE FACILITY IS TOO SMALL FOR TERMINATION PULL THE PILC CABLE OUT TO THE NEXT LARGEST STRUCTURE.
(X) THIS ITEM IS EXEMPT.

REFERENCE:

a. SEE UG4011 FOR CABLE TAIL LENGTH REQUIREMENTS.
b. SEE UG4177 FOR CABLE HANGERS AND ACCESSORIES.

TABLE OF CONTENTS

© 1998 - 2024 San Diego Gas & Electric Company. All rights reserved. Removal of this copyright notice without permission is not permitted under law.

REV	CHANGE	DR	BY	DSN	APV	DATE	REV	CHANGE	DR	BY	DSN	APV	DATE
C	DRAWING UPDATE	NV5	EJA	JAS	JAS	12/09/2024	F						
B	FORMATTING	EDM	JIK	JES	CZH	06/02/2020	E						
A	REVISION	-	-	-	TR/JW	12/9/2005	D						

X Indicates Latest Revision | Completely Revised | New Page | Information Removed

SDG&E ELECTRIC UNDERGROUND CONSTRUCTION STANDARDS

750 COMPACT EAM TO 500 PILC SPLICE

UG4147.1

SCOPE: THIS STANDARD COVERS THE RE-TERMINATION OF 3 CONDUCTOR PILC TO 600 AMP ELBOW TEE CONNECTIONS. THIS TERMINATION IS DESIGNED FOR THE LIMITED SPACE TRANSITION FROM 500 KCMIL PILC CABLE TO MOLDED CONNECTIONS ON EPR-PEJ OR XLPECN-PEJ CABLES.

ATTENTION:

* SDG&E HAS NOT PURCHASED OR INSTALLED PAPER INSULATED LEAD COVERED CONDUCTORS IN THE PAST 10 YEARS. LEAD COVERED CONDUCTORS HAVE HAD A SUPERIOR LIFE SPAN BUT ENVIRONMENTAL ISSUES WITH LEAD AND SAFETY ISSUES HANDLING HOT COMPOUND FILLING AND HOT METAL HAVE CHANGED THE UTILITY INDUSTRY'S FOCUS TO POLYMER CABLES. THE LEAD COVERING CREATES OPERATIONAL AND GROUNDING PROBLEMS, AS WELL AS INCREASED TIME REQUIREMENTS FOR INSTALLATION AND TERMINATION. AS LOADS INCREASE AND RECONSTRUCTION OF THE AREAS THAT HAVE LEAD COVERED CONDUCTORS DECREASES, ALL RE-TERMINATION OF LEAD CABLES SHALL BE WITH COLD OR HEAT SHRINK PRODUCTS DETERMINED BY DISTRIBUTION ENGINEERING AND STANDARDS.

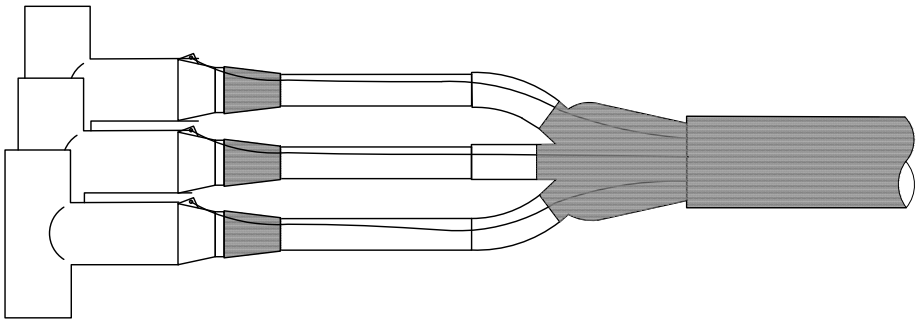

FIGURE 1

TABLE 1

FIGURE 1		
MANUFACTURER TYCO NUMBER	**STOCK NUMBER**	**DESIGN UNITS**
HVE-3-1593-SDG&E	S445870	500TRC
500 MCM LUG	S258700	SPD500

INSTALLATION:

A. CUT CABLES TO CORRECT LENGTH, INSTALL CABLE SUPPORTS, PREPARE CABLES FOR TERMINATION AND FOLLOW MANUFACTURER'S INSTRUCTIONS FOR APPLICATION.

BILL OF MATERIALS: NONE

NOTES:

I. IF THE FACILITY IS TOO SMALL FOR TERMINATION PULL THE PILC CABLE OUT TO THE NEXT LARGEST STRUCTURE.

REFERENCE:

a. CONNECTION APPLICATION STANDARDS: UG4181, UG4183, UG4184 COVER CONNECTIONS THAT MAY BE USED WITH THIS CABLE TERMINATION KIT.

TABLE OF CONTENTS

© 1998 - 2020 San Diego Gas & Electric Company. All rights reserved. Removal of this copyright notice without permission is not permitted under law.

REV	CHANGE	DR	BY	DSN	APV	DATE	REV	CHANGE	DR	BY	DSN	APV	DATE
C							F						
B	MOVED FROM UG4147	EDM	JIK	JES	CZH	06/02/2020	E						
A	REVISION	-	-	-	TR/JW	04/09/2006	D						

Indicates Latest Revision | Completely Revised X | New Page | Information Removed

SDG&E ELECTRIC UNDERGROUND CONSTRUCTION STANDARDS

3 CONDUCTOR PILC ADAPTER FOR USE WITH 600 AMP ELBOW TEE'S

UG4148.1

SCOPE: THIS STANDARD SHOWS SLIP-FIT CONNECTORS THAT ARE REQUIRED ON ALL NEW SINGLE-PHASE DEADFRONT TRANSFORMER LOW VOLTAGE SECONDARY INSTALLATIONS.

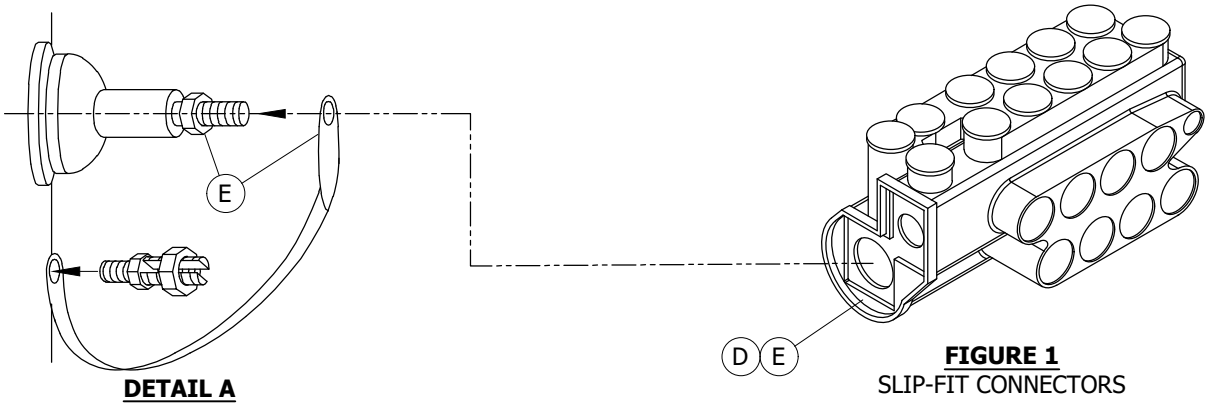

DETAIL A

FIGURE 1
SLIP-FIT CONNECTORS

TABLE 1

SLIP-FIT CONNECTORS (8-PORT)			
SINGLE-PHASE TRANSFORMER SIZE	**CABLE SIZE**	**STOCK NUMBER**	**DESIGN UNITS**
25 THRU 75 KVA (5/8" STUD)	#8 THRU 500 KCMIL	S269990	500-8SL
100 THRU 167 KVA (1" STUD)			

INSTALLATION:

A. CONNECTORS MAY BE USED FOR ALUMINUM OR COPPER CONDUCTORS BUT NEVER COMBINE COPPER AND ALUMINUM IN THE SAME PORT.

B. WHEN NECESSARY MULTIPLE CONDUCTORS PER PORT ARE ALLOWED.

C. CONNECTOR IS A SLIP FIT CONNECTION EVEN THOUGH THE TERMINAL IS THREADED.

(D) ON "PS" CONNECTORS, SLIDE CONNECTOR ONTO THE TRANSFORMER STUD, ANGLE CONNECTOR TO ALLOW A STRAIGHT, SMOOTH CABLE ENTRY AND TIGHTEN SET SCREW TO LOCK THE CONNECTOR IN PLACE. DO NOT OVER-TIGHTEN JAM NUT AGAINST CONNECTOR.

(E) ON THE NEUTRAL CONNECTOR, SLIDE THE GROUNDING STRAP ONTO THE TRANSFORMER STUD, THEN SLIDE THE CONNECTOR ALL THE WAY ONTO THE STUD, ANGLE CONNECTOR TO ALLOW A STRAIGHT, SMOOTH CABLE ENTRY, AND TIGHTEN THE SET SCREW TO LOCK CONNECTOR IN PLACE. WITHOUT OVER-TIGHTENING JAM NUT, SNUG GROUND STRAP ONTO CONNECTOR.

F. TO PREPARE CABLE, REMOVE INSULATION BY PENCILING, WIRE BRUSH CONDUCTOR AND APPLY INHIBITOR.

G. INSERT THE CONDUCTOR IN THE PORT AND TIGHTEN SET SCREW. CAUTION SHOULD BE EXERCISED TO ENSURE THAT NO STRANDS ARE EITHER SEVERED OR FORCED BACK OUT OF THE PORT WHEN TIGHTENING FIRMLY.

H. AFTER COMPLETING WORK ON THE SECONDARY CONNECTORS, MAKE SURE ALL CONNECTIONS ARE TIGHTENED FIRMLY.

BILL OF MATERIALS: NONE

NOTES:

(I) USE S270290 ONLY WHEN 500 KCMIL CABLES ARE BEING INSTALLED.

II. S/N S270290, S270296, S270296 WILL BE DEPLETED AND REPLACED WITH S269990.

REFERENCE: NONE

© 1998 - 2023 San Diego Gas & Electric Company. All rights reserved. Removal of this copyright notice without permission is not permitted under law.

REV	CHANGE	DR	BY	DSN	APV	DATE	REV	CHANGE	DR	BY	DSN	APV	DATE
C	REVISION	-	-	-	TR/MJC	12/13/2011	F	TABLE UPDATE	ARC	RSL	JES	KRG	03/09/2023
B	REVISION	-	-	-	MC/TR	04/29/2008	E	FIGURE UPDATE	EDM	EJA	GLW	CZH	07/28/2021
A	REVISION	-	-	-	JJ/TR	10/26/2006	D	FORMATTING	EDM	JIK	-	-	06/02/2020

TABLE OF CONTENTS

SCOPE: THIS STANDARD COVERS THE INSTALLATION OF LAY-IN SECONDARY TRANSFORMER CABLE CONNECTIONS FOR THREE PHASE TRANSFORMERS. THE LAY-IN CONNECTOR REPLACES THE STANDARD SECONDARY LUG APPLICATION FOR TRANSFORMERS. THE LAY-IN CONNECTOR CONDUCTOR RANGE IS 1/0 TO 1000 KCMIL FOR ALUMINUM AND COPPER CABLES.

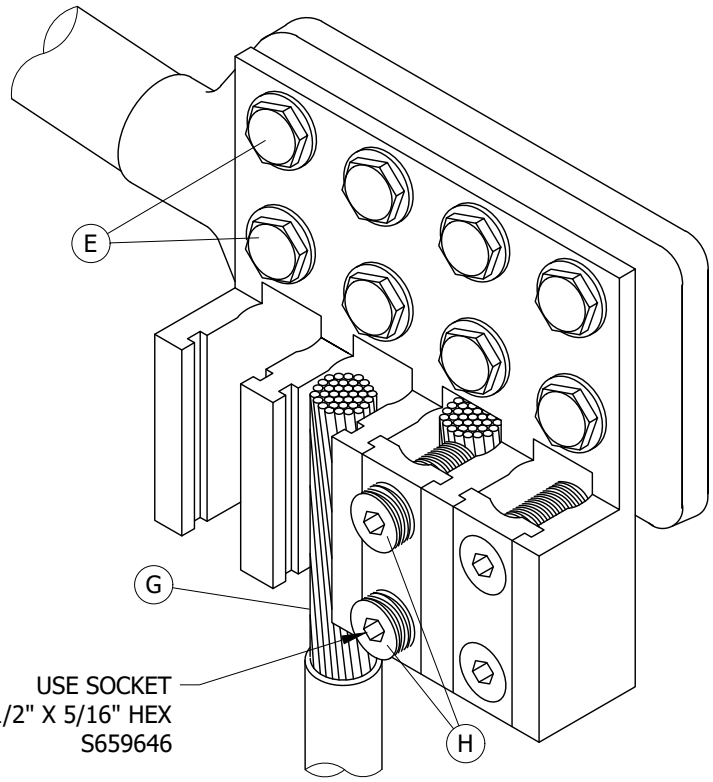

FIGURE 1
LAY-IN CONNECTOR (F)

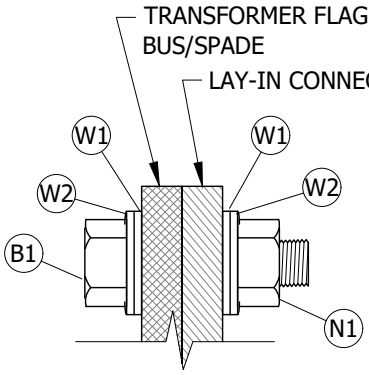

FIGURE 2
SINGLE CONNECTOR (D)

TABLE 1

HARDWARE	
ITEM	**DESCRIPTION**
B1	BOLT, 1/2" X , S.S.
N1	NUT, 1/2" BRONZE
W1	WASHER, 1/2", FLAT, S.S.
W2	WASHER, 1/2" BELLVILLE, S.S.

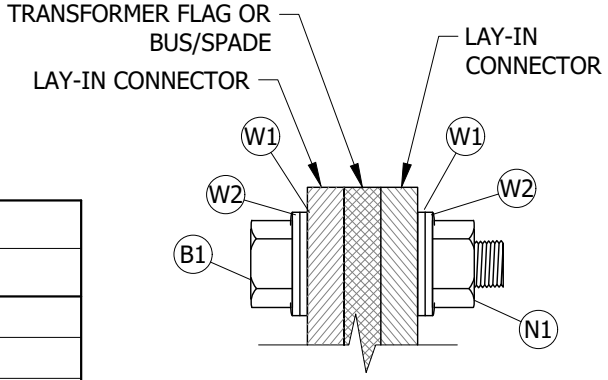

FIGURE 3
DOUBLE CONNECTOR (D)

TABLE OF CONTENTS

© 1998 - 2020 San Diego Gas & Electric Company. All rights reserved. Removal of this copyright notice without permission is not permitted under law.

REV	CHANGE	DR	BY	DSN	APV	DATE	REV	CHANGE	DR	BY	DSN	APV	DATE
C	REVISION	-	-	-	TR/MJC	12/13/2011	F						
B	REVISION	-	-	-	MC/TR	04/29/2008	E						
A	REVISION	-	-	-	JJ/TR	10/26/2006	D	MOVED FROM UG4167	EDM	JIK	-	-	06/02/2020

X Indicates Latest Revision | Completely Revised | New Page | Information Removed

SDG&E ELECTRIC UNDERGROUND CONSTRUCTION STANDARDS

LAY-IN SECONDARY CONNECTORS

UG4168.1

TABLE 2 (H)

CONDUCTOR SIZE AND TORQUE VALUE	
CABLE SIZE	TORQUE VALUE IN INCH-POUNDS
1/0	200
3/0	250
350	350
500	450
750	500
1000	500

TABLE 3

CONNECTORS			
CONNECTION POINTS	BOLT HOLES	STOCK NUMBER	DESIGN UNITS
1 CONNECTION PORT	2-HOLES	S256370	1CNPOR
2 CONNECTION PORTS	4-HOLES	S256372	2CNPOR
3 CONNECTION PORTS	6-HOLES	S256374	3CNPOR
4 CONNECTION PORTS	8-HOLES	S256376	4CNPOR
6 CONNECTION PORTS	12-HOLES	S256378	6CNPOR
8 CONNECTION PORTS	16-HOLES	S256380	8CNPOR

TABLE 4

PARTS LIST		
ITEM	DESCRIPTION	QUANTITY
1	LAY-IN CONNECTOR	AS REQ'D
2	PENATROX OXIDE INHIBITOR	AS REQ'D
3	STAINLESS STEEL BOLT SET UP WITH BELLEVILLE WASHER	AS REQ'D
4	3M SCOTCH BRIGHT PAD	AS REQ'D

INSTALLATION:

A. SELECT THE CORRECT LAY-IN CONNECTOR FOR THE NUMBER OF CABLE RUNS. THEY MAY BE ARRANGED IN COMBINATIONS TO CONNECT MULTIPLE RUNS.

B. USE A 3M SCOTCH BRIGHT PAD TO CLEAN ALL CONNECTION SURFACES, INCLUDING THE CABLE LAY-IN CONNECTION AREA.

C. APPLY A THIN COAT OF OXIDE INHIBITOR ON ALL CONNECTION SURFACES. THIS WILL ENSURE GOOD CONTACT, LOW RESISTANCE, IMPROVE CONDUCTIVITY AND SEAL OUT CONTAMINATES.

(D) SELECT THE CORRECT STAINLESS STEEL BOLT LENGTH. THE BELLEVILLE WASHER SHALL BE LOCATED BETWEEN SILICON BRONZE NUT AND THE HEAVY DUTY FLAT WASHER. THIS ALSO REQUIRES A FLAT WASHER UNDER THE BOLT HEAD. WHEN TWO LAY-IN CONNECTORS ARE USED, A BELLEVILLE WASHER SHALL BE ADDED BETWEEN THE BOLT HEAD AND THE WASHER.

(E) INSTALL ALL NECESSARY BOLTS AND TIGHTEN DOWN IN A CROSS PATTERN. ALL 1/2" BOLTS SHOULD BE TORQUED TO 44 FT-LBS IN THE SAME PATTERN. MAKE SURE THE BELLEVILLE WASHERS ARE FLAT.

(F) INSTALL CABLE AND CUT TO CORRECT LENGTH TO FIT INTO MILLED OUT AREA ON BODY OF LAY-IN PLATE.

(G) STRIP 3" OF INSULATION FROM THE END OF CONDUCTOR AND INSTALL IN LAY UP POSITION, INSTALL COVER PLATE WITH HEX SCREWS.

(H) THE 5/16" HEX SCREWS SHALL BE TIGHTENED DOWN EVENLY, TIGHTEN THE BOTTOM SET SCREW FIRST.

BILL OF MATERIALS: NONE

NOTES:

I. LAY-IN CONNECTORS MAY BE APPLIED ON BOTH SIDES OF THE TRANSFORMER FLAG FOR MULTIPLE CONDUCTOR INSTALLATIONS. THE TORQUE SCREW REQUIRES A 5/16" HEX DRIVE SOCKET TO TORQUE CABLE CONDUCTOR HEX SCREWS.

II. LAY-IN CONNECTORS MAY BE ARRANGED BY THE NUMBER OF LAY-IN POSITIONS TO FILL THE NUMBER OF CABLES REQUIRED ON EACH TRANSFORMER FLAG. THE LAY-IN CONNECTORS MAY ONLY EXTEND ONE POSITION MORE THAN THE TRANSFORMER BUSHING; IT MUST HAVE SAFE CLEARANCE FROM THE CLOSED AIR CABINET DOOR WHEN THIS IS DONE.

III. DUE TO CLEARANCE ISSUES IN SOME ERMCO THREE-PHASE TRANSFORMERS, LAY-IN CONNECTORS MAY NOT BE USED.

REFERENCE: NONE

© 1998 - 2020 San Diego Gas & Electric Company. All rights reserved. Removal of this copyright notice without permission is not permitted under law.

REV	CHANGE	DR	BY	DSN	APV	DATE	REV	CHANGE	DR	BY	DSN	APV	DATE
C	REVISION	-	-	-	TR/MJC	12/13/2011	F						
B	REVISION	-	-	-	MC/TR	04/29/2008	E						
A	REVISION	-	-	-	JJ/TR	10/26/2006	D	MOVED FROM UG4167	EDM	JIK	-	-	06/02/2020

SCOPE: THIS STANDARD SHOWS THE EXTENSION PLATE USED TO CONNECT MULTIPLE SECONDARY CABLES TO TRANSFORMERS.

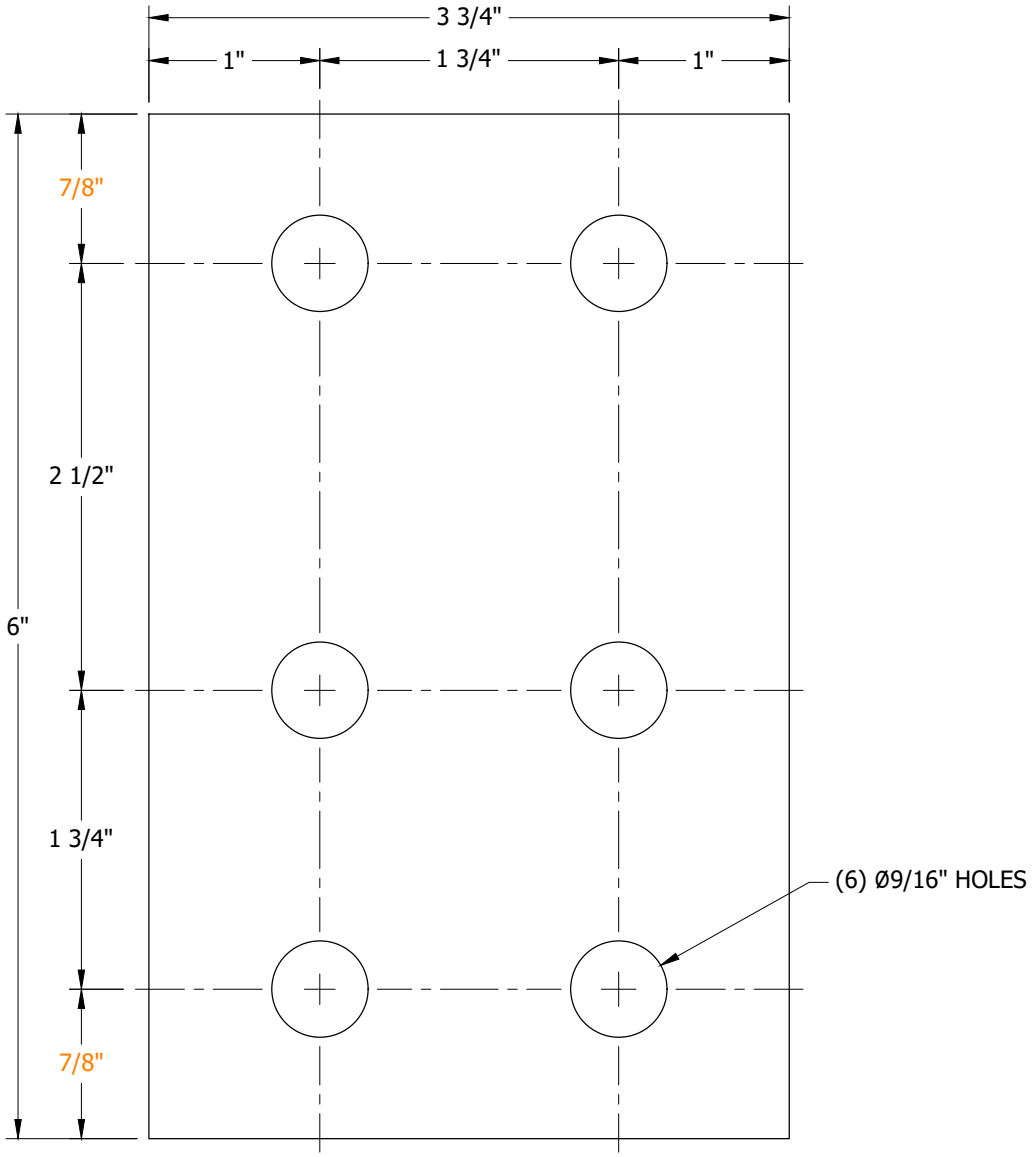

FIGURE 1
ADAPTER PLATE
FRONT VIEW

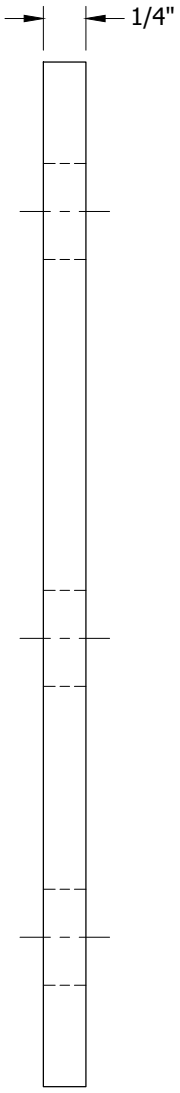

FIGURE 1
ADAPTER PLATE
SIDE VIEW

INSTALLATION: NONE

BILL OF MATERIALS: SEE UG4170

TABLE 1

STOCK NUMBER
S542372

NOTES:

I. ADAPTER PLATE TO BE TINNED COPPER.

REFERENCE: NONE

© 1998 - 2022 San Diego Gas & Electric Company. All rights reserved. Removal of this copyright notice without permission is not permitted under law.

REV	CHANGE	DR	BY	DSN	APV	DATE	REV	CHANGE	DR	BY	DSN	APV	DATE
C	FIGURE UPDATE	EDM	RSL	JES	FRC	02/14/2022	F						
B	FORMATTING	EDM	JIK	-	-	06/02/2020	E						
A	REVISION	-	-	-	JLB/RDJ	01/01/1989	D						

X Indicates Latest Revision | Completely Revised | New Page | Information Removed

SDG&E ELECTRIC UNDERGROUND CONSTRUCTION STANDARDS

SHEET 1 OF 2

SECONDARY EXTENSION PLATE FOR PADMOUNT TRANSFORMER

UG4169.1

TABLE OF CONTENTS

SCOPE: THIS STANDARD SHOWS THE INLINE SPADE USED FOR CONNECTING MULTIPLE SECONDARY CABLES TO TRANSFORMERS.

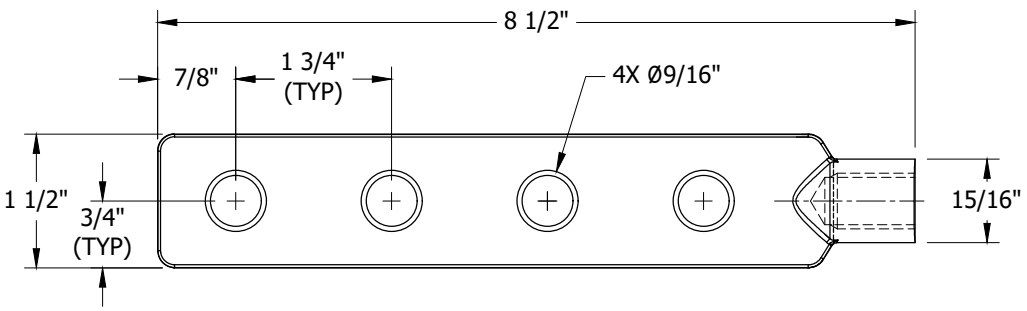

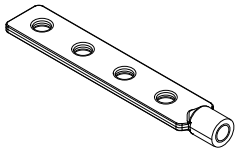

FIGURE 1
INLINE SPADE
ISOMETRIC VIEW

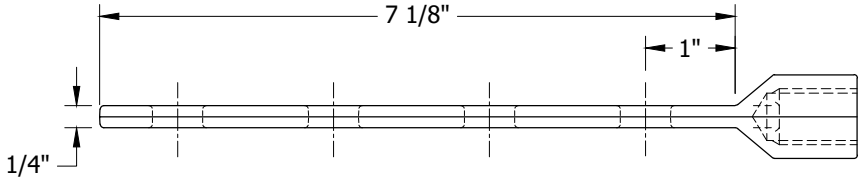

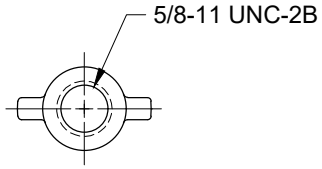

FIGURE 1
INLINE SPADE

INSTALLATION: NONE

BILL OF MATERIALS: SEE UG4170

NOTES:

I. INLINE SPADE IS TIN PLATED.

REFERENCE: NONE

TABLE OF CONTENTS

© 1998 - 2022 San Diego Gas & Electric Company. All rights reserved. Removal of this copyright notice without permission is not permitted under law.

REV	CHANGE	DR	BY	DSN	APV	DATE	REV	CHANGE	DR	BY	DSN	APV	DATE
C	FIGURE UPDATE	EDM	RSL	JES	FRC	02/14/2022	F						
B	FORMATTING	EDM	JIK	-	-	06/02/2020	E						
A	REVISION	-	-	-	JLB/RDJ	01/01/1989	D						

	Indicates Latest Revision		Completely Revised	X	New Page		Information Removed

SDG&E ELECTRIC UNDERGROUND CONSTRUCTION STANDARDS

INLINE SPADE

UG4169.2

SCOPE: THIS STANDARD SHOWS THE INSTALLATION OF A LUG CONNECTOR TO A SECONDARY 600V TRANSFORMER OR BUS.

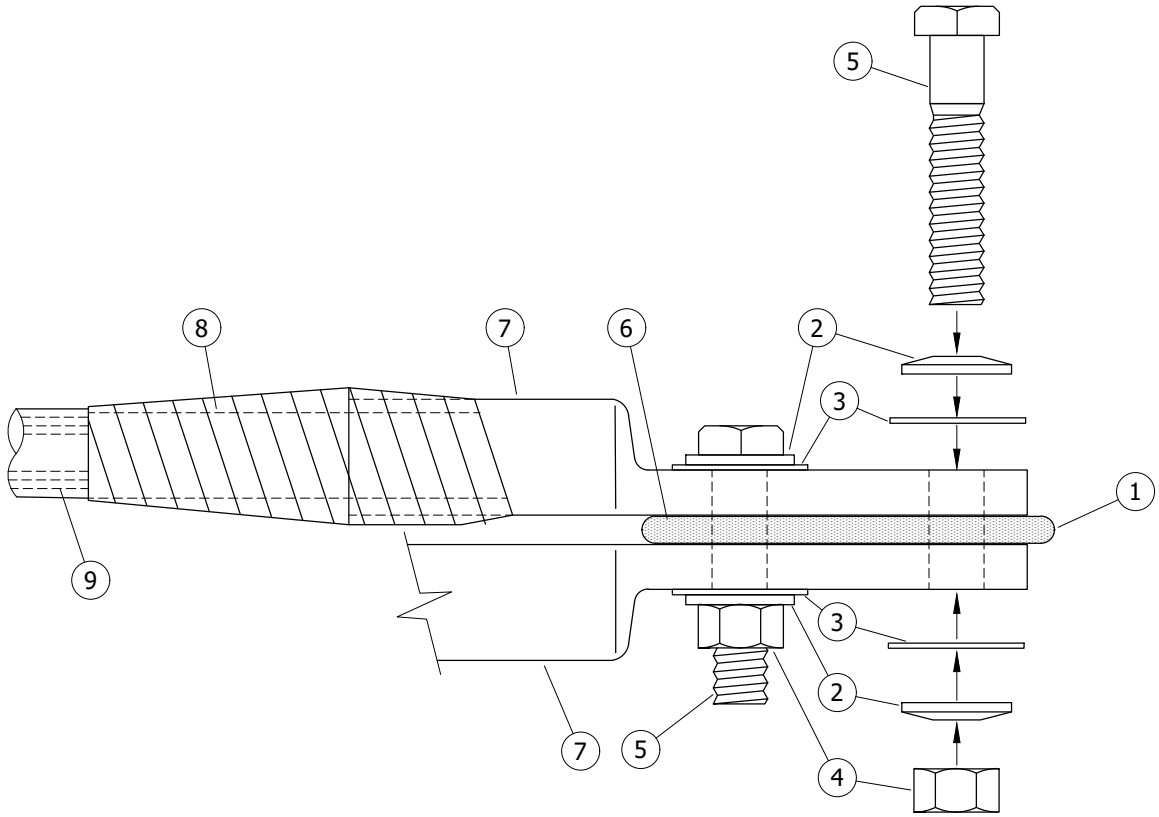

FIGURE 1

INSTALLATION: NONE

BILL OF MATERIALS:

ITEM	DESCRIPTION	QUANTITY	STANDARD PAGE	STOCK NUMBER	DESIGN UNITS
1	TRANSFORMER TERMINAL OR BUS	-	-	-	-
	SPADE, 4H, INLINE	AS REQ'D	4169	S270280	SP4H
2	WASHER, 1/2", BELLEVILLE, SS	AS REQ'D	-	S798970	-
3	WASHER, 1/2", FLAT, SS	AS REQ'D	-	S799680	-
4	NUT, 1/2", HEX HEAD MACHINE THREAD, BRONZE	AS REQ'D	-	S506112	-
5	BOLT, 1/2", HEX HEAD MACHINE THREAD, SS	AS REQ'D	-	S247200	-
6	INHIBITOR (a)	AS REQ'D	4106	-	-
7	LUG, ALUMINUM	AS REQ'D	4171	-	-
8	TAPE, PVC	AS REQ'D	-	-	-
9	CABLE, ALUMINUM	AS REQ'D	4002	-	-

NOTES: NONE

REFERENCE:

(a) SEE UG4106 FOR INSTALLATION INSTRUCTIONS.

© 1998 - 2022 San Diego Gas & Electric Company. All rights reserved. Removal of this copyright notice without permission is not permitted under law.

REV	CHANGE	DR	BY	DSN	APV	DATE	REV	CHANGE	DR	BY	DSN	APV	DATE
C	BILL OF MATERIALS UPDATE	EDM	RSL	JES	FRC	02/14/2022	F						
B	FORMATTING	EDM	JIK	-	-	06/02/2020	E						
A	REVISION	-	-	-	RSW/VCR	10/23/2000	D						

X Indicates Latest Revision | Completely Revised | New Page | Information Removed

SDG&E ELECTRIC UNDERGROUND CONSTRUCTION STANDARDS

SHEET 1 OF 1

600V SECONDARY BOLTED CONNECTION AT TRANSFORMER OR BUS

UG4170.1

SCOPE: THIS STANDARD SHOWS CONNECTORS TO TERMINATE PRIMARY AND/OR SECONDARY CONDUCTORS ON TRANSFORMER TERMINATING PLATES OR FLAT BUS CONNECTIONS.

TABLE 1

COMPRESSION TERMINALS - 1 - HOLE FOR 3/8" BOLT - SECONDARY SERVICE						
AL WIRE SIZE	BURNDY DIE SIZE	STOCK NUMBER	SECONDARY WORK		SEVICE WORK	
			DESIGN UNITS	SAP CU	DESIGN UNITS	SAP CU
4	840	S729216	1LG-04	1LG-04	1LG-04	1LG-04
2		S728800	1LG-02	1LG-02	1LG-02	1LG-02
1/0		S728640	1LG1/0	1LG1/0	1LG1/0	1LG1/0
3/0		S728960	1LG3/0	1LG3/0	1LG3/0	1LG3/0SV
350		S470464	1LG350	1LG350	1LG350	1LG350
500	316	S729252	1LG500	1LG500	1LG500	1LG500

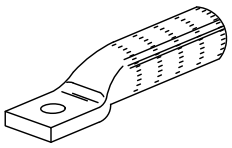

FIGURE 1
1 HOLE FOR 3/8" BOLTS

TABLE 2

COMPRESSION TERMINALS - 2 - HOLE FOR 1/2" BOLT - SECONDARY SERVICE						
AL WIRE SIZE	BURNDY DIE SIZE	STOCK NUMBER	SECONDARY WORK		SEVICE WORK	
			DESIGN UNITS	SAP CU	DESIGN UNITS	SAP CU
4	840	S729172	-	-	-	-
2		S728672	2LG-02	2LG-02	2LG-02	2LG-02
1/0		S728608	2LG1/0	2LG1/0	2LG1/0	2LG1/0
3/0		S728896	2LG3/0	2LG3/0	2LG3/0	2LG3/0
350	316	S729024	2LG350	2LG350	2LG350	2LG350SV
500	316	S729256	2LG500	2LG500	2LG500	2LG500
750	301	S729280	2LG750	2LG750	2LG750	2LG750SV
1000		S256420	2LG1000	2LG1000	2LG1000	2LG1000

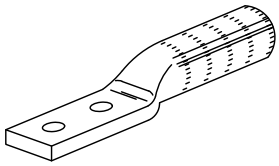

FIGURE 2
2 HOLE FOR 1/2" BOLTS

TABLE 3

COMPRESSION TERMINALS - 1 - HOLE FOR 3/8" BOLT - INDOOR PRIMARY TERMINATIONS		
AL WIRE SIZE	BURNDY DIE SIZE	STOCK NUMBER
2 SOL	BG	S728688
2/0	840	S728696

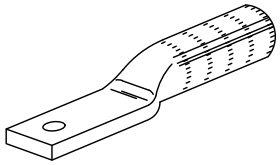

FIGURE 3
1 HOLE FOR 3/8" BOLTS

TABLE 4

COMPRESSION TERMINALS - 2 - HOLE FOR 1/2" BOLT - INDOOR PRIMARY TERMINATIONS		
AL WIRE SIZE	BURNDY DIE SIZE	STOCK NUMBER
350	317	S728864
750 MCM 750 COMP.	301	S729280
1000 AL	302	S729282
1000 CU	P44RT	S265850

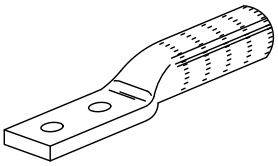

FIGURE 4
2 HOLE FOR 1/2" BOLTS

INSTALLATION: NONE

BILL OF MATERIALS: NONE

NOTES: NONE

REFERENCE: NONE

© 1998 - 2020 San Diego Gas & Electric Company. All rights reserved. Removal of this copyright notice without permission is not permitted under law.

REV	CHANGE	DR	BY	DSN	APV	DATE	REV	CHANGE	DR	BY	DSN	APV	DATE
C	REVISION	-	-	-	RSW/RDJ	1/13/2014	F						
B	REVISION	-	-	-	KN/DW	1/10/2014	E						
A	REVISION	-	-	-	RSW/RDJ	1/1/1996	D	FORMATTING	EDM	JIK	-	-	06/02/2020

X Indicates Latest Revision | Completely Revised | New Page | Information Removed

SDG&E ELECTRIC UNDERGROUND CONSTRUCTION STANDARDS

TRANSFORMER TERMINAL & BUS COMPRESSION TERMINALS FOR ALUMINUM CONDUCTORS

UG4171.1

TABLE OF CONTENTS

SCOPE: THIS STANDARD SHOWS STACKING ADAPTERS WHICH ARE TO BE USED FOR FLAT BUS CONNECTIONS IN PULL CANS WHERE THERE ARE LESS POSITIONS ON THE LANDING TERMINAL THAN THERE ARE CABLES.

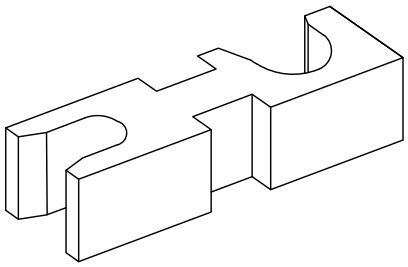

FIGURE 1

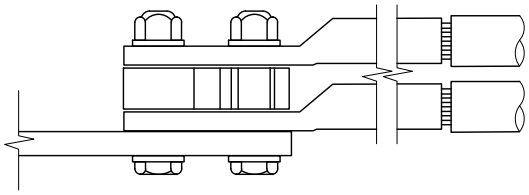

FIGURE 2

TABLE 1

STACKING ADAPTER				
AL WIRE SIZE	MANUFACTURER/CATALOG NUMBER		STOCK NUMBER	DESIGN UNITS
	BURNDY	UTILCO/ILSCO		
3/0	ASA-250U	ASL-250	S102860	3/0STA
350	ASA-800U	ASL-750	S102862	350STA
500	ASA-800U	ASL-750	S102862	500STA

INSTALLATION: NONE

BILL OF MATERIALS: NONE

NOTES: NONE

REFERENCE:

a. USE APPROPRIATE STACKING ADAPTER FROM TABLE ABOVE WITH STANDARD 3/0, 350, AND 500 KCMIL 2-HOLE COMPRESSION TERMINALS AS SHOWN ON UG4171.

b. STACKING LUGS SHOWN ON FMO UG4171 ARE NO LONGER AVAILABLE.

TABLE OF CONTENTS

© 1998 - 2020 San Diego Gas & Electric Company. All rights reserved. Removal of this copyright notice without permission is not permitted under law.

REV	CHANGE	DR	BY	DSN	APV	DATE	REV	CHANGE	DR	BY	DSN	APV	DATE
C	REVISION	-	-	-	RSW/RDJ	1/13/2014	F						
B	REVISION	-	-	-	KN/DW	1/10/2014	E						
A	REVISION	-	-	-	RSW/RDJ	1/1/1996	D	MOVED FROM 4171	EDM	JIK	JES	CZH	06/02/2020

SCOPE: THIS STANDARD SHOWS PIN ADAPTERS WHICH ARE TO BE USED WHEN SERVICE LATERAL CONDUCTORS ARE LARGER THAN THE LISTED RATING OF THE TERMINALS SUPPLIED IN SAFETY SOCKET CANS OR RESIDENTIAL COMBINATION PULL SECTION AND METER CANS.

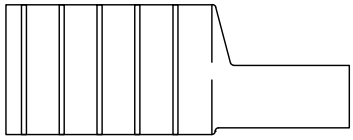

FIGURE 1
PIN ADAPTER

TABLE 1

PIN ADAPTERS									
AL WIRE SIZE	BURNDY DIE SIZE	MANUFACTURER/CATALOG NUMBER			STOCK NUMBER	SECONDARY WORK		SERVICE WORK	
		BURNDY	UTILCO/ILSCO	PENN-UNION		DESIGN UNITS	SAP CU	DESIGN UNITS	SAP CU
3/0	298	AYPO3/0	ACO-3/0	TPO-3/0	S102864	3/0PIN	3/0PIN	3/0PIN	3/0PIN2M
350	299	AYPO350	ACO-350	TPO-350	S102866	350PIN	350PIN	350PIN	350PIN2M

INSTALLATION: NONE

BILL OF MATERIALS: NONE

NOTES:

I. 3/0 PIN ADAPTER FOR USE IN STANDARD DUTY CANS (100 AMP) WITH LISTED TERMINAL SIZE RATED NOT TO EXCEED #1/0 AWG CU-AL WIRE. IN THIS CASE, 350 MCM CONDUCTORS CANNOT BE INSTALLED.

II. EXCEPTION: SOME MANUFACTURERS INSTALL 250 MCM CU-AL TERMINALS IN 100 AMP CANS. IN THIS CASE, #3/0 AWG CONDUCTORS MAY BE INSTALLED WITHOUT THE NEED FOR PIN ADAPTERS. THIS ALSO ALLOWS THE USE OF 350 MCM CONDUCTORS USING 350 ADAPTERS.

III. 350 PIN ADAPTER FOR USE IN HEAVY DUTY CANS (200 AMP) WITH LISTED TERMINAL SIZE RATED NOT TO EXCEED 250 MCM CU-AL WIRE.

REFERENCE: NONE

TABLE OF CONTENTS

© 1998 - 2020 San Diego Gas & Electric Company. All rights reserved. Removal of this copyright notice without permission is not permitted under law.

REV	CHANGE	DR	BY	DSN	APV	DATE	REV	CHANGE	DR	BY	DSN	APV	DATE
C	REVISION	-	-	-	RSW/RDJ	1/13/2014	F						
B	REVISION	-	-	-	KN/DW	1/10/2014	E						
A	REVISION	-	-	-	RSW/RDJ	1/1/1996	D	MOVED FROM 4171	EDM	JIK	JES	CZH	06/02/2020

X Indicates Latest Revision | Completely Revised | New Page | Information Removed

SDG&E ELECTRIC UNDERGROUND CONSTRUCTION STANDARDS

PIN ADAPTERS

UG4173.1

SCOPE: THIS STANDARD SHOWS COPPER COMPRESSION FOR COPPER TO COPPER JUMPER AND TAP.



FIGURE 1
DOUBLE TAB SQUEEZONS

TABLE 1

LINE SIDE	TAP SIDE											TOOL & INDEX DIE		STOCK NUMBER
	#8	#6		#4		#2		#1	#1/0	#2/0	#4/0	NO. INDENTS		
	SOL	SOL	STR	SOL	STR	SOL	STR	STR	STR	STR	STR	MD-6	Y-35	
												3	1	
#6 SOL #4 SOL STR	X	X	X	X	-	-	-	-	-	-	-	WKT	N/A	S257952
6 STR #4 SOL #2 SOL STR	-	-	X	X	X	X	-	-	-	-	-	WKK	N/A	S257920
#2, 1 - 1/0 (ALL STR)	-	X	X	X	X	X	-	-	-	-	-	N/A	0	S257792
	-	-	-	-	-	-	X	X	X	-	-	N/A	0	S257760
#2/0 - 4/0 STR	-	-	-	X	X	X	-	-	-	-	-	N/A	U-D3	S257888
	-	-	-	-	-	-	X	X	X	-	-	N/A	U-D3	S257856
	-	-	-	-	-	-	-	-	-	X	X	N/A	U-D3	S257824

INSTALLATION:

A. UNDERGROUND CONCENTRIC NEUTRAL CONNECTIONS SHOULD BE SQUEEZED WITH COMPRESSION CONNECTORS UNLESS OTHERWISE SPECIFIED IN THE UNDERGROUND CONSTRUCTION STANDARDS BOOK.

BILL OF MATERIALS: NONE

NOTES: NONE

REFERENCE: NONE

TABLE OF CONTENTS

© 1998 - 2023 San Diego Gas & Electric Company. All rights reserved. Removal of this copyright notice without permission is not permitted under law.

REV	CHANGE	DR	BY	DSN	APV	DATE	REV	CHANGE	DR	BY	DSN	APV	DATE
E	EDITORIAL CHANGES	EDM	JIK	JES	CZH	04/13/2020	H	UPDATE TABLE	GLC	SPC	MRF	FRC	06/12/2023
D	TABLE UPDATE	-	JIK	JES	CZH	11/12/2019	G	FIGURE UPDATE	EDM	RSL	JES	CZH	12/12/2021
C	EDITORIAL CHANGES	-	JC	JES	CZH	06/13/2019	F	MOVED FROM 4172	EDM	JIK	-	-	06/02/2020

SCOPE: THIS STANDARD SHOWS CONNECTORS USED FOR SPLICING SECONDARY OR SERVICE CONDUCTORS.

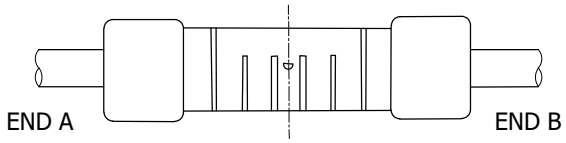

FIGURE 1
SECONDARY OR SERVICE CONDUCTORS

TABLE 1

INSULINK COMPRESSION-SECONDARY OR SERVICE CONNECTORS (NON-TENSION)

END A		END B										END CAP COLOR CODE (C)		CATALOG NUMBERS				STOCK NUMBER
		ALL ALUMINUM OR COPPER																
ACSR OR 5005	ALL ALUM OR COPPER	8		6		4		2		1/0	ACSR OR 5005			BLACK-BURN	BURNDY	HOMAC (SOMERSET)	PENN UNION	
		SOL	STR	SOL	STR	SOL	STR	SOL	STR	STR		END A	END B					
-	8 STR & 6 SOL	X	-	-	-	-	-	-	-	-	-	GREEN	BROWN	ICS60	ES6W8W	U1N81	-	-
		-	X	X	-	-	-	-	-	-	-	GREEN	GREEN	ICS61	ES6W6W	U1N88	-	S258496
6	6 STR & 4 SOL	X	-	-	-	-	-	-	-	-	-	BLUE	BROWN	ICS62	ES4W8W	U1N61	-	-
		-	X	X	-	-	-	-	-	-	-	BLUE	GREEN	ICS63	ES4W6W	U1N68	PIK 46	S258464
		-	-	-	X	X	-	-	-	-	6	BLUE	BLUE	ICS64	ES4W4W	U1N66	-	S258336
4	4 STR & 2 SOL	X	-	-	-	-	-	-	-	-	-	ORANGE	BROWN	ICS65	ES2W8W	U1N41	PIK 28	S258384
		-	X	X	-	-	-	-	-	-	-	ORANGE	GREEN	ICS66	ES2W6W	U1N48	PIK 26	S258432
		-	-	-	X	X	-	-	-	-	6	ORANGE	BLUE	ICS67	ES2W4W	U1N46	-	S258272
		-	-	-	-	-	X	X	-	-	4	ORANGE	ORANGE	ICS68	ES2W2W	U1N44	-	S258562 (X)
2	2 STR	X	-	-	-	-	-	-	-	-	-	RED	BROWN	ICS69	ES2R8W	U1N21	-	S258368
		-	X	X	-	-	-	-	-	-	-	RED	GREEN	ICS70	ES2R6W	U1N28	-	S258400
		-	-	-	X	X	-	-	-	-	6	RED	BLUE	ICS71	ES2R4W	U1N26	-	S258240
		-	-	-	-	-	X	X	-	-	4	RED	ORANGE	ICS72	ES2R2W	U1N24	PIK 12	S258528
		-	-	-	-	-	-	-	X	-	2	RED	RED	ICS73	ES2R2R	U1N22	-	S258624
1/0	1/0 STR	-	X	X	-	-	-	-	-	-	-	YELLOW	GREEN	ICS74	ES25R6W	U1N108	-	S258692
		-	-	-	X	X	-	-	-	-	6	YELLOW	BLUE	ICS75	ES25R4W	U1N106	-	S258304
		-	-	-	-	-	X	X	-	-	4	YELLOW	ORANGE	ICS76	ES25R2W	U1N104	-	S258592
		-	-	-	-	-	-	-	X	-	2	YELLOW	RED	ICS77	ES25R2R	U1N102	-	S258656
		-	-	-	-	-	-	-	-	X	1/0	YELLOW	YELLOW	ICS78	ES25R25R	U1N1010	-	S258688

TABLE 2

COMPRESSION SLEEVE SECONDARY OR SERVICE CONNECTORS (NON TENSION)

AL WIRE SIZE	INSTALLING DIE SIZE	MANUFACTURER/CATALOG NUMBER		COMPRESSION SPLICE STOCK NUMBER
		HOMAC	PENN UNION	
3/0	247	ASC 3/0	BCUA-3/0	S668420
350	U31ART	ASC 350	BCUA-350	S668418 (X)
500	317	ASC 500	BCUA-500	S668424
750	301	ASC 750	BCUA-750	S668426
1000	302	ASC 1000	BCUA-1000	S668428

© 1998 - 2023 San Diego Gas & Electric Company. All rights reserved. Removal of this copyright notice without permission is not permitted under law.

REV	CHANGE	DR	BY	DSN	APV	DATE	REV	CHANGE	DR	BY	DSN	APV	DATE
E	EDITORIAL CHANGES	EDM	JIK	JES	CZH	04/13/2020	H	UPDATE TABLE	GLC	SPC	MRF	FRC	06/12/2023
D	TABLE UPDATE	-	JIK	JES	CZH	11/12/2019	G	FIGURE UPDATE	EDM	RSL	JES	CZH	12/12/2021
C	EDITORIAL CHANGES	-	JC	JES	CZH	06/13/2019	F	MOVED FROM 4172	EDM	JIK	-	-	06/02/2020

TABLE OF CONTENTS

TABLE 3

TRIPLEX NEUTRAL SLEEVES (TENSION)					
NEUTRAL SIZE	COLOR CODE	INDENTS EACH END	LENGTH - INCHES	CATALOG NUMBERS	STOCK NUMBER
		MD-6	KEARNEY	KEARNEY	
6	BLUE	6	3 1/4	30008	S652690 (X)
4	ORANGE	6	3 1/4	30009	S652640
2	RED	6	3 1/4	30010	S652576
1/0	CLEAR	14 (B)	7 1/2	OHR-1/0-61AJ	S650274 (X)

INSTALLATION:

A. WIRE BRUSH THE CONDUCTORS BEFORE INSTALLING CONNECTOR.

(B) USE THE WK. 737 DIE IN THE MD-6 TOOL OR U-247 DIE IN THE Y35 TOOL OR KEARNEY INSULINK TOOL.

(C) MAKE **THREE INDENTS IN EACH END** OF THE COMPRESSION CONNECTOR STARTING FROM THE CENTER AND WORK OUTWARD USING THE FIXED NOSE DIE (5/8) OR W-BG DIE OF THE MD-6 TOOL.

D. USE NEUTRAL SLEEVES AS TENSION SPLICE ON 5005 AND ACSR SERVICE CABLE NEUTRAL.

E. USE HEAT SHRINK TUBES OVER CONNECTORS WHEN PLACED IN ANY BELOW GRADE INSTALLATION.

BILL OF MATERIALS: NONE

NOTES:

I. CONNECTORS WILL ACCEPT EITHER ALUMINUM OR COPPER CONDUCTORS.

(X) THIS ITEM IS EXEMPT.

REFERENCE: NONE

TABLE OF CONTENTS

© 1998 - 2023 San Diego Gas & Electric Company. All rights reserved. Removal of this copyright notice without permission is not permitted under law.

REV	CHANGE	DR	BY	DSN	APV	DATE	REV	CHANGE	DR	BY	DSN	APV	DATE
E	EDITORIAL CHANGES	EDM	JIK	JES	CZH	04/13/2020	H	UPDATE TABLE	GLC	SPC	MRF	FRC	06/12/2023
D	TABLE UPDATE	-	JIK	JES	CZH	11/12/2019	G	FIGURE UPDATE	EDM	RSL	JES	CZH	12/12/2021
C	EDITORIAL CHANGES	-	JC	JES	CZH	06/13/2019	F	MOVED FROM 4172	EDM	JIK	-	-	06/02/2020

SCOPE: THIS STANDARD SHOWS A 2-HOLE ALUMINUM COMPRESSION TERMINAL, USED FOR TERMINATING ALUMINUM CONDUCTORS ON POLE TOP SWITCH TABS AND TRANSFORMER FLAG CONNECTORS.

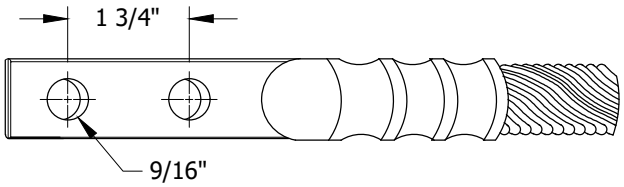

FIGURE 1

TABLE 1

CAST ALUMINUM ALLOY TERMINALS																	
WIRE							TOOL AND DIE			CATALOG NUMBER						STOCK NUMBER	DESIGN UNITS
5005		ACSR		ALUMINUM			BURNDY										
SIZE	STRAND	SIZE	STRAND	SIZE	STRAND		MD6	Y-35	Y-46	HOMAC	BURNDY	FRANKEL	KEARNEY	PENN-UNION	ANDERSON		
2	7	2	6/1	2	7	-	W-BG 5 CRIMPS	-	-	-	-	-	36918	-	-	S728672	CT2A
1/0		1/0		1/0		19	-	U840 5 CRIMPS	-	SAK 1/0-N	-	-	104741-2	-	-	S728608	CT1/0A
3/0		3/0		3/0			-	U317 5 CRIMPS	-	-	YCAK27R-2G2	GTN-3/0-2NE16	-	-	VAUD 3/0-12BN-S	S728928	CT3/0A
-	-	336.4 KCM	18/1	350 KCM	19	37	-		-	-	YCAK31A-2G1	GTM-35-2NE16	36364-2	KBLUA-035-D2	VAUD 350-12BN	S729024	-
394.5 KCM	19		26/7	400 KCM			-		-	-	-	-	36364-3	-	-	S729120	CT336A
-	-	397.5 KCM		500 KCM	37	61	-		-	-	YCAK361R-2G2	-	-	-	-	-	-
		636 KCM	24/7	750 KCM			-	-	342	SAL 750 NTN	-	-	-	-	-	S729266 (X)	CT636A

INSTALLATION:

A. THOROUGHLY CLEAN CONDUCTOR WITH WIRE BRUSH BEFORE INSERTING INTO BARREL.

B. MAKE OVERLAPPING CRIMPS FROM CONDUCTOR TO PAD.

C. USE 1/2" STAINLESS STEEL BOLTS FOR ALUMINUM TO COPPER CONNECTIONS.

D. WHEN USING TERMINALS, APPLY INHIBITOR (S247200) AT EACH ALUMINUM CONNECTION.

BILL OF MATERIALS: NONE

NOTES:

I. ALUMINUM COMPRESSION TERMINALS ARE FACTORY FILLED WITH INHIBITOR.

(X) THIS ITEM IS EXEMPT.

REFERENCE: NONE

© 1998 - 2023 San Diego Gas & Electric Company. All rights reserved. Removal of this copyright notice without permission is not permitted under law.

REV	CHANGE	DR	BY	DSN	APV	DATE	REV	CHANGE	DR	BY	DSN	APV	DATE
E	EDITORIAL CHANGES	EDM	JIK	JES	CZH	04/13/2020	H	UPDATE TABLE	GLC	SPC	MRF	FRC	06/12/2023
D	TABLE UPDATE	-	JIK	JES	CZH	11/12/2019	G	FIGURE UPDATE	EDM	RSL	JES	CZH	12/12/2021
C	EDITORIAL CHANGES	-	JC	JES	CZH	06/13/2019	F	MOVED FROM 4172	EDM	JIK	-	-	06/02/2020

TABLE OF CONTENTS

SCOPE: THIS STANDARD SHOWS A 2-HOLE COPPER COMPRESSION TERMINAL, USED FOR TERMINATING COPPER CONDUCTORS ON POLE TOP SWITCH TABS AND TRANSFORMER FLAG CONNECTORS.

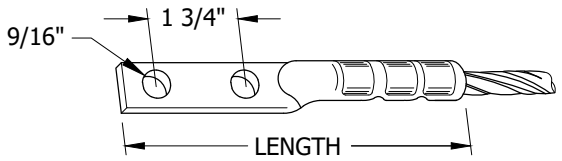

FIGURE 1

TABLE 1

TINNED COPPER TUBULAR COMPRESSION TERMINALS

WIRE			TOOL AND DIE SET CATALOG NUMBERS				NUMBER OF CRIMPS	CATALOG NUMBER				LENGTH (INCHES)	STOCK NUMBER	DESIGN UNITS
			BURNDY			ALCOA								
SIZE	STRANDING		MD6	Y-35	Y-45	60A		BURNDY	DOSSERT	PENN- UNION	HOMAC			
1/0	7	19	W163	-	-	-	4	YA25-2N	DPL10-2N	BBLU 1/0 D3	L 1/0-N	3 7/16	S729664	CT1/0C
			-	U25RT	U25RT (D)	-	2							
				U163	U163 (D)	-	2							
4/0	7	19	W243	-	-	-	3	YA28-2N	DPL21-2N	BBLU 4/0 D	L 4/0-N	5 9/32	S729792	CT4/0C
			W BG	U28RT	U28RT (D)	-	2							
				U243	U243 (D)	-	2							
350 KCM	19	37	-	U267	U267 (D)	-	6	YCA31-2N	-	-	-	6 1/2	S729744	CT350C
400 KCM	19	37	-	U32RT	U32RT (D)	-	4	YA32-2N	DPL40-2N	BBLU 040 D	L 400-N	5 31/32	S729824	CT400C
				U169	U169 (D)	-	5							
500 KCM	19	37	-	U34RT	U34RT (D)	-	4	YA34-2N	DPL50-2N	BBLU 050 D	L 500-N	6 3/16	S729856	CT500C
				U251	U251 (D)	-	3							
750 KCM	37	61	-	-	S39RT	-	6	YA39-2N	DPL75-2N	BBLU 075 D	L 750-N	7	S729920	CT750C
					-	L39RT	2							

INSTALLATION:

A. USE 1/2 INCH EVERDUR BOLTS FOR COPPER TO COPPER CONNECTIONS.

B. USE 1/2 INCH STAINLESS STEEL BOLTS FOR ALUMINUM TO COPPER CONNECTIONS.

C. USE FOR TERMINATING COPPER CONDUCTORS ON:

1. TRANSFORMER FLAG CONNECTORS, OH793.
2. MULTIPLE SERVICE CONNECTOR, OH793.
3. POLE TOP SWITCH TABS.

(D) USE ADAPTER DIE 6515 WITH BURNDY Y45 TOOL.

E. MAKE OVERLAPPING INDENTS FROM CONDUCTOR TO PAD.

F. WIRE BRUSH THE CONDUCTOR BEFORE INSTALLING TERMINAL.

BILL OF MATERIALS: NONE

NOTES: NONE

REFERENCE: NONE

© 1998 - 2023 San Diego Gas & Electric Company. All rights reserved. Removal of this copyright notice without permission is not permitted under law.

REV	CHANGE	DR	BY	DSN	APV	DATE	REV	CHANGE	DR	BY	DSN	APV	DATE
E	EDITORIAL CHANGES	EDM	JIK	JES	CZH	04/13/2020	H	UPDATE TABLE	GLC	SPC	MRF	FRC	06/12/2023
D	TABLE UPDATE	-	JIK	JES	CZH	11/12/2019	G	FIGURE UPDATE	EDM	RSL	JES	CZH	12/12/2021
C	EDITORIAL CHANGES	-	JC	JES	CZH	06/13/2019	F	MOVED FROM 4172	EDM	JIK	-	-	06/02/2020

TABLE OF CONTENTS

SCOPE: THIS SHOWS A 2-HOLE ALUMINUM OR COPPER TERMINAL, USED FOR TERMINATING ALUMINUM OR COPPER CONDUCTORS ON POLE TOP SWITCH TABS AND TRANSFORMER FLAG CONNECTORS.

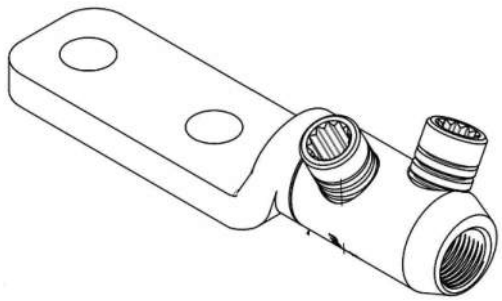

LVML/1-2H
S733104



LVML/3-2H
LVML/3A-2H
S733106

TABLE 1

PRODUCT REFERENCE (PART NUMBER)	STRANDED CORE SIZE		STUD SIZE	STOCK NUMBER	DESIGN UNITS
	MIN	MAX			
LVML/1-2H	2 KCML	250 KCML	2 X 1/2"	S733104	SB2-500
LVML/3-2H (51905-84)	500 kcmil (253mm^2)	1000 kcmil (507 mm^2)	2 X 1/2"	S733106	SB5H1M
LVML/3A-2H (51905-97)					

INSTALLATION: NONE

BILL OF MATERIALS: NONE

NOTES: NONE

REFERENCE: NONE

TABLE OF CONTENTS

© 1998 - 2023 San Diego Gas & Electric Company. All rights reserved. Removal of this copyright notice without permission is not permitted under law.

REV	CHANGE	DR	BY	DSN	APV	DATE	REV	CHANGE	DR	BY	DSN	APV	DATE
E	EDITORIAL CHANGES	EDM	JIK	JES	CZH	04/13/2020	H	UPDATE TABLE	GLC	SPC	MRF	FRC	06/12/2023
D	TABLE UPDATE	-	JIK	JES	CZH	11/12/2019	G	FIGURE UPDATE	EDM	RSL	JES	CZH	12/12/2021
C	EDITORIAL CHANGES	-	JC	JES	CZH	06/13/2019	F	MOVED FROM 4172	EDM	JIK	-	-	06/02/2020

Indicates Latest Revision | Completely Revised | X New Page | Information Removed

SDG&E ELECTRIC OVERHEAD AND UNDERGROUND CONSTRUCTION STANDARDS

COPPER COMPRESSION TERMINALS 2-HOLE

OH784.6
UG4174.6

SCOPE: THIS STANDARD SHOWS THE EQUIPMENT AND INSTALLATION OF 600 VOLT TYPE 1 CONNECTORS TO CONNECT SECONDARY AND SERVICE CABLE IN SUBSTRUCTURES.

ATTENTION:

* SLEEVES FROM DIFFERENT SUPPLIERS ARE NOT INTERCHANGEABLE.

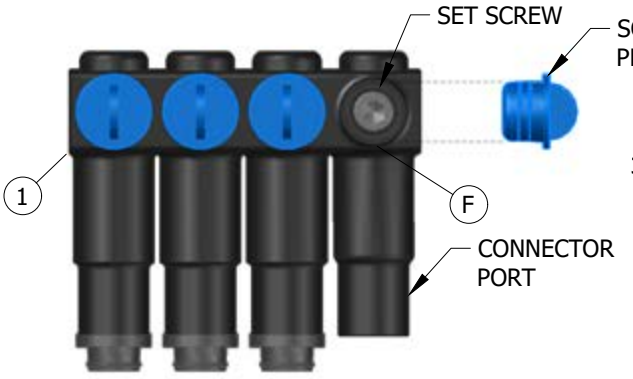

FIGURE 1
TYPE 1 CONNECTOR

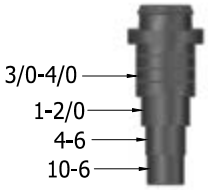

FIGURE 2
SLEEVE (D)



FIGURE 3
WIRE STRIPPING (E)

TABLE 1

FIGURE 1				
ITEM	**DESCRIPTION**		**STOCK NUMBER**	**DESIGN UNITS**
1	CONNECTOR WITH SLEEVES #8 THRU #350	4 TERMINALS, AL-CU	S256132 (B)	SEC-4W
		5 TERMINALS, AL-CU	S256134 (B)	SEC-5W
		6 TERMINALS, AL-CU	S256136 (B)	SEC-6W
		7 TERMINALS, AL-CU	S256138 (B)	SEC6SL
	CONNECTOR WITH SLEEVES #8 THRU #500	4 TERMINALS, AL-CU	S256146 (X) (B)	500-4W
		5 TERMINALS, AL-CU	S484514 (X) (a)	500-5W
		6 TERMINALS, AL-CU	S256148 (X) (B)	500-6W
		8 TERMINALS, AL-CU	S484516 (X) (a)	500-8W
2	INHIBITOR (USE AS REQUIRED)	-	S247200	-

INSTALLATION:

A. INSTALL THE SOURCE IN A MIDDLE TERMINAL AND LOAD CABLES IN THE REMAINING TERMINALS.

(B) THIS CONNECTOR UNIT ONLY ALLOWS ONE CONDUCTOR PER TERMINAL THE MINIMUM CABLE SIZE FOR A STREET LIGHT TERMINAL POSITION SHALL BE #8 AL OR CU AND SHALL OCCUPY ONE TERMINAL BY ITSELF.

C. PREPARE CABLE BY REMOVING ALL DIRT AND/OR MOISTURE FROM THE CABLE ENDS FOR A DISTANCE OF 12 T0 18 INCHES. LIBERALLY APPLY LUBRICANT (SILICONE GREASE) ON CABLE INSULATION AND INTERIOR SURFACES OF INSULATING SLEEVE WITH SUPPLIED LUBRICANT IN PREPARATION OF SLEEVE INSTALLATION.

(D) CUT THE SLEEVE STRAIGHT ACROSS THE PROPER STEP ACCORDING TO THE CONDUCTOR SIZE BEING INSTALLED. SEE FIGURE 2. FOR THE #8 THRU 350 CONNECTOR THE SLEEVE IS NOT USED FOR 350 KCMIL CABLE. INSERT THE 350 KCMIL DIRECTLY INTO THE CONNECTOR. FOR THE #8 THRU 500 CONNECTOR INSERT THE 500 KCMIL DIRECTLY INTO THE CONNECTOR AND CUT THE SLEEVE FOR 350 KCMIL AND BELOW.

TABLE OF CONTENTS

© 1998 - 2020 San Diego Gas & Electric Company. All rights reserved. Removal of this copyright notice without permission is not permitted under law.

REV	CHANGE	DR	BY	DSN	APV	DATE	REV	CHANGE	DR	BY	DSN	APV	DATE
C							F						
B	FORMATTING	EDM	JIK	-	-	06/02/2020	E						
A	REVISION	-	-	-	TR/DW	6/17/2014	D						

X Indicates Latest Revision | Completely Revised | New Page | Information Removed

SDG&E ELECTRIC UNDERGROUND CONSTRUCTION STANDARDS

0 - 600 VOLT CONNECTORS
FOR #8 THRU 500 KCMIL AL OR CU CONDUCTORS

UG4175.1

INSTALLATION (CONT'D):

(E) WIRE STRIPPING

1. SLIDE CONDUCTOR THROUGH SLEEVE UNTIL APPROXIMATELY 4 INCHES OF INSULATION IS SHOWING.
2. STRIP INSULATION FROM THE END OF THE CONDUCTOR ACCORDING TO THE STRIP GAUGE ON THE CONNECTOR (1 1/8" OR 1 1/4" DEPENDING ON MANUFACTURER). SEE FIGURE 3.

(F) PULL SCREW SEALING PLUG AND BACK OFF THE SET SCREW.

G. WIRE BRUSH CONDUCTOR WITH INHIBITOR AND INSERT CONDUCTOR INTO TERMINAL UNTIL IT STOPS AGAINST THE BACK OF THE CONNECTOR. (b)

H. TIGHTEN SCREW SECURELY AGAINST THE CONDUCTOR.

J. AFTER THE INITIAL CONNECTIONS HAVE BEEN MADE, VERIFY THAT THE PROPER TORQUE VALUES HAVE BEEN APPLIED, IT IS EXTREMELY IMPORTANT THAT SET SCREWS MEET THE FOLLOWING TORQUE VALUES:

1. #8 THRU #4: 8.5 FT-LBS TORQUE
2. #2 THRU 350 KCMIL: 25 FT-LBS TORQUE
3. 500 KCMIL: 35 FT-LBS TORQUE

K. RE-INSTALL SCREW SEALING PLUG. DO NOT LUBRICATE OR GREASE THE SCREW SEALING PLUG OR ITS PORT.

L. SLIDE INSULATING SLEEVES UP OVER CABLE SO THAT SLEEVES BUTT AGAINST THE TERMINAL.

M. USE UNCUT SLEEVES ON SPARE TERMINALS.

BILL OF MATERIALS: NONE

NOTES:

(X) THIS ITEM IS EXEMPT.

REFERENCE:

(a) REFER TO SHEET 3 THIS DOCUMENT.

(b) SEE UG4106, ALUMINUM CONDUCTOR PREPARATION FOR TERMINATIONS.

TABLE OF CONTENTS

© 1998 - 2020 San Diego Gas & Electric Company. All rights reserved. Removal of this copyright notice without permission is not permitted under law.

REV	CHANGE	DR	BY	DSN	APV	DATE	REV	CHANGE	DR	BY	DSN	APV	DATE
C							F						
B	FORMATTING	EDM	JIK	-	-	06/02/2020	E						
A	REVISION	-	-	-	TR/DW	6/17/2014	D						

X Indicates Latest Revision | Completely Revised | New Page | Information Removed

SDG&E ELECTRIC UNDERGROUND CONSTRUCTION STANDARDS

0 - 600 VOLT CONNECTORS
FOR #8 THRU 500 KCMIL AL OR CU CONDUCTORS

UG4175.2

SCOPE: THIS STANDARD SHOWS THE EQUIPMENT AND INSTALLATION OF 600 VOLT GEL PORT TYCO SECONDARY MOLD CONNECTORS TO CONNECT SECONDARY AND SERVICE CABLE IN SUBSTRUCTURES.



FIGURE 1
5-WAY

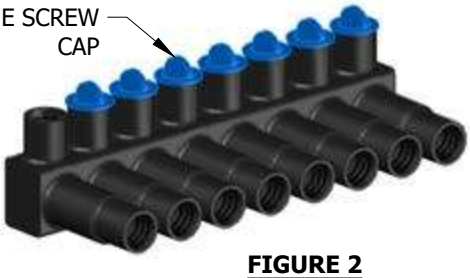

FIGURE 2
8-WAY

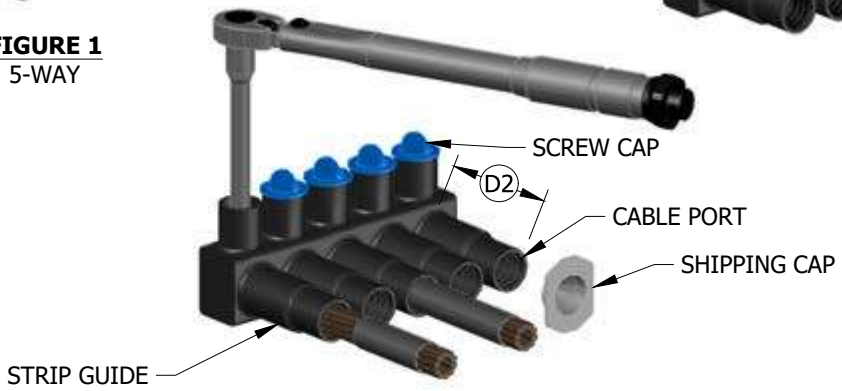

FIGURE 3
5-WAY INSTALLATION

INSTALLATION:

A. REMOVE SHIPPING CAPS, IDENTIFY CABLE SIZE AND CABLE PORT SIZE.
   1. BLACK CAP FOR #14-350 KCMIL CABLE
   2. BLUE CAP FOR #2-500KCMIL CABLE

B. CLEAN 6" OF CABLE JACKET.

C. MARK CABLE 3 3/4" FROM END OF CABLE WITH TAPE OR WHITE MARKER.

D. CABLE STRIPPING
   1. REMOVE 1 3/4" OF INSULATION FROM END OF CABLE. CHECK STRIP LENGTH WITH THE GUIDE ON THE END OF THE MOLD.
   (2) STRIP LENGTH EQUALS CABLE PORT LENGTH.

E. SNAP OPEN SCREW CAP USING A 5/16" HEX WRENCH. BACK OFF HEX SCREW COUNTER CLOCKWISE ABOUT 3/4".

F. INSERT CABLE INTO CABLE PORT. CABLE SHOULD BOTTOM OUT AND THE MARK SHOULD BE FLUSH WITH END OF CABLE PORT. CHECK HEX SCREW IS BACKED OFF WHEN CABLE IS INSTALLED.

G. TIGHTEN HEX SCREW PER TORQUE GUIDE:
   1. NO. #14-6 175 INCH-LBS
   2. NO. #4-1/0 275 INCH-LBS
   3. NO. #2/0-500 350 INCH-LBS

H. MAKE SURE CABLE REMAINS SEATED AND DOES NOT BACK OUT WHEN TORQUE IS APPLIED.

J. CLOSE CAP WHEN COMPLETED MAKING SURE LATCH SNAPS FULLY CLOSED.

BILL OF MATERIALS: NONE

NOTES: NONE

REFERENCE: NONE

© 1998 - 2020 San Diego Gas & Electric Company. All rights reserved. Removal of this copyright notice without permission is not permitted under law.

REV	CHANGE	DR	BY	DSN	APV	DATE	REV	CHANGE	DR	BY	DSN	APV	DATE
C							F						
B	FORMATTING	EDM	JIK	-	-	06/02/2020	E						
A	REVISION	-	-	-	TR/DW	6/17/2014	D						

X Indicates Latest Revision | Completely Revised | New Page | Information Removed

SDG&E ELECTRIC UNDERGROUND CONSTRUCTION STANDARDS

0-600 VOLT CONNECTIONS AND HANDHOLE INSTALLATION
FOR #8 THROUGH 500 KCMIL CONDUCTORS

UG4175.3

TABLE OF CONTENTS

SCOPE: THIS STANDARD SHOWS THE INSTALLATION OF HANDHOLES FOR 600 VOLT CONNECTORS TO CONNECT SECONDARY AND SERVICE CABLE.

CAUTION:

* WHEN INSTALLING HEAT SHRINK SLEEVES. DO NOT ALLOW FLAME TO BE APPLIED TO CONNECTOR INSULATION AS TRACES OF "HCI" (HYDROCHLORIC ACID) AND "CO" (CARBON MONOXIDE) GASES WILL BE GIVEN OFF.

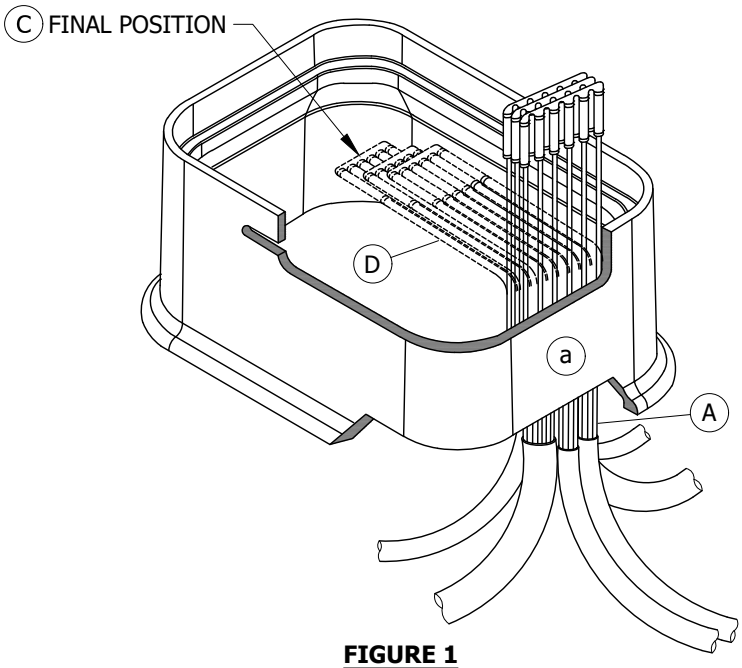

FIGURE 1
FINAL CONNECTOR POSITION

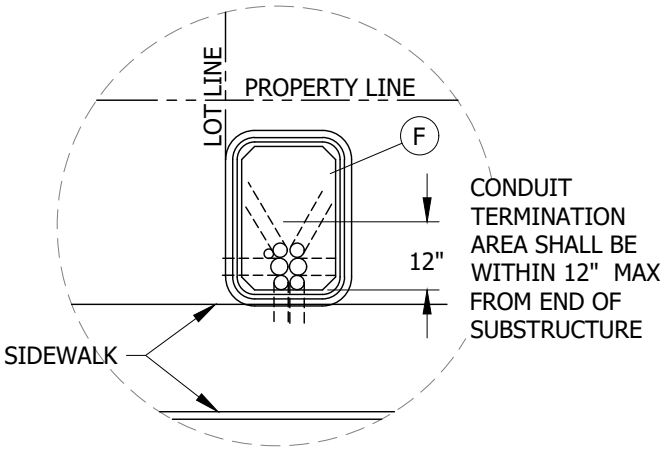

TYPICAL PLAN VIEW

HANDHOLE MAY BE INSTALLED ON EITHER SIDE OF LOT LINE OR IN CENTER OF LOT LINE IN AREA WITH LIMITED SPACE. BUT AGAINST BACK OF SIDEWALK.

FIGURE 2
HANDHOLE LOCATION

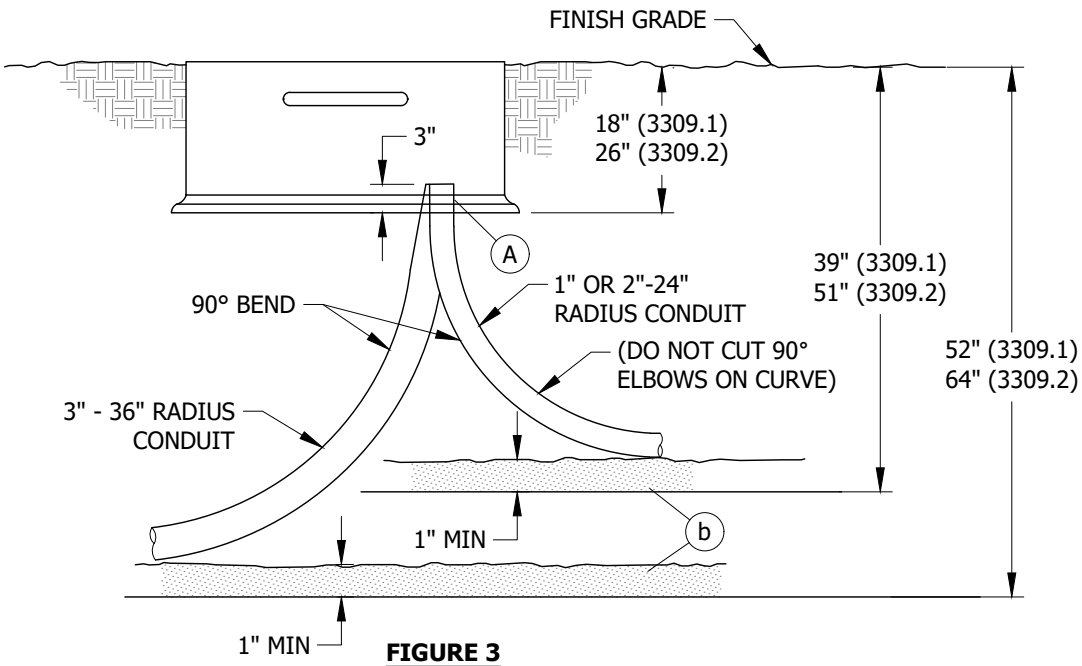

FIGURE 3
HANDHOLE INSTALLATION
(3309.1/3309.2)

© 1998 - 2020 San Diego Gas & Electric Company. All rights reserved. Removal of this copyright notice without permission is not permitted under law.

REV	CHANGE	DR	BY	DSN	APV	DATE	REV	CHANGE	DR	BY	DSN	APV	DATE
C							F						
B	FORMATTING	EDM	JIK	-	-	06/02/2020	E						
A	REVISION	-	-	-	TR/DW	6/17/2014	D						

X Indicates Latest Revision | Completely Revised | New Page | Information Removed

SDG&E ELECTRIC UNDERGROUND CONSTRUCTION STANDARDS

0-600 VOLT CONNECTIONS AND HANDHOLE INSTALLATION FOR #8 THROUGH 500 KCMIL CONDUCTORS

UG4175.4

TABLE OF CONTENTS

INSTALLATION:

(A) CUT THE CONDUIT (NOT THE NINETY DEGREES). IF A CONDUIT IS (OTHER THAN SERVICE LATERAL CONDUIT) EMPTY FOR FUTURE CABLE PULLING. SECURE THE MEASURING AND PULLING TAPE AND INSTALL AQUA-SEAL (STOCK NUMBER S442976) AND GRAY TAPE (STOCK NUMBER S721120) SECURELY TO PREVENT WATER ENTRY. CONDUITS MUST ENTER HANDHOLE AT ONE END FOR MAXIMUM TRAINING ROOM. SET HANDHOLE(S). COMPACT SOIL TO 90% AROUND HANDHOLE AREA. DO NOT BACKFILL WITH LARGE ROCKS THAT COULD BREAK HANDHOLE WHEN TAMPED. (c) (d)

B. CUT AND PREPARE CABLE.

(C) FINAL CONNECTOR POSITION MUST ENSURE THAT CONNECTOR WILL NOT TOUCH CONCRETE OR ABRASION DAMAGE WILL CAUSE PREMATURE FAILURE. PROVIDE PROPER CABLE LENGTHS AND CABLE TRAINING TO PREVENT ABRASION.

(D) MINIMUM CONDUCTOR BENDING RADIUS IS FIVE TIMES CABLE DIAMETER.

E. BOLT DOWN LID. (e)

(F) IF RIGHT OF WAY OR OBSTRUCTIONS CAUSE A PROBLEM THE HANDHOLE MAY BE TURNED TO WHERE LONG SIDE OF THE HANDHOLE PARALLELS THE SIDEWALK OR PROPERTY LINE.

BILL OF MATERIALS: NONE

NOTES:

I. 3309.1 HANDHOLE SINGLE-PHASE ALLOWS A MAXIMUM OF THREE CONNECTORS WITH EIGHT TERMINAL POSITIONS EACH. THE EIGHT RUNS SHALL NOT EXCEED ONE RUN 500 KCMIL, THREE RUNS 350 KCMIL, TWO RUNS 3/0 AND ONE STREET LIGHT RUN.

II. 3309.2 HANDHOLE SINGLE-PHASE ALLOWS A MAXIMUM THREE CONNECTORS WITH SEVEN TERMINAL POSITIONS EACH. THE SEVEN RUNS SHALL NOT EXCEED TWO RUNS 500 KCMIL, TWO RUNS 350 KCMIL, AND TWO RUNS 3/0 AND ONE STREET LIGHT RUN.

III. 3309.2 HANDHOLE THREE-PHASE ALLOWS A MAXIMUM OF FOUR CONNECTORS WITH SEVEN TERMINAL POSITIONS EACH. THIS SHALL NOT EXCEED FIVE RUNS THREE-PHASE CONSISTING OF ONE RUN 350 KCMIL AND FOUR RUNS 3/0 AND ONE SINGLE-PHASE STREET LIGHT RUN.

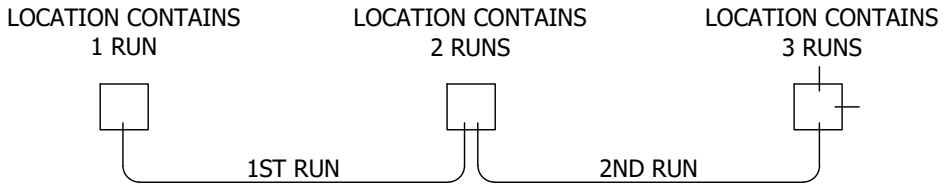

EXAMPLE

REFERENCE:

a. SEE UG3312 FOR THE HANDHOLE MEASUREMENTS.

b. SEE UG3370 FOR TRENCH DEPTHS, BASE SHADING AND BACKFILL REQUIREMENTS.

(c) SEE UG3948 FOR SEALING SERVICE LATERAL CONDUITS AND FOR CONDUIT SEALANT TO USE FOR EXCESSIVE WATER ENTRY PROBLEMS.

(d) SEE UG3305 FOR SETTING TO FINAL GRADE IF SLOPED.

(e) SEE G.O. 128.32.7; COVERS.

TABLE OF CONTENTS

© 1998 - 2020 San Diego Gas & Electric Company. All rights reserved. Removal of this copyright notice without permission is not permitted under law.

REV	CHANGE	DR	BY	DSN	APV	DATE	REV	CHANGE	DR	BY	DSN	APV	DATE
C							F						
B	FORMATTING	EDM	JIK	-	-	06/02/2020	E						
A	REVISION	-	-	-	TR/DW	6/17/2014	D						

X Indicates Latest Revision | Completely Revised | New Page | Information Removed

SDG&E ELECTRIC UNDERGROUND CONSTRUCTION STANDARDS

0-600 VOLT CONNECTIONS AND HANDHOLE INSTALLATION
FOR #8 THROUGH 500 KCMIL CONDUCTORS

UG4175.5

SCOPE: THIS STANDARD SHOWS THE EQUIVALENT CONDUCTOR SIZE (PER PHASE) OF THE CONCENTRIC NEUTRAL WIRES FOR UNDERGROUND CABLES. USE THE CHART BELOW IN SELECTING PROPER COMPRESSION CONNECTORS (SQUEEZONS).

INSTALLATION:

A. WIRE #14 AWG SOLID BARE SOFT DRAWN COPPER (STOCK NO. S812934) ON 13 LBS. SPOOL IS AVAILABLE FOR BONDING PREMOLDED CONNECTORS.

TABLE 1

CONCENTRIC NEUTRAL INFORMATION - UNDERGROUND CABLES				
CABLE	**APPROX EQUIVALENT CONDUCTOR (PER PHASE) AWG**	**APPROX EQUIVALENT CONDUCTOR (PER PHASE) CIRC MILS**	**NO. OF CONCENTRIC NEUTRAL WIRES (PER PHASE)**	**AWG SIZE (PER EACH CONCENTRIC NEUTRAL WIRE)**
2 CU 1/C	#2 - 7 STRAND	66,360	16	14
2 CU 3-1/C	#6 - 7 STRAND	26,240	6	14
2 SOLID AL 1/C	#4 - 7 STRAND	41,740	10	14
2 SOLID AL 3-1/C	#6 - 7 STRAND	26,240	6	14
2/0 AL 3-1/C	#6 - 7 STRAND	26,240	7	14
4/0 CU 3-1/C	#2 - 7 STRAND	66,360	11	12
350 AL 3-1/C NEW	#4 - 7 STRAND	41,740	9	14
350 AL 3-1/C OLD	#2 - 7 STRAND	66,360	11	12
500 CU 3-1/C	#3/0 - 19 STRAND	167,800	17	10
750 AL 3-1/C NEW	#1 - 19 STRAND	83,690	12	12
750 AL 3-1/C OLD	#3/0 - 19 STRAND	167,800	16	10
1000 AL 3-1/C NEW	#1/0 - 19 STRAND	105,600	16	12
1000 AL 3-1/C OLD	#4/0 - 19 STRAND	211,600	20	10

BILL OF MATERIALS: NONE

NOTES: NONE

REFERENCE:

a. SEE UG4174 FOR COMPRESSION AND TERMINAL COMPRESSION CONNECTORS.

TABLE OF CONTENTS

REV	CHANGE	DRWN	BY	CHKD	APVD	DATE
D	REVISED TO 3D FORMAT	NV5	ADW	EJA	JAS	12/09/2024
C	MOVED FROM UG4174	EDM	JIK	-	-	06/02/2020
B	MOVED FROM UG4172	EDM	JIK	JES	CZH	04/13/2020

SDG&E ELECTRIC UNDERGROUND CONSTRUCTION STANDARDS

CONCENTRIC NEUTRAL/COMPRESSION CONNECTOR APPLICATION CHART

SCALE: NOT TO SCALE

DRAWING NO: UG4176.1

SHEET: 1 OF 1

© 1998 - 2024 San Diego Gas and Electric Company. All rights reserved. Removal of this copyright notice without permission is not permitted under law.

X Indicates Latest Revision | Completely Revised | New Page | X Information Removed

SCOPE: THIS STANDARD SHOWS THE TEE BRACKET USED TO INSTALL 600A TEE CONNECTORS AT AN ANGLE IN HANDHOLES AND THE STAND OFF BAR USED TO FASTEN TO THE TEE BRACKET ALLOWING A PLACE TO PARK LOADBREAK ELBOWS.

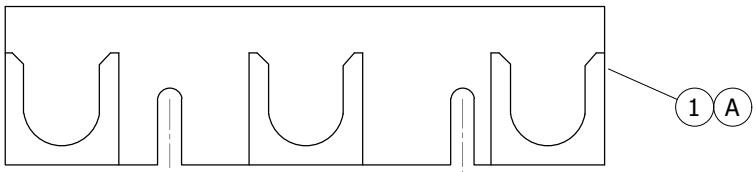

FIGURE 1
STAND OFF BAR
FRONT VIEW

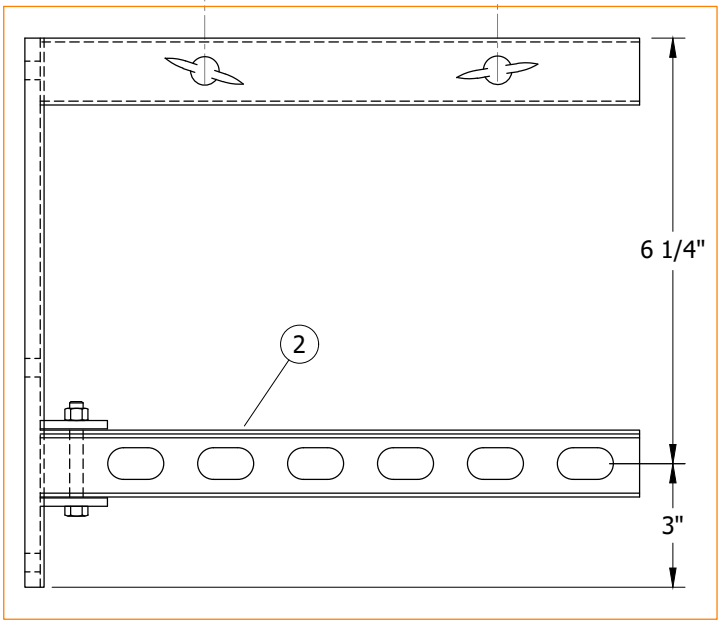

FIGURE 2
TEE BRACKET
SIDE VIEW

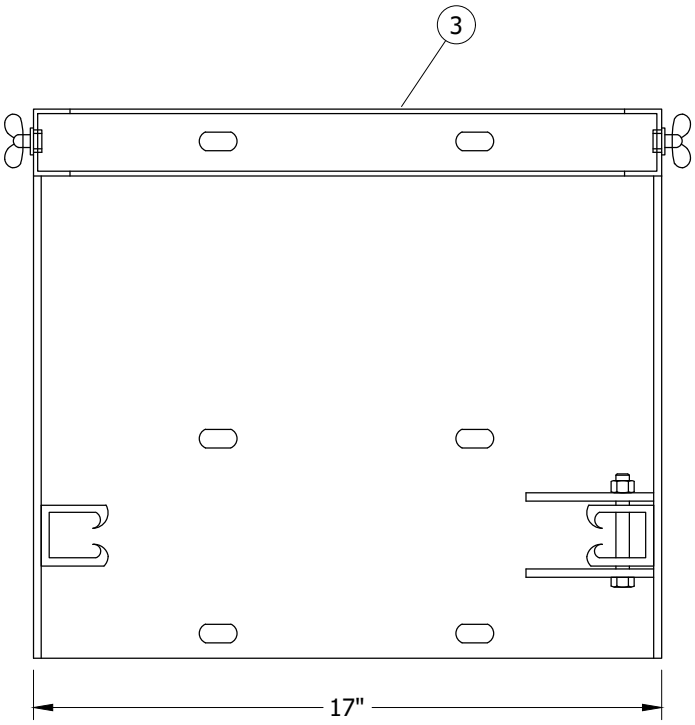

FIGURE 2
TEE BRACKET
FRONT VIEW

INSTALLATION:

(A) THE STAND OFF BAR IS TO BE USED AS A TOOL AND SHOULD NOT BE PERMANENTLY INSTALLED WITH THE TEE BRACKET.

BILL OF MATERIALS:

ITEM	DESCRIPTION	QUANTITY	STANDARD PAGE	STOCK NUMBER	DESIGN UNITS
1	BAR, STAND OFF	AS REQ'D	--	S677240	--
2	INSULATOR, UNISTRUT (REPLACEMENT ITEM)	AS REQ'D	--	S430560	--
3	BRACKET, TEE	AS REQ'D	--	S166675	T/BRKT

NOTES:

I. TEE BRACKET COMES WITH ACCESSORIES SHOWN.

REFERENCE: NONE

© 1998 - 2022 San Diego Gas & Electric Company. All rights reserved. Removal of this copyright notice without permission is not permitted under law.

REV	CHANGE	DR	BY	DSN	APV	DATE	REV	CHANGE	DR	BY	DSN	APV	DATE
C	REVISION	-	-	-	JJ/TR	3/20/2008	F						
B	REVISION	-	-	-	JJ/TR	3/7/2008	E	FIGURE UPDATE	EDM	EJA	GLW	FRC	02/15/2022
A	REVISION	-	-	-	JJ/TR	1/9/1992	D	MOVED FROM UG4178	EDM	JIK	-	-	6/2/2020

X Indicates Latest Revision | Completely Revised | New Page | Information Removed

SDG&E ELECTRIC UNDERGROUND CONSTRUCTION STANDARDS

SHEET 1 OF 1

CABLE HANGERS AND ACCESSORIES

UG4177.1

TABLE OF CONTENTS

SCOPE: THIS STANDARD SHOWS THE APPLICATION AND INSTALLATION OF THE PREFERRED HEAVY DUTY NON-METALLIC EQUIPMENT/CABLE RACK.

ATTENTION:

* THIS ANCHOR SYSTEM SHALL **NOT** BE INSTALLED IN BRICK, BLOCK OR CONCRETE GROUT. THIS PRODUCT IS DESIGNED TO SUPPORT CABLE, EQUIPMENT AND CONNECTING LOADS.

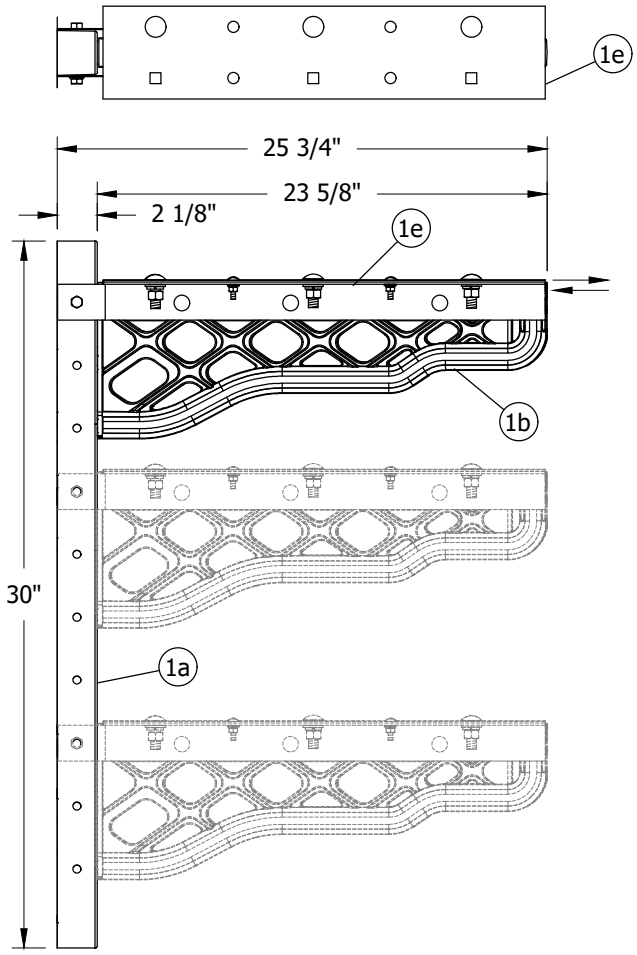

FIGURE 1
EQUIPMENT/CABLE
SUPPORT ASSEMBLY

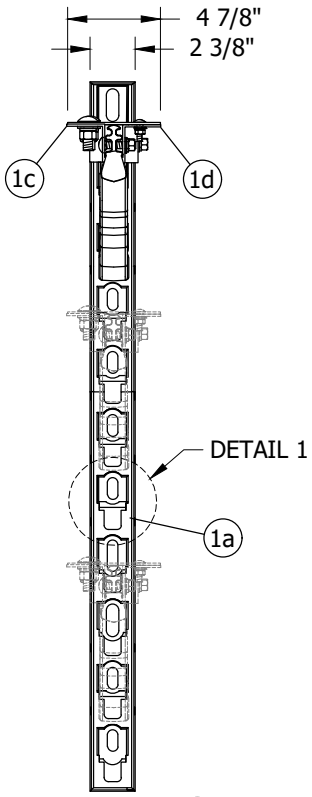

FIGURE 1 (A1)
EQUIPMENT/CABLE
SUPPORT ASSEMBLY
FRONT VIEW



FIGURE 1
EQUIPMENT/CABLE
SUPPORT CHANNEL
ISO FRONT VIEW



FIGURE 1
EQUIPMENT/CABLE
SUPPORT CHANNEL
ISO REAR VIEW

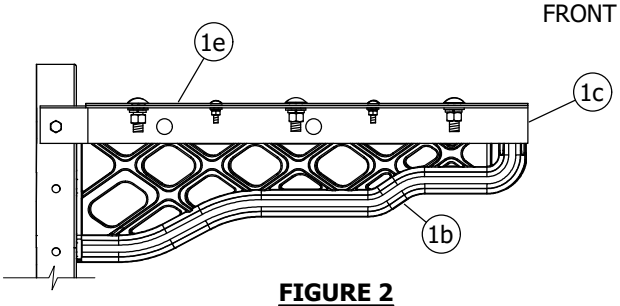

FIGURE 2
SUPPORT BRACKET WITH TOP PIECE EXTENDED

© 1998 - 2022 San Diego Gas & Electric Company. All rights reserved. Removal of this copyright notice without permission is not permitted under law.

REV	CHANGE	DR	BY	DSN	APV	DATE	REV	CHANGE	DR	BY	DSN	APV	DATE
C	REVISION	-	-	-	JJ/TR	03/20/2008	F						
B	REVISION	-	-	-	JJ/TR	03/07/2008	E	DRAWING UPDATE	EDM	ADW	GLW	KRG	07/14/2022
A	REVISION	-	-	-	JJ/TR	01/09/1992	D	FORMATTING	EDM	JIK	-	-	06/02/2020

Indicates Latest Revision | Completely Revised | X New Page | Information Removed

SDG&E ELECTRIC UNDERGROUND CONSTRUCTION STANDARDS

HEAVY DUTY NON-METALLIC EQUIPMENT/CABLE RACK (PREFERRED)

UG4178.1

TABLE OF CONTENTS

TABLE OF CONTENTS

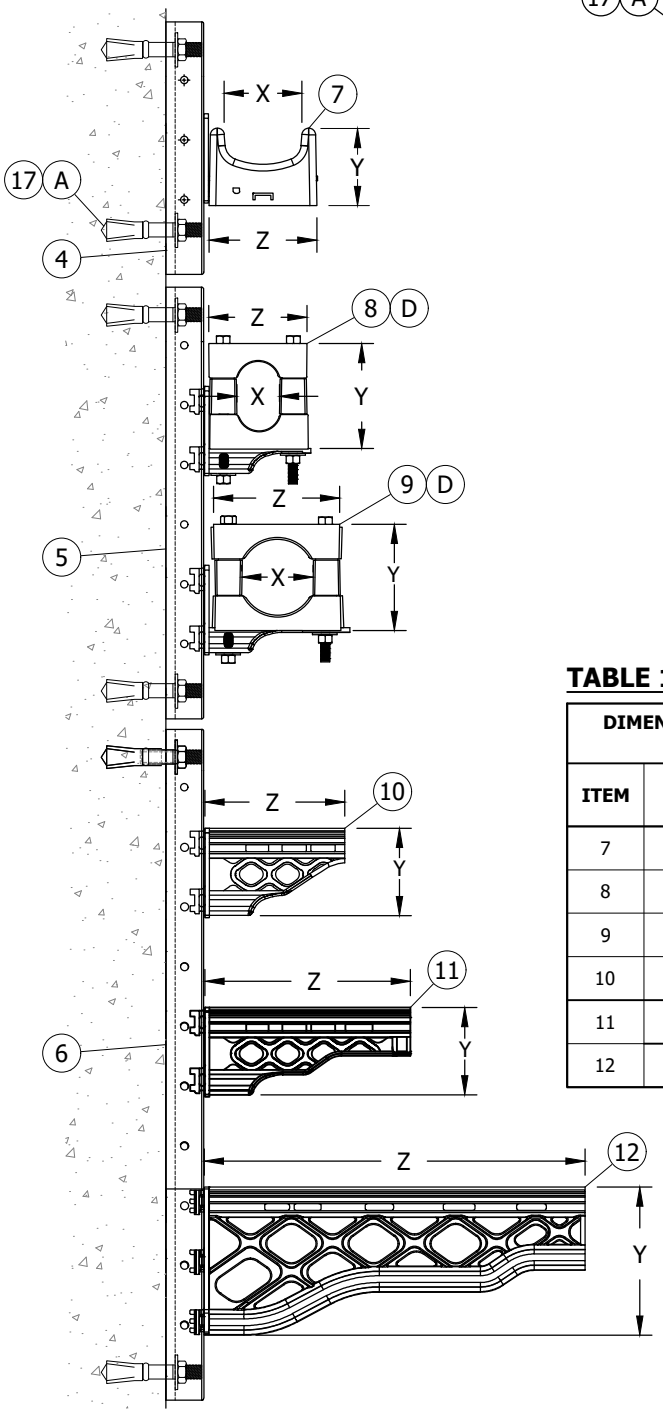

FIGURE 3
CHANNEL, CABLE SADDLE, CABLE CLAMPS, (B)
AND CABLE/EQUIPMENT ARMS

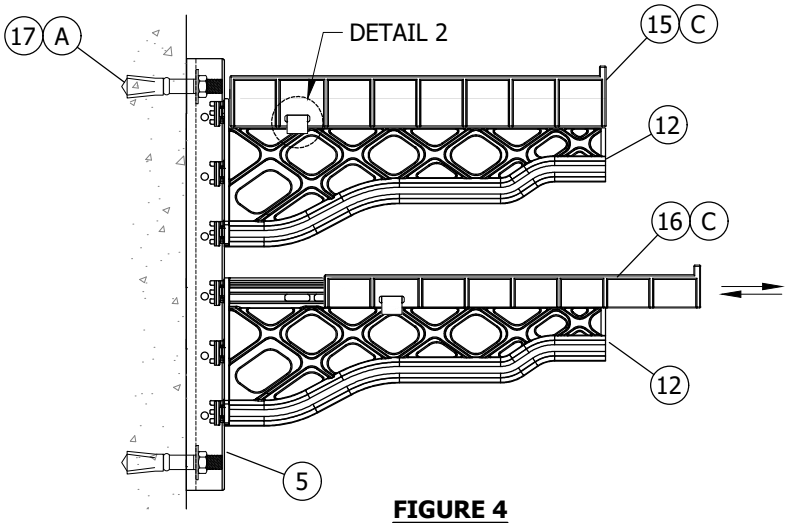

FIGURE 4
CABLE AND EQUIPMENT ARMS
SUPPORT FLANGE TOP INSTALLATION (B)

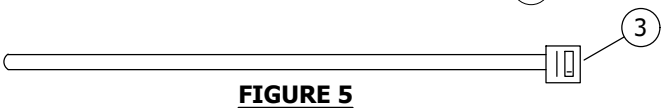

FIGURE 5
LARGE STRAP

TABLE 1

DIMENSION OF CABLE & EQUIPMENT ARMS			
ITEM	**Z (IN)**	**Y (IN)**	**X (IN)**
7	6	4 1/4	4 5/16
8	5 1/2	5 13/16	2 3/8
9	7	5 7/8	3 7/8
10	7 1/2	5	-
11	11	5	-
12	20 13/16	8 3/16	-

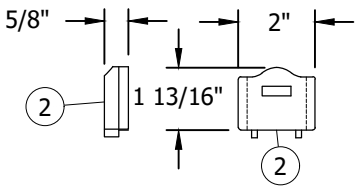

DETAIL 1
LOCK FOR CABLE
SUPPORT BRACKET (B4)

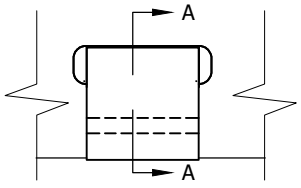

DETAIL 2
TYPICAL SLIDING LOCK TAB
(RETRACTABLE VIA PRY SLOT
ON TOP OF LOCK TAB)

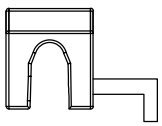

DETAIL 2
VIEW A-A

© 1998 - 2022 San Diego Gas & Electric Company. All rights reserved. Removal of this copyright notice without permission is not permitted under law.

REV	CHANGE	DR	BY	DSN	APV	DATE	REV	CHANGE	DR	BY	DSN	APV	DATE
C	REVISION	-	-	-	JJ/TR	03/20/2008	F						
B	REVISION	-	-	-	JJ/TR	03/07/2008	E	DRAWING UPDATE	EDM	ADW	GLW	KRG	07/14/2022
A	REVISION	-	-	-	JJ/TR	01/09/1992	D	FORMATTING	EDM	JIK	-	-	06/02/2020

Indicates Latest Revision | Completely Revised | X New Page | Information Removed

SDG&E ELECTRIC UNDERGROUND CONSTRUCTION STANDARDS

HEAVY DUTY NON-METALLIC EQUIPMENT/CABLE RACK
(PREFERRED)

UG4178.2

INSTALLATION:

(A) ANCHOR SYSTEM INSTALLATION

(1) WALL CHANNELS SHALL BE SET 22 1/8" APART, CENTER TO CENTER.

2. DRILL 1/2-INCH DIAMETER HOLE 2 INCHES DEEP.

(B) WALL CHANNELS, SUPPORT BRACKETS AND SADDLES INSTALLATION

1. SELECT WALL CHANNEL SIZE AS NEEDED. INSTALL A WASHER AND BOLT INTO EACH BOLT SLOT. TIGHTEN BOLT TO ATTAIN A SNUG FIT. DO NOT OVER TIGHTEN.
2. WALL CHANNELS SHOULD BE PLACED TO PROVIDE SUPPORT TO CABLE AND CONNECTION AS NEEDED.
3. ASSEMBLE SUPPORT BRACKETS, CLAMPS AND CABLE SADDLES INTO WALL CHANNEL. TAP SUPPORT BRACKETS, CLAMPS AND SADDLES DOWN LIGHTLY UNTIL SEATED.
4. INSTALL LOCKING PLUG. PLACE LOCKING PLUG INTO RECTANGULAR SLOT ABOVE SUPPORT BRACKET, CLAMPS OR SADDLE WITH LOCKING BARBS DOWN. PUSH LOCK IN UNTIL THE FLANGES ON LOCKING CLIP HIT WALL CHANNEL. LOCK WILL CLICK INTO PLACE.
5. IN ADDITION TO OR IN PLACE OF LOCK PLUG THE SECURING TOOL (PIN) MAY BE INSTALLED INTO WALL CHANNEL RIGHT ABOVE CABLE ARM OR SADDLE TO SECURE IT TO THE WALL.
6. USE LARGE BLACK TIE STRAPS TO SECURE CABLE AND CONNECTIONS AS NEEDED.

(C) WIDE TOP FLANGE

1. WIDE TOP FLANGES MAY BE INSTALLED TO PROVIDE FOR EQUIPMENT STABILITY OR ADDED HEIGHT TO CABLE TEE BODIES WHEN NEEDED.
2. TO INSTALL, SLIDE INTO PLACE UTILIZING GROOVES ON TOP OF SUPPORT BRACKET.
3. IF ADDED LENGTH OF CABLE ARM IS NEEDED WIDE TOP FLANGE MAY BE MOVED AWAY FROM WALL CHANNEL TO ADD LENGTH.
4. ROTATE LOCK TAB UPWARD USING PRY SLOT AND SLIDE OUT TO DESIRED LENGTH.

(D) CABLE CLAMP ASSEMBLY COMES WITH A REMOVABLE INSERT THAT MAY BE REMOVED TO ADJUST FOR CABLE SIZE.

BILL OF MATERIALS:

ITEM		DESCRIPTION	MANUFACTURER	MANUFACTURER PART NUMBER	QUANTITY	STANDARD PAGE	STOCK NUMBER	DESIGN UNITS
1	a	CHANNEL, WALL, 30"	ELECTRICAL MATERIALS CO.	600ALBSUP	AS REQ'D	--	S564478	EQRACK (V)
	b	BRACKET, SUPPORT, 23 1/2"						
	c	ANGLE PIECE, LEFT, 316 SS, 2" X 2" X 1/8"						
	d	ANGLE PIECE, RIGHT, 316 SS, 2" X 2" X 1/8"						
	e	TOP PIECE, FLAT, 316 SS, 23 1/4" X 4 7/8" X 1/8"						
2		LOCK, RACK, ARM TO CHANNEL	ELECTRICAL MATERIALS CO.	LOCKPLUG	AS REQ'D	--	S564510	--
3		STRAP, LARGE, BLACK	--	--	AS REQ'D	--	S738440	--
4		CHANNEL, WALL, 13"	ELECTRICAL MATERIALS CO.	CHNF13382	AS REQ'D	--	S564482	--
5		CHANNEL, WALL, 24"	ELECTRICAL MATERIALS CO.	CHNF24387	AS REQ'D	--	S564484	--
6		CHANNEL, WALL, 36"	ELECTRICAL MATERIALS CO.	CHNF3638T	AS REQ'D	--	S564486	--
7		SADDLE ASSEMBLY, CABLE, 3" X 5"	ELECTRICAL MATERIALS CO.	CS3X5P	AS REQ'D	--	S564506	--
8		CLAMP ASSEMBLY, CABLE, 2 3/8" I.D.	ELECTRICAL MATERIALS CO.	CACL2.36	AS REQ'D	--	S564504	--

© 1998 - 2022 San Diego Gas & Electric Company. All rights reserved. Removal of this copyright notice without permission is not permitted under law.

REV	CHANGE	DR	BY	DSN	APV	DATE	REV	CHANGE	DR	BY	DSN	APV	DATE
C	REVISION	-	-	-	JJ/TR	03/20/2008	F						
B	REVISION	-	-	-	JJ/TR	03/07/2008	E	DRAWING UPDATE	EDM	ADW	GLW	KRG	07/14/2022
A	REVISION	-	-	-	JJ/TR	01/09/1992	D	FORMATTING	EDM	JIK	-	-	06/02/2020

TABLE OF CONTENTS

BILL OF MATERIALS (CONT'D):

ITEM	DESCRIPTION	MANUFACTURER	MANUFACTURER PART NUMBER	QUANTITY	STANDARD PAGE	STOCK NUMBER	DESIGN UNITS
9	CLAMP ASSEMBLY, CABLE, 3 1/2" (QTY. 2)	ELECTRICAL MATERIALS CO.	CACL3.53S	AS REQ'D	--	S564502	--
10	BRACKET, SUPPORT, 7 1/2"	ELECTRICAL MATERIALS CO.	CSUP7HD	AS REQ'D	--	S564488	--
11	BRACKET, SUPPORT, 11 1/2" (D)	ELECTRICAL MATERIALS CO.	CSUP11HD	AS REQ'D	--	S564492	--
12	BRACKET, SUPPORT, 20" (D)	ELECTRICAL MATERIALS CO.	CSUP20HD	AS REQ'D	--	S564500	--
13	FLANGE, WIDE TOP, TALL, 13 1/2" (IV)	ELECTRICAL MATERIALS CO.	WTOP132H	AS REQ'D	--	S564498	--
14	FLANGE, WIDE TOP, SHORT, 13 1/2" (IV)	ELECTRICAL MATERIALS CO.	WTOP132S	AS REQ'D	--	S564496	--
15	FLANGE, WIDE TOP, TALL, 20"	ELECTRICAL MATERIALS CO.	WTOP202H	AS REQ'D	--	TBD	--
16	FLANGE, WIDE TOP, SHORT, 20"	ELECTRICAL MATERIALS CO.	WTOP202S	AS REQ'D	--	TBD	--
17	ANCHOR, DROP-IN, 303 STAINLESS, 1/2"	HILTI	--	AS REQ'D	3675.3	S108864 (X)	--
	BOLT, HILTI, EZ, 1/2" X 3 1/2"	HILTI	--		--	S108434	--
	BOLT, TITEN HD, ZINC PLATED, 3/8" X 4"	HILTI	--		--	S152716 (X)	--

NOTES:

I. NON-METALLIC CABLE RACKING STANDARD: UNDERGROUND DEVICES RACKING SYSTEM IS A FIBERGLASS REINFORCED POLYPROPYLENE OF EQUAL STRENGTH TO CURRENT GALVANIZED STEEL. IT IS THERMAL RESISTANT, WITH HIGH DIELECTRIC STRENGTH. IT IS CORROSION AND CHEMICAL RESISTANT AND WILL REDUCE CONTAMINATION AND WATER DISCOLORATION IN SUB-STRUCTURES. CABLE SADDLES AND CABLE BRACKETS HAVE SLOTS TO INSTALL CABLE TIES FOR CONDUCTOR AND CONNECTION TIE DOWN.

II. CABLE RACKING SYSTEM MAY BE INSTALLED IN ALL WALK-IN VAULTS AND MANHOLES. THIS SYSTEM MAY BE USED IN HAND HOLE APPLICATION WITH ATTENTION TO CABLE BRACKET LENGTH DOES NOT ENCROACH IN THE WORKING SPACE.

III. BEFORE DRILLING AND INSTALLING ANCHORS AND CHANNELS, CHECK THE GENERAL CONDITION OF CONCRETE THAT WILL HOLD ANCHOR. SURFACE SHOULD BE FLAT FOR A QUALITY INSTALLATION.

(IV) NOT SHOWN IN FIGURES.

(V) INCLUDES ALL HARDWARE SHOWN ON FIGURE 1.

(X) THIS ITEM IS EXEMPT.

REFERENCE: NONE

TABLE OF CONTENTS

© 1998 - 2022 San Diego Gas & Electric Company. All rights reserved. Removal of this copyright notice without permission is not permitted under law.

REV	CHANGE	DR	BY	DSN	APV	DATE	REV	CHANGE	DR	BY	DSN	APV	DATE
C	REVISION	-	-	-	JJ/TR	03/20/2008	F						
B	REVISION	-	-	-	JJ/TR	03/07/2008	E	DRAWING UPDATE	EDM	ADW	GLW	KRG	07/14/2022
A	REVISION	-	-	-	JJ/TR	01/09/1992	D	FORMATTING	EDM	JIK	-	-	06/02/2020

Indicates Latest Revision | Completely Revised | X New Page | Information Removed

SDG&E ELECTRIC UNDERGROUND CONSTRUCTION STANDARDS

HEAVY DUTY NON-METALLIC EQUIPMENT/CABLE RACK (PREFERRED)

UG4178.4

SCOPE: THIS STANDARD SHOWS THE APPLICATION AND INSTALLATION OF THE ALTERNATE HEAVY DUTY NON-METALLIC CABLE RACK.

ATTENTION:

* THIS ANCHOR SYSTEM SHALL **NOT** BE INSTALLED IN BRICK, BLOCK OR CONCRETE GROUT. THE RACKING SYSTEM CAN SUPPORT 250 LBS TO 450 LBS DEPENDING ON THE LENGTH OF THE CABLE ARM. THIS PRODUCT IS DESIGNED TO SUPPORT CABLE AND CONNECTING LOAD AND IS NOT TO BE USED AS A STEP OR LADDER AT ANY TIME.

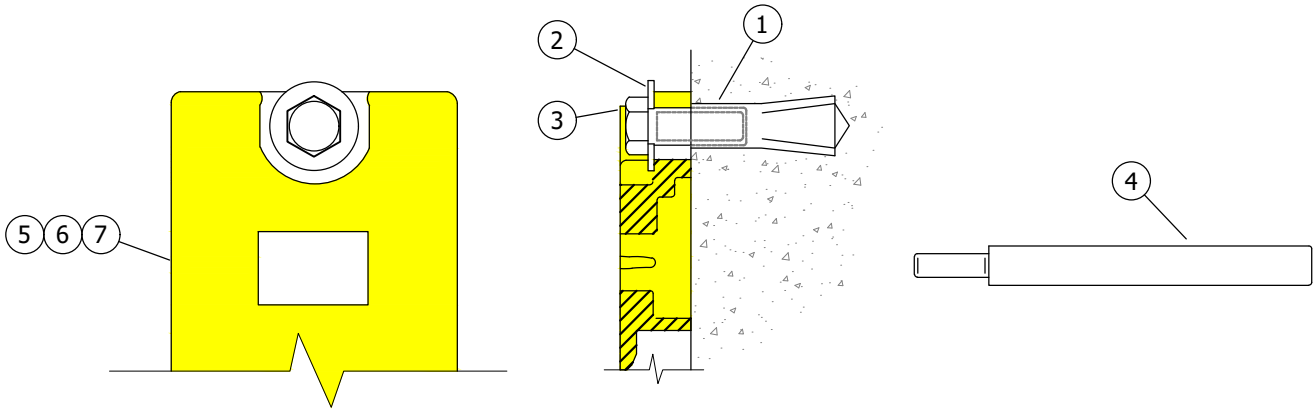

FIGURE 1
ANCHOR SYSTEM INSTALLATION (A)

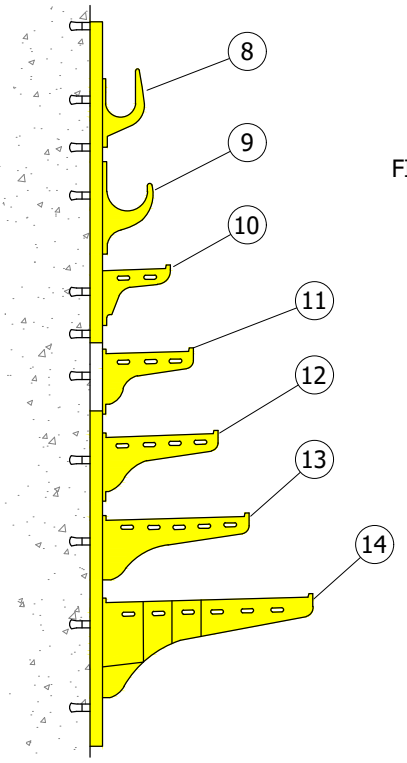

FIGURE 2
STANCHION, CABLE ARMS AND HOOKS
SIDE VIEW

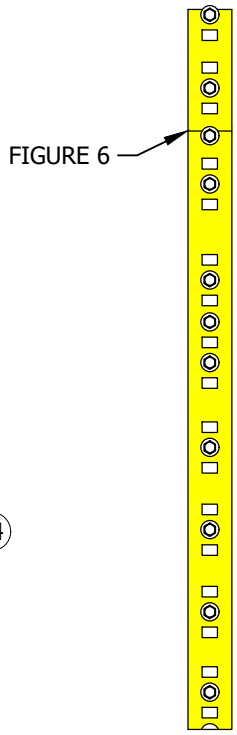

FIGURE 3
STANCHION
FRONT VIEW (B)

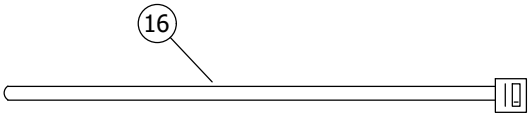

FIGURE 4
LARGE STRAP

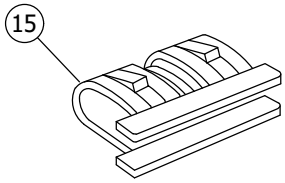

FIGURE 5
LOCKING CLIP

TABLE OF CONTENTS

© 1998 - 2022 San Diego Gas & Electric Company. All rights reserved. Removal of this copyright notice without permission is not permitted under law.

REV	CHANGE	DR	BY	DSN	APV	DATE	REV	CHANGE	DR	BY	DSN	APV	DATE
C	REVISION	-	-	-	JJ/TR	03/20/2008	F						
B	REVISION	-	-	-	JJ/TR	03/07/2008	E	DRAWING UPDATE	EDM	ADW	GLW	KRG	07/14/2022
A	REVISION	-	-	-	JJ/TR	01/09/1992	D	FORMATTING	EDM	JIK	-	-	06/02/2020

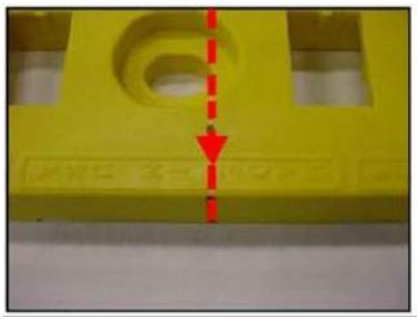

STEP 1

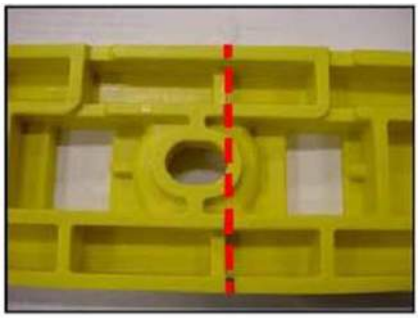

STEP 2 - CUT ABOVE BAR

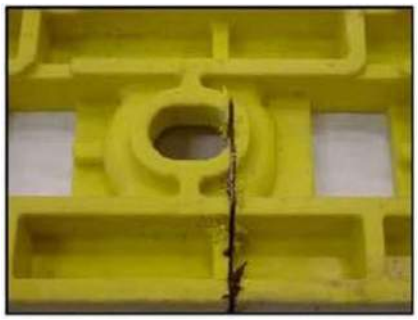

STEP 3

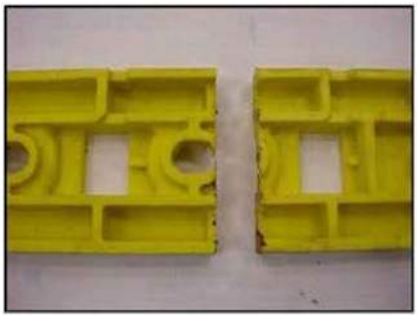

STEP 4

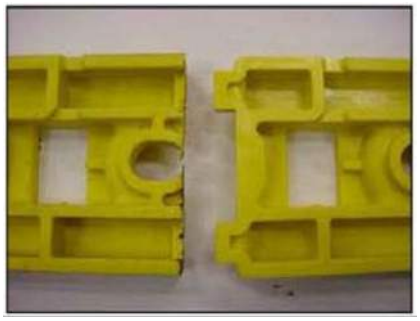

STEP 5

FIGURE 6
CUTTING STANCHIONS FOR CUSTOM FIT (B3)

INSTALLATION:

(A) ANCHOR SYSTEM INSTALLATION

1. DRILL AND INSTALL ANCHOR FOR EACH STANCHION HOLE, **THIS IS REQUIRED.**
2. USE A PLUMB LINE TO MARK DRILL POINTS. THIS WILL ENSURE STRAIGHT VERTICAL STANCHION INSTALLATION.
3. DRILL 5/8-INCH DIAMETER HOLE 2 INCHES DEEP.
4. BLOW OUT HOLE. IT MUST BE CLEAN TO SET ANCHOR CORRECTLY.
5. DRIVE ANCHOR FLUSH TO 1/16-INCH BELOW SURFACE OF CONCRETE.
6. EXPAND ANCHOR WITH FRT-112 SETTING TOOL. ANCHOR IS PROPERLY SET WHEN SHOULDER OF SETTING TOOL IS FLUSH WITH THE TOP OF THE ANCHOR.

(B) STANCHIONS, CABLE ARMS AND HOOKS INSTALLATION

1. SELECT STANCHION SIZE AS NEEDED. INSTALL A WASHER AND BOLT INTO EACH BOLT SLOT. TIGHTEN BOLT TO ATTAIN A SNUG FIT. DO NOT OVER TIGHTEN.
2. STANCHIONS SHOULD BE PLACED TO PROVIDE SUPPORT TO CABLE AND CONNECTION AS NEEDED.
3. (3) STANCHIONS MAY BE CUT FOR CUSTOM FIT IN SOME APPLICATIONS. SEE FIGURE 6 FOR CUTTING AT THE CORRECT POINT.
4. ASSEMBLE ARMS AND CABLE HOOKS INTO STANCHION. TAP THE ARMS AND HOOKS DOWN LIGHTLY UNTIL SEATED.
5. INSTALL LOCKING CLIP. PLACE THE LOCKING CLIP INTO RECTANGULAR SLOT ABOVE ARM OR HOOK WITH LOCKING BARBS UP. PUSH LOCK IN UNTIL THE FLANGES ON THE LOCKING CLIP HIT THE STANCHION. THE LOCK WILL CLICK INTO PLACE.
6. USE LARGE BLACK TIE STRAPS TO SECURE CABLE AND CONNECTIONS AS NEEDED.

TABLE OF CONTENTS

© 1998 - 2022 San Diego Gas & Electric Company. All rights reserved. Removal of this copyright notice without permission is not permitted under law.

REV	CHANGE	DR	BY	DSN	APV	DATE	REV	CHANGE	DR	BY	DSN	APV	DATE
C	REVISION	-	-	-	JJ/TR	03/20/2008	F						
B	REVISION	-	-	-	JJ/TR	03/07/2008	E	DRAWING UPDATE	EDM	ADW	GLW	KRG	07/14/2022
A	REVISION	-	-	-	JJ/TR	01/09/1992	D	FORMATTING	EDM	JIK	-	-	06/02/2020

BILL OF MATERIALS:

ITEM	DESCRIPTION	MANUFACTURER NUMBER	QUANTITY	STANDARD PAGE	STOCK NUMBER	DESIGN UNITS
1	ANCHOR, DROP-IN 1/2-13, 303 STAINLESS	FSRM-12	1/SLOT	--	S108864 (X)	--
2	WASHER, FLAT, STAINLESS STEEL, 1/2"	--	1/SLOT	--	S799680	--
3	BOLT, STAINLESS STEEL, 1/2 - 13 X 1 3/8"	FHC316-16-044	AS REQ'D	--	S148810 (X)	--
4	SETTING TOOL	FRT-112	AS REQ'D	--	S746758	--
5	STANCHION, 12"	CR12-B	AS REQ'D	--	S677288 (X)	--
6	STANCHION, 24"	CR24-B	AS REQ'D	--	S677290 (X)	--
7	STANCHION, 36"	CR36-B	AS REQ'D	--	S677292 (X)	--
8	HOOK, CABLE, 3"	3HDS	AS REQ'D	--	S415432 (X)	--
9	HOOK, CABLE, 4 15/16"	4.9HDS	AS REQ'D	--	S610948 (X)	--
10	ARM, CABLE, 6"	RA06	AS REQ'D	--	S110564 (X)	--
11	ARM, CABLE, 8"	RA08	AS REQ'D	--	S110570 (X)	--
12	ARM, CABLE, 11"	RA11	AS REQ'D	--	S110576 (X)	--
13	ARM, CABLE, 14"	RA14	AS REQ'D	--	S110582 (X)	--
14	ARM, CABLE, 20"	RA20	AS REQ'D	--	S110590 (X)	--
15	CLIP, LOCKING, BLACK	HDL	AS REQ'D	--	S237512 (X)	--
16	STRAP, LARGE, BLACK	--	AS REQ'D	--	S738440	--

NOTES:

I. NON-METALLIC CABLE RACKING STANDARD: UNDERGROUND DEVICES RACKING SYSTEM IS A FIBERGLASS REINFORCED NYLON OF EQUAL STRENGTH TO CURRENT GALVANIZED STEEL. IT IS THERMAL RESISTANT, WITH HIGH DIELECTRIC STRENGTH. IT IS CORROSION AND CHEMICAL RESISTANT AND WILL REDUCE CONTAMINATION AND WATER DISCOLORATION IN SUB-STRUCTURES. CABLE HOOKS AND ARMS HAVE SLOTS TO INSTALL CABLE TIES FOR CONDUCTOR AND CONNECTION TIE DOWN.

II. CABLE RACKING SYSTEM MAY BE INSTALLED IN ALL WALK-IN VAULTS AND MANHOLES. THIS SYSTEM MAY BE USED IN HAND HOLE APPLICATION WITH ATTENTION TO CABLE ARM LENGTH AS NOT TO ENCROACH IN THE WORKING SPACE.

III. BEFORE DRILLING AND INSTALLING ANCHORS AND STANCHIONS, CHECK THE GENERAL CONDITION OF THE CONCRETE THAT WILL HOLD THE ANCHOR. THE SURFACE SHOULD BE FLAT FOR A QUALITY INSTALLATION.

(X) THIS ITEM IS EXEMPT.

REFERENCE: NONE

TABLE OF CONTENTS

© 1998 - 2022 San Diego Gas & Electric Company. All rights reserved. Removal of this copyright notice without permission is not permitted under law.

REV	CHANGE	DR	BY	DSN	APV	DATE	REV	CHANGE	DR	BY	DSN	APV	DATE
C	REVISION	-	-	-	JJ/TR	03/20/2008	F						
B	REVISION	-	-	-	JJ/TR	03/07/2008	E	DRAWING UPDATE	EDM	ADW	GLW	KRG	07/14/2022
A	REVISION	-	-	-	JJ/TR	01/09/1992	D	FORMATTING	EDM	JIK	-	-	06/02/2020

X Indicates Latest Revision | Completely Revised | New Page | Information Removed

SDG&E ELECTRIC UNDERGROUND CONSTRUCTION STANDARDS

HEAVY DUTY NON-METALLIC CABLE RACK
(ALTERNATE)

UG4178.7

SCOPE: THIS STANDARD SHOWS THE CONNECTIONS AND ASSEMBLY CODES USED FOR CALLING OUT 200 AMP SPLICE AND CONNECTOR ASSEMBLIES ON ELECTRIC CONSTRUCTION ORDERS.

ATTENTION:

* THIS CHART SHOWS HOW 200 AMP LOADBREAK CONNECTORS ARE ASSEMBLED TO FORM SOME OF THE COMBINATIONS SHOWN ON THIS STANDARD.

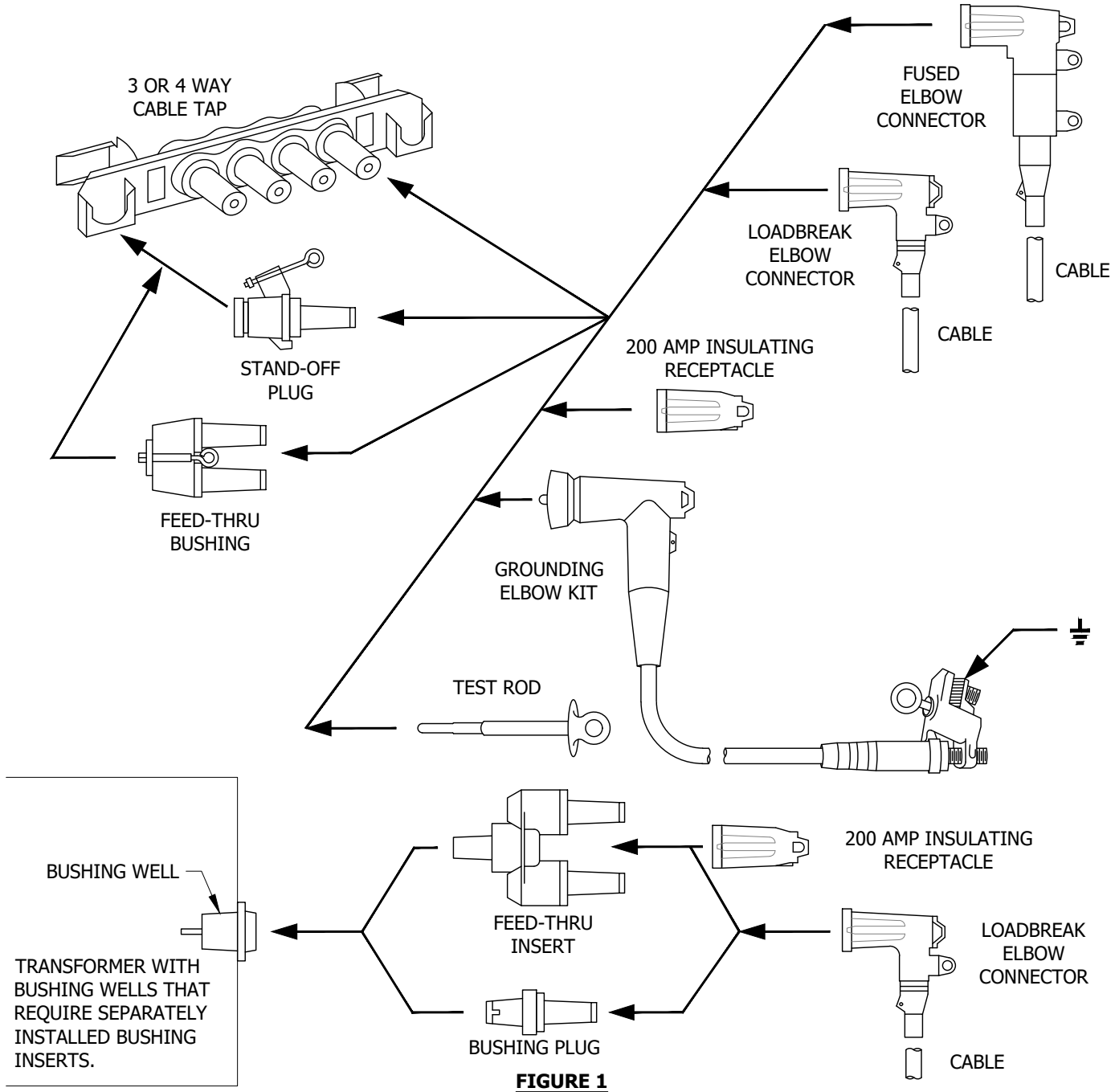

FIGURE 1
PAD-MOUNTED AND SUBSURFACE CONNECTOR APPLICATION CHART
200 AMP LOADBREAK

© 1998 - 2020 San Diego Gas & Electric Company. All rights reserved. Removal of this copyright notice without permission is not permitted under law.

REV	CHANGE	DR	BY	DSN	APV	DATE	REV	CHANGE	DR	BY	DSN	APV	DATE
C	REVISION	-	-	-	RSW/RDJ	1/1/1996	F	MOVED FROM UG4180	EDM	JIK	-	-	6/2/2020
B	REVISION	-	-	-	SLC/DTE	1/1/1990	E	REVISION	-	-	-	TR/MJC	7/9/2012
A	REVISION	-	-	-	JLB/RDJ	1/1/1989	D	REVISION	-	-	-	TR/MJC	11/8/2011

TABLE OF CONTENTS

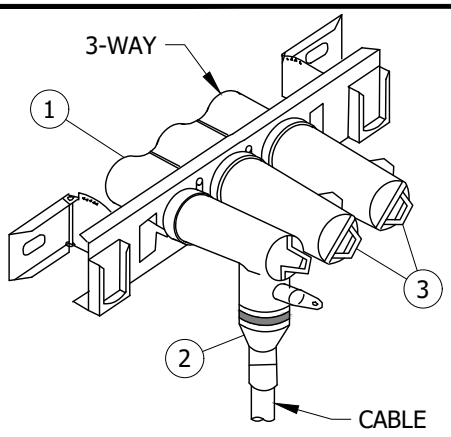

FIGURE 2
PAD-MOUNTED AND SUBSURFACE CONNECTIONS
200 AMP LOADBREAK

UG MAP SYMBOL

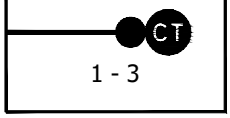

TABLE 1

TYPICAL COMBINATIONS		
CODE	3OO	5OO
CABLE SIZE	#2 AL	2/0 AL
MACRO UNITS	CC-300	CC-500

BILL OF MATERIALS (FIGURE 2):

ITEM	DESCRIPTION	WIRE SIZE	QUANTITY	STANDARD PAGE	STOCK NUMBER	DESIGN UNITS
1	TAP, CABLE, 3-WAY	-	1	-	S718312	-
2	CONNECTOR, ELBOW, LOADBREAK	#2 AL	1	-	S443838	-
		2/0 AL		-	S443840	-
3	RECEPTACLE, INSULATING	-	2	-	S204304	-

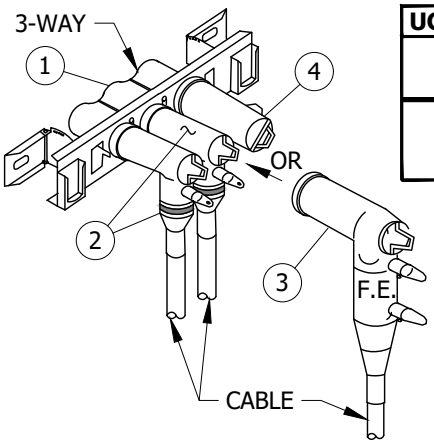

FIGURE 3
PAD-MOUNTED AND SUBSURFACE CONNECTIONS
200 AMP LOADBREAK

UG MAP SYMBOL

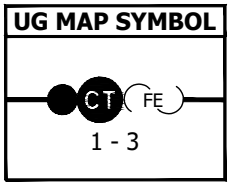

TABLE 2

ADDITIONAL MACRO UNITS					
CC-3BB	CC-3BC	CC-3B0	CC-5BB	CC-5BC	CC-5CC

TABLE 3

TYPICAL COMBINATIONS					
CODE	33O	55O	53O	5BO	5CO
CABLE SIZE	#2 AL-#2 AL	2/0 AL-2/0 AL	2/0 AL-#2 AL	2/0 AL-#2 AL F.E.	2/0 AL-2/0 AL F.E.
MACRO UNITS	CC-330	CC-550	CC-530	CC-5B0	CC-5C0

BILL OF MATERIALS (FIGURE 3):

ITEM	DESCRIPTION	WIRE SIZE	QUANTITY	STANDARD PAGE	STOCK NUMBER	DESIGN UNITS
1	TAP, CABLE, 3-WAY	-	1	-	S718312	-
2	CONNECTOR, ELBOW, LOADBREAK	#2 AL	1 OR 2	-	S443838	-
		2/0 AL		-	S443840	-
3	CONNECTOR, ELBOW, FUSED (a)	#2 AL	0 OR 1	-	S443850	-
		2/0 AL		-	S443882	-
4	ELBOW, INSULATING	-	1	-	S204304	-

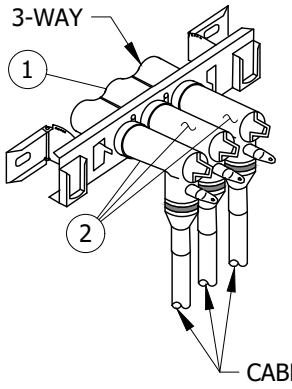

FIGURE 4
PAD-MOUNTED AND SUBSURFACE CONNECTIONS
200 AMP LOADBREAK

UG MAP SYMBOL

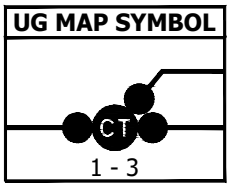

TABLE 4

TYPICAL COMBINATIONS				
CODE	333	555	533	553
CABLE SIZE	#2 AL-#2 AL #2 AL	2/0 AL-2/0 AL 2/0 AL	2/0 AL-#2 AL #2 AL	2/0 AL-2/0 AL #2 AL
MACRO UNITS	CC-333	CC-555	CC-533	CC-553

BILL OF MATERIALS (FIGURE 4):

ITEM	DESCRIPTION	WIRE SIZE	QUANTITY	STANDARD PAGE	STOCK NUMBER	DESIGN UNITS
1	TAP, CABLE, 3-WAY	-	1	-	S718312	-
2	CONNECTOR, ELBOW, LOADBREAK	#2 AL	3	-	S443838	-
		2/0 AL		-	S443840	-

TABLE OF CONTENTS

© 1998 - 2020 San Diego Gas & Electric Company. All rights reserved. Removal of this copyright notice without permission is not permitted under law.

REV	CHANGE	DR	BY	DSN	APV	DATE	REV	CHANGE	DR	BY	DSN	APV	DATE
C	REVISION	-	-	-	RSW/RDJ	1/1/1996	F	MOVED FROM UG4180	EDM	JIK	-	-	6/2/2020
B	REVISION	-	-	-	SLC/DTE	1/1/1990	E	REVISION	-	-	-	TR/MJC	7/9/2012
A	REVISION	-	-	-	JLB/RDJ	1/1/1989	D	REVISION	-	-	-	TR/MJC	11/8/2011

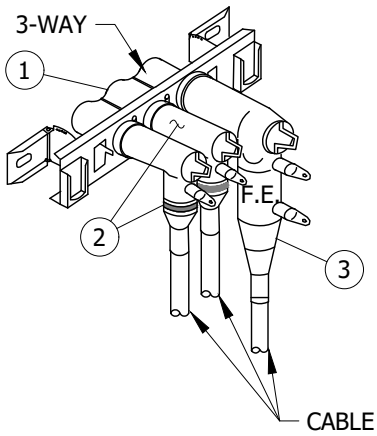

FIGURE 5
PAD-MOUNTED AND SUBSURFACE CONNECTIONS
200 AMP LOADBREAK

UG MAP SYMBOL

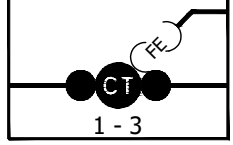

TABLE 5

TYPICAL COMBINATIONS				
CODE	33B	55C	33C	55B
CABLE SIZE	#2 AL-#2 AL #2 AL F.E.	2/0 AL-2/0 AL 2/0 AL F.E.	#2 AL-#2 AL 2/0 AL F.E.	2/0 AL-2/0 AL #2 AL F.E.
MACRO UNITS	CC-33B	CC-55C	CC-33C	CC-55B

BILL OF MATERIALS (FIGURE 5):

ITEM	DESCRIPTION	WIRE SIZE	QUANTITY	STANDARD PAGE	STOCK NUMBER	DESIGN UNITS
1	TAP, CABLE, 3-WAY	-	1	-	S718312	-
2	CONNECTOR, ELBOW, LOADBREAK	#2 AL	2	-	S443838	-
		2/0 AL		-	S443840	-
3	CONNECTOR, ELBOW, FUSED (a)	#2 AL	1	-	S443850	-
		2/0 AL		-	S443882	-

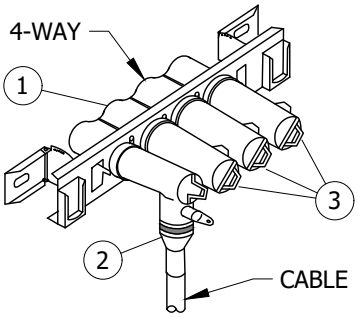

FIGURE 6
PAD-MOUNTED AND SUBSURFACE CONNECTIONS
200 AMP LOADBREAK

UG MAP SYMBOL

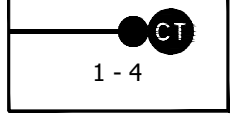

TABLE 6

TYPICAL COMBINATIONS		
CODE	3000	5000
CABLE SIZE	#2 AL	2/0 AL
MACRO UNITS	CC3000	CC5000

BILL OF MATERIALS (FIGURE 6):

ITEM	DESCRIPTION	WIRE SIZE	QUANTITY	STANDARD PAGE	STOCK NUMBER	DESIGN UNITS
1	TAP, CABLE, 4-WAY	-	1	-	S718328	-
2	CONNECTOR, ELBOW, LOADBREAK	#2 AL	1	-	S443838	-
		2/0 AL		-	S443840	-
3	RECEPTACLE, INSULATING	-	3	-	S204304	-

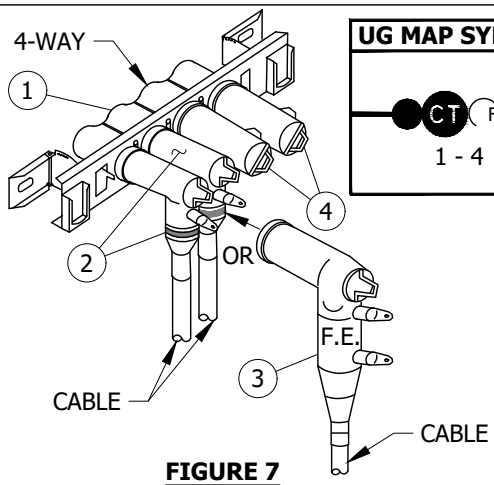

FIGURE 7
PAD-MOUNTED AND SUBSURFACE CONNECTIONS
200 AMP LOADBREAK

UG MAP SYMBOL

TABLE 7

ADDITIONAL MACRO UNITS								
CC3BB0	CC3BC0	CC3B00	CC3C00	CC3CC0	CC5BBC	CC5BB0	CC5BC0	CC5CC0

TABLE 8

TYPICAL COMBINATIONS					
CODE	3300	5500	5300	5B00	5C00
CABLE SIZE	#2 AL-#2 AL	2/0 AL-2/0 AL	2/0 AL-#2 AL	2/0 AL-#2 AL F.E.	2/0 AL-2/0 AL F.E.
MACRO UNITS	CC3300	CC5500	CC5300	CC5B00	CC5C00

BILL OF MATERIALS (FIGURE 7):

ITEM	DESCRIPTION	WIRE SIZE	QUANTITY	STANDARD PAGE	STOCK NUMBER	DESIGN UNITS
1	TAP, CABLE, 4-WAY	-	1	-	S718328	-
2	CONNECTOR, ELBOW, LOADBREAK	#2 AL	1 OR 2	-	S443838	-
		2/0 AL		-	S443840	-
3	CONNECTOR, ELBOW, FUSED (a)	#2 AL	0 OR 2	-	S443850	-
		2/0 AL		-	S443882	-
4	RECEPTACLE, INSULATING	-	2	-	S204304	-

© 1998 - 2020 San Diego Gas & Electric Company. All rights reserved. Removal of this copyright notice without permission is not permitted under law.

REV	CHANGE	DR	BY	DSN	APV	DATE	REV	CHANGE	DR	BY	DSN	APV	DATE
C	REVISION	-	-	-	RSW/RDJ	1/1/1996	F	MOVED FROM UG4180	EDM	JIK	-	-	6/2/2020
B	REVISION	-	-	-	SLC/DTE	1/1/1990	E	REVISION	-	-	-	TR/MJC	7/9/2012
A	REVISION	-	-	-	JLB/RDJ	1/1/1989	D	REVISION	-	-	-	TR/MJC	11/8/2011

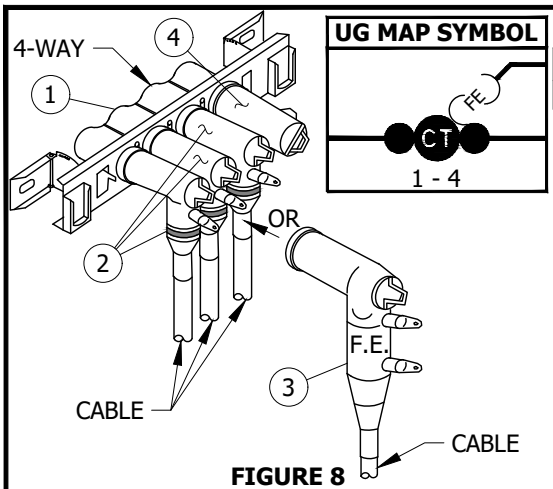

UG MAP SYMBOL

FIGURE 8
PAD-MOUNTED AND SUBSURFACE CONNECTIONS
200 AMP LOADBREAK

TABLE 9

ADDITIONAL MACRO UNITS										
CC55CC	CC53BC	CC53B0	CC53CC	CC55BB	CC55BC	CC33BB	CC33BC	CC33B0	CC33CC	CC53BB

TABLE 10

TYPICAL COMBINATIONS						
CODE	333O	555O	533O	553O	55BO	55CO
CABLE SIZE	#2 AL-#2 AL -#2 AL	2/0 AL-2/0 AL -2/0 AL	2/0 AL-#2 AL -#2 AL	2/0 AL-2/0 AL -#2 AL	2/0 AL-2/0 AL #2 AL F.E.	2/0 AL-2/0 AL 2/0 AL F.E.
MACRO UNITS	CC3330	CC5550	CC5330	CC5B00	CC55B0	CC55C0

BILL OF MATERIALS (FIGURE 8):

ITEM	DESCRIPTION	WIRE SIZE	QUANTITY	STANDARD PAGE	STOCK NUMBER	DESIGN UNITS
1	TAP, CABLE, 4-WAY	-	1	-	S718328	-
2	CONNECTOR, ELBOW, LOADBREAK	#2 AL	2 OR 3	-	S443838	-
		2/0 AL		-	S443840	-
3	CONNECTOR, ELBOW, FUSED (a)	#2 AL	0 OR 1	-	S443850	-
		2/0 AL		-	S443882	-
4	RECEPTACLE, INSULATING	-	1	-	S204304	-

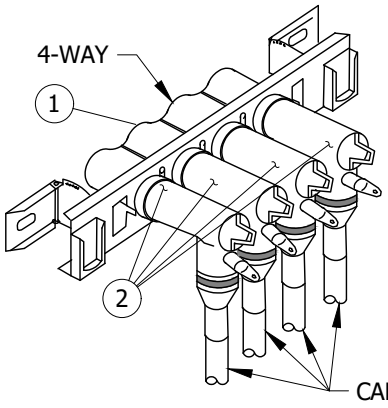

UG MAP SYMBOL

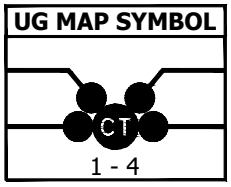

FIGURE 9
PAD-MOUNTED AND SUBSURFACE CONNECTIONS
200 AMP LOADBREAK

TABLE 11

TYPICAL COMBINATIONS					
CODE	3333	5555	5553	5533	5333
CABLE SIZE	#2 AL-#2 AL-#2 AL-#2 AL	2/0 AL-2/0 AL-2/0 AL-2/0 AL	2/0 AL-2/0 AL-2/0 AL-#2 AL	2/0 AL-2/0 AL-#2 AL-#2 AL	2/0 AL-#2 AL-#2 AL-#2 AL
MACRO UNITS	CC3333	CC5555	CC5553	CC5533	CC5333

BILL OF MATERIALS (FIGURE 9):

ITEM	DESCRIPTION	WIRE SIZE	QUANTITY	STANDARD PAGE	STOCK NUMBER	DESIGN UNITS
1	TAP, CABLE, 4-WAY	-	1	-	S718328	-
2	CONNECTOR, ELBOW, LOADBREAK	#2 AL	4	-	S443838	-
		2/0 AL		-	S443840	-

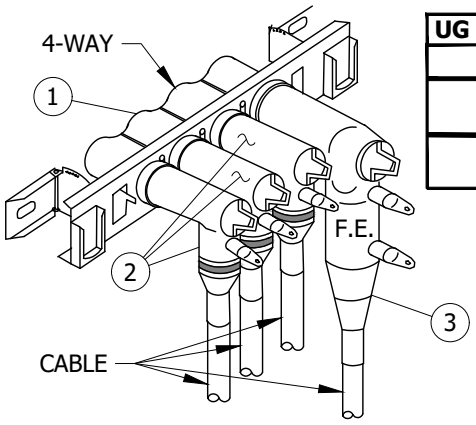

UG MAP SYMBOL

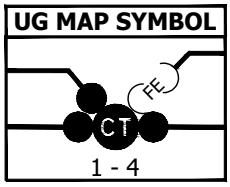

FIGURE 10
PAD-MOUNTED AND SUBSURFACE CONNECTIONS
200 AMP LOADBREAK

TABLE 12

ADDITIONAL MACRO UNITS	
CC533B	CC533C

TABLE 13

TYPICAL COMBINATIONS					
CODE	333B	555C	333C	555B	553B
CABLE SIZE	#2 AL-#2 AL -#2 AL -#2 AL F.E.	2/0 AL-2/0 AL -2/0 AL -2/0 AL F.E.	#2 AL-#2 AL -#2 AL -2/0 AL F.E.	2/0 AL-2/0 AL -2/0 AL -#2 AL F.E.	2/0 AL-2/0 AL -#2 AL -#2 AL F.E.
MACRO UNITS	CC333B	CC555C	CC333C	CC555B	CC553B

BILL OF MATERIALS (FIGURE 10):

ITEM	DESCRIPTION	WIRE SIZE	QUANTITY	STANDARD PAGE	STOCK NUMBER	DESIGN UNITS
1	TAP, CABLE, 4-WAY	-	1	-	S718328	-
2	CONNECTOR, ELBOW, LOADBREAK	#2 AL	3	-	S443838	-
		2/0 AL		-	S443840	-
3	CONNECTOR, ELBOW, FUSED (a)	#2 AL	1	-	S443850	-
		2/0 AL		-	S443882	-

© 1998 - 2020 San Diego Gas & Electric Company. All rights reserved. Removal of this copyright notice without permission is not permitted under law.

REV	CHANGE	DR	BY	DSN	APV	DATE	REV	CHANGE	DR	BY	DSN	APV	DATE
C	REVISION	-	-	-	RSW/RDJ	1/1/1996	F	MOVED FROM UG4180	EDM	JIK	-	-	6/2/2020
B	REVISION	-	-	-	SLC/DTE	1/1/1990	E	REVISION	-	-	-	TR/MJC	7/9/2012
A	REVISION	-	-	-	JLB/RDJ	1/1/1989	D	REVISION	-	-	-	TR/MJC	11/8/2011

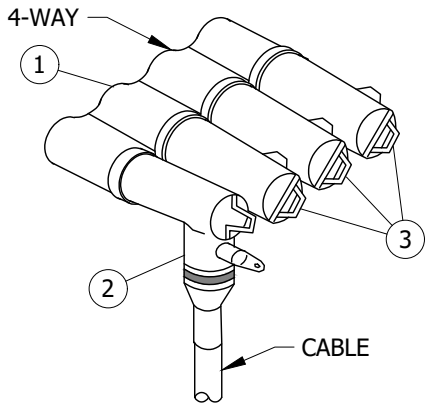

FIGURE 11
PAD-MOUNTED
200 AMP LOADBREAK

UG MAP SYMBOL

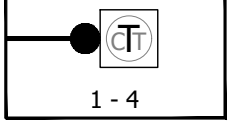

TABLE 14

TYPICAL COMBINATIONS		
CODE	3OOONB	5OOONB
CABLE SIZE	#2 AL	2/0 AL
MACRO UNITS	C-3000	C-5000

BILL OF MATERIALS (FIGURE 11):

ITEM	DESCRIPTION	WIRE SIZE	QUANTITY	STANDARD PAGE	STOCK NUMBER	DESIGN UNITS
1	TAP, CABLE, 4-WAY (NO BRACKET)	-	1	-	S718338	-
2	CONNECTOR, ELBOW, LOADBREAK	#2 AL	1	-	S443838	-
		2/0 AL		-	S443840	-
3	RECEPTACLE, INSULATING	-	3	-	S204304	-

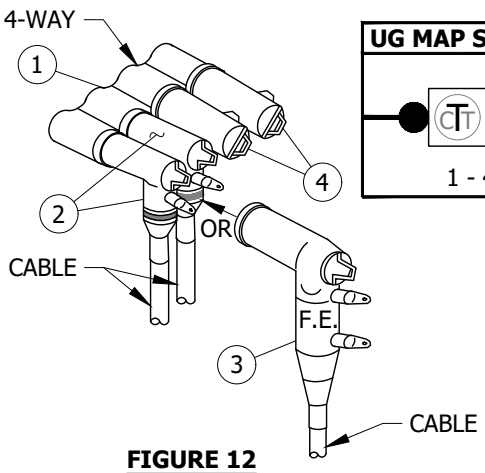

FIGURE 12
PAD-MOUNTED
200 AMP LOADBREAK

UG MAP SYMBOL

TABLE 15

ADDITIONAL MACRO UNITS								
C-3BB0	C-3BC0	C-3B00	C-3C00	C-3CC0	C-5BBC	C-5BB0	C-5BC0	C-5CC0

TABLE 16

TYPICAL COMBINATIONS					
CODE	33OONB	55OONB	53OONB	5BOONB	5COONB
CABLE SIZE	#2 AL-#2 AL	2/0 AL-2/0 AL	2/0 AL-#2 AL	2/0 AL-#2 AL F.E	2/0 AL-2/0 AL F.E.
MACRO UNITS	C-3300	C-5500	C-5300	C-5B00	C-5C00

BILL OF MATERIALS (FIGURE 12):

ITEM	DESCRIPTION	WIRE SIZE	QUANTITY	STANDARD PAGE	STOCK NUMBER	DESIGN UNITS
1	TAP, CABLE, 4-WAY (NO BRACKET)	-	1	-	S718338	-
2	CONNECTOR, ELBOW, LOADBREAK	#2 AL	1 OR 2	-	S443838	-
		2/0 AL		-	S443840	-
3	CONNECTOR, ELBOW, FUSED	#2 AL	0 OR 1	-	S443850	-
		2/0 AL		-	S443882	-
4	RECEPTACLE, INSULATING	-	2	-	S204304	-

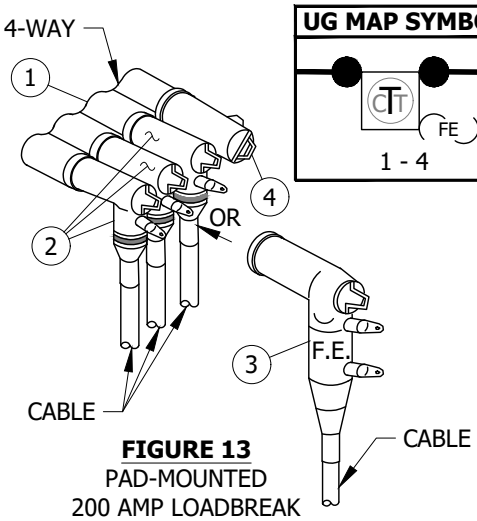

FIGURE 13
PAD-MOUNTED
200 AMP LOADBREAK

UG MAP SYMBOL

TABLE 17

ADDITIONAL MACRO UNITS										
C-55CC	C-53BC	C-53B0	C-53CC	C-55BB	C-55BC	C-33BB	C-33BC	C-33B0	C-33CC	C-53BB

TABLE 18

TYPICAL COMBINATIONS						
CODE	333ONB	555ONB	533ONB	553ONB	55BONB	55CONB
CABLE SIZE	#2 AL-#2 AL -#2 AL	2/0 AL-2/0 AL -2/0 AL	2/0 AL-#2 AL -#2 AL	2/0 AL-2/0 AL -#2 AL	2/0 AL-2/0 AL -#2 AL F.E.	2/0 AL-2/0 AL -2/0 AL F.E.
MACRO UNITS	C-3330	C-5550	C-5330	C-5530	C-55B0	C-55C0

BILL OF MATERIALS (FIGURE 13):

ITEM	DESCRIPTION	WIRE SIZE	QUANTITY	STANDARD PAGE	STOCK NUMBER	DESIGN UNITS
1	TAP, CABLE, 4-WAY (NO BRACKET)	-	1	-	S718338	-
2	CONNECTOR, ELBOW, LOADBREAK	#2 AL	2 OR 3	-	S443838	-
		2/0 AL		-	S443840	-
3	CONNECTOR, ELBOW, FUSED	#2 AL	0 OR 1	-	S443850	-
		2/0 AL		-	S443882	-
4	RECEPTACLE, INSULATING	-	1	-	S204304	-

© 1998 - 2020 San Diego Gas & Electric Company. All rights reserved. Removal of this copyright notice without permission is not permitted under law.

REV	CHANGE	DR	BY	DSN	APV	DATE	REV	CHANGE	DR	BY	DSN	APV	DATE
C	REVISION	-	-	-	RSW/RDJ	1/1/1996	F	MOVED FROM UG4180	EDM	JIK	-	-	6/2/2020
B	REVISION	-	-	-	SLC/DTE	1/1/1990	E	REVISION	-	-	-	TR/MJC	7/9/2012
A	REVISION	-	-	-	JLB/RDJ	1/1/1989	D	REVISION	-	-	-	TR/MJC	11/8/2011

X Indicates Latest Revision | Completely Revised | New Page | Information Removed

SDG&E ELECTRIC UNDERGROUND CONSTRUCTION STANDARDS

12KV 200 AMP CONNECTOR ASSEMBLIES
IDENTIFICATION CHART FOR
200A DEADFRONT TERMINATORS

UG4179.5

TABLE OF CONTENTS

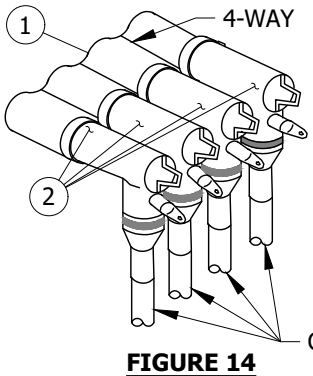

UG MAP SYMBOL

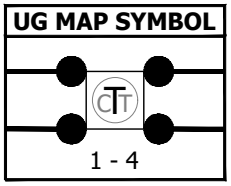

FIGURE 14
PAD-MOUNTED
200 AMP LOADBREAK

TABLE 19

TYPICAL COMBINATIONS					
CODE	3333NB	5555NB	5553NB	5533NB	5333NB
CABLE SIZE	#2 AL-#2 AL-#2 AL-#2 AL	2/0 AL-2/0 AL-2/0 AL-2/0 AL	2/0 AL-2/0 AL-2/0 AL-#2 AL	2/0 AL-2/0 AL-#2 AL-#2 AL	2/0 AL-#2 AL-#2 AL-#2 AL
MACRO UNITS	C-3333	C-5555	C-5553	C-5533	C-5333

BILL OF MATERIALS (FIGURE 14):

ITEM	DESCRIPTION	WIRE SIZE	QUANTITY	STANDARD PAGE	STOCK NUMBER	DESIGN UNITS
1	TAP, CABLE, 4-WAY (NO BRACKET)	-	1	-	S718338	-
2	CONNECTOR, ELBOW, LOADBREAK	#2 AL	4	-	S443838	-
		2/0 AL		-	S443840	-

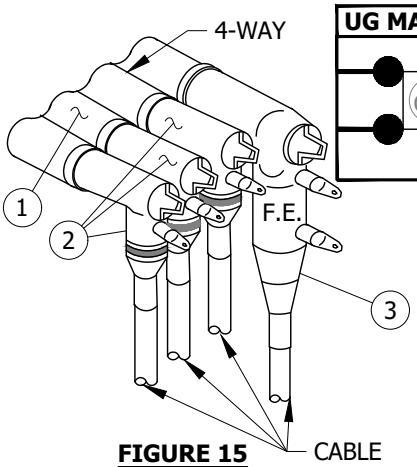

UG MAP SYMBOL

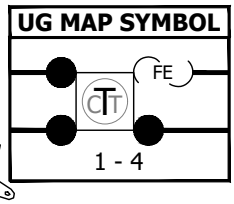

FIGURE 15
PAD-MOUNTED
200 AMP LOADBREAK

TABLE 20

ADDITIONAL MACRO UNITS	
C-533B	C-533C

TABLE 21

TYPICAL COMBINATIONS					
CODE	333BNB	555CNB	333CNB	555BNB	553BNB
CABLE SIZE	#2 AL-#2 AL-#2 AL-#2 AL F.E.	2/0 AL-2/0 AL-2/0 AL-2/0 AL F.E.	#2 AL-#2 AL-#2 AL-2/0 AL F.E.	2/0 AL-2/0 AL-2/0 AL-#2 AL F.E.	2/0 AL-2/0 AL-#2 AL-#2 AL F.E.
MACRO UNITS	C-333B	C-555C	C-333C	C-555B	C-553B

BILL OF MATERIALS (FIGURE 15):

ITEM	DESCRIPTION	WIRE SIZE	QUANTITY	STANDARD PAGE	STOCK NUMBER	DESIGN UNITS
1	TAP, CABLE, 4-WAY (NO BRACKET)	-	1	-	S718338	-
2	CONNECTOR, ELBOW, LOADBREAK	#2 AL	3	-	S443838	-
		2/0 AL		-	S443840	-
3	CONNECTOR, ELBOW, FUSED	#2 AL	1	-	S443850	-
		2/0 AL		-	S443882	-

INSTALLATION: NONE

BILL OF MATERIALS: INDIVIDUALLY INCLUDED WITH FIGURES.

NOTES:

I. **TABLE 22**

CODES USED IN THE TABLES ON THIS STANDARD	
CODE	**TYPE**
CABLE	
3	#2 AL
5	2/0 AL
COMPONENT	
B	#2 AL FUSED ELBOWS
C	2/0 AL FUSED ELBOW
O	200 AMP INSULATING RECEPTACLE

II. OTHER COMBINATIONS MAY BE CODED USING THE ABOVE CODES FOR THE SAME TYPE CONNECTIONS SHOWN.

REFERENCE:

(a) SEE UG3649 FOR "EQUIPMENT COMBINATION GUIDELINES" FOR FUSED ELBOWS.

b. FOR SPECIFICATIONS AND INSTALLATION INSTRUCTIONS, REFER TO UG4191 AND UG4195.

© 1998 - 2020 San Diego Gas & Electric Company. All rights reserved. Removal of this copyright notice without permission is not permitted under law.

REV	CHANGE	DR	BY	DSN	APV	DATE	REV	CHANGE	DR	BY	DSN	APV	DATE
C	REVISION	-	-	-	RSW/RDJ	1/1/1996	F	MOVED FROM UG4180	EDM	JIK	-	-	6/2/2020
B	REVISION	-	-	-	SLC/DTE	1/1/1990	E	REVISION	-	-	-	TR/MJC	7/9/2012
A	REVISION	-	-	-	JLB/RDJ	1/1/1989	D	REVISION	-	-	-	TR/MJC	11/8/2011

SCOPE: THIS STANDARD SHOWS THE CONNECTIONS AND ASSEMBLY CODES USED FOR CALLING OUT 200 AMP PREMOLDED SPLICE AND CONNECTOR ASSEMBLIES ON ELECTRIC CONSTRUCTION ORDERS.

ATTENTION:

* THIS CHART SHOWS HOW 200 AMP SPLICE CONNECTORS ARE ASSEMBLED.

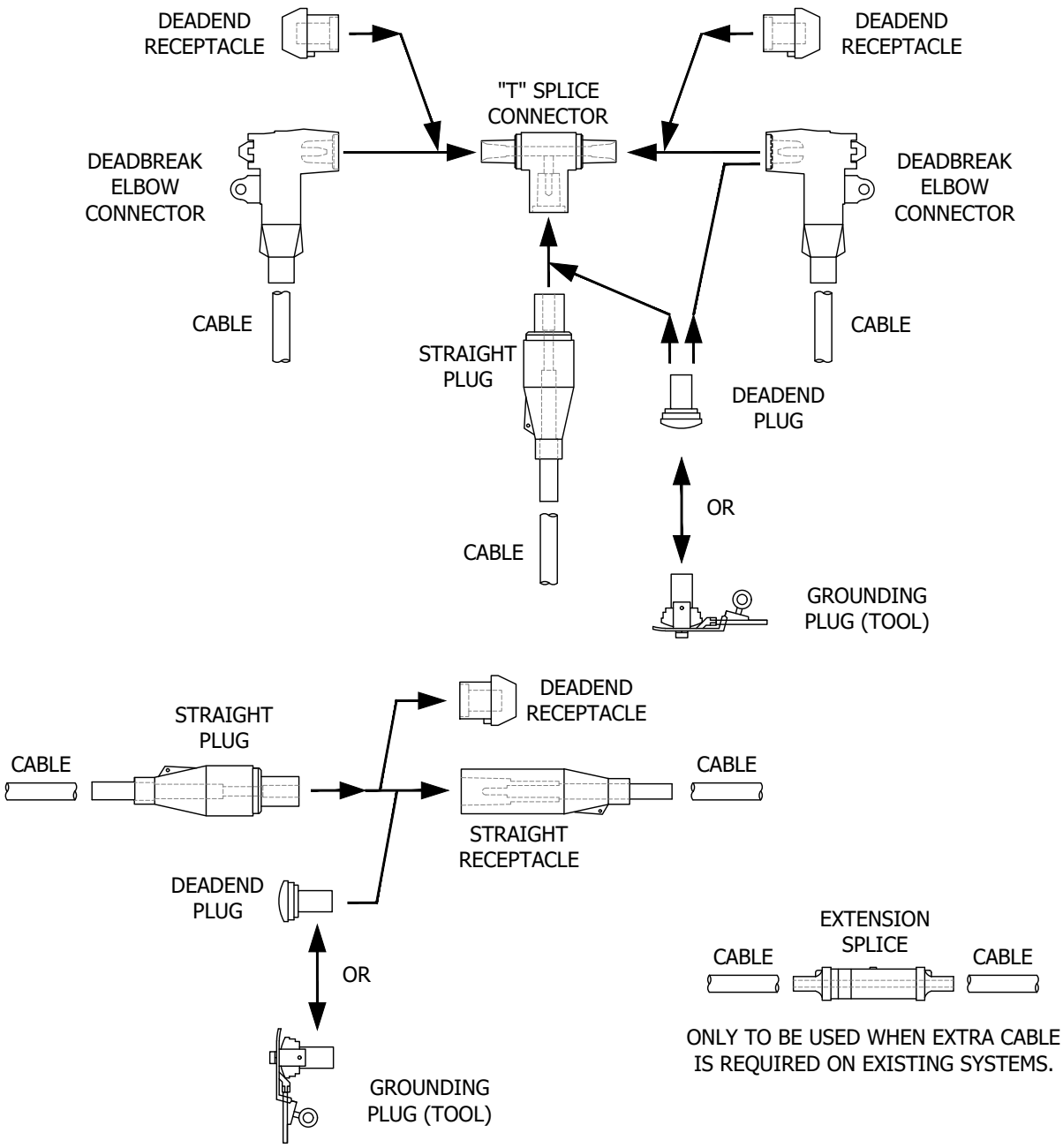

FIGURE 1
SUBSURFACE SPLICE CONNECTOR APPLICATION CHART
200 AMP DEADBREAK

© 1998 - 2020 San Diego Gas & Electric Company. All rights reserved. Removal of this copyright notice without permission is not permitted under law.

REV	CHANGE	DR	BY	DSN	APV	DATE	REV	CHANGE	DR	BY	DSN	APV	DATE
C	REVISION	-	-	-	RSW/RDJ	1/1/1996	F	FORMATTING	EDM	JIK	-	-	6/2/2020
B	REVISION	-	-	-	SLC/DTE	1/1/1990	E	REVISION	-	-	-	TR/MJC	7/9/2012
A	REVISION	-	-	-	JLB/RDJ	1/1/1989	D	REVISION	-	-	-	TR/MJC	11/8/2011

X Indicates Latest Revision | Completely Revised | New Page | Information Removed

SDG&E ELECTRIC UNDERGROUND CONSTRUCTION STANDARDS

12KV 200 AMP PREMOLDED SPLICE AND CONNECTOR ASSEMBLIES - IDENTIFICATION CHART

UG4180.1

TABLE OF CONTENTS

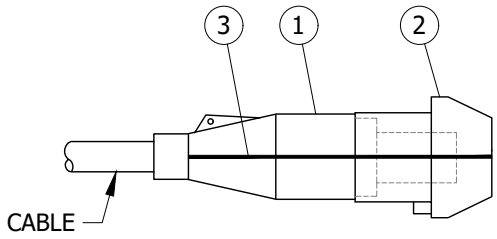

FIGURE 2
SUBSURFACE SPLICE CONNECTIONS
200 AMP DEADBREAK

UG MAP SYMBOL

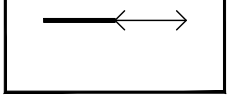

TABLE 1

TYPICAL COMBINATIONS		
CODE	S3	S5
CABLE SIZE	#2 AL	2/0 AL
MACRO UNITS	CC--S5 CC--S3	CC--S5 CC--S5

BILL OF MATERIALS (FIGURE 2):

ITEM	DESCRIPTION	WIRE SIZE	QUANTITY	STANDARD PAGE	STOCK NUMBER	DESIGN UNITS
1	STRAIGHT PLUG	#2 AL	1	-	S547314	-
		2/0 AL		-	S547316	-
2	DEADEND RECEPTACLE	-	1	-	S570304	-
3	BAIL ASSEMBLY (2 RINGS & 2 STRAPS IN KIT)	-	1	-	S120384	-

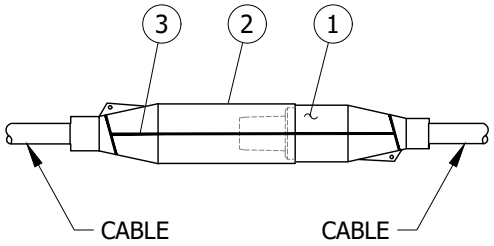

FIGURE 3
SUBSURFACE SPLICE CONNECTIONS
200 AMP DEADBREAK

UG MAP SYMBOL

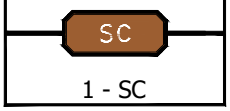

1 - SC

TABLE 2

TYPICAL COMBINATIONS			
CODE	S33	S53	S55
CABLE SIZE	#2 AL-#2 AL	#2 AL-2/0 AL	2/0 AL-2/0 AL
MACRO UNITS	CC-S33	CC-S53	CC-S55

BILL OF MATERIALS (FIGURE 3):

ITEM	DESCRIPTION	WIRE SIZE	QUANTITY	STANDARD PAGE	STOCK NUMBER	DESIGN UNITS
1	STRAIGHT PLUG	#2 AL	1	-	S547314	-
		2/0 AL		-	S547316	-
2	STRAIGHT RECEPTACLE	#2 AL	1	-	S570816	-
		2/0 AL		-	S570848	-
3	BAIL ASSEMBLY (2 RINGS & 2 STRAPS IN KIT)	-	1	-	S120384	-

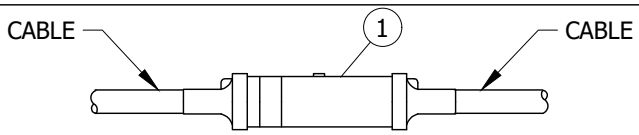

FIGURE 4
SUBSURFACE SPLICE CONNECTIONS (III)
200 AMP DEADBREAK

TABLE 3

TYPICAL COMBINATIONS					
CODE	Q11	Q13	Q15	Q33	Q55
CABLE SIZE	#2 CU- #2 CU	#2 CU- #2 AL	#2 CU- 2/0 AL	#2 AL- #2 AL	2/0 AL- 2/0 AL
DESIGN UNITS	NB-Q11	NB-Q13	NB-Q15	NB-Q33	NB-Q55

BILL OF MATERIALS (FIGURE 4):

ITEM	DESCRIPTION	WIRE SIZE	QUANTITY	STANDARD PAGE	STOCK NUMBER	DESIGN UNITS
1	EXTENSION SPLICE 200 AMP DEADBREAK	#2 CU	1	-	S668400	-
		#2 AL		-	S668402	-
		2/0 AL		-	S668404	-
		#2 CU-#2 AL		-	S668406	-
		#2 CU-2/0 AL		-	S668408	-

© 1998 - 2020 San Diego Gas & Electric Company. All rights reserved. Removal of this copyright notice without permission is not permitted under law.

REV	CHANGE	DR	BY	DSN	APV	DATE	REV	CHANGE	DR	BY	DSN	APV	DATE
C	REVISION	-	-	-	RSW/RDJ	1/1/1996	F	FORMATTING	EDM	JIK	-	-	6/2/2020
B	REVISION	-	-	-	SLC/DTE	1/1/1990	E	REVISION	-	-	-	TR/MJC	7/9/2012
A	REVISION	-	-	-	JLB/RDJ	1/1/1989	D	REVISION	-	-	-	TR/MJC	11/8/2011

TABLE OF CONTENTS

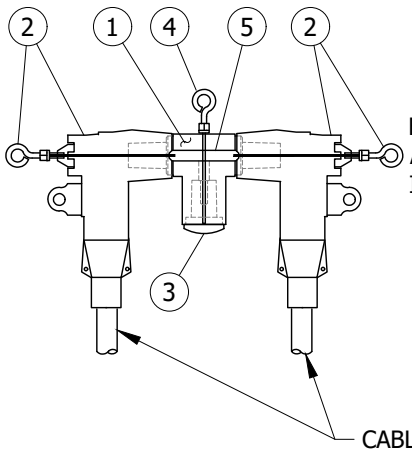

FIGURE 5
SUBSURFACE SPLICE CONNECTIONS
200 AMP DEADBREAK

UG MAP SYMBOL

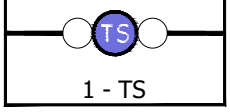

TABLE 4

TYPICAL COMBINATIONS			
CODE	D33	D53	D55
CABLE SIZE	#2 AL- #2 AL	#2 AL- 2/0 AL	2/0 AL- 2/0 AL
MACRO UNITS	CC-D33	CC-D53	CC-D55

BILL OF MATERIALS (FIGURE 5):

ITEM	DESCRIPTION	WIRE SIZE	QUANTITY	STANDARD PAGE	STOCK NUMBER	DESIGN UNITS
1	"T" SPLICE CONNECTOR	-	1	-	S256112	-
2	DEADBREAK ELBOW CONNECTOR	#2 AL	2	-	S443842	-
		2/0 AL		-	S443844	-
3	DEADEND PLUG	-	1	-	S544864	-
4	BAIL ASSEMBLY (HOLD-DOWN BAIL & FLANGE IN KIT)	-	1	-	S120352	-
5	BAIL ASSEMBLY (2 IN KIT)	-	1	-	S120448	-

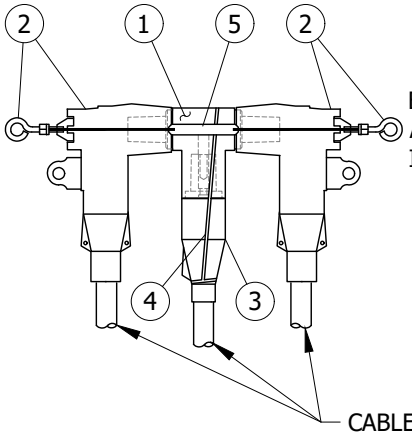

FIGURE 6
SUBSURFACE SPLICE CONNECTIONS
200 AMP DEADBREAK

UG MAP SYMBOL

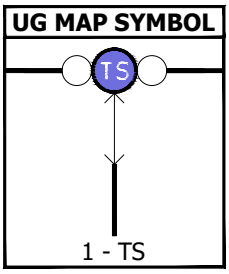

TABLE 5

TYPICAL COMBINATIONS				
CODE	D333	D353	D535	D555
CABLE SIZE	#2 AL- #2 AL- #2 AL	#2 AL- 2/0 AL- #2 AL	2/0 AL- #2 AL- 2/0 AL	2/0 AL- 2/0 AL- 2/0 AL
MACRO UNITS	CCD333	CCD353	CCD535	CCD555

BILL OF MATERIALS (FIGURE 6):

ITEM	DESCRIPTION	WIRE SIZE	QUANTITY	STANDARD PAGE	STOCK NUMBER	DESIGN UNITS
1	"T" SPLICE CONNECTOR	-	1	-	S256112	-
2	DEADBREAK ELBOW CONNECTOR	#2 AL	2	-	S443842	-
		2/0 AL		-	S443844	-
3	STRAIGHT PLUG	#2 AL	1	-	S547314	-
		2/0 AL		-	S547316	
4	BAIL ASSEMBLY (2 RINGS & 2 STRAPS IN KIT)	-	1	-	S120384	-
5	BAIL ASSEMBLY (2 IN KIT)	-	1	-	S120448	-

TABLE OF CONTENTS

© 1998 - 2020 San Diego Gas & Electric Company. All rights reserved. Removal of this copyright notice without permission is not permitted under law.

REV	CHANGE	DR	BY	DSN	APV	DATE	REV	CHANGE	DR	BY	DSN	APV	DATE
C	REVISION	-	-	-	RSW/RDJ	1/1/1996	F	FORMATTING	EDM	JIK	-	-	6/2/2020
B	REVISION	-	-	-	SLC/DTE	1/1/1990	E	REVISION	-	-	-	TR/MJC	7/9/2012
A	REVISION	-	-	-	JLB/RDJ	1/1/1989	D	REVISION	-	-	-	TR/MJC	11/8/2011

TABLE 6

PARTS IDENTIFICATION CHART

PART	WIRE SIZE	STOCK NUMBER	DESIGN UNITS
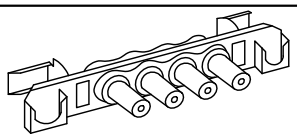 3 OR 4 WAY CABLE TAP	3-WAY	S718312	TAP-3W
	4-WAY	S718328	TAP-4W
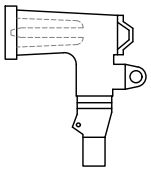 LOADBREAK ELBOW	#2 CU	S443837	LBE-2C
	#2 AL	S443838	LBE-2A
	#2/0 AL	S443840	LBE2/0
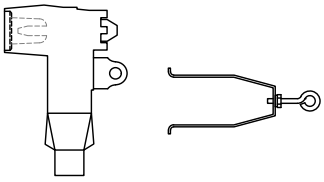 DEADBREAK ELBOW BAIL	#2 CU	S443456	NBE-2C
	#2 AL	S443842	NBE-2A
	#2/0 AL	S443844	NBE2/0
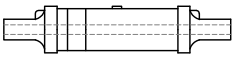 EXTENSION SPLICE	#2 CU	S668400	NB-Q11
	#2 AL	S668402	NB-Q33
	#2/0 AL	S668404	NB-Q55
	#2 CU- #2 AL	S668406	NB-Q13
	#2 CU- 2/0 AL	S668408	NB-Q15
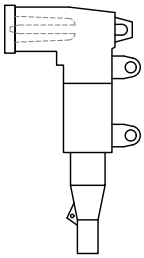 FUSED ELBOW	#2 CU	S443864	FE-2CU
	#2 AL	S443850	FE-2AL
	2/0 AL	S443882	FE-2/0
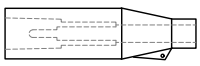 STRAIGHT RECEPTACLE	#4 CU	S570768	REC-4C
	#2 CU	S570256	REC-2C
	#2 AL	S570816	REC-2A
	2/0 AL	S570848	REC2/0
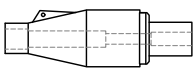 STRAIGHT PLUG	#4 CU	S544694	PLG-4C
	#2 CU	S544688	PLG-2C
	#2 AL	S547314	PLG-2A
	2/0 AL	S547316	PLG 2/0

PART	STOCK NUMBER	DESIGN UNITS
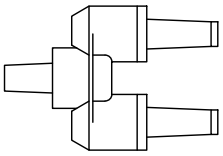 FEED-THRU INSERT	S544678	FEED-I
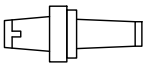 BUSHING PLUG	S544676	BSHPLG
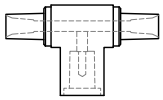 "T" SPLICE	S256112	NLBTEE
 DEADEND RECEPTACLE	S570304	DE-REC
 DEADEND PLUG	S544864	NLB-DE
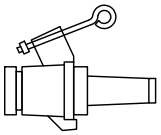 STAND-OFF PLUG	S547312	S/0PLG
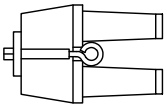 FEED-THRU BUSHING	S182016	FEED-B
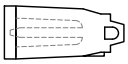 200 AMP INSULATING RECEPTACLE	S204304	INSREC

TABLE OF CONTENTS

© 1998 - 2020 San Diego Gas & Electric Company. All rights reserved. Removal of this copyright notice without permission is not permitted under law.

REV	CHANGE	DR	BY	DSN	APV	DATE	REV	CHANGE	DR	BY	DSN	APV	DATE
C	REVISION	-	-	-	RSW/RDJ	1/1/1996	F	FORMATTING	EDM	JIK	-	-	6/2/2020
B	REVISION	-	-	-	SLC/DTE	1/1/1990	E	REVISION	-	-	-	TR/MJC	7/9/2012
A	REVISION	-	-	-	JLB/RDJ	1/1/1989	D	REVISION	-	-	-	TR/MJC	11/8/2011

INSTALLATION: NONE

BILL OF MATERIALS: INDIVIDUALLY INCLUDED WITH FIGURES.

NOTES:

I. **TABLE 7**

CODES USED IN THE TABLES ON THIS STANDARD	
CODE	**TYPE**
CABLE	
1	#2 CU
3	#2 AL
5	2/0 AL
COMPONENT	
D	200 AMP TEE SPLICE
Q	200 AMP EXTENSION SPLICE
S	200 AMP SPLICE

II. OTHER COMBINATIONS MAY BE CODED USING THE ABOVE CODES FOR THE SAME TYPE CONNECTIONS SHOWN.

(III) THIS SPLICE ONLY TO BE USED FOR SPLICING WHEN EXTRA CABLE IS REQUIRED ON EXISTING SYSTEMS. EXAMPLE (TRANSFORMER OR OTHER PAD-MOUNTED EQUIPMENT REPLACEMENT, CABLE TAPS BEING RAISED IN HANDHOLES, ETC.) THIS SPLICE IS NOT TO BE USED FOR ANY OTHER TYPE OF SPLICING. SEE PAGE UG4196.4 FOR EXTENSION SPLICE APPLICATIONS.

REFERENCE:

a. FOR SPECIFICATIONS AND INSTALLATION INSTRUCTIONS, REFER TO UG4191 AND UG4195.

TABLE OF CONTENTS

© 1998 - 2020 San Diego Gas & Electric Company. All rights reserved. Removal of this copyright notice without permission is not permitted under law.

REV	CHANGE	DR	BY	DSN	APV	DATE	REV	CHANGE	DR	BY	DSN	APV	DATE
C	REVISION	-	-	-	RSW/RDJ	1/1/1996	F	FORMATTING	EDM	JIK	-	-	6/2/2020
B	REVISION	-	-	-	SLC/DTE	1/1/1990	E	REVISION	-	-	-	TR/MJC	7/9/2012
A	REVISION	-	-	-	JLB/RDJ	1/1/1989	D	REVISION	-	-	-	TR/MJC	11/8/2011

X Indicates Latest Revision | Completely Revised | New Page | Information Removed

SDG&E ELECTRIC UNDERGROUND CONSTRUCTION STANDARDS

12KV 200 AMP PREMOLDED SPLICE AND CONNECTOR ASSEMBLIES - IDENTIFICATION CHART

UG4180.5

SCOPE: THIS STANDARD SHOWS THE CONNECTIONS AND ASSEMBLY CODES USED FOR CALLING OUT 200 AND 600A CONNECTOR ASSEMBLIES ON ELECTRIC CONSTRUCTION WORK ORDERS FOR HANDHOLE INSTALLATIONS.

ATTENTION:

* THIS FIGURE SHOWS HOW 200A AND 600A CONNECTORS ARE ASSEMBLED.

** ALWAYS USE THE MANUFACTURERS RECOMMENDED TORQUE SETTINGS WHEN ASSEMBLING CONNECTORS.

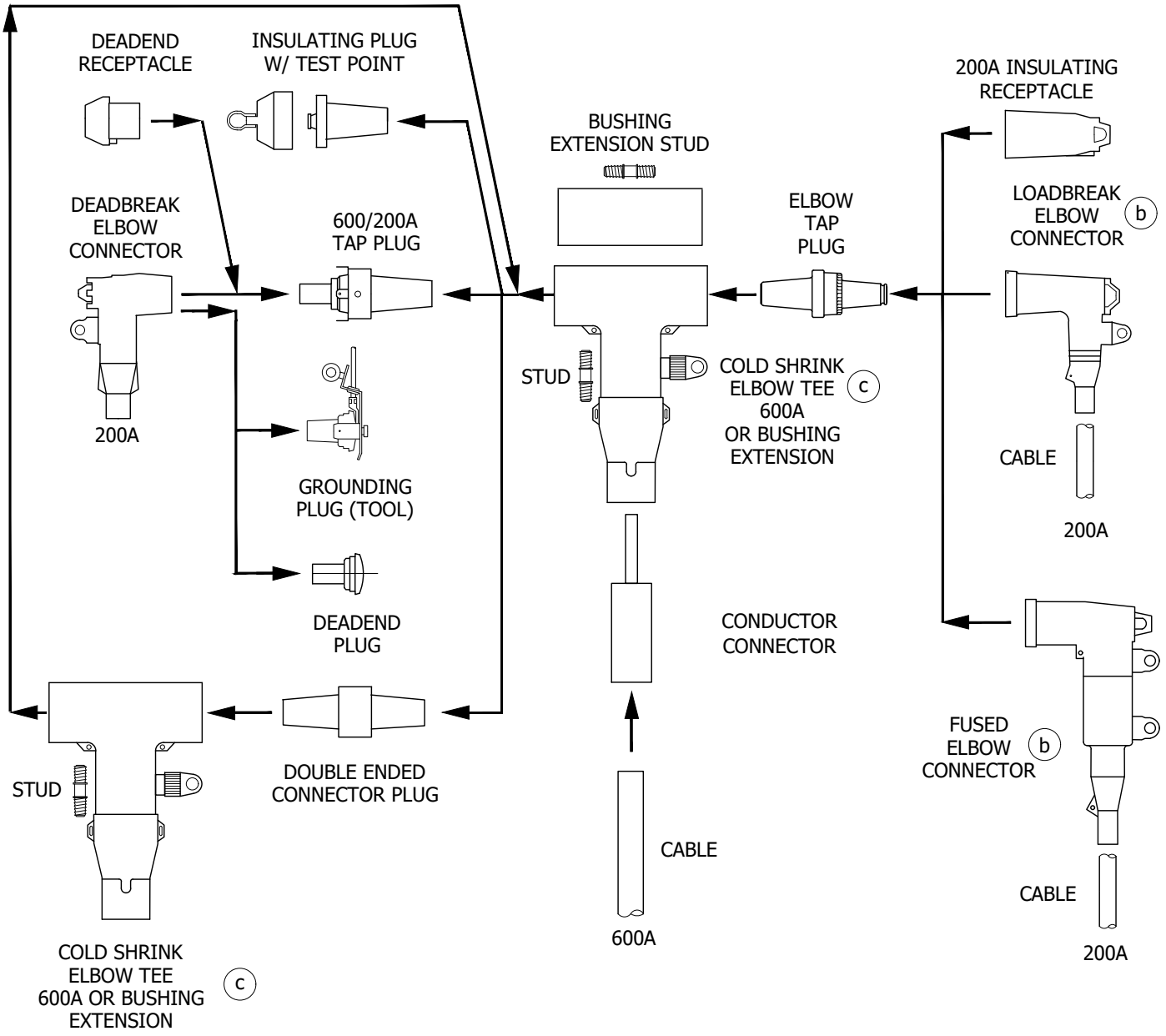

FIGURE 1
SUBSURFACE CONNECTOR APPLICATION CHART
3315 & 3316 HANDHOLE INSTALLATION ONLY
200A LOADBREAK/DEADBREAK AND 600A DEADBREAK

© 1998 - 2023 San Diego Gas & Electric Company. All rights reserved. Removal of this copyright notice without permission is not permitted under law.

REV	CHANGE	DR	BY	DSN	APV	DATE	REV	CHANGE	DR	BY	DSN	APV	DATE
D	REVISION	-	-	-	TR/MJC	10/30/2012	G	TABLE UPDATES	ARC	ADW	EJA	KRG	10/17/2023
C	REVISION	-	-	-	TR/MJC	07/24/2012	F	FORMATTING	EDM	JIK	-	-	06/02/2020
B	REVISION	-	-	-	TR/MJC	11/14/2011	E	FIGURE UPDATE	-	EJA	GLW	CZH	12/09/2019

X Indicates Latest Revision | Completely Revised | New Page | Information Removed

SDG&E ELECTRIC UNDERGROUND CONSTRUCTION STANDARDS

12KV 200 & 600A CONNECTOR ASSEMBLIES
IDENTIFICATION CHART
HANDHOLE INSTALLATIONS

UG4181.1

TABLE OF CONTENTS

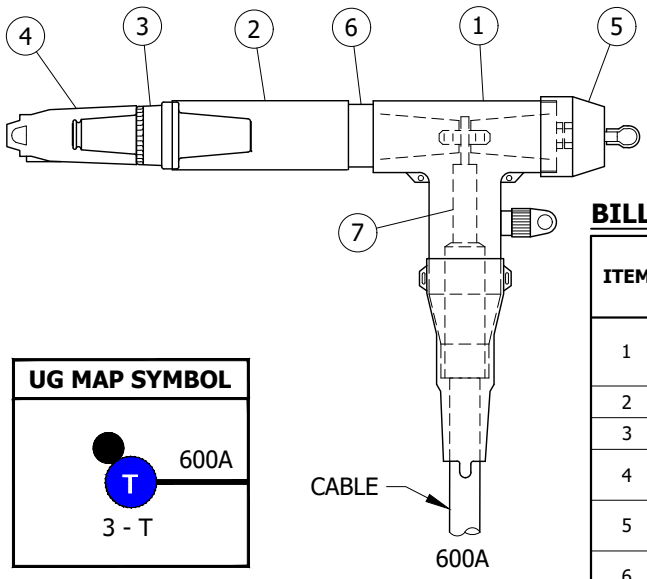

FIGURE 2
3315 & 3316 HANDHOLE INSTALLATION ONLY
SUBSURFACE CONNECTIONS
200A LOADBREAK/DEADBREAK AND 600A DEADBREAK

TABLE 1

TYPICAL COMBINATIONS			
CODE	O7	O8	O9
600A CABLE SIZE	350 AL	750 AL	1000 AL
MACRO UNITS	CC--07	CC--08	CC--09

BILL OF MATERIALS (FIGURE 2):

ITEM	DESCRIPTION	WIRE SIZE	QUANTITY	STANDARD PAGE	STOCK NUMBER	DESIGN UNITS
1	COLD SHRINK ELBOW TEE	4/0, 350 AND 500	1	--	S326572	600AT
		750 AND 1000		--	S326574	600ATL
2	BUSHING EXTENSION	--	1	--	S336204	BUSH-X
3	ELBOW TAP PLUG	--	1	--	S547328	ETP650
4	200A INSULATING RECEPTACLE	--	1	--	S204304	INSREC
5	INSULATED PLUG W/ TEST POINT	--	1	--	S544848	PLUG-F
6	DOUBLE-ENDED CONNECTOR PLUG	--	1	--	S544832	PLUG-C
7	CONDUCTOR CONNECTOR	4/0, 350 AND 500	1	--	S471314	P6ALR3
		750 AND 1000		--	S471316	P6ALR5

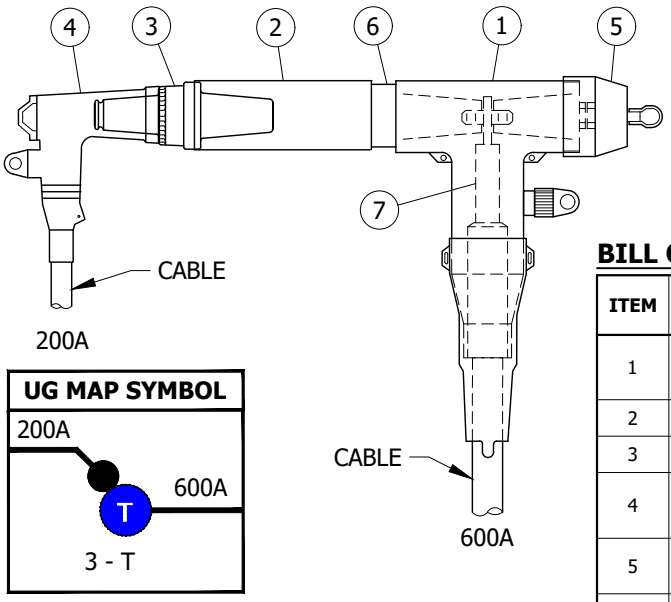

FIGURE 3
3315 & 3316 HANDHOLE INSTALLATION ONLY
SUBSURFACE CONNECTIONS
200A LOADBREAK/DEADBREAK AND 600A DEADBREAK

TABLE 2

TYPICAL COMBINATIONS						
CODE	L37	L57	L38	L58	L39	L59
200A CABLE SIZE **600A CABLE SIZE**	#2 AL 350 AL	2/0 AL 350 AL	#2 AL 750 AL	2/0 AL 750 AL	#2 AL 1000 AL	2/0 AL 1000 AL
MACRO UNITS	CC-L37	CC-L57	CC-L38	CC-L58	CC-L39	CC-L59

BILL OF MATERIALS (FIGURE 3):

ITEM	DESCRIPTION	WIRE SIZE	QUANTITY	STANDARD PAGE	STOCK NUMBER	DESIGN UNITS
1	COLD SHRINK ELBOW TEE	4/0, 350 AND 500	1	--	S326572	600AT
		750 AND 1000		--	S326574	600ATL
2	BUSHING EXTENSION	--	1	--	S336204	BUSH-X
3	ELBOW TAP PLUG	--	1	--	S547328	ETP650
4	LOADBREAK ELBOW CONNECTOR	#2 AL	1	--	S443838	LBE-2A
		2/0 AL		--	S443840	LBE2/0
5	INSULATED PLUG W/ TEST POINT	--	1	--	S544848	PLUG-F
6	DOUBLE-ENDED CONNECTOR PLUG	--	1	--	S544832	PLUG-C
7	CONDUCTOR CONNECTOR	4/0, 350 AND 500	1	--	S471314	P6ALR3
		750 AND 1000		--	S471316	P6ALR5

© 1998 - 2023 San Diego Gas & Electric Company. All rights reserved. Removal of this copyright notice without permission is not permitted under law.

REV	CHANGE	DR	BY	DSN	APV	DATE	REV	CHANGE	DR	BY	DSN	APV	DATE
D	REVISION	-	-	-	TR/MJC	10/30/2012	G	TABLE UPDATES	ARC	ADW	EJA	KRG	10/17/2023
C	REVISION	-	-	-	TR/MJC	07/24/2012	F	FORMATTING	EDM	JIK	-	-	06/02/2020
B	REVISION	-	-	-	TR/MJC	11/14/2011	E	FIGURE UPDATE	-	EJA	GLW	CZH	12/09/2019

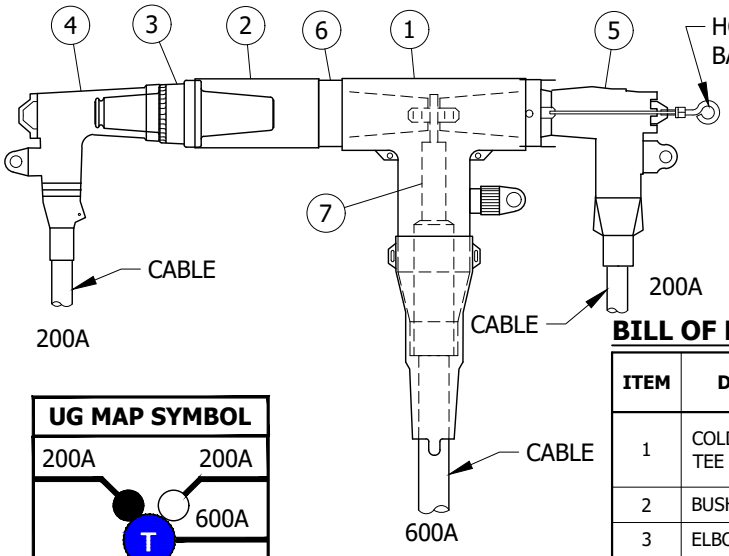

FIGURE 4
3315 & 3316 HANDHOLE INSTALLATION ONLY
SUBSURFACE CONNECTIONS
200A LOADBREAK/DEADBREAK
AND 600A DEADBREAK

TABLE 3

ADDITIONAL MACRO UNITS		
C-07D5	C-08D5	C-09D5

TABLE 4

TYPICAL COMBINATIONS						
CODE	L37D5	L57D5	L38D5	L58D5	L39D5	L59D5
200A CABLE SIZE **600A CABLE SIZE** **200A CABLE SIZE**	#2 AL 350 AL 2/0 AL	2/0 AL 350 AL 2/0 AL	#2 AL 750 AL 2/0 AL	2/0 AL 750 AL 2/0 AL	#2 AL 1000 AL 2/0 AL	2/0 AL 1000 AL 2/0 AL
MACRO UNITS	CL37D5	CL57D5	CL38D5	CL58D5	CL39D5	CL59D5

BILL OF MATERIALS (FIGURE 4):

ITEM	DESCRIPTION	WIRE SIZE	QUANTITY	STANDARD PAGE	STOCK NUMBER	DESIGN UNITS
1	COLD SHRINK ELBOW TEE	4/0, 350 AND 500	1	--	S326572	600AT
		750 AND 1000		--	S326574	600ATL
2	BUSHING EXTENSION	--	1	--	S336204	BUSH-X
3	ELBOW TAP PLUG	--	1	--	S547328	ETP650
4	LOAD BREAK ELBOW CONNECTOR	#2 AL	1	--	S443838	LBE-2A
		2/0 AL		--	S443840	LBE2/0
5	DEADBREAK ELBOW CONNECTOR	#2 AL	1	--	S443842	NBE-2A
		2/0 AL		--	S443844	NBE2/0
6	DOUBLE-ENDED CONNECTOR PLUG	--	1	--	S544832	PLUG-C
7	CONDUCTOR CONNECTOR	4/0, 350 AND 500	1	--	S471314	P6ALR3
		750 AND 1000		--	S471316	P6ALR5

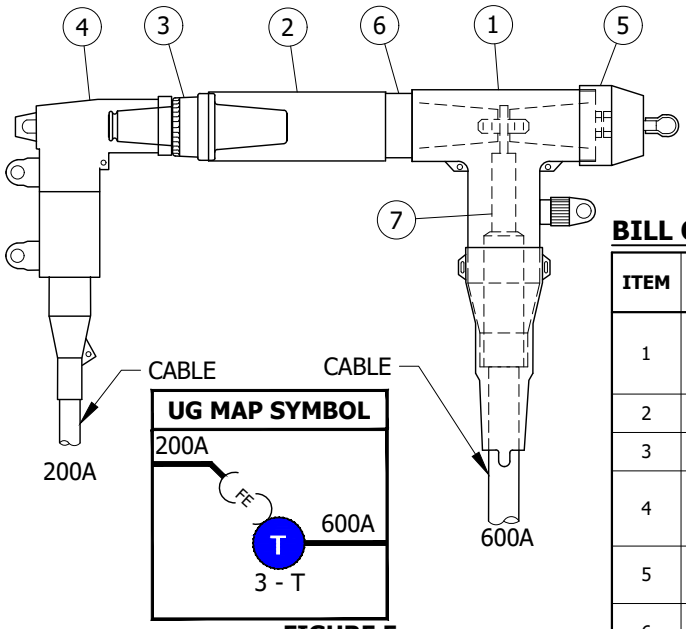

FIGURE 5
3315 & 3316 HANDHOLE INSTALLATION ONLY
SUBSURFACE CONNECTIONS
200A LOADBREAK/DEADBREAK
AND 600A DEADBREAK

TABLE 5

TYPICAL COMBINATIONS						
CODE	B7	C7	B8	C8	B9	C9
200A CABLE SIZE **600A CABLE SIZE**	#2 AL 350 AL	2/0 AL 350 AL	#2 AL 750 AL	#2 AL 750 AL	2/0 AL 1000 AL	2/0 AL 1000 AL
MACRO UNITS	CC--B7	CC--C7	CC--B8	CC--C8	CC--B9	CC--C9

BILL OF MATERIALS (FIGURE 5):

ITEM	DESCRIPTION	WIRE SIZE	QUANTITY	STANDARD PAGE	STOCK NUMBER	DESIGN UNITS
1	COLD SHRINK ELBOW TEE	4/0, 350 AND 500	1	--	S326572	600AT
		750 AND 1000		--	S326574	600ATL
2	BUSHING EXTENSION	--	1	--	S336204	BUSH-X
3	ELBOW TAP PLUG	--	1	--	S547328	ETP650
4	FUSED ELBOW CONNECTOR	#2 AL	1	--	S321682	FE-2/0
		2/0 AL		--		
5	INSULATED PLUG W/ TEST POINT	--	1	--	S544848	PLUG-F
6	DOUBLE-ENDED CONNECTOR PLUG	--	1	--	S544832	PLUG-C
7	CONDUCTOR CONNECTOR	4/0, 350 AND 500	1	--	S471314	P6ALR3
		750 AND 1000		--	S471316	P6ALR5

© 1998 - 2023 San Diego Gas & Electric Company. All rights reserved. Removal of this copyright notice without permission is not permitted under law.

REV	CHANGE	DR	BY	DSN	APV	DATE	REV	CHANGE	DR	BY	DSN	APV	DATE
D	REVISION	-	-	-	TR/MJC	10/30/2012	G	TABLE UPDATES	ARC	ADW	EJA	KRG	10/17/2023
C	REVISION	-	-	-	TR/MJC	07/24/2012	F	FORMATTING	EDM	JIK	-	-	06/02/2020
B	REVISION	-	-	-	TR/MJC	11/14/2011	E	FIGURE UPDATE	-	EJA	GLW	CZH	12/09/2019

X Indicates Latest Revision | Completely Revised | New Page | Information Removed

SDG&E ELECTRIC UNDERGROUND CONSTRUCTION STANDARDS

12KV 200 & 600A CONNECTOR ASSEMBLIES
IDENTIFICATION CHART
HANDHOLE INSTALLATIONS

UG4181.3

TABLE OF CONTENTS

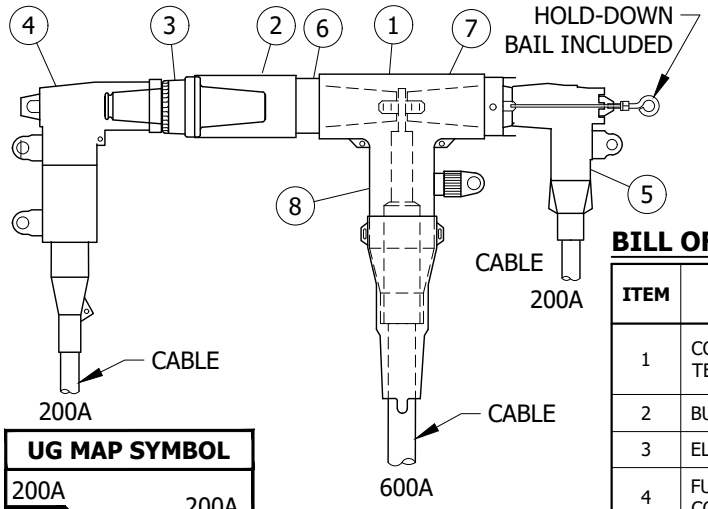

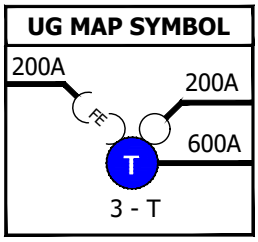

FIGURE 6
3315 & 3316 HANDHOLE INSTALLATION ONLY
SUBSURFACE CONNECTIONS
200A LOADBREAK/DEADBREAK
AND 600A DEADBREAK

TABLE 6

TYPICAL COMBINATIONS						
CODE	B7D5	C7D5	B8D5	C8D5	B9D5	C9D5
200A CABLE SIZE **600A CABLE SIZE** **200A CABLE SIZE**	#2 AL 350 AL 2/0 AL	2/0 AL 350 AL 2/0 AL	#2 AL 750 AL 2/0 AL	2/0 AL 750 AL 2/0 AL	#2 AL 1000 AL 2/0 AL	2/0 AL 1000 AL 2/0 AL
MACRO UNITS	C-B7D5	C-C7D5	C-B8D5	C-C8D5	C-B9D5	C-C9D5

BILL OF MATERIALS (FIGURE 6):

ITEM	DESCRIPTION	WIRE SIZE	QUANTITY	STANDARD PAGE	STOCK NUMBER	DESIGN UNITS
1	COLD SHRINK ELBOW TEE	4/0, 350 AND 500	1	--	S326572	600AT
		750 AND 1000		--	S326574	600ATL
2	BUSHING EXTENSION	--	1	--	S336204	BUSH-X
3	ELBOW TAP PLUG	--	1	--	S547328	ETP650
4	FUSED ELBOW CONNECTOR	#2 AL	1	--	S321682	FE-2/0
		2/0 AL		--		
5	DEADBREAK ELBOW CONNECTOR	#2 AL	1	--	S443842	NBE-2A
		2/0 AL		--	S443844	NBE2/0
6	DOUBLE-ENDED CONNECTOR PLUG	--	1	--	S544832	PLUG-C
7	600/200A TAP PLUG	--	1	--	S547324	TAP-FE
8	CONDUCTOR CONNECTOR	4/0, 350 AND 500	1	--	S471314	P6ALR3
		750 AND 1000		--	S471316	P6ALR5

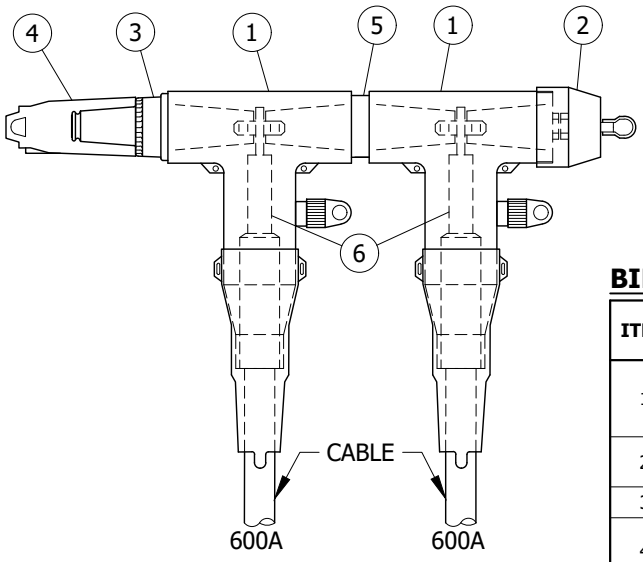

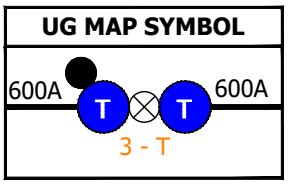

FIGURE 7
3315 & 3316 HANDHOLE INSTALLATION ONLY
SUBSURFACE CONNECTIONS
200A LOADBREAK/DEADBREAK AND 600A DEADBREAK

TABLE 7

TYPICAL COMBINATIONS			
CODE	O77	O88	O99
600A CABLE SIZE **600A CABLE SIZE**	350 AL 350 AL	750 AL 750 AL	1000 AL 1000 AL
MACRO UNITS	CC-077	CC-088	CC-099

BILL OF MATERIALS (FIGURE 7):

ITEM	DESCRIPTION	WIRE SIZE	QUANTITY	STANDARD PAGE	STOCK NUMBER	DESIGN UNITS
1	COLD SHRINK ELBOW TEE	4/0, 350 AND 500	2	--	S326572	600AT
		750 AND 1000		--	S326574	600ATL
2	INSULATED PLUG W/ TEST POINT	--	1	--	S544848	PLUG-F
3	ELBOW TAP PLUG	--	1	--	S547328	ETP650
4	200A INSULATING RECEPTACLE	--	1	--	S204304	INSREC
5	DOUBLE-ENDED CONNECTOR PLUG	--	1	--	S544832	PLUG-C
6	CONDUCTOR CONNECTOR	4/0, 350 AND 500	2	--	S471314	P6ALR3
		750 AND 1000		--	S471316	P6ALR5

© 1998 - 2023 San Diego Gas & Electric Company. All rights reserved. Removal of this copyright notice without permission is not permitted under law.

REV	CHANGE	DR	BY	DSN	APV	DATE	REV	CHANGE	DR	BY	DSN	APV	DATE
D	REVISION	-	-	-	TR/MJC	10/30/2012	G	TABLE UPDATES	ARC	ADW	EJA	KRG	10/17/2023
C	REVISION	-	-	-	TR/MJC	07/24/2012	F	FORMATTING	EDM	JIK	-	-	06/02/2020
B	REVISION	-	-	-	TR/MJC	11/14/2011	E	FIGURE UPDATE	-	EJA	GLW	CZH	12/09/2019

X Indicates Latest Revision | Completely Revised | New Page | Information Removed

SDG&E ELECTRIC UNDERGROUND CONSTRUCTION STANDARDS

12KV 200 & 600A CONNECTOR ASSEMBLIES
IDENTIFICATION CHART
HANDHOLE INSTALLATIONS

UG4181.4

TABLE OF CONTENTS

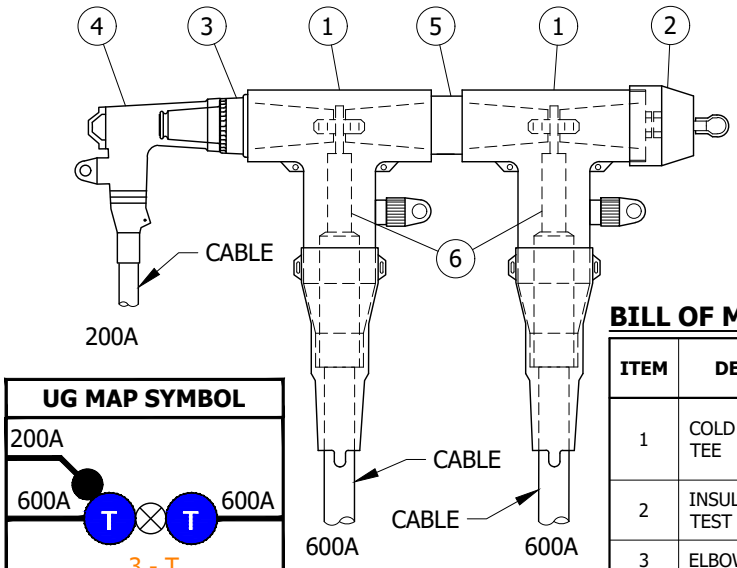

FIGURE 8
3315 & 3316 HANDHOLE INSTALLATION ONLY
SUBSURFACE CONNECTIONS
200A LOADBREAK/DEADBREAK
AND 600A DEADBREAK

TABLE 8

TYPICAL COMBINATIONS						
CODE	L377	L577	L388	L588	L399	L599
200A CABLE SIZE	#2 AL	2/0 AL	#2 AL	2/0 AL	#2 AL	2/0 AL
600A CABLE SIZE	350 AL	350 AL	750 AL	750 AL	1000 AL	1000 AL
600A CABLE SIZE	350 AL	350 AL	750 AL	750 AL	1000 AL	1000 AL
MACRO UNITS	C-L377	C-L577	C-L388	C-L588	C-L399	C-L599

BILL OF MATERIALS (FIGURE 8):

ITEM	DESCRIPTION	WIRE SIZE	QUANTITY	STANDARD PAGE	STOCK NUMBER	DESIGN UNITS
1	COLD SHRINK ELBOW TEE	4/0, 350 AND 500	2	--	S326572	600AT
		750 AND 1000		--	S326574	600ATL
2	INSULATED PLUG W/ TEST POINT	--	1	--	S544848	PLUG-F
3	ELBOW TAP PLUG	--	1	--	S547328	ETP650
4	LOADBREAK ELBOW CONNECTOR	#2 AL	1	--	S443838	LBE-2A
		2/0 AL		--	S443840	LBE2/0
5	DOUBLE-ENDED CONNECTOR PLUG	--	1	--	S544832	PLUG-C
6	CONDUCTOR CONNECTOR	4/0, 350 AND 500	2	--	S471314	P6ALR3
		750 AND 1000		--	S471316	P6ALR5

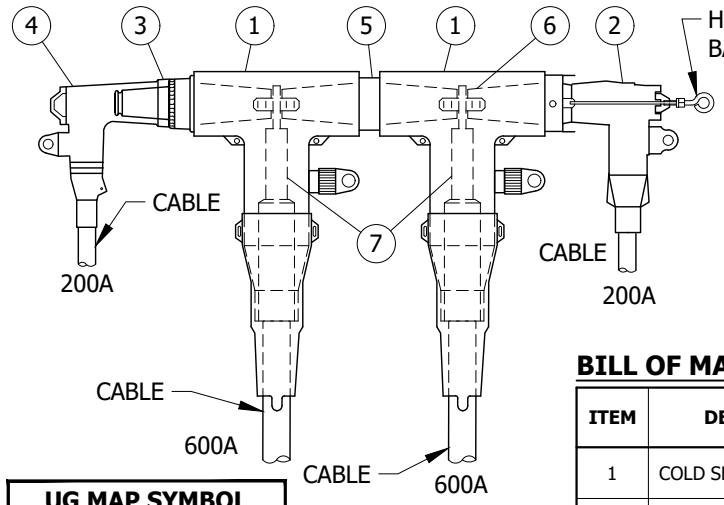

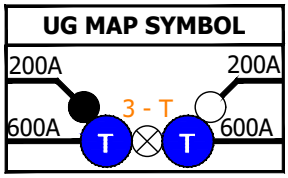

FIGURE 9
3315 & 3316 HANDHOLE INSTALLATION ONLY
SUBSURFACE CONNECTIONS
200A LOADBREAK/DEADBREAK
AND 600A DEADBREAK

TABLE 9

ADDITIONAL MACRO UNITS		
CO77D5 CO77D3	CO88D5 CO88D3	CO99D5 CO99D3

TABLE 10

TYPICAL COMBINATIONS						
CODE	L377D5	L577D5	L388D5	L588D5	L399D5	L599D5
200A CABLE SIZE	#2 AL	2/0 AL	#2 AL	2/0 AL	#2 AL	2/0 AL
600A CABLE SIZE	350 AL	350 AL	750 AL	750 AL	1000 AL	1000 AL
600A CABLE SIZE	350 AL	350 AL	750 AL	750 AL	1000 AL	1000 AL
200A CABLE SIZE	2/0 AL	2/0 AL	2/0 AL	2/0 AL	2/0 AL	2/0 AL
MACRO UNITS	L377D3 L377D5	L577D3 L577D5	L388D3 L388D5	L588D5	L399D5	L599D5

BILL OF MATERIALS (FIGURE 9):

ITEM	DESCRIPTION	WIRE SIZE	QUANTITY	STANDARD PAGE	STOCK NUMBER	DESIGN UNITS
1	COLD SHRINK ELBOW TEE	4/0, 350 AND 500	2	--	S326572	600AT
		750 AND 1000		--	S326574	600ATL
2	DEADBREAK ELBOW CONNECTOR	#2 AL	1	--	S443842	NBE-2A
		2/0 AL		--	S443844	NBE2/0
3	ELBOW TAP PLUG	--	1	--	S547328	ETP650
4	LOADBREAK ELBOW CONNECTOR	#2 AL	1	--	S443838	LBE-2A
		2/0 AL		--	S443840	LBE2/0
5	DOUBLE-ENDED CONNECTOR PLUG	--	1	--	S544832	PLUG-C
6	600/200A TAP PLUG	--	1	--	S547324	TAP-FE
7	CONDUCTOR CONNECTOR	4/0, 350 AND 500	2	--	S471314	P6ALR3
		750 AND 1000		--	S471316	P6ALR5

TABLE OF CONTENTS

© 1998 - 2023 San Diego Gas & Electric Company. All rights reserved. Removal of this copyright notice without permission is not permitted under law.

REV	CHANGE	DR	BY	DSN	APV	DATE	REV	CHANGE	DR	BY	DSN	APV	DATE
D	REVISION	-	-	-	TR/MJC	10/30/2012	G	TABLE UPDATES	ARC	ADW	EJA	KRG	10/17/2023
C	REVISION	-	-	-	TR/MJC	07/24/2012	F	FORMATTING	EDM	JIK	-	-	06/02/2020
B	REVISION	-	-	-	TR/MJC	11/14/2011	E	FIGURE UPDATE	-	EJA	GLW	CZH	12/09/2019

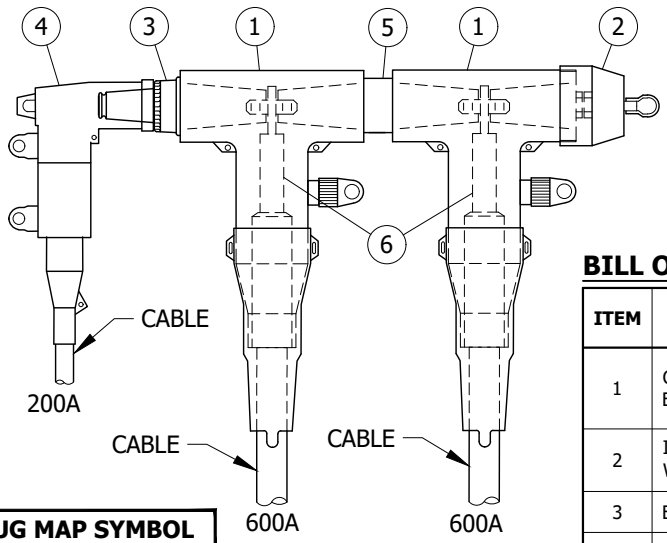

UG MAP SYMBOL

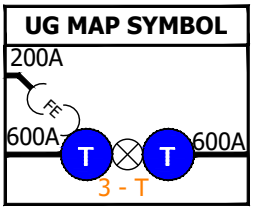

FIGURE 10
3315 & 3316 HANDHOLE INSTALLATION ONLY
SUBSURFACE CONNECTIONS
200A LOADBREAK/DEADBREAK AND 600A DEADBREAK

TABLE 11

TYPICAL COMBINATIONS						
CODE	B77	C77	B88	C88	B99	C99
200A CABLE SIZE **600A CABLE SIZE** **600A CABLE SIZE**	#2 AL 350 AL 350 AL	2/0 AL 350 AL 350 AL	#2 AL 750 AL 750 AL	2/0 AL 750 AL 750 AL	#2 AL 1000 AL 1000 AL	2/0 AL 1000 AL 1000 AL
MACRO UNITS	CC-B77	CC-C77	CC-B88	CC-C88	CC-B99	CC-C99

BILL OF MATERIALS (FIGURE 10):

ITEM	DESCRIPTION	WIRE SIZE	QUANTITY	STANDARD PAGE	STOCK NUMBER	DESIGN UNITS
1	COLD SHRINK ELBOW TEE	4/0, 350 AND 500	2	--	S326572	600AT
		750 AND 1000		--	S326574	600ATL
2	INSULATED PLUG W/ TEST POINT	--	1	--	S544848	PLUG-F
3	ELBOW TAP PLUG	--	1	--	S547328	ETP650
4	FUSED ELBOW CONNECTOR	#2 AL	1	--	S321682	FE-2/0
		2/0 AL		--		
5	DOUBLE-ENDED CONNECTOR PLUG	--	1	--	S544832	PLUG-C
6	CONDUCTOR CONNECTOR	4/0, 350 AND 500	2	--	S471314	P6ALR3
		750 AND 1000		--	S471316	P6ALR5

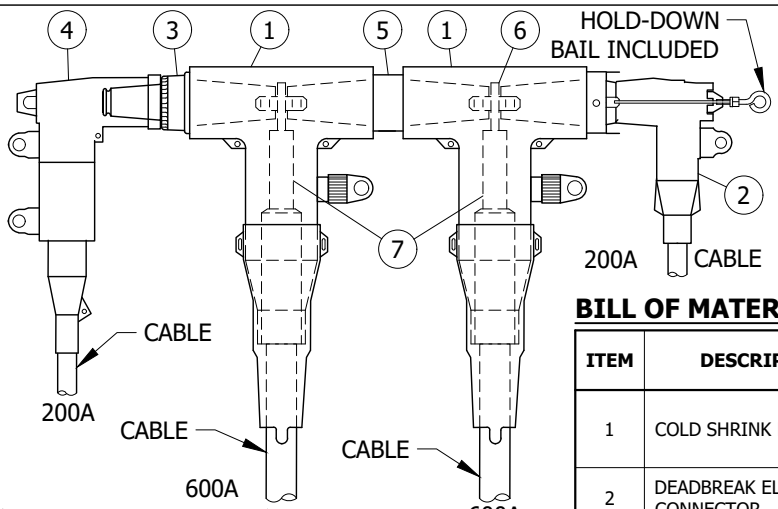

UG MAP SYMBOL

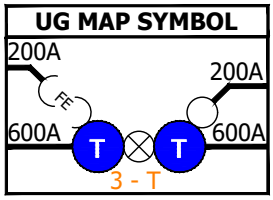

FIGURE 11
3315 & 3316 HANDHOLE INSTALLATION ONLY
SUBSURFACE CONNECTIONS - 200A
LOADBREAK/DEADBREAK AND 600A DEADBREAK

TABLE 12

TYPICAL COMBINATIONS						
CODE	B77D5	C77D5	B88D5	C88D5	B99D5	C99D5
200A CABLE SIZE **600A CABLE SIZE** **600A CABLE SIZE** **200A CABLE SIZE**	#2 AL 350 AL 350 AL 2/0 AL	2/0 AL 350 AL 350 AL 2/0 AL	#2 AL 750 AL 750 AL 2/0 AL	2/0 AL 750 AL 750 AL 2/0 AL	#2 AL 1000 AL 1000 AL 2/0 AL	2/0 AL 1000 AL 1000 AL 2/0 AL
MACRO UNITS	CB77D5	CC77D5	CB88D5	CC88D5	CB99D5	CC99D5

BILL OF MATERIALS (FIGURE 11):

ITEM	DESCRIPTION	WIRE SIZE	QUANTITY	STANDARD PAGE	STOCK NUMBER	DESIGN UNITS
1	COLD SHRINK ELBOW TEE	4/0, 350 AND 500	2	--	S326572	600AT
		750 AND 1000		--	S326574	600ATL
2	DEADBREAK ELBOW CONNECTOR	#2 AL	1	--	S443842	NBE-2A
		2/0 AL		--	S443844	NBE2/0
3	ELBOW TAP PLUG	--	1	--	S547328	ETP650
4	FUSED ELBOW CONNECTOR	#2 AL	1	--	S321682	FE-2/0
		2/0 AL		--		
5	DOUBLE-ENDED CONNECTOR PLUG	--	1	--	S544832	PLUG-C
6	600/200A TAP PLUG	--	1	--	S547324	TAP-FE
7	CONDUCTOR CONNECTOR	4/0, 350 AND 500	2	--	S471314	P6ALR3
		750 AND 1000		--	S471316	P6ALR5

© 1998 - 2023 San Diego Gas & Electric Company. All rights reserved. Removal of this copyright notice without permission is not permitted under law.

REV	CHANGE	DR	BY	DSN	APV	DATE	REV	CHANGE	DR	BY	DSN	APV	DATE
D	REVISION	-	-	-	TR/MJC	10/30/2012	G	TABLE UPDATES	ARC	ADW	EJA	KRG	10/17/2023
C	REVISION	-	-	-	TR/MJC	07/24/2012	F	FORMATTING	EDM	JIK	-	-	06/02/2020
B	REVISION	-	-	-	TR/MJC	11/14/2011	E	FIGURE UPDATE	-	EJA	GLW	CZH	12/09/2019

TABLE OF CONTENTS

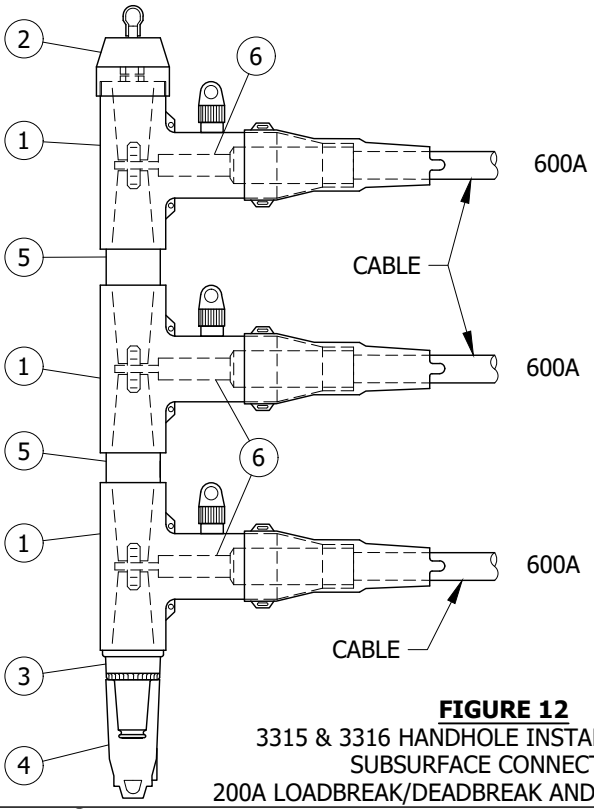

FIGURE 12
3315 & 3316 HANDHOLE INSTALLATION ONLY
SUBSURFACE CONNECTIONS
200A LOADBREAK/DEADBREAK AND 600A DEADBREAK

UG MAP SYMBOL

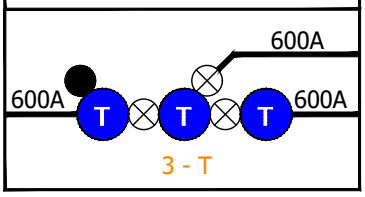

TABLE 13

TYPICAL COMBINATIONS			
CODE	O777	O888	O999
600A CABLE SIZE	350 AL	750 AL	1000 AL
600A CABLE SIZE	350 AL	750 AL	1000 AL
600A CABLE SIZE	350 AL	750 AL	1000 AL
MACRO UNITS	C-0777	C-0888	C-0999

BILL OF MATERIALS (FIGURE 12):

ITEM	DESCRIPTION	WIRE SIZE	QUANTITY	STANDARD PAGE	STOCK NUMBER	DESIGN UNITS
1	COLD SHRINK ELBOW TEE	4/0, 350 AND 500	3	--	S326572	600AT
		750 AND 1000		--	S326574	600ATL
2	INSULATED PLUG W/ TEST POINT	--	1	--	S544848	PLUG-F
3	ELBOW TAP PLUG	--	1	--	S547328	ETP650
4	200A INSULATING RECEPTACLE	--	1	--	S204304	INSREC
5	DOUBLE-ENDED CONNECTOR PLUG	--	2	--	S544832	PLUG-C
6	CONDUCTOR CONNECTOR	4/0, 350 AND 500	3	--	S471314	P6ALR3
		750 AND 1000		--	S471316	P6ALR5

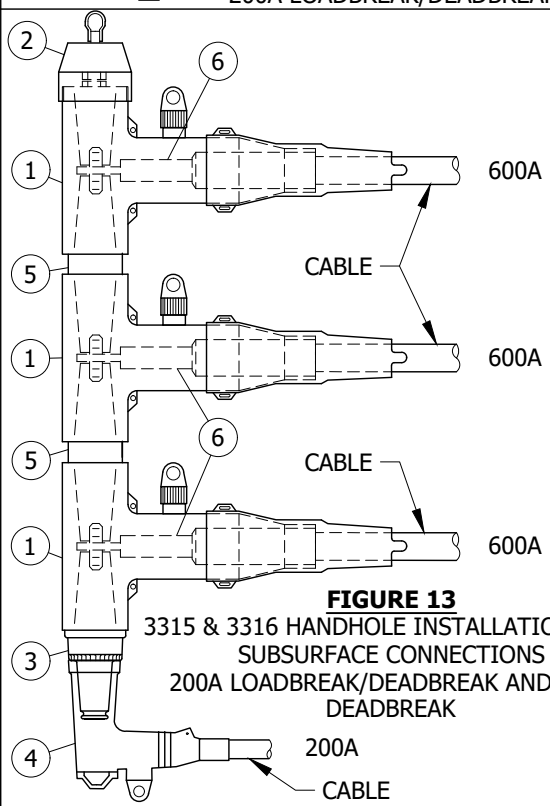

FIGURE 13
3315 & 3316 HANDHOLE INSTALLATION ONLY
SUBSURFACE CONNECTIONS
200A LOADBREAK/DEADBREAK AND 600A
DEADBREAK

UG MAP SYMBOL

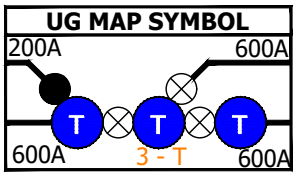

TABLE 14

ADDITIONAL MACRO UNIT
CL5889

TABLE 15

TYPICAL COMBINATIONS						
CODE	L3777	L5777	L3888	L5888	L3999	L5999
200A CABLE SIZE	#2 AL	2/0 AL	#2 AL	2/0 AL	#2 AL	2/0 AL
600A CABLE SIZE	350 AL	350 AL	750 AL	750 AL	1000 AL	1000 AL
600A CABLE SIZE	350 AL	350 AL	750 AL	750 AL	1000 AL	1000 AL
600A CABLE SIZE	350 AL	350 AL	750 AL	750 AL	1000 AL	1000 AL
MACRO UNITS	CL3777	CL5777	CL3888	CL5888	CL3999	CL5999

BILL OF MATERIALS (FIGURE 13):

ITEM	DESCRIPTION	WIRE SIZE	QUANTITY	STANDARD PAGE	STOCK NUMBER	DESIGN UNITS
1	COLD SHRINK ELBOW TEE	4/0, 350 AND 500	3	--	S326572	600AT
		750 AND 1000		--	S326574	600ATL
2	INSULATED PLUG W/ TEST POINT	--	1	--	S544848	PLUG-F
3	ELBOW TAP PLUG	--	1	--	S547328	ETP650
4	LOADBREAK ELBOW CONNECTOR	#2 AL	1	--	S443838	LBE-2A
		2/0 AL		--	S443840	LBE2/0
5	DOUBLE-ENDED CONNECTOR PLUG	--	2	--	S544832	PLUG-C
6	CONDUCTOR CONNECTOR	4/0, 350 AND 500	3	--	S471314	P6ALR3
		750 AND 1000		--	S471316	P6ALR5

© 1998 - 2023 San Diego Gas & Electric Company. All rights reserved. Removal of this copyright notice without permission is not permitted under law.

REV	CHANGE	DR	BY	DSN	APV	DATE	REV	CHANGE	DR	BY	DSN	APV	DATE
D	REVISION	-	-	-	TR/MJC	10/30/2012	G	TABLE UPDATES	ARC	ADW	EJA	KRG	10/17/2023
C	REVISION	-	-	-	TR/MJC	07/24/2012	F	FORMATTING	EDM	JIK	-	-	06/02/2020
B	REVISION	-	-	-	TR/MJC	11/14/2011	E	FIGURE UPDATE	-	EJA	GLW	CZH	12/09/2019

INSTALLATION:

A. THREE TEE COMBINATIONS SHOWN IN THIS STANDARD SHALL ONLY BE USED TO FEED A SWITCHED TIE POSITION.

BILL OF MATERIALS: INDIVIDUALLY INCLUDED WITH FIGURES

NOTES:

I. **TABLE 16**

CODES USED IN TABLES 1-15 (HANDHOLE INSTALLATIONS)	
CODE	**TYPE**
CABLE	
7	350 AL
8	750 AL
9	1000 AL
COMPONENT	
D3	DEADBREAK ELBOW #2 AL
D5	DEADBREAK ELBOW 2/0
L3	LOADBREAK ELBOW #2 AL
L5	LOADBREAK ELBOW 2/0 AL
B	#2 AL FUSED ELBOW
C	2/0 AL FUSED ELBOW
O	200 AMP INSULATING RECEPTACLE

II. OTHER COMBINATIONS MAY BE CODED USING THE ABOVE CODES FOR THE SAME TYPE COMBINATIONS SHOWN.

III. EXCEPTION FOR COMBINATIONS NOT SHOWN:

FOR ANTICIPATED 200A LOAD IN THE NEAR FUTURE, INSTALL DEADBREAK ELBOWS (PRESENT LOAD) ON THE BOTTOM OF THE 600A TEES AND 200A INSULATING RECEPTACLES ON THE TOP.

REFERENCE:

a. FOR SPECIFICATIONS AND INSTALLATION INSTRUCTIONS, REFER TO UG4182, UG4190, UG4191 AND UG4196.

(b) FOR GROUNDING ELBOW KIT, REFER TO UG4179.1.

(c) FOR INFORMATION ON COLD SHRINK ELBOW TEE, REFER TO UG4189 (FUTURE).

TABLE OF CONTENTS

© 1998 - 2023 San Diego Gas & Electric Company. All rights reserved. Removal of this copyright notice without permission is not permitted under law.

REV	CHANGE	DR	BY	DSN	APV	DATE	REV	CHANGE	DR	BY	DSN	APV	DATE
D	REVISION	-	-	-	TR/MJC	10/30/2012	G	TABLE UPDATES	ARC	ADW	EJA	KRG	10/17/2023
C	REVISION	-	-	-	TR/MJC	07/24/2012	F	FORMATTING	EDM	JIK	-	-	06/02/2020
B	REVISION	-	-	-	TR/MJC	11/14/2011	E	FIGURE UPDATE	-	EJA	GLW	CZH	12/09/2019

X Indicates Latest Revision | Completely Revised | New Page | Information Removed

SDG&E ELECTRIC UNDERGROUND CONSTRUCTION STANDARDS

12KV 200 & 600A CONNECTOR ASSEMBLIES
IDENTIFICATION CHART
HANDHOLE INSTALLATIONS

UG4181.8

SCOPE: THIS STANDARD SHOWS THE CONNECTIONS AND ASSEMBLY CODES USED FOR CALLING OUT 200 AND 600A CONNECTOR ASSEMBLIES ON ELECTRIC CONSTRUCTION WORK ORDERS FOR MANHOLE INSTALLATIONS.

ATTENTION:

* THIS FIGURE SHOWS HOW 200A AND 600A CONNECTORS ARE ASSEMBLED.

** ALWAYS USE THE MANUFACTURERS RECOMMENDED TORQUE SETTINGS WHEN ASSEMBLING CONNECTORS.

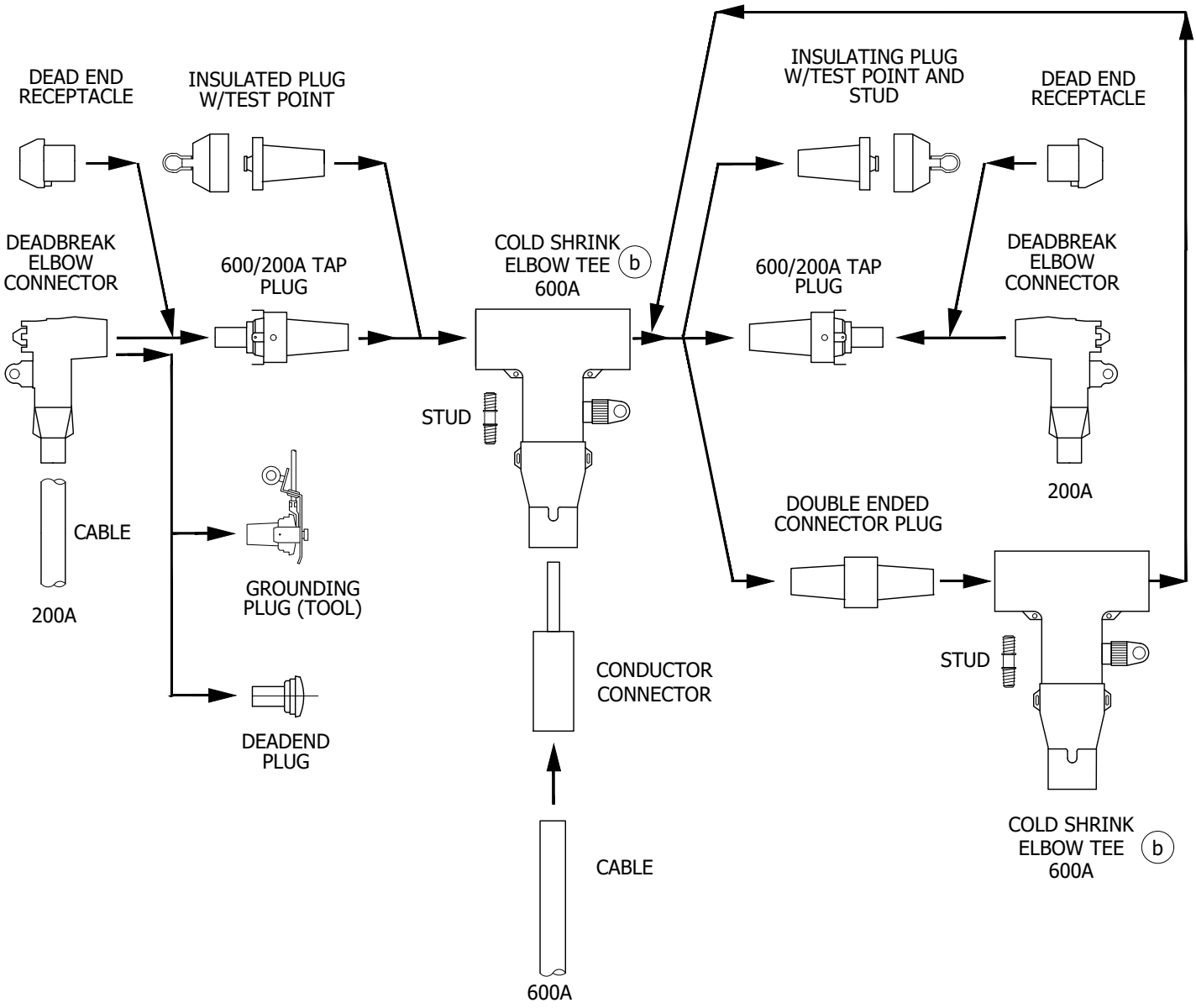

FIGURE 1
SUBSURFACE CONNECTOR APPLICATION CHART
200 AND 600A DEADBREAK MANHOLE INSTALLATION

© 1998 - 2023 San Diego Gas & Electric Company. All rights reserved. Removal of this copyright notice without permission is not permitted under law.

REV	CHANGE	DR	BY	DSN	APV	DATE	REV	CHANGE	DR	BY	DSN	APV	DATE
D	REVISION	-	-	-	TR/MJC	10/30/2012	G	TABLE UPDATES	ARC	ADW	EJA	KRG	10/17/2023
C	REVISION	-	-	-	TR/MJC	07/24/2012	F	FORMATTING	EDM	JIK	-	-	06/02/2020
B	REVISION	-	-	-	TR/MJC	11/14/2011	E	FIGURE UPDATE	-	EJA	GLW	CZH	12/09/2019

TABLE OF CONTENTS

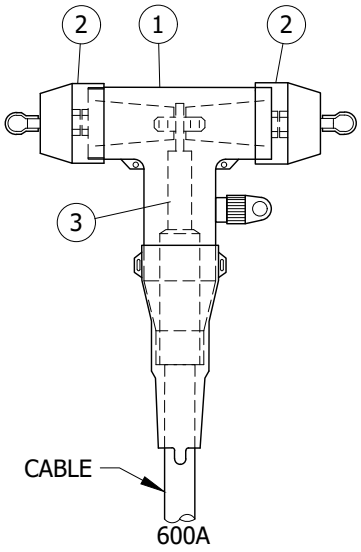

UG MAP SYMBOL
T 600A
3 - T

FIGURE 2
MANHOLE INSTALLATION SUBSURFACE CONNECTIONS
200 AND 600A DEADBREAK

TABLE 1

TYPICAL COMBINATIONS			
CODE	7	8	9
600A CABLE SIZE	350 AL	750 AL	1000 AL
MACRO UNITS	CC---7	CC---8	CC---9

BILL OF MATERIALS (FIGURE 2):

ITEM	DESCRIPTION	WIRE SIZE	QUANTITY	STANDARD PAGE	STOCK NUMBER	DESIGN UNITS
1	COLD SHRINK ELBOW TEE	4/0, 350 AND 500	1	--	S326572	600AT
		750 AND 1000		--	S326574	600ATL
2	INSULATED PLUG W/ TEST POINT	--	2	--	S544848	PLUG-F
3	CONDUCTOR CONNECTOR	4/0, 350 AND 500	1	--	S471314	P6ALR3
		750 AND 1000		--	S471316	P6ALR5

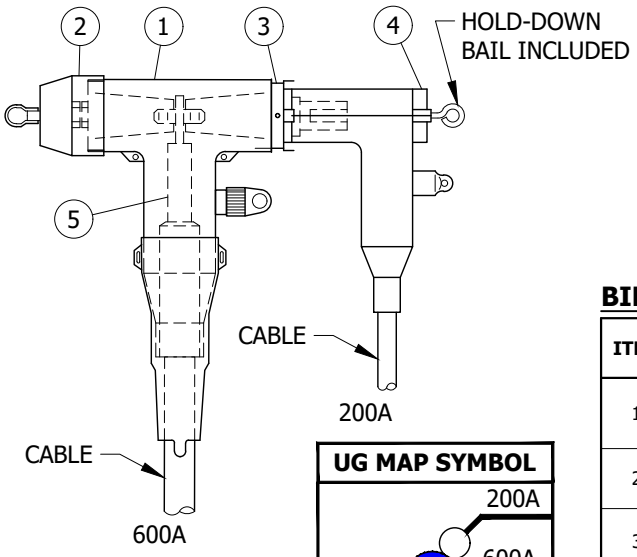

UG MAP SYMBOL
200A
T 600A
3 - T

FIGURE 3
MANHOLE INSTALLATION SUBSURFACE CONNECTIONS
200 AND 600A DEADBREAK

TABLE 2

TYPICAL COMBINATIONS						
CODE	73	75	83	85	93	95
600A CABLE SIZE 200A CABLE SIZE	350 AL #2 AL	350 AL 2/0 AL	750 AL #2 AL	750 AL 2/0 AL	1000 AL #2 AL	1000 AL 2/0 AL
MACRO UNITS	CC--73	CC--75	CC--83	CC--85	CC--93	CC--95

BILL OF MATERIALS (FIGURE 3):

ITEM	DESCRIPTION	WIRE SIZE	QUANTITY	STANDARD PAGE	STOCK NUMBER	DESIGN UNITS
1	COLD SHRINK ELBOW TEE	4/0, 350 AND 500	1	--	S326572	600AT
		750 AND 1000		--	S326574	600ATL
2	INSULATED PLUG W/ TEST POINT	--	1	--	S544848	PLUG-F
3	600/200A TAP PLUG	--	1	--	S547324	TAP-FE
4	DEADBREAK ELBOW CONNECTOR	#2 AL	1	--	S443842	NBE-2A
		2/0 AL		--	S443844	NBE2/0
5	CONDUCTOR CONNECTOR	4/0, 350 AND 500	1	--	S471314	P6ALR3
		750 AND 1000		--	S471316	P6ALR5

© 1998 - 2023 San Diego Gas & Electric Company. All rights reserved. Removal of this copyright notice without permission is not permitted under law.

REV	CHANGE	DR	BY	DSN	APV	DATE	REV	CHANGE	DR	BY	DSN	APV	DATE
D	REVISION	-	-	-	TR/MJC	10/30/2012	G	TABLE UPDATES	ARC	ADW	EJA	KRG	10/17/2023
C	REVISION	-	-	-	TR/MJC	07/24/2012	F	FORMATTING	EDM	JIK	-	-	06/02/2020
B	REVISION	-	-	-	TR/MJC	11/14/2011	E	FIGURE UPDATE	-	EJA	GLW	CZH	12/09/2019

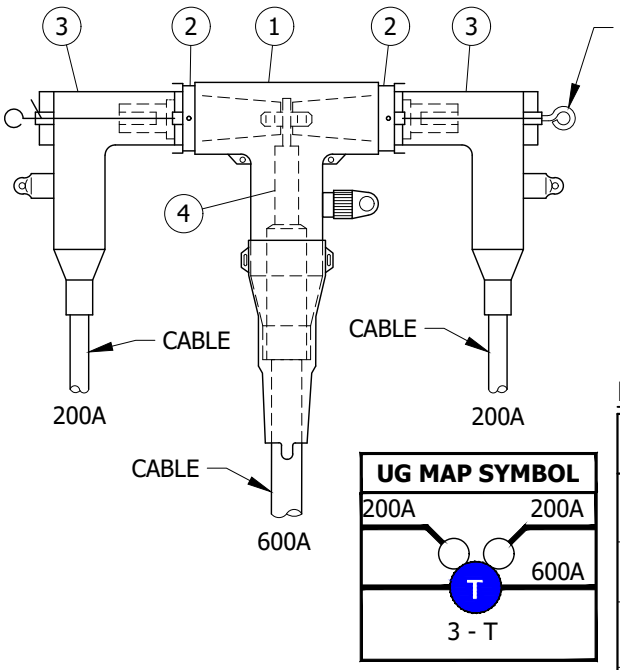

FIGURE 4
MANHOLE INSTALLATION SUBSURFACE CONNECTIONS
200 AND 600A DEADBREAK

TABLE 3

TYPICAL COMBINATIONS						
CODE	375	575	583	585	593	595
200A CABLE SIZE **600A CABLE SIZE** **200A CABLE SIZE**	#2 AL 350 AL 2/0 AL	2/0 AL 350 AL 2/0 AL	2/0 AL 750 AL #2 AL	2/0 AL 750 AL 2/0 AL	2/0 AL 1000 AL #2 AL	2/0 AL 1000 AL 2/0 AL
MACRO UNITS	CC-375	CC-575	CC-583	CC-585	CC-593	CC-595

BILL OF MATERIALS (FIGURE 4):

ITEM	DESCRIPTION	WIRE SIZE	QUANTITY	STANDARD PAGE	STOCK NUMBER	DESIGN UNITS
1	COLD SHRINK ELBOW TEE	4/0, 350 AND 500	1	--	S326572	600AT
		750 AND 1000		--	S326574	600ATL
2	600/200A TAP PLUG	--	1	--	S547324	TAP-FE
3	DEADBREAK ELBOW CONNECTOR	#2 AL	2	--	S443842	NBE-2A
		2/0 AL		--	S443844	NBE2/0
4	CONDUCTOR CONNECTOR	4/0, 350 AND 500	1	--	S471314	P6ALR3
		750 AN 1000		--	S471316	P6ALR5

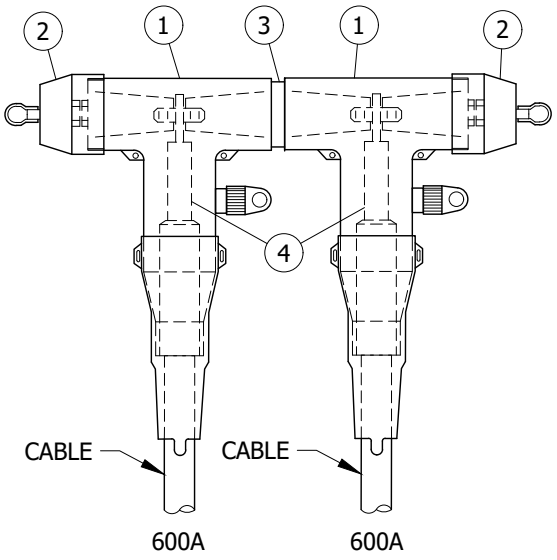

FIGURE 5
MANHOLE INSTALLATION SUBSURFACE CONNECTIONS
200 AND 600A DEADBREAK

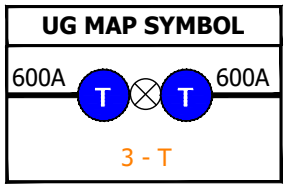

TABLE 4

TYPICAL COMBINATIONS						
CODE	77	87	88	97	98	99
600A CABLE SIZE **600A CABLE SIZE**	350 AL 350 AL	350 AL 750 AL	750 AL 750 AL	350 AL 1000 AL	750 AL 1000 AL	1000 AL 1000 AL
MACRO UNITS	CC--77	CC--87	CC--88	CC--97	CC--98	CC--99

BILL OF MATERIALS (FIGURE 5):

ITEM	DESCRIPTION	WIRE SIZE	QUANTITY	STANDARD PAGE	STOCK NUMBER	DESIGN UNITS
1	COLD SHRINK ELBOW TEE	4/0, 350 AND 500	2	--	S326572	600AT
		750 AND 1000		--	S326574	600ATL
2	600/200A TAP PLUG	--	2	--	S547324	TAP-FE
3	DOUBLE ENDED CONNECTOR PLUG	--	1	--	S544832	PLUG-C
4	CONDUCTOR CONNECTOR	4/0, 350 TO 500	2	--	S471314	P6ALR3
		750 TO 1000		--	S471316	P6ALR5

TABLE OF CONTENTS

© 1998 - 2023 San Diego Gas & Electric Company. All rights reserved. Removal of this copyright notice without permission is not permitted under law.

REV	CHANGE	DR	BY	DSN	APV	DATE	REV	CHANGE	DR	BY	DSN	APV	DATE
D	REVISION	-	-	-	TR/MJC	10/30/2012	G	TABLE UPDATES	ARC	ADW	EJA	KRG	10/17/2023
C	REVISION	-	-	-	TR/MJC	07/24/2012	F	FORMATTING	EDM	JIK	-	-	06/02/2020
B	REVISION	-	-	-	TR/MJC	11/14/2011	E	FIGURE UPDATE	-	EJA	GLW	CZH	12/09/2019

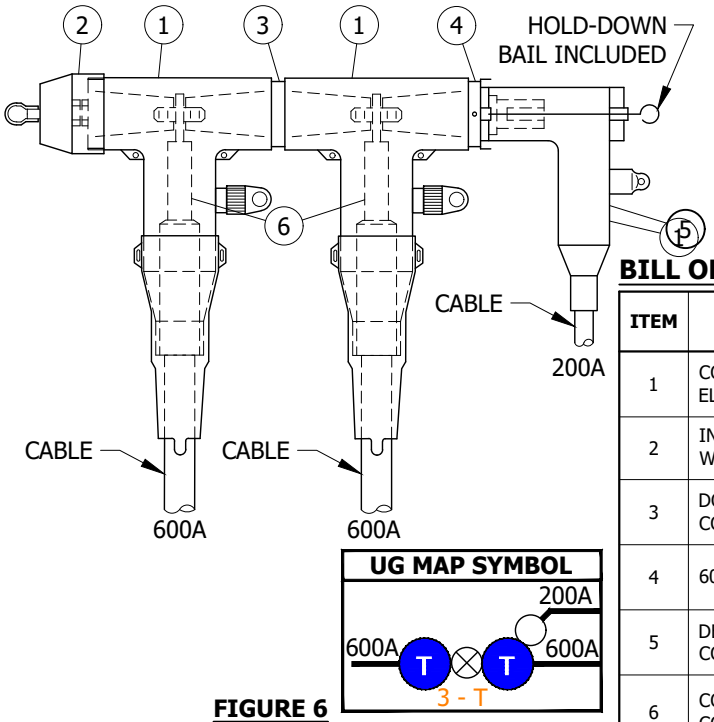

FIGURE 6
MANHOLE INSTALLATION SUBSURFACE
CONNECTIONS - 200 AND 600A DEADBREAK

TABLE 5

TYPICAL COMBINATIONS						
CODE	773	775	883	885	993	995
600A CABLE SIZE **600A CABLE SIZE** **200A CABLE SIZE**	350 AL 350 AL #2 AL	350 AL 350 AL 2/0 AL	750 AL 750 AL #2 AL	750 AL 750 AL 2/0 AL	1000 AL 1000 AL #2 AL	1000 AL 1000 AL 2/0 AL
MACRO UNITS	CC-773	CC-775	CC-883	CC-885	CC-993	CC-995

BILL OF MATERIALS (FIGURE 6):

ITEM	DESCRIPTION	WIRE SIZE	QUANTITY	STANDARD PAGE	STOCK NUMBER	DESIGN UNITS
1	COLD SHRINK ELBOW TEE	4/0, 350 AND 500	2	--	S326572	600AT
		750 AND 1000		--	S326574	600ATL
2	INSULATED PLUG W/ TEST POINT	--	1	--	S544848	PLUG-F
3	DOUBLE ENDED CONNECTOR PLUG	--	1	--	S544832	PLUG-C
4	600/200A TAP PLUG	--	1	--	S547324	TAP-FE
5	DEADBREAK ELBOW CONNECTOR	#2 AL	1	--	S443842	NBE-2A
		2/0 AL		--	S443844	NBE2/0
6	CONDUCTOR CONNECTOR	4/0, 350 AND 500	2	--	S471314	P6ALR3
		750 AND 1000		--	S471316	P6ALR5

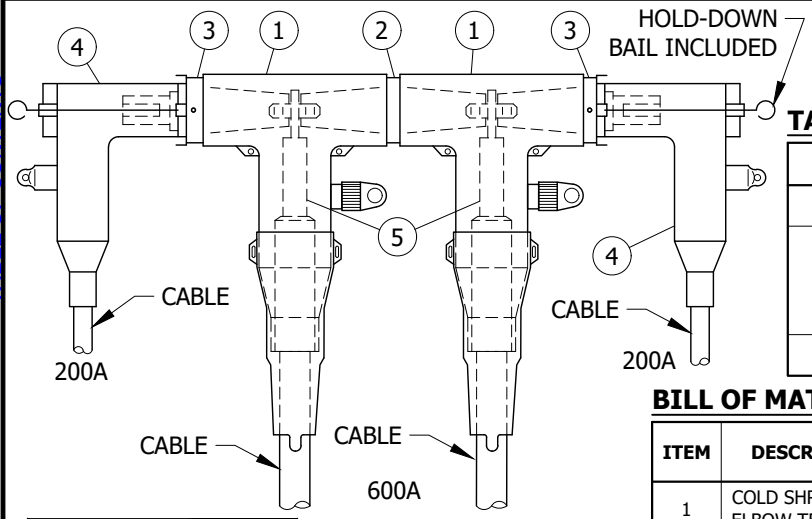

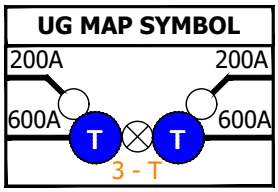

FIGURE 7
MANHOLE INSTALLATION SUBSURFACE CONNECTIONS
200 AND 600A DEADBREAK

TABLE 6

TYPICAL COMBINATIONS						
CODE	5773	5775	5883	5885	5993	5995
200A CABLE SIZE **600A CABLE SIZE** **600A CABLE SIZE** **200A CABLE SIZE**	2/0 AL 350 AL 350 AL #2 AL	2/0 AL 350 AL 350 AL 2/0 AL	2/0 AL 750 AL 750 AL #2 AL	2/0 AL 750 AL 750 AL 2/0 AL	2/0 AL 1000 AL 1000 AL #2 AL	2/0 AL 1000 AL 1000 AL 2/0 AL
MACRO UNITS	CC5773	CC5775	CC5883	CC5885	CC5993	CC5995

BILL OF MATERIALS (FIGURE 7):

ITEM	DESCRIPTION	WIRE SIZE	QUANTITY	STANDARD PAGE	STOCK NUMBER	DESIGN UNITS
1	COLD SHRINK ELBOW TEE	4/0, 350 AND 500	2	--	S326572	600AT
		750 AND 1000		--	S326574	600ATL
2	DOUBLE ENDED CONNECTOR PLUG	--	1	--	S544832	PLUG-C
3	600/200A TAP PLUG	--	2	--	S547324	TAP-FE
4	DEADBREAK ELBOW CONNECTOR	#2 AL	2	--	S443842	NBE-2A
		2/0 AL		--	S443844	NBE2/0
5	CONDUCTOR CONNECTOR	4/0, 350 AND 500	2	--	S471314	P6ALR3
		750 AND 1000		--	S471316	P6ALR5

© 1998 - 2023 San Diego Gas & Electric Company. All rights reserved. Removal of this copyright notice without permission is not permitted under law.

REV	CHANGE	DR	BY	DSN	APV	DATE	REV	CHANGE	DR	BY	DSN	APV	DATE
D	REVISION	-	-	-	TR/MJC	10/30/2012	G	TABLE UPDATES	ARC	ADW	EJA	KRG	10/17/2023
C	REVISION	-	-	-	TR/MJC	07/24/2012	F	FORMATTING	EDM	JIK	-	-	06/02/2020
B	REVISION	-	-	-	TR/MJC	11/14/2011	E	FIGURE UPDATE	-	EJA	GLW	CZH	12/09/2019

TABLE OF CONTENTS

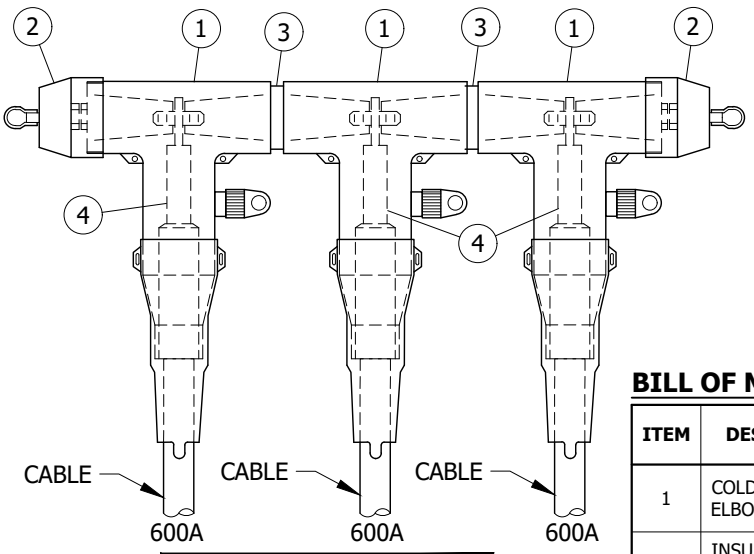

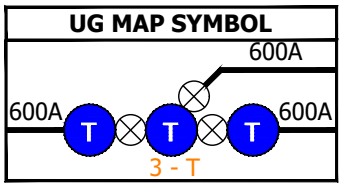

FIGURE 8
MANHOLE INSTALLATION SUBSURFACE CONNECTIONS
200 AND 600A DEADBREAK

TABLE 7

TYPICAL COMBINATIONS				
CODE	777	888	889	999
600A CABLE SIZE **600A CABLE SIZE** **600A CABLE SIZE**	350 AL 350 AL 350 AL	750 AL 750 AL 750 AL	750 AL 750 AL 1000 AL	1000 AL 1000 AL 1000 AL
MACRO UNITS	CC-777	CC-888	CC-889	CC-999

BILL OF MATERIALS (FIGURE 8):

ITEM	DESCRIPTION	WIRE SIZE	QUANTITY	STANDARD PAGE	STOCK NUMBER	DESIGN UNITS
1	COLD SHRINK ELBOW TEE	4/0, 350 AND 500	3	--	S326572	600AT
		750 AND 1000		--	S326574	600ATL
2	INSULATED PLUG W/ TEST POINT	--	2	--	S544848	PLUG-F
3	DOUBLE ENDED CONNECTOR PLUG	--	2	--	S544832	PLUG-C
4	CONDUCTOR CONNECTOR	4/0, 350 AND 500	3	--	S471314	P6ALR3
		750 AND 1000		--	S471316	P6ALR5

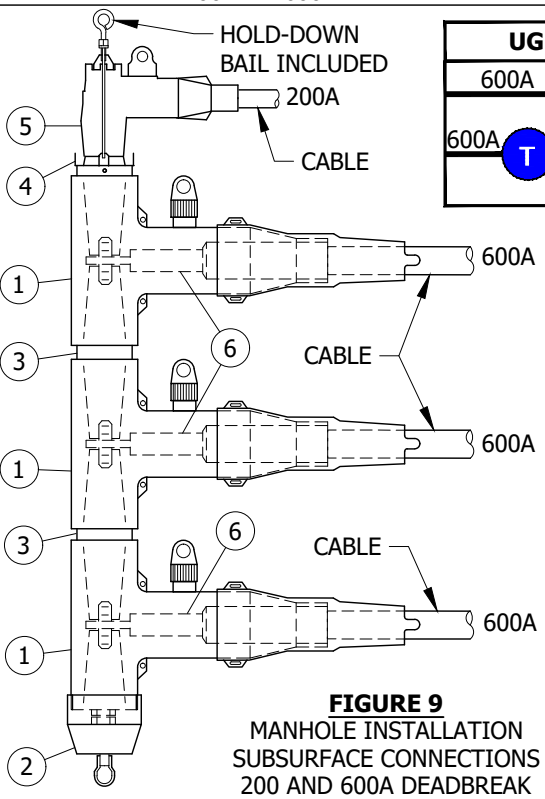

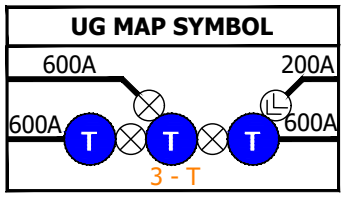

FIGURE 9
MANHOLE INSTALLATION
SUBSURFACE CONNECTIONS
200 AND 600A DEADBREAK

TABLE 8

TYPICAL COMBINATIONS						
CODE	7773	7775	8883	8885	9993	9995
600A CABLE SIZE **600A CABLE SIZE** **600A CABLE SIZE** **200A CABLE SIZE**	350 AL 350 AL 350 AL #2 AL	350 AL 350 AL 350 AL 2/0 AL	750 AL 750 AL 750 AL #2 AL	750 AL 750 AL 750 AL 2/0 AL	1000 AL 1000 AL 1000 AL #2 AL	1000 AL 1000 AL 1000 AL 2/0 AL
MACRO UNITS	CC7773	CC7775	CC8883	CC8885	CC9993	CC9995

BILL OF MATERIALS (FIGURE 9):

ITEM	DESCRIPTION	WIRE SIZE	QUANTITY	STANDARD PAGE	STOCK NUMBER	DESIGN UNITS
1	COLD SHRINK ELBOW TEE	4/0, 350 AND 500	3	--	S326572	600AT
		750 AND 1000		--	S326574	600ATL
2	INSULATED PLUG W/ TEST POINT	--	1	--	S544848	PLUG-F
3	DOUBLE ENDED CONNECTOR PLUG	--	2	--	S544832	PLUG-C
4	600/200A TAP PLUG	--	1	--	S547324	TAP-FE
5	DEADBREAK ELBOW CONNECTOR	#2 AL	1	--	S443842	NBE-2A
		2/0 AL		--	S443844	NBE2/0
6	CONDUCTOR CONNECTOR	4/0, 350 AND 500	3	--	S471314	P6ALR3
		750 AND 1000		--	S471316	P6ALR5

TABLE OF CONTENTS

© 1998 - 2023 San Diego Gas & Electric Company. All rights reserved. Removal of this copyright notice without permission is not permitted under law.

REV	CHANGE	DR	BY	DSN	APV	DATE	REV	CHANGE	DR	BY	DSN	APV	DATE
D	REVISION	-	-	-	TR/MJC	10/30/2012	G	TABLE UPDATES	ARC	ADW	EJA	KRG	10/17/2023
C	REVISION	-	-	-	TR/MJC	07/24/2012	F	FORMATTING	EDM	JIK	-	-	06/02/2020
B	REVISION	-	-	-	TR/MJC	11/14/2011	E	FIGURE UPDATE	-	EJA	GLW	CZH	12/09/2019

INSTALLATION:

A. THREE TEE COMBINATIONS SHOWN IN THIS STANDARD SHALL ONLY BE USED TO FEED A SWITCHED TIE POSITION.

BILL OF MATERIALS: INDIVIDUALLY INCLUDED WITH FIGURES

NOTES:

I. **TABLE 9**

CODES USED IN TABLES 1-8	
CODE	**TYPE**
CABLE	
3	#2 AL
5	2/0 AL
6	4/0 AL
7	350 AL
8	750 AL
9	1000 AL

II. OTHER COMBINATIONS MAY BE CODED USING THE ABOVE CODES FOR THE SAME TYPE COMBINATIONS SHOWN.

REFERENCE:

a. FOR SPECIFICATIONS AND INSTALLATION INSTRUCTIONS, REFER TO UG4182 AND UG4196.

(b) FOR INFORMATION ON COLD SHRINK ELBOW TEE, REFER TO UG4189 (FUTURE).

TABLE OF CONTENTS

© 1998 - 2023 San Diego Gas & Electric Company. All rights reserved. Removal of this copyright notice without permission is not permitted under law.

REV	CHANGE	DR	BY	DSN	APV	DATE	REV	CHANGE	DR	BY	DSN	APV	DATE
D	REVISION	-	-	-	TR/MJC	10/30/2012	G	TABLE UPDATES	ARC	ADW	EJA	KRG	10/17/2023
C	REVISION	-	-	-	TR/MJC	07/24/2012	F	FORMATTING	EDM	JIK	-	-	06/02/2020
B	REVISION	-	-	-	TR/MJC	11/14/2011	E	FIGURE UPDATE	-	EJA	GLW	CZH	12/09/2019

SCOPE: THIS STANDARD SHOWS THE CONNECTIONS AND ASSEMBLY CODES USED FOR CALLING OUT 200 AND 600A CONNECTOR ASSEMBLIES ON ELECTRIC CONSTRUCTION WORK ORDERS FOR SUBSURFACE/SURFACE OPERABLE SWITCH CONNECTIONS.

ATTENTION:

* THIS FIGURE SHOWS HOW 200A AND 600A CONNECTORS ARE ASSEMBLED.

** ALWAYS USE THE MANUFACTURERS RECOMMENDED TORQUE SETTINGS WHEN ASSEMBLING CONNECTORS.

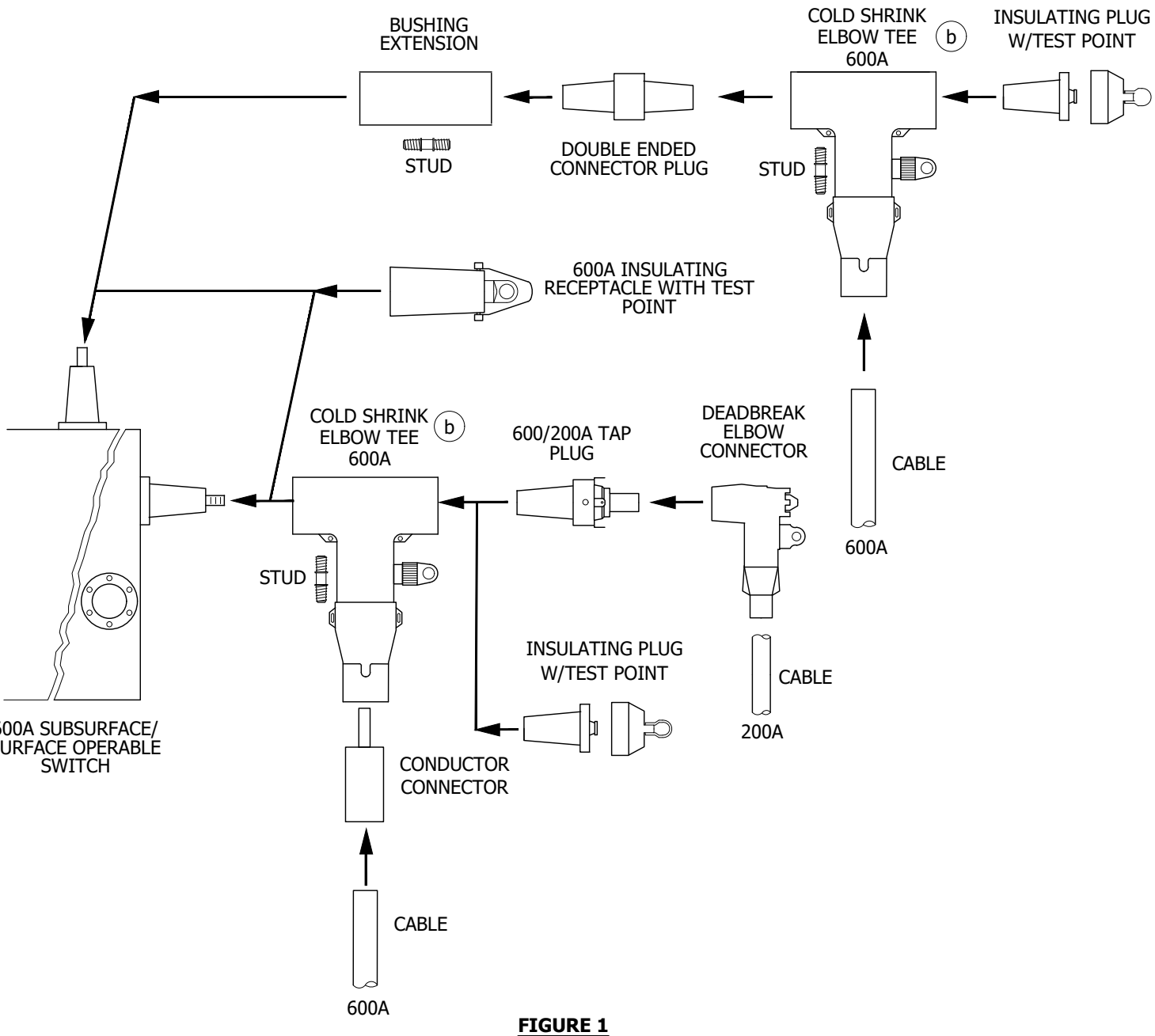

FIGURE 1

SUBSURFACE/SURFACE OPERABLE SWITCH CONNECTOR APPLICATION CHART
200 AND 600A DEADBREAK

© 1998 - 2023 San Diego Gas & Electric Company. All rights reserved. Removal of this copyright notice without permission is not permitted under law.

REV	CHANGE	DR	BY	DSN	APV	DATE	REV	CHANGE	DR	BY	DSN	APV	DATE
D	REVISION	-	-	-	TR/MJC	10/30/2012	G	TABLE UPDATES	ARC	ADW	EJA	KRG	10/17/2023
C	REVISION	-	-	-	TR/MJC	07/24/2012	F	FORMATTING	EDM	JIK	-	-	06/02/2020
B	REVISION	-	-	-	TR/MJC	11/14/2011	E	FIGURE UPDATE	-	EJA	GLW	CZH	12/09/2019

X Indicates Latest Revision | Completely Revised | New Page | Information Removed

SDG&E ELECTRIC UNDERGROUND CONSTRUCTION STANDARDS

12KV 200 & 600A CONNECTOR ASSEMBLIES
IDENTIFICATION CHART
SUBSURFACE/SURFACE OPERABLE SWITCH CONNECTIONS

UG4181.15

TABLE OF CONTENTS

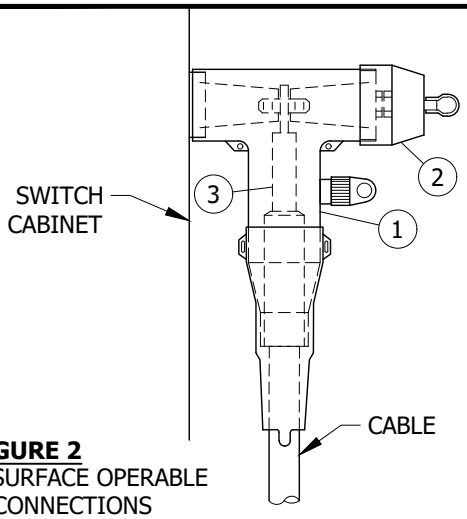

FIGURE 2
SUBSURFACE/SURFACE OPERABLE
SWITCH CONNECTIONS
200 AND 600A DEADBREAK

UG MAP SYMBOL

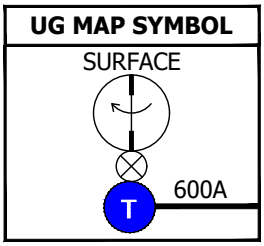

TABLE 1

TYPICAL COMBINATIONS			
CODE	T7	T8	T9
600A CABLE SIZE	350 AL	750 AL	1000 AL
MACRO UNITS	CC-T7	CC-T8	CC-T9

BILL OF MATERIALS (FIGURE 2):

ITEM	DESCRIPTION	WIRE SIZE	QUANTITY	STANDARD PAGE	STOCK NUMBER	DESIGN UNITS
1	COLD SHRINK ELBOW TEE	4/0, 350 AND 500	1	--	S326572	600AT
		750 AND 1000		--	S326574	600ATL
2	INSULATED PLUG W/ TEST POINT	--	1	--	S544848	PLUG-F
3	CONDUCTOR CONNECTOR	4/0, 350 AND 500	1	--	S471314	P6ALR3
		750 AND 1000		--	S471316	P6ALR5

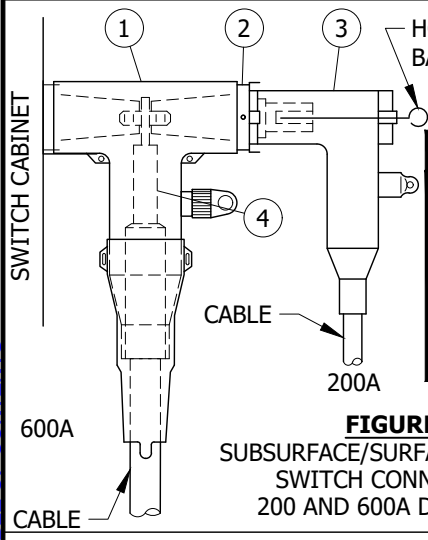

FIGURE 3
SUBSURFACE/SURFACE OPERABLE
SWITCH CONNECTIONS
200 AND 600A DEADBREAK

UG MAP SYMBOL

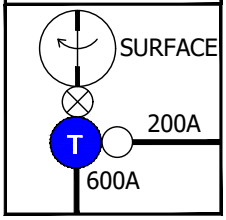

TABLE 2

TYPICAL COMBINATIONS						
CODE	T73	T75	T83	T85	T93	T95
600A CABLE SIZE **200A CABLE SIZE**	350 AL #2 AL	350 AL 2/0 AL	750 AL #2 AL	750 AL 2/0 AL	1000 AL#2 AL	1000 AL 2/0 AL
MACRO UNITS	CC-T73	CC-T75	CC-T83	CC-T85	CC-T93	CC-T95

BILL OF MATERIALS (FIGURE 3):

ITEM	DESCRIPTION	WIRE SIZE	QUANTITY	STANDARD PAGE	STOCK NUMBER	DESIGN UNITS
1	COLD SHRINK ELBOW TEE	4/0, 350 AND 500	1	--	S326572	600AT
		750 AND 1000		--	S326574	600ATL
2	600/200A TAP PLUG	--	1	--	S547324	TAP-FE
3	DEADBREAK ELBOW CONNECTOR	#2 AL	1	--	S443842	NBE-2A
		2/0 AL		--	S443844	NBE2/0
4	CONDUCTOR CONNECTOR	4/0, 350 AND 500	1	--	S471314	P6ALR3
		750 AND 1000		--	S471316	P6ALR5

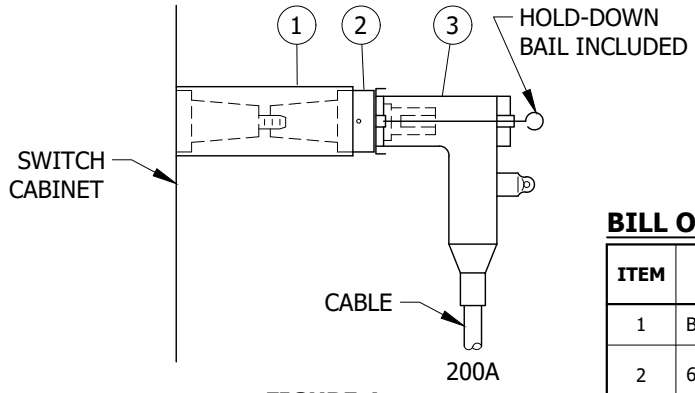

FIGURE 4
SUBSURFACE/SURFACE OPERABLE
SWITCH CONNECTIONS
200 AND 600A DEADBREAK

UG MAP SYMBOL

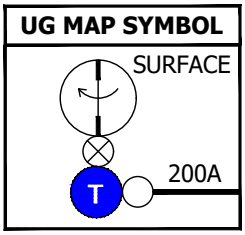

TABLE 3

TYPICAL COMBINATIONS		
CODE	F3	F5
200A CABLE SIZE	#2 AL	2/0 AL
MACRO UNITS	CC-F3	CC-F5

BILL OF MATERIALS (FIGURE 4):

ITEM	DESCRIPTION	WIRE SIZE	QUANTITY	STANDARD PAGE	STOCK NUMBER	DESIGN UNITS
1	BUSHING EXTENSION	--	1	--	S336204	BUSH-X
2	600/200A TAP PLUG	--	1	--	S547324	TAP-FE
3	DEADBREAK ELBOW CONNECTOR	#2 AL	1	--	S443842	NBE-2A
		2/0 AL		--	S443844	NBE2/0

TABLE OF CONTENTS

© 1998 - 2023 San Diego Gas & Electric Company. All rights reserved. Removal of this copyright notice without permission is not permitted under law.

REV	CHANGE	DR	BY	DSN	APV	DATE	REV	CHANGE	DR	BY	DSN	APV	DATE
D	REVISION	-	-	-	TR/MJC	10/30/2012	G	TABLE UPDATES	ARC	ADW	EJA	KRG	10/17/2023
C	REVISION	-	-	-	TR/MJC	07/24/2012	F	FORMATTING	EDM	JIK	-	-	06/02/2020
B	REVISION	-	-	-	TR/MJC	11/14/2011	E	FIGURE UPDATE	-	EJA	GLW	CZH	12/09/2019

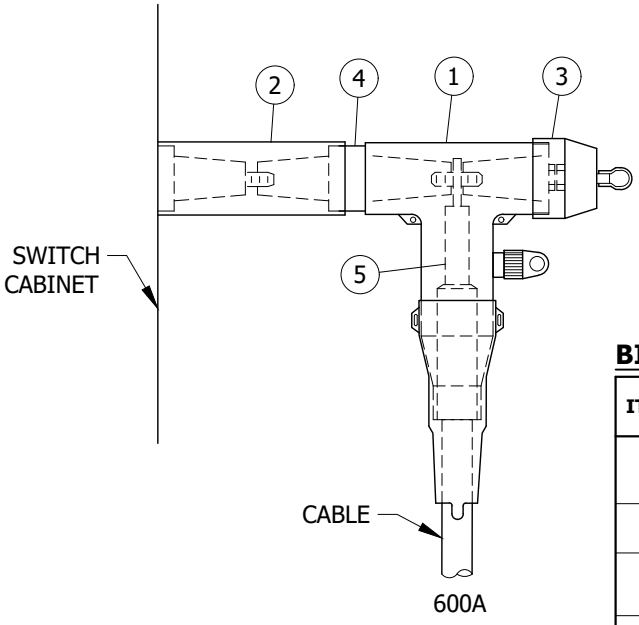

FIGURE 5
SUBSURFACE/SURFACE OPERABLE
SWITCH CONNECTIONS
200 AND 600A DEADBREAK

UG MAP SYMBOL

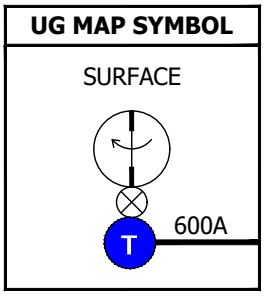

TABLE 4

TYPICAL COMBINATIONS			
CODE	F7	F8	F9
600A CABLE SIZE	350 AL	750 AL	1000 AL
MACRO UNITS	CC--F7	CC--F8	CC--F9

BILL OF MATERIALS (FIGURE 5):

ITEM	DESCRIPTION	WIRE SIZE	QUANTITY	STANDARD PAGE	STOCK NUMBER	DESIGN UNITS
1	COLD SHRINK ELBOW TEE	4/0, 350 AND 500	1	--	S326572	600AT
		750 AND 1000		--	S326574	600ATL
2	BUSHING EXTENSION	--	1	--	S336204	BUSH-X
3	INSULATED PLUG W/ TEST POINT	--	1	--	S544848	PLUG-F
4	DOUBLE ENDED CONNECTOR PLUG	--	1	--	S544832	PLUG-C
5	CONDUCTOR CONNECTOR	4/0, 350 AND 500	1	--	S471314	P6ALR3
		750 AND 1000		--	S471316	P6ALR5

TABLE OF CONTENTS

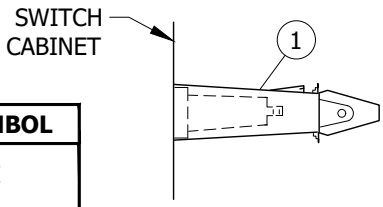

UG MAP SYMBOL

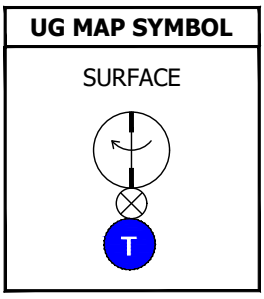

FIGURE 6
SUBSURFACE/SURFACE OPERABLE
SWITCH CONNECTIONS
200 AND 600A DEADBREAK

TABLE 5

TYPICAL COMBINATIONS	
CODE	H
MACRO UNITS	CC---H

BILL OF MATERIALS (FIGURE 6):

ITEM	DESCRIPTION	WIRE SIZE	QUANTITY	STANDARD PAGE	STOCK NUMBER	DESIGN UNITS
1	600A INSULATING RECEPTACLE	--	1	--	S570608	--

© 1998 - 2023 San Diego Gas & Electric Company. All rights reserved. Removal of this copyright notice without permission is not permitted under law.

REV	CHANGE	DR	BY	DSN	APV	DATE	REV	CHANGE	DR	BY	DSN	APV	DATE
D	REVISION	-	-	-	TR/MJC	10/30/2012	G	TABLE UPDATES	ARC	ADW	EJA	KRG	10/17/2023
C	REVISION	-	-	-	TR/MJC	07/24/2012	F	FORMATTING	EDM	JIK	-	-	06/02/2020
B	REVISION	-	-	-	TR/MJC	11/14/2011	E	FIGURE UPDATE	-	EJA	GLW	CZH	12/09/2019

INSTALLATION:

A. DO NOT "PIGGYBACK" 600A TEES ON TOP OF EACH OTHER AT ANY TIME ON THE SWITCH BUSHING.

BILL OF MATERIALS: INDIVIDUALLY INCLUDED WITH FIGURES

NOTES:

I. **TABLE 6**

CODES USED IN TABLES 1-5 (SUBSURFACE/SURFACE OPERABLE SWITCH CONNECTIONS)	
CODES	**TYPE**
CABLE	
3	#2 AL
5	2/0 AL
7	350 AL
8	750 AL
9	1000 AL
COMPONENT	
F	600 AMP SUBSURFACE/SURFACE OPERABLE SWITCH BUSHING EXTENSION
H	600 AMP SUBSURFACE/SURFACE OPERABLE SWITCH INSULATING RECEPTACLE
T	600 AMP SUBSURFACE/SURFACE OPERABLE SWITCH TEE

II. OTHER COMBINATIONS MAY BE CODED USING THE ABOVE CODES FOR THE SAME TYPE COMBINATIONS SHOWN.

REFERENCE:

a. FOR SPECIFICATIONS AND INSTALLATION INSTRUCTIONS, REFER TO UG4182 AND UG4196.

(b) FOR INFORMATION ON COLD SHRINK ELBOW TEE, REFER TO UG4189 (FUTURE).

TABLE OF CONTENTS

© 1998 - 2023 San Diego Gas & Electric Company. All rights reserved. Removal of this copyright notice without permission is not permitted under law.

REV	CHANGE	DR	BY	DSN	APV	DATE	REV	CHANGE	DR	BY	DSN	APV	DATE
D	REVISION	-	-	-	TR/MJC	10/30/2012	G	TABLE UPDATES	ARC	ADW	EJA	KRG	10/17/2023
C	REVISION	-	-	-	TR/MJC	07/24/2012	F	FORMATTING	EDM	JIK	-	-	06/02/2020
B	REVISION	-	-	-	TR/MJC	11/14/2011	E	FIGURE UPDATE	-	EJA	GLW	CZH	12/09/2019

SCOPE: THIS STANDARD SHOWS THE CONNECTIONS AND ASSEMBLY CODES USED FOR CALLING OUT 200 AND 600A CONNECTOR ASSEMBLIES ON ELECTRIC CONSTRUCTION WORK ORDERS FOR PAD-MOUNTED 200/600A EQUIPMENT CONNECTOR APPLICATIONS.

ATTENTION:

* THIS FIGURE SHOWS HOW 200A AND 600A CONNECTORS ARE ASSEMBLED.

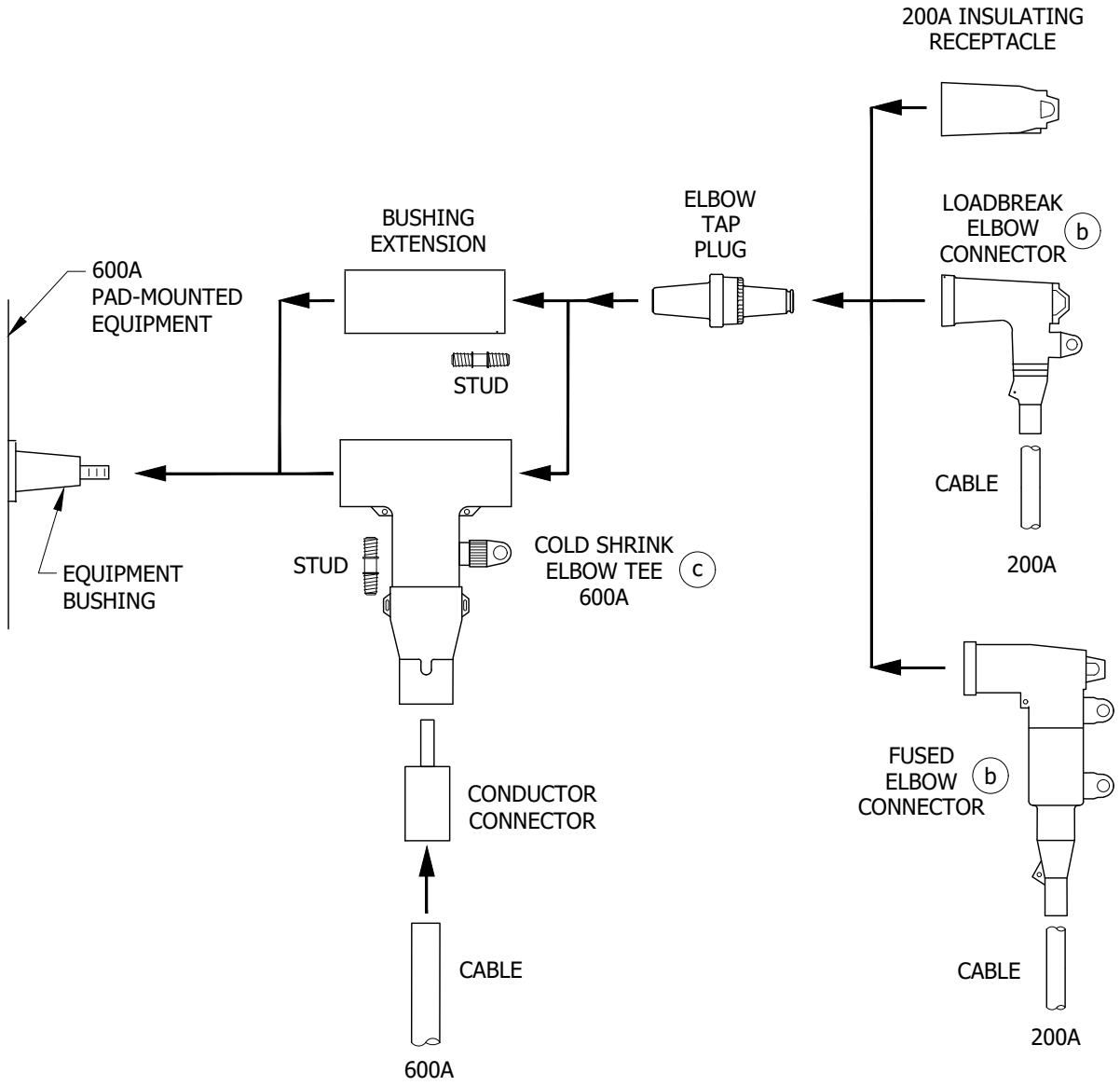

FIGURE 1
PAD-MOUNTED 200/600A EQUIPMENT CONNECTOR APPLICATION CHART
200A LOADBREAK AND 600A DEADBREAK

© 1998 - 2023 San Diego Gas & Electric Company. All rights reserved. Removal of this copyright notice without permission is not permitted under law.

REV	CHANGE	DR	BY	DSN	APV	DATE	REV	CHANGE	DR	BY	DSN	APV	DATE
D	REVISION	-	-	-	TR/MJC	10/30/2012	G	TABLE UPDATES	ARC	ADW	EJA	KRG	10/17/2023
C	REVISION	-	-	-	TR/MJC	07/24/2012	F	FORMATTING	EDM	JIK	-	-	06/02/2020
B	REVISION	-	-	-	TR/MJC	11/14/2011	E	FIGURE UPDATE	-	EJA	GLW	CZH	12/09/2019

TABLE OF CONTENTS

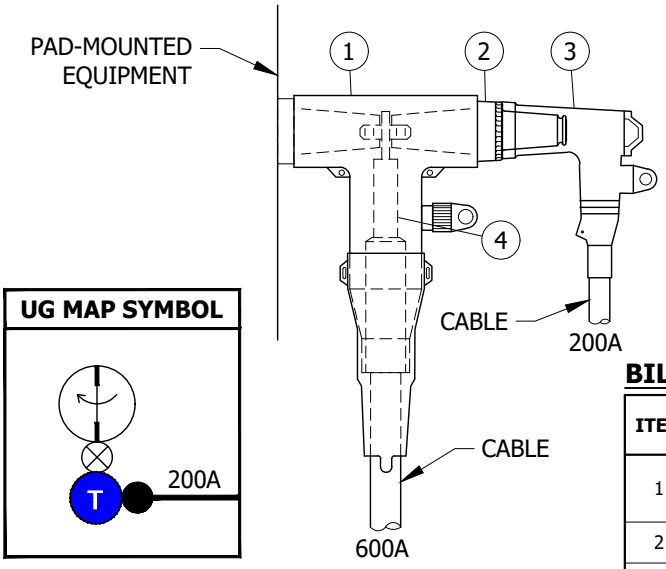

FIGURE 2
PAD-MOUNTED 200/600A
EQUIPMENT CONNECTIONS
200A LOADBREAK

TABLE 1

TYPICAL COMBINATIONS						
CODE	P73	P75	P83	P85	P93	P95
200A CABLE SIZE **600A CABLE SIZE**	#2 AL 350 AL	2/0 AL 350 AL	#2 AL 750 AL	2/0 AL 750 AL	#2 AL 1000 AL	2/0 AL 1000 AL
MACRO UNITS	CC-P73	CC-P75	CC-P83	CC-P85	CC-P93	CC-P95

BILL OF MATERIALS (FIGURE 2):

ITEM	DESCRIPTION	WIRE SIZE	QUANTITY	STANDARD PAGE	STOCK NUMBER	DESIGN UNITS
1	COLD SHRINK ELBOW TEE	4/0, 350 AND 500	1	--	S326572	600AT
		750 AND 1000		--	S326574	600ATL
2	ELBOW TAP PLUG	--	1	--	S547328	ETP650
3	LOADBREAK ELBOW CONNECTOR	#2 AL	1	--	S443838	LBE-2A
		2/0 AL		--	S443840	LBE2/0
4	CONDUCTOR CONNECTOR	4/0, 350 AND 500	1	--	S471314	P6ALR3
		750 AND 1000		--	S471316	P6ALR5

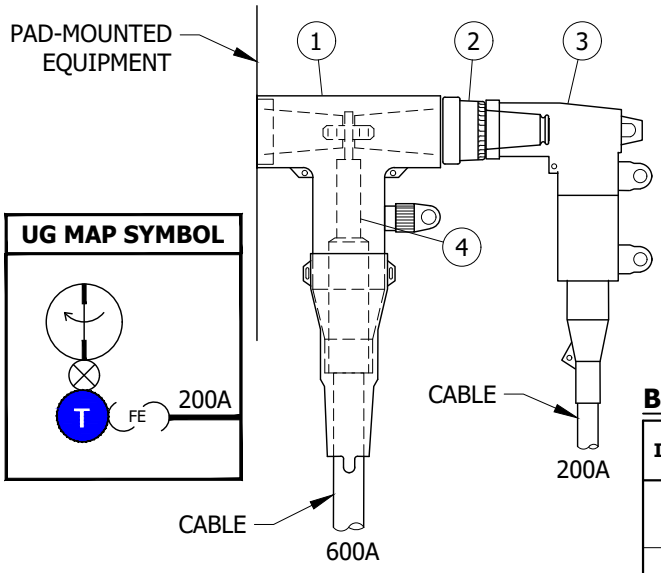

FIGURE 3
PAD-MOUNTED 200/600A EQUIPMENT CONNECTIONS
200A LOADBREAK

TABLE 2

TYPICAL COMBINATIONS						
CODE	P7B	P7C	P8B	P8C	P9B	P9C
200A CABLE SIZE **600A CABLE SIZE**	#2 AL 350 AL	2/0 AL 350 AL	#2 AL 750 AL	2/0 AL 750 AL	#2 AL 1000 AL	2/0 AL 1000 AL
MACRO UNITS	CC-P7B	CC-P7C	CC-P8B	CC-P8C	CC-P9B	CC-P9C

BILL OF MATERIALS (FIGURE 3):

ITEM	DESCRIPTION	WIRE SIZE	QUANTITY	STANDARD PAGE	STOCK NUMBER	DESIGN UNITS
1	COLD SHRINK ELBOW TEE	4/0, 350 AND 500	1	--	S326572	600AT
		750 AND 1000		--	S326574	600ATL
2	ELBOW TAP PLUG	--	1	--	S547328	ETP650
3	FUSED ELBOW CONNECTOR	#2 AL	1	--	S321682	FE-2/0
		2/0 AL		--		
4	CONDUCTOR CONNECTOR	4/0, 350 AND 500	1	--	S471314	P6ALR3
		750 AND 1000		--	S471316	P6ALR5

© 1998 - 2023 San Diego Gas & Electric Company. All rights reserved. Removal of this copyright notice without permission is not permitted under law.

REV	CHANGE	DR	BY	DSN	APV	DATE	REV	CHANGE	DR	BY	DSN	APV	DATE
D	REVISION	-	-	-	TR/MJC	10/30/2012	G	TABLE UPDATES	ARC	ADW	EJA	KRG	10/17/2023
C	REVISION	-	-	-	TR/MJC	07/24/2012	F	FORMATTING	EDM	JIK	-	-	06/02/2020
B	REVISION	-	-	-	TR/MJC	11/14/2011	E	FIGURE UPDATE	-	EJA	GLW	CZH	12/09/2019

X Indicates Latest Revision | Completely Revised | New Page | Information Removed

SDG&E ELECTRIC UNDERGROUND CONSTRUCTION STANDARDS

12KV 200 & 600A CONNECTOR ASSEMBLIES
IDENTIFICATION CHART
PAD MOUNTED 200/600A EQUIPMENT CONNECTORS

UG4181.20

TABLE OF CONTENTS

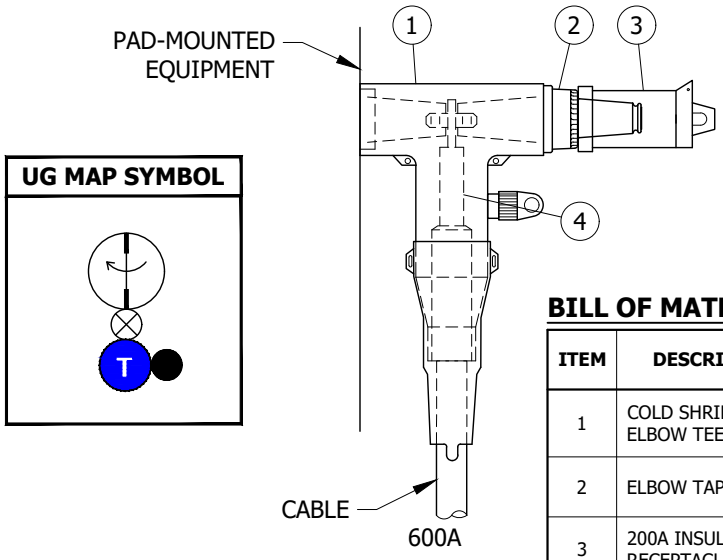

FIGURE 4
PAD-MOUNTED 200/600A EQUIPMENT
CONNECTIONS
200A LOADBREAK

TABLE 3

TYPICAL COMBINATIONS			
CODE	P7O	P8O	P9O
600A CABLE SIZE	350 AL	750 AL	1000 AL
MACRO UNITS	CC-P70	CC-P80	CC-P90

BILL OF MATERIALS (FIGURE 4):

ITEM	DESCRIPTION	WIRE SIZE	QUANTITY	STANDARD PAGE	STOCK NUMBER	DESIGN UNITS
1	COLD SHRINK ELBOW TEE	4/0, 350 AND 500	1	--	S326572	600AT
		750 AND 1000		--	S326574	600ATL
2	ELBOW TAP PLUG	--	1	--	S547328	ETP650
3	200A INSULATING RECEPTACLE	--	1	--	S204304	INSERC
4	CONDUCTOR CONNECTOR	4/0, 350 AND 500	1	--	S471314	P6ALR3
		750 AND 1000		--	S471316	P6ALR5

TABLE OF CONTENTS

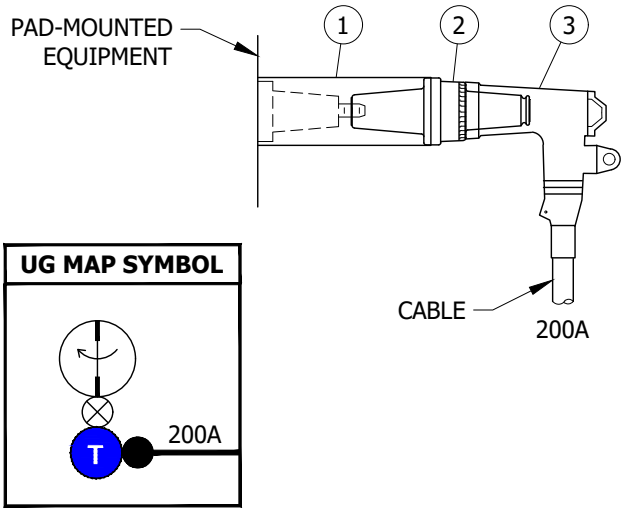

FIGURE 5
PAD-MOUNTED 200/600A EQUIPMENT CONNECTIONS
200A LOADBREAK

TABLE 4

TYPICAL COMBINATIONS		
CODE	E3	E5
200A CABLE SIZE	#2 AL	2/0 AL
MACRO UNITS	CC--E3	CC--E5

BILL OF MATERIALS (FIGURE 5):

ITEM	DESCRIPTION	WIRE SIZE	QUANTITY	STANDARD PAGE	STOCK NUMBER	DESIGN UNITS
1	BUSHING EXTENSION	--	1	--	S336204	BUSH-X
2	ELBOW TAP PLUG	--	1	--	S547328	ETP650
3	LOADBREAK ELBOW CONNECTOR	#2 AL	1	--	S443838	LBE-2A
		2/0 AL		--	S443840	LBE2/0

© 1998 - 2023 San Diego Gas & Electric Company. All rights reserved. Removal of this copyright notice without permission is not permitted under law.

REV	CHANGE	DR	BY	DSN	APV	DATE	REV	CHANGE	DR	BY	DSN	APV	DATE
D	REVISION	-	-	-	TR/MJC	10/30/2012	G	TABLE UPDATES	ARC	ADW	EJA	KRG	10/17/2023
C	REVISION	-	-	-	TR/MJC	07/24/2012	F	FORMATTING	EDM	JIK	-	-	06/02/2020
B	REVISION	-	-	-	TR/MJC	11/14/2011	E	FIGURE UPDATE	-	EJA	GLW	CZH	12/09/2019

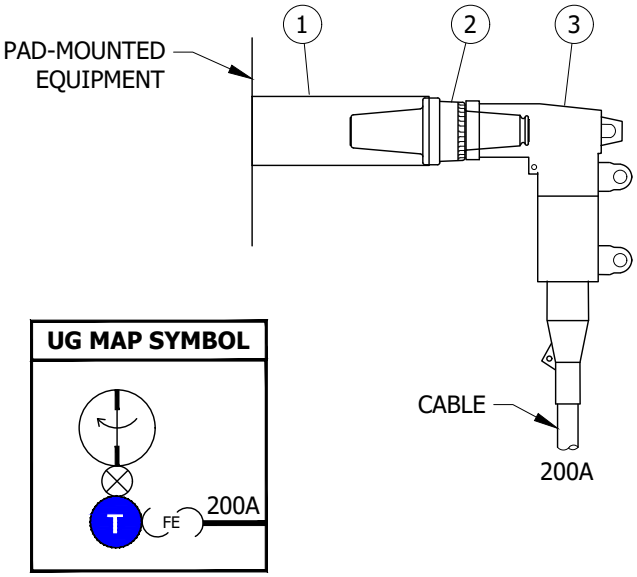

FIGURE 6
PAD-MOUNTED 200/600A EQUIPMENT CONNECTIONS
200A LOADBREAK

TABLE 5

TYPICAL COMBINATIONS		
CODE	EB	EC
200A CABLE SIZE	#2 AL	2/0 AL
MACRO UNITS	CC--EB	CC--EC

BILL OF MATERIALS (FIGURE 6):

ITEM	DESCRIPTION	WIRE SIZE	QUANTITY	STANDARD PAGE	STOCK NUMBER	DESIGN UNITS
1	BUSHING EXTENSION	--	1	--	S336204	BUSH-X
2	ELBOW TAP PLUG	--	1	--	S547328	ETP650
3	FUSED ELBOW CONNECTOR	#2 AL	1	--	S321682	FE-2/0
		2/0 AL		--		

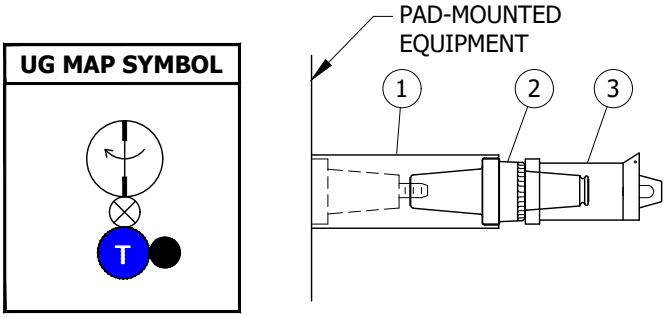

FIGURE 7
PAD-MOUNTED 200/600A EQUIPMENT CONNECTIONS
200A LOADBREAK

TABLE 6

TYPICAL COMBINATIONS	
CODE	EO
MACRO UNITS	CC--E0

BILL OF MATERIALS (FIGURE 7):

ITEM	DESCRIPTION	WIRE SIZE	QUANTITY	STANDARD PAGE	STOCK NUMBER	DESIGN UNITS
1	BUSHING EXTENSION	--	1	--	S336204	BUSH-X
2	ELBOW TAP PLUG	--	1	--	S547328	ETP650
3	200A INSULATING	--	1	--	S204304	INSREC

TABLE OF CONTENTS

© 1998 - 2023 San Diego Gas & Electric Company. All rights reserved. Removal of this copyright notice without permission is not permitted under law.

REV	CHANGE	DR	BY	DSN	APV	DATE	REV	CHANGE	DR	BY	DSN	APV	DATE
D	REVISION	-	-	-	TR/MJC	10/30/2012	G	TABLE UPDATES	ARC	ADW	EJA	KRG	10/17/2023
C	REVISION	-	-	-	TR/MJC	07/24/2012	F	FORMATTING	EDM	JIK	-	-	06/02/2020
B	REVISION	-	-	-	TR/MJC	11/14/2011	E	FIGURE UPDATE	-	EJA	GLW	CZH	12/09/2019

X Indicates Latest Revision | Completely Revised | New Page | Information Removed

SDG&E ELECTRIC UNDERGROUND CONSTRUCTION STANDARDS

12KV 200 & 600A CONNECTOR ASSEMBLIES
IDENTIFICATION CHART
PAD MOUNTED 200/600A EQUIPMENT CONNECTORS

UG4181.22

INSTALLATION:

A. DO NOT "PIGGYBACK" 600A TEES ON TOP OF EACH OTHER AT ANY TIME ON THE EQUIPMENT BUSHING.

B. THE 200A/600A LOADBREAK CONFIGURATIONS ON THESE PAGES ARE ONLY TO BE USED ON PAD MOUNTED EQUIPMENT INSTALLATIONS

BILL OF MATERIALS: INDIVIDUALLY INCLUDED WITH FIGURES

NOTES:

I. **TABLE 7**

CODES USED IN TABLES 1-6 (PAD-MOUNTED 200/600 AMP EQUIPMENT CONNECTOR)	
CODE	**TYPE**
CABLE	
3	#2 AL
5	2/0 AL
7	350 AL
8	750 AL
9	1000 AL
COMPONENT	
B	#2 AL FUSED ELBOW
C	2/0 AL FUSED ELBOW
E	600 AMP PAD-MOUNTED EQUIPMENT BUSHING EXTENSION
P	600 AMP PAD-MOUNTED EQUIPMENT TEE
O	200 AMP INSULATING RECEPTACLE

II. OTHER COMBINATIONS MAY BE CODED USING THE ABOVE CODES FOR THE SAME TYPE COMBINATIONS SHOWN.

REFERENCE:

a. FOR SPECIFICATIONS AND INSTALLATION INSTRUCTIONS, REFER TO UG4182, UG4190, UG4191 AND UG4192.

(b) FOR GROUNDING ELBOW KIT, REFER TO UG4179.1.

(c) FOR INFORMATION ON COLD SHRINK ELBOW TEE, REFER TO UG4189 (FUTURE).

TABLE OF CONTENTS

© 1998 - 2023 San Diego Gas & Electric Company. All rights reserved. Removal of this copyright notice without permission is not permitted under law.

REV	CHANGE	DR	BY	DSN	APV	DATE	REV	CHANGE	DR	BY	DSN	APV	DATE
D	REVISION	-	-	-	TR/MJC	10/30/2012	G	TABLE UPDATES	ARC	ADW	EJA	KRG	10/17/2023
C	REVISION	-	-	-	TR/MJC	07/24/2012	F	FORMATTING	EDM	JIK	-	-	06/02/2020
B	REVISION	-	-	-	TR/MJC	11/14/2011	E	FIGURE UPDATE	-	EJA	GLW	CZH	12/09/2019

SCOPE: THIS STANDARD SHOWS THE CONNECTIONS AND ASSEMBLY CODES USED FOR CALLING OUT 200 AND 600A CONNECTOR ASSEMBLIES ON ELECTRIC CONSTRUCTION WORK ORDERS FOR SUBSURFACE/SURFACE OPERABLE ON-OFF SWITCH CONNECTIONS.

ATTENTION:

* THIS FIGURE SHOWS HOW 200A AND 600A CONNECTORS ARE ASSEMBLED.

** ALWAYS USE THE MANUFACTURERS RECOMMENDED TORQUE SETTINGS WHEN ASSEMBLING CONNECTORS.

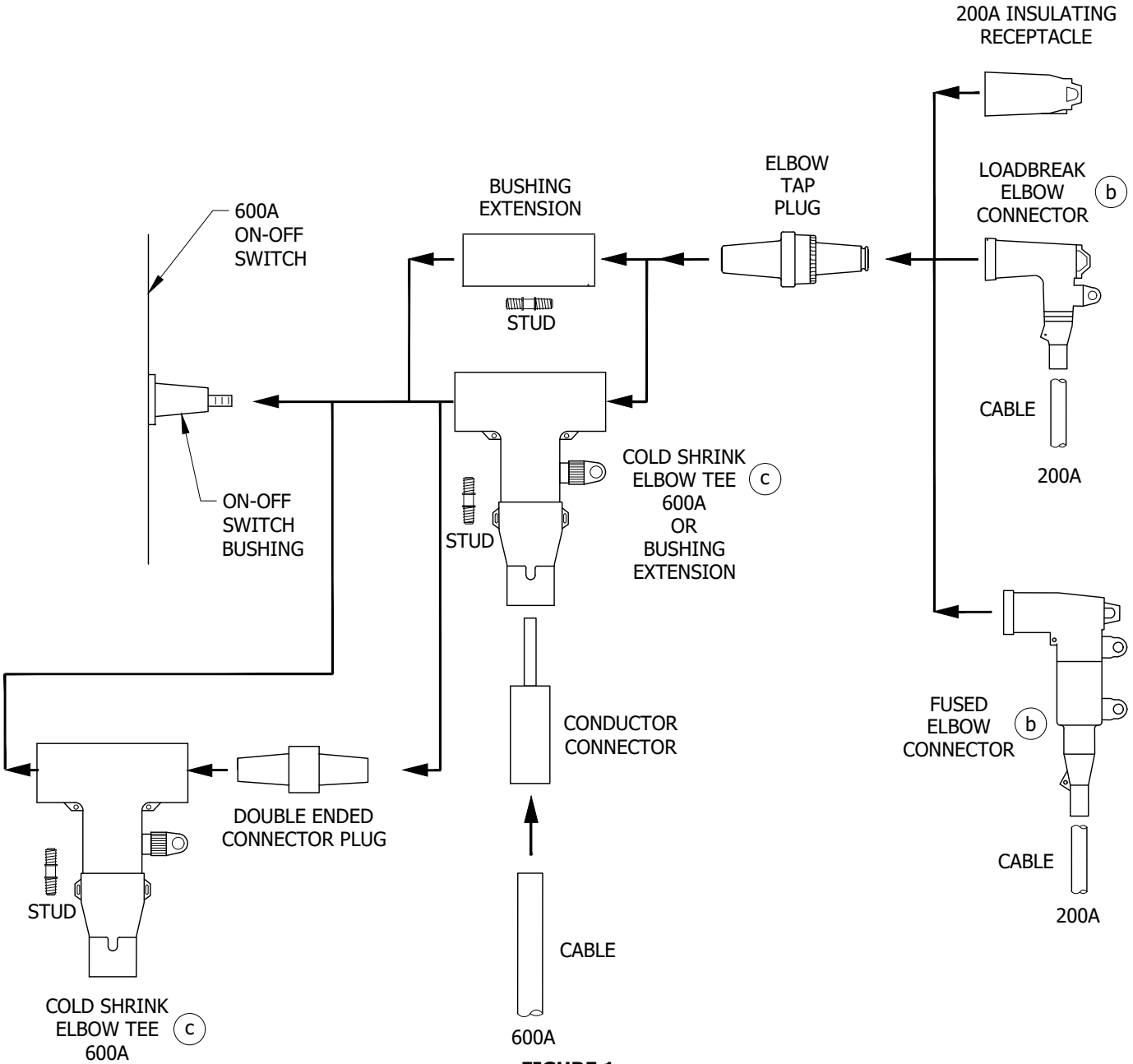

FIGURE 1
SUBSURFACE/SURFACE OPERABLE ON-OFF SWITCH CONNECTOR APPLICATION CHART
200A LOADBREAK AND 600A DEADBREAK

TABLE OF CONTENTS

© 1998 - 2023 San Diego Gas & Electric Company. All rights reserved. Removal of this copyright notice without permission is not permitted under law.

REV	CHANGE	DR	BY	DSN	APV	DATE	REV	CHANGE	DR	BY	DSN	APV	DATE
D	REVISION	-	-	-	TR/MJC	10/30/2012	G	TABLE UPDATES	ARC	ADW	EJA	KRG	10/17/2023
C	REVISION	-	-	-	TR/MJC	07/24/2012	F	FORMATTING	EDM	JIK	-	-	06/02/2020
B	REVISION	-	-	-	TR/MJC	11/14/2011	E	FIGURE UPDATE	-	EJA	GLW	CZH	12/09/2019

TABLE OF CONTENTS

UG MAP SYMBOL

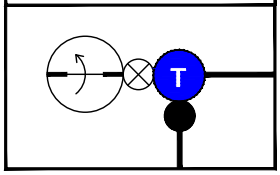

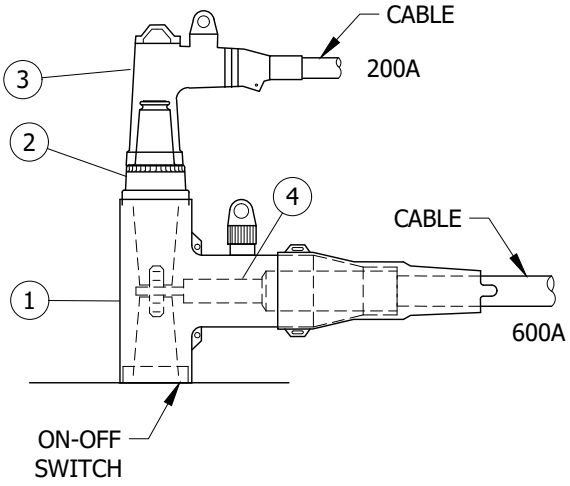

FIGURE 2
SUBSURFACE/SURFACE OPERABLE ON-OFF SWITCH
200A LOADBREAK CONNECTIONS

TABLE 1

TYPICAL COMBINATIONS						
CODE	T73	T75	T83	T85	T93	T95
600A CABLE SIZE 200A CABLE SIZE	350 AL #2 AL	350 AL 2/0 AL	750 AL #2 AL	750 AL 2/0 AL	1000 AL #2 AL	1000 AL 2/0 AL
MACRO UNITS	CC--T73	CC--T75	CC--T83	CC--T85	CC--T93	CC--T95

BILL OF MATERIALS (FIGURE 2):

ITEM	DESCRIPTION	WIRE SIZE	QUANTITY	STANDARD PAGE	STOCK NUMBER	DESIGN UNITS
1	COLD SHRINK ELBOW TEE	4/0, 350 AND 500	1	--	S326572	600AT
		750 AND 1000		--	S326574	600ATL
2	ELBOW TAP PLUG	--	1	--	S547328	ETP650
3	LOADBREAK ELBOW CONNECTOR	#2 AL	1	--	S443838	LBE-2A
		2/0 AL		--	S443840	LBE2/0
4	CONDUCTOR CONNECTOR	4/0, 350 AND 500	1	--	S471314	P6ALR3
		750 AND 1000		--	S471316	P6ALR5

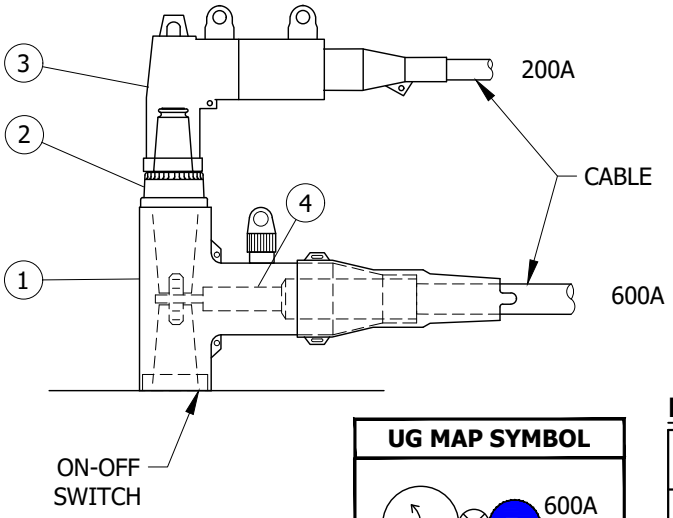

UG MAP SYMBOL

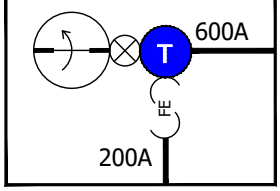

FIGURE 3
SUBSURFACE/SURFACE OPERABLE ON-OFF SWITCH
200A LOADBREAK CONNECTIONS

TABLE 2

TYPICAL COMBINATIONS						
CODE	7B	7C	8B	8C	9B	9C
600A CABLE SIZE 200A CABLE SIZE	350 AL #2 AL	350 AL 2/0 AL	750 AL #2 AL	750 AL 2/0 AL	1000 AL #2 AL	1000 AL 2/0 AL
MACRO UNITS	CC--T7B	CC--T7C	CC--T8B	CC--T8C	CC--T9B	CC--T9C

BILL OF MATERIALS (FIGURE 3):

ITEM	DESCRIPTION	WIRE SIZE	QUANTITY	STANDARD PAGE	STOCK NUMBER	DESIGN UNITS
1	COLD SHRINK ELBOW TEE	4/0, 350 AND 500	1	--	S326572	600AT
		750 AND 1000		--	S326574	600ATL
2	ELBOW TAP PLUG	--	1	--	S547328	ETP650
3	FUSED ELBOW CONNECTOR	#2 AL	1	--	S321682	FE-2/0
		2/0 AL		--		
4	CONDUCTOR CONNECTOR	4/0, 350 AND 500	1	--	S471314	P6ALR3
		750 AND 1000		--	S471316	P6ALR5

© 1998 - 2023 San Diego Gas & Electric Company. All rights reserved. Removal of this copyright notice without permission is not permitted under law.

REV	CHANGE	DR	BY	DSN	APV	DATE	REV	CHANGE	DR	BY	DSN	APV	DATE
D	REVISION	-	-	-	TR/MJC	10/30/2012	G	TABLE UPDATES	ARC	ADW	EJA	KRG	10/17/2023
C	REVISION	-	-	-	TR/MJC	07/24/2012	F	FORMATTING	EDM	JIK	-	-	06/02/2020
B	REVISION	-	-	-	TR/MJC	11/14/2011	E	FIGURE UPDATE	-	EJA	GLW	CZH	12/09/2019

X Indicates Latest Revision | Completely Revised | New Page | Information Removed

SDG&E ELECTRIC UNDERGROUND CONSTRUCTION STANDARDS

12KV 200 & 600A CONNECTOR ASSEMBLIES
IDENTIFICATION CHART
SUBSURFACE/SURFACE OPERABLE ON-OFF SWITCH CONNECTIONS

UG4181.25

TABLE OF CONTENTS

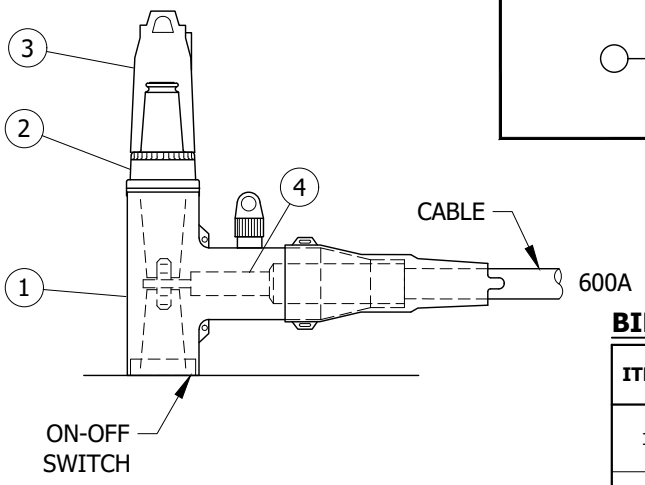

UG MAP SYMBOL

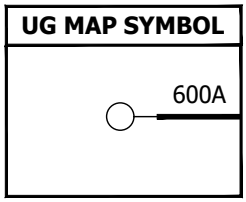

FIGURE 4
SUBSURFACE/SURFACE OPERABLE ON-OFF SWITCH
200A LOADBREAK CONNECTIONS

TABLE 3

TYPICAL COMBINATIONS			
CODE	T7O	T8O	T9O
600A CABLE SIZE	350 AL	750 AL	1000 AL
MACRO UNITS	CC-T70	CC-T80	CC-T90

BILL OF MATERIALS (FIGURE 4):

ITEM	DESCRIPTION	WIRE SIZE	QUANTITY	STANDARD PAGE	STOCK NUMBER	DESIGN UNITS
1	COLD SHRINK ELBOW TEE	4/0, 350 AND 500	2	--	S326572	600AT
		750 AND 1000		--	S326574	600ATL
2	ELBOW TAP PLUG	--	1	--	S547328	ETP650
3	200A INSULATING RECEPTACLE	--	1	--	S204304	INSREC
4	CONDUCTOR CONNECTOR	4/0, 350 AND 500	1	--	S471314	P6ALR3
		750 AND 1000		--	S471316	P6ALR5

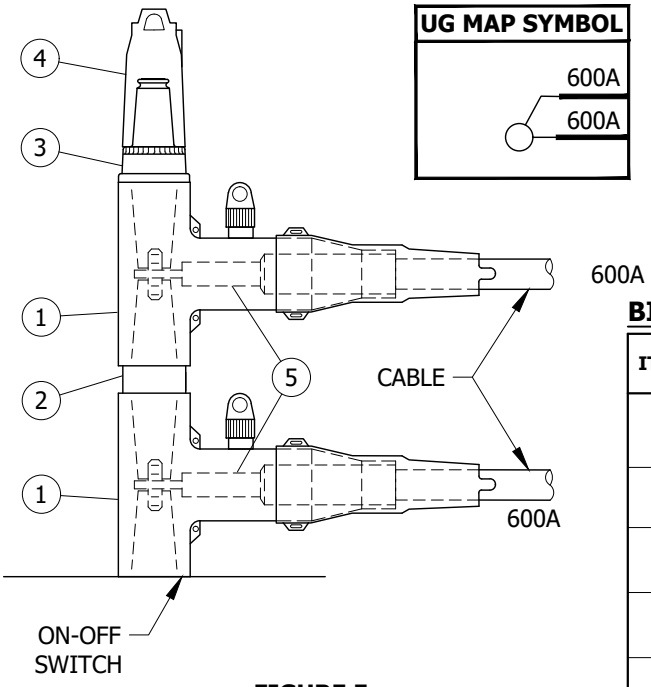

UG MAP SYMBOL

FIGURE 5
SUBSURFACE/SURFACE OPERABLE ON-OFF SWITCH
200A LOADBREAK CONNECTIONS

TABLE 4

TYPICAL COMBINATIONS			
CODE	TT7O	TT8O	TT9O
600A CABLE SIZE	350 AL	750 AL	1000 AL
MACRO UNITS	C-TT70	C-TT80	C-TT90

BILL OF MATERIALS (FIGURE 5):

ITEM	DESCRIPTION	WIRE SIZE	QUANTITY	STANDARD PAGE	STOCK NUMBER	DESIGN UNITS
1	COLD SHRINK ELBOW TEE	4/0, 350 AND 500	2	--	S326572	600AT
		750 AND 1000		--	S326574	600ATL
2	DOUBLE ENDED CONNECTOR PLUG	--	1	--	S544832	PLUG-C
3	ELBOW TAP PLUG	--	1	--	S547328	ETP650
4	200A INSULATING RECEPTACLE	--	1	--	S204304	INSREC
5	CONDUCTOR CONNECTOR	4/0, 350 AND 500	2	--	S471314	P6ALR3
		750 AND 1000		--	S471316	P6ALR5

© 1998 - 2023 San Diego Gas & Electric Company. All rights reserved. Removal of this copyright notice without permission is not permitted under law.

REV	CHANGE	DR	BY	DSN	APV	DATE	REV	CHANGE	DR	BY	DSN	APV	DATE
D	REVISION	-	-	-	TR/MJC	10/30/2012	G	TABLE UPDATES	ARC	ADW	EJA	KRG	10/17/2023
C	REVISION	-	-	-	TR/MJC	07/24/2012	F	FORMATTING	EDM	JIK	-	-	06/02/2020
B	REVISION	-	-	-	TR/MJC	11/14/2011	E	FIGURE UPDATE	-	EJA	GLW	CZH	12/09/2019

X Indicates Latest Revision | Completely Revised | New Page | Information Removed

SDG&E ELECTRIC UNDERGROUND CONSTRUCTION STANDARDS

12KV 200 & 600A CONNECTOR ASSEMBLIES
IDENTIFICATION CHART
SUBSURFACE/SURFACE OPERABLE ON-OFF SWITCH CONNECTIONS

UG4181.26

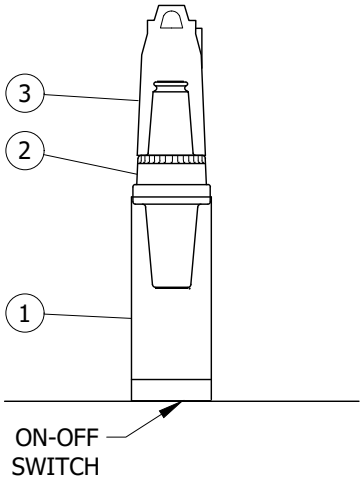

FIGURE 6
SUBSURFACE/SURFACE OPERABLE ON-OFF SWITCH
200A LOADBREAK CONNECTIONS

TABLE 5

TYPICAL COMBINATIONS	
CODE	FO
MACRO UNITS	CC---FO

BILL OF MATERIALS (FIGURE 6):

ITEM	DESCRIPTION	WIRE SIZE	QUANTITY	STANDARD PAGE	STOCK NUMBER	DESIGN UNITS
1	BUSHING EXTENSION	--	1	--	S336204	BUSH-X
2	ELBOW TAP PLUG	--	1	--	S547328	ETP650
3	200A INSULATING RECEPTACLE	--	1	--	S204304	INSREC

INSTALLATION:

A. "PIGGYBACK" TEES SHOWN IN THIS STANDARD SHALL ONLY BE USED TO FEED A SWITCH TIE POSITION.

B. DO NOT INSTALL LOADBREAK ELBOWS ON SWITCHES INSTALLED IN MANHOLES.

C. DO NOT INSTALL LOADBREAK ELBOWS ON "PIGGYBACK" TEES.

BILL OF MATERIALS: INDIVIDUALLY INCLUDED WITH FIGURES

NOTES:

I. **TABLE 6**

CODES USED IN TABLES 1-5	
CODE	**TYPE**
CABLE	
3	#2 AL
5	2/0 AL
7	350 AL
8	750 AL
9	1000 AL
COMPONENT	
B	#2 AL FUSED ELBOW
C	2/0 AL FUSED ELBOW
T	600 AMP SUBSURFACE/SURFACE OPERABLE TEE
F	600 AMP SUBSURFACE/SURFACE OPERABLE SWITCH BUSHING EXTENSION

II. OTHER COMBINATIONS MAY BE CODED USING THE ABOVE CODES FOR THE SAME TYPE COMBINATIONS SHOWN.

REFERENCE:

a. FOR SPECIFICATIONS AND INSTALLATION INSTRUCTIONS, REFER TO UG4182, UG4190, UG4191 AND UG4192.

(b) FOR GROUNDING ELBOW KIT, REFER TO UG4179.1.

(c) FOR INFORMATION ON COLD SHRINK ELBOW TEE, REFER TO UG4189 (FUTURE).

© 1998 - 2023 San Diego Gas & Electric Company. All rights reserved. Removal of this copyright notice without permission is not permitted under law.

REV	CHANGE	DR	BY	DSN	APV	DATE	REV	CHANGE	DR	BY	DSN	APV	DATE
D	REVISION	-	-	-	TR/MJC	10/30/2012	G	TABLE UPDATES	ARC	ADW	EJA	KRG	10/17/2023
C	REVISION	-	-	-	TR/MJC	07/24/2012	F	FORMATTING	EDM	JIK	-	-	06/02/2020
B	REVISION	-	-	-	TR/MJC	11/14/2011	E	FIGURE UPDATE	-	EJA	GLW	CZH	12/09/2019

TABLE OF CONTENTS

SCOPE: THIS STANDARD SHOWS THE CONNECTIONS AND ASSEMBLY CODES USED FOR CALLING OUT 600A SPLICE AND CONNECTOR ASSEMBLIES ON ELECTRIC CONSTRUCTION ORDERS.

TABLE 1

PARTS IDENTIFICATION CHART

PART	WIRE SIZE	STOCK NUMBER	DESIGN UNITS	PART	STOCK NUMBER	DESIGN UNITS
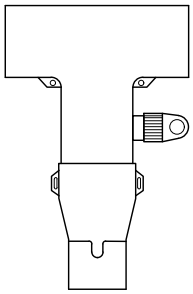 COLD SHRINK ELBOW TEE (a)	4/0, 350 AND 500	S326572	600AT	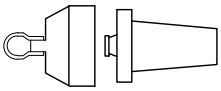 INSULATED PLUG W/TEST POINT	S544848	PLUG-F
	750 AND 1000	S326574	600ATL	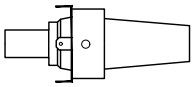 600/200A TAP PLUG	S547324	TAP-FE
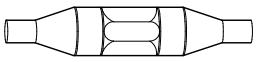 EXTENSION SPLICE	350 AL	S668434	SS-350	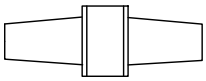 DOUBLE-ENDED CONNECTOR PLUG	S544832	PLUG-C
	750 AL	S668436	SS-750			
	750 AL COMP	S668442	SS750C	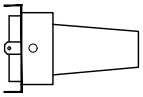 FMO 600/200A REDUCING TAP WELL	S719600	REDTAP
	750 AL-750 AL COMP	S668444	SS750B			
	1000 AL	S668438	SS1000			
	#4/0 CU	S668430	SS-4/0			
	500 CU	S668432	SS-500	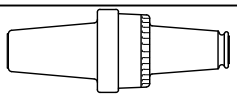 ELBOW TAP PLUG	S547328	ETP650
	1000 KCML CU ONLY	S668460	SS1KCU			
 CONDUCTOR CONNECTOR	4/0, 350 AND 500	S471314	P6ALR3	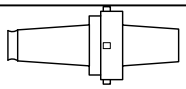 200A LOADBREAK BUSHING PLUG	S544676	BSHPLG
	750 AND 1000	S471316	P6ALR5			
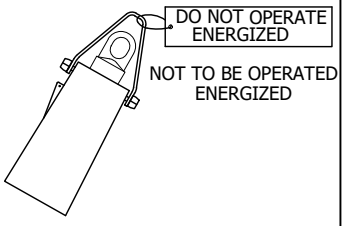 INSULATING RECEPTACLE WITH TEST POINT	--	S570608	IN-REC	 STUD	S701100	STUD
				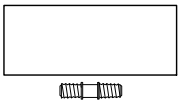 BUSHING EXTENSION AND STUD	S336204	BUSH-X

INSTALLATION: NONE

BILL OF MATERIALS: NONE

NOTES: NONE

REFERENCE:

(a) FOR INFORMATION ON COLD SHRINK ELBOW TEE, REFER TO UG4189 (FUTURE).

© 1998 - 2023 San Diego Gas & Electric Company. All rights reserved. Removal of this copyright notice without permission is not permitted under law.

REV	CHANGE	DR	BY	DSN	APV	DATE	REV	CHANGE	DR	BY	DSN	APV	DATE
D	REVISION	-	-	-	TR/MJC	10/30/2012	G	TABLE UPDATES	ARC	ADW	EJA	KRG	10/17/2023
C	REVISION	-	-	-	TR/MJC	07/24/2012	F	FORMATTING	EDM	JIK	-	-	06/02/2020
B	REVISION	-	-	-	TR/MJC	11/14/2011	E	FIGURE UPDATE	-	EJA	GLW	CZH	12/09/2019

TABLE OF CONTENTS

SCOPE: THIS STANDARD SHOWS 600A CONNECTORS AND ACCESSORIES USED TO TERMINATE 12KV, 200 AND 600A CABLES.

ATTENTION:

* ALWAYS USE THE MANUFACTURERS RECOMMENDED TORQUE SETTINGS WHEN ASSEMBLING CONNECTORS.

TABLE 1

PART IDENTIFICATION CHART

PART	MAJOR USE	SERIES	WIRE SIZE	STOCK NUMBER	DESIGN UNITS
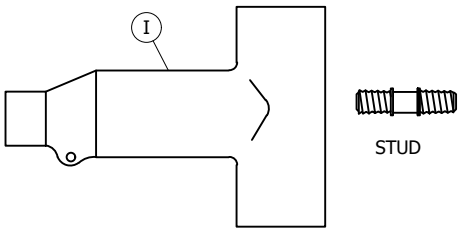 ELBOW TEE	ELBOW-TEE FOR SPLICING AND 600/200A TAPS	650	--	S326578	ELBO-T
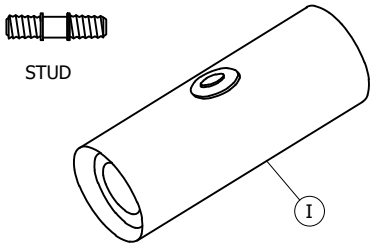 BUSHING EXTENSION	**ON SUBSURFACE SWITCH**: USED IN CENTER POSITION FOR ADDITIONAL CABLE TRAINING OR FOR THE INSTALLATION OF 200A DEADBREAK ELBOWS WHERE 600A TEES ARE NOT INSTALLED **ON PAD MOUNTED SWITCH:** USED FOR THE INSTALLATION OF 200A LOADBREAK ELBOWS OR INSULATING RECEPTACLES WHERE 600A TEES ARE NOT INSTALLED	--	--	S336204	BUSH-X
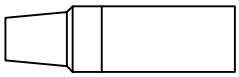 CABLE ADAPTER	TO ADAPT CABLE TO ELBOW-TEE	650	4/0 CU	S102026	ADP4/0
			2/0 AL	S103088	TBD
			350 AL	S102027	ADP350
			500 CU	S102028	ADP500
			750 COMP AL	S102051	AD750C
			750 AL	S102034	ADO750
		1000	1000 AL	S102050	AD1MIL
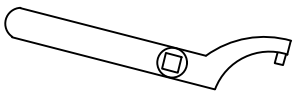 SPANNER WRENCH	TOOL USED FOR TIGHTENING ELBOW-TEE COMPONENT PARTS	--	--	S818616	--
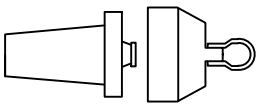 INSULATED PLUG W/ TEXT POINT	FOR DEADENDING END OF ELBOW-TEE	--	--	S544848	PLUG-F

TABLE OF CONTENTS

© 1998 - 2023 San Diego Gas & Electric Company. All rights reserved. Removal of this copyright notice without permission is not permitted under law.

REV	CHANGE	DR	BY	DSN	APV	DATE	REV	CHANGE	DR	BY	DSN	APV	DATE
C	FORMATTING	EDM	JIK	-	-	06/02/2020	F						
B	REVISION	-	-	-	TR/MJC	07/24/2012	E	FIGURE UPDATE	GLC	EJA	GLW	KRG	01/09/2023
A	REVISION	-	-	-	RSW/VCR	01/01/2000	D	TABLE UPDATE	EDM	EJA	GLW	KRG	06/29/2022

X Indicates Latest Revision | Completely Revised | New Page | Information Removed

SDG&E ELECTRIC UNDERGROUND CONSTRUCTION STANDARDS

12KV, 600/200A SPLICES, CONNECTORS AND ACCESSORIES

UG4182.1

TABLE 1 (CONT'D)

PART IDENTIFICATION CHART					
PART	**MAJOR USE**	**SERIES**	**WIRE SIZE**	**STOCK NUMBER**	**DESIGN UNITS**
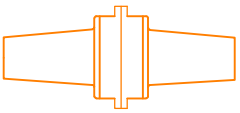 DOUBLE-ENDED CONNECTOR PLUG	USED FOR MULTIPLE ELBOW-TEE SPLICE	--	--	S544832	PLUG-C
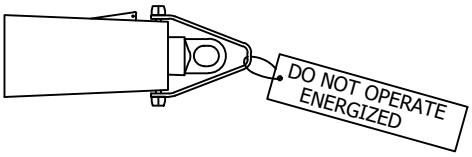 INSULATING RECEPTACLE WITH TEST POINT (NOT TO BE OPERATED ENERGIZED)	INSULATES, SHIELDS AND WATERSEALS OPEN 600A BUSHINGS	--	--	S570608	IN-REC
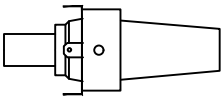 600/200A TAP PLUG	FEMALE END USE TO ATTACH TO ELBOW-TEE OR BUSHING EXTENSION AND CONNECT 200A DEADBREAK ELBOW	--	--	S547324	TAP-FE
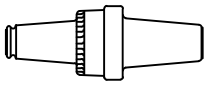 ELBOW TAP PLUG		--	--	S547328	ETP650
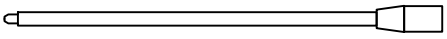 1/2" DRIVE X 3/8" HEX WRENCH		--	--	S818726	--
 STUD		--	--	S701100	STUD

TABLE OF CONTENTS

© 1998 - 2023 San Diego Gas & Electric Company. All rights reserved. Removal of this copyright notice without permission is not permitted under law.

REV	CHANGE	DR	BY	DSN	APV	DATE	REV	CHANGE	DR	BY	DSN	APV	DATE
C	FORMATTING	EDM	JIK	-	-	06/02/2020	F						
B	REVISION	-	-	-	TR/MJC	07/24/2012	E	FIGURE UPDATE	GLC	EJA	GLW	KRG	01/09/2023
A	REVISION	-	-	-	RSW/VCR	01/01/2000	D	TABLE UPDATE	EDM	EJA	GLW	KRG	06/29/2022

TABLE 2

SPADE COMPRESSION CONNECTOR							
FIGURE	CONNECTOR			DIE INDEX	TOOL AND DIE		
	WIRE SIZE	STOCK NO.	DESIGN UNITS		Y35	Y45	Y46
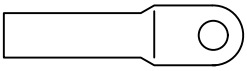	4/0	S258694 (X)	--	299 COOPER/RTE	U31ART	U31ART W/6515 ADAPTER	U31ART W/PU-ADP ADAPTER
				298 ELASTIMOLD	U28ART	U28ART W/6515 ADAPTER	U28ART W/PU-ADP ADAPTER
	2/0 AL	S471318	TBD	--	--	--	--
	350 AL	S258698	SPD350	299	U31ART	U31ART W/6515 ADAPTER	U31ART W/PU-ADP ADAPTER
	500 CU	S258700	SPD500	300	U34ART	U34ART W/6515 ADAPTER	U34ART W/PU-ADP ADAPTER
	750 COMP AL	S258708	SP750C				
	750 AL	S258704	SPD750	301	--	S39ART	P39ART
	1000 AL	S258702	SP1000	302	--	S44ART	P44ART

INSTALLATION: NONE

BILL OF MATERIALS: NONE

NOTES:

(I) SUPPLIED WITH A STUD. IF STUD IS NOT REQUIRED IN ASSEMBLY, SUCH AS ON SWITCH TERMINATIONS, DO NOT THROW AWAY. RETURN TO STOREROOM.

(X) THIS ITEM IS EXEMPT.

REFERENCE: NONE

TABLE OF CONTENTS

© 1998 - 2023 San Diego Gas & Electric Company. All rights reserved. Removal of this copyright notice without permission is not permitted under law.

REV	CHANGE	DR	BY	DSN	APV	DATE	REV	CHANGE	DR	BY	DSN	APV	DATE
C	FORMATTING	EDM	JIK	-	-	06/02/2020	F						
B	REVISION	-	-	-	TR/MJC	07/24/2012	E	FIGURE UPDATE	GLC	EJA	GLW	KRG	01/09/2023
A	REVISION	-	-	-	RSW/VCR	01/01/2000	D	TABLE UPDATE	EDM	EJA	GLW	KRG	06/29/2022

SCOPE: THIS STANDARD SHOWS THE VAULT STRETCHER. THIS IS A 600-AMP DEAD BREAK CONNECTION USED ON FEEDER CABLE. THE VAULT STRETCHER IS A SPACE SAVING CONNECTION FOR NEW AND EXISTING CONSTRUCTION WHEN SPACE IS LIMITED.

ATTENTION:

* THREE TEE COMBINATIONS SHOWN IN THIS STANDARD SHALL ONLY BE USED TO FEED A SWITCH TIE POSITION..

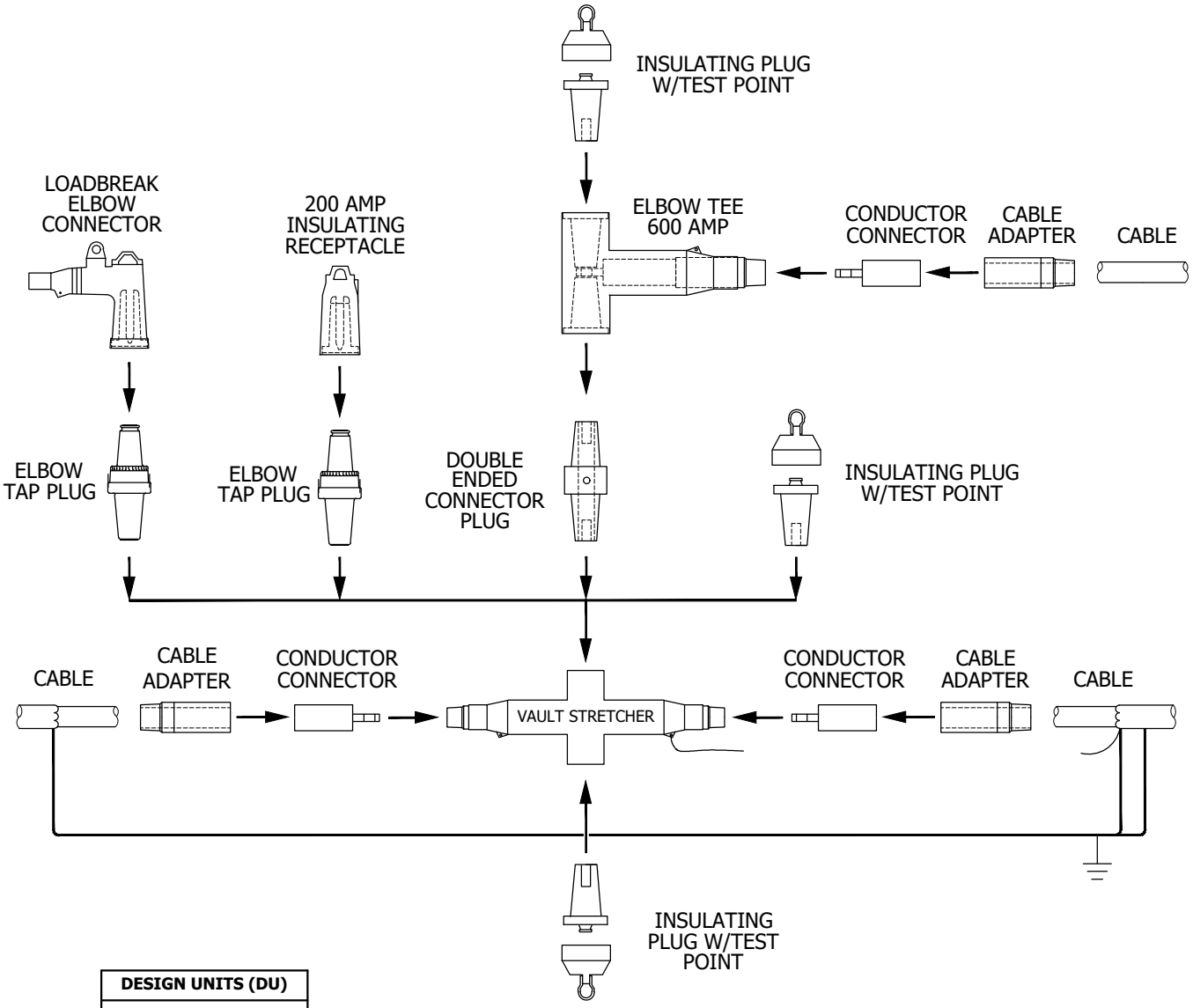

DESIGN UNITS (DU)
VS

FIGURE 1
VAULT STRETCHER ASSEMBLY (A)(I)

© 1998 - 2023 San Diego Gas & Electric Company. All rights reserved. Removal of this copyright notice without permission is not permitted under law.

REV	CHANGE	DR	BY	DSN	APV	DATE	REV	CHANGE	DR	BY	DSN	APV	DATE
C	FORMATTING	EDM	JIK	-	-	06/02/2020	F						
B	REVISION	-	-	-	TR/MJC	7/24/2012	E						
A	REVISION	-	-	-	TR/MJC	11/8/2011	D	UPDATED PART	ARC	FRC	JAS	KRG	10/21/2022

TABLE OF CONTENTS

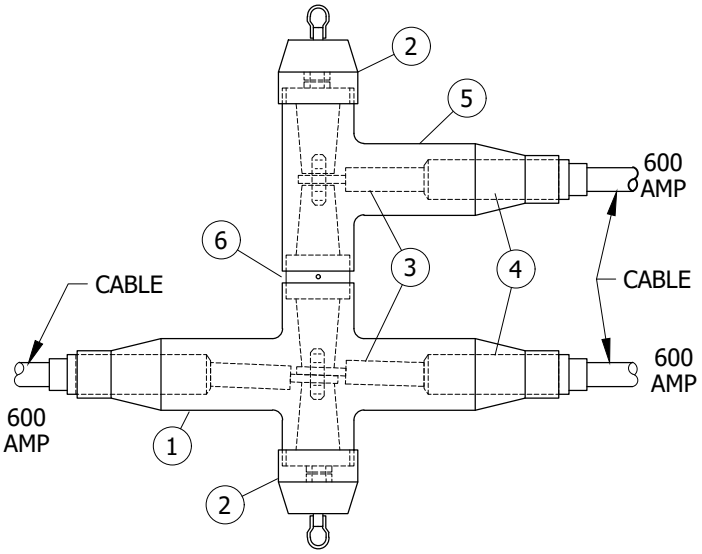

FIGURE 2
VAULT AND MANHOLE INSTALLATION ONLY
VAULT & SUBSURFACE CONNECTIONS
600 AMP DEADBREAK

UG MAP SYMBOL

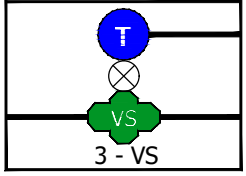

TABLE 1

TYPICAL COMBINATIONS			
CABLE SIZE	350 AL	750 AL	1000 AL
MACRO UNITS	VS777	VS888	VS999

BILL OF MATERIALS (FIGURE 2):

ITEM	DESCRIPTION	WIRE SIZE	QUANTITY	STOCK NUMBER	DESIGN UNITS
1	VAULT STRETCHER	-	1	S790456	-
2	INSULATED PLUG W/ TEST POINT	-	2	S544848	-
3	CONDUCTOR CONNECTOR	(350 AL)	3	S258698	-
		(750 AL)		S258704	-
		(750C AL)		S258708	-
		(1000 AL)		S258702	-
4	CABLE ADAPTER	(350 AL)	3	S102027	-
		(750 AL)		S102034	-
		(750C AL)		S102051	-
		(1000 AL/CU)		S102050	-
5	COLD SHRINK ELBOW TEE	4/0, 350 AND 500	1	S326572	600AT
		750 AND 1000		S326574	600ATL
6	DOUBLE ENDED CONNECTOR PLUG	-	1	S544832	-

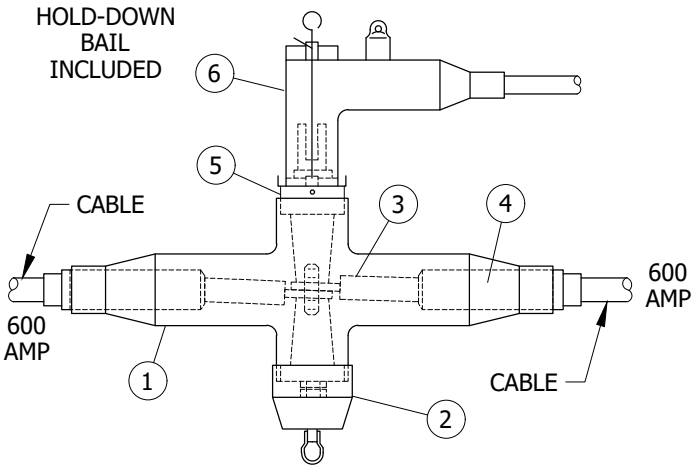

FIGURE 3
VAULT AND MANHOLE INSTALLATION ONLY
VAULT & SUBSURFACE CONNECTIONS
600 AMP DEADBREAK

UG MAP SYMBOL

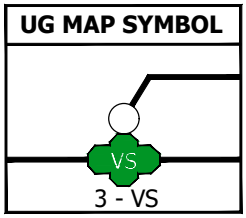

TABLE 2

TYPICAL COMBINATIONS			
CABLE SIZE	350 AL	750 AL	1000 AL
MACRO UNITS	VS773	VS883	VS993
	VS775	VS885	VS995

BILL OF MATERIALS (FIGURE 3):

ITEM	DESCRIPTION	WIRE SIZE	QUANTITY	STOCK NUMBER	DESIGN UNITS
1	VAULT STRETCHER	-	1	S790456	-
2	INSULATED PLUG W/ TEST POINT	-	1	S544848	-
3	CONDUCTOR CONNECTOR	(350 AL)	2	S258698	-
		(750 AL)		S258704	-
		(750C AL)		S258708	-
		(1000 AL)		S258702	-
4	CABLE ADAPTER	(350 AL)	2	S102027	-
		(750 AL)		S102034	-
		(750C AL)		S102051	-
		(1000 AL/CU)		S102050	-
5	600/200 AMP TAP PLUG	-	1	S547324	-
6	DEADBREAK ELBOW CONNECTOR	(#2 AL)	1	S443842	-
		(2/0 AL)		S443844	-

TABLE OF CONTENTS

© 1998 - 2023 San Diego Gas & Electric Company. All rights reserved. Removal of this copyright notice without permission is not permitted under law.

REV	CHANGE	DR	BY	DSN	APV	DATE	REV	CHANGE	DR	BY	DSN	APV	DATE
C	FORMATTING	EDM	JIK	-	-	06/02/2020	F						
B	REVISION	-	-	-	TR/MJC	7/24/2012	E						
A	REVISION	-	-	-	TR/MJC	11/8/2011	D	UPDATED PART	ARC	FRC	JAS	KRG	10/21/2022

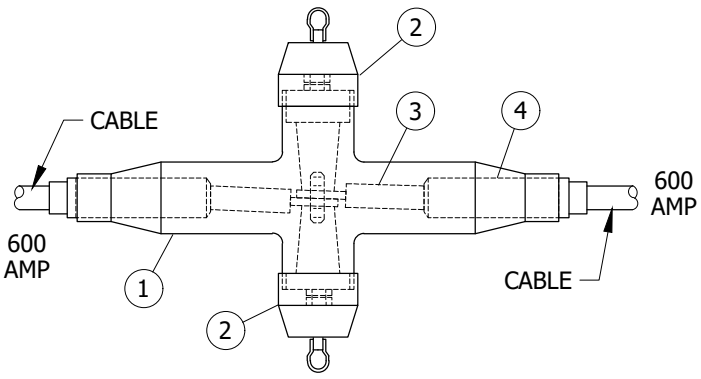

FIGURE 4
VAULT AND MANHOLE INSTALLATION ONLY
VAULT & SUBSURFACE CONNECTIONS
600 AMP DEADBREAK

UG MAP SYMBOL

VS
3 - VS

TABLE 3

TYPICAL COMBINATIONS			
CABLE SIZE	350 AL	750 AL	1000 AL
MACRO UNITS	VS77	VS88	VS99

BILL OF MATERIALS (FIGURE 4):

ITEM	DESCRIPTION	WIRE SIZE	QUANTITY	STOCK NUMBER	DESIGN UNITS
1	VAULT STRETCHER	-	1	S790456	-
2	INSULATED PLUG W/ TEST POINT	-	2	S544848	-
3	CONDUCTOR CONNECTOR	(350 AL)	2	S258698	-
		(750 AL)		S258704	-
		(750C AL)		S258708	-
		(1000 AL/CU)		S258702	-
4	CABLE ADAPTER	(350 AL)	2	S102027	-
		(750 AL)		S102034	-
		(750C AL)		S102051	-
		(1000 AL/CU)		S102050	-

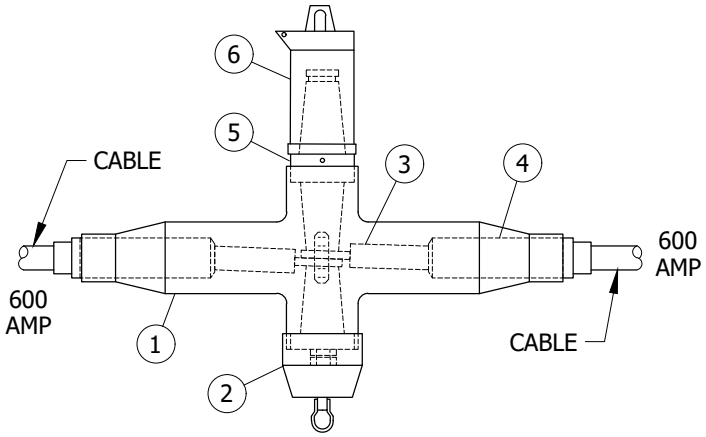

FIGURE 5
VAULT AND MANHOLE INSTALLATION ONLY
VAULT & SUBSURFACE CONNECTIONS
600 AMP DEADBREAK

UG MAP SYMBOL

VS
3 - VS

TABLE 4

TYPICAL COMBINATIONS			
CABLE SIZE	350 AL	750 AL	1000 AL
MACRO UNITS	VS770	VS880	VS990

BILL OF MATERIALS (FIGURE 5):

ITEM	DESCRIPTION	WIRE SIZE	QUANTITY	STOCK NUMBER	DESIGN UNITS
1	VAULT STRETCHER	-	1	S790456	-
2	INSULATED PLUG W/ TEST POINT	-	1	S544848	-
3	CONDUCTOR CONNECTOR	(350 AL)	2	S258698	-
		(750 AL)		S258704	-
		(750C AL)		S258708	-
		(1000 AL/CU)		S258702	-
4	CABLE ADAPTER	(350 AL)	2	S102027	-
		(750 AL)		S102034	-
		(750C AL)		S102051	-
		(1000 AL/CU)		S102050	-
5	ELBOW TAP PLUG	-	1	S547328	-
6	200 AMP INSULATING RECEPTACLE	-	1	S204304	-

TABLE OF CONTENTS

© 1998 - 2023 San Diego Gas & Electric Company. All rights reserved. Removal of this copyright notice without permission is not permitted under law.

REV	CHANGE	DR	BY	DSN	APV	DATE	REV	CHANGE	DR	BY	DSN	APV	DATE
C	FORMATTING	EDM	JIK	-	-	06/02/2020	F						
B	REVISION	-	-	-	TR/MJC	7/24/2012	E						
A	REVISION	-	-	-	TR/MJC	11/8/2011	D	UPDATED PART	ARC	FRC	JAS	KRG	10/21/2022

TABLE 5

CODES USED IN TABLES 1-4	
CABLE	
CODE	**TYPE**
3	#2 AL
5	2/0 AL
7	350 AL
8	750 AL
9	1000 AL
COMPONENT	
0	200 AMP INSULATING RECEPTACLE

INSTALLATION:

(A) FOLLOW MANUFACTURERS MAKE UP INSTRUCTIONS FOR INSTALLATION. THE LONGER LUG SUPPLIED WITH THE VAULT STRETCHERS IS SPECIFICALLY DESIGNED FOR THIS EQUIPMENT ONLY AND SHALL NOT BE USED FOR ANY OTHER APPLICATION.

BILL OF MATERIALS: INDIVIDUALLY INCLUDED WITH FIGURES

NOTES:

(I) **MAJOR USE:**

a. NEW & RE-CABLING IN VAULTS AND MANHOLES WITH MULTIPLE CIRCUITS WHEN FEEDER CABLE REQUIRES CONNECTIONS.

b. LOAD TAP INSTALLATIONS WITH LIMITED SPACE, CAN BE INSTALLED WHERE A FUTURE DISTRIBUTION TAP MAY BE REQUIRED.

REFERENCE: NONE

© 1998 - 2023 San Diego Gas & Electric Company. All rights reserved. Removal of this copyright notice without permission is not permitted under law.

REV	CHANGE	DR	BY	DSN	APV	DATE	REV	CHANGE	DR	BY	DSN	APV	DATE
C	FORMATTING	EDM	JIK	-	-	06/02/2020	F						
B	REVISION	-	-	-	TR/MJC	7/24/2012	E						
A	REVISION	-	-	-	TR/MJC	11/8/2011	D	UPDATED PART	ARC	FRC	JAS	KRG	10/21/2022

SCOPE: THIS STANDARD SHOWS 600 AMP EXTENSION SPLICES FOR USE ON FEEDER CABLES.

CAUTION:

* THE SILICONE GREASE PROVIDED WITH THESE SPLICES IS INTENDED FOR USE WITH SPLICES ONLY AND MUST NOT BE USED WITH ANY OTHER SEPARABLE CONNECTOR PRODUCTS SUCH AS LOADBREAK ELBOWS, ETC.

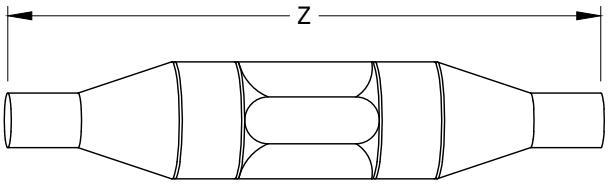

FIGURE 1

UG MAP SYMBOL

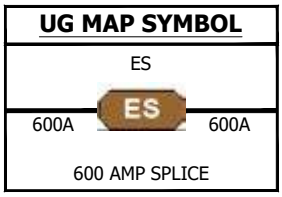

TABLE 1

SPLICE LENGTH	
CONDUCTOR SIZE	Z (IN) SPLICE LENGTH
350	14
750	15
1000	15 3/4

TABLE 2

EXTENSION SPLICE			
CONDUCTOR	INSTALLING DIE	STOCK NUMBER	DESIGN UNITS
350 KCMIL AL	U31ART/299	S668434	SS-350
350 AL - 4/0 CU		S668500	SS-3540
750 KCMIL AL	P39ART/301	S668436	SS-750
750 KCMIL AL COMP (Ia)		S668442	SS750C
750 AL-750-AL COMP		S668444	SS750B
1000 KCMIL AL (Ia)	P40ART/474	S668438	SS1000
#4/0 CU	U28RT/15	S668430	SS-4/0
500 KCMIL CU	U34RT/20	S668432	SS-500
750 KCMIL CU COMP	U36RT	S668464	SS75CU
750 CU COMP-1000 CU	U36RT & 44RT	S668466	SS71CU
750 CU COMP-1000 AL	P44ART/302	S668470	SS71CA
1000 KCMIL CU ONLY	P44RT/27	S668460	SS1KCU

TABLE OF CONTENTS

INSTALLATION:

A. FOR EXTENSION SPLICE INSTALLATION PROCEDURE, CONSULT INDIVIDUAL MANUFACTURER'S CURRENT INSTRUCTIONS.

B. DO NOT INSTALL WHERE A FUTURE DISTRIBUTION TAP IS LIKELY TO BE REQUIRED.

BILL OF MATERIALS: NONE

NOTES:

I. SPLICE IS COMPLETELY SEALED AND MAY BE INSTALLED IN SUBSURFACE EQUIPMENT.

(a) THIS SPLICE CAN CONNECT ALUMINUM TO COPPER CONDUCTORS.

II. MAJOR USE:

a. RELOCATION OF EQUIPMENT WITHIN A SUBSTRUCTURE.

b. RELOCATION OF SWITCH FROM MANHOLE TO PAD-MOUNT.

c. REPLACEMENT OF EXOTHERMIC (CADWELD) SPLICES.

d. SPLICING OF SUBSTATION GETAWAY AND EXPRESS RUNS FOR LOCATIONS WITHIN A SUBSTRUCTURE WHERE LOCAL DISTRIBUTION TAP WILL NOT BE REQUIRED.

REFERENCE: NONE

© 1998 - 2020 San Diego Gas & Electric Company. All rights reserved. Removal of this copyright notice without permission is not permitted under law.

REV	CHANGE	DR	BY	DSN	APV	DATE	REV	CHANGE	DR	BY	DSN	APV	DATE
C	FORMATTING	EDM	JIK	--	--	06/02/2020	F						
B	EDITORIAL CHANGES	--	JS	JS	CZH	06/01/2018	E						
A	TABLE UPDATE	--	JS	TR	MDJ	10/31/2016	D						

SCOPE: THIS STANDARD SHOWS THE CONNECTIONS AND ASSEMBLY CODES USED FOR CALLING OUT 600 AMP TO 200 AMP JUNCTION ASSEMBLIES.

ATTENTION:

* SURFACE CONNECTOR APPLICATION CHART 600 AMP TO 200 AMP DEAD FRONT TERMINATOR.

** THIS CHART SHOWS HOW 600A AND 200A CONNECTORS ARE ASSEMBLED TO FORM SOME OF THE COMBINATIONS SHOWN ON SHEET 2.

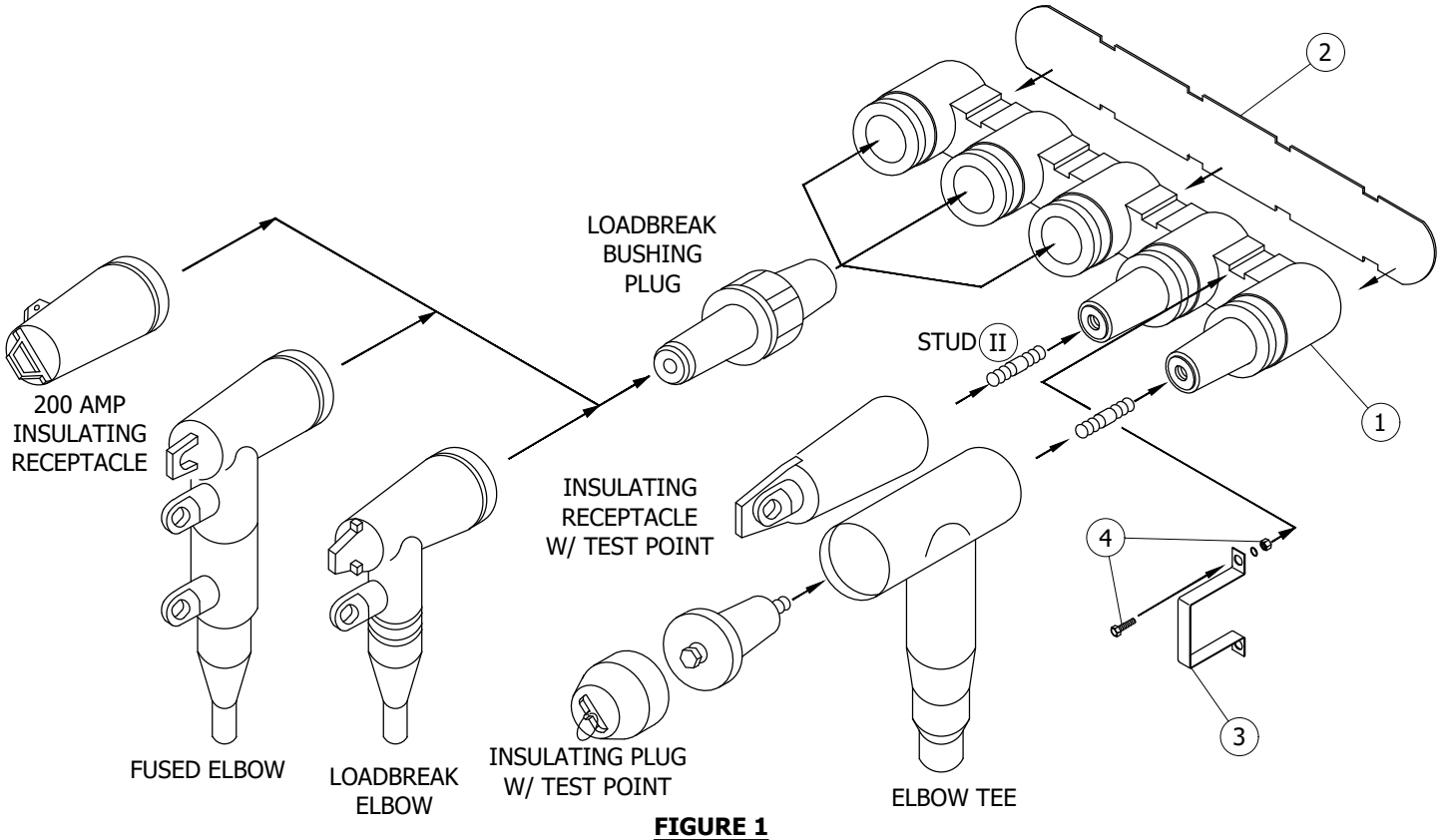

FIGURE 1
600 AMP TO 200 AMP JUNCTION
ASSEMBLY CHART

BILL OF MATERIALS (FIGURE 1):

ITEM	DESCRIPTION	QUANTITY	STANDARD PAGE	STOCK NUMBER	DESIGN UNITS
1	JUNCTION	1	-	S439860	JUN6/2
2	SPACER PLATE	1	-	-	-
3	MOUNTING STRAPS	4	-	-	-
4	FASTENERS	8	-	-	-

TABLE 1

CODES USED IN TABLES ON SHEETS 2 & 3			
CODE	**TYPE**	**CODE**	**TYPE**
CABLE		**COMPONENTS**	
3	#2 AL	B	#2 AL FUSED ELBOW
5	2/0 AL	C	2/0 AL FUSED ELBOW
7	350 AL	H	600A INSULATING RECEPTACLE
8	750C AL	O	200A INSULATING RECEPTACLE
9	1000 AL	-	-

© 1998 - 2022 San Diego Gas & Electric Company. All rights reserved. Removal of this copyright notice without permission is not permitted under law.

REV	CHANGE	DR	BY	DSN	APV	DATE	REV	CHANGE	DR	BY	DSN	APV	DATE
C	FORMATTING	EDM	JIK	-	-	06/02/2020	F						
B	REVISION	-	-	-	TR/MJC	11/8/2011	E						
A	REVISION	-	-	-	RSW/CAK	1/1/2000	D	UPDATED BILL OF MATERIALS	ARC	EJA	MBL	KRG	09/07/2022

TABLE OF CONTENTS

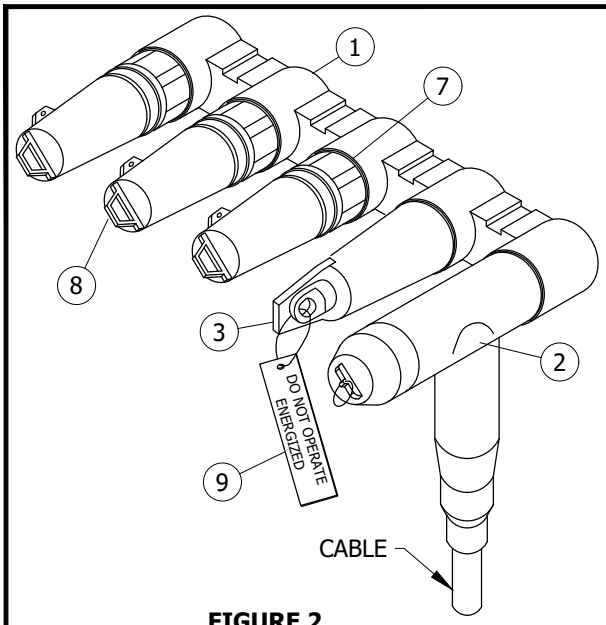

FIGURE 2
600 AMP JUNCTION ASSEMBLY

UG MAP SYMBOL

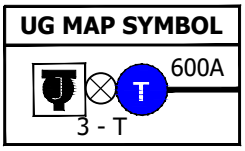

TABLE 2

TYPICAL COMBINATIONS			
CODE	7HOOO	8HOOO	9HOOO
CABLE SIZE	350 AL	750C AL	1000 AL
MACRO UNITS	J7H000	J8H000	J9H000

BILL OF MATERIALS (FIGURE 2):

ITEM	DESCRIPTION	WIRE SIZE	QUANTITY	STANDARD PAGE	STOCK NUMBER	DESIGN UNITS
1	JUNCTION, 600A - 200A	-	1	-	S439860	JUN6/2
2	COLD SHRINK ELBOW TEE	4/0, 350 AND 500	1	-	S326572	600AT
		750 AND 1000		-	S326574	600ATL
3	RECEPTACLE, INSULATING, 600A	-	1	-	S570608	-
4	CONNECTOR, CONDUCTOR (III)	350 AL	1	-	S258698	-
		750C AL			S258708	-
		1000 AL			S258702	-
5	ADAPTER, CABLE (III)	350 AL	1	-	S102027	-
		750C AL			S102051	-
		1000 AL			S102050	-
6	STUD (III)	-	1	-	S701100	-
7	PLUG, BUSHING, LOADBREAK	-	3	-	S544676	-
8	RECEPTACLE, INSULATING, 200A	-	3	-	S204304	-
9	TAG, "DO NOT OPERATE ENERGIZED"	-	1	-	S647966	-

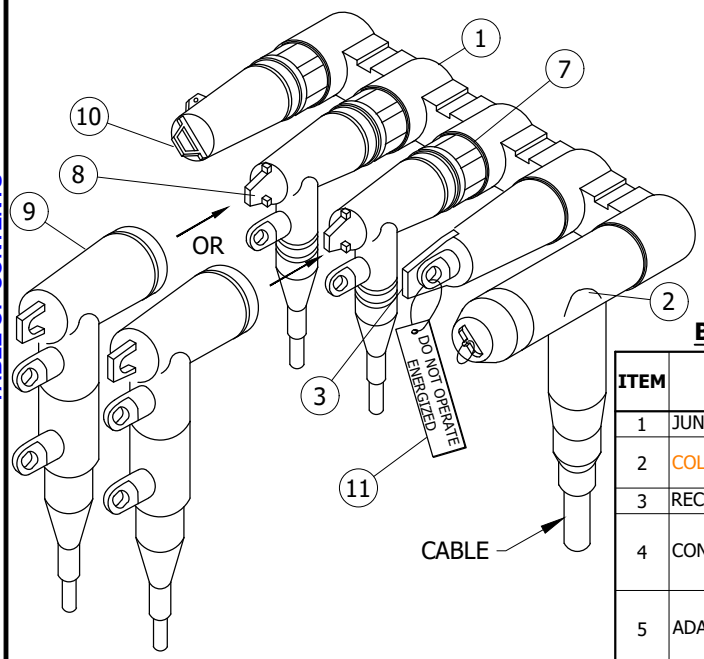

FIGURE 3
600 AMP TO 200 AMP JUNCTION ASSEMBLY

UG MAP SYMBOL

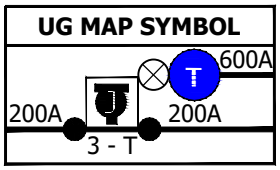

TABLE 3

ADDITIONAL MACRO UNITS		
J7H330	J8H330	J9H330
J7H550	J8H550	J9H550
J7HBB0	J8HBB0	J9HBB0
J7HCC0	J8HCC0	J9HCC0

TABLE 4

TYPICAL COMBINATIONS			
CODE	7H35O	8H35O	9H35O
CABLE SIZE	350 AL	750C AL	1000 AL
MACRO UNITS	J7H350	J8H350	J9H350

BILL OF MATERIALS (FIGURE 3):

ITEM	DESCRIPTION	WIRE SIZE	QUANTITY	STANDARD PAGE	STOCK NUMBER	DESIGN UNITS
1	JUNCTION, 600A - 200A	-	1	-	S439860	JUN6/2
2	COLD SHRINK ELBOW TEE	4/0, 350 AND 500	1	-	S326572	600AT
		750 AND 1000		-	S326574	600ATL
3	RECEPTACLE, INSULATING, 600A	-	1	-	S570608	-
4	CONNECTOR, CONDUCTOR (III)	350 AL	1	-	S258698	-
		750C AL			S258708	-
		1000 AL			S258702	-
5	ADAPTER, CABLE (III)	350 AL	1	-	S102027	-
		750C AL			S102051	-
		1000 AL			S102050	-
6	STUD (III)	-	1	-	S701100	-
7	PLUG, BUSHING, LOADBREAK	-	3	-	S544676	-
8	CONNECTOR, ELBOW, LOADBREAK	#2 AL	2	-	S443838	-
		2/0 AL			S443840	-
9	CONNECTOR, ELBOW, FUSED	#2 AL	2	-	S443850	-
		2/0 AL			S443882	-
10	RECEPTACLE, INSULATING, 200A	-	3	-	S204304	-
11	TAG, "DO NOT OPERATE ENERGIZED"	-	1	-	S647966	-

TABLE OF CONTENTS

© 1998 - 2022 San Diego Gas & Electric Company. All rights reserved. Removal of this copyright notice without permission is not permitted under law.

REV	CHANGE	DR	BY	DSN	APV	DATE	REV	CHANGE	DR	BY	DSN	APV	DATE
C	FORMATTING	EDM	JIK	-	-	06/02/2020	F						
B	REVISION	-	-	-	TR/MJC	11/8/2011	E						
A	REVISION	-	-	-	RSW/CAK	1/1/2000	D	UPDATED BILL OF MATERIALS	ARC	EJA	MBL	KRG	09/07/2022

X Indicates Latest Revision | Completely Revised | New Page | Information Removed

SDG&E ELECTRIC UNDERGROUND CONSTRUCTION STANDARDS

600 AMP TO 200 AMP JUNCTION ASSEMBLY CHART

UG4186.2

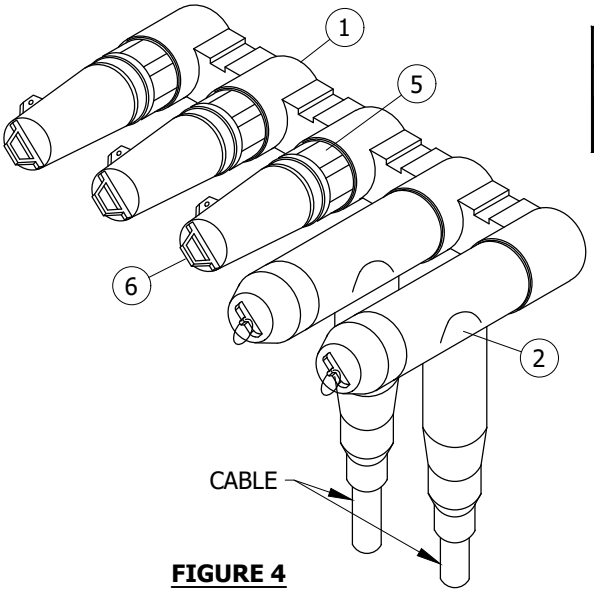

FIGURE 4
600 AMP - 200 AMP JUNCTION ASSEMBLY

UG MAP SYMBOL

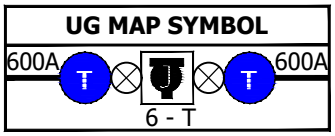

TABLE 5

ADDITIONAL MACRO UNITS		
J78000	J79000	J89000

TABLE 6

TYPICAL COMBINATIONS			
CODE	77OOO	88OOO	99OOO
CABLE SIZE	350 AL	750C AL	1000 AL
MACRO UNITS	J77000	J88000	J99000

BILL OF MATERIALS (FIGURE 4):

ITEM	DESCRIPTION	WIRE SIZE	QUANTITY	STANDARD PAGE	STOCK NUMBER	DESIGN UNITS
1	JUNCTION, 600A - 200A	-	1	-	S439860	JUN6/2
2	COLD SHRINK ELBOW TEE	4/0, 350 AND 500	2	-	S326572	600AT
		750 AND 1000		-	S326574	600ATL
3	CONNECTOR, CONDUCTOR (III)	350 AL	2	-	S258698	-
		750C AL			S258708	-
		1000 AL			S258702	-
4	ADAPTER, CABLE (III)	350 AL	2	-	S102027	-
		750C AL			S102051	-
		1000 AL			S102050	-
5	PLUG, BUSHING, LOADBREAK	-	3	-	S544676	-
6	RECEPTACLE, INSULATING, 200A	-	3	-	S204304	-

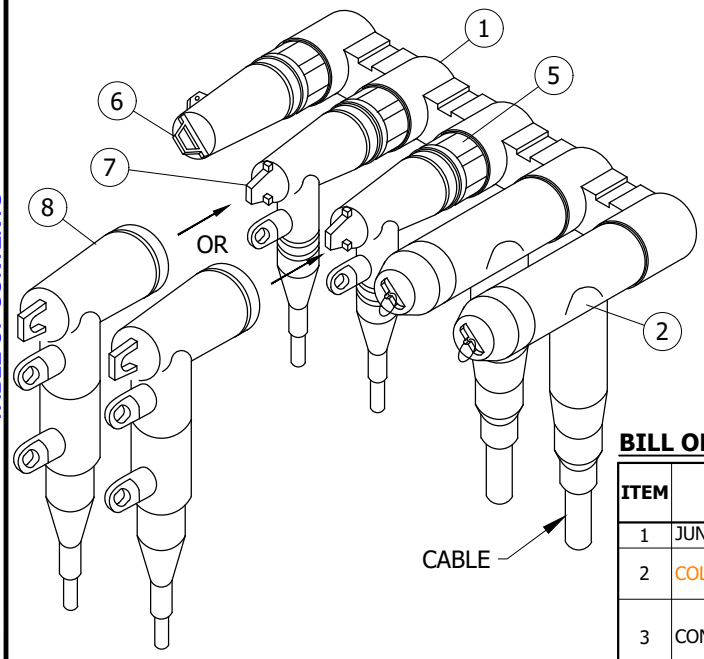

FIGURE 5
600 AMP - 200 AMP JUNCTION ASSEMBLY

UG MAP SYMBOL

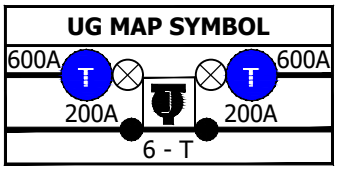

TABLE 7

ADDITIONAL MACRO UNITS		
J78350	J79350	J89350
J77330	J88330	J99330
J77550	J88550	J99550
J77BB0	J88BB0	J99BB0
J77CC0	J88CC0	J99CC0
J77BBB	J88BBB	J99BBB

TABLE 8

TYPICAL COMBINATIONS			
CODE	7735O	8835O	9935O
CABLE SIZE	350 AL	750C AL	1000 AL
MACRO UNITS	J77350	J88350	J99350

BILL OF MATERIALS (FIGURE 5):

ITEM	DESCRIPTION	WIRE SIZE	QUANTITY	STANDARD PAGE	STOCK NUMBER	DESIGN UNITS
1	JUNCTION, 600A - 200A	-	1	-	S439860	JUN6/2
2	COLD SHRINK ELBOW TEE	4/0, 350 AND 500	2	-	S326572	600AT
		750 AND 1000		-	S326574	600ATL
3	CONNECTOR, CONDUCTOR (III)	350 AL	2	-	S258698	-
		750C AL			S258708	-
		1000 AL			S258702	-
4	ADAPTER, CABLE (III)	350 AL	2	-	S102027	-
		750C AL			S102051	-
		1000 AL			S102050	-
5	PLUG, BUSHING, LOADBREAK	-	3	-	S544676	-
6	RECEPTACLE, INSULATING, 200A	-	1	-	S204304	-
7	CONNECTOR, ELBOW, LOADBREAK	#2 AL	2	-	S443838	-
		2/0 AL			S443840	-
8	CONNECTOR, ELBOW, FUSED	#2 AL	2	-	S443850	-
		2/0 AL			S443882	-

© 1998 - 2022 San Diego Gas & Electric Company. All rights reserved. Removal of this copyright notice without permission is not permitted under law.

REV	CHANGE	DR	BY	DSN	APV	DATE	REV	CHANGE	DR	BY	DSN	APV	DATE
C	FORMATTING	EDM	JIK	-	-	06/02/2020	F						
B	REVISION	-	-	-	TR/MJC	11/8/2011	E						
A	REVISION	-	-	-	RSW/CAK	1/1/2000	D	UPDATED BILL OF MATERIALS	ARC	EJA	MBL	KRG	09/07/2022

X Indicates Latest Revision | Completely Revised | New Page | Information Removed

SDG&E ELECTRIC UNDERGROUND CONSTRUCTION STANDARDS

SHEET 3 OF 4

600 AMP TO 200 AMP JUNCTION ASSEMBLY CHART

UG4186.3

TABLE OF CONTENTS

INSTALLATION: NONE

BILL OF MATERIALS: INDIVIDUALLY INCLUDED WITH FIGURES

NOTES:

I. JUNCTION SHIPPED WITH SPACER PLATE, MOUNTING STRAPS AND FASTENERS.

(II) STUD NOT SUPPLIED WITH JUNCTION.

(III) ITEM NOT SHOWN IN FIGURE.

REFERENCE: NONE

TABLE OF CONTENTS

© 1998 - 2022 San Diego Gas & Electric Company. All rights reserved. Removal of this copyright notice without permission is not permitted under law.

REV	CHANGE	DR	BY	DSN	APV	DATE	REV	CHANGE	DR	BY	DSN	APV	DATE
C	FORMATTING	EDM	JIK	-	-	06/02/2020	F						
B	REVISION	-	-	-	TR/MJC	11/8/2011	E						
A	REVISION	-	-	-	RSW/CAK	1/1/2000	D	UPDATED BILL OF MATERIALS	ARC	EJA	MBL	KRG	09/07/2022

X Indicates Latest Revision | Completely Revised | New Page | Information Removed

SDG&E ELECTRIC UNDERGROUND CONSTRUCTION STANDARDS

SHEET 4 OF 4

600 AMP TO 200 AMP JUNCTION ASSEMBLY CHART

UG4186.4

SCOPE: THIS STANDARD SHOWS THE CAM LINK. OPERABLE DEADBREAK CONNECTOR SYSTEM.

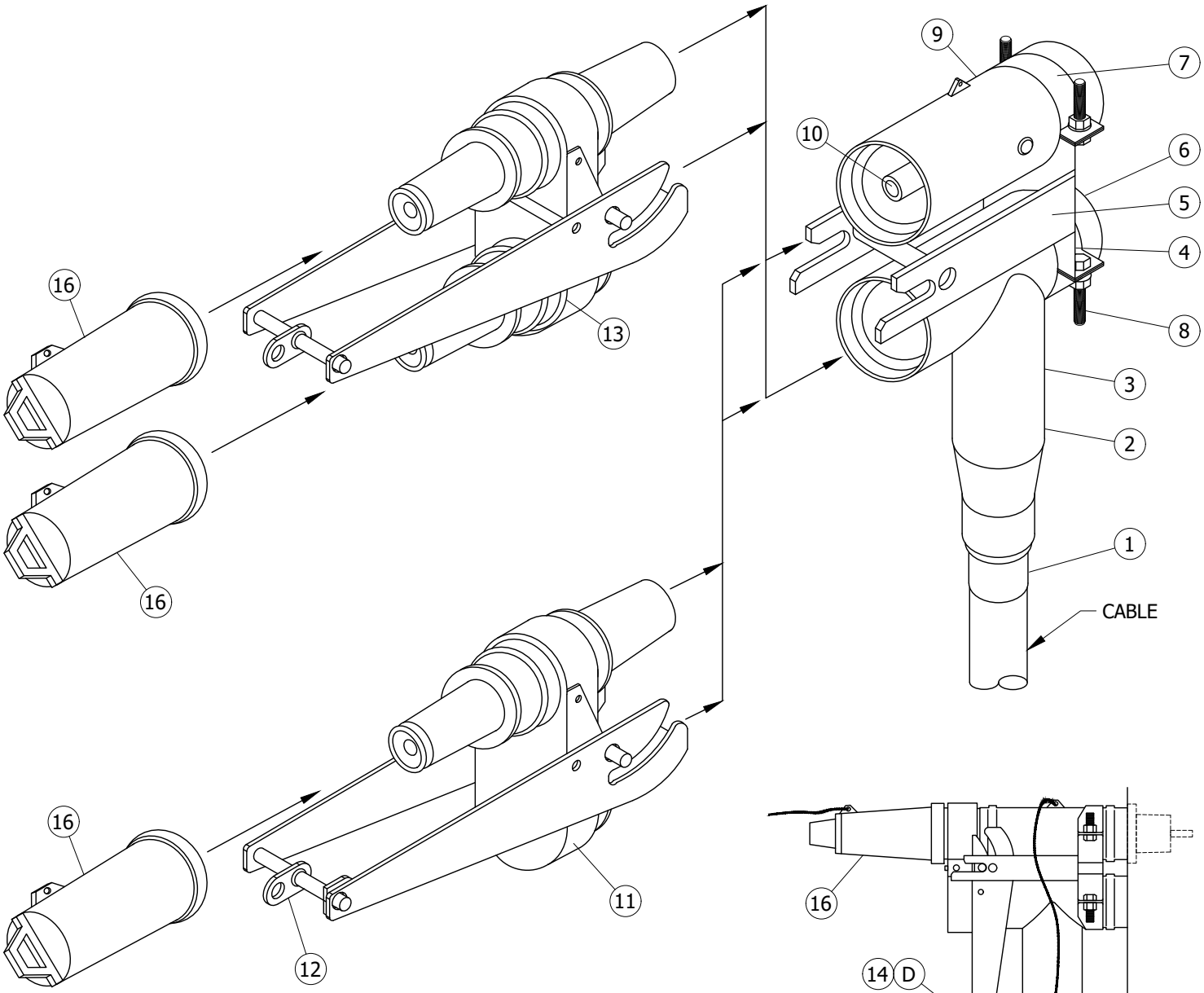

FIGURE 1

FIGURE 2

TABLE OF CONTENTS

© 1998 - 2020 San Diego Gas & Electric Company. All rights reserved. Removal of this copyright notice without permission is not permitted under law.

REV	CHANGE	DR	BY	DSN	APV	DATE	REV	CHANGE	DR	BY	DSN	APV	DATE
C							F						
B	FORMATTING	EDM	JIK	-	-	06/02/2020	E						
A	REVISION	-	-	-	RJW/VCR	11/30/2000	D						

X Indicates Latest Revision | Completely Revised | New Page | Information Removed

SDG&E ELECTRIC UNDERGROUND CONSTRUCTION STANDARDS

SHEET 1 OF 2

CAM LINK OPERABLE 600 AMP CONNECTOR

UG4187.1

INSTALLATION:

A. THE CAM LINK IS TO BE INSTALLED ON THE NON-SWITCHED SIDE OF THE PME-3 SCADA SWITCH.

B. THE CAM LINK SHALL ALSO BE INSTALLED ON ALL SIX POSITIONS OF THE PAD-MOUNTED SERVICE RESTORER.

C. FOLLOW THE MANUFACTURERS INSTALLATION INSTRUCTIONS.

(D) SECURE THE HOTSTICK EYE TO THE 600 AMP ELBOW TEE WITH LARGE CABLE TIE STRAP.

(E) ATTACH A "DO NOT OPERATE ENERGIZED" TAG TO THE HOT STICK EYE.

BILL OF MATERIALS:

ITEM	DESCRIPTION	QUANTITY	STANDARD PAGE	STOCK NUMBER	DESIGN UNITS
1	ADAPTER, CABLE	1	-	COMPLETE KIT S270240	C-LINK
2	TEE, ELBOW	1	-		
3	CONNECTOR, CONDUCTOR (V)	1	-		
4	CLAMP, ELBOW	1	-		
5	BRACKET, ALIGNMENT	1	-		
6	PLUG, STAND OFF (V)	1	-		
7	CLAMP, BUSHING EXTENSION	1	-		
8	HEX BOLT, NUT AND WASHER	4	-		
9	EXTENSION, BUSHING	1	-		
10	CONTACT, RETAINER	1	-		
11	LINK	1	-		
12	EYE, HOT STICK	1	-		
13	VISIBLE LINK (III)	1	-	S270242	V-LINK
14	CABLE TIE, LARGE	1	-	S738440	-
15	TAG, DO NOT OPERATE ENERGIZED	1	-	S647966	-
16	RECEPTACLE, INSULATING, 200A	3	-	S204304	-

TABLE OF CONTENTS

NOTES:

I. ONE KIT CONTAINS ENOUGH MATERIAL TO CONNECT ONE 1000 KCM PHASE TO THE APPARATUS. FOR SMALLER CONDUCTORS ORDER CABLE ADAPTERS AND COMPRESSION CONNECTORS SEPARATELY.

II. THE DU "C-LINK" ORDERS 3 KITS OR ENOUGH MATERIAL TO CONNECT THREE-PHASES.

(III) THE VISIBLE LINK IS NOT INCLUDED IN KIT AND IS ORDERED SEPARATELY.

IV. THE DU "V-LINK" ORDERS 3 VISIBLE LINKS.

(V) ITEM NOT SHOWN ON THE FIGURES.

REFERENCE:

a. REFERENCE UG4525 CONCENTRIC NEUTRAL TERMINATIONS AND GROUNDING PRE-MOLDED CONNECTORS.

© 1998 - 2020 San Diego Gas & Electric Company. All rights reserved. Removal of this copyright notice without permission is not permitted under law.

REV	CHANGE	DR	BY	DSN	APV	DATE	REV	CHANGE	DR	BY	DSN	APV	DATE
C							F						
B	FORMATTING	EDM	JIK	-	-	06/02/2020	E						
A	REVISION	-	-	-	RJW/VCR	11/30/2000	D						

X Indicates Latest Revision | Completely Revised | New Page | Information Removed

SDG&E ELECTRIC UNDERGROUND CONSTRUCTION STANDARDS

CAM LINK OPERABLE 600 AMP CONNECTOR

UG4187.2

SCOPE: THIS STANDARD SHOWS THE 600 AMP TEE EXTENSION.

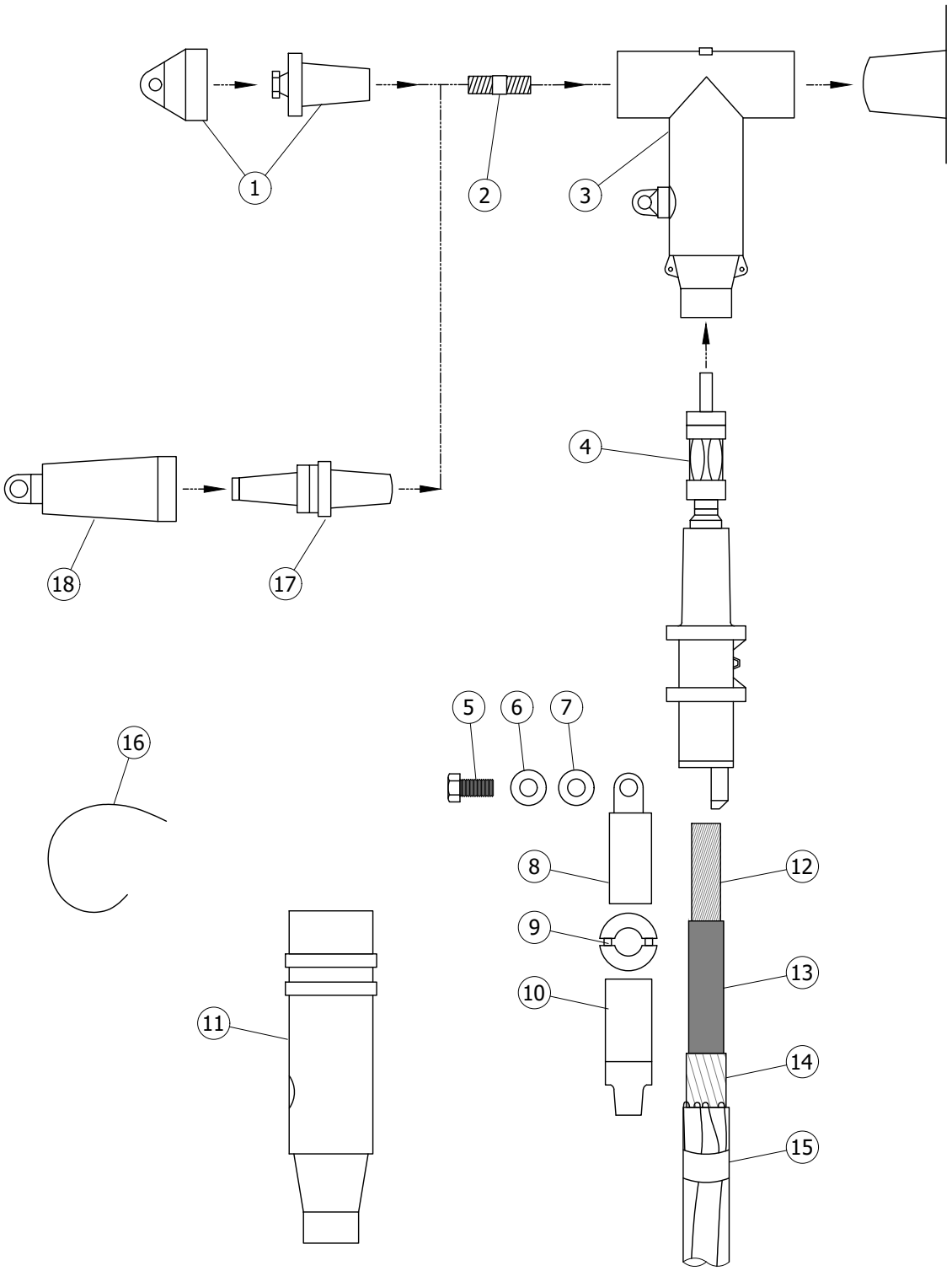

FIGURE 1

© 1998 - 2020 San Diego Gas & Electric Company. All rights reserved. Removal of this copyright notice without permission is not permitted under law.

REV	CHANGE	DR	BY	DSN	APV	DATE	REV	CHANGE	DR	BY	DSN	APV	DATE
C							F						
B	FORMATTING	EDM	JIK	--	--	06/02/2020	E						
A	REVIEW	--	--	--	TR/DW	4/23/2013	D						

X Indicates Latest Revision	Completely Revised	New Page	Information Removed	
SDG&E ELECTRIC UNDERGROUND CONSTRUCTION STANDARDS				
SHEET 1 OF 3	600A T EXTENSION			UG4188.1

TABLE OF CONTENTS

TABLE OF CONTENTS



FIGURE 2

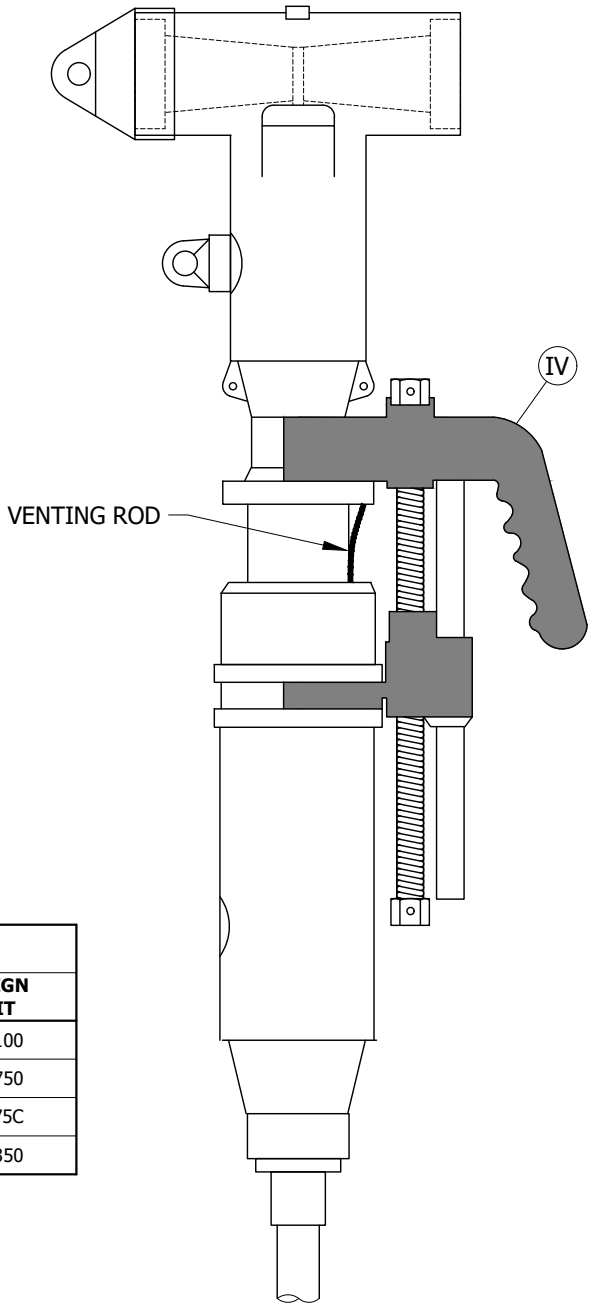

FIGURE 3

TABLE 1

TEE EXTENSION KITS			
CABLE	**KIT**	**STOCK NUMBER**	**DESIGN UNIT**
1000KCMIL PEJ-XLPE	K656RLR-N0410	S445216	TEX100
750KCMIL PEJ-XLPE	K656RLR-L0380	S445214	TEX750
750 KCMIL PEJ-XLPE COMPACT	K656RLR-L0360	S445212	TEX75C
350KCMIL PEJ-XLPE	K656RLR-J0300	S445210	TEX350

© 1998 - 2020 San Diego Gas & Electric Company. All rights reserved. Removal of this copyright notice without permission is not permitted under law.

REV	CHANGE	DR	BY	DSN	APV	DATE	REV	CHANGE	DR	BY	DSN	APV	DATE
C							F						
B	FORMATTING	EDM	JIK	--	--	06/02/2020	E						
A	REVIEW	--	--	--	TR/DW	4/23/2013	D						

INSTALLATION:

A. FOLLOW MANUFACTURER'S INSTRUCTIONS TO RE-TERMINATE CABLE AND TEE CONNECTIONS.

B. KEEP COMPONENTS CLEAN WHEN ASSEMBLING TEE EXTENSION.

BILL OF MATERIALS:

ITEM	DESCRIPTION	QUANTITY	STANDARD PAGE	STOCK NUMBER	DESIGN UNITS
1	INSULATING END CAP & BIP (BASIC INSULATING PLUG)	AS REQ'D	--	SUPPLIED IN KIT (REFERENCE TABLE 1)	SUPPLIED IN KIT (REFERENCE TABLE 1)
2	STUD, 1/2"		--		
3	TEE, ELBOW WITH TEST POINT		--		
4	ADAPTER, ONE INCH		--		
5	BOLT, STAINLESS STEEL, 1/2"		--		
6	WASHER, FLAT, STAINLESS STEEL, 1 /2"		--		
7	WASHER, BELLEVILLE, 1 /2"		--		
8	LUG, COMPRESSION		--		
9	RING, RETAINING, SUPPLIED IN KIT		--		
10	ADAPTER, CABLE		--		
11	EXTENSION HOUSING		--		
12	CONDUCTOR		--		
13	SEMI CON		--		
14	CONCENTRIC NEUTRAL		--		
15	JACKET, CABLE		--		
16	ROD, VENTING		--		
17	PLUG, END, ETP650	AS REQ'D	--	S547328	--
18	CAP, INSULATING	AS REQ'D	--	S204304	--

NOTES:

I. THE ELASTIMOLD TEE EXTENSION 600 AMP CONNECTOR IS DESIGNED TO PROVIDE ADDITIONAL LENGTH WHEN CABLE OR CONVENTIONAL ELBOWS DO NOT REACH. WHEN CABLE IS RE-TERMINATED A TEE EXTENSION CAN PROVIDE 13" OF ADDITIONAL LENGTH.

II. THIS CONNECTION CAN BE USED FOR SWITCH REPLACEMENTS, REMOVAL OF ON/OFF SWITCHES, REPAIRING FAILED TEE CONNECTIONS AND ANY TIME ADDITIONAL LENGTH IS NECESSARY.

III. ELASTIMOLD TEE EXTENSION SPECIFICATIONS:

a. 15KV CLASS

b. 8.3KV PHASE TO GROUND

c. 14.4KV MAXIMUM PHASE TO PHASE

d. 95KV BIL

(IV) 600 RRT TOOL SUPPLIED BY STANDARDS

REFERENCE: NONE

TABLE OF CONTENTS

© 1998 - 2020 San Diego Gas & Electric Company. All rights reserved. Removal of this copyright notice without permission is not permitted under law.

REV	CHANGE	DR	BY	DSN	APV	DATE	REV	CHANGE	DR	BY	DSN	APV	DATE
C							F						
B	FORMATTING	EDM	JIK	--	--	06/02/2020	E						
A	REVIEW	--	--	--	TR/DW	4/23/2013	D						

X Indicates Latest Revision | Completely Revised | New Page | Information Removed

SDG&E ELECTRIC UNDERGROUND CONSTRUCTION STANDARDS

600A T EXTENSION

UG4188.3

SCOPE: THIS STANDARD SHOWS THE CONNECTIONS AND ASSEMBLY CODES USED FOR CALLING OUT 600A PREMOLDED TEE WITH (2) 200A TAPS AND CONNECTOR ASSEMBLIES ON ELECTRIC CONSTRUCTION ORDERS.

ATTENTION:

* THIS FIGURE SHOWS HOW 600A PREMOLDED TEE WITH (2) 200A TAPS ARE ASSEMBLED.

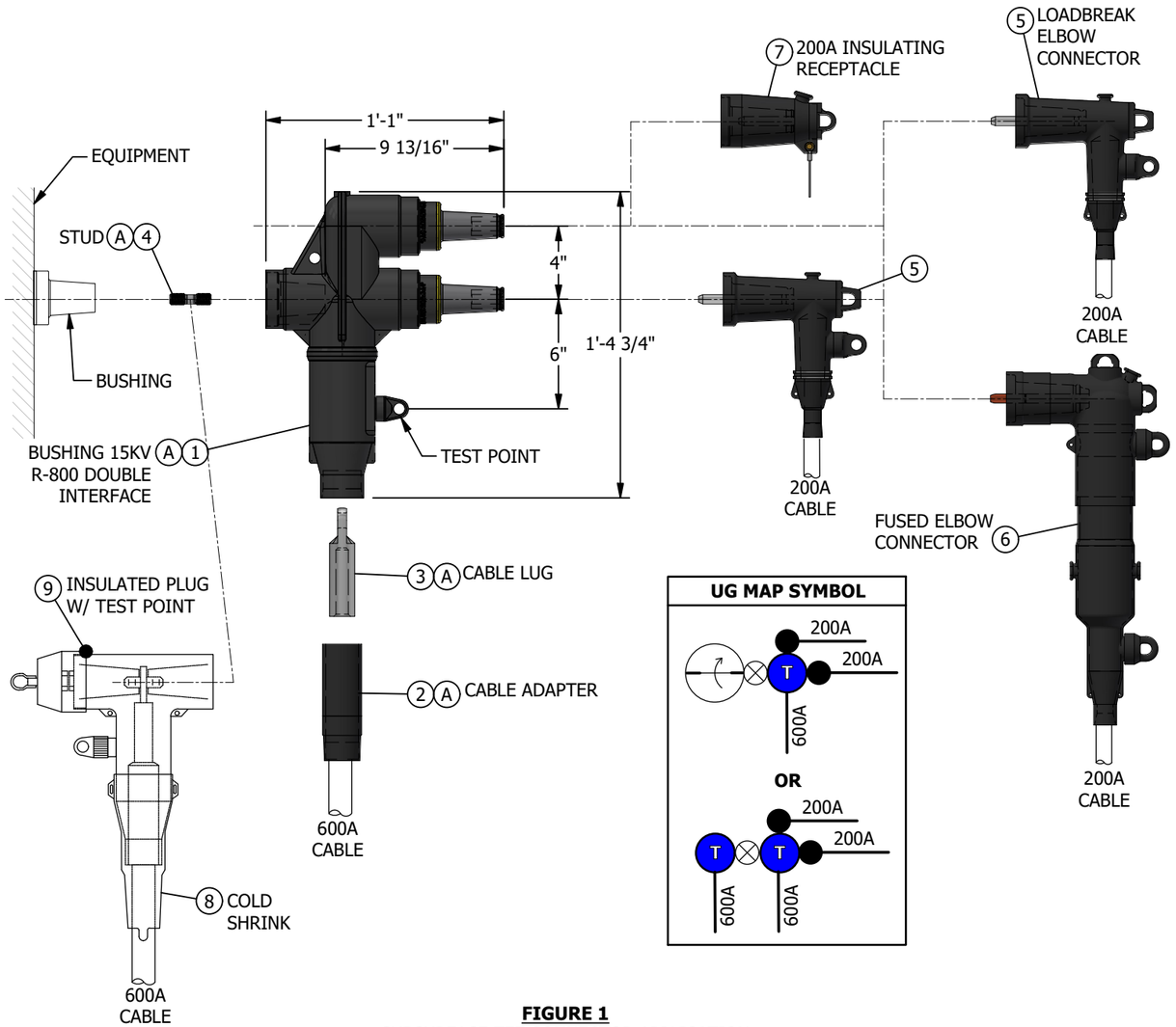

FIGURE 1
SUBSURFACE TEE CONNECTOR APPLICATION
FOR 15K R-800 DOUBLE INTERFACE BUSHING



FIGURE 2
PHOTO 2-FRONT VIEW EQUIPMENT
ELBOW 15KV R-800 DOUBLE INTERFACE



FIGURE 3
PHOTO 1-SIDE VIEW EQUIPMENT
ELBOW 15KV R-800 DOUBLE INTERFACE

ATTENTTION:

* USE TO-SCALE CABLE TEMPLATE AS AID TO PREPARE CABLE.

** PARTS ARE NOT PART OF AN INSTALLATION KIT.

INSTALLATION:

(A) **POSITIONING CABLE**

1. STRAIGHTEN AND TRAIN CABLE END. CABLE SHOULD BE FREE TO MOVE APPROXIMATELY 2 INCHES IN EITHER DIRECTION.
2. CUT CABLE TO DIMENSIONS SHOWN.
3. CLEAN CABLE JACKET APPROXIMATELY 24 INCHES FROM END OF CABLE.

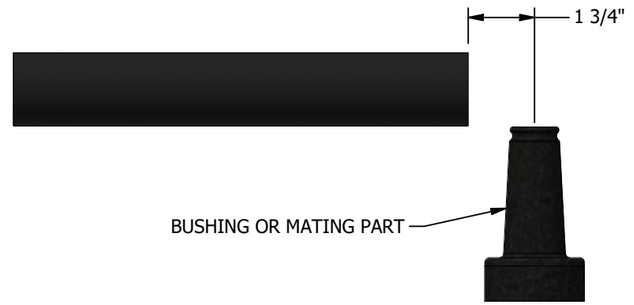

FIGURE 4 (A)

REV	CHANGE	DRWN	BY	CHKD	APVD	DATE
C						
B						
A	ORIGINAL ISSUE	EDM	ADW	JAS	KRG	11/18/2024

SDG&E ELECTRIC UNDERGROUND CONSTRUCTION STANDARDS

BUSHING 15K R-800 DOUBLE INTERFACE

SCALE: NOT TO SCALE

DRAWING NO: UG4189.1

SHEET: 1 OF 6

© 1998 - 2024 San Diego Gas and Electric Company. All rights reserved. Removal of this copyright notice without permission is not permitted under law.

Indicates Latest Revision | Completely Revised | X | New Page | Information Removed

TABLE OF CONTENTS

TABLE OF CONTENTS

INSTALLATION (CONT'D):

(B) EXPOSING CABLE SHIELDING

1. REMOVE CABLE JACKET TO DIMENSIONS SHOWN.
2. ABRADE ARE AS SHOWN.
3. CABLE SHIELDING MAY BE WIRES, STRAPS, METALLIC TAPE, OR LC TAPE. (WIRES SHOWN AS EXAMPLE)

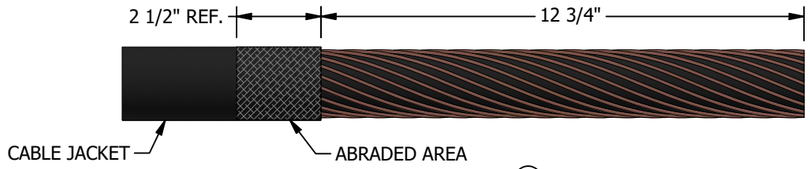

FIGURE 5 (B)

(C) APPLYING JACKET MASTIC

1. APPLY JACKET MASTIC AT POSITION SHOWN BY STRETCHING AND WRAPPING WITH LIGHT TENSION FULLY AROUND OUTER JACKET.

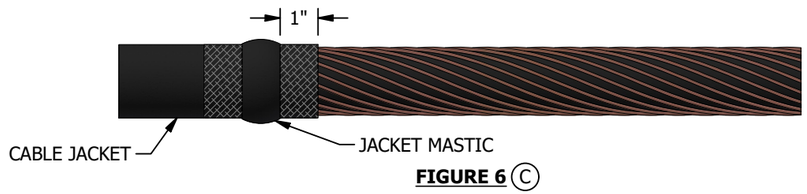

FIGURE 6 (C)

EXPOSING CABLE SEMI-CONDUCTIVE SHIELD

(D) FOR STRAP/WIRE SHIELDED CABLE

1. FOLD BACK STRAP/WIRE SHIELDS AND PRESS FIRMLY INTO JACKET MASTIC.
2. SECURE STRAP/WIRE SHIELDS TO CABLE WITH PVC TAPE AS SHOWN.



FIGURE 7 (D)

(E) FOR METALLIC TAPE/LC SHIELDED CABLE

1. WRAP PVC TAPE AT DIMENSION SHOWN TO SECURE METALLIC SHIELD.
2. REMOVE METALLIC SHIELD UP TO PVC TAPE.

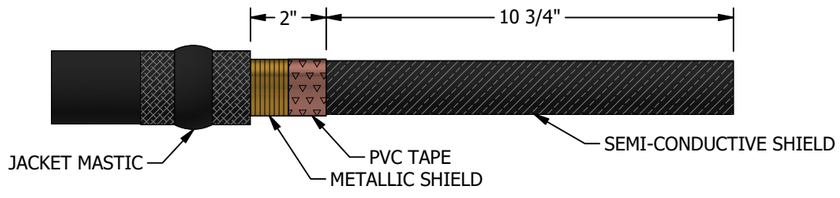

FIGURE 8 (E)

INSTALLATION (CONT'D):

EXPOSING CABLE INSULATION

(F) FOR STRAP/WIRE SHIELDED CABLE

1. REMOVE SEMI-CONDUCTIVE SHIELD TO DIMENSIONS SHOWN.
2. PLACE PVC TAPE MARKER AT DIMENSION SHOWN.
3. **WARNING: DO NOT NICK OR CUT THE CABLE INSULATION.**

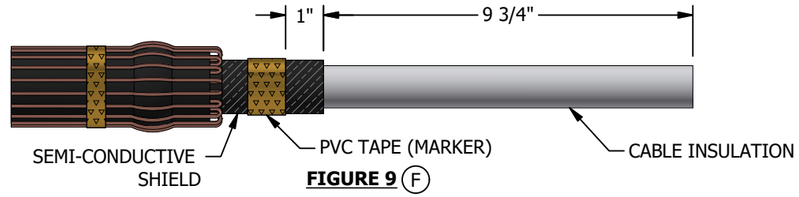

FIGURE 9 (F)

(G) FOR METALLIC TAPE/LC SHIELDED CABLE

1. REMOVE SEMI-CONDUCTIVE SHIELD TO DIMENSIONS SHOWN.
2. CHECK THAT TAPE FROM PREVIOUS STEP IS 1-INCH FROM THE EDGE OF THE SEMI-CONDUCTIVE SHIELD AS IT WILL SERVE AS A MARKER.
3. **WARNING: DO NOT NICK OR CUT THE CABLE INSULATION.**

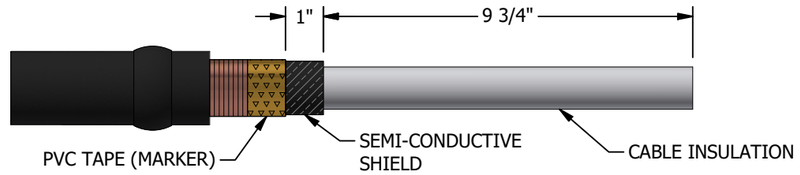

FIGURE 10 (G)

PREPARING METALLIC SHIELD

(H) FOR STRAP/WIRE SHIELDED CABLE

1. PROCEED TO NEXT STEP.

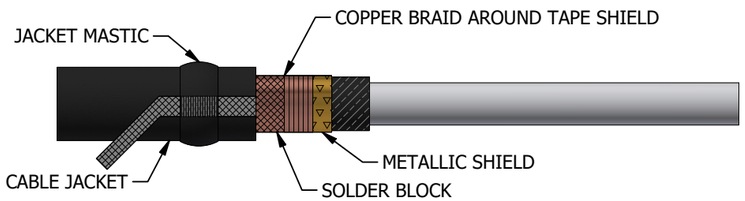

FIGURE 11 (H)

(J) FOR METALLIC TAPE/LC SHIELDED CABLE

1. POSITION COPPER BRAID SO THAT SOLDER BLOCK RESTS ON THE JACKET MASTIC.
2. WRAP COPPER BRAID AROUND METAL SHIELD AS SHOWN.
3. WRAP CONSTANT FORCE SPRING OVER WRAPPED PORTION OF COPPER BRAID.
4. WRAP 2 LAYERS OF PVC TAPE OVER CONSTANT FORCE SPRING.
5. PRESS SOLDER BLOCK INTO JACKET MASTIC.

REV	CHANGE	DRWN	BY	CHKD	APVD	DATE
C						
B						
A	ORIGINAL ISSUE	EDM	ADW	JAS	KRG	11/18/2024

SDGE

SDG&E ELECTRIC UNDERGROUND CONSTRUCTION STANDARDS

BUSHING 15K R-800 DOUBLE INTERFACE

SCALE: NOT TO SCALE

DRAWING NO: UG4189.2

SHEET: 2 OF 6

© 1998 - 2024 San Diego Gas and Electric Company. All rights reserved. Removal of this copyright notice without permission is not permitted under law.

Indicates Latest Revision | Completely Revised | X New Page | Information Removed

TABLE OF CONTENTS

INSTALLATION (CONT'D):

(J) FOR METALLIC TAPE/LC SHIELDED CABLE (CONT'D):

6. SECURE BRAID TO CABLE WITH PVC TAPE.
7. **CHECK:** CONFIRM THAT SOLDER BLOCK IS ALIGNED WITH JACKET MASTIC.

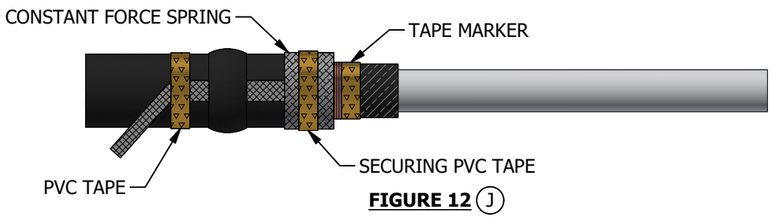

FIGURE 12 (J)

(K) EXPOSING CONDUCTOR

1. REMOVE CABLE INSULATION. REFER TO INSTRUCTIONS PROVIDED WITH LUG FOR INSULATION CUTBACK DIMENSION. CUTBACK DIMENSION SHOULD NOT EXCEED 4 3/8".
2. **NOTE:** IF YOUR LUG DOES NOT SPECIFY A CUTBACK LENGTH USE THE MAX. DIMENSION (4 3/8).
3. **WARNING: DO NOT NICK OR CUT THE CONDUCTOR STRANDS.**
4. **NOTE:** CONFIRM ALL DIMENSIONS WITH TO-SCALE CABLE CUTBACK TEMPLATE BEFORE PROCEEDING.

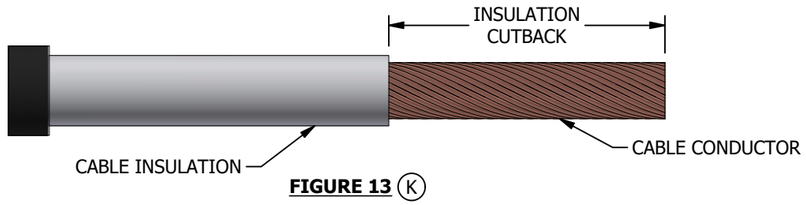

FIGURE 13 (K)

PARKING JACKET SEAL TUBE

(L) FOR STRAP/WIRE SHIELDED CABLE

1. SLIDE JACKET SEAL TUBE ONTO CABLE AS SHOWN. IF USING A COLD SHRINK TUBE, ORIENT PULL TAB FACING AWAY FROM CABLE END.

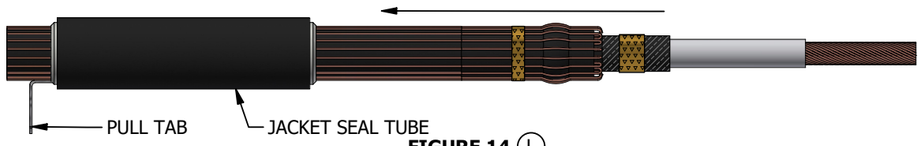

FIGURE 14 (L)

PARKING JACKET SEAL TUBE

(M) FOR METALLIC TAPE/LC SHIELDED CABLE

1. SLIDE JACKET SEAL TUBE ONTO CABLE AS SHOWN. IF USING A COLD SHRINK TUBE, ORIENT PULL TAB FACING AWAY FROM CABLE END.

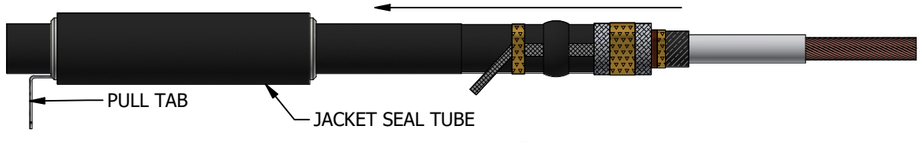

FIGURE 15 (M)

INSTALLATION (CONT'D):

(N) INSTALLING CABLE ADAPTER

1. SLIDE CABLE ADAPTER ASSEMBLY AID UP TO INSULATION.
2. CLEAN INSULATION WITH APPROVED CLEANING WIPES BY WIPING IN DIRECTION OF SEMI-CONDUCTIVE SHIELD.
3. APPLY SILICONE LUBRICANT TO CABLE INSULATION, CABLE ADAPTER ASSEMBLY AID, AND INSIDE OF CABLE ADAPTER AS SHOWN.
4. SLIDE CABLE ADAPTER UNTIL THE CABLE ADAPTER SITS FLUSH WITH THE LEADING EDGE OF THE TAPE MARKER AS SHOWN.

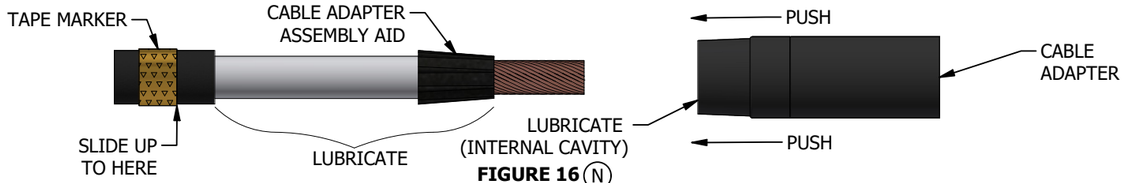

FIGURE 16 (N)

5. REMOVE CABLE ADAPTER ASSEMBLY AID.
6. CONFIRM CABLE ADAPTER IS POSITIONED AS SHOWN BELOW. INSULATION MAY EXTEND BEYOND ADAPTER AS LONG AS BOTH CHECKS ARE CONFIRMED.
7. **CHECK:** CONFIRM THAT EDGE OF TAPE MARKER IS FLUSH WITH END OF CABLE ADAPTER AS SHOWN.
8. **CHECK:** CONFIRM THAT DIMENSION FROM END OF CONDUCTOR TO CABLE ADAPTER EDGE SATISFIES CRITERIA SHOWN ABOVE.

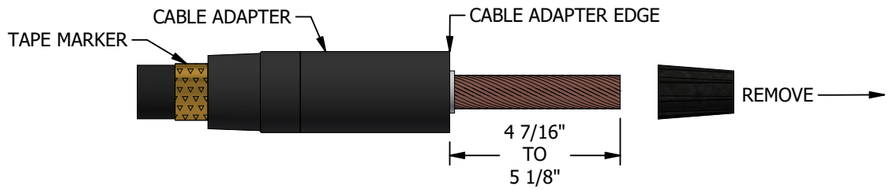

FIGURE 17 (N)

(O) INSTALLING LUG

1. CLEAN CONDUCTOR OF ANY DEBRIS. FOR ALUMINUM CONDUCTOR, WIRE BRUSH AND IMMEDIATELY INSERT LUG ONTO CONDUCTOR. SLIDE LUG UNTIL THE CONDUCTOR IS FULLY SEATED WITHIN THE LUG BARREL.
2. ROTATE LUG SO THAT SPADE IS PARALLEL TO THE CONTACT FACE OF THE BUS AS SHOWN.
3. FOR SHEAR BOLT CONNECTORS: INSTALL LUG USING SEPERATE INSTRUCTIONS PROVIDED WITH LUG.
4. FOR CRIMP CONNECTORS: SELECT CORRECT TOOL AND DIE USING CRIMP CHART SUPPLIED WITH LUG. CRIMP LUG. (MIN. NUMBER INDICATED IN CRIMP CHART) STARTING JUST BELOW KNURL LINE ADJACENT TO PAD. CAREFULLY WIPE ANY EXCESS INHIBITOR FROM LUG AND CABLE INSULATION.
5. CONFIRM THAT THE DISTANCE FROM THE END OF THE LUG TO THE CABLE ADAPTER AFTER INSTALLING IS AS SHOWN. OTHERWISE REDO ASSEMBLY.

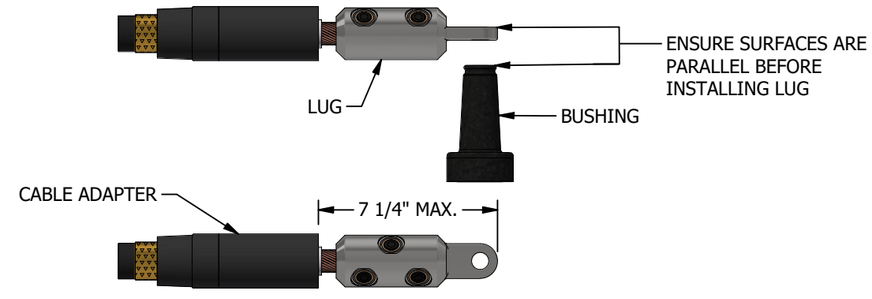

FIGURE 18 (O)

REV	CHANGE	DRWN	BY	CHKD	APVD	DATE
C						
B						
A	ORIGINAL ISSUE	EDM	ADW	JAS	KRG	11/18/2024

SDGE™

SDG&E ELECTRIC UNDERGROUND CONSTRUCTION STANDARDS

BUSHING 15K R-800 DOUBLE INTERFACE

SCALE: NOT TO SCALE

DRAWING NO: UG4189.3

SHEET: 3 OF 6

© 1998 - 2024 San Diego Gas and Electric Company. All rights reserved. Removal of this copyright notice without permission is not permitted under law.

Indicates Latest Revision | Completely Revised | X New Page | Information Removed

TABLE OF CONTENTS

INSTALLATION (CONT'D):

Ⓟ **INSTALLING DF HOUSING**

1. CLEAN AND LUBRICATE (USING SUPPLIED OR APPROVED SILICONE GREASE) ENTIRE SURFACE OF CABLE ADAPTER AND CABLE ENTRANCE OF DF.
2. WITHOUT MOVING CABLE ADAPTER, PUSH DF ONTO CABLE ADAPTER AND SLIDE UNTIL LUG IS FULLY SEATED INSIDE DF. CONFIRM CABLE ADAPTER HAS NOT SHIFTED BY OBSERVING TAPE MARKER. CABLE ADAPTER AND TAPE MARKER SHOULD BE ALIGNED AS THEY WERE IN THE "INSTALLING CABLE ADAPTER" STEP.
3. **WARNING: CONFIRM CABLE ADAPTER DOES NOT SHIFT FROM PROPER POSITIONING DURING INSTALLATION OF DF HOUSING.**
4. **WARNING: CONFIRM THE LUG HAS FULLY SEATED INTO HOUSING AS SHOWN.**

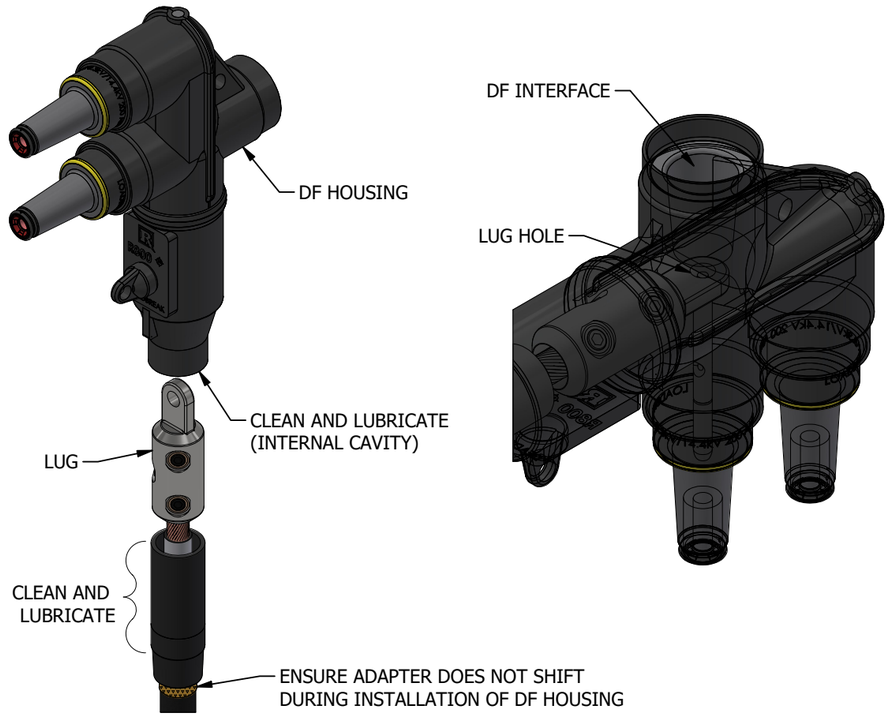

FIGURE 19 Ⓟ

Ⓠ **MOUNTING DF**

1. HAND TIGHTEN STUD INTO APPROPRIATE MATING PART OR BUSHING.
2. **WARNING: THE STUD MUST FULLY THREAD ON. NO THREADS SHOULD BE VISIBLE ON THE BUSHING (MALE) INTERFACE. IF ANY THREADS ARE VISIBLE, CONFIRM CORRECT STUD IS BEING USED AND CHECK FOR CROSS-THREADING/THREAD DAMAGE.**

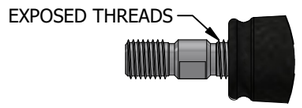

FIGURE 20 Ⓠ
INCORRECT



FIGURE 20 Ⓠ
CORRECT

INSTALLATION (CONT'D):

3. CLEAN AND LUBRICATE (USING SUPPLIED OR APPROVED SILICONE GREASE) DEADBREAK INTERFACE OF DF AND INTERFACE OF MATING PART OR BUSHING.
4. PLACE ONE HAND ON THE POWER CABLE DIRECTLY BELOW DF AND ONE HAND ON THE BODY OF THE DF. LIFTING TOGETHER, PUSH DF ONTO MATING PART, LINING UP THE HOLE IN THE LUG WITH THE STUD ON THE MATING PART.
5. **CHECK: OBSERVE POSITIONING OF ELBOW/CABLE ADAPTER/LUG ASSEMBLY, BEFORE AND AFTER MOUNTING, TO DETERMINE IF THE LUG HAS SHIFTED POSITION. IF A SHIFT IS OBSERVED REPEAT ASSEMBLY TO RESTORE CORRECT POSITIONING AND RE-DO THIS STEP.**
6. **WARNING: ENSURE LUG SPADE IS COMPLETELY SEATED AND STUD IS THROUGH HOLE IN LUG BEFORE TIGHTENING ASSEMBLY.**
7. INSERT SUPPLIED OR APPROVED ALTERNATIVE HEX TOOL INTO LOADBREAK INTERFACE AND ENGAGE FASTER. ROTATE TOOL TO START THREAD ENGAGEMENT. TIGHTEN TO 50-60 FT. LBS. THE SUPPLIED HEX TOOL WILL TWIST, AS SHOWN BELOW, ONCE THE REQUIRED TORQUE HAS BEEN ACHIEVED.

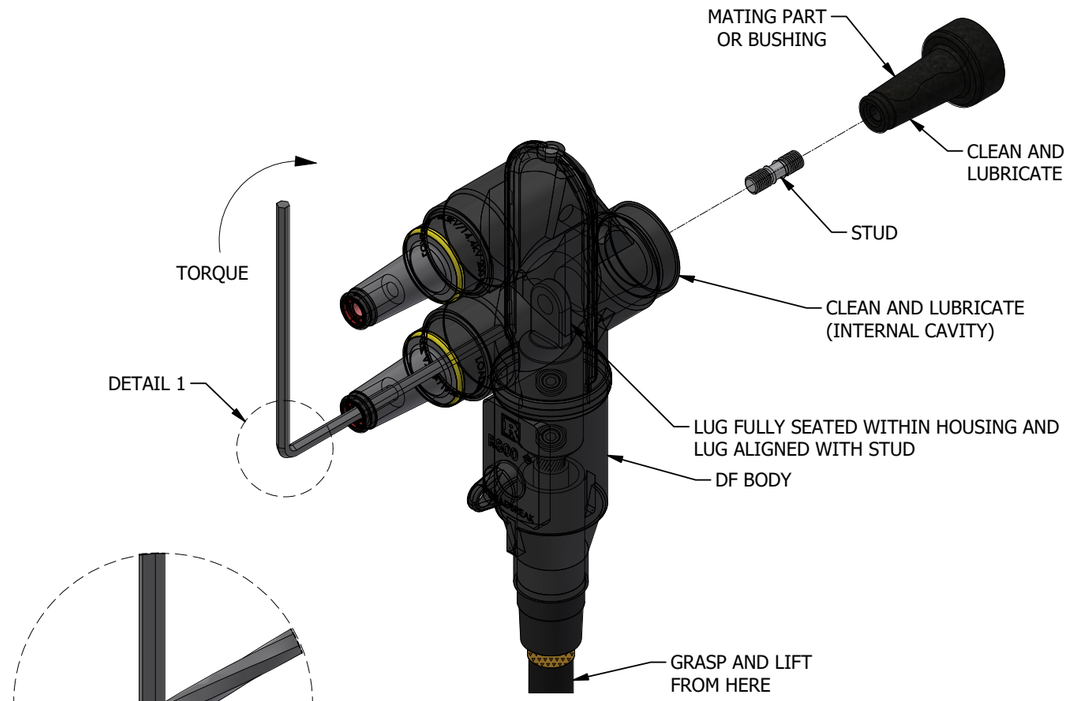

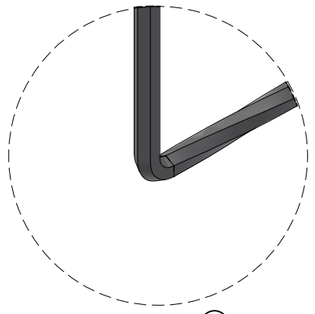

DETAIL 1 Q7

FIGURE 21 Ⓠ

REV	CHANGE	DRWN	BY	CHKD	APVD	DATE
C						
B						
A	ORIGINAL ISSUE	EDM	ADW	JAS	KRG	11/18/2024

SDGE™

SDG&E ELECTRIC UNDERGROUND CONSTRUCTION STANDARDS

BUSHING 15K R-800 DOUBLE INTERFACE

SCALE: NOT TO SCALE

DRAWING NO: UG4189.4

SHEET: 4 OF 6

© 1998 - 2024 San Diego Gas and Electric Company. All rights reserved. Removal of this copyright notice without permission is not permitted under law.

Indicates Latest Revision | Completely Revised | X New Page | Information Removed

TABLE OF CONTENTS

INSTALLATION (CONT'D):

Ⓡ **INSTALLING MATING COMPONENT**

1. CLEAN AND LUBRICATE (USING SUPPLIED OR APPROVED SILICONE GREASE) LOADBREAK INTERFACE OF DF AND INTERFACE OF INSULATING CAP OR MATING PART.
2. INSTALL MATING COMPONENT PER MANUFACTURER INSTRUCTIONS. LOADBREAK CAP SHOWN AS REFERENCE.

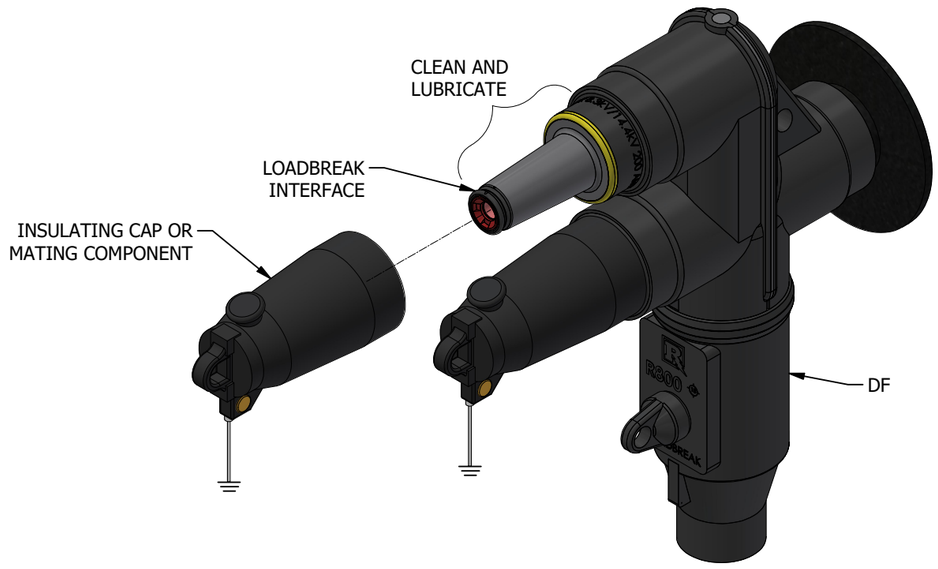

FIGURE 22 Ⓡ

APPLYING SEALING MASTIC

Ⓢ **FOR STRAP/WIRE SHIELDED CABLE**

1. APPLY SEALING MASTIC OVER PREVIOUSLY APPLIED MASTIC AND ON TOP OF FOLDED BACK NEUTRAL WIRES BY STRETCHING AND WRAPPING WITH LIGHT TENSION.
2. APPLY SEALING MASTIC BY STRETCHING AND WRAPPING WITH LIGHT TENSION FULLY AROUND NOSE OF CABLE ADAPTER FOR A WIDTH OF 1-INCH AS SHOWN BELOW.

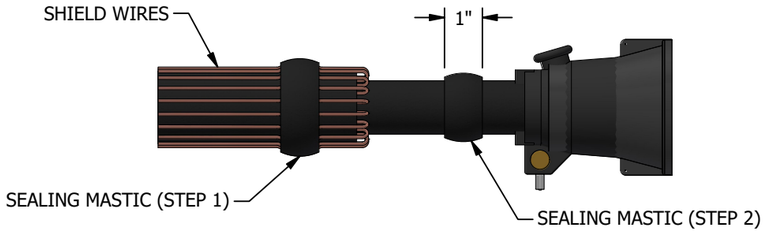

FIGURE 23 Ⓢ

INSTALLATION (CONT'D):

APPLYING SEALING MASTIC

Ⓣ **FOR METALLIC TAPE/LC SHIELDED CABLE**

1. APPLY SEALING MASTIC OVER PREVIOUSLY APPLIED MASTIC AND ON TOP OF SOLDER BLOCK BY STRETCHING AND WRAPPING WITH LIGHT TENSION.
2. APPLY SEALING MASTIC BY STRETCHING AND WRAPPING WITH LIGHT TENSION FULLY AROUND NOSE OF CABLE ADAPTER FOR A WIDTH OF 1-INCH AS SHOWN BELOW.

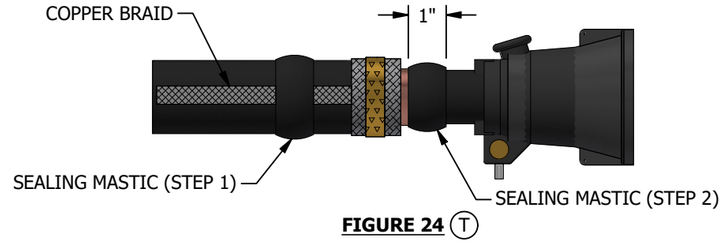

FIGURE 24 Ⓣ

APPLYING JACKET SEAL TUBE

Ⓤ **FOR STRAP/WIRE SHIELDED CABLE**

1. BEGINNING WITH THE SIDE CLOSER TO THE CABLE ADAPTER, DEPLOY THE JACKET SEAL IN AREA SHOWN BELOW ENSURING BOTH MASTICS ARE COMPLETELY COVERED.

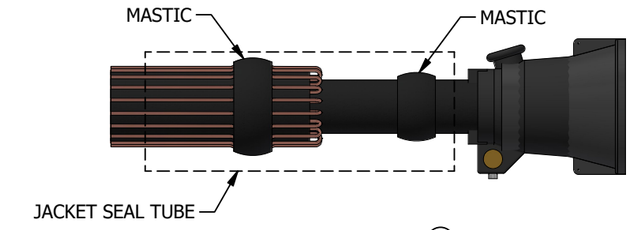

FIGURE 25 Ⓤ

Ⓥ **FOR METALLIC TAPE/LC SHIELDED CABLE**

1. BEGINNING WITH THE SIDE CLOSER TO THE CABLE ADAPTER, DEPLOY THE JACKET SEAL IN AREA SHOWN BELOW ENSURING BOTH MASTICS ARE COMPLETELY COVERED.

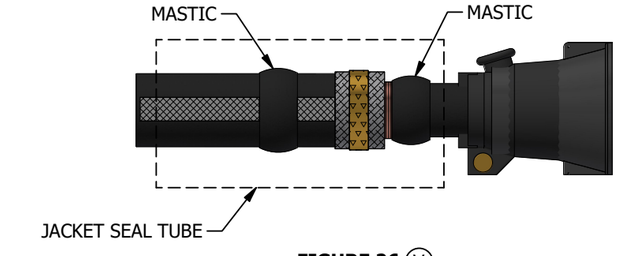

FIGURE 26 Ⓥ

REV	CHANGE	DRWN	BY	CHKD	APVD	DATE
C						
B						
A	ORIGINAL ISSUE	EDM	ADW	JAS	KRG	11/18/2024

SDGE

SDG&E ELECTRIC UNDERGROUND CONSTRUCTION STANDARDS

BUSHING 15K R-800 DOUBLE INTERFACE

SCALE: NOT TO SCALE

DRAWING NO: UG4189.5

SHEET: 5 OF 6

© 1998 - 2024 San Diego Gas and Electric Company. All rights reserved. Removal of this copyright notice without permission is not permitted under law.

Indicates Latest Revision | Completely Revised | X New Page | Information Removed

INSTALLATION (CONT'D):

CONNECTING DRAIN WIRES TO DF

Ⓦ FOR STRAP/WIRE SHIELDED CABLE

1. SECURE NEUTRALS WITH BINDING WIRE OR ZIP TIE 1-INCH FROM JACKET SEAL TUBE.
   INSERT ONE END OF A PIECE OF WIRE (#14 AWG COPPER OR LARGER) THROUGH ONE OF THE AVAILABLE GROUNDING EYES AND
2. TWIST TO MAKE A SMALL LOOP. BE SURE NOT TO DAMAGE GROUNDING EYE.
3. CONNECT OTHER END OF WIRE TO SHIELDING WIRES.
4. GROUND THE CABLE SHIELD ACCORDING TO APPROPRIATE/APPROVED PRACTICE.

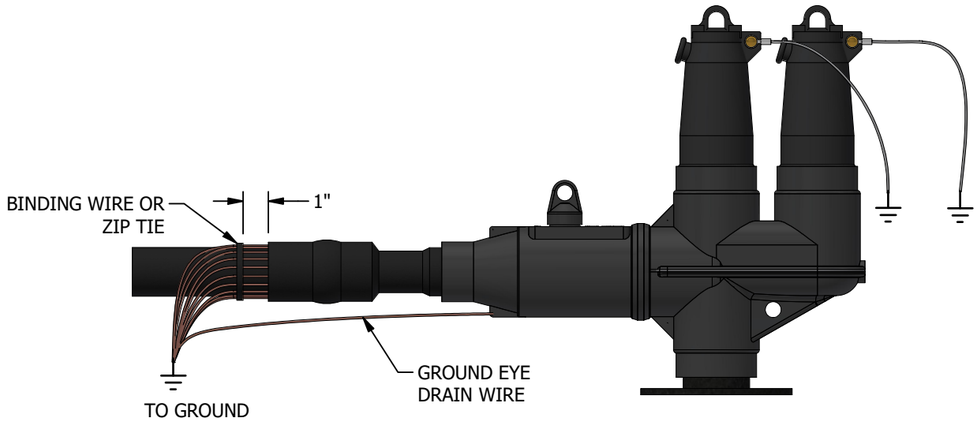

FIGURE 27 Ⓦ

Ⓧ FOR METALLIC TAPE/LC SHIELDED CABLE

1. SECURE COPPER BRAID WITH BINDING WIRE OR ZIP TIE 1-INCH FROM JACKET SEAL TUBE.
   INSERT ONE END OF A PIECE OF WIRE (#14 AWG COPPER OR LARGER) THROUGH ONE OF THE AVAILABLE GROUNDING EYES AND
2. TWIST TO MAKE A SMALL LOOP. BE SURE NOT TO DAMAGE GROUNDING EYE.
3. CONNECT OTHER END OF WIRE TO COPPER BRAID.
4. GROUND THE CABLE SHIELD ACCORDING TO APPROPRIATE/APPROVED PRACTICE.

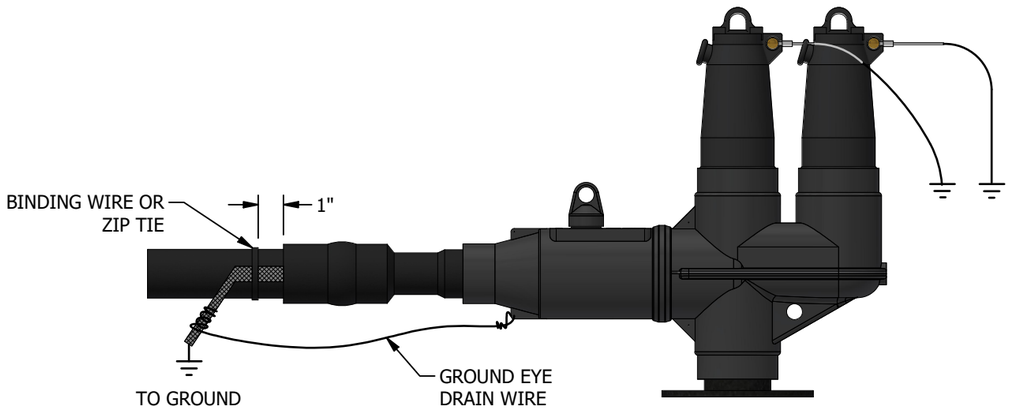

FIGURE 28 Ⓧ

BILL OF MATERIALS:

ITEM	DESCRIPTION	QUANTITY	WIRE SIZE	STANDARD PAGE	STOCK NUMBER	DESIGN UNIT
1	ELBOW, T-BODY, 15KV, R-800 DBL INTERFACE	1	1000 AL, 750 AL, 750C AL, 350 AL, & 2/0	4181	S181090	ELBO2L
2	ADAPTER, CABLE, 1000KCMIL, 600A	1	1000 AL	4182	S102050	AD1MIL
	ADAPTER, CABLE, 750KCMIL, 600A	1	750 AL	4182	S102034	ADP750
	ADAPTER, CABLE, 350KCMIL, 600A	1	750 COMP AL	4182	S102051	AD750C
	ADAPTER, CABLE, 350KCMIL, 600A	1	350 AL	4182	S102027	P350
3	CONNECTOR, 15KV, 600A, 1000KCMIL, ALUM	1	1000 AL	4182	S258702	SP1000
	CONNECTOR, 15KV, 600A, 750KCMIL, ALUM	1	750 AL	4182	S258704	SPD750
	CONNECTOR, 15KV, 600A, 750KCMIL, COMPACT	1	750 COMP AL	4182	S258708	SP750C
	CONNECTOR, 15KV, 600A, 350KCMIL, ALUM	1	350 AL	4182	S258698	SPD350
4	STUD, CONNECTOR, 600A	1	-	4182	S701100	STUD
5	ELBOW, LOADBREAK, #2/0, ALUM, TEST POINT	2	2/0 AL	4180	S443840	LBE2/0
	ELBOW, LOADBREAK, #2, ALUM, TEST POINT	1	#2 AL	4181	S443838	LBE-2A
6	ELBOW, FUSED, 2/0, 30A FUSE INCLUDED	1	2/0 AL	4191	-	-
	ELBOW, FUSED, 2 SOL, 30A FUSE INCLUDED	1	#2 AL	4191	S321680	FE-2AL
7	CAP, 200A, INSULATING RECEPTACLE	1	-	4180	S204304	INSREC
8	ELBOW, TEE, 15KV, TEST POINT, 750-1000	1	750-1000	-	S326574	600ATL
	ELBOW, TEE, 15KV, TEST POINT, 350-500	1	350-500	-	S326572	600AT
9	PLUG, INSULATED, 15KV	1	-	4182	S544848	PLUG-F

NOTES: NONE

REFERENCE:

a. SEE UG3550 FOR PADMOUNTED SWITCHGEAR.
b. SEE UG4186 FOR 12KV 600A TO 200A JUNCTION.
c. SEE UG4198 FOR N-JUNCTION CLEER 600A 25KV AND SQUARE CLEER 600A 25KV.

TABLE OF CONTENTS

REV	CHANGE	DRWN	BY	CHKD	APVD	DATE
C						
B						
A	ORIGINAL ISSUE	EDM	ADW	JAS	KRG	11/18/2024

SDGE

SDG&E ELECTRIC UNDERGROUND CONSTRUCTION STANDARDS

BUSHING 15K R-800 DOUBLE INTERFACE

SCALE: NOT TO SCALE

DRAWING NO: UG4189.6

SHEET: 6 OF 6

© 1998 - 2024 San Diego Gas and Electric Company. All rights reserved. Removal of this copyright notice without permission is not permitted under law.

Indicates Latest Revision | Completely Revised | X New Page | Information Removed

SCOPE: THIS STANDARD SHOWS 200 AMP 14KV LOADBREAK ELBOW CONNECTOR (LOADBREAK AT 12KV, 6.9 KV, 4.16KV AND 2.4KV) USED ON SUBSURFACE, PAD-MOUNTED TRANSFORMERS AND SECTIONALIZING EQUIPMENTS.

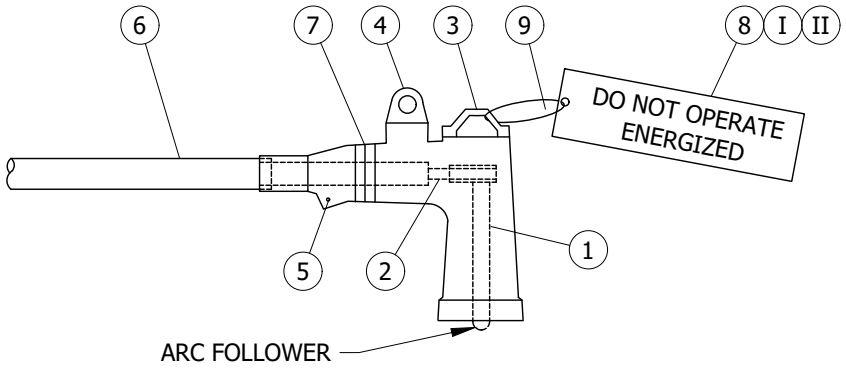

FIGURE 1

TABLE 1

ITEM	SPARE PARTS	STOCK NUMBER
1	MALE CONTACT	S444434
2	2 SOL AL COMPRESSION TERMINAL	S730200
	2/0 AL COMPRESSION TERMINAL	S730210
-	SILICON GREASE	S391424

TABLE 2

RATINGS	
KV	14.0
AMPERES	200
KV-BIL	95
LOAD BREAK OR LOAD MAKE-10 OPERATIONS	200 AMPS AT 70-80% POWER FACTOR
FAULT CLOSE RMS SYMMETRICAL AMPERES	10,000

INSTALLATION:

A. FOR INSTALLATION PROCEDURES CONSULT INDIVIDUAL MANUFACTURER'S CONTAINERS FOR CURRENT INSTRUCTIONS.

B. ENSURE THAT THE ARC FOLLOWER MATERIAL IS NOT CONTAMINATED WITH SOLVENT, SILICONE, OIL OR ANY OTHER FOREIGN SUBSTANCE. WIPE THE ARC FOLLOWER MATERIAL WITH A CLEAN, DRY, WHITE CLOTH IF CONTAMINATION IS SUSPECTED. CONTAMINATION (SOLVENT, SILICONE, ETC.,) CAN CAUSE DETERIORATION OF THE ARC FOLLOWER MATERIAL.

C. SILICONE LUBRICANT SHALL BE APPLIED TO 100% OF THE BUSHING/ELBOW INSULATION INTERFACE TO ENSURE FUTURE OPERABILITY. FOLLOW MANUFACTURERS INSTRUCTIONS PRECISELY (DO NOT SILICONE WRONG AREAS) FOR THE APPLICATION OF SILICONE. SILICONE THAT IS CONTAMINATED BY DIRT, WATER, OR OTHER MATTER SHALL BE REMOVED AND NEW SILICONE GREASE (STOCK NUMBER S391424) SHALL BE PROPERLY APPLIED. AVOID GETTING SILICONE ON THE ARC FOLLOWER MATERIAL AND CONDUCTIVE PARTS WHICH BECOME ENERGIZED.

D. REMOVE THE VOLTAGE TEST POINT COVER (ITEM 4). LUBE THE INSIDE OF THE COVER AND TEST POINT WITH A LIGHT COATING OF SILICONE GREASE. INSTALL THE COVER AND ROTATE IT 5 TIMES CLOCKWISE. THIS WILL ALLOW EASIER REMOVAL OF THE COVER AND PREVENT CORROSION OF THE TEST POINT.

E. ORIENT ADJACENT ELBOWS VERTICALLY OR PERPENDICULAR TO FEED-THRU BUSHINGS AND 3 OR 4-WAY CABLE TAPS IN ORDER TO GIVE MAXIMUM PHASE TO GROUND CLEARANCES FOR ENERGIZED SWITCHING. INSTALL CABLE STRAIGHT FOR AT LEAST 6 INCHES BELOW ENTRANCE TO ELBOW TO PREVENT VOIDS AND WATER ENTRY INTO ELBOW.

F. TO PREVENT BREAKAGE OF THE ARC FOLLOWER MATERIAL, CABLING MUST BE CAREFULLY INSTALLED TO PROVIDE FOR STRAIGHT IN INSERTION OF THE ELBOW INTO THE BUSHING. ALWAYS USE THE HOT STICK WHEN INSERTING THE ELBOW INTO THE BUSHING. (DO NOT OPERATE BY HAND, EVEN ON A DE-ENERGIZED CIRCUIT, AS THIS CAN LEAD TO ARC FOLLOWER DAMAGE SINCE STRAIGHT AXIAL MOVEMENT IS NOT ASSURED AND BENDING OF COMPRESSION LUG MAY OCCUR.) A FIVE FOOT MINIMUM CLEARANCE IS REQUIRED IN FRONT OR SIDES OF THE SUBSTRUCTURES WITH LOADBREAK EQUIPMENT AND EIGHT FOOT MINIMUM CLEARANCE IN FRONT OF PAD-MOUNTED EQUIPMENT FOR HOT STICK OPERATION.

G. AFTER INSTALLATION, WHILE SYSTEM IS DE-ENERGIZED, THE ELBOWS SHOULD BE MECHANICALLY OPERATED WITH HOT STICK TO VERIFY THAT CABLES ARE TRAINED FOR GOOD OPERABILITY. RE-INSPECT THE ARC FOLLOWERS BEFORE PUTTING THEM INTO SERVICE.

© 1998 - 2020 San Diego Gas & Electric Company. All rights reserved. Removal of this copyright notice without permission is not permitted under law.

REV	CHANGE	DR	BY	DSN	APV	DATE	REV	CHANGE	DR	BY	DSN	APV	DATE
C	COMPLETELY REVISED	-	JBH	TR	MDJ	03/22/2001	F						
B	REVISION	-	-	-	JLB/RDJ	1/1/1990	E	MOVED FROM UG4191	EDM	JIK	-	-	06/02/2020
A	REVISON	-	-	-	JLB/RDJ	1/1/1988	D	EDITORIAL CHANGES	-	JS	JS	MDJ	12/20/2016

TABLE OF CONTENTS

INSTALLATION (CONT'D):

H. CHANGE 12KV ELBOW MALE CONTACT (ITEM 1 - STOCK NUMBER S444434) WHEN:

1. ELBOW HAS BEEN INADVERTENTLY FAULT CLOSED. THE BUSHING SHOULD NOT BE USED AGAIN AND SHOULD BE REPLACED. NOTE: THOROUGHLY CLEAN USING A CLEAN, DRY RAG. INSPECT AND RE-LUBRICATE ELBOW AND BUSHING LOADBREAK INTERFACES. IF FURTHER DAMAGE IS NOTED AT SAME TIME, THEN ELBOW REPLACEMENT IS ALSO NECESSARY.
2. ELBOW CONTACT OR BUSHING CONTACT SHOW ANY EVIDENCE OF MECHANICAL DAMAGE (CHANGEOUT SHOULD NOT BE NECESSARY UNDER NORMAL FIELD OPERATING CONDITIONS).

J. ALWAYS SMOOTH OFF CRIMPS (FILE SHARP EDGES AND CLEAN OFF FILINGS) ON COMPRESSION SOCKET TERMINAL TO PREVENT DAMAGE TO ELBOW INSULATION WHEN INSERTING CABLE.

K. ALL SINGLE AND THREE PHASE DEADFRONT TRANSFORMERS, LOW PROFILE FUSED SWITCHING CABINETS WITH GE TYPE EJO FUSE CLIPS, AND THREE-PHASE FUSED SWITCHING CABINETS HAVE 12KV LOADBREAK RATED BUSHINGS INSTALLED BY MANUFACTURERS EVEN THOUGH THEY MAY NOT HAVE WHITE-BLACK-WHITE BAND. (b) (c) (d)

BILL OF MATERIALS:

ITEM	DESCRIPTION	QUANTITY	STANDARD PAGE	STOCK NUMBER			DESIGN UNITS
				2CU	2 SOL AU	2/0 AL	
1	MALE CONTACT	AS REQ'D	--	S443837	S443838	S443840	--
2	TERMINAL, COMPRESSION	AS REQ'D	--				--
3	ELBOW PULLING EYE	AS REQ'D	--				--
4	VOLTAGE TEST POINT AND COVER	AS REQ'D	--				--
5	GROUNDING POINT	AS REQ'D	--				--
6	CABLE	AS REQ'D	--				--
7	BAND, ID, WHITE - BLACK - WHITE (III)	AS REQ'D	--				--
8	TAG, "DO NOT OPERATE ENERGIZED"	AS REQ'D	--	S647966			--
9	STRAP, TIE, 6"	AS REQ'D	--	S698224			--

NOTES:

(I) THIS ELBOW IS DESIGNED FOR OPERATION AS A LOADBREAK DEVICE ON 12.0, 6.9 & 4.16KV SYSTEMS. HOWEVER, IF IT IS INSTALLED ON A 12KV SYSTEM WITHOUT A 12KV RATED BUSHING OR IN A MANHOLE, A TAG (3232) "DO NOT OPERATE ENERGIZED" IS THEN ATTACHED.

(II) UNDER PROPER SUPERVISION THIS ELBOW MAY BE USED AS A LOADBREAK DEVICE AT 12KV AND BELOW. HOWEVER THIS DOES NOT APPLY ON ELBOWS INSTALLED IN MANHOLES. UNDER NO CIRCUMSTANCES ARE ELBOWS TO BE OPERATED ENERGIZED IN MANHOLES.

(III) WHITE - BLACK - WHITE BAND IDENTIFIES ELBOW THAT CAN BE USED FOR 12KV (2 OR 3-PHASE) SWITCHING WITH 12KV RATED BUSHING AND 6930 VOLT (SINGLE-PHASE) SWITCHING.

REFERENCE:

a. REFER TO ELECTRIC STANDARD PRACTICE 212 FOR CAPACITOR TEST POINT CLEANING AND LUBRICATING.

(b) REFER TO UG3711, UG3712, UG3751, AND UG3752 FOR SINGLE AND THREE-PHASE TRANSFORMERS.

(c) REFER TO 3512 FOR LOW PROFILE FUSED SWITCHING CABINETS.

(d) REFER TO 3514 FOR THREE-PHASE FUSED SWITCHING CABINETS.

TABLE OF CONTENTS

© 1998 - 2020 San Diego Gas & Electric Company. All rights reserved. Removal of this copyright notice without permission is not permitted under law.

REV	CHANGE	DR	BY	DSN	APV	DATE	REV	CHANGE	DR	BY	DSN	APV	DATE
C	COMPLETELY REVISED	-	JBH	TR	MDJ	03/22/2001	F						
B	REVISION	-	-	-	JLB/RDJ	1/1/1990	E	MOVED FROM UG4191	EDM	JIK	-	-	06/02/2020
A	REVISON	-	-	-	JLB/RDJ	1/1/1988	D	EDITORIAL CHANGES	-	JS	JS	MDJ	12/20/2016

SCOPE: THIS STANDARD ILLUSTRATES THE 200A, 6,930V LOADBREAK FUSED ELBOW CONNECTOR USED ON A 6.9kV, 7.2kV OR 12kV SYSTEM.

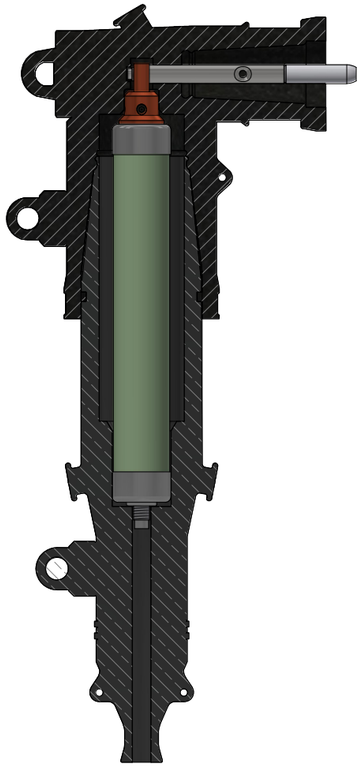

FIGURE 1
EATON/COOPER FUSED ELBOW
EATON FUSE ONLY

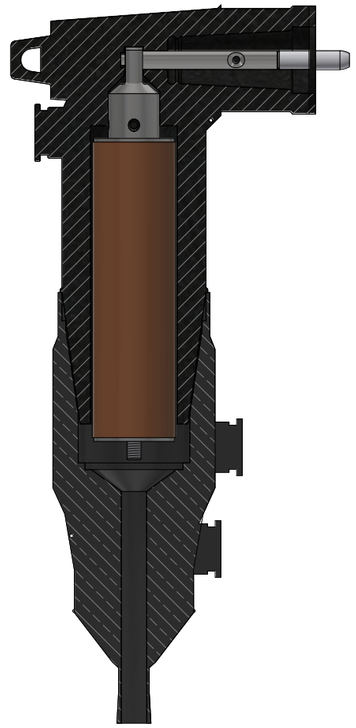

FIGURE 2
HUBBELL FUSED ELBOW
HI-TECH AND EATON FUSES

TABLE 1:

VOLTAGE RATING AND CHARACTERISTICS	
DESCRIPTION	**KV**
STANDARD VOLTAGE	15
MAXIMUM RATING PHASE TO PHASE	8.3
MAXIMUM RATING PHASE TO GROUND	8.3
AC 60HZ 1 MINUTE WITHSTAND	34
DC 15 MINUTE WITHSTAND	53
BIL AND FULL WAVE CREST	95
MINIMUM CORONA VOLTAGE LEVEL	11

TABLE 2:

CURRENT RATING AND CHARACTERISTICS	
DESCRIPTION	**AMPRES**
CONTINUOUS	FUSE RATING
SWITCHING	10 OPERATIONS AT FUSE CURRENT RATING AT 8.3KV
FAULT CLOSURE	10,000 A RMS SYMMETRICAL AT 8.3KV AFTER 10 SWITCHING OPERATIONS

TABLE 3:

FUSED ELBOW STOCK NUMBER	MANUFACTURER	NOMINAL VOLTAGE (KV)	RATINGS CONTINUOUS CURRENT (A)	CABLE SIZE	CATALOG NUMBER	DESIGN UNITS	WORKS WITH FUSE
S321676	HUBBELL	8.3	30	#2	215FEHA2	HFE2SL	HI-TECH FX
S321678	HUBBELL	8.3	30	2/0	215FEHA5	FE-2/0H	HI-TECH FX
S321680	HUBBELL	8.3	30	#2	215FECA2	CFE2SL	EATON TYPE FUSE
S321680	EATON/COOPER	8.3	30	#2	LFEP215TF ECA03AT	CFE2SL	EATON TYPE FUSE
S321682	HUBBELL	8.3	30	2/0	215FECA5	FE-2/0	EATON TYPE FUSE
S321682	EATON/COOPER	8.3	30	2/0	LFEP215TF ECB07AT	FE-2/0	EATON TYPE FUSE

TABLE 4:

FUSE	STOCK NUMBER
HI-TECH FX	S365698
EATON TYPE FE	S365694

INSTALLATION:

A. THIS ELBOW MAY BE USED AS A LOADBREAK DEVICE FOR 6,930V SINGLE-PHASE TRANSFORMERS. IF IT IS INSTALLED FUSING A PHASE TO PHASE CONNECTED LOAD WITH EXPULSION FUSING (FOR EXAMPLE, HDL, HZB TRANSFORMERS) OR A 12KV SYSTEM, A TAG "DO NOT OPERATE UNDER LOAD" IS TO BE ATTACHED. ELBOW SHALL NEVER BE INSTALLED TO SERVE UN-FUSED 12KV TRANSFORMERS. (a)

B. FOR INSTALLATION PROCEDURE, CONSULT MANUFACTURERS CONTAINERS FOR INSTRUCTIONS.

C. WHEN USING THE TEST POINT TO DETERMINE WHETHER OR NOT THE FUSED ELBOW IS ENERGIZED, FOLLOW THESE STEPS:
   1. REMOVE THE TEST POINT COVER WITH THE HOT STICK.
   2. THE TEST POINT IS A CAPACITIVE DEVICE WHICH WILL INDICATE A READING OF ABOUT 10 PERCENT OF THE VOLTAGE THE CONDUCTOR IS CARRYING. USE THE VOLTAGE DETECTOR AND PHASING TESTER (MANUFACTURED BY SAFETYLINE OR STB), FOR OBTAINING AN ACCURATE VOLTAGE INDICATION.
   3. REMOVE EACH VOLTAGE TEST POINT COVER. LUBE THE INSIDE OF THE COVERS AND TEST POINTS WITH A LIGHT COATING OF SILICONE GREASE. INSTALL THE COVERS AND ROTATE THEM FIVE (5) TIMES CLOCKWISE. THIS WILL ALLOW EASIER REMOVAL OF THE COVERS AND PREVENT CORROSION OF THE TEST POINTS.

D. THE TEST POINTS CAN ALSO BE USED TO LOCATE AN OPEN FUSE AS FOLLOWS:
   1. REMOVE THE TEST POINT COVERS WITH THE HOT STICK.
   2. WITH THE VOLTAGE DETECTOR AND PHASING TESTER, CHECK THE VOLTAGE ON EACH TEST POINT. A VOLTAGE DIFFERENCE OF 50 PERCENT OR MORE INDICATES AN OPEN FUSE.
   3. AFTER REPLACEMENT OF THE FUSE (SEE REPLACING CLEARED FUSE), RECHECK THE VOLTAGE ON THE TEST POINTS.
   4. A VOLTAGE DIFFERENCE OF LESS THAN 20 PERCENT INDICATES A GOOD FUSE. LUBE THE INSIDE OF THE COVERS WITH A LIGHT COATING OF SILICONE GREASE. INSTALL THE COVERS AND ROTATE THEM FIVE (5) TIMES CLOCKWISE. THIS WILL ALLOW EASIER REMOVAL OF THE COVERS AND PREVENT CORROSION OF THE TEST POINTS.

E. REPLACING CLEARED FUSE:
   1. DE-ENERGIZE AND GROUND CABLE AT THE SOURCE.
   2. WITH THE VOLTAGE DETECTOR AND PHASING TESTER, CHECK THE VOLTAGE ON EACH TEST POINT TO ASSURE IT IS DE-ENERGIZED.
   3. REMOVE THE PROBE FROM THE FUSED ELBOW WITH THE TORQUE LIMITING WRENCH OR SDG&E APPROVED TOOL.
   4. INSERT BLEEDER STRAP BETWEEN THE ELBOW HOUSING AND THE CABLE HOUSING AND SLIDE STRAP AROUND THE ENTIRE CIRCUMFERENCE TO VENT INTERFACES. REMOVE THE ELBOW HOUSING USING A TWIST AND PULL MOTION.
   5. REMOVE THE PROBE ADAPTER BY LOOSENING THE SET SCREW WITH A 1/8-INCH HEX WRENCH.
   6. UNSCREW THE CLEARED FUSE FROM THE CABLE HOUSING USING A 3/16-INCH HEX WRENCH.
   7. FOR HUBBELL FE. VALIDATE WHICH FUSE IS IN THE ELBOW AND REPLACE WITH SAME MANUFACTURER FUSE.
   8. REPLACE CLEARED FUSE IN REVERSE ORDER.

TABLE OF CONTENTS

REV	CHANGE	DRWN	BY	CHKD	APVD	DATE
G	EDITORIAL CHANGES	EDM	MBL	EJA	JAS	01/02/2025
F	BILL OF MATERIALS UPDATE	EDM	RSL	JAS	KRG	09/29/2022
E	FORMATTING	EDM	JIK	-	-	06/02/2020

SDG&E ELECTRIC UNDERGROUND CONSTRUCTION STANDARDS

200A 6,930V LOADBREAK 6.9kV, 7.2kV OR 12kV FUSED ELBOW CONNECTOR

SCALE: NOT TO SCALE

DRAWING NO: UG4191.1

SHEET: 1 OF 2

© 1998 - 2025 San Diego Gas and Electric Company. All rights reserved. Removal of this copyright notice without permission is not permitted under law.

X Indicates Latest Revision | X Completely Revised | New Page | Information Removed

BILL OF MATERIALS: NONE

NOTES:

I. MAY NOT BE USED ON 4KV SYSTEMS. DURING FUSE OPERATION THE FUSE MAY CAUSE AN "OVER VOLTAGE CONDITION" ON EQUIPMENT.

II. MAY NOT BE APPLIED TO SYSTEMS CAPABLE OF IMPRESSING 12KV ACROSS FUSE SUCH AS TRANSFORMERS NOT EQUIPPED WITH FUSING.

III. IF A FAULT IS EXPERIENCED, THE FUSED LOADBREAK ELBOW AND PROBE SHALL BE REPLACED.

IV. TO LOCATE AN OPEN FUSE, ONLY THE VOLTAGE DETECTOR AND PHASING TESTER CAN BE USED.

V. DO NOT OPERATE ON KNOWN FAULTS.

SPECIAL INSTRUCTIONS

VI. IN ADDITION TO NORMAL OPERATING INSTRUCTIONS FOR ELBOWS, THE FOLLOWING APPLICATIONS SHALL BE MAINTAINED FOR FUSED ELBOWS:

a. WHEN USED TO FUSE 6,930V, SINGLE-PHASE TRANSFORMERS, THE ELBOW MAY BE OPERATED LOADBREAK FOR UP TO TEN LOADMAKE AND LOADBREAK OPERATIONS. (VIb)

(b) IF VISUAL EVIDENCE OF CARBON DEPOSITS ARE PRESENT, MALE CONTACT PROBE AND BUSHING CHANGEOUT PLUS CLEANING ELBOW/BUSHING COMBINATION SHOULD BE DONE BEFORE TEN OPERATIONS.

c. DO NOT USE FUSED ELBOW FOR FAULT LOCATING CLOSE-INS. BUT IF ELBOW IS CLOSED IN ON A FAULT, THEN THE MALE CONTACT PROBE AND FUSE SHOULD BE REPLACED.

REFERENCE:

(a) SEE UG3232 FOR SIGNS AND TAGGING.

b. SEE DM6121 FOR FUSE APPLICATION CRITERIA.

TABLE OF CONTENTS

REV	CHANGE	DRWN	BY	CHKD	APVD	DATE
G	EDITORIAL CHANGES	EDM	MBL	EJA	JAS	01/02/2025
F	BILL OF MATERIALS UPDATE	EDM	RSL	JAS	KRG	09/29/2022
E	FORMATTING	EDM	JIK	-	-	06/02/2020

SDGE

SDG&E ELECTRIC UNDERGROUND CONSTRUCTION STANDARDS

200A 6,930V LOADBREAK 6.9kV, 7.2kV OR 12kV FUSED ELBOW CONNECTOR

SCALE: NOT TO SCALE

DRAWING NO: UG4191.2

SHEET: 2 OF 2

© 1998 - 2025 San Diego Gas and Electric Company. All rights reserved. Removal of this copyright notice without permission is not permitted under law.

X Indicates Latest Revision | Completely Revised | New Page | X Information Removed

SCOPE: THIS STANDARD ILLUSTRATES THE 200A, 15KV LOADBREAK ELBOW EXTENSIONS.

ATTENTION:

* FOR REPAIR OR REPLACEMENT OF A FAILED ELBOW CONNECTION WHERE THE CABLE MUST BE STRIPPED BACK AND A NEW COMPRESSION LUG APPLIED.

** TO GAIN EXTRA LENGTH WHEN CABLES HAVE BEEN ACCIDENTALLY TRIMMED TOO SHORT OR TO CONNECT NEW APPARATUS TO EXISTING CABLES.

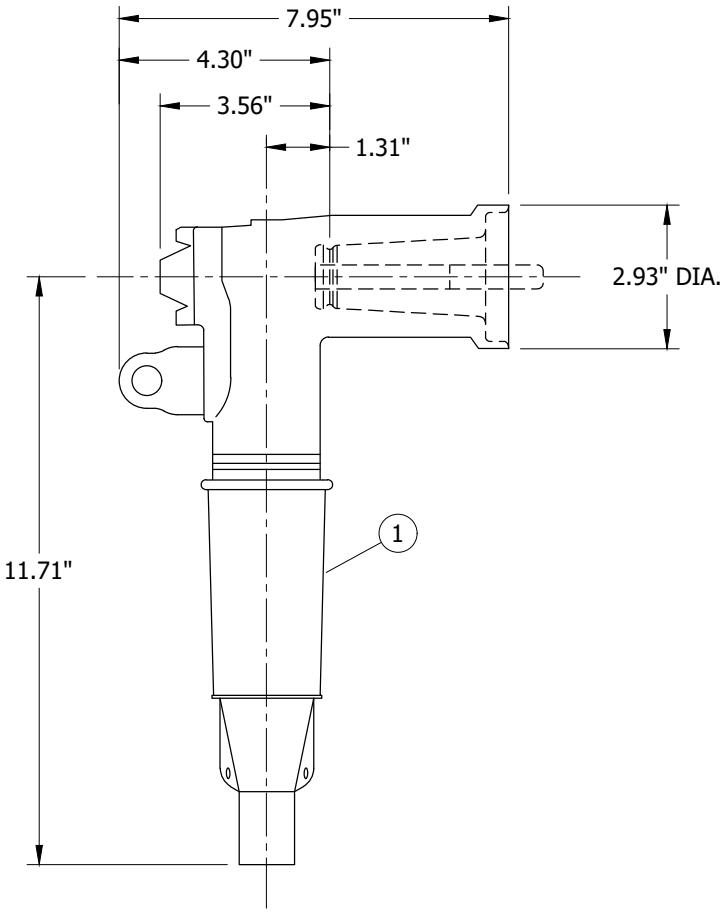

FIGURE 1
200A REPAIR LOADBREAK ELBOW

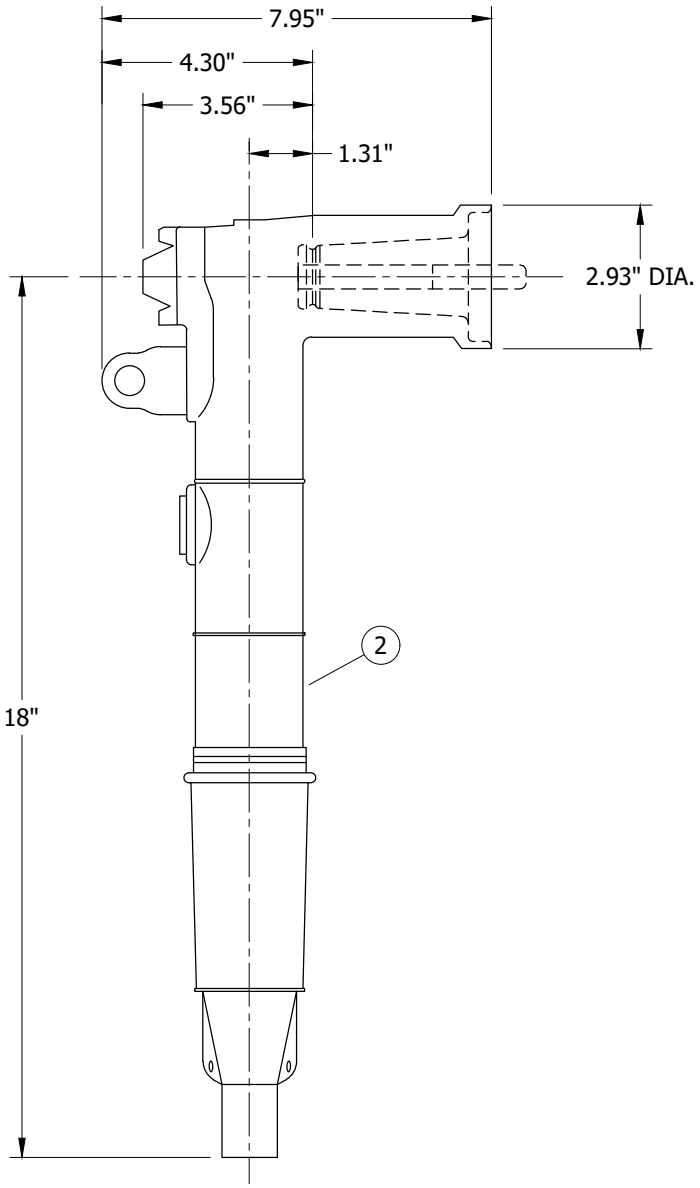

FIGURE 2
200A REPLACEMENT LOADBREAK ELBOW

TABLE OF CONTENTS

© 1998 - 2020 San Diego Gas & Electric Company. All rights reserved. Removal of this copyright notice without permission is not permitted under law.

REV	CHANGE	DR	BY	DSN	APV	DATE	REV	CHANGE	DR	BY	DSN	APV	DATE
C							F						
B							E						
A	ORIGINAL ISSUE	EDM	ADW	JES	CZH	11/9/2020	D						

Indicates Latest Revision | Completely Revised | X New Page | Information Removed

SDG&E ELECTRIC UNDERGROUND CONSTRUCTION STANDARDS

SHEET 1 OF 2

200A 15KV LOADBEAK ELBOW EXTENSION

UG4192.1

TABLE 1

VOLTAGE RATING AND CHARACTERISTICS	
DESCRIPTION	**KV**
STANDARD VOLTAGE	15
MAXIMUM RATING PHASE TO PHASE	14.4
MAXIMUM RATING PHASE TO GROUND	8.3
AC 60HZ 1 MINUTE WITHSTAND	34
DC 15 MINUTE WITHSTAND	53
BIL IMPULSE WITHSTAND	95
CORONA EXTINCTION @ 3pC SENSITIVITY	11

TABLE 2

CURRENT RATING AND CHARACTERISTICS	
DESCRIPTION	**AMPERES**
CONTINUOUS AND LOADBREAK	200
10 CYCLES MOMENTARY & FAULT CLOSE	10K

INSTALLATION:

A. FOR INSTALLATION PROCEDURE, CONSULT MANUFACTURERS INSTRUCTIONS.

B. WHEN USING TEST POINT TO DETERMINE WHETHER OR NOT ELBOW IS ENERGIZED, FOLLOW THESE STEPS:

1. REMOVE TEST POINT COVER WITH THE HOT STICK. PEEL OFF AT AN ANGLE RATHER THAN PULLING DIRECTLY IN LINE WITH TEST POINT ASSEMBLY.
2. THE TEST POINT IS A CAPACITIVE DEVICE WHICH WILL INDICATE A READING OF ABOUT 10 PERCENT OF THE VOLTAGE THE CONDUCTOR IS CARRYING. USE THE VOLTAGE DETECTOR AND PHASING TESTER (MANUFACTURED BY SAFETYLINE OR STB), TO OBTAIN AN ACCURATE VOLTAGE INDICATION.
3. REMOVE EACH VOLTAGE TEST POINT COVER. LUBE THE INSIDE OF THE COVERS AND TEST POINTS WITH A LIGHT COATING OF SILICONE GREASE. INSTALL THE COVERS AND ROTATE THEM FIVE (5) TIMES CLOCKWISE. THIS WILL ALLOW EASIER REMOVAL OF THE COVERS AND PREVENT CORROSION OF THE TEST POINTS.

BILL OF MATERIALS:

ITEM	DESCRIPTION	WIRE SIZE	QUANTITY	STANDARD PAGE	STOCK NUMBER	DESIGN UNITS
1	ELBOW, REPAIR, EXTENDED LENGTH, W/ TEST POINT	#2 SOLID	-	-	S321684	2 SOLES
		2/0 STRANDED	-	-	S321686	2/0-ES
2	ELBOW, REPLACEMENT, EXTENDED LENGTH, W/ TEST POINT	#2 SOLID	-	-	S321688	2/0-SL
		2/0 STRANDED	-	-	S321690	2/0-EL

TABLE OF CONTENTS

NOTES:

I. ELBOWS SHALL NOT BE INSTALLED IN MANHOLES.

II. DO NOT OPERATE ON KNOWN FAULTS.

III. IF A FAULT IS EXPERIENCED, THE LOADBREAK ELBOW AND BUSHING SHALL BE REPLACED.

REFERENCE: NONE

© 1998 - 2020 San Diego Gas & Electric Company. All rights reserved. Removal of this copyright notice without permission is not permitted under law.

REV	CHANGE	DR	BY	DSN	APV	DATE	REV	CHANGE	DR	BY	DSN	APV	DATE
C							F						
B							E						
A	ORIGINAL ISSUE	EDM	ADW	JES	CZH	11/9/2020	D						

Indicates Latest Revision | Completely Revised [X] | New Page | Information Removed

SDG&E ELECTRIC UNDERGROUND CONSTRUCTION STANDARDS

200A 15KV LOADBEAK ELBOW EXTENSION

UG4192.2

SCOPE: THIS STANDARD DESCRIBES THE 6-WAY 200A LOADBREAK CABLE RACK.

ATTENTION:

* FOR MANHOLES AND VAULTS.

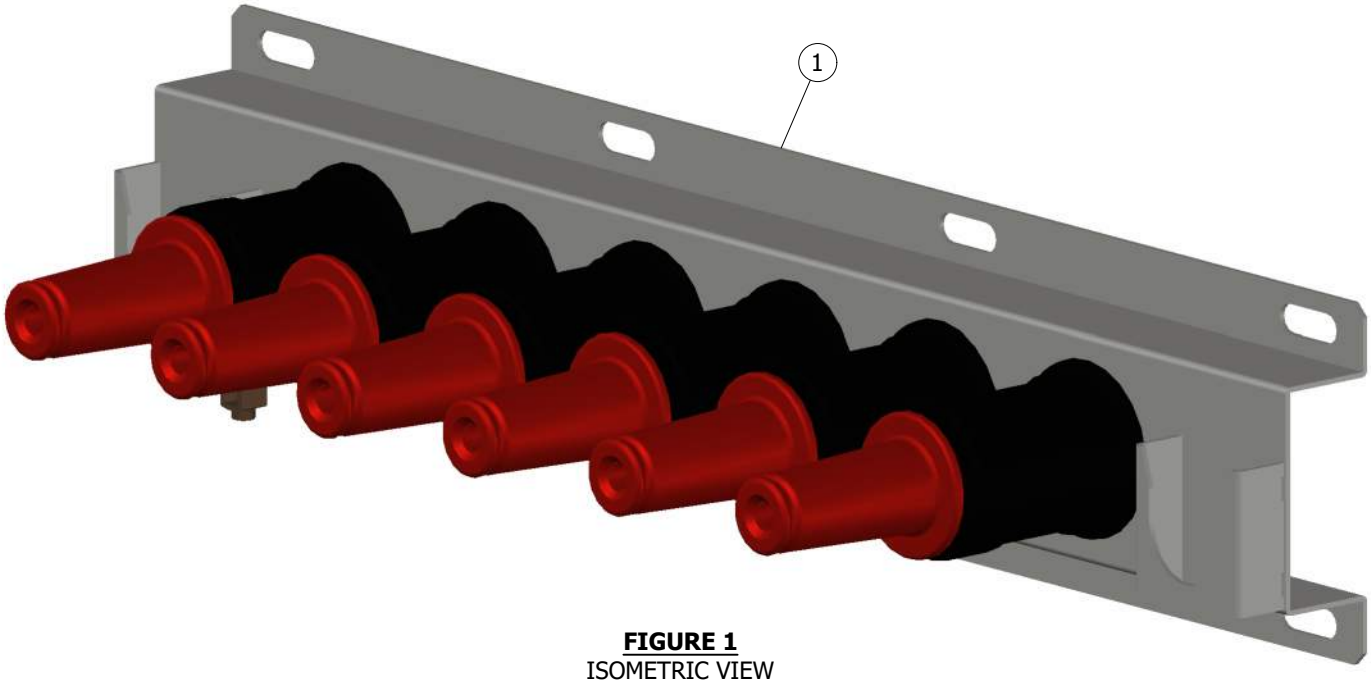

FIGURE 1
ISOMETRIC VIEW

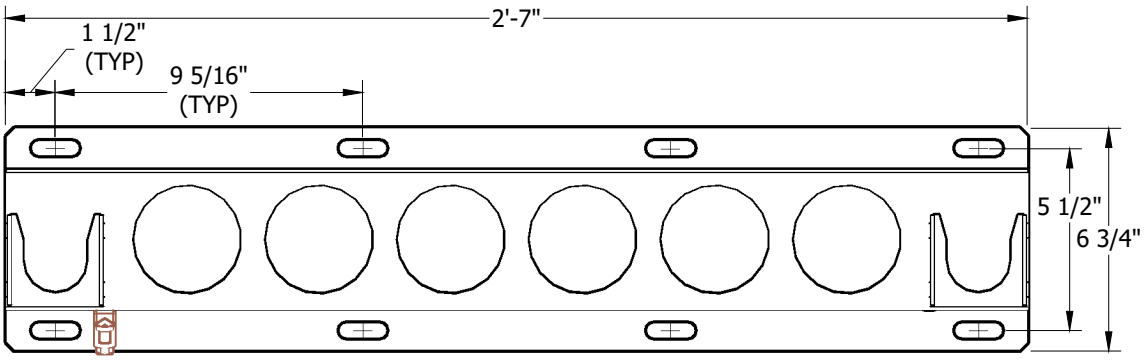

FIGURE 1
FRONT VIEW

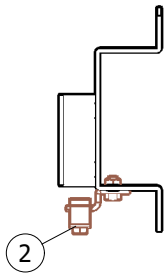

FIGURE 1
SIDE VIEW

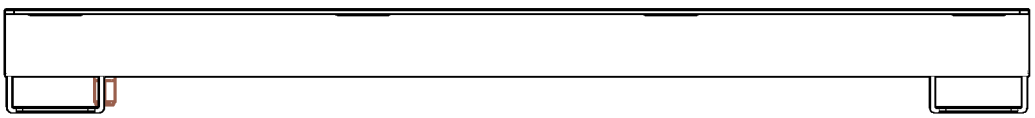

FIGURE 1
TOP VIEW

© 1998 - 2023 San Diego Gas & Electric Company. All rights reserved. Removal of this copyright notice without permission is not permitted under law.

REV	CHANGE	DR	BY	DSN	APV	DATE	REV	CHANGE	DR	BY	DSN	APV	DATE
C							F						
B							E						
A	ORIGINAL ISSUE	EDM	ADW	EJA	KRG	09/20/2023	D						

	Indicates Latest Revision		Completely Revised	X New Page		Information Removed

SDG&E ELECTRIC UNDERGROUND CONSTRUCTION STANDARDS

200A LOADBREAK CABLE RACK

UG4193.1

TABLE OF CONTENTS

INSTALLATION: NONE

BILL OF MATERIALS:

ITEM	DESCRIPTION	QUANTITY	STANDARD PAGE	STOCK NUMBER	DESIGN UNITS
1	RACK, LOADBREAK, 6-WAY, 200A	AS REQ'D	--	S439876	TAP6WY
2	STUD, GROUNDING	AS REQ'D	--		

NOTES:

I. THE SIX WAYS WILL NOT FIT IN THE 3314 HANDHOLE WITH THIS BRACKET.

REFERENCE: NONE

TABLE OF CONTENTS

© 1998 - 2023 San Diego Gas & Electric Company. All rights reserved. Removal of this copyright notice without permission is not permitted under law.

REV	CHANGE	DR	BY	DSN	APV	DATE	REV	CHANGE	DR	BY	DSN	APV	DATE
C							F						
B							E						
A	ORIGINAL ISSUE	EDM	ADW	EJA	KRG	09/20/2023	D						

Indicates Latest Revision | Completely Revised [X] | New Page | Information Removed

SDG&E ELECTRIC UNDERGROUND CONSTRUCTION STANDARDS

200A LOADBREAK CABLE RACK

UG4193.2

SCOPE: THIS STANDARD DESCRIBES THE ADJUSTABLE 6-WAY 200A LOADBREAK CABLE RACK.

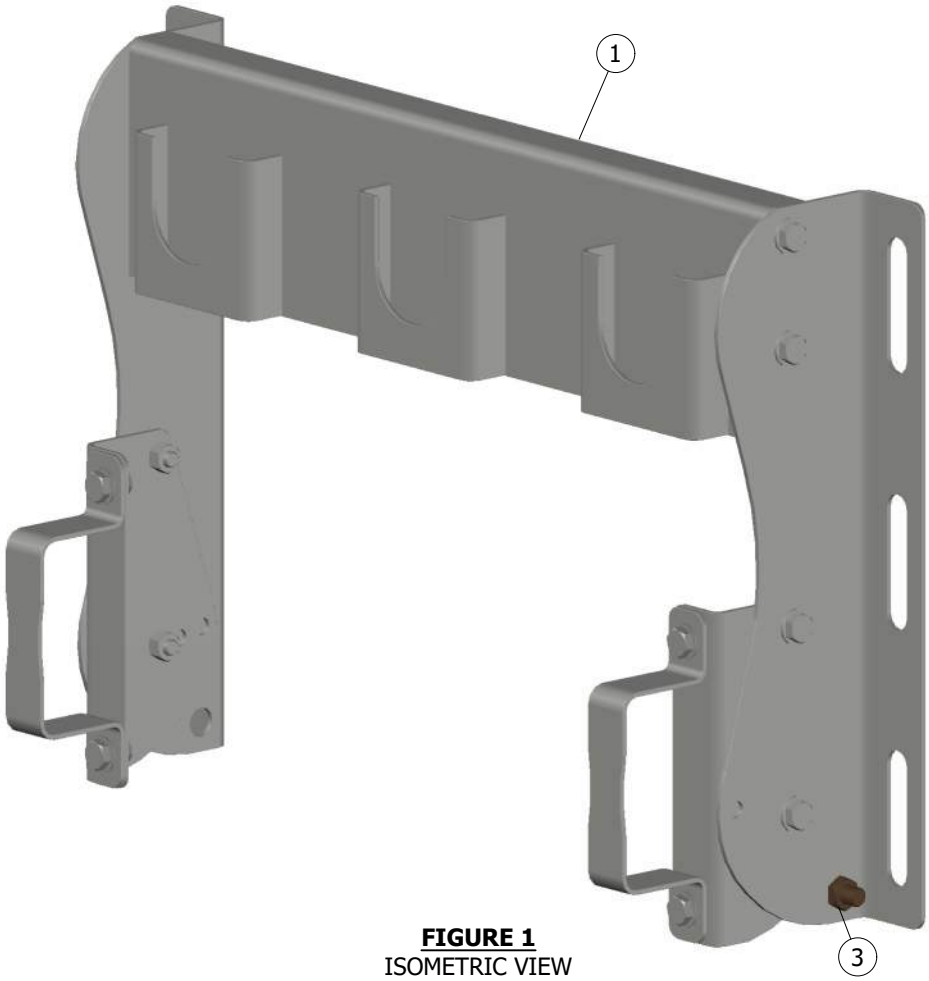

FIGURE 1
ISOMETRIC VIEW

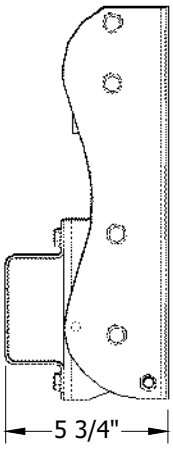

FIGURE 1
PARALLEL CONFIGURATION SIDE VIEW

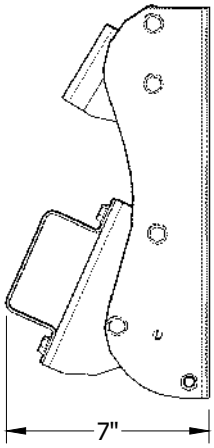

FIGURE 1
31 DEGREE CONFIGURATION SIDE VIEW

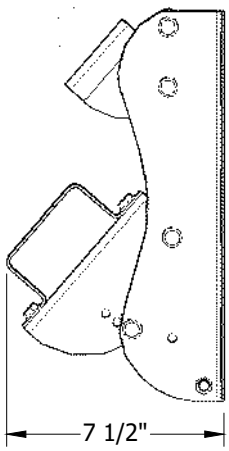

FIGURE 1
41 DEGREE CONFIGURATION SIDE VIEW

TABLE OF CONTENTS

© 1998 - 2023 San Diego Gas & Electric Company. All rights reserved. Removal of this copyright notice without permission is not permitted under law.

REV	CHANGE	DR	BY	DSN	APV	DATE	REV	CHANGE	DR	BY	DSN	APV	DATE
C							F						
B							E						
A	ORIGINAL ISSUE	EDM	ADW	EJA	KRG	09/20/2023	D						

	Indicates Latest Revision	Completely Revised	X New Page	Information Removed

SDG&E ELECTRIC UNDERGROUND CONSTRUCTION STANDARDS

200A LOADBREAK CABLE RACK ADJUSTABLE

UG4193.3

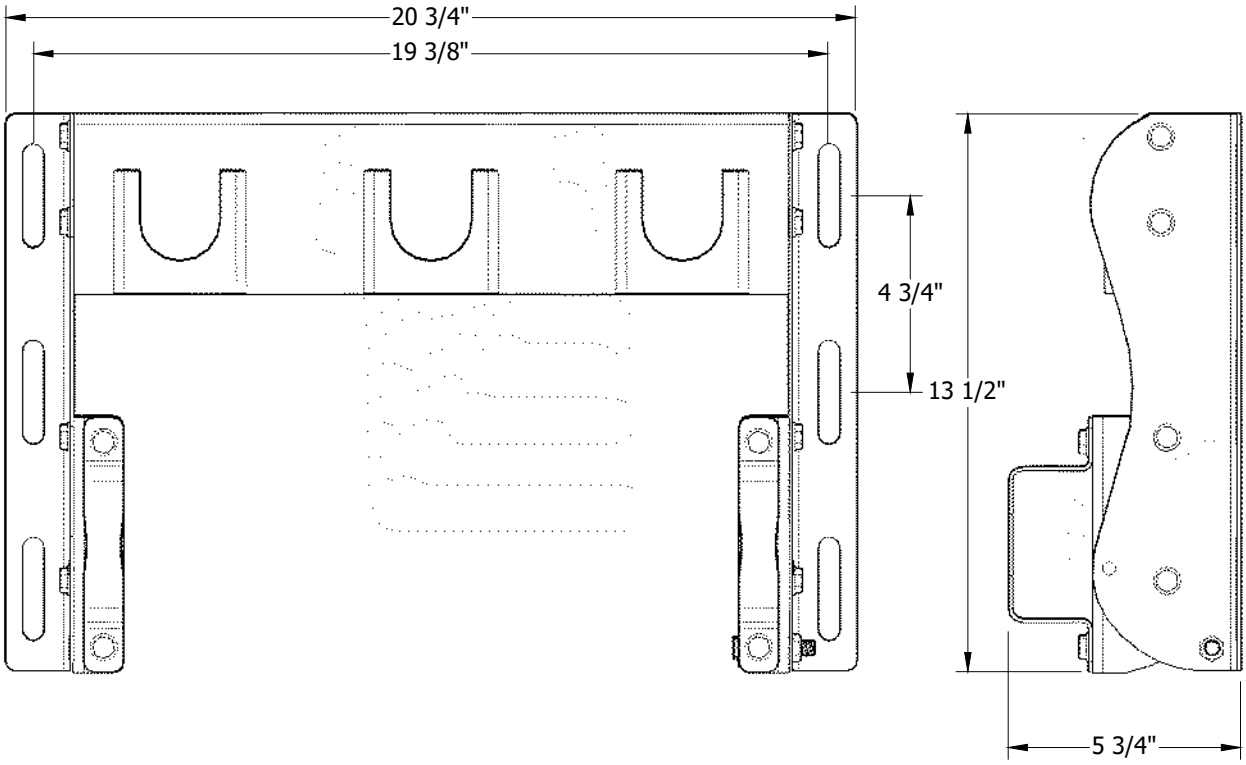

FIGURE 1
FRONT VIEW

FIGURE 1
SIDE VIEW

INSTALLATION: NONE

BILL OF MATERIALS:

ITEM	DESCRIPTION	QUANTITY	STANDARD PAGE	STOCK NUMBER	DESIGN UNITS
1	RACK, LOADBREAK, 6-WAY, 200A, ADJUSTABLE	AS REQ'D	--	S732916	SBTUSO
2	LOADBREAK, 6-WAY, 200A (III)	AS REQ'D	--	S439874	TAP6NB
3	CONNECTOR, POST 2 WIRE 3/8" 10-1 8-2 S	AS REQ'D	--	S262626	--

NOTES:

I. VARIOUS POSITIONS AND ANGLES MAY BE OBTAINED BY REPOSITIONING PARTS AT DIFFERENT ANGLES AND CONFIGURATIONS.

II. WILL BE USED IN 3314, 3315, AND 3316.

(III) NOT SHOWN ON FIGURES.

REFERENCE: NONE

© 1998 - 2023 San Diego Gas & Electric Company. All rights reserved. Removal of this copyright notice without permission is not permitted under law.

REV	CHANGE	DR	BY	DSN	APV	DATE	REV	CHANGE	DR	BY	DSN	APV	DATE
C							F						
B							E						
A	ORIGINAL ISSUE	EDM	ADW	EJA	KRG	09/20/2023	D						

Indicates Latest Revision | Completely Revised [X] | New Page | Information Removed

SDG&E ELECTRIC UNDERGROUND CONSTRUCTION STANDARDS

200A LOADBREAK CABLE RACK
ADJUSTABLE

UG4193.4

TABLE OF CONTENTS

SCOPE: THIS STANDARD DESCRIBES THE 5-WAY 600A TEE WITH 200A LOADBREAK CABLE RACK.

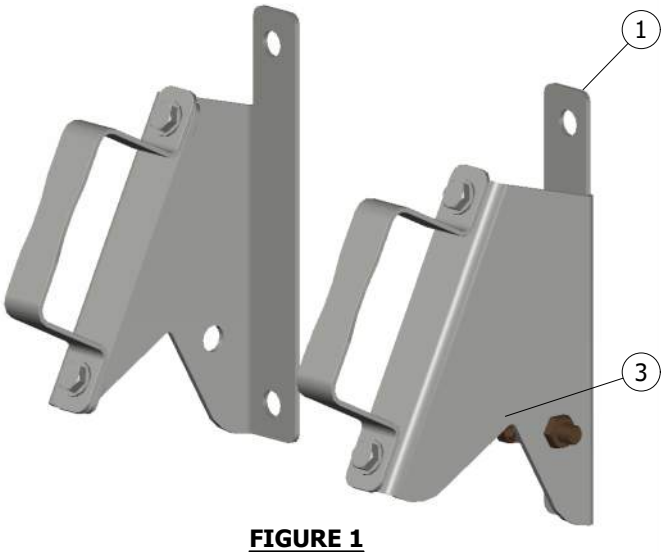

FIGURE 1
ISOMETRIC VIEW

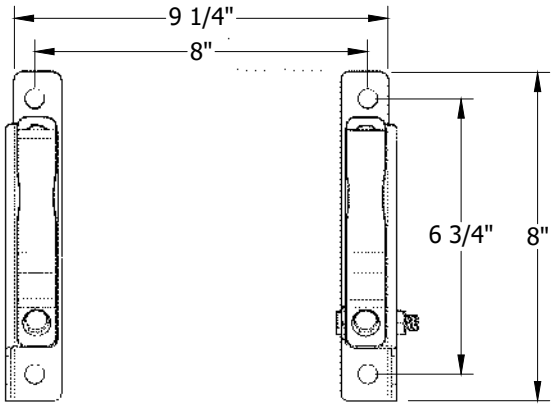

FIGURE 1
FRONT VIEW

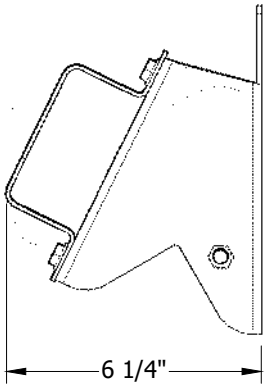

FIGURE 1
SIDE VIEW

INSTALLATION: NONE

BILL OF MATERIALS:

ITEM	DESCRIPTION	QUANTITY	STANDARD PAGE	STOCK NUMBER	DESIGN UNITS
1	RACK, LOADBREAK, 5-WAY, 600A/200A	AS REQ'D	--	S168802	6WSBRK
2	LOADBREAK/TEE, 5-WAY, 600A/200A (I)	AS REQ'D	--	S439860	JUN6-2
3	CONNECTOR, POST 2 WIRE 3/8" 10-1 8-2 S	AS REQ'D	--	S262626	--

NOTES:

(I) NOT SHOWN ON FIGURES.

REFERENCE: NONE

© 1998 - 2023 San Diego Gas & Electric Company. All rights reserved. Removal of this copyright notice without permission is not permitted under law.

REV	CHANGE	DR	BY	DSN	APV	DATE	REV	CHANGE	DR	BY	DSN	APV	DATE
C							F						
B							E						
A	ORIGINAL ISSUE	EDM	ADW	EJA	KRG	09/20/2023	D						

Indicates Latest Revision | Completely Revised [X] | New Page | Information Removed

SDG&E ELECTRIC UNDERGROUND CONSTRUCTION STANDARDS

5-WAY 600A TEE 200A LOADBREAK RACK

UG4193.5

TABLE OF CONTENTS

SCOPE: THIS STANDARD SHOWS THE LOADBREAK ACCESSORIES AND THE INSTALLATION PROCEDURES FOR THE ACCESSORIES USED ON A 2.4KV - 12.47KV PRIMARY SYSTEM VOLTAGES.

TABLE 1

PART IDENTIFICATION CHART

PART	MAJOR USE	STOCK NUMBER	DESIGN UNIT
 INSULATING RECEPTACLE (CAP)	USED AS INSULATING CAP FOR LOADBREAK BUSHING	S204304	INSREC
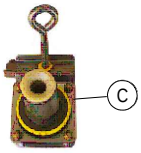 STAND-OFF PLUG	USED AS LOADBREAK STAND-OFF PLUG ELECTRICALLY ISOLATES AND WATERSEALS A LOADBREAK CONNECTOR	S547312	S/OPLG
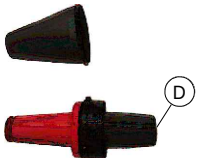 BUSHING PLUG (A)	USED IN BUSHING WELL OR REDUCING TAP WELL FOR ELBOW CONNECTION POINT	S544676	BSHPLG
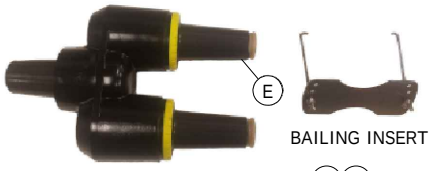 BAILING INSERT FEED-THRU INSERT (A) (B)	USED ON TRANSFORMERS AND THREE-PHASE FUSE CABINETS FITTED WITH BUSHING WELLS TO ALLOW LOOP-FEED CAPABILITY WITH ELBOWS	S544678	FEED-I
 FEED-THRU BUSHING (A)	USED AS TEMPORARY TOOL TO ISOLATE LOW PROFILE TRANSFORMER	S182016	FEED-B
 GROUNDING ELBOW		S603000	GPAKIT
 TEST ROD	USED WITH FEED-THRU BUSHING TO PROVIDE TEST POINT	S603428	-

TABLE OF CONTENTS

©1998 - 2025 San Diego Gas & Electric Company. All rights reserved. Removal of this copyright notice without permission is not permitted under law.

REV	CHANGE	DR	BY	DSN	APV	DATE	REV	CHANGE	DR	BY	DSN	APV	DATE
C	REVISION	-	-	RSW	RDJ	01/01/1996	F	TABLE UPDATE	GLC	ADW	JAS	JAS	12/30/2024
B	REVISION	-	-	JLB	RDJ	01/01/1986	E	TABLE UPDATE	EDM	EJA	GLW	CZH	08/27/2020
A	REVISION	-	-	JLB	RDJ	01/01/1983	D	MOVED FROM UG4192	EDM	JIK	-	-	06/02/2020

TABLE 1 (CONT'D)

PART IDENTIFICATION CHART			
PART	MAJOR USE	STOCK NUMBER	DESIGN UNIT
 4-WAY CABLE TAP WITH BRACKET	USED TO ESTABLISH TWO LATERAL TAPS OR LOOP FROM CIRCUIT	S718328	TAP-4W
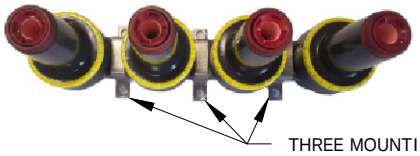 THREE MOUNTING STRAPS 4-WAY CABLE TAP WITHOUT BRACKET (I)	USED TO ESTABLISH TWO LATERAL TAPS OR LOOP FROM CIRCUIT	S718338	TAP4NB
 6-WAY CABLE TAP WITHOUT BUSHING INSERTS	USE FOR INSTALLATION IN 3314 & LARGER HANDHOLES, TERMINATING CABINETS, AND MULTI-USE VAULTS	S439874	TAP6NB
SUSPENSION BLOCK MOUNT 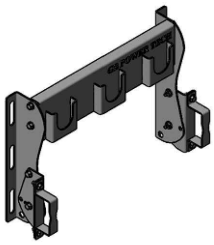 PARALLEL CONFIGURATION 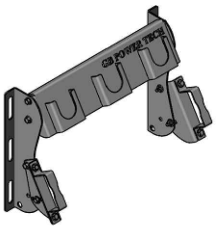 31° CONFIGURATION 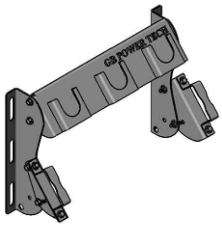 41° CONFIGURATION	USE FOR INSTALLATION IN 3314, 3315 AND TERMINATING CABINET	S732916	SBTUSO

TABLE OF CONTENTS

© 1998 - 2025 San Diego Gas & Electric Company. All rights reserved. Removal of this copyright notice without permission is not permitted under law.

REV	CHANGE	DR	BY	DSN	APV	DATE	REV	CHANGE	DR	BY	DSN	APV	DATE
C	REVISION	-	-	RSW	RDJ	01/01/1996	F	TABLE UPDATE	GLC	ADW	JAS	JAS	12/30/2024
B	REVISION	-	-	JLB	RDJ	01/01/1986	E	TABLE UPDATE	EDM	EJA	GLW	CZH	08/27/2020
A	REVISION	-	-	JLB	RDJ	01/01/1983	D	MOVED FROM UG4192	EDM	JIK	-	-	06/02/2020

INSTALLATION:

(A) ENSURE LOADBREAK CAPABLE BLACK/WHITE BAND IS PRESENT PRIOR TO LOADBREAK OPERATIONS.

(B) INSTALLATION OF INSULATING RECEPTACLE PROCEDURE:

1. REMOVE PROTECTIVE CAP.
2. CONNECT ONE CONCENTRIC NEUTRAL WIRE FROM INSULATING RECEPTACLE TO GROUNDING POINT. ALLOW ENOUGH WIRE FOR HOT STICK OPERATION.
3. LUBRICATE INTERNAL SURFACES WITH SILICONE GREASE.
4. ATTACH HOT STICK TO RECEPTACLE PULLING RING.
5. INSERT THE PROBE OF THE RECEPTACLE INTO THE BUSHING UNTIL IN PLACE AND LOCKING RING IS SEATED.
6. WHEN REMOVING, ATTACH HOT STICK TO THE PULLING RING, ROTATE RECEPTACLE ON BUSHING TO BREAK FRICTION AND PULL.

(C) INSTALLATION OF STAND-OFF PLUG PROCEDURE:

1. AFTER REMOVING INSULATING CAP, LUBRICATE PLUG SURFACE WITH SILICONE GREASE.
2. ATTACH STAND-OFF PLUG EYE FIRMLY TO HOT STICK.
3. SLIDE STAND-OFF PLUG ONTO PARKING STAND AND TIGHTEN UNTIL SNUG BY TURNING EYE CLOCKWISE.
4. MAKE CAPACITANCE TEST ON ELBOW CONNECTOR BEFORE REMOVING FROM BUSHING.
5. AFTER PLACING STAND-OFF PLUG ON PARKING STAND, REMOVE ELBOW CONNECTOR FROM BUSHING AND PLACE ON THE STAND-OFF PLUG.
6. IF ENTIRE ASSEMBLY (ELBOW AND STAND-OFF PLUG) IS TO BE REMOVED FROM PARKING STAND, ATTACH TOOL TO EYE OF THE STAND-OFF PLUG. REMOVE FROM PARKING STAND, AND PLACE WHERE DESIRED.
7. WHEN RETURNING ELBOW CONNECTOR TO THE EQUIPMENT BUSHING, REVERSE THE PROCEDURE.

(D) INSTALLATION OF BUSHING PLUG PROCEDURE -- (DE-ENERGIZED OPERATION ONLY):

1. CHECK BUSHING WELL FOR CLEANLINESS.
2. LUBRICATE BASE WITH SILICONE GREASE. PLACE LUBRICATED PORTION OF THE BUSHING PLUG IN THE BUSHING WELL (FLOWER POT).
3. ROTATE THE BUSHING PLUG IN A CLOCKWISE DIRECTION UNTIL IT BOTTOMS ON THE BUSHING WELL STUD.
4. WIPE BUSHING PLUG SURFACE CLEAN BEFORE INSTALLING ELBOW CONNECTOR OR INSULATING RECEPTACLE.

(E) INSTALLATION OF FEED-THRU INSERT -- (DE-ENERGIZED OPERATION ONLY):

1. CHECK BUSHING WELL FOR CLEANLINESS.
2. LUBRICATE BASE WITH SILICONE GREASE. PLACE LUBRICATED PORTION OF THE FEED-THRU INSERT INTO THE BUSHING WELL (FLOWER POT).
3. ROTATE THE INSERT IN A CLOCKWISE DIRECTION UNTIL IT BOTTOMS ON THE BUSHING WELL STUD.
4. IF THE INSERT DOES NOT LINE UP WITH THE ELBOWS IT MAY BE TURNED COUNTERCLOCKWISE 180 DEGREES. THIS WILL NOT AFFECT THE DIELECTRIC OR CURRENT CARRYING CAPABILITY.
5. INSTALL THE SUPPLIED BAILING ASSEMBLY OVER THE INSERT. THIS WILL FIRMLY SUPPORT THE INSERT AT THE DESIRED LOCATION.
6. WIPE THE INSERT CLEAN BEFORE INSTALLING ELBOWS OR INSULATING RECEPTACLES.

TABLE OF CONTENTS

© 1998 - 2025 San Diego Gas & Electric Company. All rights reserved. Removal of this copyright notice without permission is not permitted under law.

REV	CHANGE	DR	BY	DSN	APV	DATE	REV	CHANGE	DR	BY	DSN	APV	DATE
C	REVISION	-	-	RSW	RDJ	01/01/1996	F	TABLE UPDATE	GLC	ADW	JAS	JAS	12/30/2024
B	REVISION	-	-	JLB	RDJ	01/01/1986	E	TABLE UPDATE	EDM	EJA	GLW	CZH	08/27/2020
A	REVISION	-	-	JLB	RDJ	01/01/1983	D	MOVED FROM UG4192	EDM	JIK	-	-	06/02/2020

X Indicates Latest Revision | Completely Revised | New Page | X Information Removed

SDG&E ELECTRIC UNDERGROUND CONSTRUCTION STANDARDS

200A LOADBREAK ACCESSORIES, 12KV

UG4195.3

INSTALLATION (CONT'D):

(F) INSTALLATION OF FEED-THRU BUSHING PROCEDURE:

1. AFTER REMOVING INSULATING CAP, LUBRICATE FEED-THRU BUSHING WITH SILICONE GREASE.
2. ATTACH FEED-THRU EYE FIRMLY TO HOT STICK.
3. SLIDE FEED-THRU ONTO PARKING STAND. TIGHTEN DOWN EYE BY TURNING CLOCKWISE UNTIL SNUG.
4. MAKE CAPACITANCE TEST ON ONE ELBOW TO ESTABLISH CONDITION OF CIRCUIT. REMOVE ELBOW FROM THE BUSHING AND PLACE ON NEAREST BUSHING OF THE FEED-THRU. INSERT THE PROBE AND LOADBREAK ELBOW INTO THE BUSHING AND PUSH UNTIL IT IS FIRMLY IN PLACE AND THE LOCKING RING IS SEATED.
5. MAKE CAPACITANCE TEST ON OTHER ELBOW.
6. AFTER CIRCUIT HAS BEEN TESTED, TO ESTABLISH CONDITION OF CIRCUIT, REMOVE THE LOADBREAK ELBOW FROM THE BUSHING AND PLACE ON REMAINING BUSHING OF THE FEED-THRU.
7. TO RETURN THE LOADBREAK ELBOW TO THE EQUIPMENT BUSHING, REVERSE THE PROCEDURE.

(G) INSTALLATION OF GROUNDING ELBOW KIT PROCEDURE -- (DE-ENERGIZED OPERATION ONLY):

1. RECEIVE CLEARANCE FROM SWITCHING CENTER, WHEN NEEDED.
2. ATTACH THE GROUNDING ELBOW CABLE CLAMP TO THE EQUIPMENT GROUND. LAY GROUNDING ELBOW ON EQUIPMENT PAD, TO BE USED LATER.
3. INSTALL CLEAN FEED-THRU BUSHING ONTO PARKING STAND OF THE EQUIPMENT AND TIGHTEN UNTIL SNUG BY TURNING EYE CLOCKWISE.
4. USING HOT STICK, REMOVE THE LOADBREAK ELBOW THAT IS TO BE GROUNDED FROM SOURCE OF FEED.
5. PARK THIS ELBOW ON FEED-THRU BUSHING.
6. TEST ELBOW BY APPROVED MEANS, TO INSURE THAT CABLE IS DE-ENERGIZED. (SEE TEST ROD INSTALLATION PROCEDURE.)
7. AFTER TESTING IS COMPLETED AND IT HAS BEEN DETERMINED THAT THE CABLE IS DE-ENERGIZED, USE A HOT STICK TO INSTALL THE GROUNDING ELBOW ONTO FEED-THRU BUSHING. PROCEDURE IS NOW COMPLETED.
8. TO REMOVE GROUND ALWAYS REMOVE THE GROUNDING ELBOW FROM THE FEED-THRU BUSHING PRIOR TO REMOVING FROM THE EQUIPMENT GROUND.

(H) INSTALLATION OF TEST ROD PROCEDURE:

1. INSTALL CLEAN FEED-THRU BUSHING IN PARKING STAND ON EQUIPMENT AND TIGHTEN UNTIL SNUG BY TURNING EYE CLOCKWISE.
2. USING HOT STICK, REMOVE THE LOADBREAK ELBOW THAT IS TO BE TESTED FROM SOURCE OF FEED.
3. PARK THIS ELBOW ON FEED-THRU BUSHING.
4. USING HOT STICK, INSTALL TEST ROD INTO FEED-THRU BUSHING.
5. TEST.

BILL OF MATERIALS: NONE

NOTES:

(I) USED IN THE 200A, THREE-PHASE TERMINATING CABINET.

REFERENCE: NONE

© 1998 - 2025 San Diego Gas & Electric Company. All rights reserved. Removal of this copyright notice without permission is not permitted under law.

REV	CHANGE	DR	BY	DSN	APV	DATE	REV	CHANGE	DR	BY	DSN	APV	DATE
C	REVISION	-	-	RSW	RDJ	01/01/1996	F	TABLE UPDATE	GLC	ADW	JAS	JAS	12/30/2024
B	REVISION	-	-	JLB	RDJ	01/01/1986	E	TABLE UPDATE	EDM	EJA	GLW	CZH	08/27/2020
A	REVISION	-	-	JLB	RDJ	01/01/1983	D	MOVED FROM UG4192	EDM	JIK	-	-	06/02/2020

SCOPE: THIS STANDARD SHOWS 200 AMP DEADBREAK CONNECTORS USED ON A 12KV AND BELOW SYSTEMS.

CAUTION:

* THIS ELBOW CONNECTOR MUST BE OPERATED DE-ENERGIZED ONLY. TAG, (ITEM 9) "DO NOT OPERATE ENERGIZED", MUST BE ATTACHED THRU ITEM 3.

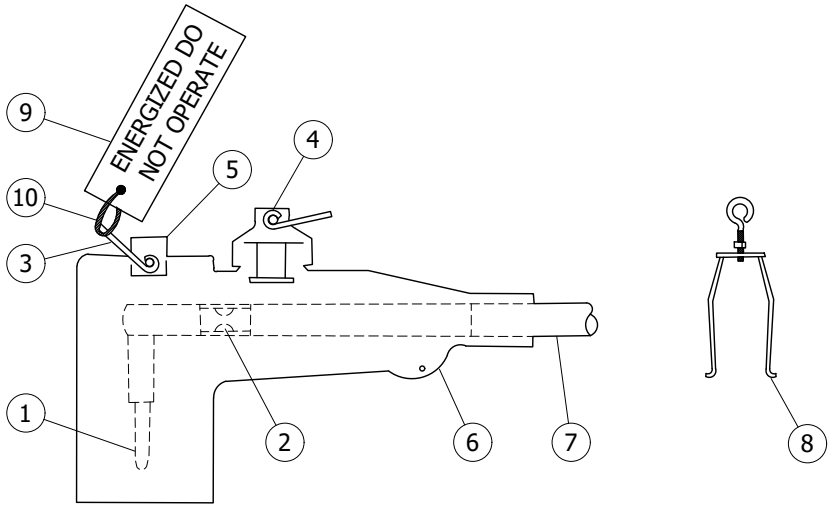

TABLE 1

RATINGS	
KV LINE TO GROUND	8.3
AMPERES	200
KV-BIL	95

FIGURE 1
200 AMP DEADBREAK ELBOW

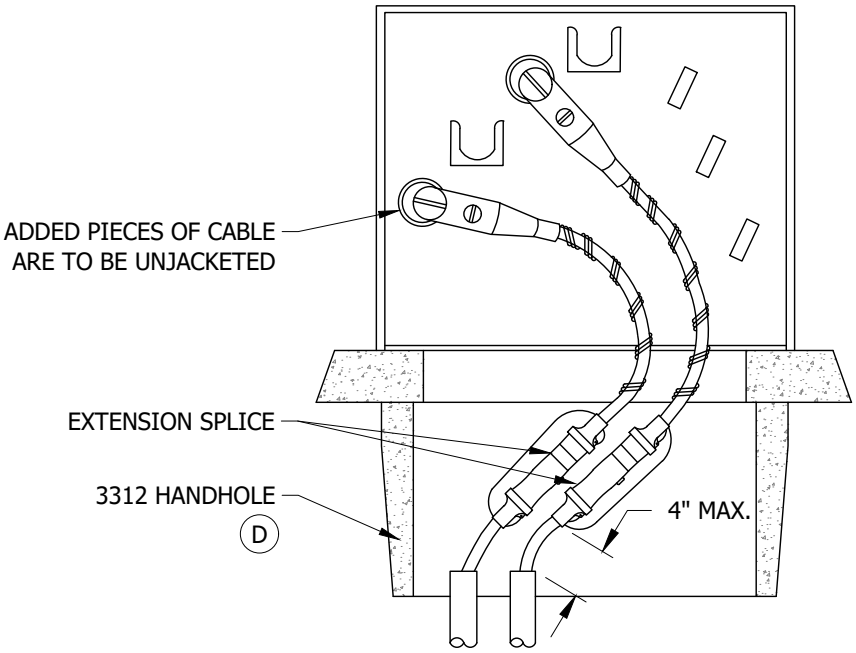

FIGURE 2
INSTALLATION EXAMPLE 1
SINGLE-PHASE LIVE FRONT TO DEAD FRONT

TABLE OF CONTENTS

© 1998 - 2020 San Diego Gas & Electric Company. All rights reserved. Removal of this copyright notice without permission is not permitted under law.

REV	CHANGE	DR	BY	DSN	APV	DATE	REV	CHANGE	DR	BY	DSN	APV	DATE
C	REVISION	-	-	-	JLB/RDJ	1/1/1987	F						
B	REVISION	-	-	-	RES/DRH	1/1/1985	E	FORMATTING	EDM	JIK	-	-	06/02/2020
A	REVISION	-	-	-	JLB/RDJ	1/1/1985	D	REVISION	-	-	-	RSW/RDJ	1/1/1996

X Indicates Latest Revision | Completely Revised | New Page | Information Removed

SDG&E ELECTRIC UNDERGROUND CONSTRUCTION STANDARDS

200 AMP DEADBREAK CONNECTORS, 12KV

UG4196.1

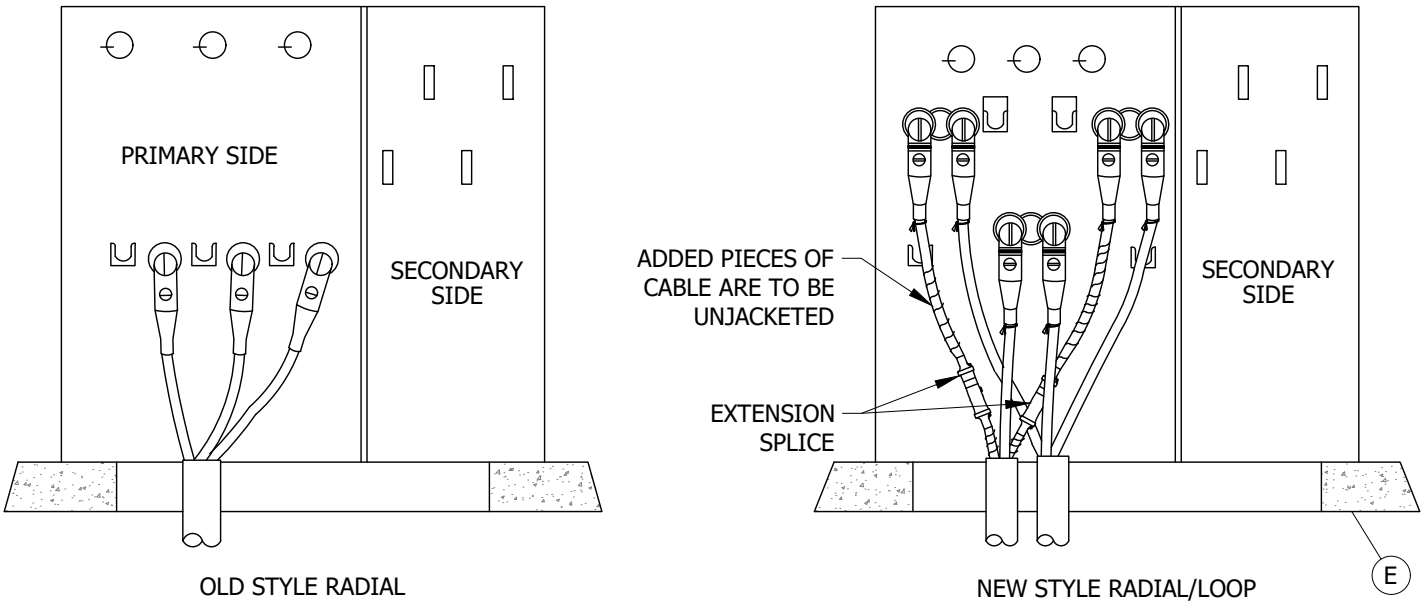

FIGURE 3
INSTALLATION EXAMPLE 2
OLD STYLE RADIAL TO NEW STYLE RADIAL/LOOP TRANSFORMER REPLACEMENT

TABLE 2

PART IDENTIFICATION CHART

PART	MAJOR USE	CABLE SIZE	STOCK NUMBER
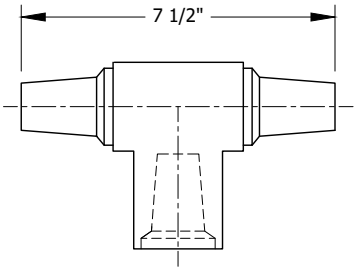 "T" CONNECTOR	USED TO JOIN THREE CABLES (TWO DEADBREAK ELBOWS & ONE STRAIGHT PLUG) USE WITH BAIL ASSEMBLIES	--	S256112
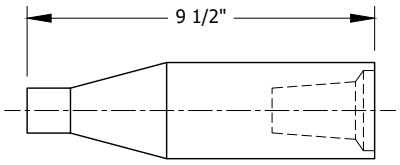 STRAIGHT RECEPTACLE (III)	USED TO JOIN A STRAIGHT PLUG USE WITH BAIL ASSEMBLY	#2 CU	S570256
		#4 CU	S570768
		2/0 AL	S570848
		#2 SOL AL	S570816

© 1998 - 2020 San Diego Gas & Electric Company. All rights reserved. Removal of this copyright notice without permission is not permitted under law.

REV	CHANGE	DR	BY	DSN	APV	DATE	REV	CHANGE	DR	BY	DSN	APV	DATE
C	REVISION	-	-	-	JLB/RDJ	1/1/1987	F						
B	REVISION	-	-	-	RES/DRH	1/1/1985	E	FORMATTING	EDM	JIK	-	-	06/02/2020
A	REVISION	-	-	-	JLB/RDJ	1/1/1985	D	REVISION	-	-	-	RSW/RDJ	1/1/1996

TABLE 2 (CONT'D)

PART IDENTIFICATION CHART			
PART	**MAJOR USE**	**CABLE SIZE**	**STOCK NUMBER**
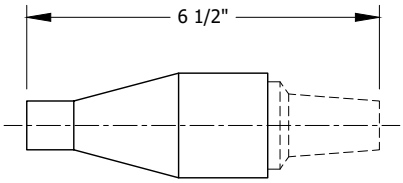 STRAIGHT PLUG (III)	USED TO JOIN A STRAIGHT RECEPTACLE OR "T" CONNECTOR USE WITH BAIL ASSEMBLY	#2 CU	S544688
		#4 CU	S544694
		2/0 AL	S547316
		#2 SOL AL	S547314
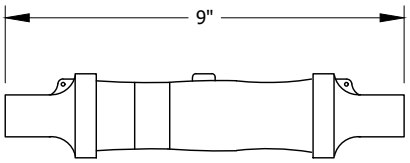 EXTENSION SPLICE (C)(II)	THIS SPLICE TO BE USED WHEN EXTRA CABLE IS REQUIRED ON EXISTING SYSTEMS WITHIN THE SAME STRUCTURE OR SUBSTRUCTURE EXAMPLES ARE: - CABLE TO EXISTING EQUIPMENT LOCATED DIRECTLY ON TOP OF SUBSTRUCTURE - CABLE TAPS OR OTHER EQUIPMENT BEING RAISED OR RELOCATED IN SUBSTRUCTURES - TRANSFORMER OR OTHER PAD-MOUNTED EQUIPMENT REPLACEMENT. - SPLICING OF CABLE WHERE 200 AMP TEES ARE NOT REQUIRED.	#2 CU	S668400
		#2 SOL AL	S668402
		2/0 AL	S668404
		#2 CU - #2 SOL AL	S668406
		#2 CU - 2/0 AL	S668408

INSTALLATION:

A. FOR INSTALLATION PROCEDURES, CONSULT INDIVIDUAL MANUFACTURERS CONTAINERS FOR INSTRUCTIONS.

B. BAILING PROCEDURES FOR DEADBREAK ELBOW AND INSERT.

1. OPERATION OF EXISTING ASSEMBLY - REBAIL TO EXISTING STOP NUT POSITION. (THIS WILL PRODUCE THE LEAST AMOUNT OF CHANGE TO AN INTERFACE CONDITION THAT IS WORKING. REDUCING OR INCREASING THE TURNS MAY RESULT IN CREATING PROBLEMS WHERE NONE EXIST.)
2. INSTALLATION OF NEW ASSEMBLY (ELBOW AND/OR INSERT) - WITH THE ELBOW FULLY SEATED ON THE BUSHING, PULL HOLD-DOWN BAIL UP OVER THE TOP OF ELBOW SO THAT THE EYE BOLT ON THE BAIL IS DIRECTLY OVER THE HOLD DOWN BAIL PRESSURE PLATE. TURN THE EYE BOLT IN A CLOCKWISE DIRECTION UNTIL INITIAL CONTACT IS MADE WITH THE HOLD DOWN BAIL PRESSURE PLATE; THEN TIGHTEN THE EYE BOLT TWO FULL (360°) TURNS MAXIMUM, 1 1/2 TURNS MINIMUM. WITH THE EYE BOLT IN ITS ASSEMBLED POSITION, ADJUST THE STOP NUT BY BRINGING THE NUT DOWN TO THE TOP PLATE OF THE BAIL. THE NUT SHOULD ACT AS A STOP TO PREVENT THE EYE BOLT FROM APPLYING EXCESSIVE FORCE ON THE ELBOW FOR FUTURE OPERATION WITH A HOT STICK.

(C) FOR EXTENSION SPLICE INSTALLATION PROCEDURE, CONSULT INDIVIDUAL MANUFACTURERS CURRENT INSTRUCTIONS.

(D) 3312 HANDHOLE IS REQUIRED ON REPLACEMENT OF SINGLE-PHASE LIVE FRONT TRANSFORMERS.

(E) 3312 HANDHOLE IS NOT REQUIRED ON REPLACEMENT OF THREE-PHASE LIVE FRONT OR DEAD FRONT TRANSFORMERS.

© 1998 - 2020 San Diego Gas & Electric Company. All rights reserved. Removal of this copyright notice without permission is not permitted under law.

REV	CHANGE	DR	BY	DSN	APV	DATE	REV	CHANGE	DR	BY	DSN	APV	DATE
C	REVISION	-	-	-	JLB/RDJ	1/1/1987	F						
B	REVISION	-	-	-	RES/DRH	1/1/1985	E	FORMATTING	EDM	JIK	-	-	06/02/2020
A	REVISION	-	-	-	JLB/RDJ	1/1/1985	D	REVISION	-	-	-	RSW/RDJ	1/1/1996

TABLE OF CONTENTS

BILL OF MATERIALS:

ITEM	DESCRIPTION		QUANTITY	STANDARD PAGE	STOCK NUMBER			DESIGN UNITS
					2 CU	2 SOL AL	2/0 AL	
1	ELECTRICAL MALE CONTACT	PART OF DEADBREAK ELBOW CONNECTOR KIT	--	--	S443456	S443842	S443844	--
2	COMPRESSION SOCKET TERMINAL		--	--				
3	ELBOW PULLING EYE		--	--				
4	VOLTAGE TEST POINT AND COVER		--	--				
5	PRESSURE PLATE FOR HOLD DOWN BAIL		--	--				
6	GROUNDING POINT		--	--				
7	CABLE		--	--				
8	HOLD DOWN BAIL (I)		--	--	S120416 (IV)			--
9	TAG, "DO NOT OPERATE ENERGIZED"	--	--	3232	S647966			--
10	TIE STRAP - 6 IN	--	--	3232	S698224			--

NOTES:

(I) ELBOW COMES COMPLETE WITH HOLD DOWN BAIL.

(II) SPLICE IS COMPLETELY SEALED AND MAY BE INSTALLED IN SUBSURFACE EQUIPMENT.

(III) **DO NOT** USE A STRAIGHT RECEPTACLE AND STRAIGHT PLUG WHEN EXTRA CABLE IS REQUIRED ON EXISTING SYSTEMS WITHIN THE SAME STRUCTURE OR SUBSTRUCTURE. INSTEAD OF THE STRAIGHT RECEPTACLE AND STRAIGHT PLUG, USE EXTENSION SPLICE SHOWN ON TABLE 2. NON USE EXAMPLES ARE:

a. CABLE TO EXISTING EQUIPMENT LOCATED DIRECTLY ON TOP OF SUBSTRUCTURE.

b. CABLE TAPS OR OTHER EQUIPMENT BEING RAISED OR RELOCATED IN SUBSTRUCTURES.

c. TRANSFORMER OR OTHER PAD-MOUNTED EQUIPMENT REPLACEMENT.

(IV) SPARE PART NUMBER.

REFERENCE: NONE

TABLE OF CONTENTS

© 1998 - 2020 San Diego Gas & Electric Company. All rights reserved. Removal of this copyright notice without permission is not permitted under law.

REV	CHANGE	DR	BY	DSN	APV	DATE	REV	CHANGE	DR	BY	DSN	APV	DATE
C	REVISION	-	-	-	JLB/RDJ	1/1/1987	F						
B	REVISION	-	-	-	RES/DRH	1/1/1985	E	FORMATTING	EDM	JIK	-	-	06/02/2020
A	REVISION	-	-	-	JLB/RDJ	1/1/1985	D	REVISION	-	-	-	RSW/RDJ	1/1/1996

SCOPE: THIS STANDARD SHOWS 200 AMP ACCESSORIES USED ON 12KV AND BELOW SYSTEM.

TABLE 1

PART IDENTIFICATION CHART

PART	MAJOR USE	STOCK NUMBER
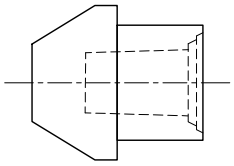 DEADEND RECEPTACLE (C)	USED TO CAP DEADBREAK TRANSFORMER BUSHING, "TEE" CONNECTOR OR STRAIGHT PLUG	S570304
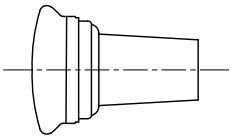 DEADEND PLUG (D)	USED FOR DEADBREAK TO CAP "TEE" CONNECTOR, DEADBREAK ELBOW OR STRAIGHT RECEPTACLE TO BE USED WITH ASSEMBLY BAIL (STOCK NUMBER S120352)	S544864
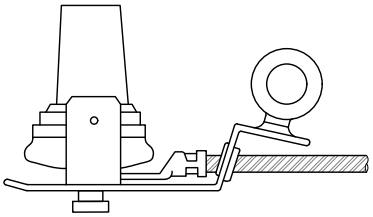 GROUNDING PLUG (TOOL) (E)	USED FOR GROUNDING ELBOW RECEPTACLES	S544844
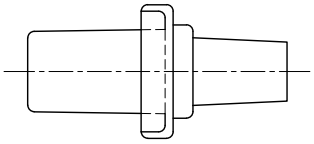 BUSHING PLUG (F)	USED IN DEADBREAK TRANSFORMER "FLOWER POT" BUSHING WELLS, AND FORMS THE MATING BUSHING FOR THE DEADBREAK ELBOWS	S544684

INSTALLATION:

A. BEFORE ASSEMBLING BUSHING PLUG, MAKE SURE THE "FLOWER POT" BUSHING WELL IS CLEAR OF ALL CONTAMINANTS.

B. IF THE ELBOW CONNECTOR IS NOT TO BE IMMEDIATELY ASSEMBLED, REPLACE RED PROTECTIVE SHIPPING CAP. NOTE: THIS IS A PROTECTIVE CAP ONLY, NOT AN INSULATING RECEPTACLE.

(C) DEADEND RECEPTACLE PROCEDURE:

1. LUBRICATE PLUG NOSE WITH SILICONE GREASE, (STOCK NUMBER S391424).
2. REMOVE PROTECTIVE CAP ON RECEPTACLE AND INSERT NYLON ROD.
3. INSERT PLUG INTO RECEPTACLE.
4. REMOVE NYLON STRING OR ROD.

TABLE OF CONTENTS

© 1998 - 2020 San Diego Gas & Electric Company. All rights reserved. Removal of this copyright notice without permission is not permitted under law.

REV	CHANGE	DR	BY	DSN	APV	DATE	REV	CHANGE	DR	BY	DSN	APV	DATE
C	FORMATTING	EDM	JIK	-	-	06/02/2020	F						
B	REVISION	-	-	-	JLB/RDJ	1/1/1987	E						
A	REVISION	-	-	-	JLB/RDJ	1/1/1976	D						

INSTALLATION (CONT'D):

(D) DEADEND PLUG PROCEDURE:

1. REMOVE PROTECTIVE CAP AND LUBRICATE NOSE OF PLUG WITH SILICONE GREASE, (STOCK NUMBER S391424).
2. PLACE NYLON ROD INTO RECEPTACLE.
3. INSERT PLUG INTO RECEPTACLE.
4. REMOVE NYLON STRING OR ROD.

(E) GROUNDING PLUG PROCEDURE:

1. AFTER REMOVING PROTECTIVE CAP AND CLEANING PLUG, LUBRICATE SURFACE WITH SILICONE GREASE, (STOCK NUMBER S391424). ALWAYS REPLACE PROTECTIVE CAP WHEN PLUG IS NOT IN USE.
2. CONNECT SYSTEM GROUND TO CONDUCTOR PROVIDED ON PLUG CARRIAGE ASSEMBLY.
3. ATTACH PLUG CARRIAGE EYE TO HOT STICK.
4. SLIDE CARRIAGE ASSEMBLY ONTO PARKING STAND. THE CARRIAGE CAN BE PUSHED OR PULLED ONTO PARKING STAND DEPENDING ON POSITION OF ELBOWS AND WORK SPACE AVAILABLE.
5. MAKE CAPACITANCE TEST BEFORE REMOVING FROM APPARATUS BUSHING.
6. AFTER PLACING CARRIAGE ON PARKING STAND, REMOVE ELBOW CONNECTOR FROM BUSHING OF THE APPARATUS AND PLACE ON PLUG.
7. APPLY PLUG HOLD DOWN BAIL TO ELBOW BY TURNING BAIL EYE CLOCKWISE WITH HOT STICK.
8. IF ENTIRE ASSEMBLY IS TO BE REMOVED FROM PARKING STAND, ATTACH HOT STICK TO EYE OF CARRIAGE ASSEMBLY, REMOVE FROM PARKING STAND AND PLACE WHERE DESIRED.
9. TO RETURN ELBOW CONNECTOR TO THE APPARATUS BUSHING, SIMPLY REVERSE THE OPERATIONAL SEQUENCE.

(F) BUSHING PLUG PROCEDURE:

1. LUBRICATE BASE OF BUSHING WITH LUBRICANT SUPPLIED. (DO NOT SUBSTITUTE.) PLACE THE LUBRICATED PORTION OF THE BUSHING IN THE "FLOWER POT".
2. ROTATE THE BUSHING IN A CLOCKWISE DIRECTION UNTIL THE BUSHING CONTACT BOTTOMS ON THE "FLOWER POT" STUD. (THE CONDUCTIVE LIP ON THE BUSHING SHOULD TOUCH OR BE APPROXIMATELY 1/16" FROM THE "FLOWER POT" FLANGE.)
3. WIPE BUSHING SURFACE CLEAN BEFORE ASSEMBLY WITH ELBOW CONNECTOR.

BILL OF MATERIALS: NONE

NOTES: NONE

REFERENCE:

a. STANDARD PRACTICES IN THE CONSTRUCTION MANAGEMENT STANDARD PRACTICE MANUAL MUST BE FOLLOWED IN THESE INSTALLATION PROCEDURES.

TABLE OF CONTENTS

© 1998 - 2020 San Diego Gas & Electric Company. All rights reserved. Removal of this copyright notice without permission is not permitted under law.

REV	CHANGE	DR	BY	DSN	APV	DATE	REV	CHANGE	DR	BY	DSN	APV	DATE
C	FORMATTING	EDM	JIK	-	-	06/02/2020	F						
B	REVISION	-	-	-	JLB/RDJ	1/1/1987	E						
A	REVISION	-	-	-	JLB/RDJ	1/1/1976	D						

X Indicates Latest Revision | Completely Revised | New Page | Information Removed

SCOPE: THIS STANDARD COVERS THE CLEER, 600A, LIVE LINE TOOL OPERATED, SEPARABLE CONNECTOR.

CAUTION:

* FEEDER MUST BE DE-ENERGIZED DURING ANY CONSTRUCTION AND INTERCONNECTION WITH THE COOPER CLEER.

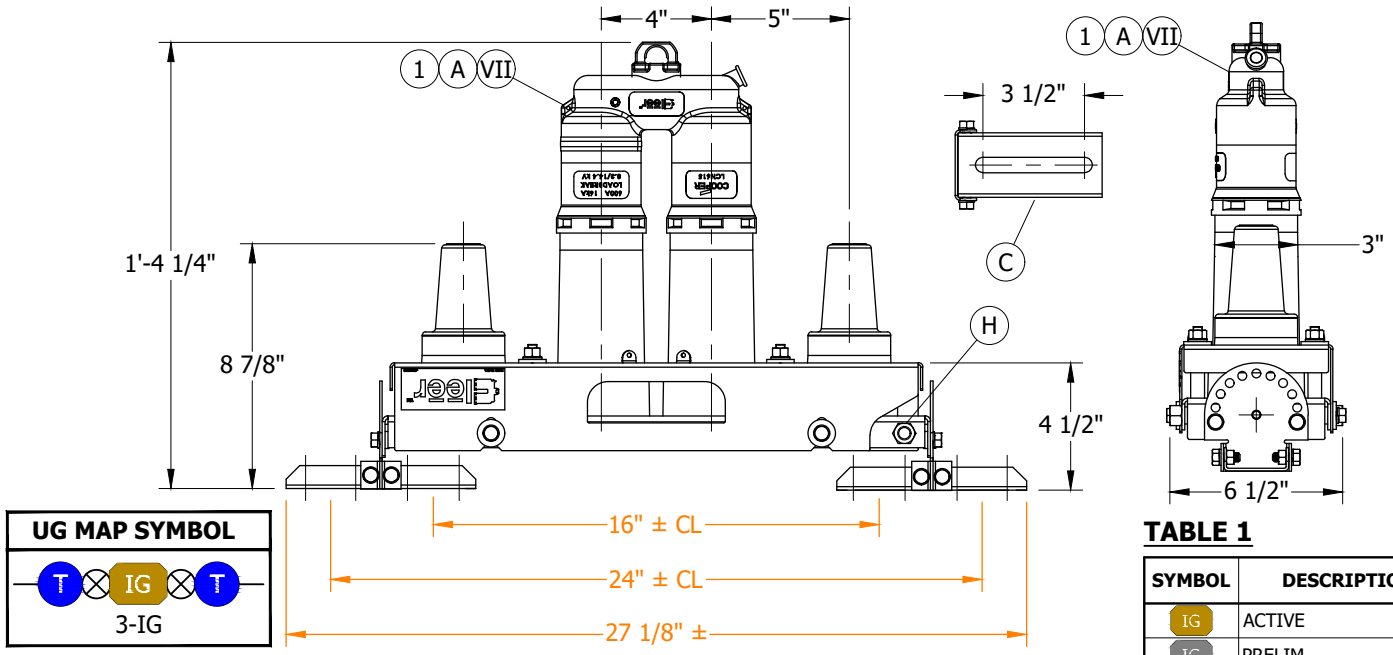

UG MAP SYMBOL
T IG T
3-IG

TABLE 1

SYMBOL	DESCRIPTION
IG	ACTIVE
IG	PRELIM

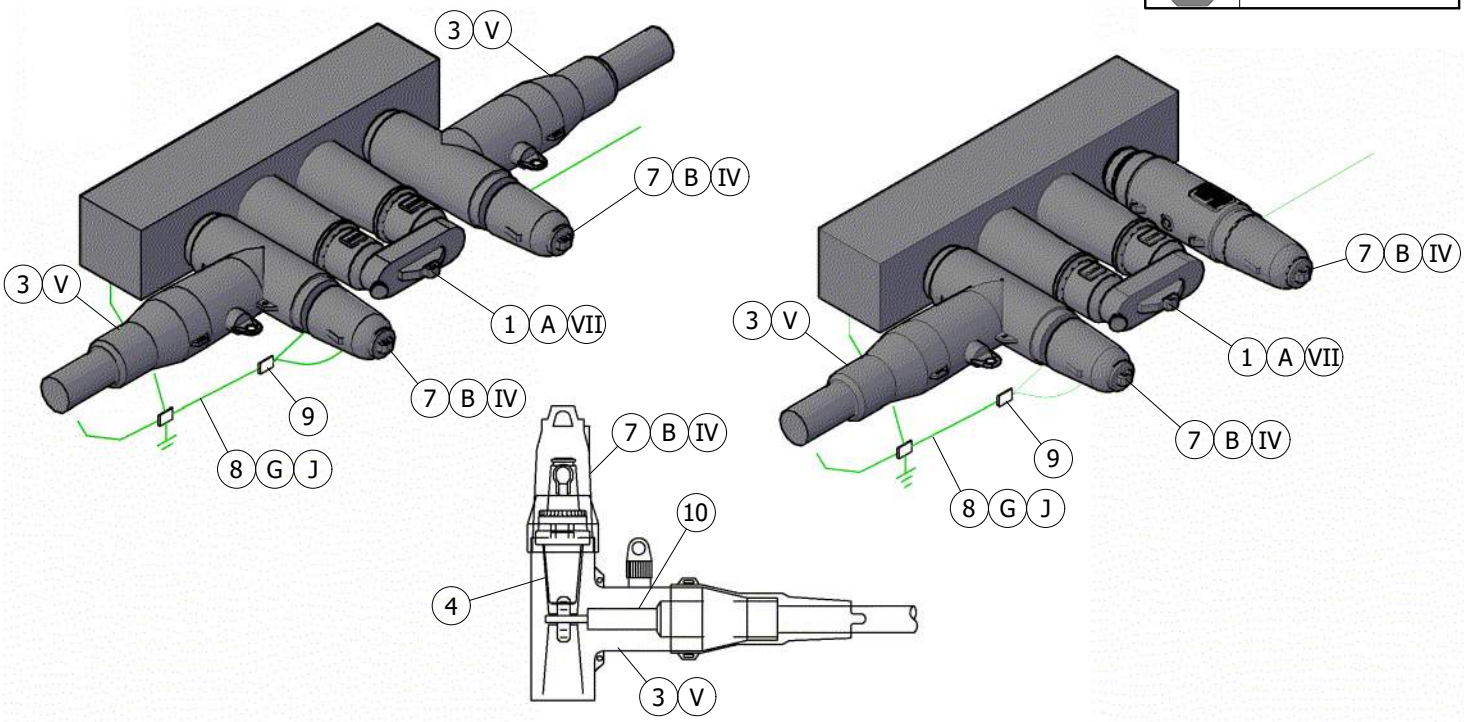

FIGURE 1
IN-LINE BRACKET XIII

© 1998 - 2023 San Diego Gas & Electric Company. All rights reserved. Removal of this copyright notice without permission is not permitted under law.

REV	CHANGE	DR	BY	DSN	APV	DATE	REV	CHANGE	DR	BY	DSN	APV	DATE
D	COMPLETELY REVISED	-	DG	JS	CZH	03/18/2019	G	DRAWING UPDATE	EDM	EJA	JAS	KRG	04/11/2023
C	EDITORIAL CHANGES	-	GW	JS	MDJ	03/22/2018	F	FORMATTING	EDM	JIK	-	-	06/02/2020
B	EDITORIAL CHANGES	-	DG	JS	MDJ	10/13/2017	E	FIGURE UPDATE	-	EJA	GLW	CZH	12/09/2019

TABLE OF CONTENTS

TABLE OF CONTENTS

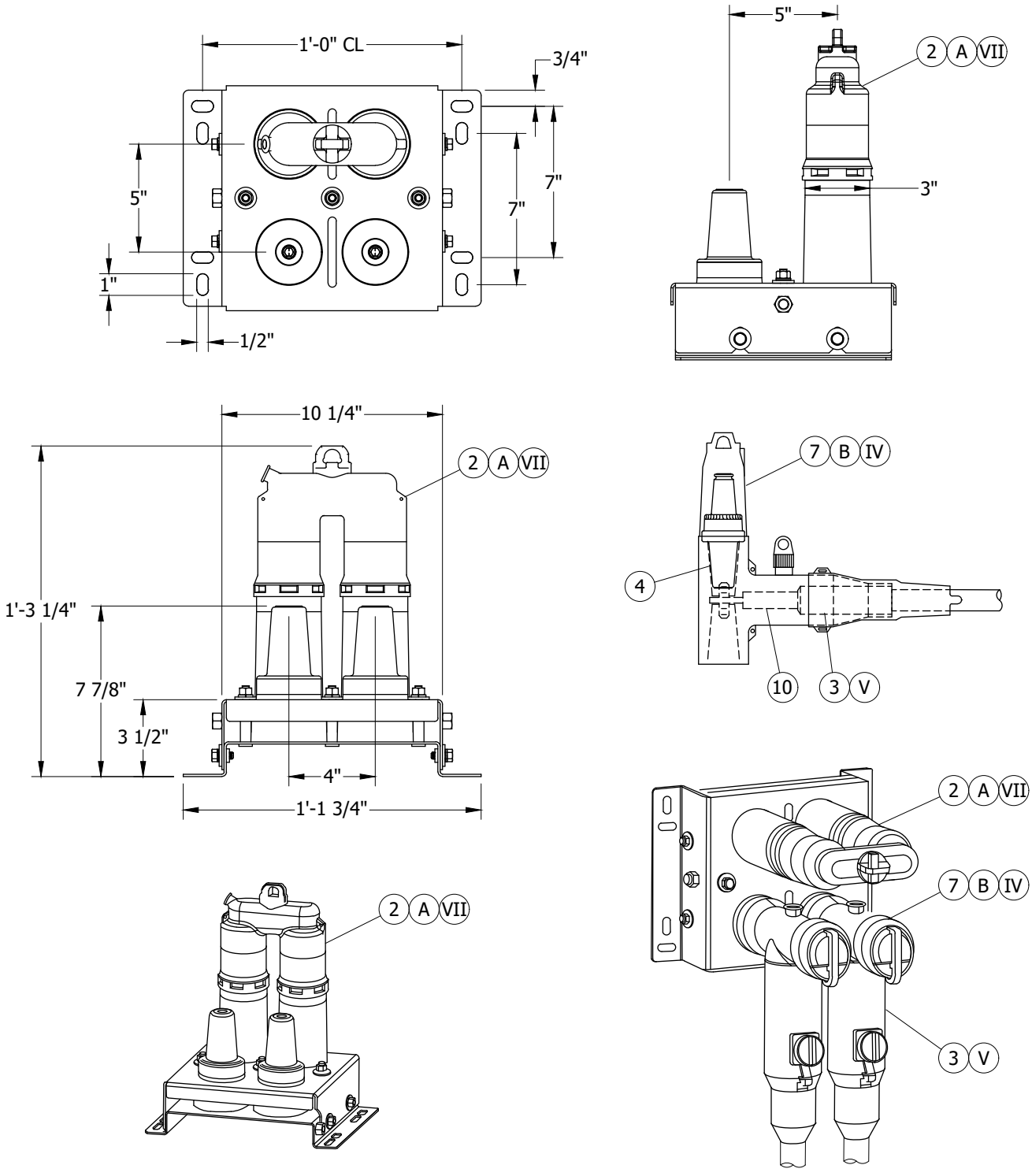

FIGURE 2
SQUARE BRACKET XIII

© 1998 - 2023 San Diego Gas & Electric Company. All rights reserved. Removal of this copyright notice without permission is not permitted under law.

REV	CHANGE	DR	BY	DSN	APV	DATE	REV	CHANGE	DR	BY	DSN	APV	DATE
D	COMPLETELY REVISED	-	DG	JS	CZH	03/18/2019	G	DRAWING UPDATE	EDM	EJA	JAS	KRG	04/11/2023
C	EDITORIAL CHANGES	-	GW	JS	MDJ	03/22/2018	F	FORMATTING	EDM	JIK	-	-	06/02/2020
B	EDITORIAL CHANGES	-	DG	JS	MDJ	10/13/2017	E	FIGURE UPDATE	-	EJA	GLW	CZH	12/09/2019



FIGURE 3
INSULATED PROTECTIVE CAP (III)(VIII)



FIGURE 4
GROUNDING ELBOW (I)(VIII)

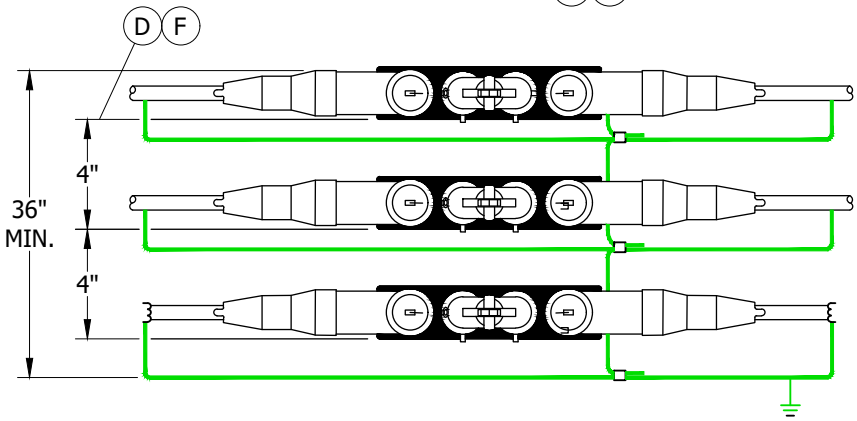

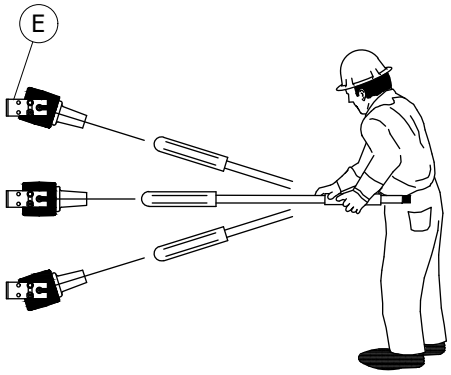

FIGURE 5
IN-LINE BRACKET

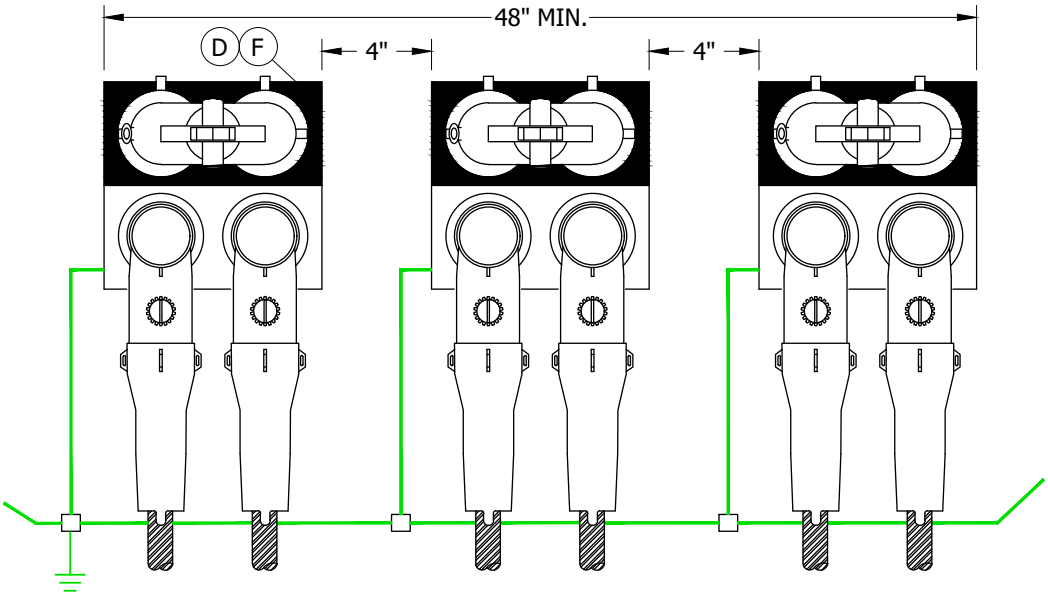

FIGURE 6
SQUARE BRACKET (XIII)

© 1998 - 2023 San Diego Gas & Electric Company. All rights reserved. Removal of this copyright notice without permission is not permitted under law.

REV	CHANGE	DR	BY	DSN	APV	DATE	REV	CHANGE	DR	BY	DSN	APV	DATE
D	COMPLETELY REVISED	-	DG	JS	CZH	03/18/2019	G	DRAWING UPDATE	EDM	EJA	JAS	KRG	04/11/2023
C	EDITORIAL CHANGES	-	GW	JS	MDJ	03/22/2018	F	FORMATTING	EDM	JIK	-	-	06/02/2020
B	EDITORIAL CHANGES	-	DG	JS	MDJ	10/13/2017	E	FIGURE UPDATE	-	EJA	GLW	CZH	12/09/2019

TABLE OF CONTENTS

INSTALLATION:

(A) N-JUNCTION CLEER PROVIDES A TEST, GROUND, AND ISOLATION POINT FOR 600A TEE CONNECTIONS.

(B) N-JUNCTION CLEER INSTALLED WITH THE TEE BODY, ELBOW TAP PLUG, 200A INSULATION RECEPTACLE.

(C) N-JUNCTION CLEER CAN BE MOUNTED ON A CONCRETE WALL OR UNISTRUT.

(D) MOUNT UNITS AWAY FROM THE MANHOLE ENTRY AREA.

(E) N-JUNCTION CLEER CAN BE SET AT A DESIRED ANGLE FOR LIVE LINE TOOL OPERATION.

(F) MINIMUM HEIGHT NEEDED FOR STACKED 3 IN-LINE CLEER INSTALLATION IS 36 INCHES. MINIMUM VERTICAL SPACING BETWEEN ADJACENT IN-LINE CLEER BRACKET IS 4 INCHES.

(G) EACH N-JUNCTION CLEER UNIT IS TO BE CONNECTED TO THE SYSTEM GROUND.

(H) N-JUNCTION CLEER HAS GROUND ATTACHMENT POINTS AND COMES WITH TWO (2) GROUND LUGS (#8 SOL TO 2/0 STRANDED).

(J) BOND THE LOAD BREAK "C" CONNECTOR TO GROUND.

K. TORQUE TEE BODY TO MANUFACTURER'S SPECIFICATION OF 50-60 FOOT-POUNDS.

L. ALL EXISTING CABLE(S) MUST BE RETERMINATED & RECRIMPED TO LAND LUG(S) PROPERLY TO PREVENT UNNECESSARY STRESS TO CABLE(S) WHICH WILL CAUSE PREMATURE FAILURE.

BILL OF MATERIALS:

ITEM	DESCRIPTION	WIRE SIZE	QUANTITY	STANDARD PAGE	STOCK NUMBER	DESIGN UNITS
1	JUNCTION BAR, 600A CLEER, 15KV, LOAD BREAK - INLINE	--	3	--	S439870	CCL-JB
2	JUNCTION BAR, 600A CLEER, 15KV, LOAD BREAK - SQUARE	--	3	--	S439872	CCL-SQ
3	ELBOW TEE, COLD SHRINK (XII)(b)	4/0, 350, 500	6	4189 (FUTURE)	S326572	600AT
		750, 1000			S326574	600ATL
4	ELBOW TAP PLUG	--	6	4182	S547328	LRTP
5	INDICATOR, FAULT, LOAD TRACKER (FI) (XIII)(XIV)	--	AS REQ'D	4360	S423714	--
6	EXTENSION BUSHING, 600A WITH LOAD TAP PLUG	--	AS REQ'D	4182	S336198	EXLRTP
7	INSULATION RECEPTACLE, 200A	--	6	4180	S204304	INSREC
8	WIRE, BARE COPPER, #2, 7 STRANDED, SOFT DRAWN	--	AS REQ'D	4002	S812818 (X)	GDWIRE
9	CONNECTOR, COPPER, COMPRESSION	--	AS REQ'D	4172	--	--
10	CONDUCTOR CONNECTOR	4/0, 350 AND 500	AS REQ'D	--	S471314	P6ALR3
		750 AND 1000			S471316	P6ALR5

NOTES:

(I) GROUNDING WITH THE N-JUNCTION CLEER REQUIRES A 600A LOAD BREAK GROUNDING ELBOW (S493780).

II. N-JUNCTION CLEER IS FULLY SHIELDED AND FULLY SUBMERSIBLE.

(III) THE N-JUNCTION CLEER CAN BE FULLY ISOLATED USING THE 600A LOAD BREAK PROTECTIVE CAP (S204300). ALL BUSHINGS OF THE CONNECTOR SYSTEM ARE THEN INSULATED AND DEADFRONT.

(IV) NO LOAD SHALL BE CONNECTED TO THE 200A TEST POINT.

(V) NO STACKING OF TEES ALLOWED ON THE N-JUNCTION CLEER UNITS.

VI. BATTERY-OPERATED EQUIPMENT IS NOT TO BE USED WHEN TORQUING REQUIREMENTS EXIST.

(VII) ALTHOUGH THIS DEVICE IS RATED AS A 600A LOAD BREAK DEVICE, SDG&E WILL ONLY PERFORM OPERATIONS WHEN DE-ENERGIZED.

(VIII) SIX (6) GROUNDING JUMPERS (S439780 - KEARNY STOREROOM ITEM) AND SIX (6) ISOLATION CAPS (S204300 - AVAILABLE AT ALL DISTRICTS) WILL BE NEEDED. THESE ARE REUSABLE (CHECKED IN/OUT).

© 1998 - 2023 San Diego Gas & Electric Company. All rights reserved. Removal of this copyright notice without permission is not permitted under law.

REV	CHANGE	DR	BY	DSN	APV	DATE	REV	CHANGE	DR	BY	DSN	APV	DATE
D	COMPLETELY REVISED	-	DG	JS	CZH	03/18/2019	G	DRAWING UPDATE	EDM	EJA	JAS	KRG	04/11/2023
C	EDITORIAL CHANGES	-	GW	JS	MDJ	03/22/2018	F	FORMATTING	EDM	JIK	-	-	06/02/2020
B	EDITORIAL CHANGES	-	DG	JS	MDJ	10/13/2017	E	FIGURE UPDATE	-	EJA	GLW	CZH	12/09/2019

TABLE OF CONTENTS

NOTES (CONT'D):

IX. FEEDER MUST BE DE-ENERGIZED DURING ANY CONSTRUCTION AND INTERCONNECTION WITH THE COOPER CLEER. THIS CONNECTION MAY BE PLACED IN WALK-IN VAULTS AND MANHOLES TO CREATE A VISIBLE OPEN IN THE 600A UNDERGROUND SYSTEM. IT CAN BE INSTALLED DURING OUTAGES TO RESTORE PARTIAL SERVICE BY OPENING TEE'S; SEPARATING TEE'S DURING OUTAGES CAN BE FOUND IN ELECTRIC STANDARD PRACTICE 222 SECTION 4.5.3 FOR PARTIAL RESTORATION. IN THE PLANNING AND DESIGN PHASE, THE CONNECTION MAY BE PLACED IN MANHOLES ON LONG, CONTINUOUS RUNS TO SUPPLY A MANUAL, STICK-OPERABLE, DISCONNECT POINT. PLACEMENT WILL ALSO INCLUDE EVERY OTHER MANHOLE AND VAULT BETWEEN SECTIONALIZING DEVICES.

(X) THIS ITEM IS EXEMPT.

XI. DESIGN SCOPE SHOULD INCLUDE VAULTS AND MANHOLES THAT HAVE SUFFICIENT SPACE AND LENGTH TO OPERATE WITHIN THE STRUCTURE. 3325, 3326, AND 3327 (TRANSMISSION SUBSTRUCTURE NEAR SUBSTATIONS GENERALLY) MANHOLES SHOULD HAVE SUFFICIENT SPACE (4198). 3322, 3324 (BOTH TYPES), AND 3399 MANHOLES WILL REQUIRE APPROVAL FROM EDE DEPENDING ON THE LAYOUT OF THE SUBSTRUCTURE.

(XII) ELBOW TEE S326589 IS FMO ONLY.

(XIII) LOAD TRACKER FAULT INDICATOR (FI) IS REQUIRED ON ALL 600A CLEER CONNECTOR INSTALLATIONS. (c)

(XIV) NOT SHOWN ON FIGURES.

REFERENCE:

a. FOR PARTIAL RESTORATION, SEE ESP222.

(b) SEE UG4189 (FUTURE) FOR COLD SHRINK ELBOW TEE WITH INTEGRATED CABLE ADAPTER.

(c) SEE UG4360: LOAD TRACKER FAULT INDICATOR.

TABLE OF CONTENTS

© 1998 - 2023 San Diego Gas & Electric Company. All rights reserved. Removal of this copyright notice without permission is not permitted under law.

REV	CHANGE	DR	BY	DSN	APV	DATE	REV	CHANGE	DR	BY	DSN	APV	DATE
D	COMPLETELY REVISED	-	DG	JS	CZH	03/18/2019	G	DRAWING UPDATE	EDM	EJA	JAS	KRG	04/11/2023
C	EDITORIAL CHANGES	-	GW	JS	MDJ	03/22/2018	F	FORMATTING	EDM	JIK	-	-	06/02/2020
B	EDITORIAL CHANGES	-	DG	JS	MDJ	10/13/2017	E	FIGURE UPDATE	-	EJA	GLW	CZH	12/09/2019

SCOPE: THIS STANDARD DESCRIBES THE CLEER 200A L BRACKET 27" X 4" X 4".

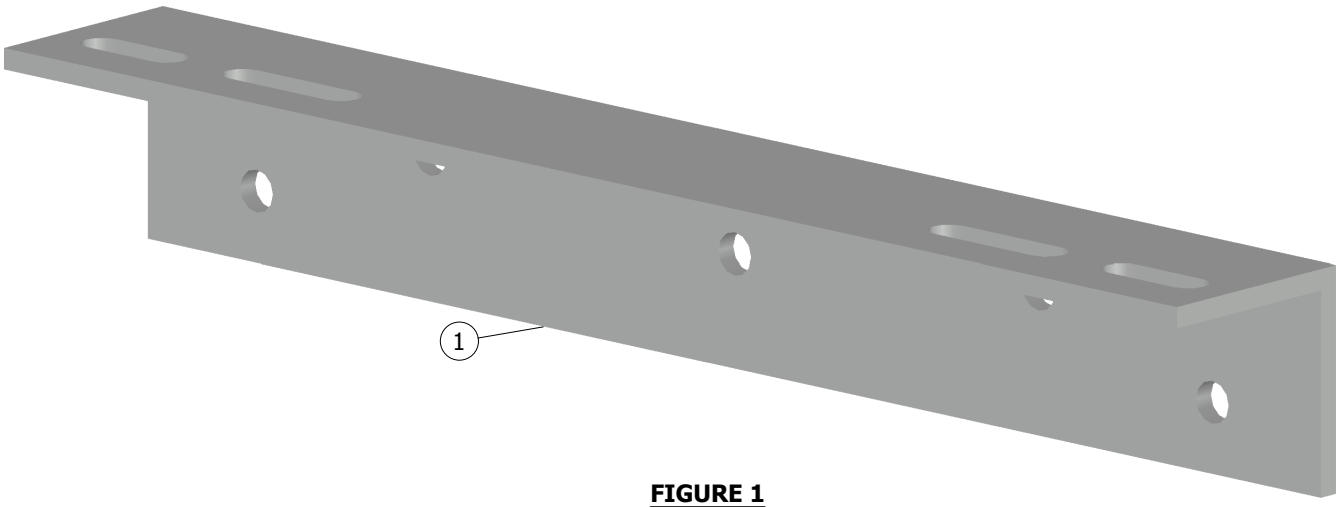

FIGURE 1
ISOMETRIC VIEW

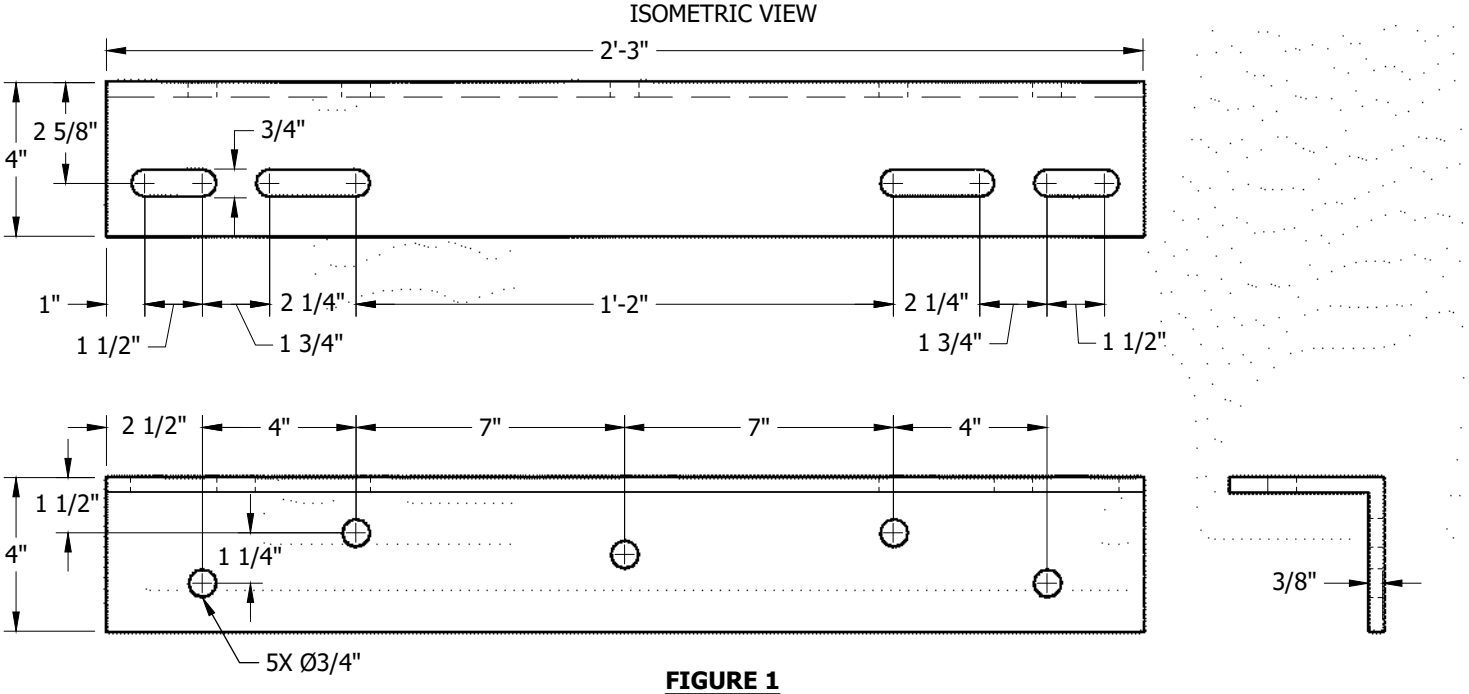

FIGURE 1

INSTALLATION: NONE

BILL OF MATERIALS:

ITEM	DESCRIPTION	QUANTITY	STANDARD PAGE	STOCK NUMBER	DESIGN UNITS
1	BRACKET, CLEER TEE, 27" X 4" X 4"	AS REQ'D	--	S165456	CLWLBK

NOTES: NONE

REFERENCE: NONE

© 1998 - 2023 San Diego Gas & Electric Company. All rights reserved. Removal of this copyright notice without permission is not permitted under law.

REV	CHANGE	DR	BY	DSN	APV	DATE	REV	CHANGE	DR	BY	DSN	APV	DATE
D	COMPLETELY REVISED	-	DG	JS	CZH	03/18/2019	G	DRAWING UPDATE	EDM	EJA	JAS	KRG	04/11/2023
C	EDITORIAL CHANGES	-	GW	JS	MDJ	03/22/2018	F	FORMATTING	EDM	JIK	-	-	06/02/2020
B	EDITORIAL CHANGES	-	DG	JS	MDJ	10/13/2017	E	FIGURE UPDATE	-	EJA	GLW	CZH	12/09/2019

Indicates Latest Revision | Completely Revised [X] | New Page | Information Removed

SDG&E ELECTRIC UNDERGROUND CONSTRUCTION STANDARDS

CLEER 200A L BRACKET
27" X 4" X 4"

UG4198.6

TABLE OF CONTENTS

MAIN TABLE OF CONTENTS

PAGE	SUBJECT
4202	STANDARD JOINT CABLE POLE RISER POSITIONS
4203	POLE QUADRANT AND RISER IDENTIFICATION
4204	CABLE POLE RISER INSTALLATION
4205	INSTALLATION OF PERMANENT POLE STEPS
4206	GENERAL INFORMATION - 12.47KV AND BELOW CABLE POLES
4214	0-750V UNDERGROUND SERVICE FROM AN OVERHEAD LINE
4218	PRIMARY CABLE POLE CONSTRUCTION, LINE AND BUCK
4235	CABLE POLE MVI / MV200 / 600A CABLE POLE APPLICATION
4240	12.47KV AND BELOW CROSSARM CABLE POLE, SINGLE-PHASE AND THREE-PHASE, 1/C PER PHASE, NON-PORCELAIN TERMINALS
4242	THREE-PHASE, CABLE-POLE-12KV, NON-PORCELAIN 900A DISCONNECT
4244	POLE TOP SWITCH 12KV RISER LOADBREAKER TYPE SINGLE CIRCUIT
4247	12.47KV AND BELOW CABLE POLE THREE-PHASE, 1/C PER PHASE, ALLEY ARM CONSTRUCTION, NON-PORCELAIN TERMINALS
4251	12.47KV AND BELOW DEADEND CABLE POLE, 6 OR 7 CONDUCTORS, 1/C PER PHASE, HOOKSTICK SWITCHED, NON-PORCELAIN TERMINALS
4252	ELASTIMOLD MVR SWITCH AND SCADA 651R2 CONTROLLER CABLE POLE

REV	CHANGE	DRWN	BY	CHKD	APVD	DATE
J	EDITORIAL CHANGES	EDM	MRF	MRF	KRG	12/06/2024
I	REVISED TO 3D FORMAT	NV5	JIK	-	-	05/30/2024
H	FORMATTING	EDM	JIK	-	-	09/16/2021

SDGE™

SDG&E ELECTRIC UNDERGROUND CONSTRUCTION STANDARDS

CABLE POLES
TABLE OF CONTENTS

SCALE: NOT TO SCALE

DRAWING NO: UG4201.1

SHEET: 1 OF 1

© 1998 - 2024 San Diego Gas and Electric Company. All rights reserved. Removal of this copyright notice without permission is not permitted under law.

X Indicates Latest Revision | Completely Revised | New Page | Information Removed

SCOPE: THIS STANDARD SHOWS NORMAL CABLE POLE RISER POSITIONS FOR SDG&E AND COMMUNICATIONS COMPANIES.

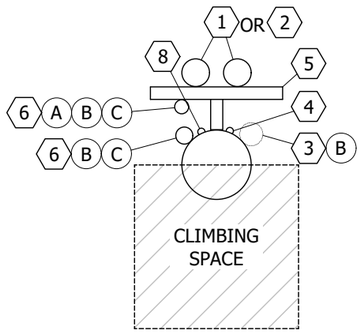

FIGURE 1
DEADEND OR
Ⓥ THROUGH CONSTRUCTION
MULTIPLE RISER

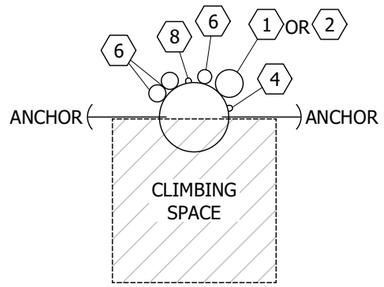

FIGURE 2
DEADEND CONSTRUCTION
SINGLE POWER RISER

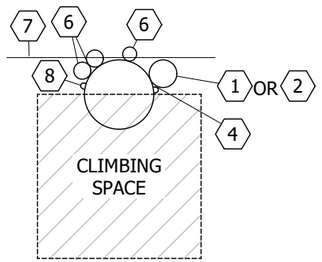

FIGURE 3
THROUGH CONSTRUCTION
SINGLE POWER RISER

TABLE 1:

TITLE	
ITEM	**DESCRIPTION**
1	SDG&E PRIMARY RISER
2	SDG&E SECONDARY RISER
3	SDG&E EXISTING RISER
4	SDG&E GROUND
5	BRACKET, LADDER ARM ASSEMBLY
6	COMMUNICATION RISER STATION
7	COMMUNICATION TANGENT THRU POSITION
8	COMMUNICATION GROUND

INSTALLATION:

Ⓐ COMMUNICATIONS ONLY POINT OF ATTACHMENT FOR LADDER ARM BRACKET CONSTRUCTION SHALL BE ON THE BACKSIDE OF LADDER ARM BRACKET ASSEMBLY. GALVANIZED UNISTRUT PIPE CLAMPS SHALL BE USED TO SECURE THE CONDUIT. COMMUNICATIONS MAY ATTACH ON THE BACK OF THE LADDER ARM ASSEMBLY ALONGSIDE SDG&E'S RISER. LADDER ARMS MAY BE INSTALLED BY COMMUNICATIONS COMPANY PROVIDED THEY ARE INSTALLED PER SDG&E CONSTRUCTION STANDARDS AND MEET SDG&E MATERIAL SPECIFICATIONS.

Ⓑ FOR NEW CONSTRUCTION WITH AN EXISTING SDG&E RISER ON THE POLE (FIGURE 3), ONE THREE-INCH RISER MAX. ON THE POLE AND ONE THREE-INCH RISER MAX. ON THE BACKSIDE OF THE LADDER ARM BRACKET ARE PERMITTED BACK TO BACK.

Ⓒ WHEN A LADDER ARM IS EXISTING, AND THE BACK OF LADDER ARM POSITIONS AND POLE POSITIONS ON COMMUNICATIONS SIDE OF POLE ARE OCCUPIED, ADDITIONAL COMMUNICATIONS RISERS MUST BE PLACED ON ANOTHER POLE.

BILL OF MATERIALS: NONE

NOTES:

I. 1/2 POLE CLIMBING SPACE APPLIES TO A LEVEL 4 FEET BELOW THE LOWEST LEVEL OF FACILITIES. COMMUNICATIONS, SECONDARY, PRIMARY, ETC., SEE OVERHEAD STANDARD SECTION 200 FOR CLIMBING SPACE REQUIREMENTS.

II. CHANGES TO THESE STANDARD RISER POSITIONS MUST NOT REDUCE THE CLIMBING SPACE TO LESS THAN 1/2 POLE.

III. CONDUIT RISER AT BASE OF POLE NOT TO INFRINGE ON CURB OR SIDEWALK POSITIIONS.

IV. SPARE CONDUITS ARE NOT CONSIDERED AS RISERS.

Ⓥ NEW CONSTRUCTION WITH EXISTING SDG&E RISER.

REFERENCE:

a. PVC RISERS ARE NOT PERMITTED WITHIN THE CLIMBING SPACE PER G.O. 95 RULE 22.2C.

b. NO C.A.T.V. OR TELCO JUMPERS ALLOWED IN CLIMBING SPACE PER G.O. 95 RULE 84.7.

c. SEE OVERHEAD STANDARDS SECTION 200 FOR ALLOWABLE G.O. 95 CLIMBING SPACE OBSTRUCTIONS.

d. SEE OH363UG4205 FOR INSTALLATION OF POLE STEPS.

e. SEE OH1403UG4203 FOR POLE QUADRANT AND RISER IDENTIFICATION.

f. SEE STANDARD OH1404UG4204 WHEN INSTALLING A SINGLE RISER, MODIFYING EXISTING CABLE POLE TO INCLUDE SECOND RISER OR FOR MULTIPLE CONDUIT RUNS AND JOINT POLE INSTALLATION.

g. SEE UG4620 FOR TELECOMMUNICATION INSTALLATION.

TABLE OF CONTENTS

REV	CHANGE	DRWN	BY	CHKD	APVD	DATE
D	REVISED TO 3D FORMAT	GLC/DV	JIK	-	-	01/27/2022
C	DRAWING UPDATE	EDM	JAC	GLW	CZH	02/10/2021
B	DRAWING UPDATE	PEI	-	-	-	02/18/2019

SDG&E ELECTRIC OVERHEAD AND UNDERGROUND CONSTRUCTION STANDARDS

STANDARD JOINT CABLE POLE RISER POSITIONS USING LADDER ARM BRACKETS AND SINGLE RISER

SCALE: NOT TO SCALE

DRAWING NO: OH1402.1 UG4202.1

SHEET: 1 OF 1

© 1998 - 2022 San Diego Gas and Electric Company. All rights reserved. Removal of this copyright notice without permission is not permitted under law.

Indicates Latest Revision | Completely Revised | New Page | Information Removed

TABLE OF CONTENTS

SCOPE: THIS STANDRD SHOWS CABLE POLE RISER LOCATIONS, SDGE QUADRANT AND SIGNS FOR MARKING POLE RISER INSTALLATIONS.

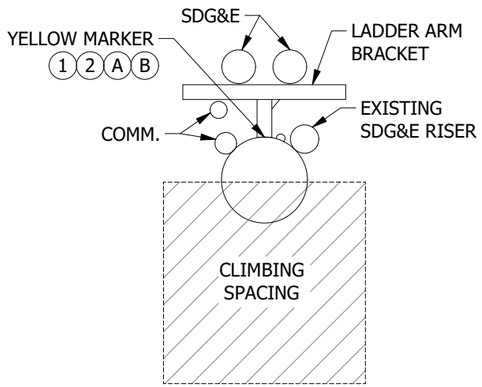

CONFIGURATION 1
DEAD END THROUGH CONSTRUCTION
MULTIPLE POWER RISER

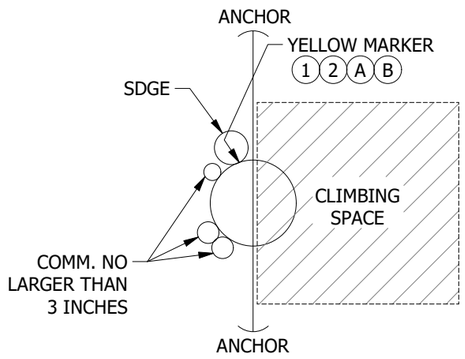

CONFIGURATION 2
DEAD END CONSTRUCTION
SINGLE POWER RISER

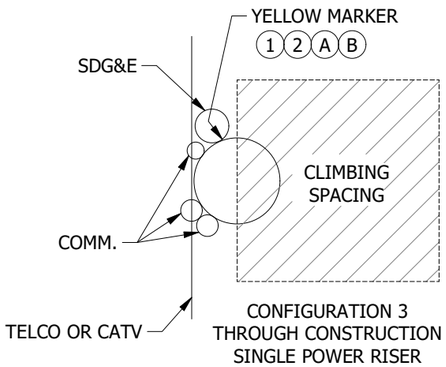

CONFIGURATION 3
THROUGH CONSTRUCTION
SINGLE POWER RISER

FIGURE 1
IDENTIFYING CABLE POLE RISER LOCATION

INSTALLATION:

(A) NAIL THE SIGN TO THE RISER POLE APPROXIMATELY 5 FEET ABOVE GROUND WITH THE PROPER SIDE SHOWING.

(B) USE ONE MARKER TO SHOW SDG&E RISER LOCATION.

BILL OF MATERIAL:

ITEM	DESCRIPTION	QUANTITY	STANDARD PAGE	STOCK NUMBER	DESIGN UNIT
1	MARKER, YELLOW PLASTIC WITH RAISED LETTERING STATING "PLACE-ELECTRIC RISER HERE 1" CLEAR-FROM-POLE SDG&E" ON ONE SIDE AND "PLACE ELECTRIC RISER HERE" FOLLOWED BY THREE ILLUSTRATIONS, THEN "SDGE" ON REVERSE SIDE. TWO 1/8" HOLES, APPROX. DIMENSIONS 3" X 9.25" X 1/16"	1	1403/4203	S476312	-
2	NAIL, ROOFING, 1-3/4", #11, 1/2" HEAD	AS REQ'D	-	S492192	-

NOTES: NONE

REFERENCE:

a. SEE OH1402UG4202 FOR STANDARD JOINT CABLE POLE RISER POSITIONS.

b. SEE OH1404UG4204 FOR CABLE POLE RISER POSITION.

SCOPE: THIS STANDARD SHOWS THE SIGN USED FOR MARKING POLE RISER INSTALLATIONS.

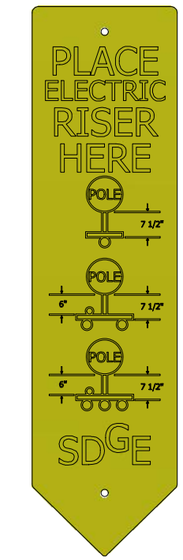

FIGURE 1
PREFERRED CONSTRUCTION (A)
FRONT

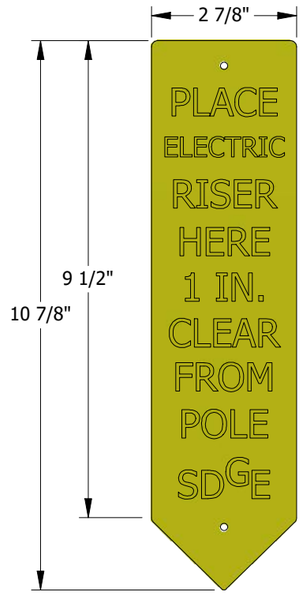

FIGURE 2
ALTERNATE CONSTRUCTION (B)
REVERSE

INSTALLATION:

(A) USE THE SIDE OF THE SIGN STATING "PLACE ELECTRIC RISER HERE" (FRONT), WHEN LADDER ARM BRACKETS ARE INSTALLED.

(B) FOR ALTERNATIVE CONSTRUCTION USE THE SIDE OF THE SIGN STATING "PLACE ELECTRIC RISER HERE 1-INCH CLEAR FROM POLE" REVERSE, WHEN A SINGLE CONDUIT IS INSTALLED.

C. REMOVE SIGN WHEN THE POLE RISER(S) IS INSTALLED.

BILL OF MATERIAL: NONE

NOTES:

I. SIGN IS AVAILABLE TO MARK SDG&E RISER LOCATIONS ON CABLE. THE SIGN STOCK NUMBER S476312 IS MADE OF FLEXIBLE PLASTIC, WITH RAISED LETTERING ON EACH SIDE. SIGNS ARE TO BE ATTACHED TO POLES WITH 1 3/4 INCH NAILS STOCK NUMBER S492192.

II. "PLACE ELECTRIC RISER HERE SHOWING 3 POLE RISER POSITIONS, SDG&E" IS PRINTED ON FRONT SIDE.

III. "PLACE ELECTRIC RISER HERE 1-INCH CLEAR FROM POLE, SDG&E" ON THE REVERSE SIDE.

IV. WHEN THE RISER LOCATION HAS BEEN DETERMINED, THE SIGNS ARE TO BE PLACED ON THE POLE, APPROXIMATELY 5 FEET ABOVE GROUND LEVEL BY THE CUSTOMER PROJECT PLANNER, PROJECT COORDINATOR, GENERAL FOREMAN, INSPECTOR OR WORKING FOREMAN SETTING THE POLE. RISER LOCATIONS ARE SHOWN ON OH1402UG4202.

REFERENCE:

a. SEE OH1403UG4203 FOR POLE QUADRANT AND RISER IDENTIFICATION.

b. SEE OH1404/UG4204 FOR CABLE POLE RISER INSTALLATION.

REV	CHANGE	DRWN	BY	CHKD	APVD	DATE
D	REVISED TO 3D FORMAT	AMP	JIK	-	-	04/14/2022
C	DRAWING UPDATE	EDM	JAC	GLW	CZH	02/10/2021
B	DRAWING UPDATE	PEI	-	-	-	02/18/2019

SDG&E ELECTRIC OVERHEAD AND UNDERGROUND CONSTRUCTION STANDARDS

POLE QUADRANT AND RISER IDENTIFICATION

SCALE: NOT TO SCALE

DRAWING NO: OH1403.1 UG4203.1

SHEET: 1 OF 1

© 1998 - 2022 San Diego Gas and Electric Company. All rights reserved. Removal of this copyright notice without permission is not permitted under law.

X Indicates Latest Revision | Completely Revised | New Page | Information Removed

SCOPE: THIS STANDARD SHOWS NEW CONSTRUCTION FOR SINGLE AND MULTIPLE CONDUIT RISERS

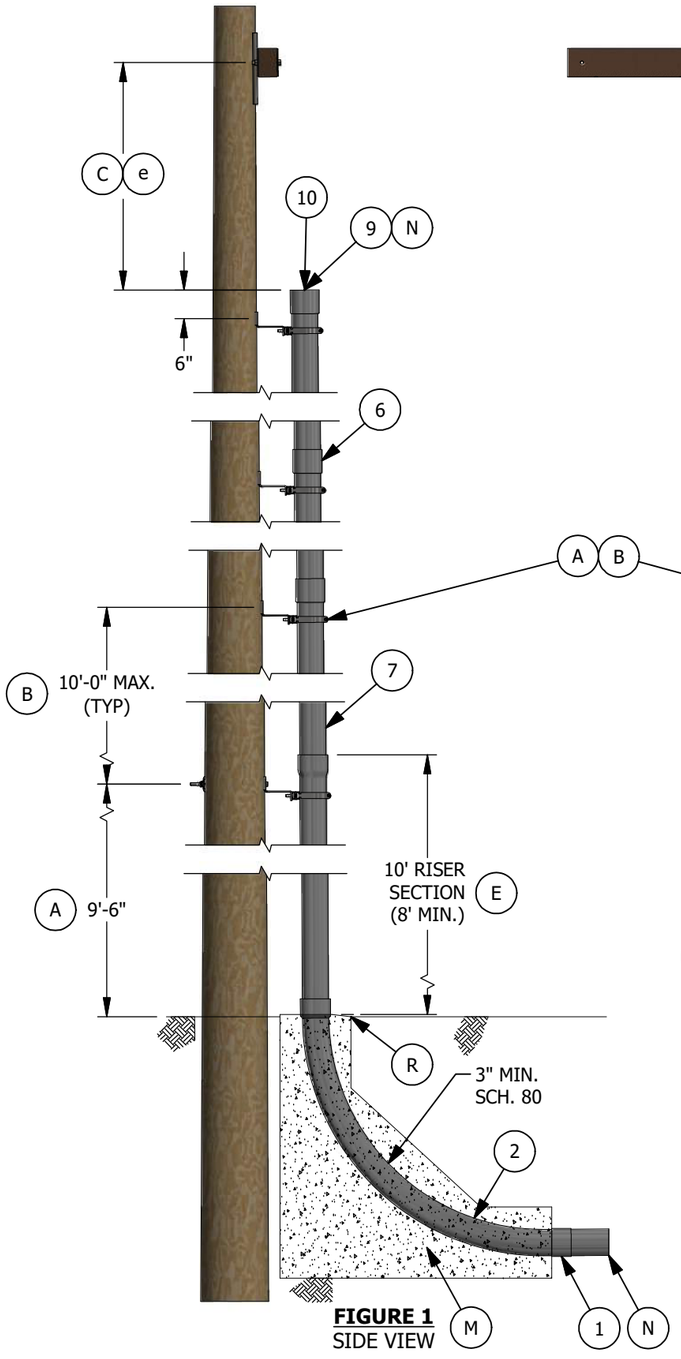

FIGURE 1
SIDE VIEW

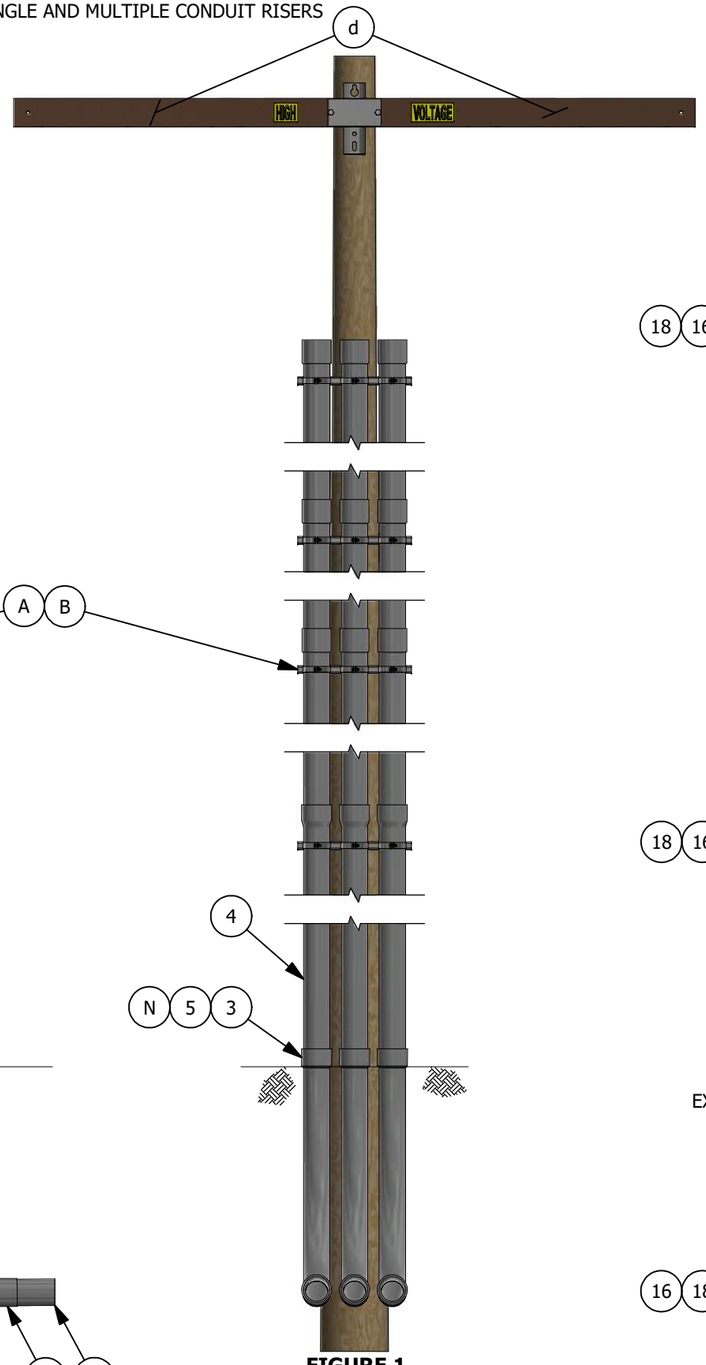

FIGURE 1
FRONT VIEW

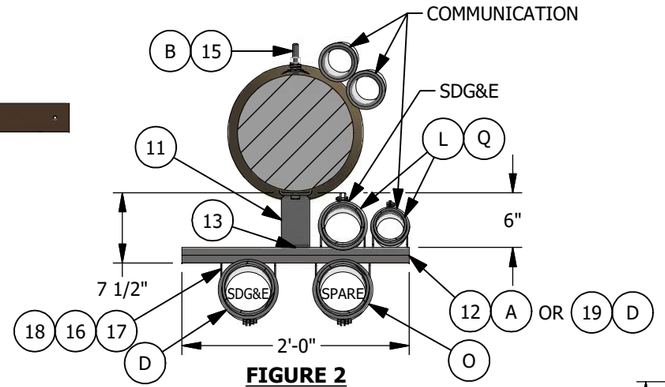

FIGURE 2
PREFERRED CONSTRUCTION FOR NEW SINGLE RISER WITH AND WITHOUT EXISTING RISER(S) ON POLE
G

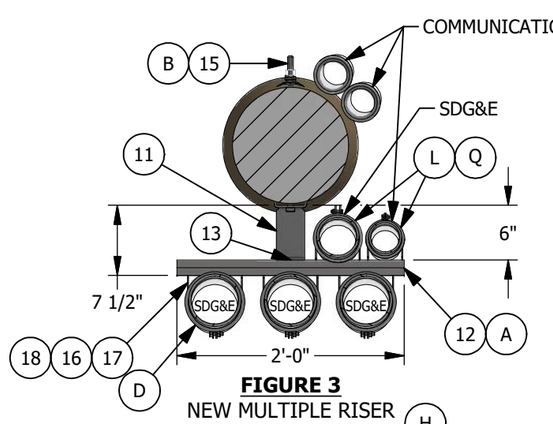

FIGURE 3
NEW MULTIPLE RISER CONSTRUCTION
H

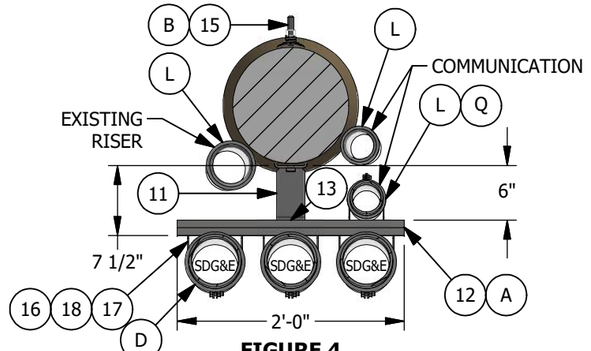

FIGURE 4
NEW MULTIPLE RISER CONSTRUCTION WITH RISER(S) ON POLE
J

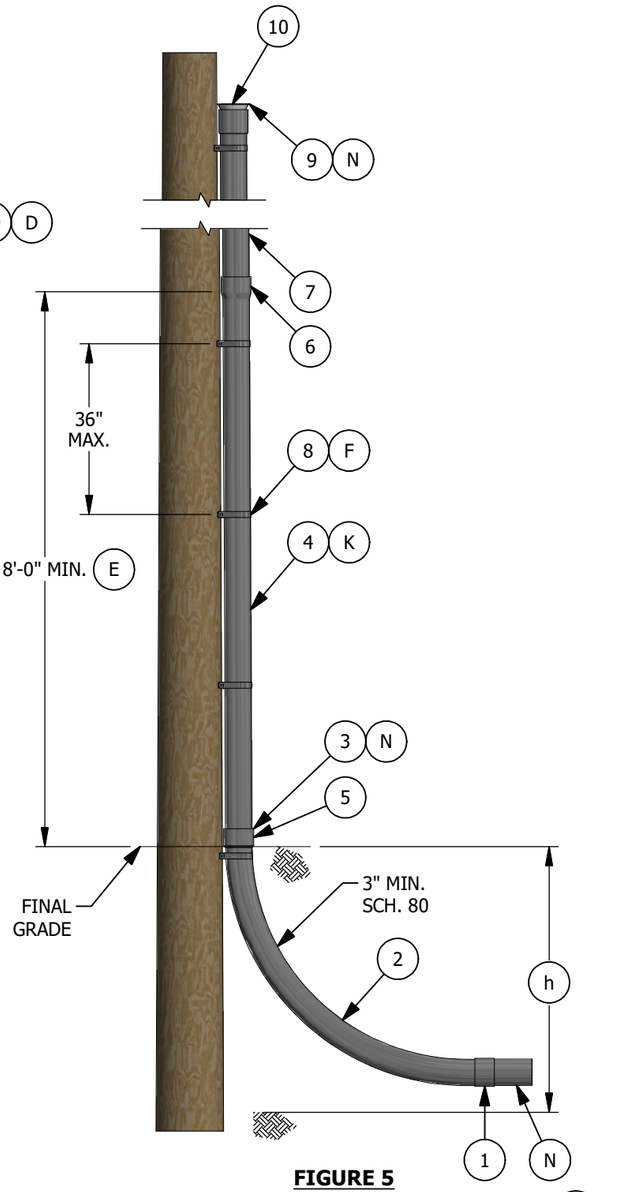

FIGURE 5
ALTERNATE NEW CONSTRUCTION FOR ONE RISER UP TO 3-INCH CABLE POLE
K

TABLE OF CONTENTS

REV	CHANGE	DRWN	BY	CHKD	APVD	DATE
D	REVISE TO 3D FORMAT	DV	JIK	-	-	11/11/2021
C	FORMATTING	EDM	JIK	-	-	09/16/2021
B	DRAWING UPDATE	PEI	-	-	-	02/18/2019

SDG&E
A Sempra Energy utility

SDG&E ELECTRIC OVERHEAD AND UNDERGROUND CONSTRUCTION STANDARDS

CABLE POLE RISER INSTALLATION

SCALE: NOT TO SCALE

DRAWING NO: OH1404.1 UG4204.1

SHEET: 1 OF 3

© 1998 - 2021 San Diego Gas and Electric Company. All rights reserved. Removal of this copyright notice without permission is not permitted under law.

X Indicates Latest Revision | Completely Revised | New Page | Information Removed

TABLE OF CONTENTS

INSTALLATION:

(A) MOUNT FIRST BRACKET LADDER ARM NO LOWER THAN 9'-6". IF THE FIRST BRACKET EXTENDS TOWARD A STREET OR DRIVEWAY, OFFSET THE UNISTRUT CHANNEL TO CLEAR LARGE VEHICLES.

(B) INSTALL AT LEAST ONE LADDER ARM BRACKET FOR EACH COUPLING JOINT OF CONDUIT - 10-FOOT MAX. DISTANCE BETWEEN BRACKETS. ALL LADDER ARM BRACKETS ARE TO BE ATTACHED TO THE POLE WITH BOLTS. NOT LAG SCREWS.

(C) REFER TO INDIVIDUAL CABLE POLE STANDARD FOR CORRECT MEASUREMENT.

(D) CENTER CONDUIT POSITION SHALL BE USED FOR MULTIPLE SDG&E SECONDARY RUNS OR SDG&E TELECOMMUNICATION CONDUIT. OTHER CONDUIT POSITIONS ON THE FRONT OF THE BRACKET SHALL BE USED FOR A SINGLE OR DOUBLE CONDUIT. THE 8 INCH UNISTRUT CHANNEL (ITEM 19) MAY BE INSTALLED FOR A SINGLE RISER WHERE NO COMMUNICATIONS IS ANTICIPATED.

(E) RISERS OF PLASTIC CONDUIT SHALL BE EPC-80 PVC SCHEDULE 80, FROM THE GROUND LINE TO A LEVEL NOT LESS THAN 8 FEET ABOVE THE GROUND LINE PER G.O. 95 RULE 54.6-E AND SDG&E CONDUIT SIZING REQUIREMENTS.

(F) FOR SINGLE RISER CONSTRUCTION, SEPARATION OF PIPE STRAPS (ITEM 8) SHALL BE 3 FEET MAXIMUM.

(G) USE FIGURE 2 FOR PREFERRED CONSTRUCTION FOR A SINGLE RISER

1. WHEN INSTALLING A SINGLE RISER.
2. WHEN ADDING A SINGLE RISER TO AN EXISTING RISER POLE. AN EXISTING SINGLE SDG&E RISER WOULD REMAIN ON THE POLE UNLESS IT IS CREATING A G.O. 95 INFRACTION. IF AN INFRACTION EXISTS, MOVE THE EXISTING RISER TO THE LADDER ARM BRACKET ALONG WITH THE NEW RISER SHOWN IN DETAIL "B".

(H) USE FIGURE 3:
WHEN INSTALLING MORE THAN ONE RISER.

(J) USE FIGURE 4:
WHEN ADDING A RISER(S) TO AN EXISTING SDG&E RISER POLE. AN EXISTING SINGLE SDG&E RISER WOULD REMAIN ON THE POLE UNLESS IT IS CREATING A G.O. INFRACTION. IF AN INFRACTION EXISTS, MOVE THE EXISTING RISER TO THE LADDER ARM BRACKET.

(K) USE FIGURE 5 FOR ALTERNATE CONSTRUCTION FOR A SINGLE RISER

1. FIELD CONDITIONS DO NOT ALLOW ROOM FOR LADDER ARM BRACKETS, (I.E. CONDUIT WOULD EXTEND INTO THE STREET, SIDEWALK, DRIVEWAY, ETC.). THIS INSTALLATION WOULD BE LIMITED TO ONE SDG&E RISER, UP TO 3" (NO OTHER RISER(S) LARGER THAN 3 INCH WOULD BE ON THE POLE). ONE HALF OF THE POLE MUST REMAIN CLEAR FOR CLIMBING SPACE AND G.O. REQUIREMENTS MUST BE FOLLOWED.
2. WHEN AN EXISTING RISER IS ALREADY ON THE POLE AND IT MAY BE RE-USED. (I.E. REMOVING A STREET LIGHT FUSE BOX FROM A POLE AND NEW CONDUIT WILL CONNECT TO THE EXISTING CONDUIT WHERE THE FUSE BOX WAS LOCATED, CUSTOMER RE-WIRE JOB, ETC.).

(L) ONE RISER ON THE POLE 3-INCH MAX. AND ONE RISER ON THE BACK SIDE OF THE LADDER ARM BRACKET 3-INCH MAX. ARE PERMITTED BACK-TO-BACK. A MAXIMUM OF TWO 4-INCH COMMUNICATIONS RISERS ARE PERMITTED ON THE BACK SIDE OF A LADDER ARM ASSEMBLY. THE ADJACENT POLE QUADRANT MUST BE VACANT TO INSTALL ANY 4 INCH RISER ON THE BACK OF THE LADDER ARM BRACKET, AND MUST REMAIN VACANT AFTER INSTALLATION.

(M) SLURRY ENCASEMENT IS REQUIRED AROUND THE ELBOW(S) FOR 5-INCH PRIMARY CONDUIT(S).

(N) EACH CONDUIT RUN BETWEEN SUBSTRUCTURES, PADS, CUSTOMER SERVICE RISERS, ETC., SHALL BE ONE SIZE CONDUIT CONTINUOUSLY, I.E. NO REDUCERS ARE ALLOWED WITHIN A CONDUIT RUN EXCEPT WHERE THE CONDUIT ENTERS A SUBSTRUCTURE OR ABOVE GROUND LEVEL ON A RISER POLE. IF A 3-INCH RISER IS ALREADY INSTALLED AND THE GRIP SIZE REQUIRES A 2-INCH RISER, A 2" TO 3" REDUCER MAY BE USED TO ACCOMMODATE THE GRIP. THE SAME WOULD APPLY TO OTHER SIZE CONDUITS AS HAS BEEN DESCRIBED. GRIPS ARE NOT REQUIRED ON SECONDARY RISERS.

(O) SPARE CONDUIT REFERS TO AN EMPTY CONDUIT THAT IS SPECIFIED BY THE PLANNER FOR OPERATING AND MAINTENANCE REQUIREMENTS.

INSTALLATION (CONT'D):

SPARE CONDUITS SHOULD BE CONSIDERED OR INSTALLED:

1. WHEN REQUESTED BY A CUSTOMER AT HIS OWN EXPENSE, BUT NOT TO EXCEED CONDUIT LIMITATIONS IN THIS STANDARD.
2. WHEN IT IS ECONOMICAL TO INSTALL CONDUIT IN LIEU OF CONCRETE, BUT NOT TO EXCEED
3. BASED ON FUTURE CONSTRUCTION LIMITATIONS SUCH AS BENEATH BRIDGES, ROADWAYS AND RAILROAD TRACKS, BUT NOT TO EXCEED CONDUIT LIMITATIONS IN THIS STANDARD.
4. IN CONVERSION OR NEW BUSINESS PROJECTS TO ALLOW EASY BYPASS OF THE POLE DURING REMOVAL. CONDUITS INSTALLED FOR THIS PURPOSE SHALL NOT GO UP THE POLE BUT, RATHER, SHALL EXTEND PAST THE POLE A MINIMUM OF 6 FEET.

P FUTURE SPARE CONDUIT REFERS TO AN EMPTY CONDUIT SPECIFIED BY EITHER THE PLANNER OR DISTRIBUTION PLANNING FOR AREAS WITH GROWTH POTENTIAL. FUTURE FEEDER CONDUIT SPECIFIED BY DISTRIBUTION PLANNING MUST BE SUPPORTED BY THE LONG TERM FEEDER ARRANGEMENT PLAN.

(Q) COMMUNICATIONS ONLY POINT OF ATTACHMENT FOR LADDER ARM BRACKET CONSTRUCTION SHALL BE ON THE BACK SIDE OF THE ARM BRACKET ASSEMBLY, (GALVANIZED UNISTRUT PIPE CLAMPS SHALL BE USED TO SECURE THE CONDUIT). COMMUNICATIONS MAY ATTACH ON THE BACK OF THE ASSEMBLY ALONGSIDE SDG&E'S RISER.

(R) SLOPE SLURRY ENCASEMENT 1/4-INCH ABOVE GRADE OF PAVED AREA TO DRAIN WATER AWAY FROM CONDUIT RISER.

BILL OF MATERIALS:

ITEM	DESCRIPTION	CONDUIT SIZE	AL CABLE	QUANTITY	STANDARD PAGE	STOCK NUMBER	DESIGN UNIT
1	COUPLING, 3" IPS DIRECT/ENCASED BURIAL	3"	-	AS REQ'D	-	S279904	-
	COUPLING, 4" DB/EB, PVC	4"	-	AS REQ'D	-	S279936	-
	COUPLING, 5" IPS, DIRECT/ENCASED BURIAL	5"	-	AS REQ'D	-	S280032	-
2	ELBOW, 3" SCH 80 PVC (CONDUIT RISER	3" - 36" R	-	AS REQ'D	-	S322472	3"CP-B
	CONDUIT RISER BEND, SCHEDULE 80 4"_48"	4" - 48" R	-	AS REQ'D	-	S322480	4"CP-B
	ELBOW, (CONDUIT RISER BEND) SCHEDULE 80,	5" - 48" R	-	AS REQ'D	-	S322488	5"CP-B
3	REDUCER, 4" X 3" SCH.80, SPIGOT TO SPIGOT	4" TO 3"	-	AS REQ'D	-	S573408	4-3RED
	REDUCER, 5" IPS TO 4" IPS, PVC SCHED	5" TO 4"	-	AS REQ'D	-	S573424	5-4RED
4	PVC SCHEDULE 80 3" W/CPLG	3"	-	AS REQ'D	-	S251552	S80-3"
	CONDUIT, PVC, SCH. 80, 4" X 10'	4"	-	AS REQ'D	-	S251584	S80-4"
	CONDUIT. 5" X 10' SCH. 80 PVC	5"	-	AS REQ'D	-	S251592	S80-5"
5	COUPLING, PVC, SCHEDULE 80, 3" IPS	3"	-	AS REQ'D	-	S280544	-
	COUPLING, 4" PVC SCH 80 SWEDGED, PER NEMA TC2	4"	-	AS REQ'D	-	S280576	-
	COUPLING, 5" SCH.80 PVC, SWEDGED	5"	-	AS REQ'D	-	S280592	-
6	COUPLING 3" PVC SCHEDULE 40, PER NEMA	3"	-	AS REQ'D	-	S280448	-
	COUPLING 4" SCHEDULE 40 PVC PER NEMA TC2	4"	-	AS REQ'D	-	S280480	-
	COUPLING, 5" PVC SCH 40, PER NEMA TC2.	5"	-	AS REQ'D	-	S280496	-
7	3" SCHEDULE 40 PVC	3"	-	AS REQ'D	-	S251360	S40-3"
	4" SCHEDULE 40 PVC	4"	-	AS REQ'D	-	S251392	S40-4"
	CONDUIT PVC 5 IN X 10FT SCH 40, WITH	5"	-	AS REQ'D	-	S251408	S40-5"
8	STRAP, CONDUIT, 3 INCH, 2-1/4 INCH DIAMETER	3"	-	AS REQ'D	-	S697920	-
	STRAP, CONDUIT,4IN, TWO 1/4IN DIAMETER	4"	-	AS REQ'D	-	S697952	-
	STRAP, PIPE, 5", TWO HOLE	5"	-	AS REQ'D	-	S697984	-
9	GRIP, CONDUIT RISER, CLOSED DOUBLE MESH 1-COND #2 SOLID, 2" CONDUIT, 1"-1.24"	3"	1/C#2 SOL	AS REQ'D	-	S393984 (N)	2G1#2A
	GRIP, CONDUIT RISER, CLOSED DOUBLE MESH 2 OR 3 COND #2 SOLID, 3" CONDUIT, 2"-2.49"	3"	2-1/C#2 SOL, 3-1/C#2 SOL	AS REQ'D	-	S394048 (N)	3G2#2A, 3G3#2A
	GRIP, 4" CONDUIT RISER, CLOSED SINGLE MESH FOR #2 SOLID CABLE.	4"	3-1/C#2 SOL	AS REQ'D	-	S394104 (N)	4G3#2A
	GRIP, CONDUIT RISER, CLOSED DOUBLE MESH 3-1COND #2 SOLID, 4" CONDUIT, 2.5"-2.99" ALSO 3-1COND 4/0 COPPER	4"	4/0	AS REQ'D	-	S394080 (N)	4G#2/0, 4G4/0C
	GRIP, 4" CONDUIT RISER, CLOSED SINGLE MESH FOR 350MCM CABLE.	4"	350 KCMIL	AS REQ'D	-	S394100 (N)	4G-350

REV	CHANGE	DRWN	BY	CHKD	APVD	DATE
D	REVISE TO 3D FORMAT	DV	JIK	-	-	11/11/2021
C	FORMATTING	EDM	JIK	-	-	09/16/2021
B	DRAWING UPDATE	PEI	-	-	-	02/18/2019

SDG&E ELECTRIC OVERHEAD AND UNDERGROUND CONSTRUCTION STANDARDS

CABLE POLE RISER INSTALLATION

SCALE: NOT TO SCALE

DRAWING NO: OH1404.2 UG4204.2

SHEET: 2 OF 3

© 1998 - 2021 San Diego Gas and Electric Company. All rights reserved. Removal of this copyright notice without permission is not permitted under law.

X Indicates Latest Revision | Completely Revised | New Page | Information Removed

BILL OF MATERIALS: (CONT'D)

ITEM	DESCRIPTION	QUANTITY	CONDUIT SIZE	AL CABLE	STANDARD PAGE	STOCK NUMBER	DESIGN UNIT
9	GRIP, 5" CONDUIT RISER, CLOSED SINGLE MESH FOR 350MCM CABLE.	AS REQ'D	5"	350 KCMIL	-	S394102 (N)	5G-350
	GRIP, 5" CONDUIT RISER, CLOSED SINGLE MESH FOR 750MCM OR 500MCM CABLE.	AS REQ'D	5"	500 KCMIL 750 KCMIL	-	S394096 (N)	5G500C, 5G-750
	GRIP, 5" CONDUIT RISER, CLOSED SINGLE MESH FOR 1000 MCM CABLE.	AS REQ'D	5"	1000 KCMIL	-	S394098 (N)	5G1000
10	PROTECTOR, NYLON CABLE	AS REQ'D	-	-	-	S558720	-
11	BRACKET, CONDUIT STANDOFF, CONSTRUCTED	AS REQ'D	-	-	-	S167186 (X)(B)	LA-ARM
12	CHANNEL, 1-5/8" X 1-5/8" BACK TO BACK	AS REQ'D	-	-	-	S216702 (X)(B)	LA-ARM
13	NUT, STUD, 1/2" X 1-3/8"	AS REQ'D	-	-	-	S507000	-
14	2" UNISTRUT PIPE CLAMPS	AS REQ'D	-	-	-	S229536 (VI)	CL-2IN
15	BOLT, MACHINE, 5/8" X 16", GALV W/ NUT	AS REQ'D	-	-	OH390	S154912 (B)	-
	WASHER CURVED RIB, 3" X 3" W/11/16" HOLE FOR 5/8" BOLT HOT DIPPED GALVANIZED	AS REQ'D	-	-	OH390	S797792 (B)	-
	WASHER, 5/8", DOUBLE COIL SPRING, TYPE M-W, STEEL, TIN/ZINC COAT	AS REQ'D	-	-	OH390	S798560 (B)	-
16	CLAMP, PIPE, STEEL, GALV., UNISTRUT, 4"	AS REQ'D	-	-	-	S229664	CL-4IN
17	5" GALV. PIPE CLAMP	AS REQ'D	-	-	-	S229668	CL-5IN
18	CLAMP, PIPE, STEEL 3"	AS REQ'D	-	-	-	S229632	CL-3IN
19	CHANNEL, GALV., 8"	AS REQ'D	-	-	-	S216840 (D)	-

NOTES:

I. ALL CABLE POLE RISERS, PRIMARY AND SECONDARY SHALL BE 3 IN MINIMUM CONDUIT.

II. THIS CONSTRUCTION IS LIMITED TO A MAXIMUM OF FOUR SDG&E RISERS (NO MORE THAN TWO PRIMARY RISER).

III. WHEN POSSIBLE, RISER SHOULD BE INSTALLED ON THE SIDE OF THE POLE OPPOSITE TRAFFIC FLOW.

IV. SPARE CONDUITS SHALL BE CAPPED JUST ABOVE GROUND LEVEL TO PREVENT MOISTURE OR WIRE ENTRY AND KEEP DEBRIS OUT, SPARES ARE NOT TO BE CONSIDERED AS A RISER.

V. WHENEVER POSSIBLE, SINGLE RISES SHOULD BE INSTALLED AWAY FROM THE TRAFFIC TOWARD THE SIDEWALK.

(VI) NOT SHOWN ON FIGURES.

(X) THIS ITEM IS EXEMPT.

REFERENCE:

a. FOR POLE STEPS, SEE OH363UG4205.

b. FOR MATERIAL REQUIREMENTS, ETC., SEE UG3944.

c. FOR POSITIONING OF RISERS INVOLVING MORE THAN ONE UTILITY, SEE OH1402UG4202.

(d) FOR NON-PORCELAIN TERMINAL MOUNTING BRACKET INSTALLATION AND MATERIALS, SEE OH1407UG4207.

(e) FOR 0 - 750V UNDERGROUND SERVICE FROM AN OVERHEAD LINE, SEE OH1414UG4214.

f. FOR TELECOMMUNICATION INSTALLATION, SEE UG4620, UG4621, UG4622, UG4623, UG4624, UG4625, AND UG4626.

g. PVC RISERS ARE NOT PERMITTED WITHIN THE CLIMBING SPACE PER G.O. 95 RULE 22.2C.

(h) FOR DEPTH REQUIREMENTS, SEE UG3370.

TABLE OF CONTENTS

REV	CHANGE	DRWN	BY	CHKD	APVD	DATE
D	REVISE TO 3D FORMAT	DV	JIK	-	-	11/11/2021
C	FORMATTING	EDM	JIK	-	-	09/16/2021
B	DRAWING UPDATE	PEI	-	-	-	02/18/2019

SDG&E ELECTRIC OVERHEAD AND UNDERGROUND CONSTRUCTION STANDARDS

CABLE POLE RISER INSTALLATION

SCALE: NOT TO SCALE

DRAWING NO: OH1404.3 UG4204.3

SHEET: 3 OF 3

© 1998 - 2021 San Diego Gas and Electric Company. All rights reserved. Removal of this copyright notice without permission is not permitted under law.

X Indicates Latest Revision | Completely Revised | New Page | Information Removed

SCOPE: THIS STANDARD SHOWS THE INSTALLATION OF POLE STEPS IN ACCORDANCE WITH SDG&E REQUIREMENTS.

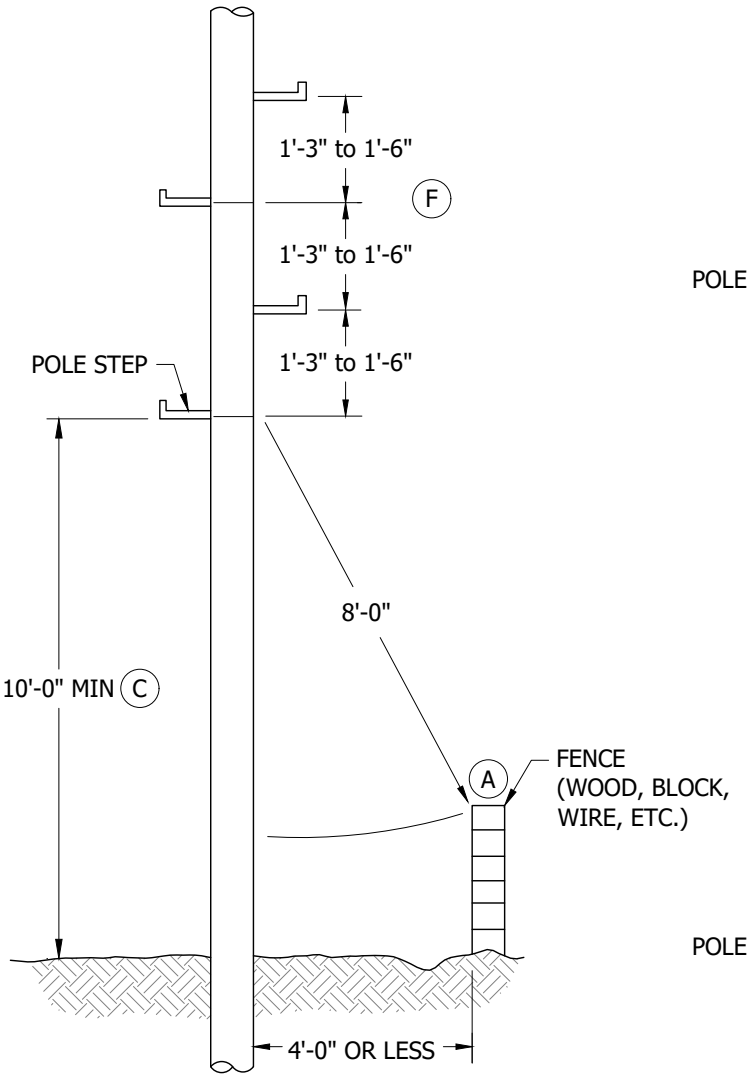

FIGURE 1

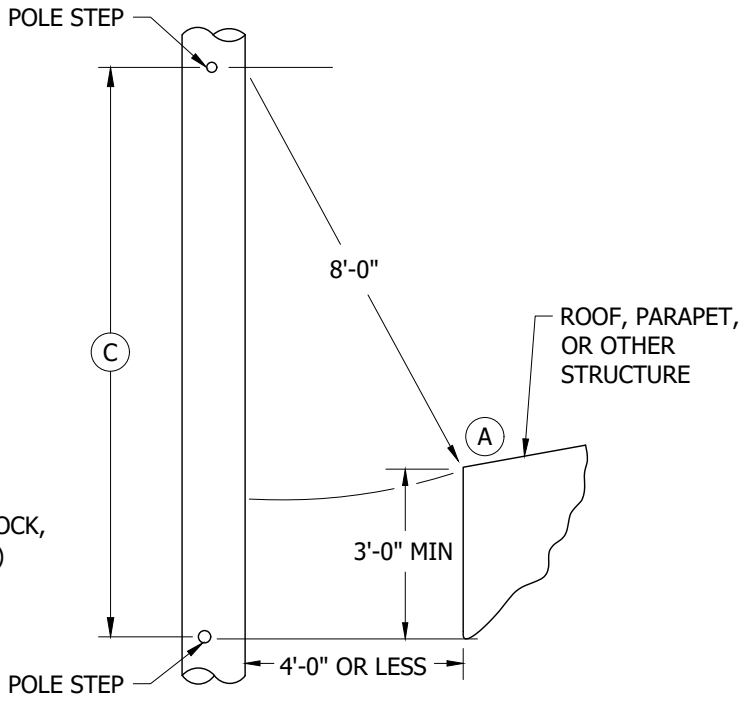

FIGURE 2
POLE-ROOF, PARAPET, STRUCTURE CONFLICT

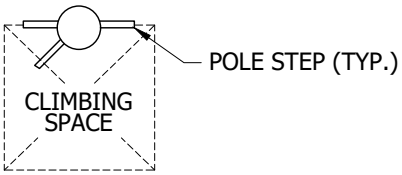

FIGURE 3
CLIMBING SPACE CONSIDERATIONS B

TABLE OF CONTENTS

© 1998 - 2024 San Diego Gas & Electric Company. All rights reserved. Removal of this copyright notice without permission is not permitted under law.

REV	CHANGE	DR	BY	DSN	APV	DATE	REV	CHANGE	DR	BY	DSN	APV	DATE
E	NOTES UPDATE	-	JC	JS	MDJ	01/17/2018	H	DRAWING UPDATE	EDM	JAC	MRF	MRF	12/18/2024
D	NOTES UPDATE	-	JS	JS	MDJ	06/26/2017	G	BILL OF MATERIALS UPDATE	GLC	JAS	MRF	MRF	09/11/2024
C	EDITORIAL CHANGES	-	JS	GW	MDJ	09/28/2016	F	DRAWING UPDATE	EDM	JAC	JES	CZH	07/01/2020

X Indicates Latest Revision | Completely Revised | New Page | Information Removed

SDG&E ELECTRIC OVERHEAD AND UNDERGROUND CONSTRUCTION STANDARDS

INSTALLATION OF PERMANENT POLE STEPS

OH363.1
UG4205.1

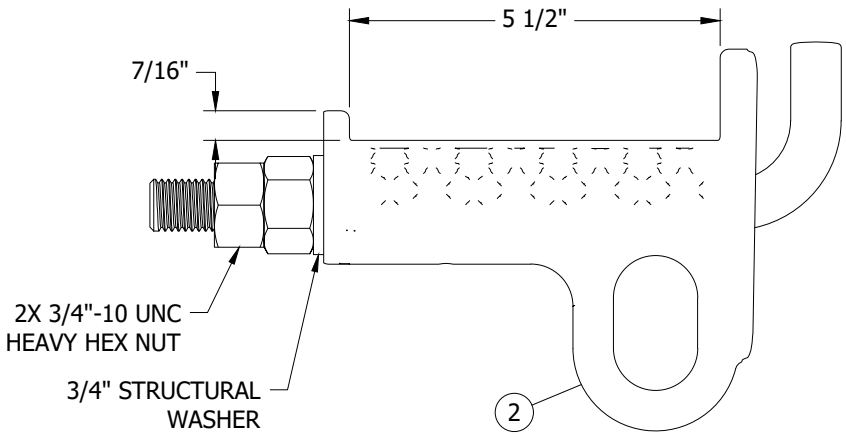

FIGURE 4
APEX POLE STEP (III) (IV)
SIDE VIEW

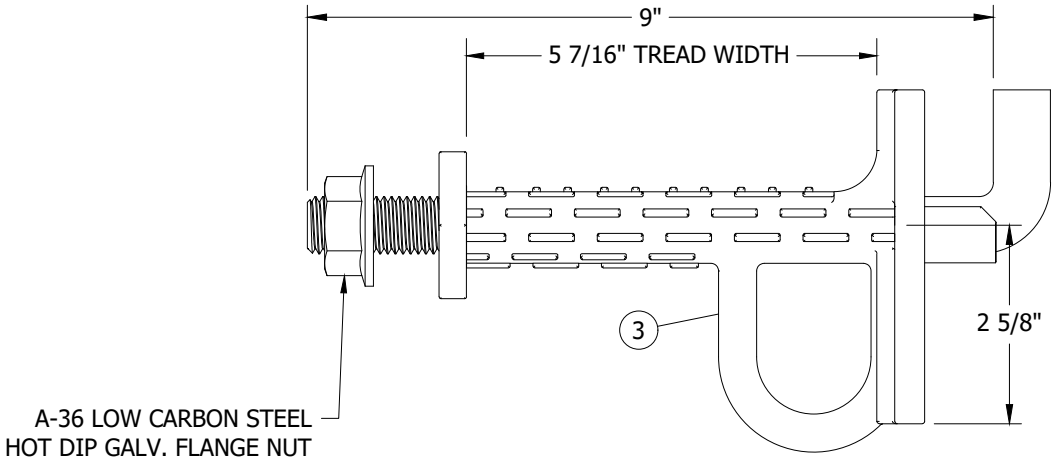

FIGURE 5
VAF POLE STEP (III) (IV)
SIDE VIEW

TABLE OF CONTENTS

© 1998 - 2024 San Diego Gas & Electric Company. All rights reserved. Removal of this copyright notice without permission is not permitted under law.

REV	CHANGE	DR	BY	DSN	APV	DATE	REV	CHANGE	DR	BY	DSN	APV	DATE
E	NOTES UPDATE	-	JC	JS	MDJ	01/17/2018	H	DRAWING UPDATE	EDM	JAC	MRF	MRF	12/18/2024
D	NOTES UPDATE	-	JS	JS	MDJ	06/26/2017	G	BILL OF MATERIALS UPDATE	GLC	JAS	MRF	MRF	09/11/2024
C	EDITORIAL CHANGES	-	JS	GW	MDJ	09/28/2016	F	DRAWING UPDATE	EDM	JAC	JES	CZH	07/01/2020

Indicates Latest Revision [X] Completely Revised [ ] New Page [X] Information Removed

SDG&E ELECTRIC OVERHEAD AND UNDERGROUND CONSTRUCTION STANDARDS

INSTALLATION OF PERMANENT POLE STEPS

OH363.2
UG4205.2

INSTALLATION:

(A) EIGHT FOOT MINIMUM RADIAL CLEARANCE IS REQUIRED FROM THE FIRST POLE STEP TO THE TOP OF ANY OBSTACLE WHEN THE POLE IS SET FOUR FEET OR LESS FROM THE OBSTACLE. IF THE POLE IS SET MORE THAN FOUR FEET AWAY FROM THE OBSTACLE, THIS REQUIREMENT DOES NOT APPLY.

(B) POLE STEPS SHOULD BE LOCATED NEAR THE EDGES OF THE CLIMBING SPACE BUT MUST BE LOCATED SO THEY ARE ALWAYS USABLE. FOR INSTANCE, IF VERTICAL RISERS WOULD INTERFERE WITH NORMALLY LOCATED POLE STEPS, INSTALL THE STEPS WITHIN THE CLIMBING SPACE AS SHOWN. APPLIES ONLY TO WOOD POLES.

(C) NO STEPS ALLOWED TO REMAIN IN THIS AREA AFTER WORK ON THE POLE IS COMPLETE.

D. THE FOLLOWING WOOD POLES SHALL BE STEPPED:

1. POLES THAT ARE DIFFICULT TO CLIMB (E.G. SHELL ROT, LARGE CRACKS).
2. POLES THAT ARE FREQUENTLY CLIMBED BY TROUBLESHOOTER FOR MAINTENANCE OR OPERATING PURPOSES, OR, AS REQUESTED.

E. FIBERGLASS AND STEEL POLES THAT ARE INACCESSIBLE SHALL EITHER BE PERMANENTLY STEPPED OR HAVE PROVISIONS TO BE STEPPED CONSISTENT WITH SDG&E CONSTRUCTION STANDARDS. THE FIRST POLE STEP SHALL BE INSTALLED AT TEN FEET ABOVE THE GROUND LEVEL.

(F) POLE STEPS ON ALL POLES ARE TO BE SPACED A MINIMUM OF 15" TO 18", TEN FEET ABOVE GROUND LEVEL. THE FIRST TEN FEET OF THE POLE, STEPS ARE TO BE SPACED A MAX. OF 18".

G. TRANSMISSION POLES WITH DISTRIBUTION UNDER BUILD SHALL BE STEPPED TEN FEET FROM GROUND LEVEL AND MAY EXTEND UP TO AND ABOVE PRIMARY.

BILL OF MATERIALS:

ITEM	DESCRIPTION	COLOR	QUANTITY	STANDARD PAGE	STOCK NUMBER	DESIGN UNITS
1	STEP, POLE, DRIVING TYPE (FOR WOOD POLE) (II)	--	--	--	S692992	STEP
2	STEP, POLE, WITH RING, APEX	BROWN	--	--	S693018	--
3	STEP, POLE, VAF 1002-.75INCH W/SAFETY	SILVER	--	--	S693020	--

NOTES:

I. JOINT POLE WHERE ANOTHER PARTY OWNS THE POLE, G.O. 95 WILL BE MAINTAINED.

(II) NOT SHOWN IN FIGURES.

(III) STEP PARTS SHALL NOT BE ALTERED IN ANY MANNER. HANDLE STEP CASTINGS WITH CARE. DO NOT DROP, STRIKE OR IMPACT.

(IV) MAXIMUM ALLOWABLE LOAD OF 500LBS. A SAFETY FACTOR OF 2.5 IS INCLUDED IN THIS VALUE.

(X) THIS ITEM IS EXEMPT.

REFERENCE:

a. POLE STEPPING JOINT USE POLES, SEE G.O. 95 RULE 91.3A.

TABLE OF CONTENTS

© 1998 - 2024 San Diego Gas & Electric Company. All rights reserved. Removal of this copyright notice without permission is not permitted under law.

REV	CHANGE	DR	BY	DSN	APV	DATE	REV	CHANGE	DR	BY	DSN	APV	DATE
E	NOTES UPDATE	-	JC	JS	MDJ	01/17/2018	H	DRAWING UPDATE	EDM	JAC	MRF	MRF	12/18/2024
D	NOTES UPDATE	-	JS	JS	MDJ	06/26/2017	G	BILL OF MATERIALS UPDATE	GLC	JAS	MRF	MRF	09/11/2024
C	EDITORIAL CHANGES	-	JS	GW	MDJ	09/28/2016	F	DRAWING UPDATE	EDM	JAC	JES	CZH	07/01/2020

X Indicates Latest Revision | Completely Revised | New Page | X Information Removed

SDG&E ELECTRIC OVERHEAD AND UNDERGROUND CONSTRUCTION STANDARDS

INSTALLATION OF PERMANENT POLE STEPS

OH363.3
UG4205.3

SCOPE: THIS STANDARD SHOWS GENERAL INFORMATION FOR CABLE POLES AT 12.47KV & BELOW.

ATTENTION

* NEW PRIMARY CABLE POLE INSTALLATIONS SHALL BE TRUCK ACCESSIBLE. EXISTING POLE LOCATIONS THAT ARE NOT TRUCK ACCESSIBLE CAN BE GRANDFATHERED BY DEVIATION.

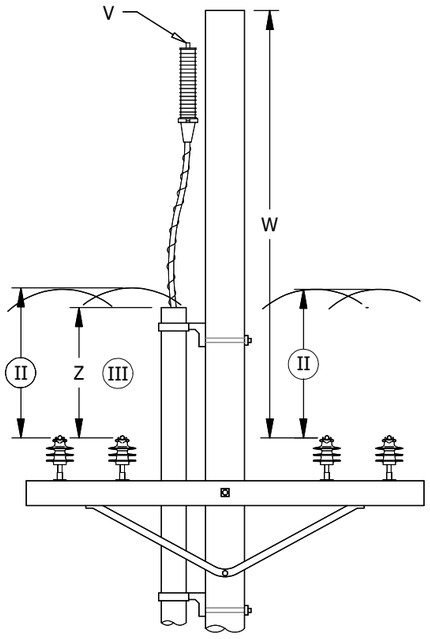

FIGURE 1
CONFIGURATION 1

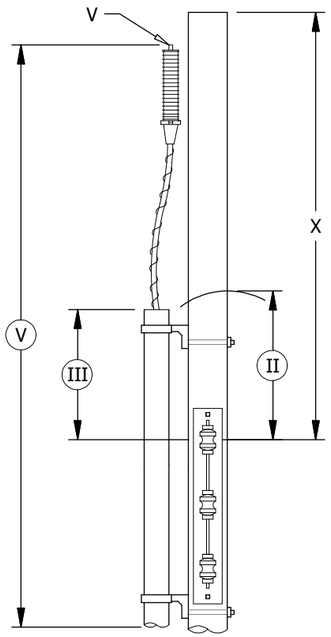

FIGURE 1
CONFIGURATION 2

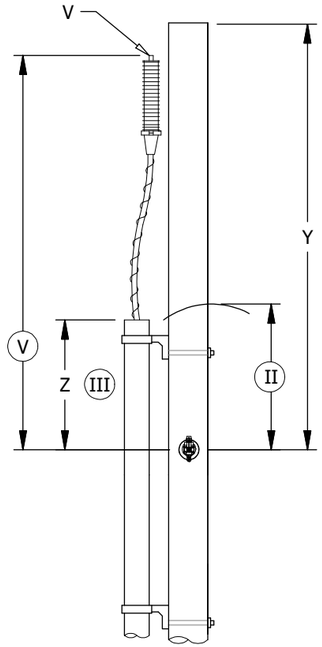

FIGURE 1
CONFIGURATION 3

TABLE 1

CLEARANCES						
VOLTAGE OF LEAD WIRES CONNECTED TO TERMINALS V (V) (I)	MINIMUM SEPARATION TO CONDUCTORS BELOW					
	SUPPLY ON CROSSARMS W (IN) (a)(b)			RACK CONSTRUCTION 0-750V X (IN) (c)	CABLE 0-750V Y (IN) (d)	COMMUNICATIONS CROSSARMS AND CABLE Z (IN) (e)
	0-750V	750-7,500V	7,500-20,000V			
0-750	24	--	--	72 UNGUARDED OR 48 WITH GUARD	72	36
750-7,500	48	48	--			48
7,500-20,000	48	48	48			60

INSTALLATION: NONE

BILL OF MATERIALS: NONE

NOTES:

(I) TERMINALS MAY BE BRACKET OR CROSSARM MOUNTED.
(II) 24-INCH MINIMUM RADIAL DIMENSION. (a)
(III) 18-INCH MINIMUM VERTICAL DIMENSION FROM CONDUIT EDGE OR LOWEST POINT OF CONDUCTOR LOOP. (a)
IV. USE THIS PAGE ONLY TO OBTAIN MINIMUM SEPARATIONS BETWEEN CONDUCTORS. DO NOT USE FOR CONSTRUCTION.
(V) 22'-6" MINIMUM TO GROUND.

REFERENCE:

(a) SEE G.O. 95 RULE 54.6F.
(b) SEE G.O. 95 TABLE 2, CASES 9, 10, 11.
(c) SEE G.O. 95 RULE 54.9E.
(d) SEE G.O. 95 RULE 54.10E
(e) SEE G.O. 95 RULE 92.1F3.

REV	CHANGE	DRWN	BY	CHKD	APVD	DATE
E	EDITORIAL CHANGES	EDM	MRF	GLW	KRG	06/27/2022
D	REVISED TO 3D FORMAT	AMP	JIK	-	-	01/27/2022
C	FORMATTING	EDM	JIK	-	-	09/16/2021

SDG&E ELECTRIC OVERHEAD AND UNDERGROUND CONSTRUCTION STANDARDS

GENERAL INFORMATION - 12.47KV & BELOW CABLE POLES

SCALE: NOT TO SCALE

DRAWING NO: OH1406.1 UG4206.1

SHEET: 1 OF 1

X Indicates Latest Revision | Completely Revised | New Page | Information Removed

© 1998 - 2022 San Diego Gas and Electric Company. All rights reserved. Removal of this copyright notice without permission is not permitted under law.

TABLE OF CONTENTS

SCOPE: THIS STANDARD SHOWS THE VARIOUS METHODS OF SECONDARY CONSTRUCTION WHEN UNDERGROUND CUSTOMERS ARE SERVED FROM OVERHEAD SECONDARY.



FIGURE 1
TERMINAL CONSTRUCTION (a)
ISOMETRIC VIEW

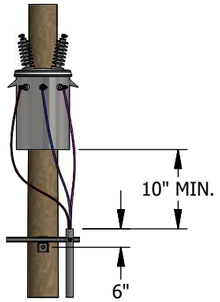

FIGURE 1
TERMINAL CONSTRUCTION (a)
FRONT VIEW

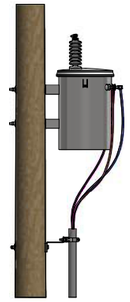

FIGURE 1
TERMINAL CONSTRUCTION (a)
SIDE VIEW

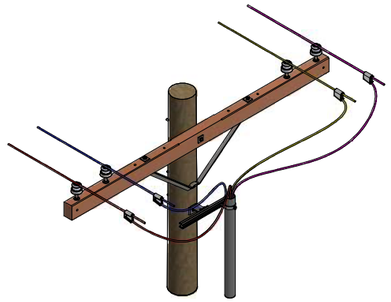

FIGURE 2
OPEN SECONDARY "AIR MAILING"
ISOMETRIC VIEW

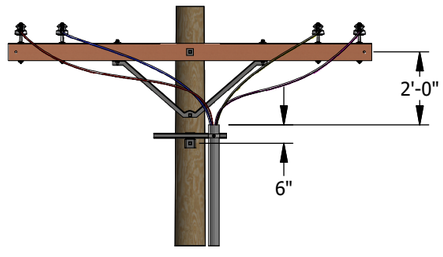

FIGURE 2
OPEN SECONDARY "AIR MAILING"
FRONT VIEW

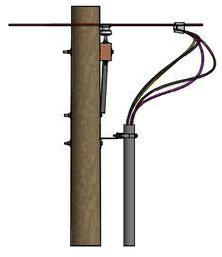

FIGURE 2
OPEN SECONDARY "AIR MAILING"
SIDE VIEW

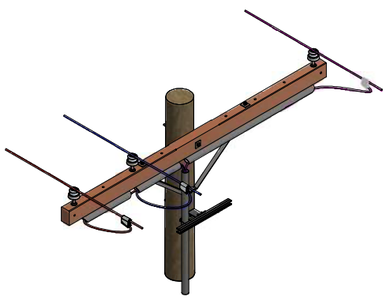

FIGURE3
CROSSARM CONSTRUCTION
#2 CABLE MAX.
ISOMETRIC VIEW

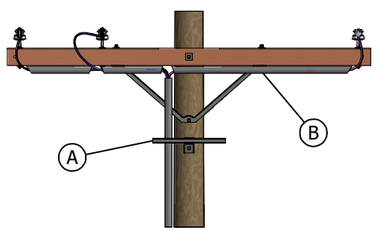

FIGURE 3
CROSSARM CONSTRUCTION
#2 CABLE MAX.
FRONT VIEW

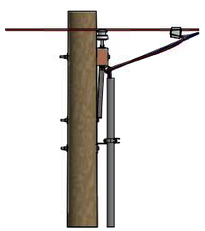

FIGURE 3
CROSSARM CONSTRUCTION
#2 CABLE MAX.
SIDE VIEW

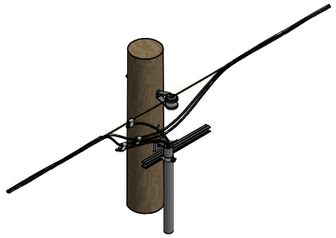

FIGURE 4
SECONDARY AERIAL CABLE
TANGENT CONSTRUCTION
ISOMETRIC VIEW

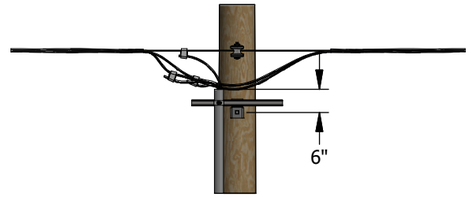

FIGURE 4
SECONDARY AERIAL CABLE
TANGENT CONSTRUCTION
FRONT VIEW

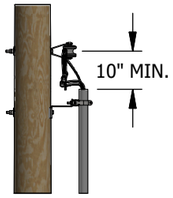

FIGURE 4
SECONDARY AERIAL CABLE
TANGENT CONSTRUCTION
SIDE VIEW

INSTALLATION:

(A) INSTALL CONDUIT ON THE BACK SIDE OF THE LADDER ARM BRACKET.

(B) INSTALL CABLE IN SCHEDULE 40 PVC UNDER ARM.

C. PVC RISER SHALL NOT BE INSTALLED IN THE CLIMBING SPACE. (b)

BILL OF MATERIALS: NONE

NOTES: NONE

REFERENCE:

(a) FOR RISER CONSTRUCTION, SEE OH1404UG4204.

(b) SEE G.O. 95, RULE 22.2 (C).

TABLE OF CONTENTS

REV	CHANGE	DRWN	BY	CHKD	APVD	DATE
D	REVISED TO 3D FORMAT	EDM	JIK	-	-	02/23/2022
C	FORMATTING	EDM	JIK	-	-	09/16/2021
B	DRAWING UPDATE	PEI	-	-	-	02/18/2019

SDG&E ELECTRIC OVERHEAD AND UNDERGROUND CONSTRUCTION STANDARDS

0-750V UNDERGROUND SERVICE FROM AN OVERHEAD LINE

SCALE: NOT TO SCALE

DRAWING NO: OH1414.1 UG4214.1

SHEET: 1 OF 1

© 1998 - 2022 San Diego Gas and Electric Company. All rights reserved. Removal of this copyright notice without permission is not permitted under law.

X Indicates Latest Revision | Completely Revised | New Page | Information Removed

SCOPE: THIS STANDARD SHOWS A CABLE POLE IN THE BUCK POSITION FOR #2/0 AND SMALLER UNDERGROUND CABLE.

ATTENTION:

* NEW PRIMARY CABLE POLE INSTALLATIONS SHALL BE TRUCK ACCESSIBLE. EXISTING CABLE POLE LOCATIONS THAT ARE NOT TRUCK ACCESSIBLE CAN BE GRANDFATHERED BY DEVIATION.

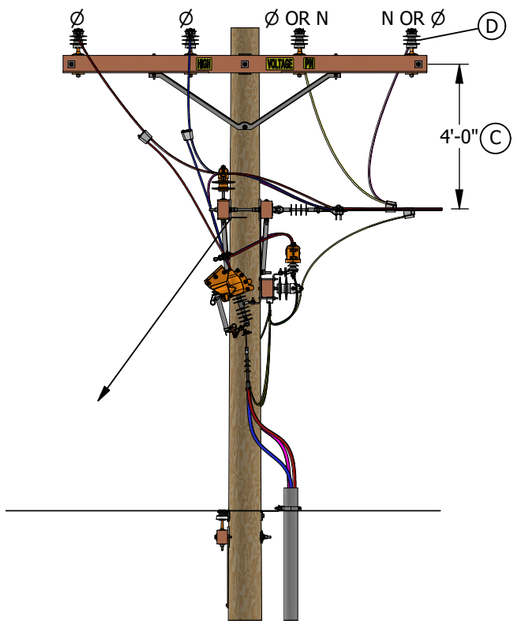

FIGURE 1
FRONT VIEW

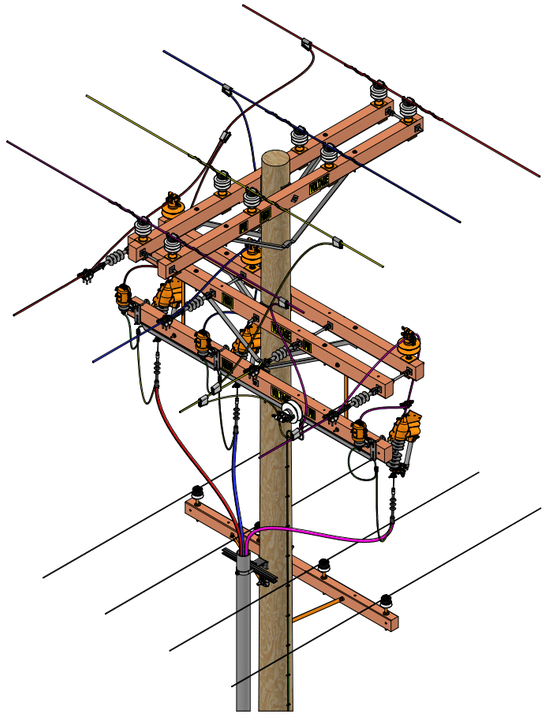

FIGURE 1
ISOMETRIC VIEW

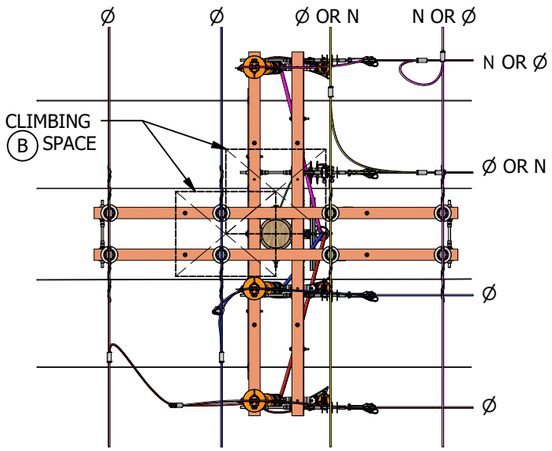

FIGURE 1
CLIMBING SPACE VIEW
PLAN VIEW

INSTALLATION:

A. THE CONSTRUCTION SHOWN BELOW THE BUCK ARM IS TYPICAL AND IS FOR ILLUSTRATION ONLY. FOR PROPER RISER, POTHEAD AND POTHEAD ARM CONSTRUCTION, SEE APPROPRIATE CABLE POLE STANDARDS IN THIS SECTION.

(B) TO MAINTAIN CLIMBING SPACE, THE LENGTH OF THE BUCK AND EQUIPMENT ARM WILL BE A MINIMUM FOR A THREE-PHASE CABLE POLE IS 12 FEET, AND FOR A SINGLE-PHASE CABLE POLE IS 10 FEET.

(C) A MINIMUM OF 48 INCHES MUST EXIST BETWEEN THE LINE ARM AND BUCK ARM TO MAINTAIN CLIMBING SPACE THROUGH THE BUCK ARM LEVEL AND UP TO THE LINE ARM LEVEL. (a)

(D) ON ALL NEW CONSTRUCTION AND WHEN ADDING TO EXISTING CONSTRUCTION, NEUTRAL CAN BE INSTALLED IN THE OUTSIDE OR INSIDE PIN POSITION. (b)

BILL OF MATERIALS: NONE

NOTES: NONE

REFERENCE:

(a) SEE OH251 FOR CLIMBING AND WORKING SPACE.

(b) SEE DM5124 FOR PRIMARY CONDUCTOR REQUIREMENTS.

TABLE OF CONTENTS

REV	CHANGE	DRWN	BY	CHKD	APVD	DATE
E	EDITORIAL CHANGES	EDM	MRF	MRF	KRG	12/06/2024
D	REVISED TO 3D FORMAT	EDM	JIK	-	-	04/12/2022
C	FORMATTING	EDM	JIK	-	-	09/16/2021

© 1998 - 2024 San Diego Gas and Electric Company. All rights reserved. Removal of this copyright notice without permission is not permitted under law.

SDG&E ELECTRIC OVERHEAD AND UNDERGROUND CONSTRUCTION STANDARDS

PRIMARY CABLE POLE CONSTRUCTION, LINE AND BUCK

SCALE: NOT TO SCALE

DRAWING NO: OH1418.1 UG4218.1

SHEET: 1 OF 1

X Indicates Latest Revision | Completely Revised | New Page | Information Removed

SCOPE: THIS STANDARD SHOWS CONSTRUCTION OF A MOLDED VACUUM INTERRUPTER (MVI) ON A DEADEND OR TANGENT CABLE POLE UTILIZING 200A OR 600A CABLE.

ATTENTION:

* NEW PRIMARY CABLE POLE INSTALLATIONS SHALL BE TRUCK ACCESSIBLE. EXISTING CABLE POLE LOCATIONS THAT ARE NOT TRUCK ACCESSIBLE CAN BE GRANDFATHERED BY DEVIATION.

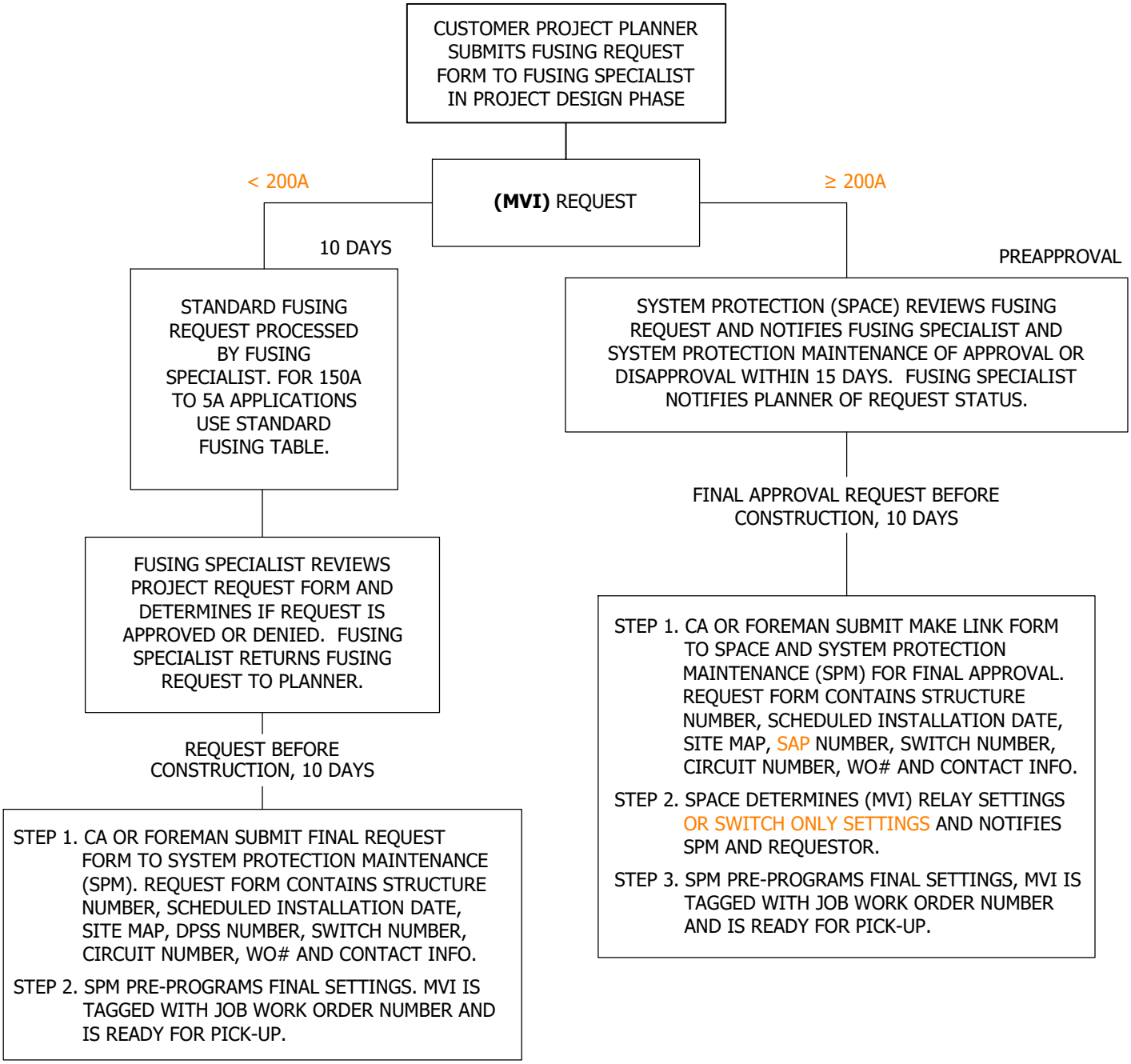

FIGURE 1
FUSING WORKFLOW CHART

© 1998 - 2023 San Diego Gas & Electric Company. All rights reserved. Removal of this copyright notice without permission is not permitted under law.

REV	CHANGE	DR	BY	DSN	APV	DATE	REV	CHANGE	DR	BY	DSN	APV	DATE
F	TABLE UPDATE	-	JAC	JES	CZH	11/12/2019	I	BILL OF MATERIALS UPDATE	ARC	RSL	MBL	FRC	07/20/2023
E	DRAWNG UPDATE	PEI	-	-	-	02/18/2019	H	DRAWING UPDATE	EDM	DWC	GLW	KRG	05/10/2022
D	COMPLETELY REVISED	-	JCL	TR	MJC	10/05/2012	G	BILL OF MATERIALS UPDATE	EDM	DEC	JES	CZH	02/08/2021

TABLE OF CONTENTS

TABLE OF CONTENTS

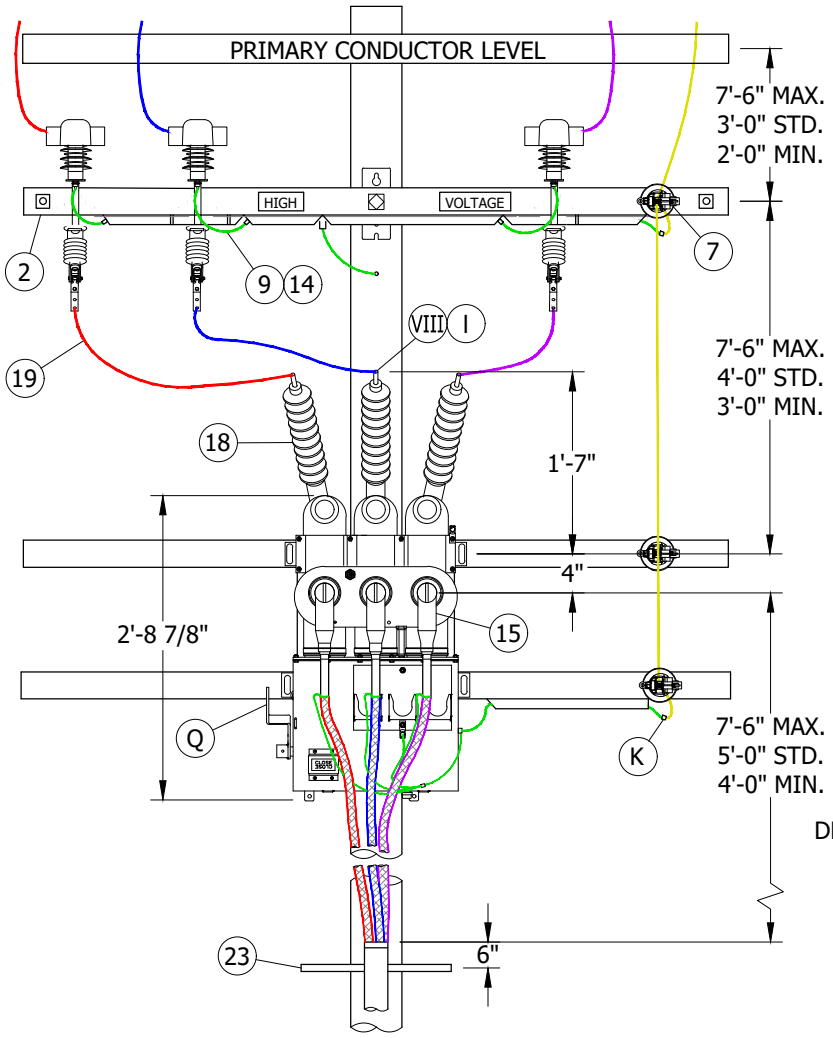

FIGURE 2
FRONT VIEW (XII)

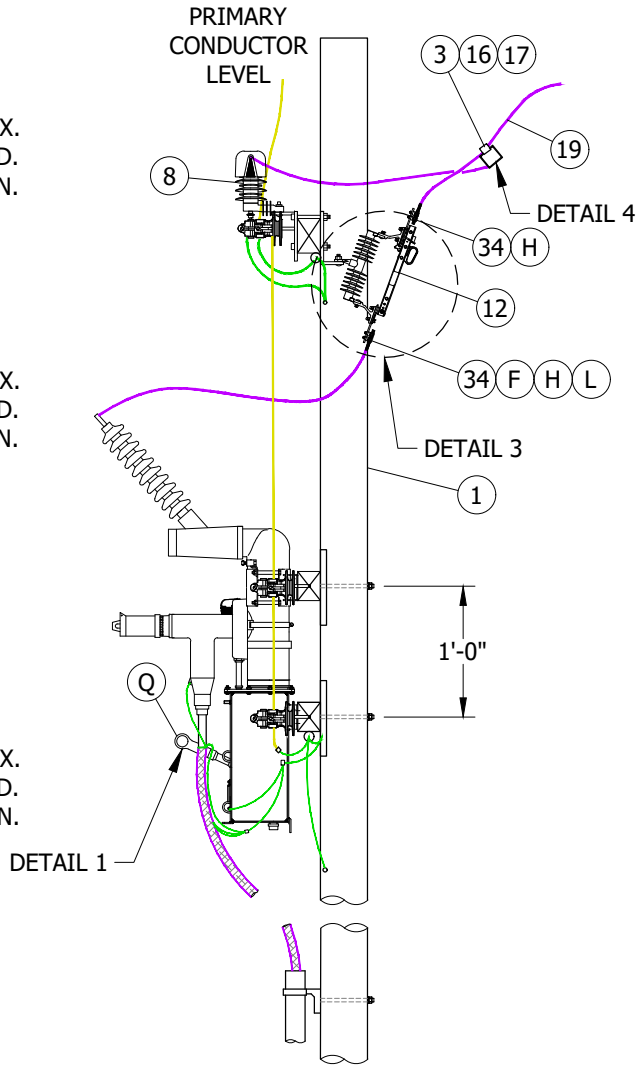

FIGURE 2
SIDE VIEW (XII)

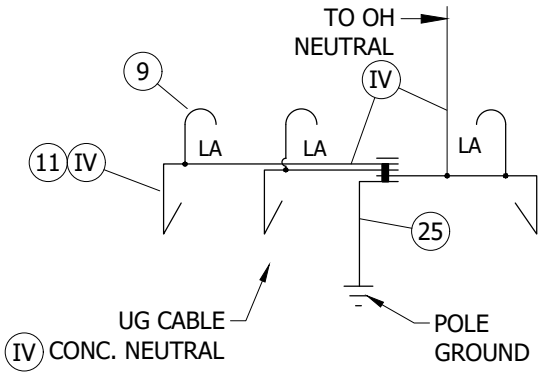

FIGURE 3
600A GROUND WIRING

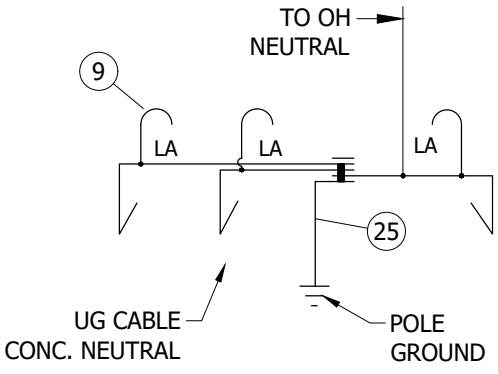

FIGURE 4
200A GROUND WIRING

© 1998 - 2023 San Diego Gas & Electric Company. All rights reserved. Removal of this copyright notice without permission is not permitted under law.

REV	CHANGE	DR	BY	DSN	APV	DATE	REV	CHANGE	DR	BY	DSN	APV	DATE
F	TABLE UPDATE	-	JAC	JES	CZH	11/12/2019	I	BILL OF MATERIALS UPDATE	ARC	RSL	MBL	FRC	07/20/2023
E	DRAWNG UPDATE	PEI	-	-	-	02/18/2019	H	DRAWING UPDATE	EDM	DWC	GLW	KRG	05/10/2022
D	COMPLETELY REVISED	-	JCL	TR	MJC	10/05/2012	G	BILL OF MATERIALS UPDATE	EDM	DEC	JES	CZH	02/08/2021

X Indicates Latest Revision | Completely Revised | New Page | Information Removed

SDG&E ELECTRIC OVERHEAD AND UNDERGROUND CONSTRUCTION STANDARDS

CABLE POLE MVI/MV200/600A THREE-PHASE
CABLE POLE APPLICATION

OH1435.2
UG4235.2

TABLE OF CONTENTS

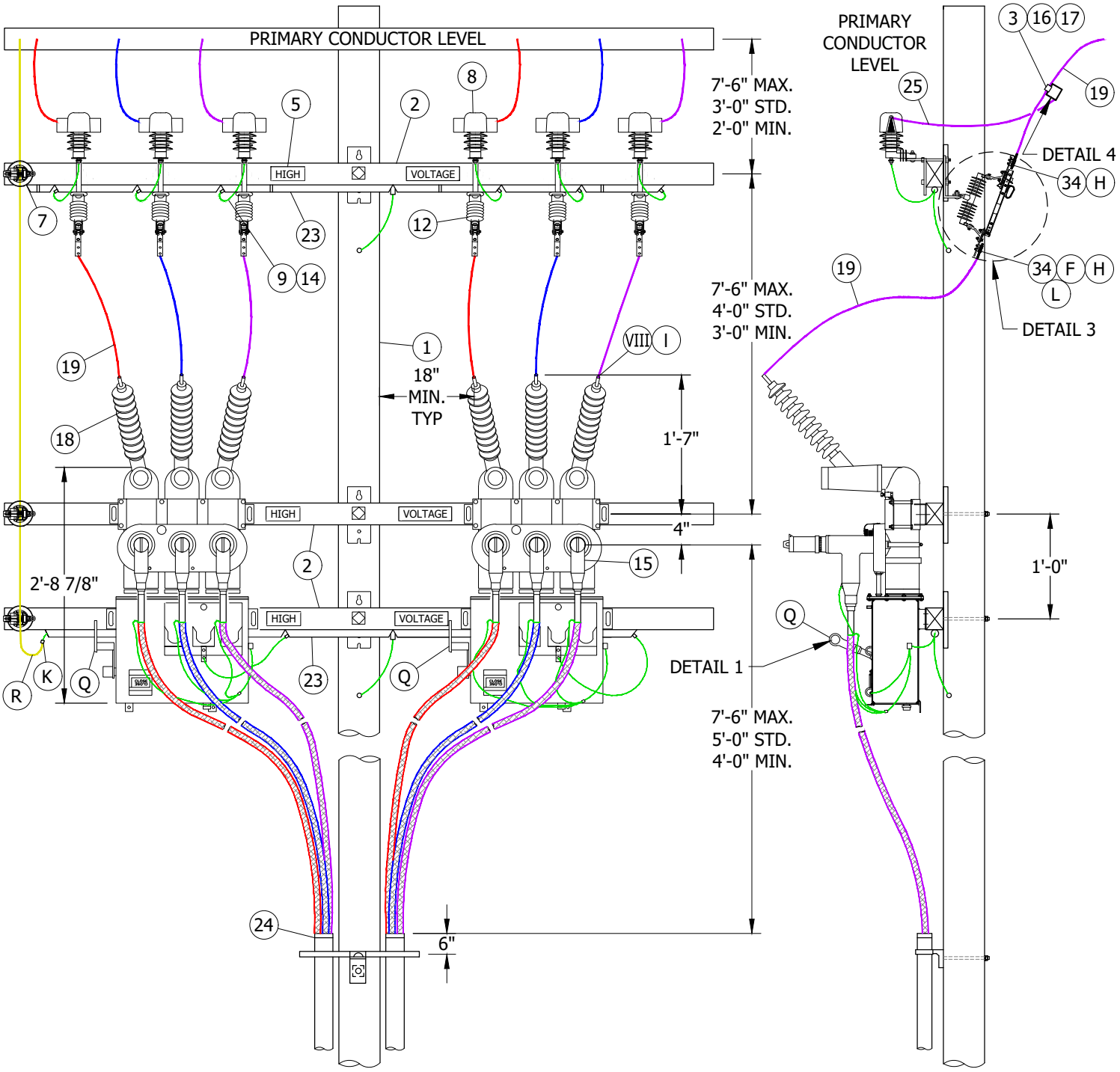

FIGURE 5
FRONT VIEW

FIGURE 5
SIDE VIEW

© 1998 - 2023 San Diego Gas & Electric Company. All rights reserved. Removal of this copyright notice without permission is not permitted under law.

REV	CHANGE	DR	BY	DSN	APV	DATE	REV	CHANGE	DR	BY	DSN	APV	DATE
F	TABLE UPDATE	-	JAC	JES	CZH	11/12/2019	I	BILL OF MATERIALS UPDATE	ARC	RSL	MBL	FRC	07/20/2023
E	DRAWNG UPDATE	PEI	-	-	-	02/18/2019	H	DRAWING UPDATE	EDM	DWC	GLW	KRG	05/10/2022
D	COMPLETELY REVISED	-	JCL	TR	MJC	10/05/2012	G	BILL OF MATERIALS UPDATE	EDM	DEC	JES	CZH	02/08/2021

X Indicates Latest Revision | Completely Revised | New Page | Information Removed

SDG&E ELECTRIC OVERHEAD AND UNDERGROUND CONSTRUCTION STANDARDS

SHEET
3 OF 9

CABLE POLE MVI/MV200/600A THREE-PHASE
CABLE POLE APPLICATION

OH1435.3
UG4235.3

ATTENTION:

* THIS FIGURE ILLUSTRATES SINGLE-PHASE OVERHEAD CONSTRUCTION WITH TWO SINGLE-PHASE UNDERGROUND CABLES.

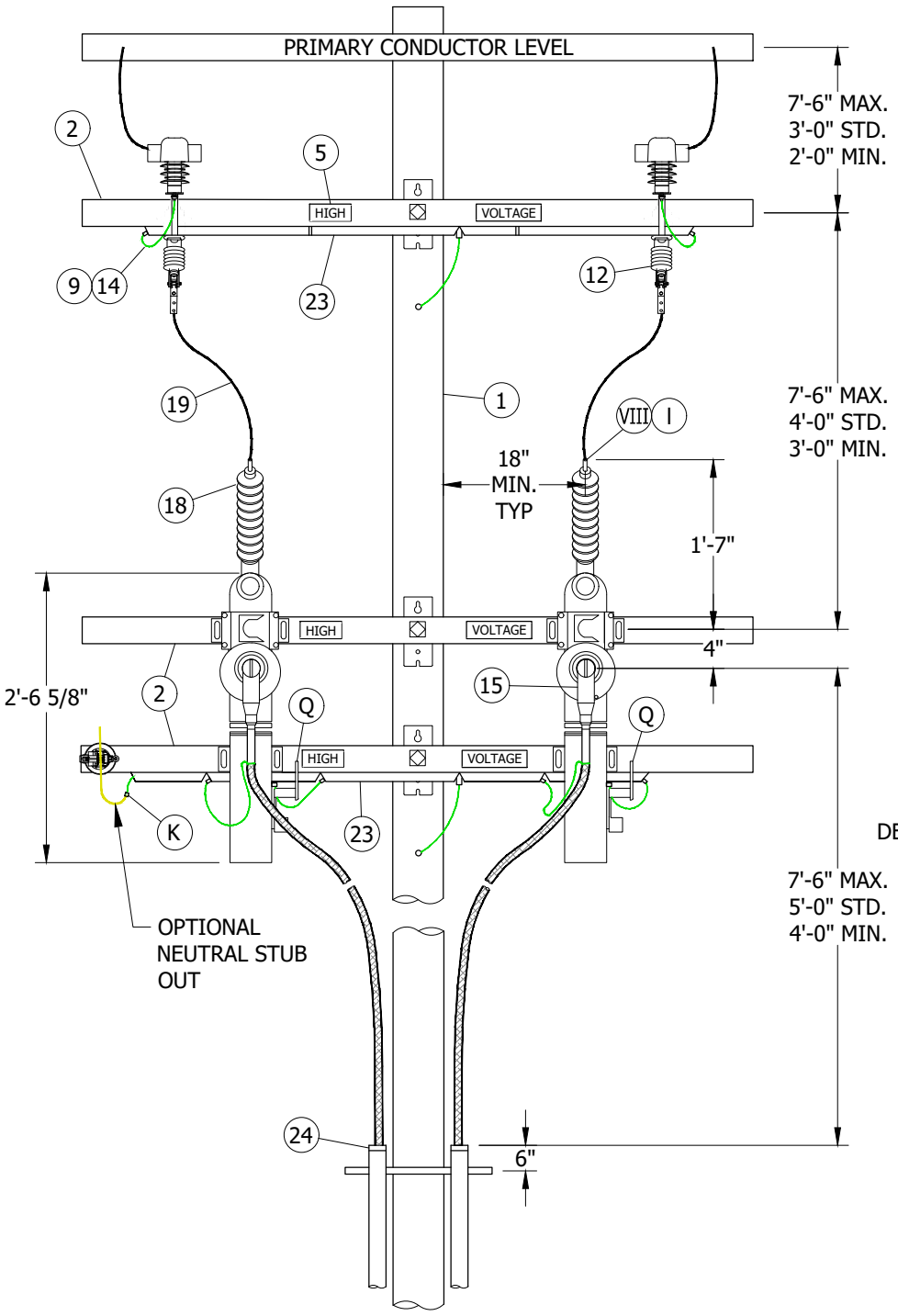

FIGURE 6
FRONT VIEW (XI)

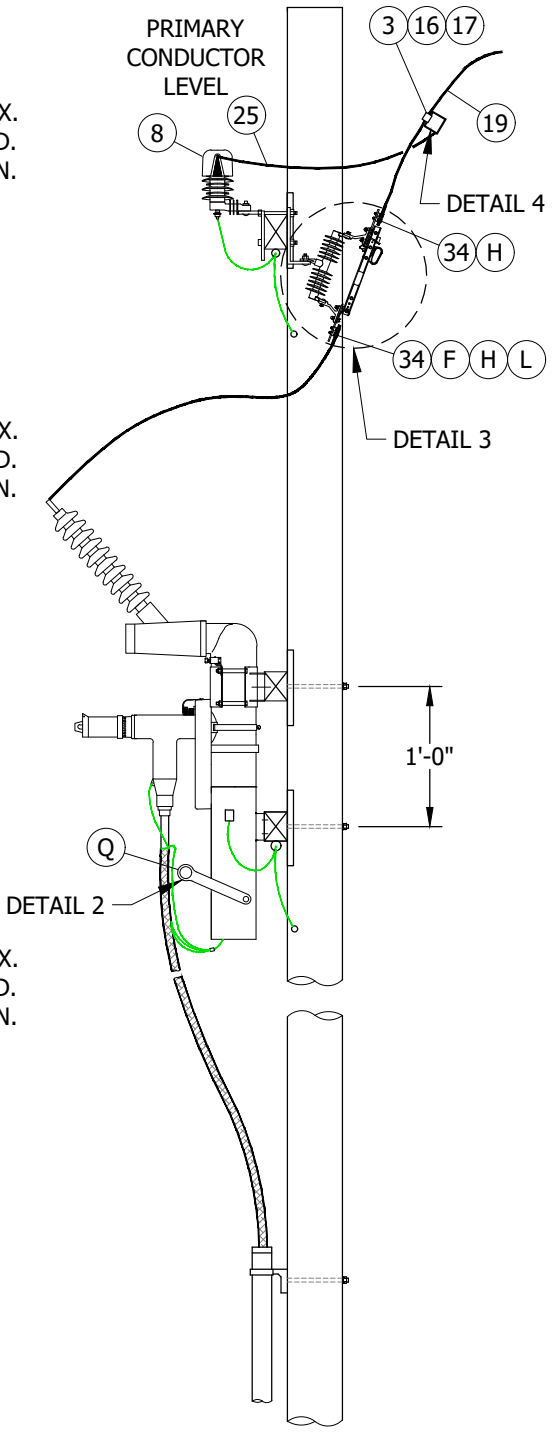

FIGURE 6
SIDE VIEW (XI)

© 1998 - 2023 San Diego Gas & Electric Company. All rights reserved. Removal of this copyright notice without permission is not permitted under law.

REV	CHANGE	DR	BY	DSN	APV	DATE	REV	CHANGE	DR	BY	DSN	APV	DATE
F	TABLE UPDATE	-	JAC	JES	CZH	11/12/2019	I	BILL OF MATERIALS UPDATE	ARC	RSL	MBL	FRC	07/20/2023
E	DRAWNG UPDATE	PEI	-	-	-	02/18/2019	H	DRAWING UPDATE	EDM	DWC	GLW	KRG	05/10/2022
D	COMPLETELY REVISED	-	JCL	TR	MJC	10/05/2012	G	BILL OF MATERIALS UPDATE	EDM	DEC	JES	CZH	02/08/2021

X Indicates Latest Revision | Completely Revised | New Page | Information Removed

SDG&E ELECTRIC OVERHEAD AND UNDERGROUND CONSTRUCTION STANDARDS

CABLE POLE MVI/MV200A SINGLE-PHASE CONSTRUCTION
CABLE POLE APPLICATION

OH1435.4
UG4235.4

TABLE OF CONTENTS

TABLE OF CONTENTS

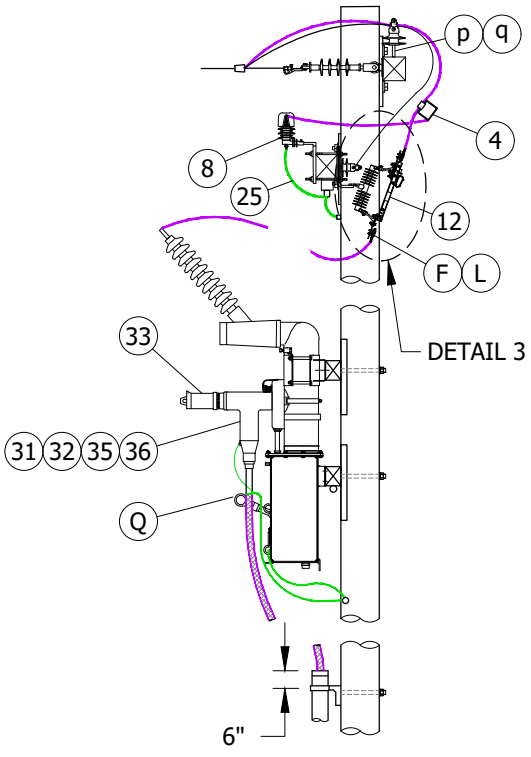

EXAMPLE 1

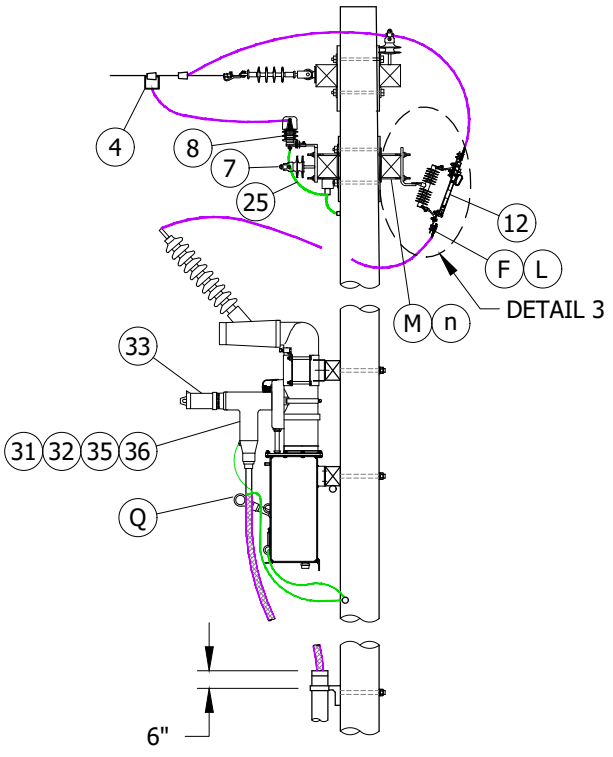

EXAMPLE 2

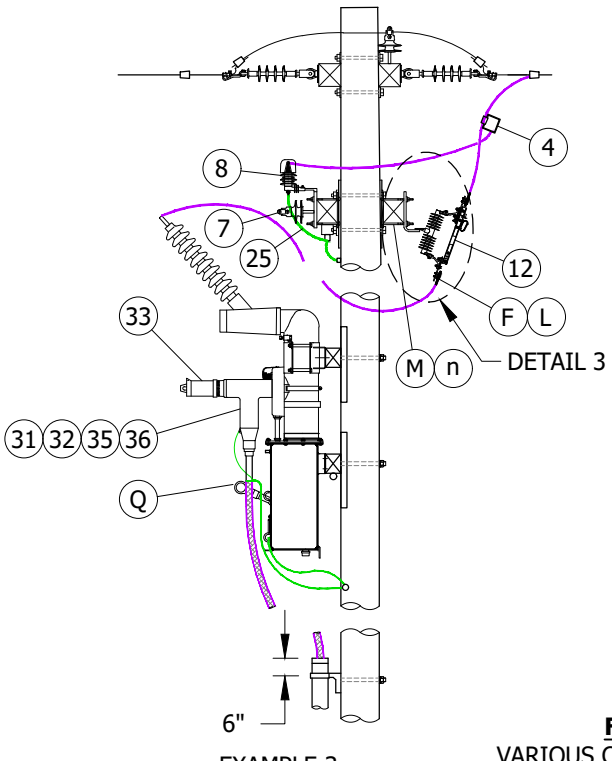

EXAMPLE 3

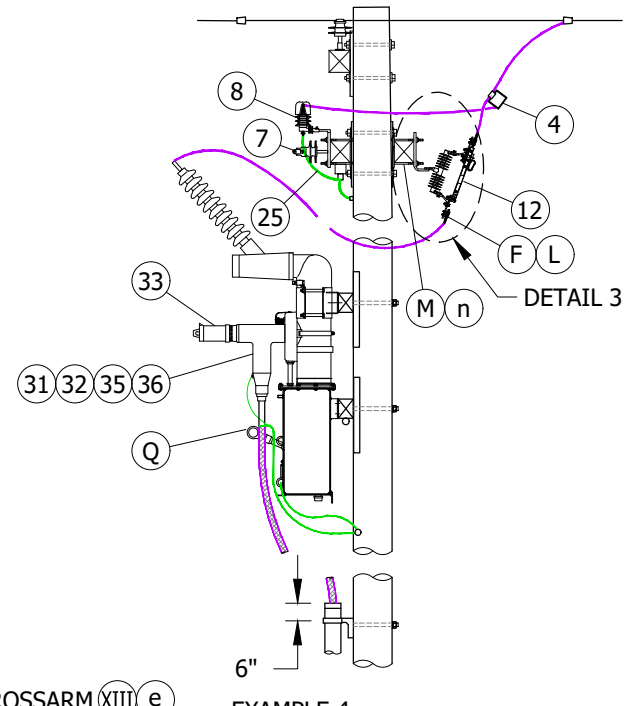

EXAMPLE 4

FIGURE 7
VARIOUS COMMON CROSSARM AND JUMPER CONFIGURATIONS

XIII e

© 1998 - 2023 San Diego Gas & Electric Company. All rights reserved. Removal of this copyright notice without permission is not permitted under law.

REV	CHANGE	DR	BY	DSN	APV	DATE	REV	CHANGE	DR	BY	DSN	APV	DATE
F	TABLE UPDATE	-	JAC	JES	CZH	11/12/2019	I	BILL OF MATERIALS UPDATE	ARC	RSL	MBL	FRC	07/20/2023
E	DRAWNG UPDATE	PEI	-	-	-	02/18/2019	H	DRAWING UPDATE	EDM	DWC	GLW	KRG	05/10/2022
D	COMPLETELY REVISED	-	JCL	TR	MJC	10/05/2012	G	BILL OF MATERIALS UPDATE	EDM	DEC	JES	CZH	02/08/2021

X Indicates Latest Revision | Completely Revised | New Page | Information Removed

SDG&E ELECTRIC OVERHEAD AND UNDERGROUND CONSTRUCTION STANDARDS

CABLE POLE MVI/MV200/600A
CABLE POLE APPLICATION

OH1435.5
UG4235.5

TABLE OF CONTENTS

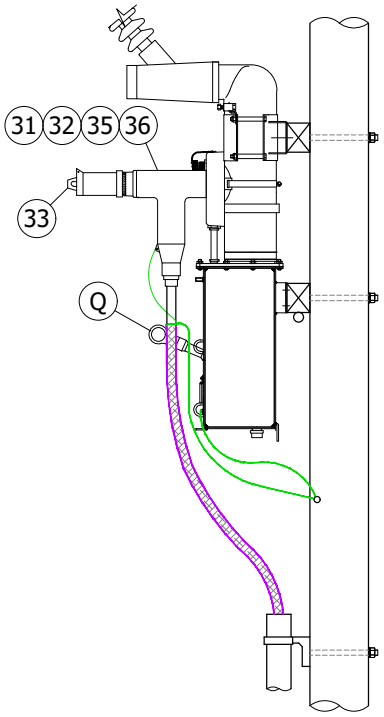

FIGURE 8
600A/200A CONNECTOR
200A APPLICATION ONLY

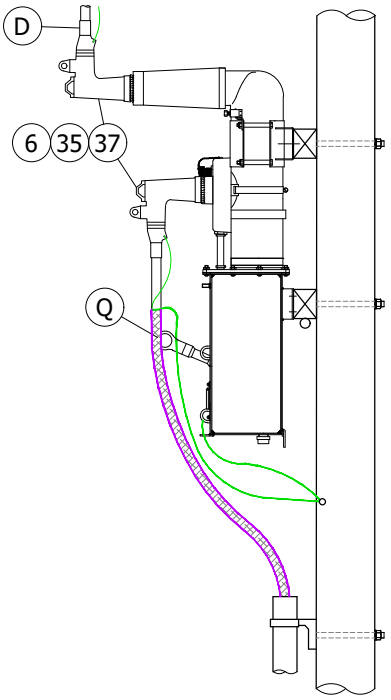

FIGURE 9
200A

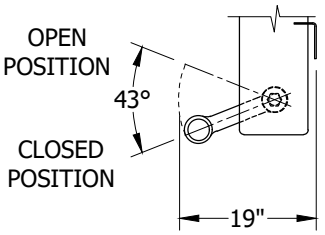

DETAIL 1
THREE-PHASE SWITCH

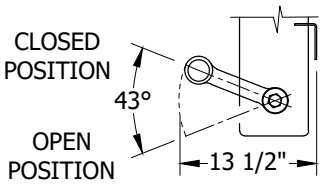

DETAIL 2
SINGLE-PHASE SWITCH

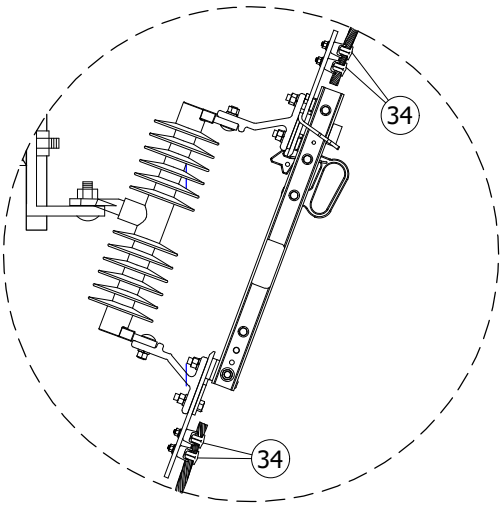

DETAIL 3

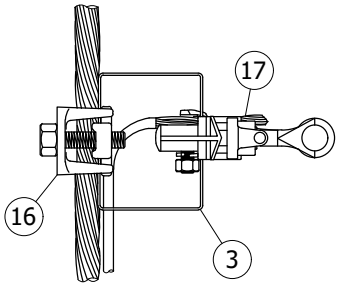

DETAIL 4
OPTION 1

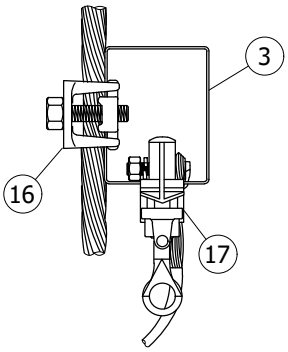

DETAIL 4
OPTION 2

© 1998 - 2023 San Diego Gas & Electric Company. All rights reserved. Removal of this copyright notice without permission is not permitted under law.

REV	CHANGE	DR	BY	DSN	APV	DATE	REV	CHANGE	DR	BY	DSN	APV	DATE
F	TABLE UPDATE	-	JAC	JES	CZH	11/12/2019	I	BILL OF MATERIALS UPDATE	ARC	RSL	MBL	FRC	07/20/2023
E	DRAWNG UPDATE	PEI	-	-	-	02/18/2019	H	DRAWING UPDATE	EDM	DWC	GLW	KRG	05/10/2022
D	COMPLETELY REVISED	-	JCL	TR	MJC	10/05/2012	G	BILL OF MATERIALS UPDATE	EDM	DEC	JES	CZH	02/08/2021

X Indicates Latest Revision | Completely Revised | New Page | Information Removed

SDG&E ELECTRIC OVERHEAD AND UNDERGROUND CONSTRUCTION STANDARDS

CABLE POLE MVI/MV200/600A
CABLE POLE APPLICATION

OH1435.6
UG4235.6

INSTALLATION:

A. NEW CABLE POLES SHALL HAVE A STANDARD DEPTH OF 9 FEET. IN MOST CASES, THIS WILL REQUIRE A 5-FOOT TALLER POLE.

B. THIS CONSTRUCTION IS FOR BOTH 200A AND 600A MVI CONSTRUCTION, WIRE SIZE TO MATCH PRIMARY REQUIREMENTS.

C. CONNECT OVERHEAD NEUTRAL, UNDERGROUND CONCENTRIC CABLE NEUTRAL, AND ARRESTER GROUND TO BUS UNDER CUTOUT/ARRESTOR ARM.

(D) SEAL CABLE WITH MASTIC FOR WATER TIGHT SEAL.

E. REDUCE QUANTITIES AS REQUIRED WHEN NOT USING NEUTRAL.

(F) BRUSH WIRE, INSTALL PENETROX "INHIBITOR" AND BELLEVILLE WASHER.

G. DIMENSIONS CAN VARY BASED ON CROSSARM SIZE AND/OR CONFIGURATION.

(H) REQUIRES TWO TAP LUGS PER CONNECTION.

J. ARM MAY BE DRILLED TO REPOSITION BOTTOM BRACKET BOLT ALLOWING CONDUIT TO SET FLUSH ON BOTTOM OF CROSSARM.

(K) CONCENTRIC WITH POLE GROUND, CONNECTION AREA.

(L) MAINTAIN SIX INCHES OF BARE WIRE BELOW DISCONNECT FOR PROPER GROUNDING OF UNDERGROUND CABLE.

(M) DOUBLE EQUIPMENT-ARM CONSTRUCTION IS REQUIRED FOR CONTAMINATION DISTRICT I.

N. **BEFORE MVI INSTALLATION THE CORRECT PREPROGRAMMED SETTINGS MUST BE SENT TO KEARNY AND THE MVI LOAD CURVE PROGRAM INSTALLED BEFORE IT CAN BE RELEASED FOR CONSTRUCTION AND READY FOR PICK UP BY THE CREW. SEE MVI FUSING REQUEST AND APPROVAL PROCESS FLOWCHART.**

O. PHASE MARKING SHALL BE COMPLETED USING THE PHASE TRAKKER JR. OR AP30 AND MARKED ON THE CROSS ARM AND MVI FOR ALL INSTALLATIONS.

P. REQUIRES 24/7 ACCESS FOR AERIAL LIFT/DERRICK.

(Q) MAKE UP JUMPERS SO THEY DO NOT INTERFERE WITH HANDLES NORMAL OPERATION.

(R) NEUTRAL TIE REQUIRED ON FOUR WIRE SYSTEM.

BILL OF MATERIALS:

TABLE OF CONTENTS

ITEM	DESCRIPTION	WIRE SIZE	QUANTITY	STANDARD PAGE	STOCK NUMBER	DESIGN UNITS
1	POLE MIN. 50-1 STEEL OR WOOD	--	1	303	--	--
2	CROSSARM	--	AS REQ'D	379	--	--
3	CONNECTOR, STIRRUP, BAIL, #2 TIN PLATED CU	--	AS REQ'D	--	S227650	BAIL
4	CONNECTOR, WEDGE, STIRRUP OR BAIL, #2 SOLID CU	--	AS REQ'D	783	--	--
5	SIGN HIGH VOLTAGE 8 NAILS/SCREWS	--	AS REQ'D	--	S647648	HV
6	BUSHING PLUG	--	AS REQ'D	--	S544676	--
7	PIN & INSULATORS-HENDRIX	--	AS REQ'D	750	--	--
8	ARRESTORS, 12KV	--	AS REQ'D	1247	S113248	LA12
9	FLEXIBLE ARRESTOR GROUND STRAP (DISTRICTS I AND II)	--	AS REQ'D	1002	S698754	--
10	WEDGE TAP CONNECTIONS (V)	--	AS REQ'D	784	--	--
11	WIRE, HENDRIX, 1/0 STR. CU. SOFT-DRAWN, COVERED (CONCENTRIC BUS WIRE) (IX) 200A	--	30'-0"	711	S812120	HEND1/0
	WIRE, 4/0 STR. CU. SOFT-DRAWN, COVERED (CONCENTRIC BUS WIRE) (IX) 600A	--	30'-0"	711	S812126	HEND4/0
12	SWITCH, DISCONNECT, 27KV, 900A	--	AS REQ'D	--	S706670 (III)	PS900
				--	S707004 (XIII)	P900D
	BRACKET, MOUNTING, CUTOUT			397	S166070	CO/B

© 1998 - 2023 San Diego Gas & Electric Company. All rights reserved. Removal of this copyright notice without permission is not permitted under law.

REV	CHANGE	DR	BY	DSN	APV	DATE	REV	CHANGE	DR	BY	DSN	APV	DATE
F	TABLE UPDATE	-	JAC	JES	CZH	11/12/2019	I	BILL OF MATERIALS UPDATE	ARC	RSL	MBL	FRC	07/20/2023
E	DRAWNG UPDATE	PEI	-	-	-	02/18/2019	H	DRAWING UPDATE	EDM	DWC	GLW	KRG	05/10/2022
D	COMPLETELY REVISED	-	JCL	TR	MJC	10/05/2012	G	BILL OF MATERIALS UPDATE	EDM	DEC	JES	CZH	02/08/2021

X Indicates Latest Revision | Completely Revised | New Page | Information Removed

SDG&E ELECTRIC OVERHEAD AND UNDERGROUND CONSTRUCTION STANDARDS

CABLE POLE MVI/MV200/600A
CABLE POLE APPLICATION

OH1435.7
UG4235.7

BILL OF MATERIALS (CONT'D):

ITEM	DESCRIPTION		WIRE SIZE	QUANTITY	STANDARD PAGE	STOCK NUMBER	DESIGN UNITS
13	STRAP, ARRESTOR GROUND (V)		--	AS REQ'D	1002	S698754	LAGND
14	CUTOUT/ARRESTOR BRACKETS		--	AS REQ'D	--	S165452	COBKT
15	MVI 600A TO 200A		--	SELECT	3675	S708416	S63PFI
	MVI 600A TO 600A					S708418	S66PFI
16	CONNECTOR, BRONZE, 2 BOLT, CONNECTOR, COPPER TAP 3/0-1000		--	--	--	S262370 (X)	CN1000
17	CONNECTOR, CLAMP, HOT LINE		--	AS REQ'D	788	S227680 (X)	--
18	AERIAL BUSHING KIT FOR MVI, THREE PHASE (VI)		--	1	--	S442500	AKMVI3
19	LEAD WIRE, THW, LENGTH PER PHASE	200A	1/0	10'-0"	--	S808034 (X)	--
		600A	500 KCMIL		--	S808928	--
20	CONNECTOR, TERMINAL COMPRESSION LUG (V)		--	AS REQ'D	4174	--	--
21	GROUNDING, #4 PVC GRND WIRE, RODS, & CONNECTORS	STEEL POLE	--	1	1002	--	GNDPSP
		WOOD POLE					GNDPVC
22	CABLE GRIP FOR PRIMARY CABLE (V)		--	1	4204	--	--
23	CONDUIT, SQ. 2" X 2" X 10'-0" PVC (SQUARE)		--	AS REQ'D	--	S251534	SQC-2
	CONDUIT, SCH 40, 2" X 10'-0" PVC (ROUND)		--		--	S251296	PVC2
24	GRIP, RISER, 5-INCH, KELLEMS (1000 AL)		--	AS REQ'D	4204	S394098	5G1000
25	WIRE, POLY COVERED 4/7 STRAND COPPER		--	AS REQ'D	711	S812490	POLY4
26	TRXLPECN-PEJ, STR, 3-1/C (V)		350 KCMIL	--	--	S197608	PJN350
27	EPR-PEJ, COMP, 3-1/C (V)		750 KCMIL	--	--	S195010	CPJ750
28	TRXLPECN-PEJ, STR, 3-1/C (V)		1000 KCMIL	--	--	S197618	PJI000
29	TRXLPECN-PEJ, SOL, 3-1/C (V)		#2	--	--	S197622	PJN3/2
30	TRXLPECN-PEJ, STR, 3-1/C (V)		#2/0	--	--	S197606	PJN2/0
31	COLD SHRINK ELBOW TEE		4/0, 350, AND 500	AS REQ'D	--	S326572	600AT
			750 AND 1000			S326574	600ATL
32	ELBOW TAP PLUG		--	AS REQ'D	--	S547328	--
33	RECEPTACLE, INSULATING, 200A		--	AS REQ'D	--	S204304	--
34	CONNECTOR, TAP LUG, 1/0 TO 500MCM CU TAP LUG BRONZE		--	AS REQ'D	--	S471232	TL1/0
35	CONDUCTOR CONNECTOR		350 AL	AS REQ'D	--	S258698	--
			750 AL			S258704	
			750 AL			S258708	
			1000 AL			S258702	
36	CABLE ADAPTER		350 AL	AS REQ'D	--	S102027	--
			750 AL			S102034	
			750 AL			S102051	
			1000 AL			S102050	
37	LOADBREAK ELBOW CONNECTOR		#2 AL	AS REQ'D	--	S443838	--
			2/0 AL			S443840	

TABLE OF CONTENTS

© 1998 - 2023 San Diego Gas & Electric Company. All rights reserved. Removal of this copyright notice without permission is not permitted under law.

REV	CHANGE	DR	BY	DSN	APV	DATE	REV	CHANGE	DR	BY	DSN	APV	DATE
F	TABLE UPDATE	-	JAC	JES	CZH	11/12/2019	I	BILL OF MATERIALS UPDATE	ARC	RSL	MBL	FRC	07/20/2023
E	DRAWNG UPDATE	PEI	-	-	-	02/18/2019	H	DRAWING UPDATE	EDM	DWC	GLW	KRG	05/10/2022
D	COMPLETELY REVISED	-	JCL	TR	MJC	10/05/2012	G	BILL OF MATERIALS UPDATE	EDM	DEC	JES	CZH	02/08/2021

NOTES:

I. THIS APPLICATION OFFERS THE ABILITY TO PROGRAM SINGLE-PHASE AND THREE-PHASE SWITCHES FOR HIGHER LOAD AND RELIABILITY ISSUES FOR NEW AND EXISTING FACILITIES.

II. THE THREE-PHASE SWITCH WILL ALSO REDUCE THE POSSIBILITY OF FERRO-RESONANCE DURING SERVICE RESTORATION.

(III) REQUIRED IN CONTAMINATION DISTRICT 1 AND PREFERRED IN COASTAL DISTRICTS (OC, NC, BC, CM). (m)

(IV) MINIMUM 480A COPPER WIRE REQUIRED (OPTION FOR USE OF COVERED WIRE).

(V) NOT SHOWN OF FIGURES.

(VI) BRACKET IS INCLUDED.

VII. ONLY TRANSPORT IN CLOSED POSITION TO PROLONG LIFE OF UNIT.

(VIII) USE APPROPRIATE AVIAN COVER AS REQUIRED.

(IX) ALLOWED SUBSTITUTION FOR CONCENTRIC BUS WIRE SHOULD MATCH EQUIVALENT AMPERAGE.

(X) THIS ITEM IS EXEMPT.

(XI) CAN ALSO BE CONSTRUCTED WITH SINGLE MVI FOR N TYPE TRANSFORMERS.

(XII) CAN ALSO BE CONSTRUCTED WITHOUT CENTER PHASE FOR SINGLE-PHASE DELTA SYSTEM.

(XIII) PREFERRED FOR INLAND DISTRICTS (NE, RA, EA, ME).

REFERENCE:

a. FOR CABLE IDENTIFICATION, SEE UG3202.

b. FOR STRUCTURE/EQUIPMENT IDENTIFICATION, SEE UG3211.

c. FOR HIGH VOLTAGE DECAL, SEE UG3221.

d. FOR MVI SPECIFICATIONS, SEE UG3675.

(e) FOR POLE GROUNDING, SEE OH1002.

f. FOR SEALING JACKETED CABLE, SEE UG4108.

g. FOR (PREFERRED I) AND (ALTERNATE) TRENCH GROUND WIRE, SEE UG4510.

h. FOR EQUIPMENT GROUNDING, SEE UG4512.

i. FOR GROUNDING PAD MOUNTED EQUIPMENT, SEE UG4520.

j. FOR GROUNDING HARDWARE AND CONNECTIONS, SEE UG4505.

k. FOR CABLE POLE RISERS, SEE OH1404UG4204.

(l) FOR AVIAN PROTECTION/COVER-UP, SEE OH1600 SECTION.

(m) FOR CONTAMINATION DISTRICTS, SEE OH287.

(n) FOR BONDING GENERAL INFORMATION, SEE OH1003.

o. FOR SPLICING, SEE UG4180.

(p) SEE OH750: INSULATORS.

(q) SEE OH396: INSULATOR PINS AND SPACERS.

TABLE OF CONTENTS

© 1998 - 2023 San Diego Gas & Electric Company. All rights reserved. Removal of this copyright notice without permission is not permitted under law.

REV	CHANGE	DR	BY	DSN	APV	DATE	REV	CHANGE	DR	BY	DSN	APV	DATE
F	TABLE UPDATE	-	JAC	JES	CZH	11/12/2019	I	BILL OF MATERIALS UPDATE	ARC	RSL	MBL	FRC	07/20/2023
E	DRAWNG UPDATE	PEI	-	-	-	02/18/2019	H	DRAWING UPDATE	EDM	DWC	GLW	KRG	05/10/2022
D	COMPLETELY REVISED	-	JCL	TR	MJC	10/05/2012	G	BILL OF MATERIALS UPDATE	EDM	DEC	JES	CZH	02/08/2021

SCOPE: THIS STANDARD SHOWS THE CONSTRUCTION METHOD FOR THREE-PHASE UNDERGROUND CABLE, UNDER 15KV WITH LESS THAN 200A CAPACITY.

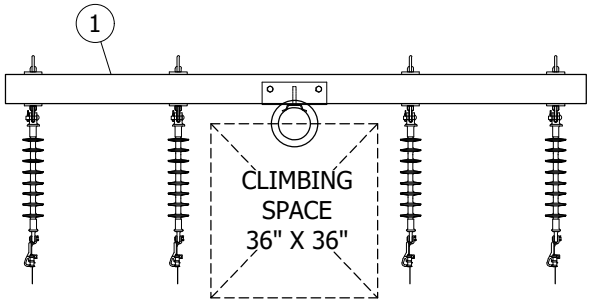

FIGURE 1 (a)
TOP VIEW

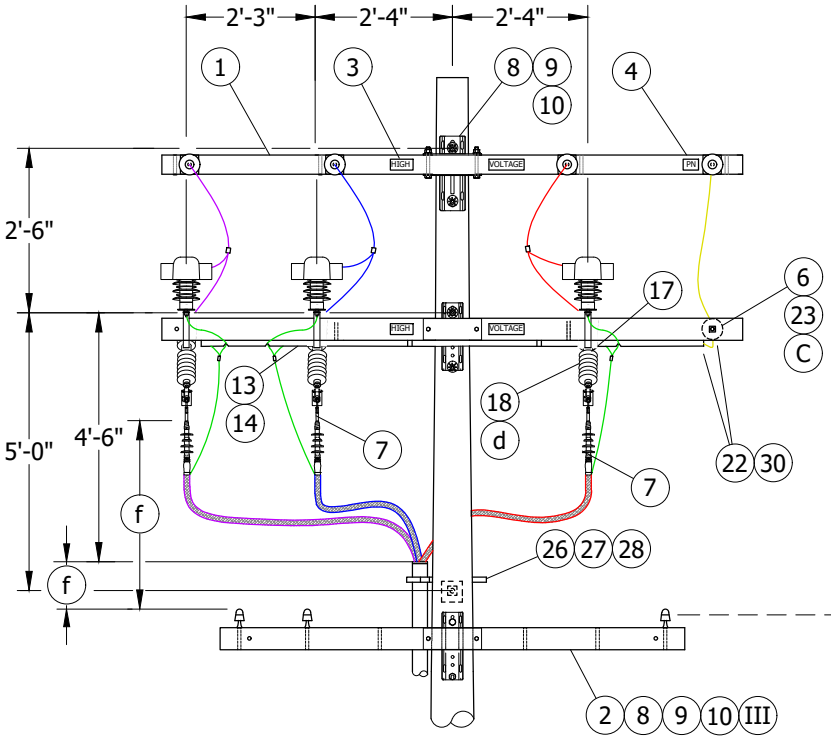

FIGURE 1 (II)
FRONT VIEW

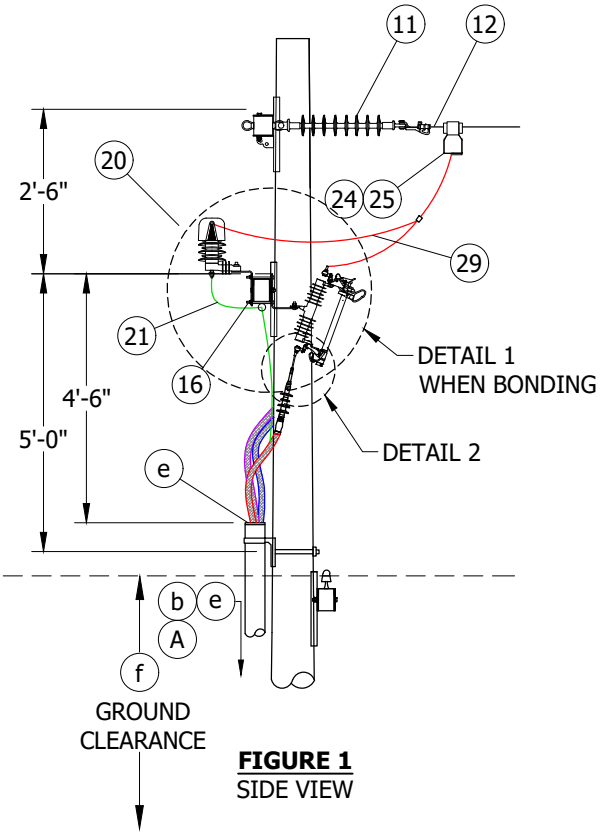

FIGURE 1
SIDE VIEW

TABLE OF CONTENTS

© 1998 - 2021 San Diego Gas & Electric Company. All rights reserved. Removal of this copyright notice without permission is not permitted under law.

REV	CHANGE	DR	BY	DSN	APV	DATE	REV	CHANGE	DR	BY	DSN	APV	DATE
C	TABLE UPDATES	EDM	JCE	JES	CZH	11/09/2020	F						
B	COMPLETLY REVISED	-	JBH	IL	MDJ	10/25/2016	E						
A	COMPLETLY REVISED	-	JBH	IL	MDJ	09/08/2016	D	FORMATTING	EDM	JIK	-	-	09/16/2021

X Indicates Latest Revision | Completely Revised | New Page | Information Removed

SDG&E ELECTRIC OVERHEAD AND UNDERGROUND CONSTRUCTION STANDARDS

12.47KV AND BELOW CROSSARM CABLE POLE,
THREE-PHASE, 1/C PER PHASE,
NON-PORCELAIN TERMINALS

OH1440.1
UG4240.1

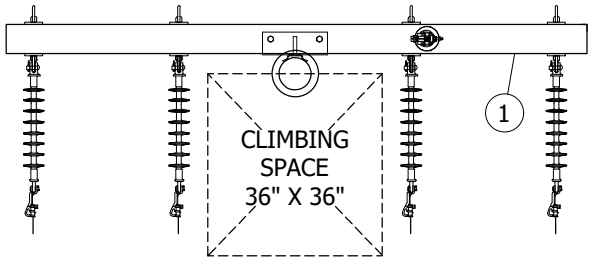

FIGURE 2 (a)
TOP VIEW

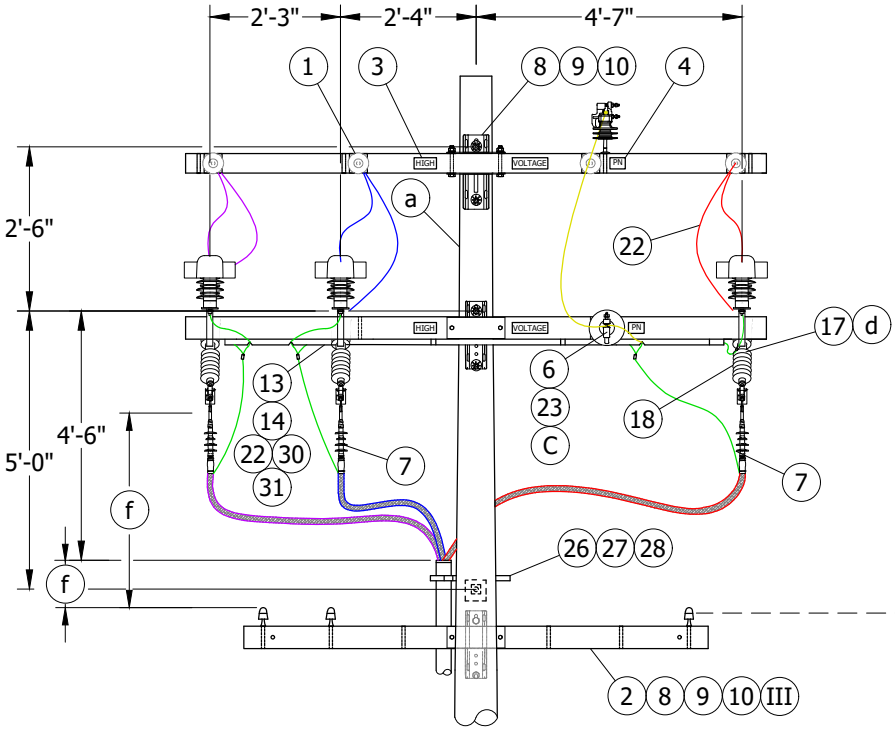

FIGURE 2 (II)
FRONT VIEW

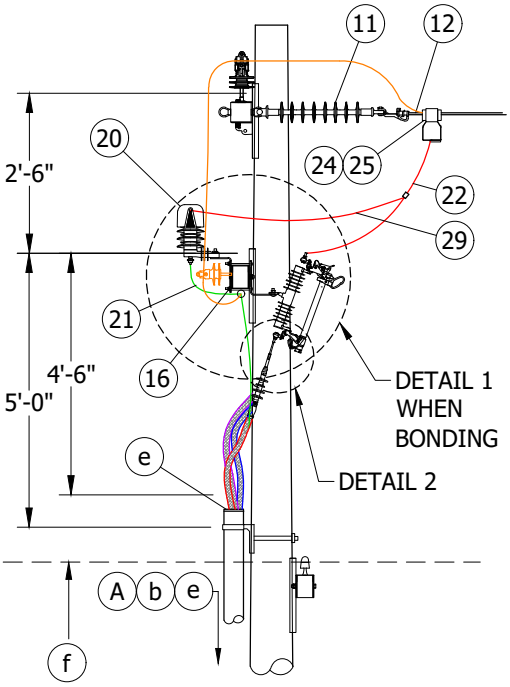

FIGURE 2
SIDE VIEW

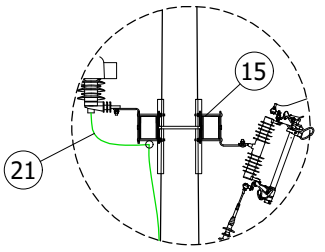

DETAIL 1 (D) (c)

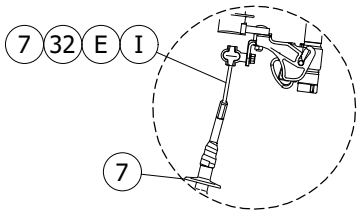

DETAIL 2

f
GROUND
CLEARANCE

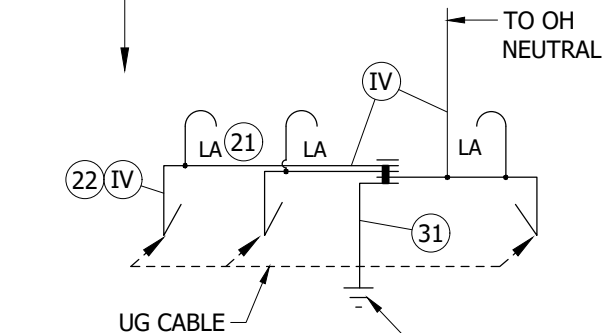

DETAIL 3
GROUND WIRING

© 1998 - 2021 San Diego Gas & Electric Company. All rights reserved. Removal of this copyright notice without permission is not permitted under law.

REV	CHANGE	DR	BY	DSN	APV	DATE	REV	CHANGE	DR	BY	DSN	APV	DATE
C	TABLE UPDATES	EDM	JCE	JES	CZH	11/09/2020	F						
B	COMPLETLY REVISED	-	JBH	IL	MDJ	10/25/2016	E						
A	COMPLETLY REVISED	-	JBH	IL	MDJ	09/08/2016	D	FORMATTING	EDM	JIK	-	-	09/16/2021

X Indicates Latest Revision | Completely Revised | New Page | Information Removed

SHEET
2 OF 4

SDG&E ELECTRIC OVERHEAD AND UNDERGROUND CONSTRUCTION STANDARDS

12.47KV AND BELOW CROSSARM CABLE POLE,
THREE-PHASE, 1/C PER PHASE,
NON-PORCELAIN TERMINALS

OH1440.2
UG4240.2

TABLE OF CONTENTS

INSTALLATION:

(A) NEW CABLE POLES SHALL HAVE A STANDARD DEPTH OF NINE FEET. IN MOST CASES, THIS WILL REQUIRE A FIVE-FOOT TALLER POLE.

B. REDUCE QUANTITIES AS REQUIRED WHEN NOT USING NEUTRAL OR WHEN CONSTRUCTING SINGLE-PHASE.

(C) INTERCONNECT OVERHEAD NEUTRAL AND CONCENTRIC CABLE NEUTRAL CONDUCTORS TO LIGHTNING ARRESTER GROUND. INSTALL NEUTRAL JUMPER FROM LINE TO CONCENTRIC ON ARRESTER SIDE OF POLE.

(D) BOND CUTOUTS IN HEAVY CONTAMINATION DISTRICTS. IN AREAS WHERE BONDING IS REQUIRED, TO AVOID BONDWIRE AND LIGHTNING ARRESTER GROUNDWIRE ON THE SAME CROSSARM, USE TWO CROSSARMS: ONE FOR CUTOUTS AND ONE FOR LIGHTNING ARRESTERS. (i)

(E) WRAP HALF OF EXPOSED ALUMINUM PORTION OF PIN CONNECTOR WITH SILICONE TAPE TO PREVENT CORROSION. INSERT PIN INTO BOTTOM OF CUTOUT CLAMP.

BILL OF MATERIALS:

ITEM	DESCRIPTION	QUANTITY	STANDARD PAGE	STOCK NUMBER	DESIGN UNITS
1	CROSSARM, FIBERGLASS, DEADEND (SIZE AS REQ'D)	1	379	--	--
2	CROSSARM, FIBERGLASS, TANGENT (SIZE AS REQ'D)	1	379	--	--
3	SIGN, "HIGH VOLTAGE" STICKER	AS REQ'D	208	S647650	HV/D
4	SIGN, "PN", ADHESIVE	AS REQ'D	208	S648004 (X)	PN-D
5	PIN, INSULATOR (SIZE AS REQ'D) (V)	AS REQ'D	396	--	--
6	INSULATOR, POLY, VISE-TOP (SIZE AS REQ'D)	AS REQ'D	750	--	--
7	TERMINATIONS, OUTDOOR, #2 SOLID	3	4111	S732918	CP-#2N
	CONNECTOR, COMPRESSION, #2 SOLID			S729930	
	TERMINATIONS, OUTDOOR, 2/0 ALUMINUM	3		S732918	CP2/0N
	CONNECTOR, COMPRESSION, 2/0 ALUMINUM			S729934	
8	BOLT, MACHINE, 3/4" (SIZE AS REQ'D)	AS REQ'D	390	--	--
9	WASHER, SPRING LOCK, 3/4"	AS REQ'D	390	S796802 (X)	LK-WSH
10	WASHER, SQUARE CURVED	AS REQ'D		S797760	RIBWSH
11	INSULATOR, SUSPENSION, CLEVIS, 35KV	AS REQ'D	750	S428958	LONGDE
12	CLAMP, STRAIGHT LINE, DEADEND	AS REQ'D	739	--	--
13	STRAP, PIPE, GALV., 1/4", ONE HOLE	AS REQ'D	1002	S697302	BOND8
14	SCREW, SELF-TAPPING, 1 1/4", #12, 24 THREAD	AS REQ'D	1002	S618086 (X)	--
15	BRACKET, CUTOUT/ARRESTER, FOR CROSSARM MOUNTING	AS REQ'D	397	S166070	CO/B
16	BRACKET, DOUBLE, CUTOUT/ARRESTER FOR CROSSARM MOUNTING	3		S165446 (X)	DBLBKT
17	CUTOUT, 12KV, (AS NEEDED PER FUSING REQUEST)	3	1212	--	--
18	FUSE HOLDER, (AS NEEDED PER FUSING REQUEST)	3	1212	--	--
19	COVER, CUTOUT (V)	3	1640	S289626	CCOVSL
20	ARRESTER, LIGHTNING, 12KV	3	1247	S113248	LA12
21	STRAP, ARRESTER GROUND	AS REQ'D	1002	S698754	LAGND
22	WIRE, COPPER, AWG 2 (CONCENTRIC BUS WIRE)	50'-0"	711	S812122	HEND2
23	PIN, TRANSFORMER ADAPTER, LEAD THREAD, 1"	1	396	S529248	PS/01
24	CLAMP, HOTLINE	AS REQ'D	788	S227680	--
25	CONNECTOR, WEDGE, STIRRUP	3		--	--

TABLE OF CONTENTS

© 1998 - 2021 San Diego Gas & Electric Company. All rights reserved. Removal of this copyright notice without permission is not permitted under law.

REV	CHANGE	DR	BY	DSN	APV	DATE	REV	CHANGE	DR	BY	DSN	APV	DATE
C	TABLE UPDATES	EDM	JCE	JES	CZH	11/09/2020	F						
B	COMPLETLY REVISED	-	JBH	IL	MDJ	10/25/2016	E						
A	COMPLETLY REVISED	-	JBH	IL	MDJ	09/08/2016	D	FORMATTING	EDM	JIK	-	-	09/16/2021

BILL OF MATERIALS (CONT'D):

ITEM	DESCRIPTION	QUANTITY	STANDARD PAGE	STOCK NUMBER	DESIGN UNITS
26	BRACKET, LADDER ARM	AS REQ'D	1404/4204	S167186 (X)	RSARM
27	NUT STUD 1/2" X 1 3/8" CLAMPING CHANNEL WITH SPRING	AS REQ'D		S507000	
28	CHANNEL, DOUBLE, GALVANIZED, 24" X 1 5/8" X 1 5/8"	AS REQ'D		S216702 (X)	
29	WIRE, #4-7, POLY COVERED, STRANDED COPPER (ARRESTER JUMPER)	20'-0"	--	S8115044	POLY4J
30	CONNECTORS, WIRE COMPRESSION, CU OR AL	AS REQ'D	785	--	--
31	GROUNDING, #4 PVC GRND WIRE, RODS, CONN-STEEL POLE	1	1002	--	GNDPSP
	GROUNDING, WIRE, #4 PVC, RODS & CONNECTORS (FOR WOOD POLES)	AS REQ'D		--	GNDPVC
32	TAPE, SILICONE	AS REQ'D	--	S720384	--

NOTES:

(I) INSTALL TERMINATION BY FOLLOWING MANUFACTURER'S INSTRUCTIONS INCLUDED IN KIT.

(II) USE FIGURE 1 FOR ALL NEW CONSTRUCTION AND WHEN ADDING TO EXISTING CONSTRUCTION WITH NEUTRAL ON OUTSIDE PIN POSITION. (j)

(III) NEW CONSTRUCTION SHALL USE AERIAL CABLE CONSTRUCTION FOR SECONDARY APPLICATIONS. EXISTING CONSTRUCTION CAN USE CROSSARMS FOR OPEN WIRE SECONDARY CONSTRUCTION. (h)

(IV) MINIMUM 230A COPPER WIRE REQUIRED (OPTION FOR USE OF COVERED WIRE).

(V) NOT SHOWN ON FIGURES.

(X) THIS ITEM IS EXEMPT.

REFERENCE:

(a) FOR ALLOWABLE WORKING AND CLIMBING SPACE, SEE OH251.

(b) FOR POLE STEPPING, SEE OH363.

(c) FOR GROUNDING METHODS, SEE OH1002.

(d) FOR FUSING, SEE OH SECTION 1200 AND UG SECTION 4300.

(e) FOR RISER POSITIONS, SEE OH1402UG4202.

(f) FOR MINIMUM VERTICAL SEPARATION PER G.O. 95, SEE OH1406UG4206.

g. FOR VISE-TOP INSULATORS, SEE OH750.

(h) FOR SECONDARY CABLE CONSTRUCTION, SEE OH612.

(i) FOR BONDING, SEE CONTAMINATION DISTRICTS OH287.

(j) SEE DM5124.2.

TABLE OF CONTENTS

© 1998 - 2021 San Diego Gas & Electric Company. All rights reserved. Removal of this copyright notice without permission is not permitted under law.

REV	CHANGE	DR	BY	DSN	APV	DATE	REV	CHANGE	DR	BY	DSN	APV	DATE
C	TABLE UPDATES	EDM	JCE	JES	CZH	11/09/2020	F						
B	COMPLETLY REVISED	-	JBH	IL	MDJ	10/25/2016	E						
A	COMPLETLY REVISED	-	JBH	IL	MDJ	09/08/2016	D	FORMATTING	EDM	JIK	-	-	09/16/2021

SCOPE: THIS STANDARD ILLUSTRATES THE CONSTRUCTION METHODS FOR 3-PHASE 12KV 350-1000KCM UNDERGROUND CABLE USING 900A DISCONNECTS.

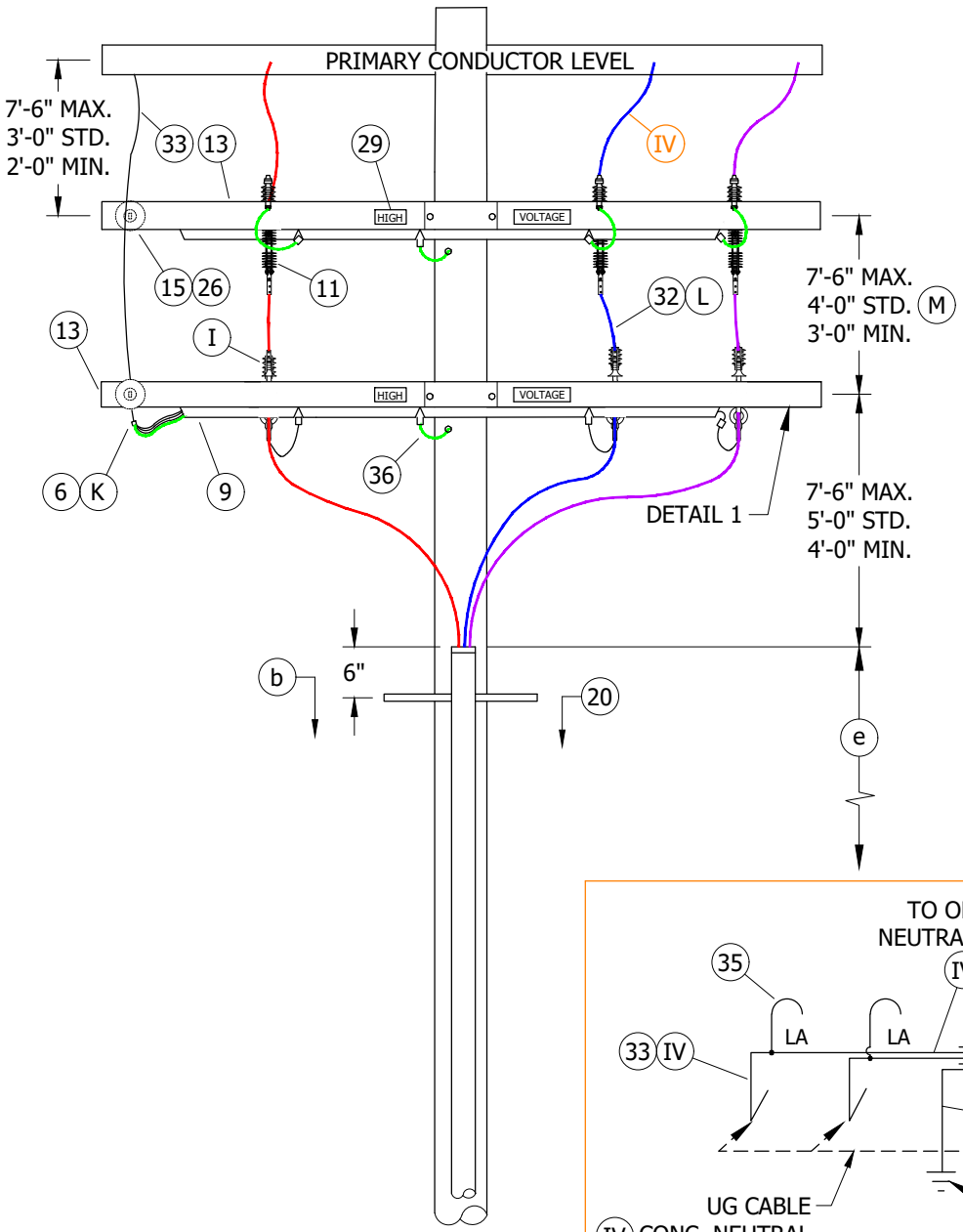

FIGURE 1
BACK VIEW OF ARM

DETAIL 1
GROUND WIRING (1)

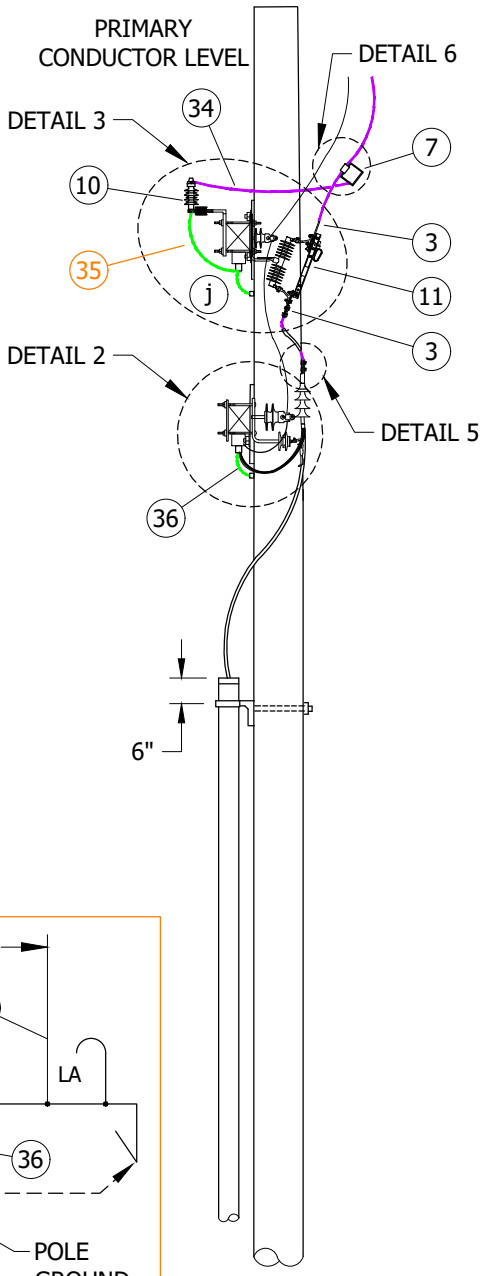

FIGURE 1
SIDE VIEW

TABLE OF CONTENTS

© 1998 - 2020 San Diego Gas & Electric Company. All rights reserved. Removal of this copyright notice without permission is not permitted under law.

REV	CHANGE	DR	BY	DSN	APV	DATE	REV	CHANGE	DR	BY	DSN	APV	DATE
C	FIGURE UPDATE	EDM	DWC	JES	CZH	3/9/2020	F						
B	EDITORIAL CHANGES	-	GW	JS	MDJ	4/1/2018	E						
A	REVISION	-	-	PEA	JJ	10/20/2005	D	DRAWING UPDATE	EDM	DWC	JES	CZH	12/11/2020

X Indicates Latest Revision | Completely Revised | New Page | Information Removed

SDG&E ELECTRIC OVERHEAD AND UNDERGROUND CONSTRUCTION STANDARDS

SHEET
1 OF 6

THREE PHASE, CABLE-POLE-12KV,
NON-PORCELAIN 900 AMP DISCONNECT
PREFERRED METHOD

OH1442.1
UG4242.1

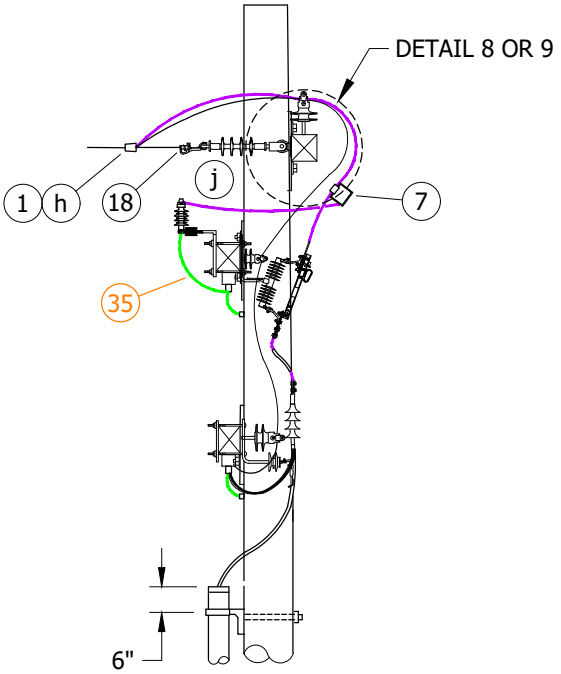

FIGURE 2
SIDE VIEW

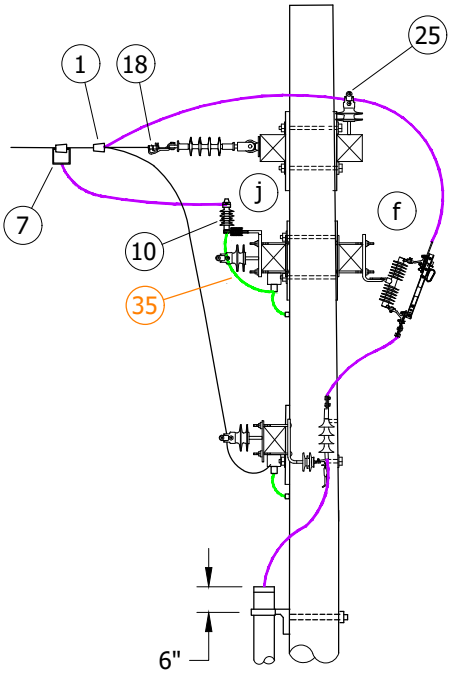

FIGURE 3
SIDE VIEW
ILLUSTRATES SECOND ARM FOR BONDING

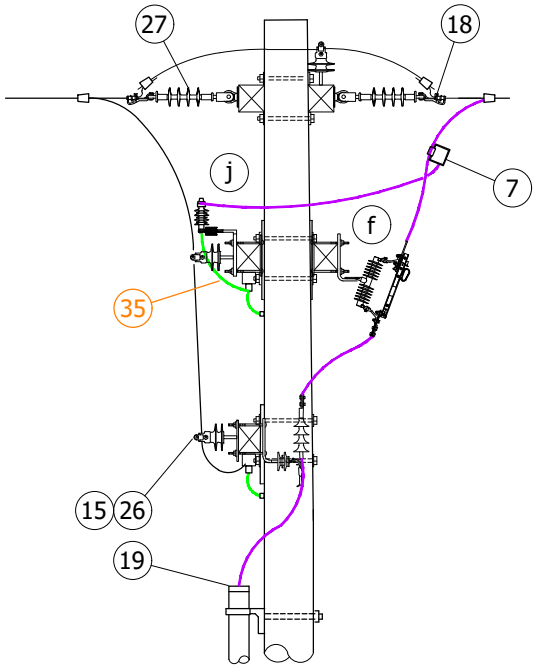

FIGURE 4
SIDE VIEW

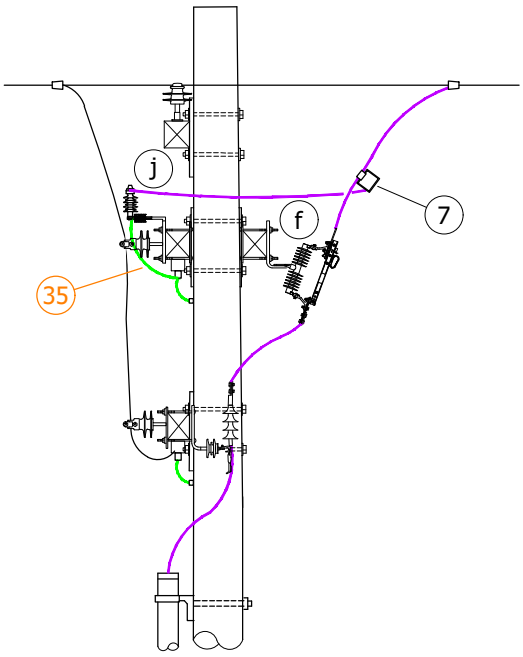

FIGURE 5
SIDE VIEW

TABLE OF CONTENTS

© 1998 - 2020 San Diego Gas & Electric Company. All rights reserved. Removal of this copyright notice without permission is not permitted under law.

REV	CHANGE	DR	BY	DSN	APV	DATE	REV	CHANGE	DR	BY	DSN	APV	DATE
C	FIGURE UPDATE	EDM	DWC	JES	CZH	3/9/2020	F						
B	EDITORIAL CHANGES	-	GW	JS	MDJ	4/1/2018	E						
A	REVISION	-	-	PEA	JJ	10/20/2005	D	DRAWING UPDATE	EDM	DWC	JES	CZH	12/11/2020

X Indicates Latest Revision | Completely Revised | New Page | Information Removed

SDG&E ELECTRIC OVERHEAD AND UNDERGROUND CONSTRUCTION STANDARDS

THREE PHASE, CABLE-POLE-12KV,
NON-PORCELAIN 900 AMP DISCONNECT
OPTIONAL METHOD

OH1442.2
UG4242.2

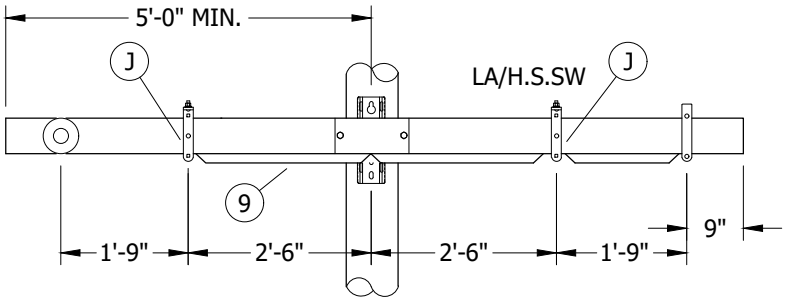

DETAIL 1
FRONT VIEW
CONDUIT WITH CABLE SUPPORT BRACKETS

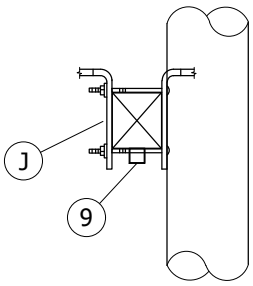

DETAIL 1
SIDE VIEW, ENLARGED
CONDUIT WITH CABLE SUPPORT BRACKETS

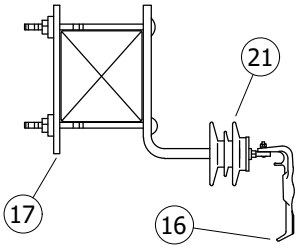

DETAIL 2
PREFERRED BRACKET
CONFIGURATION

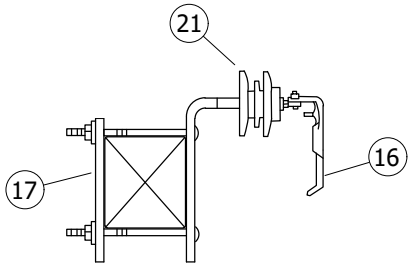

DETAIL 2
OPTIONAL BRACKET
CONFIGURATION
(NOT SHOWN)

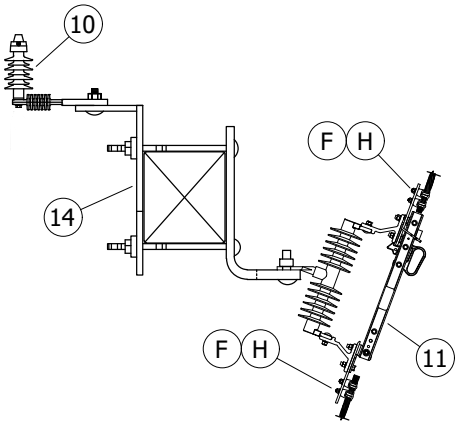

DETAIL 3
DOUBLE BRACKET

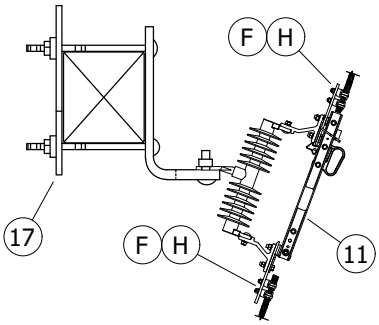

DETAIL 4
SINGLE BRACKET

TABLE OF CONTENTS

© 1998 - 2020 San Diego Gas & Electric Company. All rights reserved. Removal of this copyright notice without permission is not permitted under law.

REV	CHANGE	DR	BY	DSN	APV	DATE	REV	CHANGE	DR	BY	DSN	APV	DATE
C	FIGURE UPDATE	EDM	DWC	JES	CZH	3/9/2020	F						
B	EDITORIAL CHANGES	-	GW	JS	MDJ	4/1/2018	E						
A	REVISION	-	-	PEA	JJ	10/20/2005	D	DRAWING UPDATE	EDM	DWC	JES	CZH	12/11/2020

X Indicates Latest Revision | Completely Revised | New Page | Information Removed

SDG&E ELECTRIC OVERHEAD AND UNDERGROUND CONSTRUCTION STANDARDS

THREE PHASE, CABLE-POLE-12KV,
NON-PORCELAIN 900 AMP DISCONNECT

OH1442.3
UG4242.3

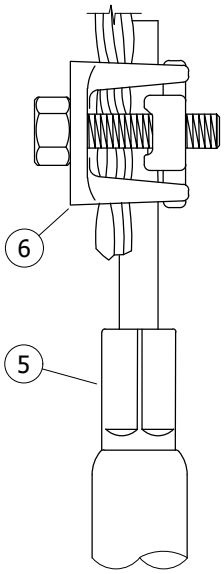

DETAIL 5
OPTION 1
PREFERRED

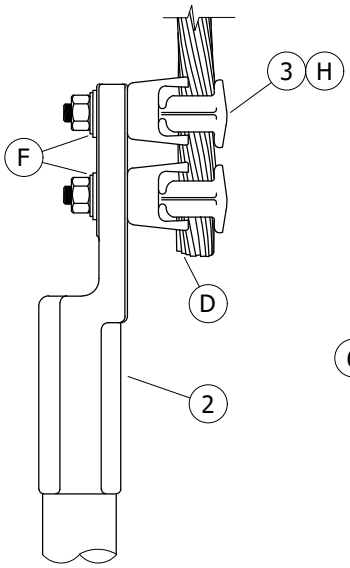

DETAIL 5
OPTION 2

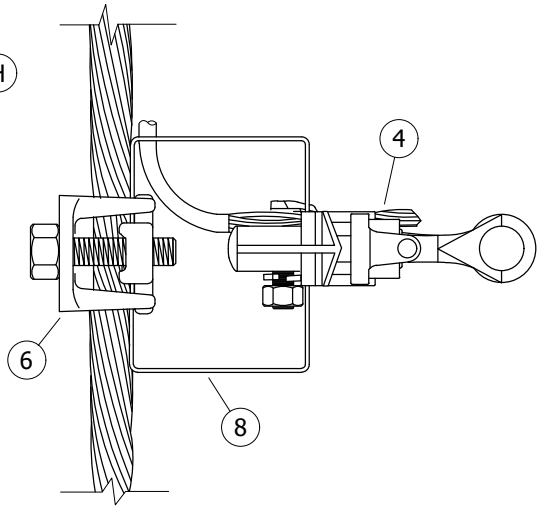

DETAIL 6
OPTION 1

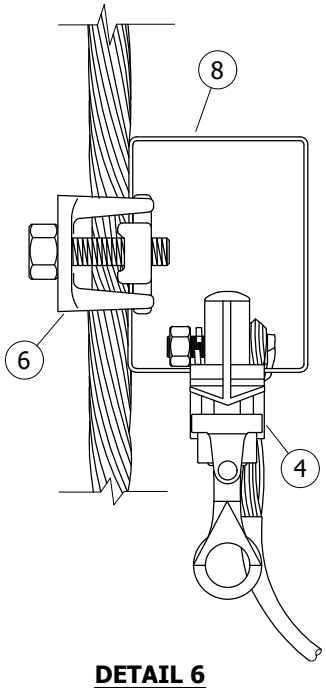

DETAIL 6
OPTION 2

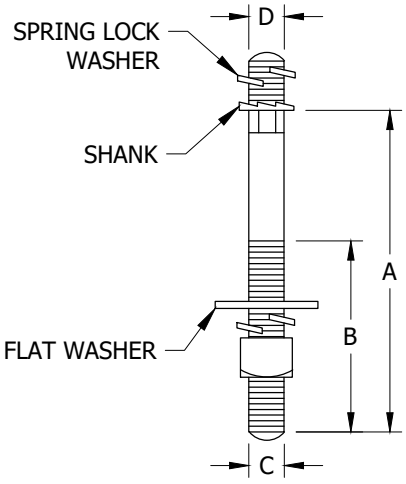

DETAIL 7
INSULATOR PIN FOR
35KV INSULATORS

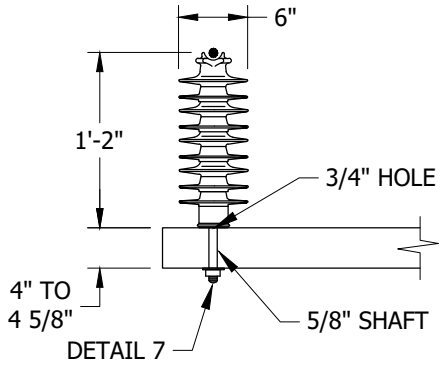

DETAIL 8
35KV F-NECK INSUL ATOR
TANGENT OR SINGLE DEADEND ARM

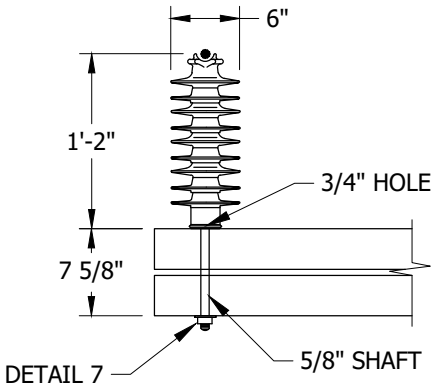

DETAIL 9
35KV F-NECK INSULATOR
STACKED ARM

TABLE 1

DESCRIPTION	A	B	C	D	STOCK NUMBER	DESIGN UNITS
HARDWARE POST INSULATOR STUD, FIBERGLASS,WOOD	7 1/2"	3 1/2"	4 1/2"	3/4"	S701760	STUD-W
	10"	4"	5/8"	1 3/4"	S701762	STUD-L

© 1998 - 2020 San Diego Gas & Electric Company. All rights reserved. Removal of this copyright notice without permission is not permitted under law.

REV	CHANGE	DR	BY	DSN	APV	DATE	REV	CHANGE	DR	BY	DSN	APV	DATE
C	FIGURE UPDATE	EDM	DWC	JES	CZH	3/9/2020	F						
B	EDITORIAL CHANGES	-	GW	JS	MDJ	4/1/2018	E						
A	REVISION	-	-	PEA	JJ	10/20/2005	D	DRAWING UPDATE	EDM	DWC	JES	CZH	12/11/2020

X Indicates Latest Revision | Completely Revised | New Page | Information Removed

SDG&E ELECTRIC OVERHEAD AND UNDERGROUND CONSTRUCTION STANDARDS

THREE PHASE, CABLE-POLE-12KV,
NON-PORCELAIN 900 AMP DISCONNECT

OH1442.4
UG4242.4

TABLE OF CONTENTS

INSTALLATION:

A. NEW CABLE POLES SHALL HAVE A STANDARD DEPTH OF 9 FEET. IN MOST CASES, THIS WILL REQUIRE A 5-FOOT TALLER POLE.

B. THIS CONSTRUCTION TO BE USED WITH 350 AND LARGER UNDERGROUND CABLE.

C. INTERCONNECT OVERHEAD NEUTRAL, AND CONCENTRIC CABLE NEUTRAL CONDUCTOR TO LIGHTNING ARRESTER GROUND.

(D) INSTALLATION OF WIRE CAN BE MADE ON EITHER SIDE OF TERMINAL COMPRESSION LUG.

(E) REDUCE QUANTITIES AS REQUIRED WHEN NOT USING NEUTRAL.

(F) BRUSH WIRE, INSTALL PENETROX "INHIBITOR" AND BELLEVILLE WASHER.

G. DIMENSIONS CAN VARY BASED ON CROSSARM SIZE AND/OR CONFIGURATION.

(H) REQUIRES TWO TAP LUGS PER CONNECTION.

(J) ARM MAY BE DRILLED TO REPOSITION BOTTOM BOLT ALLOWING CONDUIT TO SET FLUSH ON BOTTOM OF CROSSARM.

(K) CONCENTRIC WITH POLE GROUND, CONNECTION AREA.

(L) MAINTAIN SIX INCHES OF BARE WIRE BELOW DISCONNECT FOR PROPER GROUNDING OF UNDERGROUND CABLE.

(M) CENTER OF CUTOUT ARM SHALL NOT BE MOUNTED HIGHER THAN THIRTY-FIVE FEET FROM GROUND.

BILL OF MATERIALS:

ITEM	DESCRIPTION	WIRE RANGE	QUANTITY	STANDARD PAGE	STOCK NUMBER	DESIGN UNITS	SAP CU
1	CONNECTOR, WEDGE (PREFERRED)	--	AS REQ'D	783	--	--	--
2	CONNECTOR, TERMINAL COMPRESSION LUG	--	AS REQ'D	4174.2	--	--	--
3	CONNECTOR, TAP LUG, 1/0 TO 500MCM CU TAP LUG - BRONZE	--	12 TO 18	--	S471232	TL1/0	TL1/0
4	CONNECTOR, CLAMP, HOT LINE	--	3	788	S227680 (X)	--	--
5	CONNECTOR PIN (PREFERRED) UNDERGROUND STANDARD	--	AS REQ'D	UG4111.2	--	--	--
6	CONNECTOR, BRONZE, 2 BOLT, CONNECTOR, COPPER TAP 3/0-1000	--	--	--	S262370 (X)	CN1000	CN1000
7	CONNECTOR, WEDGE, STIRRUP OR BAIL, #2 SOLID CU	--	3	783	--	--	--
8	CONNECTOR, STIRRUP, BAIL, #2 TIN PLATED CU	--	AS REQ'D	--	S227650	BAIL	BAIL
9	CONDUIT, SQ. 2" X 2" X 10'-0" PVC (SQUARE)	--	AS REQ'D	--	S251534	SQC-2	SQC-2
	CONDUIT, SCH 40, 2" X 10'-0" PVC (ROUND)	--	AS REQ'D	--	S251296	PVC2	PVC2
10	EQUIPMENT, ARRESTER, LIGHTNING	--	3	1247.2	S113248	LA12	LA12
11	EQUIPMENT, POLYMER, SINGLE-DISC, 900A, SWITCH, CABLE POLE	--	3	--	S707004 (VI)	P900DC	P900DC
					S706670 (V)	PS900	--
12	GROUNDING, #4 PVC GRND WIRE, RODS, CONN-STEEL POLE (II)	--	1	1002	--	GNDPSP	GNDPSP
	GROUNDING, WIRE, #4 PVC, RODS & CONNECTORS (FOR WOOD POLES) (II)	--	--	--	--	GNDPVC	GNDPVC
13	HARDWARE, CROSSARM, FIBERGLASS, 10'-0", 4 PIN TANGENT (MINIMUM)	--	AS REQ'D	379	S294378	4TF	4TF
14	HARDWARE, BRACKET, DOUBLE, CUTOUT, ARRESTER	--	3	--	S165454	DBLBKT	DBLBKT
15	HARDWARE, STAND OFF PIN, 1 3/8" (E)	--	2	396	S529214	PS/O1+	PS/O1LG
16	HARDWARE, BRACKET, CABLE SUPPORT, WITH POLY	--	3	4207	S166064	NP-BKT	NP-BKT
17	HARDWARE, BRACKET, CUTOUT/ARRESTOR CROSSARM MOUNTING	--	3	397	S165452 (X)	CO/B	--
18	HARDWARE, CLAMP, STRAIGHT LINE, D.E. (AS NEEDED) (II)	--	AS REQ'D	739	--	--	--
19	HARDWARE, GRIP, RISER, 5-INCH, KELLEMS (1000 AL)	--	AS REQ'D	4204	S394098	5G1000	5G1000
20	HARDWARE, RISER ARM BRACKET & 24" CHANNEL (ASSEMBLY)	--	AS REQ'D	1404/4204	--	RSRARM (I)	RSRARM
21	HARDWARE, STANDOFF (350MCM AND ABOVE) (OPTIONAL)	--	AS REQ'D	--	S429040 (X)	--	--
22	HARDWARE, PIN, POST, STUD, FG/WOOD (STANDARD ARM) (II)	--	AS REQ'D	396.2	S701760	STUD-W	STUD-W
23	HARDWARE, PIN, POST, STUD, FG/WOOD (STACKED DEADEND ARM) (II)	--	AS REQ'D	396.2	S701762	STUD-L	STUD-L

TABLE OF CONTENTS

© 1998 - 2020 San Diego Gas & Electric Company. All rights reserved. Removal of this copyright notice without permission is not permitted under law.

REV	CHANGE	DR	BY	DSN	APV	DATE	REV	CHANGE	DR	BY	DSN	APV	DATE
C	FIGURE UPDATE	EDM	DWC	JES	CZH	3/9/2020	F						
B	EDITORIAL CHANGES	-	GW	JS	MDJ	4/1/2018	E						
A	REVISION	-	-	PEA	JJ	10/20/2005	D	DRAWING UPDATE	EDM	DWC	JES	CZH	12/11/2020

X Indicates Latest Revision | Completely Revised | New Page | Information Removed

SDG&E ELECTRIC OVERHEAD AND UNDERGROUND CONSTRUCTION STANDARDS

THREE PHASE, CABLE-POLE-12KV,
NON-PORCELAIN 900 AMP DISCONNECT

OH1442.5
UG4242.5

BILL OF MATERIALS: (CONT'D)

ITEM	DESCRIPTION	WIRE RANGE	QUANTITY	STANDARD PAGE	STOCK NUMBER	DESIGN UNITS	SAP CU
24	HARDWARE,PIN, 1 3/8" COBB FORGED STEEL GALV. (II)	--	2	--	S532448	PS1+	PS1LG
25	INSULATOR, VICE TOP, PIN, 1 3/8", UNIVERSAL (g)	--	3 TO 4	750.2	S429272	IPULG	IPULG
26	INSULATOR, WHITE, NEUTRAL, "F" NECK, 1 3/8" PIN (OPTIONAL)	--	2	--	S432220	IWN	IWN
27	INSULATOR, SUSPENSION, 35KV, POLYMER	--	AS REQ'D	750.3	S428958	LONGDE	LONGDE
28	INSULATOR, HENDRIX 35KV POLY LINE POST (II)	--	AS REQ'D	750	S429144	LP-14F	LP-14F
29	STICKER, "HIGH VOLTAGE", VINYL, ADHESIVE	--	AS REQ'D	208.3	S647650 (X)	--	--
30	STICKER, TAGS, SWITCH NUMBER	--	--	208	--	--	--
31	STICKER, "PN", VINYL, ADHESIVE	--	AS REQ'D	--	S648004 (X)	--	--
32	WIRE, 500 STR. CU, BARE (III)	--	AS REQ'D	711	S813792	BS500	BS500
33	WIRE, 4/0 STR. CU, SOFT-DRAWN, COVERED (CONCENTRIC BUS WIRE)	--	30'-0"	711	S812126	HEND4/0	HEND4/0
34	WIRE, POLY COVERED 4/7 STRAND COPPER	--	AS REQ'D	711	S815044	POLY4J	POLY4J
35	STRAP, ARRESTER GROUND	--	AS REQ'D	1002	S698754	LAGND	LAGND
36	WIRE, POLY COVERED, #4 SOLID COPPER (POLE GROUND)	--	AS REQ'D	711	S812490	POLY4	POLY4
37	WILDLIFE, COVER, 900A DISCONNECT (AS REQ'D) (II)	--	3	1620.7	S286948	9COCVR	9COCVR

NOTES:

(I) MINIMUM CROSSARM TEN-FOOT.
(II) NOT SHOWN ON FIGURES.
(III) WIRE SIZE IS APPLICABLE TO AMPERAGE OF PRIMARY SOURCE.
(IV) MINIMUM 480A COPPER WIRE REQUIRED (OPTION FOR USE OF COVERED WIRE).
(V) REQUIRED IN CONTAMINATION DISTRICT 1 AND PREFERRED IN COASTAL DISTRICTS (OC, NC, BC, CM).
(VI) PREFERRED FOR INLAND DISTRICTS (NE, RA, EA, ME).
(X) THIS ITEM IS EXEMPT.

REFERENCE:

a. ALLOWABLE WORKING AND CLIMBING SPACE - SEE OH251.
(b) POLE STEPPING - SEE OH363.
c. GROUNDING METHODS - SEE OH1002.
d. RISER POSITION - SEE OH1404/UG4204.
(e) MINIMUM VERTICAL SEPARATION AS PER G.O. 95 - SEE OH1406/UG4206.
(f) FOR BONDING GENERAL INFORMATION - SEE OH1003.
(g) PER CONTAMINATION DISTRICT REQUIREMENTS - SEE OH287.
(h) REFERENCE GELPACT - SEE OH783.16.
i. MINIMUM CROSSARM BOLT REQUIREMENT - SEE OH379.
(j) FIBERGLASS CROSSARM GROUNDING DETAIL OPTION, SEE OH1002.1. FIGURE 5 AND FIGURE 6.

TABLE OF CONTENTS

© 1998 - 2020 San Diego Gas & Electric Company. All rights reserved. Removal of this copyright notice without permission is not permitted under law.

REV	CHANGE	DR	BY	DSN	APV	DATE	REV	CHANGE	DR	BY	DSN	APV	DATE
C	FIGURE UPDATE	EDM	DWC	JES	CZH	3/9/2020	F						
B	EDITORIAL CHANGES	-	GW	JS	MDJ	4/1/2018	E						
A	REVISION	-	-	PEA	JJ	10/20/2005	D	DRAWING UPDATE	EDM	DWC	JES	CZH	12/11/2020

TABLE OF CONTENTS

SCOPE: THIS STANDARD SHOWS A SIDE BREAK GANG OPERATED POLE TOP 900A RISER MOUNTING SWITCH FOR CIRCUIT TIES OR SECTIONALIZING PURPOSES.

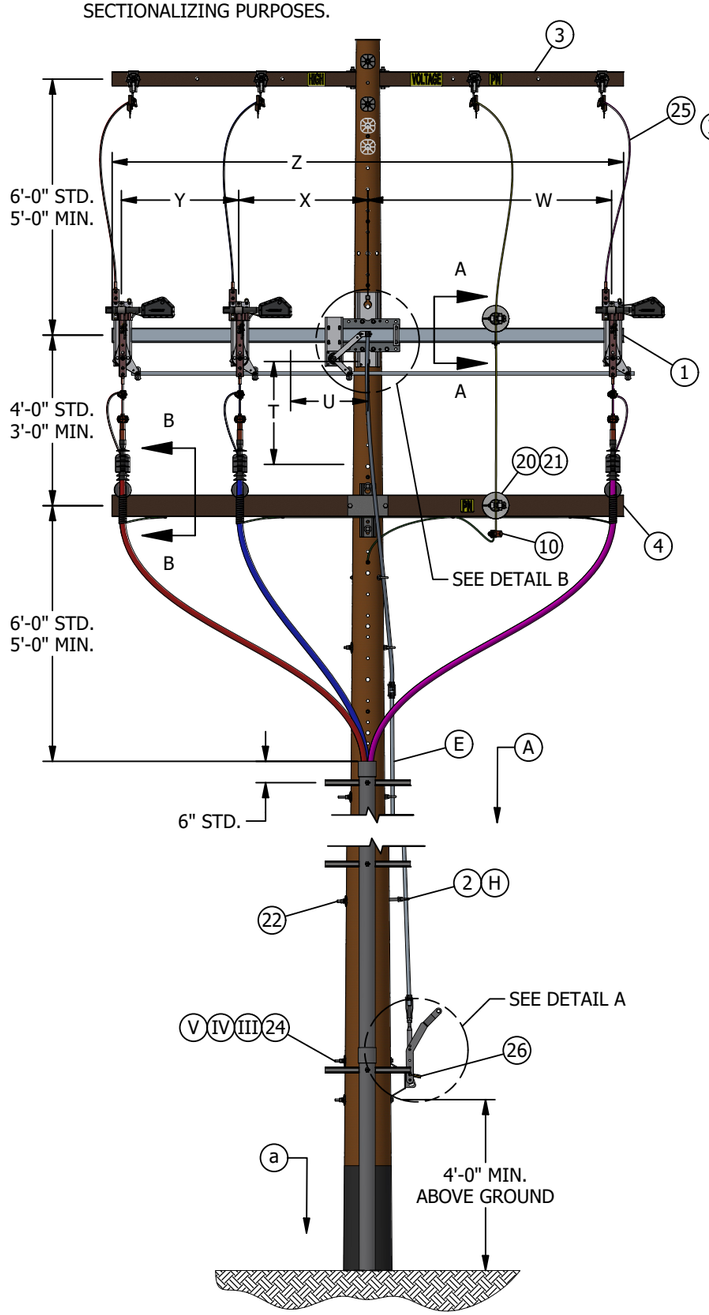

FIGURE 1
FRONT VIEW

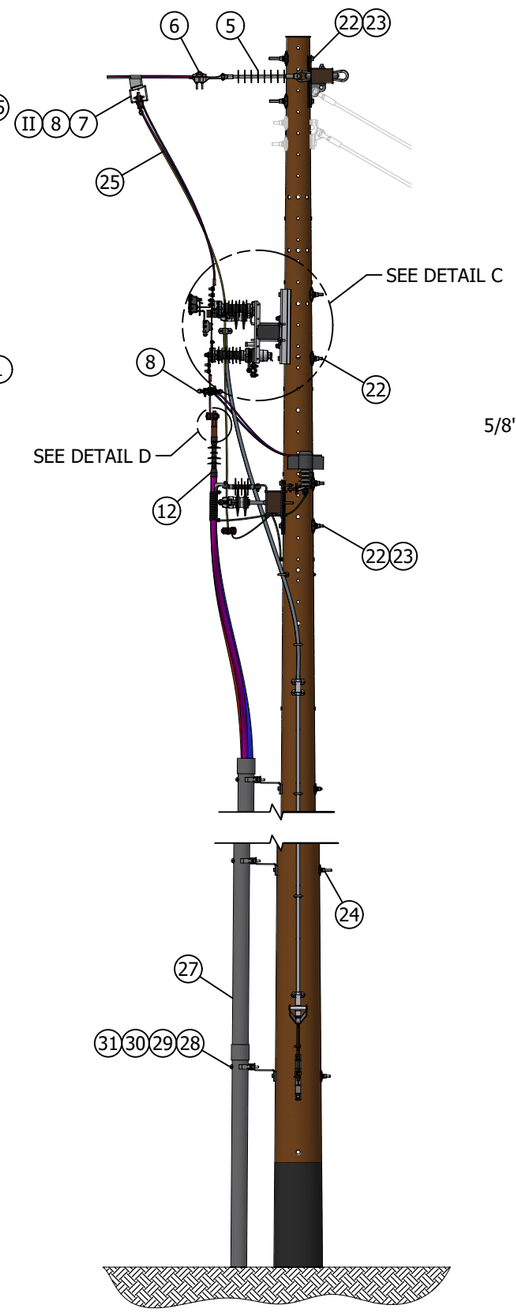

FIGURE 1
SIDE VIEW

ATTENTION:

* NEW PRIMARY CABLE POLE INSTALLATIONS SHALL BE TRUCK ACCESSIBLE. EXISTING CABLE POLE LOCATIONS THAT ARE NOT TRUCK ACCESSIBLE CAN BE GRANDFATHERED BY DEVIATION.

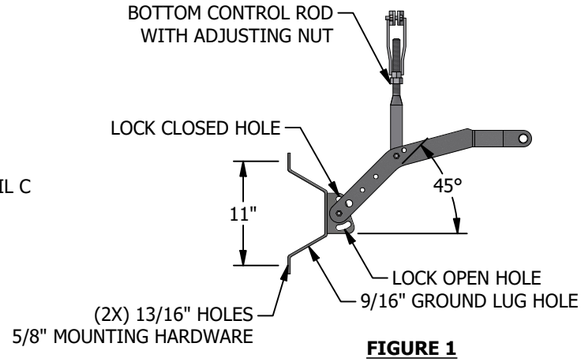

FIGURE 1
DETAIL A
POSITION OF HANDLE FOR
CONTROL ROD COMPRESSION

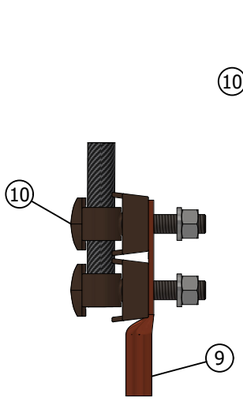

FIGURE 1
DETAIL D
CONFIGURATION 1

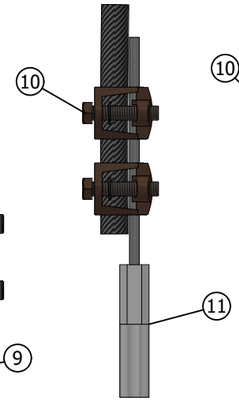

FIGURE 1
DETAIL D
CONFIGURATION 2
2/0 AND BELOW

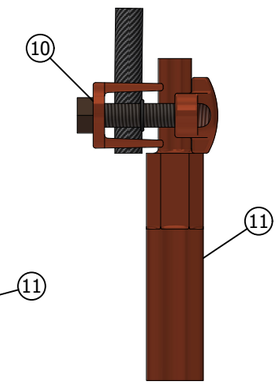

FIGURE 1
DETAIL D
CONFIGURATION 3
350 AND ABOVE

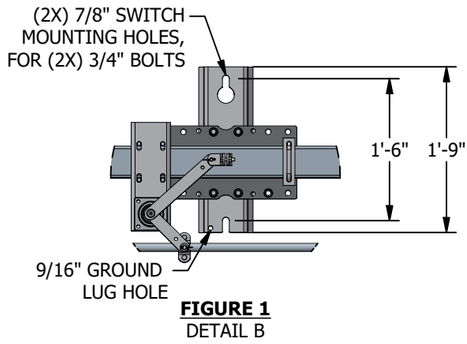

FIGURE 1
DETAIL B

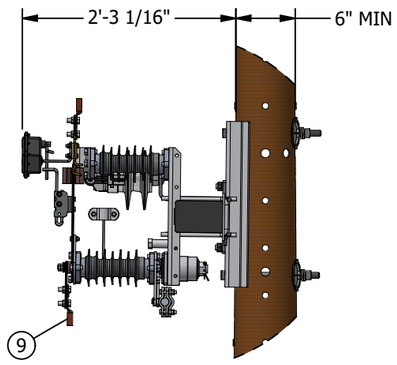

FIGURE 1
DETAIL C

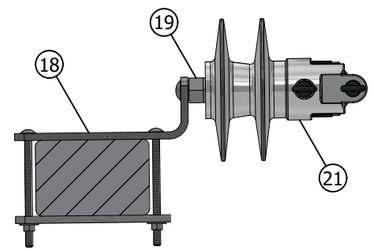

FIGURE 1
SECTION A-A

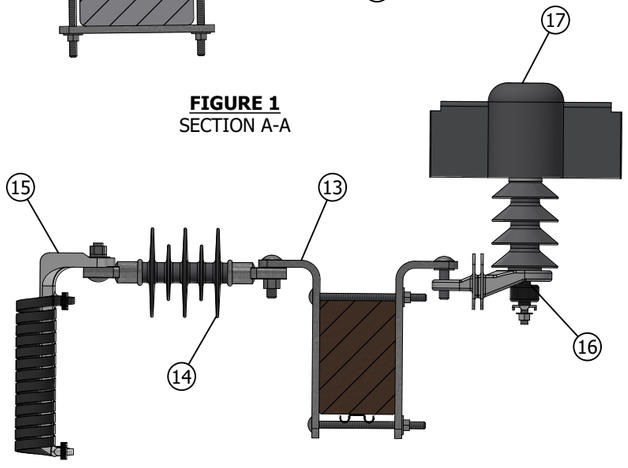

FIGURE 1
SECTION B-B

REV	CHANGE	DRWN	BY	CHKD	APVD	DATE
F	TYPO CORRECTIONS	JIK	JIK	-	-	1/24/2024
E	REVISE TO 3D FORMAT/BILL OF MATERIALS UPDATE	DV	JIK	-	-	3/15/2023
D	FIGURE UPDATE	EDM	MRF	GLW	KRG	5/31/2022

SDGE™

SDG&E ELECTRIC OVERHEAD AND UNDERGROUND CONSTRUCTION STANDARDS

SCALE: NOT TO SCALE

POLE TOP SWITCH 12KV
RISER LOADBREAK TYPE SINGLE CIRCUIT

DRAWING NO: OH1444.1 UG4244.1

SHEET: 1 OF 3

© 1998 - 2024 San Diego Gas and Electric Company. All rights reserved. Removal of this copyright notice without permission is not permitted under law.

X Indicates Latest Revision | Completely Revised | New Page | Information Removed

TABLE OF CONTENTS

TABLE 1:

SWITCH CONFIGURATIONS									
TYPE	SWITCH WEIGHT (LBS)	Z (FT)	Y (IN)	X (IN)	W (IN)	T (IN)	U (IN)	STOCK NUMBER	DESIGN UNIT
CENTER PH. LEFT	240 LBS.	10	33	26	55	31 5/8	34 1/8	S709312	RGS10L
CENTER PH. RIGHT	240 LBS.	10	33	24	57	31 5/8	34 1/8	S709310	RGS10R
CENTER PH. LEFT	250 LBS.	12	33	36	69	31 5/8	34 1/8	S709316	RGS12L
CENTER PH. RIGHT	250 LBS.	12	33	36	69	31 5/8	34 1/8	S709314	RGS12R
CENTER PH. LEFT	265 LBS.	15	33	54	87	44 7/8	47 5/8	S709318	RGS15L
CENTER PH. RIGHT	265 LBS.	15	33	54	87	44 7/8	47 5/8	S709320	RGS15R

INSTALLATION:

(A) REFLECTOR STRIPS ARE REQUIRED ON ALL SECTIONALIZING/TIE SWITCHES AND SERVICE RESTORER POLES. (d)

B. NEUTRALS SHALL BE SOLIDLY TIED TOGETHER AT ALL SWITCHES REGARDLESS OF WHETHER THEY ARE NORMAL OPEN OR CLOSED. THIS INCLUDES CIRCUIT TIES. (e)

RECIPROCATING CONTROL ROD SWITCH INSTALLATION:

C. THE SWITCH IS SUPPLIED WITH THE CONTACTS TIED IN THE CLOSED POSITION. DO NOT CUT THESE TIES UNTIL THE SWITCH AND CONTROL ROD INSTALLATION IS COMPLETE.

D. PROVIDED V-BRACES ARE REQUIRED ON THE FIFTEEN-FOOT SWITCHES.

(E) VERIFY THE POLE QUADRANT WHERE THE CONTROL ROD WILL BE INSTALLED.

F. THE OPERATION HANDLE SHOULD BE LOCATED 42 INCHES FROM GROUND GRADE, OR AT ANY INCREASED ELEVATION.

G. DRILL 13/16-INCH SWITCH MOUNTING HOLES ACCORDING TO THE DIMENSION GIVEN ON THE CONSTRUCTION DRAWING. INSTALL SWITCH WITH 3/4-INCH BOLTS AND SHEAR PLATES ARE REQUIRED BY CONSTRUCTION STANDARDS.

(H) INSTALL CONTROL ROD, WORKING FROM THE SWITCH DOWN TO THE OPERATING HANDLE. INSTALL CONTROL ROD GUIDES AS SHOWN ON THE CONSTRUCTION DRAWING. MAKE CERTAIN THAT THE SWITCH IS IN THE CLOSED POSITION PRIOR TO DRILLING HOLES FOR THE CONTROL ROD GUIDES. SWING ARM STYLE GUIDES SHOULD POINT UPWARDS AT 45 DEGREES WHEN THE SWITCH IS CLOSED. CHECK THAT 17 INCHES MINIMUM SPACE IS AVAILABLE ABOVE EYEBOLT GUIDES FOR CONTROL RODS SPLICES WHEN EYE BOLT TYPE GUIDES ARE USED (1-INCH FIBERGLASS AND 3/4-INCH PIPE ONLY). MINIMUM TWO GUIDES PER TEN-FOOT SECTION OF CONTROL ROD.

J. DRILL CONTROL HANDLE MOUNTING BOLT HOLES AT THE DESIRED LOCATION (42-INCH MINIMUM HEIGHT). ATTACH THE MANUAL OPERATION HANDLE ADJUSTING SCREW CLAMP, OR FITTING TO THE CONTROL ROD SECTION. PUT THE HANDLE IN THE "UP" POSITION. CONNECT THE CONTROL HANDLE ADJUSTING SCREW CLAMP OR FITTING TO THE CONTROL ROD. A COMPRESSIVE LOAD (20-30 LBS.) SHOULD BE FELT ON THE CONTROL AS THE CONTROL MOVES TO THE FULLY CLOSED/LOCKED POSITION. USE THE ADJUSTING SCREW TO ACHIEVE THE PROPER COMPRESSION LOAD.

K. CHECK ALL BOLTS TO ENSURE THAT THEY HAVE BEEN ADEQUATELY TORQUED.

L. CUT THE TIE WIRES ON THE SWITCH CONTACT BLADES.

M. OPERATE THE SWITCH TO OPEN. VERIFY THAT THE PADLOCKING HOLES ON THE HANDLE AND THE HANDLE BASE ALIGN, SWITCH CONTACTS FULL ENGAGED/CLOSED.

N. CLOSE THE SWITCH AND CHECK FOR COMPRESSION IN THE CONTROL ROD.

O. ADJUSTING THE CONTROL ROD COMPRESSION:

1. PULL THE HANDLE DOWNWARD TO ABOUT 45 DEGREES FROM THE VERTICAL CLOSED POSITION.
2. EXTEND THE ADJUSTING SCREW SO THAT THE SLACK IS REMOVED FROM THE CONTROL ROD AND THE HANDLE REQUIRES 20 TO 30 POUNDS OF FORCE TO MAKE IT "TOGGLE" TO THE FULLY CLOSED POSITION.
3. CHECK THAT THE CLOSE PADLOCK HOLE ON THE HANDLE AND THE HANDLE BASE ALIGN.
4. TIGHTEN THE ADJUSTING NUT/LOCK-NUT.

P. OPERATE THE SWITCH SEVERAL TIMES USING A RAPID MOTION THROUGHOUT THE HANDLE ROTATION. SWING THE HANDLE DOWN TO REMOVE THE TOGGLE LOAD AND OPERATE THE SWITCH IN ONE SWIFT MOTION WHEN OPENING THE SWITCH. CLOSE THE SWITCH USING A CONTINUOUS MOTION.

INSTALLATION (CONT'D):

Q. VERIFY THAT THE SWITCH CONTACT BLADES ARE FULLY SEATED WHEN THE SWITCH IS CLOSED.

R. CHECK THE ARC-HORNS OR INTERRUPTERS ARE OPERATION PROPERLY. SEE THE APPROPRIATE INTERRUPTER INSTALLATION AND ADJUSTMENT INSTRUCTION SHEER INCLUDED IN THE SWITCH INSTALLATION DRAWING PACKAGE.

BILL OF MATERIALS:

ITEM	DESCRIPTION	QUANTITY	CALLOUTS	STANDARD PAGE	STOCK NUMBER	DESIGN UNIT
1	SWITCH, GANG OPERATED, 15KV, 600A WITH AMPRUPTER, INCLUDING 30'-0" OF CONTROL ROD	1	-	-	SEE TABLE 1	-
2	ADDITIONAL 10' CONTROL ROD WITH 2 EYE NUTS AND COUPLING	2	(VII)(XX)	-	S602932	I-ROD
3	FIBERGLASS CROSSARM, DEADEND	1	-	379	-	-
4	FIBERGLASS CROSSARM, TANGENT	1	-	379	-	-
5	INSULATOR, DEAD-END, 35KV, GALV, SALISBURY	4	-	750	S428958	LONGDE
6	CLAMP, STRAIGHT LINE, DEADEND	4	-	739	-	-
7	CONNECTOR, WEDGE TYPE WITH STIRRUP (SIZE AS REQ'D)	4	-	788	-	-
8	CLAMP, HOT LINE, BRONZE (SIZE AS REQ'D)	6	-	788	-	-
9	TERMINAL, COMPRESSION, CU OR AL (SIZE AS REQ'D)	6	(XX)	795	-	-
10	CONNECTOR, TWO-BOLT FOR 4/0 COPPER	-	(XX)	-	S262336	CN4/0
	CONNECTOR, TWO-BOLT FOR 1000 KCMIL	4	(X)(XX)	-	S262370	CN1000
	CONNECTOR, EYE BOLT (SIZE AS REQ'D)	-	(XX)	787	-	-
11	TERMINAL, PIN, ALUMINUM/COPPER	3	(XX)	4111	S729944	C1000N
	TERMINAL, PIN, ALUMINUM/COPPER,	-	(XX)	4111	S729930	CP-#2N
12	TERMINAL, 12KV TERMINAL, POLY	3	-	4111	S727138	C1000N
13	BRACKET, CUTOUT ARRESTER, HOT DIPPED 3/8"	3	-	397	S165454	DBLBKT
14	INSULATOR, POLYMER COUPLING, 9 INCHES IN LENGTH.	3	-	1355	S429040	-
15	BRACKET, MOUNTING CS 820	3	-	-	S166064	NP-BKT
16	ARRESTER, 10KV MOV, W/O WILDLIFE	3	-	-	S113248	-
17	COVER, LIGHTNING ARRESTER, 4" DIAMETER	3	-	1640	S289602	-
18	BRACKET, CUTOUT, GLV, 6", LONG CARRIAGE	1	-	397	S165452	COBKT
19	PIN, TRANSFORMER 1-3/8"	1	-	396	S529214	PS/O1LG
20	PIN, INSULATOR, 12KV, FORGED STEEL, GALV	1	-	396	S532448	PS1LG
21	INSULATOR, LINE, 12kV	2	-	750	-	-
22	BOLT, MACHINE, 3/4", GALV W/ NUT	6	(XX)	390	-	-
	WASHER, CURVED, RIB, 4" X 4" X 17/32", 13/16" HOLE, FOR 3/4" BOLT, GALV	6	(XX)	390	S797760	-
	WASHER, 3/4", DOUBLE COIL SPRING, TYPE M-W, STEEL, TIN/ZINC COAT	6	(XX)	390	S798496	-
23	WASHER, FLAT, ROUND, 3/4" X 2", GALV	4	(XX)	390	S800256	-
24	BOLT, MACHINE, 5/8", GALV W/ NUT	12	(XX)	390	-	-
	WASHER, CURVED, RIB, 3" X 3" X 5/16", 11/16" HOLE, FOR 5/8" BOLT, GALV	12	(XX)	390	S797792	-
	WASHER, 5/8", DOUBLE COIL SPRING, TYPE M-W, STEEL, TIN/ZINC COAT	12	(XX)	390	S798560	-
25	WIRE, BARE STRAND OR POLY COVERED, (SIZE AS REQUIRED)	-	(XX)	711	-	-
26	PADLOCK, 30 SERIES, ALLOY, ELECTRIC	1	-	-	S514848	-
27	CONDUIT, 4" X 10FT, PVC SCHEDULE 40	3	(XX)	1404	S251392	S40-4"
28	CLAMP, PIPE, STEEL, GALV., UNISTRUT, 4"	5	(XX)	1404	S229664	CL-4IN
29	CHANNEL, 1-5/8" X 1-5/8" BACK TO BACK	5	(XX)	1404	S216702	RARM/L
30	NUT, STUD, 1/2" X 1-3/8" GALV 13	10	(XX)	-	S507000	-
31	BRACKET, CONDUIT STANDOFF, CONSTRUCTED	5	(XX)	1404	S167186	RARM/L

REV	CHANGE	DRWN	BY	CHKD	APVD	DATE
F	TYPO CORRECTIONS	JIK	JIK	-	-	1/24/2024
E	REVISE TO 3D FORMAT/BILL OF MATERIALS UPDATE	DV	JIK	-	-	3/15/2023
D	FIGURE UPDATE	EDM	MRF	GLW	KRG	5/31/2022

SDG&E ELECTRIC OVERHEAD AND UNDERGROUND CONSTRUCTION STANDARDS

POLE TOP SWITCH 12KV
RISER LOADBREAK TYPE SINGLE CIRCUIT

SCALE: NOT TO SCALE

DRAWING NO: OH1444.2 UG4244.2

SHEET: 2 OF 3

© 1998 - 2024 San Diego Gas and Electric Company. All rights reserved. Removal of this copyright notice without permission is not permitted under law.

X Indicates Latest Revision | Completely Revised | New Page | Information Removed

NOTES:

I. SWITCH OPERATING RODS MAY EXTEND ONE-HALF THEIR DIAMETER INTO THE CLIMBING SPACE. (d)

(II) IN CONTAMINATION DISTRICT 1, COMPRESSION OR WEDGE CONNECTORS ARE PREFERRED. IN CONTAMINATION DISTRICTS 2 & 3, STIRRUP WEDGE CONNECTORS ARE PREFERRED FOR UG CABLE 2/0 AND BELOW, AND WEDGE CONNECTORS ARE PREFERRED FOR UG CABLE 350 AND ABOVE.

(III) CONTROL ROD IS SHOWN ROTATED 90 DEGREES TO THE RIGHT TO ALLOW FOR EXTERNAL RISERS ALONG FACE OF POLE.

(IV) SWITCH HANDLE SHOWN IN CLOSED POSITION.

(V) SWITCH HANDLE CAN BE ROTATED UP TO 180 DEGREES FROM FACE OF POLE IN EITHER DIRECTION.

(VI) ORIENT SWITCH ARM BRACE BRACKET 180 DEGREES FROM NORMAL POSITION FOR USE AS MOUNTING BRACKET FOR THE NEUTRAL STANDOFF.

(VII) NOT SHOWN ON FIGURES.

(X) THIS ITEM IS EXEMPT.

(XX) QUANTITY SHOWN IN THE BILL OF MATERIALS ARE FROM THE SPECIFIC CONSTRUCTION THAT IS ILLUSTRATED IN THIS STANDARD. YOU MUST ADJUST THE QUANTITY BASED ON THE NEEDS OF YOUR JOB.

REFERENCE:

(a) FOR POLE STEPPING, SEE OH363.

b. FOR FEEDER CIRCUIT SECTIONALIZING AND PROTECTION, SEE DM6111.

c. FOR CONDUCTOR CLEARANCE, SEE G.O. 95, 54.7-A3.

(d) FOR POLE MARKING, SEE OH208.

(e) FOR NEUTRAL REQUIREMENT, SEE DM6221.

f. FOR BONDING REQUIREMENTS, SEE OH1003.

TABLE OF CONTENTS

REV	CHANGE	DRWN	BY	CHKD	APVD	DATE
F	TYPO CORRECTIONS	JIK	JIK	-	-	1/24/2024
E	REVISE TO 3D FORMAT/BILL OF MATERIALS UPDATE	DV	JIK	-	-	3/15/2023
D	FIGURE UPDATE	EDM	MRF	GLW	KRG	5/31/2022

SDGE™

SDG&E ELECTRIC OVERHEAD AND UNDERGROUND CONSTRUCTION STANDARDS

POLE TOP SWITCH 12KV
RISER LOADBREAK TYPE SINGLE CIRCUIT

SCALE: NOT TO SCALE

DRAWING NO: OH1444.3 UG4244.3

SHEET: 3 OF 3

© 1998 - 2024 San Diego Gas and Electric Company. All rights reserved. Removal of this copyright notice without permission is not permitted under law.

X Indicates Latest Revision | Completely Revised | New Page | Information Removed

SCOPE: THIS STANDARD SHOWS ALLEY ARM CONSTRUCTION FOR 12.47KV AND BELOW, THREE-PHASE CABLE POLE USING NON-PORCELAIN TERMINALS WITH CROSSARM MOUNTED TERMINALS FOR #2/0 AND SMALLER U.G. CABLE. THIS CONSTRUCTION IS TO BE USED FOR ALL CONTAMINATION DISTRICTS.

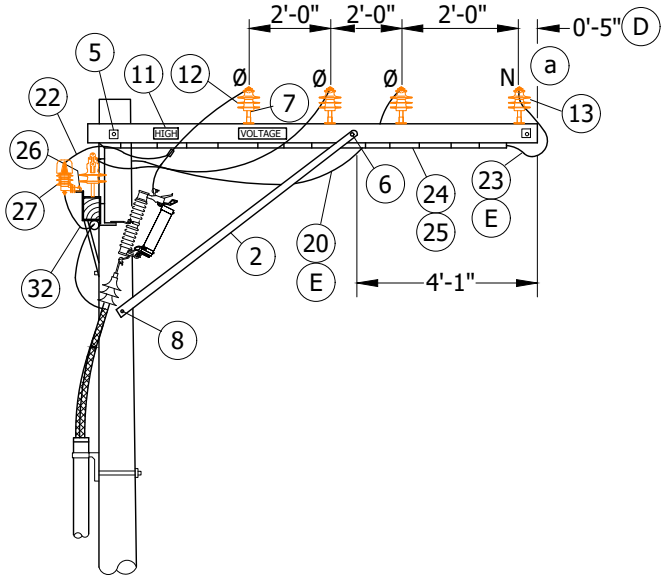

FIGURE 1
TANGENT CONSTRUCTION
SIDE VIEW

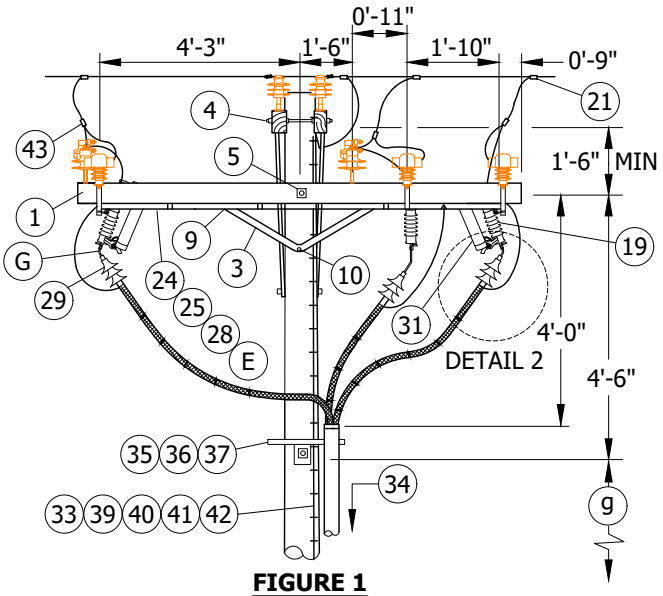

FIGURE 1
TANGENT CONSTRUCTION
FRONT VIEW

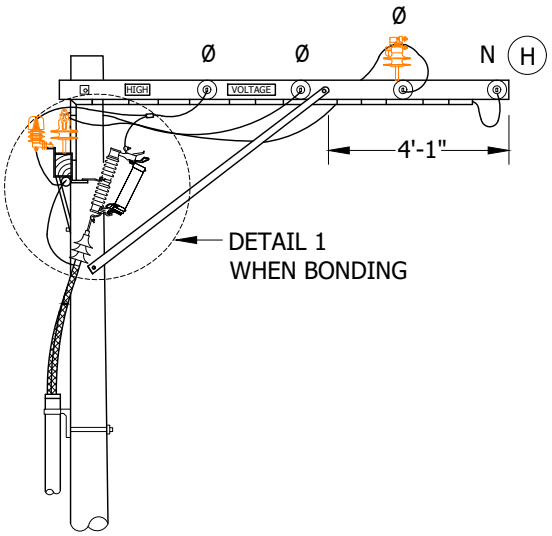

FIGURE 2
DEADEND CONSTRUCTION
SIDE VIEW

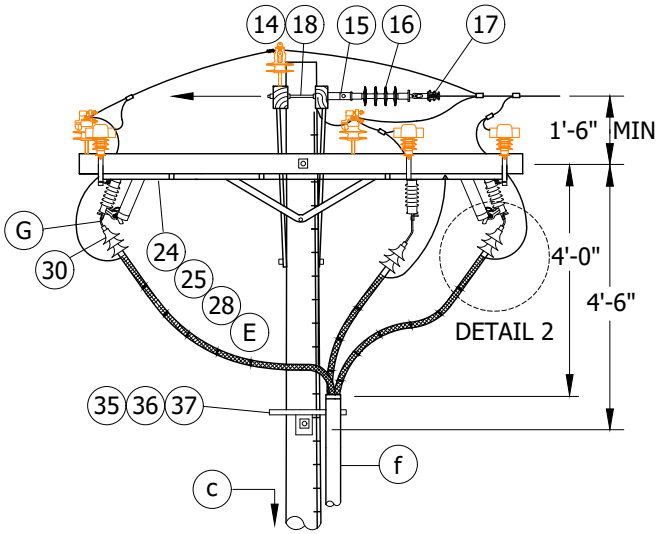

FIGURE 2
DEADEND CONSTRUCTION
FRONT VIEW

TABLE OF CONTENTS

© 1998 - 2020 San Diego Gas & Electric Company. All rights reserved. Removal of this copyright notice without permission is not permitted under law.

REV	CHANGE	DR	BY	DSN	APV	DATE	REV	CHANGE	DR	BY	DSN	APV	DATE
C	TABLE UPDATE	EDM	JIK	JES	CZH	4/13/2020	F						
B	DRAWING UPDATE	PEI	-	-	-	02/18/2019	E						
A	ORIGINAL ISSUE	-	-	PTA	JJ	10/20/2005	D						

X Indicates Latest Revision | Completely Revised | New Page | Information Removed

SHEET
1 OF 5

SDG&E ELECTRIC OVERHEAD AND UNDERGROUND CONSTRUCTION STANDARDS

12.47KV AND BELOW CABLE POLE THREE-PHASE,
1/C PER PHASE, ALLEY ARM CONSTRUCTION,
NON-PORCELAN TERMINALS

OH1447.1
UG4247.1

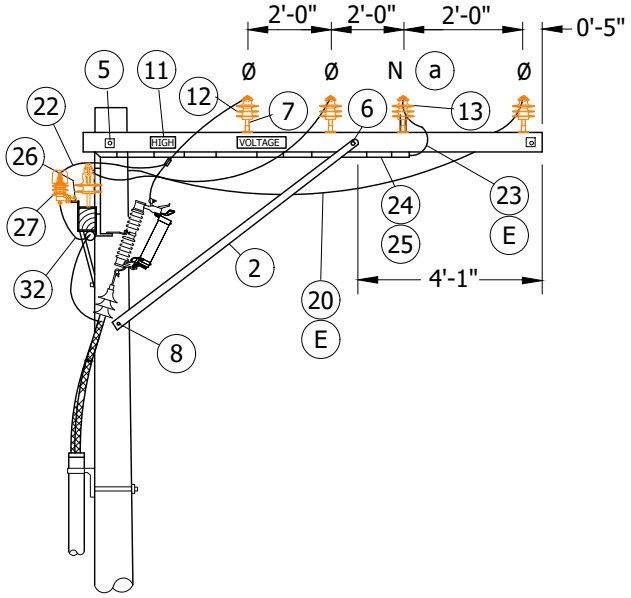

FIGURE 3
TANGENT CONSTRUCTION
SIDE VIEW

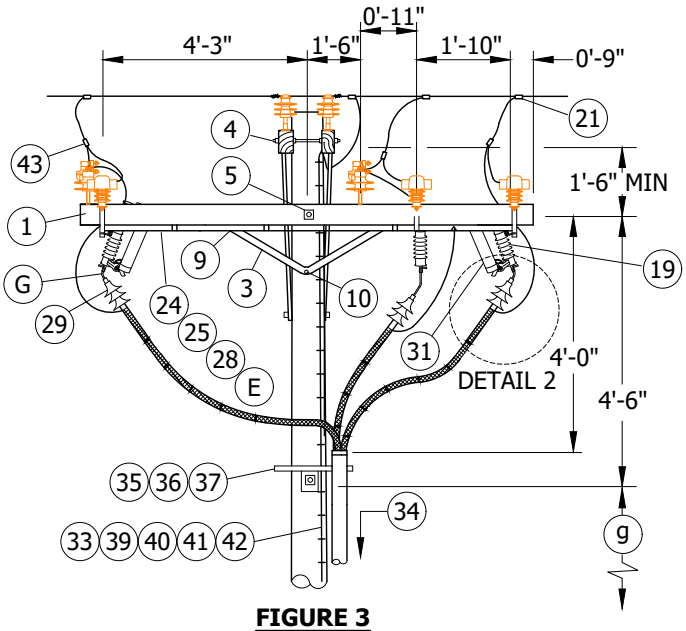

FIGURE 3
TANGENT CONSTRUCTION
FRONT VIEW

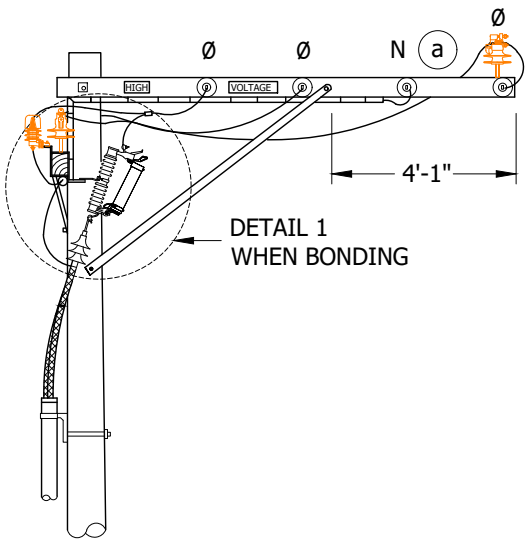

FIGURE 4
DEADEND CONSTRUCTION
SIDE VIEW

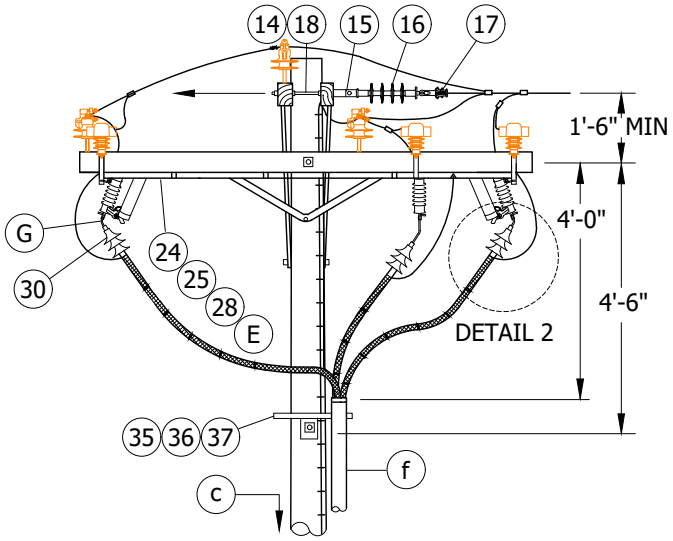

FIGURE 4
DEADEND CONSTRUCTION
FRONT VIEW

TABLE OF CONTENTS

© 1998 - 2020 San Diego Gas & Electric Company. All rights reserved. Removal of this copyright notice without permission is not permitted under law.

REV	CHANGE	DR	BY	DSN	APV	DATE	REV	CHANGE	DR	BY	DSN	APV	DATE
C	TABLE UPDATE	EDM	JIK	JES	CZH	4/13/2020	F						
B	DRAWING UPDATE	PEI	-	-	-	02/18/2019	E						
A	ORIGINAL ISSUE	-	-	PTA	JJ	10/20/2005	D						

X Indicates Latest Revision | Completely Revised | New Page | Information Removed

SDG&E ELECTRIC OVERHEAD AND UNDERGROUND CONSTRUCTION STANDARDS

12.47KV AND BELOW CABLE POLE THREE-PHASE,
1/C PER PHASE, ALLEY ARM CONSTRUCTION,
NON-PORCELAN TERMINALS

OH1447.2
UG4247.2

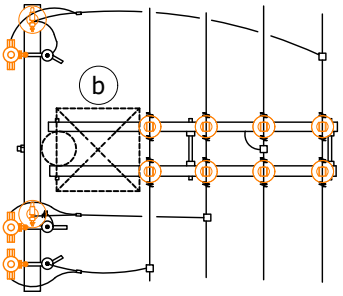

FIGURE 5
TANGENT CONSTRUCTION
CLIMBING SPACE

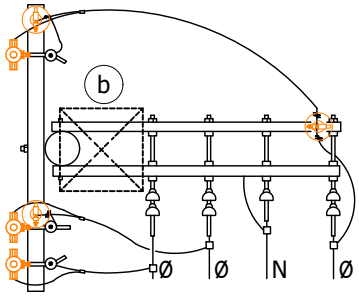

FIGURE 6
DEADEND CONSTRUCTION
CLIMBING SPACE

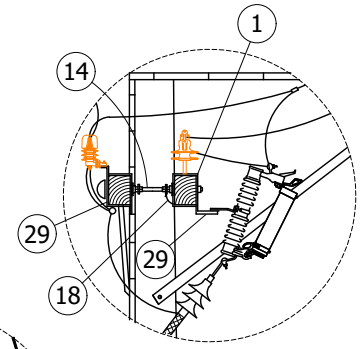

DETAIL 1 (D)

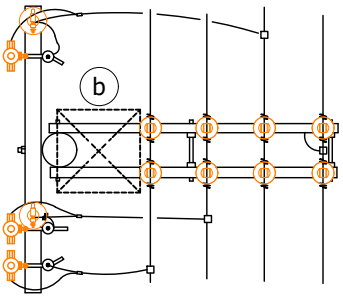

FIGURE 7
TANGENT CONSTRUCTION
CLIMBING SPACE

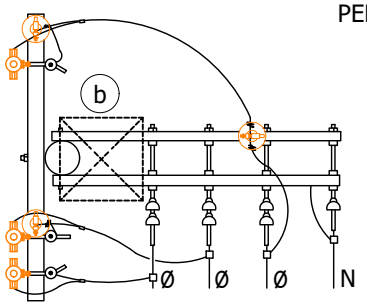

FIGURE 8
DEADEND CONSTRUCTION
CLIMBING SPACE

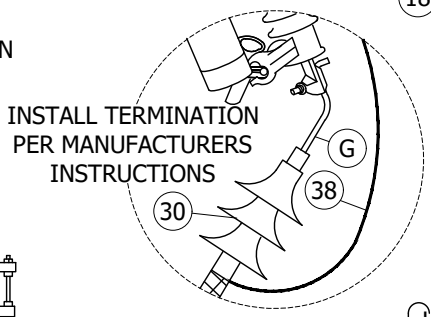

DETAIL 2

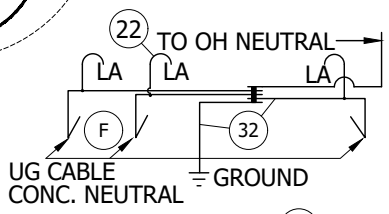

DETAIL 3 (F)
GROUND WIRING

INSTALLATION:

A. NEW CABLE POLES SHALL HAVE A STANDARD SETTING DEPTH OF 9'. IN MOST CASES THIS WILL REQUIRE A 5' TALLER POLE.

B. THIS CONSTRUCTION TO BE USED WITH #2/0 AND SMALLER UNDERGROUND CABLE.

(C) REDUCE QUANTITIES AS REQUIRED WHEN NOT USING NEUTRAL.

(D) BOND CUTOUTS IN HEAVY CONTAMINATION DISTRICTS AS SHOWN ON STANDARD 287. IN AREAS WHERE BONDING IS REQUIRED, TO AVOID BONDWIRE AND LIGHTNING ARRESTER GROUNDWIRE ON THE SAME CROSSARM, USE TWO CROSSARMS; ONE FOR CUTOUTS AND ONE FOR LIGHTNING ARRESTERS. USE MATERIAL ITEMS (1), (14), (18) AND (29) WHEN ADDING CROSSARM.

TABLE 1

(E)

UG CABLE SIZE AWG OR KCMIL, AL	OH JUMPER COND SIZE, AWG OR KCMIL, CU	OH NEUT JUMPER SIZE			CABLE POLE NEUT SIZE (CU) UNDER POTHEAD ARM OR TRIPLE TERM BRKT
		CU	AL	-	
2	4	6	2	-	#6 PER PHASE
2/0	4	6	2	-	#6 PER PHASE

(F) INTERCONNECT OVERHEAD NEUTRAL AND CONCENTRIC CABLE NEUTRAL CONDUCTORS TO LIGHTNING ARRESTER GROUND.

(G) WRAP ONE HALF OF EXPOSED ALUMINUM PORTION OF PIN CONNECTOR WITH SILICONE TAPE (S/N 720384) TO PREVENT CORROSION. INSERT THE PIN INTO THE BOTTOM OF THE CUTOUT CLAMP. BEFORE TIGHTENING THE CLAMP, BEND THE TOP OF THE PIN (APPROX. 1-1/2") AT A 90° DEGREE ANGLE.

© 1998 - 2020 San Diego Gas & Electric Company. All rights reserved. Removal of this copyright notice without permission is not permitted under law.

REV	CHANGE	DR	BY	DSN	APV	DATE	REV	CHANGE	DR	BY	DSN	APV	DATE
C	TABLE UPDATE	EDM	JIK	JES	CZH	4/13/2020	F						
B	DRAWING UPDATE	PEI	-	-	-	02/18/2019	E						
A	ORIGINAL ISSUE	-	-	PTA	JJ	10/20/2005	D						

X Indicates Latest Revision | Completely Revised | New Page | Information Removed

SDG&E ELECTRIC OVERHEAD AND UNDERGROUND CONSTRUCTION STANDARDS

12.47KV AND BELOW CABLE POLE THREE-PHASE,
1/C PER PHASE, ALLEY ARM CONSTRUCTION,
NON-PORCELAN TERMINALS

OH1447.3
UG4247.3

TABLE OF CONTENTS

BILL OF MATERIALS:

ITEM	DESCRIPTION		QUANTITY FIG. 1	QUANTITY FIG. 2	STANDARD PAGE	STOCK NUMBER	DESIGN UNITS
1	CROSSARM, 3-3/4" X 5-3/4" X 10'-0"		3	3	380.2	-	-
2	BRACE, DIAGONAL ALLEY ARM, 7'		2	2	-	S164352	-
3	BRACE, ANGLE CROSSARM, 4'		1	1	-	S164032	-
4	BOLT, SPACE, GALV, 5/8" X (LENGTH AS REQ'D), 4 SQ FLAT WASH, 1DBL COIL SPR WASH (C)		1	-	392.1 & .2	-	-
5	BOLT, MACH, GALV, 5/8" X (LENGTH AS REQ'D), 2 SQ FLAT WASH, 1 DBL COIL SPR WASH		1	2	392.1 & .2	-	-
6	BOLT, SPACE, GALV, 5/8" X (LENGTH AS REQ'D), 2 SQ WASH 2 DBL COIL SPR WASH		1	1	392.1 & .2	-	-
7	PIN, INSULATOR, STRAIGHT, 12KV, (C) OR	1"	10	3	-	S532706 (X)	-
		1-3/8"				S532448	-
8	BOLT, MACH, GALV, 5/8" X (LENGTH AS REQ'D), 1 DBL COIL SPR WASH		1	1	392.1 & .2	-	-
9	BOLT, MACH, GALV, 1/2" X 7", 1 RD WASH, 1 DBL COIL SPR WASH		2	2	392.1 & .2	S678528	-
10	BOLT, MACH, GALV, 5/8" X (LENGTH AS REQ'D), 1 SQ WASH, 1 DBL COIL SPR WASH		1	1	392.1 & .2	-	-
11	SIGN, HIGH VOLTAGE, & 8 ROOFING NAILS		2	2	-	S647648	-
						S492224	-
12	INSULATOR, LINE, 12KV		8	3	750.3	-	-
13	INSULATOR, LINE, 12KV, NEUTRAL (C)		2	2	-	S429216	-
14	BOLT SPACE, GALV, 5/8" X (LENGTH AS REQ'D), 3 SQ FLAT WASH, 2 RD AND 2 DBL COIL SPRING WASHER & 2 NUTS		-	4	392.1 & .2	-	-
15	CLEVIS, DEADEND, 5/8" BOLT, STEEL (C)		-	4	-	S235712	-
16	INSULATOR, SUSPENSION, 12KV , CLEVIS (C)		-	4	750.4	S431650	-
17	CLAMP, STRAIGHT LINE, D.E. (C)		-	4	739-743	-	-
18	WIRE, #8, BARE SOLID ANNEALED COPPER	FT	-	10	-	S812928	-
		LB	-	1			
19	CUTOUT, FOR CURRENT LIMITING FUSE		3	3	1206	-	-
20	WIRE, BARE STRANDED COPPER, (OH JUMPERS)		36'	36'	715	-	-
21	CONNECTOR, WIRE COMPRESSION (SIZE AS REQ'D)		AS REQ'D		784-786	-	-
22	WIRE, #6, BARE STRANDED COPPER		12'	12'	-	S813536	-
23	WIRE, BARE STRANDED COPPER OR ACSR/AW BARE, (OH NEUTRAL JUMPER) (F)		16'	16'	711/715	-	-
24	CONDUIT, PVC, TYPE 2, SCHEDULE 40, 1"		22'	22'	-	S251202 (X)	-
25	STRAPS, PIPE, GALV, 1", & 6D NAILS, GALV		AS REQ'D		-	S697792	-
26	BRACKET, CUTOUT/ARRESTER, FOR CROSSARM MOUNTING		3	3	-	S165446 (X)	-
27	ARRESTER, LIGHTNING W/48" COVERED LEAD WIRE		3	3	1247	S113256	10KTVA
28	WIRE, BARE STRANDED COPPER (UNDER POTHEAD ARM) (E)		12'	12'	715	-	-
29	BRACKET, ARRESTER OR CUTOUT		AS REQ'D		-	S166070	-
30	TERMINALS, UNDERGROUND CABLE		3	3	4111	-	-
31	FUSE, CURRENT-LIMITING, SIZE AS SPECIFIED ON WORK ORDER		3	3	1207	-	-

TABLE OF CONTENTS

© 1998 - 2020 San Diego Gas & Electric Company. All rights reserved. Removal of this copyright notice without permission is not permitted under law.

REV	CHANGE	DR	BY	DSN	APV	DATE	REV	CHANGE	DR	BY	DSN	APV	DATE
C	TABLE UPDATE	EDM	JIK	JES	CZH	4/13/2020	F						
B	DRAWING UPDATE	PEI	-	-	-	02/18/2019	E						
A	ORIGINAL ISSUE	-	-	PTA	JJ	10/20/2005	D						

X Indicates Latest Revision | Completely Revised | New Page | Information Removed

SDG&E ELECTRIC OVERHEAD AND UNDERGROUND CONSTRUCTION STANDARDS

12.47KV AND BELOW CABLE POLE THREE-PHASE,
1/C PER PHASE, ALLEY ARM CONSTRUCTION,
NON-PORCELAN TERMINALS

OH1447.4
UG4247.4

BILL OF MATERIALS (CONT'D):

ITEM	DESCRIPTION		QUANTITY FIG. 1	QUANTITY FIG. 2	STANDARD PAGE	STOCK NUMBER	DESIGN UNITS
32	FLEXIBLE ARRESTER GROUND STRAP		AS REQ'D		-	S698754	-
33	#4 CU SOLID GROUND WIRE, PVC COVERED		50'	50'	-	S812490	GNDPVC
34	RISER CONSTRUCTION		-	-	1400/4200	-	-
35	BRACKET, LADDER ARM		AS REQ'D		1404/4204	S167186 (X)	-
36	NUT, CLAMPING CHANNEL, W/SPRING, 1/2"		AS REQ'D		1404/4204	S503488	-
37	CHANNEL, DOUBLE GALV, 24"		AS REQ'D		1404/4204	S216702 (X)	-
38	WIRE #6 THW	FT.	12'		-	S808288	-
		LB.	3				
39	GROUND ROD, 5/8" X 8', COPPERWELD		1	1	-	S603074 (X)	GNDPVC
40	COPPER BONDED GROUND CONNECTOR		1	1	-	S259010	-
41	GALVANIZED STAPLES FOR PVC COVERED GROUND WIRE		AS REQ'D		-	S678564 (X)	-
42	HOT LINE CLAMP		3	3	788	S227680	-

TABLE 2

UG MACRO UNITS		
CABLE SIZE	W/ LADDER ARMS	W/O LADDER ARMS
3C-#2/0 AL	CP2/0L	CP#2/0
3C-3#2 AL	CP3#2L	CP-3#2

TABLE OF CONTENTS

NOTES:

(X) THIS ITEM IS EXEMPT.

REFERENCE:

(a) ON ALL NEW CONSTRUCTION AND WHEN ADDING TO EXISTING CONSTRUCTION, NEUTRAL TO BE INSTALLED IN OUTSIDE PIN POSITION PER DESIGN MANUAL PAGE 5124.2.

(b) ALLOWABLE WORKING AND CLIMBING SPACE - SEE STANDARD. 251.

(c) POLE STEPPING - SEE STANDARD. 363/4205.

d. GROUNDING METHODS - SEE PAGE 1002.5.

e. SEE STANDARD SECTION 1200/4300 FOR FUSING.

(f) RISER POSITION - SEE STANDARD 1402/4202.

(g) MINIMUM VERTICAL SEPARATION AS PER G.O. 95 - SEE STANDARD. 1406/4206.

© 1998 - 2020 San Diego Gas & Electric Company. All rights reserved. Removal of this copyright notice without permission is not permitted under law.

REV	CHANGE	DR	BY	DSN	APV	DATE	REV	CHANGE	DR	BY	DSN	APV	DATE
C	TABLE UPDATE	EDM	JIK	JES	CZH	4/13/2020	F						
B	DRAWING UPDATE	PEI	-	-	-	02/18/2019	E						
A	ORIGINAL ISSUE	-	-	PTA	JJ	10/20/2005	D						

X Indicates Latest Revision | Completely Revised | New Page | Information Removed

SDG&E ELECTRIC OVERHEAD AND UNDERGROUND CONSTRUCTION STANDARDS

12.47KV AND BELOW CABLE POLE THREE-PHASE, 1/C PER PHASE, ALLEY ARM CONSTRUCTION, NON-PORCELAN TERMINALS

OH1447.5
UG4247.5

SCOPE: THIS STANDARD SHOWS 6 OR 7 CONDUCTOR CABLE POLE WITH 900A HOOKSTICK SWITCHES FOR 350 KCM AND LARGER U.G. CABLE.

ATTENTION:

* NEW PRIMARY CABLE POLE INSTALLATIONS SHALL BE TRUCK ACCESSIBLE. EXISTING CABLE POLE LOCATIONS THAT ARE NOT TRUCK ACCESSIBLE CAN BE GRANDFATHERED BY DEVIATION.

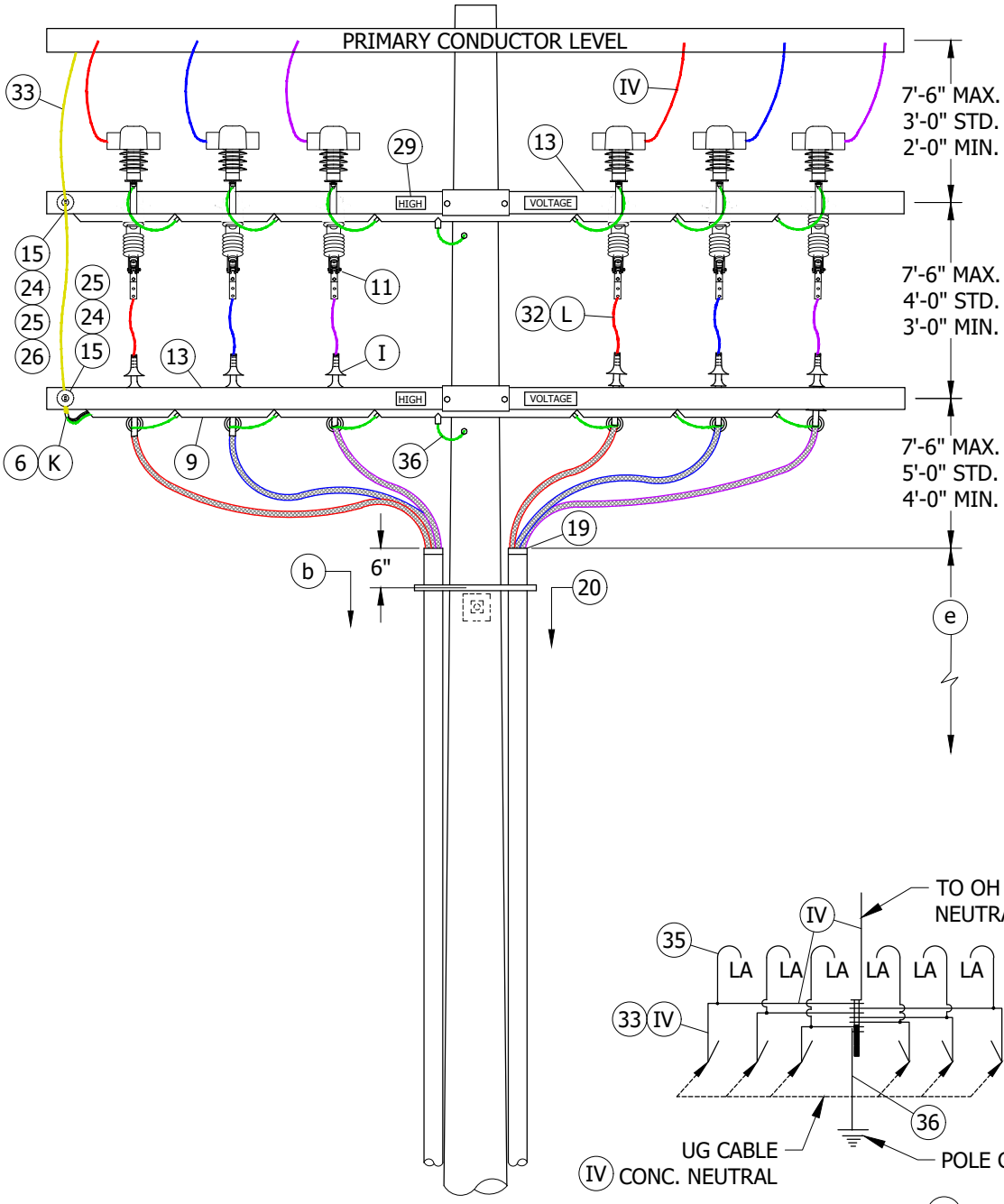

FIGURE 1
FRONT VIEW

FIGURE 2 (12)
GROUND WIRING

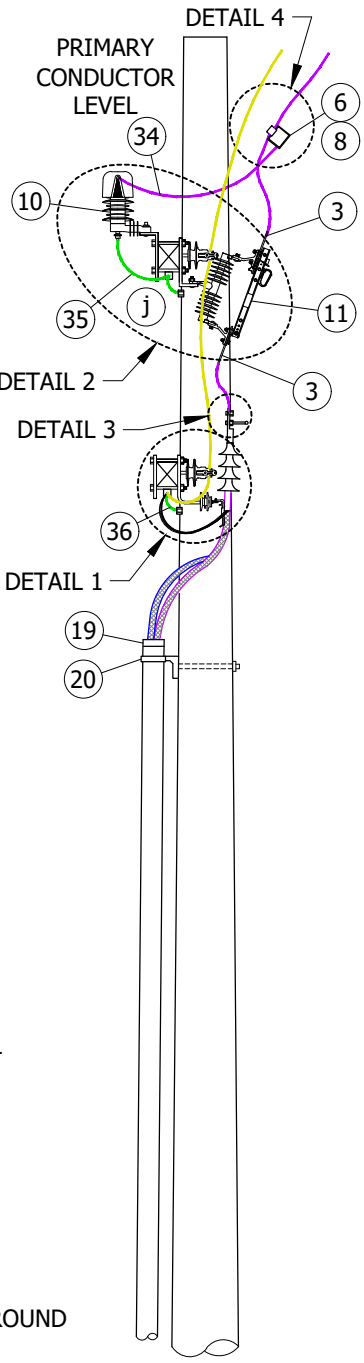

FIGURE 1
SIDE VIEW

TABLE OF CONTENTS

© 1998 - 2022 San Diego Gas & Electric Company. All rights reserved. Removal of this copyright notice without permission is not permitted under law.

REV	CHANGE	DR	BY	DSN	APV	DATE	REV	CHANGE	DR	BY	DSN	APV	DATE
C	FIGURE UPDATE	EDM	DWC	JES	CZH	08/13/2021	F						
B	DRAWING UPDATE	PEI	-	-	-	02/18/2019	E						
A	ORIGINAL ISSUE	-	-	PTA	JJ	10/20/2005	D	EDITORIAL CHANGES	EDM	MRF	FRC	KRG	05/31/2022

X Indicates Latest Revision | Completely Revised | New Page | Information Removed

SDG&E ELECTRIC OVERHEAD AND UNDERGROUND CONSTRUCTION STANDARDS

12.47KV AND BELOW DEADEND CABLE POLE,
6 OR 7 CONDUCTORS 1/C PER PHASE, HOOKSTICK SWITCHED,
NON-PORCELIAN TERMINALS

OH1451.1
UG4251.1

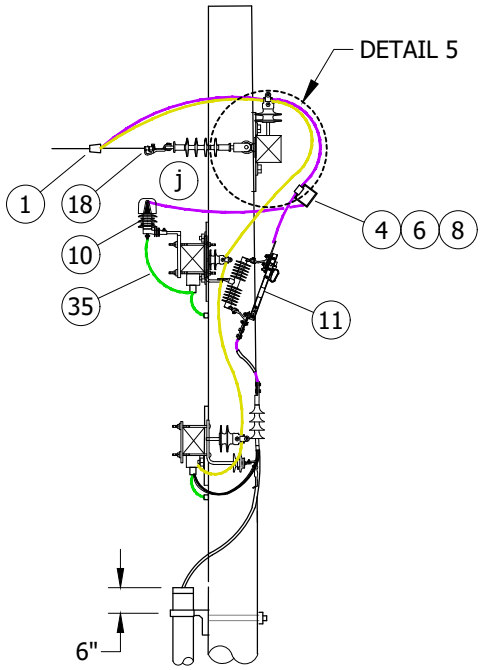

FIGURE 3
SIDE VIEW

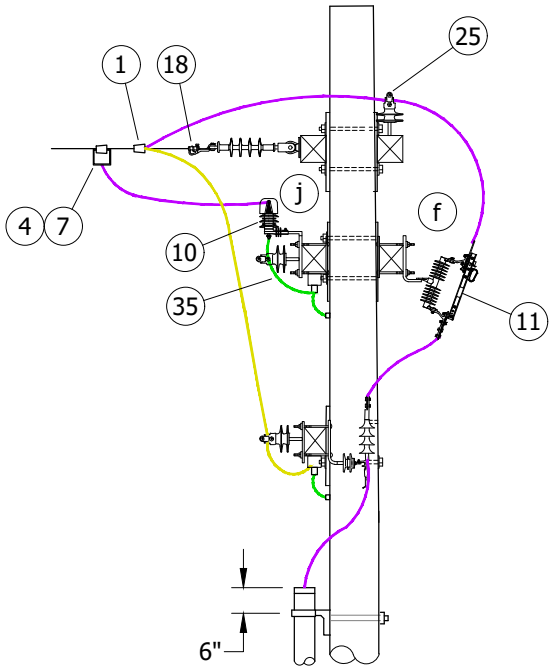

FIGURE 4
SIDE VIEW
ILLUSTRATES SECOND ARM FOR BONDING

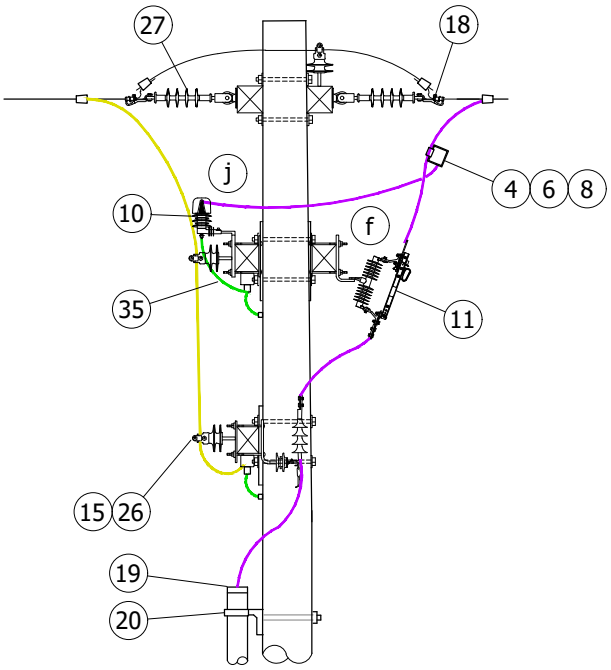

FIGURE 5
SIDE VIEW

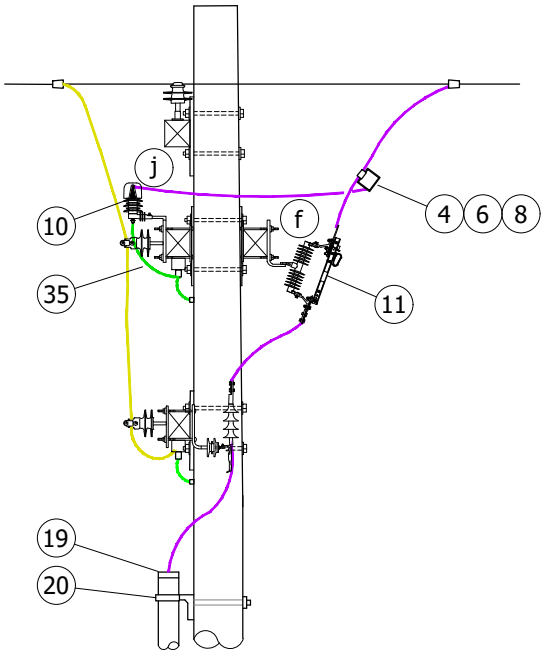

FIGURE 6
SIDE VIEW

TABLE OF CONTENTS

© 1998 - 2022 San Diego Gas & Electric Company. All rights reserved. Removal of this copyright notice without permission is not permitted under law.

REV	CHANGE	DR	BY	DSN	APV	DATE	REV	CHANGE	DR	BY	DSN	APV	DATE
C	FIGURE UPDATE	EDM	DWC	JES	CZH	08/13/2021	F						
B	DRAWING UPDATE	PEI	-	-	-	02/18/2019	E						
A	ORIGINAL ISSUE	-	-	PTA	JJ	10/20/2005	D	EDITORIAL CHANGES	EDM	MRF	FRC	KRG	05/31/2022

X Indicates Latest Revision | Completely Revised | New Page | Information Removed

SDG&E ELECTRIC OVERHEAD AND UNDERGROUND CONSTRUCTION STANDARDS

12.47KV AND BELOW DEADEND CABLE POLE,
6 OR 7 CONDUCTORS 1/C PER PHASE, HOOKSTICK SWITCHED,
NON-PORCELIAN TERMINALS

OH1451.2
UG4251.2

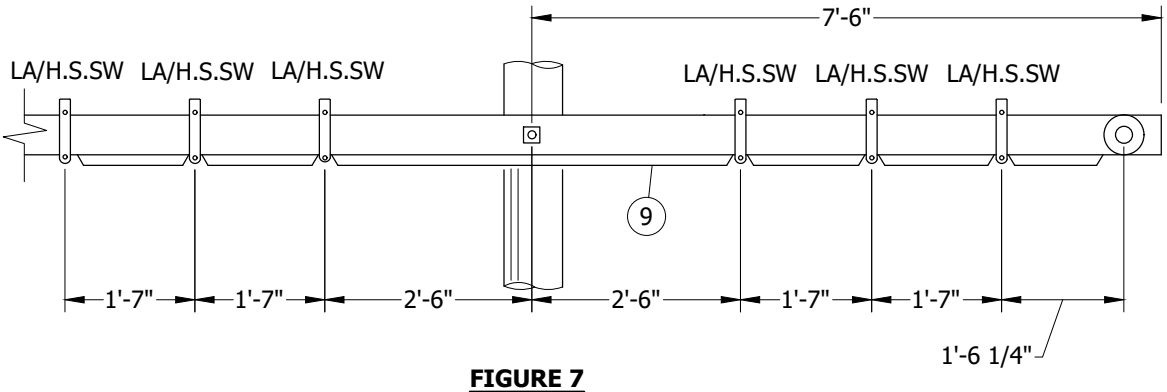

FIGURE 7
15'-0" ARM 6 HOOKSTICK DISCONNECT SWITCHES AND LIGHTNING ARRESTER BRACKETS MOUNTING DETAIL

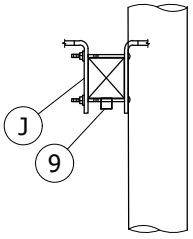

FIGURE 7
CONDUIT WITH CABLE SUPPORT BRACKETS SIDE VIEW

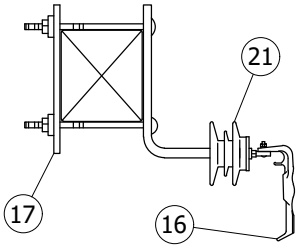

DETAIL 1
PREFERRED BRACKET CONFIGURATION

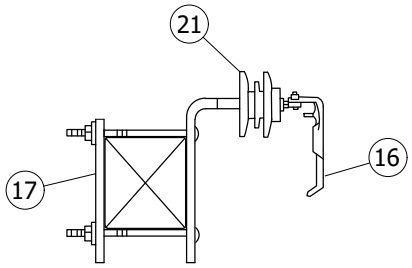

DETAIL 1
OPTIONAL BRACKET CONFIGURATION (NOT SHOWN)

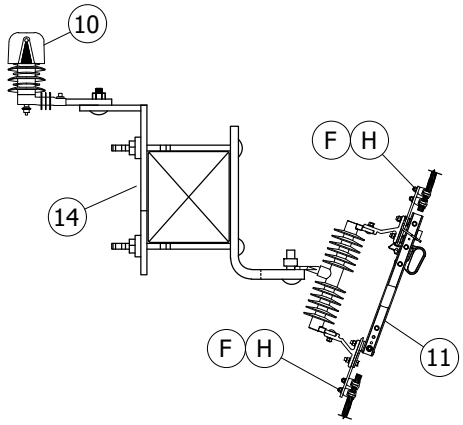

DETAIL 2
DOUBLE BRACKET

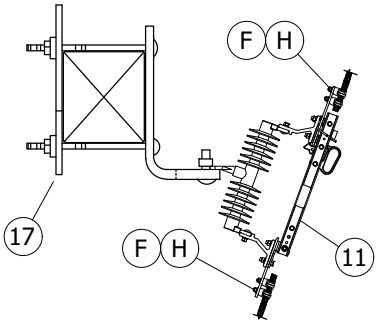

DETAIL 2
SINGLE BRACKET

TABLE OF CONTENTS

© 1998 - 2022 San Diego Gas & Electric Company. All rights reserved. Removal of this copyright notice without permission is not permitted under law.

REV	CHANGE	DR	BY	DSN	APV	DATE	REV	CHANGE	DR	BY	DSN	APV	DATE
C	FIGURE UPDATE	EDM	DWC	JES	CZH	08/13/2021	F						
B	DRAWING UPDATE	PEI	-	-	-	02/18/2019	E						
A	ORIGINAL ISSUE	-	-	PTA	JJ	10/20/2005	D	EDITORIAL CHANGES	EDM	MRF	FRC	KRG	05/31/2022

X Indicates Latest Revision | Completely Revised | New Page | Information Removed

SHEET 3 OF 6

SDG&E ELECTRIC OVERHEAD AND UNDERGROUND CONSTRUCTION STANDARDS

12.47KV AND BELOW DEADEND CABLE POLE,
6 OR 7 CONDUCTORS 1/C PER PHASE, HOOKSTICK SWITCHED,
NON-PORCELIAN TERMINALS

OH1451.3
UG4251.3

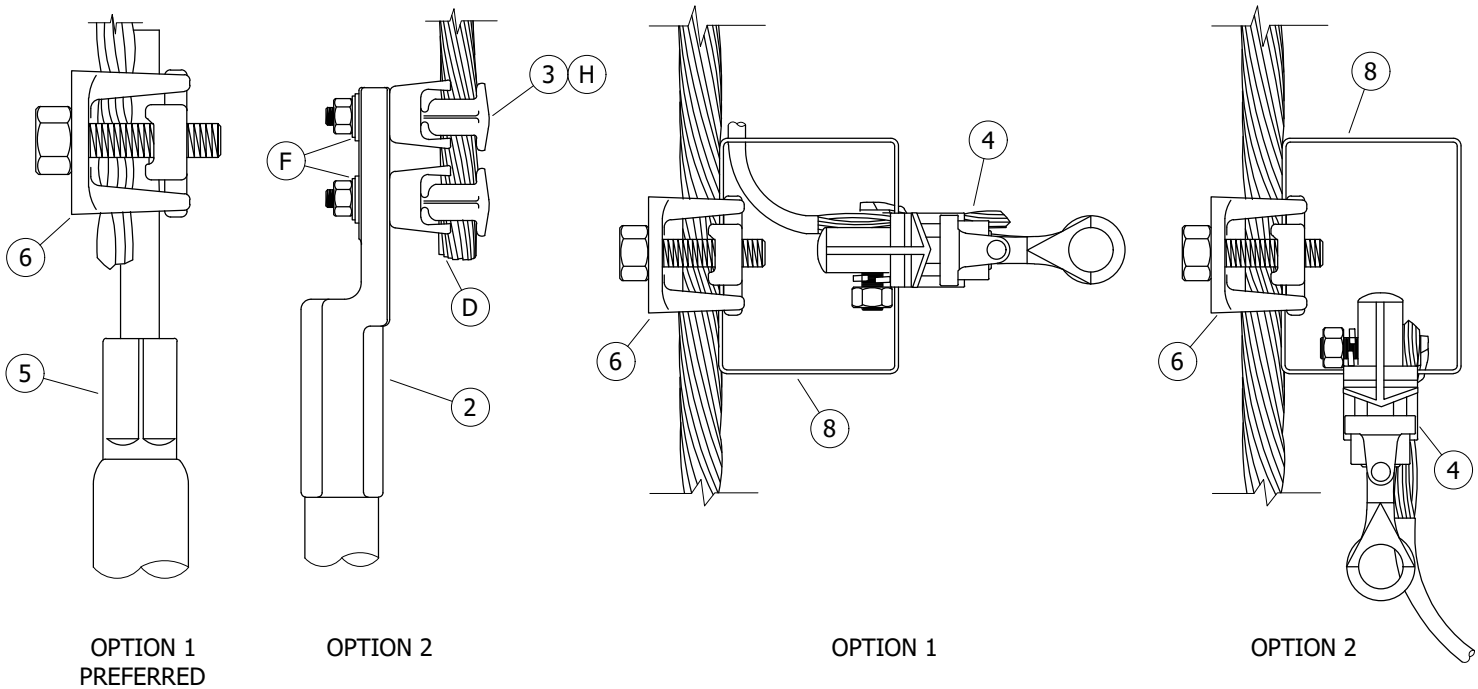

OPTION 1
PREFERRED

OPTION 2

DETAIL 3

OPTION 1

OPTION 2

DETAIL 4

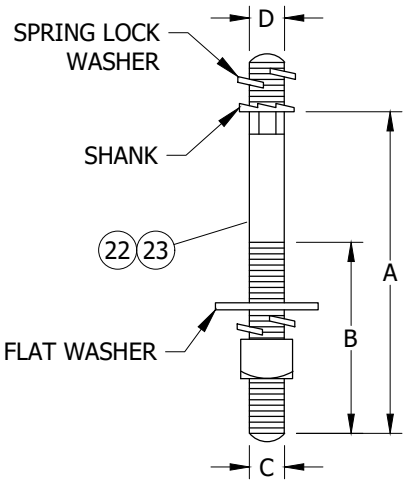

DETAIL 6
INSULATOR PIN FOR
35KV INSULATORS

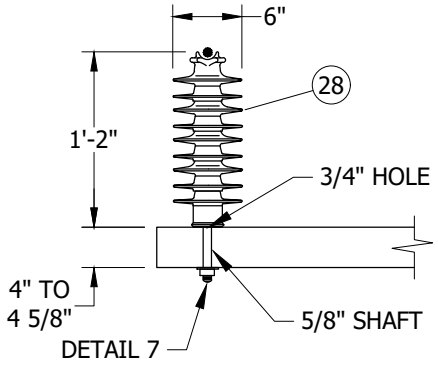

DETAIL 5
35KV F-NECK INSULATOR
TANGENT OR SINGLE DEADEND ARM

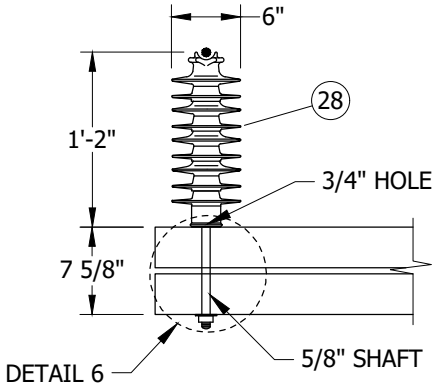

DETAIL 5
35KV F-NECK INSULATOR
STACKED ARM

TABLE 1

DESCRIPTION	A	B	C	D	STOCK NUMBER	DESIGN UNITS
HARDWARE POST INSULATOR STUD, FIBERGLASS,WOOD	7 1/2"	3 1/2"	4 1/2"	3/4"	S701760	STUD-W
	10"	4"	5/8"	1 3/4"	S701762	STUD-L

© 1998 - 2022 San Diego Gas & Electric Company. All rights reserved. Removal of this copyright notice without permission is not permitted under law.

REV	CHANGE	DR	BY	DSN	APV	DATE	REV	CHANGE	DR	BY	DSN	APV	DATE
C	FIGURE UPDATE	EDM	DWC	JES	CZH	08/13/2021	F						
B	DRAWING UPDATE	PEI	-	-	-	02/18/2019	E						
A	ORIGINAL ISSUE	-	-	PTA	JJ	10/20/2005	D	EDITORIAL CHANGES	EDM	MRF	FRC	KRG	05/31/2022

X Indicates Latest Revision | Completely Revised | New Page | Information Removed

SDG&E ELECTRIC OVERHEAD AND UNDERGROUND CONSTRUCTION STANDARDS

12.47KV AND BELOW DEADEND CABLE POLE,
6 OR 7 CONDUCTORS 1/C PER PHASE, HOOKSTICK SWITCHED,
NON-PORCELIAN TERMINALS

OH1451.4
UG4251.4

TABLE OF CONTENTS

INSTALLATION:

A. NEW CABLE POLES SHALL HAVE A STANDARD DEPTH OF 9 FEET. IN MOST CASES, THIS WILL REQUIRE A 5-FOOT TALLER POLE.

B. THIS CONSTRUCTION TO BE USED WITH 350 AND LARGER UNDERGROUND CABLE.

C. INTERCONNECT OVERHEAD NEUTRAL, AND CONCENTRIC CABLE NEUTRAL CONDUCTOR TO LIGHTNING ARRESTER GROUND.

(D) INSTALLATION OF WIRE CAN BE MADE ON EITHER SIDE OF TERMINAL COMPRESSION LUG.

(E) REDUCE QUANTITIES AS REQUIRED WHEN NOT USING NEUTRAL.

(F) BRUSH WIRE, INSTALL PENETROX "INHIBITOR" AND BELLEVILLE WASHER.

G. DIMENSIONS CAN VARY BASED ON CROSSARM SIZE AND/OR CONFIGURATION.

(H) REQUIRES TWO TAP LUGS PER CONNECTION.

(J) ARM MAY BE DRILLED TO REPOSITION BOTTOM BOLT ALLOWING CONDUIT TO SET FLUSH ON BOTTOM OF CROSSARM. (k)

(K) CONCENTRIC WITH POLE GROUND, CONNECTION AREA.

(L) MAINTAIN SIX INCHES OF BARE WIRE BELOW DISCONNECT FOR PROPER GROUNDING OF UNDERGROUND CABLE.

(M) CENTER OF CUTOUT ARM SHALL NOT BE MOUNTED HIGHER THAN THIRTY-FIVE FEET FROM GROUND.

BILL OF MATERIALS:

ITEM	DESCRIPTION	WIRE RANGE	QUANTITY	STANDARD PAGE	STOCK NUMBER	DESIGN UNITS	SAP CU
1	CONNECTOR, WEDGE (PREFERRED)	--	AS REQ'D	783	--	--	--
2	CONNECTOR, TERMINAL COMPRESSION LUG	--	AS REQ'D	784/4174	--	--	--
3	CONNECTOR, TAP LUG, 1/0 TO 500MCM CU TAP LUG - BRONZE	--	AS REQ'D	--	S471232	TL1/0	TL1/0
4	CONNECTOR, CLAMP, HOTLINE	--	6	788	S227680 (X)	--	--
5	CONNECTOR PIN (PREFERRED) UNDERGROUND STANDARD	--	AS REQ'D	4111	--	--	--
6	CONNECTOR, BRONZE, 2 BOLT, CONNECTOR, COPPER TAP 3/0-1000	--	--	--	S262370 (X)	CN1000	CN1000
7	CONNECTOR, WEDGE, STIRRUP OR BAIL, #2 SOLID CU	--	6	783	--	--	--
8	CONNECTOR, STIRRUP, BAIL, #2 TIN PLATED CU	--	AS REQ'D	788	S227650	BAIL	BAIL
9	CONDUIT, SQ. 2" X 2" X 10'-0" PVC (SQUARE)	--	AS REQ'D	--	S251534	SQC-2	SQC-2
	CONDUIT, SCH 40, 2" X 10'-0" PVC (ROUND)	--	AS REQ'D	--	S251296	PVC2	PVC2
10	EQUIPMENT, ARRESTER, LIGHTNING	--	6	1247	S113248	LA12	LA12
11	EQUIPMENT, POLYMER, SINGLE-DISC, 900A, SWITCH, CABLE POLE	--	6	--	S707004 (VI)	P900D	P900D
					S706670 (V)	PS900	--
12	GROUNDING, #4 PVC GRND WIRE, RODS, CONN-STEEL POLE (II)	--	1	1002	--	GNDPSP	GNDPSP
	GROUNDING, WIRE, #4 PVC, RODS & CONNECTORS (FOR WOOD POLES) (II)	--		--	--	GNDPVC	GNDPVC
13	HARDWARE, CROSSARM, FIBERGLASS, 15'-0", 6 PIN TANGENT (FOR STEEL POLES)	--	AS REQ'D	379	S294370	6LTF	6LTF
	HARDWARE, SGALRM 6 PIN 15FT 12KV STD W/6FT ANGLE BR (FOR WOOD POLES)			380	S293712	6L	6L
14	HARDWARE, BRACKET, DOUBLE, CUTOUT, ARRESTER	--	6	--	S165454	DBLBKT	DBLBKT
15	HARDWARE, STAND OFF PIN, 1 3/8" (E)	--	2	396	S529214 (X)	PS/O1+	PS/O1LG
16	HARDWARE, BRACKET, CABLE SUPPORT, WITH POLY	--	6	4207	S166064	NP-BKT	NP-BKT
17	HARDWARE, BRACKET, CUTOUT/ARRESTOR CROSSARM MOUNTING	--	6	397	S165452 (X)	CO/B	--
18	HARDWARE, CLAMP, STRAIGHT LINE, D.E. (AS NEEDED) (II)	--	AS REQ'D	739	--	--	--
19	HARDWARE, GRIP, RISER, 5-INCH, KELLEMS (AS REQ'D)	--	6	1404/4204	--	--	--
20	HARDWARE, RISER ARM BRACKET & 24" CHANNEL (ASSEMBLY)	--	AS REQ'D	1404/4204	--	RSRARM (I)	RSRARM
21	HARDWARE, STANDOFF (350MCM AND ABOVE) (OPTIONAL)	--	AS REQ'D	--	S429040 (X)	--	--
22	HARDWARE, PIN, POST, STUD, FG/WOOD (STANDARD ARM) (II)	--	AS REQ'D	396	S701760	STUD-W	STUD-W
23	HARDWARE, PIN, POST, STUD, FG/WOOD (STACKED DEADEND ARM) (II)	--	AS REQ'D	396	S701762	STUD-L	STUD-L

TABLE OF CONTENTS

© 1998 - 2022 San Diego Gas & Electric Company. All rights reserved. Removal of this copyright notice without permission is not permitted under law.

REV	CHANGE	DR	BY	DSN	APV	DATE	REV	CHANGE	DR	BY	DSN	APV	DATE
C	FIGURE UPDATE	EDM	DWC	JES	CZH	08/13/2021	F						
B	DRAWING UPDATE	PEI	-	-	-	02/18/2019	E						
A	ORIGINAL ISSUE	-	-	PTA	JJ	10/20/2005	D	EDITORIAL CHANGES	EDM	MRF	FRC	KRG	05/31/2022

X Indicates Latest Revision | Completely Revised | New Page | Information Removed

SDG&E ELECTRIC OVERHEAD AND UNDERGROUND CONSTRUCTION STANDARDS

12.47KV AND BELOW DEADEND CABLE POLE,
6 OR 7 CONDUCTORS 1/C PER PHASE, HOOKSTICK SWITCHED,
NON-PORCELIAN TERMINALS

OH1451.5
UG4251.5

BILL OF MATERIALS (CONT'D):

ITEM	DESCRIPTION	WIRE RANGE	QUANTITY	STANDARD PAGE	STOCK NUMBER	DESIGN UNITS	SAP CU
24	HARDWARE,PIN, 1 3/8" COBB FORGED STEEL GALV. (II)	--	2	--	S532448	PS1+	PS1LG
25	INSULATOR, VICE TOP, PIN, 1 3/8", UNIVERSAL (g)	--	AS REQ'D	750	S429272	IPULG	IPULG
26	INSULATOR, WHITE, NEUTRAL, "F" NECK, 1 3/8" PIN (OPTIONAL) (VII)	--	AS REQ'D	--	S432220	IWN	IWN
27	INSULATOR, SUSPENSION, 35KV, POLYMER	--	AS REQ'D	750	S428958	LONGDE	LONGDE
28	INSULATOR, HENDRIX 35KV POLY LINE POST (II)	--	AS REQ'D	750	S429144	LP-14F	LP-14F
29	STICKER, "HIGH VOLTAGE", VINYL, ADHESIVE	--	AS REQ'D	208	S647650 (X)	--	--
30	STICKER, TAGS, SWITCH NUMBER (VII)	--	--	208	--	--	--
31	STICKER, "PN", VINYL, ADHESIVE (VII)	--	AS REQ'D	--	S648004 (X)	--	--
32	WIRE, 500 STR. CU, BARE (III)	--	AS REQ'D	711	S813792	BS500	BS500
33	WIRE, 4/0 STR. CU, SOFT-DRAWN, COVERED (CONCENTRIC BUS WIRE)	--	30'-0"	711	S812126	HEN4/0	HEN4/0
34	WIRE, POLY COVERED 4/7 STRAND COPPER	--	AS REQ'D	711	S815044	POLY4J	POLY4J
35	STRAP, ARRESTER GROUND	--	AS REQ'D	1002	S698754	LAGND	LAGND
36	WIRE, POLY COVERED, #4 SOLID COPPER (POLE GROUND)	--	AS REQ'D	711	S812490	POLY4	POLY4
37	WILDLIFE, COVER, 900A DISCONNECT (AS REQ'D) (II) (VII)	--	6	1620	S286948	9COCVR	9COCVR

NOTES:

(I) MINIMUM CROSSARM 15-FOOT.
(II) NOT SHOWN ON FIGURES.
(III) WIRE SIZE IS APPLICABLE TO AMPERAGE OF PRIMARY SOURCE.
(IV) MINIMUM 480A COPPER WIRE REQUIRED (OPTION FOR USE OF COVERED WIRE).
(V) REQUIRED IN CONTAMINATION DISTRICT 1 AND PREFERRED IN COASTAL DISTRICTS (OC, NC, BC, CM).
(VI) PREFERRED FOR INLAND DISTRICTS (NE, RA, EA, ME).
(VII) NOT SHOWN ON FIGURES.
(X) THIS ITEM IS EXEMPT.

REFERENCE:

a. FOR ALLOWABLE WORKING AND CLIMBING SPACE, SEE OH251.
(b) FOR POLE STEPPING, SEE OH363.
c. FOR GROUNDING METHODS, SEE OH1002.
d. FOR RISER POSITION, SEE OH1404UG4204.
(e) FOR MINIMUM VERTICAL SEPARATION AS PER G.O. 95, SEE OH1406UG4206.
(f) FOR BONDING GENERAL INFORMATION, SEE OH1003.
(g) FOR CONTAMINATION DISTRICT REQUIREMENTS, SEE OH287.
(h) FOR REFERENCE GELPACT, SEE OH783.
i. FOR MINIMUM CROSSARM BOLT REQUIREMENT, SEE OH379.
(j) FOR FIBERGLASS CROSSARM GROUNDING DETAIL OPTION, SEE OH1002.
(k) FOR CROSSARM DRILLING, SEE OH379.

TABLE OF CONTENTS

© 1998 - 2022 San Diego Gas & Electric Company. All rights reserved. Removal of this copyright notice without permission is not permitted under law.

REV	CHANGE	DR	BY	DSN	APV	DATE	REV	CHANGE	DR	BY	DSN	APV	DATE
C	FIGURE UPDATE	EDM	DWC	JES	CZH	08/13/2021	F						
B	DRAWING UPDATE	PEI	-	-	-	02/18/2019	E						
A	ORIGINAL ISSUE	-	-	PTA	JJ	10/20/2005	D	EDITORIAL CHANGES	EDM	MRF	FRC	KRG	05/31/2022

SCOPE: THIS STANDARD COVERS THE INSTALLATION OF THE MVR (MOLDED VACUUM RECLOSER) FOR CABLE POLE APPLICATIONS AS A LINE SWITCH, SERVICE RESTORER OR TIE SWITCH OR BRANCH LINE EQUIPMENT ISOLATION UNIT FOR NEW CONSTRUCTION. LINE SOURCE CAN BE CONSTRUCTED DEADEND OR TANGENT.

CAUTION:

* IN BYPASS MODE, THE SWITCH IS OUT OF SERVICE, BUT REMAINS ENERGIZED.

** PRIOR TO SWITCHING BYPASS, CONFIRM DIRECTION OF FEED.

ATTENTION:

* NEW PRIMARY CABLE POLE INSTALLATIONS SHALL BE TRUCK ACCESSIBLE. EXISTING CABLE POLE LOCATIONS THAT ARE NOT TRUCK ACCESSIBLE CAN BE GRANDFATHERED BY DEVIATION.

** A TELECOM COORDINATION FORM MUST BE SUBMITTED BEFORE DESIGN BEGINS TO DETERMINE COMMUNICATION REQUIREMENTS.

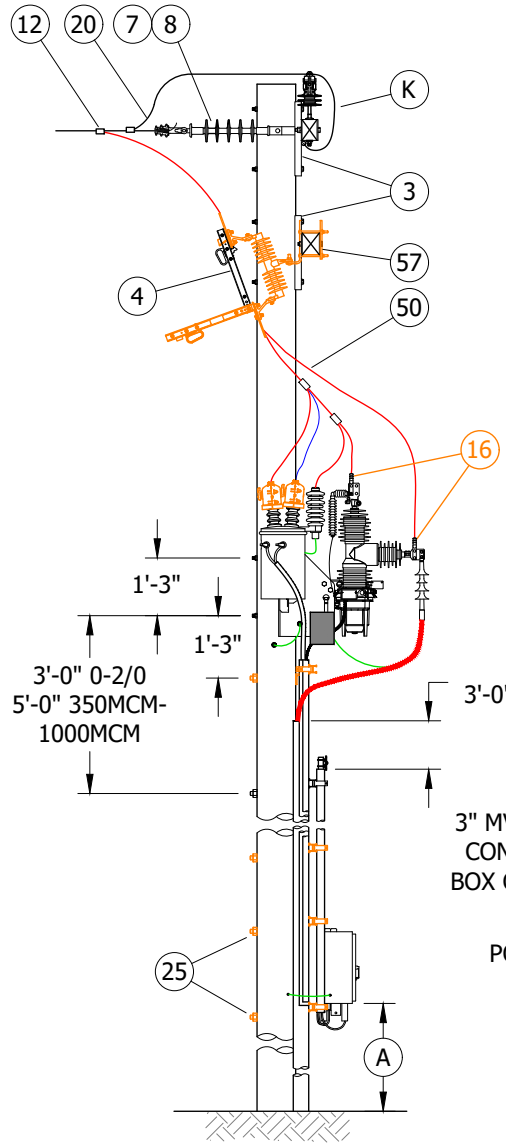

FIGURE 1
SIDE VIEW

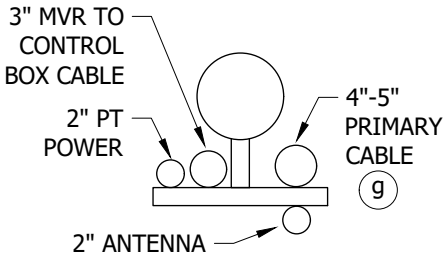

FIGURE 1
CONDUIT QUADRANT
VIEW A-A

FIGURE 1
FRONT VIEW

© 1998 - 2023 San Diego Gas & Electric Company. All rights reserved. Removal of this copyright notice without permission is not permitted under law.

REV	CHANGE	DR	BY	DSN	APV	DATE	REV	CHANGE	DR	BY	DSN	APV	DATE
C	DRAWING UPDATE	PEI	-	-	-	02/18/2019	F						
B	EDITORIAL CHANGES	-	GW	JS	MDJ	03/01/2018	E	DRAWING UPDATE	EDM	MRF	MRF	KRG	05/25/2023
A	ORIGINAL ISSUE	-	JC	TR	MDJ	10/25/2016	D	EDITORIAL CHANGES	PEI	JA	JES	CZH	10/12/2020

X	Indicates Latest Revision		Completely Revised	New Page	X	Information Removed

SDG&E ELECTRIC OVERHEAD AND UNDERGROUND CONSTRUCTION STANDARDS

ELASTIMOLD MVR SWITCH AND SCADA 651R2 CONTROLLER CABLE POLE

OH1452.1
UG4252.1

TABLE OF CONTENTS

TABLE OF CONTENTS

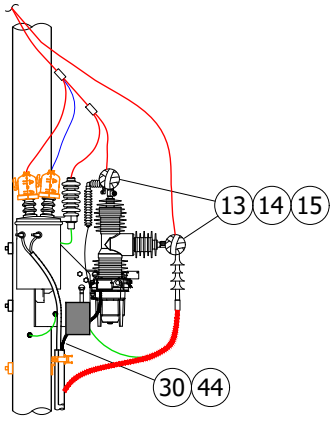

FIGURE 2
ELASTIMOLD MVR SWITCH (I) (R)
WIRING DETAIL
SIDE VIEW

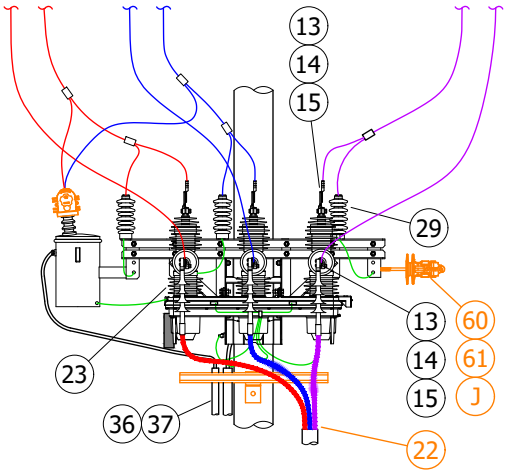

FIGURE 2
ELASTIMOLD MVR SWITCH (I) (R)
WIRING DETAIL
FRONT VIEW

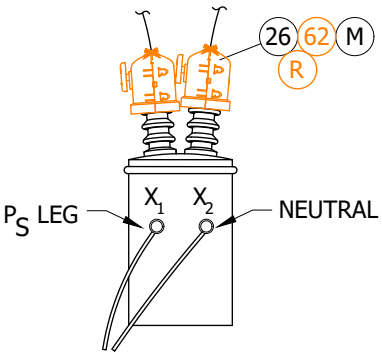

FIGURE 3
PT DIAGRAM

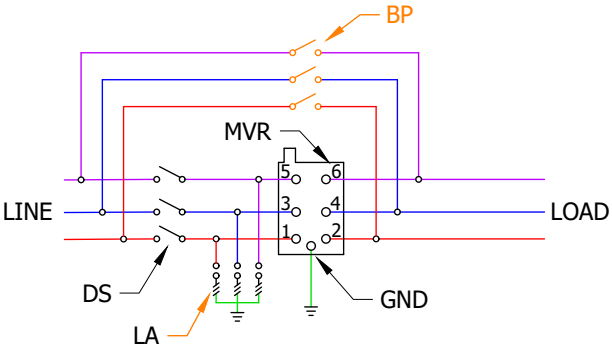

FIGURE 4
SCHEMATIC DIAGRAM (N)
SEE TABLE 1

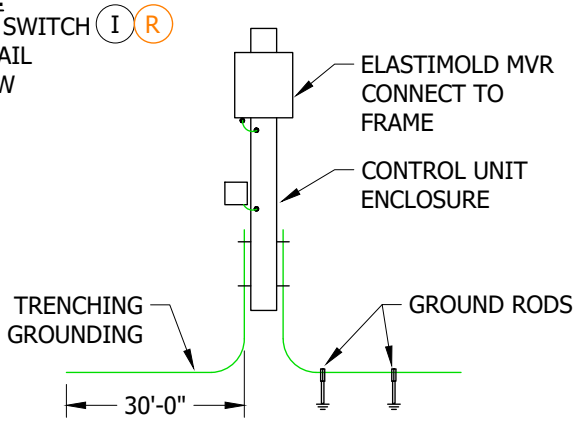

FIGURE 5
GROUND WIRE DETAIL (b) (c)

TABLE 1

SCHEMATIC ABBREVIATIONS	
ABBR	**DEFINITION**
BP	BYPASS SWITCH
DS	DISCONNECT SWITCH
GND	GROUND CONNECTOR ON HEAD
LA	LIGHTNING ARRESTER
MVR	ELASTIMOLD MVR SWITCH

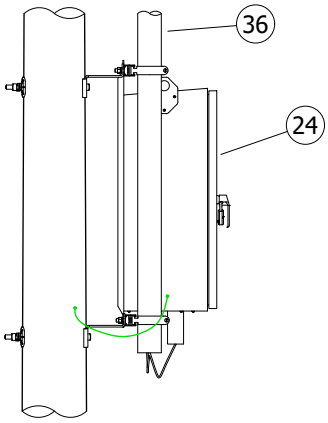

FIGURE 6
SIDE VIEW

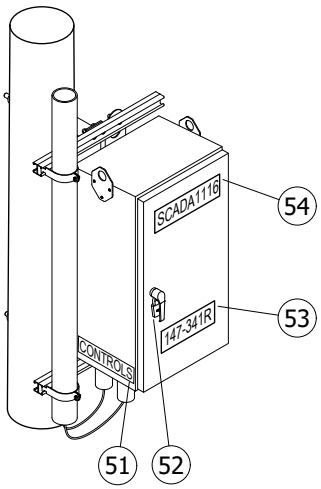

FIGURE 7
ISO VIEW

© 1998 - 2023 San Diego Gas & Electric Company. All rights reserved. Removal of this copyright notice without permission is not permitted under law.

REV	CHANGE	DR	BY	DSN	APV	DATE	REV	CHANGE	DR	BY	DSN	APV	DATE
C	DRAWING UPDATE	PEI	-	-	-	02/18/2019	F						
B	EDITORIAL CHANGES	-	GW	JS	MDJ	03/01/2018	E	DRAWING UPDATE	EDM	MRF	MRF	KRG	05/25/2023
A	ORIGINAL ISSUE	-	JC	TR	MDJ	10/25/2016	D	EDITORIAL CHANGES	PEI	JA	JES	CZH	10/12/2020

X Indicates Latest Revision | Completely Revised | New Page | Information Removed

SDG&E ELECTRIC OVERHEAD AND UNDERGROUND CONSTRUCTION STANDARDS

ELASTIMOLD MVR SWITCH AND SCADA 651R2 CONTROLLER CABLE POLE

OH1452.2
UG4252.2

INSTALLATION:

(A) RTU TO BE MOUNTED 10 FEET FROM GROUND LEVEL TO BOTTOM OF RTU CABINET WHEN NOT SUBJECT TO TRAFFIC CONTACT. IF VULNERABLE TO VEHICLE DAMAGE, MOUNT RTU 13 FEET 6 INCHES FROM GROUND LEVEL TO BOTTOM OF RTU CABINET.

B. CONTROL, PT TERMINAL BLOCK-RELAY, AND ANTENNA CONNECTIONS ARE TO BE MADE BY KEARNY CREW. LINE CREW MOUNTS MVR SWITCH TO OLE AND LEAVES CONTROL CABLE AND VOLTAGE CABLE ON SITE OR WITH KEARNY CREW. IF THE CONTROL & VOLTAGE CABLES ARE LEFT ON SITE, DO NOT REMOVE THEM FROM PLASTIC BAG OR REMOVE CAPS. WATER ENTRY WILL DAMAGE THE CABLES.

(C) DELINEATOR/REFLECTOR STRIPS ARE REQUIRED ON ALL SECTIONALIZING/TIELINE SWITCHES AND SERVICE RESTORER POLES. (d)

D. IN AVIAN PROTECTION AREAS, USE APPROPRIATE AVIAN COVER-UP. (e)

E. ALL MVR SITES REQUIRE ALL WEATHER, 24/7 VEHICLE ACCESS FOR AERIAL LIFTS AND DERRICK TRUCKS.

(F) BYPASSING THE MVR SWITCH PRIOR TO TESTING WILL ENSURE CIRCUIT INTEGRITY. TO BYPASS THE MVR, CLOSE THE NORMALLY OPEN DISCONNECTS AND OPEN THE "NORMALLY CLOSED" DISCONNECTS. THIS WILL BYPASS, BUT NOT ELECTRICALLY ISOLATE THE MVR. TO RESUME NORMAL OPERATION, ENSURE MVR IS CLOSED, THEN CLOSE THE "NORMALLY CLOSED" DISCONNECTS AND OPEN THE "NORMALLY OPEN" DISCONNECTS.

G. COIL ANY EXCESS CONTROL CABLE AND ATTACH TO MVR POLE MOUNT BRACKET WITH PLASTIC TIES.

H. ALL MVR SITES SHALL BE PHASE IDENTIFIED WITH THE AP30. THE CROSSARM SHALL BE MARKED FOR "A", "B", AND "C" PHASES. BOTTOM OF THE MVR SHALL BE MARKED FOR "A", B", AND "C" PHASES. CABLE SHALL BE MARKED AND MATCH "A/1", "B/2", AND "C/3" PHASE MARKING.

(J) FOR USE ONLY IF ADDITIONAL JUMPER SUPPORT IS NEEDED

(K) IF THE CIRCUIT IS A FOUR-WIRE SYSTEM, THE SYSTEM NEUTRAL SHALL BE CONNECTED TO THE POLE AND THE CONCENTRIC NEUTRAL IN THE UNDERGROUND SYSTEM.

(L) THE LADDER ARM, LOCATED 15 INCHES BELOW THE MVR RACK, SHALL HAVE WIRING HARNESS AND POWER CONDUITS TERMINATED AT ONE INCH BELOW THE MVR RACK.

(M) THE POTENTIAL TRANSFORMER (PT) SHALL BE CONNECTED TO THE 12KV CIRCUIT IN DELTA, DIRECTLY TO THE LINE, COVERED WIRE AND AVIAN COVERS ARE REQUIRED ON THE PT.

(N) GROUNDING OF THE ARRESTERS, MVR RACK, YAGI ANTENNA, AND THE MVR RELAY CONTROLLER BOX IS REQUIRED.

(O) PLEASE REFERENCE JUNE 2020 NEWSLETTER; THE MVR SHALL NOT BE INSTALLED INSIDE HFTD TIER 2 OR 3 WITHOUT PRIOR APPROVAL OF EDE & SPACE.

(P) ADJUST AND ADD LADDER ARMS AS NEEDED BETWEEN ANTENNA LADDER ARM AND CONTROLLER RELAY.

(Q) STEEL OR COMPOSITE POLE REQUIRED IN THE TIER 2 AND TIER 3 AREAS, SELECT THE FINISH NEEDED.

(R) PT MUST BE CONNECTED TO SOURCE SIDE.

(S) THE PT MAY BE A SINGLE OR DUAL BUSHING CONNECTION. SINGLE BUSHING PT REQUIRES ONE PHASE AND PRIMARY NEUTRAL (CASE) CONNECTION. REFER TO TRANSFORMER NAMEPLATE.

TABLE OF CONTENTS

BILL OF MATERIALS:

ITEM	DESCRIPTION		QUANTITY	STANDARD PAGE	STOCK NUMBER	DESIGN UNITS
1	POLE, 50-1 (MINIMUM HEIGHT) (Q)	STEEL GALVANIZED	1	354	--	--
		STEEL WEATHERING			--	--
		WOOD			--	--
		COMPOSITE			--	--
2	FIBERGLASS CROSSARM, DEADEND, 10'-0"		AS REQ'D	379	S294372	6DF
3	BOLT, SPACE, GALV., 3/4" X (LENGTH AS REQ'D) 2 SQUARE, CURVED & 2 COIL SPRING WASHERS		AS REQ'D	390	--	--

© 1998 - 2023 San Diego Gas & Electric Company. All rights reserved. Removal of this copyright notice without permission is not permitted under law.

REV	CHANGE	DR	BY	DSN	APV	DATE	REV	CHANGE	DR	BY	DSN	APV	DATE
C	DRAWING UPDATE	PEI	-	-	-	02/18/2019	F						
B	EDITORIAL CHANGES	-	GW	JS	MDJ	03/01/2018	E	DRAWING UPDATE	EDM	MRF	MRF	KRG	05/25/2023
A	ORIGINAL ISSUE	-	JC	TR	MDJ	10/25/2016	D	EDITORIAL CHANGES	PEI	JA	JES	CZH	10/12/2020

BILL OF MATERIALS (CONT'D):

ITEM	DESCRIPTION	QUANTITY	STANDARD PAGE	STOCK NUMBER	DESIGN UNITS
4	SWITCH, DISCONNECT, 27KV, 900A	6	--	S706670 (VI)	PS900
				S707004 (VII)	P900D
5	SIGN, HIGH VOLTAGE STICKER	AS REQ'D	208	--	--
6	SCREWS, SELF TAPPING, 1 1/4", #12, 24 THREADED (V)	AS REQ'D	--	S618086	--
7	INSULATOR, SUSPENSION, 12KV, LONG DEADEND	AS REQ'D	750	S428958	LONGDE
8	CLAMP, STRAIGHT LINE, DEADEND	AS REQ'D	739	--	--
9	WIRE, #8, BARE SOLID ANNEALED COPPER (V)	30'-0"	711	S812928	BOND8
10	STRAP, PIPE, GALV., 1/4", ONE HOLE	AS REQ'D	1002	S697304	--
11	LEAD WIRE, 0-2/0, 200A, 1/0 POLY	30'-0"	711.10	S812114	CW1/0
	LEAD WIRE, 350MCM, 600A, 4/0 POLY			S812106	CW4/0
	LEAD WIRE, 750MCM-1000MCM, 600A, 500MCM POLY			S812108	CW500
12	CONNECTOR, WIRE, WEDGE (SIZE AS REQ'D)	AS REQ'D	783	--	--
13	TAPE, HIGH VOLTAGE, SELF FUSING, SCOTCH 70	AS REQ'D	--	S720384	--
14	TAPE, HIGH VOLTAGE, LINELESS RUBBER, SCOTCH 130C	AS REQ'D	1272	S720480	--
15	TAPE, HIGH VOLTAGE, VINYL, SCOTCH SUPER 88	AS REQ'D	--	S720600	--
16	TERMINAL, COMPRESSION, CU OR AL (SIZE AS REQ'D)	AS REQ'D	784	--	--
17	PIN, INSULATOR, 12KV, 1"	AS REQ'D	396	S532706 (X)	PS1
18	INSULATOR, LINE 12KV TANGENT	AS REQ'D	750	--	--
	INSULATOR, VISE-TOP				
19	FIBERGLASS, CROSSARM, TANGENT	AS REQ'D	379	--	--
20	WIRE, POLY COPPER, (SIZE AS REQ'D WITH MINIMUM SIZE EQUAL TO LINE CONDUCTOR AMPACITY OR GREATER)	25'-0"	--	--	--
21	SIGN, PN	2	208	--	--
22	GRIP, RISER, KELLEMS (SIZE AS REQUIRED)	1	4204	--	--
23	ELASTIMOLD RECLOSER/SWITCH, 800A (SCADA COMPATIBLE) (O)	1	3675	S571970	EM-SW OR EM-SR
	BRACKET, MOUNTING				
	PT, SENSOR, INTERNAL VOLTAGE, 12000/120V				
24	CONTROLLER, SEL 651R2 (ELASTIMOLD SWITCH COMPATIBLE) (IV)	1	--	S274578	--
	CONTROL CABLE, 40'-0", 32-PIN CONFIG. (IV)				
	TRANSCEIVER, MDS RADIO (V) (IV)	AS REQ'D	--	S749500	SOTRAN
	TRANSCEIVER, MDS RADIO SPREADSPECTRUM (V) (IV)	AS REQ'D	--	S749504 (X)	SSTRAN
25	BOLT, MACH, GALV., 3/4" X (LENGTH AS REQ'D), 1 SQUARE CURVED RIBBED & 1 COIL SPRING WASHER	4	390	--	--
26	COVER, BUSHING/ARRESTER	AS REQ'D	1630	S289670	--
27	WIRE, HENDRIX, TAP, 4/7 (V)	AS REQ'D	711	S812124	HEND4
28	GROUND STRAP, FLEXIBLE ARRESTER	AS REQ'D	1002	S698754	LAGND
29	ARRESTER, LIGHTNING, 12KV	3	1247	S113248 (X)	LA12
30	GRIP, CONTROL CABLE, MVR	1	--	S392408 (X)	--
31	BRACKET, LADDER ARM	--	1404	S167186	RARM/L
32	ARM, DOUBLE UNISTRUT, 2'-0"	--		S216702	
33	NUT, CLAMPING CHANNEL, W/SPRING, 1/2"	--		S503488	
34	BOLTS, GALVANIZED, 5/8" (LENGTH AS REQUIRED)	AS REQ'D	390	--	--
35	NUT STUD, 1/2" X 1 3/8", CLAMPING UNISTRUT	AS REQ'D	1404	S507000	--

TABLE OF CONTENTS

© 1998 - 2023 San Diego Gas & Electric Company. All rights reserved. Removal of this copyright notice without permission is not permitted under law.

REV	CHANGE	DR	BY	DSN	APV	DATE	REV	CHANGE	DR	BY	DSN	APV	DATE
C	DRAWING UPDATE	PEI	-	-	-	02/18/2019	F						
B	EDITORIAL CHANGES	-	GW	JS	MDJ	03/01/2018	E	DRAWING UPDATE	EDM	MRF	MRF	KRG	05/25/2023
A	ORIGINAL ISSUE	-	JC	TR	MDJ	10/25/2016	D	EDITORIAL CHANGES	PEI	JA	JES	CZH	10/12/2020

BILL OF MATERIALS (CONT'D):

ITEM	DESCRIPTION		QUANTITY	STANDARD PAGE	STOCK NUMBER	DESIGN UNITS
36	PVC, SCHEDULE 40	2"	AS REQ'D	4204	S251296	S40-2"
37		3"			S251360	S40-3"
38		4"			S251392	S40-4"
39		5" (IV)			S251408	S40-5"
40	CLAMP, UNISTRUT PIPE	2"	AS REQ'D	4204	S229536	CL-2IN
41		3"			S229632	CL-3IN
42		4"			S229664	CL-4IN
43		5"			S229668	CL-5IN
44	WEATHER HEAD, 2"		1	--	S203290	--
45	NIPPLE, PIPE 2" X 7", ALUMINUM (IV)		1	--	--	ANTXMB
46	BOLT, MACH GALV., 5/8" X 14"		1	--	S154880	
47	WASHER, CENTERING, GALV.		2	--	S795520	
48	CABLE, FLEXIBLE, COAXIAL SCADA ANTENNA, 1/2" (IV)		AS REQ'D	--	S191906	ANTCAB
49	CONNECTOR, COAXIAL, STRAIGHT (IV)		2	--	S254170	--
50	GROUNDING BALL STUD, 5/8" X 3" SHANK		3	--	S700100 (X)	GDSTUD
51	TAG, "CONTROLS"		1	--	--	--
52	PADLOCK, SCHLAGE ELECTRIC SERIES		2	--	S514848	--
53	TAG, SWITCH NUMBER (IV)		2	204	--	--
54	DECAL "SCADA" "INFORM S.C.O. UPON ENTRY"		1	207	S301934	--
55	STRIP, VISIBILITY (C)		1	208	S304064	--
56	GROUNDING, #4, PVC, GROUND WIRE, RODS & CONNECTORS	STEEL POLE	1	1002	--	GNDPSP
		WOOD/FG POLE				GNDPVC
57	BRACKET, CUTOUT/ARRESTER, CROSSARM MOUNTING		3	397	S165452	COBKT
58	ANTENNA, SCADA, COMMUNICATION, BROADBAND & CONNECTORS		1	--	S109570	ANT
59	CONNECTOR, BRONZE, 2 BOLT, COPPER TAP	2/0 & BELOW	AS REQ'D	--	S262336	CN4/0
		350 & ABOVE			S262370	CN1000
	CONNECTOR, INSULATION PIERCING (SHEAR BOLT) (IX)		--	2025	S269924	SLW276
60	BRACKET, INSULATOR, STANDOFF	30" 1" THREAD	AS REQ'D	390	S166144	KBKT30
		28" 1 3/8" THREAD			S166176	KBKT28
61	INSULATOR, VISE TOP			750	--	--
62	HANDWHEEL, COVER, BUSHING		AS REQ'D	1630	S402440	--

TABLE OF CONTENTS

NOTES:

(I) SEL 651R2 CONTROLLER REQUIRES 120V SUPPLY COMING FROM THE SOURCE SIDE USING A PT MOUNTED TO THE MVR SWITCH FRAME.

(II) PLANNER TO SPECIFY QUADRANT OF POLE FOR ANTENNA MOUNT WITH DATA FROM THE "SCADA TELECOMMUNICATIONS COORDINATION" FORM. SEE PROJECT MANAGEMENT INTRANET SITE FOR FORMS.

III. THE NEW MVR SWITCH COMES WITH INTERNAL AND SUPPLEMENTAL VOLTAGE SENSORS AND DO NOT NEED EXTERNAL LINDSEY SENSORS INSTALLED.

(IV) ITEMS SUPPLIED BY KEARNY.

(V) NOT SHOWN ON FIGURES

(VI) REQUIRED IN CONTAMINATION DISTRICT 1 AND PREFERRED IN COASTAL DISTRICTS (OC, NC, BC, CM).

© 1998 - 2023 San Diego Gas & Electric Company. All rights reserved. Removal of this copyright notice without permission is not permitted under law.

REV	CHANGE	DR	BY	DSN	APV	DATE	REV	CHANGE	DR	BY	DSN	APV	DATE
C	DRAWING UPDATE	PEI	-	-	-	02/18/2019	F						
B	EDITORIAL CHANGES	-	GW	JS	MDJ	03/01/2018	E	DRAWING UPDATE	EDM	MRF	MRF	KRG	05/25/2023
A	ORIGINAL ISSUE	-	JC	TR	MDJ	10/25/2016	D	EDITORIAL CHANGES	PEI	JA	JES	CZH	10/12/2020

NOTES (CONT'D):

(VII) PREFERRED FOR INLAND DISTRICTS (NE, RA, EA, ME).

(VIII) EXTENSION LADDER ARM SUPPORT BRACKET MAYBE LOCATED AT ANY LADDER ARM LEVEL.

(IX) FOR USE WITH COVERED CONDUCTOR.

(X) THIS ITEM IS EXEMPT.

(XI) MAPPING SYMBOLOGY BELOW:

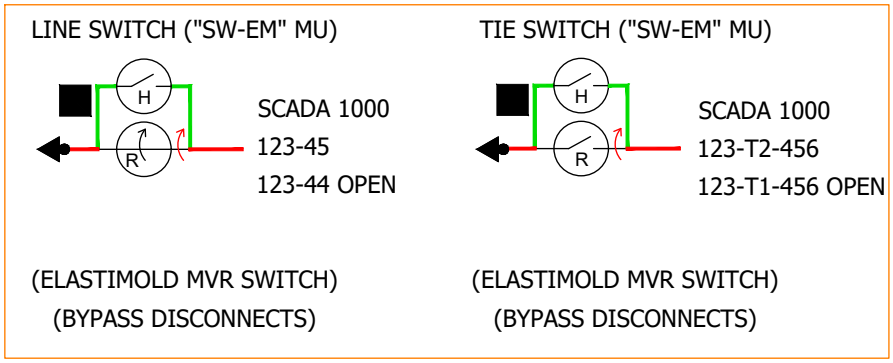

REFERENCES:

a. FOR POLE STEPPING, SEE OH363.

(b) FOR GROUNDING METHODS, SEE OH1002.

(c) FOR TRENCH GROUNDING, SEE UG4510.

(d) FOR DELINEATOR/REFLECTOR STRIPS, SEE OH208.

(e) FOR AVIAN PROTECTION, SEE OH1610.

f. FOR CABLE PULLING LIMITATIONS, SEE UG4005, UG4006, AND UG4007.

(g) FOR MINIMUM CONDUIT SIZES, SEE UG4004.

h. FOR CABLE POLE RISER INSTALLATION, SEE UG4204.

i. FOR ALLOWABLE WORKING AND CLIMBING SPACE, SEE OH251.

(j) FOR MINIMUM VERTICAL SEPARATION AS PER G.O. 95, SEE OH1406UG4206.

k. FOR CABLE IDENTIFICATION, SEE UG3202.

TABLE OF CONTENTS

© 1998 - 2023 San Diego Gas & Electric Company. All rights reserved. Removal of this copyright notice without permission is not permitted under law.

REV	CHANGE	DR	BY	DSN	APV	DATE	REV	CHANGE	DR	BY	DSN	APV	DATE
C	DRAWING UPDATE	PEI	-	-	-	02/18/2019	F						
B	EDITORIAL CHANGES	-	GW	JS	MDJ	03/01/2018	E	DRAWING UPDATE	EDM	MRF	MRF	KRG	05/25/2023
A	ORIGINAL ISSUE	-	JC	TR	MDJ	10/25/2016	D	EDITORIAL CHANGES	PEI	JA	JES	CZH	10/12/2020

SCOPE: THIS STANDARD COVERS INSTRUCTIONS FOR APPLYING ANIMAL GUARD TAPING.

INSTALLATION:

(A) TO BEGIN THE COVERUP OF THE RECLOSER BUSHINGS, FIRST REMOVE THE THREE PREINSTALLED SUPPLEMENTAL VOLTAGE SENSORS ATTACHED TO THE VERTICAL NEMA-4 PAD TERMINALS.

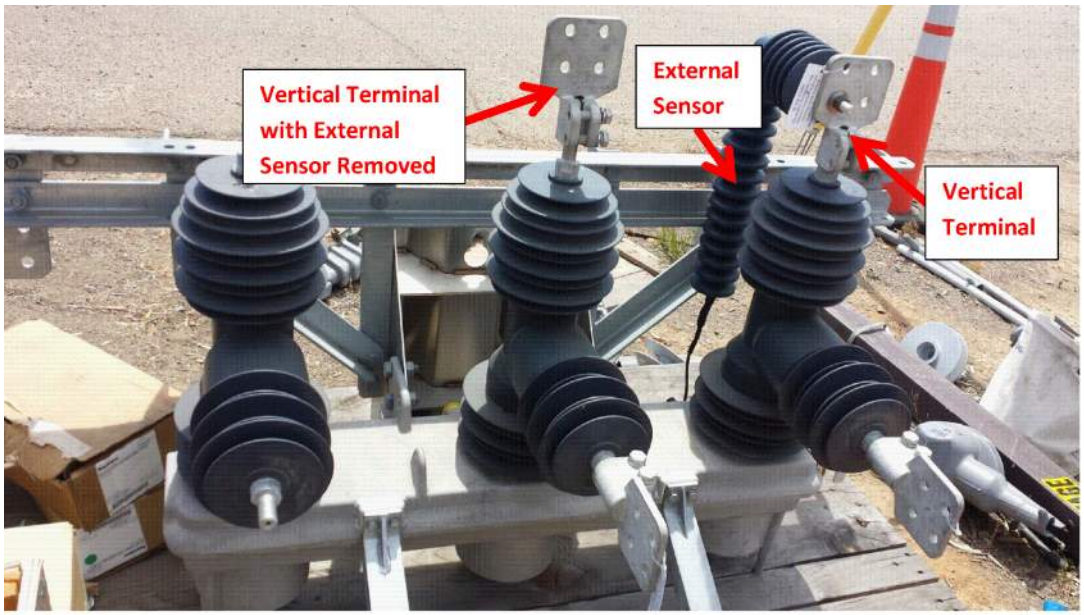

FIGURE 1 (A)

(B) ONCE THE SUPPLEMENTAL SENSORS ARE REMOVED, APPLY THE SCOTCH 70 SELF FUSING TAPE (S720384) TO THE BASE OF EACH NEMA-4 VERTICAL TERMINAL WITH ENOUGH WRAPS TO COVER THE ENTIRE METAL SURFACE.



FIGURE 2 (B)

TABLE OF CONTENTS

© 1998 - 2023 San Diego Gas & Electric Company. All rights reserved. Removal of this copyright notice without permission is not permitted under law.

REV	CHANGE	DR	BY	DSN	APV	DATE	REV	CHANGE	DR	BY	DSN	APV	DATE
C	DRAWING UPDATE	PEI	-	-	-	02/18/2019	F						
B	EDITORIAL CHANGES	-	GW	JS	MDJ	03/01/2018	E	DRAWING UPDATE	EDM	MRF	MRF	KRG	05/25/2023
A	ORIGINAL ISSUE	-	JC	TR	MDJ	10/25/2016	D	EDITORIAL CHANGES	PEI	JA	JES	CZH	10/12/2020

INSTALLATION (CONT'D):

(C) AFTER APPLYING THE SCOTCH 70 TAPE TO THE NEMA-4 VERTICAL TERMINAL BASES, MAKE THE HIGH VOLTAGE CONNECTIONS TO THE TERMINAL AS REQUIRED. APPLY A LAYER OF SCOTCH 130C TAPE (S720480) OVER THE AREA COVERED BY THE SCOTCH 70 TAPE UNTIL THE SCOTCH 130C IS NO LONGER VISIBLE.

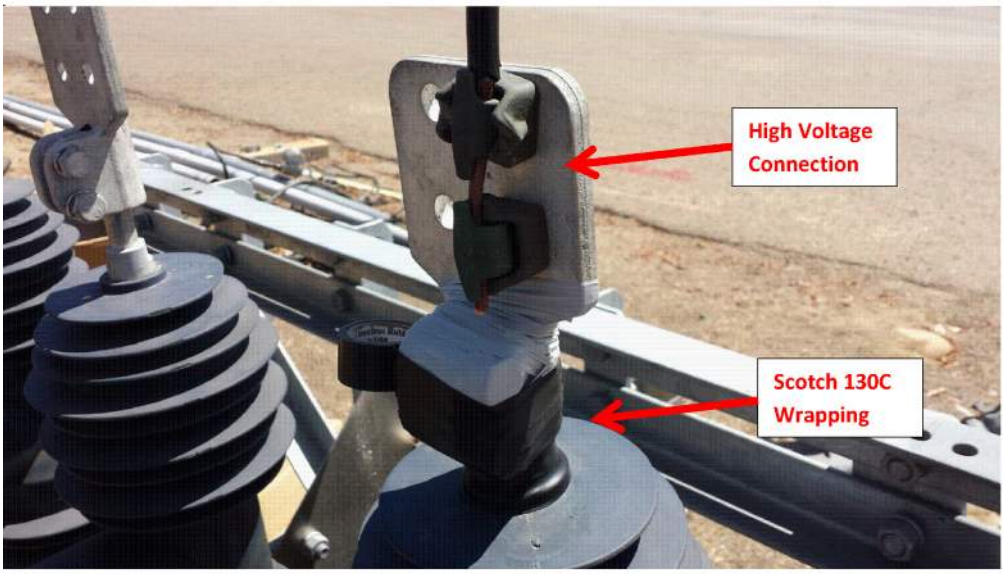

FIGURE 3 (C)

(D) REATTACH THE SUPPLEMENTAL VOLTAGE SENSORS BACK TO THE VERTICAL NEMA-4 BUSHINGS USING A RATCHET WRENCH AT A TORQUE SETTING OF 25 FT-LBS. MAKE SURE TO RECONNECT THE SMALL CANNON PLUG FROM THE BOTTOM OF THE SUPPLEMENTAL SENSORS INTO THE RECEPTACLES FOUND ON THE FRAME OF THE RECLOSER FOR EACH PHASE.

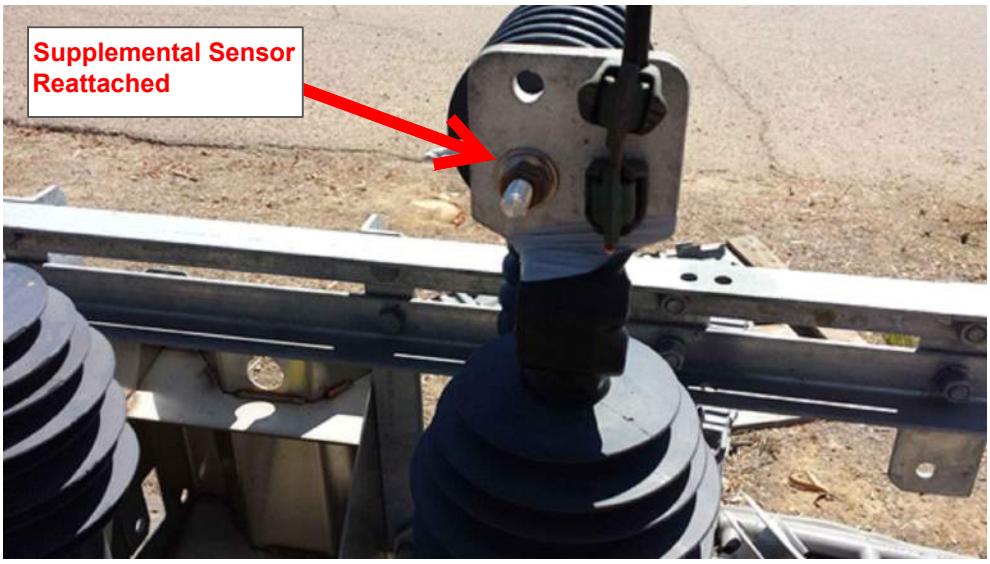

FIGURE 4 (D)

© 1998 - 2023 San Diego Gas & Electric Company. All rights reserved. Removal of this copyright notice without permission is not permitted under law.

REV	CHANGE	DR	BY	DSN	APV	DATE	REV	CHANGE	DR	BY	DSN	APV	DATE
C	DRAWING UPDATE	PEI	-	-	-	02/18/2019	F						
B	EDITORIAL CHANGES	-	GW	JS	MDJ	03/01/2018	E	DRAWING UPDATE	EDM	MRF	MRF	KRG	05/25/2023
A	ORIGINAL ISSUE	-	JC	TR	MDJ	10/25/2016	D	EDITORIAL CHANGES	PEI	JA	JES	CZH	10/12/2020

INSTALLATION (CONT'D):

(E) ONCE THE EXTERNAL SENSORS HAVE BEEN REATTACHED, CONTINUE APPLYING THE SCOTCH 70 TAPE TO THE REMAINING EXPOSED METAL SURFACE ON THE NEMA-4 VERTICAL TERMINALS UNTIL A COMPLETE COVERUP IS MADE.



FIGURE 5 (E)

(F) AFTER APPLYING THE SCOTCH 70, APPLY THE SCOTCH 130C TO THE REST OF THE AREA UNTIL THE SCOTCH 130C COVERS UP THE ENTIRE SECTION.



FIGURE 6 (F)

© 1998 - 2023 San Diego Gas & Electric Company. All rights reserved. Removal of this copyright notice without permission is not permitted under law.

REV	CHANGE	DR	BY	DSN	APV	DATE	REV	CHANGE	DR	BY	DSN	APV	DATE
C	DRAWING UPDATE	PEI	-	-	-	02/18/2019	F						
B	EDITORIAL CHANGES	-	GW	JS	MDJ	03/01/2018	E	DRAWING UPDATE	EDM	MRF	MRF	KRG	05/25/2023
A	ORIGINAL ISSUE	-	JC	TR	MDJ	10/25/2016	D	EDITORIAL CHANGES	PEI	JA	JES	CZH	10/12/2020

TABLE OF CONTENTS

INSTALLATION (CONT'D):

(G) AFTER APPLYING COVERUP WITH THE SCOTCH 70 AND 130C TAPE, APPLY THE SCOTCH SUPER 88 TAPE (S720600) TO THE ENTIRE THE NEMA-4 VERTICAL TERMINALS.



FIGURE 7 (G)

H. REPEAT STEPS A-G FOR EACH OF THE 3 NEMA-4 VERTICAL BUSHING TERMINALS.

J. REPEAT STEPS A-C AND E-G FOR EACH OF THE 3 NEMA-4 HORIZONTAL BUSHING TERMINALS. THESE TERMINATIONS DO NOT HAVE ANY EXTERNAL VOLTAGE SENSOR DEVICES.

BILL OF MATERIALS: NONE

NOTES: NONE

REFERENCE: NONE

TABLE OF CONTENTS

© 1998 - 2023 San Diego Gas & Electric Company. All rights reserved. Removal of this copyright notice without permission is not permitted under law.

REV	CHANGE	DR	BY	DSN	APV	DATE	REV	CHANGE	DR	BY	DSN	APV	DATE
C	DRAWING UPDATE	PEI	-	-	-	02/18/2019	F						
B	EDITORIAL CHANGES	-	GW	JS	MDJ	03/01/2018	E	DRAWING UPDATE	EDM	MRF	MRF	KRG	05/25/2023
A	ORIGINAL ISSUE	-	JC	TR	MDJ	10/25/2016	D	EDITORIAL CHANGES	PEI	JA	JES	CZH	10/12/2020

X Indicates Latest Revision | Completely Revised | New Page | Information Removed

SDG&E ELECTRIC OVERHEAD AND UNDERGROUND CONSTRUCTION STANDARDS

ELASTIMOLD MVR SWITCH AND SCADA 651R2 CONTROLLER CABLE POLE

OH1452.10
UG4252.10

PAGE	SUBJECT
	FUSES
4302	FUSE APPLICATION GUIDE
4305	4KV, 12KV CUT OUT ASSEMBLY AND FUSE INSTALLATION, FUSE INDICATOR/FIREFLY
4306	OVERHEAD 12KV CURRENT-LIMITING FUSE INSTALLATION
4307	FUSES USED IN OVERHEAD CONSTRUCTION
4309	FUSES USED ON 1200 KVAR PAD MOUNTED CAPACITOR
4310	CURRENT-LIMITING TO SM-4 FUSE CONVERSION FOR PME SWITCH
4311	CURRENT-LIMITING FUSES, AND ELECTRONIC FUSES
4312	CURRENT-LIMITING AND SOLID BLADE FUSE TABLE
4313	EXPULSION FUSE TABLE
4314	TRANSFORMER FUSING TABLES
	FAULT INDICATORS
4344	SEL 8301 WIRELESS FAULT INDICATOR
4352	AUTOMATIC FAULT INDICATOR-SELF RESETTING, HOT STICK OPERABLE
4354	CAPACITIVE TEST POINT FAULT INDICATOR
4355	AUTOMATIC FAULT INDICATOR INSTALLATION
4359	OVERHEAD FAULT INDICATOR-SELF RESETTING, HOT STICK OPERABLE
4360	LOAD TRACKER FAULT INDICATOR

MAIN TABLE OF CONTENTS

REV	CHANGE	DRWN	BY	CHKD	APVD	DATE
F	REVISED TO 3D FORMAT	NV5	JIK	JAS	JAS	08/22/2024
E	4308 MOVED TO FMO	GLC	RSL	JES	CZH	12/12/2021
D	ADD UG4360	EDM	ADW	GLW	CZH	07/29/2021

© 1998 - 2024 San Diego Gas and Electric Company. All rights reserved. Removal of this copyright notice without permission is not permitted under law.

SDG&E ELECTRIC UNDERGROUND CONSTRUCTION STANDARDS

FUSES AND FAULT INDICATORS
TABLE OF CONTENTS

SCALE: NOT TO SCALE

DRAWING NO:	SHEET:
UG4301.1	1 OF 1

X Indicates Latest Revision | Completely Revised | New Page | Information Removed

SCOPE: THIS STANDARD DESCRIBES A GENERAL GUIDE FOR EXPULSION AND CURRENT-LIMITING FUSE APPLICATIONS AND REFERENCE TO THE SPECIFIC STANDARDS PAGE.

TABLE 1

FUSE TYPE	DISTRIBUTION APPLICATION	CONSTRUCTION STANDARD
BUSSMAN TYPE MDS	USED IN EKSTROM LIMITER ADAPTER TO LIMIT FAULT CURRENT TO CUSTOMER SERVICE PANEL	FMO UG4303
KEARNEY & RTE TYPE B	USED IN OVERHEAD CUTOUTS FOR CABLE POLE CONSTRUCTION	OH1206UG4306
VARIOUS TYPES	VARIOUS TYPES OF FUSES USED ON THE OVERHEAD DISTRIBUTION SYSTEM	OH1207UG4307
GENERAL ELECTRIC TYPE J-1	USED TO FUSE 12KV (P.T) TRANSFORMER INSIDE CABINET OF PAD-MOUNTED CAPACITOR	UG4309
COMBINED TECHNOLOGY TYPE X LIMITER MC-GRAW EDISON TYPE NXC	USED TO FUSE CAPACITORS INSIDE CABINET OF PAD-MOUNTED CAPACITOR	UG4309, UG4311, UG4312
NELSON TYPE E	NOT APPROVED FOR USE	--
GENERAL ELECTRIC TYPE EJO-1 COMBINED TECHNOLOGY TYPE EOD	FUSING SINGLE- PHASE AND THREE-PHASE LATERALS FROM FUSE CABINETS. THREE-PHASE PORTABLE SWITCH (GREEN BOX) (a)	UG4311 & UG4312
MC-GRAW EDISON TYPE NX	FUSING SINGLE-PHASE AND THREE-PHASE LIVEFRONT TRANSFORMER (YP, HP, HQ, HAP, HAQ, HLP, HMP, HPP), SINGLE-PHASE GREEN BOX, G&W OIL FUSED CUTOUTS, OLD THREE-PHASE FUSE COMPARTMENT (b)	UG4311
KEARNEY TYPE A	FUSING SINGLE-PHASE LATERALS FROM LOW PROFILE FUSE CABINET FOR REPLACEMENT OF EXISTING UNITS ONLY (c)	--
KEARNEY & RTE TYPE B	FUSING THREE-PHASE LATERALS FROM FUSED SWITCHING CABINET AND RETROFITTING S&C FUSE CABINETS (d)	UG4311 & UG4312
RTE/ELRP KEARNEY/TYPE B COMBINED TECHNOLOGY TYPE BOI	USED IN WALL MOUNTED AND SUBSURFACE FUSE CABINETS, ALSO IN PAD-MOUNTED PMH-9 & -11 SWITCHGEAR AND 1990 OR NEWER S&C MINI-RUPTER FUSE CABINET, ALSO FOUND ON VAULT WALLS	UG4311 & UG4312
X-LIMITER	USED IN PME-9 AND 11 SWITCHGEAR AND PAD-MOUNTED CAPACITOR	UG4311 & UG4312
BURNDY TYPE PF8	USED IN LOADBREAK ELBOWS TO FUSE SINGLE-PHASE TRANSFORMERS AND SMALL LATERALS	UG4312
ELASTIMOLD TYPE EFX	USED IN LOADBREAK ELBOWS TO FUSE SINGLE-PHASE TRANSFORMERS AND SMALL LATERALS, FUSED TEST CANISTER (FTC), AND VACUUM-SWITCH CIRCUIT TESTER (VCT)	UG4312
GENERAL ELECTRIC	USED IN D&W (G.E.) OIL FUSED CUTOUTS	UG4313
S&C TYPE SM-4	USED IN SM-4 HOLDER (TRANSFORMER) 1000 KVA OLDER S&C MINI-RUPTER	UG4313
S&C TYPE SM-5	USED IN SM-5 HOLDER SUBSTATION CAPACITORS, LIMITED DISTRIBUTION APPLICATION	UG4313
--	TRANSFORMER FUSING TABLES	UG4314

INSTALLATION: NONE

BILL OF MATERIALS: NONE

NOTES: NONE

REFERENCE:

(a) REFER TO UG3512, FMO UG3513.

(b) REFER TO FMO UG3599.109.

(c) REFER TO FMO UG3599.104.

(d) REFER TO FMO UG3599.105-108, 111, 112.

© 1998 - 2020 San Diego Gas & Electric Company. All rights reserved. Removal of this copyright notice without permission is not permitted under law.

REV	CHANGE	DR	BY	DSN	APV	DATE	REV	CHANGE	DR	BY	DSN	APV	DATE
C							F						
B	FORMATTING	EDM	JIK	-	-	9/28/2020	E						
A	REVISION	-	-	-	JJ/MF	8/21/2006	D						

X Indicates Latest Revision | Completely Revised | New Page | Information Removed

SDG&E ELECTRIC UNDERGROUND CONSTRUCTION STANDARDS

FUSE APPLICATION GUIDE

UG4302.1

TABLE OF CONTENTS

SCOPE: THIS STANDARD SHOWS THE CMU CUTOUT ASSEMBLY, PREPARED FOR USE ON THE 4KV AND 12KV ELECTRIC SYSTEM IN TIER 2 & TIER 3 AREAS.

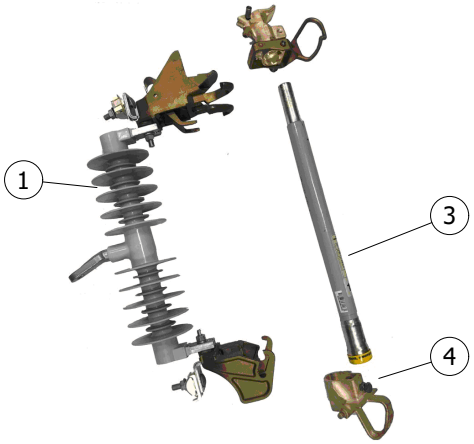

FIGURE 1
CUTOUT BODY WITH FUSE

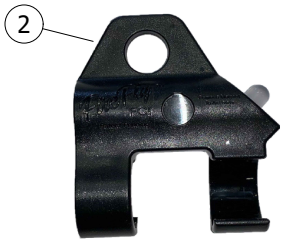

FIGURE 2
FIREFLY

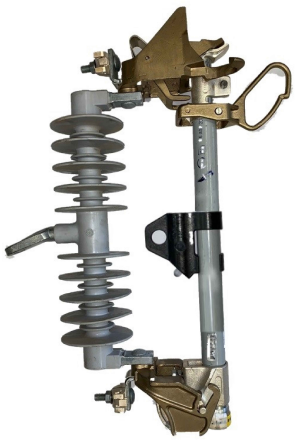

FIGURE 3
ASSEMBLED CUTOUT BODY WITH FUSE AND FIREFLY

INSTALLATION: NONE

BILL OF MATERIALS:

ITEM	DESCRIPTION	QUANTITY	STANDARD PAGE	STOCK NUMBER	DESIGN UNITS
1	FUSEHOLDER, POLYMER BODY, WITH END FITTINGS FOR CMU FUSE BARREL, CMU, CURRENT RANGE UP TO 150A	--	--	S298018	CMU
2	FIRELY FOR 100A AND SMALLER SMU/CMU FUSES (c)	--	--	S423608	
3	FUSE, BARREL, REFER TO SIZES	--	1207/4307	--	--
4	FITTINGS, END, UPPER & LOWER, FOR CMU FUSES (III)(a)	--	--	S368690	--

NOTES:

I. KEARNY TYPE HX CUTOUTS ARE NO LONGER AVAILABLE. FOR APPLICATIONS IN TIER 2 & TIER 3 AREAS, CMU CUTOUT BODY AND CMU FUSES WILL NOW BE USED.

II. THE PACKAGE CONTAINS THE CMU CUTOUT BODY AND UPPER AND LOWER END FITTINGS.

(III) TROUBLESHOOTER: END FITTINGS CAN BE ORDERED SEPARATELY.

IV. DO NOT DISCARD END FITTING FROM AN ASSEMBLED USED OR BLOWN FUSE.

V. WHEN ASSEMBLING END FITTINGS TO THE FUSE BARREL, MAKE SURE NOT TO OVER TIGHTEN BOLTS. FINGER TIGHTEN AND HALF A TURN WITH A WRENCH WILL SUFFICE.

VI. USE ON 2.4KV - 12KV.

VII. CROSSARM MOUNTING BRACKETS ARE INCLUDED WITH THE MATERIALS SUPPLIED BY THE OH DESIGN UNITS (USED ON DESIGN BY LOCATION JOBS). BRACKETS MUST BE ORDERED SEPARATELY ON MANUALLY PREPARED FIELD MEMO JOBS. (b)

a. DOUBLE CUTOUT & ARRESTER MTG BKT = S165454 (X)

b. CUTOUT OR ARRESTER MTG BKT = S165452 (X)

(X) THIS ITEM IS EXEMPT.

REFERENCE:

(a) SEE OH1207UG4307.

(b) SEE OH397.

(c) SEE OH1208.

© 1998 - 2024 San Diego Gas & Electric Company. All rights reserved. Removal of this copyright notice without permission is not permitted under law.

REV	CHANGE	DR	BY	DSN	APV	DATE	REV	CHANGE	DR	BY	DSN	APV	DATE
C	DRAWING UPDATE	-	RSL	JES	CZH	03/09/2020	F	BILL OF MATERIALS UPDATE	ARC	MPC	CWB	KRG	06/05/2023
B	DRAWING UPDATE	-	JCE	JS	CZJ	03/18/2019	E	EDITORIAL CHANGES	EDM	CWB	JES	CZH	09/30/2021
A	ORGINAL ISSUE	-	GW	JS	MDJ	04/01/2018	D	FORMATTING	EDM	JIK	-	-	09/28/2020

X Indicates Latest Revision | Completely Revised | New Page | Information Removed

SDG&E ELECTRIC OVERHEAD AND UNDERGROUND CONSTRUCTION STANDARDS

CUTOUT ASSEMBLY
CMU

OH1212.1
UG4305.1

TABLE OF CONTENTS

SCOPE: THIS STANDARD SHOWS THE POLYMER INTERCHANGEABLE CUTOUT BODY.

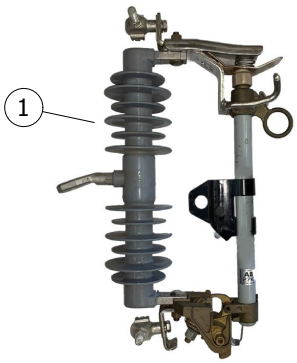

FIGURE 1
POLYMER INTERCHANGEABLE CUTOUT
WITH FUSE AND FIREFLY

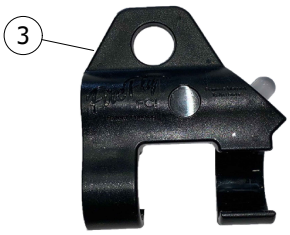

FIGURE 2
FIREFLY

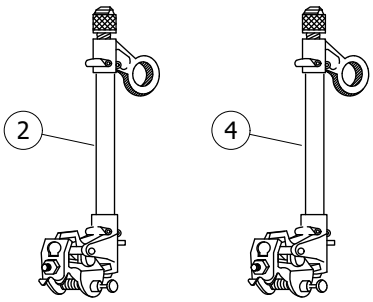

FIGURE 3
FUSEHOLDERS

INSTALLATION: NONE

BILL OF MATERIALS:

ITEM	DESCRIPTION	CURRENT RANGE	QUANTITY	STANDARD PAGE	STOCK NUMBER	DESIGN UNITS
1	CUTOUT BODY, INTERCHANGEABLE, WITHOUT FUSEHOLDER	0-300A	--	--	S298020	NPCO (VI)
			--	--	S298026	NPCO-2 (VII)(VIII)
2	HOLDER, FUSE, 100 AMP, 15KV (II)(III)(IV)	FUSE 5 THRU 100A	--	--	S413394	X100FH
3	FIREFLY FOR 100A QA FUSE DOORS (II)(III)		--	--	S423606	
4	HOLDER, FUSE, 200 AMP, 15KV (II)(IV)	FUSE 125 THRU 200A	--	1208	S413396	X200FH

NOTES:

I. MAY BE USED IN HFTD WITH CURRENT LIMITING FUSES

(II) INTERCHANGEABLE WITH CUTOUT BODY REGARDLESS OF MANUFACTURER

(III) CUTOUTS SHALL BE BONDED IF INSTALLED IN CONTAMINATION DISTRICT 1.(c)

(IV) FOR USE IN INTERCHANGEABLE CUTOUT BODY

V. USE ON 2.4 - 12KV.

(VI) FOR USE IN CONTAMINATION DISTRICTS II AND III ONLY (c)

(VII) REQUIRED FOR CONTAMINATION DISTRICT I (c)

(VIII) PERMITTED IN ALL CONTAMINATION DISTRICTS (c)

REFERENCE:

a. FOR EQUIPMENT MOUNTING BRACKETS, SEE OH397.

b. FOR FUSES, SEE OH1207UG4307.

(c) SEE OH287UG3140: CONTAMINATION DISTRICTS.

TABLE OF CONTENTS

© 1998 - 2024 San Diego Gas & Electric Company. All rights reserved. Removal of this copyright notice without permission is not permitted under law.

REV	CHANGE	DR	BY	DSN	APV	DATE	REV	CHANGE	DR	BY	DSN	APV	DATE
C	DRAWING UPDATE	-	RSL	JES	CZH	03/09/2020	F	BILL OF MATERIALS UPDATE	ARC	MPC	CWB	KRG	06/05/2023
B	DRAWING UPDATE	-	JCE	JS	CZJ	03/18/2019	E	EDITORIAL CHANGES	EDM	CWB	JES	CZH	09/30/2021
A	ORGINAL ISSUE	-	GW	JS	MDJ	04/01/2018	D	FORMATTING	EDM	JIK	-	-	09/28/2020

TABLE OF CONTENTS

SCOPE: THIS STANDARD SHOWS CURRENT LIMITING FUSES USED FOR CABLE POLE CONSTRUCTION.

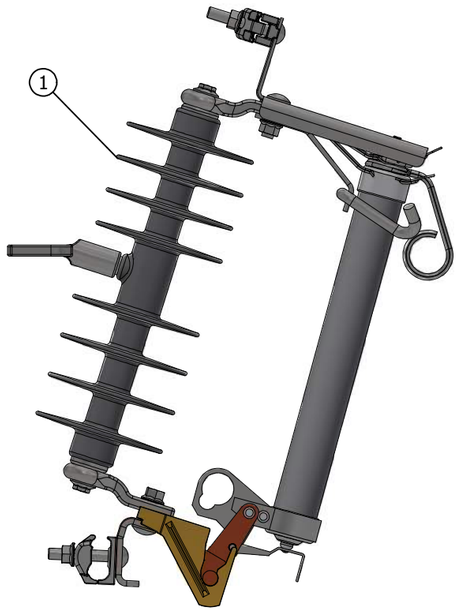

FIGURE 1
POLYMER INTERCHANGEABLE CUTOUT



FIGURE 2
SINGLE BARREL ELF FUSE

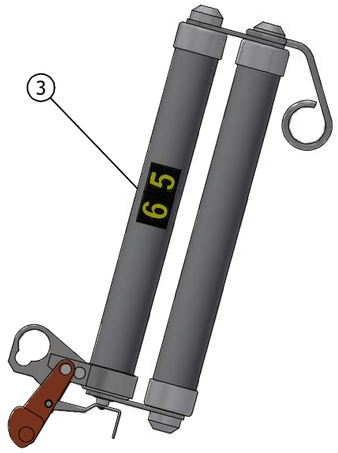

FIGURE 3
DOUBLE BARREL ELF FUSE

INSTALLATION:

(A) THESE FUSES DROP WHEN THEY OPERATE, ARE TOTALLY EXPENDABLE AND HAVE NO SALVAGEABLE PARTS. DISCARD ENTIRE FUSE ASSEMBLY AFTER OPERATION.

(B) INSTALL FUSE SIZE WITH DECALS ON EACH FUSE SO IT WILL BE VISIBLE AFTER INSTALLATION.(c)

BILL OF MATERIALS:

ITEM	DESCRIPTION	QUANTITY	STANDARD PAGE	STOCK NUMBER	DESIGN UNITS OH	DESIGN UNITS UG
1	CUTOUT, POLYMER, 25KV NOMINAL, 27KV MAX, 150 BIL	AS REQ'D	-	S298020 (III)	NPCO	NPCO
	CUTOUT, 12KV, 300A	AS REQ'D	-	S298026 (I)(IV)	NPCO-2	NPCO-2
2	FUSE, CURRENT LIMITING, 30 AMP, 8.3KV, (A)(B)(I)(II)	AS REQ'D	-	S365654	30AELF	ELF30A
3	FUSE, CURRENT LIMITING, 65 AMP, 8.3KV, (A)(B)(I)(II)	AS REQ'D	-	S365656	65AELF	ELF65A

NOTES:

(I) PERMITTED IN ALL CONTAMINATION DISTRICTS (d)

(II) FOR USE IN INTERCHANGEABLE CUTOUT.

(III) FOR USE IN CONTAMINATION DISTRICTS II AND III ONLY (d)

(IV) REQUIRED FOR CONTAMINATION DISTRICT I (d)

REFERENCE:

a. FOR APPLICATION OF THESE FUSES, SEE DM SECTION 6100.

b. FOR EQUIPMENT MOUNTING BRACKETS, SEE OH397.

(c) SEE OH208 AND UG3212.

(d) SEE OH287UG3140: CONTAMINATION DISTRICTS.

REV	CHANGE	DRWN	BY	CHKD	APVD	DATE
F	EDITORIAL CHANGES	EDM	JAC	JAS	KRG	11/03/2022
E	REVISED TO 3D FORMAT	AMP	JIK	-	-	05/10/2022
D	FORMATTING	EDM	JIK	-	-	9/28/2020

SDG&E — A Sempra Energy utility

SDG&E ELECTRIC OVERHEAD AND UNDERGROUND CONSTRUCTION STANDARDS

OVERHEAD 12KV CURRENT-LIMITING FUSE INSTALLATION

SCALE: NOT TO SCALE

DRAWING NO: OH1206.1 UG4306.1

SHEET: 1 OF 1

© 1998 - 2022 San Diego Gas and Electric Company. All rights reserved. Removal of this copyright notice without permission is not permitted under law.

X Indicates Latest Revision | Completely Revised | New Page | Information Removed

SCOPE: THIS STANDARD SHOWS VARIOUS TYPES OF FUSES USED ON THE OVERHEAD DISTRIBUTION SYSTEM.

TABLE 1:

CURRENT-LIMITING FUSES (II)(d)		
SIZE (AMPS)	**TYPE**	**STOCK NUMBER**
30	CURRENT-LIMITING (HXELF)	S365732 (B)
30	CURRENT-LIMITING (ELF)	S365654 (C)
65	CURRENT-LIMITING (ELF)	S365656 (C)
65	CURRENT-LIMITING (HXELF)	S365738 (B)
150	CURRENT-LIMITING (HX)	S365689 (B)
12	CURRENT-LIMITING (BACK-UP)	S365634 (A)
40	CURRENT-LIMITING (BACK-UP)	S365636 (A)

TABLE 2:

15.5KV NX FUSES FOR CURRENT-LIMITING FUSE TOOL (USED FOR TESTING DISTRIBUTION TRANSFORMERS)		
SIZE (AMPS)	**TYPE**	**STOCK NUMBER**
8	CURRENT-LIMITING	S368000
10	CURRENT-LIMITING	S367552
12	CURRENT-LIMITING	S367584
18	CURRENT-LIMITING	S367648
21	CURRENT-LIMITING	S367712
25	CURRENT-LIMITING	S367744
30	CURRENT-LIMITING	S367808
40	CURRENT-LIMITING	S367872

TABLE 3:

15.5KV ELF FUSES (USED FOR TESTING DISTRIBUTION TRANSFORMERS)			
SIZE (AMPS)	**TYPE**	**STOCK NUMBER**	**DESIGN UNITS**
12	CURRENT-LIMITING	S365664	-
50	CURRENT-LIMITING	S365666	-

TABLE 4:

15.5KV CURRENT-LIMITING FUSE, CAPACITOR POWER TRANSFORMER			
SIZE (AMPS)	**TYPE**	**STOCK NUMBER**	**DESIGN UNITS**
3	CURRENT-LIMITING	S365732	-

TABLE 5:

SECONDARY CURRENT-LIMITING FUSE FOR EKSTROM ADAPTER (b)			
SIZE (AMPS)	**TYPE**	**STOCK NUMBER**	**DESIGN UNITS**
125	CURRENT-LIMITING	S365643	-

TABLE 6:

CMU FUSES FOR CMU CUTOUT BODY (I)				
SIZE (AMPS)	**TYPE**	**STOCK NUMBER**	**DESIGN UNITS**	
			UG	**OH**
5	CMU-5	S368692	5CMU	CMU5 (D)
10	CMU-10	S368694	10CMU	CMU10 (D)
15	CMU-15	S368696	15CMU	CMU15 (D)
20	CMU-20	S368698	20CMU	CMU20 (D)
25	CMU-25	S368700	25CMU	CMU25 (D)
30	CMU-30	S368702	30CMU	CMU30 (D)
40	CMU-40	S368704	40CMU	CMU40 (D)
50	CMU-50	S368706	50CMU	CMU50 (D)
65	CMU-65	S368708	65CMU	CMU65 (D)
80	CMU-80	S368710	80CMU	CMU80 (D)
100	CMU-100	S368712	100CMU	CMU100 (D)
125	CMU-125	S368714	125CMU	CMU125
150	CMU-150	S368716	150CMU	CMU150

TABLE 7:

END FITTINGS FOR CMU FUSES	
DESCRIPTION	**STOCK NUMBER**
FUSE END FITTINGS	S368690

TABLE 8:

EXPULSION FUSES (a)					
SIZE (AMPS)	**TYPE**	**STOCK NUMBER**	**DESIGN UNITS**		
			OH ACCTS.	**UG ACCTS.**	**OVERHEAD (B)(C)**
5	200	S366016	-	EXP-05	EX5 (D)
10	200	S365696	-	EXP-10	EX10 (D)
15	QA	S365792	015-QA	QA-015	QA15 (D)
20	QA	S365856	020-QA	QA-020	QA20 (D)
25	QA	S365920	025-QA	QA-025	QA25 (D)
30	QA	S365952	030-QA	QA-030	QA30 (D)
40	QA	S365984	040-QA	QA-040	QA40 (D)
50	QA	S366048	050-QA	QA-050	QA50 (D)
60	QA	S366080	060-QA	QA-060	QA60 (D)
75	QA	S366112	075-QA	QA-075	QA75 (D)
100	QA	S365728	100-QA	QA-100	QA100 (D)
125	QA	S365760	125-QA	QA-125	QA125
150	QA	S365824	150-QA	QA-150	QA150
200	200	S365888	200-QA	QA-200	QA200

INSTALLATION:

(A) NO LONGER PURCHASED.

(B) USE WITH KEARNEY CUTOUT. (c)(d)

(C) USE WITH INTERCHANGEABLE CUTOUT. (c)(d)

(D) CORRESPONDING FIREFLY SHOULD BE INSTALLED WITH APPLICABLE NEW FUSE INSTALLATION OR FUSE REPLACEMENT EXCEPT WHEN FUSING TRANSFORMERS. (e)

BILL OF MATERIALS: NONE

NOTES:

(I) THESE FUSES ARE CAL-FIRE EXEMPT. THEY WILL BE USED IN TIER 2 & TIER 3 AREAS.

(II) THESE FUSES ARE ALLOWED IN THE ENTIRE SERVICE TERRITORY.

REFERENCE:

(a) SEE DESIGN STANDARDS SECTION 6100.

(b) SEE OH1204.

(c) SEE OH1207UG4307 FOR EXPLOSION FUSE.

(d) SEE OH1206UG4306 FOR CURRENT-LIMITING FUSE.

(e) SEE OH1208 FOR FIREFLY FUSED CUTOUT INDICATOR.

TABLE OF CONTENTS

REV	CHANGE	DRWN	BY	CHKD	APVD	DATE
H	EDITORIAL CHANGES	GLC/DV	MPC	JAS	KRG	03/04/2024
G	REVISED TO 3D FORMAT	GLC/DV	JIK	-	-	01/27/2022
F	FORMATTING	EDM	JIK	-	-	09/28/2020

© 1998 - 2024 San Diego Gas and Electric Company. All rights reserved. Removal of this copyright notice without permission is not permitted under law.

SDG&E ELECTRIC OVERHEAD AND UNDERGROUND CONSTRUCTION STANDARDS

FUSES USED IN OVERHEAD CONSTRUCTION

SCALE: NOT TO SCALE

DRAWING NO: OH1207.1 UG4307.1

SHEET: 1 OF 1

[X] Indicates Latest Revision [ ] Completely Revised [ ] New Page [X] Information Removed

SCOPE: THIS STANDARD DESCRIBES THE 1200 KVAR PAD-MOUNTED CAPACITOR.

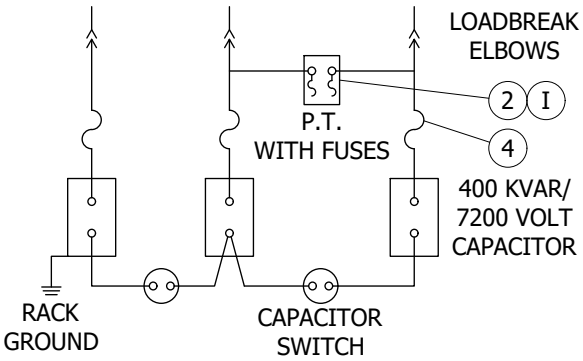

FIGURE 1
SCHEMATIC DIAGRAM (II)
NEW STYLE

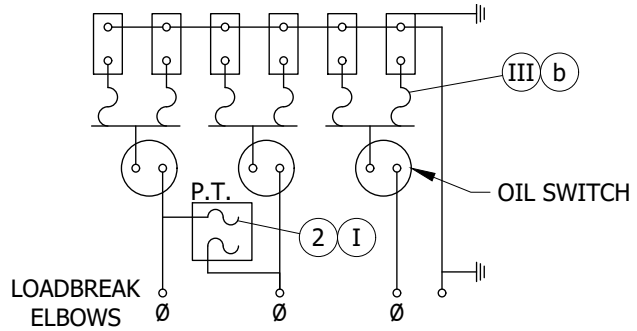

FIGURE 2
SCHEMATIC DIAGRAM (III)
OLD STYLE

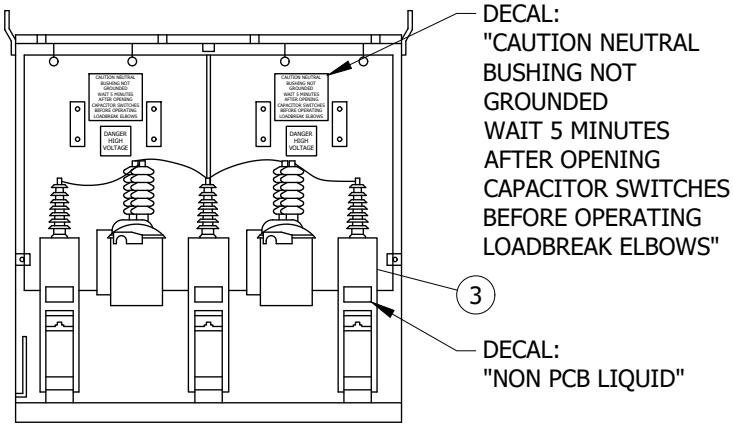

FIGURE 3
BACK VIEW
EXPOSED

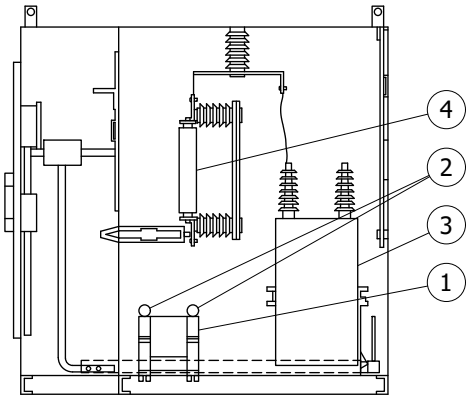

FIGURE 3
SIDE VIEW
EXPOSED

INSTALLATION: NONE

BILL OF MATERIALS:

ITEM	DESCRIPTION	QUANTITY	STANDARD PAGE	STOCK NUMBER	DESIGN UNITS
1	TRANSFORMER (P.T), 12KV	1	3821	S762714	--
2	FUSE, CURRENT-LIMITING 0.5 AMP, 14.4 KV - GE TYPE J-1	2	--	S366456	--
3	CAPACITOR, 400 KVAR, 7200V, SINGLE-PHASE	3	3821	S207348	--
4	FUSE, COMBINED TECHNOLOGIES, 15.5 KV, 80 AMP, TYPE X-LIMITER (II)	3	4311	S365695	--

NOTES:

(I) P.T. TRANSFORMER FUSES, GE TYPE J-1 ARE THE SAME FOR NEW AND OLD STYLE CAPACITORS.
(II) NEW STYLE 3-80A, COMBINED TECHNOLOGY FUSES TYPE X LIMITER. (a)
(III) 6-45A, MCGRAW EDISON FUSES TYPE NXC: S365718. (b)

REFERENCE:

(a) REFER TO UG3821.
(b) REFER TO FMO UG3899.201-203.

© 1998 - 2020 San Diego Gas & Electric Company. All rights reserved. Removal of this copyright notice without permission is not permitted under law.

REV	CHANGE	DR	BY	DSN	APV	DATE	REV	CHANGE	DR	BY	DSN	APV	DATE
C							F						
B	FORMATTING	EDM	JIK	-	-	9/28/2020	E						
A	REVISION	-	-	-	RSW/RDJ	1/1/1996	D						

X Indicates Latest Revision | Completely Revised | New Page | Information Removed

SDG&E ELECTRIC UNDERGROUND CONSTRUCTION STANDARDS

1200 KVAR PAD-MOUNTED CAPACITOR

UG4309.1

TABLE OF CONTENTS

SCOPE: THIS STANDARD PROVIDES INSTALLATION INSTRUCTIONS FOR THE SML-4Z FUSE CONVERSION KIT FOR THE PME 9 AND 11 SWITCH TRANSFUSER DOOR.

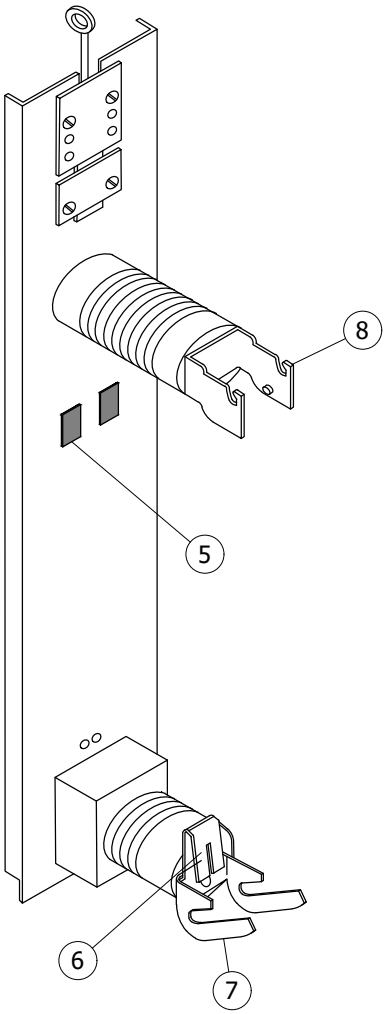

FIGURE 1
CURRENT LIMITING

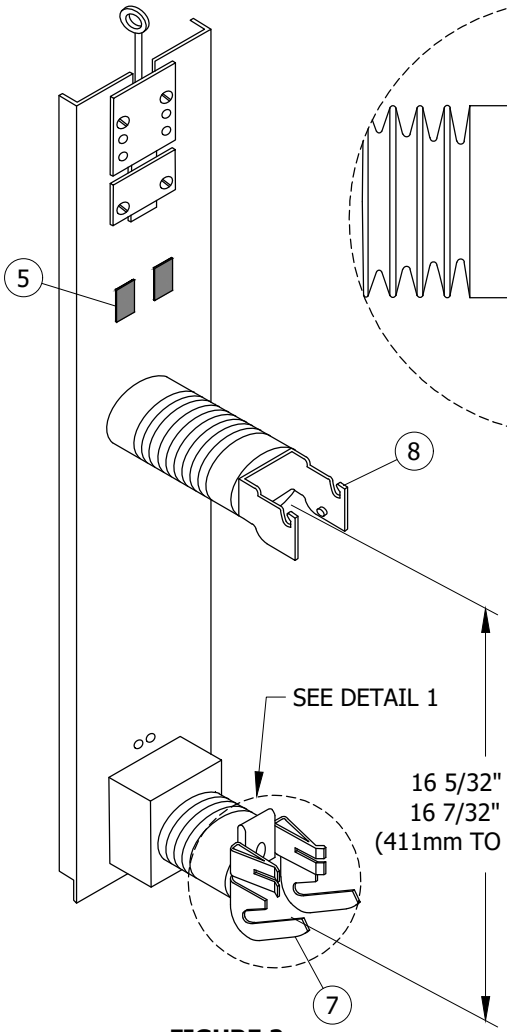

FIGURE 2
SM-4

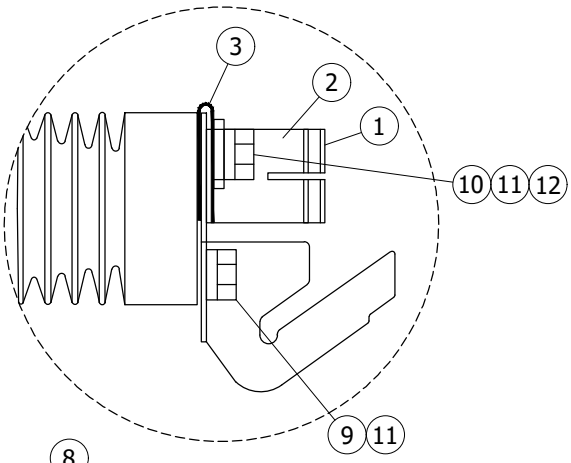

DETAIL 1

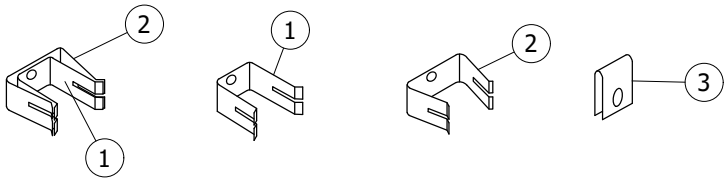

FIGURE 3 (K)

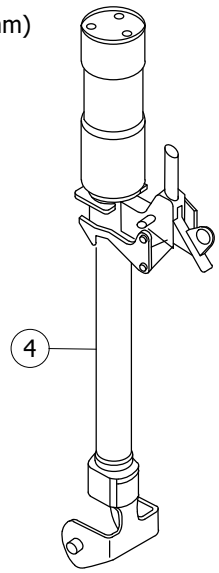

FIGURE 4

TABLE OF CONTENTS

© 1998 - 2023 San Diego Gas & Electric Company. All rights reserved. Removal of this copyright notice without permission is not permitted under law.

REV	CHANGE	DR	BY	DSN	APV	DATE	REV	CHANGE	DR	BY	DSN	APV	DATE
C	BILL OF MATERIALS UPDATE	GLC	JA	JAS	KRG	04/07/2023	F						
B	FORMATTING	EDM	JIK	-	-	9/28/2020	E						
A	REVISION	-	-	-	RSW/CAK	01/01/2000	D						

X Indicates Latest Revision | Completely Revised | New Page | Information Removed

SDG&E ELECTRIC UNDERGROUND CONSTRUCTION STANDARDS

SHEET 1 OF 2

CURRENT LIMITING TO SM-4
FUSE CONVERSION FOR PME SWITCH

UG4310.1

INSTALLATION:

A. IF THIS WORK IS TO BE DONE IN THE FIELD ON AN ENERGIZED SWITCH, IT MUST BE DE-ENERGIZED AND ALL CABLES GROUNDED.

B. OPEN THE THREE TRANSFUSER DOORS TO BE CONVERTED.

(C) REMOVE PLUGS FROM PRE-DRILLED HOLES IN TRANSFUSER DOOR.

D. RELOCATE THE UPPER INSULATOR WITH LATCH BRACKET TO LOWER SET OF HOLES. REUSE EXISTING HARDWARE. TIGHTEN THE BOLTS.

(E) REMOVE THE LOWER FUSE CONTACT AND INSTALL ITEMS 1, 2 & 3. MAKE SURE ITEM 3 IS INSTALLED WITH ONE LEG BEHIND THE HINGE BRACKET AND THE OTHER LEG OVER THE CONTACT AND CONTACT BACKUP.

(F) REPLACE PLUGS.

G. INSTALL THE FUSE HOLDER. MAKE SURE THAT THE FUSE MAKES GOOD CONTACT WITH THE CONTACT ASSEMBLY.

H. CHECK THAT THE FUSE HOLDER LATCHES CORRECTLY. IT IS NORMAL FOR THE FUSE HOLDER TO MOVE SLIGHTLY AT THE LATCHING END.

J. ONCE ADJUSTMENT IS ACHIEVED, TIGHTEN HARDWARE TO 35-40 FT/LBS.

(K) SNAP THE CONTACT BACKUP ITEM 2 OVER THE CONTACT ITEM 1 PRIOR TO INSTALLING ON HINGE BRACKET.

BILL OF MATERIALS:

ITEM	DESCRIPTION	QUANTITY	STANDARD PAGE	STOCK NUMBER	DESIGN UNITS
1	CONTACT	3	--	S442944	CL-SM4 (I)
2	CONTACT BACKUP	3	--		
3	SHUNT (E)	3	--		
4	HOLDER, FUSE	3	--		
5	PLUGS (C)(F)	AS REQ'D	--	--	--
6	CONTACT, FUSE	AS REQ'D	UG4313.1	--	--
7	BRACKET, HINGE	AS REQ'D	--	--	--
8	BRACKET, LATCH	AS REQ'D	--	--	--
9	SCREW, HEX CAP, 3/8"-16 X 1"	AS REQ'D	--	--	--
10	SCREW, HEX CAP, 3/8"-16 X 1 1/4"	AS REQ'D	--	--	--
11	WASHER, LOCK, STD., 3/8"	AS REQ'D	--	--	--
12	WASHER, FLAT, STD., 3/8"	AS REQ'D	--	--	--

NOTES:

(I) DESIGN UNIT CL-SM4 ORDERS ENOUGH MATERIAL FOR 3 FUSES OR ONE COMPARTMENT.

REFERENCE: NONE

TABLE OF CONTENTS

© 1998 - 2023 San Diego Gas & Electric Company. All rights reserved. Removal of this copyright notice without permission is not permitted under law.

REV	CHANGE	DR	BY	DSN	APV	DATE	REV	CHANGE	DR	BY	DSN	APV	DATE
C	BILL OF MATERIALS UPDATE	GLC	JA	JAS	KRG	04/07/2023	F						
B	FORMATTING	EDM	JIK	-	-	9/28/2020	E						
A	REVISION	-	-	-	RSW/CAK	01/01/2000	D						

SCOPE: THIS STANDARD DESCRIBES THE VARIOUS TYPES OF FUSES USED ON THE UNDERGROUND DISTRIBUTION SYSTEM.

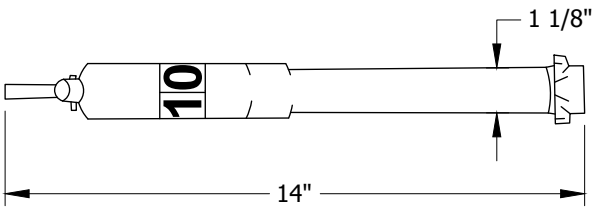

FIGURE 1
COOPER POWER SYSTEMS/ MC-GRAW EDISON
TYPE NX

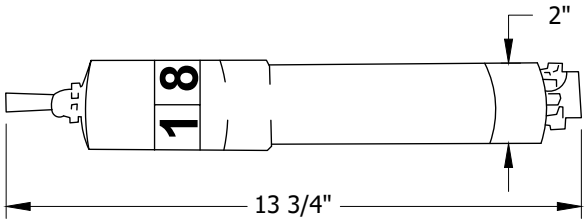

FIGURE 2
COOPER POWER SYSTEMS/ MC-GRAW EDISON
TYPE NX

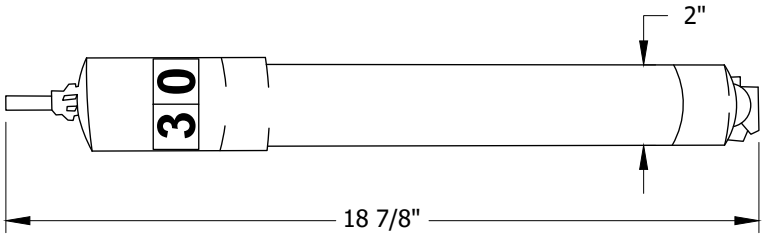

FIGURE 3
COOPER POWER SYSTEMS/ MC-GRAW EDISON
TYPE NX

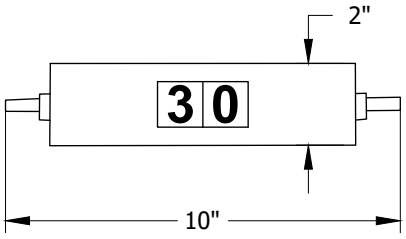

FIGURE 4
COOPER POWER SYSTEMS/ MC-GRAW EDISON
TYPE NX

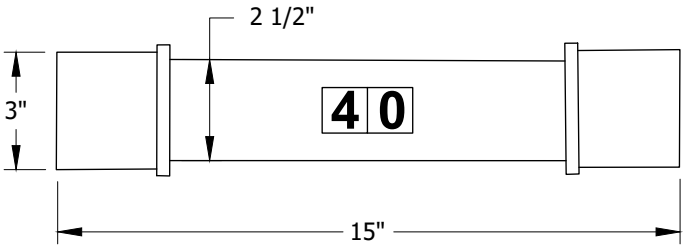

FIGURE 5
MERSEN/ GENERAL ELECTRIC
TYPE EJO-1 & COMBINED TECHNOLOGIES TYPE EOD

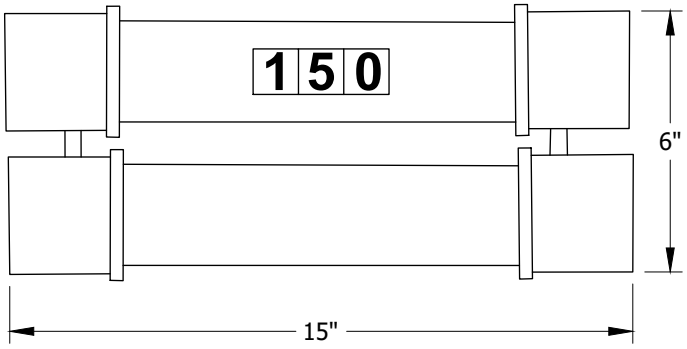

FIGURE 6
MERSEN/ GENERAL ELECTRIC
TYPE EJO-1

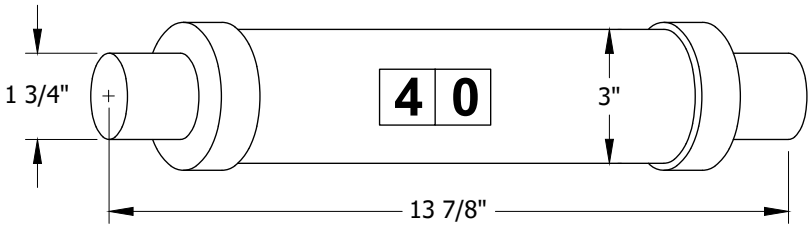

FIGURE 7
COOPER POWER SYSTEMS/ BUSSMANN

© 1998 - 2020 San Diego Gas & Electric Company. All rights reserved. Removal of this copyright notice without permission is not permitted under law.

REV	CHANGE	DR	BY	DSN	APV	DATE	REV	CHANGE	DR	BY	DSN	APV	DATE
C	TABLE UPDATES	-	KR	JS	MDJ	1/25/2017	F						
B	EDITORIAL CHANGES	-	JBH	JBH	MDJ	8/11/2016	E						
A	TABLE UPDATE	-	JS	TR	MDJ	5/24/2016	D	FORMATTING	EDM	JIK	-	-	9/28/2020

TABLE OF CONTENTS

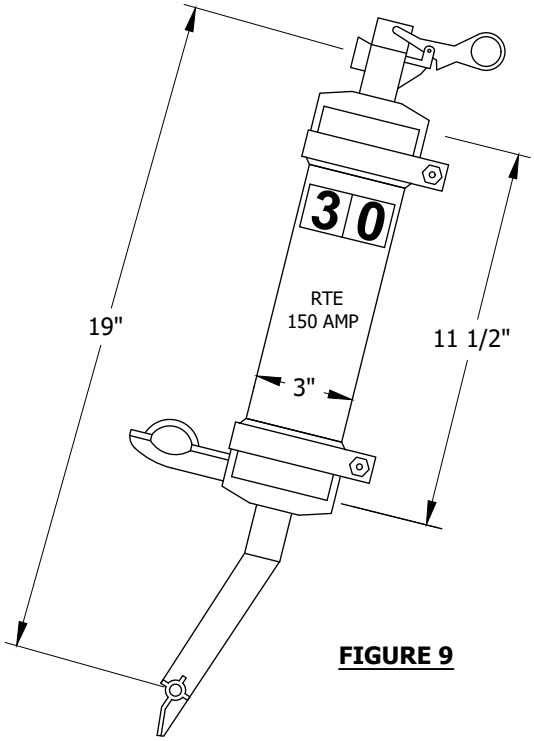

FIGURE 9

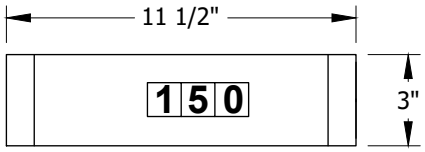

FIGURE 8
RTE TYPE B, COOPER POWER HX-XLIMITER, & COMBINED TECHNOLOGIES TYPE BOI, 150 AMP

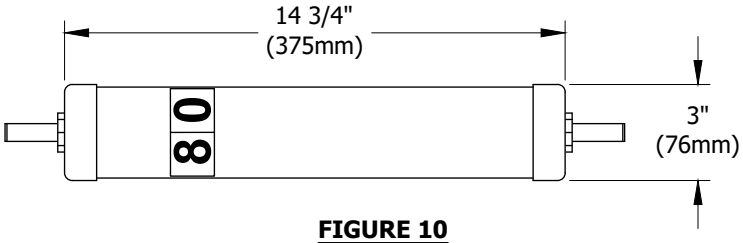

FIGURE 10
COOPER POWER SYSTEMS/ COMBINED TECHNOLOGIES 80 AMP X-LIMITER

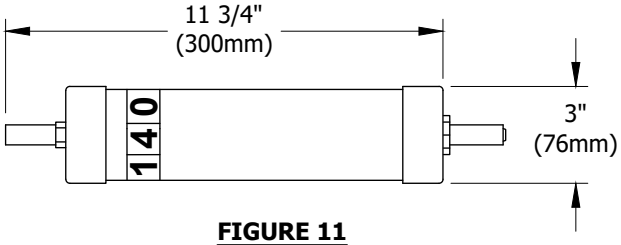

FIGURE 11
140 AMP X-LIMITER CURRENT LIMITING FUSE

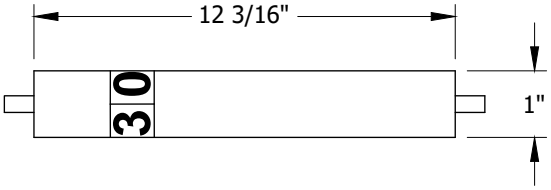

FIGURE 12
30 AMP FULL-RANGE CURRENT LIMITING FUSE USED WITH FUSE TEST CANISTER/FTC

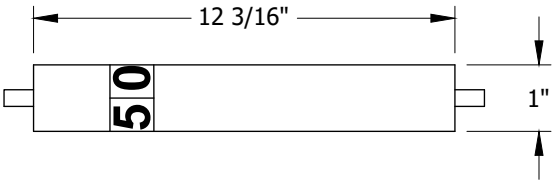

FIGURE 13
50 AMP FULL-RANGE CURRENT LIMITING FUSE USED WITH VACUUM-SWITCH CIRCUIT TESTER/VCT

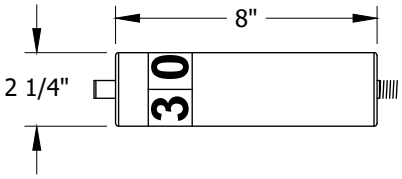

FIGURE 14
30 AMP FULL-RANGE CURRENT LIMITING FUSE USED WITH FUSED ELBOW

INSTALLATION: NONE

BILL OF MATERIALS: NONE

NOTES: NONE

REFERENCE: NONE

© 1998 - 2020 San Diego Gas & Electric Company. All rights reserved. Removal of this copyright notice without permission is not permitted under law.

REV	CHANGE	DR	BY	DSN	APV	DATE	REV	CHANGE	DR	BY	DSN	APV	DATE
C	TABLE UPDATES	-	KR	JS	MDJ	1/25/2017	F						
B	EDITORIAL CHANGES	-	JBH	JBH	MDJ	8/11/2016	E						
A	TABLE UPDATE	-	JS	TR	MDJ	5/24/2016	D	FORMATTING	EDM	JIK	-	-	9/28/2020

TABLE OF CONTENTS

SCOPE: THIS STANDARD PROVIDES A TABLE OF CURRENT-LIMITING FUSES AND SOLID BLADES.

TABLE 1

CURRENT-LIMITING FUSE & SOLID BLADE TABLE

MANUFACTURER	NOMINAL VOLTAGE (KV)	RATING CONTINUOUS CURRENT (AMP)			INTERRUPTING SYMMETRICAL CURRENT (AMP)	FIGURE NUMBER (a)	CATALOG NUMBER	STOCK NUMBER	DESIGN UNITS
COOPER POWER SYSTEMS/ TYPE NX	8.3	8	K	--	50,000	1	FA3A8	S367936	--
		10		--			FA3A10	S368032	--
		12		--			FA3A12	S367616	--
		18		--		2	FA3A18	S367680	--
		25		--			FA3A25	S367776	--
		30		--			FA3A30	S367840	--
		40		--			FA3A40	S367904	--
	--	200	--	--	--	--	FA1B1	S139552	SB200N
	8.3	25	K	--	50,000	4	FA3H25	S365684	--
		30		--			FA3H30	S365688	--
		40		--			FA3H40	S365692	--
		8		--		--	FC11Y8	S367968	--
	15.5	8	K	--	50,000	3	FA4A8	S368000	--
		10		--			FA4A10	S367552	--
		12		--			FA4A12	S367584	--
		18		--			FA4A18	S367648	--
		20		--			FA4A20	S367712	--
		25		--			FA4A25	S367744	--
		30		--			FA4A30	S367808	--
		40		--			FA4A40	S367872	--
	--	200	--	--	--	--	FA3B1	S139488	--
MERSEN/TYPE EJO-1	8.3	30	G	--	80,000	5	9F60FJE030	S365714	EJO-30
		40		--			9F60FJE040	S365716	EJO-40
		65		--			9F60FJE065	S365720	EJO-65
		80		--			9F60FJE080	S365722	EJO-80
		100		H			9F60FJE100	S365724	EJO100
		150		--		6	9F60HJE150	S365725	EJO150
		200		--			9F60HJE200	S365726	EJO200
	--	200	--	--	--	--	(C)	S368034	SB200E
									12/6.9KV / 4KV
COOPER POWER SYSTEMS/TYPE EOD	8.3	40	G	--	80,000	5	83F40-EOD	S365716	EJO-40 / 40CL4
		65		--			83F65-EOD	S365720	EJO-65 / 65CL4
		80		--			83F080-EOD	S365722	EJO-80 / 80CL4
		100		--			83F100-EOD	S365724	EJO100 / 100CL4
		150					83F150-SD	S365725	EJO150 / 150CL4
		200				6	83F200-EOD	S365726	EJO200 / 200CL4
TYPE BOI		150	K	A	40,000	8	83F150-BO1	S365687	CL150W
X-LIMITER	15	80	K	B	50,000	10	155F80-I/I	S365695	--
	8.3	140	K	--	50,000	11	83F140-I/I	S365730	XL-140

© 1998 - 2022 San Diego Gas & Electric Company. All rights reserved. Removal of this copyright notice without permission is not permitted under law.

REV	CHANGE	DR	BY	DSN	APV	DATE	REV	CHANGE	DR	BY	DSN	APV	DATE
C	TABLE UPDATES	-	KR	JS	MDJ	01/25/2017	F						
B	EDITORIAL CHANGES	-	JBH	JBH	MDJ	08/11/2016	E	NOTES UPDATE	EDM	ADW	GLW	KRG	11/07/2022
A	TABLE UPDATE	-	JS	TR	MDJ	05/24/2016	D	MOVED FROM UG4311	EDM	JIK	-	-	09/28/2020

TABLE OF CONTENTS

TABLE 1 (CONT'D)

CURRENT-LIMITING FUSE & SOLID BLADE TABLE									
MANUFACTURER	NOMINAL VOLTAGE (KV)	RATING CONTINUOUS CURRENT (AMP)			INTERRUPTING SYMMETRICAL CURRENT (AMP)	FIGURE NUMBER (a)	CATALOG NUMBER	STOCK NUMBER	DESIGN UNITS
BUSSMANN TYPE SDL	7.2	40	(K)	--	40,000	7	SDL-S-L-40	S365672	CLF40A
		80		--			SDL-S-J-80	S365680	CLF80A
	--	200	--	--	--	--	(C)	S368036	SB200A
COOPER POWER SYSTEMS/ HX-X-LIMITER	8.3	30 (E)	(K)	--	40,000	9	83F030-HX	S365670	CLF30B
		80 (E)		--			83F080-HX	S365681	CLF80B
COOPER POWER SYSTEMS/ RTE TYPE B		150 (D)	--	--		9	(C)	S365691	CL150S
		150 (F)		(A)		8	3575150M01M	S365687	CL150W
BURNDY/T&B TYPE PF8		--		--	--	--	--	--	--
		30		--			PF8-30K	S365723	PF8-30
ELASTIMOLD TYPE EFX		30	--	--	--	12	EFX155030	S365740	--
		50		--		13	EFX155050	S365750	--
		30		--		14	EFX083030	S365698	FE-30A

INSTALLATION:

(A) 150A RTE TYPE B FUSE AND THE 150A COMBINED TECHNOLOGIES TYPE BOI HAVE THE SAME CHARACTERISTICS AND ARE INTERCHANGEABLE. THEY MAY BE COMBINED FOR THREE-PHASE LOAD IN A FUSING CABINET ETC.

(B) THIS FUSE IS TO BE USED FOR REPLACEMENT OF THE NEW STYLE PADMOUNT CAPACITOR WITH (3) 400 KVAR CAPACITORS.

(C) FABRICATED BY SDG&E.

(D) S&C MINI-RUPTER FUSE CABINET, WHICH COMES WITH END FITTINGS. (a)

(E) WHEN KEARNEY TYPE "B" FUSE, WHICH COMES WITH END FITTINGS, IS REQUIRED IN WALL MOUNTED FUSE CABINET. SUBSURFACE FUSE CABINET, 1990 OR NEWER S&C MINI-RUPTER FUSE CABINET, OR PAD MOUNTED PMH 9 & 11 SWITCHGEAR, REMOVE END FITTINGS AND SEND THEM TO KEARNEY SHOP FOR RE-USE. STOCK NUMBER: S351008

(F) COMES WITHOUT END FITTINGS, USED IN WALL MOUNTED FUSE CABINETS, SUBSURFACE FUSE CABINETS, 1990 OR NEWER S&C MINI-RUPTER FUSE CABINET, OR PAD MOUNTED PMH 9 & 11 SWITCHGEAR. (a)

(G) MAY NOT BE USED ON 4KV SYSTEMS, AN 8.3KV RATED G.E. TYPE EJO-1 AND COMBINED TECHNOLOGIES FUSES WILL GENERATE A MAXIMUM ARC PEAK VOLTAGE OF 25KV. THE 12KV SYSTEM CAN WITHSTAND THIS PEAK, WHEREAS THE 4KV SYSTEM MAY NOT.

(H) 100A GENERAL ELECTRIC TYPE EJO-1 FUSE AND THE 150 & 200A COMBINED TECHNOLOGIES TYPE EOD FUSES ARE THE MAXIMUM SIZE ALLOWED IN A SINGLE-PHASE FUSE CABINET DUE TO PHYSICAL CONSTRAINT OF CABINET.

J. DOUBLE BARREL FUSES CAN ONLY BE USED WITH THREE-PHASE FUSE CABINETS.

(K) INSTALL FUSE SIZE WITH DECALS ON EACH FUSE SO IT WILL BE VISIBLE AFTER INSTALLATION. (a)

(L) COMBINED TECHNOLOGIES' FUSES AND GENERAL ELECTRIC-EJO TYPE FUSES, HAVE THE SAME OPERATING CURVE CHARACTERISTICS AND ARE INTERCHANGEABLE. THEY MAY BE COMBINED FOR THREE-PHASE LOAD IN PAD MOUNTED FUSE CABINETS, SUBSURFACE FUSE CABINETS, 1990 OR NEWER S&C MINI-RUPTER FUSE CABINETS, OR PAD MOUNTED PMH 9 & 11 SWITCHGEAR. (a)

BILL OF MATERIALS: NONE

NOTES: NONE

REFERENCE:

(a) FOR FIGURES, SEE UG4311.

© 1998 - 2022 San Diego Gas & Electric Company. All rights reserved. Removal of this copyright notice without permission is not permitted under law.

REV	CHANGE	DR	BY	DSN	APV	DATE	REV	CHANGE	DR	BY	DSN	APV	DATE
C	TABLE UPDATES	-	KR	JS	MDJ	01/25/2017	F						
B	EDITORIAL CHANGES	-	JBH	JBH	MDJ	08/11/2016	E	NOTES UPDATE	EDM	ADW	GLW	KRG	11/07/2022
A	TABLE UPDATE	-	JS	TR	MDJ	05/24/2016	D	MOVED FROM UG4311	EDM	JIK	-	-	09/28/2020

SCOPE: THIS STANDARD PROVIDES A TABLE OF EXPULSION FUSES.

TABLE 1

EXPULSION FUSE TABLE						
MANUFACTURER	**NOMINAL VOLTAGE (KV)**	**RATING CONTINUOUS CURRENT (AMP)**	**INTERRUPTING SYMMETRICAL CURRENT (AMP)**	**CATALOG NUMBER**	**STOCK NUMBER**	**DESIGN UNITS**
GENERAL ELECTRIC [FOR USE IN D&W (G.E.) OIL FUSED CUTOUTS] 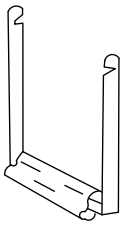 FUSE	5.2	6	(B)	9F57CAA006	S466752	DW-006
		10		9F57CAA010	S466400	DW-010
		15		9F57CAA015	S466496	DW-015
		20		9F57CAA020	S466560	DW-020
		25		9F57CAA025	S466624	DW-025
		30		9F57CAA030	S466656	DW-030
		40		9F57CAA040	S466720	DW-040
		50		9F57CAA050	S466784	DW-050
		65		9F57CAA065	S466816	DW-065
		75		9F57CAA075	S466848	DW-075
		100		9F57CAA100	S466432	DW-100
		125		9F57CAA125	S466464	DW-125
		150		9F57CAA150	S466528	DW-150
		200		9F57CAA200	S466592	DW-200
		300		9F57BAA300	S466688	DW-300
S&C (FOR USE IN SM-4 HOLDER)	14.4	10	12,500 BASED ON X/R=15	122015R4	S366976 (A)	SM4-10
		15		122025R4	S367104 (A)	SM4-15
		30		122050R4	S367232 (A)	SM4-30
		40		122060R4	S367248 (A)	SM4-40
		50		122075R4	S367296 (A)	SM4-50
		65		122100R4	S367328 (A)	SM4-65
		80		122125R4	S367392 (A)	SM4-80
		100		122150R4	S367008 (A)	SM4100
		125		122200R4	S367040 (A)	SM4125
		150		122250R4	S367136 (A)	SM4150
		200		122300R4	S367168 (A)	SM4200
		SNUFFLER		--	S657408	--
		200 (D)	--	(E)	S368060	--
SM-4 HOLDER		--	--	86632	S413248	--
S&C (FOR USE IN SM-5 HOLDER)	14.4	100	25,000 BASED ON X/R=15 (C)	132150R4	S367424 (A)	SM5100
		150		132250R4	S367456 (A)	SM5150
		200		132300R4	S367488 (A)	SM5200
SM-5 HOLDER		--	--	86152RZ	S413280	--

© 1998 - 2020 San Diego Gas & Electric Company. All rights reserved. Removal of this copyright notice without permission is not permitted under law.

REV	CHANGE	DR	BY	DSN	APV	DATE	REV	CHANGE	DR	BY	DSN	APV	DATE
C	TABLE UPDATES	-	KR	JS	MDJ	1/25/2017	F						
B	EDITORIAL CHANGES	-	JBH	JBH	MDJ	8/11/2016	E						
A	TABLE UPDATE	-	JS	TR	MDJ	5/24/2016	D	MOVED FROM UG4311	EDM	JIK	-	-	9/28/2020

TABLE OF CONTENTS

INSTALLATION:

(A) FOR FUSING AND REFUSING TRANSFORMERS, S&C THREE-PHASE FUSED SWITCHING CABINETS AND VAULT ASSEMBLIES. THE S&C THREE-PHASE FUSED SWITCHING CABINETS USE EITHER AN SM-4 OR SM-5 FUSE ASSEMBLY WHICH DIFFER IN OVERALL SIZE. THEY ARE NOT INTERCHANGEABLE.

(B) INTERRUPTING SYMMETRICAL CURRENT (AMP) RATING FOR G.E. (D&W) OIL CUTOUTS ARE: 3,100 A FOR 100 A CUTOUT, 6,200 A FOR 200 A CUTOUT, AND 6,400 A FOR 300 A CUTOUT BASED ON X/R RATIO OF MORE THAN 4. FOR X/R RATIOS OF LESS THAN 4, THE SYMMETRICAL INTERRUPTION RATINGS ARE: 4,100 A FOR 100 A, 8,300 A FOR 200A AND 8,540 A FOR 300 A CUTOUTS.

(C) SYMMETRICAL INTERRUPTION RATINGS OF S&C FUSES FOR X/R=10 IS 27,400 A AND FOR X/R=5 IS 32,000 A.

(D) SOLID BLADE.

(E) FABRICATED BY SDG&E.

BILL OF MATERIALS: NONE

NOTES: NONE

REFERENCE: NONE

TABLE OF CONTENTS

© 1998 - 2020 San Diego Gas & Electric Company. All rights reserved. Removal of this copyright notice without permission is not permitted under law.

REV	CHANGE	DR	BY	DSN	APV	DATE	REV	CHANGE	DR	BY	DSN	APV	DATE
C	TABLE UPDATES	-	KR	JS	MDJ	1/25/2017	F						
B	EDITORIAL CHANGES	-	JBH	JBH	MDJ	8/11/2016	E						
A	TABLE UPDATE	-	JS	TR	MDJ	5/24/2016	D	MOVED FROM UG4311	EDM	JIK	-	-	9/28/2020

SCOPE: THIS STANDARD PROVIDES A TABLE OF FUSES USED FOR TRANSFORMERS.

TABLE OF CONTENTS

TABLE 1

LIVE FRONT TRANSFORMER FUSING TABLE TYPE "NX" FUSE UNITS			
TRANSFORMER RATING (KVA)	FUSE SIZE (AMPS)		
	SINGLE PHASE		THREE PHASE
	6.9KV	12KV	12KV
15	8	8	-
25			-
30	-		8
37.5	10		-
45	-		8
50	12		-
75	18	10	8
100	25	12	-
112.5	-	-	12
150	-	-	12
167	30	20	-
225	-	-	18
250	-	30	-
300	-	-	25
333	-	30	-
500	-	-	40
750	-	-	2-25
1,000	-	-	2-30

TABLE 2

LIVE FRONT TRANSFORMER FUSING TABLE THREE-PHASE, 12KV TYPE SM-4 RATED 14.4KV	
TRANSFORMER RATING (KVA)	FUSE SIZE (AMPS)
1,500	125
2,000	150
2,500, 3,000	200

TABLE 3

D & W (G.E.) CUTOUT FUSES FOR 4KV-WS, WSV, WUS TRANSFORMER		
FIGURE	TRANSFORMER RATING (KVA)	FUSE SIZE (AMPS)
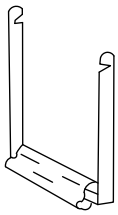 FUSE	5	6
	7.5	6
	10	10
	15	10
	25	15
	30	20
	37.5	25
	50	30
	75	50
	100	75
	167	100

TABLE 4

REPLACEMENT FUSE FOR SUBSURFACE TRANSFORMER (HSS) (HTS) (CURRENT LIMITING)			
TRANSFORMER RATING (KVA)	AMPS	FUSE RATING (KVA)	STOCK NUMBER
25	6	15.5	S365682
50	10		S365686
75	12		S365690
100	15		S365712

TABLE 5

REPLACEMENT FUSE FOR BAY-O-NET						
TRANSFORMER		FUSE CATALOG NUMBER				STOCK NUMBER
KV	KVA	KEARNY	AMPS	CPS	AMPS	
2.4 1PH	25	124080-15	15	4038108C07	15	S363534
	50	124080-30	30	-	-	S363538
	75	-	-	4038108C12	50	S366150
4.16 3PH	75	124080-15	15	4038108C07	15	S363534
	150	124080-30	30	-	-	S363538
	225	-	-	4000353C12	40	S363540
	500	-	-	4000353C16	100	S363546
6.9 1PH (A)	25	124080-6	6	4038108C04	6	S363530
	50	124080-12	12	4038108C06	12	S363532
	75	124080-15	15	4038108C07	15	S363534
	100	124080-25	25	4038108C09	25	S363536
12.0	25	124080-5	5	4038108C03	5	S363528
	45 3PH	124080-5	5	4038108C03	5	S363528
	50	124080-8	8	4038108C05	8	S366138
	75 1PH	124080-12	12	4038108C06	12	S363532
	75 3PH	124080-6	6	4038108C04	6	S363530
	100 1PH	124080-15	15	4038108C07	15	S363534
	167 1PH	124080-12	12	4038108C09	25	S363536
	225	124080-15	15	4038108C07	15	S363534
	250 1PH	-	-	4000353C12	40	S363540
	300	124080-25	25	4038108C09	25	S363536
	500	124080-30	30	4000353C12	40	S353540
	750	-	-	4000353C14	65	S363542
	1,000	-	-	4000353C14	65	S363542
	1,500	-	-	4038361C04CB	100	S366140
	2,000	-	-	4038361C05CB	125	S366142
	2,500	-	-	4038361C05CB	125	S366142
ALL	SLUG	-	-	-	-	S656300

TABLE 6

CLT FUSES FOR WESTINGHOUSE (YP) TRANSFORMERS (FOR REFUSING ONLY)			
TRANSFORMER RATING (KVA)	FUSE SIZE (AMPS)	CATALOG NUMBER	STOCK NUMBER
15	5	678C248G03	S366848
25	5	678C248G03	S366848
37.5	8	678C248G06	S366912
50	12	591C273G03	S366624
75	18	678C276G03	S366688
100	25	678C276G06	S366752
167	30	680C386G01	S366800

© 1998 - 2020 San Diego Gas & Electric Company. All rights reserved. Removal of this copyright notice without permission is not permitted under law.

REV	CHANGE	DR	BY	DSN	APV	DATE	REV	CHANGE	DR	BY	DSN	APV	DATE
C	TABLE UPDATES	-	KR	JS	MDJ	1/25/2017	F						
B	EDITORIAL CHANGES	-	JBH	JBH	MDJ	8/11/2016	E						
A	TABLE UPDATE	-	JS	TR	MDJ	5/24/2016	D	MOVED FROM UG4311	EDM	JIK	-	-	9/28/2020

INSTALLATION:

(A) 6.9KV FUSE MAY ALSO BE USED FOR 7.2KV.

BILL OF MATERIALS: NONE

NOTES: NONE

REFERENCE:

a. SEE DESIGN MANUAL PAGES 6131.1-7 FOR U.G. TRANSFORMER/FUSE COORDINATION TABLES.

TABLE OF CONTENTS

© 1998 - 2020 San Diego Gas & Electric Company. All rights reserved. Removal of this copyright notice without permission is not permitted under law.

REV	CHANGE	DR	BY	DSN	APV	DATE	REV	CHANGE	DR	BY	DSN	APV	DATE
C	TABLE UPDATES	-	KR	JS	MDJ	1/25/2017	F						
B	EDITORIAL CHANGES	-	JBH	JBH	MDJ	8/11/2016	E						
A	TABLE UPDATE	-	JS	TR	MDJ	5/24/2016	D	MOVED FROM UG4311	EDM	JIK	-	-	9/28/2020

SCOPE: THIS STANDARD PROVIDES INFORMATION ON THE MATERIAL AND INSTALLATION OF THE SCHWEITZER ENGINEERING LABORATORIES (SEL) 8301 UNDERGROUND WIRELESS FAULT INDICATOR ON THE ELECTRIC DISTRIBUTION SYSTEM.



FIGURE 1
SEL 8301
UNDERGROUND WIRELESS FAULT INDICATOR (A)

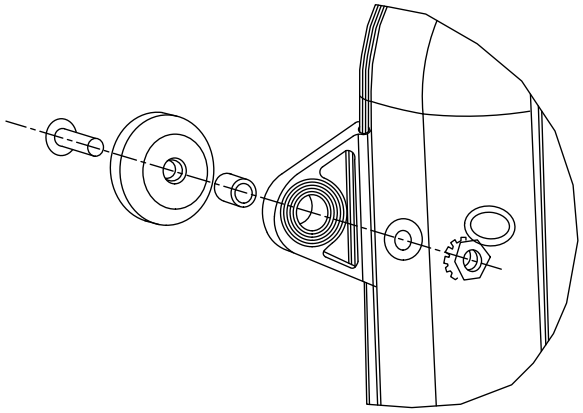

FIGURE 2
MAGNETIC MOUNTING KIT ASSEMBLY (A)

ATTENTION:

* FOR INSTALLATION IN A MAGNETIC STEEL PAD-MOUNT ENCLOSURE, USE THE PROVIDED MAGNETIC MOUNTING KIT. FOR INSTALLATION TO A NONMAGNETIC SURFACE, SKIP TO SECTION 4.2.1.8, STEP 7 OF THE ESP 246.

© 1998 - 2020 San Diego Gas & Electric Company. All rights reserved. Removal of this copyright notice without permission is not permitted under law.

REV	CHANGE	DR	BY	DSN	APV	DATE	REV	CHANGE	DR	BY	DSN	APV	DATE
C							F						
B	FORMATTING	EDM	JIK	-	-	9/28/2020	E						
A	ORIGINAL VERSION	EDM	JES	JES	CZH	1/14/2020	D						

X Indicates Latest Revision | Completely Revised | New Page | Information Removed

SDG&E ELECTRIC OVERHEAD CONSTRUCTION STANDARDS

SEL 8301 WIRELESS FAULT INDICATOR

UG4344.1

TABLE OF CONTENTS

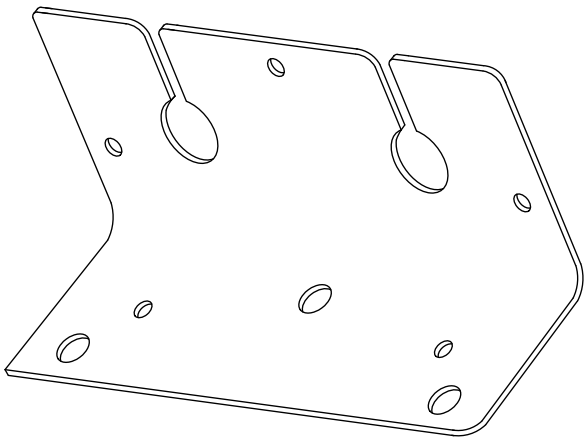

FIGURE 3
REMOTE ANTENNA BRACKET (A)

ATTENTION:

* USE THE MOUNTING HOLES SHOWN TO ATTACH THE MAGNETIC MOUNTS TO THE REMOTE ANTENNA BRACKET.

TABLE OF CONTENTS

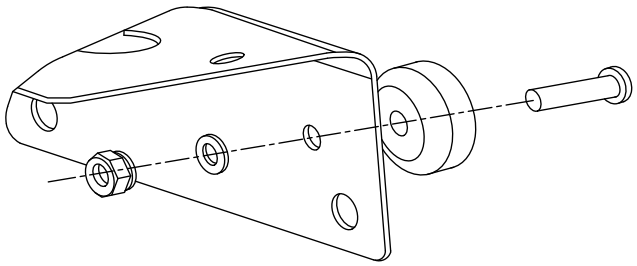

FIGURE 4
ANTENNA BRACKET MAGNETIC MOUNTING KIT ASSEMBLY (A)

© 1998 - 2020 San Diego Gas & Electric Company. All rights reserved. Removal of this copyright notice without permission is not permitted under law.

REV	CHANGE	DR	BY	DSN	APV	DATE	REV	CHANGE	DR	BY	DSN	APV	DATE
C							F						
B	FORMATTING	EDM	JIK	-	-	9/28/2020	E						
A	ORIGINAL VERSION	EDM	JES	JES	CZH	1/14/2020	D						

X Indicates Latest Revision | Completely Revised | New Page | Information Removed

SDG&E ELECTRIC OVERHEAD CONSTRUCTION STANDARDS

SEL 8301 WIRELESS FAULT INDICATOR

UG4344.2

TABLE OF CONTENTS

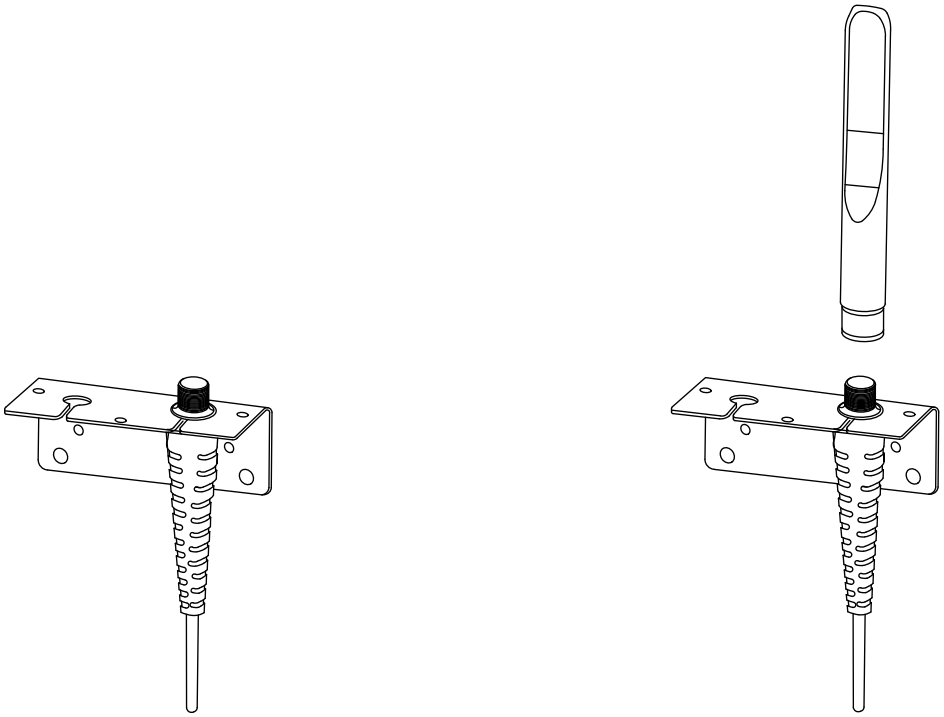

FIGURE 5
PLACE ANTENNA ON CABLE (A)

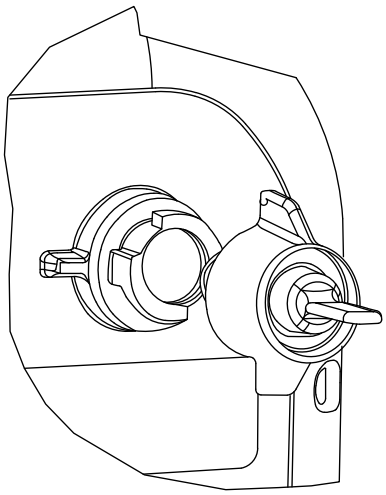

FIGURE 6
PORT PLUG (A)

© 1998 - 2020 San Diego Gas & Electric Company. All rights reserved. Removal of this copyright notice without permission is not permitted under law.

REV	CHANGE	DR	BY	DSN	APV	DATE	REV	CHANGE	DR	BY	DSN	APV	DATE
C							F						
B	FORMATTING	EDM	JIK	-	-	9/28/2020	E						
A	ORIGINAL VERSION	EDM	JES	JES	CZH	1/14/2020	D						

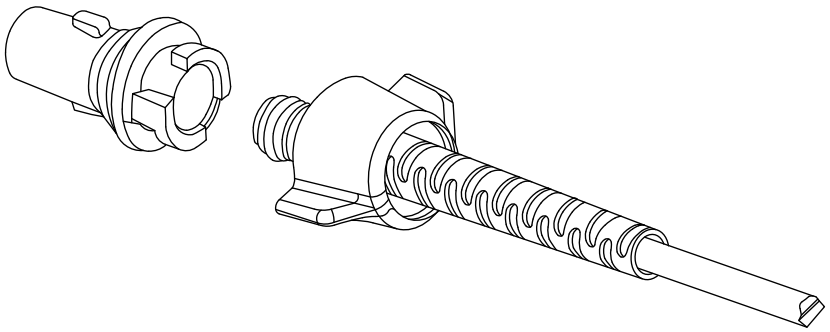

FIGURE 7
REMOVE COVERS FROM ANTENNA CABLES (A)

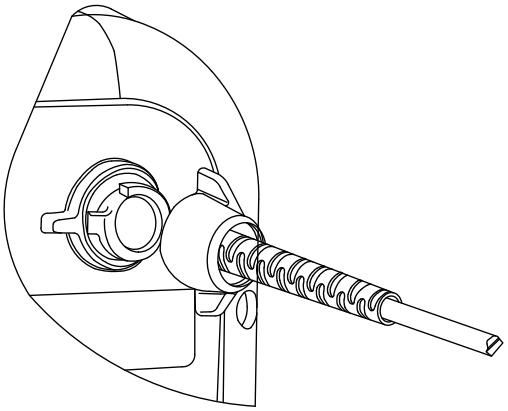

FIGURE 8
PLUG THE ANTENNA CABLE INTO THE FAULT INDICATORS (A)

TABLE OF CONTENTS

© 1998 - 2020 San Diego Gas & Electric Company. All rights reserved. Removal of this copyright notice without permission is not permitted under law.

REV	CHANGE	DR	BY	DSN	APV	DATE	REV	CHANGE	DR	BY	DSN	APV	DATE
C							F						
B	FORMATTING	EDM	JIK	-	-	9/28/2020	E						
A	ORIGINAL VERSION	EDM	JES	JES	CZH	1/14/2020	D						

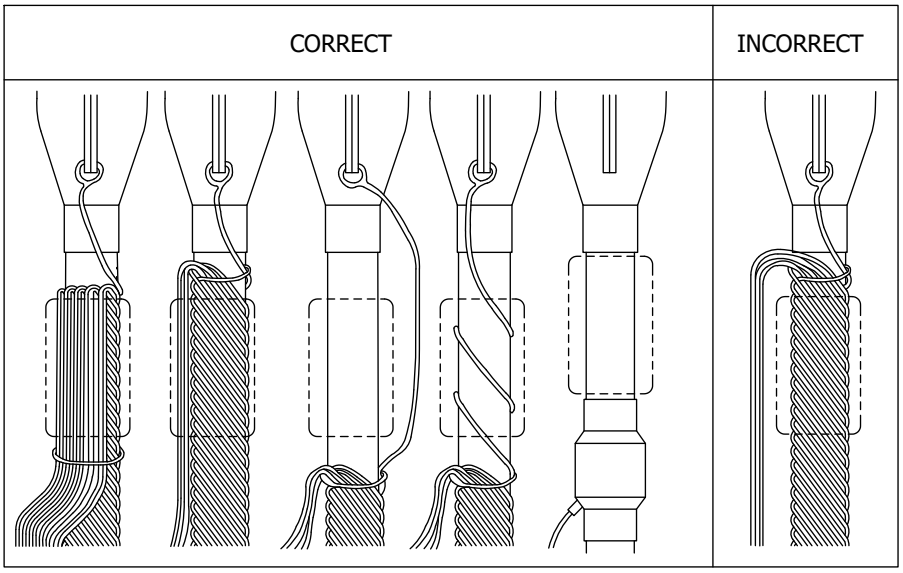

FIGURE 9
CORRECT AND INCORRECT NEUTRAL TRAINING (A)

ATTENTION:

* PROPER CONCENTRIC NEUTRAL TRAINING IS ESSENTIAL FOR PROPER FUNCTION OF THE CURRENT TRANSFORMERS.

** INSTALL THE CURRENT TRANSFORMERS AT GROUND POTENTIAL.

TABLE OF CONTENTS

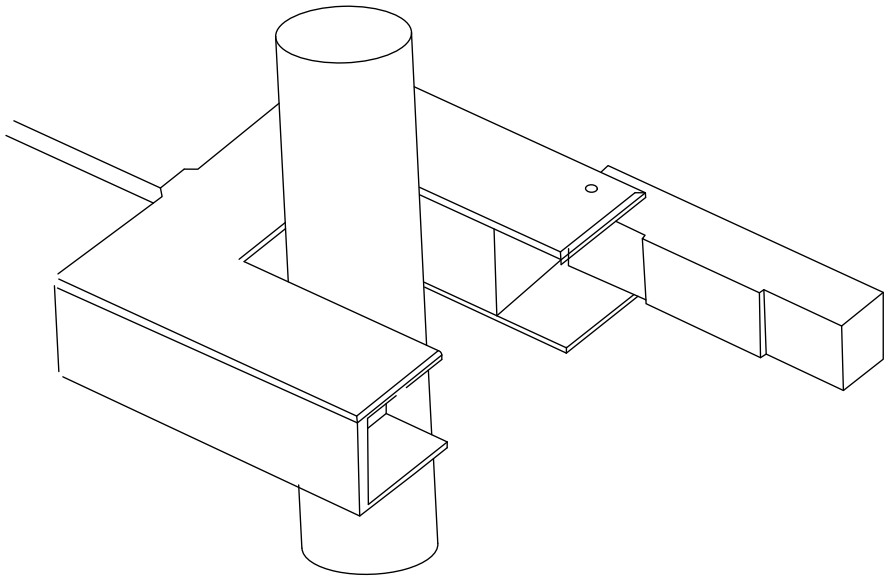

FIGURE 10
CURRENT TRANSFORMER INSTALLATION ON CABLE (A)

© 1998 - 2020 San Diego Gas & Electric Company. All rights reserved. Removal of this copyright notice without permission is not permitted under law.

REV	CHANGE	DR	BY	DSN	APV	DATE	REV	CHANGE	DR	BY	DSN	APV	DATE
C							F						
B	FORMATTING	EDM	JIK	-	-	9/28/2020	E						
A	ORIGINAL VERSION	EDM	JES	JES	CZH	1/14/2020	D						

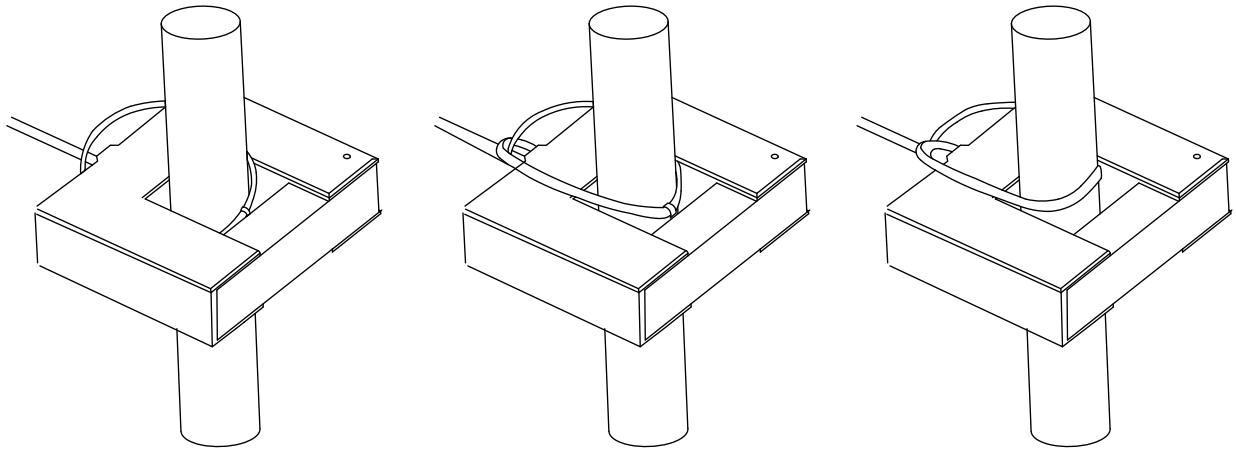

SINGLE CABLE TIE | DOUBLE CABLE TIE | FIGURE-EIGHT CABLE TIE

FIGURE 11
CLOSE AND SECURE THE CURRENT TRANSFORMER TO THE CABLE (A)

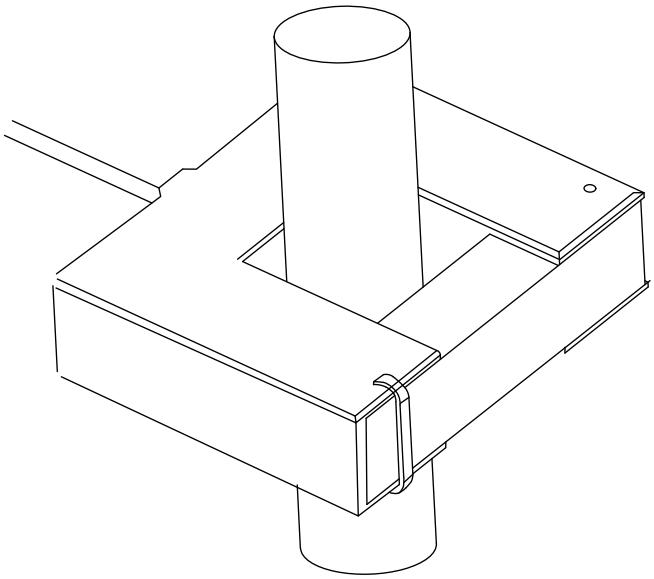

FIGURE 12
LOCK CURRENT TRANSFORMER (A)

© 1998 - 2020 San Diego Gas & Electric Company. All rights reserved. Removal of this copyright notice without permission is not permitted under law.

REV	CHANGE	DR	BY	DSN	APV	DATE	REV	CHANGE	DR	BY	DSN	APV	DATE
C							F						
B	FORMATTING	EDM	JIK	-	-	9/28/2020	E						
A	ORIGINAL VERSION	EDM	JES	JES	CZH	1/14/2020	D						

X Indicates Latest Revision | Completely Revised | New Page | Information Removed

SDG&E ELECTRIC OVERHEAD CONSTRUCTION STANDARDS

SHEET 6 OF 16

SEL 8301 WIRELESS FAULT INDICATOR

UG4344.6

TABLE OF CONTENTS

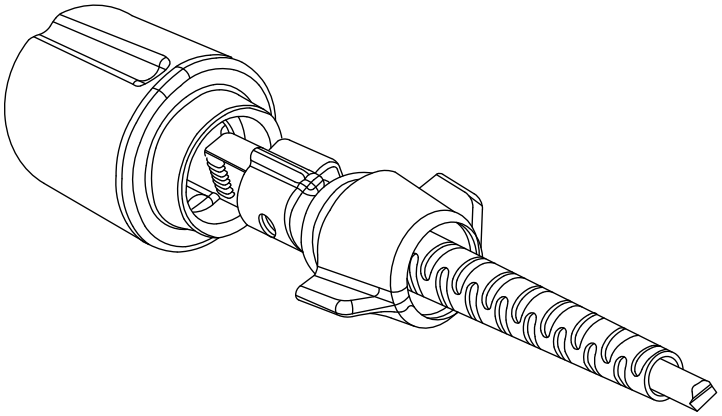

FIGURE 13
REMOVE CAP FROM THE CURRENT TRANSFORMER CABLE PLUG (A)

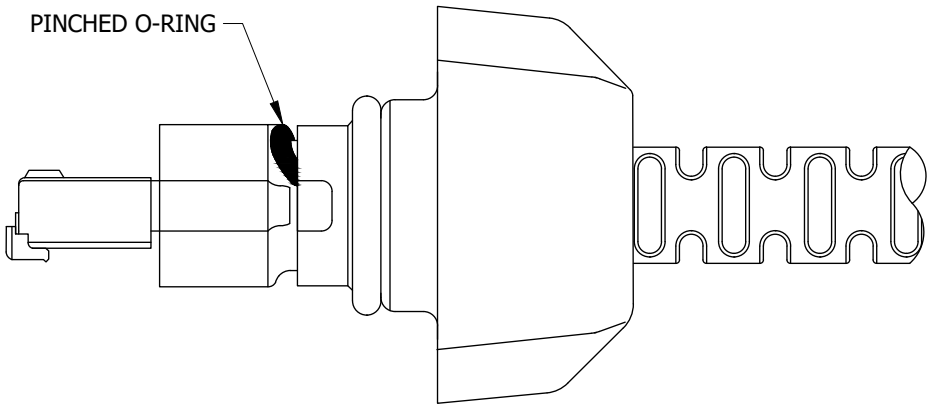

FIGURE 14
PINCHED O-RING (A)

TABLE OF CONTENTS

© 1998 - 2020 San Diego Gas & Electric Company. All rights reserved. Removal of this copyright notice without permission is not permitted under law.

REV	CHANGE	DR	BY	DSN	APV	DATE	REV	CHANGE	DR	BY	DSN	APV	DATE
C							F						
B	FORMATTING	EDM	JIK	-	-	9/28/2020	E						
A	ORIGINAL VERSION	EDM	JES	JES	CZH	1/14/2020	D						

X Indicates Latest Revision | Completely Revised | New Page | Information Removed

TABLE OF CONTENTS

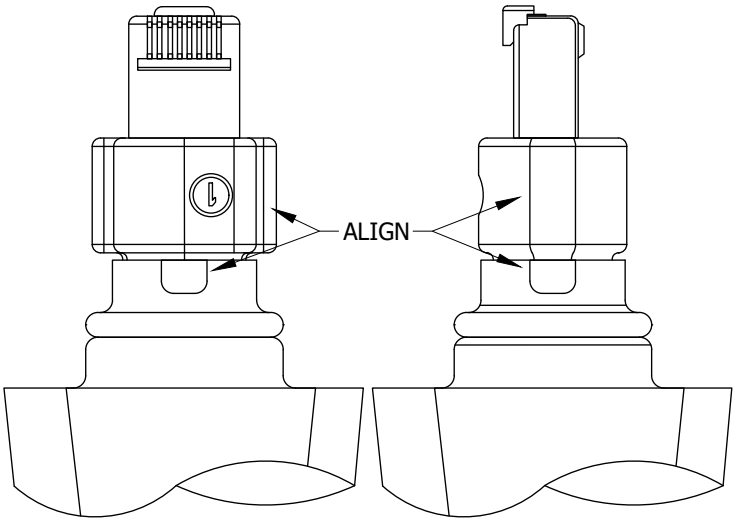

FIGURE 15
CURRENT TRANSFORMER PLUG ALIGNMENT (A)

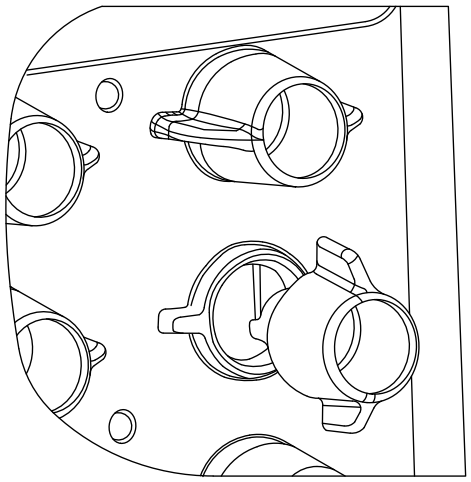

FIGURE 16
CURRENT TRANSFORMER PLUG ALIGNMENT (A)

© 1998 - 2020 San Diego Gas & Electric Company. All rights reserved. Removal of this copyright notice without permission is not permitted under law.

REV	CHANGE	DR	BY	DSN	APV	DATE	REV	CHANGE	DR	BY	DSN	APV	DATE
C							F						
B	FORMATTING	EDM	JIK	-	-	9/28/2020	E						
A	ORIGINAL VERSION	EDM	JES	JES	CZH	1/14/2020	D						

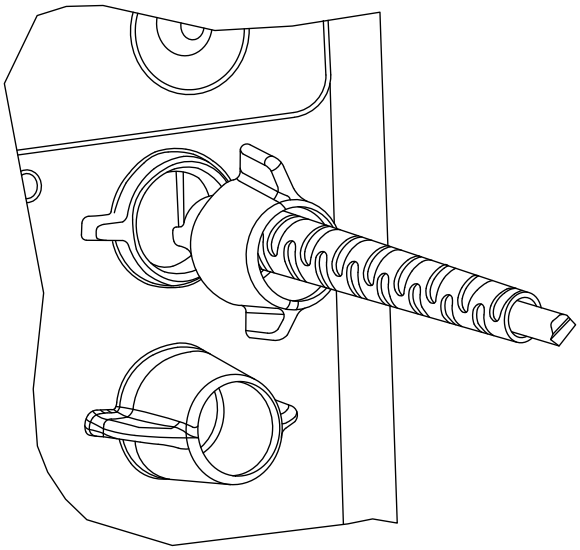

FIGURE 17
INSTALL THE CURRENT TRANSFORMER PLUG (A)

TABLE OF CONTENTS

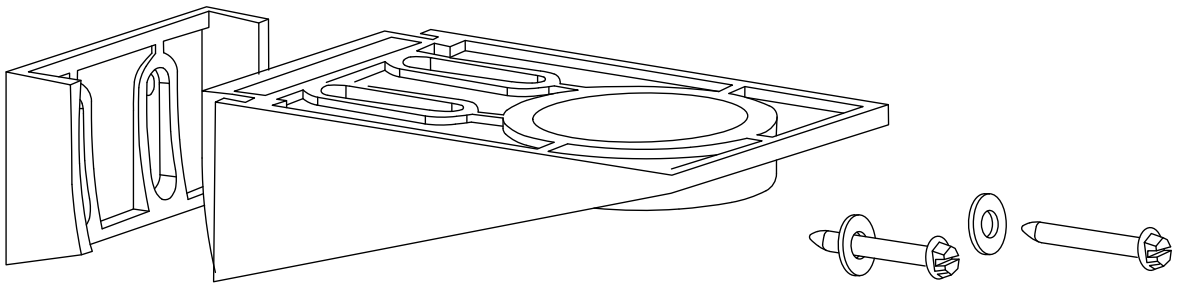

FIGURE 18
WATER DEPTH SENSOR (A)

© 1998 - 2020 San Diego Gas & Electric Company. All rights reserved. Removal of this copyright notice without permission is not permitted under law.

REV	CHANGE	DR	BY	DSN	APV	DATE	REV	CHANGE	DR	BY	DSN	APV	DATE
C							F						
B	FORMATTING	EDM	JIK	-	-	9/28/2020	E						
A	ORIGINAL VERSION	EDM	JES	JES	CZH	1/14/2020	D						

X Indicates Latest Revision | Completely Revised | New Page | Information Removed

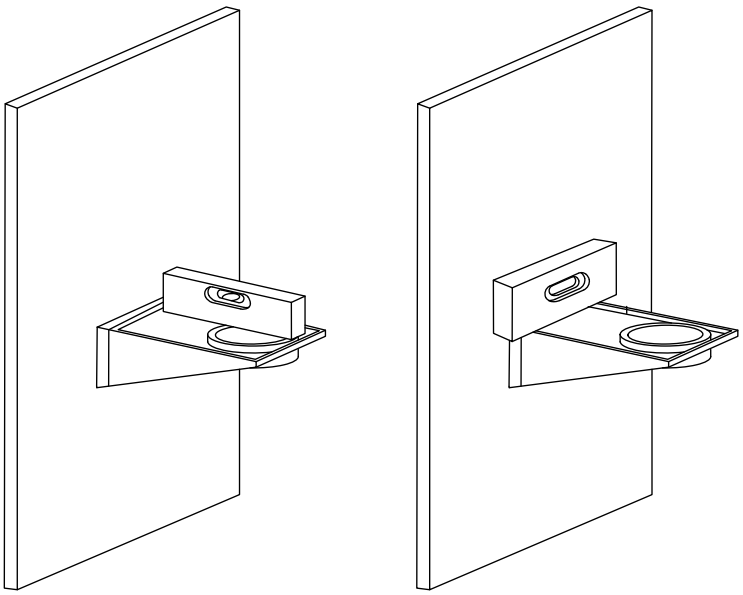

FIGURE 19
WATER DEPTH SENSOR MOUNTING BRACKET (A)

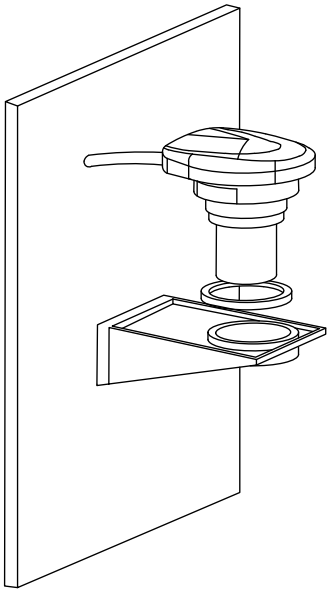

FIGURE 20
INSTALL WDS IN THE MOUNTING BRACKET (A)

TABLE OF CONTENTS

© 1998 - 2020 San Diego Gas & Electric Company. All rights reserved. Removal of this copyright notice without permission is not permitted under law.

REV	CHANGE	DR	BY	DSN	APV	DATE	REV	CHANGE	DR	BY	DSN	APV	DATE
C							F						
B	FORMATTING	EDM	JIK	-	-	9/28/2020	E						
A	ORIGINAL VERSION	EDM	JES	JES	CZH	1/14/2020	D						

TABLE OF CONTENTS

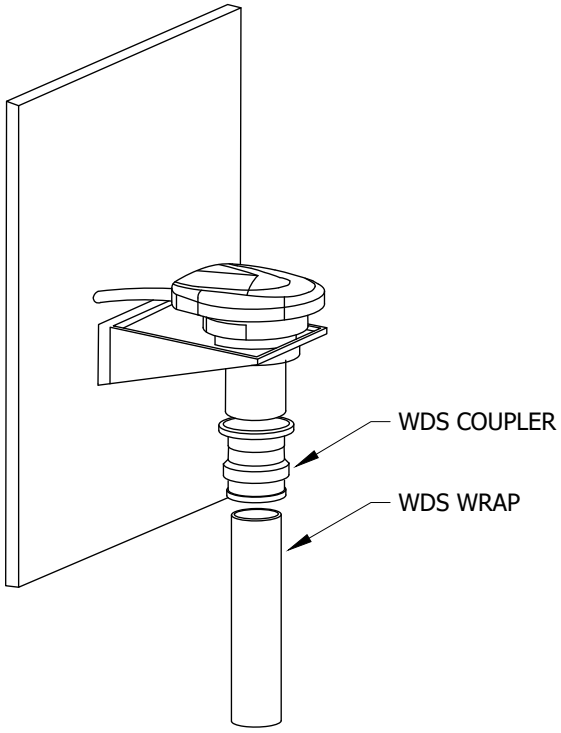

FIGURE 21
MOUNT THE COUPLER AND TRAP TO WDS (A)

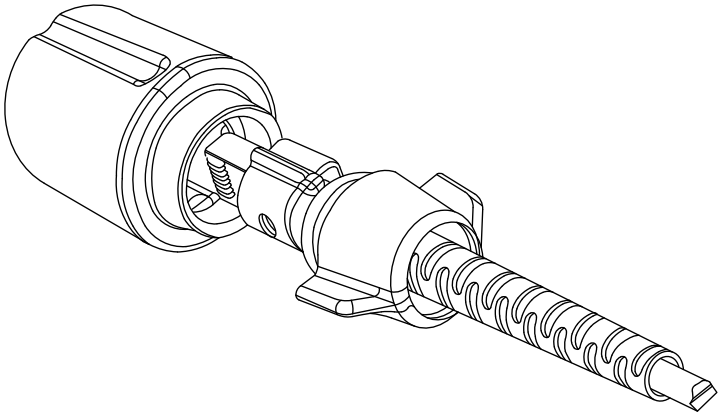

FIGURE 22
REMOVE PROTECTIVE CAP FROM WDS PLUG (A)

© 1998 - 2020 San Diego Gas & Electric Company. All rights reserved. Removal of this copyright notice without permission is not permitted under law.

REV	CHANGE	DR	BY	DSN	APV	DATE	REV	CHANGE	DR	BY	DSN	APV	DATE
C							F						
B	FORMATTING	EDM	JIK	-	-	9/28/2020	E						
A	ORIGINAL VERSION	EDM	JES	JES	CZH	1/14/2020	D						

X Indicates Latest Revision | Completely Revised | New Page | Information Removed

SDG&E ELECTRIC OVERHEAD CONSTRUCTION STANDARDS

SEL 8301 WIRELESS FAULT INDICATOR

UG4344.11

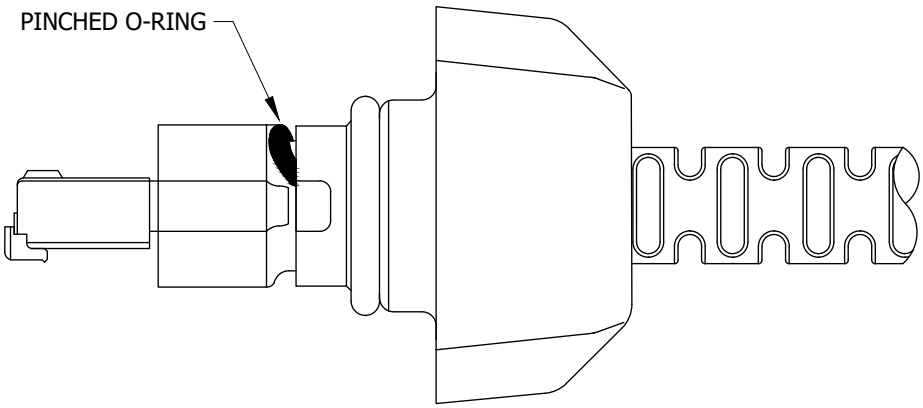

FIGURE 23
INCORRECT INSTALL. PINCHED O-RING (A)

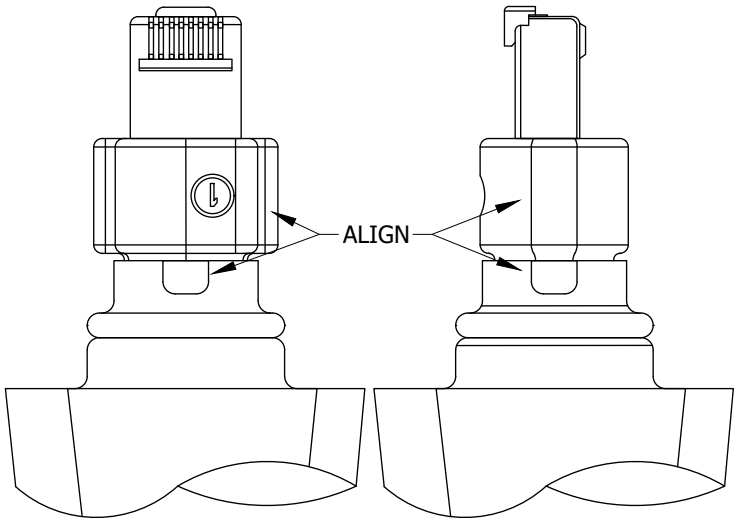

FIGURE 24
INCORRECT INSTALL. PINCHED O-RING
ENSURE THE INNER O-RING IS PROPERLY INSTALLED (A)

© 1998 - 2020 San Diego Gas & Electric Company. All rights reserved. Removal of this copyright notice without permission is not permitted under law.

REV	CHANGE	DR	BY	DSN	APV	DATE	REV	CHANGE	DR	BY	DSN	APV	DATE
C							F						
B	FORMATTING	EDM	JIK	-	-	9/28/2020	E						
A	ORIGINAL VERSION	EDM	JES	JES	CZH	1/14/2020	D						

X Indicates Latest Revision | Completely Revised | New Page | Information Removed

SDG&E ELECTRIC OVERHEAD CONSTRUCTION STANDARDS

SHEET 12 OF 16

SEL 8301 WIRELESS FAULT INDICATOR

UG4344.12

TABLE OF CONTENTS

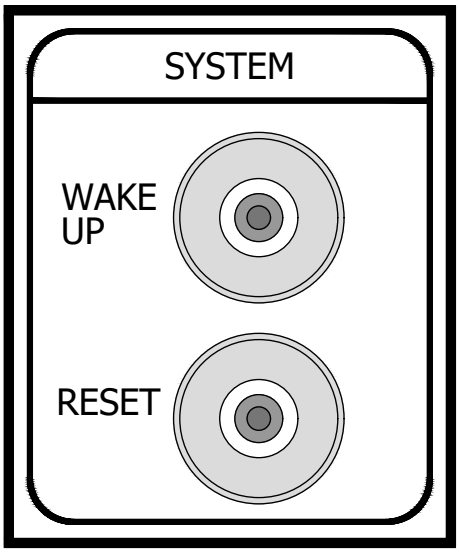

FIGURE 25
ACTIVATION RADIO SYSTEM BUTTONS (A)

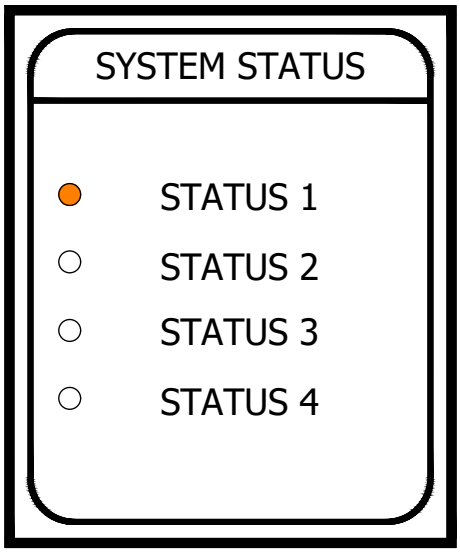

FIGURE 26
RADIO STATUS (A)

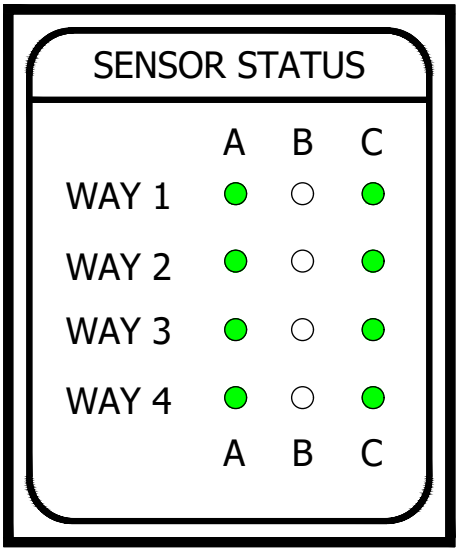

FIGURE 27
SUCCESSFUL CONNECTION TO THE LPCN NETWORK (A)

TABLE OF CONTENTS

© 1998 - 2020 San Diego Gas & Electric Company. All rights reserved. Removal of this copyright notice without permission is not permitted under law.

REV	CHANGE	DR	BY	DSN	APV	DATE	REV	CHANGE	DR	BY	DSN	APV	DATE
C							F						
B	FORMATTING	EDM	JIK	-	-	9/28/2020	E						
A	ORIGINAL VERSION	EDM	JES	JES	CZH	1/14/2020	D						

X Indicates Latest Revision | Completely Revised | New Page | Information Removed

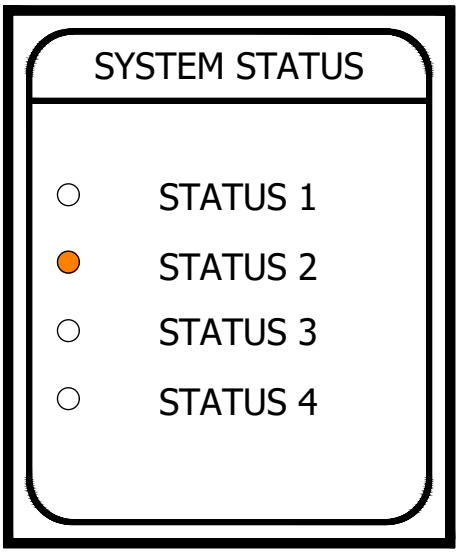

FIGURE 28
FAULT INDICATOR SENSORS STATUS DISPLAY (A)
SENSOR STATUS

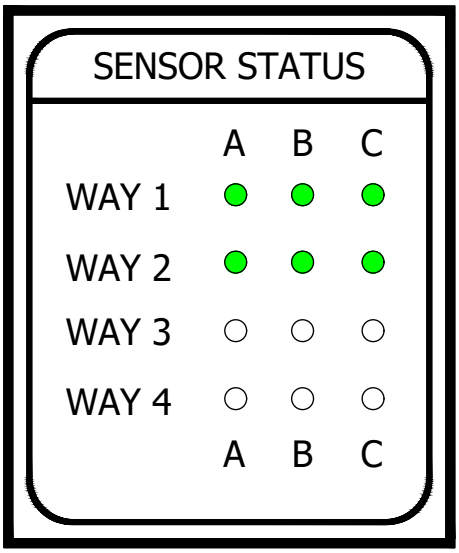

FIGURE 29
EXAMPLE SENSOR STATUS DISPLAY (A)

TABLE OF CONTENTS

TABLE 1

SENSOR STATUS LED DESCRIPTION		
LED STATE	**SENSOR STATUS**	**DESCRIPTION**
OFF	N/A	UNPOPULATED
FLASHING GREEN	UNARMED	SYSTEM DETECT OR NEW EVENT DETECTED
SOLID GREEN	ARMED	READY TO DETECT FUTURE EVENTS
FLASHING RED	UNARMED	PERMANENT FAULT
SOLID RED	UNARMED	PERMANENT LOSS OF CURRENT

© 1998 - 2020 San Diego Gas & Electric Company. All rights reserved. Removal of this copyright notice without permission is not permitted under law.

REV	CHANGE	DR	BY	DSN	APV	DATE	REV	CHANGE	DR	BY	DSN	APV	DATE
C							F						
B	FORMATTING	EDM	JIK	-	-	9/28/2020	E						
A	ORIGINAL VERSION	EDM	JES	JES	CZH	1/14/2020	D						

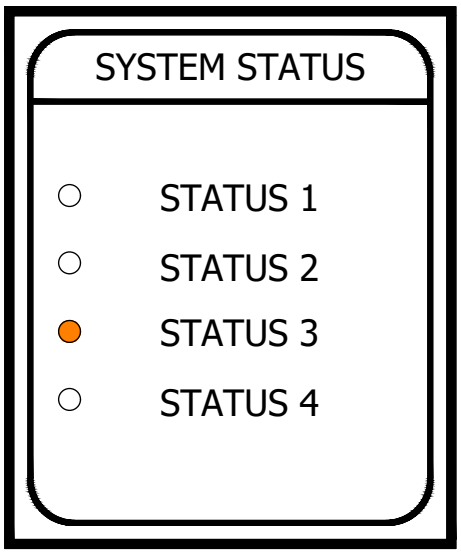

FIGURE 30
WATER DEPTH SENSOR STATUS (A)

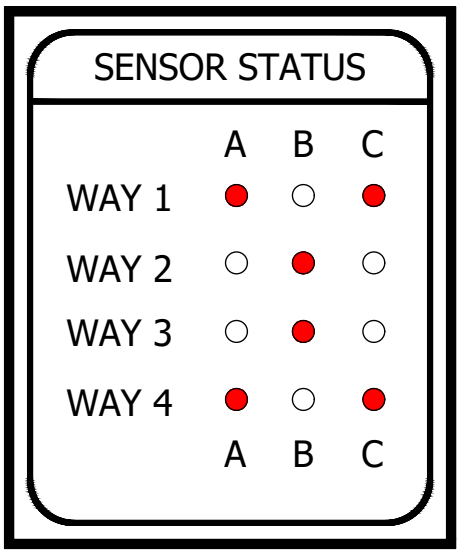

FIGURE 31
WATER DEPTH SENSOR HAS NOT BEEN (A) ZEROED (RED X)

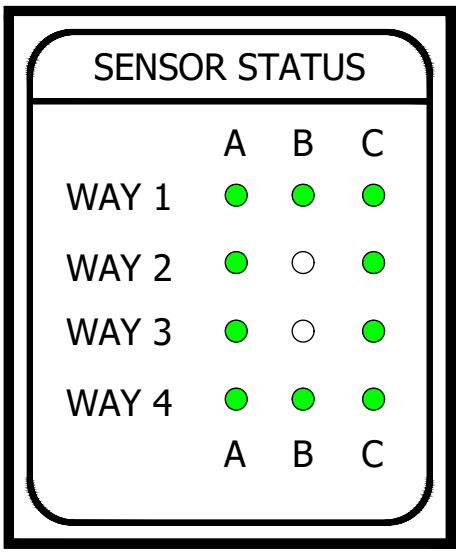

FIGURE 32
WATER DEPTH SENSOR ZEROING COMPLETE (A)

TABLE OF CONTENTS

© 1998 - 2020 San Diego Gas & Electric Company. All rights reserved. Removal of this copyright notice without permission is not permitted under law.

REV	CHANGE	DR	BY	DSN	APV	DATE	REV	CHANGE	DR	BY	DSN	APV	DATE
C							F						
B	FORMATTING	EDM	JIK	-	-	9/28/2020	E						
A	ORIGINAL VERSION	EDM	JES	JES	CZH	1/14/2020	D						

X Indicates Latest Revision | Completely Revised | New Page | Information Removed

SDG&E ELECTRIC OVERHEAD CONSTRUCTION STANDARDS

SEL 8301 WIRELESS FAULT INDICATOR

UG4344.15

INSTALLATION:

(A) REFERENCE ESP 246 FOR INSTALLATION AND OPERATING INSTRUCTIONS.

BILL OF MATERIALS: NONE

NOTES:

I. IT IS ESSENTIAL FOR FAULT AND LOADING INTERPRETATION THAT EACH CURRENT TRANSFORMER IS PROPERLY MAPPED TO THE CORRECT PORT ON THE FAULT INDICATOR, INDICATED BY THE PHASE AND WAY.

II. 4.3.1. THE WATER DEPTH SENSOR (WDS) REPORTS THE PERCENTAGE OF WATER IN A SUBSURFACE VAULT, MANHOLE, OR HANDHOLE BY MEASURING THE DISTANCE BETWEEN THE SENSOR AND THE WATER SURFACE. MOUNT THE WDS AS CLOSE TO THE TOP OF THE VAULT, MANHOLE, OR HANDHOLE AS POSSIBLE. THE WDS MUST BE INSTALLED IN ALL VAULTS, MANHOLES, AND HANDHOLES.

III. 4.3.1.3 THE SYSTEM STATUS LEDS INDICATE WHAT INFORMATION THE SENSOR STATUS DISPLAY IS PRESENTLY SHOWING. THE ILLUMINATED STATUS 1 LED INDICATES THAT THE SENSOR STATUS DISPLAY IS SHOWING THE RADIO STATUS INFORMATION.

IV. 4.3.1.4.3 ALL FOUR A-PHASE LEDS ILLUMINATE AS RED TO INDICATE RADIO DEACTIVATION. IF THIS OCCURS REPEAT SECTIONS 4.3.1.1 - 4.3.1.4.2.

V. 4.3.1.4.4 THE C-PHASE LEDS IN THE SENSOR STATUS DISPLAY WILL INDICATE THE STRENGTH TO THE LPCN NETWORK.

VI. 4.3.1.4.5 CONTACT SEL FOR TECHNICAL SUPPORT IF THE A-PHASE LEDS IN THE SENSOR STATUS DISPLAY SHOW ANYTHING OTHER THAN FOUR SOLID GREEN LEDS TEN MINUTES AFTER RADIO ACTIVATION.

VII. 4.3.4.3 LOG INTO OTV USING A COMPANY LAN ID AND PASSWORD.

a. IF REQUIRING ACCESS, EMAIL RESPONSIBLE ENGINEER WITHIN EDE.

VIII. 4.3.4.11.11 COMPLETE ALL FIELDS AS FOLLOWS.

a. USE CAPITALIZATION FOR ALL LETTERS.

IX. 4.3.4.3.11.11 EACH "WAY" AND "PHASE" NEEDS A SWITCH POSITION ASSIGNED. SWITCH POSITIONS CAN BE LEFT BLANK IF NOT APPLICABLE IN THIS LOCATION.

a. THIS SHOULD BE RECORDED IN THE JOB PACKAGE BY THE INSTALLATION CREW AND HANDED BACK TO THE IN-HOUSE PLANNER OR DISTRICT ENGINEER.

REFERENCE:

a. SCHWEITZER ENGINEERING LABORATORIES DOCUMENT QUICK START GUIDE.

b. SCHWEITZER ENGINEERING LABORATORIES DATA SHEET.

TABLE OF CONTENTS

© 1998 - 2020 San Diego Gas & Electric Company. All rights reserved. Removal of this copyright notice without permission is not permitted under law.

REV	CHANGE	DR	BY	DSN	APV	DATE	REV	CHANGE	DR	BY	DSN	APV	DATE
C							F						
B	FORMATTING	EDM	JIK	-	-	9/28/2020	E						
A	ORIGINAL VERSION	EDM	JES	JES	CZH	1/14/2020	D						

X Indicates Latest Revision | Completely Revised | New Page | Information Removed

SDG&E ELECTRIC OVERHEAD CONSTRUCTION STANDARDS

SEL 8301 WIRELESS FAULT INDICATOR

UG4344.16

SCOPE: THIS STANDARD SHOWS AUTOMATIC SELF RESETTING, HOT STICK OPERABLE FAULT INDICATORS AND INSTALLATION REQUIREMENTS USED FOR INSTALLING AND LOCATING FAULTS IN THE UNDERGROUND SYSTEM.

CAUTION:

* NOT FOR USE ON UNSHIELDED CABLE OR BARE CONDUCTORS.

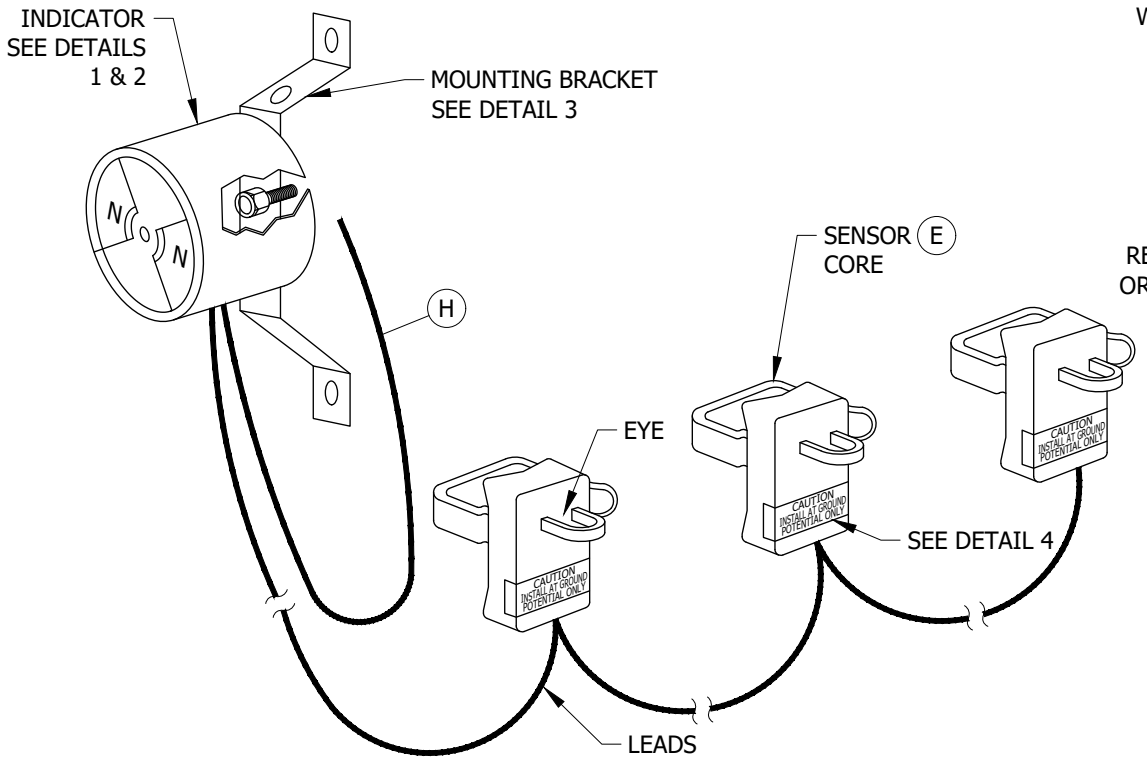

FIGURE 1

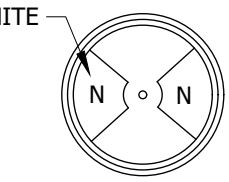

DETAIL 1
NORMAL

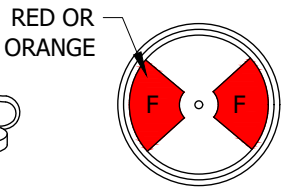

DETAIL 2
TRIPPED

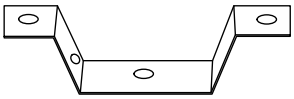

DETAIL 3
MOUNTING BRACKET

CAUTION
INSTALL AT GROUND
POTENTIAL ONLY

DETAIL 4

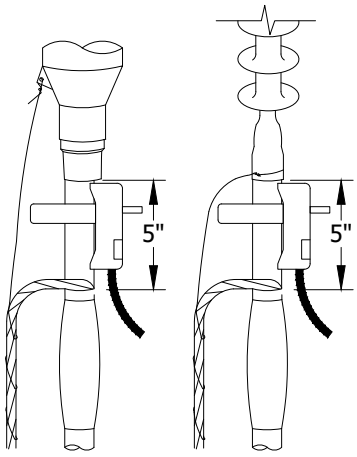

FOR INSTALLATIONS ON
NEW TERMINATIONS

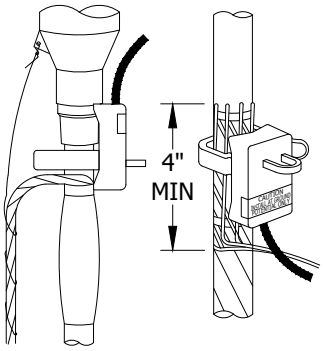

FOR INSTALLATIONS ON
EXISTING TERMINATIONS

FIGURE 2
CORRECT SENSOR CORE INSTALLATION (J) (K)

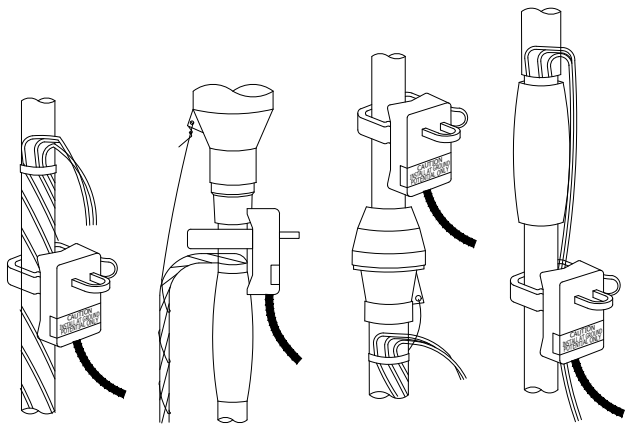

FIGURE 3
INCORRECT SENSOR CORE INSTALLATION (K) (VI)

TABLE OF CONTENTS

© 1998 - 2020 San Diego Gas & Electric Company. All rights reserved. Removal of this copyright notice without permission is not permitted under law.

REV	CHANGE	DR	BY	DSN	APV	DATE	REV	CHANGE	DR	BY	DSN	APV	DATE
C	FORMATTING	EDM	JIK	-	-	9/28/2020	F						
B	REVISION	-	-	-	RSW/RDJ	1/1/1996	E						
A	REVISION	-	-	-	JLB/RDJ	1/1/1994	D						

X Indicates Latest Revision | Completely Revised | New Page | Information Removed

SDG&E ELECTRIC UNDERGROUND CONSTRUCTION STANDARDS

AUTOMATIC FAULT INDICATOR
SELF RESETTING, HOT STICK OPERABLE

UG4352.1

INSTALLATION:

A. ATTACH THE EYE OF THE INDICATOR TO A HOT STICK.

B. OPEN THE FLEXIBLE CURRENT SENSING ARM AND, USING THE CABLE AS A LEVERAGE POINT, STRETCH THE SPRING AROUND THE CABLE.

C. GRASP THE EYE ON THE CURRENT SENSING ARM AND CLOSE THE LATCH USING A SECOND HOT STICK.

D. UPON COMPLETION, TRIP TEST EACH SENSOR WITH TEST TOOL (STOCK NUMBER: S746754).

(E) THE THREE-PHASE INDICATORS HAVE THREE SENSOR CORES ATTACHED TO ONE INDICATOR. THE INDICATOR WILL SHOW AN ORANGE OR RED TARGET WHEN A FAULT CURRENT EXCEEDING A TRIP VALUE PASSES THROUGH ANY OF THE THREE SENSOR CORES. RESET WILL OCCUR WHEN A NORMAL LOAD CURRENT OF 5 AMPERES OR MORE FLOWS IN ALL THREE CABLES. ALL THREE SENSOR CORES MUST BE MOUNTED FACING THE SAME DIRECTION.

F. FAULT INDICATORS ARE COMPLETELY SUBMERSIBLE AND WILL READ ACCURATELY MOUNTED IN CORRECT POSITION. DO NOT INSTALL INDICATORS IF THEY CANNOT BE MOUNTED PERMANENTLY.

G. ALL NEW INSTALLATIONS OR REPLACEMENTS MUST BE APPROVED BY DISTRIBUTION PLANNING.

(H) AUXILIARY CONTACT, FOR SCADA USE ONLY.

(J) APPLY FAULT INDICATOR DIRECTLY OVER SEMI-CONDUCTING LAYER "INSULATION SHIELD".

(K) FOR CABLE WITH OR WITHOUT JACKETING.

BILL OF MATERIALS: NONE

NOTES:

I. THE USE OF RUBBER GLOVES FOR APPLICATION OF A FAULT INDICATOR IN THE STRESS CONE AREA ON 12KV UNDERGROUND INSTALLATIONS IS PROHIBITED. ANY WORK ON CONDUCTORS OR EQUIPMENT ABOVE 7,500 VOLTS (4,350 VOLTS TO GROUND) MUST BE DONE WITH SUITABLE DEVICES, IE., HOT STICK TOOLS. THIS DOES NOT APPLY TO WORK ON DE-ENERGIZED COMPONENTS (NEW CONDUCTORS BEING PULLED, ETC.) PROVIDED ALL ENERGIZED PARTS WITHIN THE MINIMUM WORKING DISTANCES (2-FOOT RULE) ARE COVERED WITH SUITABLE PROTECTIVE DEVICES.

II. ANY "OLD STYLE" FAULT INDICATORS REMAINING IN THE SYSTEM SHOULD BE REMOVED AND SCRAPPED. THESE ARE MADE BY EDISON CONTROL AND ARE MADE OF BLACK PLASTIC.

III. THE LATEST APPROVED FAULT INDICATORS ARE THREE-PHASE, CURRENT RESET, WHITE PLASTIC UNITS WITH INRUSH RESTRAINT. THAT IS, THEY WILL RESET WITHIN A MINUTE AT 3 AMPS OF LOAD OR MORE AND WILL NOT TRIP ON INRUSH.

IV. EXCESS LEAD LENGTH CAN BE COILED UP AND TAPED AWAY FROM 12KV CABLE AND TERMINATIONS.

V. DUE TO LIMITED SPACE, FAULT INDICATOR SHALL NOT BE INSTALLED IN TERMINATORS.

(VI) MAGNETIC FIELD DUE TO CURRENT IN CENTER CONDUCTOR WILL BE CANCELED BY CURRENT IN CONCENTRIC NEUTRAL.

TABLE OF CONTENTS

TABLE 1

CURRENT RESET (THREE-PHASE) FAULT INDICATORS					
FOR APPLICATION ON CONDUCTOR SIZE (KCMIL)	TRIP RATING (AMPS)	CALBRATED EXTERNAL DIAMETER (IN)	LEAD LENGTH (FT)	STOCK NUMBER	DESIGN UNITS
350, 750, 1,000	800	1.5	35	S423762	FI8-35
350, 750, 1,000	1,000	1.5	35	S423760	FI1K35

REFERENCE:

a. SEE DESIGN MANUAL 6113 FOR APPLICATION CRITERIA.

b. SEE UG3212.5 FOR FAULT INDICATOR LOCATION IDENTIFICATION TAGS.

c. SEE UG4355 FOR INSTALLATION OF FAULT INDICATORS.

d. SEE UG4359 FOR CABLE POLE APPLICATIONS.

© 1998 - 2020 San Diego Gas & Electric Company. All rights reserved. Removal of this copyright notice without permission is not permitted under law.

REV	CHANGE	DR	BY	DSN	APV	DATE	REV	CHANGE	DR	BY	DSN	APV	DATE
C	FORMATTING	EDM	JIK	-	-	9/28/2020	F						
B	REVISION	-	-	-	RSW/RDJ	1/1/1996	E						
A	REVISION	-	-	-	JLB/RDJ	1/1/1994	D						

SCOPE: THIS STANDARD SHOWS AUTOMATIC SELF RESETTING, HOT STICK OPERABLE FAULT INDICATORS AND INSTALLATION REQUIREMENTS USED FOR INSTALLING AND LOCATING FAULTS IN THE UNDERGROUND SYSTEM.

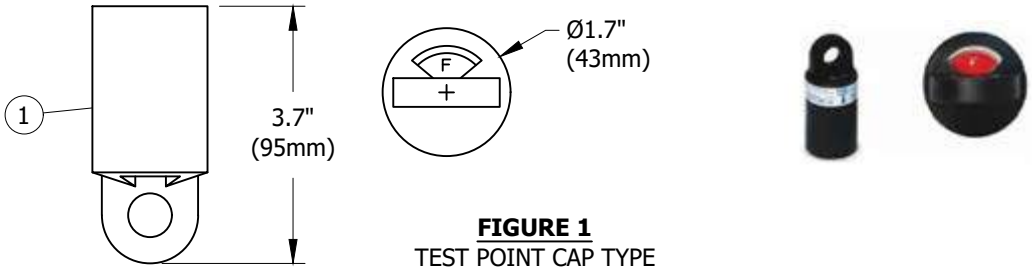

FIGURE 1
TEST POINT CAP TYPE

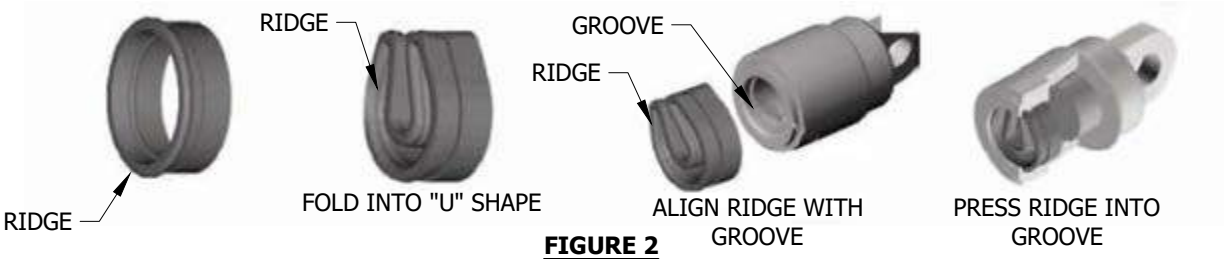

FIGURE 2
INTERNAL ADAPTER RING



FIGURE 3
PHASE SENSOR BOOT

INSTALLATION:

A. INSTALL THE INTERNAL ADAPTER RING (IF NEEDED).

1. FOR HUBBELL, CHARDON, RTE, OR GE-CHARDON ELBOWS WITH MOLDED IN TEST POINTS, SKIP INSTALLATION STEP B.
2. FOR ELASTIMOLD 15, 25, OR 35KV LBE ELBOWS HAVING MOLDED IN TEST POINTS, INSTALL INTERNAL ADAPTER RINGS AS SHOWN IN FIGURE 2. (OTHER ELBOW TYPES CONSULT FACTORY).

B. INSTALL THE PHASE SENSOR BOOT.

(1) REMOVE TEST POINT CAP. CLEAN & DRY TEST POINT. APPLY A LIGHT COAT OF SILICONE DIELECTRIC GREASE TO THE INSIDE OF THE BOOT.

(2) USING A PUSHING AND ROTATING MOTION SEAT THE BOOT ONTO TEST POINT OF THE ELBOW.

(3) ALIGN ARROW ON TEST POINT LABEL WITH ELBOW PULLING EYE.

BILL OF MATERIALS:

ITEM	DESCRIPTION	QUANTITY	STANDARD PAGE	STOCK NUMBER	DESIGN UNITS
1	CAPACITIVE TEST POINT FAULTED CIRCUIT INDICATOR	--	--	S423770	FI1-TP

NOTES: NONE

REFERENCE: NONE

© 1998 - 2020 San Diego Gas & Electric Company. All rights reserved. Removal of this copyright notice without permission is not permitted under law.

REV	CHANGE	DR	BY	DSN	APV	DATE	REV	CHANGE	DR	BY	DSN	APV	DATE
C	EDITORIAL CHANGES	-	ADW	JES	CZH	11/12/2019	F						
B	TABLE UPDATE	-	JK	JS	CZH	03/18/2019	E						
A	ORIGINAL ISSUE	-	AW	JS	CZH	07/05/2018	D	FORMATTING	EDM	JIK	-	-	9/28/2020

X Indicates Latest Revision | Completely Revised | New Page | Information Removed

SDG&E ELECTRIC UNDERGROUND CONSTRUCTION STANDARDS

CAPACITIVE TEST POINT FAULTED CIRCUIT INDICATOR

UG4354.1

TABLE OF CONTENTS

SCOPE: THIS STANDARD SHOWS THE INSTALLATION OF FAULT INDICATORS IN PAD-MOUNTED AND SUBSURFACE EQUIPMENT.

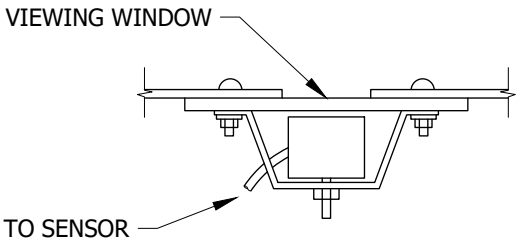

FIGURE 1

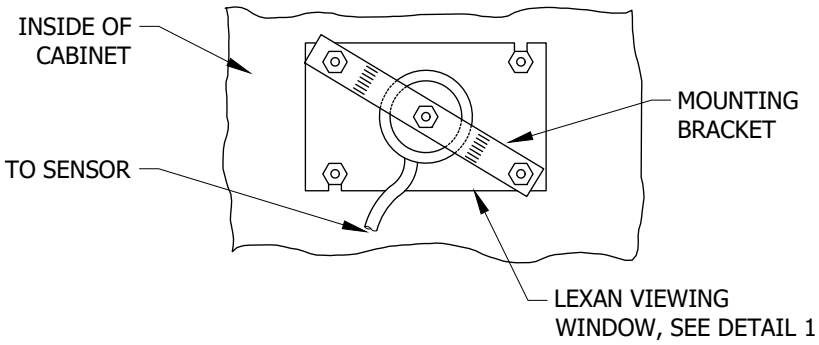

FIGURE 2

TABLE 1

ITEM	STOCK NUMBER
LEXAN VIEWING WINDOW	S443830

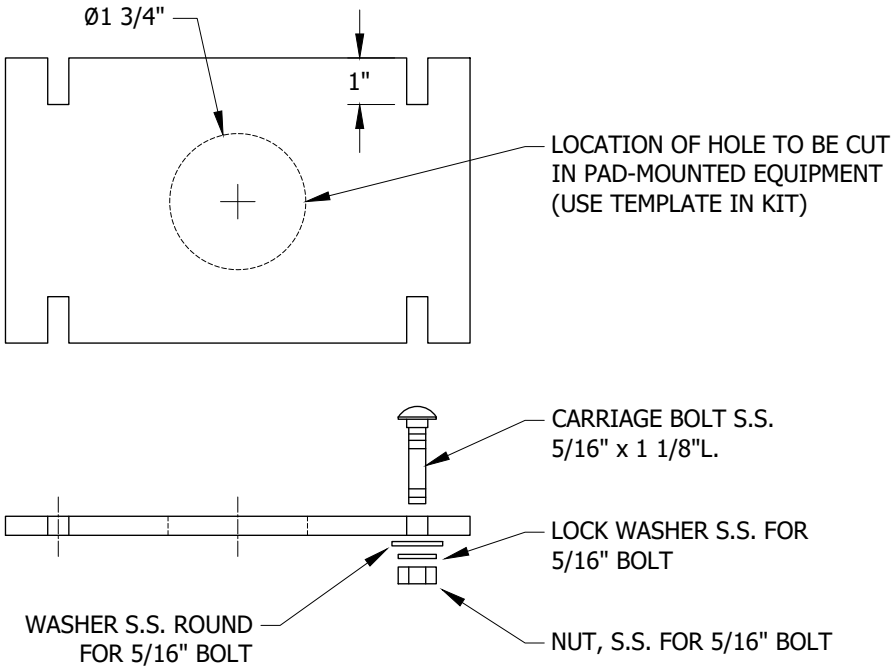

DETAIL 1
LEXAN VIEWING WINDOW

TABLE OF CONTENTS

© 1998 - 2020 San Diego Gas & Electric Company. All rights reserved. Removal of this copyright notice without permission is not permitted under law.

REV	CHANGE	DR	BY	DSN	APV	DATE	REV	CHANGE	DR	BY	DSN	APV	DATE
C	REVISION	-	-	-	RSW/CAK	1/1/1998	F						
B	REVISION	-	-	-	RSW/RDJ	1/1/1996	E						
A	REVISION	-	-	-	JLB/RDJ	1/1/1992	D	FORMATTING	EDM	JIK	-	-	9/28/2020

X Indicates Latest Revision | Completely Revised | New Page | Information Removed

SDG&E ELECTRIC UNDERGROUND CONSTRUCTION STANDARDS

FAULT INDICATOR INSTALLATION
PAD-MOUNTED INSTALLATION

UG4355.1

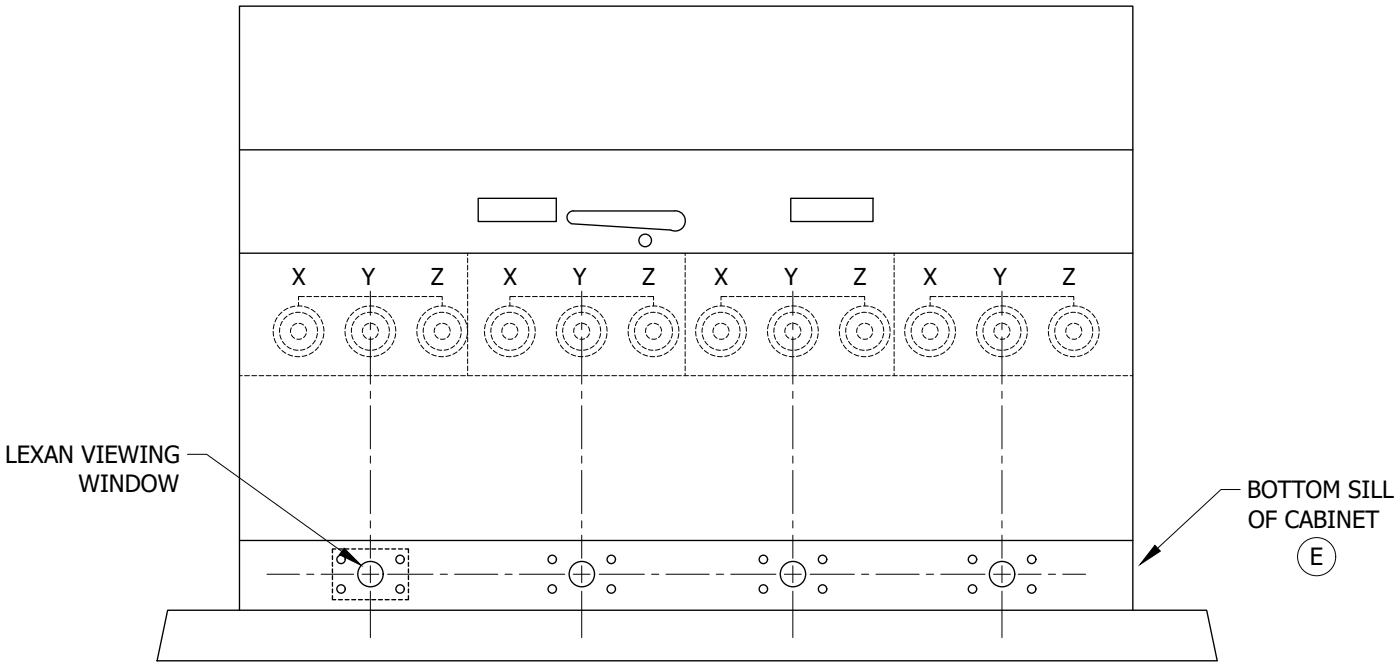

FIGURE 3
THREE-PHASE PAD-MOUNTED SWITCH

TABLE 2

THREE-PHASE PAD-MOUNTED SWITCH		
REPLACEMENT SWITCH SILL	**STOCK NUMBER**	**DESIGN UNITS**
NELSON SWITCH SILL (E)	S648502	SILL-N
ESCO SWITCH SILL (E)	S648500	SILL-E

INSTALLATION:

A. FOLLOW INSTALLATION INSTRUCTIONS IN VIEWING WINDOW KIT.

B. FOR RETROFIT INSTALLATION OF VIEWING WINDOWS IN NON-STANDARD (OLD STYLE) PAD-MOUNTED SWITCHES, ABOVE TO SENSOR.

C. APPLY RUST INHIBITOR AND SAME COLOR PAINT AS CABINET ON ALL HOLES DRILLED OR PUNCHED IN CABINET.

D. STANDARD AND NON-STANDARD PAD-MOUNTED SWITCHES SHALL REQUIRE FAULT INDICATORS WITH 35-FOOT LEADS. TIE OFF EXCESS LEADS AS NEEDED.

(E) FOR STANDARD PAD-MOUNTED SWITCHES, USE NELSON OR ESCO REPLACEMENT SILLS FOR RETROFIT INSTALLATION.

F. ALL NEW SWITCHES COME WITH VIEWING WINDOWS INSTALLED IN FRONT BOTTOM SILL OF CABINET.

BILL OF MATERIALS: NONE

NOTES: NONE

REFERENCE:

a. SEE UG3212.5 FOR FAULT INDICATOR IDENTIFICATION.

b. SEE UG4352 FOR AUTOMATIC FAULT INDICATORS APPLICATION AND SELECTION.

© 1998 - 2020 San Diego Gas & Electric Company. All rights reserved. Removal of this copyright notice without permission is not permitted under law.

REV	CHANGE	DR	BY	DSN	APV	DATE	REV	CHANGE	DR	BY	DSN	APV	DATE
C	REVISION	-	-	-	RSW/CAK	1/1/1998	F						
B	REVISION	-	-	-	RSW/RDJ	1/1/1996	E						
A	REVISION	-	-	-	JLB/RDJ	1/1/1992	D	FORMATTING	EDM	JIK	-	-	9/28/2020

TABLE OF CONTENTS

SCOPE: THIS STANDARD SHOWS THE INSTALLATION OF FAULT INDICTORS IN PME 9, 10 AND 11 AIR BREAK SECTIONALIZING SWITCHES.

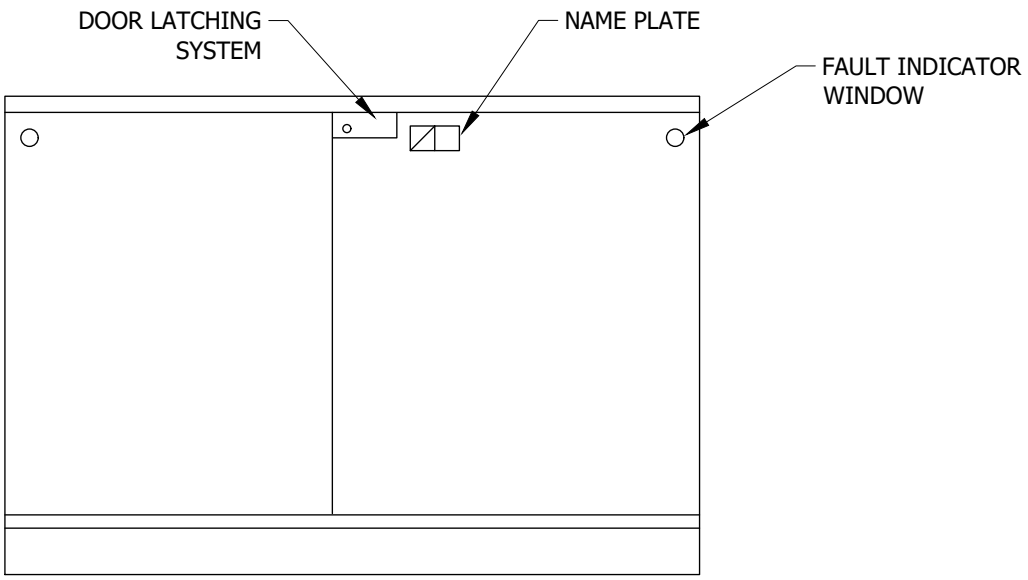

FIGURE 1

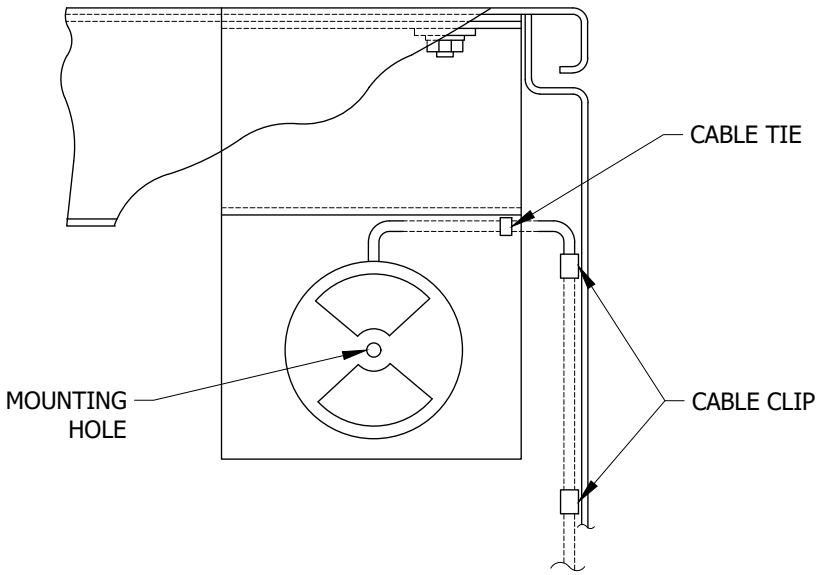

FIGURE 2
FRONT VIEW

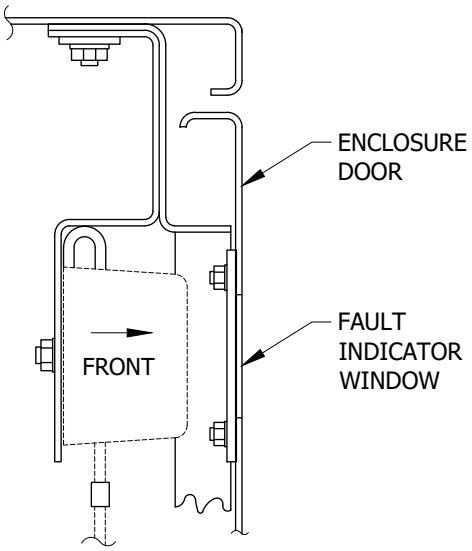

FIGURE 2
SIDE VIEW

TABLE OF CONTENTS

© 1998 - 2020 San Diego Gas & Electric Company. All rights reserved. Removal of this copyright notice without permission is not permitted under law.

REV	CHANGE	DR	BY	DSN	APV	DATE	REV	CHANGE	DR	BY	DSN	APV	DATE
C	REVISION	-	-	-	RSW/CAK	1/1/1998	F						
B	REVISION	-	-	-	RSW/RDJ	1/1/1996	E						
A	REVISION	-	-	-	JLB/RDJ	1/1/1992	D	FORMATTING	EDM	JIK	-	-	9/28/2020

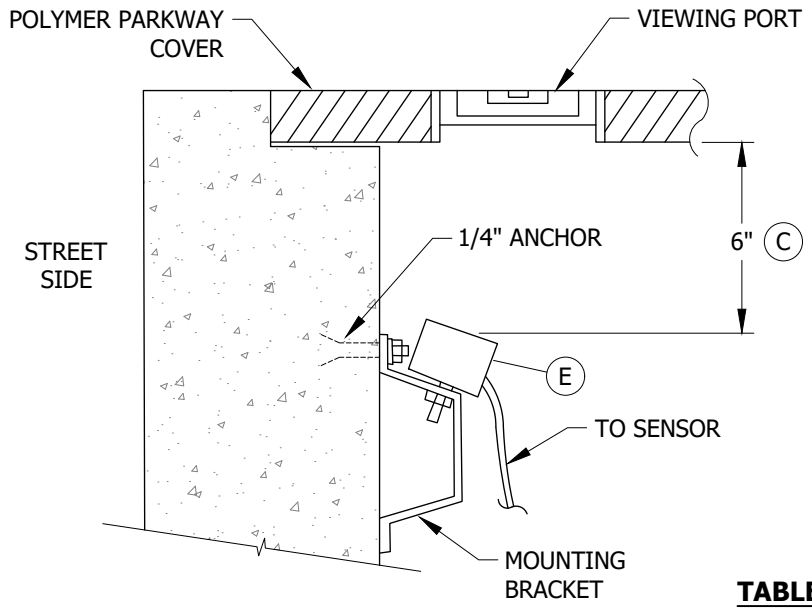

FIGURE 3
HANDHOLE INSTALLATION

TABLE 1

ITEM	STOCK NUMBER
1/4" ANCHOR	S107666

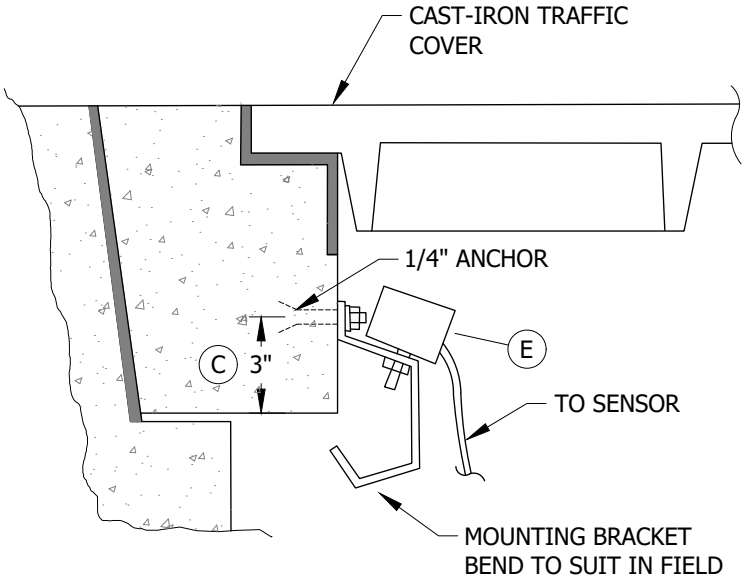

FIGURE 4
HANDHOLE INSTALLATION

© 1998 - 2020 San Diego Gas & Electric Company. All rights reserved. Removal of this copyright notice without permission is not permitted under law.

REV	CHANGE	DR	BY	DSN	APV	DATE	REV	CHANGE	DR	BY	DSN	APV	DATE
C	REVISION	-	-	-	RSW/CAK	1/1/1998	F						
B	REVISION	-	-	-	RSW/RDJ	1/1/1996	E						
A	REVISION	-	-	-	JLB/RDJ	1/1/1992	D	FORMATTING	EDM	JIK	-	-	9/28/2020

X Indicates Latest Revision | Completely Revised | New Page | Information Removed

SDG&E ELECTRIC UNDERGROUND CONSTRUCTION STANDARDS

FAULT INDICATOR INSTALLATION

UG4355.4

TABLE OF CONTENTS

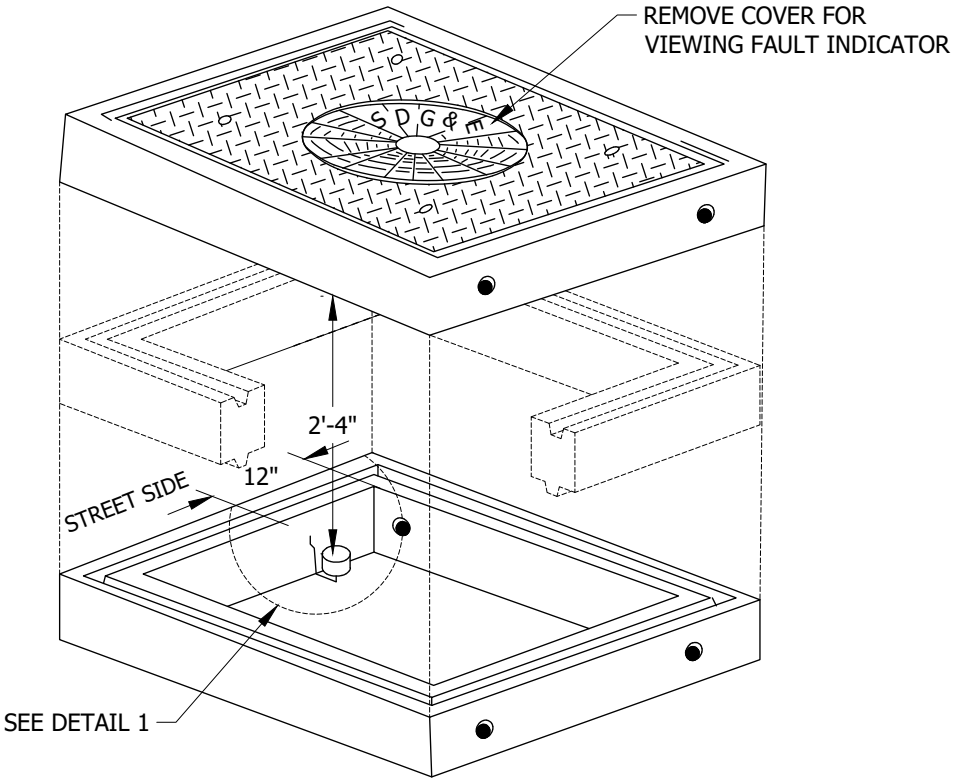

FIGURE 5
MANHOLE INSTALLATION

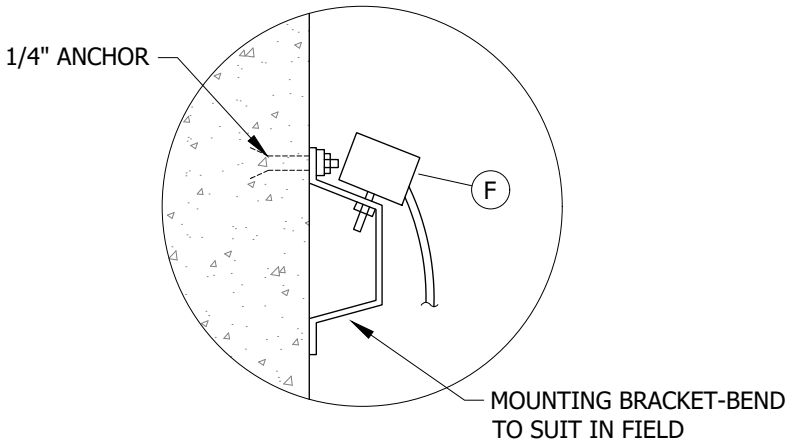

DETAIL 1

TABLE OF CONTENTS

© 1998 - 2020 San Diego Gas & Electric Company. All rights reserved. Removal of this copyright notice without permission is not permitted under law.

REV	CHANGE	DR	BY	DSN	APV	DATE	REV	CHANGE	DR	BY	DSN	APV	DATE
C	REVISION	-	-	-	RSW/CAK	1/1/1998	F						
B	REVISION	-	-	-	RSW/RDJ	1/1/1996	E						
A	REVISION	-	-	-	JLB/RDJ	1/1/1992	D	FORMATTING	EDM	JIK	-	-	9/28/2020

X Indicates Latest Revision | Completely Revised | New Page | Information Removed

SDG&E ELECTRIC UNDERGROUND CONSTRUCTION STANDARDS

FAULT INDICATOR INSTALLATION

UG4355.5

INSTALLATION:

A. REMOVE THE STAINLESS STEEL BRACKET SUPPLIED BY THE FAULT INDICATOR MANUFACTURER.

B. THE REMAINING STAINLESS STEEL NUT AND BOLT IS USED TO ATTACH THE FAULT INDICATOR TO MOUNTING PLATE SUPPLIED BY SWITCH MANUFACTURER.

(C) ALL MEASUREMENTS SHOWN ARE APPROXIMATE - EXACT PLACEMENT OF THE FAULT INDICATOR TARGET WILL HAVE TO BE DETERMINED INDIVIDUALLY, USING THE FRAME AND COVER INTENDED FOR THAT INSTALLATION.

D. ATTACH LEADS TO HANDHOLE WALL.

(E) THREE FAULT INDICATORS MAY BE INSTALLED UNDER ONE VIEWING PORT.

(F) MOUNT FAULT INDICATORS SO THE TARGET IS VISIBLE WHEN MANHOLE COVER IS REMOVED.

G. ATTACH LEADS TO MANHOLE WALL.

BILL OF MATERIALS: NONE

NOTES: NONE

REFERENCE:

a. SEE UG3212.5 FOR FAULT INDICATOR IDENTIFICATION.

b. SEE UG4352 FOR AUTOMATIC FAULT INDICATORS APPLICATION AND SELECTION.

TABLE OF CONTENTS

© 1998 - 2020 San Diego Gas & Electric Company. All rights reserved. Removal of this copyright notice without permission is not permitted under law.

REV	CHANGE	DR	BY	DSN	APV	DATE	REV	CHANGE	DR	BY	DSN	APV	DATE
C	REVISION	-	-	-	RSW/CAK	1/1/1998	F						
B	REVISION	-	-	-	RSW/RDJ	1/1/1996	E						
A	REVISION	-	-	-	JLB/RDJ	1/1/1992	D	FORMATTING	EDM	JIK	-	-	9/28/2020

X Indicates Latest Revision | Completely Revised | New Page | Information Removed

SDG&E ELECTRIC UNDERGROUND CONSTRUCTION STANDARDS

FAULT INDICATOR INSTALLATION

UG4355.6

SCOPE: THIS STANDARD SHOWS AND DESCRIBES THE INSTALLATION OF OVERHEAD FAULT INDICATORS WITH RATINGS OF 800 AND 1000 AMPS ON 3/0, 4/0, 336 AND 636 CONDUCTORS.

CAUTION:

* DO NOT INSTALL DOWNSTREAM OF A FUSE.

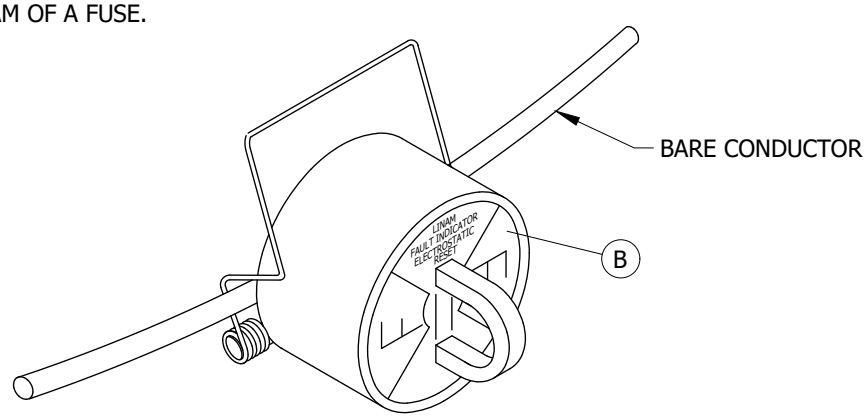

FIGURE 1

TABLE 1

OVERHEAD FAULT INDICATORS					
FOR APPLICATION ON CONDUCTOR SIZE	TRIP RATING (AMPS)	CALIBRATED EXTERNAL DIAMETER (IN)	STOCK NUMBER	DESIGN UNITS	
				UG	OH
3/0, 4/0, 336, 636	800	0.700	S423750	FI800	800FI
3/0, 4/0, 336, 636	1,000	0.700	S423752	FI1000	1000FI

INSTALLATION:

A. THESE ARE SINGLE PHASE, SELF-CONTAINED UNITS WITH ELECTROSTATIC RESET AND INRUSH RESTRAINT. THEY WILL RESET THEMSELVES AFTER SEVERAL MINUTES OF AT LEAST 5KV LINE-TO-GROUND POTENTIAL.

(B) THE INDICATOR WILL SHOW AN ORANGE OR RED TARGET WHEN A FAULT CURRENT EXCEEDING A TRIP VALUE PASSES THROUGH IT'S SENSOR CORE. RESET WILL OCCUR WITHIN SEVERAL MINUTES WHEN THE CONDUCTOR HAS A LINE TO GROUND VOLTAGE OF 5KV OR MORE.

C. ALL NEW INSTALLATION OR REPLACEMENT OF FAULT INDICATORS MUST BE APPROVED BY DISTRIBUTION PLANNING.

D. ANY "OLD STYLE" FAULT INDICATORS REMAINING IN THE SYSTEM SHOULD BE REMOVED AND SCRAPPED. THESE ARE SINGLE AND THREE PHASE UNITS WITH A REMOTE TARGET, BLACK IN COLOR, AND MANUFACTURED BY EDISON CONTROL.

E. UPON COMPLETION OF INSTALLATION, TRIP TEST EACH FAULT INDICATOR WITH TEST TOOL (STOCK NO. S746756).

BILL OF MATERIALS: NONE

NOTES:

I. TYPICAL APPLICATIONS ARE FEEDER CABLE POLES, LINE SWITCHES AND FEEDER SPLIT POINTS.

II. INSTALL FAULT INDICATORS DIRECTLY ON OVERHEAD LINE CONDUCTORS UNLESS MONITORING A CABLE FED FROM A POLE WITH TANGENT OVERHEAD CONDUCTORS. IN THIS CASE, INSTALL FAULT INDICATORS ON JUMPERS FROM OVERHEAD CONDUCTOR TO SWITCH.

III. THE INDICATOR IS PLACED ON AN OVERHEAD CONDUCTOR USING HOT LINE TOOLS. REFER TO INSTALLATION SHEET PROVIDED WITH EACH UNIT FOR DETAILS.

REFERENCE:

a. SEE DESIGN MANUAL DM6113 FOR APPLICATION CRITERIA.

© 1998 - 2020 San Diego Gas & Electric Company. All rights reserved. Removal of this copyright notice without permission is not permitted under law.

REV	CHANGE	DR	BY	DSN	APV	DATE	REV	CHANGE	DR	BY	DSN	APV	DATE
C	FORMATTING	EDM	JIK	-	-	9/28/2020	F						
B	DRAWING UPDATE	-	PEI	-	-	2/18/2019	E						
A	ORIGINAL ISSUE	-	-	PTA	RDG	1/1/1996	D						

SCOPE: THIS STANDARD DESCRIBES THE LOAD TRACKER FAULT INDICATOR FOR INSTALLATION ON CLEER TEES.

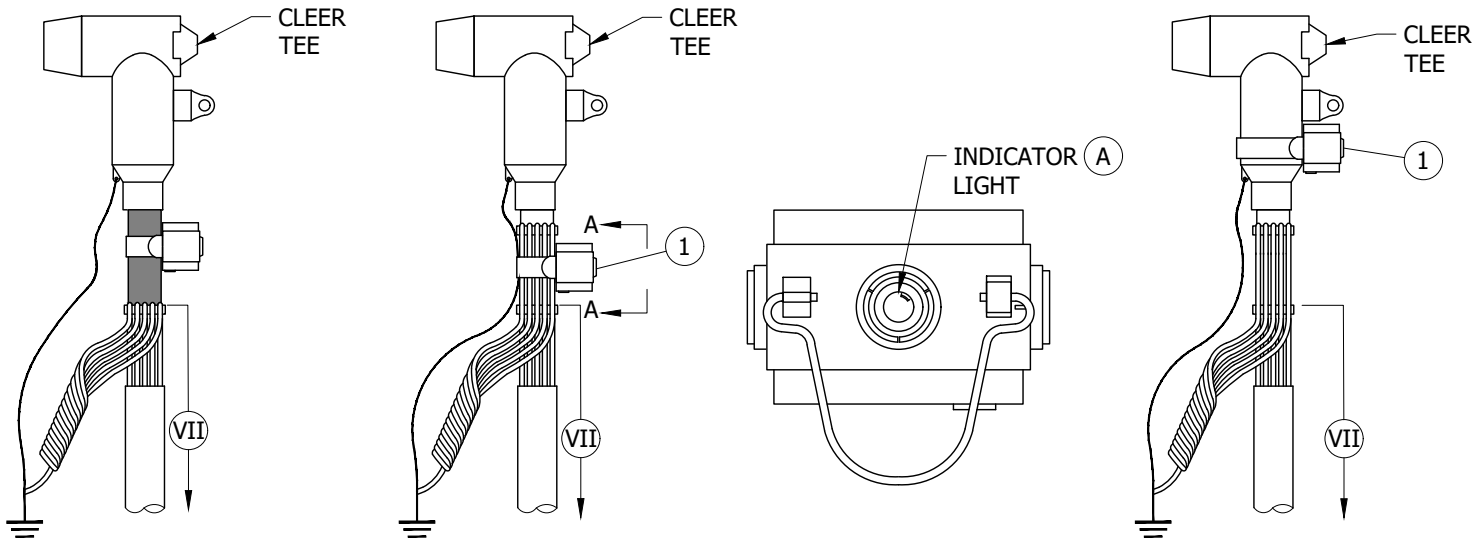

CONFIGURATION 1
ALLOWED INSTALLATION (V)
ABOVE CONCENTRIC NEUTRAL GROUND

CONFIGURATION 2
ALLOWED INSTALLATION
OVER CONCENTRIC NEUTRAL (VI)
GROUND AND FOLDBACK

CONFIGURATION 2
VIEW A-A

CONFIGURATION 3
NOT ALLOWED INSTALLATION
ELBOW MOUNTED

FIGURE 1
LOAD TRACKER INSTALLATION CONFIGURATIONS

TABLE OF CONTENTS

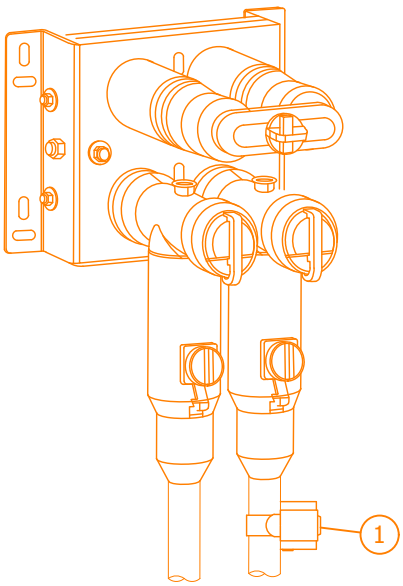

FIGURE 2
INSTALLATION ON (b)
N-JUNCTION CLEER

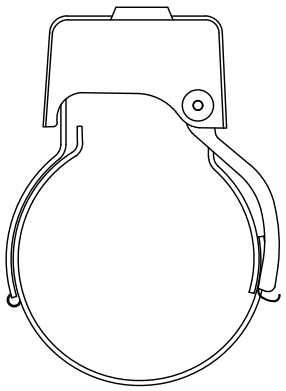

FIGURE 3
LOAD TRACKER
IN CLOSED POSITION

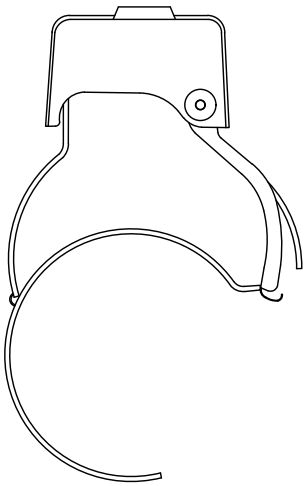

FIGURE 4
LOAD TRACKER
IN OPEN POSITION

© 1998 - 2023 San Diego Gas & Electric Company. All rights reserved. Removal of this copyright notice without permission is not permitted under law.

REV	CHANGE	DR	BY	DSN	APV	DATE	REV	CHANGE	DR	BY	DSN	APV	DATE
C							F						
B	FIGURE UPDATE	EDM	EJA	JAS	KRG	04/11/2023	E						
A	ORIGINAL ISSUE	EDM	ADW	GLW	CZH	07/29/2021	D						

X Indicates Latest Revision | Completely Revised | New Page | Information Removed

SDG&E ELECTRIC UNDERGROUND CONSTRUCTION STANDARDS

LOAD TRACKER FAULT INDICATOR

UG4360.1

INSTALLATION:

(A) IF THERE IS A FAULT IN A PHASE, A LIGHT WILL FLASH ON THIS DEVICE INDICATING WHICH PHASE HAS THE FAULT. THE FIBER PORT HOLE MUST BE POSITIONED SO THE FLASHING LIGHT WILL BE VISIBLE WHEN INSTALLATION IS COMPLETE.

BILL OF MATERIALS:

ITEM	DESCRIPTION			QUANTITY	STANDARD PAGE	STOCK NUMBER	DESIGN UNITS
1	LOAD TRACKER, FAULT INDICATOR, UG, PDP, LARGE (VIII)			AS REQ'D	--	S423714	DULTFI
2	LOAD TRACKER, FAULT INDICATOR, UG, PDP, SMALL (IX)			AS REQ'D	--	S423718	RFOS
3	BAR, JUNCTION, 600A CLEER, 15KV, LOADBREAK (IX)	A	INLINE	AS REQ'D	4198	S439870	CCL-JB
		B	SQUARE			S439872	CCL-SQ

NOTES:

I. THE POWER DELIVERY PRODUCTS (PDP) LOAD TRACKER IS AN UNDERGROUND FAULT INDICATOR WHICH CAN BE ELBOW OR CABLE MOUNTED. IT IS REQUIRED WITH 600A CLEER CONNECTORS, FOR ISOLATING PADMOUNT EQUIPMENT SUCH AS MVI (MOLDED VACUUM INTERRUPTER) AND IN DEADFRONT TERMINATOR CONSTRUCTION.

II. THIS DEVICE IDENTIFIES PEAK LOAD CURRENT, ADJUSTS TO THE PROPER TRIP RATING AND HOLDS IT FOR 72 HOURS.

III. APPROVED FOR 200A AND 600A SYSTEMS.

IV. THIS DEVICE CAN BE UTILIZED UNDER WATER AS IT HAS A PORT FOR FIBER OPTIC CABLE TO BRING INDICATION TO A VISIBLE POINT WITHOUT DEWATERING A STRUCTURE.

(V) FAULT CURRENT INDICATOR (FCI) SEES FAULT CURRENT AND DOES NOT SEE RETURN CURRENT.

(VI) FCI SEES FAULT CURRENT TWO TIMES IN THE FORWARD DIRECTION AND ONE TIME IN THE REVERSE DIRECTION.

(VII) LOAD TRACKER SHALL NOT BE INSTALLED IN THIS AREA BECAUSE FAULT CURRENT AND RETURN CURRENT WILL CANCEL EACH OTHER OUT.

(VIII) THE 600A CLEER CONNECTOR WILL ONLY USE THIS ITEM.

(IX) NOT SHOWN ON FIGURES.

REFERENCE:

a. FOR FAULT CLOSE TEST JUMPER, SEE ESP 220.

(b) SEE UG4198: N-JUNCTION CLEER 600A 25KV AND SQUARE CLEER 600A 25KV.

TABLE OF CONTENTS

© 1998 - 2023 San Diego Gas & Electric Company. All rights reserved. Removal of this copyright notice without permission is not permitted under law.

REV	CHANGE	DR	BY	DSN	APV	DATE	REV	CHANGE	DR	BY	DSN	APV	DATE
C							F						
B	FIGURE UPDATE	EDM	EJA	JAS	KRG	04/11/2023	E						
A	ORIGINAL ISSUE	EDM	ADW	GLW	CZH	07/29/2021	D						

MAIN TABLE OF CONTENTS

PAGE	SUBJECT
4405	FMO LUMINAIRE REPLACEMENT BALLASTS AND STARTERS
4412	PHOTOELECTRIC CONTROLS
4413	NUMBERING SDGE OWNED ORNAMENTAL STREET LIGHT POLES
4414	STREET LIGHT OWNERSHIP AND MAINTENANCE IDENTIFICATION DECAL
4422	STANDARD AND DECORATIVE LUMINAIRES
4423	POST TOP LUMINAIRES
4424	DOMESTIC WALKWAY LIGHTING (DWL) LUMINAIRES
4430	DIRECT BURIAL POLE INSTALLATION FOR VICTORIAN LUMINAIRES
4431	DIRECT BURIAL POLE INSTALLATION FOR CONVENTIONAL LUMINAIRES
4432	DIRECT BURIAL POLE INSTALLATION FOR MISSION BELL LUMINAIRES
4433	DIRECT BURIAL POLE INSTALLATION FOR DECORATIVE LUMINAIRES
4434	DIRECT BURIAL POLE INSTALLATION FOR DOMESTIC WALKWAY LIGHTING AND POST TOP LUMINAIRES
4435	HANDHOLE (INSIDE DIMENSIONS - 10-1/4" X 15-3/8")
4470	ROADWAY LED LIGHTING INSTALLATION
4471	GE EVOLVE LED ROADWAY LIGHTING FIXTURES
4472	CREE LED ROADWAY LIGHTING FIXTURES
4473	ACUITY LED ROADWAY LIGHTING FIXTURES
4480	LED DECORATIVE LIGHTING FIXTURES (RESERVED)

REV	CHANGE	DRWN	BY	CHKD	APVD	DATE
H	REVISED TO 3D FORMAT	NV5	JIK	-	-	05/30/2024
G	UG4410 MOVED TO FMO	GLC	MRF	MRF	KRG	07/20/2023
F	REFORMAT	EDM	JIK	-	-	01/18/2022

© 1998 - 2024 San Diego Gas and Electric Company. All rights reserved. Removal of this copyright notice without permission is not permitted under law.

SDG&E ELECTRIC UNDERGROUND CONSTRUCTION STANDARDS

LIGHTING SECTION
TABLE OF CONTENTS

SCALE: NOT TO SCALE

DRAWING NO:	SHEET:
UG4401.1	1 OF 1

X Indicates Latest Revision | Completely Revised | New Page | Information Removed

TABLE OF CONTENTS

SCOPE: THIS STANDARD PROVIDES ALL THE NECESSARY ORDERING INFORMATION FOR REPLACEMENT BALLASTS AND STARTERS FOR LUMINAIRES IN FMO SECTION.

TABLE 1

REPLACEMENT BALLASTS FOR LUMINAIRES (a)						
BALLAST		LAMP SIZE (WATTS)	MANUFACTURER		STOCK CODE	KIT/ASSEMBLY
TYPE	SOURCE VOLTAGE		MANUFACTURER	TYPE/SERIES		
REACTOR-NPF	120	150	GENERAL ELECTRIC	M250A2	S121108	ASSEMBLY
				M250A		
		100		M250A	S121142	
		150		M400A	S121146	
		250		M400A2	S121148	
		400		M250A2	S121150	

TABLE 2

REPLACEMENT STARTERS FOR LUMINAIRES (a)				
MANUFACTURER	TYPE	LAMP SIZE (WATTS)	SOURCE VOLTAGE	STOCK NUMBER
AMERICAN ELECTRIC	SERIES 113	35-400	120	S679130
GENERAL ELECTRIC	M250R2	50-150		S679132
	M400R2	250-400		S679134

TABLE 3

REPLACEMENT BALLASTS FOR LUMINAIRES						
BALLASTS		LAMP SIZE (WATTS)	MANUFACTURER		STOCK CODE	KIT/ASSEMBLY
TYPE	SOURCE VOLTAGE		MANUFACTURER	TYPE/SERIES		
REACTOR-NPF	120	150	GENERAL ELECTRIC	MISSION BELL	S121171	ASSEMBLY
		100			S121170	
		150			S121168	

TABLE 4

REPLACEMENT STARTERS FOR LUMINAIRES				
MANUFACTURER	TYPE	LAMP SIZE (WATS)	SOURCE VOLTAGE	STOCK NUMBER
GENERAL ELECTRIC	MISSION BELL	50-150	120	S679132

TABLE 5

REPLACEMENT BALLASTS FOR LUMINAIRES						
BALLASTS		LAMP SIZE (WATTS)	MANUFACTURER		STOCK CODE	KIT/ASSEMBLY
TYPE	SOURCE VOLTAGE		MANUFACTURER	TYPE/SERIES		
REACTOR-NPF	120	50	McGRAW EDISON	TRADITIONAIRE	S442934	KIT
		70			S442921	
		100			S442922	
		150			S442924	

TABLE 6

REPLACEMENT STARTERS FOR LUMINAIRES				
MANUFACTURER	TYPE	LAMP SIZE (WATTS)	SOURCE VOLTAGE	STOCK NUMBER
ADVANCE TRANSFORMER CO.	TRADITIONAIRE	50-150	120	S422612
GENERAL ELECTRIC				S679136
COOPER LIGHTING		35-150		S679138

INSTALLATION: NONE

BILL OF MATERIALS: NONE

NOTES: NONE

REFERENCE:

(a) SEE FMO UG4499.203 FOR HIGH PRESSURE SODIUM VAPOR LUMINAIRE AND REPLACEMENT BALLAST.

REV	CHANGE	DRWN	BY	CHKD	APVD	DATE
D	REVISED TO 3D FORMAT	NV5	JIK	-	-	05/30/2024
C	FORMATTING	EDM	JIK	-	-	01/18/2022
B	REVISION	-	-	-	PJA/MJC	12/13/2011

SDG&E ELECTRIC UNDERGROUND CONSTRUCTION STANDARDS

FMO LUMINAIRE REPLACEMENT BALLASTS AND STARTERS

SCALE: NOT TO SCALE

DRAWING NO: UG4405.1

SHEET: 1 OF 1

© 1998 - 2024 San Diego Gas and Electric Company. All rights reserved. Removal of this copyright notice without permission is not permitted under law.

X Indicates Latest Revision | Completely Revised | New Page | Information Removed

SCOPE: THIS STANDARD SHOWS SEVERAL TYPES OF PHOTOELECTRIC CONTROLS THAT CAN BE USED FOR STREET LIGHT LUMINAIRES.

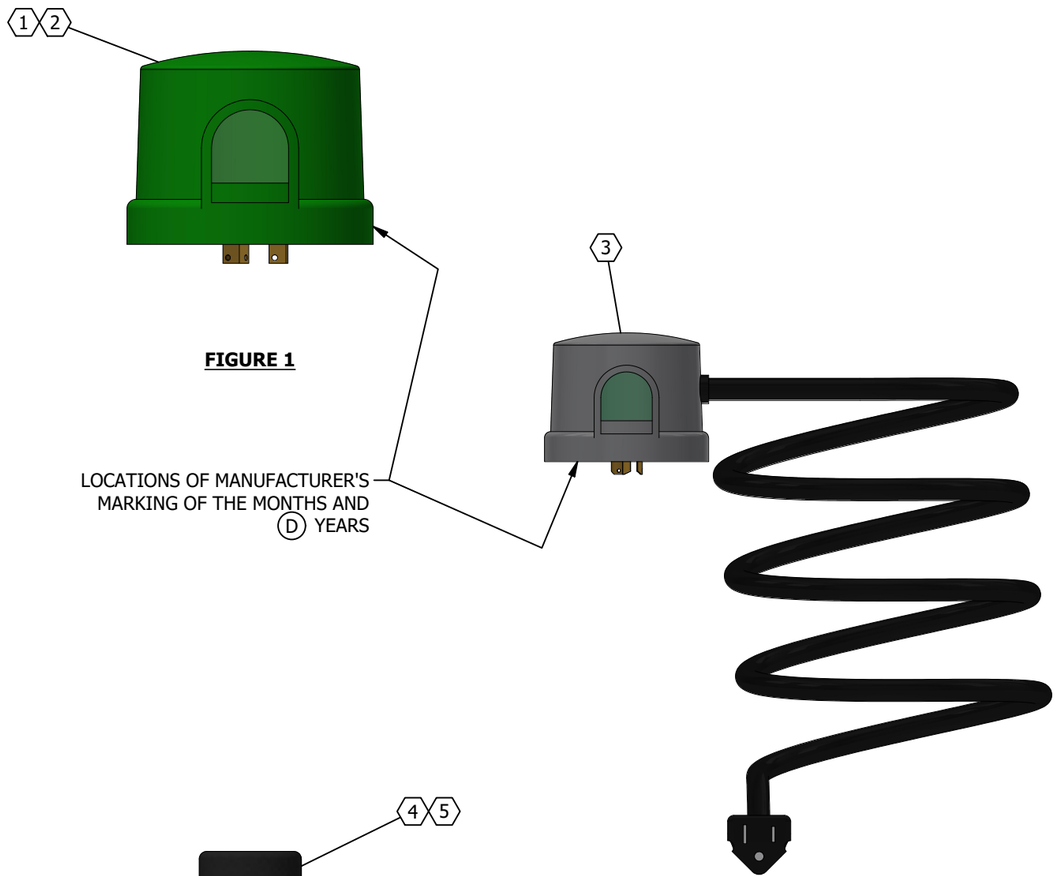

FIGURE 1



FIGURE 3

FIGURE 2

INSTALLATION:

A. PHOTOELECTRIC CONTROL SHOULD BE MOUNTED WITH THE PHOTO CELL FACING NORTH.

B. FOR USE ON AUXILIARY HOLIDAY LIGHTING.

(C) USED ON AMERON VICTORIAN LUMINAIRE, LAWNAIRE, LOMALITER.

(D) WHEN INSTALLING AND REMOVING PHOTO-ELECTRIC CONTROLS, INSTALLER IS TO SCRIBE A VERTICAL LINE UNDER THE CURRENT MONTH AND YEAR OR ENTER THE CURRENT DATE IN THE SPACE PROVIDED.

E. USED ON AMERON VICTORIAN LUMINAIRES.

TABLE 1

PHOTOELECTRIC CONTROLS					
ITEM	RATING		NEMA COLOR CODE	STOCK NUMBER	DESIGN UNIT
	VOLTS	WATTS			
1	120 TO 277	1,000	GRAY	S273884 (I)	PC-TL
2	185 TO 305	1,000	RED	S273890	PCTL
3	120	1,000	GRAY	S273886	PC-AUX
4	105 TO 130	1,000	GRAY	S273702 (C)	PC-MGE
5	105 TO 130	1,000	GRAY	S273702 (C)	PC-AM

BILL OF MATERIALS: NONE

NOTES:

(I) S273884 HAS A TEN YEAR WARRANTY. PHOTO-CELL FAILURE RETURN TO ELECTRIC DISTRIBUTION ENGINEERING.

REFERENCE: NONE

TABLE OF CONTENTS

REV	CHANGE	DRWN	BY	CHKD	APVD	DATE
D	REVISED TO 3D FORMAT	NV5	JIK	-	-	05/30/2024
C	FORMATTING	EDM	JIK	-	-	01/18/2022
B	DRAWING UPDATE	PEI	-	-	-	02/04/2019

© 1998 - 2024 San Diego Gas and Electric Company. All rights reserved. Removal of this copyright notice without permission is not permitted under law.

SDG&E ELECTRIC OVERHEAD AND UNDERGROUND CONSTRUCTION STANDARDS

PHOTOELECTRIC CONTROLS

SCALE: NOT TO SCALE

DRAWING NO: OH1512.1 UG4412.1

SHEET: 1 OF 1

X Indicates Latest Revision | Completely Revised | New Page | Information Removed

SCOPE: THIS STANDARD SHOWS THE INSTALLATION AND REQUIREMENTS FOR TAGGING SDG&E OWNED ORNAMENTAL STREET LIGHT POLES.

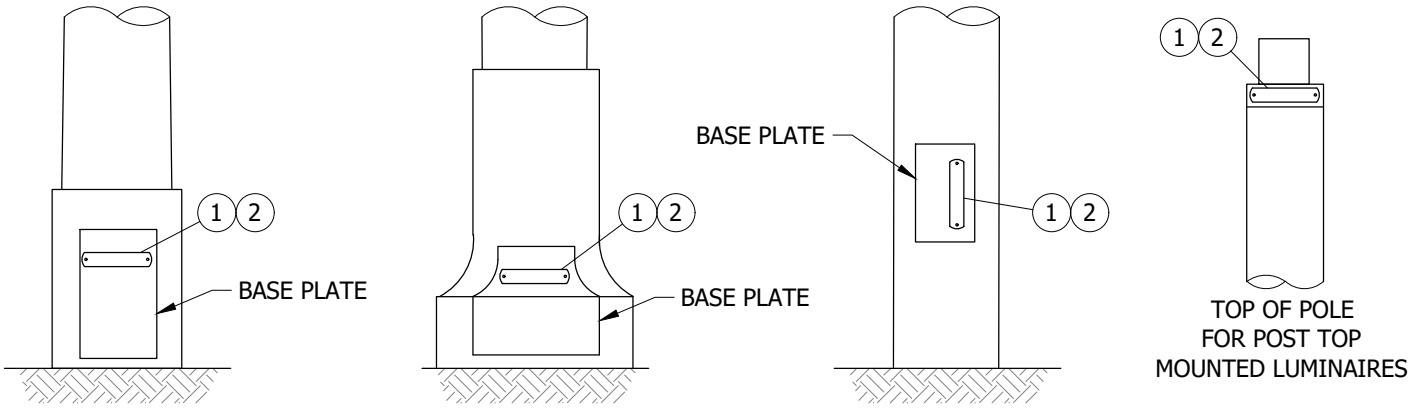

FIGURE 1

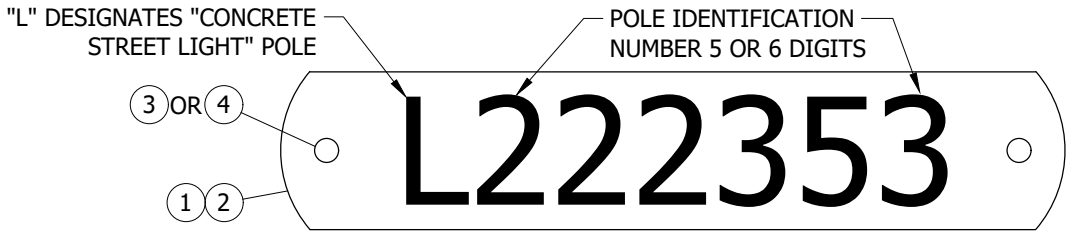

FIGURE 2

INSTALLATION:

A. ALL TAGS TO BE ATTACHED BY DRILLING TWO HOLES AS SHOWN ABOVE USING SELF TAPPING SCREWS OR EPOXY PASTE.

B. WORK ORDER SKETCHES, TEXT AND MATERIAL LISTS WILL SPECIFY NUMBERS TO BE ATTACHED TO POLES.

(C) FOR USE IN CORROSIVE AREAS.

BILL OF MATERIALS:

ITEM	DESCRIPTION	QUANTITY	STANDARD PAGE	STOCK NUMBER	DESIGN UNITS
1	TAPE, ROLL, ALUMINUM EMBOSSING, 7/8"	AS REQ'D	--	S720704	--
2	TAPE, ROLL, BRASS EMBOSSING, 7/8"	AS REQ'D	--	S720736 (C)	--
3	SCREW, SELF TAPPING DRIVE, STAINLESS STEEL, #4 - 1/4"	2	--	S621346 (X)	--
4	EPOXY PASTE	AS REQ'D	--	S213244	--

NOTES:

I. TAG SDG&E OWNED POLES ONLY-DO NOT TAG POLES OWNED BY OTHERS.

II. DO NOT RETAG (WITH NEW IDENTIFICATION NUMBERS). EXISTING POLES THAT HAVE OLD CAL-GRID OR POLE DISTRICT NUMBERS. THE OLD NUMBER STILL APPLIES FOR IDENTIFICATION PURPOSES.

(X) THIS ITEM IS EXEMPT.

REFERENCE:

a. FOR EXISTING CAL-GRID OR POLE NUMBERING DISTRICT TAGS, SEE FMO UG4499.101.

© 1998 - 2022 San Diego Gas & Electric Company. All rights reserved. Removal of this copyright notice without permission is not permitted under law.

REV	CHANGE	DR	BY	DSN	APV	DATE	REV	CHANGE	DR	BY	DSN	APV	DATE
C							F						
B	FORMATTING	EDM	JIK	-	-	01/18/2022	E						
A	REVISION	-	-	-	RW/CAK	01/01/1998	D						

X Indicates Latest Revision | Completely Revised | New Page | Information Removed

SDG&E ELECTRIC UNDERGROUND CONSTRUCTION STANDARDS

NUMBERING ORNAMENTAL STREET LIGHT POLES

UG4413.1

TABLE OF CONTENTS

SCOPE: THIS STANDARD SHOWS A UNIFORM METHOD FOR IDENTIFYING SDG&E OWNED AND/OR MAINTAINED STREET LIGHTS.DECALS WILL BE ADDED TO ALL APPLICABLE NEW STREET LIGHTS WHEN INSTALLED, OR ON EXISTING LIGHTS WHEN MAINTAINED.

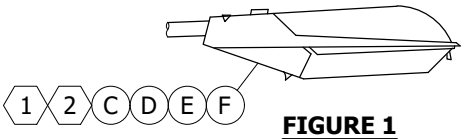

FIGURE 1

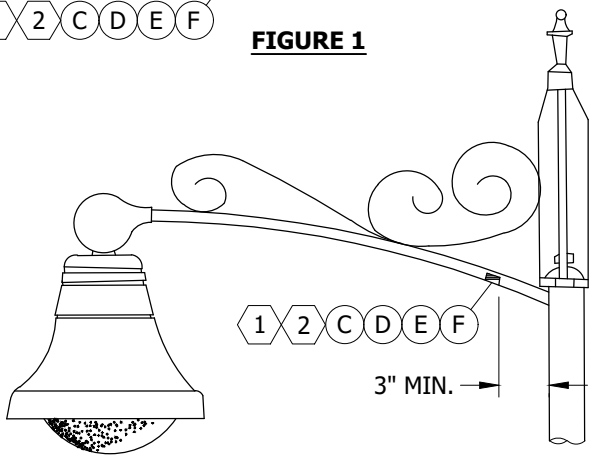

FIGURE 2

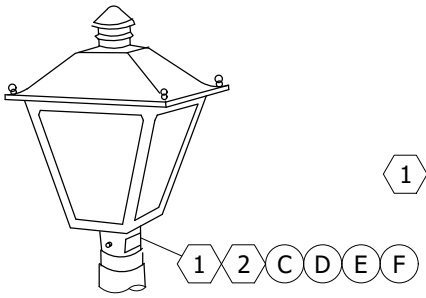

FIGURE 3

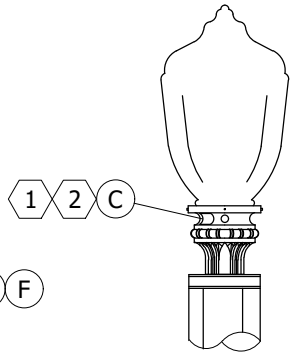

FIGURE 4



FIGURE 5

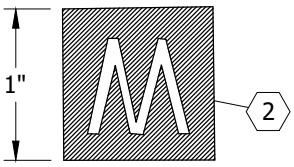

FIGURE 6

TABLE 1

DECALS FOR STREET LIGHT IDENTIFICATION			
ITEM	**DESCRIPTION**	**SCHEDULE**	**STOCK NUMBER**
1	"SDG&E" DECAL, 2 5/8" X 1 7/8"	LSI, OL1, DWL	S332850
2	YELLOW "M" DECAL, 1" X 1"	LS2B	S302112

TABLE OF CONTENTS

INSTALLATION:

A. CLEAN SURFACE WITH SOLVENT BEFORE APPLYING DECAL. DECAL HAS A PRESSURE SENSITIVE ADHESIVE BACKING.

B. THE DECAL SHALL BE LOCATED ON THE STREET SIDE OF ALL LUMINAIRES.

C. THE DECAL SHALL BE LOCATED SO IT IS VISIBLE FROM THE GROUND. DO NOT PLACE DECAL ON THE REFRACTOR OR OBSTRUCT EXISTING DECALS OR VENT HOLES. IF VARIATIONS FROM THESE LOCATION ARE REQUIRED, CONTACT DISTRIBUTION STANDARDS.

D. DECAL SHALL BE SECURED TO THE UNDERSIDE OF THE MAST ARM, 3 INCHES MINIMUM FROM POLE.

E. FOR DUAL LUMINAIRE INSTALLATIONS, TWO (2) DECALS ARE REQUIRED.

F. IF DURING MAINTENANCE, A YELLOW LETTER "O" OR A BLUE LETTER "M" DECAL EXISTS, REMOVE THE OLD DECAL AND REPLACE WITH "SDG&E" OR YELLOW "M" DECAL.

BILL OF MATERIALS: NONE

NOTES:

I. FIGURES 1 THROUGH 4 ARE SHOWN AS TYPICAL STREET LIGHT LUMINAIRES ONLY. (a)

II. THE "SDG&E" DECAL INDICATES THE STREET LIGHT IS OWNED AND MAINTAINED BY SDG&E.

III. THE YELLOW "M" DECAL INDICATES THE STREET LIGHT IS MAINTAINED BY SDG&E AND OWNED BY OTHERS.

REFERENCE:

(a) FOR SPECIFIC DETAILS, SEE UG4421, UG4422, UG4423, AND UG4424.

© 1998 - 2022 San Diego Gas & Electric Company. All rights reserved. Removal of this copyright notice without permission is not permitted under law.

REV	CHANGE	DR	BY	DSN	APV	DATE	REV	CHANGE	DR	BY	DSN	APV	DATE
C	FORMATTING	EDM	JIK	-	-	01/18/2022	F						
B	DRAWING UPDATE	PEI	-	-	-	02/04/2019	E						
A	EDITORIAL CHANGES	-	JS	GW	MDJ	09/15/2016	D						

X Indicates Latest Revision | Completely Revised | New Page | Information Removed

SDG&E ELECTRIC OVERHEAD AND UNDERGROUND CONSTRUCTION STANDARDS

STREET LIGHT OWNERSHIP AND MAINTENANCE IDENTIFICATION - DECAL

OH1514.1
UG4414.1

SCOPE: THIS STANDARD SHOWS STANDARD AND DECORATIVE LUMINAIRES USED FOR ROADWAY AND AREA LIGHTING.

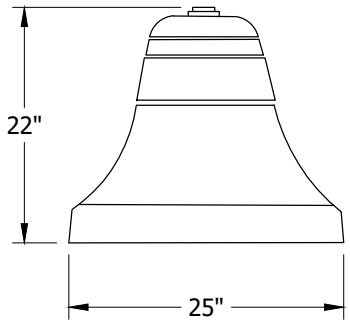

FIGURE 1
SIERRA LIGHTING
MISSION BELL LUMINAIRE
(70, 100, 150 & 250W HPSV SHOWN)

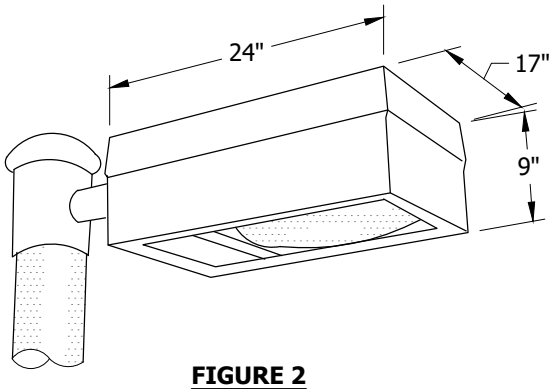

FIGURE 2
GENERAL ELECTRIC
DECASHIELD LUMINAIRE
D-400
(250W SHOWN)

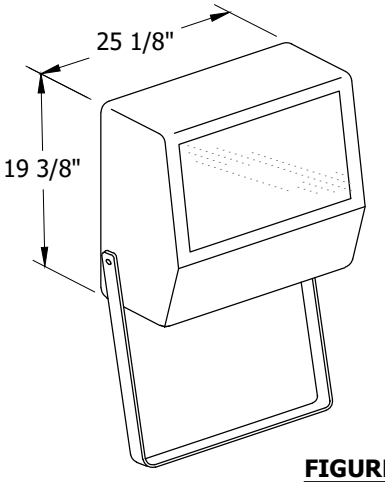

FIGURE 3
GENERAL ELECTRIC
POWER FLOOD
(1000W SHOWN)

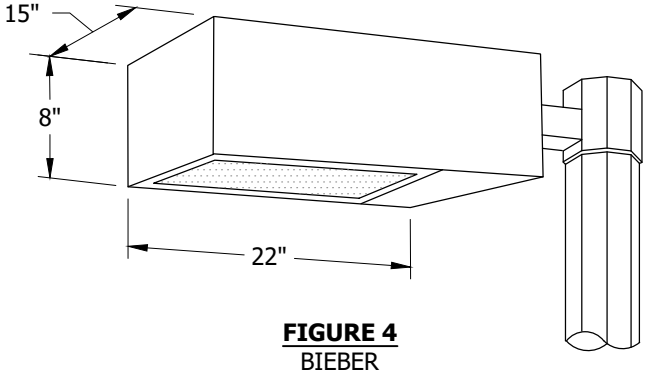

FIGURE 4
BIEBER
PARK LANE LUMINAIRE
(70W SHOWN)

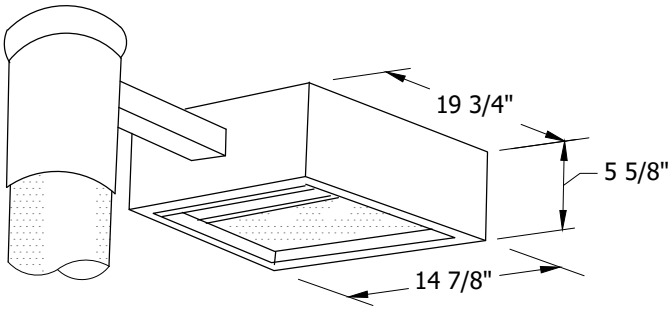

FIGURE 5
COOPER CONCOURSE
(70W SHOWN)

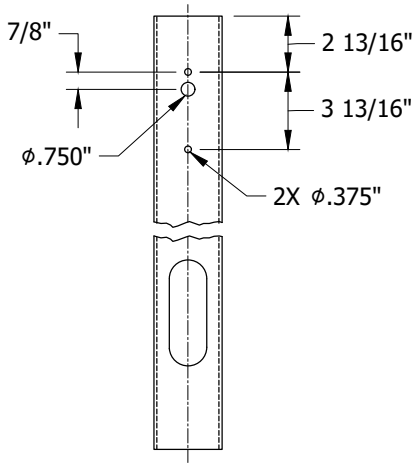

DETAIL 1
DRILLING DETAIL

TABLE OF CONTENTS

© 1998 - 2022 San Diego Gas & Electric Company. All rights reserved. Removal of this copyright notice without permission is not permitted under law.

REV	CHANGE	DR	BY	DSN	APV	DATE	REV	CHANGE	DR	BY	DSN	APV	DATE
C	FORMATTING	EDM	JIK	-	-	01/18/2022	F						
B	REVISION	-	-	PIA	JJ	03/24/2008	E						
A	REVISION	-	-	PIA	JJ	01/22/2007	D						

X Indicates Latest Revision | Completely Revised | New Page | Information Removed

SDG&E ELECTRIC UNDERGROUND CONSTRUCTION STANDARDS

STANDARD AND DECORATIVE LUMINAIRES

UG4422.1

TABLE 1

STANDARD AND DECORATIVE LUMINAIRES						
FIGURE NO.	BALLAST				LUNINAIRE	
	TYPE	LAMP (WATTS)	LAMP TYPE	SOURCE (VOLTS)	MANUFACTURER	STOCK NUMBER
1	REACTOR - NPF	70	HPSV	120	SIERRA LIGHTING	S474662
	REACTOR - NPF	100				S474620
	REACTOR - NPF	150				S474624
	REGULATOR	250				S474660
2	AUTO - REGULATOR				GENERAL ELECTRIC CO.	S474426
3	REGULATOR					S474452
	REGULATOR	400				S474454
	AUTO - REGULATOR	1,000				S474456
4	REACTOR - NPF	70			BIEBER LIGHTING	S473384
5	REACTOR - NPF				COOPER	S473220

INSTALLATION:

A. ALL PHOTO ELECTRIC RECEPTACLES ARE WIRED FOR 120V.

B. DUAL VOLTAGE BALLASTS RATED 120 X 240V ARE FACTORY WIRED FOR 120V OPERATION.

C. THESE LUMINAIRES ARE INSTALLED ON AN 8-INCH LONG, 2-INCH DIAMETER MAST ARM.

BILL OF MATERIALS: NONE

NOTES: NONE

REFERENCE:

a. FOR REPLACEMENT LAMPS, SEE UG4410.

b. FOR DIRECT BURIAL POLE INSTALLATION FOR MISSION BELL LUMINAIRES, SEE UG4432.

c. FOR DIRECT BURIAL POLE INSTALLATION FOR DECORATIVE LUMINAIRES, SEE UG4433.

TABLE OF CONTENTS

© 1998 - 2022 San Diego Gas & Electric Company. All rights reserved. Removal of this copyright notice without permission is not permitted under law.

REV	CHANGE	DR	BY	DSN	APV	DATE	REV	CHANGE	DR	BY	DSN	APV	DATE
C	FORMATTING	EDM	JIK	-	-	01/18/2022	F						
B	REVISION	-	-	PIA	JJ	03/24/2008	E						
A	REVISION	-	-	PIA	JJ	01/22/2007	D						

SCOPE: THIS STANDARD SHOWS POST TOP LUMINAIRES FOR ROADWAY LIGHTING.

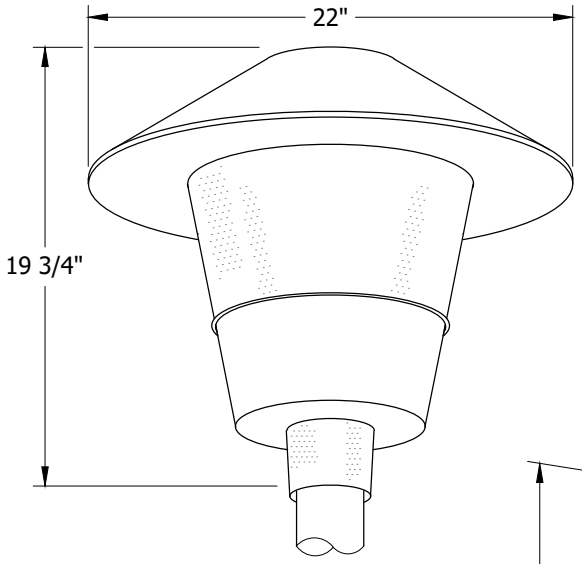

FIGURE 1
GENERAL ELECTRIC
POST TOP
(LAWNAIRE REPLACEMENT)

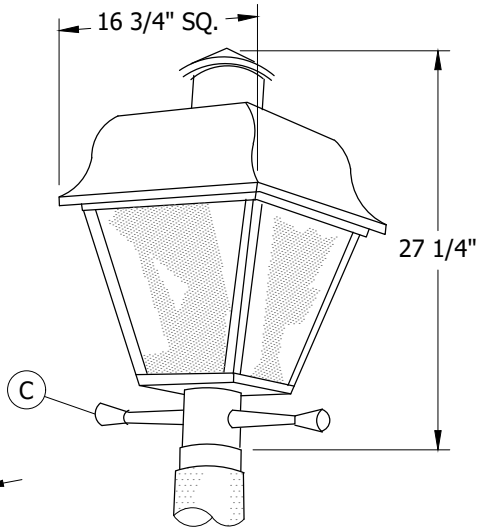

FIGURE 2
GENERAL ELECTRIC
SALEM POST TOP
(REPLACES TRADITIONAIRE)

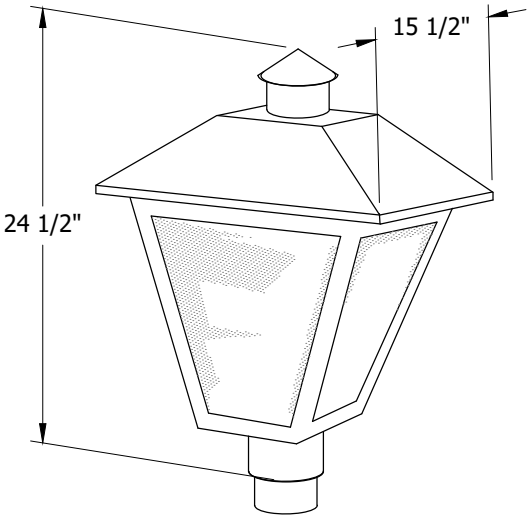

FIGURE 3
GENERAL ELECTRIC
TOWN & COUNTRY

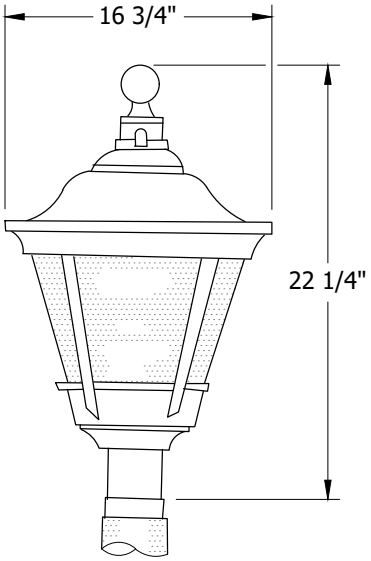

FIGURE 4
HOLOPHANE
RSL 350

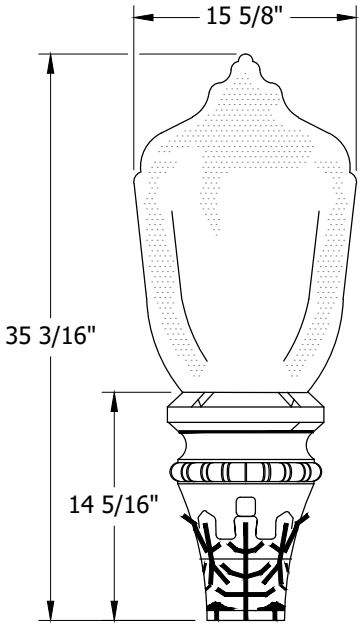

FIGURE 5
GENERAL ELECTRIC
STREET ORNAMENT COLONIAL 2

TABLE OF CONTENTS

© 1998 - 2022 San Diego Gas & Electric Company. All rights reserved. Removal of this copyright notice without permission is not permitted under law.

REV	CHANGE	DR	BY	DSN	APV	DATE	REV	CHANGE	DR	BY	DSN	APV	DATE
C	FORMATTING	EDM	JIK	-	-	01/18/2022	F						
B	REVISION	-	-	-	PJA/JJ	02/13/2007	E						
A	REVISION	-	-	-	PJA/JJ	01/22/2007	D						

X Indicates Latest Revision | Completely Revised | New Page | Information Removed

SDG&E ELECTRIC UNDERGROUND CONSTRUCTION STANDARDS

POST TOP LUMINAIRES

UG4423.1

TABLE 1

POST TOP LUMINAIRE						
FIGURE	BALLAST				LUMINAIRE	
	TYPE	LAMP (WATTS)	LAMP TYPE	SOURCE (VOLTS)	MANUFACTURER	STOCK NUMBER
1	REACTOR-NPF	70	HPSV	120	GENERAL ELECTRIC CO.	S473212
		100				S473232
2		70				S473216 (C)
		100				S474688 (C)
		150				S474696 (C)
3		70				S473226
		100				S474590
4					HOLOPHANE	S474594
5	REACTOR	70			GENERAL ELECTRIC CO.	S473210

INSTALLATION:

A. ALL P.E. RECEPTACLES ARE WIRED FOR THE SOURCE VOLTAGE SHOWN.

B. FIGURES 1, 2, 3, AND 5 ARE EQUIPPED WITH ACRYLIC REFRACTORS. FIGURE 4 IS EQUIPPED WITH GLASS REFRACTORS.

(C) THIS LUMINAIRE SHALL BE INSTALLED SO THAT THE LADDER ARM IS PARALLEL TO THE CURB.

D. THE MOUNTING HEIGHT FOR THESE LUMINAIRES IS 17 FEET.

BILL OF MATERIALS: NONE

NOTES: NONE

REFERENCE:

a. FOR REPLACEMENT LAMPS, SEE UG4410.

b. FOR REPLACEMENT PHOTO ELECTRIC CONTROLS, SEE UG4412.

c. FOR DIRECT BURIAL POLE INSTALLATION FOR DOMESTIC WALKWAY LIGHTING, SEE UG4434.

TABLE OF CONTENTS

© 1998 - 2022 San Diego Gas & Electric Company. All rights reserved. Removal of this copyright notice without permission is not permitted under law.

REV	CHANGE	DR	BY	DSN	APV	DATE	REV	CHANGE	DR	BY	DSN	APV	DATE
C	FORMATTING	EDM	JIK	-	-	01/18/2022	F						
B	REVISION	-	-	-	PJA/JJ	02/13/2007	E						
A	REVISION	-	-	-	PJA/JJ	01/22/2007	D						

SCOPE: THIS STANDARD SHOWS POST TOP LUMINAIRES FOR WALKWAY LIGHTING.

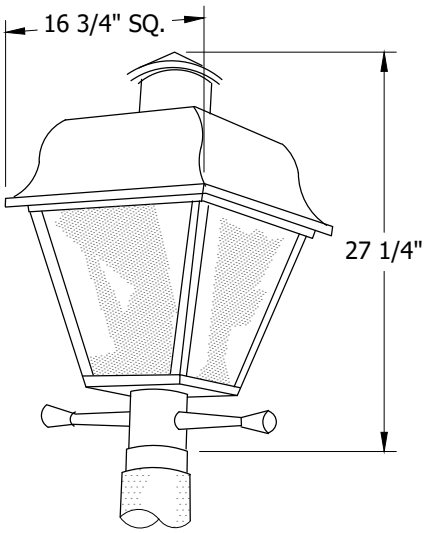

FIGURE 1
GENERAL ELECTRIC
SALEM POST TOP
(REPLACES TRADITIONAIRE)

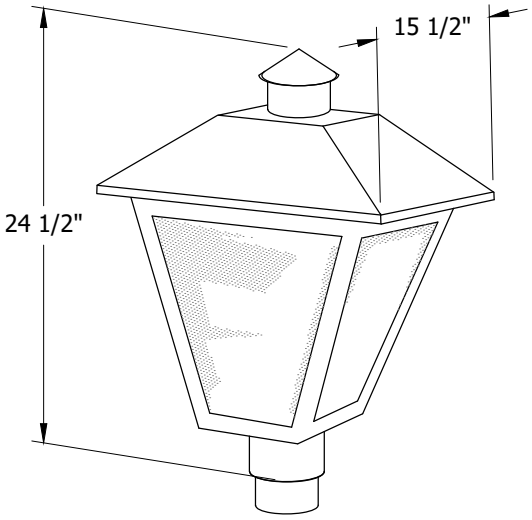

FIGURE 2
GENERAL ELECTRIC
TOWN & COUNTRY

TABLE 1

DOMESTIC WALKWAY LIGHTING (DWL) LUMINAIRES						
FIGURE NO.	BALLAST				LUMINAIRE	
	TYPE	LAMP (WATTS)	LAMP TYPE	SOURCE (VOLTS)	MANUFACTURER	STOCK NUMBER
1	REACTOR -NPF	50	HPSV	120	GENERAL ELECTRIC CO.	S474678
2						S474516

INSTALLATION:

A. NORMALLY USED WITH AN IES TYPE V SYMMETRIC LIGHT PATTERN.
B. ALL P.E. RECEPTACLES ARE WIRED FOR 120V.
C. DUAL VOLTAGE BALLASTS RATED 120 X 240V ARE FACTORY WIRED FOR 120V OPERATION.
D. THE MOUNTING HEIGHT FOR THE LUMINAIRES IS 9 FEET.

BILL OF MATERIALS: NONE

NOTES: NONE

REFERENCE:

a. FOR REPLACEMENT LAMPS, SEE UG4410.
b. FOR REPLACEMENT PHOTO ELECTRIC CONTROLS, SEE UG4412.
c. FOR "DIRECT BURIAL POLE INSTALLATION FOR DECORATIVE LUMINAIRES, SEE UG4434.

© 1998 - 2022 San Diego Gas & Electric Company. All rights reserved. Removal of this copyright notice without permission is not permitted under law.

REV	CHANGE	DR	BY	DSN	APV	DATE	REV	CHANGE	DR	BY	DSN	APV	DATE
C	FORMATTING	EDM	JIK	-	-	01/18/2022	F						
B	REVISION	-	-	PIA	JJ	02/13/2007	E						
A	REVISION	-	-	PIA	JJ	01/22/2007	D						

X Indicates Latest Revision | Completely Revised | New Page | Information Removed

TABLE OF CONTENTS

SCOPE: THIS STANDARD SHOWS THE INSTALLATION OF DIRECT BURIAL VICTORIAN STYLE OCTAGONAL POLE WITH LUMINAIRE FOR ROADWAY LIGHTING.

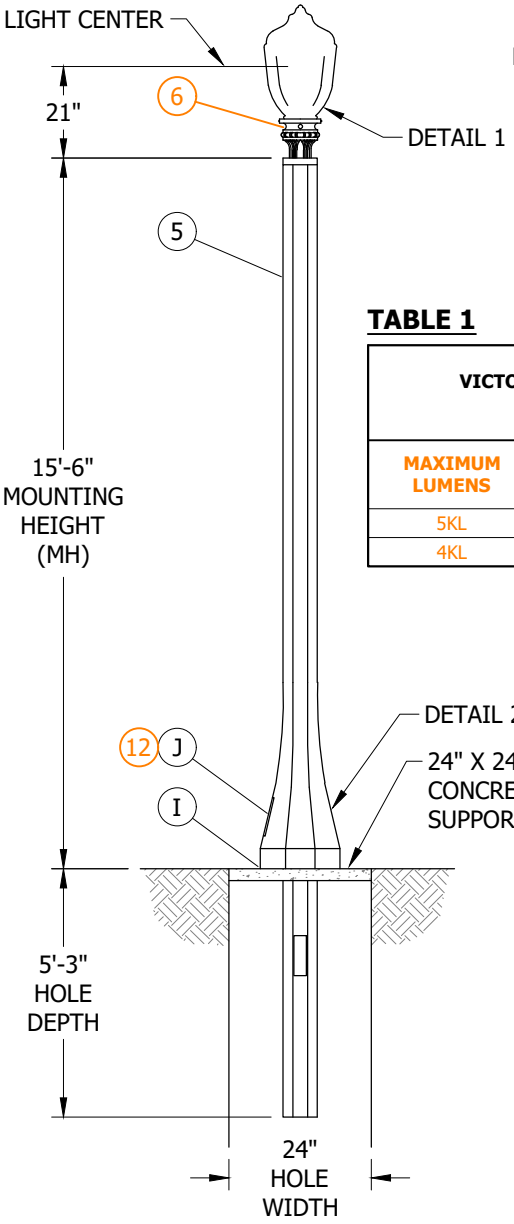

FIGURE 1

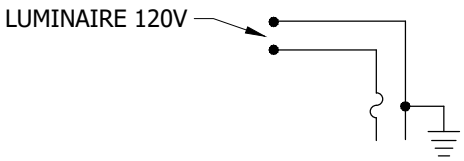

FIGURE 2
CONNECTION DIAGRAM

TABLE 1

VICTORIAN POLE/LUMINARE DESIGN UNITS		
MAXIMUM LUMENS	**LED DESIGN UNIT**	**LED STANDARD PAGE**
5KL	ACORNLED	UG4481
4KL	ACULED	UG4481

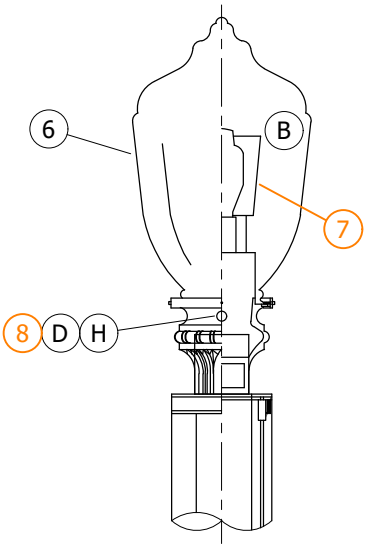

DETAIL 1

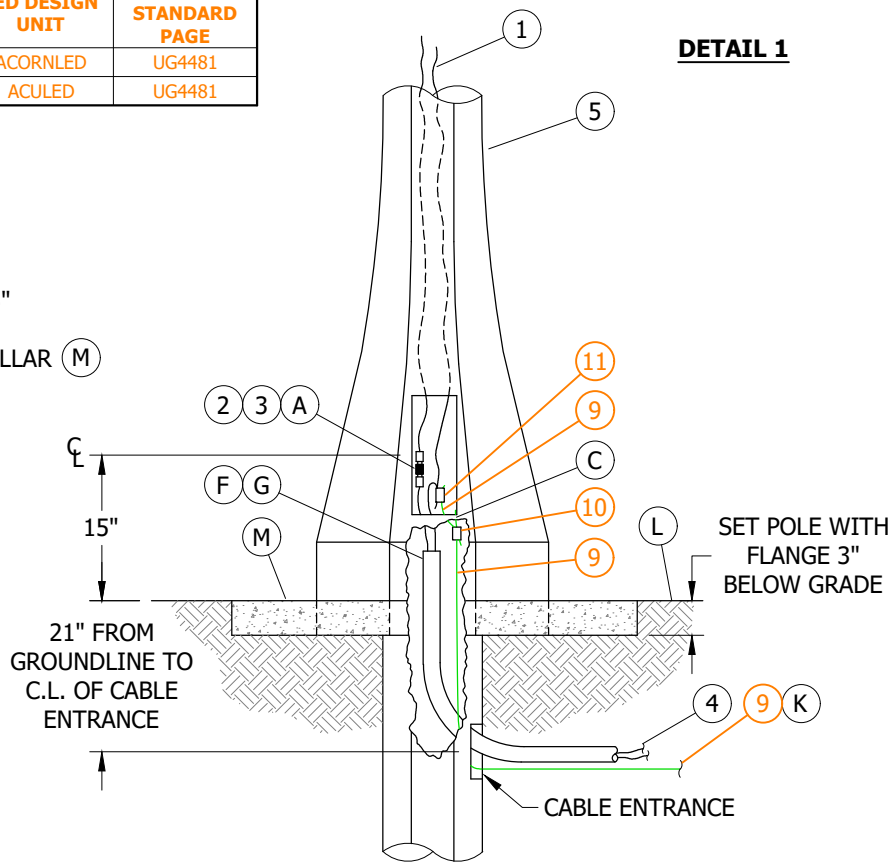

DETAIL 2
VIEW FROM STREET

TABLE OF CONTENTS

© 1998 - 2022 San Diego Gas & Electric Company. All rights reserved. Removal of this copyright notice without permission is not permitted under law.

REV	CHANGE	DR	BY	DSN	APV	DATE	REV	CHANGE	DR	BY	DSN	APV	DATE
C	FORMATTING	EDM	JIK	-	-	01/18/2022	F						
B	REVISION	-	-	PIA	JJ	07/27/2006	E						
A	REVISION	-	-	PIA	JJ	03/16/2006	D	LED CONTENT REVISION	AMP	RSL	JAS	KRG	09/30/2022

X Indicates Latest Revision | Completely Revised | New Page | Information Removed

SDG&E ELECTRIC UNDERGROUND CONSTRUCTION STANDARDS

DIRECT BURIAL POLE INSTALLATION
FOR VICTORIAN LUMINAIRES

UG4430.1

INSTALLATION:

(A) ALL LUMINAIRES ARE TO BE WIRED FOR 120V.

(B) REFRACTOR DIRECTION SHOULD BE PROPERLY PLACED.

(C) POLE TO CONTAIN ONE OF THREE GROUNDING METHODS:

1. A #8 COPPER WIRE.
2. STAINLESS STEEL BOLT TO CONNECT #6 COPPER WIRE.
3. COPPER GROUND STRAP.

(D) PHOTO ELECTRIC CONTROL FOR DECORATIVE LED FIXTURES ARE LOCATED INSIDE THE LUMINAIRE.

(E) PLACE POLE DIRECTLY BEHIND SIDEWALK IF CURB AND SIDEWALK IS 5 FEET WIDE OR LESS. ALLOW ROOM FOR CONCRETE SUPPORT COLLAR. OTHERWISE PLACE POLE DIRECTLY BEHIND CURB LEAVING ROOM FOR COLLAR. MAKE A JOINTER MARK BETWEEN THE CURB OR SIDEWALK AND THE COLLAR.

(F) WHEN CONDUIT IS INITIALLY INSTALLED, CONDUIT SHALL EXTEND 2 FEET ABOVE FINAL GRADE.

(G) CUT CONDUIT NO MORE THAN 6 INCHES BELOW HANDHOLE OPENING IN THE POLE FOR FINAL INSTALLATION.

(H) FACE PHOTO CELL TO THE NORTH.

(J) ROTATE THE POLE TO LINE UP CABLE ENTRANCE WITH CONDUIT. HANDHOLE OPENING IN POLE SHALL FACE THE SIDEWALK.

(K) INSTALL 30 FEET OF GROUND WIRE IN THE TRENCH AS SHOWN IN FIGURE 2, ON UG4510. THE ALTERNATE METHOD OF GROUNDING IS TO INSTALL (2) 8-FOOT GROUND RODS 6 FEET MINIMUM APART. USE #6 BARE STRAND SOFT DRAWN COPPER WIRE TO ATTACH TO THE RODS AND POLE.

(L) NATURAL SPOIL WITH 3/4-INCH MAXIMUM AGGREGATE, SAND, DECOMPOSED GRANITE, 3/4-INCH MAXIMUM AGGREGATE, OR POLESET (LISTED IN ORDER OF LEAST EXPENSE) MAY BE USED AS BACKFILL. TAMP THE BACKFILL (EXCEPT POLESET) THOROUGHLY.

(M) CONCRETE SUPPORT COLLAR TO BE POURED IN PLACE.

BILL OF MATERIALS:

TABLE OF CONTENTS

ITEM	DESCRIPTION	QUANTITY	STANDARD PAGE	STOCK NUMBER	DESIGN UNITS
1	WIRE, 2 #8, 600V, ALUMINUM	16'-0"	--	S196176	--
2	KIT, CONNECTOR FUSED	1	--	S443392	--
3	CARTRIDGE, FUSE, DUAL ELEMENT, 10A, 250V	1	--	S363936	--
4	WIRE, 2 #8, 600V	AS REQ'D	--	S196176	--
5	POLE, PRESTRESSED CONCRETE, DIRECT BURIAL, VICTORIAN STYLE, OCTAGONAL	1	--	S678112	--
6	LUMINAIRE, HOLOPHANE TAFT OR KING ACORN STYLE	1	UG4481	--	--
7	DECAL, STREET LIGHT OWNERSHIP/MAINTENANCE IDENTIFICATION	1	4414	--	--
8	CONTROL, PHOTO ELECTIC	1	UG4412	S273884	--
9	WIRE, BARE COPPER, #2, 7 STR. SOFT DRAWN	33'-0"	--	S812818 (X)	--
10	CONNECTOR, COPPER COMPRESSION	1	--	S257792	--
11	CONNECTOR, COMPRESSION	1	--	S256432	--
12	TAG, POLE	1	4413	--	--

NOTES:

(X) THIS ITEM IS EXEMPT.

REFERENCE:

a. SEE UG4510.

© 1998 - 2022 San Diego Gas & Electric Company. All rights reserved. Removal of this copyright notice without permission is not permitted under law.

REV	CHANGE	DR	BY	DSN	APV	DATE	REV	CHANGE	DR	BY	DSN	APV	DATE
C	FORMATTING	EDM	JIK	-	-	01/18/2022	F						
B	REVISION	-	-	PIA	JJ	07/27/2006	E						
A	REVISION	-	-	PIA	JJ	03/16/2006	D	LED CONTENT REVISION	AMP	RSL	JAS	KRG	09/30/2022

X Indicates Latest Revision | Completely Revised | New Page | Information Removed

SDG&E ELECTRIC UNDERGROUND CONSTRUCTION STANDARDS

DIRECT BURIAL POLE INSTALLATION FOR VICTORIAN LUMINAIRES

UG4430.2

SCOPE: THIS STANDARD SHOWS THE INSTALLATION OF DIRECT BURIAL POLES WITH CONVENTIONAL LUMINAIRES FOR ROADWAY LIGHTING.

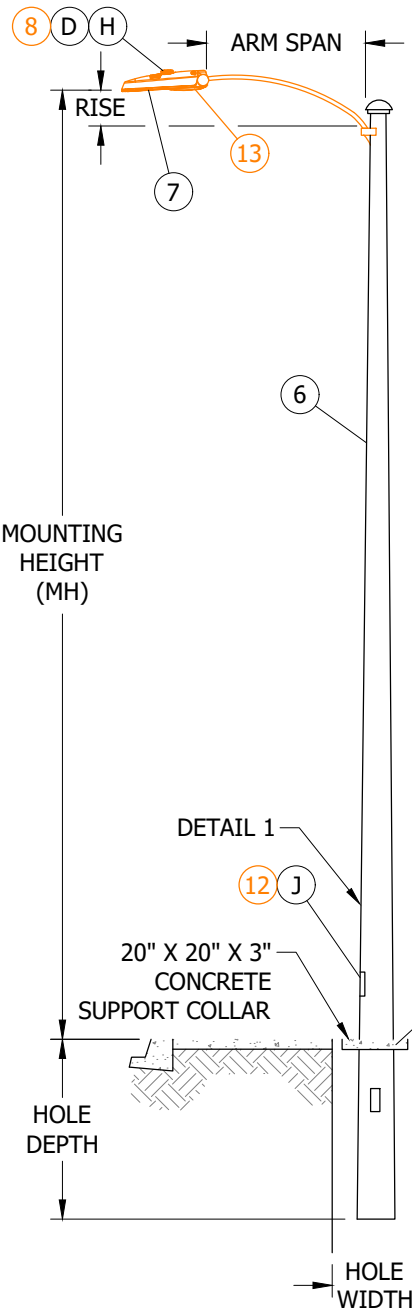

FIGURE 1

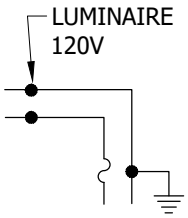

FIGURE 3
CONNECTION DIAGRAM FOR FIGURE 1

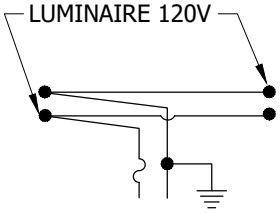

FIGURE 4
CONNECTION DIAGRAM FOR FIGURE 2

FIGURE 2

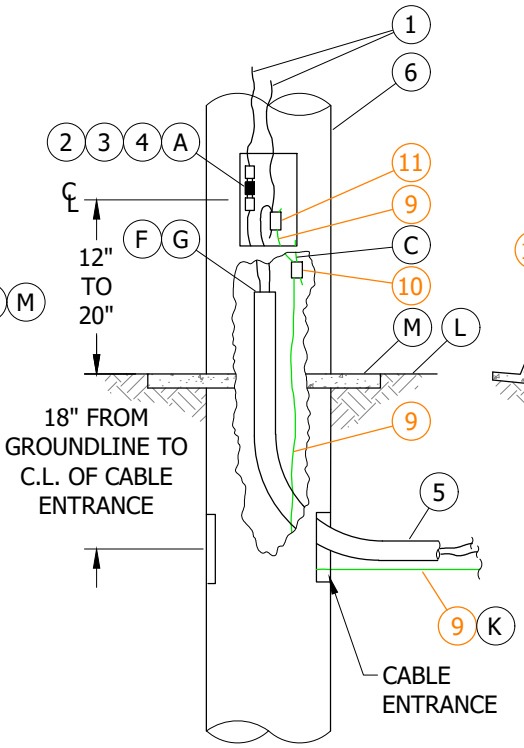

DETAIL 1
VIEW FROM STREET

TABLE OF CONTENTS

© 1998 - 2022 San Diego Gas & Electric Company. All rights reserved. Removal of this copyright notice without permission is not permitted under law.

REV	CHANGE	DR	BY	DSN	APV	DATE	REV	CHANGE	DR	BY	DSN	APV	DATE
C	FORMATTING	EDM	JIK	-	-	01/18/2022	F						
B	REVISION	-	-	PSW	JJ	07/27/2006	E						
A	REVISION	-	-	JLB	RDJ	01/01/1987	D	LED CONTENT REVISION	AMP	RSL	JAS	KRG	07/25/2022

X Indicates Latest Revision	Completely Revised	New Page	Information Removed	

SDG&E ELECTRIC UNDERGROUND CONSTRUCTION STANDARDS

SHEET 1 OF 3

DIRECT BURIAL POLE INSTALLATION FOR CONVENTIONAL LUMINAIRES

UG4431.1

TABLE 1

PRESTRESSED CONCRETE DIRECT BURIAL POLE												
LUMINAIRE MAXIMUM LUMENS	LED STANDARD PAGE	NORMAL MOUNTING HEIGHT (FT)	MAST ARM		OVERALL POLE LENGTH	HOLE DEPTH	HOLE WIDTH	ACTUAL MOUNTING HEIGHT	STOCK NUMBER (B)			
			ARM SPAN	ARM RISE					NATURAL AGGREGATE			
									SINGLE ARM	REPLACE SINGLE ARM	DOUBLE ARM	REPLACE DOUBLE ARM
2-7KL	UG4471, UG4472, UG4473	26	6'-0"	2'-3"	29'-6"	5'-0"	18"	26'-9"	S678144	S110822	S678162	S110824
8-15KL	UG4471, UG4472, UG4473	30	6'-0"	2'-3"	32'-10"	5'-0"	18"	30'-1"	S678180	S110822	S678198	S110824
20-25KL	UG4471, UG4472, UG4473	35	6'-0"	2'-3"	38'-5"	5'-6"	18"	35'-2"	S678216	S110822	--	--

INSTALLATION:

(A) ALL LUMINAIRES ARE TO BE WIRED FOR 120V.

(B) STOCK NUMBERS ARE FOR POLES WITH MAST ARMS AND REPLACEMENT MAST ARMS.

(C) POLE TO CONTAIN ONE OF THREE GROUNDING METHODS:

1. #8 COPPER WIRE.
2. STAINLESS STEEL BOLT TO CONNECT #6 COPPER WIRE.
3. COPPER GROUND STRAP.

(D) PHOTO ELECTRIC CONTROL FOR ROADWAY LED LIGHT FIXTURES ARE LOCATED ON TOP OF THE UNIT.

(E) PLACE POLE DIRECTLY BEHIND SIDEWALK IF CURB AND SIDEWALK IS 5 FEET WIDE OR LESS. ALLOW ROOM FOR CONCRETE SUPPORT COLLAR. OTHERWISE PLACE POLE DIRECTLY BEHIND CURB LEAVING ROOM FOR COLLAR. MAKE A JOINTER MARK BETWEEN THE CURB OR SIDEWALK AND THE COLLAR.

(F) WHEN CONDUIT IS INITIALLY INSTALLED, CONDUIT SHALL EXTEND 2 FEET ABOVE FINAL GRADE.

(G) CUT CONDUIT NO MORE THAN 6 INCHES BELOW HANDHOLE OPENING IN THE POLE FOR FINAL INSTALLATION.

(H) FACE PHOTO CELL TO THE NORTH.

(J) ROTATE THE POLE TO LINE UP CABLE ENTRANCE WITH CONDUIT. HANDHOLE OPENING IN POLE SHALL FACE THE SIDEWALK.

(K) INSTALL 30 FEET OF GROUND WIRE IN THE TRENCH AS SHOWN IN FIGURE 2, ON UG4510. THE ALTERNATE METHOD OF GROUNDING IS TO INSTALL (2) 8-FOOT GROUND RODS 6 FEET MINIMUM APART. USE #6 BARE STR. SOFT DRAWN COPPER WIRE TO ATTACH TO THE RODS AND POLE.

(L) NATURAL SPOIL WITH 3/4-INCH MAXIMUM AGGREGATE, SAND, DECOMPOSED GRANITE, 3/4-INCH MAXIMUM AGGREGATE, OR POLESET (LISTED IN ORDER OF LEAST EXPENSE) MAY BE USED AS BACKFILL. TAMP THE BACKFILL (EXCEPT POLESET) THOROUGHLY.

(M) CONCRETE SUPPORT COLLAR TO BE POURED IN PLACE.

BILL OF MATERIALS:

ITEM	DESCRIPTION	QUANTITY						STANDARD PAGE	STOCK NUMBER	DESIGN UNITS
		FIGURE 1			FIGURE 2					
		26'-0" MH	30'-0" MH	35'-0" MH	26'-0" MH	30'-0" MH	35'-0" MH			
1	WIRE, 2 #8, 600V, ALUMINUM	31'-0"	35'-0"	40'-0" (I)	44'-0"	47'-0"	52'-0" (I)	--	S196176	--
2	KIT, CONNECTOR FUSED	1			1			--	S443392	--
3	CARTRIDGE, FUSE, DUAL ELEMENT, 10A, 250V	1			--			--	S363936	--

© 1998 - 2022 San Diego Gas & Electric Company. All rights reserved. Removal of this copyright notice without permission is not permitted under law.

REV	CHANGE	DR	BY	DSN	APV	DATE	REV	CHANGE	DR	BY	DSN	APV	DATE
C	FORMATTING	EDM	JIK	-	-	01/18/2022	F						
B	REVISION	-	-	PSW	JJ	07/27/2006	E						
A	REVISION	-	-	JLB	RDJ	01/01/1987	D	LED CONTENT REVISION	AMP	RSL	JAS	KRG	07/25/2022

X Indicates Latest Revision | Completely Revised | New Page | Information Removed

SDG&E ELECTRIC UNDERGROUND CONSTRUCTION STANDARDS

DIRECT BURIAL POLE INSTALLATION
FOR CONVENTIONAL LUMINAIRES

TABLE OF CONTENTS

BILL OF MATERIALS (CONT'D):

ITEM	DESCRIPTION	QUANTITY						STANDARD PAGE	STOCK NUMBER	DESIGN UNITS
		FIGURE 1			FIGURE 2					
		26'-0" MH	30'-0" MH	35'-0" MH	26'-0" MH	30'-0" MH	35'-0" MH			
4	FUSE, LIMITRON, 20A, 600V	--			1			--	S366128	--
5	WIRE, 2 #8, 600V	AS REQ'D			AS REQ'D			--	S196176	--
6	POLE, PRESTRESSED CONCRETE, DIRECT BURIAL, INCLUDING MAST ARMS	1			1			--	SEE TABLE 1	--
7	LUMINAIRE, ROADWAY "COBRAHEAD" LED	1			2			OH1570 / UG4470	--	--
8	CONTROL, PHOTO ELECTRIC	1			2			UG4412	TBD	--
9	WIRE, BARE COPPER, #2, 7 STR. SOFT DRAWN	33'-0"			33'-0"			--	S812818 (X)	--
10	CONNECTOR, COPPER COMPRESSION	1			1			--	S257792	--
11	CONNECTOR, COMPRESSION	1			1			--	S256432	--
12	TAG, POLE	1			1			4413	--	--
13	DECAL, STREET LIGHT MAINTENANCE IDENTIFICATION	1			2			4414	--	--

NOTES:

(I) ADD 1FT TO WIRE QUANTITY FOR EVERY ADDITIONAL FOOT ABOVE TYPICAL 35FT MOUNTING HEIGHT FOR ITEM 1.

(X) THIS ITEM IS EXEMPT.

REFERENCE:

a. SEE UG4510.

TABLE OF CONTENTS

© 1998 - 2022 San Diego Gas & Electric Company. All rights reserved. Removal of this copyright notice without permission is not permitted under law.

REV	CHANGE	DR	BY	DSN	APV	DATE	REV	CHANGE	DR	BY	DSN	APV	DATE
C	FORMATTING	EDM	JIK	-	-	01/18/2022	F						
B	REVISION	-	-	PSW	JJ	07/27/2006	E						
A	REVISION	-	-	JLB	RDJ	01/01/1987	D	LED CONTENT REVISION	AMP	RSL	JAS	KRG	07/25/2022

SCOPE: THIS STANDARD SHOWS THE INSTALLATION OF DIRECT BURIAL POLES WITH MISSION BELL LUMINAIRES FOR ROADWAY LIGHTING.

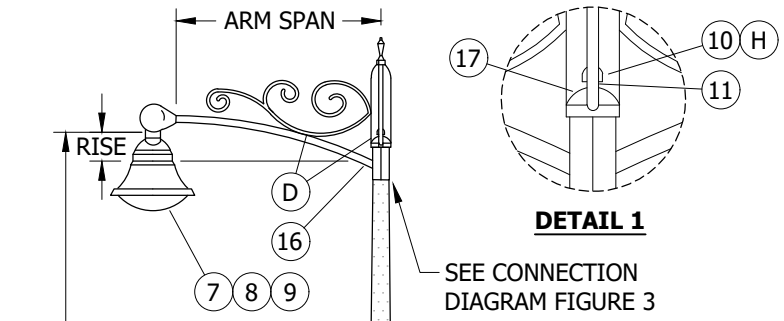

DETAIL 1

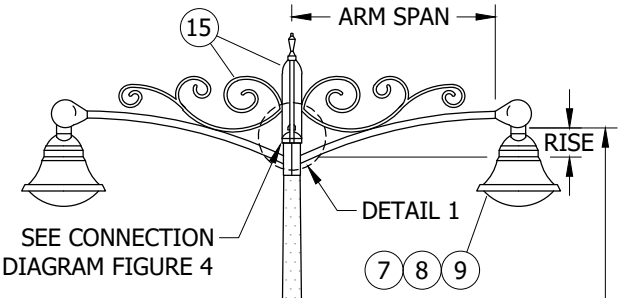

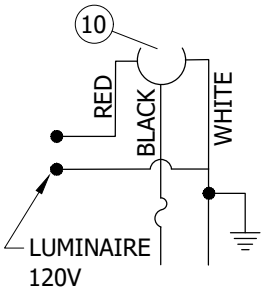

FIGURE 3 (I)
CONNECTION DIAGRAM FOR FIGURE 1

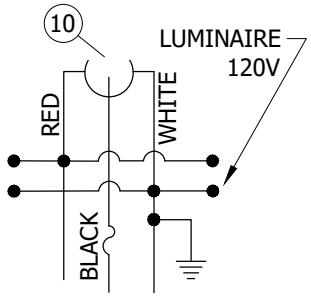

FIGURE 4 (I)
CONNECTION DIAGRAM FOR FIGURE 2

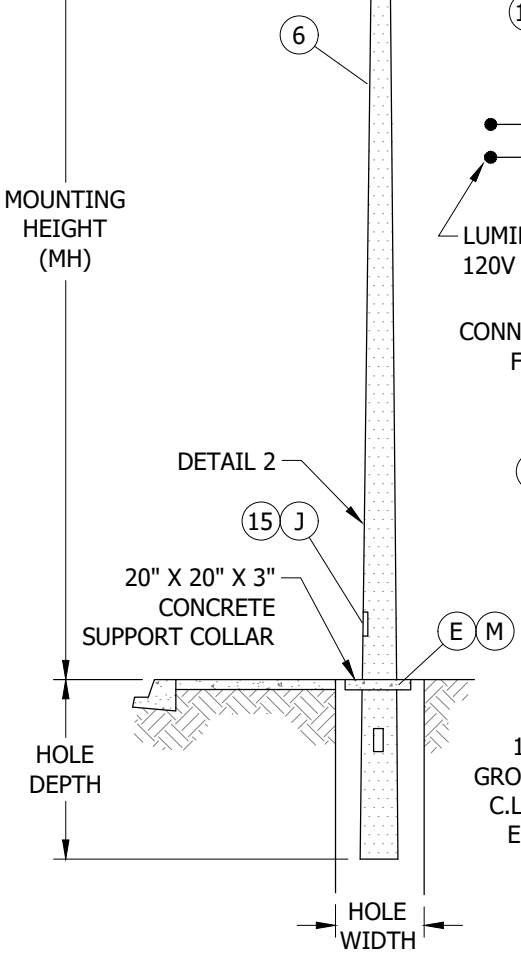

FIGURE 1

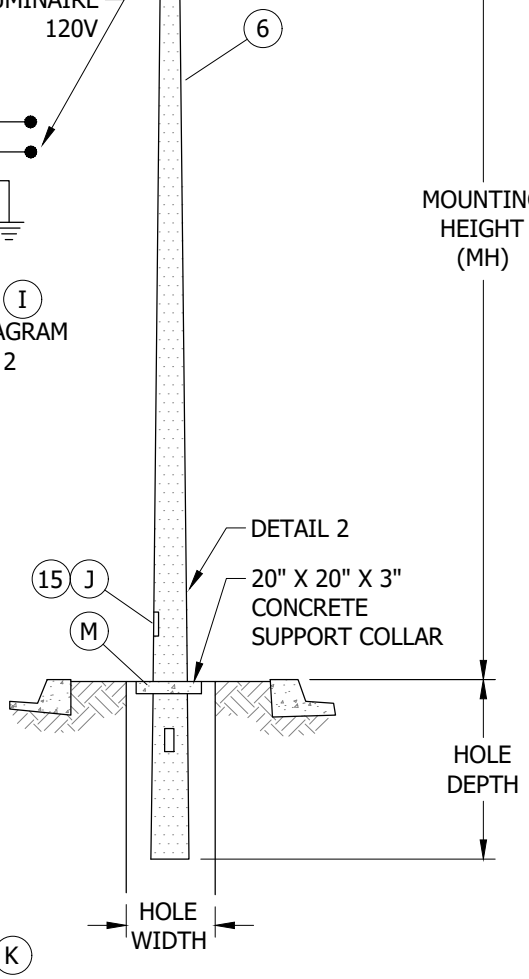

FIGURE 2

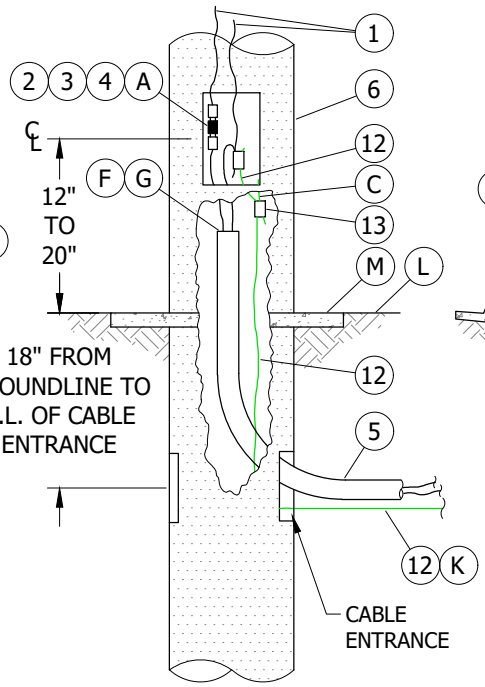

DETAIL 2
VIEW FROM STREET

© 1998 - 2022 San Diego Gas & Electric Company. All rights reserved. Removal of this copyright notice without permission is not permitted under law.

REV	CHANGE	DR	BY	DSN	APV	DATE	REV	CHANGE	DR	BY	DSN	APV	DATE
C	FORMATTING	EDM	JIK	-	-	01/18/2022	F						
B	REVISION	-	-	PIA	JJ	02/13/2007	E						
A	REVISION	-	-	JLB	RDJ	01/01/1987	D						

X Indicates Latest Revision | Completely Revised | New Page | Information Removed

SDG&E ELECTRIC UNDERGROUND CONSTRUCTION STANDARDS

SHEET 1 OF 3

DIRECT BURIAL POLE INSTALLATION FOR MISSION BELL LUMINAIRES

UG4432.1

TABLE OF CONTENTS

TABLE 1

PRESTRESSED CONCRETE DIRECT BURIAL POLE											
MISSION BELL LUMINAIRE	NORMAL MOUNTING HEIGHT (FT)	MAST ARM		OVERALL POLE LENGTH	HOLE DEPTH	HOLE WIDTH	ACTUAL MOUNTING HEIGHT	STOCK NUMBER (B)			
		SPAN	RISE					NATURAL AGGREGATE			
								SINGLE ARM	REPLACE SINGLE ARM	DOUBLE ARM	REPLACE DOUBLE ARM
70W, 100W, 150W HPSV	26	4'-0"	1'-9"	29'-6"	5'-0"	18"	26'-3"	S678288	S110820	S678306	--
200W, 250W, HPSV	30	4'-0"	1'-9"	32'-10"	5'-0"	18"	29'-7"	S378324		--	--

INSTALLATION:

(A) ALL LUMINAIRES ARE TO BE WIRED FOR 120V.

(B) STOCK NUMBERS ARE FOR POLES ARMS AND MAST ARMS ONLY.

(C) POLE TO CONTAIN ONE OF THREE GROUNDING METHODS:

1. #8 COPPER WIRE.
2. STAINLESS STEEL BOLT TO CONNECT #6 COPPER WIRE.
3. COPPER GROUND STRAP.

(D) BIRDCAGE AND DECORATIVE SCROLLS ARE NOT A STANDARD INSTALLATION. BIRDCAGE AND DECORATIVE SCROLLS TO BE PROVIDED BY CUSTOMER OR BY GOVERNMENTAL AGENCY. SDG&E WILL INSTALL THE BIRDCAGE AND DECORATIVE SCROLL AT THE TIME THE POLE IS INSTALLED.

(E) PLACE POLE DIRECTLY BEHIND SIDEWALK IF CURB AND SIDEWALK IS 5 FEET WIDE OR LESS. ALLOW ROOM FOR CONCRETE SUPPORT COLLAR. OTHERWISE PLACE POLE DIRECTLY BEHIND CURB LEAVING ROOM FOR COLLAR. MAKE A JOINTER MARK BETWEEN THE CURB OR SIDEWALK AND THE COLLAR.

(F) WHEN CONDUIT IS INITIALLY INSTALLED, IT SHALL EXTEND 2 FEET ABOVE FINAL GRADE.

(G) CUT CONDUIT NO MORE THAN 6 INCHES BELOW HANDHOLE OPENING IN THE POLE FOR FINAL INSTALLATION.

(H) FACE PHOTO CELL TO THE NORTH.

(J) ROTATE THE POLE TO LINE UP CABLE ENTRANCE WITH CONDUIT. HANDHOLE OPENING IN POLE SHALL FACE THE SIDEWALK.

(K) INSTALL 30 FEET OF GROUND WIRE IN THE TRENCH AS SHOWN IN FIGURE 2, ON UG4510. THE ALTERNATE METHOD OF GROUNDING IS TO INSTALL (2) 8-FOOT GROUND RODS 6 FEET MINIMUM APART. USE #6 BARE STR. SOFT DRAWN COPPER WIRE TO ATTACH TO THE RODS AND POLE.

(L) NATURAL SPOIL WITH 3/4-INCH MAXIMUM AGGREGATE, SAND, DECOMPOSED GRANITE, 3/4-INCH MAXIMUM AGGREGATE, OR POLESET (LISTED IN ORDER OF LEAST EXPENSE) MAY BE USED AS BACKFILL. TAMP THE BACKFILL (EXCEPT POLESET) THOROUGHLY.

(M) CONCRETE SUPPORT COLLAR TO BE POURED IN PLACE.

BILL OF MATERIALS:

ITEM	DESCRIPTION	QUANTITY						STANDARD PAGE	STOCK NUMBER	DESIGN UNITS
		FIGURE 1			FIGURE 2					
		26'-0" MH	30'-0" MH	35'-0" MH	26'-0" MH	30'-0" MH	35'-0" MH			
1	WIRE, #8 THW, 600V, ALUMINUM (II)	31'-0"	35'-0"	40'-0"	43'-0"	47'-0"	52'-0"	--	S196176	--
2	KIT, CONNECTOR FUSED	1			1			--	S443392	--
3	CARTRIDGE, FUSE, DUAL ELEMENT, 10A, 250V	1			--			--	S363936	--
4	FUSE, LIMITRON, 20A, 600V	--			1			--	S366128	--

© 1998 - 2022 San Diego Gas & Electric Company. All rights reserved. Removal of this copyright notice without permission is not permitted under law.

REV	CHANGE	DR	BY	DSN	APV	DATE	REV	CHANGE	DR	BY	DSN	APV	DATE
C	FORMATTING	EDM	JIK	-	-	01/18/2022	F						
B	REVISION	-	-	PIA	JJ	02/13/2007	E						
A	REVISION	-	-	JLB	RDJ	01/01/1987	D						

X Indicates Latest Revision | Completely Revised | New Page | Information Removed

SDG&E ELECTRIC UNDERGROUND CONSTRUCTION STANDARDS

DIRECT BURIAL POLE INSTALLATION
FOR MISSION BELL LUMINAIRES

UG4432.2

TABLE OF CONTENTS

BILL OF MATERIALS (CONT'D):

ITEM	DESCRIPTION	QUANTITY						STANDARD PAGE	STOCK NUMBER	DESIGN UNITS
		FIGURE 1			FIGURE 2					
		26'-0" MH	30'-0" MH	35'-0" MH	26'-0" MH	30'-0" MH	35'-0" MH			
5	WIRE, #8 THW, 600V, ALUMINUM INSULATED CABLE	AS REQ'D			AS REQ'D			--	S196176	--
6	POLE, PRESTRESSED CONCRETE, DIRECT BURIAL INCLUDING MAST ARMS	1			1			--	SEE TABLE 1	--
7	LUMINAIRE, MISSION BELL	1			2			4422	--	--
8	LAMP, HPSV	1			2			4410	--	--
9	REFRACTOR, REPLACEMENT	1			2			4411	--	--
10	CONTROL, PHOTO ELECTRIC, 105-285V, 1,000W	1			1			--	S273888	--
11	ADAPTER, P. E. RECEPTACLE	1			1			--	S102544	--
12	WIRE, BARE COPPER, #2, 7 STR. SOFT DRAWN	33'-0"			33'-0"			--	S812818 (X)	--
13	CONNECTOR, COPPER COMPRESSION	1			1			--	S257792	--
14	CONNECTOR, COMPRESSION (II)	1			1			--	S256432	--
15	TAG, POLE	1			1			4413	--	--
16	DECAL, STREET LIGHT MAINTENANCE IDENTIFICATION	1			2			4414	--	--
17	CAP, BONNET	1			1			--	S203902	--
18	WIRE, #10 THW, 600V, COPPER (II)	AS REQ'D			AS REQ'D			--	S808064	--

NOTES:

(I) USE #10 WIRE (ITEM 18) FROM THE PHOTO ELECTRIC CONTROL TO THE LUMINAIRE.

(II) NOT SHOWN ON FIGURES.

(X) THIS ITEM IS EXEMPT.

REFERENCE:

a. SEE UG4510.

TABLE OF CONTENTS

© 1998 - 2022 San Diego Gas & Electric Company. All rights reserved. Removal of this copyright notice without permission is not permitted under law.

REV	CHANGE	DR	BY	DSN	APV	DATE	REV	CHANGE	DR	BY	DSN	APV	DATE
C	FORMATTING	EDM	JIK	-	-	01/18/2022	F						
B	REVISION	-	-	PIA	JJ	02/13/2007	E						
A	REVISION	-	-	JLB	RDJ	01/01/1987	D						

X Indicates Latest Revision | Completely Revised | New Page | Information Removed

SDG&E ELECTRIC UNDERGROUND CONSTRUCTION STANDARDS

DIRECT BURIAL POLE INSTALLATION FOR MISSION BELL LUMINAIRES

UG4432.3

SCOPE: THIS STANDARD SHOWS THE INSTALLATION OF DIRECT BURIAL POLES WITH DECORATIVE LUMINAIRES FOR ROADWAY LIGHTING.

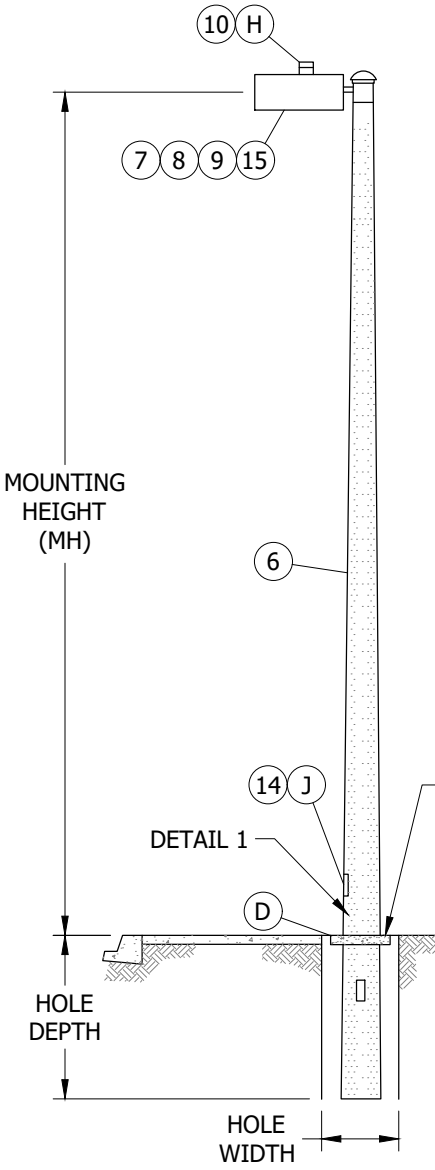

FIGURE 1

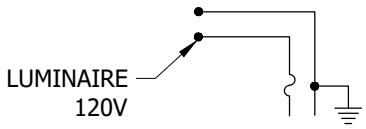

FIGURE 3
CONNECTION DIAGRAM FOR FIGURE 1

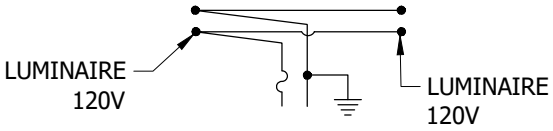

FIGURE 4
CONNECTION DIAGRAM FOR FIGURE 2

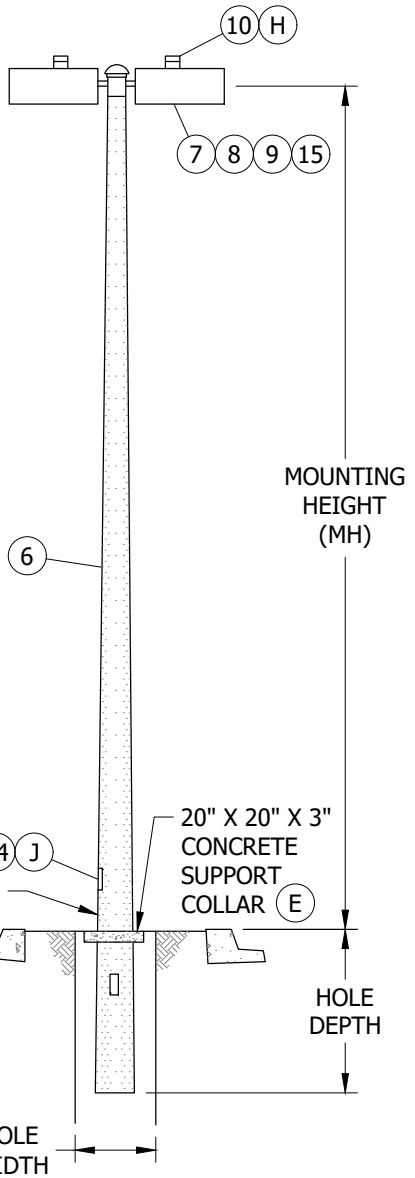

FIGURE 2

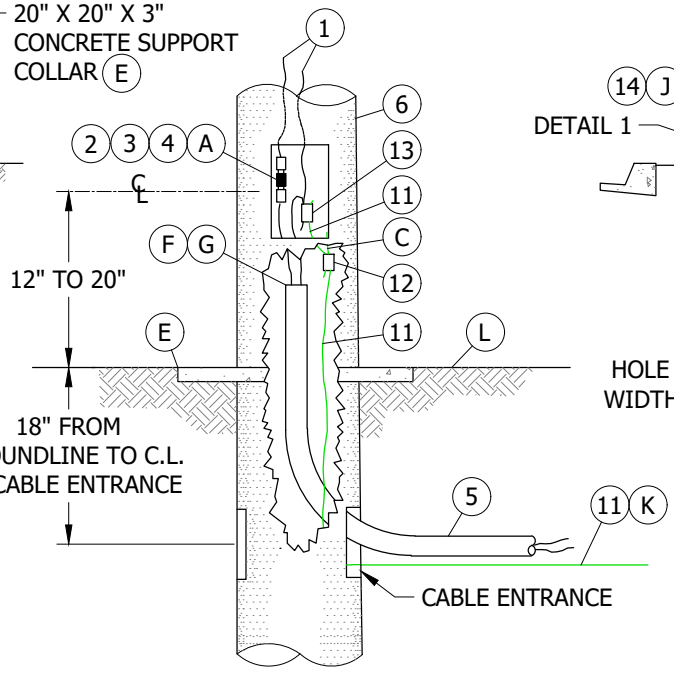

DETAIL 1
VIEW FROM STREET

TABLE OF CONTENTS

© 1998 - 2022 San Diego Gas & Electric Company. All rights reserved. Removal of this copyright notice without permission is not permitted under law.

REV	CHANGE	DR	BY	DSN	APV	DATE	REV	CHANGE	DR	BY	DSN	APV	DATE
C							F						
B	FORMATTING	EDM	JIK	-	-	01/18/2022	E						
A	REVISION	-	-	PIA	JJ	02/13/2007	D						

X Indicates Latest Revision | Completely Revised | New Page | Information Removed

SDG&E ELECTRIC UNDERGROUND CONSTRUCTION STANDARDS

SHEET 1 OF 3

DIRECT BURIAL POLE INSTALLATION FOR DECORATIVE LUMINAIRES

UG4433.1

TABLE 1

PRESTRESSED CONCRETE DIRECT BURIAL POLE							
DECORATIVE LUMINAIRE	NORMAL MOUNTING HEIGHT (FT)	OVERALL POLE LENGTH	HOLE DEPTH	HOLE WIDTH (IN)	ACTUAL MOUNTING HEIGHT	STOCK NUMBER (B)	POLE SHAPE
70W HPSV	24	27'-7"	4'-7"	18	23'-0"	S677900	OCTAGONAL
70W, 100W, 150W HPSV	26	29'-6"	5'-0"		24'-6"	S678000	ROUND
100W, 150W, 175W HPSV	28	32'-10"	4'-11"		27'-11"	S677902	OCTAGONAL
200W, 250W HPSV	30	32'-10"	5'-0"		27'-10"	S678036	ROUND
400W HPSV	35	38'-5"	5'-6"		32'-11"	S678072	

INSTALLATION:

(A) ALL LUMINAIRES ARE TO BE WIRED FOR 120V.

(B) STOCK NUMBERS ARE FOR POLES ONLY.

(C) POLE TO CONTAIN ONE OF THREE GROUNDING METHODS.

1. A #8 COPPER WIRE.
2. STAINLESS STEEL BOLT TO CONNECT #6 COPPER WIRE.
3. COPPER GROUND STRAP.

(D) PLACE POLE DIRECTLY BEHIND SIDEWALK IF CURB AND SIDEWALK IS 5 FEET WIDE OR LESS. ALLOW ROOM FOR CONCRETE SUPPORT COLLAR. OTHERWISE PLACE POLE DIRECTLY BEHIND CURB LEAVING ROOM FOR COLLAR. MAKE A JOINTER MARK BETWEEN THE CURB OR SIDEWALK AND THE COLLAR.

(E) CONCRETE SUPPORT COLLAR TO BE POURED IN PLACE.

(F) WHEN CONDUIT IS INITIALLY INSTALLED, IT SHALL EXTEND 2 FEET ABOVE FINAL GRADE.

(G) CUT CONDUIT NO MORE THAN 6 INCHES BELOW HANDHOLE OPENING IN THE POLE FOR FINAL INSTALLATION.

(H) FACE PHOTO CELL TO THE NORTH.

(J) ROTATE THE POLE TO LINE UP CABLE ENTRANCE WITH CONDUIT. HANDHOLE OPENING IN POLE SHALL FACE THE SIDEWALK.

(K) INSTALL 30 FEET OF GROUND WIRE IN THE TRENCH AS SHOWN IN FIGURE 2 ON UG4510. THE ALTERNATE METHOD OF GROUNDING IS TO INSTALL (2) 8-FOOT GROUND RODS 6 FEET MINIMUM APART. USE #6 BARE STR. SOFT DRAWN COPPER WIRE TO ATTACH TO THE RODS AND POLE.

(L) NATURAL SPOIL WITH 3/4-INCH MAXIMUM AGGREGATE, SAND, DECOMPOSED GRANITE, 3/4-INCH MAXIMUM AGGREGATE, OR POLESET (LISTED IN ORDER OF LEAST EXPENSE) MAY BE USED AS BACKFILL. TAMP THE BACKFILL (EXCEPT POLESET) THOROUGHLY.

TABLE OF CONTENTS

BILL OF MATERIALS:

ITEM	DESCRIPTION	QUANTITY						STANDARD PAGE	STOCK NUMBER	DESIGN UNITS
		FIGURE 1			FIGURE 2					
		26'-0" MH	30'-0" MH	35'-0" MH	26'-0" MH	30'-0" MH	35'-0" MH			
1	WIRE, #8 THW, 600V, ALUMINUM	27'-0"	31'-0"	36'-0"	25'-0"	32'-0"	37'-0"	--	S196176	--
2	KIT, CONNECTOR FUSED	1			1			--	S443392	--
3	CARTRIDGE, FUSE, DUAL ELEMENT, 10A, 250V	1			--			--	S363936	--
4	FUSE, LIMITRON, 20A, 600V	--			1			--	S366128	--
5	WIRE, #8 THW, 600V, ALUMINUM, INSULATED CABLE	AS REQ'D			AS REQ'D			--	S196176	--
6	POLE, PRESTRESSED CONCRETE, DIRECT BURIAL, INCLUDING MAST ARMS	1			1			--	SEE TABLE 1	--
7	LUMINAIRE, DECORATIVE	1			2			4422	--	--
8	LAMP, HPSV	1			2			4410	--	--

© 1998 - 2022 San Diego Gas & Electric Company. All rights reserved. Removal of this copyright notice without permission is not permitted under law.

REV	CHANGE	DR	BY	DSN	APV	DATE	REV	CHANGE	DR	BY	DSN	APV	DATE
C							F						
B	FORMATTING	EDM	JIK	-	-	01/18/2022	E						
A	REVISION	-	-	PIA	JJ	02/13/2007	D						

BILL OF MATERIALS (CONT'D):

ITEM	DESCRIPTION	QUANTITY						STANDARD PAGE	STOCK NUMBER	DESIGN UNITS
		FIGURE 1			FIGURE 2					
		26'-0" MH	30'-0" MH	35'-0" MH	26'-0" MH	30'-0" MH	35'-0" MH			
9	REFRACTOR, REPLACEMENT	1			2			4411	--	--
10	CONTROL, PHOTO ELECTRIC, 105-285V, 1,000W	1			2			--	S273888	--
11	WIRE, #2, BARE COPPER, 7 STR, SOFT DRAWN	33'-0"			33'-0"			--	S812818 (X)	--
12	CONNECTOR, COMPRESSION, COPPER	1			1			--	S257792	--
13	CONNECTOR, COMPRESSION	1			1			--	S256432	--
14	TAG, POLE	1			1			4413	--	--
15	DECAL, STREET LIGHT MAINTENANCE IDENTIFICATION	1			2			4414	--	--

NOTES:

(X) THIS ITEM IS EXEMPT.

REFERENCE:

a. SEE UG4510.

TABLE OF CONTENTS

© 1998 - 2022 San Diego Gas & Electric Company. All rights reserved. Removal of this copyright notice without permission is not permitted under law.

REV	CHANGE	DR	BY	DSN	APV	DATE	REV	CHANGE	DR	BY	DSN	APV	DATE
C							F						
B	FORMATTING	EDM	JIK	-	-	01/18/2022	E						
A	REVISION	-	-	PIA	JJ	02/13/2007	D						

X Indicates Latest Revision | Completely Revised | New Page | Information Removed

SDG&E ELECTRIC UNDERGROUND CONSTRUCTION STANDARDS

DIRECT BURIAL POLE INSTALLATION FOR DECORATIVE LUMINAIRES

UG4433.3

SCOPE: THIS STANDARD SHOWS THE INSTALLATION OF DIRECT BURIAL POLES WITH POST TOP LUMINAIRES FOR DOMESTIC WALKWAY AND ROADWAY LIGHTING.

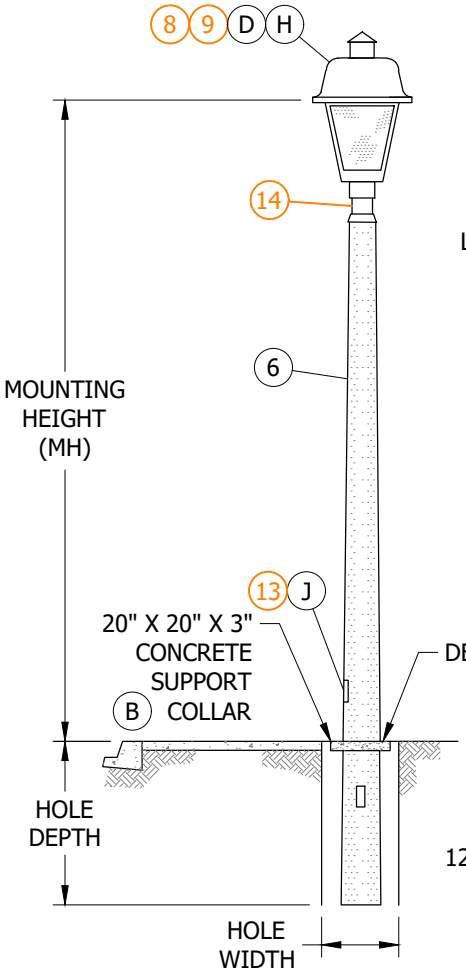

FIGURE 1
DWL
WALKWAY LIGHT

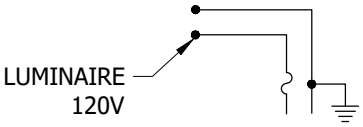

FIGURE 3
CONNECTION DIAGRAM
FOR FIGURE 1

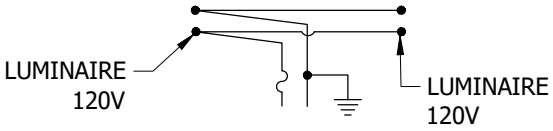

FIGURE 4
CONNECTION DIAGRAM
FOR FIGURE 2

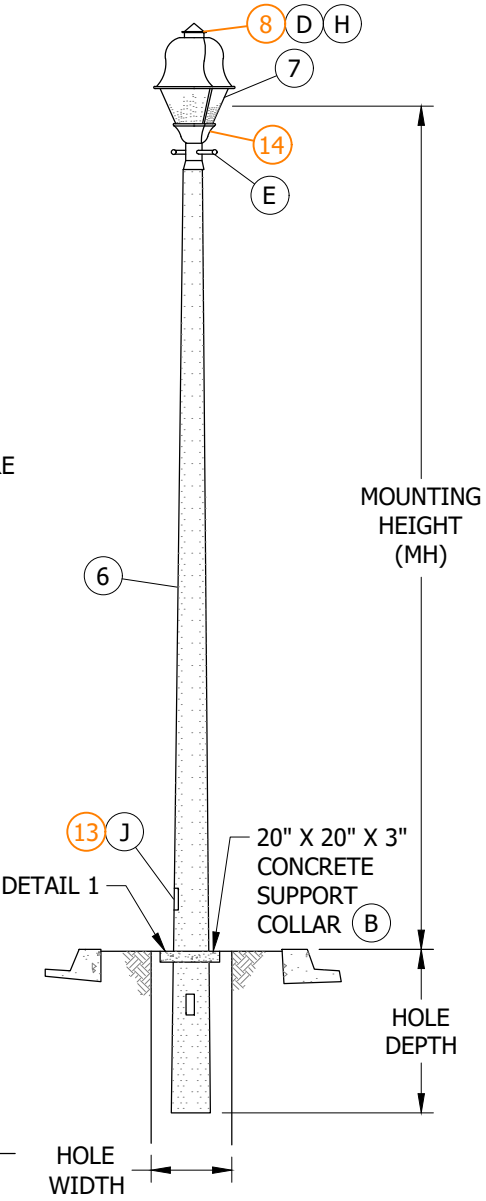

FIGURE 2
SINGLE POST TOP
ROADWAY LIGHT

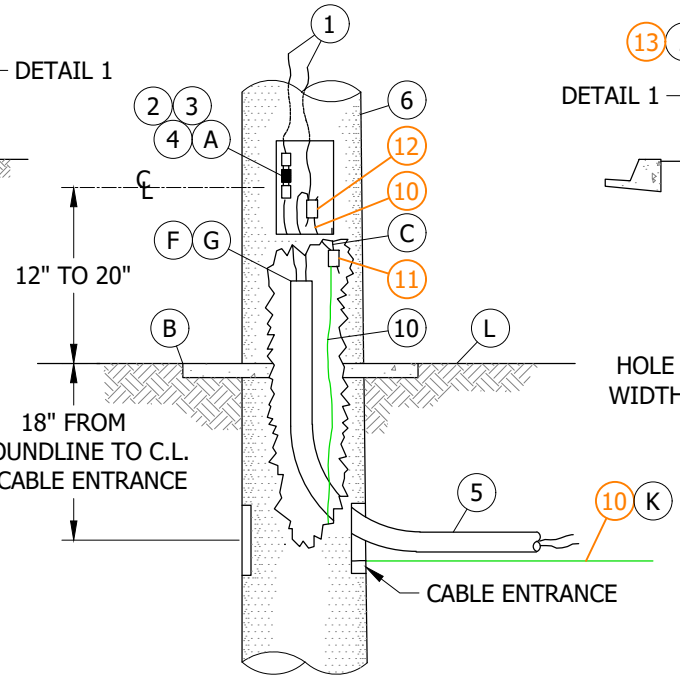

DETAIL 1

TABLE OF CONTENTS

© 1998 - 2023 San Diego Gas & Electric Company. All rights reserved. Removal of this copyright notice without permission is not permitted under law.

REV	CHANGE	DR	BY	DSN	APV	DATE	REV	CHANGE	DR	BY	DSN	APV	DATE
C	FORMATTING	EDM	JIK	-	-	01/18/2022	F						
B	REVISION	-	-	SA	JS	02/13/2007	E						
A	REVISION	-	-	PSW	JJ	01/22/2007	D	LED CONTENT REVISION	AMP	RSL	JAS	KRG	02/16/23

X Indicates Latest Revision | Completely Revised | New Page | Information Removed

SDG&E ELECTRIC UNDERGROUND CONSTRUCTION STANDARDS

SHEET 1 OF 3

DIRECT BURIAL POLE INSTALLATION FOR DOMESTIC WALKWAY LIGHTING & POST TOP LUMINAIRES

UG4434.1

TABLE 1

PRESTRESSED CONCRETE DIRECT BURIAL POLE							
FIGURE	LED STANDARD PAGE	LUMINAIRE MAXIMUM LUMENS	OVERALL POLE LENGTH	HOLE DEPTH	HOLE WIDTH (IN)	ACTUAL MOUNTING	STOCK NUMBER
1	UG4481 FIG.2 & 3	7KL	11'-0"	3'-0"	18	10'-0"	S678108
2	UG4481 FIG.1-3	4KL & 7KL	20'-0"	4'-0"		17'-0"	S678126

INSTALLATION:

(A) ALL LUMINAIRES ARE TO BE WIRED FOR 120V.

(B) CONCRETE SUPPORT COLLAR TO BE POURED IN PLACE.

(C) PRESTRESSED CONCRETE POLE TO CONTAIN ONE OF THREE GROUNDING METHODS.

1. A #8 COPPER WIRE.
2. STAINLESS STEEL BOLT TO CONNECT #6 COPPER WIRE.
3. COPPER GROUND STRAP.

(D) PHOTOELECTRIC CONTROL FOR DECORATIVE LED FIXTURES ARE LOCATED INSIDE THE LUMINAIRE.

(E) THIS LUMINAIRE SHALL BE INSTALLED SO THAT THE LADDER ARM IS PARALLEL TO THE CURB.

(F) WHEN CONDUIT IS INITIALLY INSTALLED, IT SHALL EXTEND 2 FEET ABOVE FINAL GRADE.

(G) CUT CONDUIT NO MORE THAN 6 INCHES BELOW HANDHOLE OPENING IN THE POLE FOR FINAL INSTALLATION.

(H) FACE PHOTO CELL TO THE NORTH.

(J) ROTATE THE POLE TO LINE UP CABLE ENTRANCE WITH CONDUIT. HANDHOLE OPENING IN POLE SHALL FACE THE SIDEWALK.

(K) GROUND PRESTRESSED CONCRETE POLE ONLY BY INSTALLING 30 FEET OF GROUND WIRE IN THE TRENCH AS SHOWN IN FIGURE 2 ON UG4510. THE ALTERNATE METHOD OF GROUNDING IS TO INSTALL TWO 8 FOOT GROUND RODS 6 FEET APART MINIMUM. USE #6 BARE STRANDED SOFT DRAWN COPPER WIRE TO ATTACH THE RODS TO POLE.

(L) NATURAL SPOIL WITH 3/4-INCH MAXIMUM AGGREGATE, SAND, DECOMPOSED GRANITE, 3/4-INCH MAXIMUM AGGREGATE, OR POLESET (LISTED IN ORDER OF LEAST EXPENSE) MAY BE USED AS BACKFILL.

BILL OF MATERIALS:

ITEM	DESCRIPTION	QUANTITY			STANDARD PAGE	STOCK NUMBER	DESIGN UNITS
		FIGURE 1	FIGURE 2				
			SINGLE	DOUBLE			
1	WIRE, 2 #8, 600V, ALUMINUM	9'-0"	16'-0"	16'-0" (2)	--	S196176	--
2	HOLDER, FUSE	1	1	1	--	S443392	--
3	CARTRIDGE, FUSE, DUAL ELEMENT, 10A, 250V	1	1	1	--	S363936	--
4	FUSE, LIMITRON, 20A, 600V	--	--	1	--	S366128	--
5	WIRE, 2 #8, 600V, ALUMINUM, INSULATED CABLE	AS REQ'D	AS REQ'D	AS REQ'D	--	S196176	--
6	POLE, DIRECT BURIAL	1	1	1	--	SEE TABLE 1	--
7	LUMINAIRE, ROADWAY POST TOP	--	1	2	UG4481	--	--
8	CONTROL, PHOTO ELECTRIC	1	1	2	UG4412	S273884	--
9	LUMINAIRE, DWL POST TOP	1	1	2	UG4481	--	--
10	WIRE, #2, BARE COPPER, 7 STR, SOFT DRAWN	33'-0"	33'-0"	33'-0"	--	S812818 (X)	--
11	CONNECTOR, COMPRESSION, COPPER	1	1	1	--	S257792	--
12	CONNECTOR, COMPRESSION (K)	1	1	1	--	S256432	--

TABLE OF CONTENTS

© 1998 - 2023 San Diego Gas & Electric Company. All rights reserved. Removal of this copyright notice without permission is not permitted under law.

REV	CHANGE	DR	BY	DSN	APV	DATE	REV	CHANGE	DR	BY	DSN	APV	DATE
C	FORMATTING	EDM	JIK	-	-	01/18/2022	F						
B	REVISION	-	-	SA	JS	02/13/2007	E						
A	REVISION	-	-	PSW	JJ	01/22/2007	D	LED CONTENT REVISION	AMP	RSL	JAS	KRG	02/16/23

BILL OF MATERIALS (CONT'D):

ITEM	DESCRIPTION	QUANTITY			STANDARD PAGE	STOCK NUMBER	DESIGN UNITS
		FIGURE 1	FIGURE 2				
			SINGLE	DOUBLE			
13	TAG, POLE	1	1	1	4413	--	--
14	DECAL, STREET LIGHT MAINTENANCE IDENTIFICATION	1	1	2	4414	--	--

NOTES:

(X) THIS ITEM IS EXEMPT.

REFERENCE:

a. SEE UG4510.

TABLE OF CONTENTS

© 1998 - 2023 San Diego Gas & Electric Company. All rights reserved. Removal of this copyright notice without permission is not permitted under law.

REV	CHANGE	DR	BY	DSN	APV	DATE	REV	CHANGE	DR	BY	DSN	APV	DATE
C	FORMATTING	EDM	JIK	-	-	01/18/2022	F						
B	REVISION	-	-	SA	JS	02/13/2007	E						
A	REVISION	-	-	PSW	JJ	01/22/2007	D	LED CONTENT REVISION	AMP	RSL	JAS	KRG	02/16/23

SCOPE: THIS STANDARD SHOWS THE INSTALLATION AND CONNECTIONS FOR THE NO. 3-1/2 HANDHOLE USED WHEN INSTALLING STREET LIGHTS OWNED BY THE CITY OF SAN DIEGO.

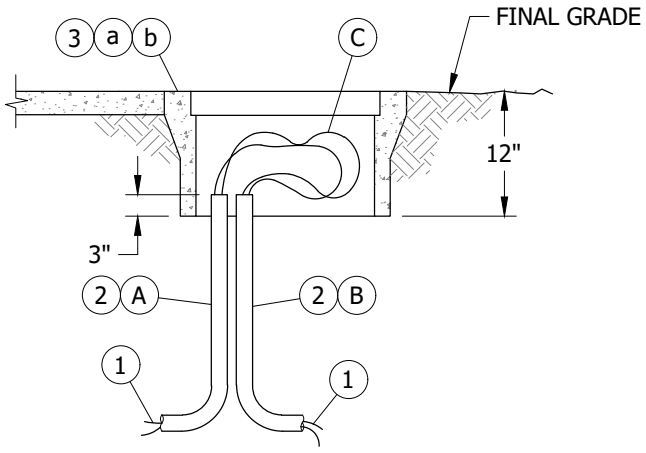

FIGURE 1
NO. 3-1/2 HANDHOLE INSTALLATION

INSTALLATION:

(A) 1-INCH POLYETHYLENE CONDUIT FROM SERVICE POINT.

(B) 1-INCH POLYETHYLENE CONDUIT TO STREET LIGHT.

(C) NO CONNECTIONS ARE REQUIRED IF ONLY ONE STREET LIGHT IS CONNECTED TO SERVICE POINT. LOOP CABLE THROUGH HANDHOLE TO SERVICE POINT.

BILL OF MATERIALS:

ITEM	DESCRIPTION	QUANTITY	STANDARD PAGE	STOCK NUMBER	DESIGN UNITS
1	WIRE, #8XLPE, 600V, ALUMINUM CABLE	AS REQ'D	--	S196176	U/2-#8
2	CONDUIT, POLYETHYLENE, 1"	AS REQ'D	--	S249630	1" PE
3	HANDHOLE, NO. 3-1/2	1	--	(I)	31/2PB

NOTES:

(I) HANDHOLE SUPPLIED BY CITY OF SAN DIEGO.

REFERENCE:

(a) FOR HANDHOLE DIMENSIONS, SEE UG3308.

(b) FOR EXCAVATION DIMENSIONS, SEE UG3308.

TABLE OF CONTENTS

© 1998 - 2022 San Diego Gas & Electric Company. All rights reserved. Removal of this copyright notice without permission is not permitted under law.

REV	CHANGE	DR	BY	DSN	APV	DATE	REV	CHANGE	DR	BY	DSN	APV	DATE
C							F						
B	FORMATTING	EDM	JIK	-	-	01/18/2022	E						
A	REVISION	-	-	-	RW/ROG	01/01/1998	D						

X Indicates Latest Revision | Completely Revised | New Page | Information Removed

SDG&E ELECTRIC UNDERGROUND CONSTRUCTION STANDARDS

SHEET 1 OF 1

HANDHOLE
(INSIDE DIMENSIONS - 10 1/4" X 15 3/8")

UG4435.1

SCOPE: THIS STANDARD SHOWS TYPICAL LED STREET LIGHT CONSTRUCTION INSTALLED ON WOOD, STEEL, OR FIBERGLASS POLES TO PROVIDE ROADWAY LIGHTING.

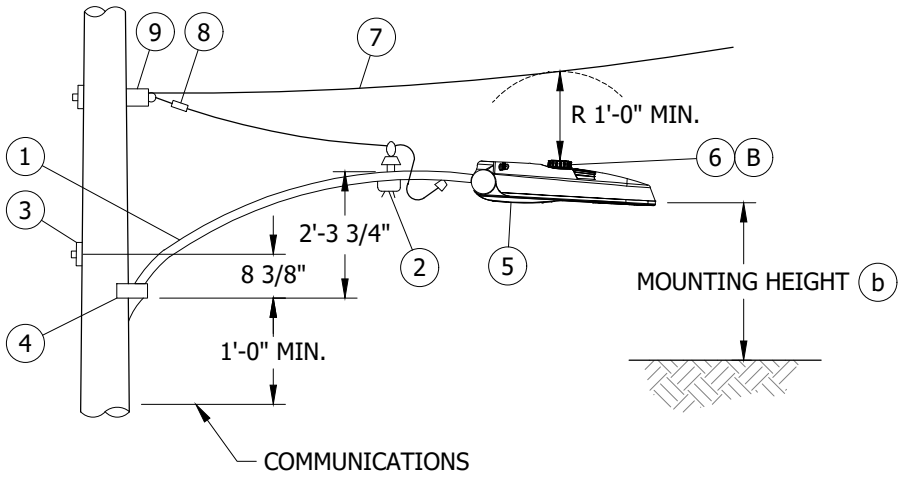

FIGURE 1
6'-0" ARM INSTALLATION

TABLE 1

LED FIXTURES			
LUMENS (IN THOUSANDS)	**MANUFACTURER**	**STANDARD PAGE**	**STOCK NUMBER**
0-5L	GE	1571	S473100, S473102, S473104
	CREE	1572	S473132, S473136, S473138, S473140
	ACUITY	1573	S473434
6-10L	GE	1571	S473106, S473108
	CREE	1572	S473130, S473134, S473142
	ACUITY	1573	S473434, S473438
11-15L	GE	1571	S473112, S473114
	CREE	1572	S473144
	ACUITY	1573	S473438, S473440
20-25L	GE	1571	S473110
	CREE	1572	S473146
	ACUITY	1573	S473440

INSTALLATION:

A. ITEMS REQUIRED FOR SECONDARY LINE ARM CONSTRUCTION.

(B) FACE PHOTO CELL TO THE NORTH.

C. UTILIZE LEVELING FEATURE WITHIN FIXTURE PER MANUFACTURER'S SPECIFICATIONS BEFORE ENERGIZING.

D. ALL LED FIXTURES MUST BE INSTALLED TO A 3-WIRE 120V SUPPLY WITH A GROUND CONNECTED TO A GROUND SOURCE USING APPROVED GROUNDING METHODS FOR WOOD, STEEL, OR FIBERGLASS POLE APPLICATIONS. (d)

© 1998 - 2024 San Diego Gas & Electric Company. All rights reserved. Removal of this copyright notice without permission is not permitted under law.

REV	CHANGE	DR	BY	DSN	APV	DATE	REV	CHANGE	DR	BY	DSN	APV	DATE
C	STD PAGE & STOCK NUMBERS	AMP	RSL	JAF	KRG	08/12/2022	F						
B	FORMATTING	EDM	JIK	-	-	01/18/2022	E						
A	ORIGINAL ISSUE	-	JIK	JES	CZH	08/20/2019	D	INSTALLATION UPDATE	AMP	EJA	MRF	MRF	02/14/2024

BILL OF MATERIALS:

ITEM	DESCRIPTION	QUANTITY	STANDARD PAGE	STOCK NUMBER	DESIGN UNITS
1	BRACKET, UPSWEEP, 2" DIA, 6'-0"	1	--	S167264	BKT6
2	BRACKET, SERVICE INSULATOR	1	631	S166880	INSBKT
3	BOLT, MACH, GALV, 5/8" X (LENGTH AS REQ.), 2 SQ. WASHERS & 1 DOUBLE COIL SPRING WASHER.	1	390.7	--	--
4	SCREW, LAG, 1/2" X 4" (WOOD POLES ONLY) (I)	2	390.7	S621568 (X)	1/2L
	BLIND NUT, 1/2" (STEEL POLES ONLY) (I)	2	390.7	S503460 (X)	--
5	LIGHTING FIXTURE	1	(b)	--	--
6	CONTROL, PHOTOELECTRIC, TWISTLOCK BASE 105-285V	1	1512	S273884	PC-TL
7	WIRE, COPPER #8 600V, FLEXIBLE POLYETHYLENE INSULATED DUPLEX	10'-0"	711	S196432	DX8C
8	CONNECTOR, WIRE	2	783-785	--	--
9	CLEVIS, SECONDARY, DEADEND	1	612	S235488	SDE

NOTES:

(I) THE BLIND NUT AND LAG SCREW ARE OPTIONAL FOR ATTACHING SUPPORT BRACE TO POLE.

II. NOT CONNECTING, OR FLOATING THE GROUND WILL RESULT IN AN ENERGIZED MAST OR POLE.

(X) THIS ITEM IS EXEMPT.

REFERENCE:

a. FOR G.O. 95 MINIMUM CLEARANCE REQUIRED FOR STREET LIGHT INSTALLATIONS, SEE OH1509.

(b) FOR MANUFACTURER INDICES, SEE OH1571 FOR GENERAL ELECTRIC (GE) PRODUCT INDEX, OH1572 FOR CREE PRODUCT INDEX, AND OH1573 FOR ACUITY PRODUCT INDEX.

c. FOR UNDERGROUND INSTALLATIONS, SEE UG4431.

(d) SEE OH 1004 AND OH 1002 FOR GROUNDING INSTALLATION.

TABLE OF CONTENTS

© 1998 - 2024 San Diego Gas & Electric Company. All rights reserved. Removal of this copyright notice without permission is not permitted under law.

REV	CHANGE	DR	BY	DSN	APV	DATE	REV	CHANGE	DR	BY	DSN	APV	DATE
C	STD PAGE & STOCK NUMBERS	AMP	RSL	JAF	KRG	08/12/2022	F						
B	FORMATTING	EDM	JIK	-	-	01/18/2022	E						
A	ORIGINAL ISSUE	-	JIK	JES	CZH	08/20/2019	D	INSTALLATION UPDATE	AMP	EJA	MRF	MRF	02/14/2024

SCOPE: THIS STANDARD SHOWS GE LED FIXTURES USED TO PROVIDE ROADWAY LIGHTING.

TABLE 1

GE LED FIXTURE INDEX

DESCRIPTION	MOUNTING HEIGHT (FT)	WATTAGE (II) (III) (A)	STANDARD PAGE	STOCK NUMBER	DESIGN UNITS	FIGURE DETAIL	HPSV/LPSV EQUIVALENT STOCK NUMBERS (a) (b)
2KL ERL1 TYPE II WIDE	26	14	SHEETS 4-5	S473800	LC14GE	1	S473800
4KL ERL1 TYPE II WIDE	26	31	SHEETS 6-7	S473102	LC31GE	1	S473400
5KL ERL1 TYPE II WIDE	26	39	SHEETS 8-9	S473104	LC39GE	1	S473802 S473402
8KL ERL1 TYPE II WIDE	30	71	SHEETS 10-11	S473106	LC78GE	1	S473404 S473804
10KL ERL1 TYPE III	30	97	SHEETS 12-13	S473108	LC99GE	1	S473406
20KL ERL2 TYPE III	35	174	SHEETS 14-15	S473110	LC174G	3	S473410
11KL ERLH TYPE IV	30	98	SHEETS 16-17	S473112	LC96GE	2	S473806
15KL ERLH TYPE III	30	136	SHEETS 18-19	S473114	LC136G	2	S473408

TABLE OF CONTENTS

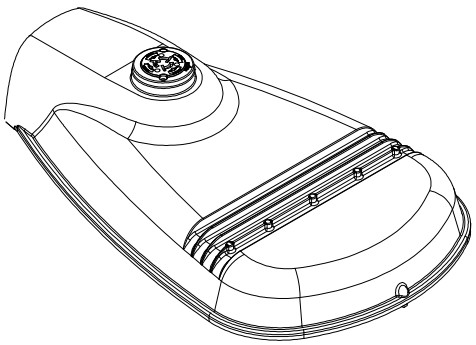

FIGURE 1
ERL1

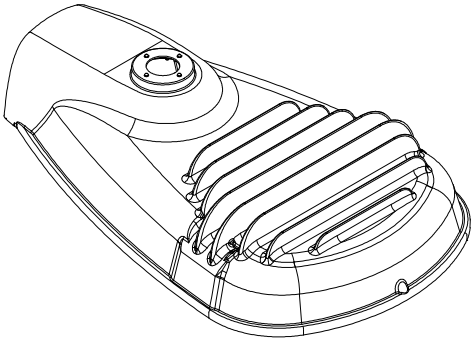

FIGURE 2
ERLH

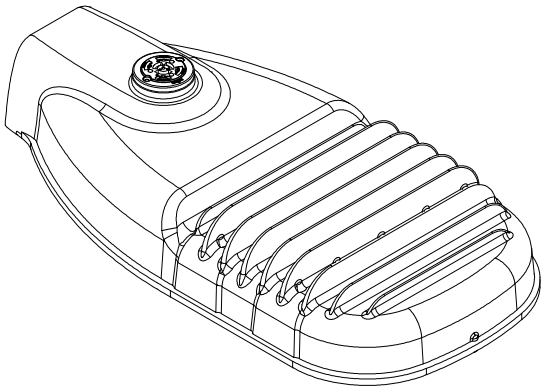

FIGURE 3
ERL2

© 1998 - 2023 San Diego Gas & Electric Company. All rights reserved. Removal of this copyright notice without permission is not permitted under law.

REV	CHANGE	DR	BY	DSN	APV	DATE	REV	CHANGE	DR	BY	DSN	APV	DATE
C	FORMATTING	EDM	JIK	-	-	01/18/2022	F						
B	TABLE UPDATE	AMP	JIK	JES	CZH	02/12/2020	E						
A	ORIGINAL ISSUE	AMP	JIK	JES	CZH	08/20/2019	D	NOTES UPDATE	AMP	RSL	JAS	KRG	02/16/2023

INSTALLATION:

(A) HPSV/LPSV CONVERSION TO LED: REMOVE AND REPLACE ENTIRE HPSV/LPSV STREET LIGHTING FIXTURE AND BALLAST AND REPLACE WITH EQUIVALENT LED FIXTURE SHOWN IN TABLE 1. FOR OVERHEAD FEED CONVERSIONS, MOUNT THE REPLACEMENT LED FIXTURE AT THE EXISTING FIXTURE HEIGHT OR HIGHER WHILE MAINTAINING REQUIRED CLEARANCES TO OTHER FACILITIES PER OH1509.

B. MECHANICAL INSTALLATION OF FIXTURE

1. BIRD SHIELDS: THE BIRD SHIELD BEHIND THE PIPE CLAMP HAS A 1 1/4-INCH (1.660 OD) OPENING. REMOVE SHIELD IF LARGER PIPE IS USED. SEE FIGURE 4.
2. MOUNTING ARM: UNFASTEN, OPEN AND REMOVE DOOR FROM HINGE CRADLE. ADJUST PIPE CLAMP OPENING SLIGHTLY LARGER THAN PIPE SIZE. INSERT MOUNTING ARM THROUGH BIRD-SHIELD (IF USED) AND INTO THE LUMINAIRE UNTIL IT HITS THE LEVELING-STEPS EXTENDING FROM TOP OF HOUSING. SEE FIGURE 4.
3. LEVELING: TILT THE LUMINAIRE UP OR DOWN USING LEVELING-STEPS. TO LEVEL, HOLD LUMINAIRE APPROXIMATELY LEVEL AND SNUG UP BOLTS. ONCE LEVEL, TIGHTEN EACH MOUNTING BOLT ALTERNATING BETWEEN BOLTS. REFER TO INSTALLATION INSTRUCTIONS FOR BOLT TORQUES. DO NOT OVERTIGHTEN BOLTS. IF UPWARD TILT IS NEEDED, LOOSEN BOLTS SLIGHTLY, LIFT LUMINAIRE AND INSERT IT TO THE NEXT SET OF STEPS. IF DOWNWARD TILT IS NEEDED, EXTRACT THE MOUNTING ARM FROM LUMINAIRE TO SIT ON THE REARWARD STEPS. SEE FIGURE 4.
4. REFERENCE ELECTRICAL CONNECTIONS SECTION FOR COMPLETING ELECTRICAL CONNECTIONS.
5. PHOTOELECTRIC CONTROL: ORIENT THE PHOTOELECTRIC (PE) RECEPTACLE SO THAT THE WORD "NORTH" IS DIRECTED TRUE NORTH. SEAT AND LOCK THE PE CONTROL/RECEPTACLE AND ROTATE CLOCKWISE UNTIL WORD "NORTH" IS TRUE NORTH. LOWER PE RECEPTACLE INTO POSITION, SEE FIGURE 5 AND 6.

(6) FINAL ASSEMBLY: DOOR INTERLOCKS WITH TOP HOUSING IN ALL POSITIONS EXCEPT IN VICINITY OF REMOVAL LOCATION. DOORS ARE DESIGNED TO BE ASSEMBLED TO TOP HOUSING WHILE IN UPRIGHT POSITION. TO REPLACE DOOR, HOLD SLIGHTLY PAST VERTICAL AND TOWARD POLE-SIDE OF HINGE. INSERT HINGE PIN INTO HINGE CRADLE AND LOWER DOOR TO HANG FREE.

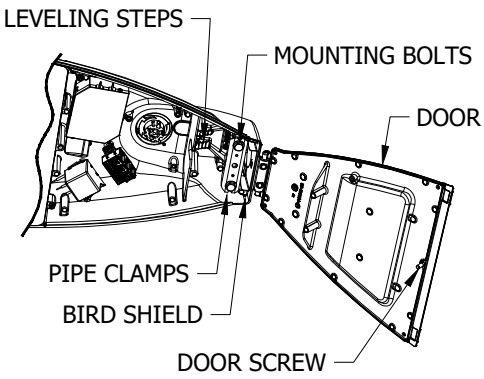

FIGURE 4
INTERNAL VIEW (B6)

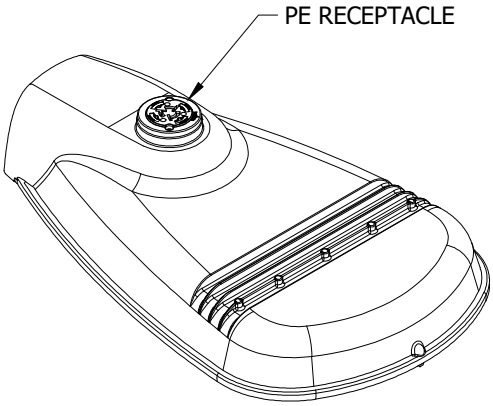

FIGURE 5
TOP VIEW (B6)

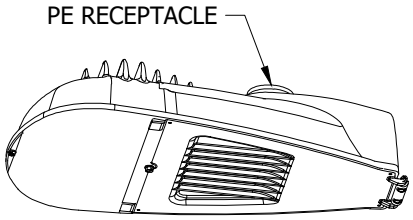

FIGURE 6
BOTTOM VIEW (B6)

C. ELECTRICAL CONNECTIONS OF FIXTURE

1. MAKE ALL CONNECTIONS IN ACCORDANCE WITH THE NATIONAL ELECTRICAL CODE AND APPLICABLE LOCAL CODE REQUIREMENTS INCLUDING GROUNDING. VERIFY SUPPLY VOLTAGE MATCHES NAMEPLATE RATING. USE #6 THRU #16 AWG SERVICE LEADS AND MATCH THE NAMEPLATE'S SERVICE LEAD TEMPERATURE RATING. EXTEND SERVICE LEADS APPROXIMATELY 7 INCHES PAST PIPE/MOUNTING BRACKET END.

TABLE OF CONTENTS
RETURN TO LED FIXTURE INDEX

© 1998 - 2023 San Diego Gas & Electric Company. All rights reserved. Removal of this copyright notice without permission is not permitted under law.

REV	CHANGE	DR	BY	DSN	APV	DATE	REV	CHANGE	DR	BY	DSN	APV	DATE
C	FORMATTING	EDM	JIK	-	-	01/18/2022	F						
B	TABLE UPDATE	AMP	JIK	JES	CZH	02/12/2020	E						
A	ORIGINAL ISSUE	AMP	JIK	JES	CZH	08/20/2019	D	NOTES UPDATE	AMP	RSL	JAS	KRG	02/16/2023

INSTALLATION (CONT'D):

(2) ATTACH SERVICE LEADS TO TERMINAL BLOCK AS SHOWN ON THE WIRING SCHEMATIC. SEE FIGURE 7.

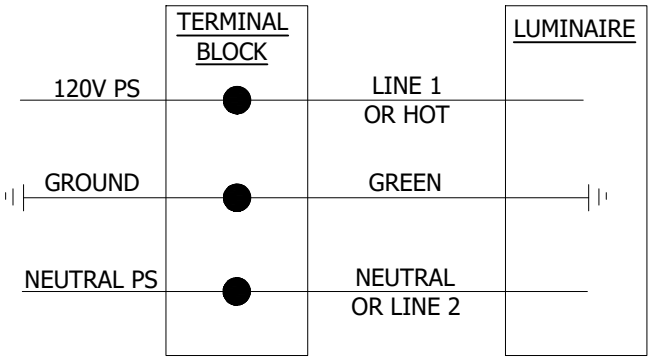

FIGURE 7
WIRING SCHEMATIC (C2)

(3) DIMMING CONTROL INSTRUCTIONS ARE FOR REFERENCE SINCE LUMENS SETTINGS ARE PRESET BY MANUFACTURER FOR ALL STOCK FIXTURES. FOR WIRED DIMMING CONTROLS, ATTACH DIMMING LEADS PER WIRING SCHEMATIC. REFER TO INSTALLATION INSTRUCTIONS FOR BOLT TORQUES. DO NOT OVER TIGHTEN BOLT. SEE FIGURE 8.

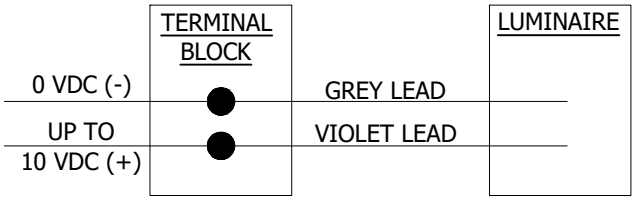

FIGURE 8
DIMMING CONTROL SCHEMATIC (C3)

BILL OF MATERIALS: NONE

NOTES:

I. THIS IS A REPRODUCTION OR ADAPTATION OF MANUFACTURER DATA. REFER TO SPECIFIC PRODUCT INSTALLATION MANUALS PROVIDED WITH STOCK MATERIALS FOR COMPLETE SAFETY AND INSTALLATION INSTRUCTIONS.

(II) MOUNTING HEIGHTS PROVIDED ON PAGE OH1571.1 ARE SPECIFIC TO NEW UNDERGROUND FEED INSTALLATIONS DUE TO STANDARD CONCRETE POLE SIZES AVAILABLE. NEW LED STREETLIGHT INSTALLATIONS OR HPSV-TO-LED UPGRADE INSTALLATIONS MAY BE MOUNTED WITHIN 2 FEET OF THESE REFERENCE MOUNTING HEIGHTS AS LONG AS THE REQUIRED CLEARANCES TO OTHER FACILITIES ARE MAINTAINED PER OH1509.

(III) FOR NEW SDG&E OWNED STREETLIGHT INSTALLATIONS (NOT EXISTING CONVERSIONS), A LIGHTING DESIGN ANALYSIS MAY BE REQUIRED TO DETERMINE THE REQUIRED MOUNTING HEIGHT IF THE REFERENCE MOUNTING HEIGHTS PROVIDED HERE ARE NOT FEASIBLE. CONTACT THE STREET LIGHTING GROUP IN THIS SCENARIO FOR GUIDANCE.

REFERENCE:

(a) OVERHEAD FIELD MAINTENANCE ONLY SECTION 1500 FOR HPSV AND LPSV FIXTURE DETAIL.
(b) SOME FIXTURES ARE NO LONGER AVAILABLE.
c. SEE OH1570 FOR OVERHEAD LIGHTING INSTALLATION.
d. SEE UG4431 FOR UNDERGROUND LIGHTING INSTALLATION.
e. SEE OH1512 FOR PHOTOELECTRIC CONTROLS AVAILABLE.

TABLE OF CONTENTS
RETURN TO LED FIXTURE INDEX

© 1998 - 2023 San Diego Gas & Electric Company. All rights reserved. Removal of this copyright notice without permission is not permitted under law.

REV	CHANGE	DR	BY	DSN	APV	DATE	REV	CHANGE	DR	BY	DSN	APV	DATE
C	FORMATTING	EDM	JIK	-	-	01/18/2022	F						
B	TABLE UPDATE	AMP	JIK	JES	CZH	02/12/2020	E						
A	ORIGINAL ISSUE	AMP	JIK	JES	CZH	08/20/2019	D	NOTES UPDATE	AMP	RSL	JAS	KRG	02/16/2023

SCOPE: THIS STANDARD SHOWS VARIOUS GE EVOLVE LED ROADWAY LIGHTING FIXTURES.

ATTENTION:

* SEE NOTES AND REFERENCES SHEET 21.

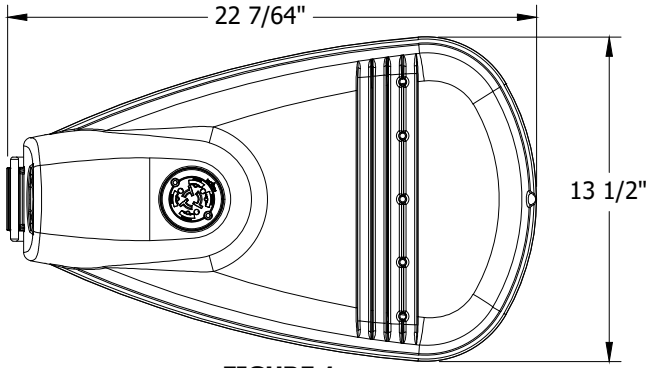

FIGURE 1
TOP VIEW

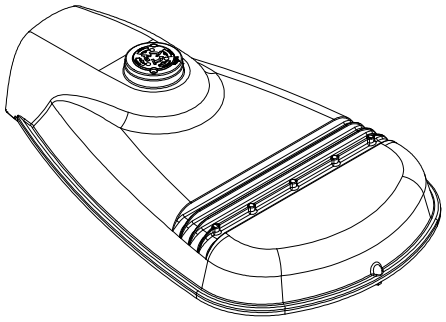

FIGURE 2
ISOMETRIC

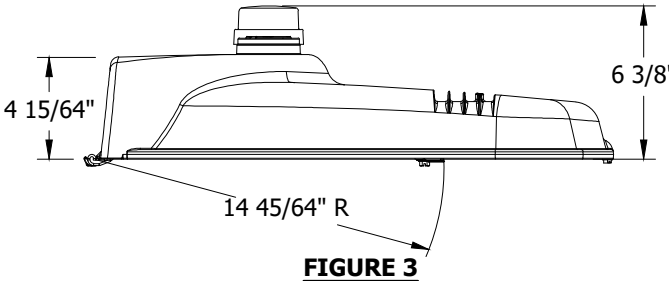

FIGURE 3
SIDE VIEW

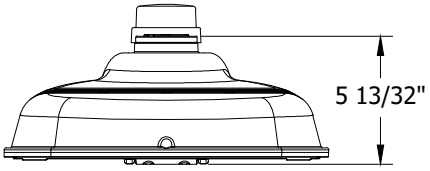

FIGURE 4
FRONT VIEW

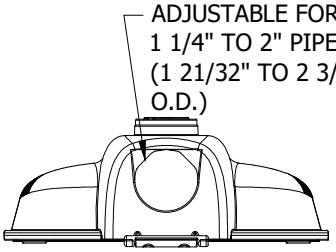

FIGURE 5
BACK VIEW

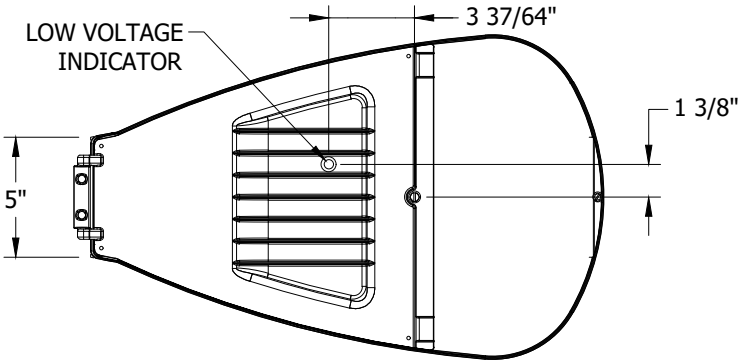

FIGURE 6
BOTTOM VIEW

TABLE 1

MANUFACTURER NAME/STYLE	LUMENS PACKAGE	COLOR TEMPERATURE	UNIT WEIGHT (LBS)	PROJECTED AREA	DISTRIBUTION TYPE	STOCK NUMBER	DESIGN UNITS
GE/ERL1	1900L	3,000K	15.5	SEE TABLE 3	TYPE II WIDE	S473100	LC14GE

TABLE OF CONTENTS

RETURN TO LED FIXTURE INDEX

© 1998 - 2023 San Diego Gas & Electric Company. All rights reserved. Removal of this copyright notice without permission is not permitted under law.

REV	CHANGE	DR	BY	DSN	APV	DATE	REV	CHANGE	DR	BY	DSN	APV	DATE
C	FORMATTING	EDM	JIK	-	-	01/18/2022	F						
B	TABLE UPDATE	AMP	JIK	JES	CZH	02/12/2020	E						
A	ORIGINAL ISSUE	AMP	JIK	JES	CZH	08/20/2019	D	NOTES UPDATE	AMP	RSL	JAS	KRG	02/16/2023

X Indicates Latest Revision | Completely Revised | New Page | Information Removed

SDG&E ELECTRIC OVERHEAD AND UNDERGROUND CONSTRUCTION STANDARDS

GE EVOLVE ROADWAY LIGHTING
2KL FIXTURE

OH1571.4
UG4471.4

TABLE 2

PHOTOMETRIC DIAGRAMS			
FIXTURE DESIGN WITHOUT BACKLIGHT SHIELD		**PLOT DRAWN IN FOOTCANDLES**	**GRAPH RADIUS LINES IN CANDELAS**
LUMENS	1,900	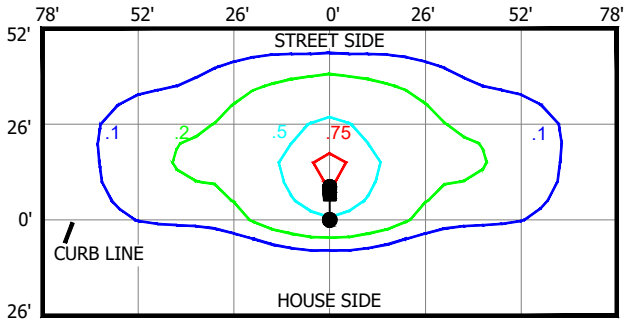	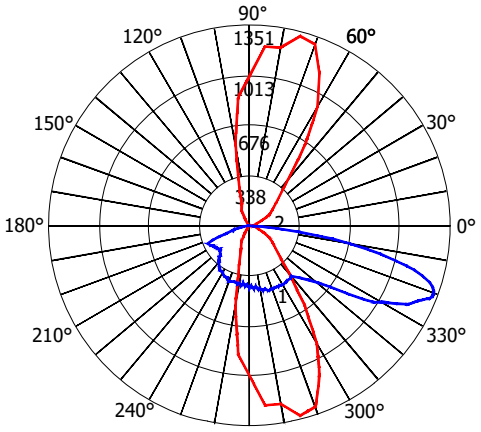
WATTS	14		
MOUNTING HEIGHT	26'		
ARM LENGTH	6'		
ARRANGEMENT	SINGLE		
.IES FILE NAME	ERL1_02B330_-120V.IES		
FIXTURE DESIGN WITH BACKLIGHT SHIELD (C)		**PLOT DRAWN IN FOOTCANDLES**	**GRAPH RADIUS LINES IN CANDELAS**
LUMENS	1,800	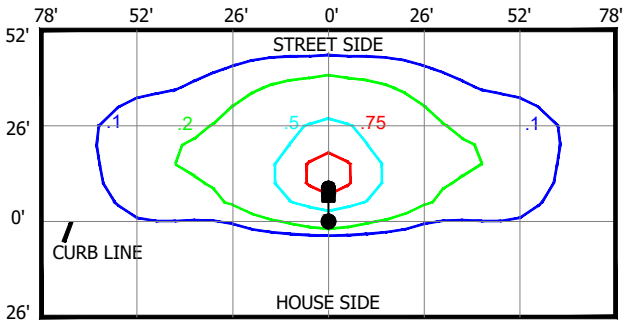	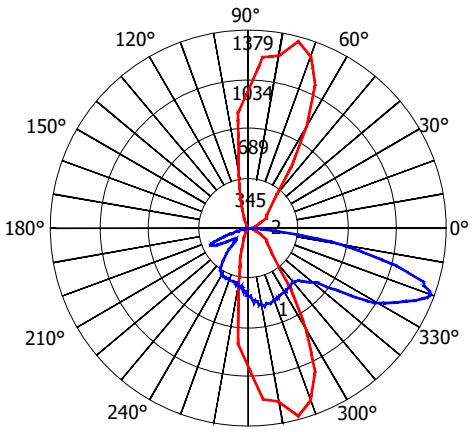
WATTS	14		
MOUNTING HEIGHT	26'		
ARM LENGTH	6'		
ARRANGEMENT	SINGLE		
.IES FILE NAME	ERL1_02B330_-120V-ELSHS-ERL1-BLCK.IES		

TABLE 3

LUMINAIRE ESTIMATED PROJECTED AREA (EPA)			
HORIZONTAL TENON. CONFIG.	**SINGLE**	**2 @ 90°**	**2 @ 180°**
--		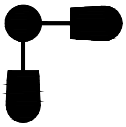	
STANDARD LUMINAIRE (FT^2) (TENON EPA NOT INCLUDED)	0.50	1.0	1.0

TABLE OF CONTENTS

RETURN TO LED FIXTURE INDEX

© 1998 - 2023 San Diego Gas & Electric Company. All rights reserved. Removal of this copyright notice without permission is not permitted under law.

REV	CHANGE	DR	BY	DSN	APV	DATE	REV	CHANGE	DR	BY	DSN	APV	DATE
C	FORMATTING	EDM	JIK	-	-	01/18/2022	F						
B	TABLE UPDATE	AMP	JIK	JES	CZH	02/12/2020	E						
A	ORIGINAL ISSUE	AMP	JIK	JES	CZH	08/20/2019	D	NOTES UPDATE	AMP	RSL	JAS	KRG	02/16/2023

ATTENTION:

* SEE NOTES AND REFERENCES SHEET 21.

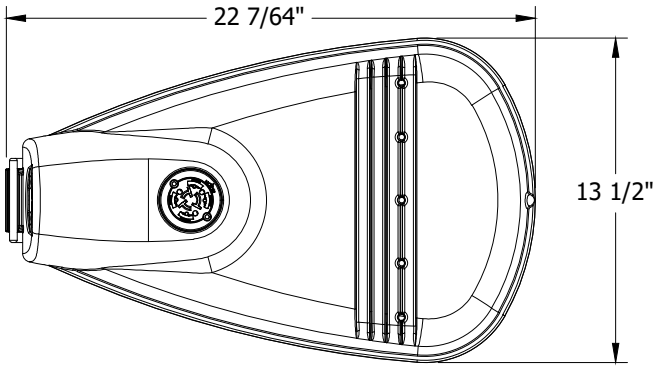

FIGURE 7
TOP VIEW

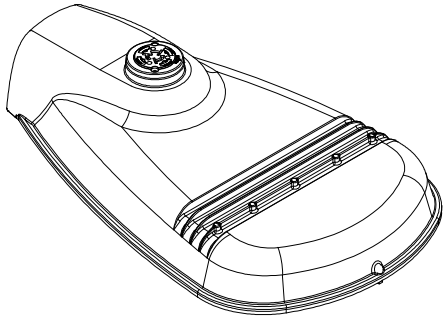

FIGURE 8
ISOMETRIC

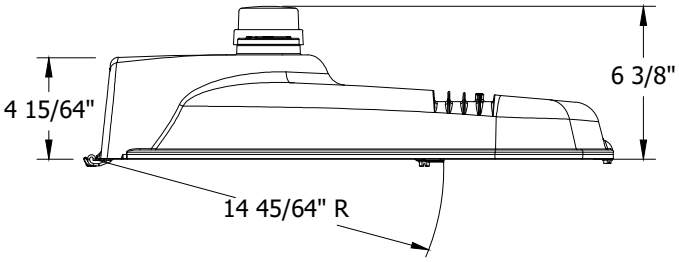

FIGURE 9
SIDE VIEW

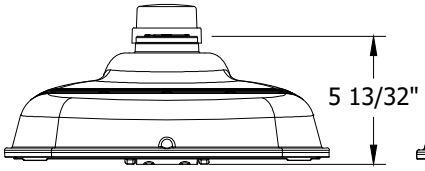

FIGURE 10
FRONT VIEW

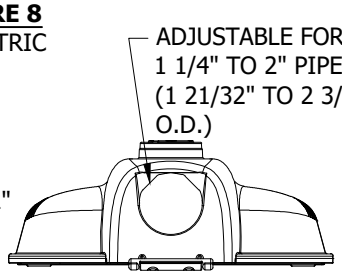

FIGURE 11
BACK VIEW

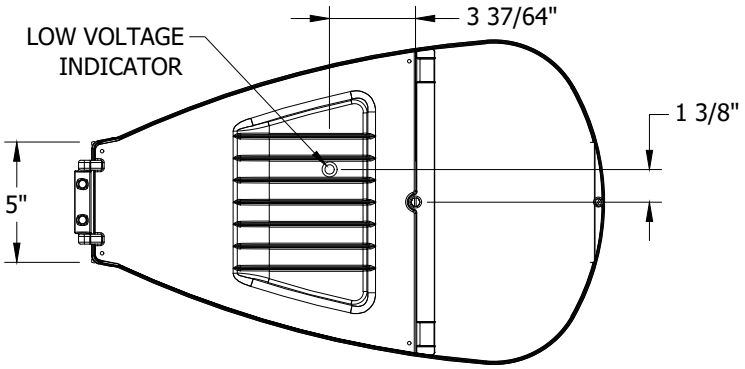

FIGURE 12
BOTTOM VIEW

TABLE 4

MANUFACTURER NAME/STYLE	LUMENS PACKAGE	COLOR TEMPERATURE	UNIT WEIGHT (LBS)	PROJECTED AREA	DISTRIBUTION TYPE	STOCK NUMBER	DESIGN UNITS
GE/ERL1	3900L	3,000K	15.5	SEE TABLE 6	TYPE II WIDE	S473102	LC31GE

TABLE OF CONTENTS

RETURN TO LED FIXTURE INDEX

© 1998 - 2023 San Diego Gas & Electric Company. All rights reserved. Removal of this copyright notice without permission is not permitted under law.

REV	CHANGE	DR	BY	DSN	APV	DATE	REV	CHANGE	DR	BY	DSN	APV	DATE
C	FORMATTING	EDM	JIK	-	-	01/18/2022	F						
B	TABLE UPDATE	AMP	JIK	JES	CZH	02/12/2020	E						
A	ORIGINAL ISSUE	AMP	JIK	JES	CZH	08/20/2019	D	NOTES UPDATE	AMP	RSL	JAS	KRG	02/16/2023

TABLE 5

PHOTOMETRIC DIAGRAMS

FIXTURE DESIGN WITHOUT BACKLIGHT SHIELD		PLOT DRAWN IN FOOTCANDLES	GRAPH RADIUS LINES IN CANDELAS
LUMENS	3,900	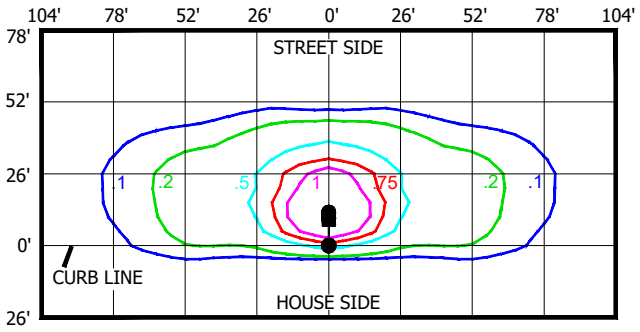	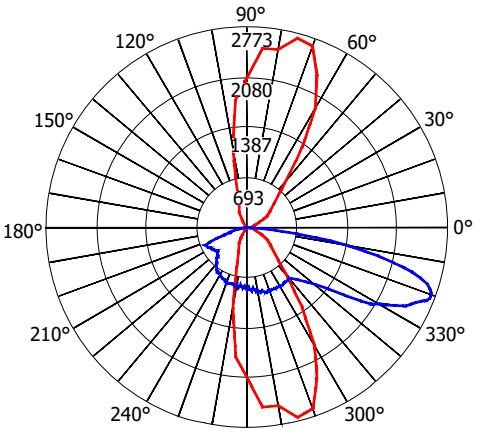
WATTS	31		
MOUNTING HEIGHT	26'		
ARM LENGTH	6'		
ARRANGEMENT	SINGLE		
.IES FILE NAME	ERL1_04B330_ -120-277V.IES		

FIXTURE DESIGN WITH BACKLIGHT SHIELD (C)		PLOT DRAWN IN FOOTCANDLES	GRAPH RADIUS LINES IN CANDELAS
LUMENS	3,700	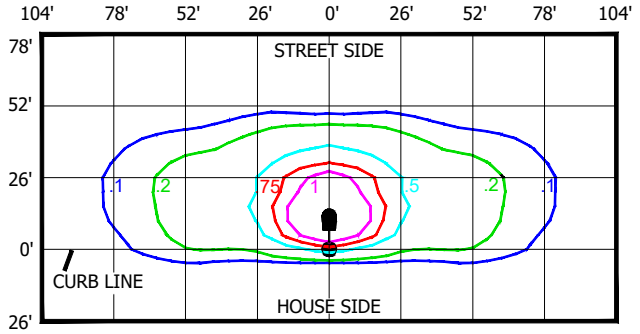	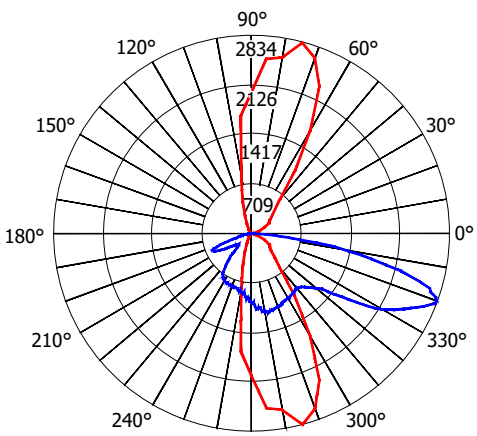
WATTS	31		
MOUNTING HEIGHT	26'		
ARM LENGTH	6'		
ARRANGEMENT	SINGLE		
.IES FILE NAME	ERL1_4B330_ -120-277V-ELSHS -ERL1-BLCK.IES		

TABLE 6

LUMINAIRE ESTIMATED PROJECTED AREA (EPA)			
HORIZONTAL TENON. CONFIG.	SINGLE	2 @ 90°	2 @ 180°
--		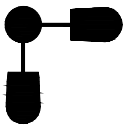	
STANDARD LUMINAIRE (FT^2) (TENON EPA NOT INCLUDED)	0.50	1.0	1.0

© 1998 - 2023 San Diego Gas & Electric Company. All rights reserved. Removal of this copyright notice without permission is not permitted under law.

REV	CHANGE	DR	BY	DSN	APV	DATE	REV	CHANGE	DR	BY	DSN	APV	DATE
C	FORMATTING	EDM	JIK	-	-	01/18/2022	F						
B	TABLE UPDATE	AMP	JIK	JES	CZH	02/12/2020	E						
A	ORIGINAL ISSUE	AMP	JIK	JES	CZH	08/20/2019	D	NOTES UPDATE	AMP	RSL	JAS	KRG	02/16/2023

TABLE OF CONTENTS

RETURN TO LED FIXTURE INDEX

ATTENTION:

* SEE NOTES AND REFERENCES SHEET 21.

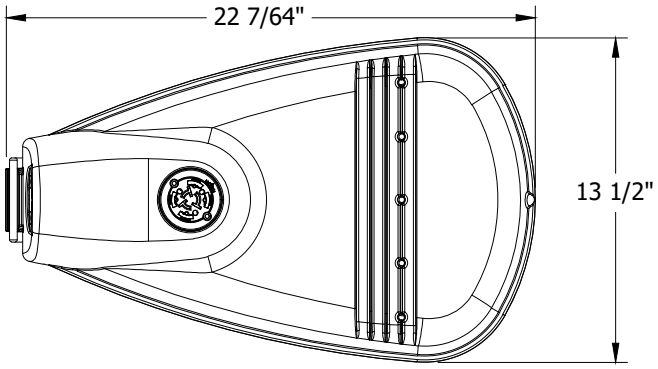

FIGURE 13
TOP VIEW

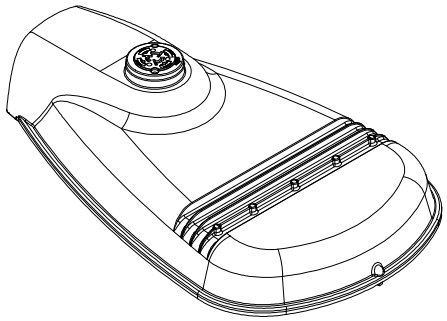

FIGURE 14
ISOMETRIC

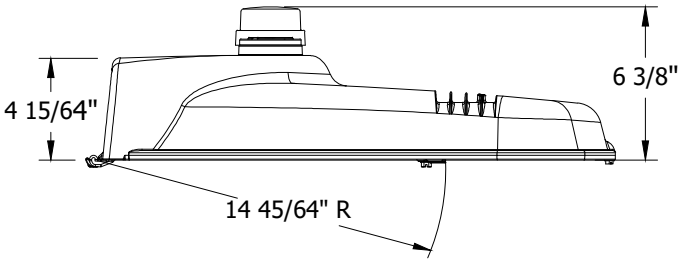

FIGURE 15
SIDE VIEW

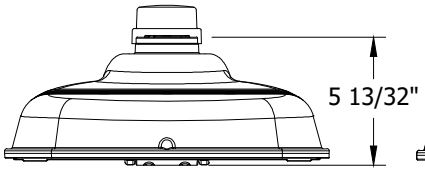

FIGURE 16
FRONT VIEW

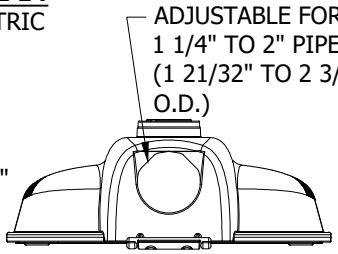

FIGURE 17
BACK VIEW

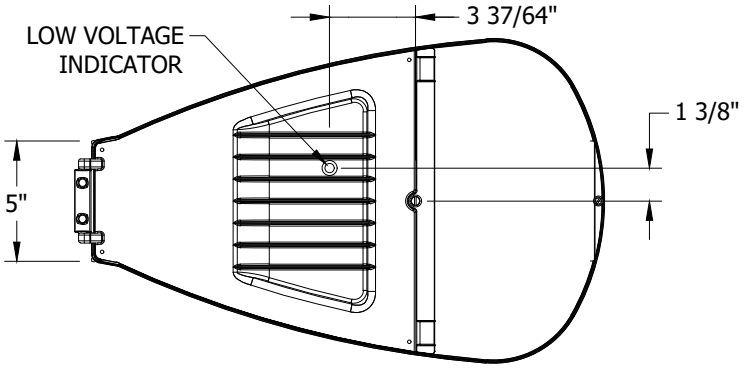

FIGURE 18
BOTTOM VIEW

TABLE 7

MANUFACTURER NAME/STYLE	LUMENS PACKAGE	COLOR TEMPERATURE	UNIT WEIGHT (LBS)	PROJECTED AREA	DISTRIBUTION TYPE	STOCK NUMBER	DESIGN UNITS
GE/ERL1	4900L	3,000K	15.5	SEE TABLE 9	TYPE II WIDE	S473104	LC39GE

© 1998 - 2023 San Diego Gas & Electric Company. All rights reserved. Removal of this copyright notice without permission is not permitted under law.

REV	CHANGE	DR	BY	DSN	APV	DATE	REV	CHANGE	DR	BY	DSN	APV	DATE
C	FORMATTING	EDM	JIK	-	-	01/18/2022	F						
B	TABLE UPDATE	AMP	JIK	JES	CZH	02/12/2020	E						
A	ORIGINAL ISSUE	AMP	JIK	JES	CZH	08/20/2019	D	NOTES UPDATE	AMP	RSL	JAS	KRG	02/16/2023

TABLE 8

PHOTOMETRIC DIAGRAMS

FIXTURE DESIGN WITHOUT BACKLIGHT SHIELD		PLOT DRAWN IN FOOTCANDLES	GRAPH RADIUS LINES IN CANDELAS
LUMENS	4,900	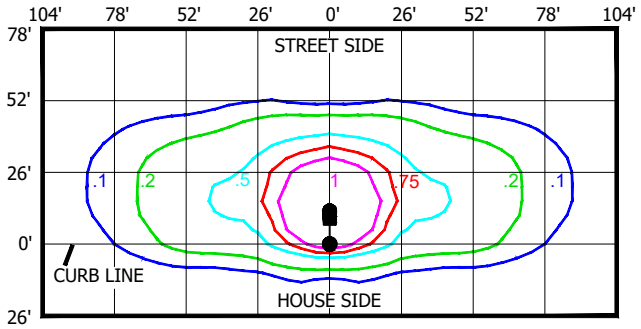	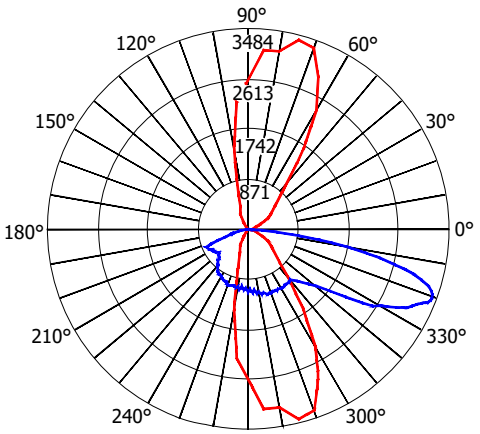
WATTS	39		
MOUNTING HEIGHT	26'		
ARM LENGTH	6'		
ARRANGEMENT	SINGLE		
.IES FILE NAME	ERL1_05B330_ -120-277V.IES		

FIXTURE DESIGN WITH BACKLIGHT SHIELD (C)		PLOT DRAWN IN FOOTCANDLES	GRAPH RADIUS LINES IN CANDELAS
LUMENS	4,600	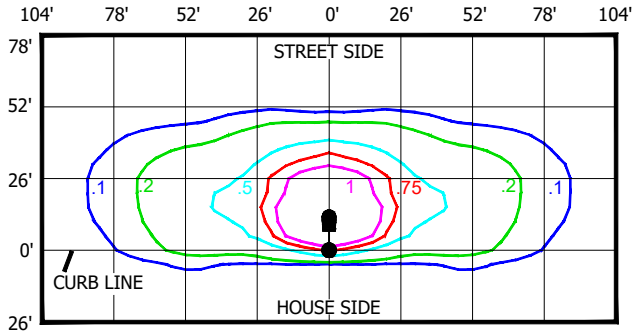	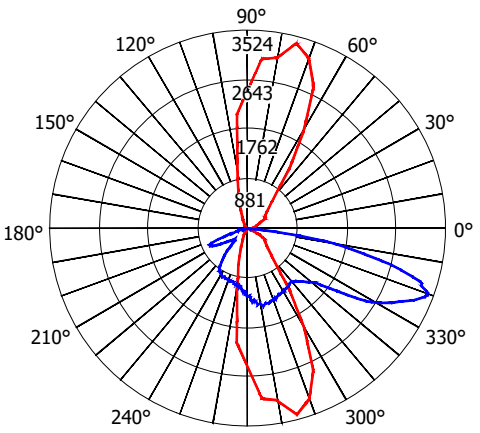
WATTS	39		
MOUNTING HEIGHT	26'		
ARM LENGTH	6'		
ARRANGEMENT	SINGLE		
.IES FILE NAME	ERL1_05B330_ -120-277V-ELSHS -ERL1-BLCK.IES		

TABLE 9

LUMINAIRE ESTIMATED PROJECTED AREA (EPA)			
HORIZONTAL TENON. CONFIG.	SINGLE	2 @ 90°	2 @ 180°
--		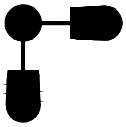	
STANDARD LUMINAIRE (FT^2) (TENON EPA NOT INCLUDED)	0.50	1.0	1.0

TABLE OF CONTENTS

RETURN TO LED FIXTURE INDEX

© 1998 - 2023 San Diego Gas & Electric Company. All rights reserved. Removal of this copyright notice without permission is not permitted under law.

REV	CHANGE	DR	BY	DSN	APV	DATE	REV	CHANGE	DR	BY	DSN	APV	DATE
C	FORMATTING	EDM	JIK	-	-	01/18/2022	F						
B	TABLE UPDATE	AMP	JIK	JES	CZH	02/12/2020	E						
A	ORIGINAL ISSUE	AMP	JIK	JES	CZH	08/20/2019	D	NOTES UPDATE	AMP	RSL	JAS	KRG	02/16/2023

ATTENTION:

* SEE NOTES AND REFERENCES SHEET 21.

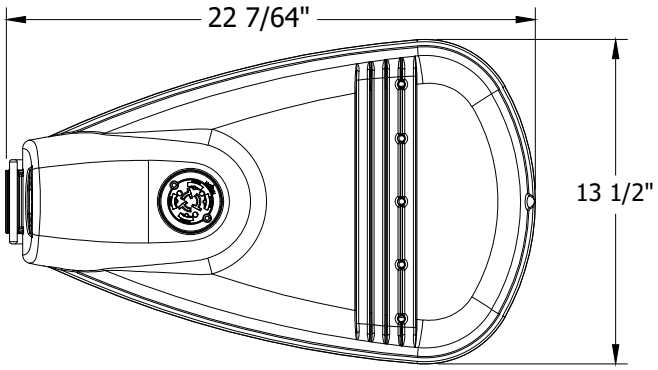

FIGURE 19
TOP VIEW

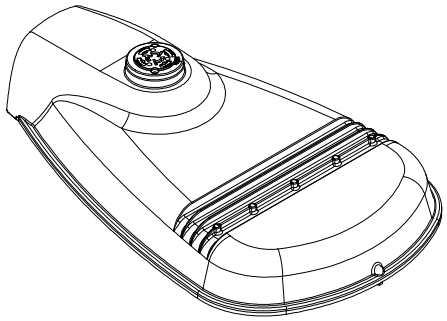

FIGURE 20
ISOMETRIC

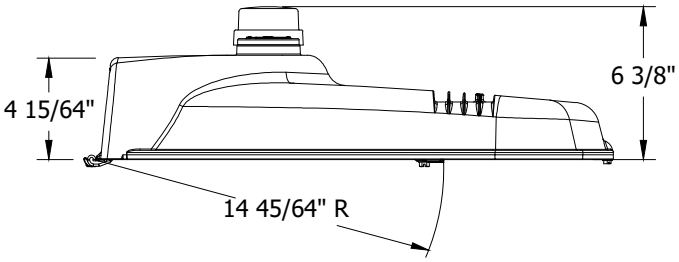

FIGURE 21
SIDE VIEW

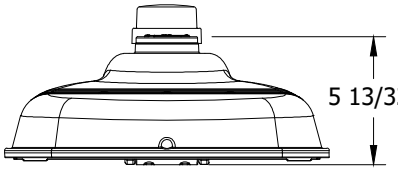

FIGURE 22
FRONT VIEW

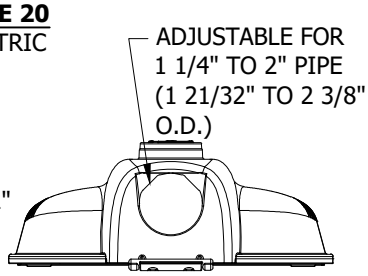

FIGURE 23
BACK VIEW

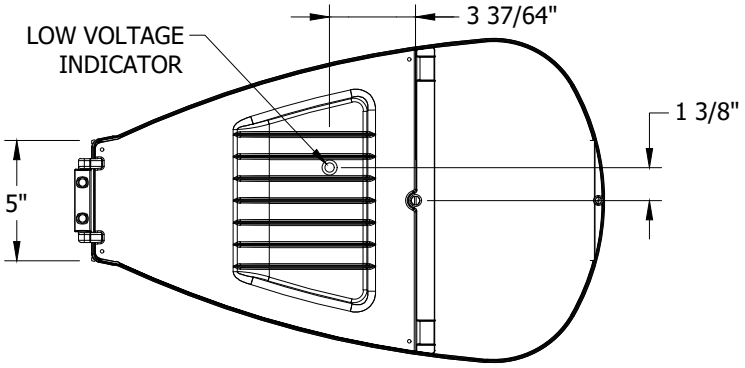

FIGURE 24
BOTTOM VIEW

TABLE 10

MANUFACTURER NAME/STYLE	LUMENS PACKAGE	COLOR TEMPERATURE	UNIT WEIGHT (LBS)	PROJECTED AREA	DISTRIBUTION TYPE	STOCK NUMBER	DESIGN UNITS
GE/ERL1	7800L	3,000K	15.5	SEE TABLE 12	TYPE II WIDE	S473106	LC78GE

© 1998 - 2023 San Diego Gas & Electric Company. All rights reserved. Removal of this copyright notice without permission is not permitted under law.

REV	CHANGE	DR	BY	DSN	APV	DATE	REV	CHANGE	DR	BY	DSN	APV	DATE
C	FORMATTING	EDM	JIK	-	-	01/18/2022	F						
B	TABLE UPDATE	AMP	JIK	JES	CZH	02/12/2020	E						
A	ORIGINAL ISSUE	AMP	JIK	JES	CZH	08/20/2019	D	NOTES UPDATE	AMP	RSL	JAS	KRG	02/16/2023

TABLE OF CONTENTS

RETURN TO LED FIXTURE INDEX

TABLE 11

PHOTOMETRIC DIAGRAMS			
FIXTURE DESIGN WITHOUT BACKLIGHT SHIELD		**PLOT DRAWN IN FOOTCANDLES**	**GRAPH RADIUS LINES IN CANDELAS**
LUMENS	7,800	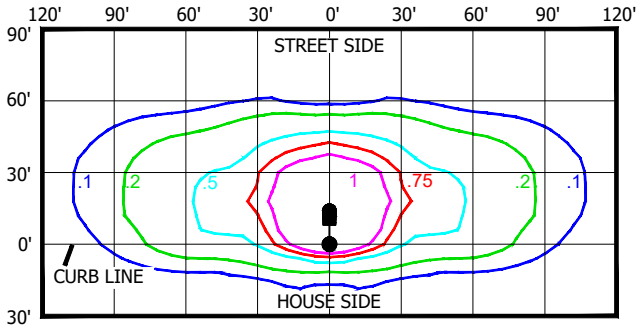	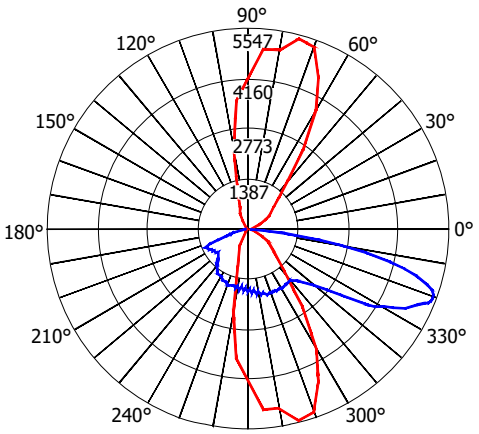
WATTS	71		
MOUNTING HEIGHT	30'		
ARM LENGTH	6'		
ARRANGEMENT	SINGLE		
.IES FILE NAME	ERL1_08B330_ .IES		
FIXTURE DESIGN WITH BACKLIGHT SHIELD (C)		**PLOT DRAWN IN FOOTCANDLES**	**GRAPH RADIUS LINES IN CANDELAS**
LUMENS	7,400	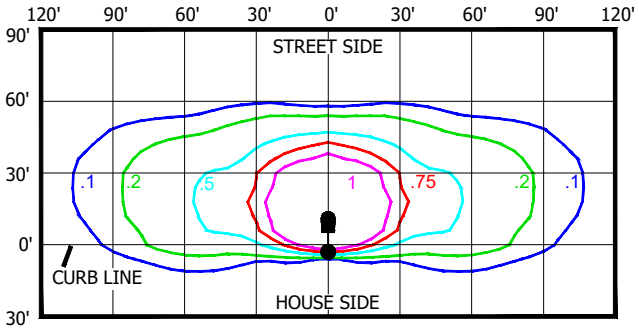	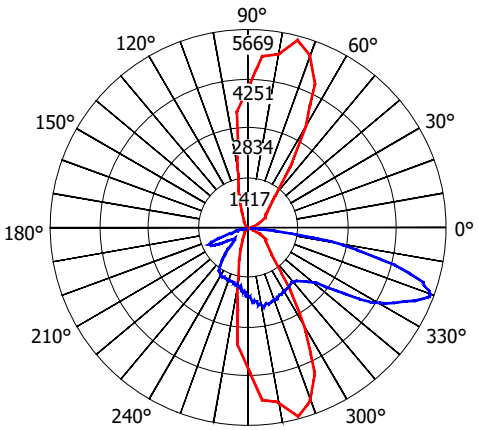
WATTS	71		
MOUNTING HEIGHT	30'		
ARM LENGTH	6'		
ARRANGEMENT	SINGLE		
.IES FILE NAME	ERL1_08B330_ -ELSHS-ERL1-BLCK.IES		

TABLE 12

LUMINAIRE ESTIMATED PROJECTED AREA (EPA)			
HORIZONTAL TENON. CONFIG.	**SINGLE**	**2 @ 90°**	**2 @ 180°**
--		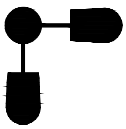	
STANDARD LUMINAIRE (FT^2) (TENON EPA NOT INCLUDED)	0.50	1.0	1.0

TABLE OF CONTENTS

RETURN TO LED FIXTURE INDEX

© 1998 - 2023 San Diego Gas & Electric Company. All rights reserved. Removal of this copyright notice without permission is not permitted under law.

REV	CHANGE	DR	BY	DSN	APV	DATE	REV	CHANGE	DR	BY	DSN	APV	DATE
C	FORMATTING	EDM	JIK	-	-	01/18/2022	F						
B	TABLE UPDATE	AMP	JIK	JES	CZH	02/12/2020	E						
A	ORIGINAL ISSUE	AMP	JIK	JES	CZH	08/20/2019	D	NOTES UPDATE	AMP	RSL	JAS	KRG	02/16/2023

ATTENTION:

* SEE NOTES AND REFERENCES SHEET 21.

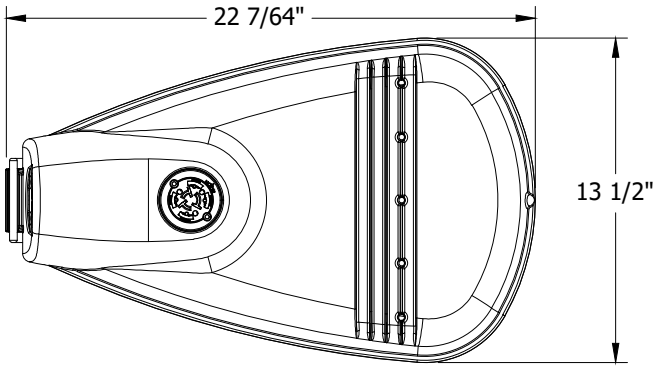

FIGURE 25
TOP VIEW

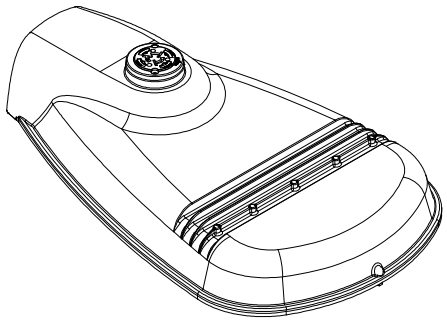

FIGURE 26
ISOMETRIC

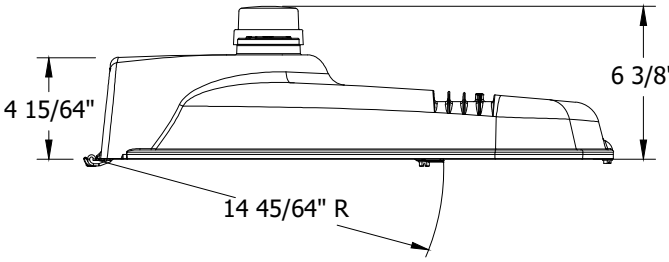

FIGURE 27
SIDE VIEW

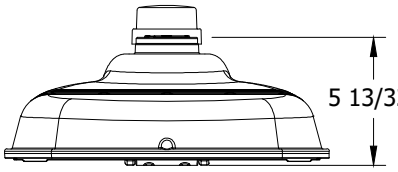

FIGURE 28
FRONT VIEW

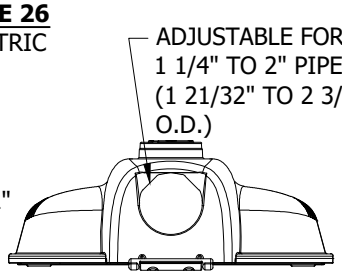

FIGURE 29
BACK VIEW

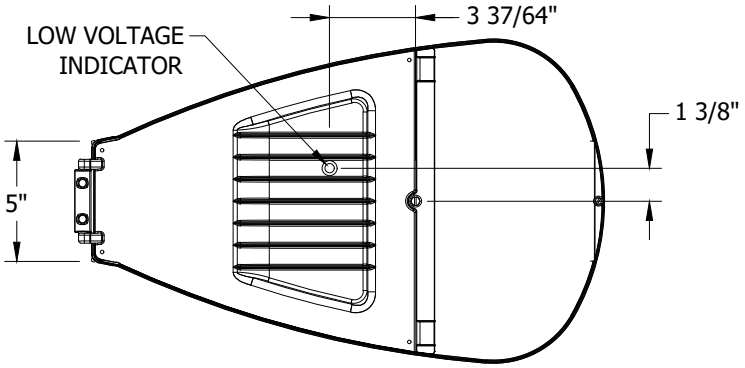

FIGURE 30
BOTTOM VIEW

TABLE 13

MANUFACTURER NAME/STYLE	LUMENS PACKAGE	COLOR TEMPERATURE	UNIT WEIGHT (LBS)	PROJECTED AREA	DISTRIBUTION TYPE	STOCK NUMBER	DESIGN UNITS
GE/ERL1	9600L	3,000K	15.5	SEE TABLE 15	TYPE III	S473108	LC99GE

TABLE OF CONTENTS

RETURN TO LED FIXTURE INDEX

© 1998 - 2023 San Diego Gas & Electric Company. All rights reserved. Removal of this copyright notice without permission is not permitted under law.

REV	CHANGE	DR	BY	DSN	APV	DATE	REV	CHANGE	DR	BY	DSN	APV	DATE
C	FORMATTING	EDM	JIK	-	-	01/18/2022	F						
B	TABLE UPDATE	AMP	JIK	JES	CZH	02/12/2020	E						
A	ORIGINAL ISSUE	AMP	JIK	JES	CZH	08/20/2019	D	NOTES UPDATE	AMP	RSL	JAS	KRG	02/16/2023

TABLE 14

PHOTOMETRIC DIAGRAMS

FIXTURE WITHOUT BACKLIGHT SHIELD		PLOT DRAWN IN FOOTCANDLES	GRAPH RADIUS LINES IN CANDELAS
LUMENS	9,600	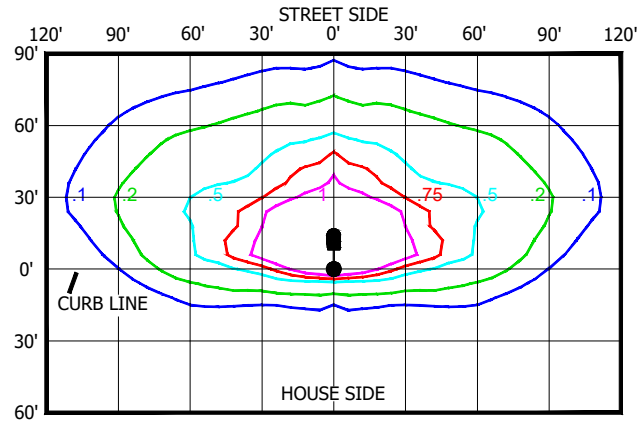	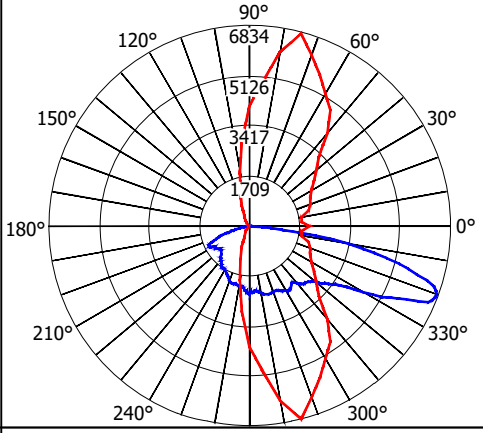
WATTS	97		
MOUNTING HEIGHT	30'		
ARM LENGTH	6'		
ARRANGEMENT	SINGLE		
.IES FILE NAME	ERL1_10C330_ .IES		

FIXTURE WITH BACKLIGHT SHIELD (C)		PLOT DRAWN IN FOOTCANDLES	GRAPH RADIUS LINES IN CANDELAS
LUMENS	9,400	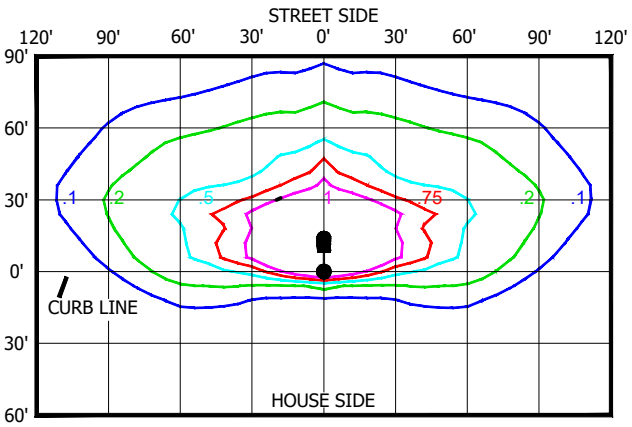	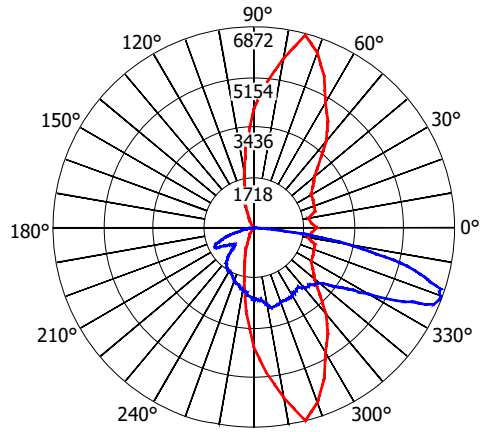
WATTS	97		
MOUNTING HEIGHT	30'		
ARM LENGTH	6'		
ARRANGEMENT	SINGLE		
.IES FILE NAME	ERL1_10C330_ -ELSHS-ERL1-BLCK.IES		

TABLE 15

LUMINAIRE ESTIMATED PROJECTED AREA (EPA)

HORIZONTAL TENON. CONFIG.	SINGLE	2 @ 90°	2 @ 180°
--		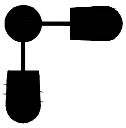	
STANDARD LUMINAIRE (FT^2) (TENON EPA NOT INCLUDED)	0.50	1.0	1.0

© 1998 - 2023 San Diego Gas & Electric Company. All rights reserved. Removal of this copyright notice without permission is not permitted under law.

REV	CHANGE	DR	BY	DSN	APV	DATE	REV	CHANGE	DR	BY	DSN	APV	DATE
C	FORMATTING	EDM	JIK	-	-	01/18/2022	F						
B	TABLE UPDATE	AMP	JIK	JES	CZH	02/12/2020	E						
A	ORIGINAL ISSUE	AMP	JIK	JES	CZH	08/20/2019	D	NOTES UPDATE	AMP	RSL	JAS	KRG	02/16/2023

X Indicates Latest Revision | Completely Revised | New Page | Information Removed

ATTENTION:

* SEE NOTES AND REFERENCES SHEET 21.

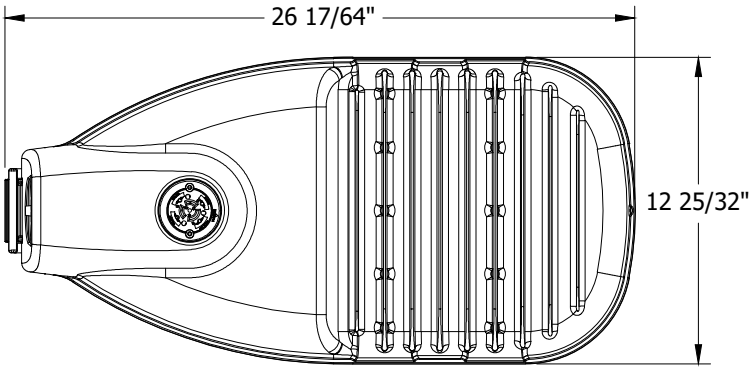

FIGURE 31
TOP VIEW

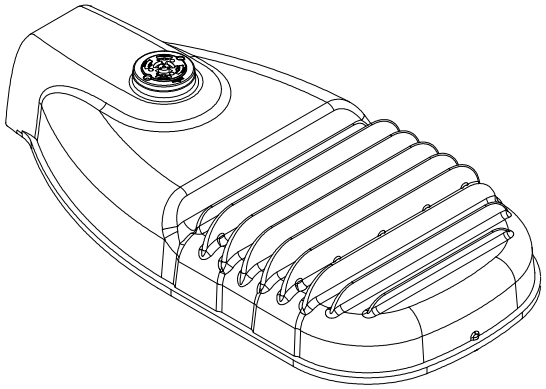

FIGURE 32
ISOMETRIC

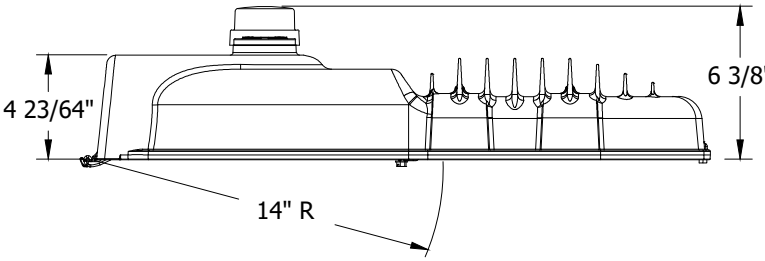

FIGURE 33
SIDE VIEW

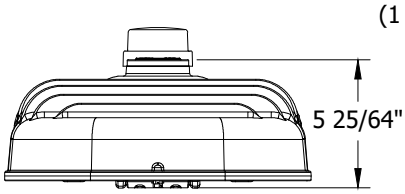

FIGURE 34
FRONT VIEW

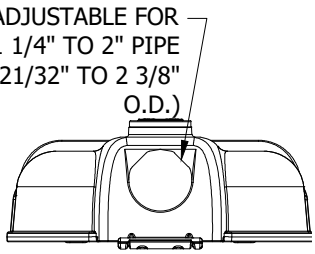

FIGURE 35
BACK VIEW

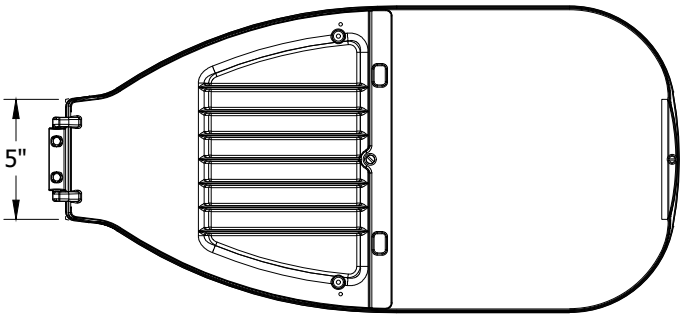

FIGURE 36
BOTTOM VIEW

TABLE 16

MANUFACTURER NAME/STYLE	LUMENS PACKAGE	COLOR TEMPERATURE	UNIT WEIGHT (LBS)	PROJECTED AREA	DISTRIBUTION TYPE	STOCK NUMBER	DESIGN UNITS
GE/ERL2	20100L	3,000K	24.0	SEE TABLE 18	TYPE III	S473110	LC174G

© 1998 - 2023 San Diego Gas & Electric Company. All rights reserved. Removal of this copyright notice without permission is not permitted under law.

REV	CHANGE	DR	BY	DSN	APV	DATE	REV	CHANGE	DR	BY	DSN	APV	DATE
C	FORMATTING	EDM	JIK	-	-	01/18/2022	F						
B	TABLE UPDATE	AMP	JIK	JES	CZH	02/12/2020	E						
A	ORIGINAL ISSUE	AMP	JIK	JES	CZH	08/20/2019	D	NOTES UPDATE	AMP	RSL	JAS	KRG	02/16/2023

TABLE OF CONTENTS

RETURN TO LED FIXTURE INDEX

TABLE 17

PHOTOMETRIC DIAGRAMS

FIXTURE WITHOUT BACKLIGHT SHIELD		PLOT DRAWN IN FOOTCANDLES	GRAPH RADIUS LINES IN CANDELAS
LUMENS	20,100	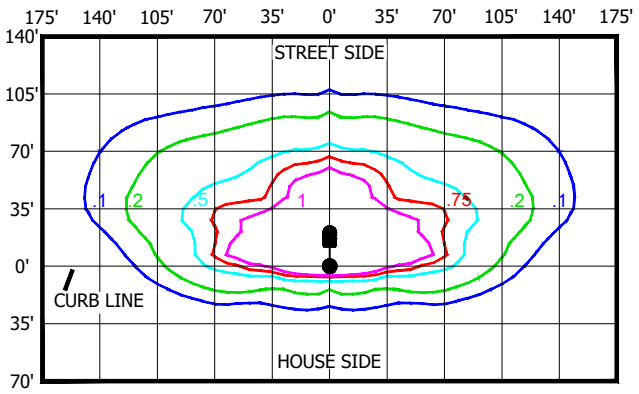	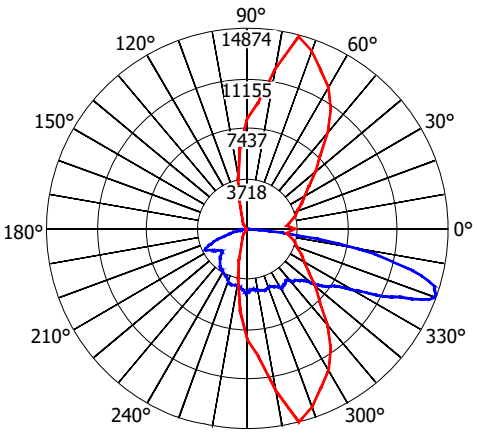
WATTS	174		
MOUNTING HEIGHT	35'		
ARM LENGTH	6'		
ARRANGEMENT	SINGLE		
.IES FILE NAME	ERL2_21C330_ -120-277V.IES		

FIXTURE WITH BACKLIGHT SHIELD (C)		PLOT DRAWN IN FOOTCANDLES	GRAPH RADIUS LINES IN CANDELAS
LUMENS	19,700	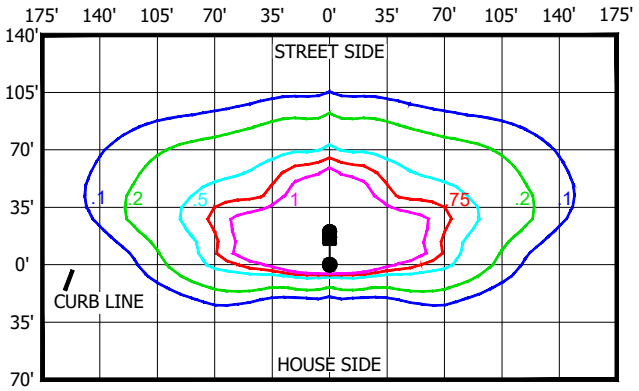	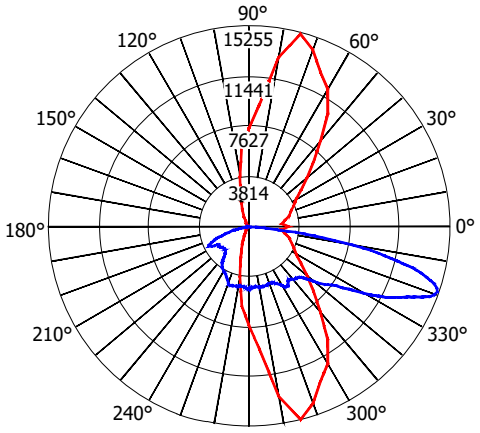
WATTS	174		
MOUNTING HEIGHT	35'		
ARM LENGTH	6'		
ARRANGEMENT	SINGLE		
.IES FILE NAME	ERL2_21C330_ -120-277V-ELSHS -ERL2-BLCK.IES		

TABLE 18

LUMINAIRE ESTIMATED PROJECTED AREA (EPA)			
HORIZONTAL TENON. CONFIG.	SINGLE	2 @ 90°	2 @ 180°
--		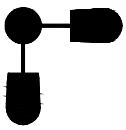	
STANDARD LUMINAIRE (FT^2) (TENON EPA NOT INCLUDED)	0.57	1.14	1.14

TABLE OF CONTENTS

RETURN TO LED FIXTURE INDEX

© 1998 - 2023 San Diego Gas & Electric Company. All rights reserved. Removal of this copyright notice without permission is not permitted under law.

REV	CHANGE	DR	BY	DSN	APV	DATE	REV	CHANGE	DR	BY	DSN	APV	DATE
C	FORMATTING	EDM	JIK	-	-	01/18/2022	F						
B	TABLE UPDATE	AMP	JIK	JES	CZH	02/12/2020	E						
A	ORIGINAL ISSUE	AMP	JIK	JES	CZH	08/20/2019	D	NOTES UPDATE	AMP	RSL	JAS	KRG	02/16/2023

ATTENTION:

* SEE NOTES AND REFERENCES SHEET 21.

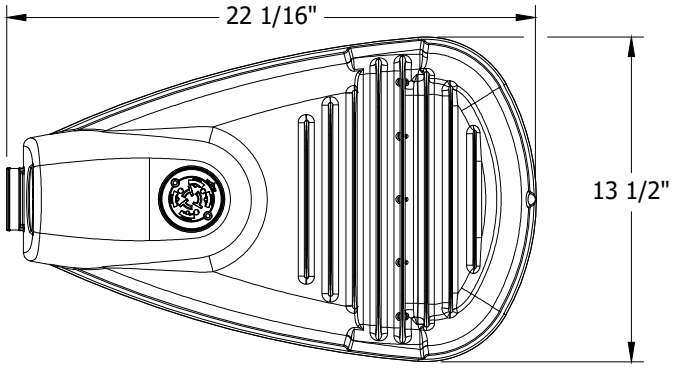

FIGURE 37
TOP VIEW

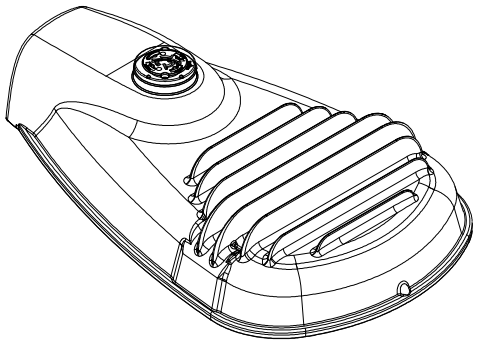

FIGURE 38
ISOMETRIC

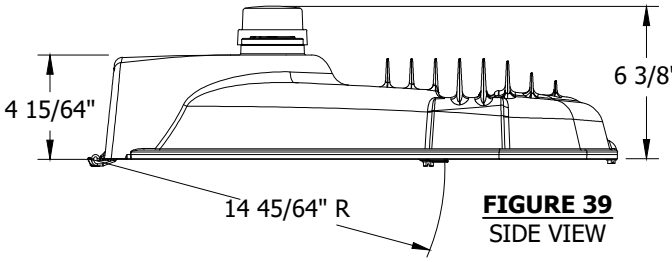

FIGURE 39
SIDE VIEW

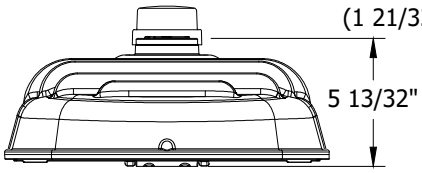

FIGURE 40
FRONT VIEW

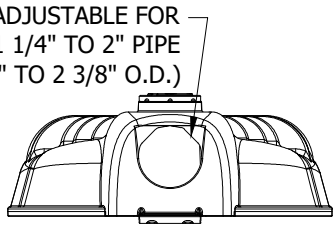

FIGURE 41
BACK VIEW

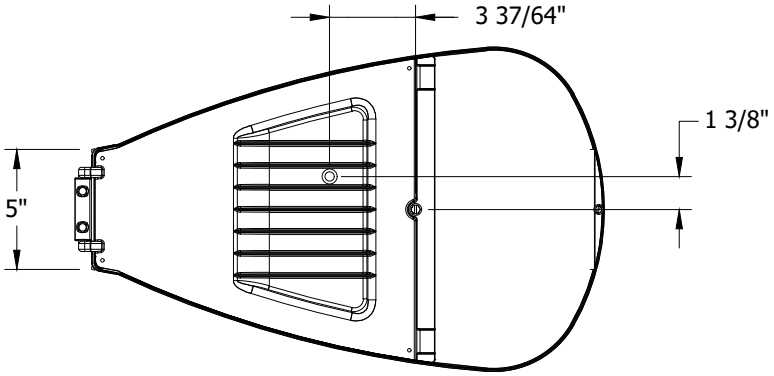

FIGURE 42
BOTTOM VIEW

TABLE 19

MANUFACTURER NAME/STYLE	LUMENS PACKAGE	COLOR TEMPERATURE	UNIT WEIGHT (LBS)	PROJECTED AREA	DISTRIBUTION TYPE	STOCK NUMBER	DESIGN UNITS
GE/ERLH	11000L	3,000K	15.15	SEE TABLE 21	TYPE IV	S473112	LC96GE

© 1998 - 2023 San Diego Gas & Electric Company. All rights reserved. Removal of this copyright notice without permission is not permitted under law.

REV	CHANGE	DR	BY	DSN	APV	DATE	REV	CHANGE	DR	BY	DSN	APV	DATE
C	FORMATTING	EDM	JIK	-	-	01/18/2022	F						
B	TABLE UPDATE	AMP	JIK	JES	CZH	02/12/2020	E						
A	ORIGINAL ISSUE	AMP	JIK	JES	CZH	08/20/2019	D	NOTES UPDATE	AMP	RSL	JAS	KRG	02/16/2023

TABLE OF CONTENTS

RETURN TO LED FIXTURE INDEX

TABLE 20

PHOTOMETRIC DIAGRAMS

FIXTURE WITHOUT BACKLIGHT SHIELD		PLOT DRAWN IN FOOTCANDLES	GRAPH RADIUS LINES IN CANDELAS
LUMENS	11,000	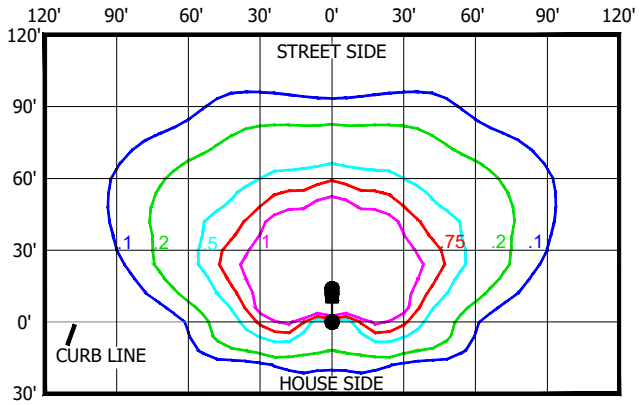	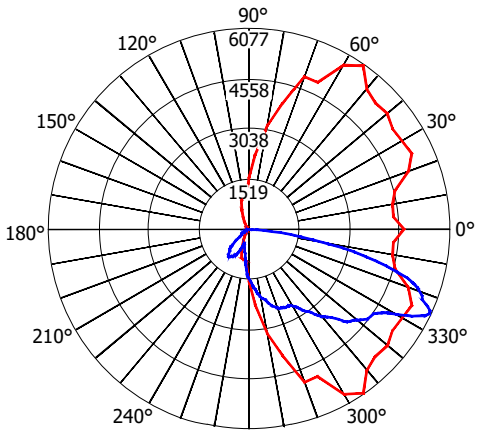
WATTS	98		
MOUNTING HEIGHT	30'		
ARM LENGTH	6'		
ARRANGEMENT	SINGLE		
.IES FILE NAME	ERLH_11D330_ .IES		

FIXTURE WITH BACKLIGHT SHIELD (C)		PLOT DRAWN IN FOOTCANDLES	GRAPH RADIUS LINES IN CANDELAS
LUMENS	10,700	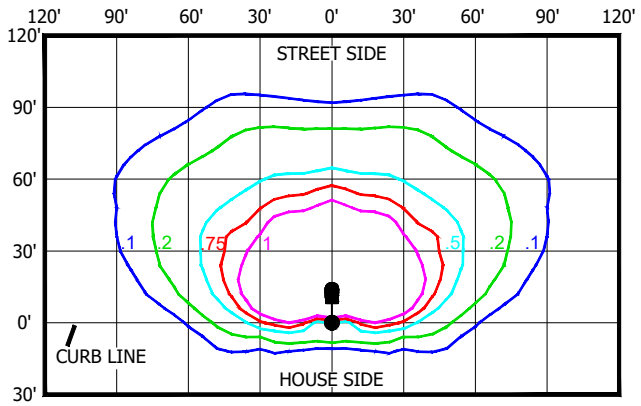	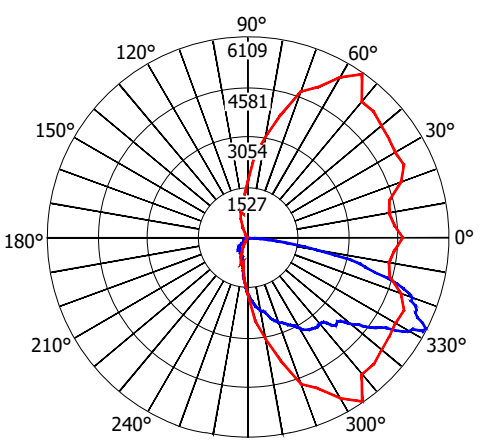
WATTS	98		
MOUNTING HEIGHT	30'		
ARM LENGTH	6'		
ARRANGEMENT	SINGLE		
.IES FILE NAME	ERLH_11D330_ ELSHS-ERL1 -BLCK.IES		

TABLE 21

LUMINAIRE ESTIMATED PROJECTED AREA (EPA)			
HORIZONTAL TENON. CONFIG.	SINGLE	2 @ 90°	2 @ 180°
--		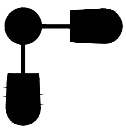	
STANDARD LUMINAIRE (FT^2) (TENON EPA NOT INCLUDED)	0.50	1.0	1.0

© 1998 - 2023 San Diego Gas & Electric Company. All rights reserved. Removal of this copyright notice without permission is not permitted under law.

REV	CHANGE	DR	BY	DSN	APV	DATE	REV	CHANGE	DR	BY	DSN	APV	DATE
C	FORMATTING	EDM	JIK	-	-	01/18/2022	F						
B	TABLE UPDATE	AMP	JIK	JES	CZH	02/12/2020	E						
A	ORIGINAL ISSUE	AMP	JIK	JES	CZH	08/20/2019	D	NOTES UPDATE	AMP	RSL	JAS	KRG	02/16/2023

X Indicates Latest Revision | Completely Revised | New Page | Information Removed

TABLE OF CONTENTS

RETURN TO LED FIXTURE INDEX

ATTENTION:

* SEE NOTES AND REFERENCES SHEET 21.

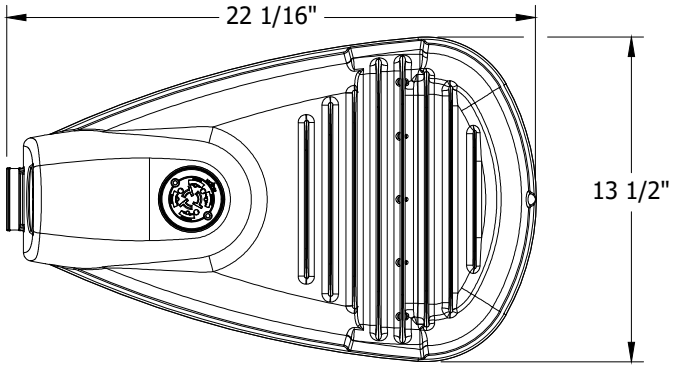

FIGURE 43
TOP VIEW

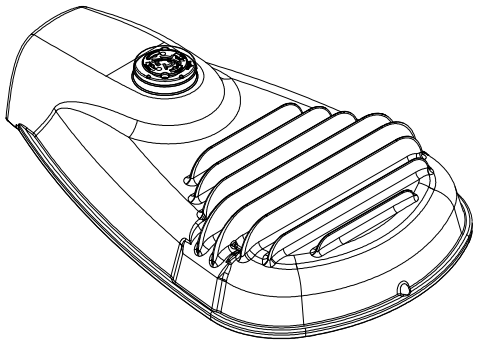

FIGURE 44
ISOMETRIC

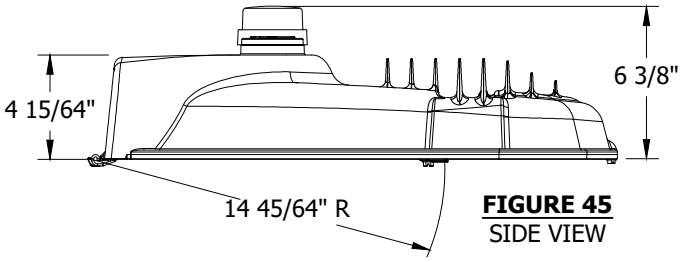

FIGURE 45
SIDE VIEW

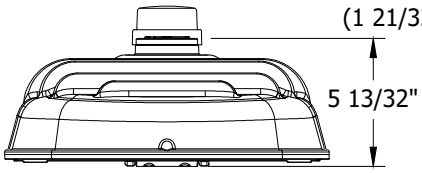

FIGURE 46
FRONT VIEW

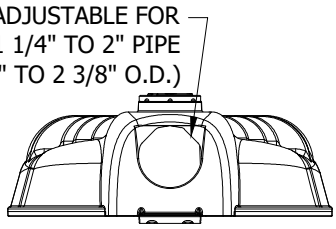

FIGURE 47
BACK VIEW

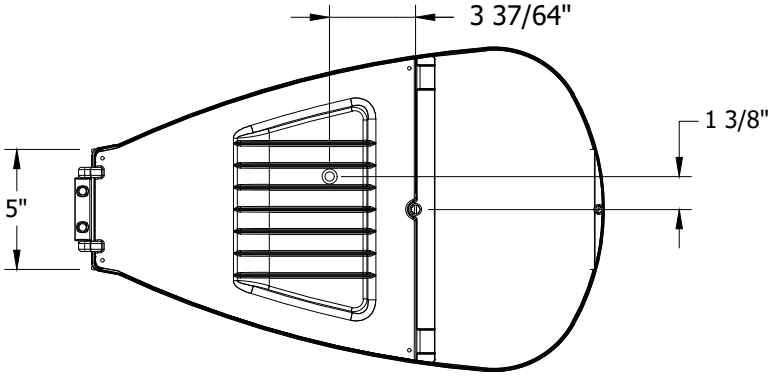

FIGURE 48
BOTTOM VIEW

TABLE 22

MANUFACTURER NAME/STYLE	LUMENS PACKAGE	COLOR TEMPERATURE	UNIT WEIGHT (LBS)	PROJECTED AREA	DISTRIBUTION TYPE	STOCK NUMBER	DESIGN UNITS
GE/ERLH	14400L	3,000K	15.15	SEE TABLE 24	TYPE III	S473114	LC136G

TABLE OF CONTENTS

RETURN TO LED FIXTURE INDEX

© 1998 - 2023 San Diego Gas & Electric Company. All rights reserved. Removal of this copyright notice without permission is not permitted under law.

REV	CHANGE	DR	BY	DSN	APV	DATE	REV	CHANGE	DR	BY	DSN	APV	DATE
C	FORMATTING	EDM	JIK	-	-	01/18/2022	F						
B	TABLE UPDATE	AMP	JIK	JES	CZH	02/12/2020	E						
A	ORIGINAL ISSUE	AMP	JIK	JES	CZH	08/20/2019	D	NOTES UPDATE	AMP	RSL	JAS	KRG	02/16/2023

TABLE 23

PHOTOMETRIC DIAGRAMS

FIXTURE WITHOUT BACKLIGHT SHIELD		PLOT DRAWN IN FOOTCANDLES	GRAPH RADIUS LINES IN CANDELAS
LUMENS	14,400	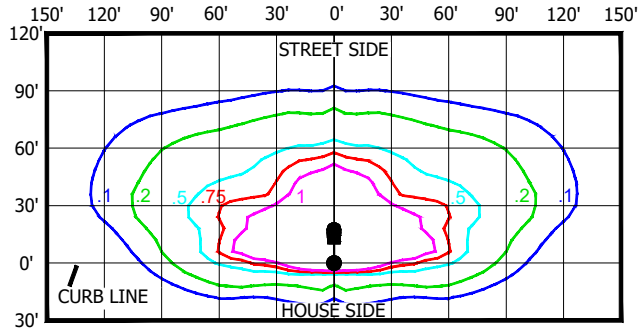	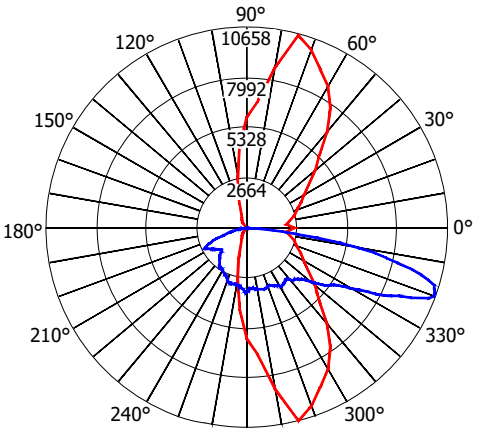
WATTS	136		
MOUNTING HEIGHT	30'		
ARM LENGTH	6'		
ARRANGEMENT	SINGLE		
.IES FILE NAME	ERLH_15C330_ .IES		

FIXTURE WITH BACKLIGHT SHIELD (C)		PLOT DRAWN IN FOOTCANDLES	GRAPH RADIUS LINES IN CANDELAS
LUMENS	14,000	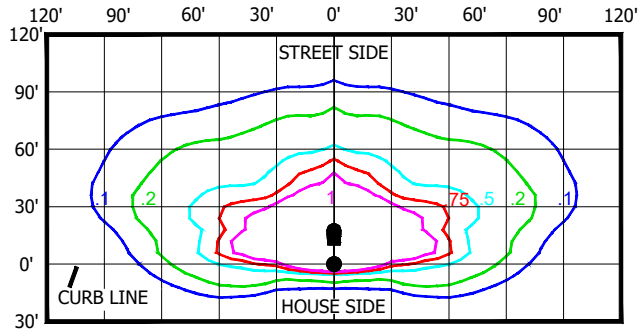	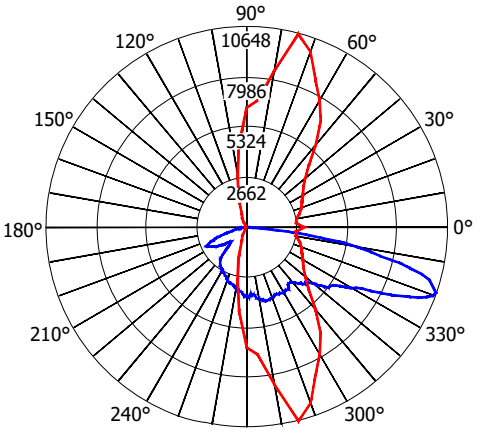
WATTS	136		
MOUNTING HEIGHT	30'		
ARM LENGTH	6'		
ARRANGEMENT	SINGLE		
.IES FILE NAME	ERLH_15C330_ ELSHS-ERL1 -BLCK.IES		

TABLE 24

LUMINAIRE ESTIMATED PROJECTED AREA (EPA)			
HORIZONTAL TENON. CONFIG.	SINGLE	2 @ 90°	2 @ 180°
--		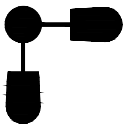	
STANDARD LUMINAIRE (FT^2) (TENON EPA NOT INCLUDED)	0.50	1.0	1.0

TABLE OF CONTENTS

RETURN TO LED FIXTURE INDEX

© 1998 - 2023 San Diego Gas & Electric Company. All rights reserved. Removal of this copyright notice without permission is not permitted under law.

REV	CHANGE	DR	BY	DSN	APV	DATE	REV	CHANGE	DR	BY	DSN	APV	DATE
C	FORMATTING	EDM	JIK	-	-	01/18/2022	F						
B	TABLE UPDATE	AMP	JIK	JES	CZH	02/12/2020	E						
A	ORIGINAL ISSUE	AMP	JIK	JES	CZH	08/20/2019	D	NOTES UPDATE	AMP	RSL	JAS	KRG	02/16/2023

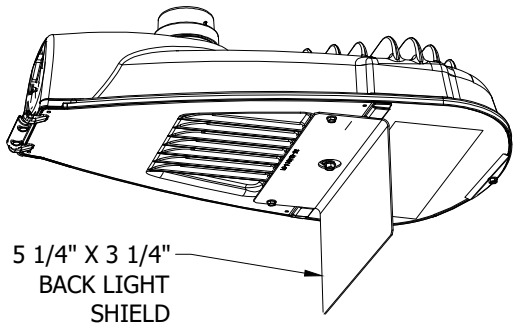

FIGURE 49
ISOMETRIC

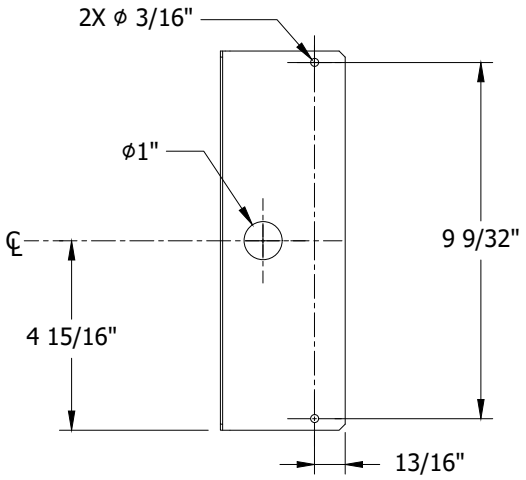

FIGURE 50
TOP VIEW

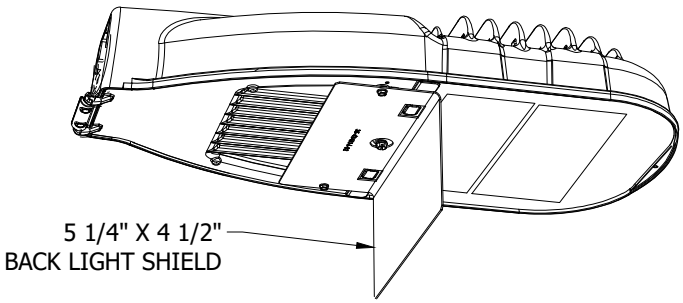

FIGURE 51
ISOMETRIC

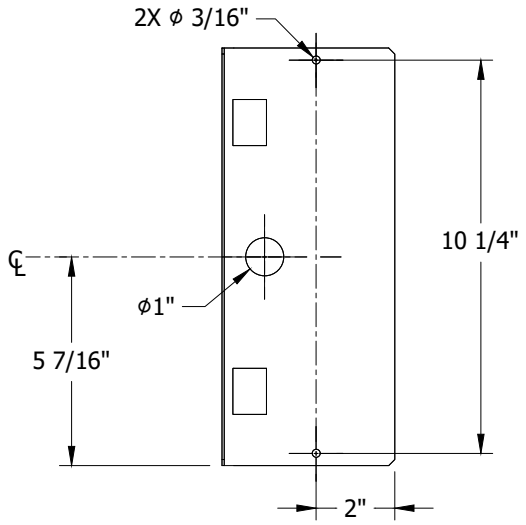

FIGURE 52
TOP VIEW

TABLE 25

GE LED BACK LIGHT SHIELD				
DESCRIPTION	**FIGURE**	**FIXTURE TYPE COMPATIBILITY BY STOCK NUMBER**	**STOCK NUMBER**	**DESIGN UNITS**
ERL1 & ERLH BACK LIGHT SHIELD, 5 1/4" X 3 1/4" X 9 7/8" LONG	49	S473100, S473102, S473104, S473106, S473108, S473112, S473114	S643014	GEBLS1
ERL2 BACK LIGHT SHIELD, 5 1/4" X 4 1/2" X 10 7/8" LONG	51	S473110	S643016	GEBLS2

TABLE OF CONTENTS

RETURN TO LED FIXTURE INDEX

© 1998 - 2023 San Diego Gas & Electric Company. All rights reserved. Removal of this copyright notice without permission is not permitted under law.

REV	CHANGE	DR	BY	DSN	APV	DATE	REV	CHANGE	DR	BY	DSN	APV	DATE
C	FORMATTING	EDM	JIK	-	-	01/18/2022	F						
B	TABLE UPDATE	AMP	JIK	JES	CZH	02/12/2020	E						
A	ORIGINAL ISSUE	AMP	JIK	JES	CZH	08/20/2019	D	NOTES UPDATE	AMP	RSL	JAS	KRG	02/16/2023

INSTALLATION:

A. REMOVE DOOR FROM LUMINAIRE BEFORE INSTALLING SCREWS TO PREVENT INTERNAL DAMAGE. UNFASTEN DOOR LATCH SCREW, OPEN DOOR, AND REMOVE DOOR FROM HINGE CRADLE.

B. FASTEN SHIELD TO DOOR BY SECURING THE INCLUDED THREAD CUTTING SCREWS INTO THE TWO 3/16-INCH HOLES ON THE SHIELD (SHOWN ON FIGURES 50 AND 52).

C. MAKE SURE THE SHIELD IS ORIENTED CORRECTLY BY VERIFYING THE 1-INCH HOLE IN THE CENTER OF THE SHIELD LINES UP WITH THE LATCH SCREW ON THE DOOR (SHOWN ON FIGURES 49 AND 51). FOR THE ERL2 SHIELD, THE SQUARE CUTOUTS ON THE SHIELD SHOULD LINE UP WITH THE SQUARE BUMPS ON THE DOOR (SHOWN ON FIGURE 51).

D. TO REPLACE DOOR INTO LUMINAIRE, HOLD SLIGHTLY PAST VERTICAL TOWARD THE POLE-SIDE OF THE HINGE. INSERT HINGE PIN INTO HINGE CRADLE AND LOWER DOOR TO VERIFY DOOR CAN HANG FREE. CLOSE DOOR AND SECURE LATCH SCREW.

BILL OF MATERIALS: NONE

NOTES:

I. REFER TO SPECIFIC PRODUCT INSTALLATION MANUALS PROVIDED WITH ITEM FOR COMPLETE SAFETY AND INSTALLATION INSTRUCTIONS.

II. SEE NON-OPERATIONAL ESP TBD FOR IES DESIGN FILES.

(III) MANUFACTURER DATA REPRODUCED OR ADAPTED WHERE NOTED FROM PRODUCT CUT SHEET OLP-3128 (REV 09/06/17) AND INSTALLATION GUIDE GEH-6064-SP (REV 05/17/17).

REFERENCE:

a. FOR OVERHEAD LIGHTING INSTALLATION, SEE OH1570.

b. FOR UNDERGROUND LIGHTING INSTALLATION, SEE UG4431.

(c) FOR BACKLIGHT SHIELD AND INSTALLATION DETAILS, SEE SHEET 20.

TABLE OF CONTENTS

RETURN TO LED FIXTURE INDEX

© 1998 - 2023 San Diego Gas & Electric Company. All rights reserved. Removal of this copyright notice without permission is not permitted under law.

REV	CHANGE	DR	BY	DSN	APV	DATE	REV	CHANGE	DR	BY	DSN	APV	DATE
C	FORMATTING	EDM	JIK	-	-	01/18/2022	F						
B	TABLE UPDATE	AMP	JIK	JES	CZH	02/12/2020	E						
A	ORIGINAL ISSUE	AMP	JIK	JES	CZH	08/20/2019	D	NOTES UPDATE	AMP	RSL	JAS	KRG	02/16/2023

X Indicates Latest Revision | Completely Revised | New Page | Information Removed

SDG&E ELECTRIC OVERHEAD AND UNDERGROUND CONSTRUCTION STANDARDS

GE EVOLVE LED ROADWAY LIGHTING
FIXTURES - NOTES AND REFERENCES

OH1571.21
UG4471.21

SCOPE: THIS STANDARD SHOWS CREE RSW & TRAVEYO TYPE LED FIXTURES USED TO PROVIDE ROADWAY LIGHTING.

TABLE 1

CREE LED FIXTURE INDEX							
DESCRIPTION	**DESIGN UNITS**	**MOUNTING HEIGHT** (II) (III) (A)	**MAXIMUM SYSTEM WATTAGE**	**STANDARD PAGE**	**STOCK NUMBER**	**FIGURE DETAIL**	**HPSV/LPSV EQUIVALENT STOCK NUMBERS** (a) (b)
5KL RSW TYPE 3	RWS3	26'	45	OH 1572.6	S473138	1	S473800, S473400, S473802, S473402
5KL RSW TYPE 2	RWS2	26'	45	OH 1572.8	S473140	1	S473800, S473400, S473802, S473402
9KL RSW TYPE 3	RWM3	30'	83	OH 1572.10	S473142	2	S473406, S473806, S473404, S473804
9KL RSW TYPE 2	RWM2	30'	83	OH 1572.12	S473150	2	S473406, S473806, S473404, S473804
14KL RSW TYPE 3	RWL3	30'	136	OH 1572.14	S473144	3	S473408
24KL RSW TYPE 3	RWX3	35'	223	OH 1572.16	S473146	3	S473410
5KL TRV TYPE 3	RESERVED FOR FUTURE USE						
5KL TRV TYPE 2							
10KL TRV TYPE 3							
10KL TRV TYPE 2							
25KL TRV TYPE 3							

TABLE OF CONTENTS

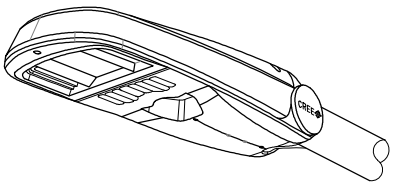

FIGURE 1
RSW SMALL

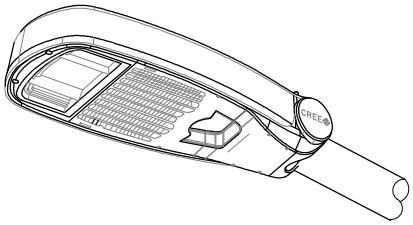

FIGURE 2
RSW MEDIUM

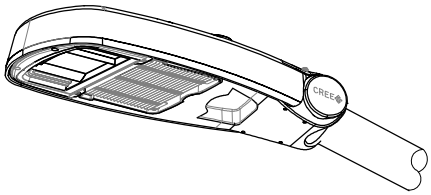

FIGURE 3
RSW LARGE/XL

FUTURE FIGURE

FIGURE 4
TRV SMALL

FUTURE FIGURE

FIGURE 5
TRV MEDIUM

FUTURE FIGURE

FIGURE 6
TRV LARGE

© 1998 - 2021 San Diego Gas & Electric Company. All rights reserved. Removal of this copyright notice without permission is not permitted under law.

REV	CHANGE	DR	BY	DSN	APV	DATE	REV	CHANGE	DR	BY	DSN	APV	DATE
C							F						
B							E						
A	ORIGINAL ISSUE	AMP	RSL	JES	CZH	04/28/21	D						

Indicates Latest Revision | Completely Revised | X New Page | Information Removed

SDG&E ELECTRIC OVERHEAD CONSTRUCTION STANDARDS

ROADWAY LED LIGHTING FIXTURES
CREE - MANUFACTURER INDEX

ATTENTION: INSTALLATION FOR RSW TYPE LED FIXTURES

INSTALLATION:

(A) HPSV/LPSV CONVERSION TO LED: REMOVE AND REPLACE ENTIRE HPSV/LPSV STREET LIGHTING FIXTURE AND BALLAST AND REPLACE WITH EQUIVALENT LED FIXTURE SHOWN IN TABLE 1. FOR OVERHEAD CIRCUIT RECONDUCTOR OR REBUILD, MOUNT THE REPLACEMENT LED FIXTURE AT THE EXISTING FIXTURE HEIGHT OR HIGHER WHILE MAINTAINING REQUIRED CLEARANCES TO OTHER FACILITIES PER OH1509.

B. MECHANICAL INSTALLATION OF FIXTURE

1. SLIDE FIXTURE ON TO A MINIMUM 8" LONG TENON (MAST), THROUGH OPENING ON THE REAR OF HOUSING. SEE **FIGURE 7**.
2. ONCE DESIRED POSITION IS ACHIEVED, OPEN COVER BY HOLDING FIXTURE AND PULLING THE HANDLE AND ALLOW THE COVER TO SWING OPEN. SEE **FIGURE 8 AND 9**.
3. TO LEVEL FIXTURE, USE BUBBLE LEVEL LOCATED INSIDE HOUSING. ADJUST LEVELING OF FIXTURE FROM SIDE TO SIDE BY ROTATION FIXTURE ON POLE. TO LEVEL FROM FRONT TO BACK, SLIDE POLE IN OR OUT TO DIFFERENT STEP IN UPPER HOUSING. EACH STEP CHANGES THE ANGLE IN 2.5 DEGREE INCREMENTS.
4. WHEN TIGHTENING BOLTS, MAKE SURE TO ALTERNATE BETWEEN BOLTS TO KEEP BRACKET STRAIGHT. TIGHTEN MOUNTING BOLTS TO THE APPROPRIATE TORQUE VALUES AS SPECIFIED IN THE MANUFACTURER INSTALLATION GUIDE. DO NOT OVER TIGHTEN. SEE **FIGURE 7** FOR BOLT LOCATION.

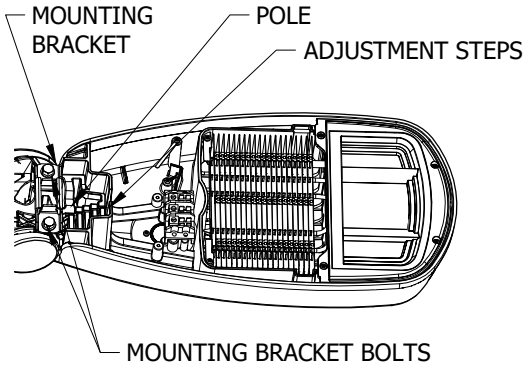

FIGURE 7
INTERNAL VIEW

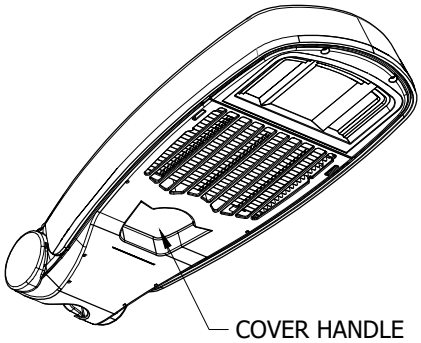

FIGURE 8
BOTTOM VIEW

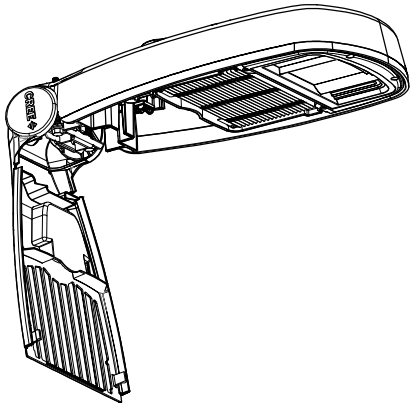

FIGURE 9
BOTTOM VIEW LID OPEN

C. ELECTRICAL CONNECTIONS OF FIXTURES

1. FOR 120/277V CONNECT THE BLACK FIXTURE LEAD TO THE VOLTAGE SUPPLY POSITION OF THE TERMINAL BLOCK (HOT 1 FOR 208/240V WIRING).
2. FOR 120/277V CONNECT THE WHITE FIXTURE LEAD TO THE NEUTRAL SUPPLY POSITION OF THE TERMINAL BLOCK OR (HOT 2 FOR 208/240V WIRING).
3. CONNECT THE GREEN OR GREEN/YELLOW GROUND LEAD TO THE GREEN WIRE POSITION OF THE TERMINAL BLOCK.
4. PUSH EXCESS SUPPLY WIRES INTO POLE AND CLOSE COVER. MAKE SURE THAT NO WIRES ARE PINCHED AND COVER LATCHES ARE FULLY ENGAGED.

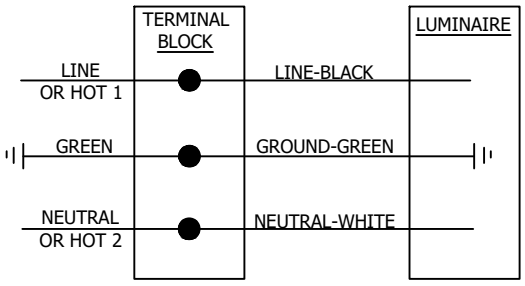

FIGURE 10
WIRING SCHEMATIC

© 1998 - 2021 San Diego Gas & Electric Company. All rights reserved. Removal of this copyright notice without permission is not permitted under law.

REV	CHANGE	DR	BY	DSN	APV	DATE	REV	CHANGE	DR	BY	DSN	APV	DATE
C							F						
B							E						
A	ORIGINAL ISSUE	AMP	RSL	JES	CZH	04/28/21	D						

Indicates Latest Revision | Completely Revised | X New Page | Information Removed

SDG&E ELECTRIC OVERHEAD CONSTRUCTION STANDARDS

ROADWAY LED LIGHTING FIXTURES
INSTALLATION FOR RSW SERIES

OH1572.2
UG4472.2

TABLE OF CONTENTS

D. MODIFYING FIELD ADJUSTABLE OUTPUT (FAO) SETTINGS OF FIXTURE

1. THE FIELD ADJUSTABLE OUTPUT MODULE ENABLES THE RSW FIXTURE TO BE DIMMED AS NEEDED FOR A PARTICULAR INSTALLATION. ALL FIXTURES WILL BE SHIPPED FROM THE FACTORY AT THE MAXIMUM LUMEN OUTPUT AND CAN BE MANUALLY ADJUSTED TO LOWER OUTPUTS FOR PROJECT SPECIFIC NEEDS DURING INSTALLATION.
2. THE FIELD ADJUSTABLE OUTPUT MODULE IS LOCATED INSIDE THE FIXTURE. OPEN THE COVER BY HOLDING FIXTURE AND PULLING THE HANDLE. ALLOW THE COVER TO SWING OPEN.
3. ESTABLISH THE DESIRED POWER OR LUMEN SETTING BY TURNING THE MODULE SWITCH TO THE POSITION DEFINED BY THE AU/CU POWER LEVEL INCLUDED WITH THE DESIGN PACKAGE. REFER TO THE MANUFACTURER SPECIFICATIONS AND FIELD ADJUSTABLE SETTINGS TABLES INCLUDED WITHIN THIS STANDARD FOR EACH FIXTURE. SEE FIGURE 11, 12, AND 13 ADJUSTMENT SWITCH DETAILS FOR EACH FIXTURE SIZE.
4. CLOSE THE COVER ENSURING NO WIRES ARE PINCHED. APPLY A WATTAGE LABEL THAT INDICATES THE ADJUSTED FIXTURE POWER SETTING.

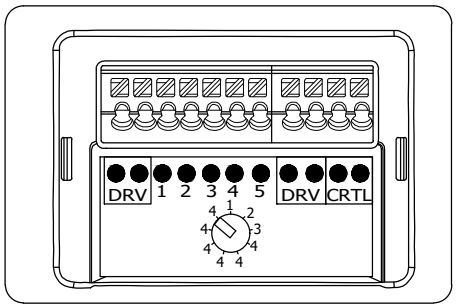

FIGURE 11
SMALL RSW
FAO SWITCH

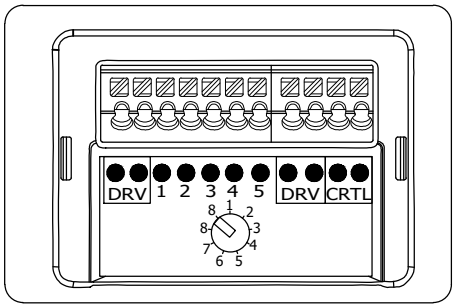

FIGURE 12
MEDIUM RSW
FAO SWITCH

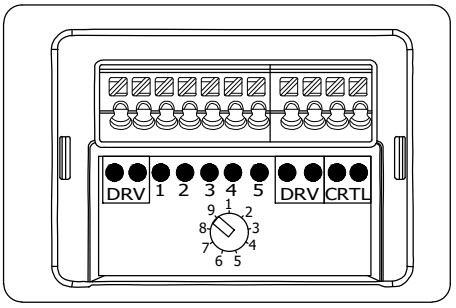

FIGURE 13
LARGE/XL RSW
FAO SWITCH

BILL OF MATERIALS: NONE

NOTES:

I. THIS IS A REPRODUCTION OR ADAPTATION OF MANUFACTURER DATA. REFER TO SPECIFIC PRODUCT INSTALLATION MANUALS PROVIDED WITH STOCK MATERIALS FOR COMPLETE SAFETY AND INSTALLATION INSTRUCTIONS.

(II) MOUNTING HEIGHTS PROVIDED ON PAGE OH1572.1 ARE SPECIFIC TO NEW UNDERGROUND FEED INSTALLATIONS DUE TO STANDARD CONCRETE POLE SIZES AVAILABLE. NEW LED STREETLIGHT INSTALLATIONS OR HPSV-TO-LED UPGRADE INSTALLATIONS MAY BE MOUNTED WITHIN 2 FEET OF THESE REFERENCE MOUNTING HEIGHTS AS LONG AS THE REQUIRED CLEARANCES TO OTHER FACILITIES ARE MAINTAINED PER OH1509.

(III) FOR NEW SDG&E OWNED STREETLIGHT INSTALLATION (NOT EXISTING CONVERSIONS), A LIGHTING DESIGN ANALYSIS MAY BE REQUIRED TO DETERMINE THE MOUNTING HEIGHT IF THE REFERENCE MOUNTING HEIGHT PROVIDED HERE ARE NOT FEASIBLE. CONTACT THE STREET LIGHTING GROUP IN THIS SCENARIO FOR GUIDANCE.

REFERENCE:

(a) SEE OVERHEAD FIELD MAINTENANCE ONLY SECTION 1500 FOR HPSV AND LPSV FIXTURE DETAILS.

(b) SOME FIXTURES ARE NO LONGER AVAILABLE.

c. SEE OH1570 FOR OVERHEAD LIGHTING INSTALLATION.

d. SEE UG4431 FOR UNDERGROUND LIGHTING INSTALLATION.

e. SEE OH1512 FOR PHOTOELECTRIC CONTROLS AVAILABLE.

© 1998 - 2021 San Diego Gas & Electric Company. All rights reserved. Removal of this copyright notice without permission is not permitted under law.

REV	CHANGE	DR	BY	DSN	APV	DATE	REV	CHANGE	DR	BY	DSN	APV	DATE
C							F						
B							E						
A	ORIGINAL ISSUE	AMP	RSL	JES	CZH	04/28/21	D						

Indicates Latest Revision | Completely Revised | X New Page | Information Removed

TABLE OF CONTENTS

SCOPE: THIS STANDARD SHOWS TRAVEYO TYPE LED FIXTURES USED TO PROVIDE ROADWAY LIGHTING.

ATTENTION: INSTALLATION FOR TRAVEYO TYPE LED FIXTURES

INSTALLATION:

RESERVED FOR FUTURE CONTENT

TABLE OF CONTENTS

© 1998 - 2021 San Diego Gas & Electric Company. All rights reserved. Removal of this copyright notice without permission is not permitted under law.

REV	CHANGE	DR	BY	DSN	APV	DATE	REV	CHANGE	DR	BY	DSN	APV	DATE
C							F						
B							E						
A	ORIGINAL ISSUE	AMP	RSL	JES	CZH	04/28/21	D						

BILL OF MATERIALS: NONE

NOTES: NONE

REFERENCE:

a. SEE OH1570 FOR OVERHEAD LIGHTING INSTALLATION.

b. SEE UG4431 FOR UNDERGROUND LIGHTING INSTALLATION.

TABLE OF CONTENTS

© 1998 - 2021 San Diego Gas & Electric Company. All rights reserved. Removal of this copyright notice without permission is not permitted under law.

REV	CHANGE	DR	BY	DSN	APV	DATE	REV	CHANGE	DR	BY	DSN	APV	DATE
C							F						
B							E						
A	ORIGINAL ISSUE	AMP	RSL	JES	CZH	04/28/21	D						

Indicates Latest Revision | Completely Revised [X] | New Page | Information Removed

SDG&E ELECTRIC OVERHEAD CONSTRUCTION STANDARDS

ROADWAY LED LIGHTING FIXTURES INSTALLATION FOR TRAVEYO SERIES

OH1572.5
UG4472.5

SCOPE: THIS STANDARD SHOWS VARIOUS CREE LED ROADWAY LIGHTING FIXTURES.

ATTENTION: SEE NOTES & REFERENCES PAGE OH1572.19. LUMEN OUTPUT SETTING MUST BE IDENTIFIED FOR THIS FIXTURE INSTALLATION USING TABLE 2 ON NEXT SHEET.

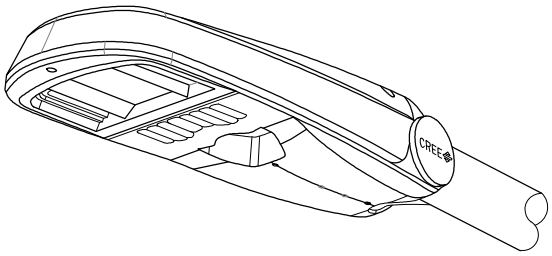

FIGURE 1
ISOMETRIC

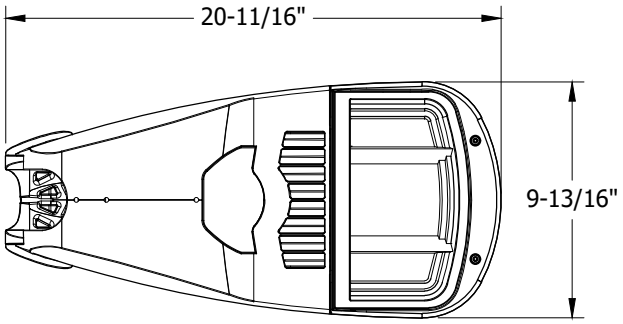

FIGURE 2
BOTTOM

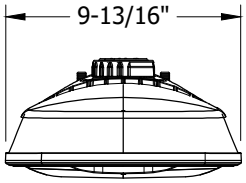

FIGURE 3
FRONT

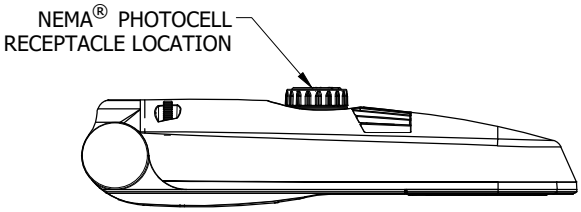

FIGURE 4
SIDE

TABLE OF CONTENTS

TABLE 1

STOCK NUMBER	MANUFACTURER NAME/STYLE	LUMENS PACKAGE	COLOR TEMPERATURE	UNIT WEIGHT	PROJECTED AREA	DISTRIBUTION TYPE	DESIGN UNITS
S473138	CREE / RSW SMALL	5000L	3000K	8.45 LBS	SEE LUMINAIRE EPA TABLE	TYPE III MEDIUM	RWS3

LUMINAIRE ESTIMATED PROJECTED AREA (EPA)

HORIZONTAL TENON. CONFIG.	SINGLE	2 @ 90°	2 @ 180°
STANDARD LUMINAIRE (FT^2) (TENON EPA NOT INCLUDED)	0.61	0.89	1.22

© 1998 - 2021 San Diego Gas & Electric Company. All rights reserved. Removal of this copyright notice without permission is not permitted under law.

REV	CHANGE	DR	BY	DSN	APV	DATE	REV	CHANGE	DR	BY	DSN	APV	DATE
C							F						
B							E						
A	ORIGINAL ISSUE	AMP	RSL	JES	CZH	04/28/21	D						

Indicates Latest Revision | Completely Revised | X New Page | Information Removed

SDG&E ELECTRIC OVERHEAD CONSTRUCTION STANDARDS

CREE RSW ROADWAY LIGHTING
5KL FIXTURE

OH1572.6
UG4472.6

PHOTOMETRIC DIAGRAMS

FIXTURE DESIGN WITHOUT BACKLIGHT SHIELD

LUMENS: 5000
WATTS: 45
MOUNTING HEIGHT: 26'
ARM LENGTH: 6'
ARRANGEMENT: SINGLE
.IES FILE NAME:
RSWS-A-HT-3ME-5L-30K7-UL_CONFIGURED.IES

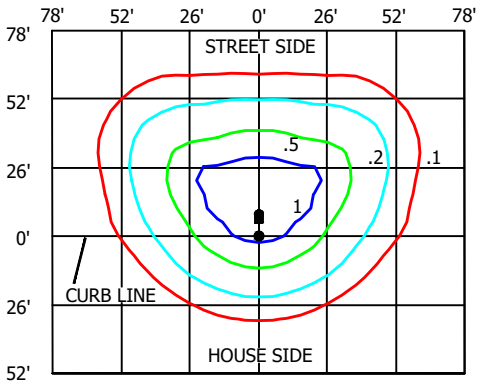

PLOT DRAWN IN FOOTCANDLES

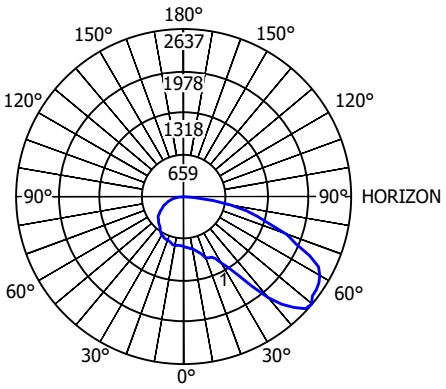

GRAPH RADIUS LINES ARE IN CANDELAS

FIXTURE DESIGN WITH BACKLIGHT SHIELD

LUMENS: 4630
WATTS: 45
MOUNTING HEIGHT: 26'
ARM LENGTH: 6'
ARRANGEMENT: SINGLE
.IES FILE NAME:
RSWS-A-HT-3ME-3L-30K7-UL W-RSW-BLSS_11675461.01.IES

SEE SHEET OH1572.18 FOR BACKLIGHT SHIELD DETAILS AND INSTALLATION

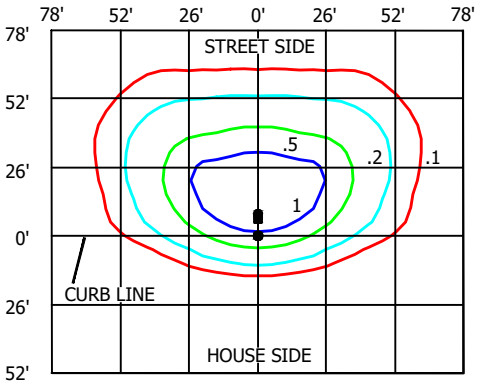

PLOT DRAWN IN FOOTCANDLES

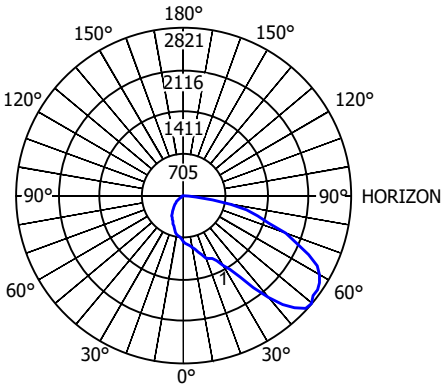

GRAPH RADIUS LINES ARE IN CANDELAS

TABLE OF CONTENTS

ATTENTION: LUMEN OUTPUT "Q" SETTING MUST BE INCLUDED FOR EACH FIXTURE WITHIN THE CONSTRUCTION NOTES FOR EACH LOCATION IN THE JOB PACKAGE.

TABLE 2

Q OPTION SETTING	ACTUAL SYSTEM WATTS	NOMINAL LABEL WATTAGE	LUMEN OUTPUT	LUMEN OUTPUT WITH BACKLIGHT SHIELD	HPSV EQUIVALENT WATTAGE
Q4 (FULL POWER)	45	50	5,000	4,630	100
Q3	41	40	4,654	4,310	70
Q2	36	40	4,105	3,801	50-70
Q1	30	30	3,617	3,350	50-70

© 1998 - 2021 San Diego Gas & Electric Company. All rights reserved. Removal of this copyright notice without permission is not permitted under law.

REV	CHANGE	DR	BY	DSN	APV	DATE	REV	CHANGE	DR	BY	DSN	APV	DATE
C							F						
B							E						
A	ORIGINAL ISSUE	AMP	RSL	JES	CZH	04/28/21	D						

Indicates Latest Revision | Completely Revised | X New Page | Information Removed

SDG&E ELECTRIC OVERHEAD CONSTRUCTION STANDARDS

CREE RSW ROADWAY LIGHTING
5KL FIXTURE

OH1572.7
UG4472.7

ATTENTION: SEE NOTES & REFERENCES PAGE OH1572.19. LUMEN OUTPUT SETTING MUST BE IDENTIFIED FOR THIS FIXTURE INSTALLATION USING TABLE 4 ON NEXT SHEET.

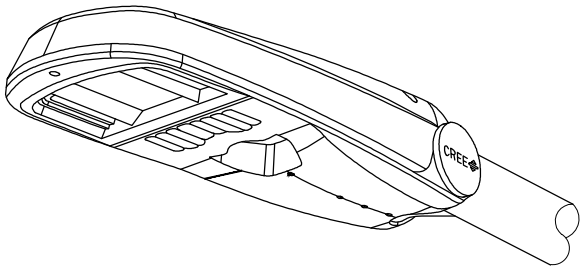

FIGURE 5
ISOMETRIC

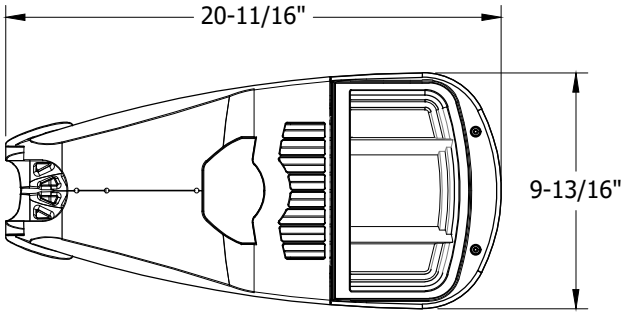

FIGURE 6
BOTTOM

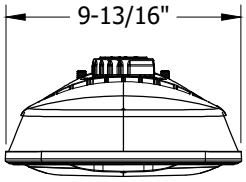

FIGURE 7
FRONT

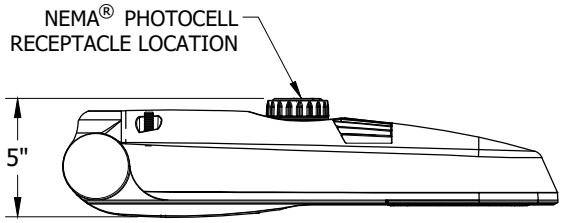

FIGURE 8
SIDE

TABLE 3

STOCK NUMBER	MANUFACTURER NAME/STYLE	LUMENS PACKAGE	COLOR TEMPERATURE	UNIT WEIGHT	PROJECTED AREA	DISTRIBUTION TYPE	DESIGN UNITS
S473140	CREE / RSW SMALL	5000L	3000K	8.45 LBS	SEE LUMINAIRE EPA TABLE	TYPE II MEDIUM	RWS2

LUMINAIRE ESTIMATED PROJECTED AREA (EPA)

HORIZONTAL TENON. CONFIG.	SINGLE	2 @ 90°	2 @ 180°
STANDARD LUMINAIRE (FT^2) (TENON EPA NOT INCLUDED)	0.61	0.89	1.22

© 1998 - 2021 San Diego Gas & Electric Company. All rights reserved. Removal of this copyright notice without permission is not permitted under law.

REV	CHANGE	DR	BY	DSN	APV	DATE	REV	CHANGE	DR	BY	DSN	APV	DATE
C							F						
B							E						
A	ORIGINAL ISSUE	AMP	RSL	JES	CZH	04/28/21	D						

Indicates Latest Revision | Completely Revised | X New Page | Information Removed

SDG&E ELECTRIC OVERHEAD CONSTRUCTION STANDARDS

CREE RSW ROADWAY LIGHTING
5KL FIXTURE

OH1572.8
UG4472.8

TABLE OF CONTENTS

PHOTOMETRIC DIAGRAMS

FIXTURE DESIGN WITHOUT BACKLIGHT SHIELD

LUMENS: 5000
WATTS: 45
MOUNTING HEIGHT: 26'
ARM LENGTH: 6'
ARRANGEMENT: SINGLE
.IES FILE NAME:
RSWS-A-HT-2ME-5L-30K7-UL_11644102.07.IES

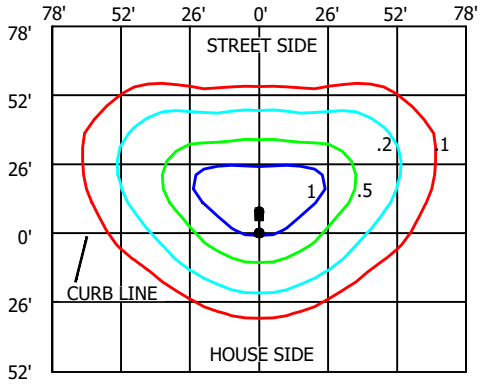

PLOT DRAWN IN FOOTCANDLES

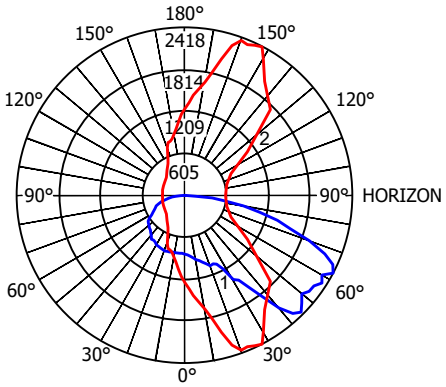

GRAPH RADIUS LINES ARE IN CANDELAS

FIXTURE DESIGN WITH BACKLIGHT SHIELD

LUMENS: 4630
WATTS: 45
MOUNTING HEIGHT: 26'
ARM LENGTH: 6'
ARRANGEMENT: SINGLE
.IES FILE NAME:
RSWS-A-HT-2ME-5L-30K7-UL W-RSW-BLSS_11675461.01.IES

SEE SHEET OH1572.18 FOR BACKLIGHT SHIELD DETAILS AND INSTALLATION

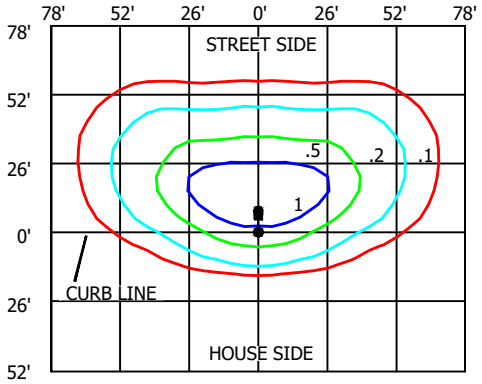

PLOT DRAWN IN FOOTCANDLES

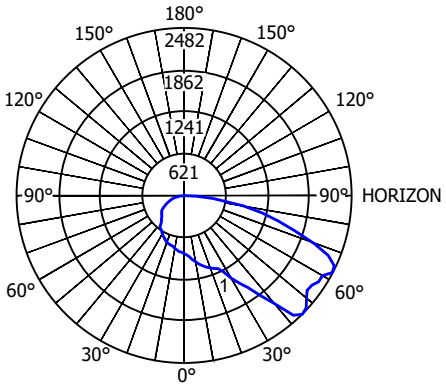

GRAPH RADIUS LINES ARE IN CANDELAS

ATTENTION: LUMEN OUTPUT "Q" SETTING MUST BE INCLUDED FOR EACH FIXTURE WITHIN THE CONSTRUCTION NOTES FOR EACH LOCATION IN THE JOB PACKAGE.

TABLE 4

Q OPTION SETTING	ACTUAL SYSTEM WATTS	NOMINAL LABEL WATTAGE	LUMEN OUTPUT	LUMEN OUTPUT WITH BACKLIGHT SHIELD	HPSV EQUIVALENT WATTAGE
Q4 (FULL POWER)	45	50	5,000	4,630	100
Q3	41	40	4,654	4,310	70
Q2	36	40	4,105	3,801	50-70
Q1	30	30	3,617	3,350	50-70

© 1998 - 2021 San Diego Gas & Electric Company. All rights reserved. Removal of this copyright notice without permission is not permitted under law.

REV	CHANGE	DR	BY	DSN	APV	DATE	REV	CHANGE	DR	BY	DSN	APV	DATE
C							F						
B							E						
A	ORIGINAL ISSUE	AMP	RSL	JES	CZH	04/28/21	D						

Indicates Latest Revision | Completely Revised | X New Page | Information Removed

TABLE OF CONTENTS

ATTENTION: SEE NOTES & REFERENCES PAGE OH1572.19. LUMEN OUTPUT SETTING MUST BE IDENTIFIED FOR THIS FIXTURE INSTALLATION USING TABLE 6 ON NEXT SHEET.

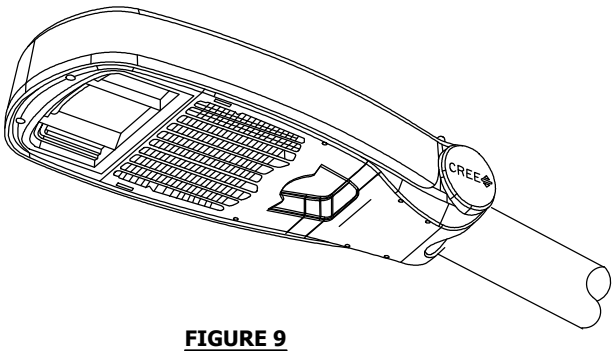

FIGURE 9
ISOMETRIC

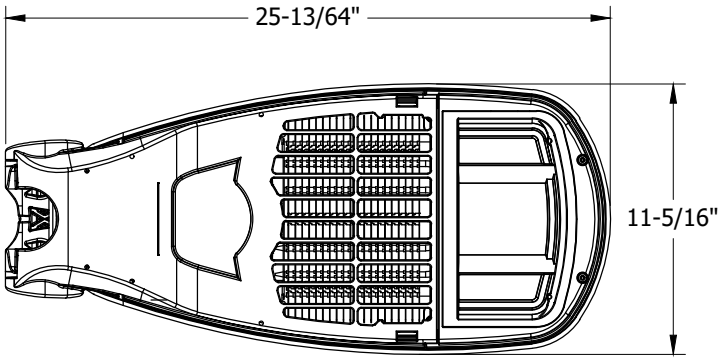

FIGURE 10
BOTTOM

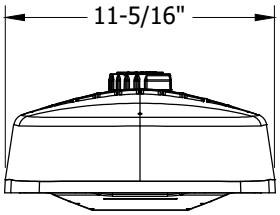

FIGURE 11
FRONT

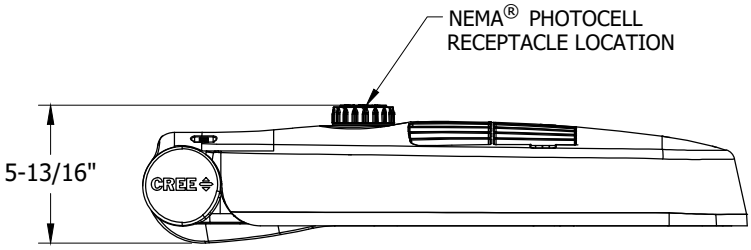

FIGURE 12
SIDE

TABLE OF CONTENTS

TABLE 5

STOCK NUMBER	MANUFACTURER NAME/STYLE	LUMENS PACKAGE	COLOR TEMPERATURE	UNIT WEIGHT	PROJECTED AREA	DISTRIBUTION TYPE	DESIGN UNITS
S473142	CREE / RSW MEDIUM	9000L	3000K	15.6 LBS	SEE LUMINAIRE EPA TABLE	TYPE III MEDIUM	RWM3

LUMINAIRE ESTIMATED PROJECTED AREA (EPA)

HORIZONTAL TENON. CONFIG.	SINGLE	2 @ 90°	2 @ 180°
STANDARD LUMINAIRE (FT^2) (TENON EPA NOT INCLUDED)	0.86	1.24	1.71

© 1998 - 2021 San Diego Gas & Electric Company. All rights reserved. Removal of this copyright notice without permission is not permitted under law.

REV	CHANGE	DR	BY	DSN	APV	DATE	REV	CHANGE	DR	BY	DSN	APV	DATE
C							F						
B							E						
A	ORIGINAL ISSUE	AMP	RSL	JES	CZH	04/28/21	D						

PHOTOMETRIC DIAGRAMS

FIXTURE DESIGN WITHOUT BACKLIGHT SHIELD

LUMENS: 9325
WATTS: 83
HT: 30'
ARM LENGTH: 6'
ARRANGEMENT: SINGLE
.IES FILE NAME:
RSWM-A-HT-3ME-9L-30K7-UL-GY-N_12311460.02A.IES

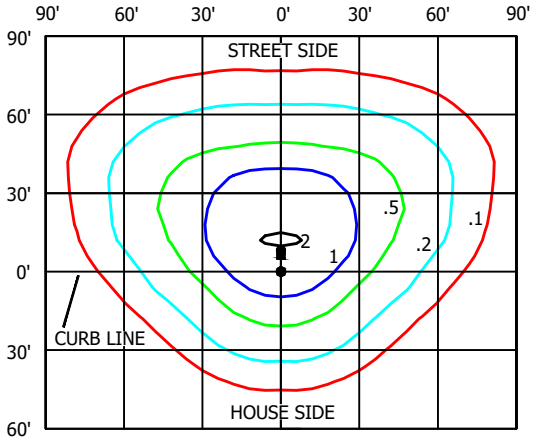

PLOT DRAWN IN FOOTCANDLES

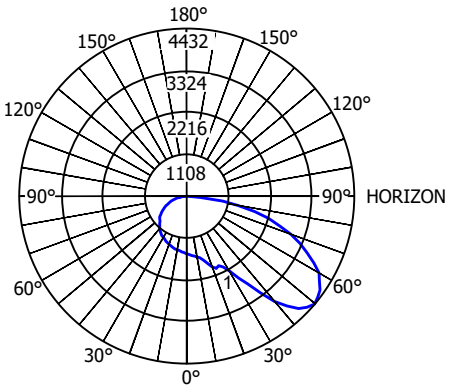

GRAPH RADIUS LINES ARE IN CANDELAS

FIXTURE DESIGN WITH BACKLIGHT SHIELD

LUMENS: 8550
WATTS: 83
MOUNTING HEIGHT: 30'
ARM LENGTH: 6'
ARRANGEMENT: SINGLE
.IES FILE NAME:
RSWM-A-HT-3ME-9L-30K7-UL W_RSW-BLSM_11705478.03.IES

SEE SHEET OH1572.18 FOR BACKLIGHT SHIELD DETAILS AND INSTALLATION

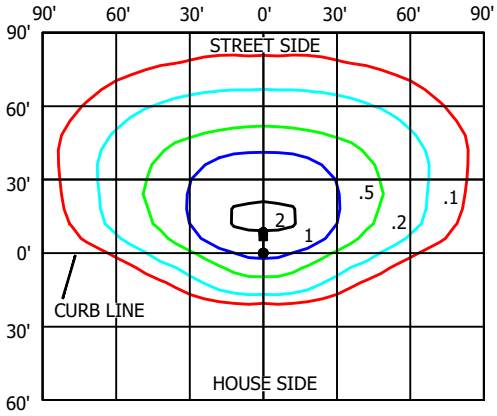

PLOT DRAWN IN FOOTCANDLES

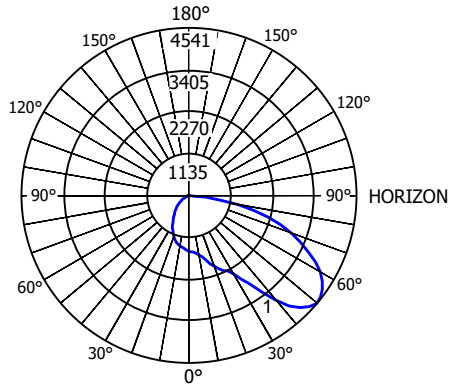

GRAPH RADIUS LINES ARE IN CANDELAS

ATTENTION: LUMEN OUTPUT "Q" SETTING MUST BE INCLUDED FOR EACH FIXTURE WITHIN THE CONSTRUCTION NOTES FOR EACH LOCATION IN THE JOB PACKAGE.

TABLE 6

Q OPTION SETTING	ACTUAL SYSTEM WATTS	NOMINAL LABEL WATTAGE	LUMEN OUTPUT	HPSV EQUIVALENT WATTAGE
Q8 (FULL POWER)	83	80	9,325	150
Q7	81	80	9,100	150
Q6	75	80	8,975	150
Q5	69	70	8,325	150
Q4	65	70	7,750	100-150
Q3	61	60	7,300	100
Q2	60	60	7,000	100
Q1	50	50	6,500	100

TABLE OF CONTENTS

© 1998 - 2021 San Diego Gas & Electric Company. All rights reserved. Removal of this copyright notice without permission is not permitted under law.

REV	CHANGE	DR	BY	DSN	APV	DATE	REV	CHANGE	DR	BY	DSN	APV	DATE
C							F						
B							E						
A	ORIGINAL ISSUE	AMP	RSL	JES	CZH	04/28/21	D						

Indicates Latest Revision | Completely Revised | X New Page | Information Removed

SDG&E ELECTRIC OVERHEAD CONSTRUCTION STANDARDS

CREE RSW ROADWAY LIGHTING
9KL FIXTURE

OH1572.11
UG4472.11

ATTENTION: SEE NOTES & REFERENCES PAGE OH1572.19. LUMEN OUTPUT SETTING MUST BE IDENTIFIED FOR THIS FIXTURE INSTALLATION USING TABLE 8 ON NEXT SHEET.

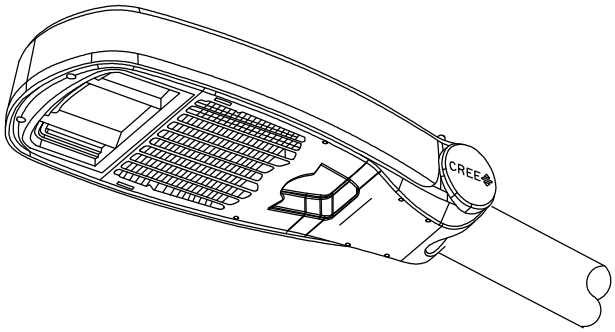

FIGURE 13
ISOMETRIC

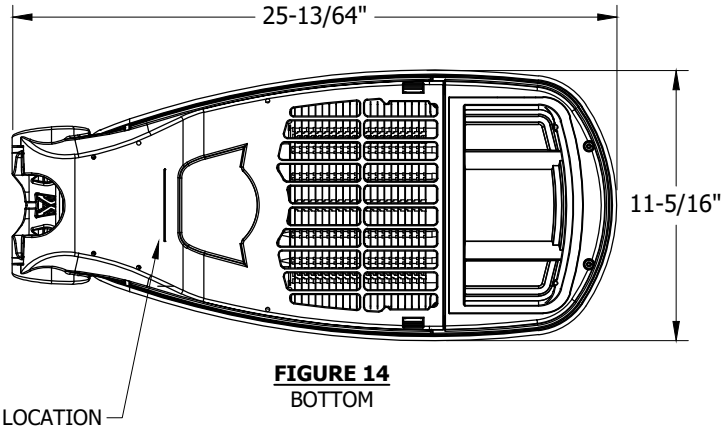

FIGURE 14
BOTTOM

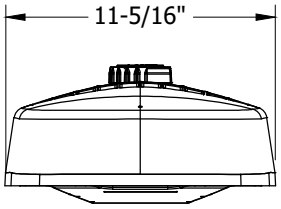

FIGURE 15
FRONT

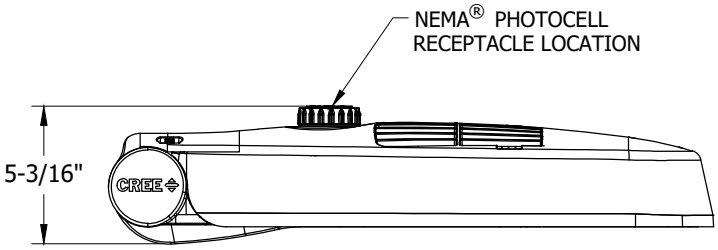

FIGURE 16
SIDE

TABLE 7

STOCK NUMBER	MANUFACTURER NAME/STYLE	LUMENS PACKAGE	COLOR TEMPERATURE	UNIT WEIGHT	PROJECTED AREA	DISTRIBUTION TYPE	DESIGN UNITS
S473150	CREE / RSW MEDIUM	9000L	3000K	15.6 LBS	SEE LUMINAIRE EPA TABLE	TYPE II MEDIUM	RWM2

LUMINAIRE ESTIMATED PROJECTED AREA (EPA)

HORIZONTAL TENON. CONFIG.	SINGLE	2 @ 90°	2 @ 180°
STANDARD LUMINAIRE (FT^2) (TENON EPA NOT INCLUDED)	0.86	1.24	1.71

© 1998 - 2021 San Diego Gas & Electric Company. All rights reserved. Removal of this copyright notice without permission is not permitted under law.

REV	CHANGE	DR	BY	DSN	APV	DATE	REV	CHANGE	DR	BY	DSN	APV	DATE
C							F						
B							E						
A	ORIGINAL ISSUE	AMP	RSL	JES	CZH	04/28/21	D						

PHOTOMETRIC DIAGRAMS

FIXTURE DESIGN WITHOUT BACKLIGHT SHIELD

LUMENS: 9325
WATTS: 83
HT: 30'
ARM LENGTH: 6'
ARRANGEMENT: SINGLE
.IES FILE NAME:
RSWM-A-HT-2ME-9L-30K7-UL-GY-N_12311460.05A.IES

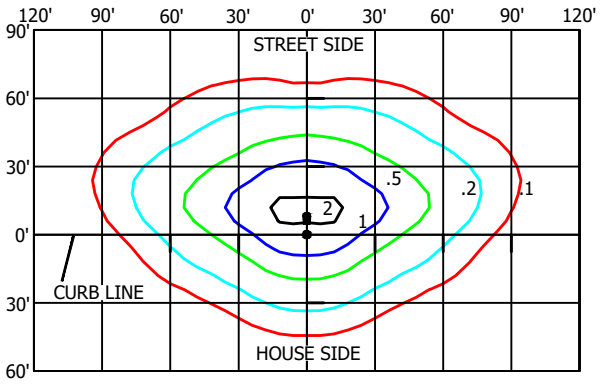

PLOT DRAWN IN FOOTCANDLES

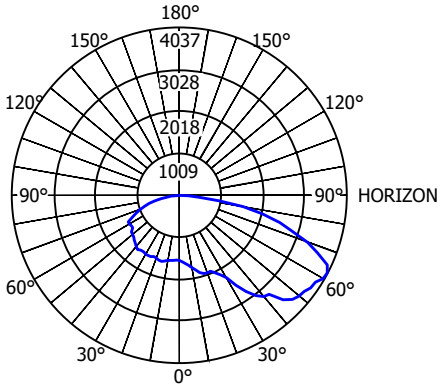

GRAPH RADIUS LINES ARE IN CANDELAS

FIXTURE DESIGN WITH BACKLIGHT SHIELD

LUMENS: 8550
WATTS: 83
MOUNTING HEIGHT: 30'
ARM LENGTH: 6'
ARRANGEMENT: SINGLE
.IES FILE NAME:
RSWM-A-HT-2ME-9L-30K7-UL W-RSW-BLSM_11705478.01.IES

SEE SHEET OH1572.18 FOR BACKLIGHT SHIELD DETAILS AND INSTALLATION

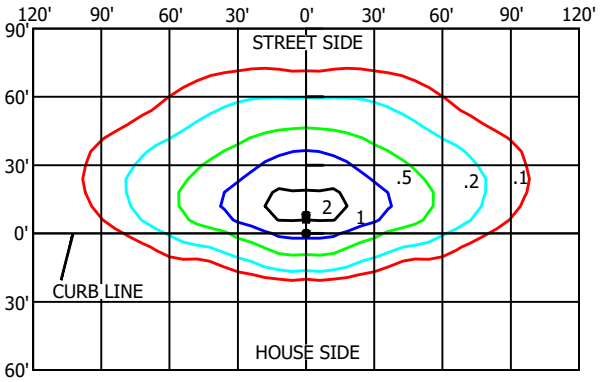

PLOT DRAWN IN FOOTCANDLES

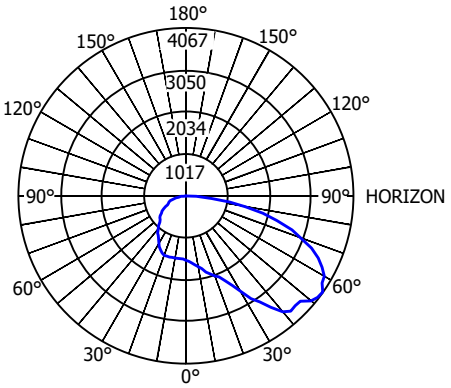

GRAPH RADIUS LINES ARE IN CANDELAS

TABLE OF CONTENTS

ATTENTION: LUMEN OUTPUT "Q" SETTING MUST BE INCLUDED FOR EACH FIXTURE WITHIN THE CONSTRUCTION NOTES FOR EACH LOCATION IN THE JOB PACKAGE.

TABLE 8

Q OPTION SETTING	ACTUAL SYSTEM WATTS	NOMINAL LABEL WATTAGE	LUMEN OUTPUT	LUMEN OUTPUT WITH BACKLIGHT SHIELD	HPSV EQUIVALENT WATTAGE
Q8 (FULL POWER)	83	80	9,325	8,550	150
Q7	81	80	9,100	8,350	150
Q6	75	80	8,975	8,250	150
Q5	69	70	8,325	7,650	150
Q4	65	70	7,750	7,125	100-150
Q3	61	60	7,300	6,700	100
Q2	60	60	7,000	6,425	100
Q1	50	50	6,500	5,975	100

© 1998 - 2021 San Diego Gas & Electric Company. All rights reserved. Removal of this copyright notice without permission is not permitted under law.

REV	CHANGE	DR	BY	DSN	APV	DATE	REV	CHANGE	DR	BY	DSN	APV	DATE
C							F						
B							E						
A	ORIGINAL ISSUE	AMP	RSL	JES	CZH	04/28/21	D						

Indicates Latest Revision | Completely Revised | X New Page | Information Removed

SDG&E ELECTRIC OVERHEAD CONSTRUCTION STANDARDS

CREE RSW ROADWAY LIGHTING
9KL FIXTURE

OH1572.13
UG4472.13

ATTENTION: SEE NOTES & REFERENCES PAGE OH1572.19. LUMEN OUTPUT SETTING MUST BE IDENTIFIED FOR THIS FIXTURE INSTALLATION USING TABLE 10 ON NEXT SHEET.

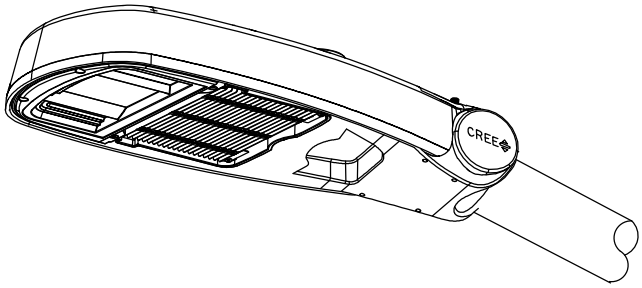

FIGURE 17
ISOMETRIC

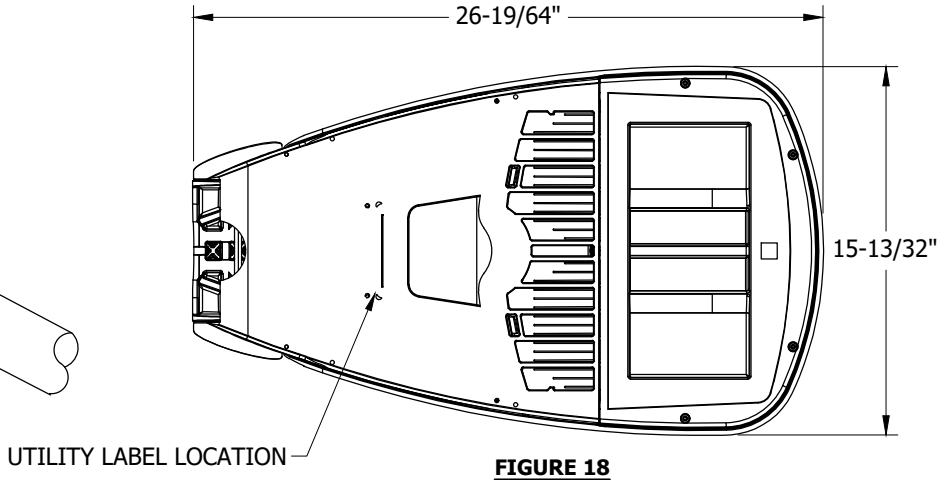

FIGURE 18
SIDE

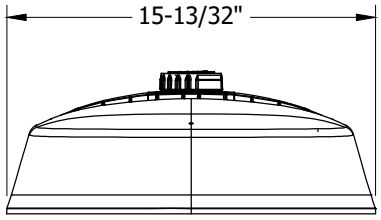

FIGURE 19
FRONT

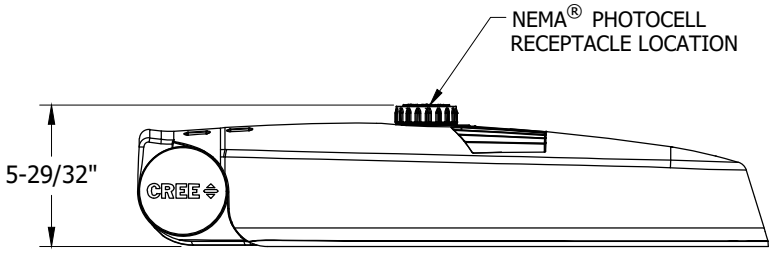

FIGURE 20
BOTTOM

TABLE OF CONTENTS

TABLE 9

STOCK NUMBER	MANUFACTURER NAME/STYLE	LUMENS PACKAGE	COLOR TEMPERATURE	UNIT WEIGHT	PROJECTED AREA	DISTRIBUTION TYPE	DESIGN UNITS
S473144	CREE / RSW LARGE	14000L	3000K	20.2 LBS	SEE LUMINAIRE EPA TABLE	TYPE III MEDIUM	RWL3

LUMINAIRE ESTIMATED PROJECTED AREA (EPA)

HORIZONTAL TENON. CONFIG.	SINGLE	2 @ 90°	2 @ 180°
STANDARD LUMINAIRE (FT^2) (TENON EPA NOT INCLUDED)	1.00	1.55	2.00

© 1998 - 2021 San Diego Gas & Electric Company. All rights reserved. Removal of this copyright notice without permission is not permitted under law.

REV	CHANGE	DR	BY	DSN	APV	DATE	REV	CHANGE	DR	BY	DSN	APV	DATE
C							F						
B							E						
A	ORIGINAL ISSUE	AMP	RSL	JES	CZH	04/28/21	D						

Indicates Latest Revision | Completely Revised | X New Page | Information Removed

PHOTOMETRIC DIAGRAMS

FIXTURE DESIGN WITHOUT BACKLIGHT SHIELD

LUMENS: 14575
WATTS: 136
HT: 30'
ARM LENGTH: 6'
ARRANGEMENT: SINGLE
.IES FILE NAME:
RSWL-A-H-T-3ME-14L-30K7-UL-GY-N_12081584.04A.IES

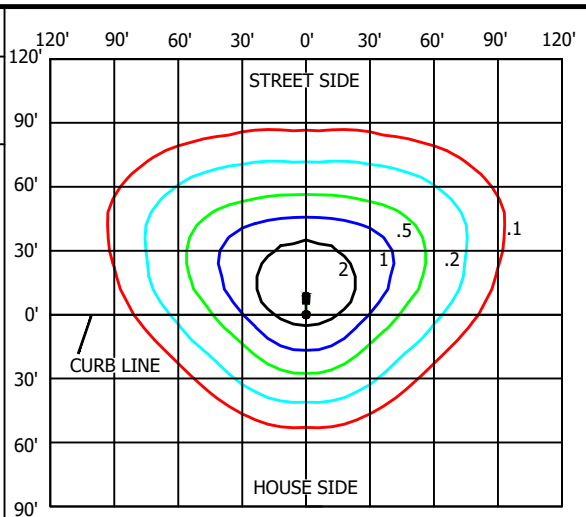

PLOT DRAWN IN FOOTCANDLES

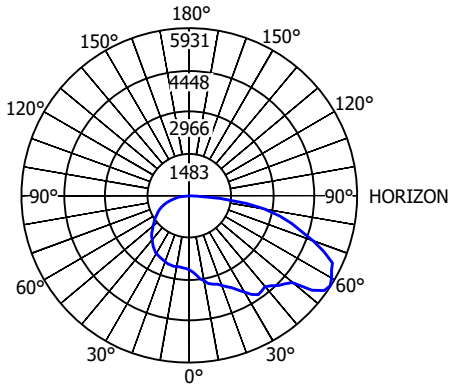

GRAPH RADIUS LINES ARE IN CANDELAS

FIXTURE DESIGN WITH BACKLIGHT SHIELD

LUMENS: 12875
WATTS: 136
MOUNTING HEIGHT: 30'
ARM LENGTH: 6'
ARRANGEMENT: SINGLE
.IES FILE NAME:
RSWL-A-HT-3ME-14L-30K7-UL-GY-N W RSW-BLSL_12081584.07A.IES

SEE SHEET OH1572.18 FOR BACKLIGHT SHIELD DETAILS AND INSTALLATION

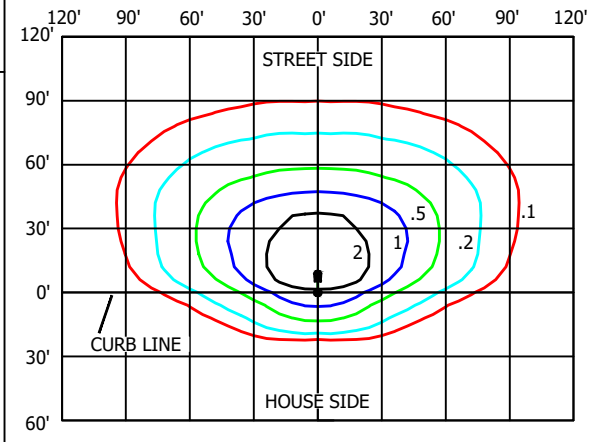

PLOT DRAWN IN FOOTCANDLES

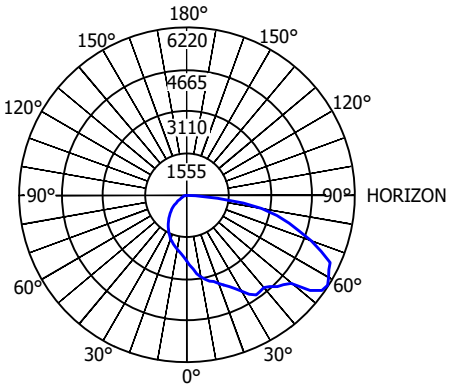

GRAPH RADIUS LINES ARE IN CANDELAS

TABLE OF CONTENTS

ATTENTION: LUMEN OUTPUT "Q" SETTING MUST BE INCLUDED FOR EACH FIXTURE WITHIN THE CONSTRUCTION NOTES FOR EACH LOCATION IN THE JOB PACKAGE.

TABLE 10

Q OPTION SETTING	ACTUAL SYSTEM WATTS	NOMINAL LABEL WATTAGE	LUMEN OUTPUT	LUMEN OUTPUT WITH BACKLIGHT SHIELD	HPSV EQUIVALENT WATTAGE
Q9 (FULL POWER)	136	140	14,575	12,875	250
Q8	133	130	14,425	12,725	250
Q7	126	130	13,850	12,225	250
Q6	120	120	13,400	11,825	150-250
Q5	110	110	12,375	10,925	150-250
Q4	102	100	11,575	10,225	150
Q3	90	90	10,500	9,275	150
Q2	81	80	9,250	8,175	100-150
Q1	70	70	8,350	7,375	100-150

© 1998 - 2021 San Diego Gas & Electric Company. All rights reserved. Removal of this copyright notice without permission is not permitted under law.

REV	CHANGE	DR	BY	DSN	APV	DATE	REV	CHANGE	DR	BY	DSN	APV	DATE
C							F						
B							E						
A	ORIGINAL ISSUE	AMP	RSL	JES	CZH	04/28/21	D						

Indicates Latest Revision | Completely Revised | X New Page | Information Removed

SDG&E ELECTRIC OVERHEAD CONSTRUCTION STANDARDS

CREE RSW ROADWAY LIGHTING
14KL FIXTURE

OH1572.15
UG4472.15

ATTENTION: SEE NOTES & REFERENCES PAGE OH1572.19. LUMEN OUTPUT SETTING MUST BE IDENTIFIED FOR THIS FIXTURE INSTALLATION USING TABLE 12 ON NEXT SHEET.

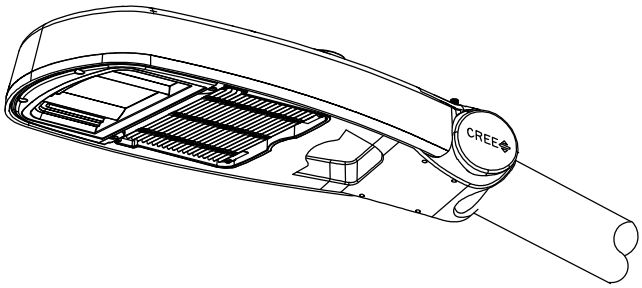

FIGURE 21
ISOMETRIC

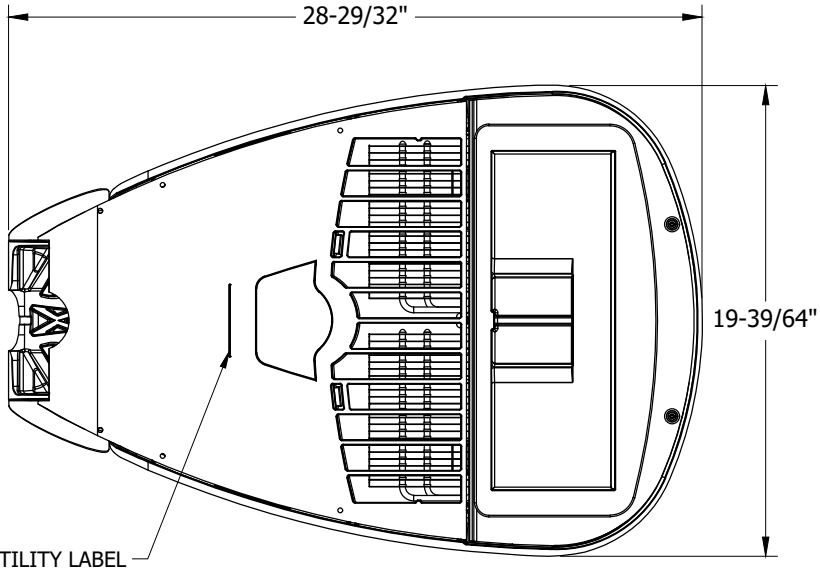

FIGURE 22
BOTTOM

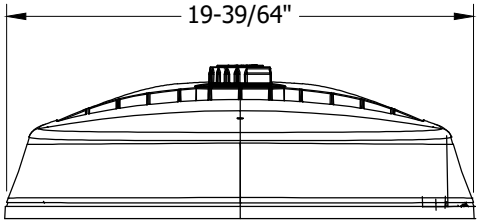

FIGURE 23
FRONT

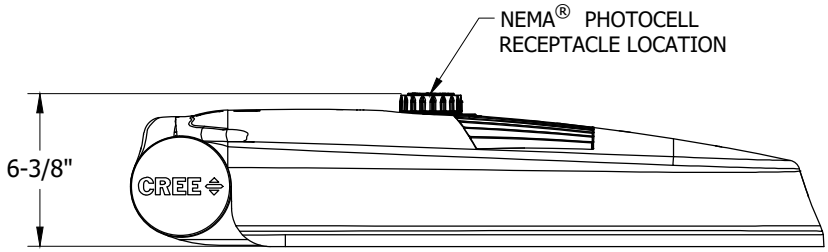

FIGURE 24
SIDE

TABLE OF CONTENTS

TABLE 11

STOCK NUMBER	MANUFACTURER NAME/STYLE	LUMENS PACKAGE	COLOR TEMPERATURE	UNIT WEIGHT	PROJECTED AREA	DISTRIBUTION TYPE	DESIGN UNITS
S473146	CREE / RSW EXTRA LARGE	24000L	3000K	28.8 LBS	SEE LUMINAIRE EPA TABLE	TYPE III MEDIUM	RWX3

LUMINAIRE ESTIMATED PROJECTED AREA (EPA)

HORIZONTAL TENON. CONFIG.	SINGLE	2 @ 90°	2 @ 180°
STANDARD LUMINAIRE (FT^2) (TENON EPA NOT INCLUDED)	1.17	1.93	2.33

© 1998 - 2021 San Diego Gas & Electric Company. All rights reserved. Removal of this copyright notice without permission is not permitted under law.

REV	CHANGE	DR	BY	DSN	APV	DATE	REV	CHANGE	DR	BY	DSN	APV	DATE
C							F						
B							E						
A	ORIGINAL ISSUE	AMP	RSL	JES	CZH	04/28/21	D						

Indicates Latest Revision | Completely Revised | X New Page | Information Removed

SDG&E ELECTRIC OVERHEAD CONSTRUCTION STANDARDS

CREE RSW ROADWAY LIGHTING
24KL FIXTURE

OH1572.16
UG4472.16

PHOTOMETRIC DIAGRAMS

FIXTURE DESIGN WITHOUT BACKLIGHT SHIELD

LUMENS: 23800
WATTS: 223
HT: 35'
ARM LENGTH: 6'
ARRANGEMENT: SINGLE
.IES FILE NAME:
RSWX-A-HT-3ME-24L-30K7-UL-GY-N_11983868.04.IES

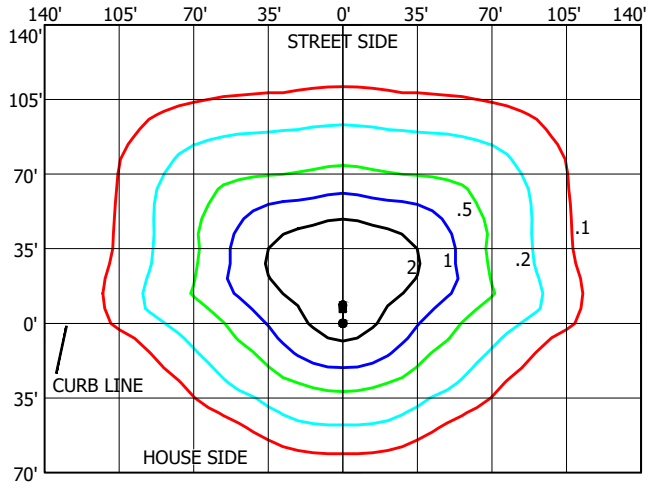

PLOT DRAWN IN FOOTCANDLES

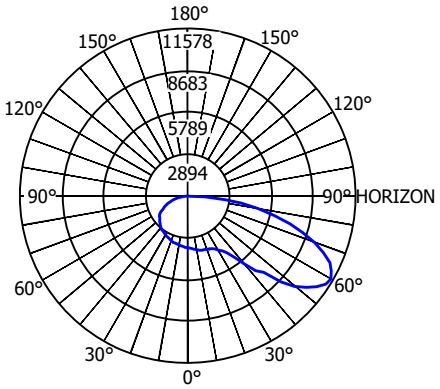

GRAPH RADIUS LINES ARE IN CANDELAS

THIS SPACE INTENTIONALLY LEFT BLANK - NO BACKLIGHT SHIELD AVAILABLE FOR THIS FIXTURE

TABLE OF CONTENTS

ATTENTION: LUMEN OUTPUT "Q" SETTING MUST BE INCLUDED FOR EACH FIXTURE WITHIN THE CONSTRUCTION NOTES FOR EACH LOCATION IN THE JOB PACKAGE.

TABLE 12

Q OPTION SETTING	ACTUAL SYSTEM WATTS	NOMINAL LABEL WATTAGE	LUMEN OUTPUT	LUMEN OUTPUT WITH BACKLIGHT SHIELD	HPSV EQUIVALENT WATTAGE
Q9 (FULL POWER)	223	220	23,800	22,800	400
Q8	212	210	22,800	21,800	400
Q7	200	200	21,700	20,800	400
Q6	191	190	20,900	20,000	250-400
Q5	172	170	19,100	18,300	250-400
Q4	156	160	17,800	17,100	250-400
Q3	138	140	15,900	15,300	250
Q2	121	120	14,350	13,725	250
Q1	107	110	12,875	12,325	150-250

© 1998 - 2021 San Diego Gas & Electric Company. All rights reserved. Removal of this copyright notice without permission is not permitted under law.

REV	CHANGE	DR	BY	DSN	APV	DATE	REV	CHANGE	DR	BY	DSN	APV	DATE
C							F						
B							E						
A	ORIGINAL ISSUE	AMP	RSL	JES	CZH	04/28/21	D						

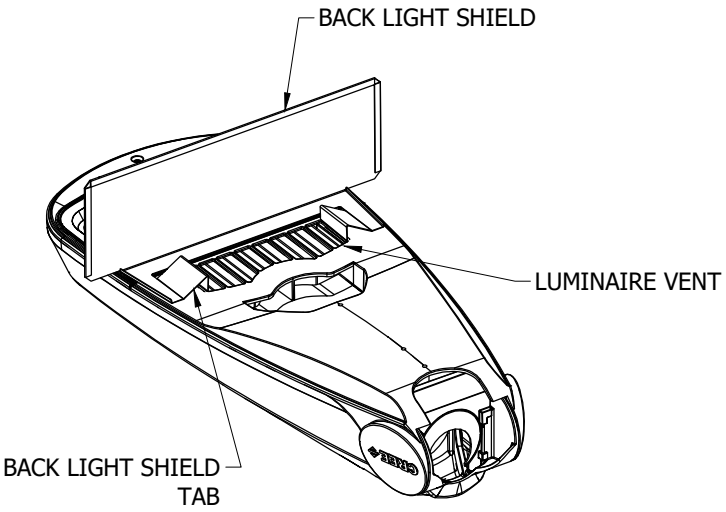

FIGURE 25
ISOMETRIC

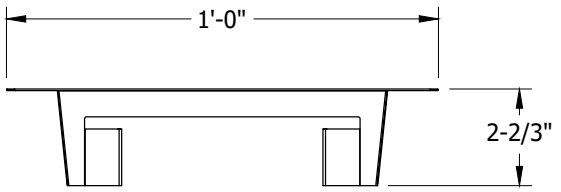

FIGURE 26
TOP VIEW

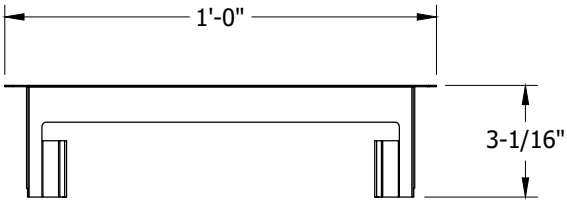

FIGURE 27
TOP VIEW

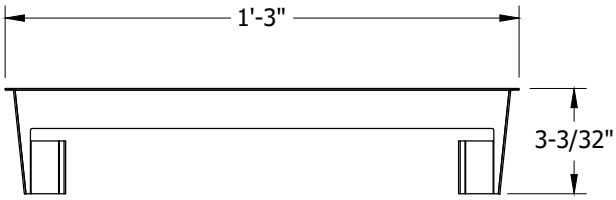

FIGURE 28
TOP VIEW

TABLE 13

RSW LED BACK LIGHT SHIELD				
STOCK NUMBERS	**DESCRIPTION**	**FIGURE**	**FIXTURE TYPE COMPATIBILITY BY STOCK NUMBER**	**DESIGN UNITS**
S643018	RSW, BACK LIGHT SHIELD, SMALL	26	S473138, S472140	RWBSS
S643020	RSW, BACK LIGHT SHIELD, MEDIUM	27	S473142, S473150	RWBSM
S643022	RSW, BACK LIGHT SHIELD, LARGE	28	S473144	RWBSL

© 1998 - 2021 San Diego Gas & Electric Company. All rights reserved. Removal of this copyright notice without permission is not permitted under law.

REV	CHANGE	DR	BY	DSN	APV	DATE	REV	CHANGE	DR	BY	DSN	APV	DATE
C							F						
B							E						
A	ORIGINAL ISSUE	AMP	RSL	JES	CZH	04/28/21	D						

Indicates Latest Revision | Completely Revised [X] | New Page | Information Removed

TABLE OF CONTENTS

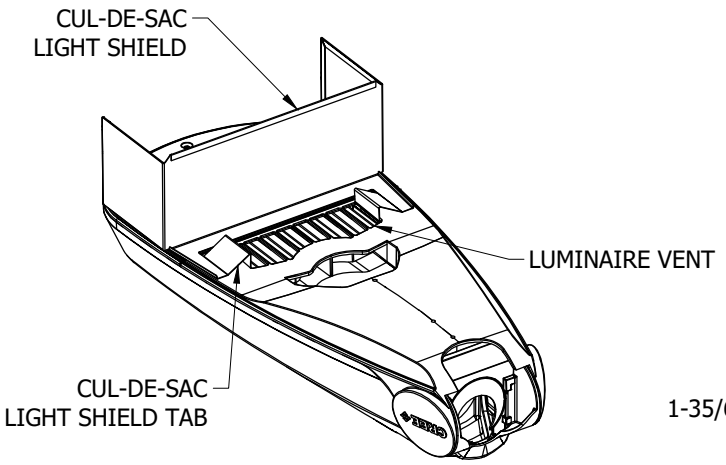

FIGURE 29
ISOMETRIC

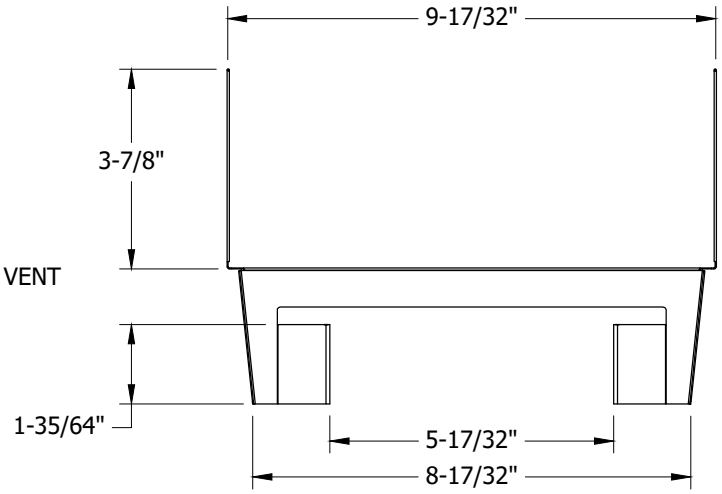

FIGURE 30
TOP VIEW

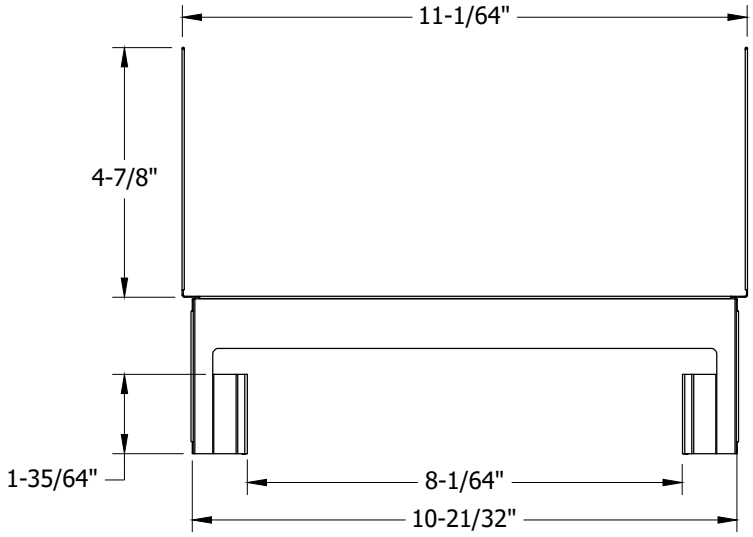

FIGURE 31
TOP VIEW

TABLE 14

RSW CUL-DE-SAC LIGHT SHIELD				
STOCK NUMBERS	**DESCRIPTION**	**FIGURE**	**FIXTURE TYPE COMPATIBILITY BY STOCK NUMBER**	**DESIGN UNITS**
S643024	RSW, CUL-DE-SAC LIGHT SHIELD, SMALL	30	S473138, S472140	RWCSS
S643026	RSW, CUL-DE-SAC LIGHT SHIELD, MEDIUM	31	S473142, S473150	RWCSM

© 1998 - 2021 San Diego Gas & Electric Company. All rights reserved. Removal of this copyright notice without permission is not permitted under law.

REV	CHANGE	DR	BY	DSN	APV	DATE	REV	CHANGE	DR	BY	DSN	APV	DATE
C							F						
B							E						
A	ORIGINAL ISSUE	AMP	RSL	JES	CZH	04/28/21	D						

Indicates Latest Revision | Completely Revised | X New Page | Information Removed

INTSALLATION

A. CUL-DE-SAC AND BACK LIGHT SHIELDS

1. INSERT ONE OF THE TABS ON THE LIGHT SHIELD INTO THE FIRST SLOT IN THE LUMINAIRE VENT BY PRESSING THE TAB DOWN INTO THE SLOT. SEE FIGURES 25 AND 29 FOR BACK LIGHT OR CUL-DE-SAC LIGHT SHIELD VARIATIONS RESPECTIVELY.
2. INSERT THE OTHER LIGHT SHIELD TAB INTO THE LAST SLOT ON THE LUMINAIRE VENT BY PRESSING THE TAB DOWN INTO THE SLOT. SEE FIGURES 25 AND 29 FOR BACK LIGHT OR CUL-DE-SAC LIGHT SHIELD VARIATIONS RESPECTIVELY.

BILL OF MATERIALS: NONE

NOTES:

I. REFER TO SPECIFIC PRODUCT INSTALLATION MANUALS PROVIDED WITH ITEM FOR COMPLETE SAFETY AND INSTALLATION INSTRUCTIONS.

REFERENCES:

a. SEE OVERHEAD CONSTRUCTION STANDARD 1570 FOR OVERHEAD LIGHTING INSTALLATION.

b. SEE UNDERGROUND CONSTRUCTION STANDARD 4431 FOR UNDERGROUND LIGHTING INSTALLATION.

c. SEE OVERHEAD CONSTRUCTION STANDARD 1512 FOR PHOTOELECTRIC CONTROLS AVAILABLE.

TABLE OF CONTENTS

© 1998 - 2021 San Diego Gas & Electric Company. All rights reserved. Removal of this copyright notice without permission is not permitted under law.

REV	CHANGE	DR	BY	DSN	APV	DATE	REV	CHANGE	DR	BY	DSN	APV	DATE
C							F						
B							E						
A	ORIGINAL ISSUE	AMP	RSL	JES	CZH	04/28/21	D						

	Indicates Latest Revision		Completely Revised	X	New Page	Information Removed

SHEET 20 OF 20

SDG&E ELECTRIC OVERHEAD CONSTRUCTION STANDARDS

CREE RSW ROADWAY LIGHTING
FIXTURE - LIGHT SHIELDS

OH1572.20
UG4472.20

SCOPE: THIS STANDARD SHOWS ACUITY BRANDS ATB TYPE LED LIGHT FIXTURES USED TO PROVIDE ROADWAY LIGHTING

TABLE 1

ACUITY LED FIXTURE INDEX							
DESCRIPTION	**DESIGN UNIT**	**MOUNTING HEIGHT** (II) (III) (A)	**MAXIMUM SYSTEM WATTAGE**	**STANDARD PAGE**	**STOCK NUMBER**	**FIGURE DETAIL**	**HPSV/LPSV EQUIVALENT STOCK NUMBERS** (a) (b)
7KL ATBX TYPE II	ATBX	26'	60	OH1573.5	S473434	1	S473800, S473400, S473802, S473402
11KL ATBS TYPE III	ATBS	30'	82	OH1573.7	S473438	2	S473404, S473804, S473406, S473806
20KL ATBM TYPE III	ATBM	35'	190	OH1573.9	S473440	3	S473410, S473408

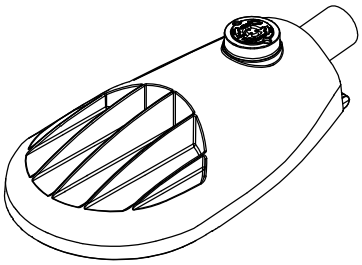

FIGURE 1
ATBX

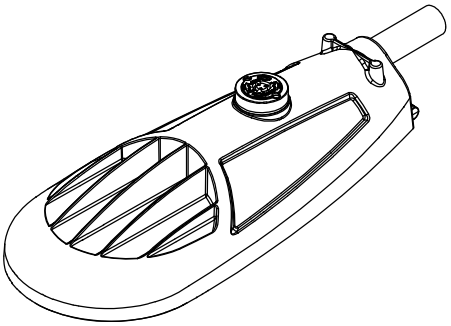

FIGURE 2
ATBS

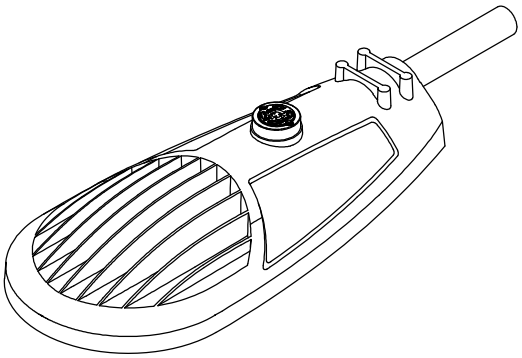

FIGURE 3
ATBM

TABLE OF CONTENTS

© 1998 - 2024 San Diego Gas & Electric Company. All rights reserved. Removal of this copyright notice without permission is not permitted under law.

REV	CHANGE	DR	BY	DSN	APV	DATE	REV	CHANGE	DR	BY	DSN	APV	DATE
C							F						
B	EDITORIAL CHANGES	AMP	JES	EJA	KRG	02/15/2024	E						
A	ORIGINAL ISSUE	AMP	ADW	JES	CZH	12/13/2021	D						

ATTENTION: INSTALLATION FOR ATB TYPE LED FIXTURES.

INSTALLATION:

(A) HPSV/LPSV CONVERSION TO LED: REMOVE AND REPLACE ENTIRE HPSV/LPSV STREET LIGHTING FIXTURE AND BALLAST AND REPLACE WITH EQUIVALENT LED FIXTURE SHOWN IN TABLE 1. FOR OVERHEAD FEED CONVERSIONS, MOUNT THE REPLACEMENT LED FIXTURE AT THE EXISTING FIXTURE HEIGHT OR HIGHER WHILE MAINTAINING REQUIRED CLEARANCES TO OTHER FACILITIES PER OH1509.

B. MECHANICAL INSTALLATION OF FIXTURE

1. DETERMINE THE SIZE OF THE MAST ARM**.** THIS LUMINAIRE IS DESIGNED TO ACCOMMODATE A MAST ARM FROM 1-1/4 INCH TO 2 INCH DIAMETER.

2. THE LUMINAIRE IS FACTORY SET TO MOUNT TO THE 1-1/4 INCH ARM. TO MOUNT TO A 2 INCH ARM, THE V-SHAPED BRACKET MUST BE FLIPPED. REMOVE THE FITTER BOLTS AND FLIP THE BRACKET.

3. THE REAR OPENING MUST BE ENLARGED FOR ATBS AND ATBM FIXTURE TYPES. KNOCKOUTS ARE CAST AROUND THE REAR OPENING FOR THIS PURPOSE. TO REMOVE THIS EXCESS MATERIAL, STRIKE WITH A HAMMER OR GRASP WITH PLIERS AND BREAK OFF.

4. LOOSEN (DO NOT REMOVE) THE FITTER BOLTS. LIFT THE LUMINAIRE INTO POSITION IN FRONT OF THE MAST ARM SUCH THAT THE MAST ARM ENTERS THROUGH THE OPENING AT THE REAR OF THE LUMINAIRE HOUSING. THE LUMINAIRE SHOULD BE MOUNTED WITH THE PLASTIC LENS FACING DOWN. THE LUMINAIRE TILT ANGLE MAY BE ADJUSTED BY THE ADJUSTMENT STEPS LOCATED IN THE REAR OF THE HOUSING. TIGHTEN THE FITTER BOLTS TO THE VALUES SPECIFIED IN MANUFACTURER INSTALLATION GUIDE. DO NOT OVER TIGHTEN BOLTS.

5. **PHOTOELECTRIC CONTROL:** PLUG THE PHOTOCONTROL INTO THE RECEPTACLE ENSURING GASKET IS FIRMLY SEATED. TWIST CLOCKWISE UNTIL IT LOCKS INTO POSITION. IF PHOTOCONTROL RECEPTACLE ROTATION IS REQUIRED, LOOSEN THE TWO PHILIPS HEAD RECEPTACLE SCREWS COMPLETELY. ROTATE 90°, 180° OR 270°, THEN RE-TIGHTEN SCREWS UNTIL SNUG, USING 20-25 IN-LBS OF TORQUE.

6. NOT CONNECTING, OR FLOATING THE GROUND WILL RESULT IN AN ENERGIZED MAST OR POLE.

TABLE OF CONTENTS

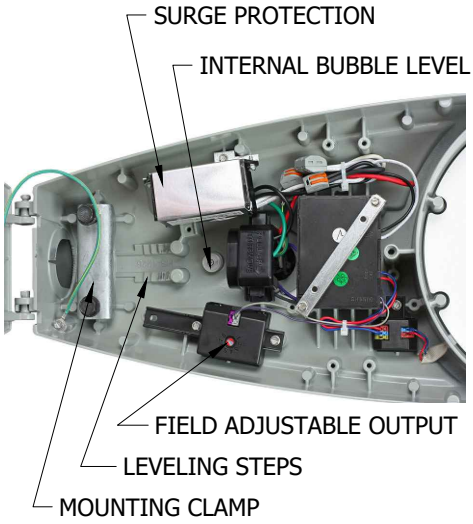

FIGURE 4
INTERNAL VIEW

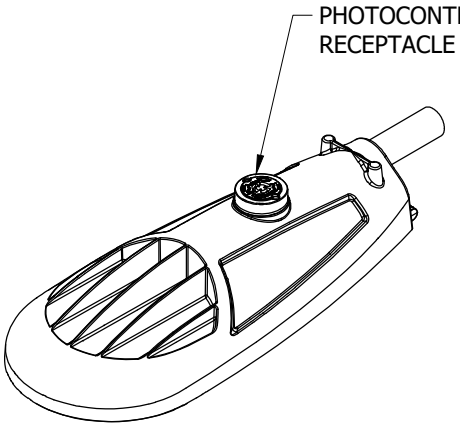

FIGURE 5
TOP VIEW



FIGURE 6
BOTTOM VIEW

© 1998 - 2024 San Diego Gas & Electric Company. All rights reserved. Removal of this copyright notice without permission is not permitted under law.

REV	CHANGE	DR	BY	DSN	APV	DATE	REV	CHANGE	DR	BY	DSN	APV	DATE
C							F						
B	EDITORIAL CHANGES	AMP	JES	EJA	KRG	02/15/2024	E						
A	ORIGINAL ISSUE	AMP	ADW	JES	CZH	12/13/2021	D						

C. ELECTRICAL CONNECTIONS OF FIXTURE

1. PULL UP THE TERMINAL BLOCK COVER.

2. FEED THE SUPPLY WIRES THROUGH THE MAST ARM, DRESS THEM SO THEY DO NOT INTERFERE WITH ANY COMPONENTS AND SO THEY WILL NOT BE PINCHED IN THE DOOR, AND CONNECT THEM TO THE PROPER TERMINALS ON THE TERMINAL BLOCK.

3. VERIFY THE SUPPLY VOLTAGE IS CORRECT AS NOTED ON THE NAMEPLATE LABEL.

4. ATTACH SERVICE LEADS TO TERMINAL BLOCK AS SHOWN ON THE WIRING SCHEMATIC. SEE DIAGRAM 1.

5. PUSH DOWN THE TERMINAL BLOCK COVER TO KEEP TERMINALS COVERED. TIGHTEN THE TERMINAL BLOCK SCREW TO THE VALUES SPECIFIED IN MANUFACTURER INSTALLATION GUIDE. DO NOT OVER TIGHTEN SCREW.

6. ALL LED FIXTURES MUST BE INSTALLED TO A 3-WIRE 120V SUPPLY WITH A GROUND CONNECTED TO A GROUND SOURCE AS SHOWN IN DIAGRAM 1 USING APPROVED GROUNDING METHODS FOR WOOD, CONCRETE, OR STEEL POLE APPLICATIONS. (f)

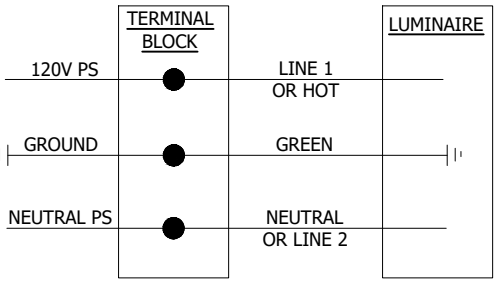

DIAGRAM 1
WIRING SCHEMATIC

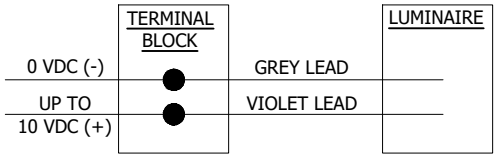

DIAGRAM 2
DIMMING CONTROL SCHEMATIC

D. MODIFYING FIELD ADJUSTABLE OUTPUT (FAO) SETTINGS OF FIXTURE

1. THE FIELD ADJUSTABLE OUTPUT MODULE IS LOCATED INSIDE THE FIXTURE. OPEN THE COVER BY REMOVING THE WINGNUT AND ALLOW COVER TO SWING OPEN.

2. ESTABLISH THE DESIRED POWER OR LUMEN SETTING BY TURNING THE SWITCH TO THE POSITION DEFINED BY THE POWER LEVEL INCLUDED WITH THE DESIGN PACKAGE. REFER TO THE MANUFACTURER SPECIFICATIONS AND THE FIELD ADJUSTABLE SETTINGS TABLES INCLUDED WITHIN THIS STANDARD FOR EACH FIXTURE. SEE FIGURE 7 FOR ADJUSTMENT SWITCH DETAILS .

3. CLOSE THE COVER ENSURING NO WIRES ARE PINCHED AND SCREW IN WINGNUT. APPLY A WATTAGE LABEL THAT INDICATES THE ADJUSTED FIXTURE POWER SETTING.

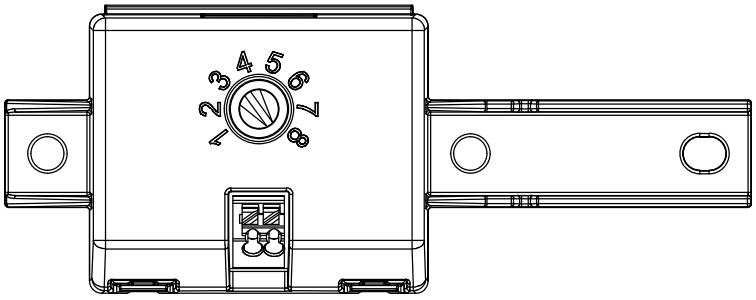

FIGURE 7
FAO SWITCH

© 1998 - 2024 San Diego Gas & Electric Company. All rights reserved. Removal of this copyright notice without permission is not permitted under law.

REV	CHANGE	DR	BY	DSN	APV	DATE	REV	CHANGE	DR	BY	DSN	APV	DATE
C							F						
B	EDITORIAL CHANGES	AMP	JES	EJA	KRG	02/15/2024	E						
A	ORIGINAL ISSUE	AMP	ADW	JES	CZH	12/13/2021	D						

X Indicates Latest Revision | Completely Revised | New Page | Information Removed

SDG&E ELECTRIC OVERHEAD AND UNDERGROUND CONSTRUCTION STANDARDS

ROADWAY LED LIGHTING FIXTURES INSTALLATION

OH1573.3
UG4473.3

TABLE OF CONTENTS

BILL OF MATERIALS: NONE.

NOTES:

I. THIS IS A REPRODUCTION OR ADAPTATION OF MANUFACTURER DATA. REFER TO SPECIFIC PRODUCT INSTALLATION MANUALS PROVIDED WITH STOCK MATERIALS FOR COMPLETE SAFETY AND INSTALLATION INSTRUCTIONS.

(II) MOUNTING HEIGHTS PROVIDED ON PAGE OH1573.1 ARE SPECIFIC TO NEW UNDERGROUND FEED INSTALLATIONS DUE TO STANDARD CONCRETE POLE SIZES AVAILABLE. NEW LED STREETLIGHT INSTALLATIONS OR HPSV-TO-LED UPGRADE INSTALLATIONS MAY BE MOUNTED WITHIN 2 FEET OF THESE REFERENCE MOUNTING HEIGHTS AS LONG AS THE REQUIRED CLEARANCES TO OTHER FACILITIES ARE MAINTAINED PER OH1509.

(III) FOR NEW SDG&E OWNED STREETLIGHT INSTALLATIONS (NOT EXISTING CONVERSIONS), A LIGHTING DESIGN ANALYSIS MAY BE REQUIRED TO DETERMINE THE REQUIRED MOUNTING HEIGHT IF THE REFERENCE MOUNTING HEIGHTS PROVIDED HERE ARE NOT FEASIBLE. CONTACT THE STREET LIGHTING GROUP IN THIS SCENARIO FOR GUIDANCE.

REFERENCE:

(a) OVERHEAD FIELD MAINTENANCE ONLY SECTION 1500 FOR HPSV AND LPSV FIXTURE DETAIL.

(b) SOME FIXTURES ARE NO LONGER AVAILABLE.

c. SEE OH1570 FOR OVERHEAD LIGHTING INSTALLATION.

d. SEE UG4431 FOR UNDERGROUND LIGHTING INSTALLATION.

e. SEE OH1512 FOR PHOTOELECTRIC CONTROLS AVAILABLE.

(f) SEE OH1004 AND OH1002 FOR GROUNDING INSTALLATION.

TABLE OF CONTENTS

© 1998 - 2024 San Diego Gas & Electric Company. All rights reserved. Removal of this copyright notice without permission is not permitted under law.

REV	CHANGE	DR	BY	DSN	APV	DATE	REV	CHANGE	DR	BY	DSN	APV	DATE
C							F						
B	EDITORIAL CHANGES	AMP	JES	EJA	KRG	02/15/2024	E						
A	ORIGINAL ISSUE	AMP	ADW	JES	CZH	12/13/2021	D						

X Indicates Latest Revision | Completely Revised | New Page | Information Removed

SDG&E ELECTRIC OVERHEAD AND UNDERGROUND CONSTRUCTION STANDARDS

ROADWAY LED LIGHTING FIXTURES INSTALLATION

OH1573.4
UG4473.4

SCOPE: THIS STANDARD SHOWS VARIOUS ACUITY LED ROADWAY LIGHTING FIXTURES.

ATTENTION: SEE NOTES & REFERENCES PAGE OH1573.12. LUMEN OUTPUT SETTINGS MUST BE IDENTIFIED FOR THIS FIXTURE INSTALLATION USING TABLE 2 ON THE NEXT SHEET.

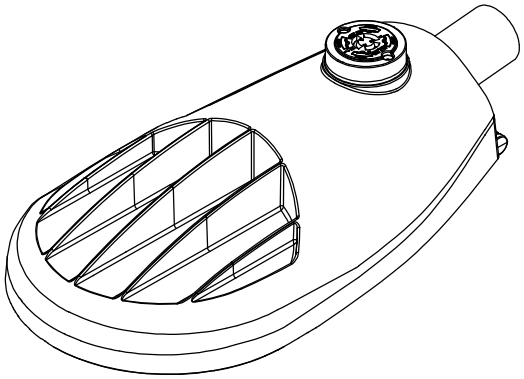

FIGURE 1
ISOMETRIC

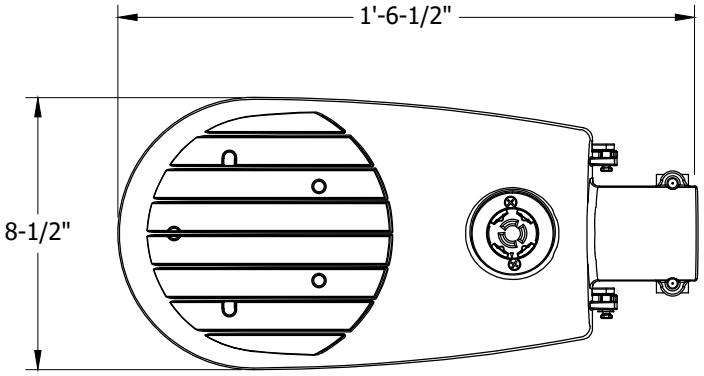

FIGURE 2
TOP VIEW

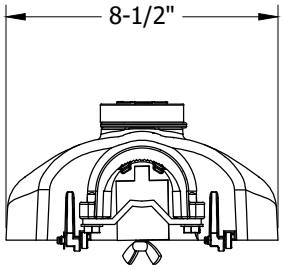

FIGURE 3
REAR VIEW

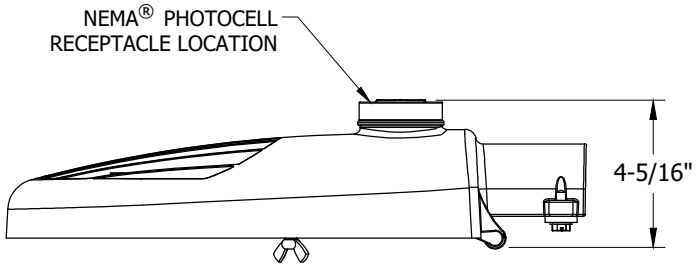

FIGURE 4
SIDE VIEW

TABLE 1

STOCK NUMBER	MANUFACTURER NAME/STYLE	LUMENS PACKAGE	COLOR TEMPERATURE	UNIT WEIGHT	PROJECTED AREA	DISTRIBUTION TYPE	DESIGN UNITS
S473434	ACUITY/ATBX	7,133L	3000K	8 LBS	SEE LUMINAIRE EPA TABLE	TYPE II	ATBX

LUMINAIRE ESTIMATED PROJECTED AREA (EPA)

HORIZONTAL TENON. CONFIG.	SINGLE	2 @ 90°	2 @ 180°
		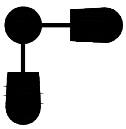	
STANDARD LUMINAIRE (FT^2) (TENON EPA NOT INCLUDED)	.26	.52	.52

© 1998 - 2024 San Diego Gas & Electric Company. All rights reserved. Removal of this copyright notice without permission is not permitted under law.

REV	CHANGE	DR	BY	DSN	APV	DATE	REV	CHANGE	DR	BY	DSN	APV	DATE
C							F						
B	EDITORIAL CHANGES	AMP	JES	EJA	KRG	02/15/2024	E						
A	ORIGINAL ISSUE	AMP	ADW	JES	CZH	12/13/2021	D						

TABLE OF CONTENTS

PHOTOMETRIC DIAGRAMS

FIXTURE WITHOUT BACKLIGHT SHIELD

LUMENS: 7133
WATTS: 60
MOUNTING HEIGHT: 26'
ARM LENGTH: 6'
ARRANGEMENT: SINGLE
.IES FILE NAME:
ATBX_P70_XXXXX_R2_3K.IES

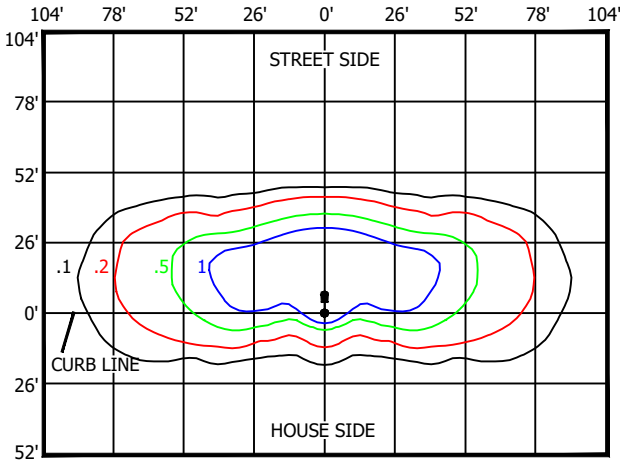

PLOT DRAWN IN FOOTCANDLES

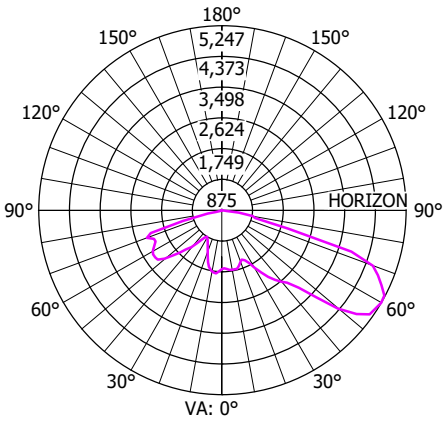

GRAPH RADIUS LINES ARE IN CANDELAS

FIXTURE WITH BACKLIGHT SHIELD

LUMENS: 6217
WATTS: 60
MOUNTING HEIGHT: 26'
ARM LENGTH: 6'
ARRANGEMENT: SINGLE
.IES FILE NAME:
ATBX_P70_XXXXX_R2_3K
_HSS.IES

SEE SHEET OH1573.11 FOR BACK LIGHT SHIELD DETAILS AND INSTALLATION

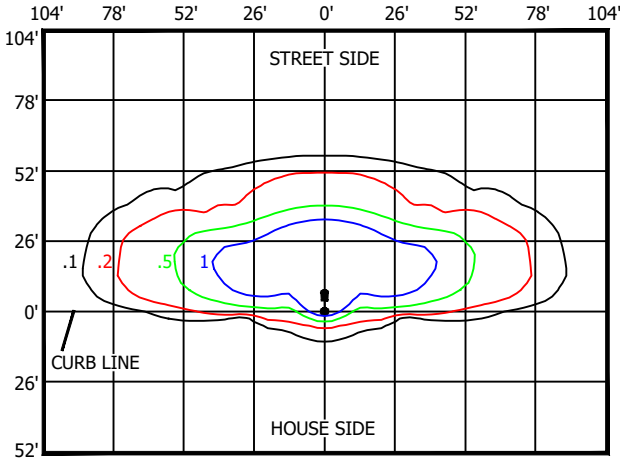

PLOT DRAWN IN FOOTCANDLES

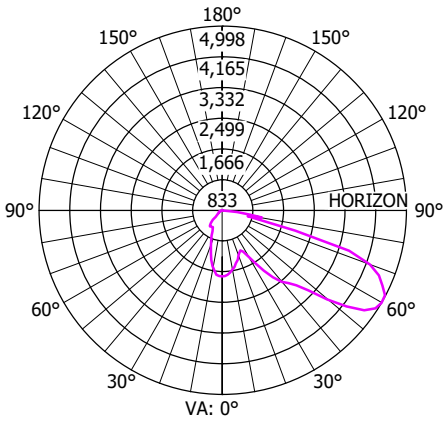

GRAPH RADIUS LINES ARE IN CANDELAS

ATTENTION: LUMEN OUTPUT FAO SWITCH POSITION MUST BE INCLUDED FOR EACH FIXTURE WITHIN THE CONSTRUCTION NOTES FOR EACH LOCATION IN THE JOB PACKAGE.

TABLE 2

FAO SWITCH POSITION	ACTUAL SYSTEM WATTS	NOMINAL LABEL WATTAG	LUMEN OUTPUT	LUMEN OUTPUT WITH BACKLIGHT SHIELD	HPS EQUIVALENT WATTAGE
8	60	60	7133	6,217	150W
7	56	60	6,776	5,906	150W
6	49	50	6,063	5,284	150W
5	41	40	5,278	4,601	100W
4	33	30	4,422	3,855	100W
3	25	30	3,495	3,046	70W
2	17	20	2,497	2,176	50W
1	10	10	1,427	1,243	N/A

TABLE OF CONTENTS

© 1998 - 2024 San Diego Gas & Electric Company. All rights reserved. Removal of this copyright notice without permission is not permitted under law.

REV	CHANGE	DR	BY	DSN	APV	DATE	REV	CHANGE	DR	BY	DSN	APV	DATE
C							F						
B	EDITORIAL CHANGES	AMP	JES	EJA	KRG	02/15/2024	E						
A	ORIGINAL ISSUE	AMP	ADW	JES	CZH	12/13/2021	D						

ATTENTION: SEE NOTES & REFERENCES PAGE OH1573.12. LUMEN OUTPUT SETTINGS MUST BE IDENTIFIED FOR THIS FIXTURE INSTALLATION USING TABLE 4 ON THE NEXT SHEET.

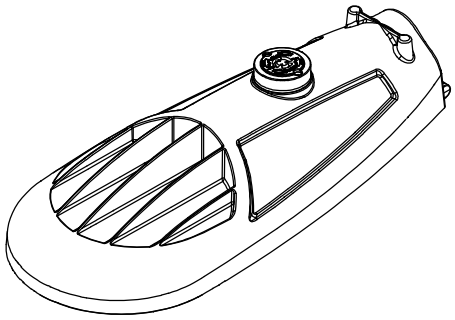

FIGURE 5
ISOMETRIC

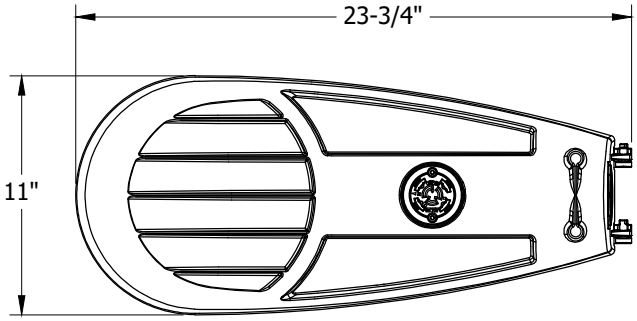

FIGURE 6
TOP VIEW

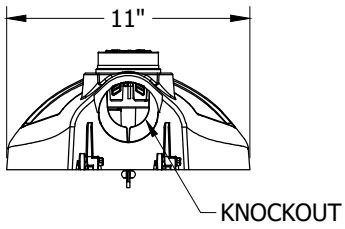

FIGURE 7
REAR VIEW

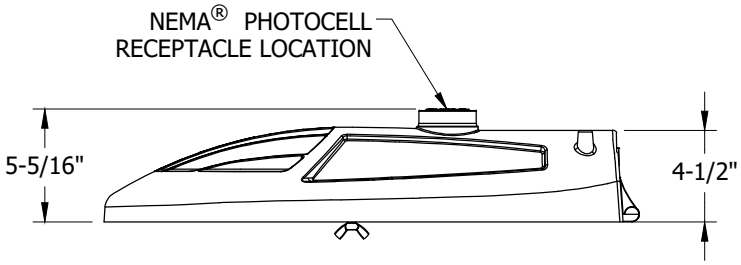

FIGURE 8
SIDE VIEW

TABLE 3

STOCK NUMBER	MANUFACTURER NAME/STYLE	LUMENS PACKAGE	COLOR TEMPERATURE	UNIT WEIGHT	PROJECTED AREA	DISTRIBUTION TYPE	DESIGN UNITS
S473438	ACUITY/ATBS	10,624L	3000K	12 LBS	SEE LUMINAIRE EPA TABLE	TYPE III	ATBS

LUMINAIRE ESTIMATED PROJECTED AREA (EPA)

HORIZONTAL TENON. CONFIG.	SINGLE	2 @ 90°	2 @ 180°
		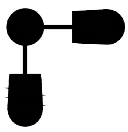	
STANDARD LUMINAIRE (FT^2) (TENON EPA NOT INCLUDED)	.30	.60	.60

© 1998 - 2024 San Diego Gas & Electric Company. All rights reserved. Removal of this copyright notice without permission is not permitted under law.

REV	CHANGE	DR	BY	DSN	APV	DATE	REV	CHANGE	DR	BY	DSN	APV	DATE
C							F						
B	EDITORIAL CHANGES	AMP	JES	EJA	KRG	02/15/2024	E						
A	ORIGINAL ISSUE	AMP	ADW	JES	CZH	12/13/2021	D						

TABLE OF CONTENTS

PHOTOMETRIC DIAGRAMS

FIXTURE WITHOUT BACKLIGHT SHIELD

LUMENS: 10624
WATTS: 82
MOUNTING HEIGHT: 30'
ARM LENGTH: 6'
ARRANGEMENT: SINGLE
.IES FILE NAME:
ATBS_P50_XXXXX_R3_3K.IES

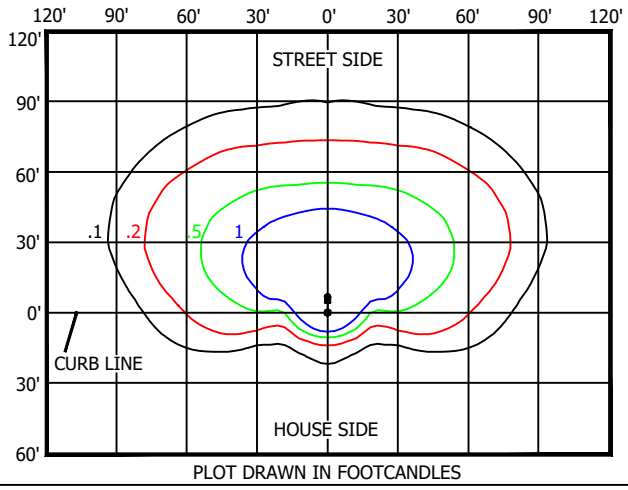

PLOT DRAWN IN FOOTCANDLES

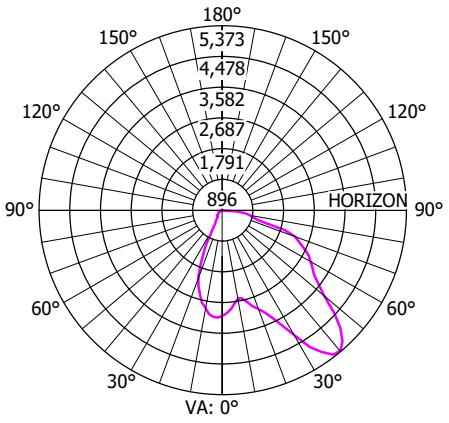

GRAPH RADIUS LINES ARE IN CANDELAS

FIXTURE WITH BACKLIGHT SHIELD

LUMENS: 9423
WATTS: 82
MOUNTING HEIGHT: 30'
ARM LENGTH: 6'
ARRANGEMENT: SINGLE
.IES FILE NAME:
ATBS_P50_XXXXX_R3_3K
_HSS.IES

SEE SHEET OH1573.11 FOR BACK LIGHT SHIELD DETAILS AND INSTALLATION

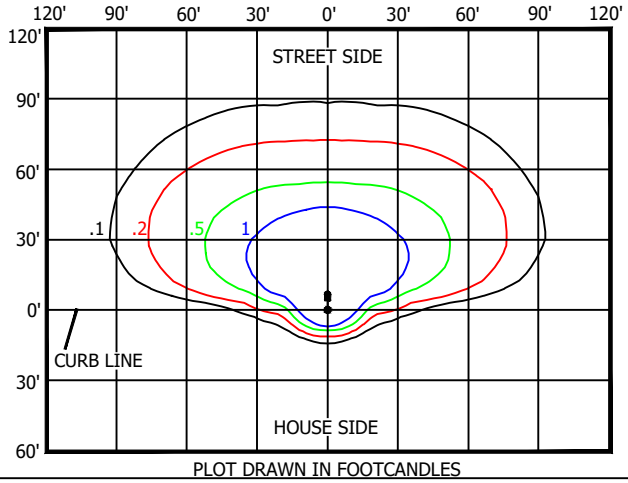

PLOT DRAWN IN FOOTCANDLES

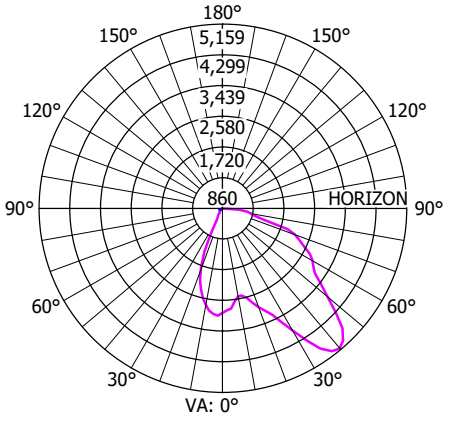

GRAPH RADIUS LINES ARE IN CANDELAS

ATTENTION: LUMEN OUTPUT FAO SWITCH POSITION MUST BE INCLUDED FOR EACH FIXTURE WITHIN THE CONSTRUCTION NOTES FOR EACH LOCATION IN THE JOB PACKAGE.

TABLE 4

FAO SWITCH POSITION	ACTUAL SYSTEM WATTS	NOMINAL LABEL WATTAG	LUMEN OUTPUT	LUMEN OUTPUT WITH BACKLIGHT SHIELD	HPS EQUIVALENT WATTAGE
8	82	80	10,624	9,423	250W
7	76	80	9,987	8,858	200W
6	66	70	8,712	7,727	200W
5	56	60	7,543	6,690	150W
4	45	50	6,268	5,560	150W
3	34	30	4,781	4,240	100W
2	25	30	3,612	3,204	70W
1	16	20	2,337	2,073	50W

© 1998 - 2024 San Diego Gas & Electric Company. All rights reserved. Removal of this copyright notice without permission is not permitted under law.

REV	CHANGE	DR	BY	DSN	APV	DATE	REV	CHANGE	DR	BY	DSN	APV	DATE
C							F						
B	EDITORIAL CHANGES	AMP	JES	EJA	KRG	02/15/2024	E						
A	ORIGINAL ISSUE	AMP	ADW	JES	CZH	12/13/2021	D						

X Indicates Latest Revision | Completely Revised | New Page | Information Removed

SDG&E ELECTRIC OVERHEAD AND UNDERGROUND CONSTRUCTION STANDARDS

ACUITY ATB ROADWAY LIGHTING
11KL FIXTURE

OH1573.8
UG4473.8

TABLE OF CONTENTS

ATTENTION: SEE NOTES & REFERENCES PAGE OH1573.12. LUMEN OUTPUT SETTINGS MUST BE IDENTIFIED FOR THIS FIXTURE INSTALLATION USING TABLE 6 ON THE NEXT SHEET.

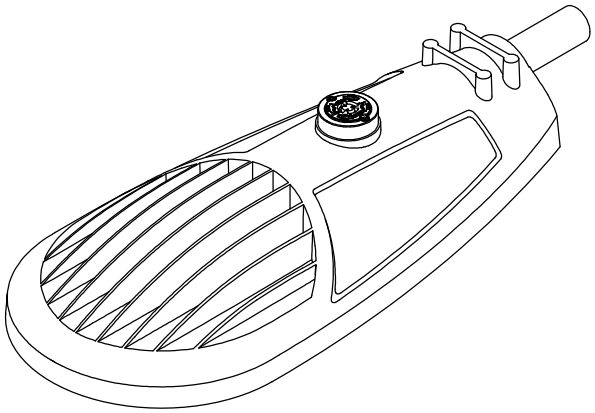

FIGURE 9
ISOMETRIC

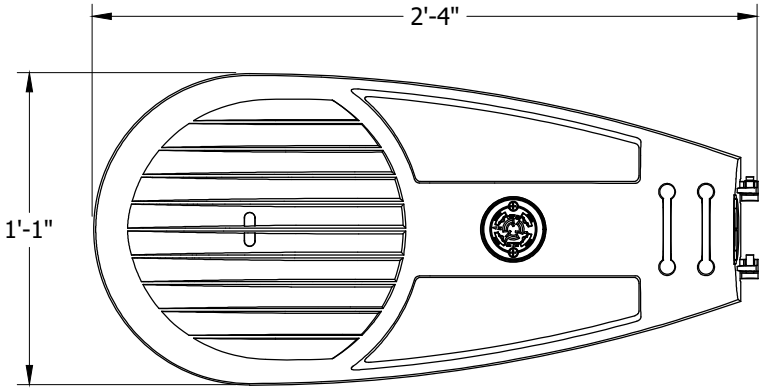

FIGURE 10
TOP VIEW

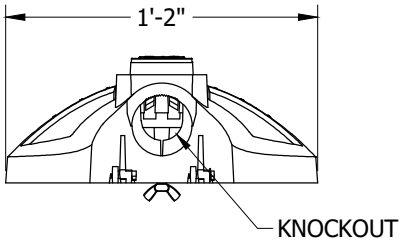

FIGURE 11
REAR VIEW

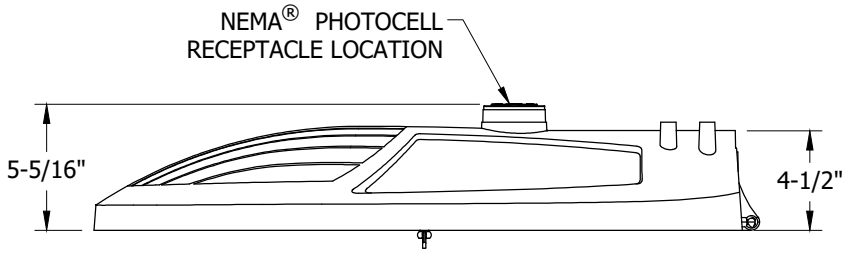

FIGURE 12
SIDE VIEW

TABLE 5

STOCK NUMBER	MANUFACTURER NAME/STYLE	LUMENS PACKAGE	COLOR TEMPERATURE	UNIT WEIGHT	PROJECTED AREA	DISTRIBUTION TYPE	DESIGN UNITS
S473440	ACUITY/ATBM	20,142L	3000K	21 LBS	SEE LUMINAIRE EPA TABLE	TYPE III	ATBM

LUMINAIRE ESTIMATED PROJECTED AREA (EPA)

HORIZONTAL TENON. CONFIG.	SINGLE	2 @ 90°	2 @ 180°
		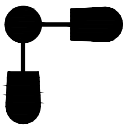	
STANDARD LUMINAIRE (FT^2) (TENON EPA NOT INCLUDED)	.30	.60	.60

© 1998 - 2024 San Diego Gas & Electric Company. All rights reserved. Removal of this copyright notice without permission is not permitted under law.

REV	CHANGE	DR	BY	DSN	APV	DATE	REV	CHANGE	DR	BY	DSN	APV	DATE
C							F						
B	EDITORIAL CHANGES	AMP	JES	EJA	KRG	02/15/2024	E						
A	ORIGINAL ISSUE	AMP	ADW	JES	CZH	12/13/2021	D						

X Indicates Latest Revision | Completely Revised | New Page | Information Removed

TABLE OF CONTENTS

PHOTOMETRIC DIAGRAMS

FIXTURE WITHOUT BACKLIGHT SHIELD

LUMENS: 20142
WATTS: 190
MOUNTING HEIGHT: 35'
ARM LENGTH: 6'
ARRANGEMENT: SINGLE
.IES FILE NAME:
ATBM_P70_XXXXX_R3_3K.IES

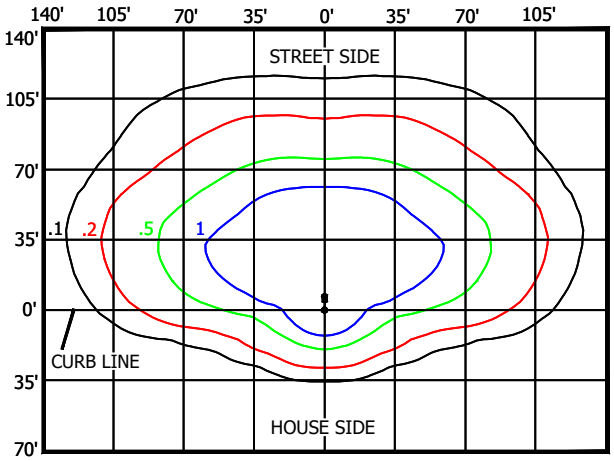

PLOT DRAWN IN FOOTCANDLES

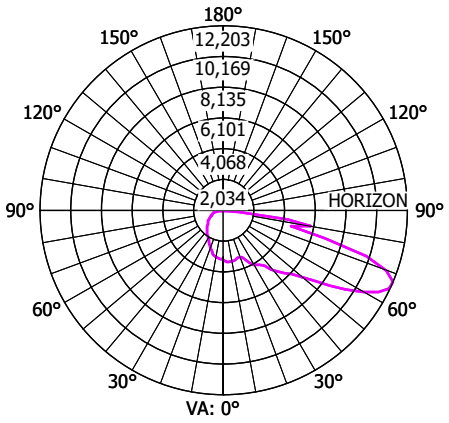

GRAPH RADIUS LINES ARE IN CANDELAS

FIXTURE WITH BACKLIGHT SHIELD

LUMENS: 18978
WATTS: 190
MOUNTING HEIGHT: 35'
ARM LENGTH: 6'
ARRANGEMENT: SINGLE
.IES FILE NAME:
ATBM_P70_XXXXX_R3_3K
_HSS.IES

SEE SHEET OH1573.11 FOR BACK LIGHT SHIELD DETAILS AND INSTALLATION

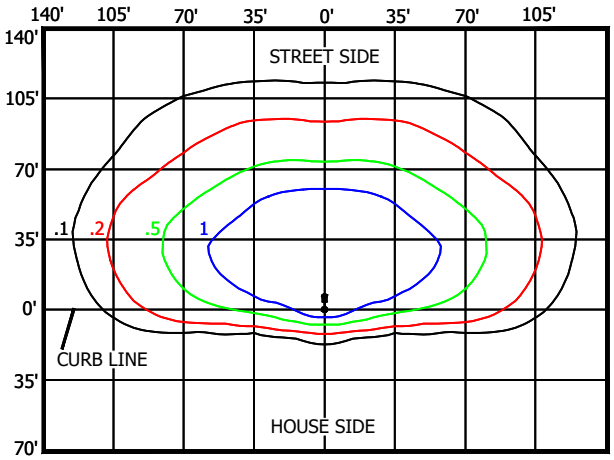

PLOT DRAWN IN FOOTCANDLES

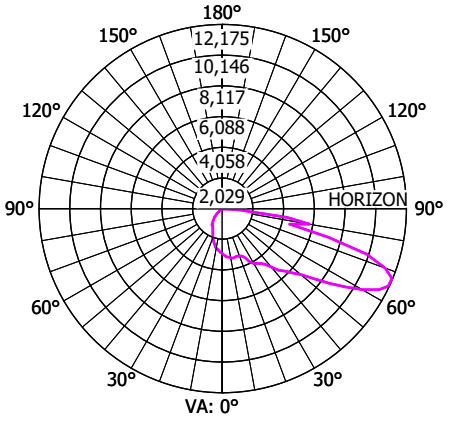

GRAPH RADIUS LINES ARE IN CANDELAS

TABLE OF CONTENTS

ATTENTION: LUMEN OUTPUT FAO SWITCH POSITION MUST BE INCLUDED FOR EACH FIXTURE WITHIN THE CONSTRUCTION NOTES FOR EACH LOCATION IN THE JOB PACKAGE.

TABLE 6

FAO SWITCH POSITION	ACTUAL SYSTEM WATTS	NOMINAL LABEL WATTAG	LUMEN OUTPUT	LUMEN OUTPUT WITH BACKLIGHT SHIELD	HPS EQUIVALENT WATTAGE
8	190	190	20,142	18,978	400W
7	190	190	20,142	18,978	400W
6	150	150	17,725	16,701	310W
5	125	130	15,711	14,803	310W
4	101	100	13,294	12,525	250W
3	76	80	10,474	9,869	200W
2	53	50	7,654	7,212	150W
1	30	30	4,431	4,175	100W

© 1998 - 2024 San Diego Gas & Electric Company. All rights reserved. Removal of this copyright notice without permission is not permitted under law.

REV	CHANGE	DR	BY	DSN	APV	DATE	REV	CHANGE	DR	BY	DSN	APV	DATE
C							F						
B	EDITORIAL CHANGES	AMP	JES	EJA	KRG	02/15/2024	E						
A	ORIGINAL ISSUE	AMP	ADW	JES	CZH	12/13/2021	D						

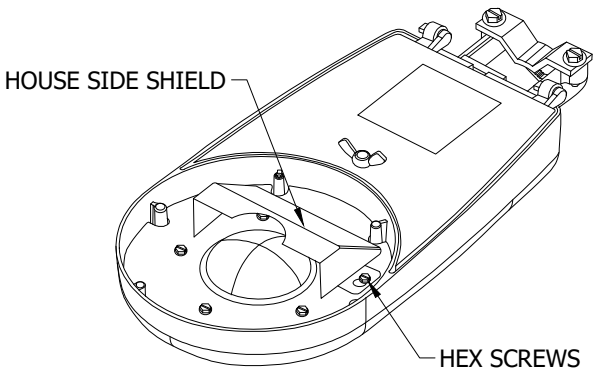

FIGURE 13
ISOMETRIC

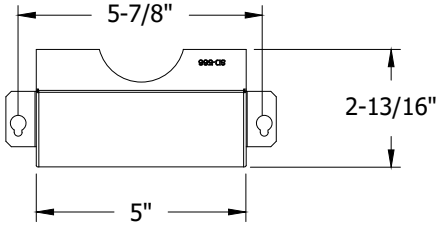

FIGURE 15
TOP VIEW

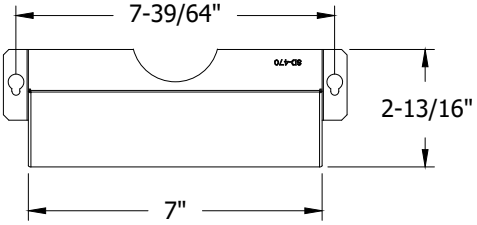

FIGURE 16
TOP VIEW

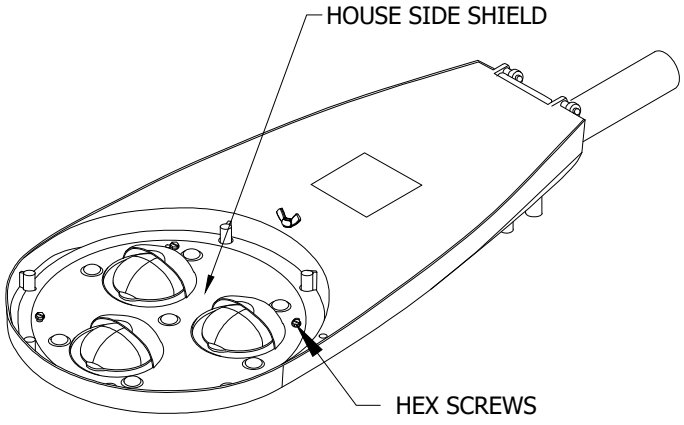

FIGURE 14
ISOMETRIC

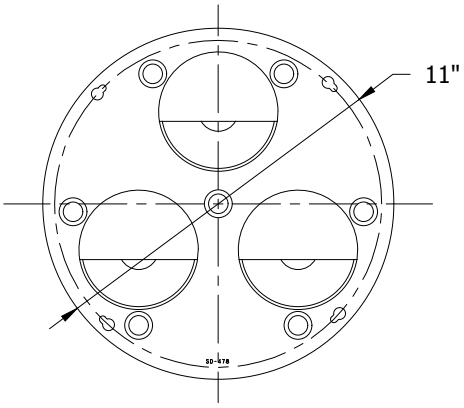

FIGURE 17
TOP VIEW

TABLE 7

ATB HOUSE SIDE SHIELD				
STOCK NUMBER	**DESCRIPTION**	**FIGURE**	**FIXTURE TYPE COMPATIBILITY BY STOCK NUMBER**	**DESIGN UNITS**
S643034	ATB HOUSE SIDE SHIELD, X-SMALL	15	S473434	ATBXHSS
S643032	ATB HOUSE SIDE SHIELD, SMALL	16	S473438	ATBSHSS
S643030	ATB HOUSE SIDE SHIELD, MEDIUM	17	S473440	ATBMHSS

© 1998 - 2024 San Diego Gas & Electric Company. All rights reserved. Removal of this copyright notice without permission is not permitted under law.

REV	CHANGE	DR	BY	DSN	APV	DATE	REV	CHANGE	DR	BY	DSN	APV	DATE
C							F						
B	EDITORIAL CHANGES	AMP	JES	EJA	KRG	02/15/2024	E						
A	ORIGINAL ISSUE	AMP	ADW	JES	CZH	12/13/2021	D						

X Indicates Latest Revision | Completely Revised | New Page | Information Removed

TABLE OF CONTENTS

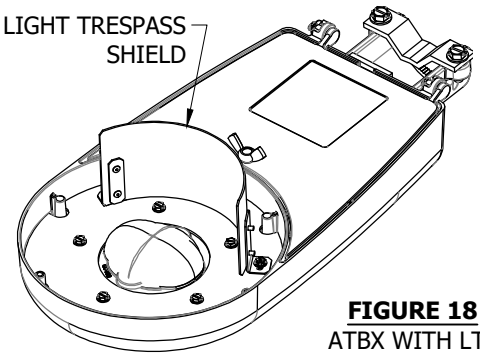

FIGURE 18
ATBX WITH LTS

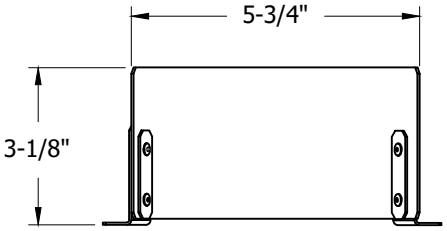

FIGURE 21
ATBX LTS

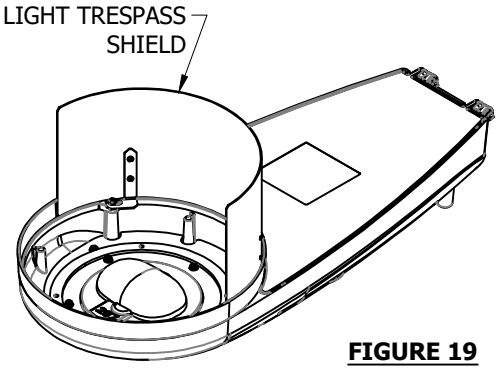

FIGURE 19
ATBS WITH LTS

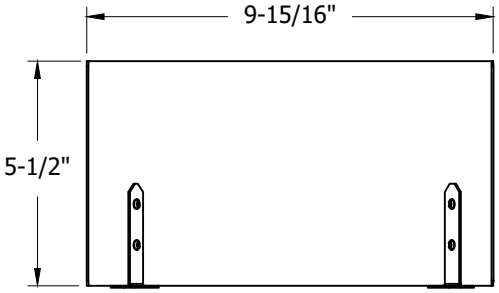

FIGURE 22
ATBS LTS

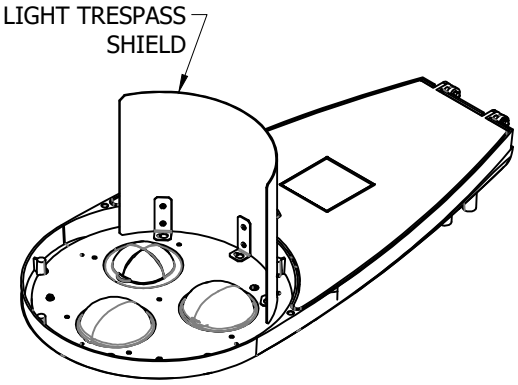

FIGURE 20
ATBM WITH LTS

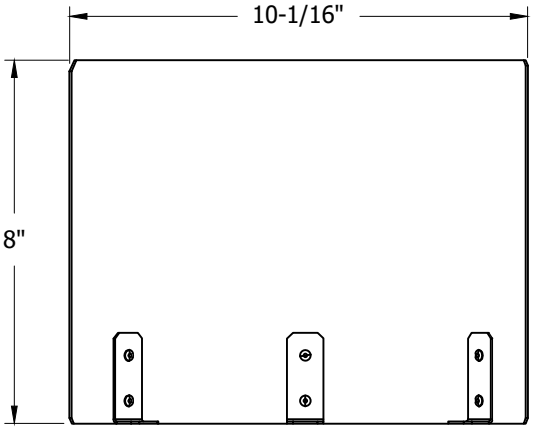

FIGURE 23
ATBM LTS

TABLE 8

ATB LIGHT TRESPASS SHIELD				
STOCK NUMBER	**DESCRIPTION**	**FIGURE**	**FIXTURE TYPE COMPATIBILITY BY STOCK NUMBER**	**DESIGN UNITS**
S643040	ATB LIGHT TRESPASS SHIELD, X-SMALL	18	S473434	ATBXLTS
S643038	ATB LIGHT TRESPASS SHIELD, SMALL	19	S473438	ATBSLTS
S643036	ATB LIGHT TRESPASS SHIELD, MEDIUM	20	S473440	ATBMLTS

© 1998 - 2024 San Diego Gas & Electric Company. All rights reserved. Removal of this copyright notice without permission is not permitted under law.

REV	CHANGE	DR	BY	DSN	APV	DATE	REV	CHANGE	DR	BY	DSN	APV	DATE
C							F						
B	EDITORIAL CHANGES	AMP	JES	EJA	KRG	02/15/2024	E						
A	ORIGINAL ISSUE	AMP	ADW	JES	CZH	12/13/2021	D						

TABLE OF CONTENTS

INSTALLATION:

A. LIGHT SHIELDS.

1. PRE-INSTALL PROVIDED #8 HEX WASHER HEAD SCREWS IN HOLES IN LUMINAIRE OPTICAL PLATE. DO NOT FULLY TIGHTEN.
2. ALIGN KEYHOLE SLOTS IN SHIELD BASE TO SCREWS. SHIFT SHIELD SLIGHTLY FOWARD TO ENGAGE KEYHOLE SLOTS ONTO SCREW HEADS.
3. TIGHEN SCREWS UNTIL SNUG.

BILL OF MATERIALS: NONE

NOTES:

I. REFER TO SPECIFIC PRODUCT INSTALLATION MANUALS PROVIDED WITH ITEM FOR COMPLETE SAFETY AND INSTALLATION INSTRUCTIONS.

REFERENCE:

a. SEE OVERHEAD CONSTRUCTION STANDARD 1570 FOR OVERHEAD LIGHTING INSTALLATION.

b. SEE UNDERGROUND CONSTRUCTION STANDARD 4431 FOR UNDERGROUND LIGHTING INSTALLATION.

c. SEE OVERHEAD CONSTRUCTION STANDARD 1512 FOR PHOTOELECTRIC CONTROLS AVAILABLE.

TABLE OF CONTENTS

© 1998 - 2024 San Diego Gas & Electric Company. All rights reserved. Removal of this copyright notice without permission is not permitted under law.

REV	CHANGE	DR	BY	DSN	APV	DATE	REV	CHANGE	DR	BY	DSN	APV	DATE
C							F						
B	EDITORIAL CHANGES	AMP	JES	EJA	KRG	02/15/2024	E						
A	ORIGINAL ISSUE	AMP	ADW	JES	CZH	12/13/2021	D						

X Indicates Latest Revision | Completely Revised | New Page | Information Removed

SDG&E ELECTRIC OVERHEAD AND UNDERGROUND CONSTRUCTION STANDARDS

ACUITY ATB ROADWAY LIGHTING

FIXTURES - LIGHT SHIELDS

OH1573.13
UG4473.13

MAIN TABLE OF CONTENTS

PAGE	SUBJECT
4505	GROUNDING HARDWARE
4510	TRENCH GROUND WIRE - STANDARD AND ALTERNATIVE
4512	EQUIPMENT GROUNDING INSTALLATION - SINGLE AND THREE-PHASE
4514	GROUNDING TELCO CONDUCTORS IN PAD MOUNTED EQUIPMENT
4520	GROUNDING PAD MOUNTED EQUIPMENT
4521	GROUNDING TRAYER PAD MOUNTED EQUIPMENT
4525	CONCENTRIC NEUTRAL TERMINATIONS AND GROUNDING PREMOLDED CONNECTORS
4530	NEUTRAL AND GROUND WIRE SCHEMATIC DIAGRAM
4540	GROUNDING SUBSTRUCTURES AND EQUIPMENT - 3313, 3314, 3315, 3316, 3317
4550	GROUNDING TELCO CONDUCTOR IN HANDHOLES - 3314, 3315, OR 3316

REV	CHANGE	DRWN	BY	CHKD	APVD	DATE
G	REVISED TO 3D FORMAT	NV5	JIK	-	-	05/07/2024
F	FORMATTING	EDM	JIK	-	-	06/18/2021
E	EDITORIAL CHANGES	-	JK	JS	CZH	05/18/2018

© 1998 - 2024 San Diego Gas and Electric Company. All rights reserved. Removal of this copyright notice without permission is not permitted under law.

SDG&E ELECTRIC UNDERGROUND CONSTRUCTION STANDARDS

GROUNDING
TABLE OF CONTENTS

SCALE: NOT TO SCALE

DRAWING NO: UG4501.1

SHEET: 1 OF 1

X Indicates Latest Revision | Completely Revised | New Page | Information Removed

SCOPE: THIS STANDARD COVERS THE HARDWARE USED IN GROUNDING PAD MOUNTED AND SUB-SURFACE EQUIPMENT AND FACILITIES.

TABLE 1

PARTS IDENTIFICATION CHART

ITEM	PART	SIZE	WIRE SIZE	STOCK NUMBER
1	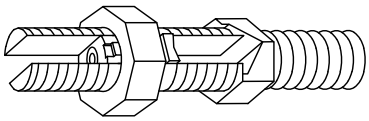 SPLIT BOLT STUD BRONZE	3/8" X 16	--	S262626 (X)
		1/2" X 13	--	S262560
2	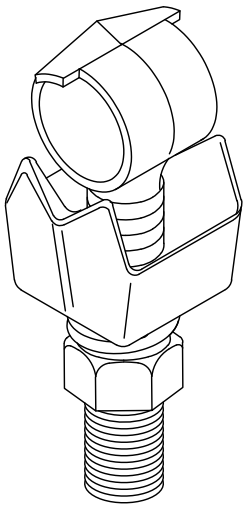 BRONZE EYE BOLT CLAMP	--	8 TO 2/0	S471312
		--	6 TO 250	S471296
		--	4/0 TO 500	S471232
3	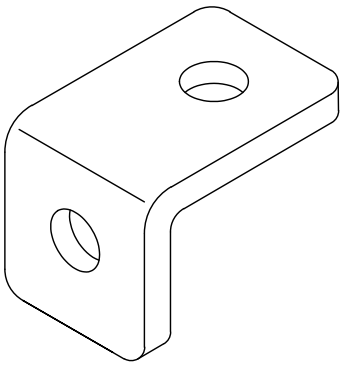 STAINLESS STEEL "L" BRACKET	2" X 3"	--	S166072

TABLE OF CONTENTS

© 1998 - 2021 San Diego Gas & Electric Company. All rights reserved. Removal of this copyright notice without permission is not permitted under law.

REV	CHANGE	DR	BY	DSN	APV	DATE	REV	CHANGE	DR	BY	DSN	APV	DATE
C							F						
B	FORMATTING	EDM	JIK	-	-	06/18/2021	E						
A	EDITORIAL CHANGES	-	JC	TR	JS/MDJ	7/28/2015	D						

TABLE 1 (CONT'D)

PARTS IDENTIFICATION CHART				
ITEM	**PART**	**SIZE**	**WIRE SIZE**	**STOCK NUMBER**
4	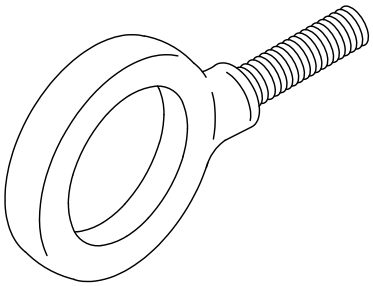 ANCHOR SHOULDER EYE BOLT STAINLESS STEEL	1 1/2" X 1/2"	--	S152722 (X)
5	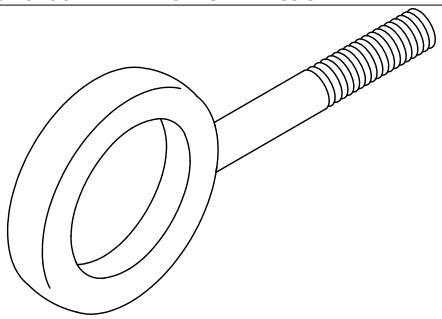 STAINLESS STEEL PULLING EYE BOLT	6" X 1/2"	--	S150528

INSTALLATION: NONE

BILL OF MATERIALS: NONE

NOTES:

I. ALL NEW CONNECTIONS AND HARDWARE USED IN THE CONNECTION AND MOUNTING OF GROUNDS SHALL BE COPPER, SILICON BRONZE, AND STAINLESS STEEL. GALVANIZED MOUNT HARDWARE FOR GROUNDING SHALL NO LONGER BE USED. THE STAINLESS STEEL EYE BOLTS AND BRACKETS WILL PREVENT CORROSION AND LIMIT RUST IN THE WATER, ALLOWING THE PRACTICE OF PUMPING WATER TO CONTINUE. USE THE 2" x 3" STAINLESS STEEL MOUNTING BRACKET TO ATTACH THE STAINLESS STEEL SHOULDER EYE BOLT FOR DEAD ENDING AND PASSING THE GROUND WIRE AROUND A CORNER. THIS WILL ELIMINATE CUTTING AND DAMAGING THE GROUND WIRE. 1/2" X 6" EYE BOLT IS USED TO PULL GROUND WIRE TAUGHT.

(X) THIS ITEM IS EXEMPT.

REFERENCE: NONE

TABLE OF CONTENTS

© 1998 - 2021 San Diego Gas & Electric Company. All rights reserved. Removal of this copyright notice without permission is not permitted under law.

REV	CHANGE	DR	BY	DSN	APV	DATE	REV	CHANGE	DR	BY	DSN	APV	DATE
C							F						
B	FORMATTING	EDM	JIK	-	-	06/18/2021	E						
A	EDITORIAL CHANGES	-	JC	TR	JS/MDJ	7/28/2015	D						

SCOPE: THIS STANDARD SHOWS THE STANDARD TRENCH GROUND WIRE INSTALLATIONS AND EQUIPMENT GROUNDS FOR ALL NEW CONSTRUCTION FOR ALL PARTIES USED TO PROVIDE GROUNDING, CONDUIT, AND PAD INSTALLATIONS. THIS INCLUDES ALL NEUTRALS SUPPLIED FROM THE SUBSTATION BANK AND NEUTRALS SUPPLIED BY A GROUNDING BANK AND TRENCH GROUNDS FOR DELTA UNDERGROUND SYSTEMS.

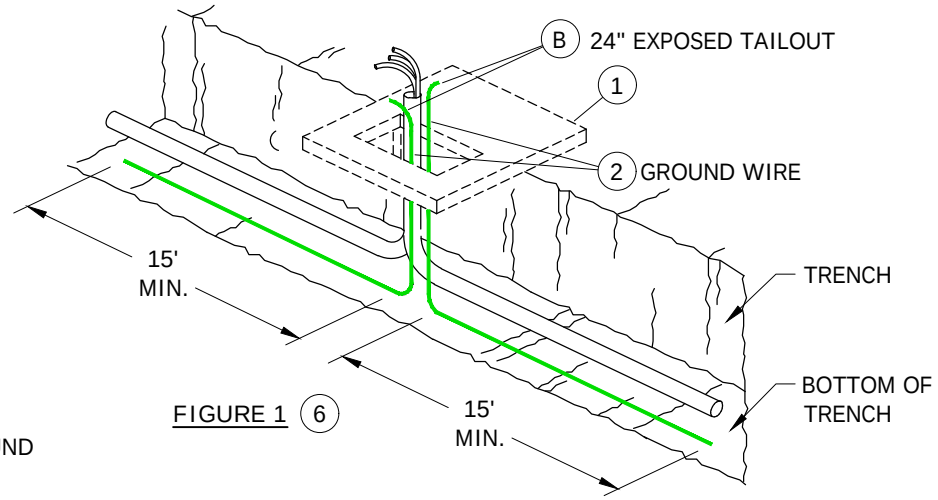

FIGURE 1 (6)

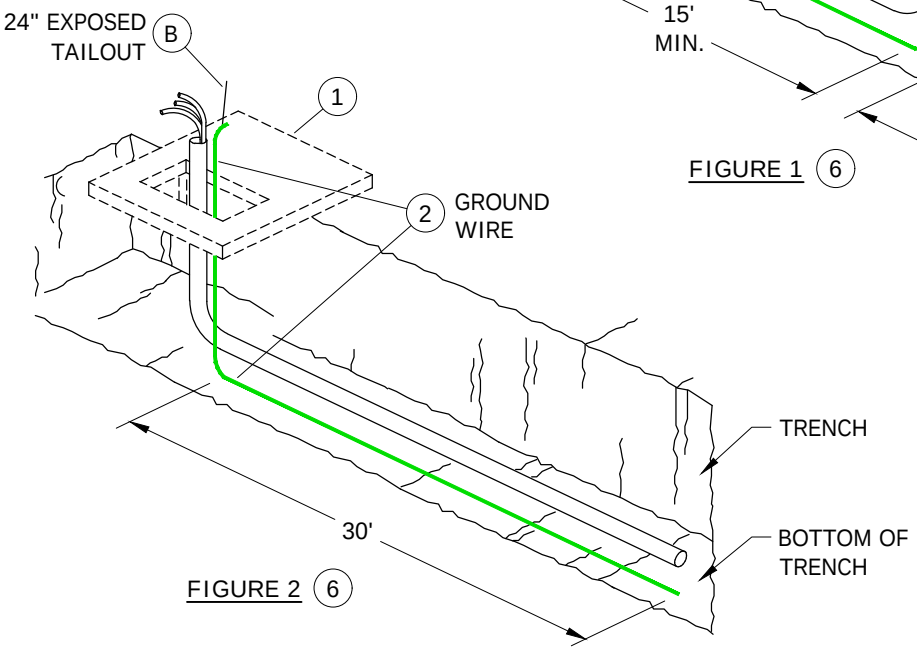

FIGURE 2 (6)

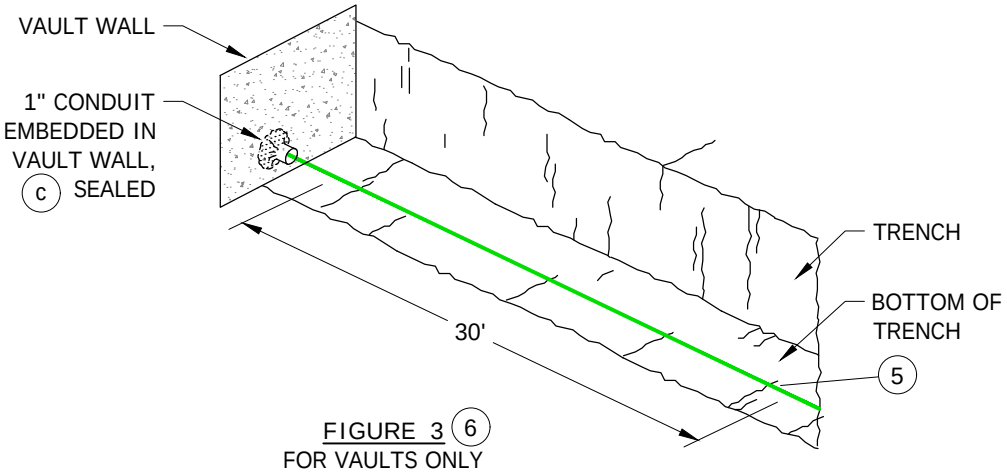

FIGURE 3 (6)
FOR VAULTS ONLY

© 1998 - 2023 San Diego Gas & Electric Company. All rights reserved. Removal of this copyright notice without permission is not permitted under law.

REV	CHANGE	DR	BY	DSN	APV	DATE	REV	CHANGE	DR	BY	DSN	APV	DATE
C	FORMATTING	EDM	JIK	-	-	06/18/2021	F						
B	EDITORIAL CHANGES	-	GW	JS	MDJ	4/1/2018	E						
A	DRAWING UPDATE	-	JC	TR	JS/MDJ	7/28/2015	D	EDITORIAL CHANGES	GLC	RSL	JAS	KRG	11/28/2023

X Indicates Latest Revision | Completely Revised | New Page | Information Removed

SDG&E ELECTRIC UNDERGROUND CONSTRUCTION STANDARDS

TRENCH GROUND WIRE - STANDARD

UG4510.1

TABLE OF CONTENTS

ATTENTION:

* USE ALTERNATIVE TRENCH GROUND WIRE WHEN TRENCH IS SHORT AND CANNOT MEET REQUIREMENTS OF SHEET 1, AS OUTLINED BELOW, FOR CONDUIT AND PAD INSTALLATIONS. THIS INCLUDES ALL NEUTRALS SUPPLIED FROM THE SUBSTATION BANK AND NEUTRALS SUPPLIED BY A GROUNDING BANK AND TRENCH GROUNDS FOR DELTA UNDERGROUND SYSTEMS.

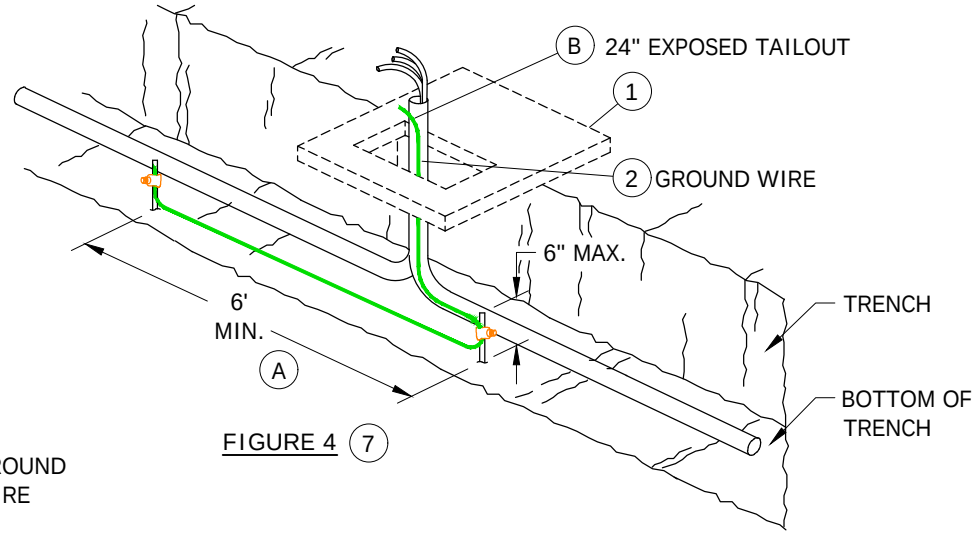

FIGURE 4 (7)

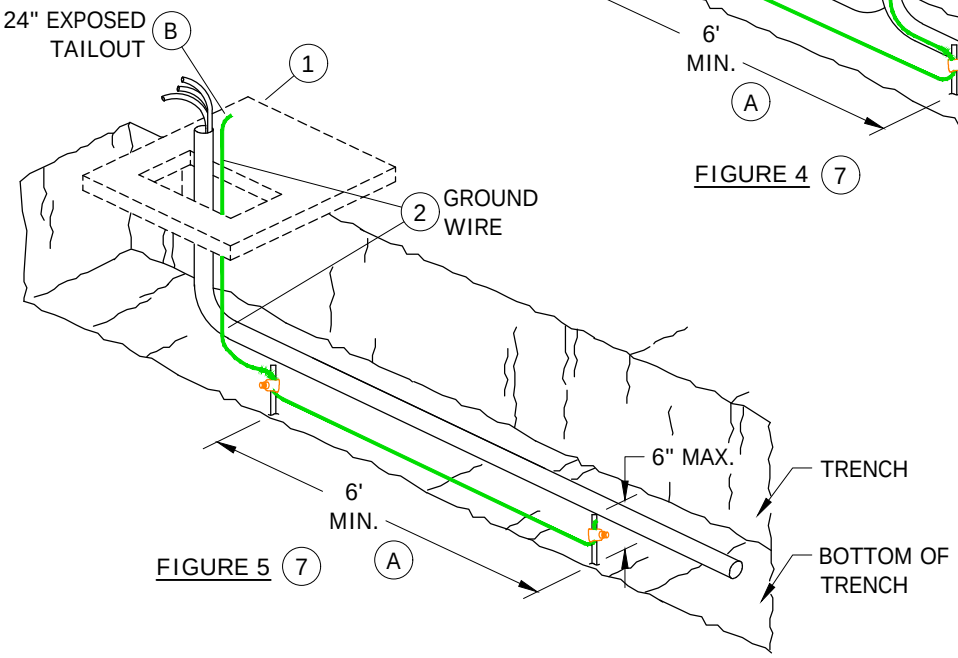

FIGURE 5 (7)

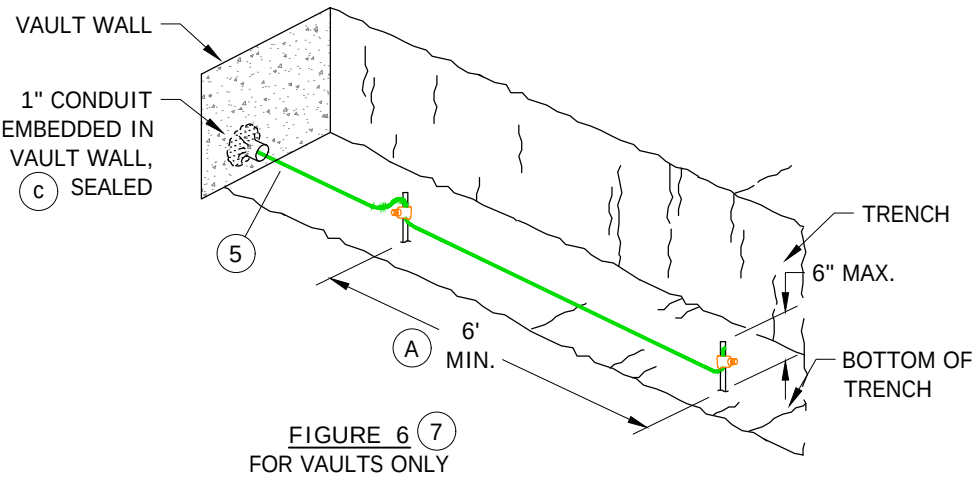

FIGURE 6 (7)
FOR VAULTS ONLY

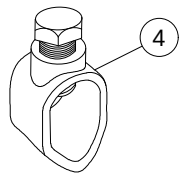

COPPER BONDED GROUND ROD CONNECTORS

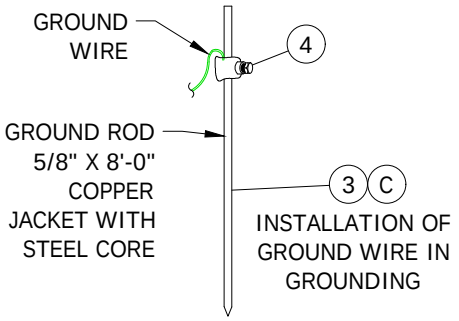

GROUND CONNECTOR

FIGURE 7
GROUNDING COMPONENTS

TABLE OF CONTENTS

© 1998 - 2023 San Diego Gas & Electric Company. All rights reserved. Removal of this copyright notice without permission is not permitted under law.

REV	CHANGE	DR	BY	DSN	APV	DATE	REV	CHANGE	DR	BY	DSN	APV	DATE
C	FORMATTING	EDM	JIK	-	-	06/18/2021	F						
B	EDITORIAL CHANGES	-	GW	JS	MDJ	4/1/2018	E						
A	DRAWING UPDATE	-	JC	TR	JS/MDJ	7/28/2015	D	EDITORIAL CHANGES	GLC	RSL	JAS	KRG	11/28/2023

X Indicates Latest Revision	Completely Revised	New Page	Information Removed	

SDG&E ELECTRIC UNDERGROUND CONSTRUCTION STANDARDS

TRENCH GROUND WIRE - ALTERNATIVE

INSTALLATION:

(A) GROUND RODS TO HAVE A SIX-FOOT MINIMUM SEPARATION.

(B) LEAVE 24 INCHES OF WIRE (EXPOSED TAILOUT) ABOVE TOP OF FINAL GRADE.

(C) LOCATE GROUND RODS SO THEY DO NOT TOUCH CONDUITS. GENERAL ORDER 128 REQUIRES GROUND RODS TO BE DRIVEN. THEY MAY BE DRIVEN AT ANGLES IF IT IS DIFFICULT OR NOT POSSIBLE TO DRIVE STRAIGHT DOWN.

BILL OF MATERIALS:

ITEM	DESCRIPTION	QUANTITY	STANDARD PAGE	STOCK NUMBER	DESIGN UNITS
1	PAD	1	--	REFER TO WORK ORDER	--
2	WIRE, BARE COPPER, SOFT DRAWN, #2, 7 STR. (b)	AS REQ'D	--	S812818 (X)	GDWIRE
3	GROUND ROD, COPPERWELD, 5/8" X 8'-0"	AS REQ'D	1002	S603074 (X)	--
4	CLAMP 5/8" GROUND ROD COPPER	AS REQ'D	1002	S230018 (X)	--
5	CU, BARE STRAND, 4/0	AS REQ'D	--	--	--
6	WIRE, GROUND, TRENCH (WITHOUT RODS)	AS REQ'D	--	--	TG-T-W
7	WIRE, GROUND, TRENCH (WITH RODS)	AS REQ'D	--	--	TG-T-R

NOTES:

1. CUSTOMER PRIMARY SERVICE TRENCHES, CUSTOMER PRIMARY METERING, CUSTOMER PRIMARY EQUIPMENT INSTALLATIONS, APPLICANT INSTALLED, SDG&E INSTALLED TRENCH GROUNDS AND ALL PRIMARY EQUIPMENT.

(X) THIS ITEM IS EXEMPT.

REFERENCE:

a. SEE UG3480 FOR PAD INSTALLATION OF PAD MOUNTED EQUIPMENT.

(b) SEE UG4003 FOR WIRE INFORMATION.

(c) SEE UG3960 FOR PREVENTION OF WATER ENTRY.

TABLE OF CONTENTS

© 1998 - 2023 San Diego Gas & Electric Company. All rights reserved. Removal of this copyright notice without permission is not permitted under law.

REV	CHANGE	DR	BY	DSN	APV	DATE	REV	CHANGE	DR	BY	DSN	APV	DATE
C	FORMATTING	EDM	JIK	-	-	06/18/2021	F						
B	EDITORIAL CHANGES	-	GW	JS	MDJ	4/1/2018	E						
A	DRAWING UPDATE	-	JC	TR	JS/MDJ	7/28/2015	D	EDITORIAL CHANGES	GLC	RSL	JAS	KRG	11/28/2023

X Indicates Latest Revision | Completely Revised | New Page | Information Removed

SDG&E ELECTRIC UNDERGROUND CONSTRUCTION STANDARDS

TRENCH GROUND WIRE - STANDARD AND ALTERNATIVE

UG4510.3

SCOPE: THIS STANDARD SHOWS SINGLE AND THREE-PHASE EQUIPMENT GROUNDING INSTALLATION USED WITH STANDARD OR ALTERNATE TRENCH GROUND WIRE, AS INSTALLED PER UG4510.

ATTENTION:

* SINGLE-PHASE EQUIPMENT GROUNDING.

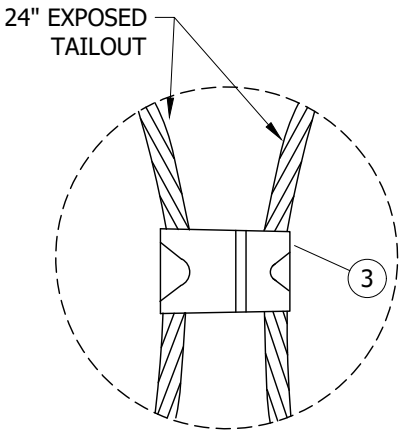

DETAIL 1

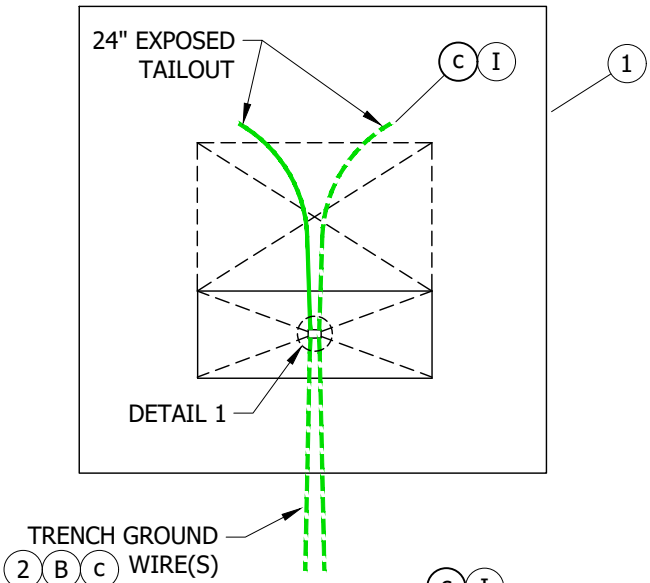

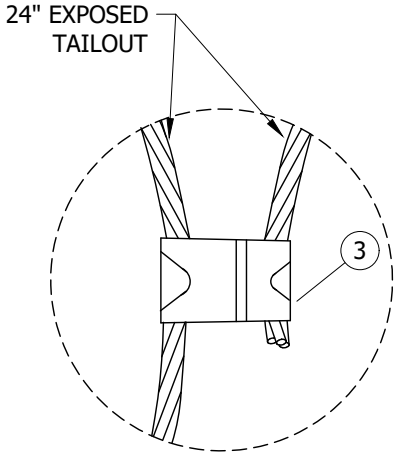

DETAIL 2

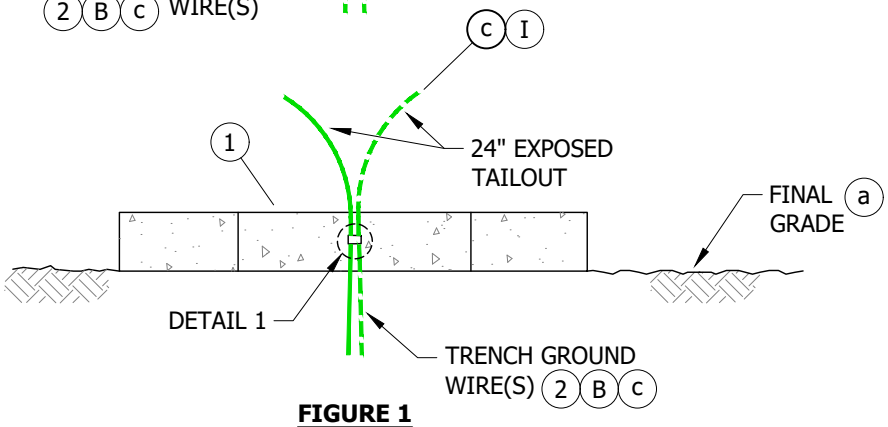

FIGURE 1

TYPICAL PAD WITHOUT HANDHOLE

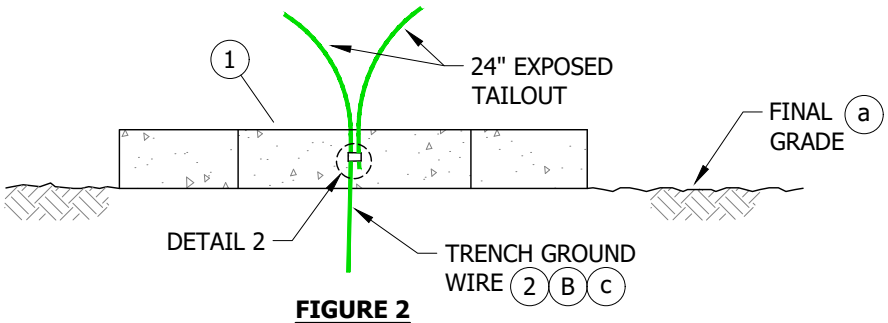

FIGURE 2

SECTION VIEW

© 1998 - 2021 San Diego Gas & Electric Company. All rights reserved. Removal of this copyright notice without permission is not permitted under law.

REV	CHANGE	DR	BY	DSN	APV	DATE	REV	CHANGE	DR	BY	DSN	APV	DATE
C	FORMATTING	EDM	JIK	-	-	06/18/2021	F						
B	EDITORIAL CHANGES	-	GW	JS	MDJ	4/1/2018	E						
A	EDITORIAL CHANGES	-	JS	TR	MDJ	5/24/2016	D						

X Indicates Latest Revision | Completely Revised | New Page | Information Removed

SDG&E ELECTRIC UNDERGROUND CONSTRUCTION STANDARDS

EQUIPMENT GROUNDING INSTALLATION
SINGLE-PHASE

UG4512.1

TABLE OF CONTENTS

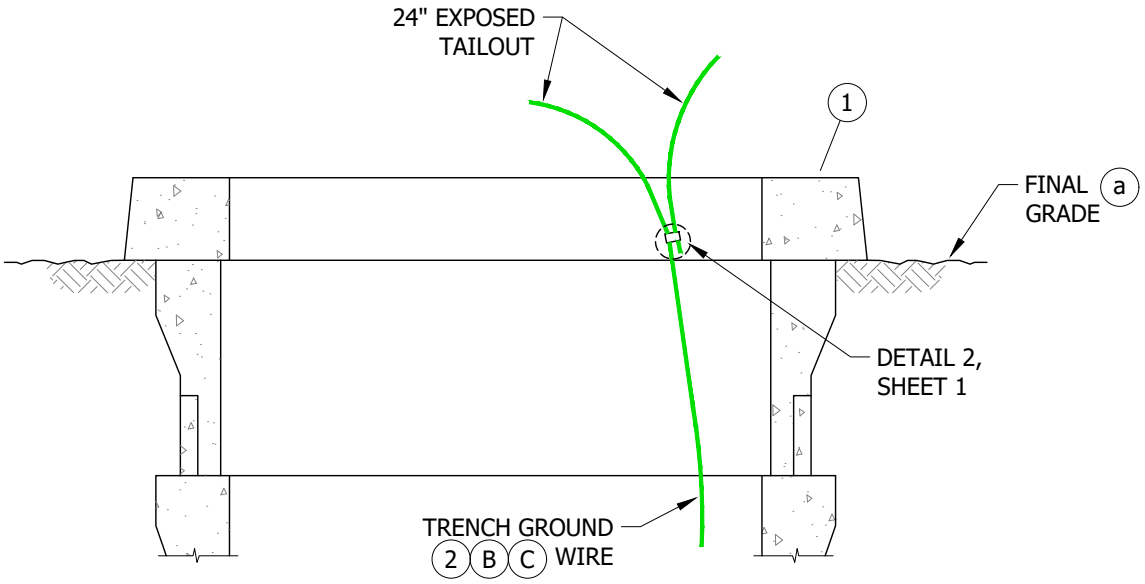

FIGURE 3
PAD WITH 3312 HANDHOLE(S)
SECTION VIEW

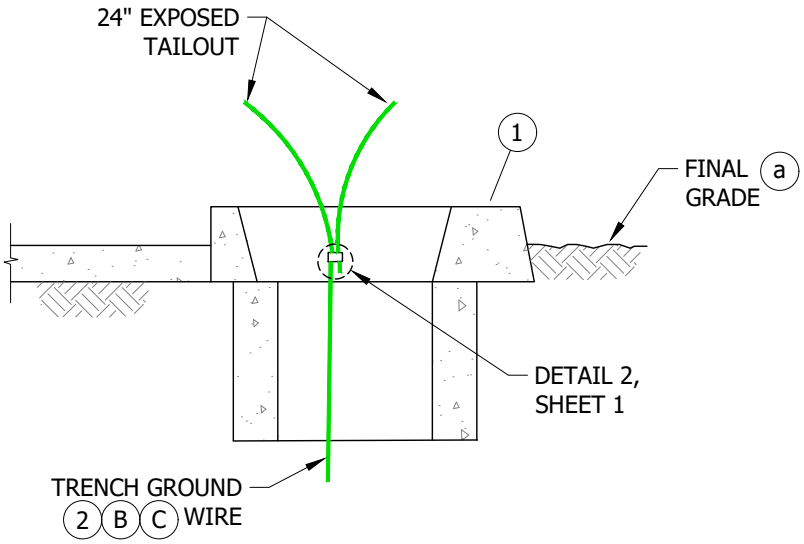

FIGURE 4
3416 PAD WITH 3311 HANDHOLE
SECTION VIEW

© 1998 - 2021 San Diego Gas & Electric Company. All rights reserved. Removal of this copyright notice without permission is not permitted under law.

REV	CHANGE	DR	BY	DSN	APV	DATE	REV	CHANGE	DR	BY	DSN	APV	DATE
C	FORMATTING	EDM	JIK	-	-	06/18/2021	F						
B	EDITORIAL CHANGES	-	GW	JS	MDJ	4/1/2018	E						
A	EDITORIAL CHANGES	-	JS	TR	MDJ	5/24/2016	D						

X Indicates Latest Revision | Completely Revised | New Page | Information Removed

SDG&E ELECTRIC UNDERGROUND CONSTRUCTION STANDARDS

EQUIPMENT GROUNDING INSTALLATION
SINGLE-PHASE

UG4512.2

TABLE OF CONTENTS

ATTENTION:

* THREE-PHASE EQUIPMENT GROUNDING.

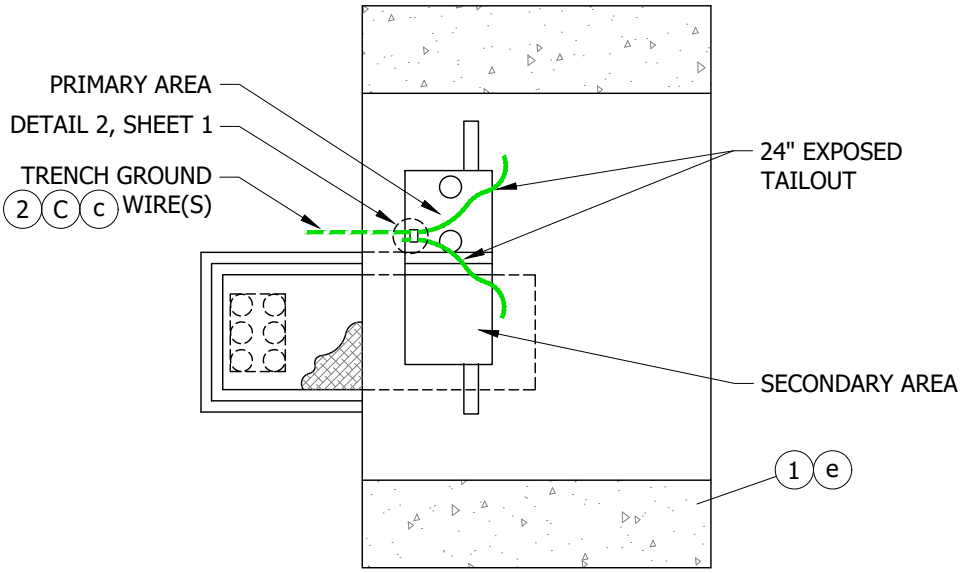

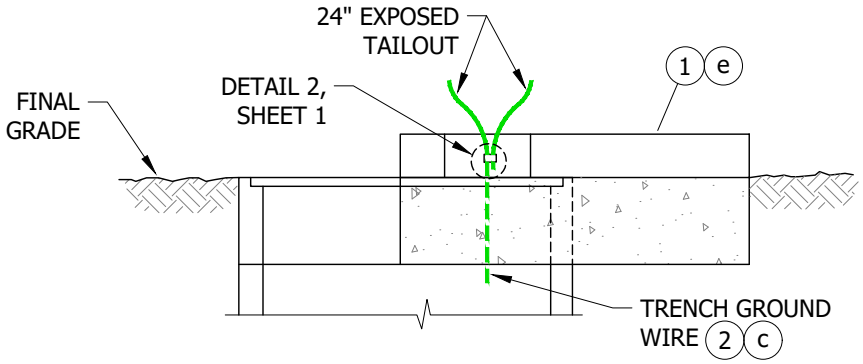

FIGURE 5

TABLE OF CONTENTS

© 1998 - 2021 San Diego Gas & Electric Company. All rights reserved. Removal of this copyright notice without permission is not permitted under law.

REV	CHANGE	DR	BY	DSN	APV	DATE	REV	CHANGE	DR	BY	DSN	APV	DATE
C	FORMATTING	EDM	JIK	-	-	06/18/2021	F						
B	EDITORIAL CHANGES	-	GW	JS	MDJ	4/1/2018	E						
A	EDITORIAL CHANGES	-	JS	TR	MDJ	5/24/2016	D						

X Indicates Latest Revision | Completely Revised | New Page | Information Removed

SDG&E ELECTRIC UNDERGROUND CONSTRUCTION STANDARDS

EQUIPMENT GROUNDING INSTALLATION
THREE-PHASE

UG4512.3

INSTALLATION:

(A) IN CASES WHERE THERE ARE TWO GROUND WIRES, SQUEEZE THE GROUND WIRES TOGETHER WITH A COMPRESSION CONNECTOR. WHERE THERE IS ONLY ONE TRENCH GROUND WIRE, ADD THE SECOND 24-INCH TAILOUT WIRE. SDG&E SHALL FURNISH AND INSTALL THE COMPRESSION CONNECTOR AND THE SECOND 24-INCH TAILOUT WIRE.

(B) STANDARD OR ALTERNATE TRENCH GROUND WIRE IS REQUIRED, FOR ALL EQUIPMENT AND TRENCH GROUNDS.

(C) BUTT TRENCH GROUND WIRE AGAINST 3314 HANDHOLE.

BILL OF MATERIALS:

ITEM	DESCRIPTION	QUANTITY	STANDARD PAGE	STOCK NUMBER	DESIGN UNITS
1	PAD	1	--	REFER TO WORK ORDER	--
2	WIRE, BARE COPPER, #2, 7 STR. SOFT DRAWN (A)	AS REQ'D	--	S812818 (X)	GDWIRE
3	CONNECTOR, COMPRESSION (A)	AS REQ'D	--	S257760	--

NOTES:

(I) SECOND TRENCH GROUND WIRE MAY BE REQUIRED. (C)

(X) THIS ITEM IS EXEMPT.

REFERENCE:

(a) SEE UG3484 FOR PAD INSTALLATION USED FOR MOUNTING PAD MOUNTED EQUIPMENT.

(b) SEE UG4003 FOR WIRE INFORMATION.

(c) SEE UG4510 FOR STANDARD AND ALTERNATE TRENCH GROUND WIRE INSTALLATION.

(d) SEE UG4514 FOR GROUNDING TELCO CONDUCTOR IN PAD MOUNTED EQUIPMENT.

(e) SEE UG3426 & UG3427 FOR THREE-PHASE TRANSFORMER PAD INSTALLATION.

f. AVAILABLE IN SERVICE STANDARDS AND GUIDE MANUAL.

TABLE OF CONTENTS

© 1998 - 2021 San Diego Gas & Electric Company. All rights reserved. Removal of this copyright notice without permission is not permitted under law.

REV	CHANGE	DR	BY	DSN	APV	DATE	REV	CHANGE	DR	BY	DSN	APV	DATE
C	FORMATTING	EDM	JIK	-	-	06/18/2021	F						
B	EDITORIAL CHANGES	-	GW	JS	MDJ	4/1/2018	E						
A	EDITORIAL CHANGES	-	JS	TR	MDJ	5/24/2016	D						

SCOPE: THIS STANDARD SHOWS GROUND WIRE INSTALLATION AT PAD MOUNTED EQUIPMENT.

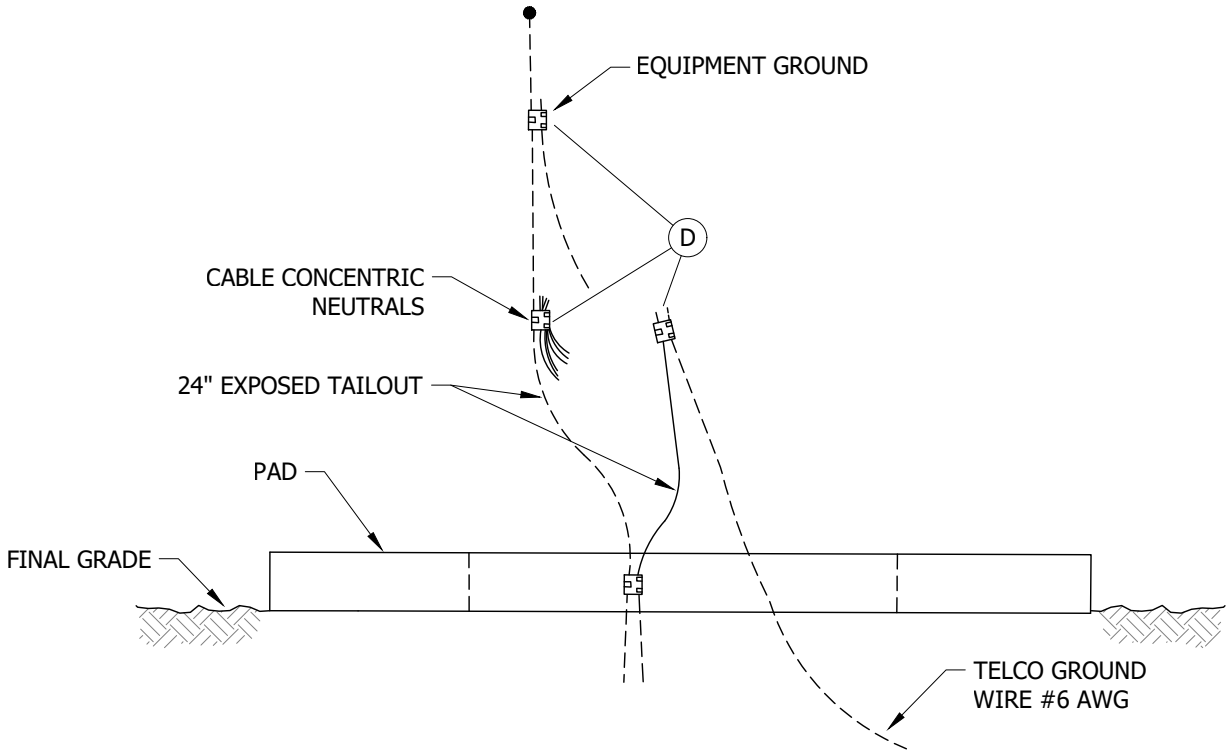

FIGURE 1

INSTALLATION:

A. SDG&E HAS AGREED TO CONNECT TELCO #6 AWG COPPER GROUND WIRE TO SDG&E'S GROUNDING SYSTEM AT SDG&E'S PAD MOUNTED EQUIPMENT. TELCO PERSONNEL WILL RUN THIS TO SDG&E'S PAD LOCATION BEFORE THE PAD IS SET.

B. IN SOME CASES, TELCO MAY INSTALL THEIR GROUND WIRE IN AN IDENTIFIED GROUND WIRE CONDUIT. IF THE CONDUIT IS PRESENT, ONE OF THE FOLLOWING CONDITIONS MUST BE MET:

1. TELCO GROUND WIRE MUST BE PRESENT.
2. IF TELCO GROUND WIRE IS NOT PRESENT, TELCO SHOULD HAVE IDENTIFIED THE CONDUIT AND SEALED IT WITH A PERMANENT CAP.
3. IF TELCO GROUND WIRE IS NOT PRESENT AND TELCO CONDUIT IS NOT SEALED, SDG&E SHOULD CUT OFF THE CONDUIT BELOW GRADE LEVEL TO PREVENT FUTURE UNAUTHORIZED WIRE ENTRY. SDG&E NEED NOT CAP THE TELCO CONDUIT.

C. WHEN COMPLETING THE SDG&E EQUIPMENT GROUNDING CONNECTIONS, SKIN THE TELCO WIRE AND CONNECT IT TO AN SDG&E GROUND GRID TAILOUT AS SHOWN IN FIGURE 1.

(D) USE COMPRESSION CONNECTORS. (c)

BILL OF MATERIALS: NONE

NOTES: NONE

REFERENCE:

a. SEE UG4512 FOR EQUIPMENT GROUNDING.

b. AVAILABLE IN SERVICE STANDARDS AND GUIDE MANUAL.

(c) SEE UG4174 FOR COMPRESSION CONNECTORS.

© 1998 - 2021 San Diego Gas & Electric Company. All rights reserved. Removal of this copyright notice without permission is not permitted under law.

REV	CHANGE	DR	BY	DSN	APV	DATE	REV	CHANGE	DR	BY	DSN	APV	DATE
C							F						
B	FORMATTING	EDM	JIK	-	-	06/18/2021	E						
A	NO CHANGES - REAFFIRMED	-	JS	TR	MDJ	5/23/2016	D						

X Indicates Latest Revision | Completely Revised | New Page | Information Removed

SDG&E ELECTRIC UNDERGROUND CONSTRUCTION STANDARDS

SHEET 1 OF 1

GROUNDING TELCO CONDUCTOR IN PAD MOUNTED EQUIPMENT

UG4514.1

SCOPE: THIS STANDARD SHOWS GROUNDING INSTALLATIONS USED TO PROVIDE PAD MOUNTED EQUIPMENT GROUNDING.

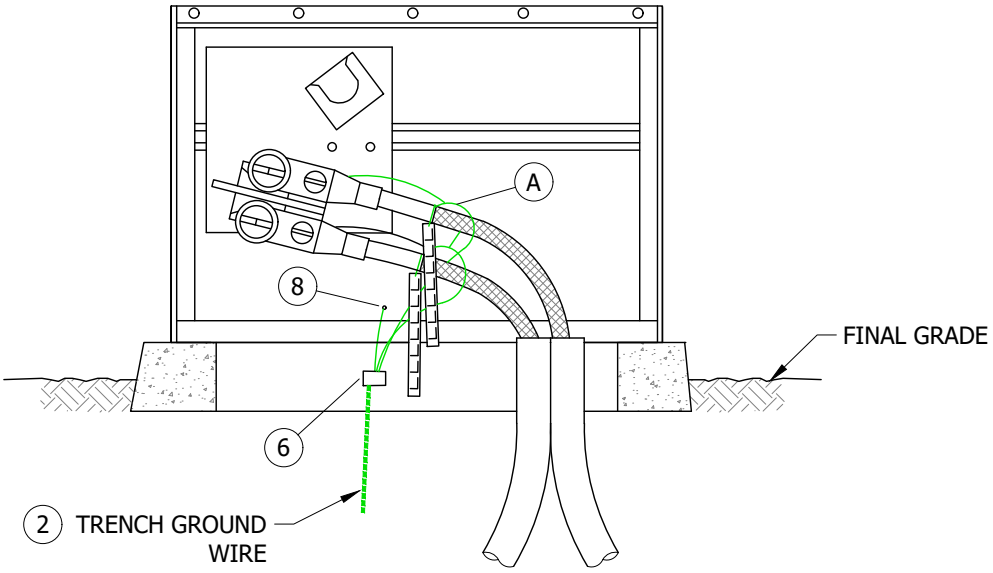

FIGURE 1
3522 SINGLE-PHASE CABLE TERMINATOR
FEED THROUGH BUSHING INSTALLATION

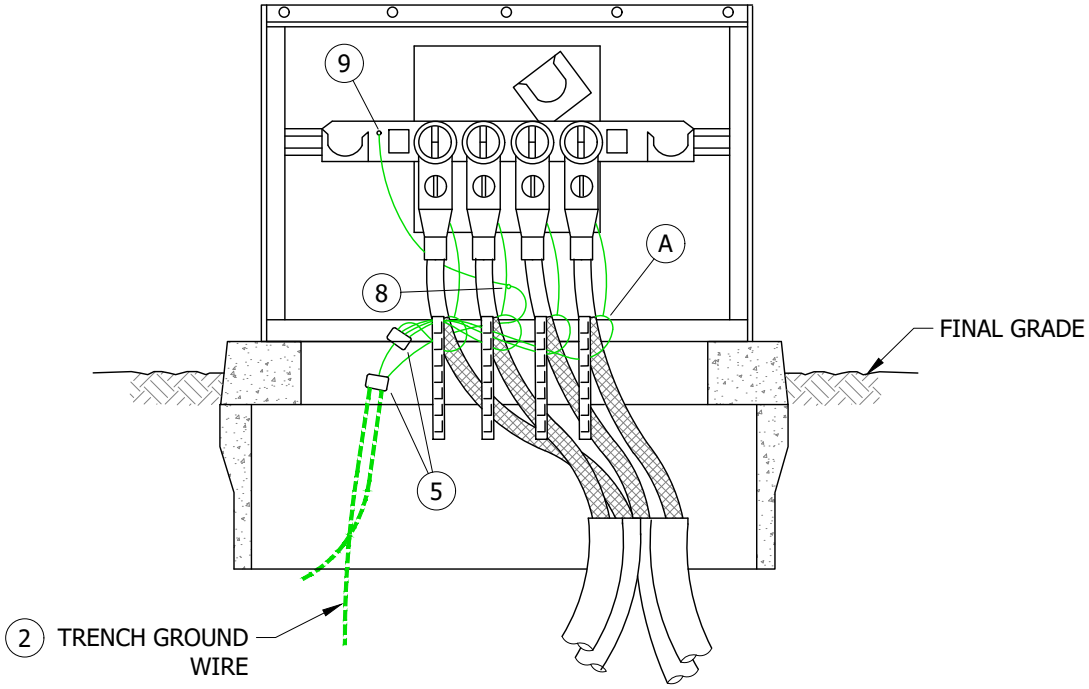

FIGURE 2
3522 SINGLE-PHASE CABLE TERMINATOR
CABLE TAP INSTALLATION
NEW TAGS

TABLE OF CONTENTS

© 1998 - 2021 San Diego Gas & Electric Company. All rights reserved. Removal of this copyright notice without permission is not permitted under law.

REV	CHANGE	DR	BY	DSN	APV	DATE	REV	CHANGE	DR	BY	DSN	APV	DATE
C	FORMATTING	EDM	JIK	-	-	06/18/2021	F						
B	EDITORIAL CHANGES	-	SL	JS	CZH	9/4/2018	E						
A	EDITORIAL CHANGES	-	JC	TR	-	5/20/2015	D						

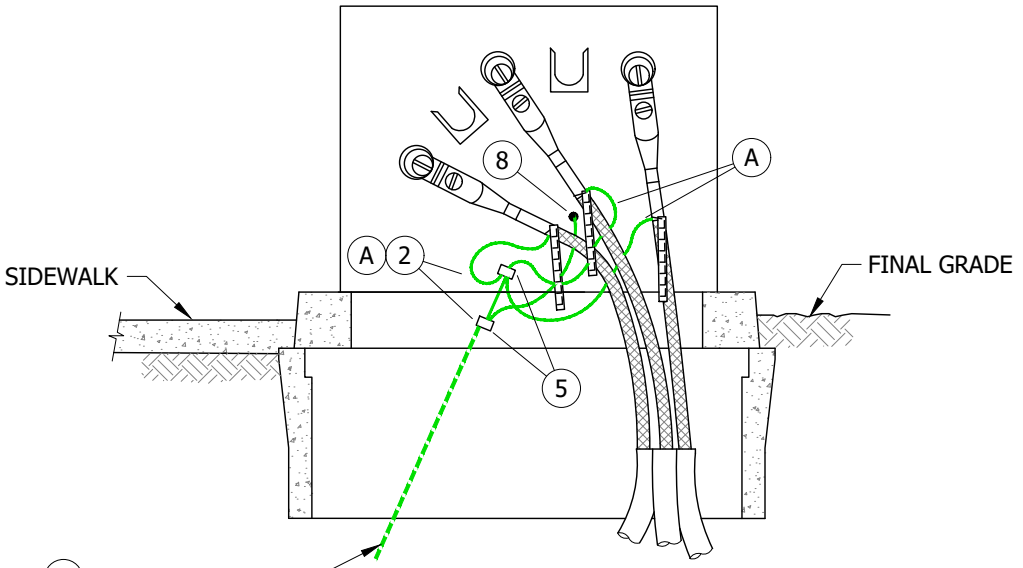

FIGURE 3
3512 SINGLE-PHASE
FUSED SWITCHING CABINET

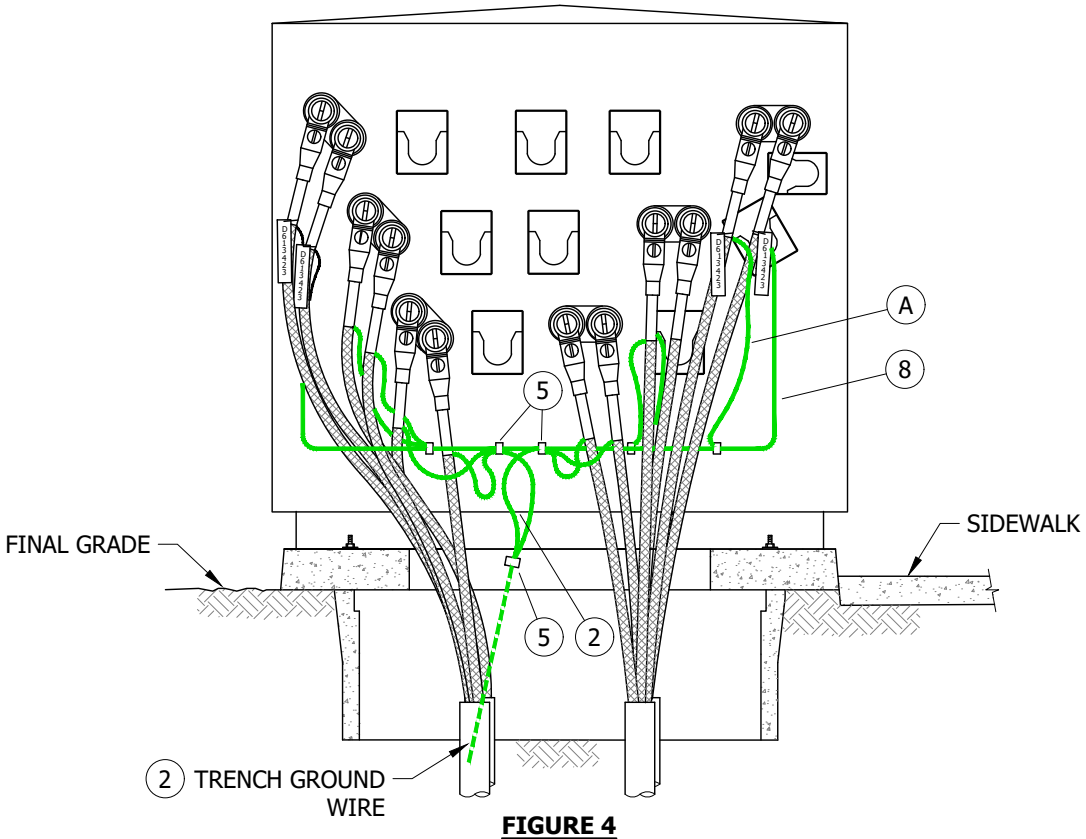

FIGURE 4
3514 THREE-PHASE
FUSED SWITCHING CABINET

© 1998 - 2021 San Diego Gas & Electric Company. All rights reserved. Removal of this copyright notice without permission is not permitted under law.

REV	CHANGE	DR	BY	DSN	APV	DATE	REV	CHANGE	DR	BY	DSN	APV	DATE
C	FORMATTING	EDM	JIK	-	-	06/18/2021	F						
B	EDITORIAL CHANGES	-	SL	JS	CZH	9/4/2018	E						
A	EDITORIAL CHANGES	-	JC	TR	-	5/20/2015	D						

TABLE OF CONTENTS

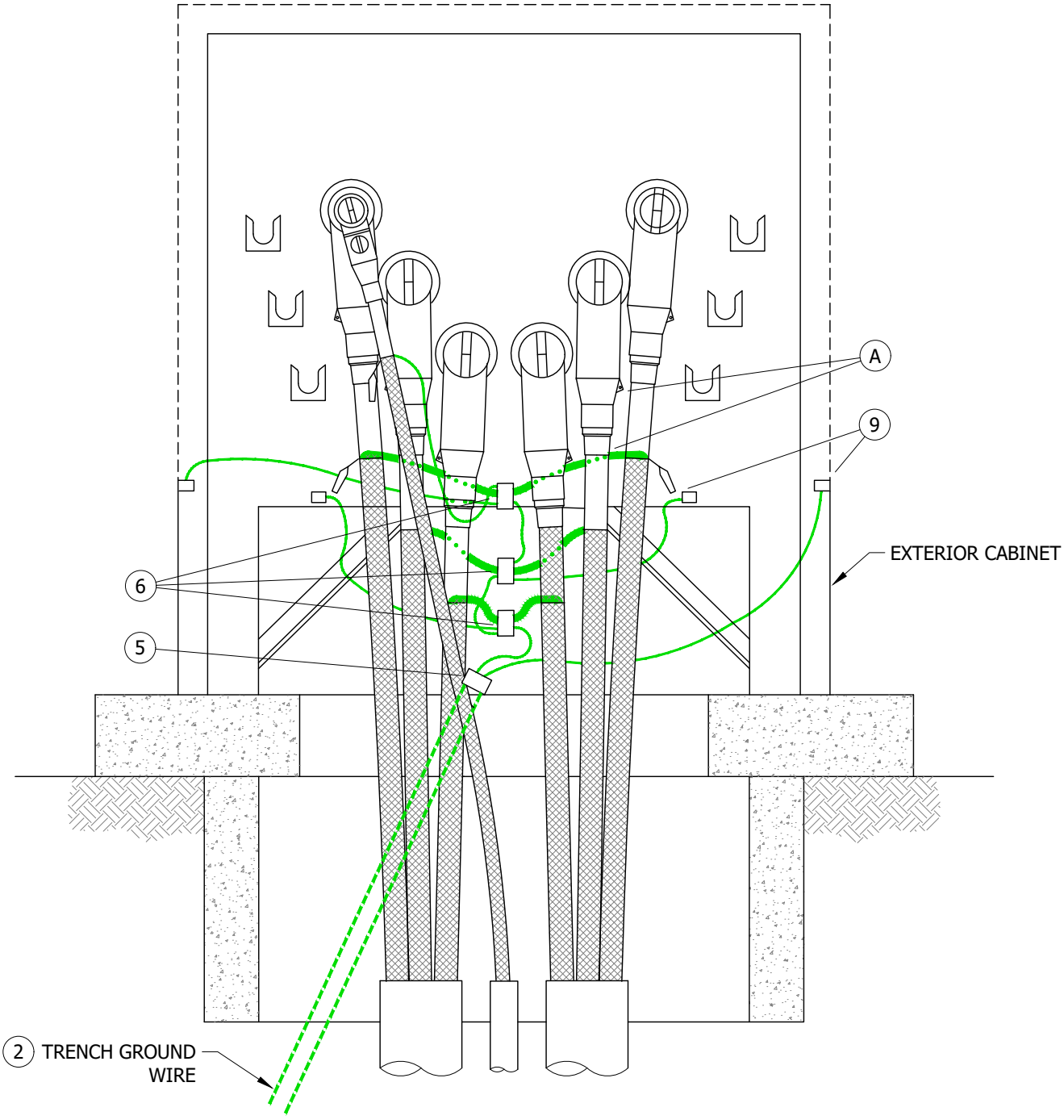

FIGURE 5
3575/3576 THREE-PHASE SERVICE RESTORER

© 1998 - 2021 San Diego Gas & Electric Company. All rights reserved. Removal of this copyright notice without permission is not permitted under law.

REV	CHANGE	DR	BY	DSN	APV	DATE	REV	CHANGE	DR	BY	DSN	APV	DATE
C	FORMATTING	EDM	JIK	-	-	06/18/2021	F						
B	EDITORIAL CHANGES	-	SL	JS	CZH	9/4/2018	E						
A	EDITORIAL CHANGES	-	JC	TR	-	5/20/2015	D						

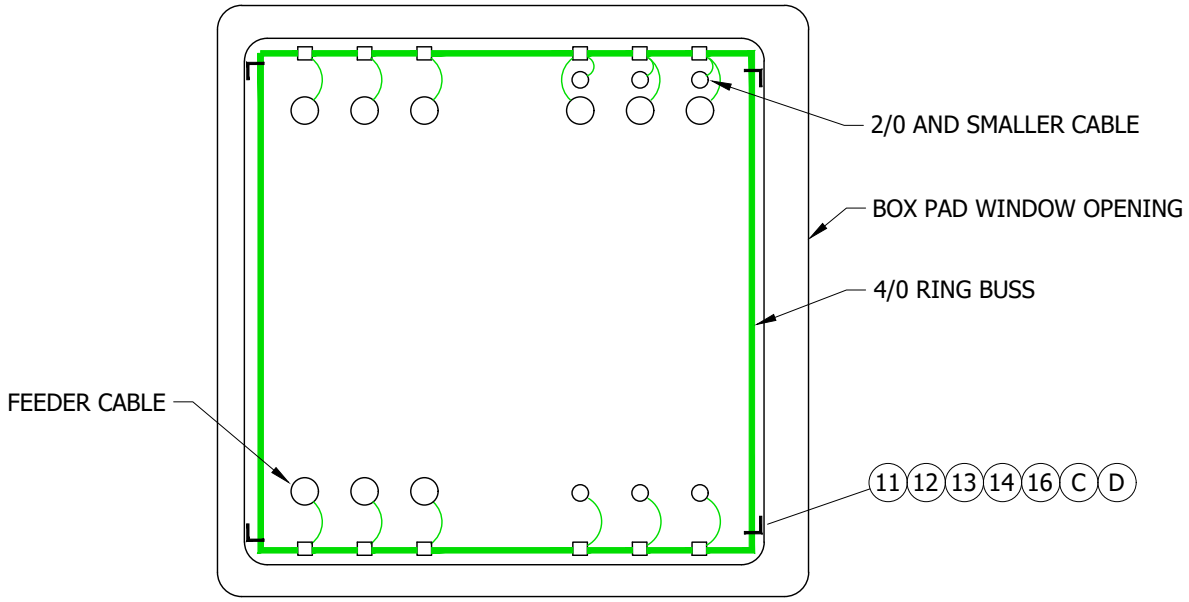

FIGURE 6
PLAN VIEW

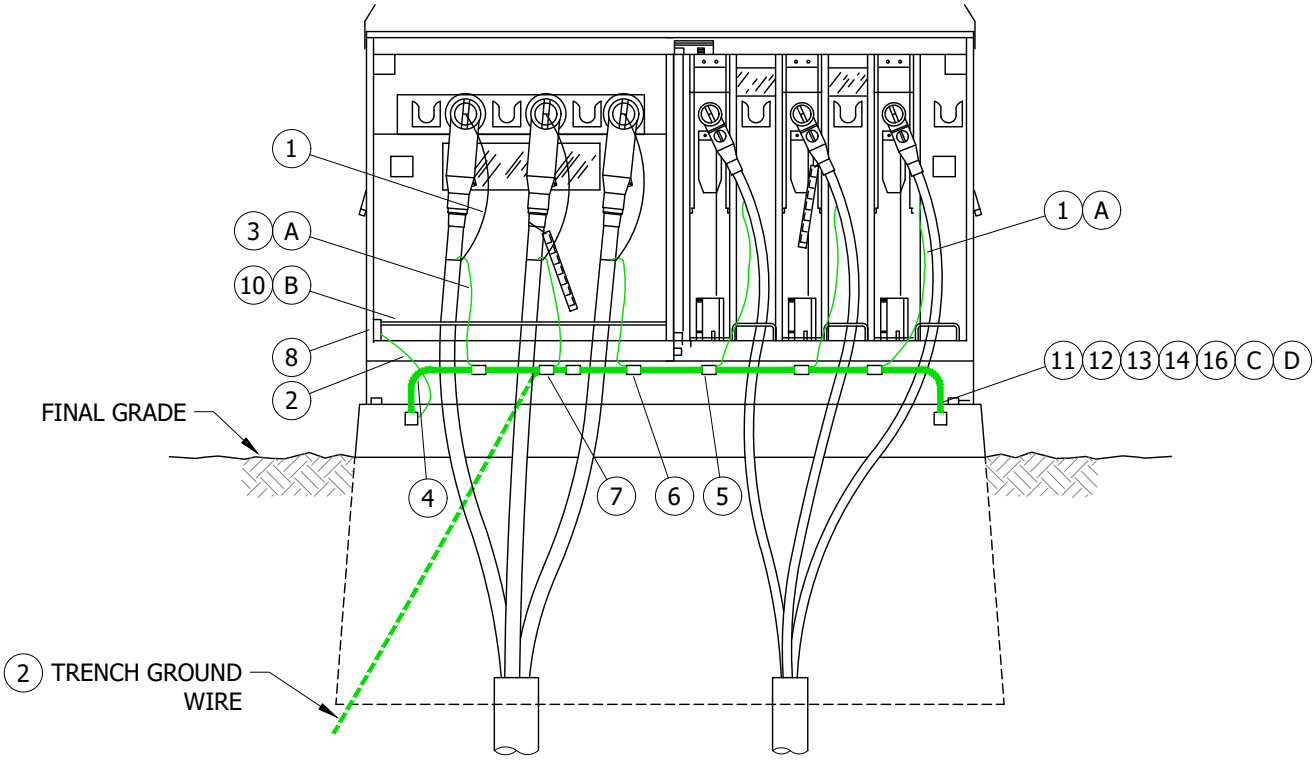

FIGURE 6
FRONT VIEW

© 1998 - 2021 San Diego Gas & Electric Company. All rights reserved. Removal of this copyright notice without permission is not permitted under law.

REV	CHANGE	DR	BY	DSN	APV	DATE	REV	CHANGE	DR	BY	DSN	APV	DATE
C	FORMATTING	EDM	JIK	-	-	06/18/2021	F						
B	EDITORIAL CHANGES	-	SL	JS	CZH	9/4/2018	E						
A	EDITORIAL CHANGES	-	JC	TR	-	5/20/2015	D						

TABLE OF CONTENTS

INSTALLATION:

(A) CONCENTRIC NEUTRAL TAILS OR EQUIVALENT WIRE SIZE PER PHASE. (j)

(B) GROUNDING RODS ARE FOR PERSONAL GROUNDS ONLY. MAKE NO PERMANENT CONNECTIONS ON THIS DEVICE.

(C) INSTALL ONE UNISTRUT CHANNEL FITTING IN EACH CORNER OF THE BOX PAD. MOUNT THE FITTING ON THE VERTICAL SURFACE INSIDE OF THE WINDOW.

(D) INSTALL THE 4/0 COPPER WIRE IN THE CHANNEL FITTINGS. "DO NOT INSTALL EYE BOLT TO TIGHTEN RING BUSS".

BILL OF MATERIALS:

ITEM	DESCRIPTION	QUANTITY	STANDARD PAGE	STOCK NUMBER	DESIGN UNITS
1	CU, SOLID, #14 (OR SURPLUS STRAND OF CONCENTRIC NEUTRAL)	AS REQ'D	--	--	--
2	WIRE, BARE COPPER, SOFT DRAWN, #2, 7 STR. (i)	AS REQ'D	--	S812818 (X)	GDWIRE
3	WIRE, BARE COPPER, SOFT DRAWN, 1/0 STR. (i)	AS REQ'D	--	S812752	--
4	WIRE, BARE COPPER, SOFT DRAWN, 4/0 STR. (i)	AS REQ'D	--	S812764	4/0-SD
5	CONNECTOR, COMPRESSION, 4/0 - #4	AS REQ'D	--	S257888	--
6	CONNECTOR, COMPRESSION, 4/0 - 1/0	AS REQ'D	--	S257856	--
7	CONNECTOR, COMPRESSION, 4/0 - 4/0	AS REQ'D	--	S257824	--
8	CONNECTOR, SERVICE POST	AS REQ'D	--	S262560	--
9	CONNECTOR, GROUND, PROVIDED WITH EQUIPMENT	--	--	--	--
10	ROD, GROUNDING	BY MFG	--	S230018 (X)	--
11	BRACKET, STAINLESS STEEL, 2", C 3"	AS REQ'D	--	S166072	--
12	SCREW, HEX HEAD CAP, BRONZE, 1/2" X 1 1/2"	4	--	S616692	--
13	NUT, HEXAGON, BRONZE, 1/2"	4	--	S506112	--
14	WASHER, STANDARD, FLAT ROUND, BRONZE, 1/2"	8	--	S799488	--
15	WIRE, TRENCH GROUND (I)	AS REQ'D	--	--	--
16	WASHER, LOCK, SILICONE, BRONZE, 1/2"	4	--	S796416	--

NOTES:

(I) NOT SHOWN ON FIGURES.

(X) THIS ITEM IS EXEMPT.

REFERENCE:

a. SEE UG4108 FOR SEALING JACKETED CABLE.

b. SEE UG4174 AND UG4176 FOR CONCENTRIC NEUTRAL/COMPRESSION CONNECTOR APPLICATION CHART AND COPPER COMPRESSION CONNECTORS.

c. SEE UG4510 FOR STANDARD AND ALTERNATE TRENCH GROUND WIRE INSTALLATION.

d. SEE UG4512 FOR EQUIPMENT GROUNDING INSTALLATION.

e. SEE UG4521 FOR NEUTRAL AND GROUND WIRE SCHEMATIC DIAGRAM.

f. SEE UG4514 FOR GROUNDING TELCO CONDUCTOR IN PAD MOUNTED EQUIPMENT.

g. SEE UG4525 FOR CONCENTRIC NEUTRAL TERMINATIONS AND GROUNDING PREMOLDED CONNECTORS.

h. SEE UG4530 FOR NEUTRAL AND GROUND WIRE SCHEMATIC DIAGRAM.

(i) SEE UG4003 (PREVIOUS # UG4002.2) FOR WIRE INFORMATION.

(j) SEE UG4176 FOR EQUIVALENT WIRE SIZE.

TABLE OF CONTENTS

© 1998 - 2021 San Diego Gas & Electric Company. All rights reserved. Removal of this copyright notice without permission is not permitted under law.

REV	CHANGE	DR	BY	DSN	APV	DATE	REV	CHANGE	DR	BY	DSN	APV	DATE
C	FORMATTING	EDM	JIK	-	-	06/18/2021	F						
B	EDITORIAL CHANGES	-	SL	JS	CZH	9/4/2018	E						
A	EDITORIAL CHANGES	-	JC	TR	-	5/20/2015	D						

SCOPE: THIS STANDARD SHOWS GROUNDING INSTALLATION FOR JUNCTION PLATES.

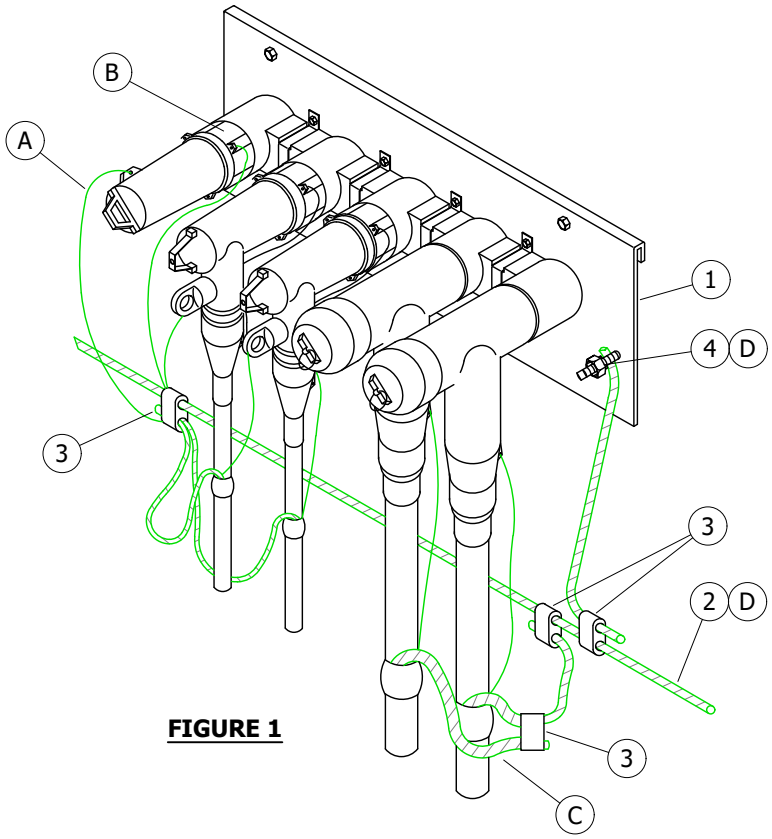

FIGURE 1

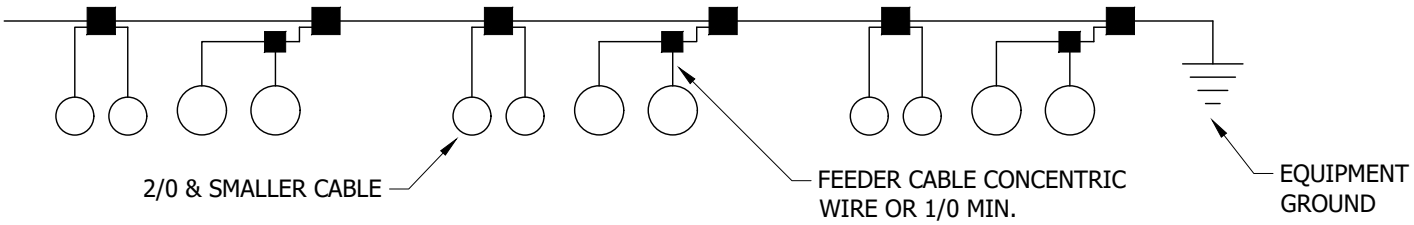

FIGURE 2
600A TO 200A JUNCTION

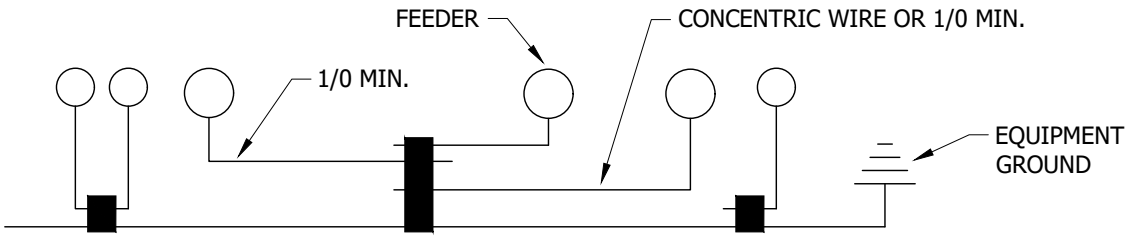

FIGURE 3

© 1998 - 2021 San Diego Gas & Electric Company. All rights reserved. Removal of this copyright notice without permission is not permitted under law.

REV	CHANGE	DR	BY	DSN	APV	DATE	REV	CHANGE	DR	BY	DSN	APV	DATE
C	FORMATTING	EDM	JIK	-	-	06/18/2021	F						
B	EDITORIAL CHANGES	-	SL	JS	CZH	9/4/2018	E						
A	EDITORIAL CHANGES	-	JC	TR	-	5/20/2015	D						

INSTALLATION:

(A) GROUND EACH PREMOLDED CONNECTOR ON OR IN THE GROUNDING POINT PROVIDED ON CONNECTOR. LOOP WIRE THRU THE GROUNDING EYE AND TWIST THE WIRE TIGHTLY AROUND ITSELF TAKING CARE NOT TO DAMAGE THE EYE.

(B) GROUND BUSHING PLUGS TO EQUIPMENT GROUND.

(C) CONNECT LIKE PHASE CONCENTRIC NEUTRALS OF FEEDER CABLES TOGETHER. CONNECT CONCENTRIC NEUTRALS TO EQUIPMENT GROUND.

(D) CONNECT THE EQUIPMENT GROUND TO THE EXISTING GROUND RODS IN THE 3314 HANDHOLE.

BILL OF MATERIALS:

ITEM	DESCRIPTION	QUANTITY	STANDARD PAGE	STOCK NUMBER	DESIGN UNITS
1	PLATE, JUNCTION	3	--	--	--
2	WIRE, BARE COPPER, #2, STR. SOFT DRAWN	AS REQ'D	--	S812818 (X)	GDWIRE
3	CONNECTOR, COPPER, SIZE	AS REQ'D	--	--	--
4	CONNECTOR, SERVICE POST	AS REQ'D	--	S262560	--

NOTES:

(X) THIS ITEM IS EXEMPT.

REFERENCE: NONE

TABLE OF CONTENTS

© 1998 - 2021 San Diego Gas & Electric Company. All rights reserved. Removal of this copyright notice without permission is not permitted under law.

REV	CHANGE	DR	BY	DSN	APV	DATE	REV	CHANGE	DR	BY	DSN	APV	DATE
C	FORMATTING	EDM	JIK	-	-	06/18/2021	F						
B	EDITORIAL CHANGES	-	SL	JS	CZH	9/4/2018	E						
A	EDITORIAL CHANGES	-	JC	TR	-	5/20/2015	D						

X Indicates Latest Revision | Completely Revised | New Page | Information Removed

SDG&E ELECTRIC UNDERGROUND CONSTRUCTION STANDARDS

GROUNDING PAD MOUNTED EQUIPMENT
JUNCTION PLATE

UG4520.7

SCOPE: THIS STANDARD SHOWS THE GROUNDING INSTALLATION USED TO PROVIDE TRAYER PAD MOUNTED EQUIPMENT GROUNDING.

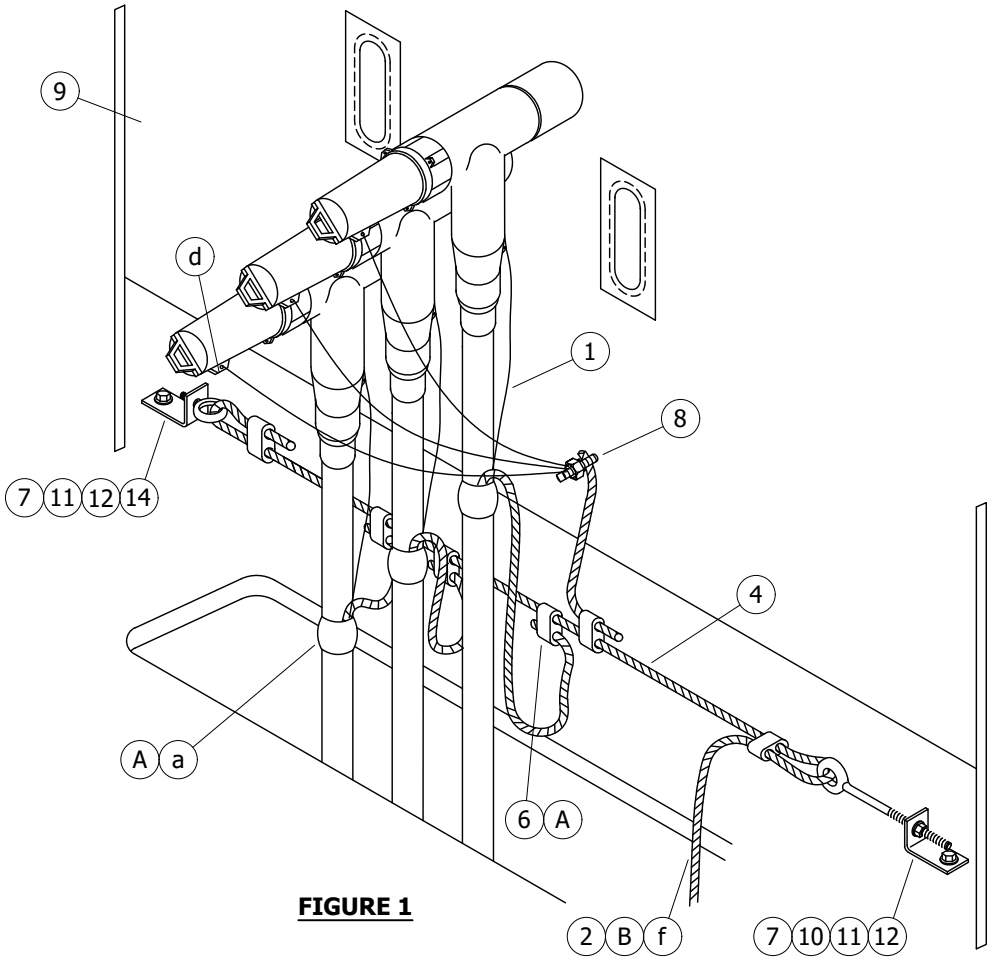

FIGURE 1

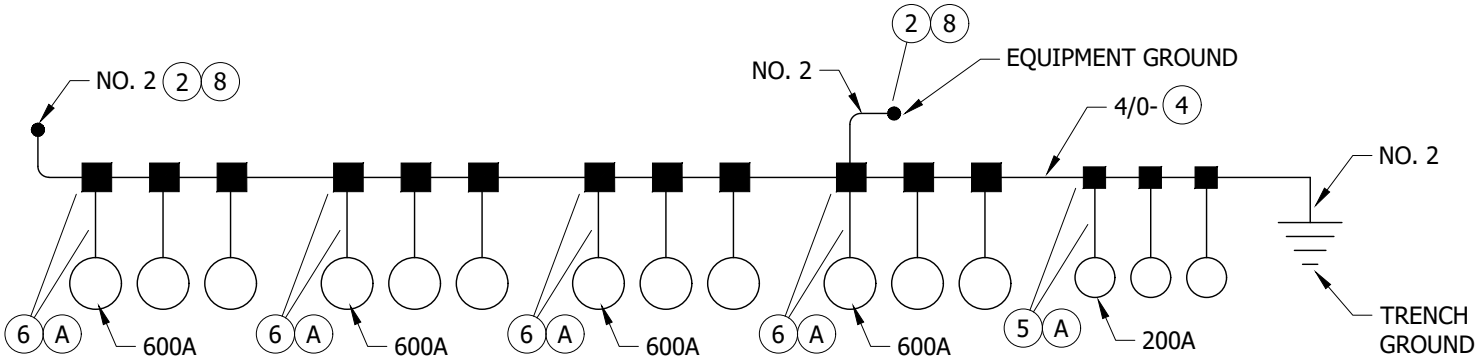

FIGURE 2
NEUTRAL AND GROUND SCHEMATIC FOR 4-WAY MANUAL,
4-WAY SCADA, AND 5-WAY SCADA TRAYER PAD MOUNTED SWITCHES.
600A / 200A JUNCTION

© 1998 - 2021 San Diego Gas & Electric Company. All rights reserved. Removal of this copyright notice without permission is not permitted under law.

REV	CHANGE	DR	BY	DSN	APV	DATE	REV	CHANGE	DR	BY	DSN	APV	DATE
C	MOVED FROM UG4520	EDM	JIK	-	-	06/18/2021	F						
B	EDITORIAL CHANGES	-	SL	JS	CZH	9/4/2018	E						
A	EDITORIAL CHANGES	-	JC	TR	-	5/20/2015	D						

X Indicates Latest Revision | Completely Revised | New Page | Information Removed

SDG&E ELECTRIC UNDERGROUND CONSTRUCTION STANDARDS

GROUNDING TRAYER PAD MOUNTED EQUIPMENT

SHEET 1 OF 2

UG4521.1

TABLE OF CONTENTS

INSTALLATION:

(A) CONCENTRIC NEUTRAL TAILS OR EQUIVALENT WIRE SIZE PER PHASE. (g)

(B) GROUND SOURCE MAY BE TRENCH GROUND OR GROUND FROM SUB-STRUCTURE.

BILL OF MATERIALS:

ITEM	DESCRIPTION	QUANTITY	STANDARD PAGE	STOCK NUMBER	DESIGN UNITS
1	STRAND, #14 SOLID CU OR CONCENTRIC NEUTRAL SURPLUS	AS REQ'D	--	--	--
2	WIRE, BARE COPPER, SOFT-DRAWN, #2, 7 STR. (f)	AS REQ'D	--	S812818 (X)	GDWIRE
3	WIRE, BARE COPPER, SOFT-DRAWN, 1/0 STR. (I) (f)	AS REQ'D	--	S812752	--
4	WIRE, BARE COPPER, SOFT-DRAWN, 4/0 STR. (f)	AS REQ'D	--	S812764	4/0-SD
5	CONNECTOR, COMPRESSION, 4/0 - #4	AS REQ'D	--	S257888	--
6	CONNECTOR, COMPRESSION, 4/0 - 1/0	AS REQ'D	--	S257856	--
7	CONNECTOR, COMPRESSION, 4/0 - 4/0	AS REQ'D	--	S257824	--
8	CONNECTOR, SERVICE POST	AS REQ'D	--	S262560	--
9	SWITCH, TRAYER	AS REQ'D	--	--	--
10	EYE BOLT, STAINLESS STEEL, 6" X 1/2"	1	--	S150528	--
11	BRACKET, STAINLESS STEEL, 2" X 3"	2	--	S166072	--
12	BOLT, STAINLESS, 3 1/2" X 1/2"	4	--	S148804	--
13	WIRE, TRENCH GROUND (I)	AS REQ'D	--	--	--
14	EYE BOLT, STAINLESS STEEL, 1 1/2" X 1/2"	1	--	S152722 (X)	--

NOTES:

(I) NOT SHOWN ON FIGURES

(X) THIS ITEM IS EXEMPT.

REFERENCE:

(a) SEE UG4108 FOR SEALING JACKETED CABLE.

b. SEE UG4510 FOR STANDARD AND ALTERNATE TRENCH GROUND WIRE INSTALLATION.

c. SEE UG4512 FOR EQUIPMENT GROUNDING INSTALLATION.

(d) SEE UG4525 FOR CONCENTRIC NEUTRAL TERMINATIONS AND GROUNDING PREMOLDED CONNECTORS.

e. SEE UG4530 FOR NEUTRAL AND GROUND WIRE SCHEMATIC DIAGRAM.

(f) SEE UG4003 (PREVIOUS # UG4002.2) FOR WIRE INFORMATION.

(g) SEE UG4176 FOR EQUIVALENT WIRE SIZE.

TABLE OF CONTENTS

© 1998 - 2021 San Diego Gas & Electric Company. All rights reserved. Removal of this copyright notice without permission is not permitted under law.

REV	CHANGE	DR	BY	DSN	APV	DATE	REV	CHANGE	DR	BY	DSN	APV	DATE
C	MOVED FROM UG4520	EDM	JIK	-	-	06/18/2021	F						
B	EDITORIAL CHANGES	-	SL	JS	CZH	9/4/2018	E						
A	EDITORIAL CHANGES	-	JC	TR	-	5/20/2015	D						

SCOPE: THIS STANDARD SHOWS THE CONCENTRIC NEUTRAL TERMINATION AND THE GROUNDING OF PREMOLDED AND STRESS RELIEF CONNECTORS.

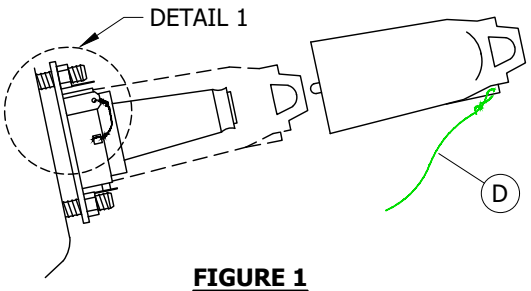

FIGURE 1
BUSHING PLUG AND
INSULATING RECEPTACLE

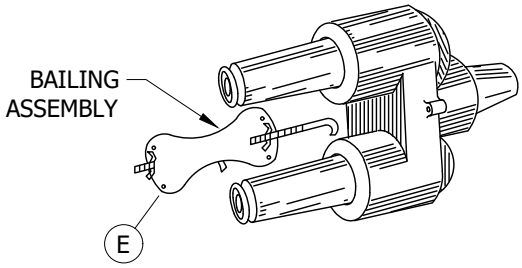

FIGURE 2

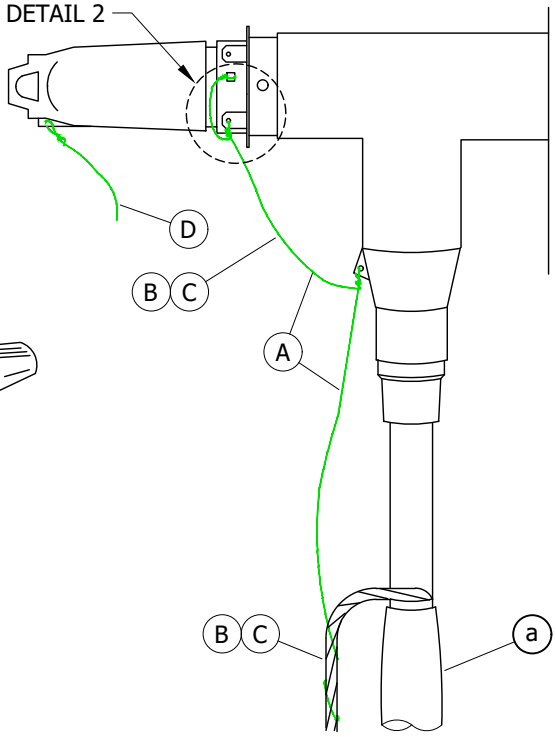

FIGURE 3
CABLE TERMINATION

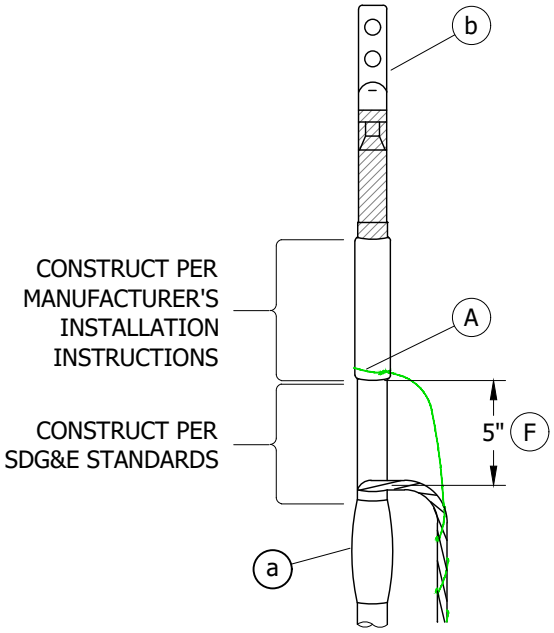

FIGURE 4
STRESS RELIEF KIT FOR
EXISTING FACILITIES
200A AND 600A CABLE

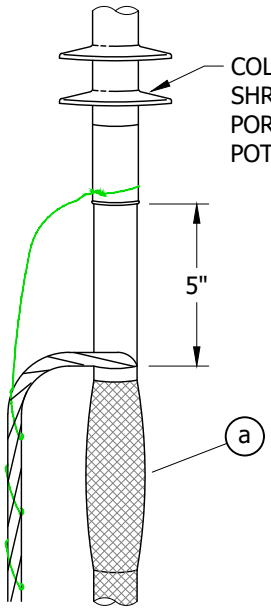

EXAMPLE 1
LIVEFRONT SWITCH
GEAR APPLICATION

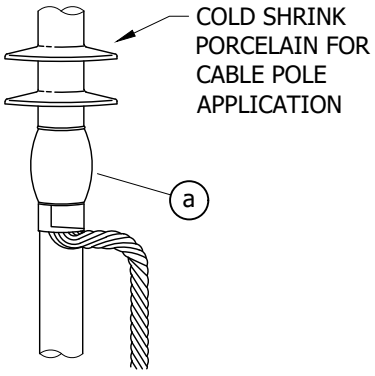

EXAMPLE 2
CABLE POLE
APPLICATION

FIGURE 5
200A & 600A CABLE

© 1998 - 2021 San Diego Gas & Electric Company. All rights reserved. Removal of this copyright notice without permission is not permitted under law.

REV	CHANGE	DR	BY	DSN	APV	DATE	REV	CHANGE	DR	BY	DSN	APV	DATE
C							F						
B	FORMATTING	EDM	JIK	-	-	06/18/2021	E						
A	REVISION	-	-	PSW	RDG	1/1/1996	D						

X Indicates Latest Revision | Completely Revised | New Page | Information Removed

SDG&E ELECTRIC UNDERGROUND CONSTRUCTION STANDARDS

CONCENTRIC NEUTRAL TERMINATIONS AND
GROUNDING PREMOLDED CONNECTORS

UG4525.1

TABLE OF CONTENTS

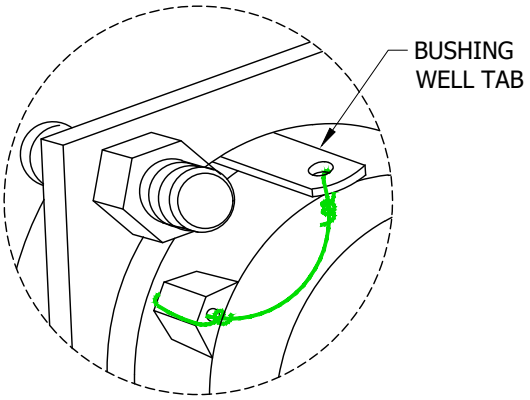

DETAIL 1

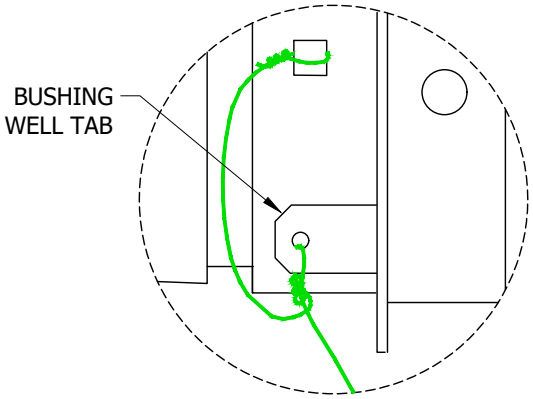

DETAIL 2

INSTALLATION:

(A) GROUND EACH PREMOLDED CONNECTOR ON OR IN THE GROUNDING POINT PROVIDED ON CONNECTOR. GROUND STRESS RELIEF KIT PER MANUFACTURER'S INSTALLATION INSTRUCTIONS. ONLY ONE GROUND FOR EACH CONNECTOR OR STRESS RELIEF KIT IS REQUIRED. USE A PIECE OF NO. 14 SOLID COPPER WIRE (STOCK NO. S812934) OR A SURPLUS STRAND OF CONCENTRIC NEUTRAL TAIL. DO NOT USE ANY CONCENTRIC NEUTRAL STRANDS ATTACHED TO THE CABLE UNLESS THE CABLE IS 2/0 OR 2 SOLID TRIPLEXED.

(B) ON PREMOLDED CONNECTORS MAKE A SMALL LOOP THRU THE GROUNDING EYE AND TWIST THE WIRE TIGHTLY AROUND ITSELF TAKING CARE NOT TO DAMAGE THE EYE.

(C) ON PREMOLDED CONNECTORS OR STRESS RELIEF KIT, WRAP THE WIRE AROUND THE CONCENTRIC NEUTRAL TAIL (WHEN TAIL IS AVAILABLE), OR TAKE THE WIRE DIRECTLY TO A COMPRESSION CONNECTOR OR TO THE BUSHING WELL TAB USE TO SECURE BAILING ASSEMBLIES. THE GROUND WIRE MAY LOOP FROM ONE CONNECTOR TO ANOTHER WHEN CONNECTORS ARE ASSEMBLED TOGETHER. THIS WILL ENSURE POSITIVE ELECTRICAL CONNECTIONS TO EACH END FOR GROUND RELIABILITY.

(D) ON LOADBREAK EQUIPMENT, LEAVE ENOUGH SLACK IN THE GROUNDING LEAD OR CONCENTRIC NEUTRAL TAIL FOR HOTSTICK OPERATION.

(E) CONNECTORS WITH BAILING ASSEMBLIES SHALL BE GROUNDED THE SAME AS DESCRIBED IN NOTE A IF A GROUNDING POINT IS PROVIDED ON CONNECTOR.

(F) WHEN INSTALLING STRESS RELIEF KITS IN EXISTING LIVEFRONT EQUIPMENT, INSTALL THE CONCENTRIC NEUTRAL AT THE SAME HEIGHT AS EXISTING CABLES AND DELETE THE 5-INCH MEASUREMENT.

BILL OF MATERIALS: NONE

NOTES:

I. GROUND ANY BUSHING PLUGS SUPPLIED WITH TRANSFORMERS, SWITCH CABINETS, ETC.

II. ALL CONCENTRIC NEUTRAL STRANDS ON ANY CABLE EVER PURCHASED BY SDG&E ARE NO. 14 OR LARGER.

REFERENCE:

(a) SEE UG4108 INSTRUCTIONS FOR SEALING JACKETED CABLE.

(b) SEE UG4122 FOR INDOOR CABLE TERMINATION, POLYETHYLENE CABLE.

c. SEE UG4176 FOR CONCENTRIC NEUTRAL SIZES.

TABLE OF CONTENTS

© 1998 - 2021 San Diego Gas & Electric Company. All rights reserved. Removal of this copyright notice without permission is not permitted under law.

REV	CHANGE	DR	BY	DSN	APV	DATE	REV	CHANGE	DR	BY	DSN	APV	DATE
C							F						
B	FORMATTING	EDM	JIK	-	-	06/18/2021	E						
A	REVISION	-	-	PSW	RDG	1/1/1996	D						

X Indicates Latest Revision | Completely Revised | New Page | Information Removed

SDG&E ELECTRIC UNDERGROUND CONSTRUCTION STANDARDS

CONCENTRIC NEUTRAL TERMINATIONS AND GROUNDING PREMOLDED CONNECTORS

UG4525.2

SCOPE: THIS STANDARD SHOWS SCHEMATIC DIAGRAMS FOR THE NEUTRAL AND GROUND WIRE USED FOR UNDERGROUND TERMINATIONS.

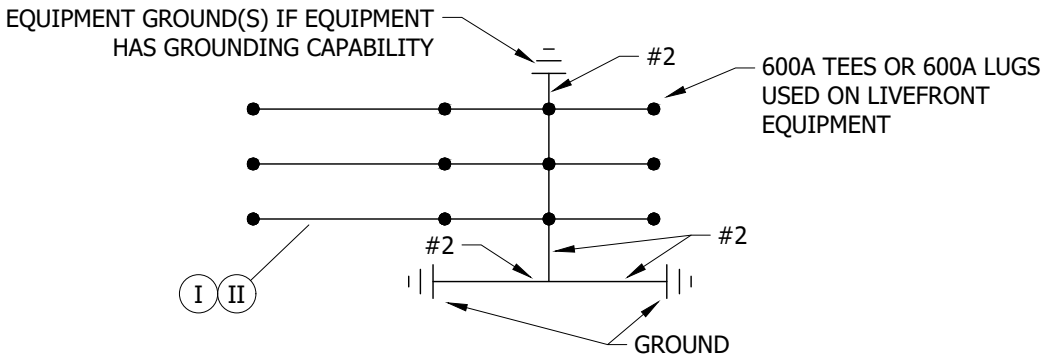

FIGURE 1
600A TEES OR 600A LUGS
PMH 5 SWITCH
SERVICE RESTORER

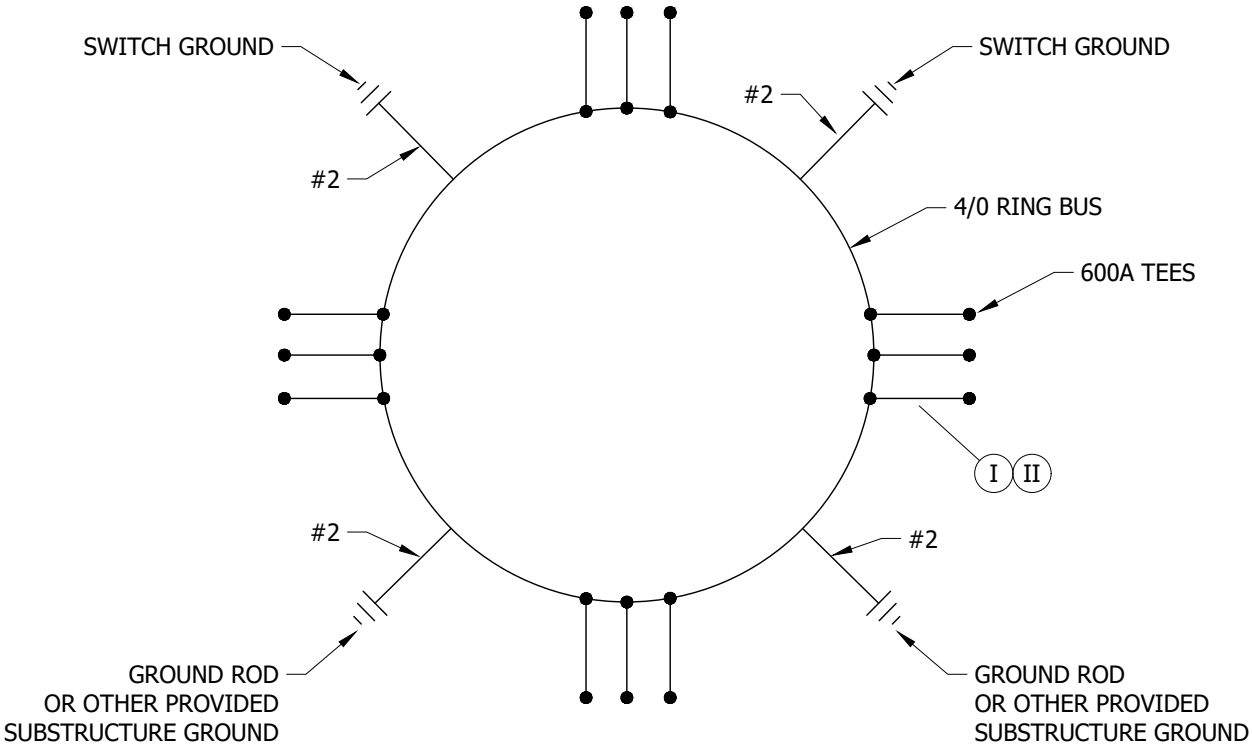

FIGURE 2
600A 4-WAY SWITCH, SUBSURFACE OR PAD MOUNTED
600A PMH OR PME 3, 5, 9, 10, 11 SWITCH, PAD MOUNTED
600A 3, 4, & 6 WAY VISTA

© 1998 - 2021 San Diego Gas & Electric Company. All rights reserved. Removal of this copyright notice without permission is not permitted under law.

REV	CHANGE	DR	BY	DSN	APV	DATE	REV	CHANGE	DR	BY	DSN	APV	DATE
C	FORMATTING	EDM	JIK	-	-	06/18/2021	F						
B	REVISION	-	-	-	RDW/VCR	3/1/2002	E						
A	REVISION	-	-	-	JLB/RDJ	1/1/1991	D						

X Indicates Latest Revision | Completely Revised | New Page | Information Removed

SDG&E ELECTRIC UNDERGROUND CONSTRUCTION STANDARDS

NEUTRAL AND GROUND WIRE
SCHEMATIC DIAGRAM

UG4530.1

TABLE OF CONTENTS

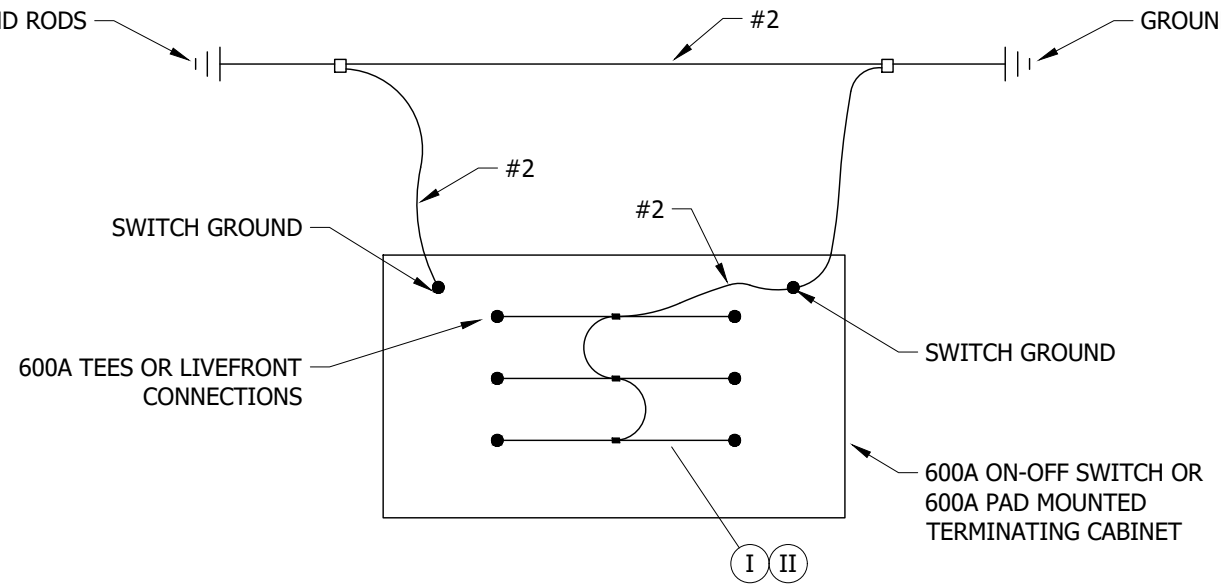

FIGURE 3
600A ON-OFF SWITCH, SUBSURFACE
600A PAD MOUNTED PMH 5 AIR BREAK SECTIONALIZING SWITCH

INSTALLATION:

A. WHEN THREE SETS OF TEES ARE REQUIRED FOR THE ON/OFF SWITCH, USE FIGURE 2.

BILL OF MATERIALS: NONE

NOTES:

(I) CONCENTRIC WIRE OR #2 FOR 350 KCMIL PER PHASE.

(II) CONCENTRIC WIRE OR 1/0 FOR 750 OR 1000 KCMIL PER PHASE.

REFERENCE: NONE

TABLE OF CONTENTS

© 1998 - 2021 San Diego Gas & Electric Company. All rights reserved. Removal of this copyright notice without permission is not permitted under law.

REV	CHANGE	DR	BY	DSN	APV	DATE	REV	CHANGE	DR	BY	DSN	APV	DATE
C	FORMATTING	EDM	JIK	-	-	06/18/2021	F						
B	REVISION	-	-	-	RDW/VCR	3/1/2002	E						
A	REVISION	-	-	-	JLB/RDJ	1/1/1991	D						

X Indicates Latest Revision | Completely Revised | New Page | Information Removed

SDG&E ELECTRIC UNDERGROUND CONSTRUCTION STANDARDS

NEUTRAL AND GROUND WIRE SCHEMATIC DIAGRAM

UG4530.2

SCOPE: THIS STANDARD SHOWS GROUNDING INSTALLATION USED TO PROVIDE GROUNDING FOR 200A CONNECTORS IN A 3313 HANDHOLE. USE THIS METHOD IF ALL PARTIES CANNOT MEET THE STANDARD TRENCH GROUND WIRE METHOD. (e)

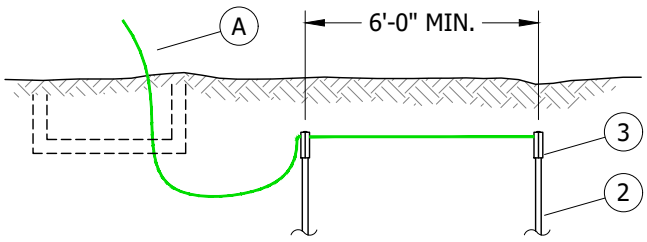

METHOD 1

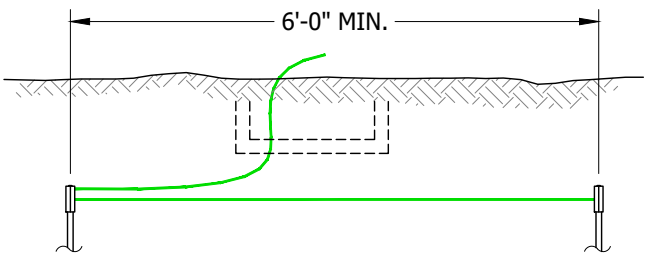

METHOD 2

FIGURE 1
METHOD FOR GROUNDING USING GROUNDING RODS (d)

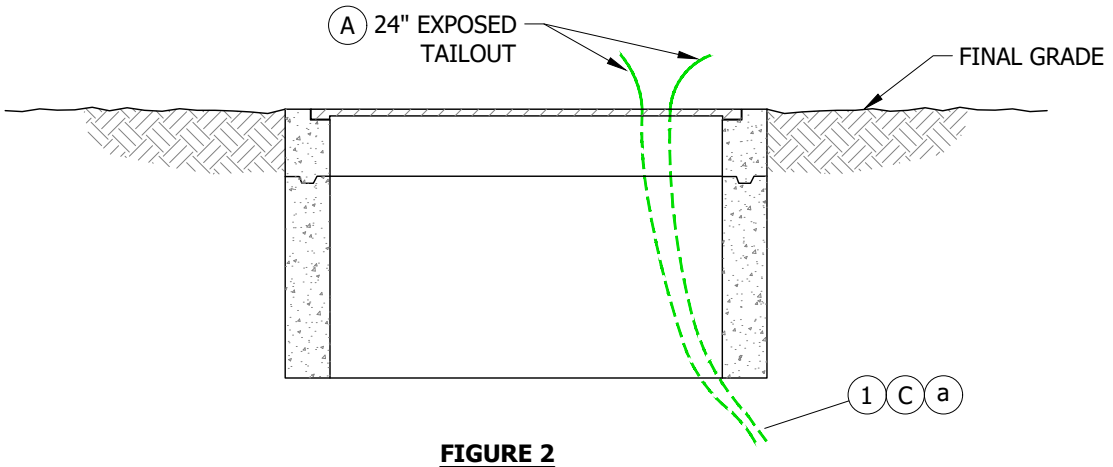

FIGURE 2
GROUND INSTALLATION BEFORE HANDHOLE IS SET

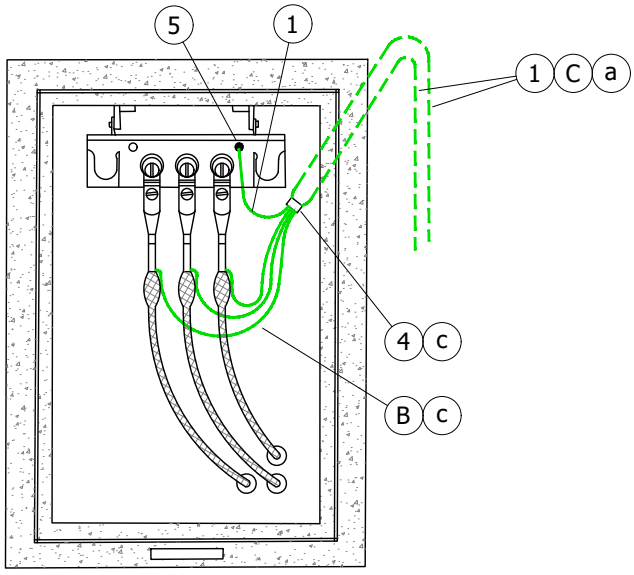

FIGURE 3
PLAN VIEW

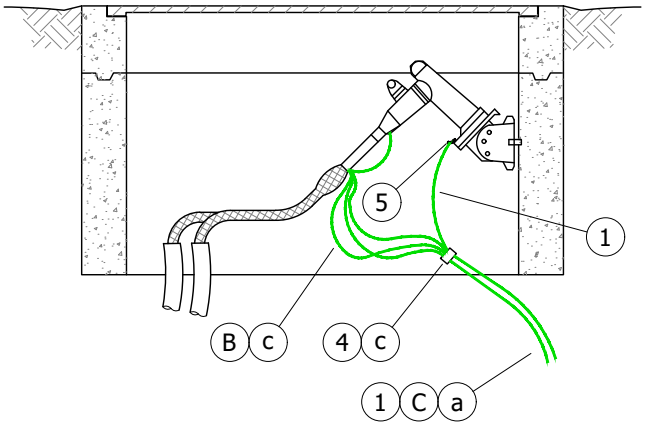

FIGURE 3
SIDE VIEW

© 1998 - 2021 San Diego Gas & Electric Company. All rights reserved. Removal of this copyright notice without permission is not permitted under law.

REV	CHANGE	DR	BY	DSN	APV	DATE	REV	CHANGE	DR	BY	DSN	APV	DATE
C							F						
B	FORMATTING	EDM	JIK	-	-	06/18/2021	E						
A	EDITORIAL CHANGES	-	JS	TR	MDJ	6/14/2016	D						

X Indicates Latest Revision | Completely Revised | New Page | Information Removed

SDG&E ELECTRIC UNDERGROUND CONSTRUCTION STANDARDS

GROUNDING SUBSTRUCTURES AND EQUIPMENT
3313

UG4540.1

TABLE OF CONTENTS

INSTALLATION:

(A) LEAVE 24 INCHES OF WIRE (EXPOSED TAILOUT) ABOVE THE TOP OF FINAL GRADE.

(B) INSTALL HANDHOLE GROUND AS SHOWN IN FIGURES.

(C) INSTALL STANDARD OR ALTERNATE TRENCH GROUND WIRE WHEN THE SAME PARTY IS RESPONSIBLE FOR THE CONDUIT AND HANDHOLE INSTALLATION. (a)

BILL OF MATERIALS:

ITEM	DESCRIPTION	QUANTITY	STANDARD PAGE	STOCK NUMBER	DESIGN UNITS	MACRO
1	WIRE, BARE COPPER, #2, 7 STRAND, SOFT DRAWN	AS REQ'D	4003	S812818 (X)	GDWIRE	G3313R
2	GROUND ROD, COPPERWELD, 5/8" X 8'-0"	2	--	S603074 (X)	--	
3	GROUND, BONDED, COPPER, CONNECTED	2	--	S259010	--	
4	CONNECTOR, COMPRESSION	AS REQ'D	4174.1	S257856	--	
5	CONNECTOR GROUND, PROVIDED WITH CABLE TAP	--	--	--	--	

NOTES:

(X) THIS ITEM IS EXEMPT.

REFERENCE:

(a) SEE UG4510 FOR STANDARD AND ALTERNATE TRENCH GROUND WIRE.

b. SEE UG4525 FOR CONCENTRIC NEUTRAL TERMINATIONS AND GROUNDING PREMOLDED CONNECTORS.

(c) SEE UG4176 FOR CONCENTRIC NEUTRAL/COMPRESSION CONNECTOR APPLICATION CHART AND COPPER COMPRESSION CONNECTORS.

(d) SEE UG4510 FOR ALTERNATIVE TRENCH GROUND WIRE METHOD.

(e) SEE UG4510 FOR STANDARD TRENCH GROUND WIRE METHOD.

TABLE OF CONTENTS

© 1998 - 2021 San Diego Gas & Electric Company. All rights reserved. Removal of this copyright notice without permission is not permitted under law.

REV	CHANGE	DR	BY	DSN	APV	DATE	REV	CHANGE	DR	BY	DSN	APV	DATE
C							F						
B	FORMATTING	EDM	JIK	-	-	06/18/2021	E						
A	EDITORIAL CHANGES	-	JS	TR	MDJ	6/14/2016	D						

SCOPE: THIS STANDARD SHOWS GROUNDING INSTALLATION USED TO PROVIDE GROUNDING FOR ALL 200A CONNECTORS IN A 3314 HANDHOLE.

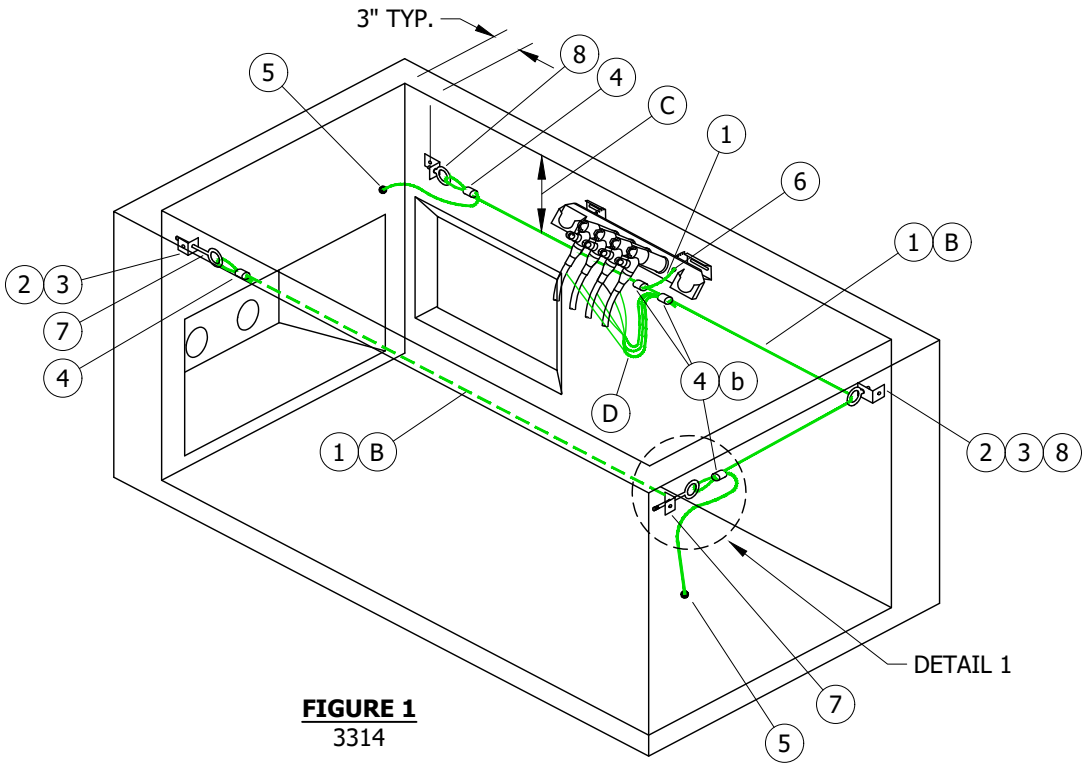

FIGURE 1
3314

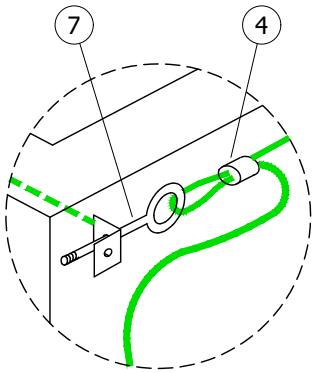

DETAIL 1

INSTALLATION:

A. INSTALL HANDHOLE GROUND AS SHOWN IN FIGURE 1.

(B) WHEN EQUIPMENT ON OPPOSITE WALL REQUIRES GROUNDING, INSTALL ONE CONTINUOUS WIRE AROUND THE HANDHOLE AND CONNECT THE GROUND WIRE AS SHOWN IN FIGURE 1, OTHERWISE ONLY INSTALL THE GROUND WIRE SHOWN AS A SOLID LINE IN FIGURE 1.

(C) INSTALL THE GROUND WIRE AT THE SAME LEVEL AS THE CONCENTRIC NEUTRAL TERMINATIONS ON THE CABLE.

(D) FOR CONCENTRIC NEUTRAL TAILS OR EQUIVALENT WIRE SIZE PER PHASE, SEE UG4176 FOR EQUIVALENT WIRE SIZE. (b)

© 1998 - 2021 San Diego Gas & Electric Company. All rights reserved. Removal of this copyright notice without permission is not permitted under law.

REV	CHANGE	DR	BY	DSN	APV	DATE	REV	CHANGE	DR	BY	DSN	APV	DATE
C							F						
B	FORMATTING	EDM	JIK	-	-	06/18/2021	E						
A	EDITORIAL CHANGES	-	JS	TR	MDJ	6/14/2016	D						

BILL OF MATERIALS:

ITEM	DESCRIPTION	QUANTITY	STANDARD PAGE	STOCK NUMBER	DESIGN UNITS
1	WIRE, BARE COPPER, #2, 7 STRAND, SOFT DRAWN	AS REQ'D	4003	S812818 (X)	--
2	BRACKET, STAINLESS STEEL, 2" X 3"	AS REQ'D	--	S166072	--
3	ANCHOR, CONCRETE, STAINLESS STEEL, 1/2" X 3 3/4"	AS REQ'D	4177	S107654	--
4	CONNECTOR, COMPRESSION	AS REQ'D	4174.1	S257760	--
5	CONNECTOR, SERVICE POST	2	--	S262560	--
6	CONNECTOR, GROUND, PROVIDED WITH CABLE TAP	--	--	--	--
7	EYE BOLT, STAINLESS STEEL, 1/2" X 6"	AS REQ'D	--	S150528	--
8	EYE BOLT, STAINLESS STEEL, 1/2" X 1 1/2"	AS REQ'D	--	S152722 (X)	--

NOTES:

(X) THIS ITEM IS EXEMPT.

REFERENCE:

a. SEE UG4525 FOR CONCENTRIC NEUTRAL TERMINATIONS AND GROUNDING PREMOLDED CONNECTORS.

(b) SEE UG4176 FOR CONCENTRIC NEUTRAL/COMPRESSION CONNECTOR APPLICATION CHART AND COPPER COMPRESSION CONNECTORS.

TABLE OF CONTENTS

© 1998 - 2021 San Diego Gas & Electric Company. All rights reserved. Removal of this copyright notice without permission is not permitted under law.

REV	CHANGE	DR	BY	DSN	APV	DATE	REV	CHANGE	DR	BY	DSN	APV	DATE
C							F						
B	FORMATTING	EDM	JIK	-	-	06/18/2021	E						
A	EDITORIAL CHANGES	-	JS	TR	MDJ	6/14/2016	D						

SCOPE: THIS STANDARD SHOWS GROUNDING INSTALLATION USED TO PROVIDE GROUNDING FOR ALL 200A AND 600A CONNECTORS IN A 3315 HANDHOLE.

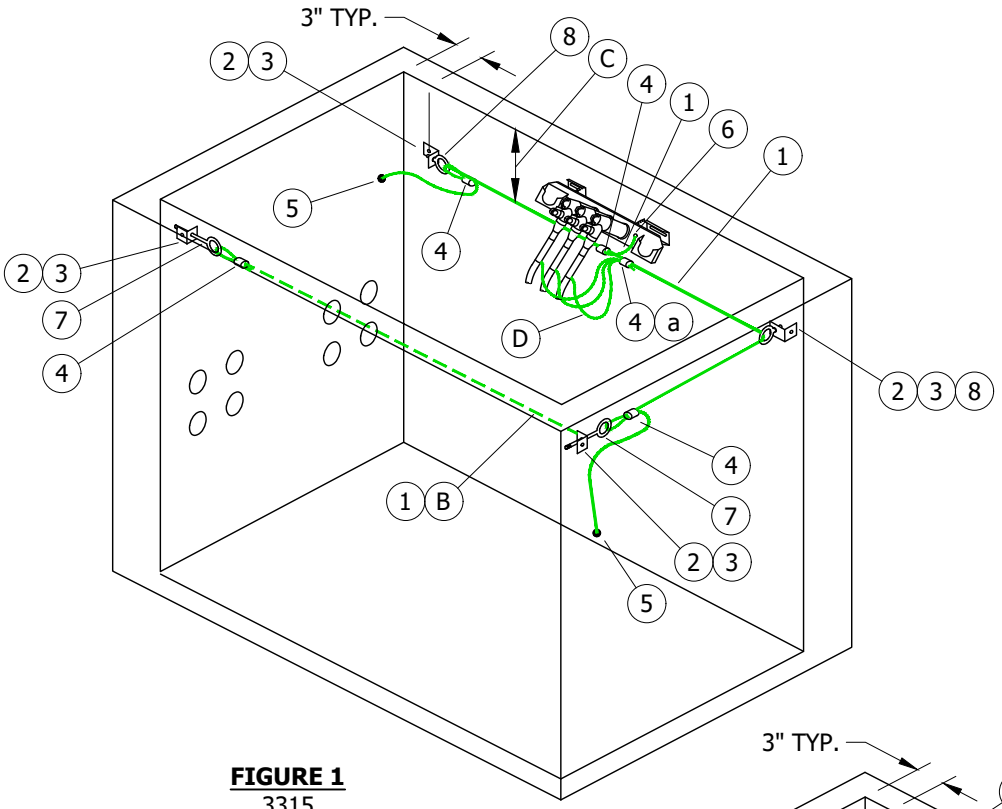

FIGURE 1
3315

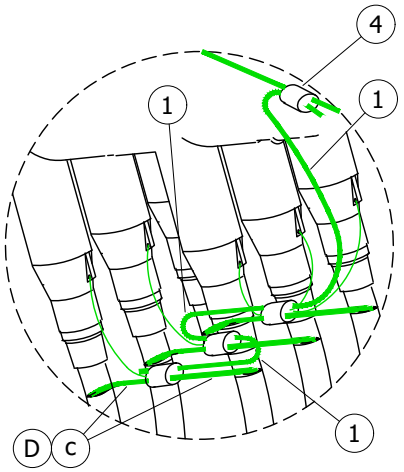

DETAIL 1

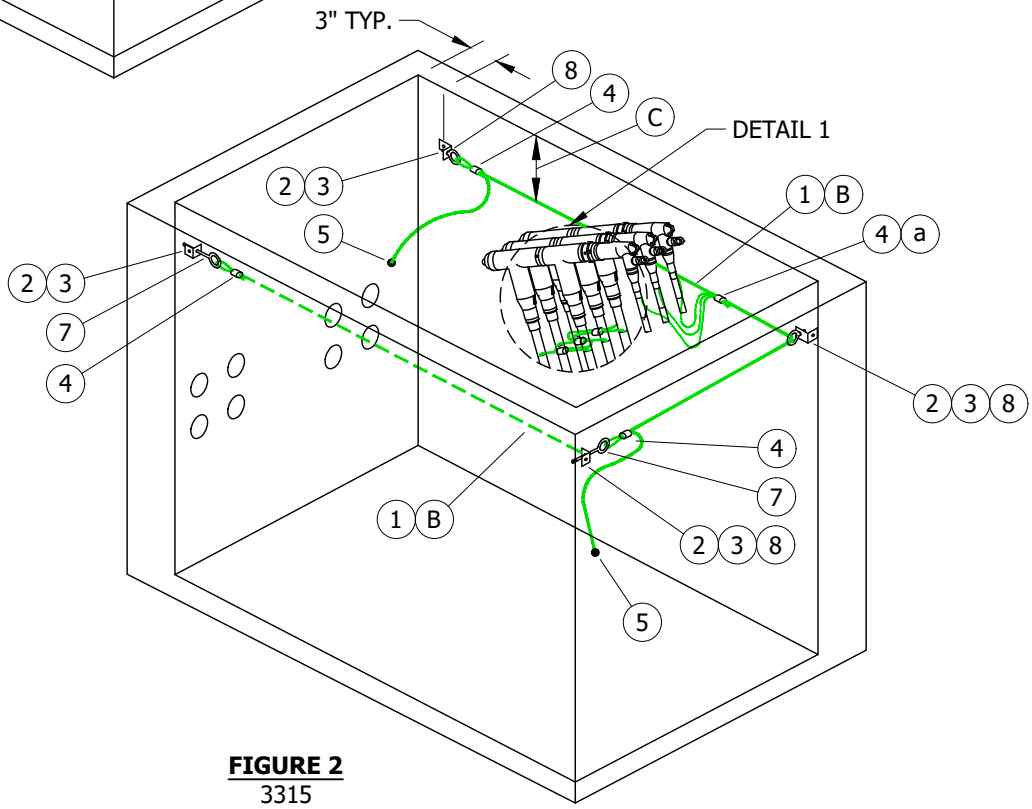

FIGURE 2
3315

TABLE OF CONTENTS

© 1998 - 2021 San Diego Gas & Electric Company. All rights reserved. Removal of this copyright notice without permission is not permitted under law.

REV	CHANGE	DR	BY	DSN	APV	DATE	REV	CHANGE	DR	BY	DSN	APV	DATE
C							F						
B	FORMATTING	EDM	JIK	-	-	06/18/2021	E						
A	EDITORIAL CHANGES	-	JS	TR	MDJ	6/14/2016	D						

INSTALLATION:

A. INSTALL HANDHOLE GROUND AS SHOWN IN FIGURES.

(B) WHEN EQUIPMENT ON OPPOSITE WALL REQUIRES GROUNDING, INSTALL ONE CONTINUOUS WIRE AROUND THE HANDHOLE AND CONNECT THE GROUND WIRE AS SHOWN IN FIGURES, OTHERWISE ONLY INSTALL THE GROUND WIRE SHOWN AS A SOLID LINE IN FIGURES.

(C) INSTALL THE GROUND WIRE AT THE SAME LEVEL AS THE CONCENTRIC NEUTRAL TERMINATIONS ON THE CABLE.

(D) FOR CONCENTRIC NEUTRAL TAILS OR EQUIVALENT WIRE SIZE PER PHASE, SEE UG4176 FOR CHART AND EQUIVALENT WIRE SIZE.(a)

BILL OF MATERIALS:

ITEM	DESCRIPTION	QUANTITY	STANDARD PAGE	STOCK NUMBER	DESIGN UNITS
1	WIRE, BARE COPPER, #2, 7 STRAND, SOFT DRAWN	AS REQ'D	4003	S812818 (X)	--
2	BRACKET, STAINLESS STEEL, 2" X 3"	AS REQ'D	--	S166072	--
3	ANCHOR, CONCRETE, STAINLESS STEEL, 1/2" X 3 3/4"	AS REQ'D	4177	S107654	--
4	CONNECTOR, COMPRESSION	AS REQ'D	4174.1	S257760	--
5	CONNECTOR, SERVICE POST	2	--	S262560	--
6	CONNECTOR, GROUND, PROVIDED WITH CABLE TAP	--	--	--	--
7	EYE BOLT, STAINLESS STEEL, 1/2" X 6"	AS REQ'D	--	S150528	--
8	EYE BOLT, STAINLESS STEEL, 1/2" X 1 1/2"	AS REQ'D	--	S152722 (X)	--

NOTES:

(X) THIS ITEM IS EXEMPT.

REFERENCE:

(a) SEE UG4176 FOR CONCENTRIC NEUTRAL/COMPRESSION CONNECTOR APPLICATION CHART AND COPPER COMPRESSION CONNECTORS.

b. SEE UG4525 FOR CONCENTRIC NEUTRAL TERMINATIONS AND GROUNDING PREMOLDED CONNECTORS.

(c) SEE UG4530 FOR NEUTRAL AND GROUND WIRE SCHEMATIC DIAGRAM.

TABLE OF CONTENTS

© 1998 - 2021 San Diego Gas & Electric Company. All rights reserved. Removal of this copyright notice without permission is not permitted under law.

REV	CHANGE	DR	BY	DSN	APV	DATE	REV	CHANGE	DR	BY	DSN	APV	DATE
C							F						
B	FORMATTING	EDM	JIK	-	-	06/18/2021	E						
A	EDITORIAL CHANGES	-	JS	TR	MDJ	6/14/2016	D						

SCOPE: THIS STANDARD SHOWS GROUNDING INSTALLATION USED TO PROVIDE GROUNDING FOR ALL 200A AND 600A CONNECTORS IN A 3316 HANDHOLE.

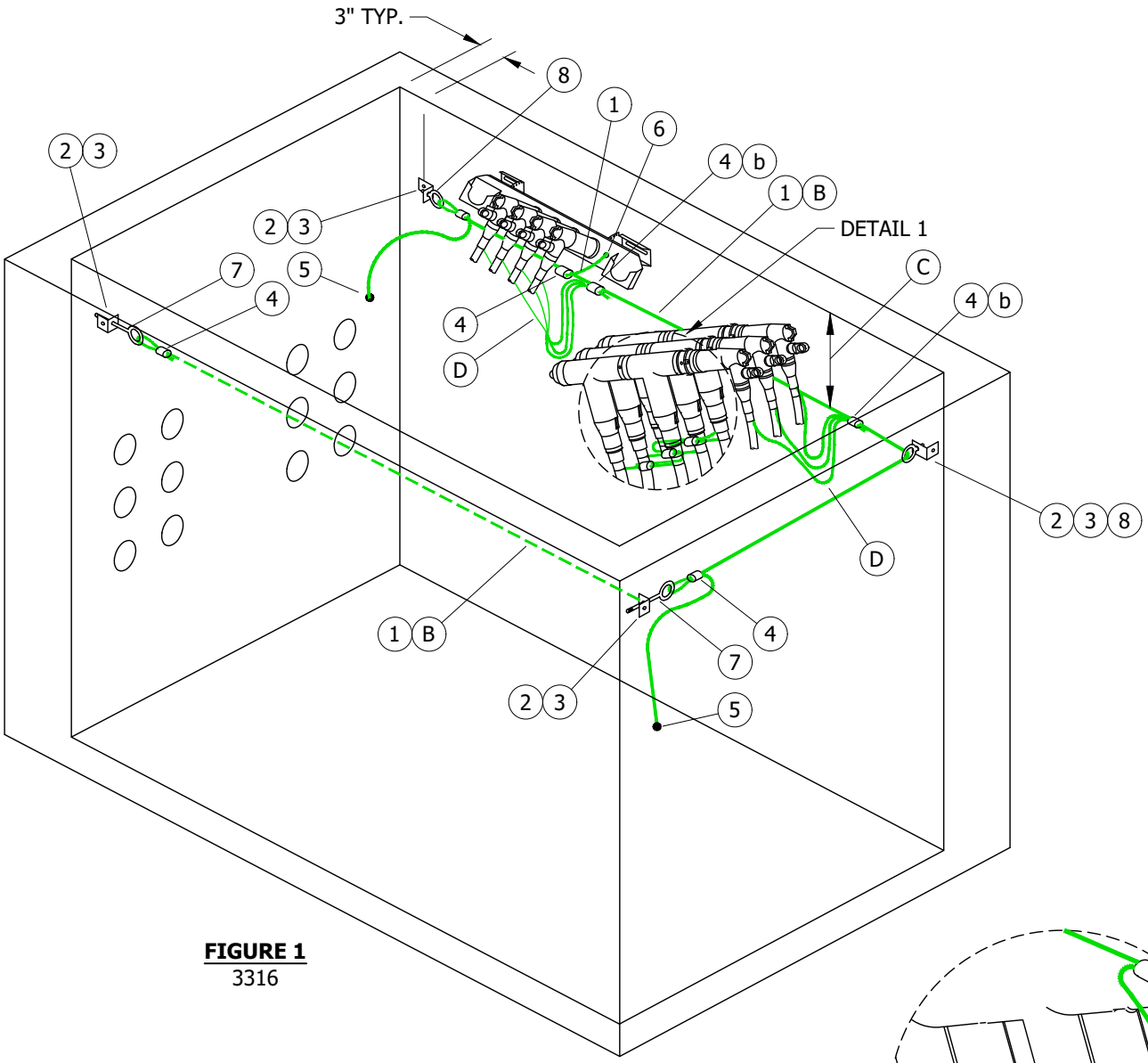

FIGURE 1
3316

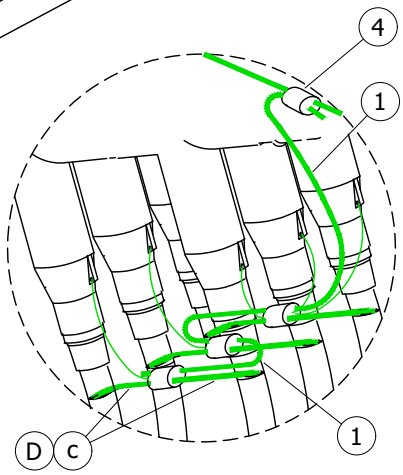

DETAIL 1

© 1998 - 2021 San Diego Gas & Electric Company. All rights reserved. Removal of this copyright notice without permission is not permitted under law.

REV	CHANGE	DR	BY	DSN	APV	DATE	REV	CHANGE	DR	BY	DSN	APV	DATE
C							F						
B	FORMATTING	EDM	JIK	-	-	06/18/2021	E						
A	EDITORIAL CHANGES	-	JS	TR	MDJ	6/14/2016	D						

INSTALLATION:

A. INSTALL HANDHOLE GROUND AS SHOWN IN FIGURE 1.

(B) WHEN EQUIPMENT ON OPPOSITE WALL REQUIRES GROUNDING, INSTALL ONE CONTINUOUS WIRE AROUND THE HANDHOLE AND CONNECT THE GROUND WIRE AS SHOWN IN FIGURE 1, OTHERWISE ONLY INSTALL THE GROUND WIRE SHOWN AS A SOLID LINE IN FIGURE 1.

(C) INSTALL THE GROUND WIRE AT THE SAME LEVEL AS THE CONCENTRIC NEUTRAL TERMINATIONS ON THE CABLE.

(D) FOR CONCENTRIC NEUTRAL TAILS OR EQUIVALENT WIRE SIZE PER PHASE, SEE UG4176 FOR EQUIVALENT WIRE SIZE. (b)

BILL OF MATERIALS:

ITEM	DESCRIPTION	QUANTITY	STANDARD PAGE	STOCK NUMBER	DESIGN UNITS
1	WIRE, BARE COPPER, #2, 7 STRAND, SOFT DRAWN	AS REQ'D	4003	S812818 (X)	--
2	BRACKET, STAINLESS STEEL, 2" X 3"	AS REQ'D	4505	S166072	--
3	ANCHOR, CONCRETE, STAINLESS STEEL, 1/2" X 3 3/4"	AS REQ'D	4177	S107654	--
4	CONNECTOR, COMPRESSION	AS REQ'D	4174.1	S257760	--
5	CONNECTOR, SERVICE POST	2	--	S262560	--
6	CONNECTOR, GROUND, PROVIDED WITH CABLE TAP	--	--	--	--
7	EYE BOLT, STAINLESS STEEL, 1/2" X 6"	AS REQ'D	--	S150528	--
8	EYE BOLT, STAINLESS STEEL, 1/2" X 1 1/2"	AS REQ'D	--	S152722 (X)	--

NOTES:

(X) THIS ITEM IS EXEMPT.

REFERENCE:

a. SEE UG4525 FOR CONCENTRIC NEUTRAL TERMINATIONS AND GROUNDING PREMOLDED CONNECTORS.

(b) SEE UG4176 FOR CONCENTRIC NEUTRAL/COMPRESSION CONNECTOR APPLICATION CHART AND COPPER COMPRESSION CONNECTORS.

(c) SEE UG4530 FOR NEUTRAL AND GROUND WIRE SCHEMATIC DIAGRAM.

TABLE OF CONTENTS

© 1998 - 2021 San Diego Gas & Electric Company. All rights reserved. Removal of this copyright notice without permission is not permitted under law.

REV	CHANGE	DR	BY	DSN	APV	DATE	REV	CHANGE	DR	BY	DSN	APV	DATE
C							F						
B	FORMATTING	EDM	JIK	-	-	06/18/2021	E						
A	EDITORIAL CHANGES	-	JS	TR	MDJ	6/14/2016	D						

SCOPE: THIS STANDARD SHOWS GROUNDING INSTALLATION USED TO PROVIDE GROUNDING FOR THE SWITCH AND CONNECTORS IN THE 3317 HANDHOLE.

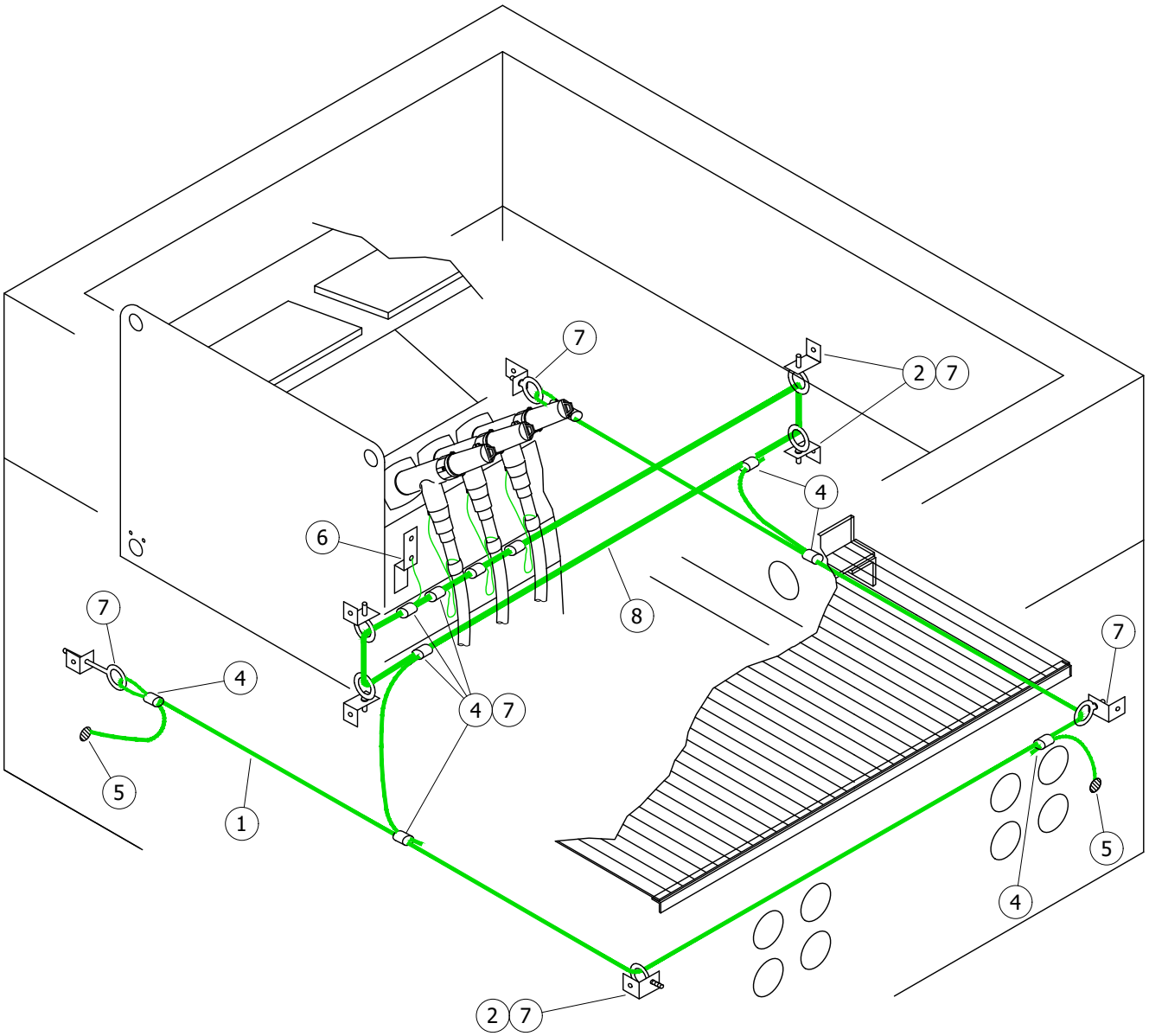

FIGURE 1
3317

© 1998 - 2021 San Diego Gas & Electric Company. All rights reserved. Removal of this copyright notice without permission is not permitted under law.

REV	CHANGE	DR	BY	DSN	APV	DATE	REV	CHANGE	DR	BY	DSN	APV	DATE
C							F						
B	FORMATTING	EDM	JIK	-	-	06/18/2021	E						
A	EDITORIAL CHANGES	-	JS	TR	MDJ	6/14/2016	D						

TABLE OF CONTENTS

INSTALLATION:

A. INSTALL HANDHOLE GROUND AS SHOWN IN FIGURE 1.

B. INSTALL GROUND WIRE 1 1/2" (38mm) BELOW STEEL GRATING ELBOW TO PROVIDE CLEARANCE FROM SUPPORT HARDWARE.

C. FOR CONCENTRIC NEUTRAL TAILS OR EQUIVALENT WIRE SIZE PER PHASE, SEE UG4176 FOR EQUIVALENT WIRE SIZE. (b)

BILL OF MATERIALS:

ITEM	DESCRIPTION	QUANTITY	STANDARD PAGE	STOCK NUMBER	DESIGN UNITS
1	WIRE, BARE COPPER, #2, 7 STRAND, SOFT DRAWN	AS REQ'D	4003	S812818 (X)	--
2	BRACKET, STAINLESS STEEL, 2" X 3"	AS REQ'D	--	S166072	--
3	ANCHOR, CONCRETE, STAINLESS STEEL, 1/2" X 3 3/4" (I)	AS REQ'D	4177	S107654	--
4	CONNECTOR, COMPRESSION	AS REQ'D	4174.1	S257760	--
5	CONNECTOR, SERVICE POST	2	--	S262560	--
6	LUG, GROUND, PROVIDED BY SWITCH MANUFACTURER	--	--	--	--
7	EYE BOLT, STAINLESS STEEL, 1/2" X 6"	AS REQ'D	--	S150528	--
8	WIRE, BARE COPPER, 4/0 STRANDED	AS REQ'D	--	S812764	--
9	EYE BOLT, STAINLESS STEEL, 1/2" X 1 1/2" (I)	AS REQ'D	--	S152722 (X)	--

NOTES:

(I) NOT SHOWN ON FIGURE.

(X) THIS ITEM IS EXEMPT.

REFERENCE:

a. SEE UG4525 FOR CONCENTRIC NEUTRAL TERMINATIONS AND GROUNDING PREMOLDED CONNECTORS.

(b) SEE UG4176 FOR CONCENTRIC NEUTRAL/COMPRESSION CONNECTOR APPLICATION CHART AND COPPER COMPRESSION CONNECTORS.

c. SEE UG4530 FOR NEUTRAL AND GROUND WIRE SCHEMATIC DIAGRAM.

TABLE OF CONTENTS

© 1998 - 2021 San Diego Gas & Electric Company. All rights reserved. Removal of this copyright notice without permission is not permitted under law.

REV	CHANGE	DR	BY	DSN	APV	DATE	REV	CHANGE	DR	BY	DSN	APV	DATE
C							F						
B	FORMATTING	EDM	JIK	-	-	06/18/2021	E						
A	EDITORIAL CHANGES	-	JS	TR	MDJ	6/14/2016	D						

SCOPE: THIS STANDARD DESCRIBES CONNECTION TO TELCO GROUND, IF PRESENT.

TABLE 1

HANDHOLE DIMENSIONS	
HANDHOLE	**Z (IN)**
3314	18
3315	16
3316	16

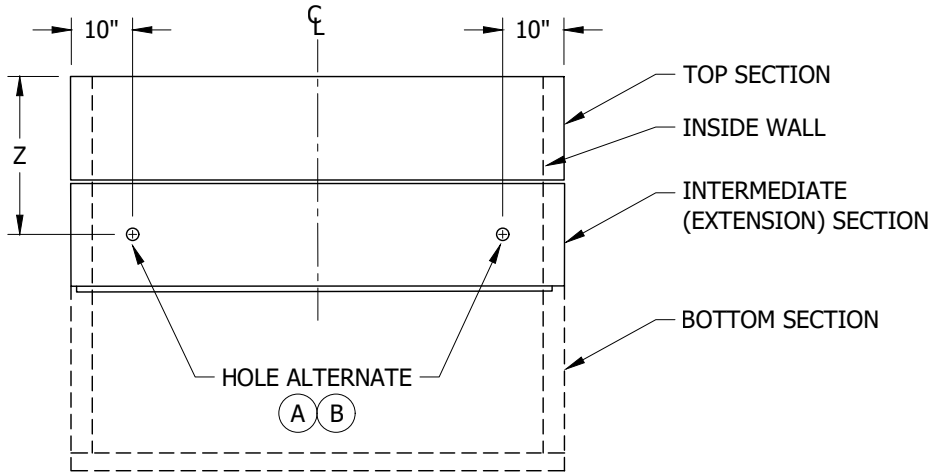

FIGURE 1
END VIEW OF HANDHOLE

INSTALLATION:

(A) OPEN HANDHOLE AND MAKE SURE THERE IS NO EQUIPMENT AT THE DRILLING LOCATION.

(B) DRILL A 1/2-INCH HOLE IN THE END AT ONE OF THE LOCATIONS SHOWN IN FIGURE 1 TO AVOID REBAR.

C. TAKE THE #6 AWG INSULATED COPPER GROUND WIRE FURNISHED BY PT&T AND PUT THROUGH THE HOLE AND INTO THE HANDHOLE.

D. FILL THE DRILLED HOLE WITH EPOXY PUTTY (SEALING COMPOUND). SEE BILL OF MATERIALS ITEM #1.

E. SKIN THE INSULATION AND CONNECT TO THE GROUND OR NEUTRAL WIRE IN THE HANDHOLE WITH A COPPER COMPRESSION CONNECTOR. IF NO GROUND WIRE IS AVAILABLE, ATTACH TO GROUND ROD.

BILL OF MATERIALS:

ITEM	DESCRIPTION	QUANTITY	STANDARD PAGE	STOCK NUMBER	DESIGN UNITS
1	SEALING COMPOUND (III)	--	--	S442976	--

NOTES:

I. IF TELCO GROUND WIRE IS PRESENT AT THE TIME OF INSTALLATION OF THE HANDHOLE, INSERT GROUND WIRE TAIL BETWEEN PAD AND TOP SECTION OR HANDHOLE SECTIONS THROUGH THE GROUT OR PLASTIC MASTIC SEALANT.

II. GROUNDING OF TELCO CONDUCTORS MUST BE AUTHORIZED ON INDIVIDUAL CONSTRUCTION ORDERS FOR BOTH NEW AND EXISTING HANDHOLES.

(III) NOT SHOWN IN FIGURE.

REFERENCE:

a. SEE UG4174 FOR COPPER COMPRESSION CONNECTORS.

TABLE OF CONTENTS

© 1998 - 2021 San Diego Gas & Electric Company. All rights reserved. Removal of this copyright notice without permission is not permitted under law.

REV	CHANGE	DR	BY	DSN	APV	DATE	REV	CHANGE	DR	BY	DSN	APV	DATE
C							F						
B	FORMATTING	EDM	JIK	-	-	06/18/2021	E						
A	EDITORIAL CHANGES	-	JC	TR	JS/MDJ	7/28/2015	D						

X Indicates Latest Revision | Completely Revised | New Page | Information Removed

SDG&E ELECTRIC UNDERGROUND CONSTRUCTION STANDARDS

GROUNDING TELCO CONDUCTOR IN HANDHOLE
3314, 3315, OR 3316

UG4550.1

PAGE	SUBJECT
4620	TELECOMMUNICATIONS CONDUIT RISER & TRENCH
4621	HANDHOLE INSTALLATION FOR LOCATING STATIONS FOR FIBER OPTIC CABLE
4622	TRACER WIRE TERMINATION ON RISER POLES
4623	TELECOMMUNICATIONS FIBER OPTIC RISER POLE
4624	4-INCH CONDUIT, BENDS AND SWEEPS FOR FIBER OPTIC AND TELECOMMUNICATIONS CABLE
4625	POLYETHYLENE INNERDUCT AND CABLE SLEEVE
4626	FIBER OPTIC CABLE INSTALLATION
4630	LTE ANTENNA STAND ALONE/DISTRIBUTION STEEL POLE
4640	PAD MOUNTED VISTA SCADA INSTALLATION
4641	SCADA INSTALLATION FOR PAD MOUNTED SWITCHES
4642	SUB-SURFACE VISTA INSTALLATION
4643	DRY VAULT SCADA INSTALLATION
4644	DIRECT BURIED ANTENNA FIBERGLASS POLES
4645	ANTENNA POLE WITH ANTENNA
4646	ANTENNA POLE (49 FOOT)
4647	ANTENNA POLE W/LUMINAIRES
4648	CELL RELAY/RFLAN RANGE EXTENDER ATTACHMENT TO DISTRIBUTION POLE
4649	CUSTOMER-OWNED WIRELESS COMMUNICATIONS PROVIDER ATTACHMENT TO DISTRIBUTION POLE (UNMETERED SERVICE)
4650	CUSTOMER-OWNED WIRELESS COMMUNICATIONS PROVIDER ATTACHMENT TO DISTRIBUTION POLE (METERED SERVICE)
4651	WEATHER MONITORING SYSTEM
4653	UNMETERED ELECTRIC SERVICE FOR WIRELESS COMMUNICATIONS PROVIDER
4660	CUSTOMER-OWNED WIRELESS COMMUNICATIONS PROVIDER ATTACHMENT TO DISTRIBUTION STREET LIGHT POLE (UNMETERED SERVICE)
4661	STREET LIGHT WITH 5G ATTACHMENT

THIS SECTION HAS BEEN REMOVED FROM THE EXTERNAL VERSION.
DUE TO CONFIDENTIAL INFORMATION.

MAIN TABLE OF CONTENTS

REV	CHANGE	DRWN	BY	CHKD	APVD	DATE
I	REVISED TO 3D FORMAT	NV5	JIK	-	-	05/07/2024
H	DRAWING UPDATE	ARC	ADW	GLW	KRG	02/16/2023
G	ADDED UG4630	EDM	GLW	JES	CZH	02/08/2021

© 1998 - 2024 San Diego Gas and Electric Company. All rights reserved. Removal of this copyright notice without permission is not permitted under law.

SDG&E ELECTRIC UNDERGROUND CONSTRUCTION STANDARDS

TELECOMMUNICATIONS
TABLE OF CONTENTS

SCALE: NOT TO SCALE

DRAWING NO:	SHEET:
UG4601.1	1 OF 1

X Indicates Latest Revision | Completely Revised | New Page | Information Removed

4700 - PRIMARY METER/ REGULATOR/ BOOSTER STATION

4700 - PRIMARY METER/ REGULATOR/ BOOSTER STATION

MAIN TABLE OF CONTENTS

PAGE	SUBJECT
4705	12KV SERVICE POINT CONNECTION FOR TROLLEY TRACTION STATION
4710	INSTALLATION OF PAD MOUNTED REGULATOR
4712	GRIDCO PAD MOUNTED POWER REGULATOR IPR50 AND PRT-50
4713	INSTALLATION OF PAD MOUNTED THREE-PHASE REGULATOR "3 IN 1"
4714	INSTALLATION OF PAD MOUNTED THREE-PHASE REGULATOR
4720	ENERGY STORAGE INTERCONNECTION

REV	CHANGE	DRWN	BY	CHKD	APVD	DATE
G	REMOVED 4711	GLC	EJA	JAS	JAS	09/05/2024
F	REVISED TO 3D FORMAT	NV5	JIK	-	-	05/30/2024
E	FORMATTING	EDM	JIK	-	-	10/26/2021

© 1998 - 2024 San Diego Gas and Electric Company. All rights reserved. Removal of this copyright notice without permission is not permitted under law.

SDG&E ELECTRIC UNDERGROUND CONSTRUCTION STANDARDS

MISCELLANEOUS EQUIPMENT
TABLE OF CONTENTS

SCALE: NOT TO SCALE

DRAWING NO: UG4701.1

SHEET: 1 OF 1

X Indicates Latest Revision | Completely Revised | New Page | Information Removed

SCOPE: THIS STANDARD PROVIDES GUIDELINES FOR THE CONNECTION OF SDG&E'S 12KV DISTRIBUTION SYSTEM TO A PRIMARY METERED SERVICE POINT FOR THE 600V DC TROLLEY SYSTEM.

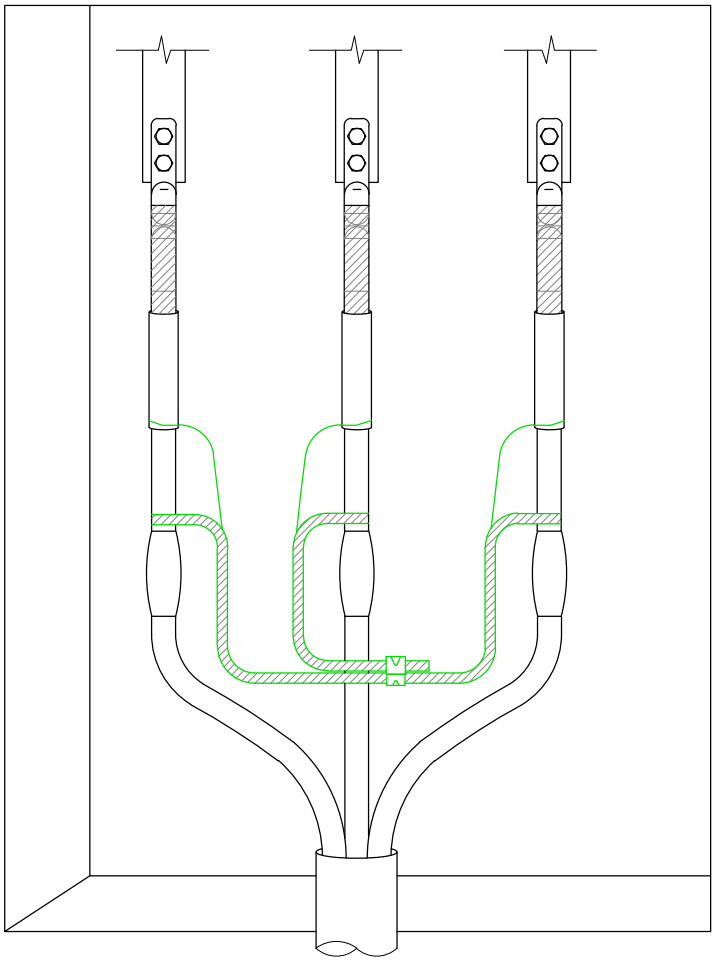

FIGURE 1

INSTALLATION: NONE

BILL OF MATERIALS: NONE

NOTES:

I. THE FOLLOWING REQUIREMENTS SHALL BE MET WHEN MAKING THIS CONNECTION:

a. SDG&E SHALL LOCATE IT'S SUBSTRUCTURE AS CLOSE AS PRACTICABLE TO THE CUSTOMER'S GROUND GRID BUT IN NO CASE SHALL THE SUBSTRUCTURE BE IN CONTACT WITH THE CUSTOMER'S GROUND GRID (GROUNDING ELECTRODE SYSTEM).

b. THE CONCENTRIC NEUTRALS FROM SDG&E'S CABLE SHALL NOT BE CONNECTED TO THE CUSTOMER'S EQUIPMENT.

c. THE CABLE TERMINATION IN THE CUSTOMER'S SWITCHGEAR CABINET SHALL BE A LIVEFRONT DELTA CONNECTION.

REFERENCE:

a. SEE SG609.

b. SEE SERVICE PLANNING MANUAL 254.

© 1998 - 2021 San Diego Gas & Electric Company. All rights reserved. Removal of this copyright notice without permission is not permitted under law.

REV	CHANGE	DR	BY	DSN	APV	DATE	REV	CHANGE	DR	BY	DSN	APV	DATE
C							F						
B	FORMATTING	EDM	JIK	-	-	10/26/2021	E						
A	REVISION	-	-	-	WT/MC	02/08/2010	D						

X Indicates Latest Revision | Completely Revised | New Page | Information Removed

SDG&E ELECTRIC UNDERGROUND CONSTRUCTION STANDARDS

12KV SERVICE POINT CONNECTION FOR TROLLEY TRACTION STATION

SHEET 1 OF 1

UG4705.1

TABLE OF CONTENTS

SCOPE: THIS STANDARD COVERS THE INSTALLATION OF THE 600A PAD MOUNTED REGULATORS.

ATTENTION:

* THE PAD MOUNTED REGULATORS MAY BE INSTALLED IN TWO APPLICATIONS: OVERHEAD CONSTRUCTION REQUIRING 600A VOLTAGE REGULATION, SEE SHEET 4, AND FULL UNDERGROUND CIRCUITS REQUIRING 600A VOLTAGE REGULATION, SEE SHEET 6.

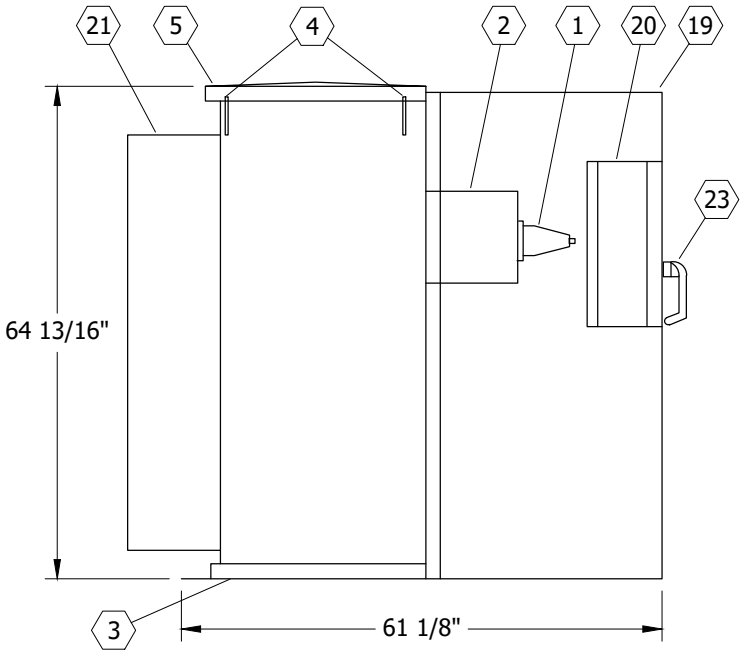

FIGURE 1
SIDE VIEW
SEE TABLE 1

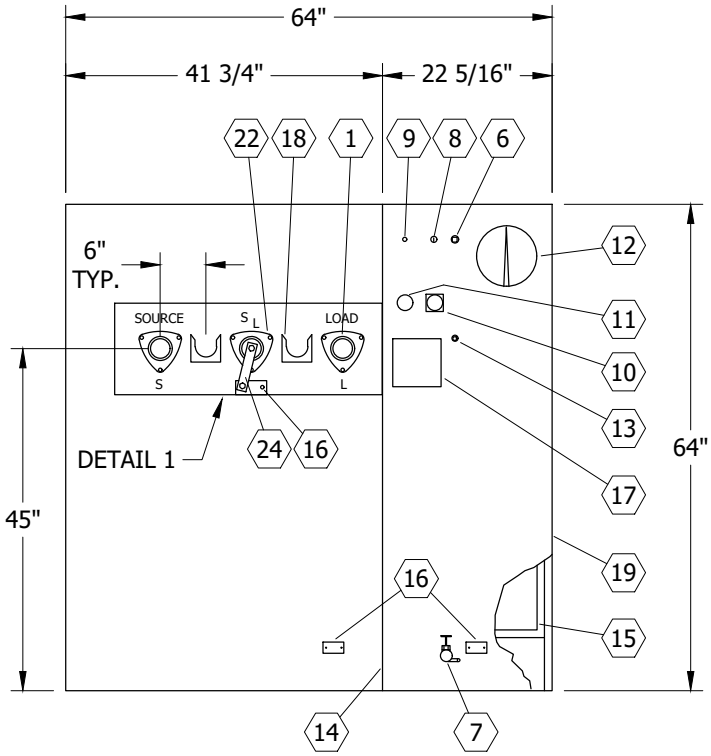

FIGURE 1
FRONT VIEW
SEE TABLE 1



DETAIL 1

© 1998 - 2021 San Diego Gas & Electric Company. All rights reserved. Removal of this copyright notice without permission is not permitted under law.

REV	CHANGE	DR	BY	DSN	APV	DATE	REV	CHANGE	DR	BY	DSN	APV	DATE
C	REVISION	-	-	TR	JDJ	10/09/2007	F						
B	REVISION	-	-	TR	JDJ	10/08/2007	E						
A	REVISION	-	-	TR	JDJ	01/19/2007	D	FORMATTING	EDM	JIK	-	-	10/26/2021

X Indicates Latest Revision | Completely Revised | New Page | Information Removed

SDG&E ELECTRIC UNDERGROUND CONSTRUCTION STANDARDS

INSTALLATION OF PAD MOUNTED REGULATOR

UG4710.1

TABLE OF CONTENTS

TABLE 1 (FIGURE 1)

PAD MOUNTED REGULATOR DESCRIPTION LIST	
ITEM	**DESCRIPTION**
1	BUSHING, INTEGRAL APPARATUS, HIGH VOLTAGE
2	BOXOUT, TANK, FOR HV BUSHINGS
3	BASE, REGULATOR, TANK W/ JACKING AND ROLLING FACILITIES
4	LIFTING LUGS
5	BOLTED COVER W/ NUT GUARD
6	PRESS CONN. & FILL PLUG, 1, 0" UPPER FILTER
7	VALVE, DRAIN, 1, 0", W/ SAMPLER
8	DEVICE, AUTO PRESS RELIEF
9	PRESSURE VACUUM GAUGE PROVISION
10	GAUGE, MAGNETIC OIL LEVEL
11	GAUGE, OIL SIGHT
12	INDICATOR, TAP CHANGER POSITION, W/ DRAGHANDS AND REGULATION RANGE LIMIT SWITCHES
13	THERMOMETER PROVISION
14	PLATE, STEEL DIVIDER
15	REMOVABLE SILL
16	PAD, GROUND, W/ 2 - 1/2-13 UNC TAPPED HOLES 7/16 DEEP
17	NAMEPLATE
18	PARKING STAND
19	CABINET, BOLTED HIGH SECURITY, W/ PENTAHEAD DOOR BOLTS
20	ENCLOSURE, CONTROL, LOCKABLE ON INSIDE OF CABINET DOOR
21	CORRUGATION, COOLING (WHEN REQUIRED)
22	BUSHING, NEUTRAL/CONCENTRIC GROUND
23	DOOR HANDLE
24	CONCENTRIC NEUTRAL/NEUTRAL GROUND STRAP

TABLE OF CONTENTS

© 1998 - 2021 San Diego Gas & Electric Company. All rights reserved. Removal of this copyright notice without permission is not permitted under law.

REV	CHANGE	DR	BY	DSN	APV	DATE	REV	CHANGE	DR	BY	DSN	APV	DATE
C	REVISION	-	-	TR	JDJ	10/09/2007	F						
B	REVISION	-	-	TR	JDJ	10/08/2007	E						
A	REVISION	-	-	TR	JDJ	01/19/2007	D	FORMATTING	EDM	JIK	-	-	10/26/2021

TABLE OF CONTENTS

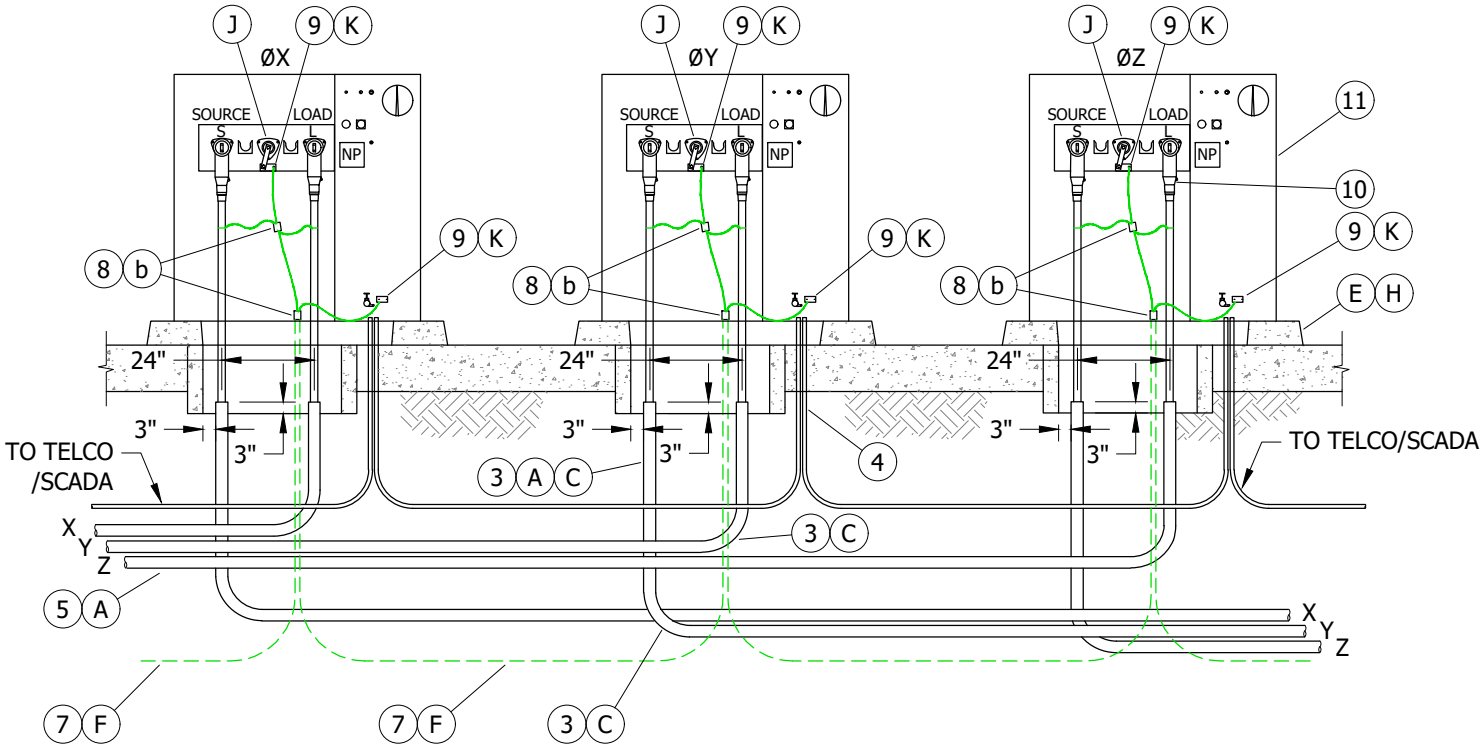

FIGURE 2
CABLE CONNECTION DIAGRAM

© 1998 - 2021 San Diego Gas & Electric Company. All rights reserved. Removal of this copyright notice without permission is not permitted under law.

REV	CHANGE	DR	BY	DSN	APV	DATE	REV	CHANGE	DR	BY	DSN	APV	DATE
C	REVISION	-	-	TR	JDJ	10/09/2007	F						
B	REVISION	-	-	TR	JDJ	10/08/2007	E						
A	REVISION	-	-	TR	JDJ	01/19/2007	D	FORMATTING	EDM	JIK	-	-	10/26/2021

X Indicates Latest Revision | Completely Revised | New Page | Information Removed

SDG&E ELECTRIC UNDERGROUND CONSTRUCTION STANDARDS

INSTALLATION OF PAD MOUNTED REGULATOR

UG4710.3

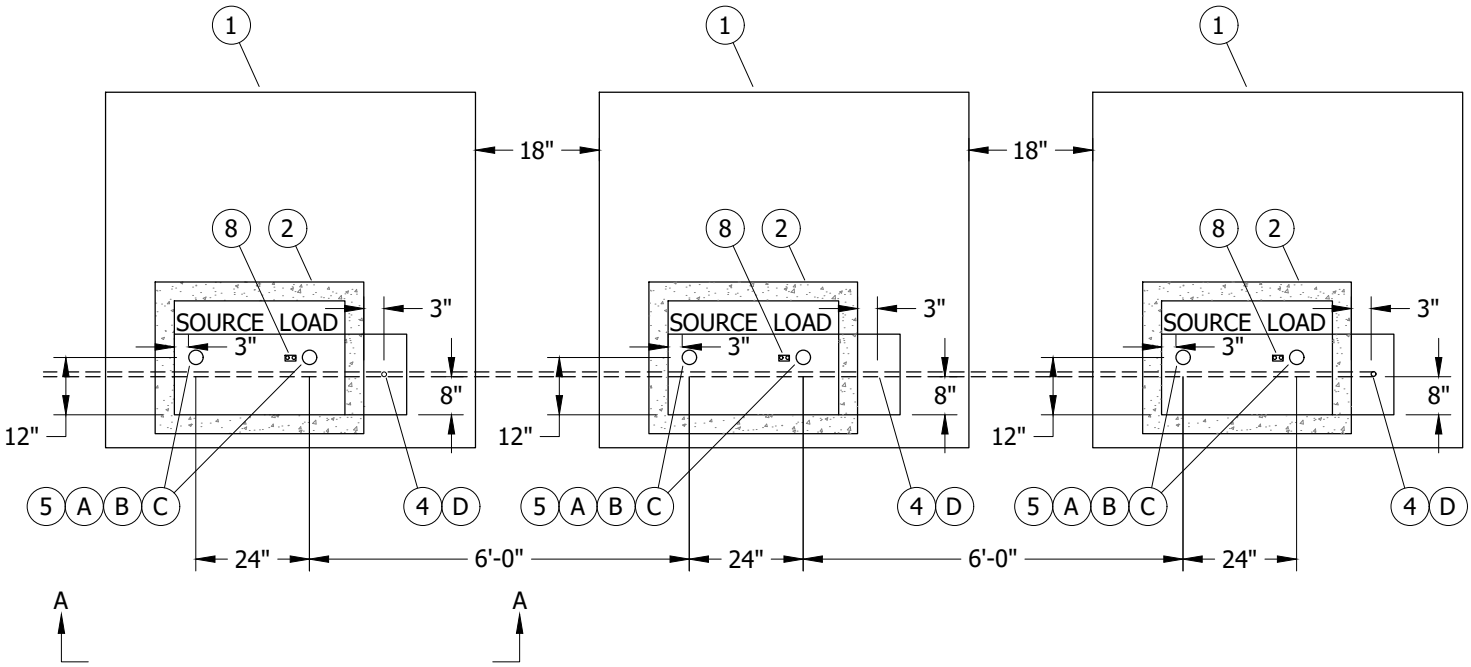

FIGURE 3
CONDUIT/SUBSTRUCTURE/PAD/COMMUNICATION/GROUND
INSTALLATION DIAGRAM
PLAN VIEW

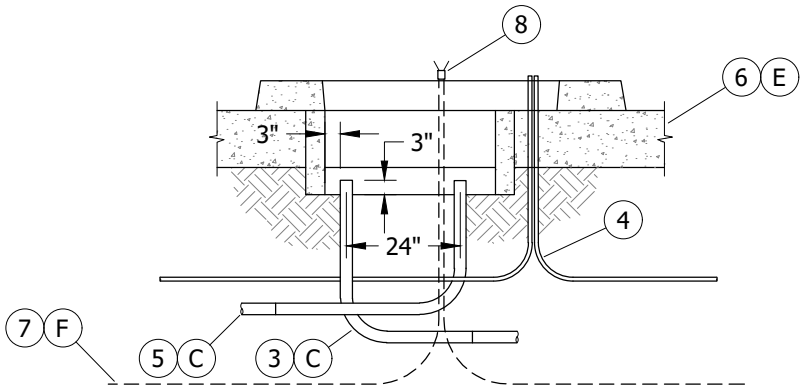

FIGURE 3
CONDUIT/SUBSTRUCTURE/PAD/COMMUNICATION/GROUND
INSTALLATION DIAGRAM
VIEW A-A

© 1998 - 2021 San Diego Gas & Electric Company. All rights reserved. Removal of this copyright notice without permission is not permitted under law.

REV	CHANGE	DR	BY	DSN	APV	DATE	REV	CHANGE	DR	BY	DSN	APV	DATE
C	REVISION	-	-	TR	JDJ	10/09/2007	F						
B	REVISION	-	-	TR	JDJ	10/08/2007	E						
A	REVISION	-	-	TR	JDJ	01/19/2007	D	FORMATTING	EDM	JIK	-	-	10/26/2021

X Indicates Latest Revision | Completely Revised | New Page | Information Removed

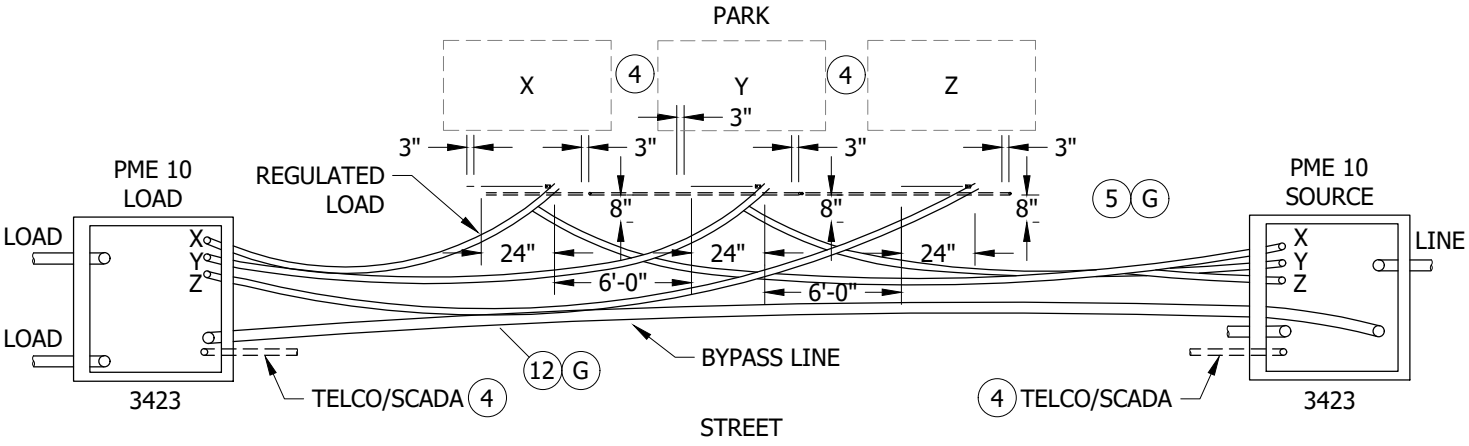

FIGURE 4
CONDUIT DIAGRAM FOR PME AND PAD MOUNTED REGULATORS

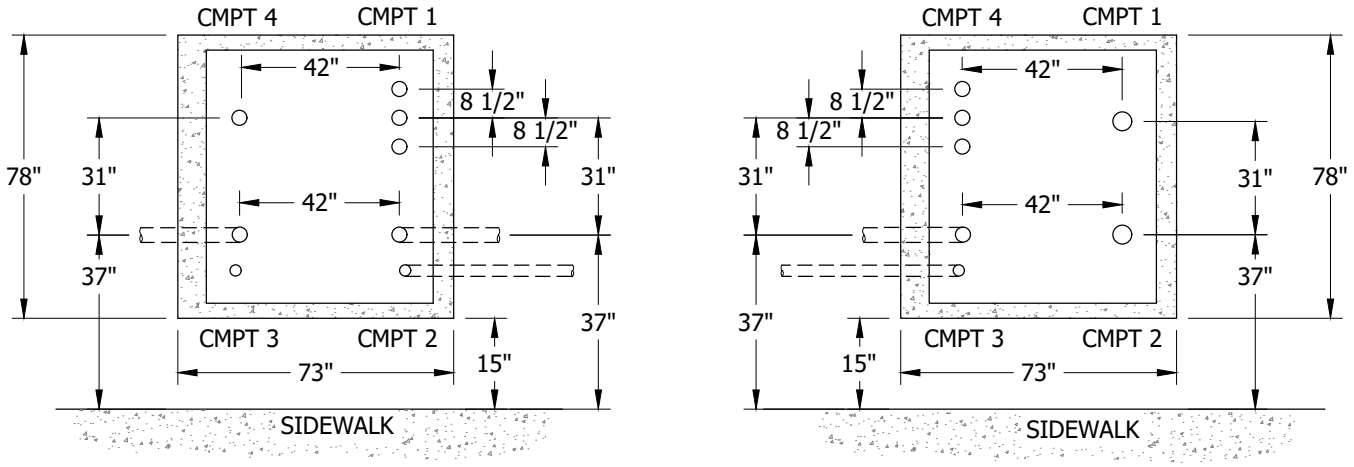

FIGURE 5 (a)
BOX AND CONDUIT PLACEMENT
PLAN VIEW

© 1998 - 2021 San Diego Gas & Electric Company. All rights reserved. Removal of this copyright notice without permission is not permitted under law.

REV	CHANGE	DR	BY	DSN	APV	DATE	REV	CHANGE	DR	BY	DSN	APV	DATE
C	REVISION	-	-	TR	JDJ	10/09/2007	F						
B	REVISION	-	-	TR	JDJ	10/08/2007	E						
A	REVISION	-	-	TR	JDJ	01/19/2007	D	FORMATTING	EDM	JIK	-	-	10/26/2021

X Indicates Latest Revision | Completely Revised | New Page | Information Removed

TABLE OF CONTENTS

INSTALLATION:

(A) SLURRY ENCASE ALL 3-INCH CONDUITS.

(B) SLURRY ENCASE ALL 3-INCH 90 DEGREE BENDS TO WITHIN 6 INCHES OF THE FINAL CUT.

(C) DO NOT CUT THE 90 DEGREE BENDS.

(D) LOOP A 1-INCH POLYETHYLENE CONDUIT TO EACH PAD. STUB THE CONDUIT 4 FEET FROM THE EDGE OF PAD, CLOSEST TO TELCO, WHEN REQUIRED.

(E) IN SOFT SOILS A CONCRETE BACKFILL (1 SACK MIX.) IS REQUIRED UNDER THE PAD 12 INCHES BEYOND THE SIDE EDGES OF PAD AND 12 INCHES DEEP.

(F) INSTALL A TRENCH GROUND WIRE FOR EACH PAD. INSTALL A SEPARATE GROUND WIRE BETWEEN THE CENTER PAD AND EACH END PAD.

(G) ALL HORIZONTAL BENDS WILL BE MADE WITH ONLY LONG SWEEPS OF 25-FOOT RADIUS OR LONGER.

(H) SET 3313 ON 4 INCHES OF COMPACTED 1/2-INCH GRAVEL.

(J) NEUTRAL/GROUND STRAP FROM NEUTRAL BUSHING TO GROUND PAD.

(K) ATTACH TRENCH GROUND TO GROUND PADS AND CONCENTRIC NEUTRAL.

BILL OF MATERIALS:

ITEM	DESCRIPTION	QUANTITY	STANDARD PAGE	STOCK NUMBER	DESIGN UNITS
1	PAD, TRANSFORMER, 3426	3	3426	S514005	3426B0
2	BASE SECTION, 3313	3	3313	S162664	3313B
3	90 DEGREE BEND, 3"	6	3373	S322048	S80-3"
4	CONDUIT, POLY, 1"	AS REQ'D	3373	S249630	1"PE
5	CONDUIT, 3" DB	AS REQ'D	3373	S249664	1DB3-P
6	SLURRY, 1-SACK	AS REQ'D	3376	S656400	--
7	WIRE, TRENCH GROUND	3	4510	--	--
8	CONNECTOR, COMPRESSION	AS REQ'D	4174/4176	--	--
9	PAD, GROUND W/ 2 - 1/2-13 UNC TAPPED HOLES 7/16 DEEP	AS REQ'D	--	S262560	--
10	CONNECTOR, "T" TYPE, 600A	6	4181	--	--
11	REGULATOR, VOLTAGE, SINGLE-PHASE, PADMOUNT	3	--	S581490	REG600
12	CONDUIT, 5", FOR UNDERGROUND BYPASS	AS REQ'D	3373	S249728	1DB5SL
13	BEND, 5", 90°, FOR UNDERGROUND BYPASS (I)	AS REQ'D	3373	S322112	1-5SLB
14	ENCASE/SLURRY/CONDUITS (I)	AS REQ'D	3373	--	1EB3IN

NOTES:

(I) NOT SHOWN ON FIGURES.

REFERENCE:

(a) FOR INSTRUCTIONS ON INSTALLATION OF BOX PAD, SEE UG3423.

(b) FOR EQUIPMENT GROUNDING, SEE UG4520.

TABLE OF CONTENTS

© 1998 - 2021 San Diego Gas & Electric Company. All rights reserved. Removal of this copyright notice without permission is not permitted under law.

REV	CHANGE	DR	BY	DSN	APV	DATE	REV	CHANGE	DR	BY	DSN	APV	DATE
C	REVISION	-	-	TR	JDJ	10/09/2007	F						
B	REVISION	-	-	TR	JDJ	10/08/2007	E						
A	REVISION	-	-	TR	JDJ	01/19/2007	D	FORMATTING	EDM	JIK	-	-	10/26/2021

SCOPE: THIS STANDARD SHOWS NEW CONSTRUCTION FOR MULTIPLE CONDUIT RISERS, USED WITH PAD MOUNTED REGULATOR.

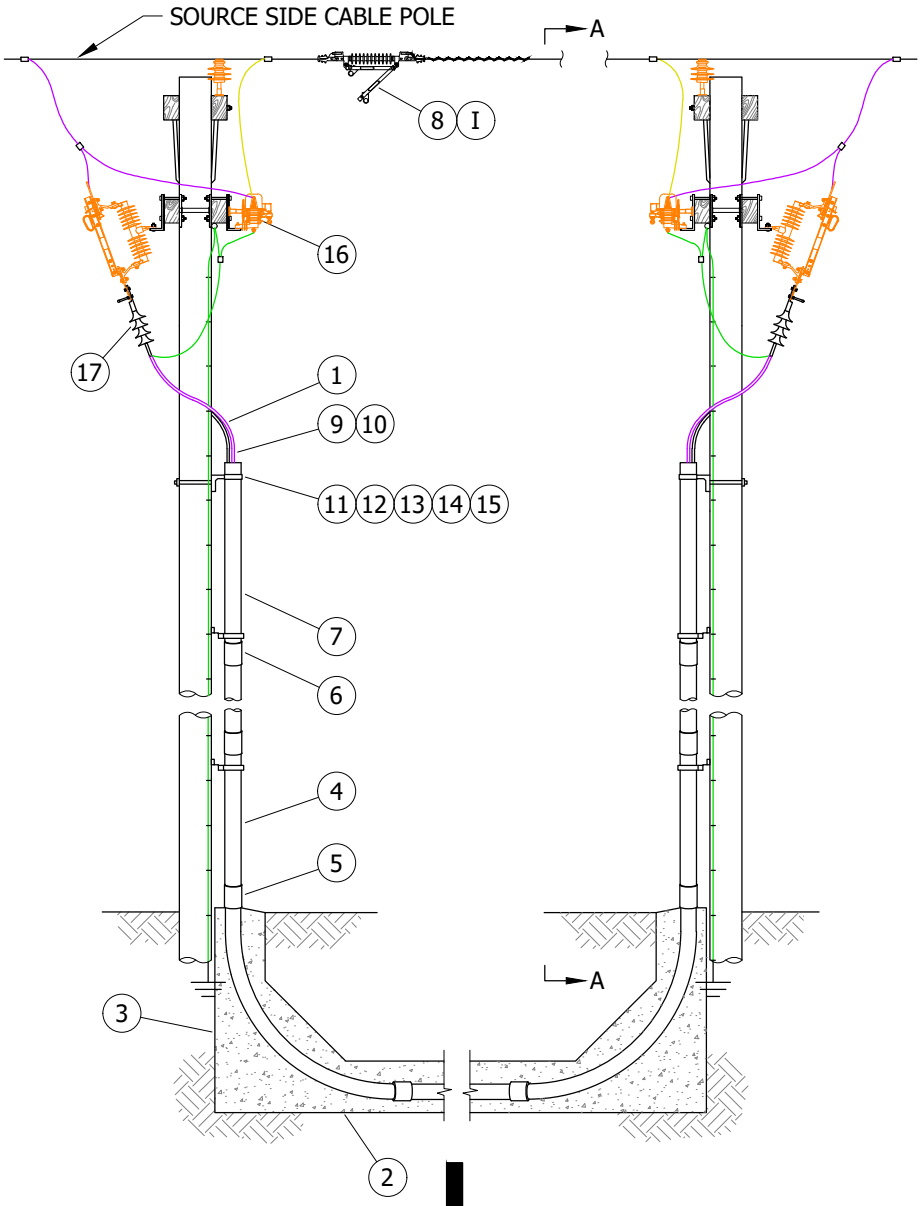

FIGURE 1 (II)

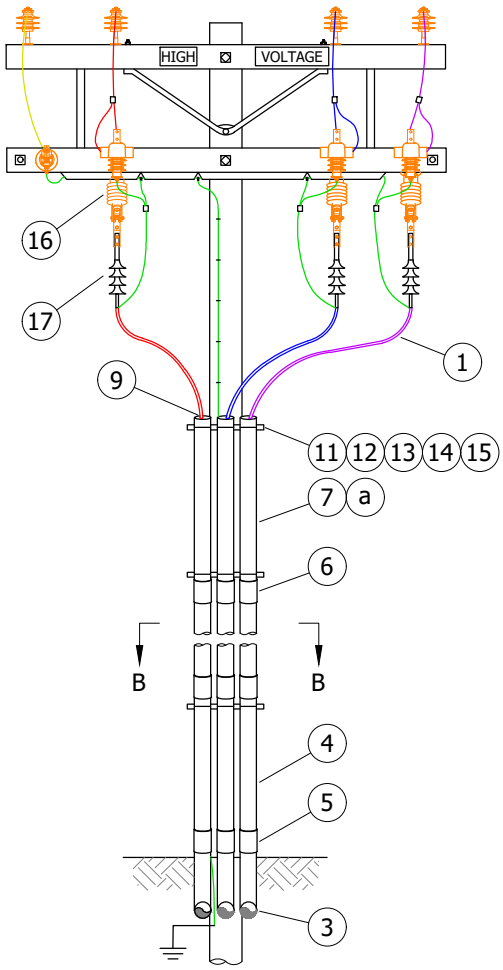

FIGURE 1
VIEW A-A

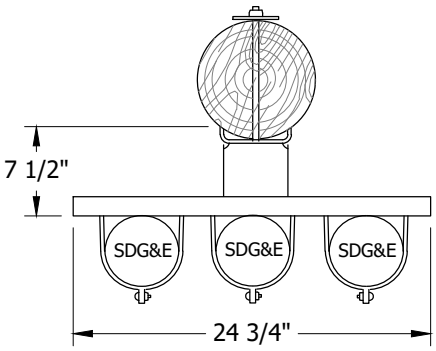

FIGURE 1
NEW MULTIPLE RISER CONSTRUCTION
VIEW B-B

TABLE OF CONTENTS

© 1998 - 2021 San Diego Gas & Electric Company. All rights reserved. Removal of this copyright notice without permission is not permitted under law.

REV	CHANGE	DR	BY	DSN	APV	DATE	REV	CHANGE	DR	BY	DSN	APV	DATE
C	REVISION	-	-	TR	JDJ	10/09/2007	F						
B	REVISION	-	-	TR	JDJ	10/08/2007	E						
A	REVISION	-	-	TR	JDJ	01/19/2007	D	FORMATTING	EDM	JIK	-	-	10/26/2021

INSTALLATION: NONE

BILL OF MATERIALS:

ITEM	DESCRIPTION	QUANTITY	STANDARD PAGE	STOCK NUMBER	DESIGN UNITS
1	CABLE, 1C-1000AL, FOR POLES AND PADMOUNT	AS REQ'D	--	S197628	--
2	COUPLING, 3" (SIZE AS REQUIRED)	AS REQ'D	--	S279904	--
3	CONDUIT RISER BEND, SCHEDULE 80, 3", 36" R (SIZE AS REQUIRED)	AS REQ'D	--	S322472	3"CP-B
4	CONDUIT RISER, PVC, SCHEDULE 80, 3" (SIZE AS REQUIRED)	AS REQ'D	--	S251552	S80-3"
5	COUPLING, PVC, SCHEDULE 80, 3"	AS REQ'D	--	S280544	--
6	COUPLING, PVC, SCHEDULE 40, 3" (SIZE AS REQUIRED)	AS REQ'D	--	S280448	--
7	CONDUIT, PVC, SCHEDULE 40, 3" (SIZE AS REQUIRED)	AS REQ'D	--	S251360	S40-3"
8	IN LINE BY-PASS	3	1218	S707020	ILD5W
9	GRIP, CABLE SIZE AS REQUIRED FOR PRIMARY RISERS (FOR 3" CONDUIT, 1/C-1000 AL CABLE)	AS REQ'D	--	S394048	3G2#2A
10	PROTECTOR, NYLON CABLE	AS REQ'D	--	S558720	--
11	BRACKET, LADDER ARM	AS REQ'D	--	S167186 (X)	LA-ARM
12	CHANNEL, DOUBLE, GALV., 24 3/4" X 7/8" X 2 3/4"	AS REQ'D	--	S216702 (X)	
13	NUT STUD 1/2" X 1 3/8" CLAMPING CHANNEL, W/SPRING	AS REQ'D	--	S507000	
14	BOLT, MACH, GALV., 5/8" X (LENGTH AS REQ'D), 1-SQUARE, WASHER & DOUBLE COIL SPRING WASHER	AS REQ'D	390	--	--
15	CLAMP, PIPE, STEEL, GALV., UNISTRUT, 3"	AS REQ'D	--	S229632	CL-3IN
16	CABLE POLE	--	4242	--	--
17	CABLE POLE CONNECTION	--	4111	--	--

NOTES:

(I) LOCATE INLINE SWITCH NEXT TO SOURCE CABLE.

(II) SEE SHEETS 1-6 FOR REGULATOR INSTALLATION.

(X) THIS ITEM IS EXEMPT.

REFERENCE:

(a) SEE UG4204, FIGURE 3.

TABLE OF CONTENTS

© 1998 - 2021 San Diego Gas & Electric Company. All rights reserved. Removal of this copyright notice without permission is not permitted under law.

REV	CHANGE	DR	BY	DSN	APV	DATE	REV	CHANGE	DR	BY	DSN	APV	DATE
C	REVISION	-	-	TR	JDJ	10/09/2007	F						
B	REVISION	-	-	TR	JDJ	10/08/2007	E						
A	REVISION	-	-	TR	JDJ	01/19/2007	D	FORMATTING	EDM	JIK	-	-	10/26/2021

SCOPE: THIS STANDARD COVERS THE INSTALLATION OF THE GRIDCO IPR-50. THE GRIDCO IPR-50 IS A PAD MOUNTED SINGLE PHASE UNIT THAT CAN BE CONNECTED TO TRANSFORMERS UP TO 50KVA AT ANY PRIMARY VOLTAGE. THE IPR-50 PROVIDES CONTINUOUS, DYNAMIC AND PRECISE LOAD VOLTAGE REGULATION, REACTIVE POWER COMPENSATION AND HARMONIC CANCELLATION DURING FORWARD AND REVERSE POWER FLOW.

ATTENTION:

* THE IPR-50 CAN BE APPLIED TO TRANSFORMERS WHERE PV (SOLAR PLANTS) AND EV (ELECTRIC VEHICLE CHARGING) IS PRESENT, TO HELP MAINTAIN VOLTAGE AND POWER FACTOR LEVELS.

** THE IPR-50 IS WIRED TO THE SECONDARY SIDE OF A SINGLE PHASE TRANSFORMER 120/240V.

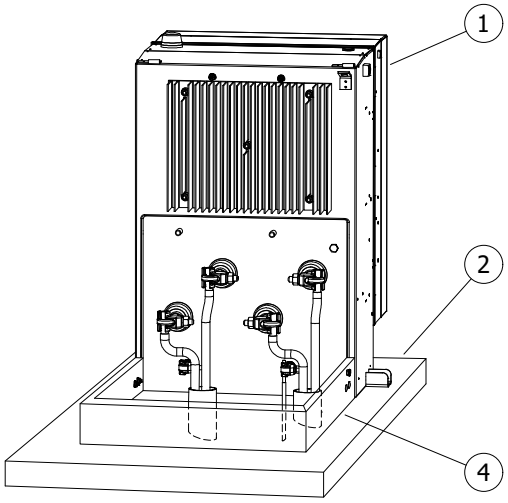

FIGURE 1
ISOMETRIC VIEW

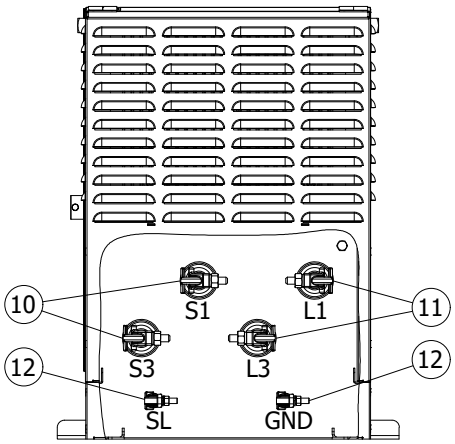

FIGURE 2
FRONT VIEW

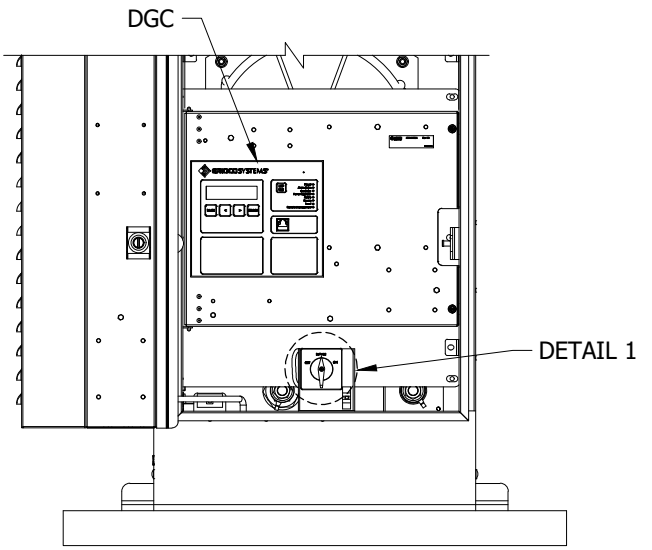

FIGURE 3
REAR VIEW

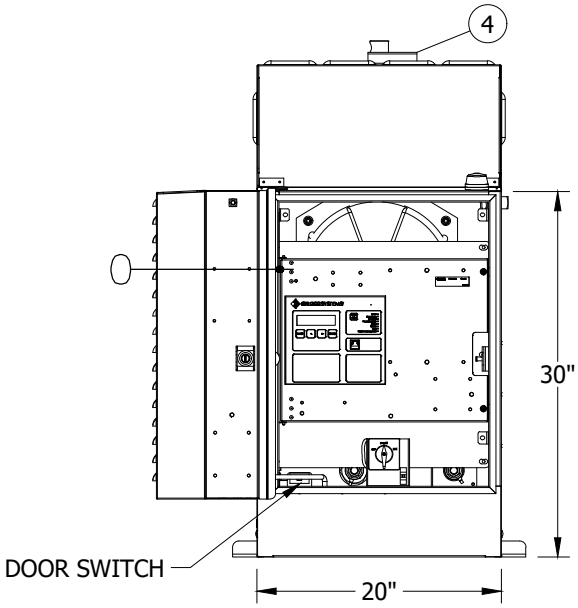

FIGURE 4
REAR VIEW

TABLE OF CONTENTS

© 1998 - 2021 San Diego Gas & Electric Company. All rights reserved. Removal of this copyright notice without permission is not permitted under law.

REV	CHANGE	DR	BY	DSN	APV	DATE	REV	CHANGE	DR	BY	DSN	APV	DATE
C	EDITORIAL CHANGES	-	KR	JS	MDJ	12/1/2017	F						
B	ORIGINAL ISSUE	-	JBH	TR	MDJ	4/15/2016	E	FORMATTING	EDM	JIK	-	-	10/26/2021
A	ORIGINAL ISSUE	-	JC	TR	-	5/5/2015	D	TABLE UPDATES	-	KR	JS	MDJ	12/21/2017

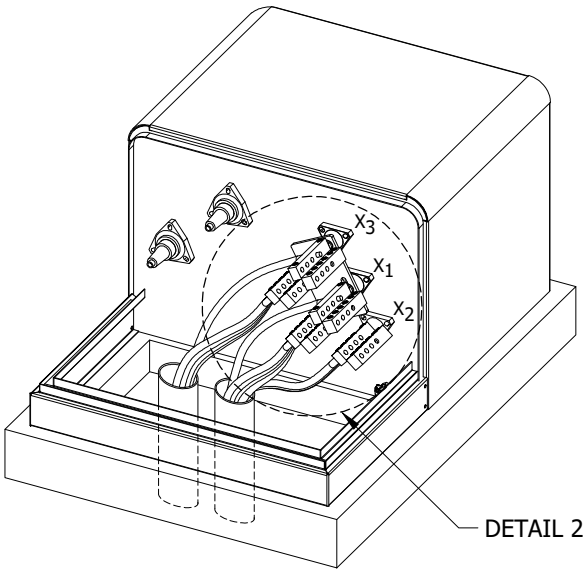

FIGURE 5
XFMR
ISOMETRIC VIEW

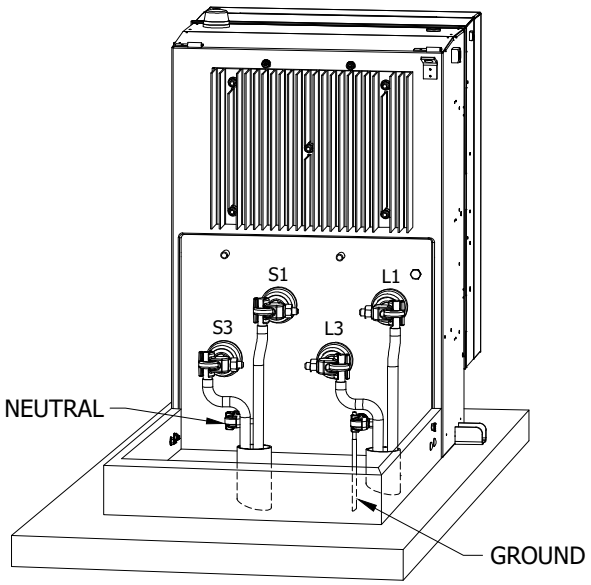

FIGURE 6
GRIDCO IPR50
ISOMETRIC VIEW

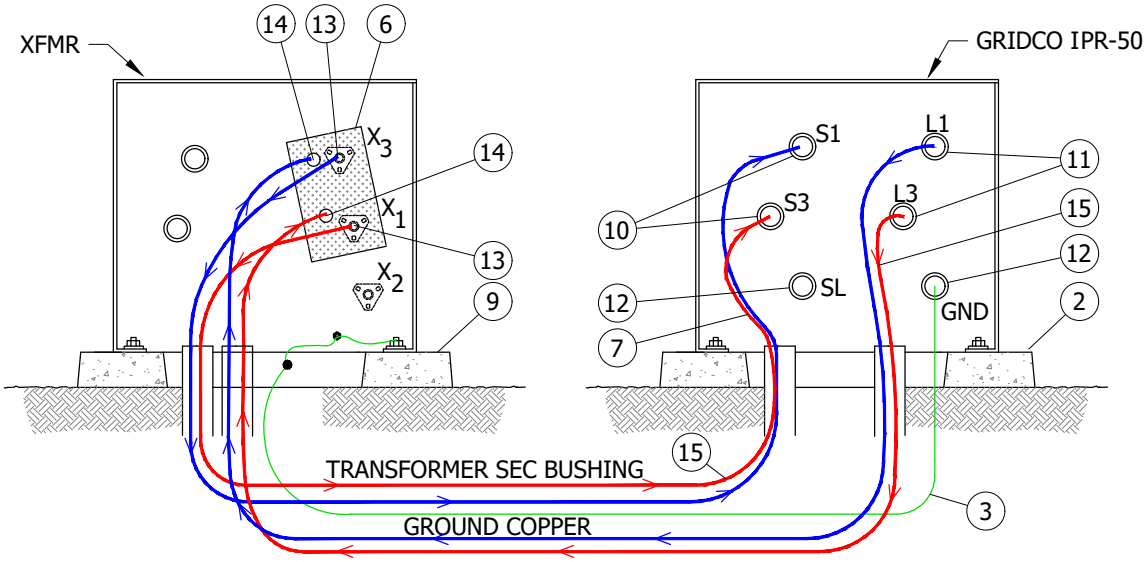

FIGURE 7
INSTALLATION OF IPR
CONNECTED TO SECONDARY OF XFMR

TABLE OF CONTENTS

© 1998 - 2021 San Diego Gas & Electric Company. All rights reserved. Removal of this copyright notice without permission is not permitted under law.

REV	CHANGE	DR	BY	DSN	APV	DATE	REV	CHANGE	DR	BY	DSN	APV	DATE
C	EDITORIAL CHANGES	-	KR	JS	MDJ	12/1/2017	F						
B	ORIGINAL ISSUE	-	JBH	TR	MDJ	4/15/2016	E	FORMATTING	EDM	JIK	-	-	10/26/2021
A	ORIGINAL ISSUE	-	JC	TR	-	5/5/2015	D	TABLE UPDATES	-	KR	JS	MDJ	12/21/2017

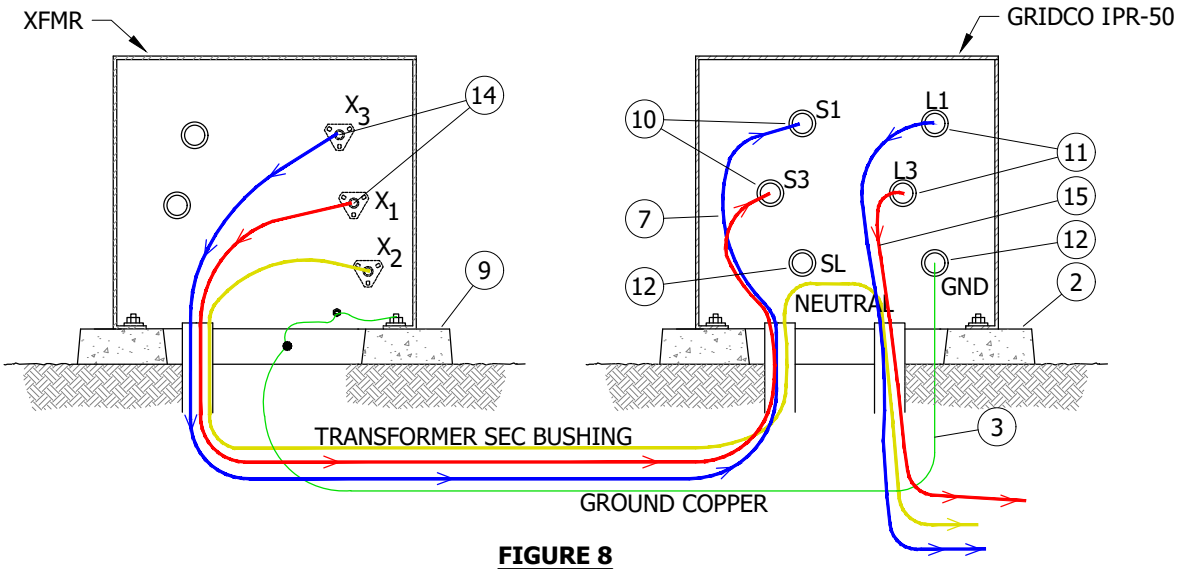

FIGURE 8
INSTALLATION OF IPR
CONNECTED IN SERIES OF SECONDARY

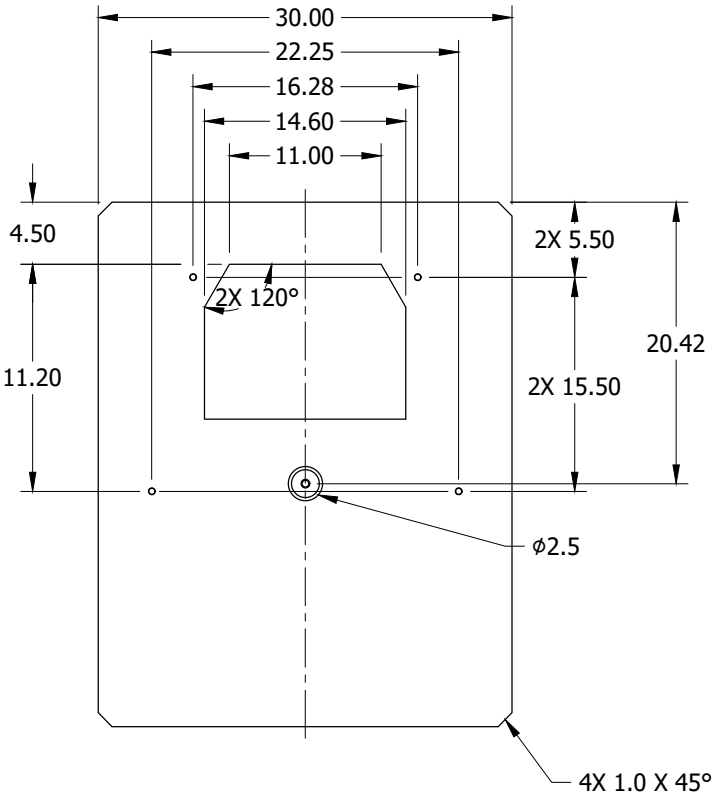

FIGURE 9
TOP VIEW

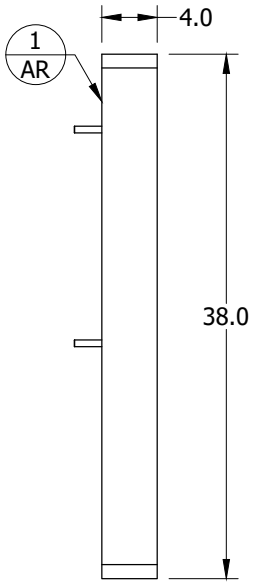

FIGURE 9
SIDE VIEW

TABLE OF CONTENTS

© 1998 - 2021 San Diego Gas & Electric Company. All rights reserved. Removal of this copyright notice without permission is not permitted under law.

REV	CHANGE	DR	BY	DSN	APV	DATE	REV	CHANGE	DR	BY	DSN	APV	DATE
C	EDITORIAL CHANGES	-	KR	JS	MDJ	12/1/2017	F						
B	ORIGINAL ISSUE	-	JBH	TR	MDJ	4/15/2016	E	FORMATTING	EDM	JIK	-	-	10/26/2021
A	ORIGINAL ISSUE	-	JC	TR	-	5/5/2015	D	TABLE UPDATES	-	KR	JS	MDJ	12/21/2017

X Indicates Latest Revision | Completely Revised | New Page | Information Removed

SDG&E ELECTRIC UNDERGROUND CONSTRUCTION STANDARDS

GRIDCO PAD MOUNTED POWER REGULATOR
IPR50

UG4712.3

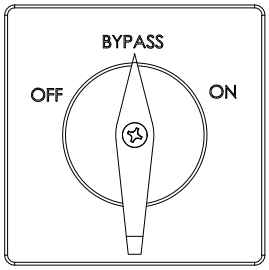

DETAIL 1
BYPASS SWITCH

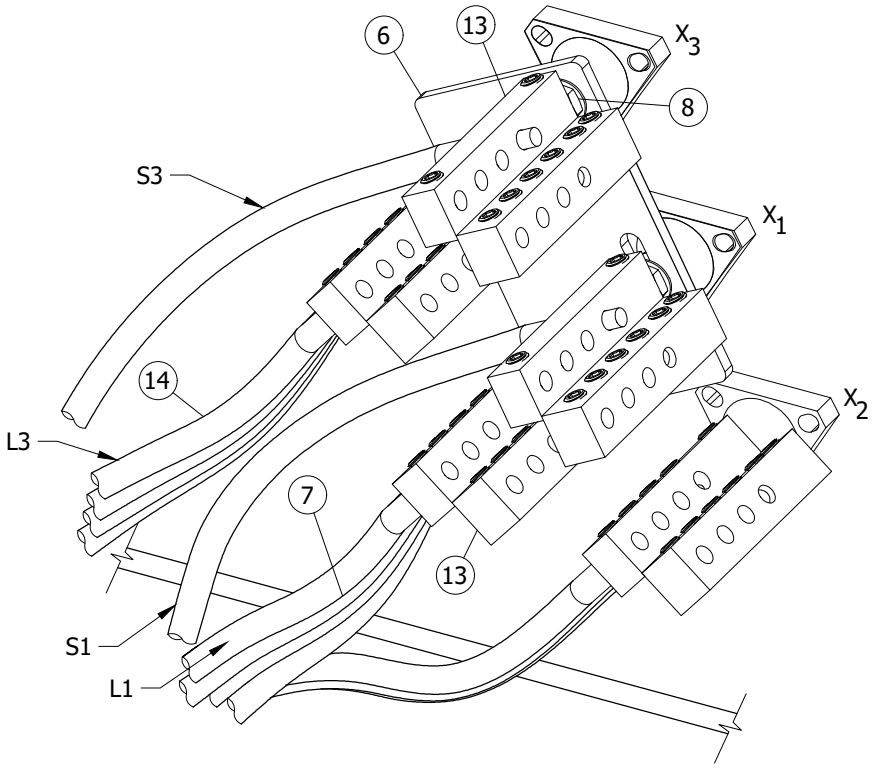

DETAIL 2

INSTALLATION:

A. THE IPR IS DESIGNED TO CONNECT TO THE SECONDARY SIDE OF A DISTRIBUTION TRANSFORMER RATED FOR 50KVA OR LESS. THE MAXIMUM CURRENT LIMIT OF THE IPR IS 250A. IF THE CURRENT EXCEEDS 250A, THE IPR WILL AUTOMATICALLY GO TO BYPASS. WHEN THE CURRENT RETURNS BELOW 250A, THE UNIT WILL AUTOMATICALLY TRANSITION OUT OF BYPASS AND RETURN TO ACTIVE STATE.

B. WEIGHT APPROXIMATELY 355 POUNDS.

C. THE IPR UNIT MUST BE PROPERLY GROUNDED BEFORE ENERGIZING THE SYSTEM.

D. DE-ENERGIZE THE TRANSFORMER BEFORE CONNECTING THE IPR.

E. SOURCE BUSHINGS ARE LOCATED TO THE LEFT SIDE OF THE IPR DESIGNATED AS S1 AND S3. THE LOAD BUSHINGS ARE LOCATED ON THE RIGHT DESIGNATED AS L1 AND L3. FITS CONDUCTORS SIZED #4AWG TO 500MCM.

F. PRIOR TO ENERGIZING THE UNIT, THE BYPASS SWITCH SHOULD BE IN THE BYPASS POSITION. ONCE THE TRANSFORMER IS ENERGIZED, CHECK VOLTAGE ON THE SECONDARY SIDE. TURN BYPASS SWITCH TO "ON" AND CHECK SECONDARY VOLTAGE AGAIN AFTER GIVING THE POWER ELECTRONICS A MINUTE TO BECOME OPERATIONAL. THE SECONDARY VOLTAGE SHOULD BE REGULATED PER THE FACTORY PROGRAM CONFIGURATION, 240V.

ONLY APPLIES TO IPR CONNECTED TO SECONDARY OF TRANSFORMER:

G. INSTALL RED ISOLATION BOARD WITH BACKING NUTS TO X1/X3 BUSHINGS.

H. LAND 350MCM ON RIGHT SIDE SECONDARY Z BARS (SHOWN AS S1/S3). RUN BACK TO IPR IN CONDUIT. L1/L3 (350MCM FROM IPR) WILL LAND ON LEFT SIDE SECONDARY Z BARS. THIS WILL BE REGULATED VOLTAGE Z BARS.

J. RUN SECONDARY TO CUSTOMERS (SIZE AND QTY AS NEEDED) OFF LEFT SIDE (REGULATED) Z BARS.

© 1998 - 2021 San Diego Gas & Electric Company. All rights reserved. Removal of this copyright notice without permission is not permitted under law.

REV	CHANGE	DR	BY	DSN	APV	DATE	REV	CHANGE	DR	BY	DSN	APV	DATE
C	EDITORIAL CHANGES	-	KR	JS	MDJ	12/1/2017	F						
B	ORIGINAL ISSUE	-	JBH	TR	MDJ	4/15/2016	E	FORMATTING	EDM	JIK	-	-	10/26/2021
A	ORIGINAL ISSUE	-	JC	TR	-	5/5/2015	D	TABLE UPDATES	-	KR	JS	MDJ	12/21/2017

BILL OF MATERIALS:

ITEM	DESCRIPTION	QUANTITY	STANDARD PAGE	STOCK NUMBER	DESIGN UNITS
1	REGULATOR, IPR-50	1	-	S581252	UIPR50
2	PAD, IPR-50 PAD	1	-	S514244	IPRPAD
3	GROUND WIRE	AS REQ'D	4510	S812818 (X)	GDWIRE
4	LOCK, KEYLESS	1	3711.3	S468010	-
5	SEALANT, CAULKING (VI)	AS REQ'D	-	S631800	-
6	RED ISOLATION BOARD	1	-	-	-
7	SOURCE CABLE TO IPR-50	AS REQ'D	-	-	-
8	NUT, CLAMPING CHANNEL	AS REQ'D	3711.3	S503520	-
9	PAD, TRANSFORMER, 3421	1	3421	S514240	3421-1
10	SOURCE BUSHING, IPR-50 EYEBOLT	2	-	-	-
11	LOAD BUSHING, IPR-50 EYEBOLT	2	-	-	-
12	SL NEUTRAL AND GROUND BUSHINGS, IPR-50	-	-	-	-
13	CONNECTIONS, SECONDARY, LINE TO IPR	AS REQ'D	4167/4168	-	-
14	CONNECTIONS, SECONDARY, IPR-50 LOAD & LOAD TO CUSTOMER(S)	AS REQ'D	-	-	-
15	LOAD CABLE FROM IPR-50 TO SECONDARY	AS REQ'D	-	-	-

NOTES:

I. VOLTAGE REGULATION UP TO ±10 PERCENT CONTINUOUS OF NOMINAL ±24V.

II. SOURCE VOLTAGE RANGE -55 PERCENT TO +25 PERCENT OF NOMINAL.

III. THE IPR IS A SERIES COMPONENT, THEREFORE IN BYPASS, UNREGULATED POWER WILL CONTINUE TO FLOW.

IV. THE IPR WILL PROTECT ITSELF FROM OVER CURRENT BY GOING INTO BYPASS. THERE IS A STATUS LIGHT LABELED "ACTIVE" LOCATED ON THE FRONT PANEL OF THE CONTROLLER. WHEN THE "ACTIVE" STATUS LIGHT IS ON, THE UNIT IS ACTIVELY REGULATING. WHEN THE STATUS LIGHT IS OFF, THE UNIT IS IN BYPASS.

V. THE UNIT IS AIR COOLED AND THE SURFACES OF THE IPR CAN EXCEED 100 DEGREES C. BE SURE TO TAKE APPROPRIATE PRECAUTIONS WHEN HANDLING THE DEVICE.

(VI) NOT SHOWN ON FIGURES.

(X) THIS ITEM IS EXEMPT.

REFERENCE:

a. FOR WIRE ENTRY PREVENTION, SEE UG3408.

b. FOR CONDUIT SEALING, SEE UG3948 (G.O. 128 RULE 31.6).

c. FOR SLIP-FIT CONNECTORS, SEE UG4167 AND UG4168.

d. FOR INSTALLATION OF SINGLE PHASE "NTS" TRANSFORMER, SEE UG3711.3.

e. FOR CABLE IDENTIFICATION, SEE UG3202.

f. FOR TRANSFORMER IDENTIFICATION, SEE UG3212, UG3213, UG3214, UG3215, UG3216, UG3217 AND UG3218.

g. FOR PAD AND CONDUIT REQUIREMENTS, SEE UG3421.

h. FOR MINIMUM OPERATING AND CLEARANCE REQUIREMENTS (PAD PLACEMENT), SEE UG3480, UG3481, UG3482, AND UG3483.

i. FOR PAD INSTALLATION OF PAD MOUNTED EQUIPMENT, SEE UG3484.

j. FOR RETAINING WALL REQUIREMENTS AND CLEARANCES FROM REVERSE SUBGRADE RETAINING WALL, SEE UG3486, UG3487, AND UG3488.

© 1998 - 2021 San Diego Gas & Electric Company. All rights reserved. Removal of this copyright notice without permission is not permitted under law.

REV	CHANGE	DR	BY	DSN	APV	DATE	REV	CHANGE	DR	BY	DSN	APV	DATE
C	EDITORIAL CHANGES	-	KR	JS	MDJ	12/1/2017	F						
B	ORIGINAL ISSUE	-	JBH	TR	MDJ	4/15/2016	E	FORMATTING	EDM	JIK	-	-	10/26/2021
A	ORIGINAL ISSUE	-	JC	TR	-	5/5/2015	D	TABLE UPDATES	-	KR	JS	MDJ	12/21/2017

TABLE OF CONTENTS

REFERENCE (CONT'D):

k. FOR RETAINING WALLS, SEE UG3489.

l. FOR SEALING SERVICE LATERAL CONDUITS, SEE UG3948.

m. FOR (PREFERRED I) AND (ALTERNATE) TRENCH GROUND WIRE, SEE UG4510.

n. FOR (PREFERRED II) EQUIPMENT GROUNDING INSTALLATION, SEE UG4512.

o. FOR EQUIPMENT GROUNDING, SEE UG4512.

p. FOR GROUNDING TELCO CONDUCTOR IN PAD MOUNTED EQUIPMENT, SEE UG4514.

TABLE OF CONTENTS

© 1998 - 2021 San Diego Gas & Electric Company. All rights reserved. Removal of this copyright notice without permission is not permitted under law.

REV	CHANGE	DR	BY	DSN	APV	DATE	REV	CHANGE	DR	BY	DSN	APV	DATE
C	EDITORIAL CHANGES	-	KR	JS	MDJ	12/1/2017	F						
B	ORIGINAL ISSUE	-	JBH	TR	MDJ	4/15/2016	E	FORMATTING	EDM	JIK	-	-	10/26/2021
A	ORIGINAL ISSUE	-	JC	TR	-	5/5/2015	D	TABLE UPDATES	-	KR	JS	MDJ	12/21/2017

X Indicates Latest Revision | Completely Revised | New Page | Information Removed

SDG&E ELECTRIC UNDERGROUND CONSTRUCTION STANDARDS

GRIDCO PAD MOUNTED POWER REGULATOR
IPR50

UG4712.6

SCOPE: THIS STANDARD COVERS THE INSTALLATION OF THE GRIDCO PRT-50. THE GRIDCO PRT-50 IS A PAD MOUNTED, SINGLE PHASE TRANSFORMER THAT PROVIDES CONTINUOUS, DYNAMIC AND PRECISE LOAD VOLTAGE REGULATION, REACTIVE POWER COMPENSATION AND HARMONIC CANCELLATION DURING FORWARD AND REVERSE POWER FLOW.

ATTENTION:

* THE PRT-50 CAN BE USED IN PLACE OF STANDARD SINGLE PHASE TRANSFORMERS WHERE PV (PHOTO VOLTAIC) AND EV (ELECTRICAL VEHICLE CHARGING) IS PRESENT TO HELP MAINTAIN VOLTAGE AND POWER FACTOR LEVELS.

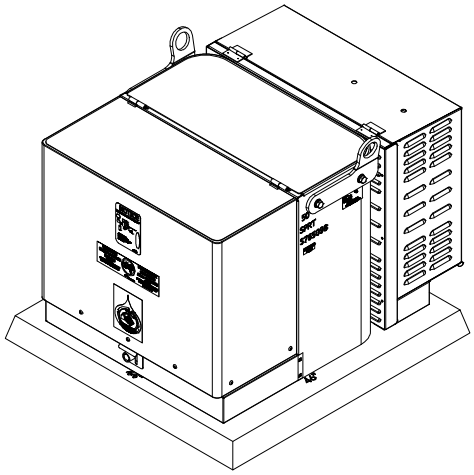

FIGURE 1
PRT-50

INSTALLATION:

(A) LOAD VOLTAGE REGULATION RANGE IS +/- 10 PERCENT AT 208A AT 100 PERCENT CAPACITY.

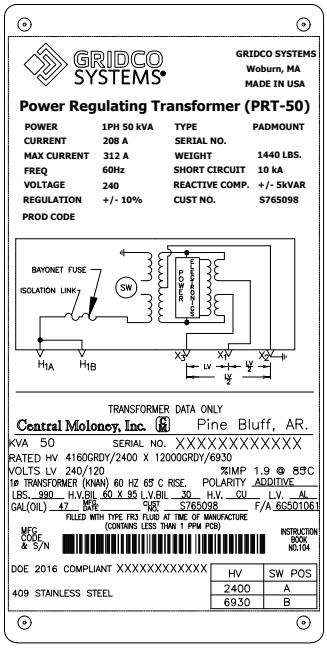

FIGURE 2 (A)

© 1998 - 2021 San Diego Gas & Electric Company. All rights reserved. Removal of this copyright notice without permission is not permitted under law.

REV	CHANGE	DR	BY	DSN	APV	DATE	REV	CHANGE	DR	BY	DSN	APV	DATE
C	EDITORIAL CHANGES	-	KR	JS	MDJ	12/1/2017	F						
B	ORIGINAL ISSUE	-	JBH	TR	MDJ	4/15/2016	E	FORMATTING	EDM	JIK	-	-	10/26/2021
A	ORIGINAL ISSUE	-	JC	TR	-	5/5/2015	D	TABLE UPDATES	-	KR	JS	MDJ	12/21/2017

TABLE OF CONTENTS

INSTALLATION (CONT'D):

(B) CLEARANCE TO ACCESS THE POWER ELECTRONICS REQUIRES A MINIMUM OF 20.5 TO 24.5 INCHES FROM BASE OF UNIT TO FULLY OPEN, DEPENDING ON ALIGNMENT ON THE PAD. FIGURE 3 SIDE VIEW, SHOWN CENTERED ON PAD.

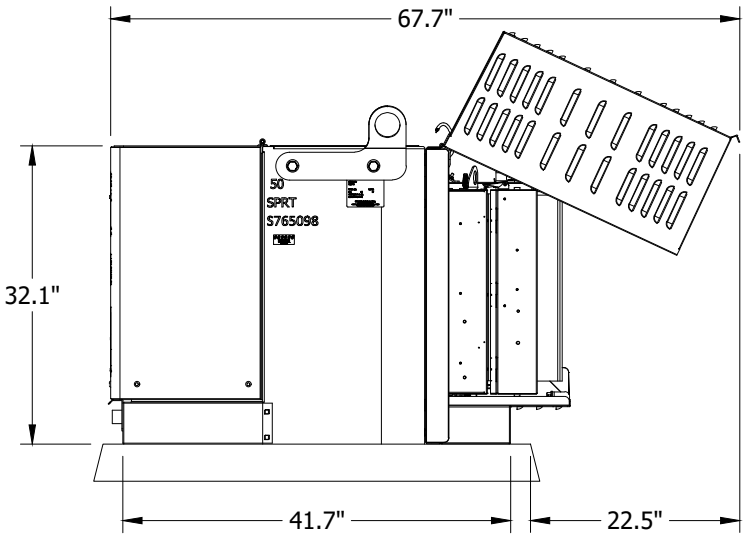

FIGURE 3 (B)
SIDE VIEW

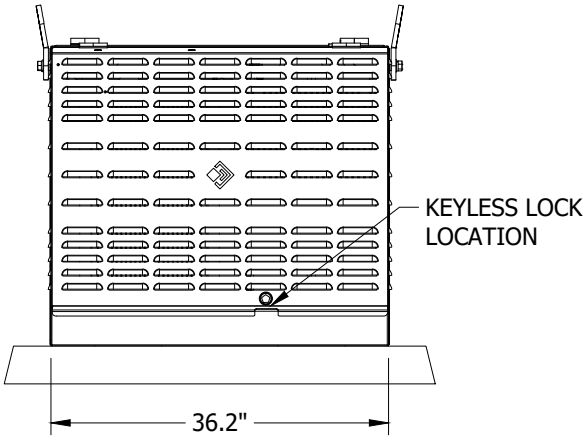

FIGURE 3
BACK VIEW

(C) CUSTOM LIFTING BRACKETS HAVE BEEN SUPPLIED DUE TO THE SHIFT OF BALANCE WITH THE ADDITION OF THE INLINE POWER REGULATOR. TURN LIFTING BRACKETS UPSIDE DOWN AFTER INSTALLATION.



FIGURE 4 (C)

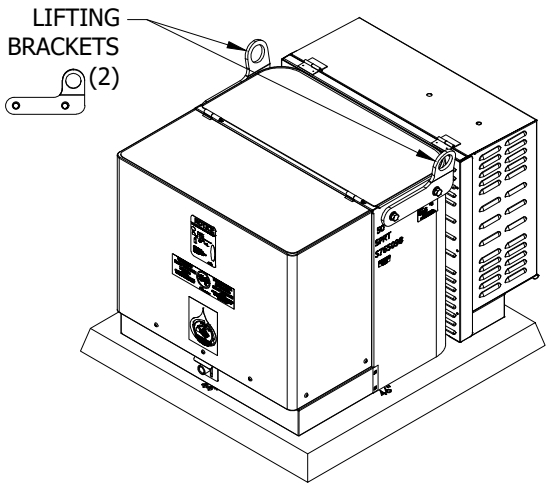

FIGURE 4
ISOMETRIC VIEW (C)

D. TERMINATE PRIMARY AND SECONDARY CONDUITS FLUSH WITH TOP OF PAD. SEAL SECONDARY AND PRIMARY CONDUITS WITH SEALING COMPOUND OR EQUIVALENT. SEAL SERVICE LATERAL CONDUITS. (b)

© 1998 - 2021 San Diego Gas & Electric Company. All rights reserved. Removal of this copyright notice without permission is not permitted under law.

REV	CHANGE	DR	BY	DSN	APV	DATE	REV	CHANGE	DR	BY	DSN	APV	DATE
C	EDITORIAL CHANGES	-	KR	JS	MDJ	12/1/2017	F						
B	ORIGINAL ISSUE	-	JBH	TR	MDJ	4/15/2016	E	FORMATTING	EDM	JIK	-	-	10/26/2021
A	ORIGINAL ISSUE	-	JC	TR	-	5/5/2015	D	TABLE UPDATES	-	KR	JS	MDJ	12/21/2017

INSTALLATION (CONT'D):

(E) BYPASS SWITCH CONTAINS THE FOLLOWING SETTINGS:

1. ON: THE INTEGRATED INLINE POWER REGULATOR IS ACTIVELY REGULATING GRID POWER FLOW.
2. OFF: POWER TO DOOR AND INTEGRATED POWER ELECTRONICS IS OFF DURING WHICH TIME THE SYSTEM IS IN PASS-THROUGH MODE ALLOWING GRID POWER TO PASS THROUGH WITHOUT REGULATING.
3. BYPASS: THE INTEGRATED INLINE POWER REGULATOR IS POWERED ALLOWING MANAGEMENT OF THE DEVICE HOWEVER GRID POWER IS DETOURED AROUND THE ELECTRONICS AND THE UNIT IS NOT REGULATING.



FIGURE 5
BYPASS SWITCH (E)

(F) PRIOR TO CONNECTING SECONDARIES, CHECK THAT TORQUE MARKS ON SECONDARY BOLTS ARE ALIGNED THROUGH THE PLEXIGLAS VIEWING WINDOW.

(G) TO PERFORM TRANSFORMER PRE-TEST, DISCONNECT AND ISOLATE X3/X1 CONDUCTORS SHOWN IN FIGURE 6. PERFORM TEST, THEN RE-INSTALL X3/X1 CONDUCTORS, AND TORQUE TO 50 FT. LBS. DO NO OVER/UNDER TIGHTEN.

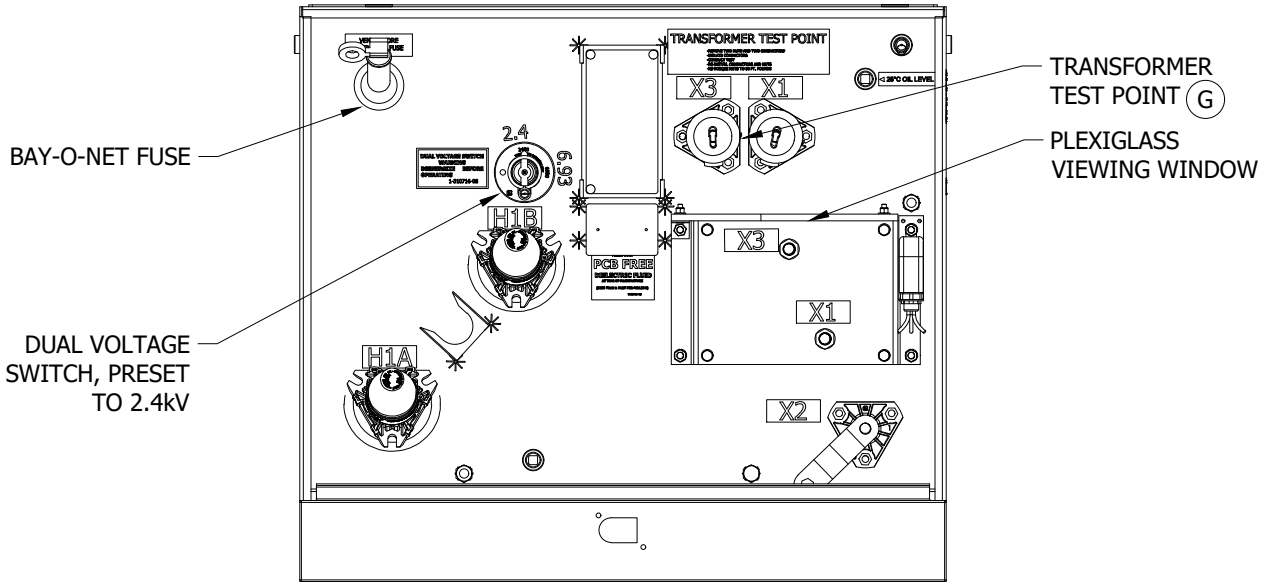

FIGURE 6 (F)(G)

© 1998 - 2021 San Diego Gas & Electric Company. All rights reserved. Removal of this copyright notice without permission is not permitted under law.

REV	CHANGE	DR	BY	DSN	APV	DATE	REV	CHANGE	DR	BY	DSN	APV	DATE
C	EDITORIAL CHANGES	-	KR	JS	MDJ	12/1/2017	F						
B	ORIGINAL ISSUE	-	JBH	TR	MDJ	4/15/2016	E	FORMATTING	EDM	JIK	-	-	10/26/2021
A	ORIGINAL ISSUE	-	JC	TR	-	5/5/2015	D	TABLE UPDATES	-	KR	JS	MDJ	12/21/2017

TABLE OF CONTENTS

INSTALLATION (CONT'D):

(H) PRIOR TO ENERGIZING THE UNIT, THE BYPASS SWITCH SHOULD BE IN THE BYPASS POSITION. ONCE THE TRANSFORMER IS ENERGIZED, CHECK VOLTAGE ON THE SECONDARY SIDE. IF VOLTAGE IS ACCEPTABLE, TURN BYPASS SWITCH TO "ON" AND CHECK SECONDARY VOLTAGE AGAIN.

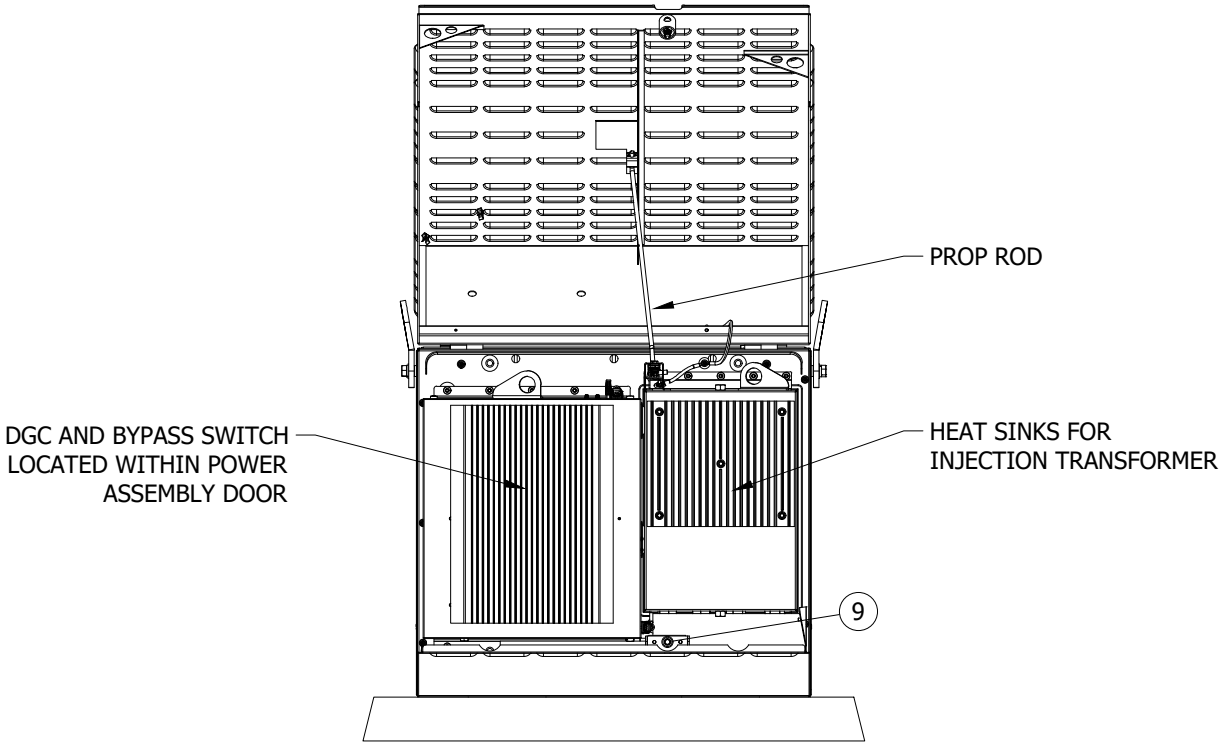

FIGURE 7 (H)

J. BASE WILL BE CAULKED TO PREVENT WIRE ENTRY. (a)

K. KEYLESS LOCK TO BE ATTACHED TO LATCHING MECHANISM ON TRANSFORMER AND IPR CABINET WITH PENTAHEAD BOLT THREADED IN COMPLETELY.

BILL OF MATERIALS:

ITEM	DESCRIPTION		QUANTITY	STANDARD PAGE	STOCK NUMBER	DESIGN UNITS
1	TRANSFORMER, REGULATING, 50KVA, 6930/2400V (A)		1	-	S765098	SPRT50
2	PAD, TRANSFORMER, SINGLE PHASE		1	3421	S514240	3421-1
3	CONNECTOR, SLIP-FIT	#8-350KCMIL	3	4167/4168	S270290	350-8S
		#6-55KCMIL			S270296	500-8S
4	GROUND WIRE		AS REQ'D	4510	S812818 (X)	GDWIRE
5	CONNECTOR, SERVICE POST		2	3711.1	S262560	SPCONN
6	NUT, CLAMPING CHANNEL		2		S503520	-
7	SCREW, HEX HEAD CAP, BRONZE, 1/2" X 1 1/2"		2		S616192	-
8	WASHER, STANDARD FLAT ROUND, BRONZE, 1/2"		2		S799488	-
9	LOCK, KEYLESS		2		S468010	-
10	SEALANT, CAULKING		AS REQ'D	3408	S631800	-

© 1998 - 2021 San Diego Gas & Electric Company. All rights reserved. Removal of this copyright notice without permission is not permitted under law.

REV	CHANGE	DR	BY	DSN	APV	DATE	REV	CHANGE	DR	BY	DSN	APV	DATE
C	EDITORIAL CHANGES	-	KR	JS	MDJ	12/1/2017	F						
B	ORIGINAL ISSUE	-	JBH	TR	MDJ	4/15/2016	E	FORMATTING	EDM	JIK	-	-	10/26/2021
A	ORIGINAL ISSUE	-	JC	TR	-	5/5/2015	D	TABLE UPDATES	-	KR	JS	MDJ	12/21/2017

TABLE OF CONTENTS

NOTES:

I. PRT-50 WEIGHS APPROXIMATELY 1,440 POUNDS.

II. THE HEAT SINKS MOUNTED ON THE OUTSIDE OF THE PRT CAN GET EXTREMELY HOT. BE SURE TO TAKE APPROPRIATE PRECAUTIONS WHEN HANDLING OR SERVICING THE DEVICE.

III. WHEN INSTALLING OR CHANGING SPRT50 FROM 2.4KV TO 6.9KV, CHANGE BAY-O-NET FUSE FROM 40A TO 12A (AND VICE VERSA). SPRT50 IS SUPPLIED WITH 40A 2.4KV FUSE.

IV. SET SCREW CONNECTORS ARE NOT PROVIDED WITH TRANSFORMER. ALWAYS MAKE CERTAIN SECONDARY CONNECTIONS ARE TIGHT BEFORE ENERGIZING TRANSFORMER. (c)

(X) THIS ITEM IS EXEMPT.

REFERENCE:

(a) FOR WIRE ENTRY PREVENTION, SEE UG3408.

(b) FOR CONDUIT SEALING, SEE UG3948 (G.O. 128 RULE 31.6).

(c) FOR SLIP-FIT CONNECTORS, SEE UG4167.

d. FOR INSTALLATION OF SINGLE PHASE "SDS" TRANSFORMER, SEE UG3711.1.

e. FOR CABLE IDENTIFICATION, SEE UG3202.

f. FOR TRANSFORMER IDENTIFICATION, SEE UG3214.

g. FOR PAD AND CONDUIT REQUIREMENTS, SEE UG3421.

h. FOR MINIMUM OPERATING AND CLEARANCE REQUIREMENTS (PAD PLACEMENT), SEE UG3480, UG3481, UG3482 AND UG3483.

i. FOR PAD INSTALLATION OF PAD MOUNTED EQUIPMENT, SEE UG3484.

j. FOR RETAINING WALL REQUIREMENTS AND CLEARANCES FROM REVERSE SUBGRADE RETAINING WALL, SEE UG3486, UG3487 AND UG3488.

k. FOR RETAINING WALLS, SEE UG3489.

l. FOR SEALING SERVICE LATERAL CONDUITS, SEE UG3948.

m. FOR PREFERRED I AND ALTERNATE TRENCH GROUND WIRE, SEE UG4510.

n. FOR EQUIPMENT GROUNDING INSTALLATION, SEE UG4512.

o. FOR GROUNDING TELCO CONDUCTOR IN PAD MOUNTED EQUIPMENT, SEE UG4514.

TABLE OF CONTENTS

© 1998 - 2021 San Diego Gas & Electric Company. All rights reserved. Removal of this copyright notice without permission is not permitted under law.

REV	CHANGE	DR	BY	DSN	APV	DATE	REV	CHANGE	DR	BY	DSN	APV	DATE
C	EDITORIAL CHANGES	-	KR	JS	MDJ	12/1/2017	F						
B	ORIGINAL ISSUE	-	JBH	TR	MDJ	4/15/2016	E	FORMATTING	EDM	JIK	-	-	10/26/2021
A	ORIGINAL ISSUE	-	JC	TR	-	5/5/2015	D	TABLE UPDATES	-	KR	JS	MDJ	12/21/2017

SCOPE: THIS STANDARD COVERS THE INSTALLATION OF THE 600A THREE-PHASE "3 IN 1" PAD MOUNTED REGULATORS. THE PAD MOUNTED REGULATORS MAY BE INSTALLED IN TWO APPLICATIONS.

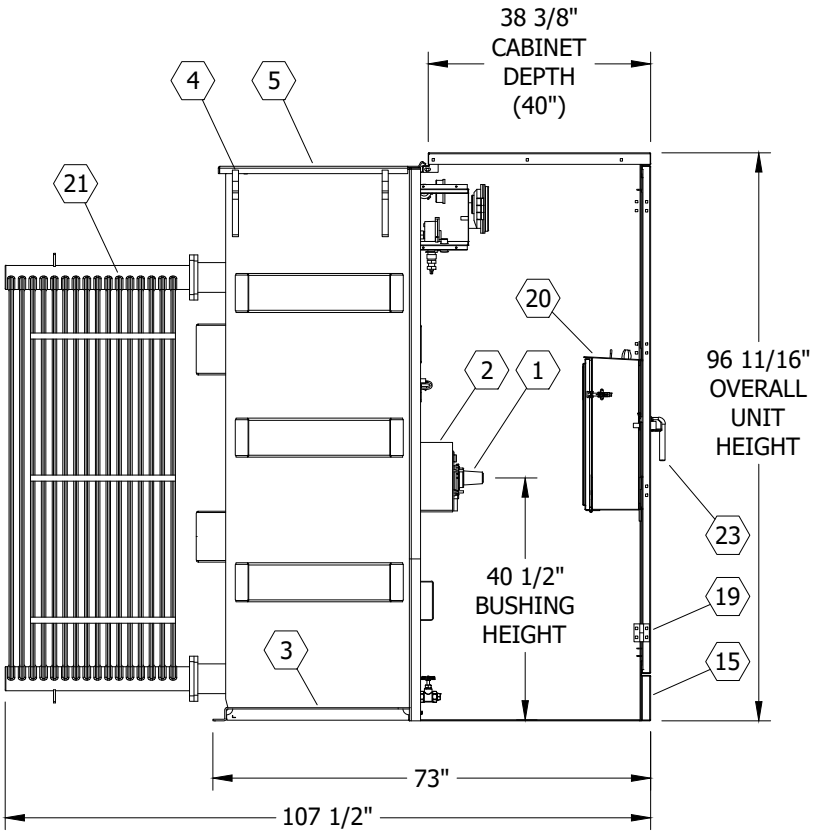

FIGURE 1
WYE CONNECTED REGULATOR (I)(b)(c)
CABINET SIDE REMOVED
SIDE VIEW
SEE TABLE 1

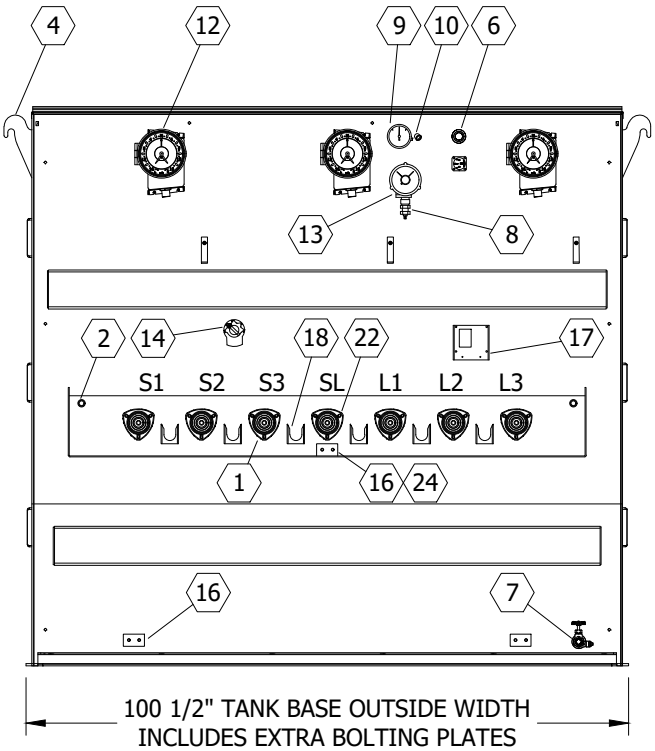

FIGURE 1
WYE CONNECTED REGULATOR (I)(b)(c)
CABINET REMOVED
FRONT VIEW
SEE TABLE 1

TABLE OF CONTENTS

© 1998 - 2021 San Diego Gas & Electric Company. All rights reserved. Removal of this copyright notice without permission is not permitted under law.

REV	CHANGE	DR	BY	DSN	APV	DATE	REV	CHANGE	DR	BY	DSN	APV	DATE
C							F						
B	FORMATTING	EDM	JIK	-	-	10/26/2021	E						
A	ORIGINAL ISSUE	-	KR	JES	CZH	04/22/2019	D						

X Indicates Latest Revision | Completely Revised | New Page | Information Removed

SDG&E ELECTRIC UNDERGROUND CONSTRUCTION STANDARDS

INSTALLATION OF PAD MOUNTED THREE-PHASE REGULATOR "3 IN 1"

UG4713.1

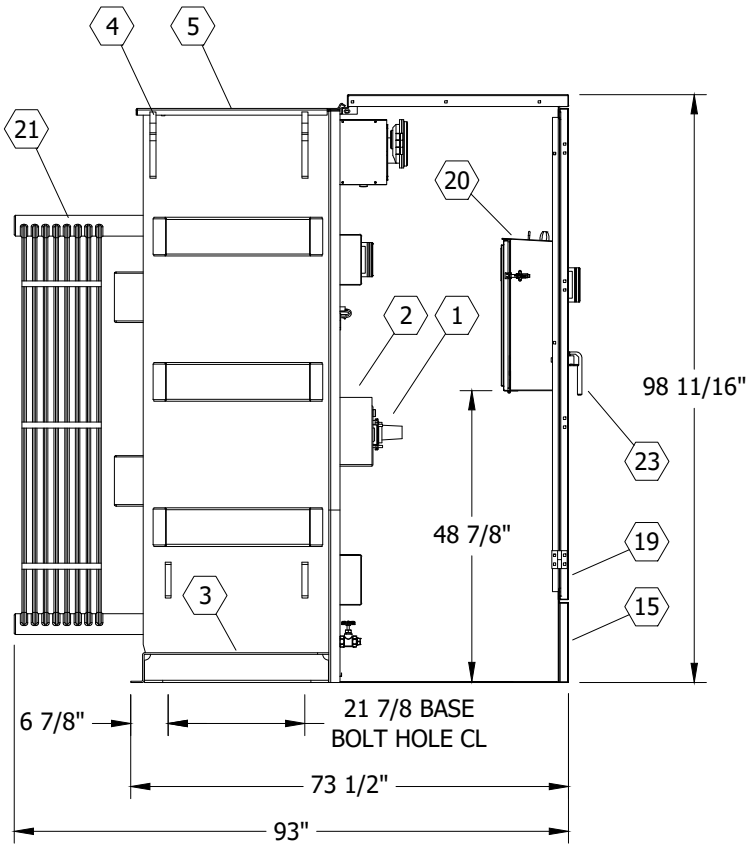

FIGURE 2
DELTA CONNECTED REGULATOR (I)(b)(c)
CABINET SIDE REMOVED
SIDE VIEW
SEE TABLE 1

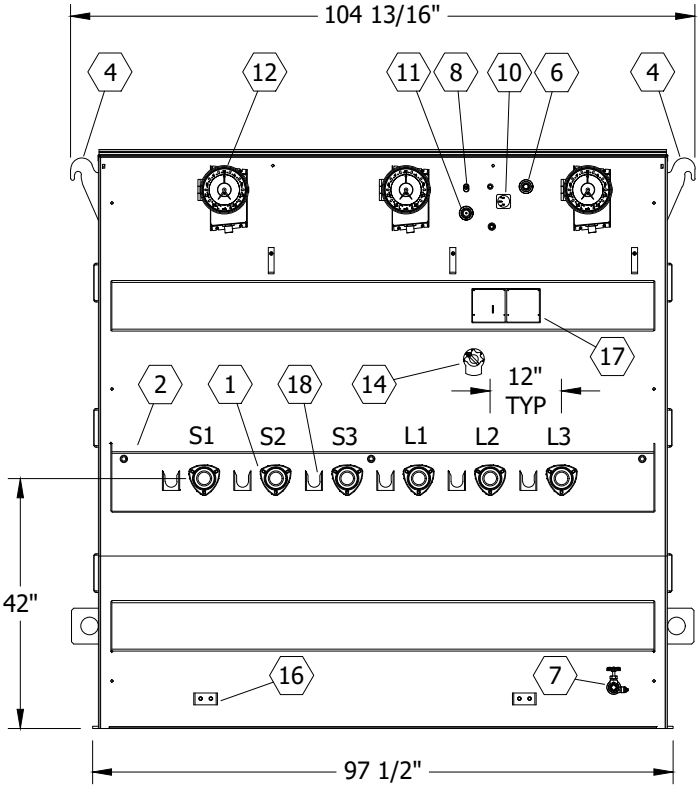

FIGURE 2
DELTA CONNECTED REGULATOR (I)(b)(c)
CABINET REMOVED
FRONT VIEW
SEE TABLE 1

TABLE OF CONTENTS

© 1998 - 2021 San Diego Gas & Electric Company. All rights reserved. Removal of this copyright notice without permission is not permitted under law.

REV	CHANGE	DR	BY	DSN	APV	DATE	REV	CHANGE	DR	BY	DSN	APV	DATE
C							F						
B	FORMATTING	EDM	JIK	-	-	10/26/2021	E						
A	ORIGINAL ISSUE	-	KR	JES	CZH	04/22/2019	D						

X Indicates Latest Revision | Completely Revised | New Page | Information Removed

SDG&E ELECTRIC UNDERGROUND CONSTRUCTION STANDARDS

INSTALLATION OF PAD MOUNTED THREE-PHASE REGULATOR "3 IN 1"

UG4713.2

TABLE 1 (FIGURES 1-2)

PAD MOUNTED REGULATOR DESCRIPTION LIST	
ITEM	**DESCRIPTION**
1	BUSHING, INTEGRAL APPARATUS, HIGH VOLTAGE
2	BOXOUT, TANK, FOR HV BUSHINGS
3	BASE, REGULATOR, TANK W/ JACKING AND ROLLING FACILITIES
4	LIFTING LUGS
5	BOLTED COVER W/ NUT GUARD
6	PRESS CONN. & FILL PLUG, 1, 0" UPPER FILTER
7	VALVE, DRAIN, 1, 0" , W/ SAMPLER
8	DEVICE, AUTO PRESS RELIEF
9	PROVISION PRESSURE VACUUM GAUGE
10	GAUGE, OIL LEVEL MAGNETIC
11	GAUGE, OIL SIGHT
12	INDICATOR, TAP CHANGER POSITION, W/ DRAGHANDS AND REGULATION RANGE LIMIT SWITCHES
13	THERMOMETER PROVISION
14	TAP SWITCH, EXTERNAL NON-LOAD, FOR CONTROL TAPS
15	REMOVABLE SILL
16	PAD, GROUND, W/ 2 - 1/2-13 UNC TAPPED HOLES 7/16" DEEP
17	NAMEPLATE
18	PARKING STAND
19	CABINET, BOLTED, HIGH SECURITY, W/ PENTAHEAD DOOR BOLTS
20	ENCLOSURE, CONTROL, LOCKABLE ON INSIDE OF CABINET DOOR
21	CORRUGATION, COOLING, (WHEN REQUIRED)
22	BUSHING, NEUTRAL/CONCENTRIC GROUND
23	DOOR HANDLE
24	CONCENTRIC NEUTRAL/NEUTRAL GROUND STRAP

TABLE OF CONTENTS

© 1998 - 2021 San Diego Gas & Electric Company. All rights reserved. Removal of this copyright notice without permission is not permitted under law.

REV	CHANGE	DR	BY	DSN	APV	DATE	REV	CHANGE	DR	BY	DSN	APV	DATE
C							F						
B	FORMATTING	EDM	JIK	-	-	10/26/2021	E						
A	ORIGINAL ISSUE	-	KR	JES	CZH	04/22/2019	D						

X Indicates Latest Revision | Completely Revised | New Page | Information Removed

SDG&E ELECTRIC UNDERGROUND CONSTRUCTION STANDARDS

INSTALLATION OF PAD MOUNTED THREE-PHASE REGULATOR "3 IN 1"

UG4713.3

TABLE OF CONTENTS

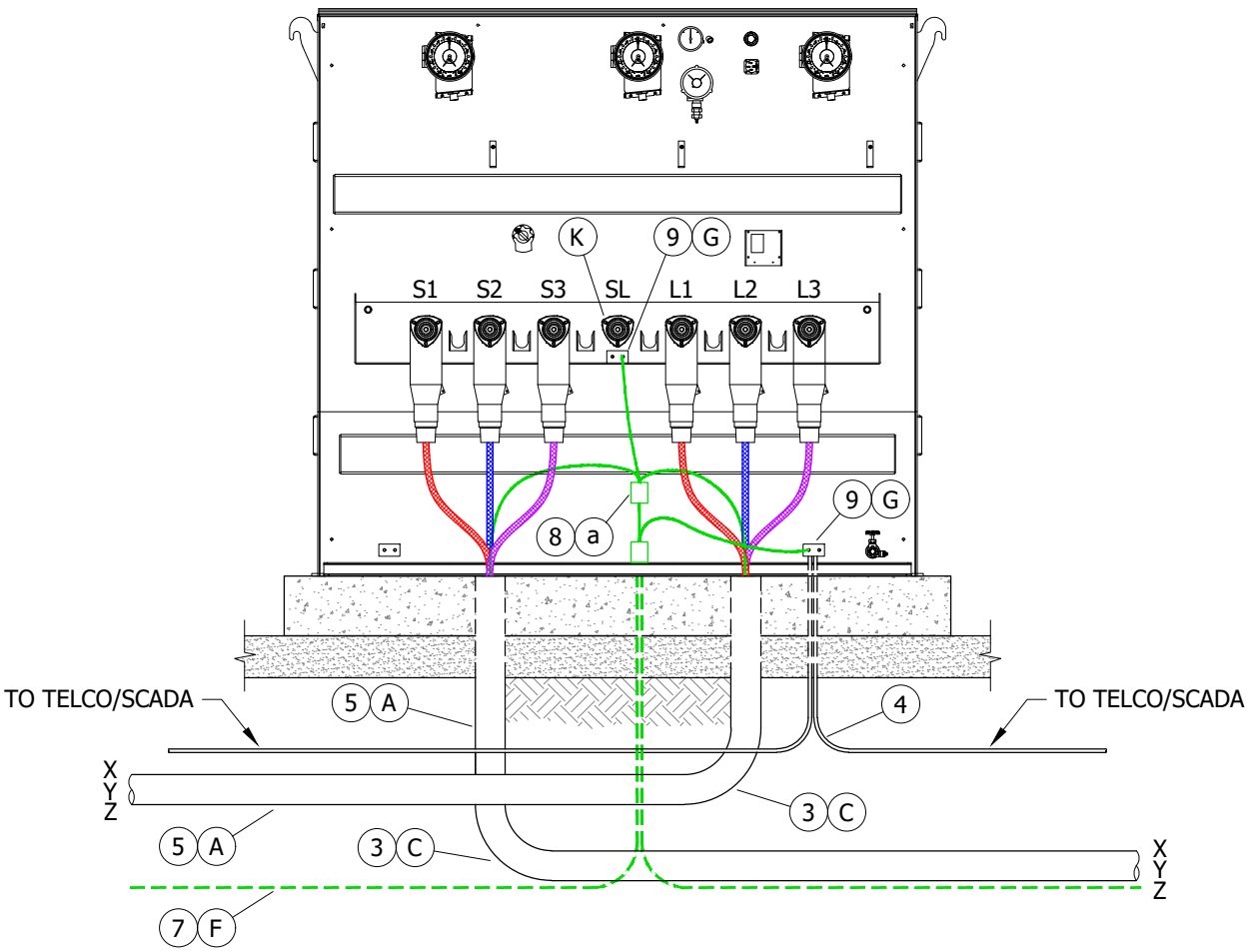

FIGURE 3
CABLE CONNECTION DIAGRAM
WYE CONNECTED REGULATOR

© 1998 - 2021 San Diego Gas & Electric Company. All rights reserved. Removal of this copyright notice without permission is not permitted under law.

REV	CHANGE	DR	BY	DSN	APV	DATE	REV	CHANGE	DR	BY	DSN	APV	DATE
C							F						
B	FORMATTING	EDM	JIK	-	-	10/26/2021	E						
A	ORIGINAL ISSUE	-	KR	JES	CZH	04/22/2019	D						

X Indicates Latest Revision | Completely Revised | New Page | Information Removed

SDG&E ELECTRIC UNDERGROUND CONSTRUCTION STANDARDS

INSTALLATION OF PAD MOUNTED THREE-PHASE REGULATOR "3 IN 1"

UG4713.4

TABLE OF CONTENTS

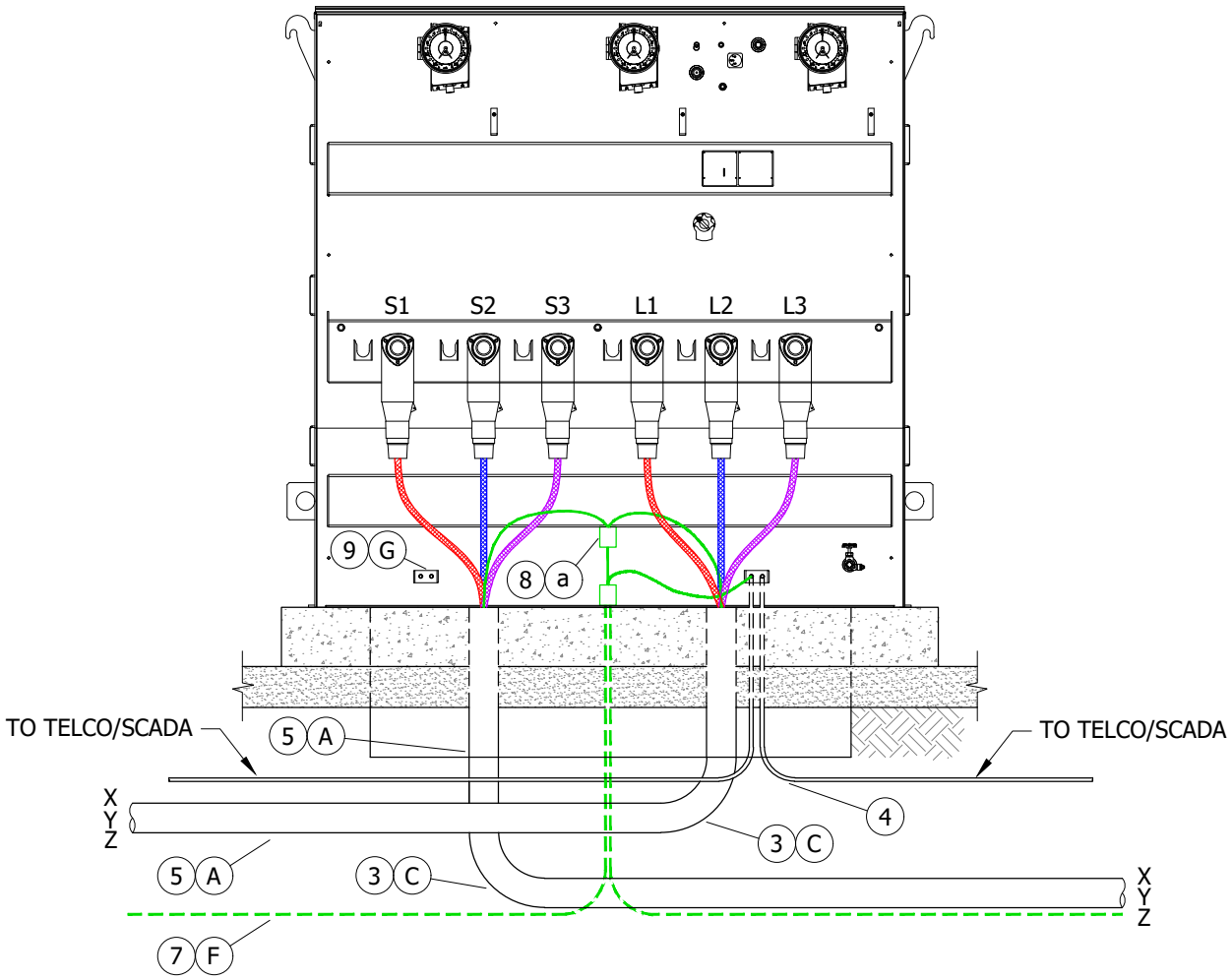

FIGURE 4
CABLE CONNECTION DIAGRAM
DELTA CONNECTED REGULATOR

© 1998 - 2021 San Diego Gas & Electric Company. All rights reserved. Removal of this copyright notice without permission is not permitted under law.

REV	CHANGE	DR	BY	DSN	APV	DATE	REV	CHANGE	DR	BY	DSN	APV	DATE
C							F						
B	FORMATTING	EDM	JIK	-	-	10/26/2021	E						
A	ORIGINAL ISSUE	-	KR	JES	CZH	04/22/2019	D						

X Indicates Latest Revision | Completely Revised | New Page | Information Removed

SDG&E ELECTRIC UNDERGROUND CONSTRUCTION STANDARDS

INSTALLATION OF PAD MOUNTED THREE-PHASE REGULATOR "3 IN 1"

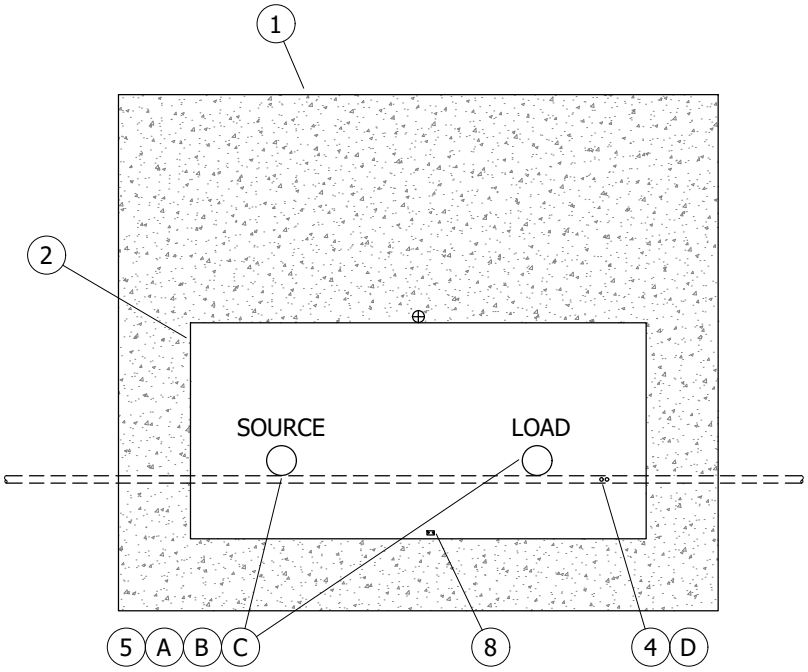

FIGURE 5
CONDUIT/SUBSTRUCTURE/PAD/COMMUNICATION/GROUND
INSTALLATION DIAGRAM
TOP VIEW

TABLE OF CONTENTS

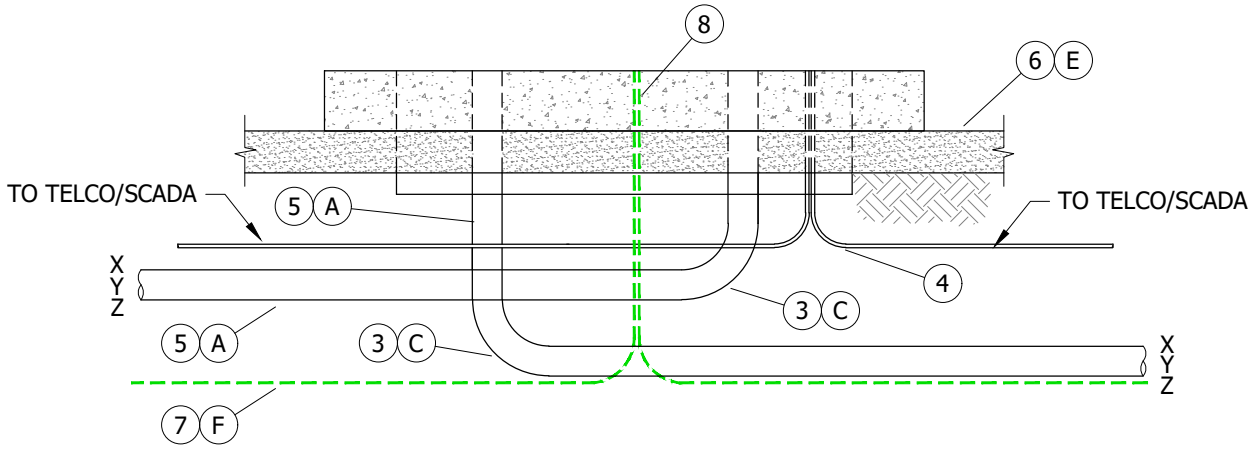

FIGURE 5
CONDUIT/SUBSTRUCTURE/PAD/COMMUNICATION/GROUND
INSTALLATION DIAGRAM
FRONT VIEW

© 1998 - 2021 San Diego Gas & Electric Company. All rights reserved. Removal of this copyright notice without permission is not permitted under law.

REV	CHANGE	DR	BY	DSN	APV	DATE	REV	CHANGE	DR	BY	DSN	APV	DATE
C							F						
B	FORMATTING	EDM	JIK	-	-	10/26/2021	E						
A	ORIGINAL ISSUE	-	KR	JES	CZH	04/22/2019	D						

X Indicates Latest Revision | Completely Revised | New Page | Information Removed

SDG&E ELECTRIC UNDERGROUND CONSTRUCTION STANDARDS

INSTALLATION OF PAD MOUNTED THREE-PHASE REGULATOR "3 IN 1"

UG4713.6

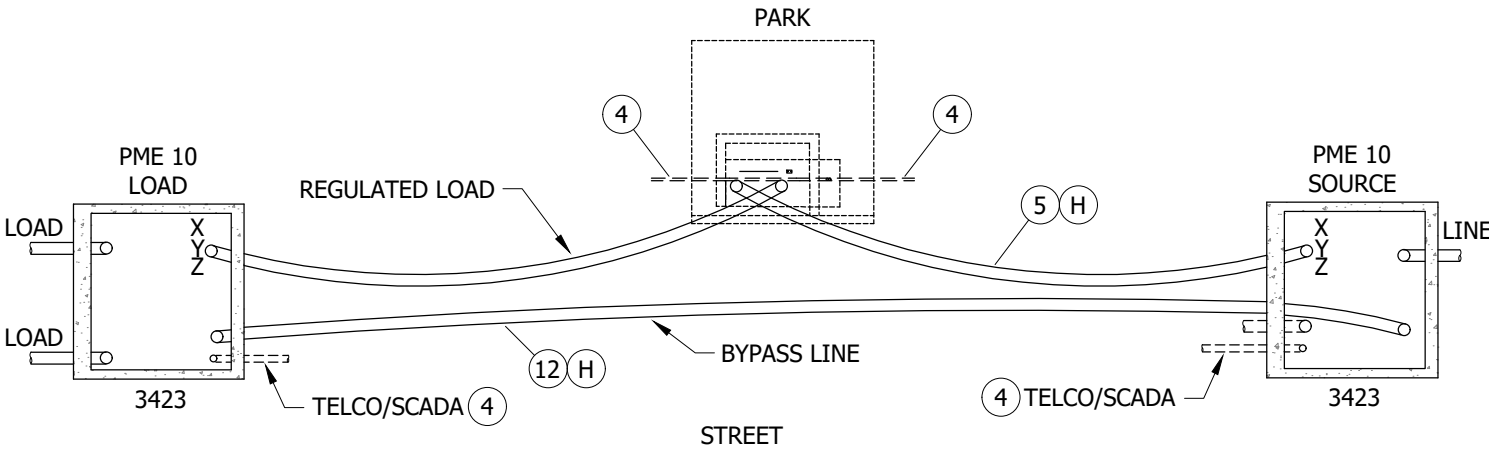

FIGURE 6

CONDUIT DIAGRAM FOR PME AND PAD MOUNTED REGULATORS

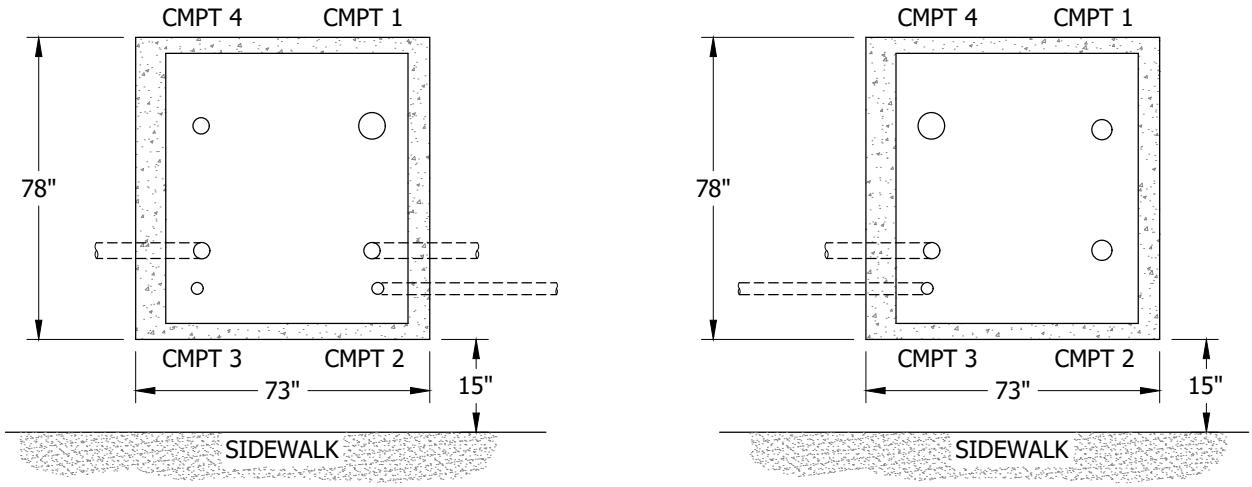

FIGURE 7

CONDUIT DIAGRAM FOR PME AND PAD MOUNTED REGULATORS (d)
BOX AND CONDUIT PLACEMENT
PLAN VIEW

© 1998 - 2021 San Diego Gas & Electric Company. All rights reserved. Removal of this copyright notice without permission is not permitted under law.

REV	CHANGE	DR	BY	DSN	APV	DATE	REV	CHANGE	DR	BY	DSN	APV	DATE
C							F						
B	FORMATTING	EDM	JIK	-	-	10/26/2021	E						
A	ORIGINAL ISSUE	-	KR	JES	CZH	04/22/2019	D						

X Indicates Latest Revision | Completely Revised | New Page | Information Removed

TABLE OF CONTENTS

INSTALLATION:

(A) SLURRY ENCASE ALL 5-INCH CONDUITS.

(B) SLURRY ENCASE ALL 5-INCH 90 DEGREE BENDS TO WITHIN 6 INCHES OF THE FINAL CUT.

(C) DO NOT CUT THE 90 DEGREE BENDS.

(D) LOOP A 1-INCH POLYETHYLENE CONDUIT TO EACH PAD. STUB THE CONDUIT 4 FEET FROM THE EDGE OF PAD, CLOSEST TO TELCO, WHEN REQUIRED.

(E) IN SOFT SOILS A CONCRETE BACKFILL (1 SACK MIX.) IS REQUIRED UNDER THE PAD 12 INCHES BEYOND THE SIDE EDGES OF PAD AND 12 INCHES DEEP.

(F) INSTALL A TRENCH GROUND WIRE FOR EACH PAD. INSTALL A SEPARATE GROUND WIRE BETWEEN THE CENTER PAD AND EACH END PAD.

(G) ATTACH TRENCH GROUND TO GROUND PADS AND CONCENTRIC NEUTRAL.

(H) ALL HORIZONTAL BENDS WILL BE MADE WITH ONLY LONG SWEEPS OF 25-FOOT RADIUS OR LONGER.

J. SET 3313 ON 4 INCHES OF COMPACTED 1/2 GRAVEL.

(K) NEUTRAL/GROUND STRAP FROM NEUTRAL BUSHING TO GROUND PAD.

BILL OF MATERIALS:

ITEM	DESCRIPTION	QUANTITY	STANDARD PAGE	STOCK NUMBER	DESIGN UNITS
1	PAD, REGULATOR, THREE-PHASE	1	--	--	--
2	BASE SECTION, 3313	3	3313	S162664	3313B
3	BEND, 5", 90°	2	3373	--	--
4	CONDUIT, POLY, 1"	AS REQ'D	3373	S249630	1"PE
5	CONDUIT, 5" DB	AS REQ'D	3373	S249728	1DB5SL
6	SLURRY 1-SACK	AS REQ'D	3376	S656400	--
7	WIRE, TRENCH GROUND	3	4510	--	--
8	CONNECTOR, COMPRESSION	AS REQ'D	4174/4176	--	--
9	PAD, GROUND W/ 2 - 1/2-13 UNC TAPPED HOLES 7/16" DEEP	AS REQ'D	--	S262560	--
10	CONNECTOR, "T" TYPE, 600A	6	4181	--	--
11	REGULATOR, VOLTAGE, THREE-PHASE PADMOUNT, WYE	1	--	S581254	GYP656
	REGULATOR, VOLTAGE, THREE-PHASE PADMOUNT, DELTA	1	--	S581256	GDP578
12	CONDUIT, 5", FOR UNDERGROUND BYPASS	AS REQ'D	3373	S249728	1DB5SL
13	BEND, 5", 90°, FOR UNDERGROUND BYPASS (II)	AS REQ'D	3373	S322112	1-5SLB
14	ENCASE/SLURRY/CONDUITS	AS REQ'D	3373	--	1EB3IN

NOTES:

(I) SUB-STRUCTURE AND CONDUIT INSTALLATION, SEE FIGURES 3-5.

(II) NOT SHOWN ON FIGURES.

REFERENCE:

(a) FOR EQUIPMENT GROUNDING, SEE UG4520.

(b) FOR OVERHEAD CONSTRUCTION REQUIRING 600A VOLTAGE REGULATION, SEE UG4710.

(c) FOR FULL UNDERGROUND CIRCUITS REQUIRING 600A VOLTAGE REGULATION, SEE UG4710.

(d) FOR INSTRUCTIONS ON INSTALLATION OF BOX PAD, SEE UG3423.

© 1998 - 2021 San Diego Gas & Electric Company. All rights reserved. Removal of this copyright notice without permission is not permitted under law.

REV	CHANGE	DR	BY	DSN	APV	DATE	REV	CHANGE	DR	BY	DSN	APV	DATE
C							F						
B	FORMATTING	EDM	JIK	-	-	10/26/2021	E						
A	ORIGINAL ISSUE	-	KR	JES	CZH	04/22/2019	D						

TABLE OF CONTENTS

SCOPE: THIS STANDARD SHOWS NEW CONSTRUCTION FOR MULTIPLE CONDUIT RISERS USED WITH PAD MOUNTED REGULATOR.

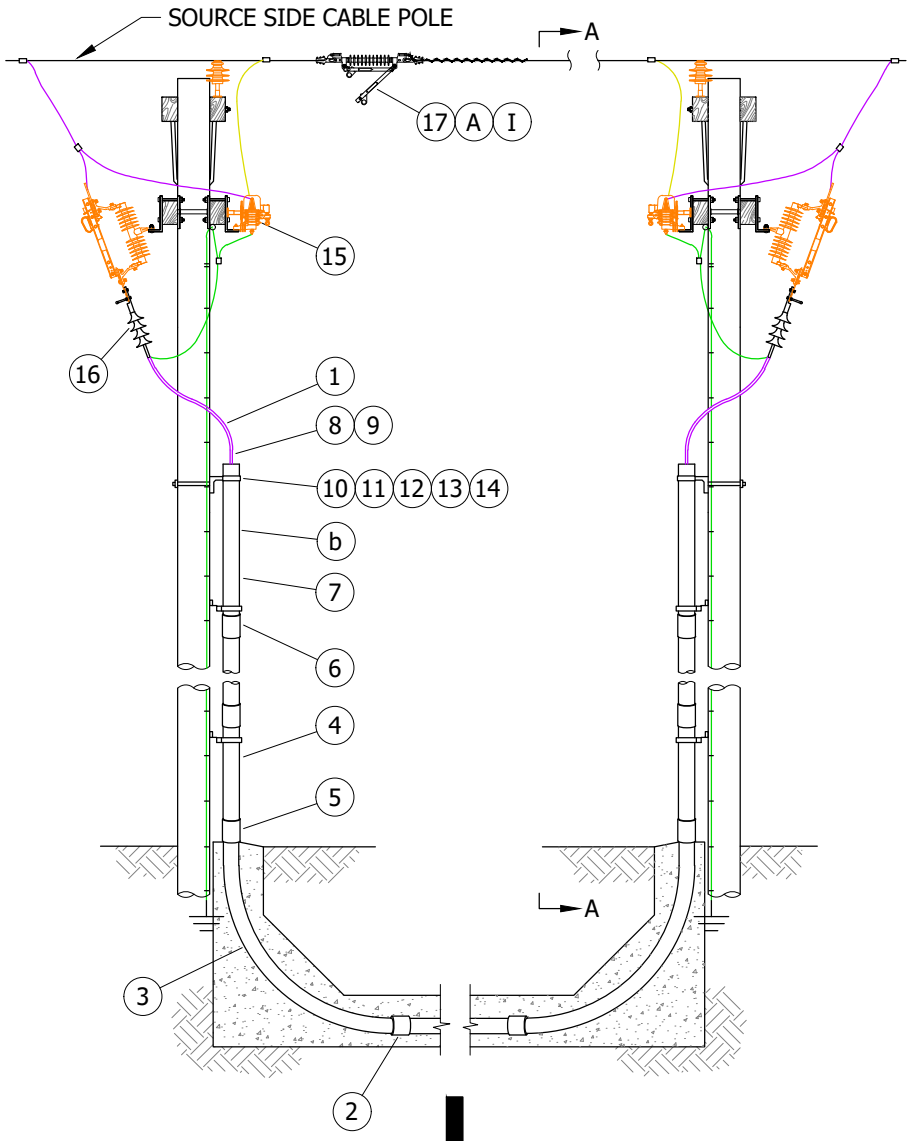

FIGURE 1

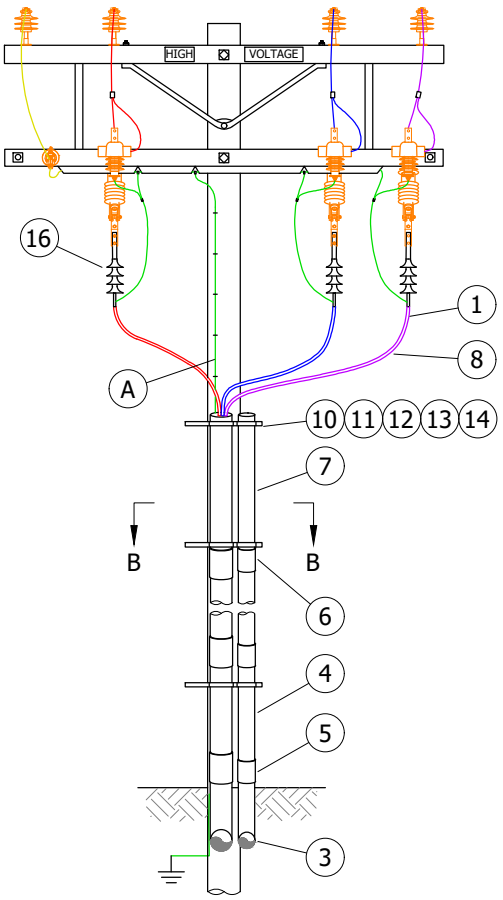

FIGURE 1
VIEW A-A

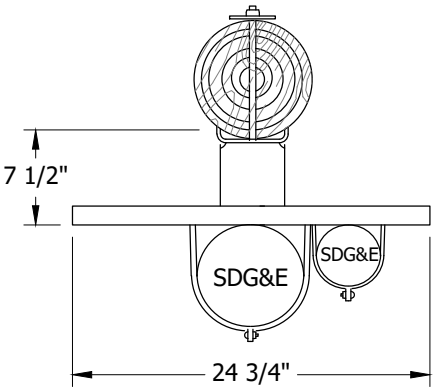

FIGURE 1
NEW MULTIPLE RISER CONSTRUCTION
VIEW B-B

TABLE OF CONTENTS

© 1998 - 2021 San Diego Gas & Electric Company. All rights reserved. Removal of this copyright notice without permission is not permitted under law.

REV	CHANGE	DR	BY	DSN	APV	DATE	REV	CHANGE	DR	BY	DSN	APV	DATE
C							F						
B	FORMATTING	EDM	JIK	-	-	10/26/2021	E						
A	ORIGINAL ISSUE	-	KR	JES	CZH	04/22/2019	D						

X Indicates Latest Revision | Completely Revised | New Page | Information Removed

SDG&E ELECTRIC UNDERGROUND CONSTRUCTION STANDARDS

INSTALLATION OF PAD MOUNTED THREE-PHASE REGULATOR "3 IN 1"

UG4713.9

INSTALLATION:

(A) STAPLES AND COVERED GROUND WIRE NOT NEEDED ON STEEL POLE.(a)

BILL OF MATERIALS:

ITEM	DESCRIPTION	SIZE (IN)	QUANTITY	STANDARD PAGE	STOCK NUMBER	DESIGN UNITS
1	CABLE FOR POLES AND PADMOUNT, USE 1000KCMIL	--	AS REQ'D	--	--	--
2	COUPLING (SIZE AS REQUIRED)	5	AS REQ'D	--	S280032	--
3	CONDUIT RISER BEND, SCHEDULE 80 (SIZE AS REQUIRED)	5, 48R	AS REQ'D	--	S322488	5"CP-B
4	CONDUIT RISER, PVC, SCHEDULE 80 (SIZE AS REQUIRED)	5	AS REQ'D	--	S251592	S80-5"
5	COUPLING, PVC, SCHEDULE 80	5	AS REQ'D	--	S280592	--
6	COUPLING, PVC, SCHEDULE 40 (SIZE AS REQUIRED)	5	AS REQ'D	--	S280496	--
7	CONDUIT, PVC, SCHEDULE 40 (SIZE AS REQUIRED)	5	AS REQ'D	--	S251408	S40-5"
8	GRIP, CABLE SIZE AS REQUIRED FOR PRIMARY RISERS (FOR 5" CONDUIT, 1000KCMIL AL CABLE)	--	AS REQ'D	--	S394098	5G1000
9	PROTECTOR, NYLON CABLE	--	AS REQ'D	--	S558720	--
10	BRACKET, LADDER ARM	--	AS REQ'D	--	S167186 (X)	LA-ARM
11	CHANNEL, DOUBLE, GALV., 24 3/4" x 7/8" x 2 3/4"	--	AS REQ'D	--	S216702 (X)	
12	NUT STUD, 1/2" x 1 3/8", CLAMPING CHANNEL, W/SPRING	--	AS REQ'D	--	S507000	
13	BOLT, MACH, GALV., 5/8" x (LENGTH AS REQ'D), 1-SQUARE, WASHER & DOUBLE COIL SPRING WASHER	--	AS REQ'D	390	--	--
14	CLAMP, PIPE, STEEL, GALV., UNISTRUT, 5"	--	AS REQ'D	--	S229668	CL-5IN
15	CABLE POLE	--	--	4242	--	--
16	CABLE POLE CONNECTION	--	--	4111	--	--
17	IN LINE BYPASS	--	3	1218	S707020	ILD5W

NOTES:

(I) LOCATE INLINE SWITCH NEXT TO SOURCE CABLE.

(X) THIS ITEM IS EXEMPT.

REFERENCE:

(a) FOR GROUNDING, SEE OH SECTION 1000.

(b) SEE UG4204, FIGURE 3.

TABLE OF CONTENTS

© 1998 - 2021 San Diego Gas & Electric Company. All rights reserved. Removal of this copyright notice without permission is not permitted under law.

REV	CHANGE	DR	BY	DSN	APV	DATE	REV	CHANGE	DR	BY	DSN	APV	DATE
C							F						
B	FORMATTING	EDM	JIK	-	-	10/26/2021	E						
A	ORIGINAL ISSUE	-	KR	JES	CZH	04/22/2019	D						

SCOPE: THIS STANDARD COVERS THE INSTALLATION OF THE 600A THREE-PHASE "3 IN 1" PAD MOUNTED REGULATORS. THE PAD MOUNTED REGULATORS MAY BE INSTALLED IN TWO APPLICATIONS.

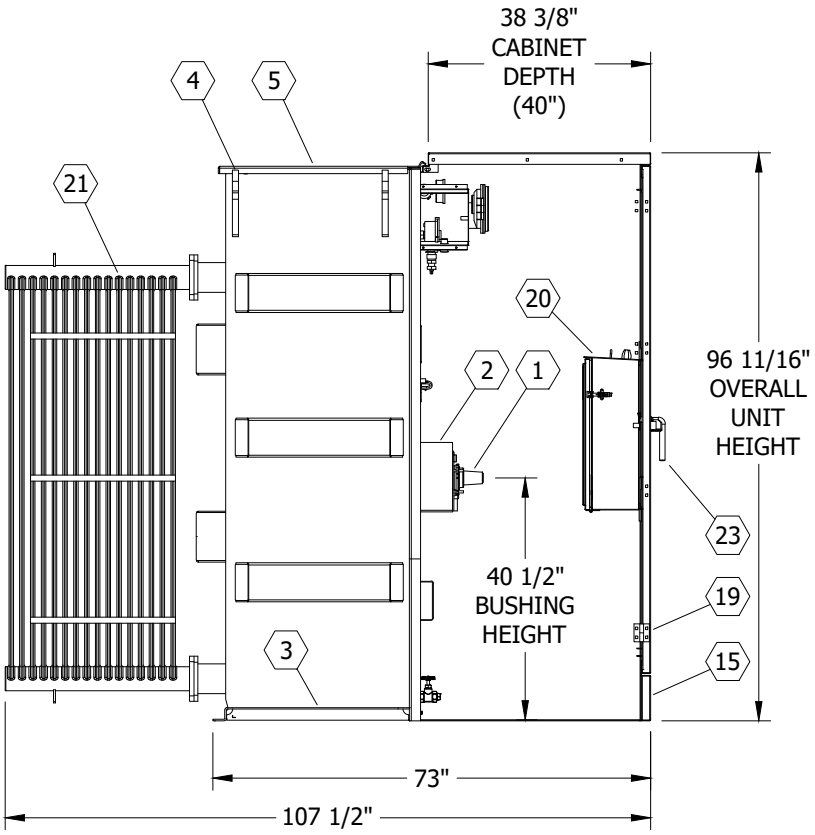

FIGURE 1
WYE CONNECTED REGULATOR (a)(b)(c)
CABINET SIDE REMOVED
SIDE VIEW
SEE TABLE 1

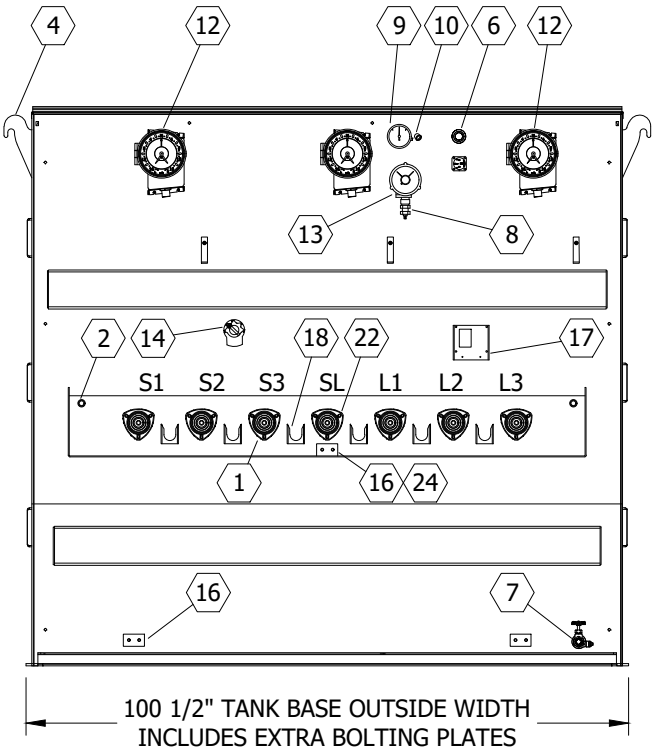

FIGURE 1
WYE CONNECTED REGULATOR (a)(b)(c)
CABINET REMOVED
FRONT VIEW
SEE TABLE 1

TABLE OF CONTENTS

© 1998 - 2021 San Diego Gas & Electric Company. All rights reserved. Removal of this copyright notice without permission is not permitted under law.

REV	CHANGE	DR	BY	DSN	APV	DATE	REV	CHANGE	DR	BY	DSN	APV	DATE
C	FORMATTING	EDM	JIK	-	-	10/26/2021	F						
B	EDITORIAL CHANGES	-	KR	JES	CZH	04/22/2019	E						
A	ORIGINAL ISSUE	-	-	-	TR/JDJ	10/09/2007	D						

X Indicates Latest Revision | Completely Revised | New Page | Information Removed

SDG&E ELECTRIC UNDERGROUND CONSTRUCTION STANDARDS

INSTALLATION OF PAD MOUNTED THREE-PHASE REGULATOR

UG4714.1

TABLE OF CONTENTS

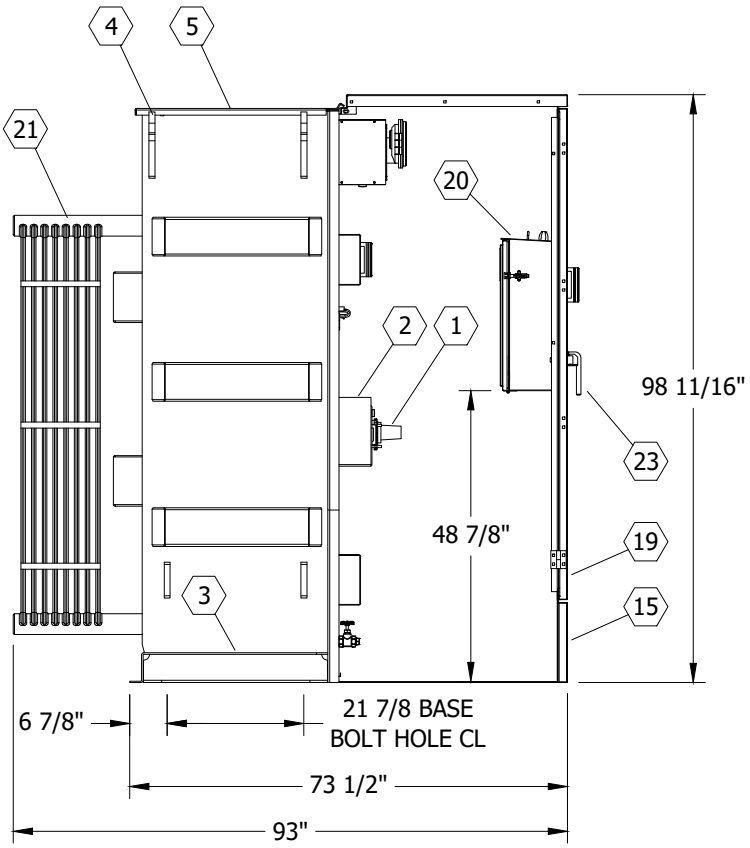

FIGURE 2
DELTA CONNECTED REGULATOR (a)(b)(c)
CABINET SIDE REMOVED
SIDE VIEW
SEE TABLE 1

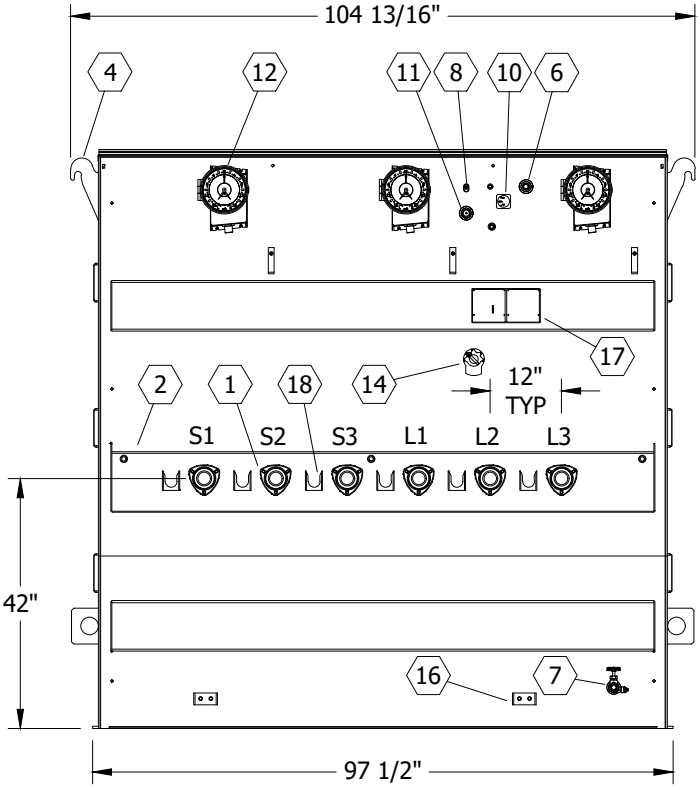

FIGURE 2
DELTA CONNECTED REGULATOR (a)(b)(c)
CABINET REMOVED
FRONT VIEW
SEE TABLE 1

© 1998 - 2021 San Diego Gas & Electric Company. All rights reserved. Removal of this copyright notice without permission is not permitted under law.

REV	CHANGE	DR	BY	DSN	APV	DATE	REV	CHANGE	DR	BY	DSN	APV	DATE
C	FORMATTING	EDM	JIK	-	-	10/26/2021	F						
B	EDITORIAL CHANGES	-	KR	JES	CZH	04/22/2019	E						
A	ORIGINAL ISSUE	-	-	-	TR/JDJ	10/09/2007	D						

X Indicates Latest Revision | Completely Revised | New Page | Information Removed

SDG&E ELECTRIC UNDERGROUND CONSTRUCTION STANDARDS

INSTALLATION OF PAD MOUNTED THREE-PHASE REGULATOR

UG4714.2

TABLE 1 (FIGURES 1-2)

PAD MOUNTED REGULATOR DESCRIPTION LIST	
ITEM	**DESCRIPTION**
1	BUSHING, INTEGRAL APPARATUS, HIGH VOLTAGE
2	BOXOUT, TANK, FOR HV BUSHINGS
3	BASE, REGULATOR, TANK W/ JACKING AND ROLLING FACILITIES
4	LIFTING LUGS
5	BOLTED COVER W/ NUT GUARD
6	PRESS CONN. & FILL PLUG, 1, 0", UPPER FILTER
7	VALVE, DRAIN, 1, 0", W/ SAMPLER
8	DEVICE, AUTO PRESS RELIEF
9	PROVISION, PRESSURE VACUUM GAUGE
10	GAUGE, OIL LEVEL, MAGNETIC
11	GAUGE, OIL SIGHT
12	INDICATOR, TAP CHANGER POSITION, W/ DRAGHANDS AND REGULATION RANGE LIMIT SWITCHES
13	THERMOMETER PROVISION
14	TAP SWITCH, EXTERNAL NON-LOAD, FOR CONTROL TAPS
15	REMOVABLE SILL
16	PAD, GROUND, W/ 2 - 1/2-13 UNC TAPPED HOLES, 7/16" DEEP
17	NAMEPLATE
18	PARKING STAND
19	CABINET, BOLTED HIGH SECURITY, W/ PENTAHEAD DOOR BOLTS
20	ENCLOSURE, CONTROL, LOCKABLE ON INSIDE OF CABINET DOOR
21	CORRUGATION, COOLING, (WHEN REQUIRED)
22	BUSHING, NEUTRAL/CONCENTRIC GROUND
23	DOOR HANDLE
24	CONCENTRIC NEUTRAL/NEUTRAL GROUND STRAP

TABLE OF CONTENTS

© 1998 - 2021 San Diego Gas & Electric Company. All rights reserved. Removal of this copyright notice without permission is not permitted under law.

REV	CHANGE	DR	BY	DSN	APV	DATE	REV	CHANGE	DR	BY	DSN	APV	DATE
C	FORMATTING	EDM	JIK	-	-	10/26/2021	F						
B	EDITORIAL CHANGES	-	KR	JES	CZH	04/22/2019	E						
A	ORIGINAL ISSUE	-	-	-	TR/JDJ	10/09/2007	D						

TABLE OF CONTENTS

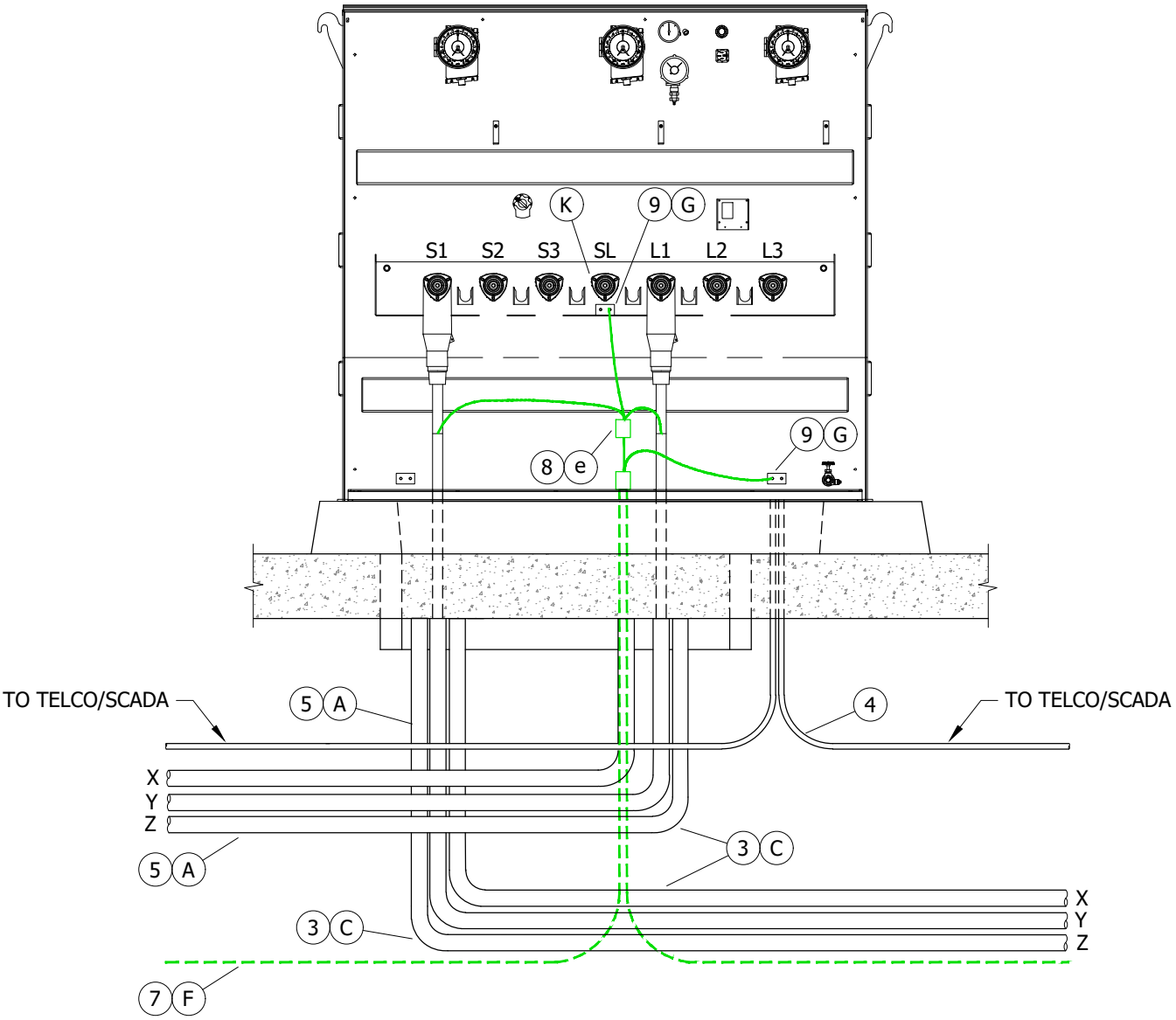

FIGURE 3
CABLE CONNECTION DIAGRAM
WYE CONNECTED REGULATOR

© 1998 - 2021 San Diego Gas & Electric Company. All rights reserved. Removal of this copyright notice without permission is not permitted under law.

REV	CHANGE	DR	BY	DSN	APV	DATE	REV	CHANGE	DR	BY	DSN	APV	DATE
C	FORMATTING	EDM	JIK	-	-	10/26/2021	F						
B	EDITORIAL CHANGES	-	KR	JES	CZH	04/22/2019	E						
A	ORIGINAL ISSUE	-	-	-	TR/JDJ	10/09/2007	D						

TABLE OF CONTENTS

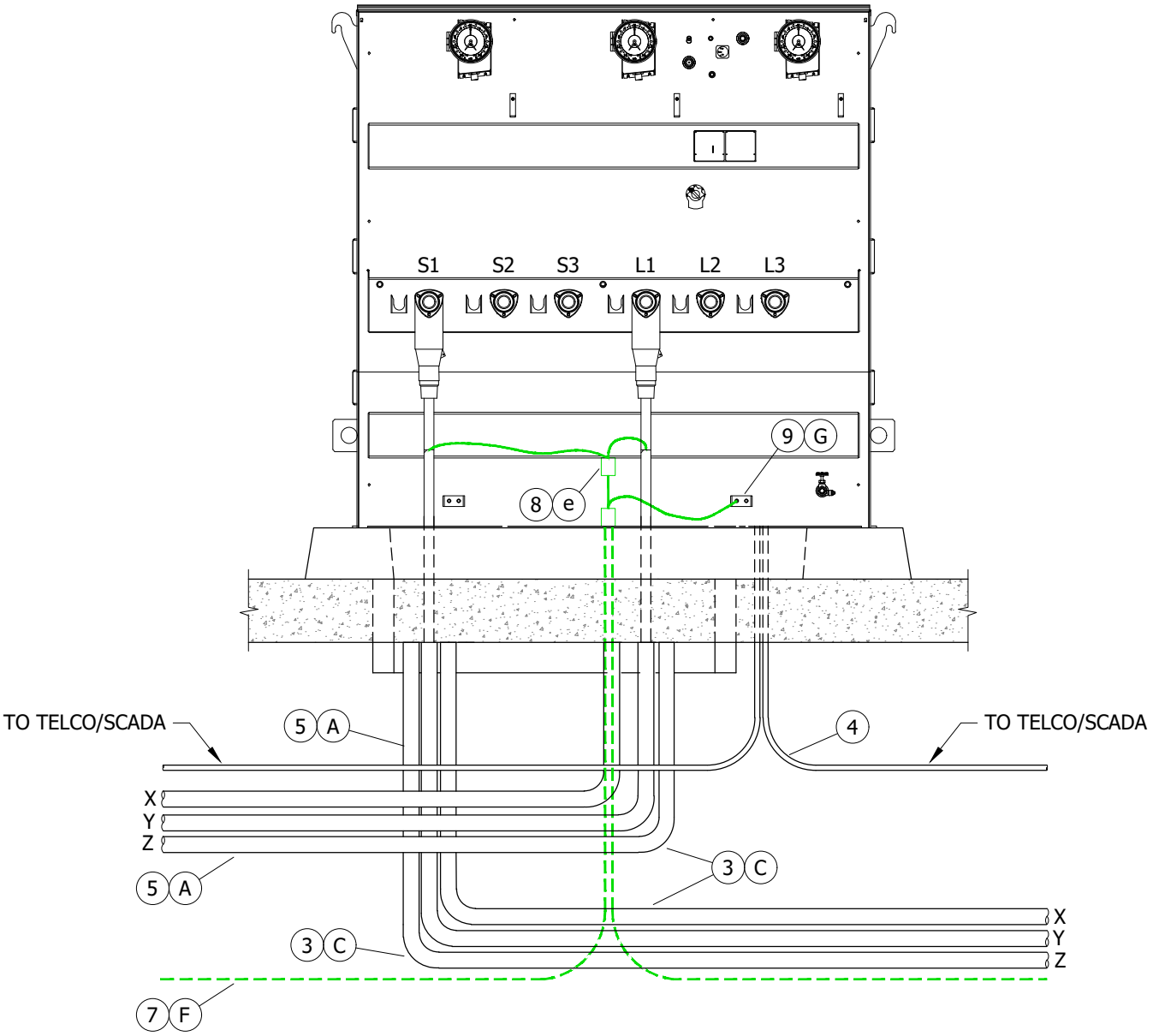

FIGURE 4
CABLE CONNECTION DIAGRAM
DELTA CONNECTED REGULATOR

© 1998 - 2021 San Diego Gas & Electric Company. All rights reserved. Removal of this copyright notice without permission is not permitted under law.

REV	CHANGE	DR	BY	DSN	APV	DATE	REV	CHANGE	DR	BY	DSN	APV	DATE
C	FORMATTING	EDM	JIK	-	-	10/26/2021	F						
B	EDITORIAL CHANGES	-	KR	JES	CZH	04/22/2019	E						
A	ORIGINAL ISSUE	-	-	-	TR/JDJ	10/09/2007	D						

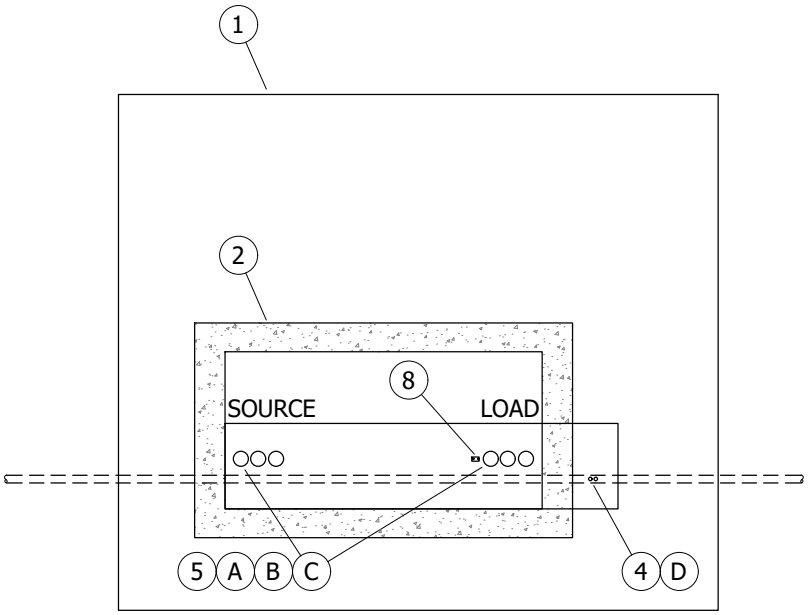

FIGURE 5
CONDUIT / SUBSTRUCTURE / PAD / COMMUNICATION / GROUND
INSTALLATION DIAGRAM
TOP VIEW

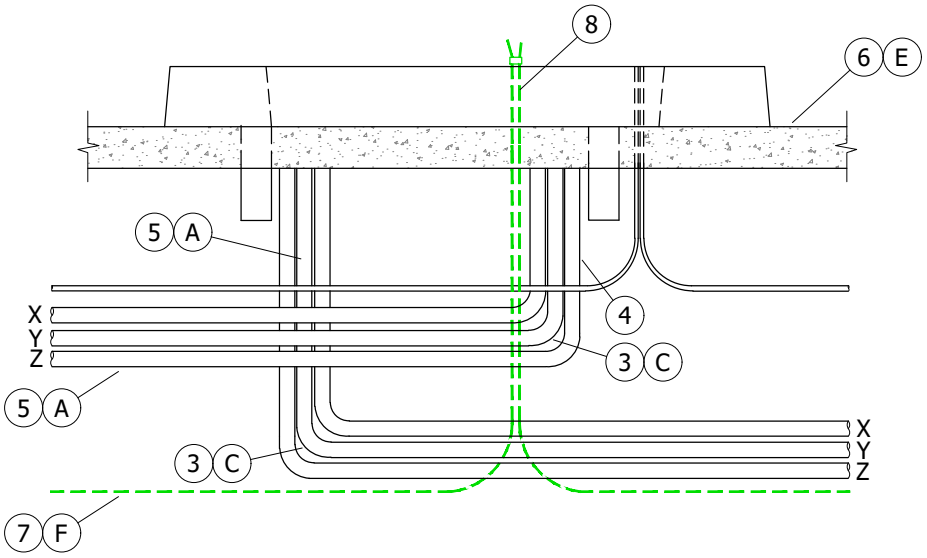

FIGURE 5
CONDUIT / SUBSTRUCTURE / PAD / COMMUNICATION / GROUND
INSTALLATION DIAGRAM
FRONT VIEW

TABLE OF CONTENTS

© 1998 - 2021 San Diego Gas & Electric Company. All rights reserved. Removal of this copyright notice without permission is not permitted under law.

REV	CHANGE	DR	BY	DSN	APV	DATE	REV	CHANGE	DR	BY	DSN	APV	DATE
C	FORMATTING	EDM	JIK	-	-	10/26/2021	F						
B	EDITORIAL CHANGES	-	KR	JES	CZH	04/22/2019	E						
A	ORIGINAL ISSUE	-	-	-	TR/JDJ	10/09/2007	D						

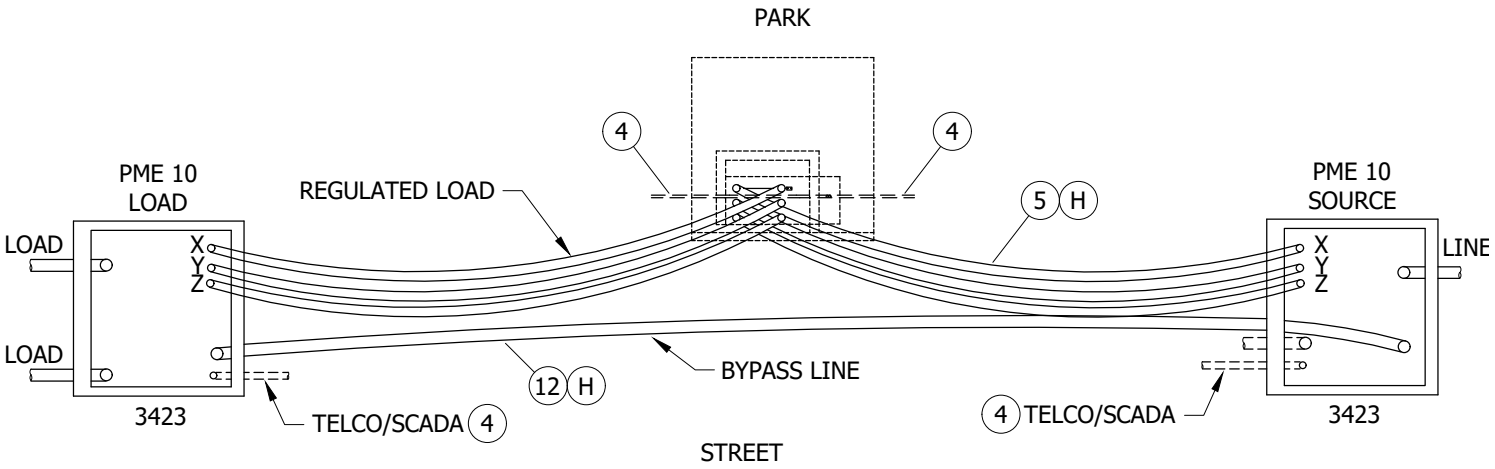

FIGURE 6

CONDUIT DIAGRAM FOR PME AND PAD MOUNTED REGULATORS

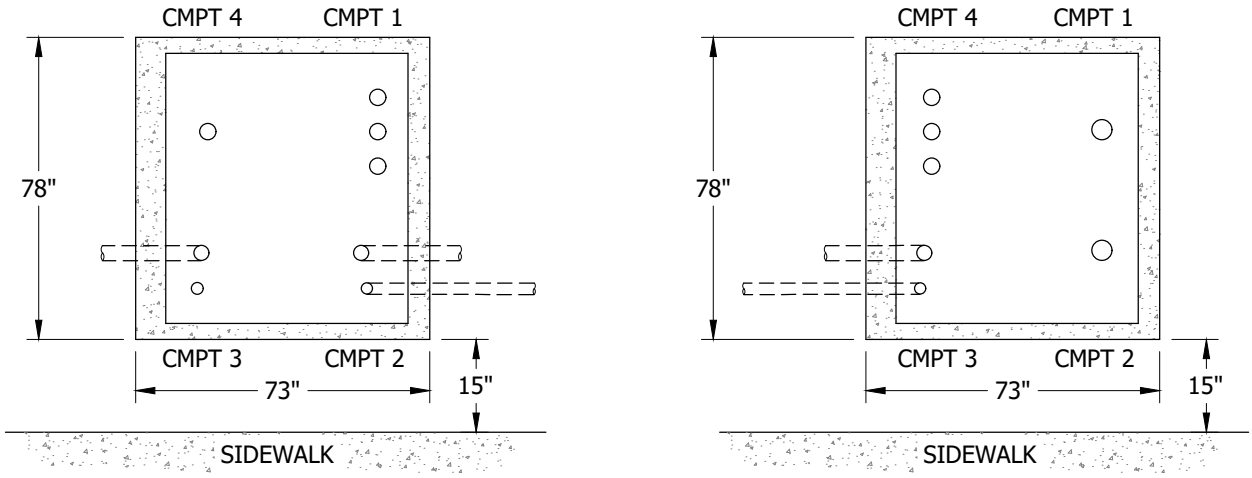

FIGURE 7

CONDUIT DIAGRAM FOR PME AND PAD MOUNTED REGULATORS (d)
BOX AND CONDUIT PLACEMENT
PLAN VIEW

© 1998 - 2021 San Diego Gas & Electric Company. All rights reserved. Removal of this copyright notice without permission is not permitted under law.

REV	CHANGE	DR	BY	DSN	APV	DATE	REV	CHANGE	DR	BY	DSN	APV	DATE
C	FORMATTING	EDM	JIK	-	-	10/26/2021	F						
B	EDITORIAL CHANGES	-	KR	JES	CZH	04/22/2019	E						
A	ORIGINAL ISSUE	-	-	-	TR/JDJ	10/09/2007	D						

X Indicates Latest Revision | Completely Revised | New Page | Information Removed

SDG&E ELECTRIC UNDERGROUND CONSTRUCTION STANDARDS

INSTALLATION OF PAD MOUNTED THREE-PHASE REGULATOR

UG4714.7

TABLE OF CONTENTS

INSTALLATION:

(A) SLURRY ENCASE ALL 3-INCH CONDUITS.

(B) SLURRY ENCASE ALL 3-INCH 90-DEGREE BENDS TO WITHIN 6 INCHES OF THE FINAL CUT.

(C) DO NOT CUT THE 90-DEGREE BENDS.

(D) LOOP A 1-INCH POLYETHYLENE CONDUIT TO EACH PAD. STUB THE CONDUIT 4 FEET FROM THE EDGE OF PAD, CLOSEST TO TELCO, WHEN REQUIRED.

(E) IN SOFT SOILS A CONCRETE BACKFILL (1 SACK MIX.) IS REQUIRED UNDER THE PAD 12 INCHES BEYOND THE SIDE EDGES OF PAD AND 12 INCHES DEEP.

(F) INSTALL A TRENCH GROUND WIRE FOR EACH PAD. INSTALL A SEPARATE GROUND WIRE BETWEEN THE CENTER PAD AND EACH END PAD.

(G) ATTACH TRENCH GROUND TO GROUND PADS AND CONCENTRIC NEUTRAL.

(H) ALL HORIZONTAL BENDS WILL BE MADE WITH ONLY LONG SWEEPS OF 25-FOOT RADIUS OR LONGER.

J. SET 3313 ON 4 INCHES OF COMPACTED 1/2 GRAVEL.

(K) NEUTRAL/GROUND STRAP FROM NEUTRAL BUSHING TO GROUND PAD.

BILL OF MATERIALS:

ITEM	DESCRIPTION	QUANTITY	STANDARD PAGE	STOCK NUMBER	DESIGN UNITS
1	PAD, TRANSFORMER, 3426	3	3426	S514005	3426BO
2	BASE SECTION, 3313	3	3313	S162664	3313B
3	BEND, 3", 90°	6	3373	S322048	S80-3"
4	CONDUIT, POLY, 1"	AS REQ'D	3373	S249630	1"PE
5	CONDUIT, 3" DB	AS REQ'D	3373	S249664	1DB3-P
6	SLURRY, 1-SACK	AS REQ'D	3376	S656400	--
7	WIRE, TRENCH GROUND	3	4510	--	--
8	CONNECTOR, COMPRESSION	AS REQ'D	4174/4176	--	--
9	PAD, GROUND, W/ 2 - 1/2-13 UNC TAPPED HOLES, 7/16 DEEP	AS REQ'D	--	S262560	--
10	CONNECTOR, "T" TYPE, 600A (I)	6	4181	--	--
11	REGULATOR, VOLTAGE, SINGLE-PHASE PADMOUNT (I)	3	--	S581490	REG600
12	CONDUIT, 5", FOR UNDERGROUND BYPASS	AS REQ'D	3373	S249728	1DB5SL
13	BEND, 5", 90°, FOR UNDERGROUND BYPASS (I)	AS REQ'D	3373	S322112	1-5SLB
14	ENCASE/SLURRY/CONDUITS (I)	AS REQ'D	3373	--	1EB3IN

NOTES:

(I) NOT SHOWN ON FIGURES.

REFERENCE:

(a) FOR SUB-STRUCTURE AND CONDUIT INSTALLATION, SEE FIGURES 3-5.

(b) FOR OVERHEAD CONSTRUCTION REQUIRING 600A VOLTAGE REGULATION, SEE UG4710.

(c) FOR FULL UNDERGROUND CIRCUITS REQUIRING 600A VOLTAGE REGULATION, SEE UG4710.

(d) FOR INSTRUCTIONS ON INSTALLATION OF BOX PAD, SEE UG3423.

(e) FOR EQUIPMENT GROUNDING, SEE UG4520.

TABLE OF CONTENTS

© 1998 - 2021 San Diego Gas & Electric Company. All rights reserved. Removal of this copyright notice without permission is not permitted under law.

REV	CHANGE	DR	BY	DSN	APV	DATE	REV	CHANGE	DR	BY	DSN	APV	DATE
C	FORMATTING	EDM	JIK	-	-	10/26/2021	F						
B	EDITORIAL CHANGES	-	KR	JES	CZH	04/22/2019	E						
A	ORIGINAL ISSUE	-	-	-	TR/JDJ	10/09/2007	D						

SCOPE: THIS STANDARD SHOWS NEW CONSTRUCTION FOR MULTIPLE CONDUIT RISERS USED WITH PAD MOUNTED REGULATOR.

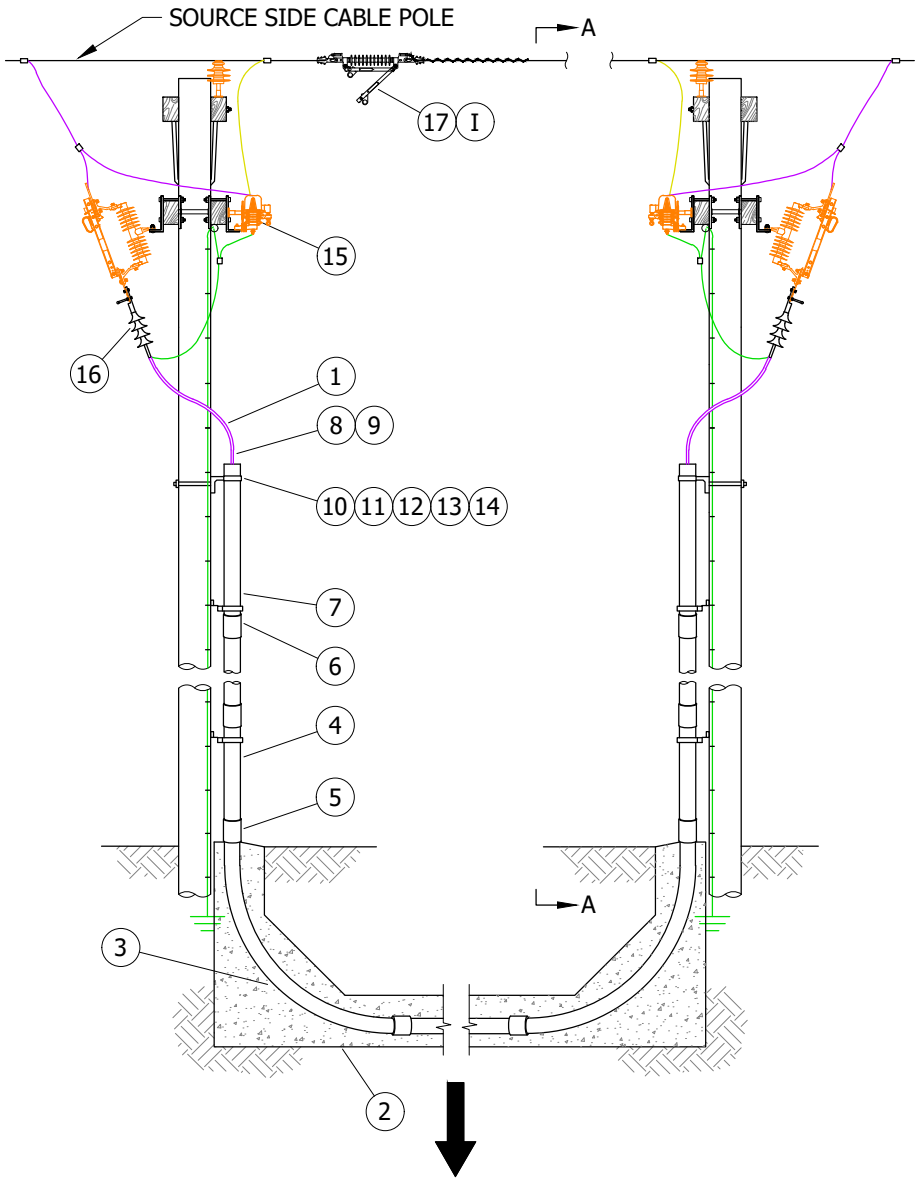

FIGURE 1

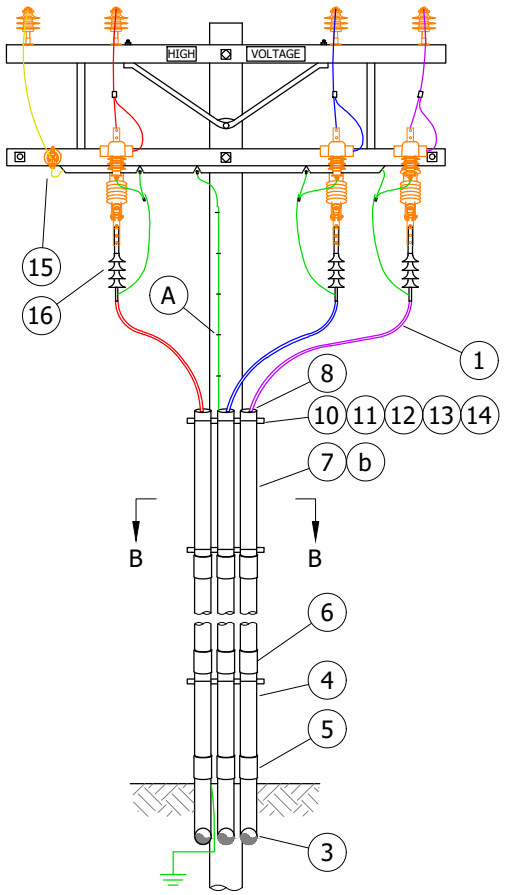

FIGURE 1
VIEW A-A

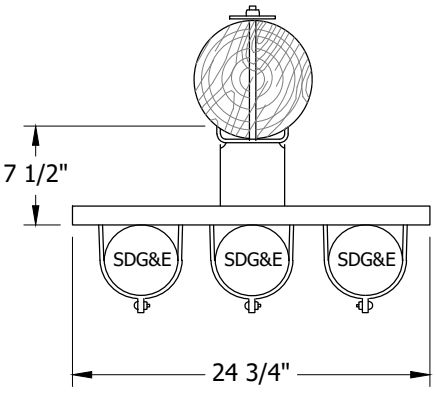

FIGURE 1
NEW MULTIPLE RISER CONSTRUCTION
VIEW B-B

TABLE OF CONTENTS

© 1998 - 2021 San Diego Gas & Electric Company. All rights reserved. Removal of this copyright notice without permission is not permitted under law.

REV	CHANGE	DR	BY	DSN	APV	DATE	REV	CHANGE	DR	BY	DSN	APV	DATE
C	FORMATTING	EDM	JIK	-	-	10/26/2021	F						
B	EDITORIAL CHANGES	-	KR	JES	CZH	04/22/2019	E						
A	ORIGINAL ISSUE	-	-	-	TR/JDJ	10/09/2007	D						

X Indicates Latest Revision	Completely Revised	New Page	Information Removed	

SDG&E ELECTRIC UNDERGROUND CONSTRUCTION STANDARDS

INSTALLATION OF PAD MOUNTED THREE-PHASE REGULATOR

UG4714.9

INSTALLATION:

(A) STAPLES AND COVERED GROUND WIRE NOT NEEDED ON STEEL POLE.(a)

BILL OF MATERIALS:

ITEM	DESCRIPTION	SIZE	QUANTITY	STANDARD PAGE	STOCK NUMBER	DESIGN UNITS
1	CABLE FOR POLES AND PADMOUNT, USE 1C-1000AL	--	AS REQ'D	--	S197628	--
2	COUPLING, SIZE AS REQ'D	3"	AS REQ'D	--	S279904	--
3	CONDUIT RISER BEND, SCHEDULE 80, SIZE AS REQ'D	3"_36" R	AS REQ'D	--	S322472	3"CP-B
4	CONDUIT RISER, PVC, SCHEDULE 80, SIZE AS REQ'D	3"	AS REQ'D	--	S251552	S80-3"
5	COUPLING, PVC, SCHEDULE 80	3"	AS REQ'D	--	S280544	--
6	COUPLING, PVC, SCHEDULE 40, SIZE AS REQ'D	3"	AS REQ'D	--	S280448	--
7	CONDUIT, PVC, SCHEDULE 40, SIZE AS REQ'D	3"	AS REQ'D	--	S251360	S40-3"
8	GRIP, CABLE SIZE AS REQUIRED FOR PRIMARY RISERS (FOR 3" CONDUIT, 1/C-1000 AL CABLE)	--	AS REQ'D	--	S394098	3G2#2A
9	PROTECTOR, NYLON CABLE	--	AS REQ'D	--	S558720	--
10	BRACKET, LADDER ARM	--	AS REQ'D	--	S167186 (X)	LA-ARM
11	CHANNEL, DOUBLE, GALV., 24 3/4" X 7/8" X 2 3/4"	--	AS REQ'D	--	S216702 (X)	
12	NUT STUD, 1/2" X 1 3/8", CLAMPING CHANNEL, W/SPRING	--	AS REQ'D	--	S507000	
13	BOLT, MACH, GALV., 5/8" X (LENGTH AS REQ'D), 1-SQUARE, WASHER & DOUBLE COIL SPRING WASHER	--	AS REQ'D	390	--	--
14	CLAMP, PIPE, STEEL, GALV., UNISTRUT	3"	AS REQ'D	--	S229632	CL-3IN
15	CABLE POLE	--	--	4242	--	--
16	CABLE POLE CONNECTION	--	--	4111	--	--
17	IN LINE BYPASS	--	3	1218	S707020	ILD5W

NOTES:

(I) LOCATE INLINE SWITCH NEXT TO SOURCE CABLE.

(X) THIS ITEM IS EXEMPT.

REFERENCE:

(a) FOR GROUNDING, SEE OH SECTION 1000.

(b) SEE UG4204, FIGURE 3.

TABLE OF CONTENTS

© 1998 - 2021 San Diego Gas & Electric Company. All rights reserved. Removal of this copyright notice without permission is not permitted under law.

REV	CHANGE	DR	BY	DSN	APV	DATE	REV	CHANGE	DR	BY	DSN	APV	DATE
C	FORMATTING	EDM	JIK	-	-	10/26/2021	F						
B	EDITORIAL CHANGES	-	KR	JES	CZH	04/22/2019	E						
A	ORIGINAL ISSUE	-	-	-	TR/JDJ	10/09/2007	D						

X Indicates Latest Revision | Completely Revised | New Page | Information Removed

SDG&E ELECTRIC UNDERGROUND CONSTRUCTION STANDARDS

INSTALLATION OF PAD MOUNTED THREE-PHASE REGULATOR

UG4714.10

TABLE OF CONTENTS

SCOPE: THIS STANDARD COVERS ALL APPROVED ENERGY STORAGE INTERCONNECTION CONFIGURATIONS FOR 1MW SYSTEMS AND ABOVE, REGARDLESS OF UTILITY/INDEPENDENT OWNED AND OPERATED.

ATTENTION:

* NO DEVIATIONS WILL BE ALLOWED FOR THE APPROVED PHYSICAL ARRANGEMENT CONFIGURATIONS.

** FORMAL INDIVIDUAL EQUIPMENT DEVIATIONS (MANUFACTURER, MODEL, ETC.) WILL STILL BE ALLOWED ON AN APPLICATION. APPROVAL BASIS.

*** THE BATTERY SYSTEM WILL NOT BE INCLUDED IN DETAIL AND WILL BE DEVELOPED IN A SEPARATE STANDARD.

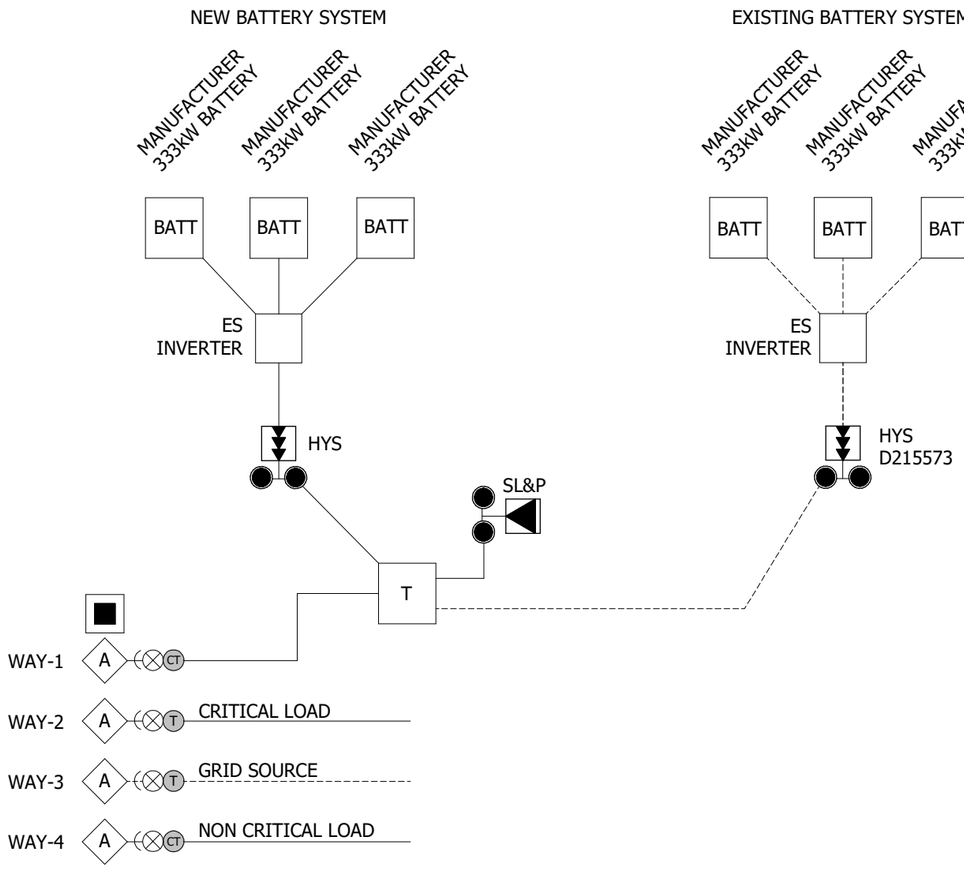

FIGURE 1
MULTI BATTERY SYSTEM (C)

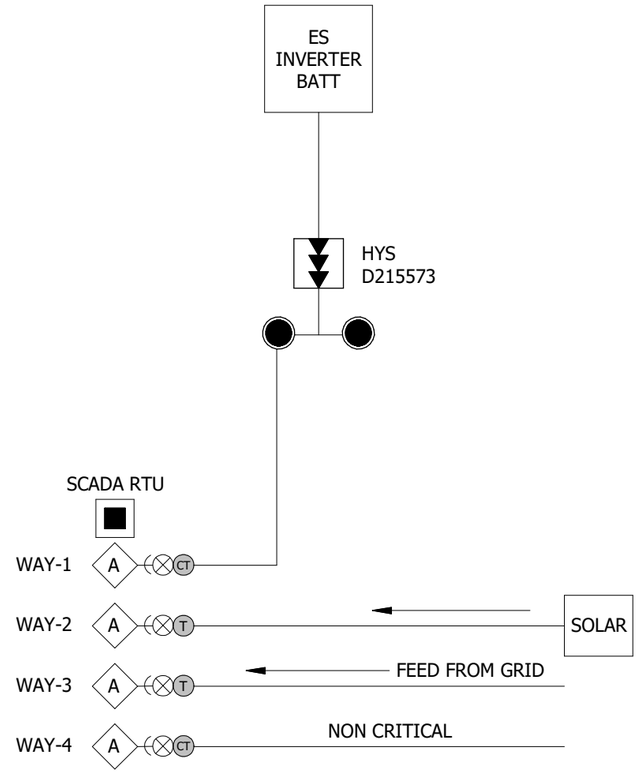

FIGURE 2
ENERGY STORAGE/SOLAR ONELINE (D)

INSTALLATION:

INTERCONNECTION PROCEDURES:

A. OVERVIEW: AN OVERVIEW OF THE GENERATOR INTERCONNECTION PROCEDURES IS AVAILABLE ON THE SDG&E WEBSITE AT THE FOLLOWING URL ADDRESS:
HTTPS://WWW.SDGE.COM/GENERATION-INTERCONNECTIONS/OVERVIEW-GENERATION-INTERCONNECTIONS

B. TARIFFS: THERE ARE TWO GENERATOR INTERCONNECTION PROCESSES COVERED BY DIFFERENT TARIFFS: WDAT AND RULE 21.

1. WDAT - WHOLESALE DISTRIBUTION OPEN ACCESS TARIFF: THE WDAT INTERCONNECTION PROCESS IS OVERSEEN BY FERC. THE WDAT TARIFF IS AVAILABLE ON THE SDG&E WEBSITE AT:
HTTPS://WWW.SDGE.COM/GENERATION-INTERCONNECTIONS/WHOLESALE-GENERATOR-TRANSMISSION-INTERCONNECTIONS
THE WDAT INTERCONNECTION PROCESS MUST BE USED FOR PROJECTS INTERCONNECTING TO THE SDG&E DISTRIBUTION SYSTEM THAT WISH TO SELL ENERGY TO ANY PARTY BESIDES SDG&E. TO INITIATE A REQUEST TO INTERCONNECT A PROJECT TO THE SDG&E DISTRIBUTION SYSTEM UNDER THE WDAT PROCESS, AN INTERCONNECTION REQUEST FORM MUST BE FILLED OUT AND SUBMITTED TO THE SDG&E CUSTOMER GENERATION TEAM. THE INTERCONNECTION REQUEST FORM IS AVAILABLE IN THE WDAT TARIFF IN APPENDIX 1 ON PAGES 329 TO 345.
THIS PAGE RANGE SHOULD BE PRINTED, FILLED OUT, AND SUBMITTED TO THE CUSTOMER GENERATION TEAM AT:
WDATSGIPAPPLICATIONS@SEMPRAUTILITIES.COM

REV	CHANGE	DRWN	BY	CHKD	APVD	DATE
C	REVISED TO 3D FORMAT	ARC	JIK	-	-	03/14/2022
B	FORMATTING	EDM	JIK	-	-	10/26/2021
A	ORIGINAL ISSUE	-	DG	JS	MDJ	04/01/2018

SDG&E
A Sempra Energy utility

© 1998 - 2022 San Diego Gas and Electric Company. All rights reserved. Removal of this copyright notice without permission is not permitted under law.

SDG&E ELECTRIC OVERHEAD AND UNDERGROUND CONSTRUCTION STANDARDS

ENERGY STORAGE INTERCONNECTION

SCALE: NOT TO SCALE

DRAWING NO: OH1920.1 UG4720.1

SHEET: 1 OF 3

X Indicates Latest Revision | Completely Revised | New Page | Information Removed

TABLE OF CONTENTS

INSTALLATION (CONT'D):

2. RULE 21: THE ELECTRIC RULE 21 TARIFF INTERCONNECTION PROCESS IS OVERSEEN BY THE CPUC. THE RULE 21 TARIFF IS AVAILABLE ON THE SDG&E WEBSITE AT:
   HTTPS://WWW.SDGE.COM/GENERATION-INTERCONNECTIONS/ELECTRIC-RULE-21
   THE RULE INTERCONNECTION PROCESS CAN ONLY BE USED IF A GENERATOR PROJECT INTERCONNECTING TO THE SDG&E DISTRIBUTION SYSTEM WILL SELL ITS OUTPUT TO SDG&E ONLY. TO INITIATE A REQUEST TO INTERCONNECT A PROJECT TO THE SDG&E DISTRIBUTION SYSTEM UNDER THE RULE 21 PROCESS, AN INTERCONNECTION APPLICATION FORM MUST BE FILLED OUT AND SUBMITTED TO THE SDG&E CUSTOMER GENERATION TEAM. THE INTERCONNECTION APPLICATION FORM IS AVAILABLE ON THE SDG&E WEBSITE AT:
   HTTP://REGARCHIVE.SDGE.COM/TM2/PDF/ELEC_ELEC-SF_142-05203.PDF
   THIS APPLICATION FORM SHOULD BE PRINTED OUT, FILLED OUT, AND SUBMITTED TO THE CUSTOMER GENERATION TEAM AT:
   DGAPPLICATIONS@SEMPRAUTILITIES.COM

CAUTION:

* FOR GENERATION INTERCONNECTION OVERVIEW AND RULES FOLLOWED, GO TO THE LINK:
HTTP://WWW.SDGE.COM/GENERATION-INTERCONNECTIONS/OVERVIEW-GENERATION-INTERCONNECTIONS

CONFIGURATIONS: PRIMARY AND NON-PRIMARY METERING TO BE DETERMINED BY ELECTRIC METERING

Ⓒ GENERAL AND MULTI-BATTERY (REQUIRES HSCC SCADA TRAYER - S704738), SEE FIGURE 1:
WAY 1: ENERGY STORAGE
WAY 2: CRITICAL LOAD
WAY 3: GRID SOURCE
WAY 4: NON-CRITICAL LOAD

1. WAYS 1-4 WILL REQUIRE AUTOMATION CONTROL. WAY 3 WILL BE THE ONLY NON-FAULT INTERRUPTING POSITION. TRIP/CLOSE MODULES WILL NEED TO BE CLOSED, AND THE TRIP CIRCUIT WILL NEED TO BE ENABLED. WORK METHODS WILL CHANGE REGARDING CRITICAL AND NON-CRITICAL LOADS.
2. DESIGN OF ENERGY STORAGE SYSTEM WITH THE INVERTER AND TRANSFORMER AS A SINGLE UNIT IS AN APPROVED OPTION TO HE PRIMARY DISTRIBUTION SYSTEM.

Ⓓ CONFIGURATION 02 (TRADITIONAL SCADA TRAYER), SEE FIGURE 2:
WAY 1: ENERGY STORAGE
WAY 2: SOLAR
WAY 3: GRID SOURCE
WAY 4: LOAD

1. WAYS 1-4 WILL REQUIRE AUTOMATION CONTROL. WAY 3 WILL BE THE ONLY NON-FAULT INTERRUPTING POSITION. TRIP/CLOSE MODULES WILL NEED TO BE CLOSED, AND THE TRIP CIRCUIT WILL NEED TO BE ENABLED. WORK METHODS WILL CHANGE REGARDING CRITICAL AND NON-CRITICAL LOADS.
2. DESIGN OF ENERGY STORAGE SYSTEM WITH THE INVERTER AND TRANSFORMER AS A SINGLE UNIT, AND THE BATTERY AS A SEPARATE UNIT IS AN APPROVED OPTION TO THE PRIMARY DISTRIBUTION SYSTEM.

VOLTAGE LIMITATIONS:

E. PRIMARY METERED SWITCHGEAR INTERCONNECTIONS: 12.0KV (DELTA) OR 12.47KV (WYE) NOMINAL.
F. NON-PRIMARY METERED SWITCHGEAR INTERCONNECTIONS: 480VAC BETWEEN INVERTER OUTPUT AND UTILITY HYS TRANSFORMER.
G. LESS THAN 12KV NOMINAL INTERCONNECTIONS: INTERCONNECTION STUDY TO BE PERFORMED TO DETERMINE EQUIPMENT/CIRCUIT UPGRADING.

CONDUCTOR/CONDUIT LIMITATIONS:

H. ONLY SDG&E APPROVED CONDUITS AND CONDUCTORS WILL BE UTILIZED IN ANY ENERGY STORAGE PROJECT.

AUXILIARY POWER: REFER TO COMPANY POLICY FOR DETAILED AUXILIARY PROCEDURES/PROCESSES.

J. FIRE SUPPRESSION/PROTECTION
K. DETERMINE CONNECTIONS/PLACEMENT (WAYS FOR SWITCH)
L. UPS (INTERCONNECTION)
M. NETWORKING/TELECOMMUNICATIONS/METERING POWERED BY DC AND/OR AC VOLTAGE
N. STATION LIGHT AND POWER

GIS MAPPING:

O. INDIVIDUAL TECH DEVICES WILL BE IDENTIFIED BY PAD STRUCTURES.

COMMUNICATIONS: REFER TO COMPANY POLICY FOR DETAILED COMMUNICATION PROTOCOLS/PROCEDURES.

P. CAL ISO:
   1. METERING (REVENUE)
   2. REMOTE INTELLIGENT GATEWAY (RIG)
   3. AUTOMATED DISPATCH SYSTEM (ADS)
   4. APPROVED COMMUNICATIONS
Q. SDG&E:
   1. VENDOR
   2. IT
   3. SERIAL
   4. TCP/IP
   5. INTERNET
   6. GRID OPS TELEMETRY
   7. METERING (REVENUE)
   8. ELECTRIC METERING
   9. INFORMATION SECURITY (IS)

BILL OF MATERILS: NONE

NOTES:

I. TRAYER 4 WAY SCADA HIGH SPEED CLOSE COIL SWITCH(S) SPECIFICALLY DESIGNED FOR BLACKSTARTING AND ISLANDING CAPABILITIES.
II. FOR OVERHEAD SECTIONALIZING APPLICATIONS, USE ANY APPROVED SCADA RECLOSERS.
III. HYS TRANSFORMER(S) WILL BE REQUIRED FOR ALL NON-PRIMARY METERED INTERCONNECTIONS.

REV	CHANGE	DRWN	BY	CHKD	APVD	DATE
C	REVISED TO 3D FORMAT	ARC	JIK	-	-	03/14/2022
B	FORMATTING	EDM	JIK	-	-	10/26/2021
A	ORIGINAL ISSUE	-	DG	JS	MDJ	04/01/2018

SDG&E ELECTRIC OVERHEAD AND UNDERGROUND CONSTRUCTION STANDARDS

ENERGY STORAGE INTERCONNECTION

SCALE: NOT TO SCALE

DRAWING NO: OH1920.2 UG4720.2

SHEET: 2 OF 3

© 1998 - 2022 San Diego Gas and Electric Company. All rights reserved. Removal of this copyright notice without permission is not permitted under law.

X Indicates Latest Revision | Completely Revised | New Page | Information Removed

REFERENCE:

a. ELECTRIC DISTRIBUTION OVERHEAD CONSTRUCTION STANDARDS
HTTP://SEMPRA.SHAREPOINT.COM/SITES/SDGE-POWERUP/EDE/EDE%20MANUALS/OVERHEAD%20CONSTRUCTION%20STANDARDS.PDF

b. ELECTRIC DISTRIBUTION UNDERGROUND CONSTRUCTION STANDARDS
HTTP://SEMPRA.SHAREPOINT.COM/SITES/SDGE-POWERUP/EDE/EDE%20MANUALS/UNDERGROUND%20CONSTRUCTION%20STANDARDS.PDF

c. ELECTRIC DISTRIBUTION DESIGN MANUAL (INTERNAL SDG&E ONLY)
HTTP://SEMPRA.SHAREPOINT.COM/SITES/SDGE-POWERUP/EDE/EDE%20MANUALS/ELECTRIC%20DISTRIBUTION%20DESIGN%20MANUAL.PDF

d. ELECTRIC SERVICE STANDARDS
HTTP://SEMPRA.SHAREPOINT.COM/SITES/SDGE-POWERUP/EDE/EDE%20MANUALS/SERVICE%20STANDARDS%20AND%20GUIDE.PDF

e. ELECTRIC STANDARD PRACTICES (INTERNAL SDG&E ONLY)
HTTP://SEMPRA.SHAREPOINT.COM/SITES/SDGE-POWERUP/EDE/EDE%20MANUALS/ELECTRIC%20STANDARD%20PRACTICES.PDF

f. GO 95 LINK
HTTP://WWW.CPUC.CA.GOV/GOS/GO95/GO_95_STARTUP_PAGE.HTML

g. GO 128 LINK
HTTP://WWW.CPUC.CA.GOV/GOS/GO128/GO_128_STARTUP_PAGE.HTML

h. CAL ISO LINK - RESOURCE INTERCONNECTION GUIDE
HTTP://WWW.CAISO.COM/PARTICIPATE/PAGES/RESOURCEINTERCONNECTIONGUIDE/DEFAULT.ASPX

i. CAL ISO LINK - NEW RESOURCE INTERCONNECTION GUIDE
HTTP://WWW.CAISO.COM/PARTICIPATE/PAGES/NEWRESOURCEIMPLEMENTATION/DEFAULT.ASPX

TABLE OF CONTENTS

REV	CHANGE	DRWN	BY	CHKD	APVD	DATE
C	REVISED TO 3D FORMAT	ARC	JIK	-	-	03/14/2022
B	FORMATTING	EDM	JIK	-	-	10/26/2021
A	ORIGINAL ISSUE	-	DG	JS	MDJ	04/01/2018

SDGE
A Sempra Energy utility

© 1998 - 2022 San Diego Gas and Electric Company. All rights reserved. Removal of this copyright notice without permission is not permitted under law.

SDG&E ELECTRIC OVERHEAD AND UNDERGROUND CONSTRUCTION STANDARDS

ENERGY STORAGE INTERCONNECTION

SCALE: NOT TO SCALE

DRAWING NO: OH1920.3 UG4720.3

SHEET: 3 OF 3

X Indicates Latest Revision | Completely Revised | New Page | Information Removed

Table of Contents

1. *TRANSFORMER VAULT* 3
2. *PERSONNEL ACCESS DOOR (MAN DOOR)* 3
3. *EQUIPMENT OPENINGS* 4
4. *PULLING INSERT REQUIREMENTS* 6
5. *VENTILATION SYSTEM* 7
6. *VAULT LIGHTING SYSTEM* 8
7. *ENERGIZING VAULT VENTILATION AND LIGHTING SYSTEM* 8
8. *VAULT DRAINAGE SYSTEM: (CHECK WITH CITY IF REQUIRED)* 8
9. *VAULT GROUNDING SYSTEM* 9
10. *PRIMARY CONDUIT, EXTERIOR and INTERIOR:* 9
11. *CUSTOMER SERVICE CONDUIT* 11
12. *SERVICE ENTRANCE, BUS DUCT* 11
13. *CUSTOMER'S METERING FACILITIES* 12
14. *COMMUNICATIONS CONDUIT* 12
15. *CABLE TRAY* 12
16. *UNISTRUT HANGERS:* 12
17. *SDG&E WILL FURNISH AND INSTALL* 13
18. *BUS DUCT INTO PAD-MOUNTED TRANSFORMER:* 14
19. *COPPER BRAID SIZING CHART:* 16
20. *LOW VOLTAGE TERMINALS:* 17
21. *INTERNAL VAULT WIRING* 19
22. *EQUIPMENT OPENINGS IN VAULT WALL* 21
23. *ELECTRIC VAULT LOCATION & ACCESSIBILITY* 22
24. *VAULT INTERNAL DIMENSIONS: BELOW GRADE & STREET LEVEL VAULTS* 24
25. *LADDER INSTALLATION FOR VAULTS GREATER THAN 12ft (Below Grade)* 25
26. *VAULT EQUIPMENT COVER and PERSONNEL ACCESS OPENING (Below Grade)* 26
27. *TYPICAL VAULT CONFIGURATIONS (AT & BELOW GRADE)* 28
28. *CONSTRUCTION & MAINTENANCE RESPONSIBILITIES:* 31

© 1998 – 2018 San Diego Gas & Electric Company. All rights reserved. Removal of this copyright notice without expressed written consent is not permitted under law.

The following specifications have been compiled for the installation of SDG&E distribution facilities in a customer-owned vault. The information provides requirements to be followed for the construction of the vault and installation of electrical equipment per SDG&E standards. Consult the appropriate regional Project Management Office/service center for approval whenever any alteration to or deviation from these plans and specifications are contemplated. See service center and phone number listed below.

This installation must comply with all applicable rules of the Electrical Safety Orders of the Division of Industrial Safety, Department of Industrial Relations, State of California, National Electric Code, California Code of Regulations Title 8, CPUC General Order 128 and other governing codes and ordinances.

TABLE OF CONTENTS

PROJECT TITLE: ^ _____

PROJECT LOCATION: ^ _____

PROJECT NUMBER: ^ _____

SERVICE CENTER: ^ _____

PHONE NUMBER: ^ _____

PLANNER: ^ _____ DATE: ^ _____ APPROVAL: _____

© 1998 – 2018 San Diego Gas & Electric Company. All rights reserved. Removal of this copyright notice without expressed written consent is not permitted under law.

CUSTOMER SHALL FURNISH, INSTALL, OWN, AND MAINTAIN:

1. TRANSFORMER VAULT:

1.1. Walls, roof, and floor shall be of assemblies of materials approved for three-hour non-combustible fire resistive construction (California Code of Regulations, Title 8, section 2806). All walls to be solid or solid filled. All concrete block or brick joints to be solid mortared. All floor-to-wall joints, wall-to-wall joints and wall-to-ceiling joints to be sealed water-tight with water and oil resistant materials. Street grade vaults only require seam sealing of floor-to-wall joints and wall-to wall joints to a height of 6 inches above floor, with water and oil resistant materials.

1.2. A 6 inch threshold for oil retention shall be provided at all vertical access openings into vault. See section 22.

1.3. Vault size _____ (inside dimensions). See section 24 for dimension table.

1.4. Whenever a vault is constructed over sublevels of a structure, the customer is to provide SDG&E with a certificate from a civil engineer registered in the State of California verifying the structural adequacy of the building to support the transformers and the fire withstanding capabilities of the structure's floor, ceiling and walls. Vault floor to be capable of supporting combined equipment weight of_____pounds.

1.5. Any vault construction below finished grade is to be considered a dry vault. The exterior surfaces of a dry vault which are exposed to surrounding earth conditions shall be sealed water-tight with an impermeable seal so as to prevent water entry through any portion of the vault. See section 1.1 above for sealing requirement for wall, floor and ceiling joints.

1.6. No ducts, pipes or conduits, except those which are a part of the electrical installation shall be installed in or through the vault. Sprinklers and smoke detectors shall not be installed in the vault room.

1.7. Any and all conduits passing through vault floor or walls (see section 1.6 above) shall be sealed water-tight with water and oil resistant materials on exterior surface. In addition, customer must apply a one inch thick and one inch wide layer of sealant mastic around the conduit in the center of the form before concrete is poured. See **SDG&E Underground Construction Standard page 3960** for illustration of required technique, recommended materials and required spacing between conduits. Contact SDG&E inspector at least one (1) day in advance of concrete pour to schedule inspection of construction of vault walls through which electric conduit pass.

1.8. Any and all spare conduits between the vault and a substructure located outside the vault shall be plugged at both ends with expandable duct plugs.

1.9. Customer shall inform SDG&E when any pre stressed concrete portions of vault are proposed for construction.

2. PERSONNEL ACCESS DOOR (WALK-THROUGH DOOR):

2.1. Developer / customer is to provide a 3ft x 6ft-8in, three-hour fire-rated self-closing personnel access door equipped with panic hardware, and should be located as shown in section 22 or 23.

© 1998 – 2018 San Diego Gas & Electric Company. All rights reserved. Removal of this copyright notice without expressed written consent is not permitted under law.

TABLE OF CONTENTS

2.2. Developer / customer to provide light switch, with lighted switch plate, inside vault and adjacent to door.

2.3. Developer / customer to install **weather strips on all door edges** to prevent excessive air intake around door edges when vault ventilation is operating, and to limit fresh air intake in case of fire.

2.4. Developer / customer shall provide and install a Schlage VTQP section MA series key section in a storeroom function (self locking) Rhodes series lever action lockset. SDG&E will replace the MA series cylinder with an electric series cylinder prior to energizing the service. The developer is required to notify SDG&E's inspector when the lockset is installed.

2.5. Personnel access door shall open into a clear area that will allow manual carry-in of small tools and equipment. Personnel access doors in garage areas shall open into a designated no-parking zone and have permanent unobstructed access to door.

2.6. Door threshold to be 6 inches above vault floor for oil retention. All threshold seams, if any, to be sealed with water and oil resistant materials. See "Equipment Openings in Vault Wall" illustration in section 22.

2.7. Developer/customer to attach sign/placard to door stating the following:

"SDG&E Electric Vault", "Danger – High Voltage – Keep Out."

2.8. Developer to provide SDG&E with an approved route with 24 hour access easement to the personnel access door in the vault. If an electrically operated gate is installed restricting SDG&E vehicle access to the walk-through door, developer shall install a Schlage VTQP quad section cylinder in a key switch wired to the gate controller. A list of locksmiths authorized to sell SDG&E approved locks is available on request. The developer will install a means of opening the gate from the inside without the use of a vehicle to activate the controller. This will require the installation of an additional key switch inside the gate if there is no unsecured switch available. Door to have 24-hour direct ingress and egress for SDG&E personnel.

3. EQUIPMENT OPENINGS:

3.1. **Below Grade Vaults**

3.1.1. 10 ft. X 10 ft. Equipment opening through vault ceilings. Customer / developer shall provide removable three-hour fire rated 3 part concrete cover with wheel load factor HS-20 (per AASHTO). Customer to submit drawings approved by civil engineer registered in the State of California verifying HS-20 wheel loading for each equipment opening cover. No section of covers to exceed 4,800 lbs. Both opening and cover/s shall have matching beveled edges, with 30° vertical deflection. Four lifting coil inserts to be provided for removal of each section of cover. Lifting inserts shall be 1-inch threaded coil inserts with 4,500 lbs safe working load tension. See **SDG&E Underground Construction Standards** for illustrative details for equipment opening three piece cover. The equipment opening must be kept clear and unobstructed by customer-installed equipment both above and below the opening. A minimum vertical clearance of 30ft - for operation of heavy equipment including cranes - must be provided above the equipment opening – see illustration in section 23. Customer shall seal the cover to prevent water entry following installation of equipment. Repair, maintenance or replacement of any old or new, damaged covers is the responsibility of the customer / developer. SDG&E to determine when replacement is necessary.

© 1998 – 2018 San Diego Gas & Electric Company. All rights reserved. Removal of this copyright notice without expressed written consent is not permitted under law.

TABLE OF CONTENTS

3.1.2. Customer to provide personnel access opening with 30-inch cast-in-frame ring and a 34-inch cast iron cover. Opening to be adjacent to equipment opening and at final grade. No coverings are permitted over this opening. Locate opening as shown in Sections 22.2 & 25. See SDG&E Underground Standards page 3332.

3.2. **At Grade Vaults**:

3.2.1. 10 ft. X 10 ft. Equipment opening through exterior vault wall. Equipment access door shall be Three-hour fire rated and have 24-hour direct access for SDG&E personnel. Developer shall provide and install a Schlage VTQP quad section MA series key section. SDG&E will replace the MA series cylinder with an electric series cylinder prior to energizing the service. A permanent and level six-foot clear working area, at least as wide as the door, is required outside of the equipment access door and at the same grade as the vault floor.

3.2.2. Customer to install removable 6-inch oil retention sill at equipment opening floor level when there is no other access for installing or removing transformers or other vault equipment. Sill construction to be 6-inch steel box beam. Bolts to pass through beam and align with inserts embedded in base of equipment opening. The beam must align with floor base and vertical edge to provide close fit for sealant compression to retain oil inside vault. Sealant to be oil and water resistant. See section 22.

TABLE OF CONTENTS

3.3. Truck Access on Private Property: If both the equipment opening and access route to equipment opening is located on private property, customer will provide permanent “all weather” drivable access route to equipment opening. This permanent access route shall be of sufficient strength to support truck weight class HS20 (20 tons per axel), be a minimum of 16ft wide and 13ft-6in high, with permanent turnaround having 20ft minimum turning radius – as measured from inside radius edge. Customer may provide permanent drive through access route in lieu of turnaround if so desired. Customer to install “Permanent SDG&E Truck Access Route” placard along access route with a minimum of one placard every 25ft. If heavier duty equipment is used to install facilities, such as a large crane, permanent access shall be maintained.

3.4. Truck Work Area on Private Property: If equipment opening is located on private property and area in immediate vicinity of equipment opening is also located on private property, customer will provide clear and permanent truck work area at least 50ft long x 16ft wide, centered on equipment opening.

3.5. Truck Access in Public Right-of-Way: If equipment opening is adjacent to public right-of-way, or in public right-of-way, it shall be located such that it provides the same truck access as for private property.

3.6. Truck Work Area in Public-Right-of-Way: If equipment opening is adjacent to public right-of-way, or in public right-of-way, it shall be located such that it provides the same truck work area as for private property.

3.7. Boom Clearance: Customer will provide permanent overhead boom clearance at equipment access opening as shown in “Electric Vault Location and Accessibility” illustration in section 23.

3.8. Restrictions: customer is not permitted to install tables, chairs, partitions, posts, signs, screens, walls, fences, railings, or barriers of any nature above or in front of SDG&E equipment opening or personnel access opening into electric vault.

© 1998 – 2018 San Diego Gas & Electric Company. All rights reserved. Removal of this copyright notice without expressed written consent is not permitted under law.

TABLE OF CONTENTS

4. PULLING INSERT REQUIREMENTS

4.1. Transformer/switch/equipment moving inserts (A) – ____(no.) 1-inch diameter galvanized pulling irons located 48-inch up from vault floor, per attached SDG&E sketch. The coil insert strength shall be 10,000 pounds minimum with a working load safety factor 3. The concrete vault shall have a safety factor of 2 for these loads.

4.2. Cable pulling insert (B) (below grade vaults) – One (1) 7/8 inch diameter galvanized pulling iron(s) located in the opposite wall and at same height as incoming conduits. Pulling iron(s) to be designed to provide a minimum pulling tension of 12,000 lbs. The concrete vault to have a safety factor of 2 for these loads. A clear and unobstructed path must be provided and maintained between the conduit opening (into the vault) and the pulling eye on the opposite wall.

4.3. Cable pulling insert (C) (below grade vaults) – One 1-inch diameter galvanized pulling iron in same wall as cable pulling insert required in section 4.2 above, located directly opposite equipment opening, 48-inch above the vault floor. Pulling iron to provide a minimum pulling tension of 12,000 lbs. The concrete vault to have a safety factor of 2 for these loads. A clear and unobstructed path must be provided and maintained between cable pulling insert in section 4.2 and this cable pulling insert.

4.4. Cable pulling insert (E) (on grade vaults) – One 1-inch diameter galvanized pulling iron located in vault ceiling directly above incoming conduits in vault floor. Pulling iron to provide a minimum pulling tension of 12,000 lbs. The concrete vault to have a safety factor of 2 for these loads.

4.5. Optional cable and/or transformer insert – may be located in the vault floor a minimum of 9-inch from any wall face, and located per attached work order sketch.

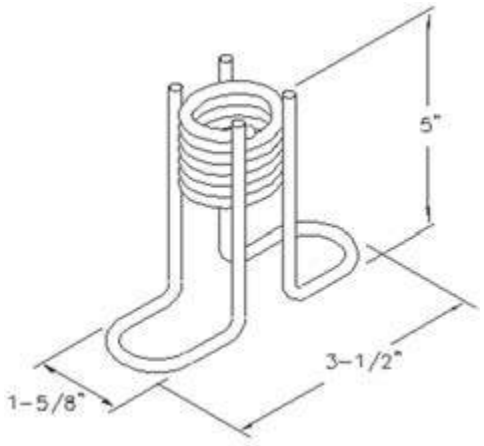

Figure 1 - Typical coil insert for use into thin slabs or small sections.

© 1998 – 2018 San Diego Gas & Electric Company. All rights reserved. Removal of this copyright notice without expressed written consent is not permitted under law.

TABLE OF CONTENTS

5. VENTILATION SYSTEM:

5.1. Ventilation openings shall be located as far away as practicable from building doors, windows, fire escapes and combustible material. (California Code of Regulations, Title 8, section 2806). Openings inside the vault shall be located so as to direct the air stream over and around the transformer/s.

5.2. Supply Air (Intake) Opening for supply air shall be provided from a source of clean outside air or garage air. Intake louver(s) shall be provided on the outside of the building or in the garage, located a minimum of 18 inches above grade and per local codes. Intake louver(s) shall be sized per the louver manufacturer's recommendations to minimize entrainment of water into the air stream. Intake louver(s) shall be provided with bird screens. Three hour fire-rated ductwork shall connect the intake louver(s) to the vault. Ductwork shall be sized and designed per SMACNA, ASHRAE, and industry standards. Ductwork sizing shall consider pressure drop, air velocity and noise. Supply air opening(s) shall be located away from exhaust louver(s) and at least 18 ft above the floor of the vault and positioned to promote good cross ventilation/distribution of supply air across the entire vault. Supply air openings shall be constructed with a ½ inch mesh hardware cloth and sized for a maximum face velocity of 800 feet per minute. In addition, the foregoing installation is to comply with all local codes and ordinances.

5.3. Exhaust Air (Discharge): Ventilation and cooling air from the vault shall be discharged to the outside of the building or garage through exhaust louver(s). Exhaust louver(s) shall be located a minimum of 18 inches above street grade, away from intake louver(s) and building openings and per local codes. Exhaust louver(s) shall be sized per the louver manufacturer's recommendations. Exhaust louver(s) shall be provided with bird screens. Three hour fire-rated ductwork shall connect the exhaust louver(s) to the vault. Ductwork shall be sized and designed per SMACNA, ASHRAE, and industry standards. Ductwork sizing shall consider pressure drop, air velocity and noise. Exhaust opening(s) shall be located near the ceiling of the vault and positioned to promote good cross ventilation and/or distribution of supply air across the entire vault. Exhaust openings shall be constructed with a ½in mesh hardware cloth and sized for a maximum face velocity of 800 feet per minute. In addition, the foregoing installation is to comply with all local codes and ordinances.

5.4. Ventilation fan motor may be located inside or outside transformer vault. Coordinate with SDG&E to determine acceptable location prior to purchase of equipment. Ventilation fan motor installation is to comply with all local codes and ordinances.

5.5. Ventilation fan motor inside transformer vault shall have a disconnect device located (and marked) inside the vault adjacent to personnel access door. Customer to provide thermostat control, with a range of 70°F to 140°F located inside the vault mounted away from intake and exhaust vents in easily accessible location ("Minneapolis – Honeywell thermostat model or equivalent"). **Customer to provide regular scheduled maintenance for ventilation fan motor. Coordinate with SDG&E for access to transformer vault.**

5.6. Ventilation fan motor outside transformer vault shall have a lockable disconnect located outside the vault in the immediate vicinity of fan motor. Appropriate permanent signage is to be posted adjacent to outside lockable disconnect warning against tampering or disconnecting the vault ventilation. Customer to provide thermostat control, with a range of 70°F to 140°F located inside the vault mounted away from intake and exhaust vents in easily accessible location ("Minneapolis – Honeywell thermostat model or equivalent"). Thermostat shall have alarm monitoring and temperature reset controls and 2-way communication or remote control capability. **Customer to**

© 1998 – 2018 San Diego Gas & Electric Company. All rights reserved. Removal of this copyright notice without expressed written consent is not permitted under law.

provide regular scheduled maintenance for ventilation fan motor. Coordinate with SDG&E for access to transformer vault.

5.7. Fire dampers shall be installed as required by local and State governing agencies having jurisdiction for the Occupancy type for the building. Any required fire dampers are to be located within vault. Provide adequate clearance for fire damper installation on supply & exhaust vent openings if dampers are required.

5.8. One continuous_____CFM (minimum) exhaust fan direct driven by a_____3-phase, sealed ball bearing motor. Fan to be mounted as close to the ceiling as practicable when located inside vault.

5.9. Vents, Ducts and flues shall not be connected with any other ventilation or air distribution system and must be for exclusive use of electric (transformer) vault.

5.10. See Section 21 for Internal Vault Wiring Diagrams.

5.10.1. Note - No gas meter set assemblies are allowed within 10ft of intake or discharge vents.

6. VAULT LIGHTING SYSTEM:

6.1. Vault light switch and 120v power receptacle. A 277V vault lighting system may be installed if available.

6.2. EXO switch complete with protection. Ventilation blower motor and vault lighting system to be separately protected. See attached detail____for diagram schematic.

6.3. Customer to wire out per authority having jurisdiction (AHJ) from point adjacent to secondary side of transformer to EXO switch and interconnect vault lights, switch and receptacle, exhaust fan and thermostat control as required.

6.4. Four-foot double fluorescent lamp fixture with minimum 40-watt bi-fin lamps to be mounted on ceiling or maximum height of 9 feet above floor level, at locations as specified on SDG&E drawing.

6.5. See Section 21 for Internal Vault Wiring diagrams.

7. ENERGIZING VAULT VENTILATION AND LIGHTING SYSTEM

7.1. When initially energizing the vault ventilation and lighting system a joint meeting with the customer electrician and SDG&E crews shall be scheduled to ensure wiring is correct and all motors/lighting are working properly. For services using three-phase motors, proper rotation should be confirmed.

8. VAULT DRAINAGE SYSTEM: (CHECK WITH CITY IF REQUIRED)

8.1. When Governmental or Municipal authority requires a vault drainage system, the customer is to install a standard floor drain connected to a dry sump located outside of the vault. Slope the floor gently to this drain and cover with standard grating. Customer will be responsible for maintaining all components of drainage system in good working condition.

8.2. The design and installation of vault drainage system (provided by the customer) must be approved by the appropriate inspection authority and must meet all local, state and federal environment requirements for all components.

© 1998 – 2018 San Diego Gas & Electric Company. All rights reserved. Removal of this copyright notice without expressed written consent is not permitted under law.

TABLE OF CONTENTS

8.3. Customer is responsible for proper environmental disposal of any and all liquids recovered by vault drainage system.

8.4. Waste collection container must be capable of containing the total volume of oil for projected maximum size transformer/s (based on panel size/s) that can be used in vault. Contact SDG&E for volume requirement.

8.5. Regardless of whether Governmental or Municipal authorities require a vault drainage system, customer will install a sump hole directly below street level personnel access opening - in below grade vaults only.

9. VAULT GROUNDING SYSTEM:

9.1. Trench grounding is the preferred method for providing grounds for all vaults. Customer to install 30 ft of 4/0 bare stranded copper wire in the primary trench closest to building and encase the 4/0 bare copper wire in the base of the trench using Ground Enhancement Material (GEM). See SDG&E UG Standard 4510. Customer to insert 4/0 ground wire into 1inch PVC conduit for transition through vault/building wall. See SDG&E UG Standard 3960.2 for required technique and materials to transition PVC conduit through concrete. Ground wire inside vault to reach vault floor + 24 inch additional length.

9.2. As an alternative method, only when the approaching primary trench is less than 30 ft in length, customer to install 2 - 5/8 in X 10 ft long copper clad steel ground rods at minimum 6 ft interval in the primary trench. Install 4/0 bare stranded copper wire ground wire. Rods to be interconnected with 4/0 bare strand copper wire. See SDG&E UG Standard 4510. Customer to insert 4/0 ground wire into 1 inch PVC conduit for transition through vault/building wall. See SDG&E UG Standard 3960.2 for required technique and materials to transition PVC conduit through concrete. Ground wire inside vault to reach vault floor + 24 inch additional length.

9.3. Customer to provide individual equipment grounds within the vault for all transformers, capacitors, cable taps and fuse cabinets as specified by SDG&E. Customer to install/embed 1-#2/7 bare strand copper wire into vault floor for each transformer, capacitor, fuse cabinet and set of cable taps. Equipment ground wire to run from primary side of each transformer or capacitor, from below middle cable tap, and from below fuse cabinet, to a position just below entry point where 4/0 bare stranded copper trench ground wire transitions through vault wall – see 9.1 or 9.2 above. Customer to provide 24 inch (minimum) tail at each end of (each) equipment ground wire embedded in the floor of the vault.

9.4. Contact SDG&E inspector at least one (1) day in advance to schedule inspection of installation of trench ground outside vault (prior to backfill) and/or equipment ground embedded in vault floor. Customer to provide ladder access and a safe temporary access path (plywood or planks) within the vault for SDG&E inspector to make the inspection.

9.5. SDG&E will install required interior grounding for switches inside the vault.

10. PRIMARY CONDUIT, EXTERIOR and INTERIOR:

10.1. Primary exterior conduit trench shall be slurry backfilled, concrete encased or as specified by SDG&E.

TABLE OF CONTENTS

© 1998 – 2018 San Diego Gas & Electric Company. All rights reserved. Removal of this copyright notice without expressed written consent is not permitted under law.

10.2. Primary exterior conduits shall terminate in corner of vault as specified by SDG&E Project Management Dept. Top of conduit package shall terminate no less than 60 inch below interior surface of vault ceiling.

10.3. Any and all conduits passing through vault exterior wall (see section 1.6 & 1.7 above) shall be water-tight with water and oil resistant materials. Conduit must be sealed on vault exterior surface. In addition customer must apply a one inch thick and one inch wide layer of sealant mastic around each conduit in the center of the form before concrete is poured. See SDG&E Underground Construction Standard page 3960 for illustration of required technique, recommended materials and required spacing between conduits. Contact SDG&E inspector at least one (1) day in advance to schedule inspection of vault floor through which conduits pass.

10.4. Any and all conduits passing through vault floor (see section 1.6 & 1.7 above) shall be sealed water-tight with water and oil resistant materials. If possible, conduit may be sealed on vault interior surface. In addition, customer must apply a one inch thick and one inch wide layer of sealant mastic around the conduit in the center of the form before concrete is poured. See SDG&E Underground Construction Standard page 3960.2 for illustration of required technique, recommended materials and required spacing between conduits. Contact SDG&E inspector at least one (1) day in advance to schedule inspection of construction of vault floor through which conduits pass.

10.5. All primary exterior conduits shall be installed such that they are free and clear of dirt, rocks, or other obstructions. Customer/developer shall install ¾in pulling and measuring tape rated at 2,500 pound tensile strength in all conduit runs over 10ft. Each conduit will have at least a two-foot measuring tape coil securely tied at each terminating end of conduit run. Horizontal conduit bends shall be 25ft radius of curvature.

10.6. Contact SDG&E inspector at least one (1) day in advance to schedule inspection of installation of primary exterior conduit system (prior to backfill) Note: service conduits not included in this section

10.6.1. _____(#. Conduits),_____In. Size,_____Type

10.6.2. _____(#. Conduits),_____In. Size,_____Type

10.6.3. _____(#. Conduits),_____In. Size,_____Type

10.6.4. _____(#. Conduits),_____In. Size,_____Type

10.7. Primary interior conduit may be installed beneath the vault floor provided vault floor is located at street level and is completely resting on earth.

10.8. Cable troughs may be installed in vault floor as substitute for primary interior conduits. Customer to submit specification to SDG&E for approval prior to fabrication. Allow 6 inches of width for each set of distribution cables and 7in of width for each set of feeder cables. The maximum width of any trough will be 30in.

10.9. Trough covers will be designed to withstand a minimum of 20,600 lbs traffic loading capacity (AASHTO H20 and ASTM C 857). Trough cover surfaces must be smooth textured to allow easy pass-over by small roller wheels. Trough covers will be flush mounted and have flush mounted

© 1998 – 2018 San Diego Gas & Electric Company. All rights reserved. Removal of this copyright notice without expressed written consent is not permitted under law.

TABLE OF CONTENTS

lifting handles on each end, or 1in lifting hole on both ends. Trough cover sections will be limited to a maximum weight of 80 lbs.

10.10. Cable troughs may not pass beneath floor mounted electric equipment. Troughs may terminate beneath floor mounted electric equipment.

10.11. Cable trays may be installed as substitute for primary interior conduits. See section 15.

11. CUSTOMER SERVICE CONDUIT:

11.1. Service conduits are only permitted when transformer vault is located at street level and vault floor is resting on earth. Combinations of 3 or 4 inch service conduits may be used provided they do not exceed 6 conduits total. A maximum of 5 - 5 inch service conduits may serve commercial & industrial boards up to 2,000 Amps. A maximum of 5 - 5 inch service conduits may serve residential & multifamily boards up to 3,500 Amps.

11.2. In addition to truck access required in section 3 above, line truck access is to be provided as indicated in SDG&E Service Standards & Guide, pg 16, when service conduits will be installed.

11.3. Service conduit requirements exceeding quantities stated above will require bus duct, rather than conduit, between secondary side of transformer and customer service equipment. When transformer vault is not on street level, and is not resting on earth, bus duct is required between secondary side of transformer and customer service equipment.

11.4. Install_____conduits from secondary side of transformer to customers pull section as indicated on sheet **XX** of **YY**. Terminate primary and service conduits at least 2in above floor to permit sealing (see section 1.6 & 1.7 above)

11.5. When more than one pull-section is served by the same transformer and the total number of conduits exceeds those listed above, bus duct will be required.

11.6. Any and all electric service conduits passing through vault floor shall be sealed water-tight with water and oil resistant materials. See SDGE Underground Standard 3960 for required spacing and specifications to be provided between conduits to allow use of sealing tools. See section 1.9 above for additional requirements

12. SERVICE ENTRANCE, BUS DUCT:

12.1. Service bus way from customer's service equipment to transformer. The design and location must be approved by SDG&E prior to fabrication. Refer to attached enclosure for straight bus section and bus entrance box. For attachment to transformer housing, bus bar configuration and transformer housing see illustrations in section 18 for details/specifications. Bus and entrance box to be permanently supported as required. Horizontal bus sections within vault to maintain 7ft-6in vertical clearance above vault floor. Where bus enters vault room, opening to be sealed following bus installation. Bus ampacity to match or exceed panel rating.

12.2. Customer service entrance installation to comply with all local codes and ordinances.

TABLE OF CONTENTS

© 1998 – 2018 San Diego Gas & Electric Company. All rights reserved. Removal of this copyright notice without expressed written consent is not permitted under law.

13. CUSTOMER'S METERING FACILITIES:

13.1. Customer's meter board shall be constructed in accordance with SDG&E's service guide requirements. Manufacturer shall submit drawings to SDG&E Service Standards group for approval prior to fabrication.

14. COMMUNICATIONS CONDUIT:

14.1. SCADA (Supervisory Control and Data Acquisition): One 4 inch communications conduit shall be extended from customer vault to closest SDG&E substructure (for supervisory cable). Or one 4 inch conduit shall be extended to anticipated/future SCADA antenna location (for coax cable). And one 1 inch conduit shall be extended from customer vault to project telephone equipment area (telephone line). Coordinate with SDG&E Project Management department to determine specific requirement.

15. CABLE TRAY:

15.1. Cable trays are **not** preferred; however, the installation of cable trays may be necessary when circumstances prevent the installation of either (primary) conduit or trough, such as structurally thin floors. Customer to submit specifications to SDG&E for approval prior to fabrication.

15.2. Refer to Article 392 of the National Electric Code (NEC) for guidelines in selecting the proper cable tray type. (The type of cable to be installed in the tray will dictate the type of cable tray needed).

15.3. Refer to Article 392 of the National Electric Code (NEC) for guidelines in calculating the cable tray depth and width. (The type and number of cables to be installed will dictate the depth and width).

15.4. Cable tray side rail height should be at least 1in higher than the load depth (the depth of the largest cable).

15.5. Cable tray radius: The nominal (inside) bending radius for curved sections of cable trays shall not be less than the minimum allowable bending radius for the largest (triplexed) cable to be installed in the tray. Refer to SDG&E Underground Standard pg. 4004 for a listing of minimum cable bending radius.

15.6. Cable tray load/span classification describes the cable tray's load carrying capability for a specific support span. A classification should be selected that reflects the actual working load for each application. Refer to SDG&E Underground Standard pg. 4003.1 for a listing of SDG&E cable weights.

15.7. Cable trays shall hang not less than 7 ft-6 in above the vault floor.

16. UNISTRUT HANGERS:

16.1. Unistrut hangers shall be used to support cable trays and shall be suspended from ceiling of vault. Each unistrut hanger shall be capable of supporting 500 lbs. Unistruts will be spaced such that the maximum load at each unistrut hanger is no more that 250 lbs.

16.2. Sufficient unistrut hangers shall be installed such that not more than one cable tray splice plate connection is located between hangers. Curved sections shall have at least one unistrut hanger at the center of the curved section.

© 1998 – 2018 San Diego Gas & Electric Company. All rights reserved. Removal of this copyright notice without expressed written consent is not permitted under law.

TABLE OF CONTENTS

17. SDG&E WILL FURNISH AND INSTALL:

17.1. Transformers

17.1.1. _____Transformer(s)_____kV._____/_____volt connected for three-phase 4-wire service (weight_____lbs)

17.1.2. _____Transformer(s)_____kV._____/_____volt connected for three-phase 4-wire service (weight_____lbs)

17.1.3. _____Transformer(s)_____kV. 120/240 volt connected for 1 -phase 3 -wire service (weight_____lbs)

17.2. 12KV Distribution Cable and Connectors

17.2.1. **Distribution Equipment:** SDG&E will furnish and install in vault (a) cable taps, (b) transformers, (c)_____-way switch (_____lbs), (d) wall-mounted fuse cabinet/s and fuses, (e) capacitor (2,000 lbs), (f) SCADA and communication equipment.

17.2.1.1. Equipment Dimensions

17.2.1.1.1. Cable Taps

17.2.1.1.2. Transformers

17.2.1.1.3. Switches

17.2.1.1.4. Fuse Cabinets

17.2.1.1.5. Capacitors

17.2.1.1.6. SCADA and Communication Equipment

17.2.2. **Service Conductors:** SDG&E will furnish and install service entrance conductors from transformer secondary terminals to customer's service pull section only when criteria in section 10.1 (above) are satisfied. Otherwise customer will install bus duct.

NOTE - CUSTOMER SERVICE ENTRANCE DESIGN AND LOCATION TO BE APPROVED BY SDG&E PRIOR TO FABRICATION

TABLE OF CONTENTS

© 1998 – 2018 San Diego Gas & Electric Company. All rights reserved. Removal of this copyright notice without expressed written consent is not permitted under law.

TABLE OF CONTENTS

18. 18. BUS DUCT INTO PAD-MOUNTED TRANSFORMER:

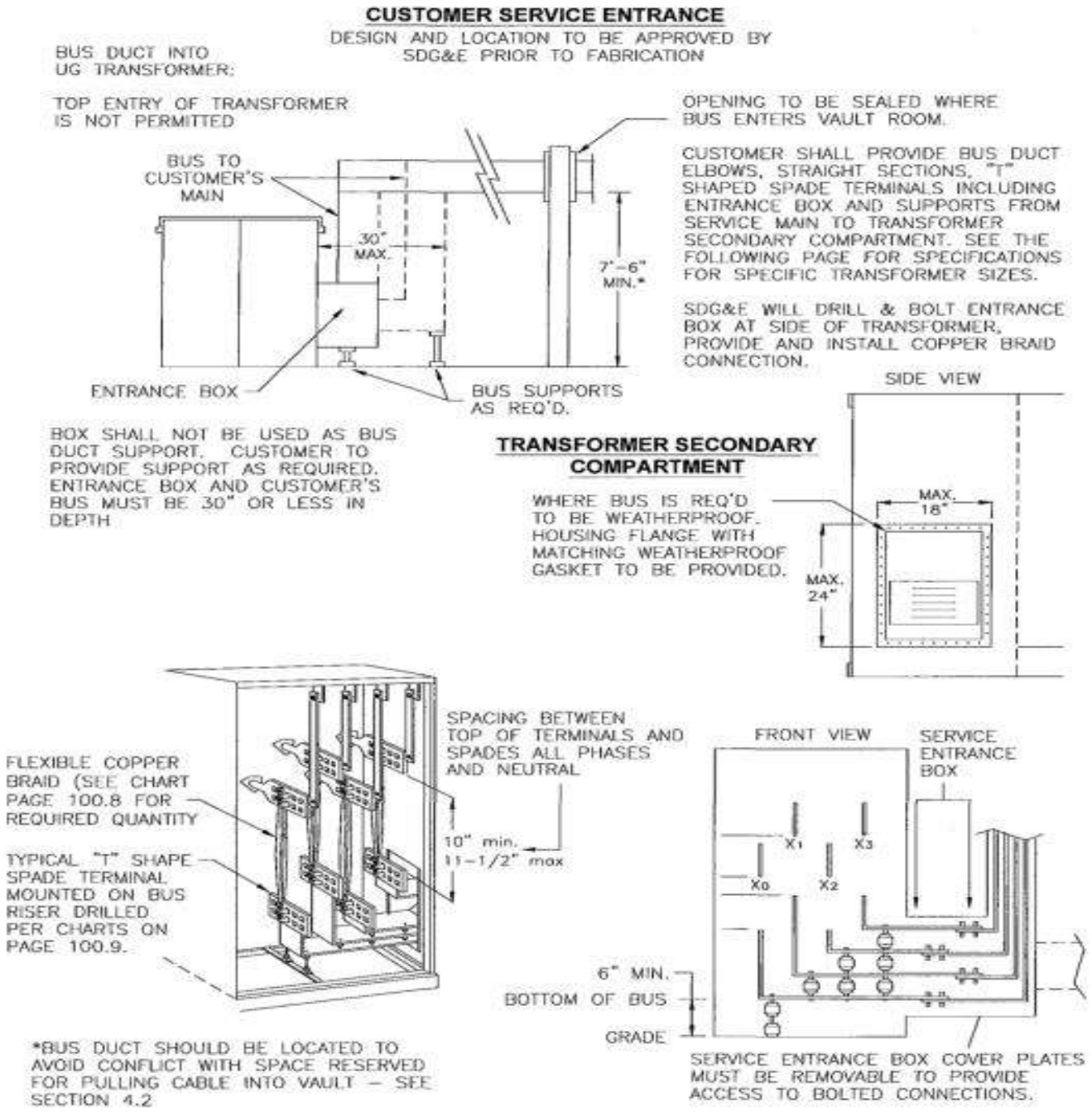

Figure 2 - Typical bus duct configuration for pad-mounted transformer.

© 1998 – 2018 San Diego Gas & Electric Company. All rights reserved. Removal of this copyright notice without expressed written consent is not permitted under law

TABLE OF CONTENTS

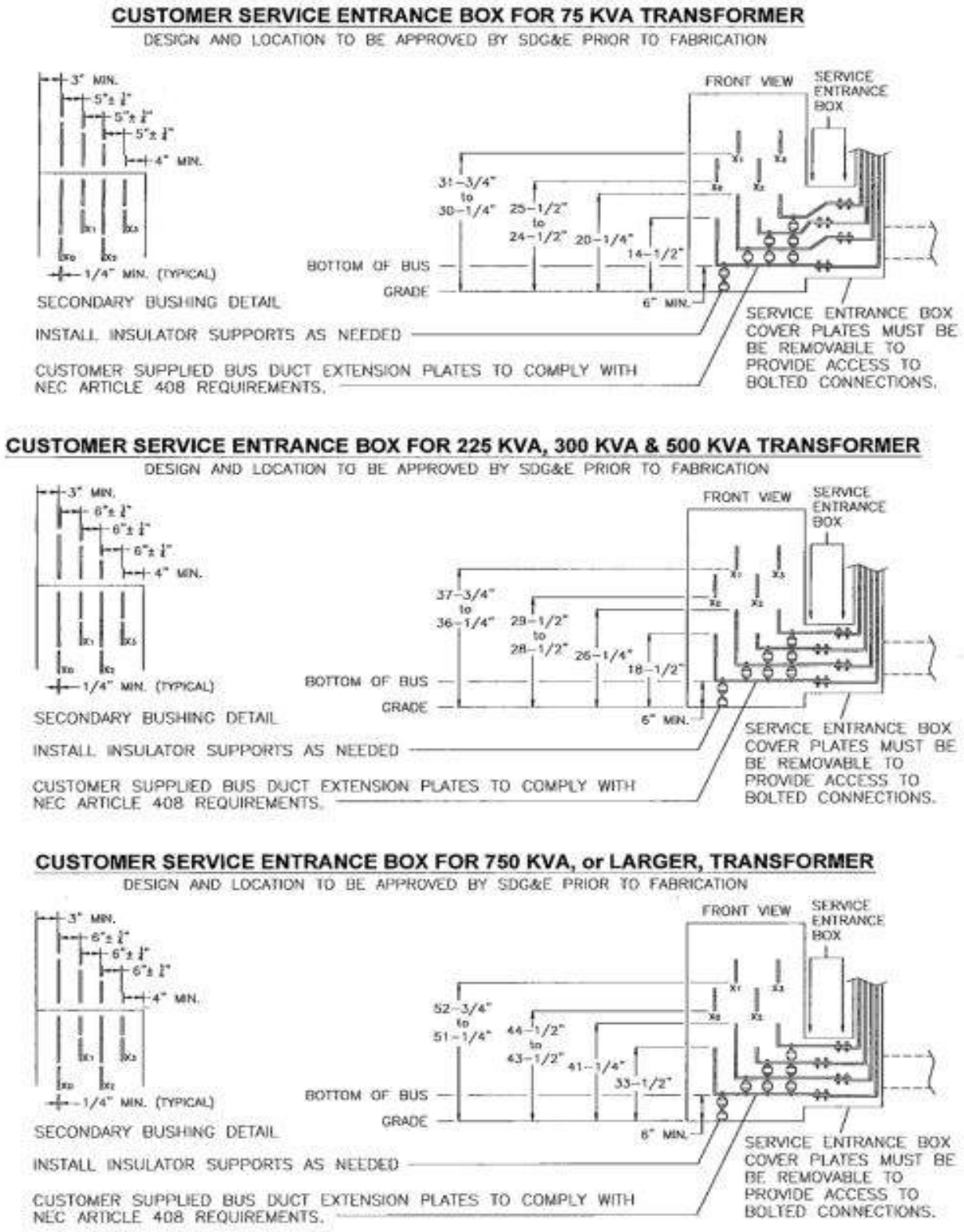

Figure 3 - Typical service entrance configuration for various sizes of transformers.

© 1998 – 2018 San Diego Gas & Electric Company. All rights reserved. Removal of this copyright notice without expressed written consent is not permitted under law.

19. COPPER BRAID SIZING CHART:

19.1. Three-phase padmount transformers (number of 600 amp secondary braided jumpers per phase to be used)

SECONDARY VOLTAGE

KVA	208Y/120	240 DELTA	480Y/277
75	1	1	1
150	1	1	1
225	2	2	1
300	2	2	1
500	4	3	2
750	6	—	3
1000	7	—	3
1500	11	—	5
2000	—	—	6
2500	—	—	8
3000	—	—	9

Table 1 - Number of 600A secondary braided jumpers based on transformer kVA size and secondary voltage.

TABLE OF CONTENTS

© 1998 – 2018 San Diego Gas & Electric Company. All rights reserved. Removal of this copyright notice without expressed written consent is not permitted under law.

20. LOW VOLTAGE TERMINALS:

LOW VOLTAGE TERMINALS

KVA X –6 HOLES	KVA X –6 HOLES	KVA X –6 HOLES	KVA X –6 HOLES	VOLTAGE
	500	750	1000	208Y/120
750	1000	1500	2000 – 3000	480Y/277

Table 2 - Number of "T" spade terminal holes based on transformer kVA size and secondary terminal voltages.

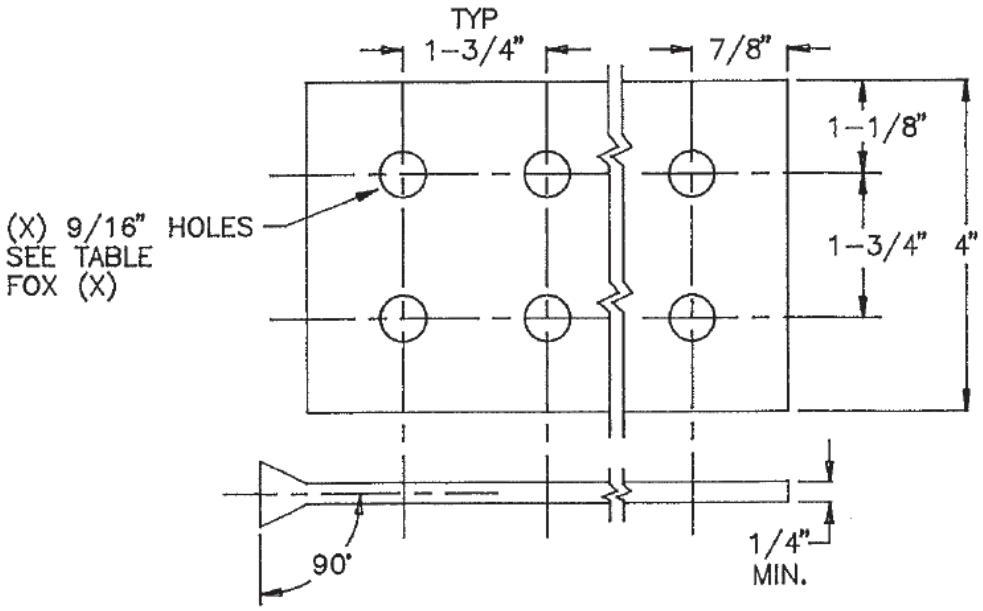

Figure 4 - "T" Spade terminal dimensions.

© 1998 – 2018 San Diego Gas & Electric Company. All rights reserved. Removal of this copyright notice without expressed written consent is not permitted under law.

TABLE OF CONTENTS

A MIN.	KVA	B MIN.	E
5±1/4”	75	6±1/4”	27±1/2”
5±1/4”	150	6±1/4”	27±1/2”
6±1/4”	225	8±1/4”	31±1/2”
6±1/4”	300	8±1/4”	31±1/2”
6±1/4”	500	8±1/4”	31±1/2”
6±1/4”	750	8±1/4”	46±1/2”
6±1/4”	1000 - 3000	8±1/4”	46±1/2”

Table 3 - Secondary bushing spatial dimensions.

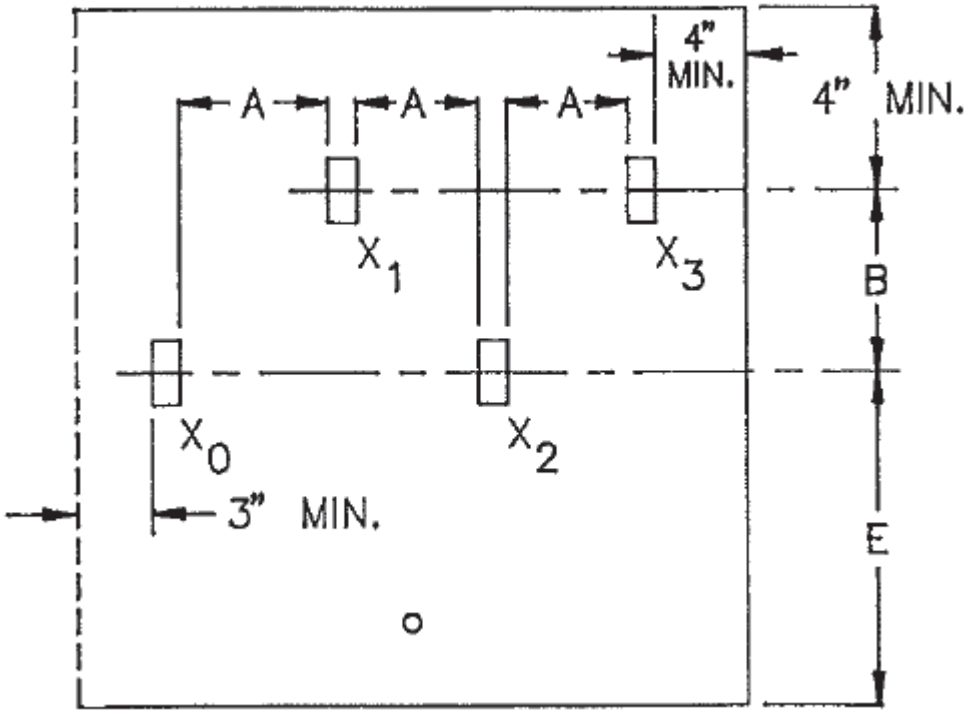

Figure 5 - Secondary bushing spatial diagram.

TABLE OF CONTENTS

© 1998 – 2018 San Diego Gas & Electric Company. All rights reserved. Removal of this copyright notice without expressed written consent is not permitted under law.

21. INTERNAL VAULT WIRING

21.1. **120 – 208V Vault** (Alternate, only use if 277-480V not present)

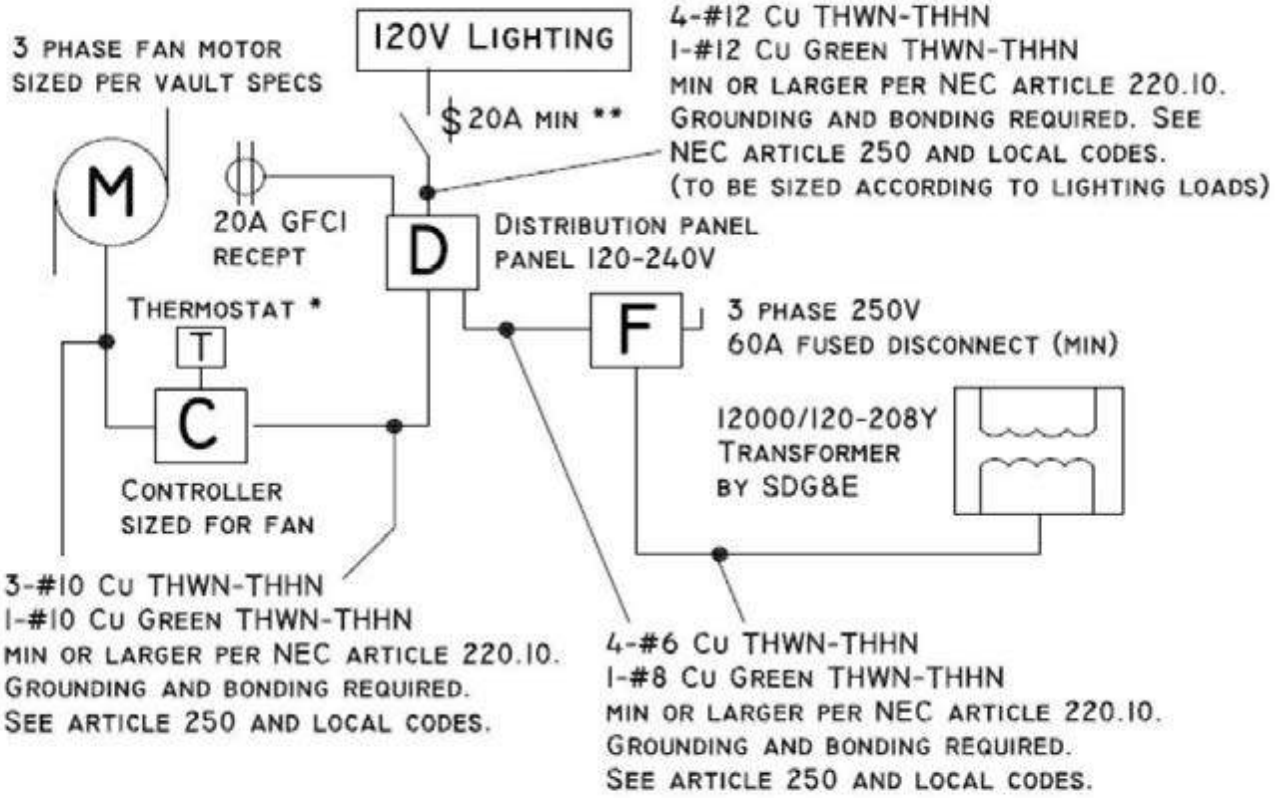

120-208V Vault

* THERMOSTAT TO BE MOUNTED AWAY FROM INTAKE AND EXHAUST VENTS IN ANY EASILY ACCESSILBLE LOCATION.

** LIGHT SWITCH WITH LIGHTED SWITCH PLATE REQUIRED INSIDE VAULT (A) ADJACENT TO PERSONNEL ACCESS DOOR AND (B) BELOW 34" CAST IRON COVER/PERSONNEL ACCESS OPENING, 48" ABOVE THE FLOOR.

NOTE: ANY MODIFICATIONS OR ADDITIONS TO THESE SPECIFICATIONS SHALL COMPLY WITH ALL APPLICABLE NEC AND LOCAL CODES.

TABLE OF CONTENTS

© 1998 – 2018 San Diego Gas & Electric Company. All rights reserved. Removal of this copyright notice without expressed written consent is not permitted under law

21.2. **277 – 480V Vault** (Preferred)

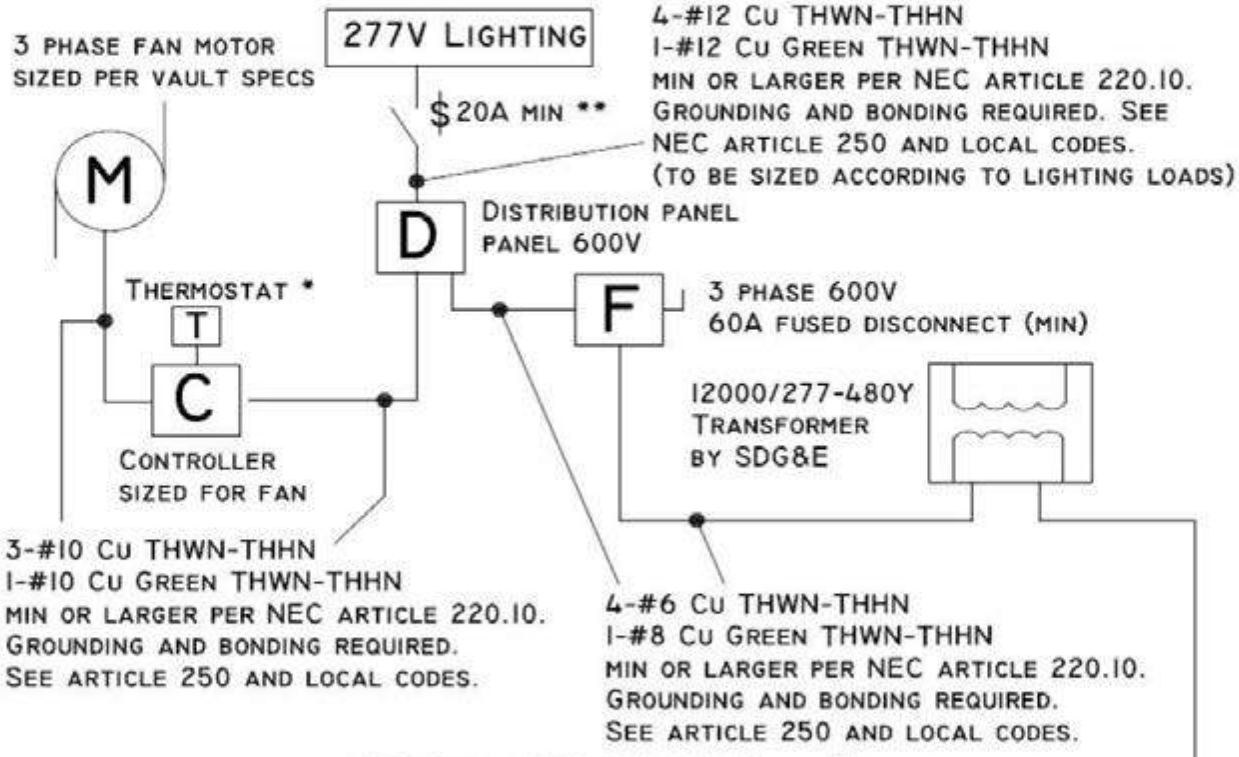

277-480V Vault

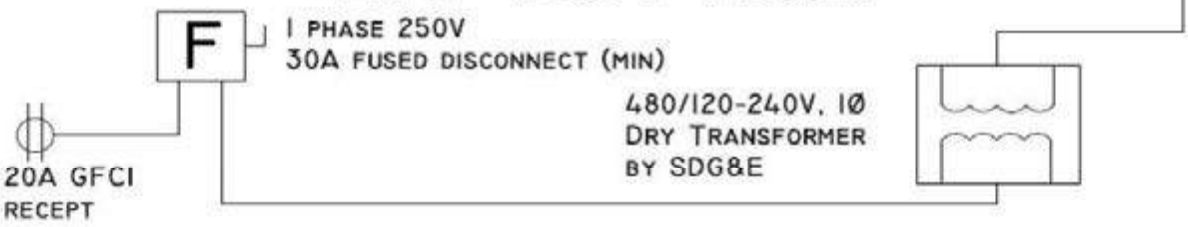

120V Vault Power from 277-480 Y Transformer

* THERMOSTAT TO BE MOUNTED AWAY FROM INTAKE AND EXHAUST VENTS IN ANY EASILY ACCESSILBLE LOCATION.

** LIGHT SWITCH WITH LIGHTED SWITCH PLATE REQUIRED INSIDE VAULT (A) ADJACENT TO PERSONNEL ACCESS DOOR AND (B) BELOW 34" CAST IRON COVER/PERSONNEL ACCESS OPENING, 48" ABOVE THE FLOOR.

NOTE: ANY MODIFICATIONS OR ADDITIONS TO THESE SPECIFICATIONS SHALL COMPLY WITH ALL APPLICABLE NEC AND LOCAL CODES.

TABLE OF CONTENTS

© 1998 – 2018 San Diego Gas & Electric Company. All rights reserved. Removal of this copyright notice without expressed written consent is not permitted under law

22. EQUIPMENT OPENINGS IN VAULT WALL:

22.1. 10ft X 10ft Door required for equipment opening. May be a roll-up door or conventional.

22.2. Either style door must be Three-Hour Fire Rated. See section 3.1 and 3.2.

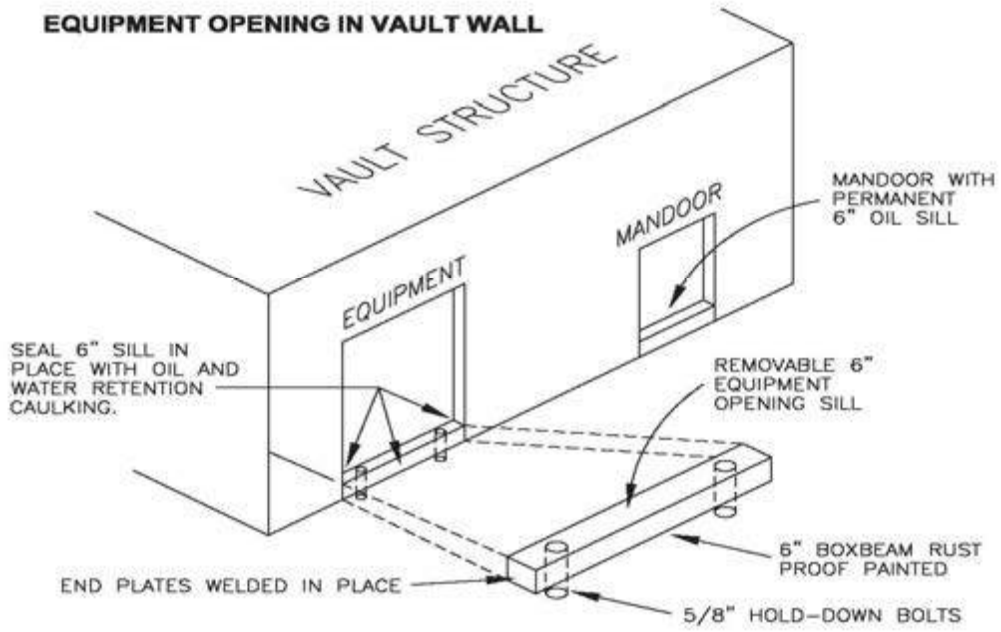

Figure 6 - At Grade vault equipment and personnel access door.

© 1998 – 2018 San Diego Gas & Electric Company. All rights reserved. Removal of this copyright notice without expressed written consent is not permitted under law.

TABLE OF CONTENTS

TABLE OF CONTENTS

23. ELECTRIC VAULT LOCATION & ACCESSIBILITY:

23.1. At Grade Vault (Preferred):

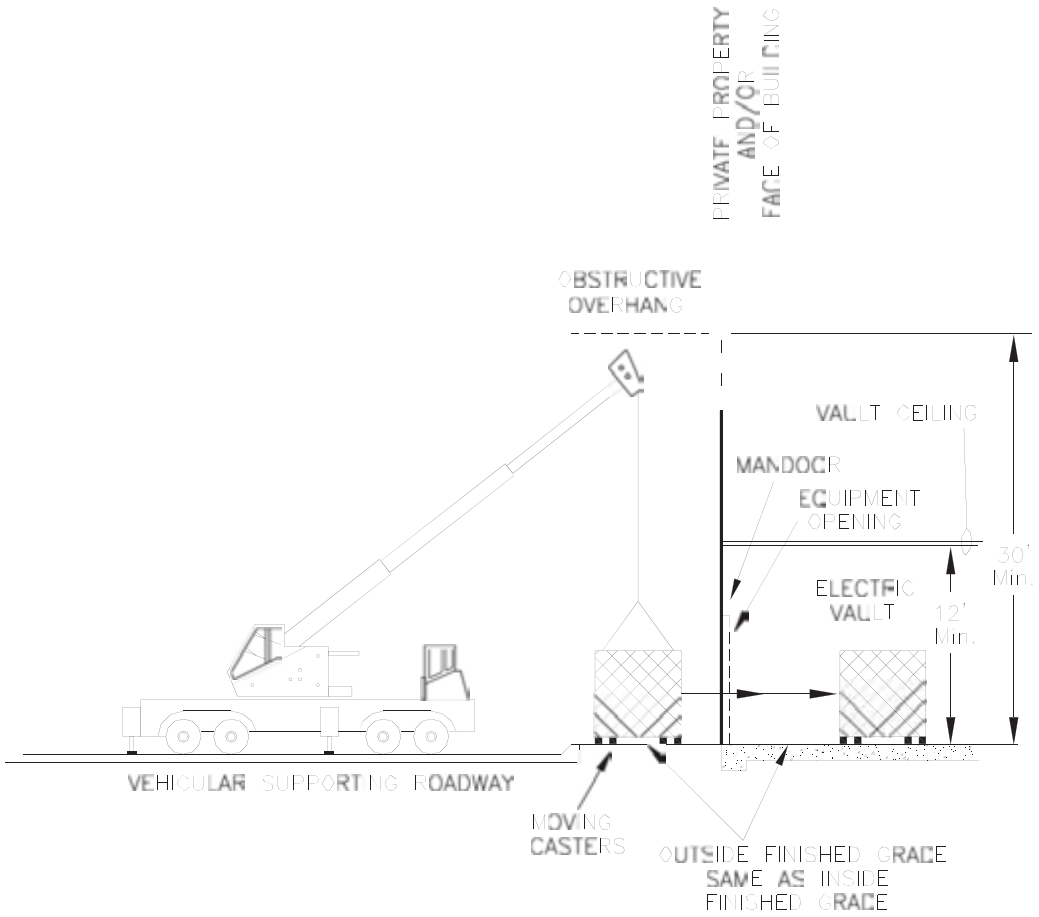

Figure 7 - Access to equipment openings for At Grade Vaults.

© 1998 – 2018 San Diego Gas & Electric Company. All rights reserved. Removal of this copyright notice without expressed written consent is not permitted under law.

23.2. Below Grade Vault (Alternate):

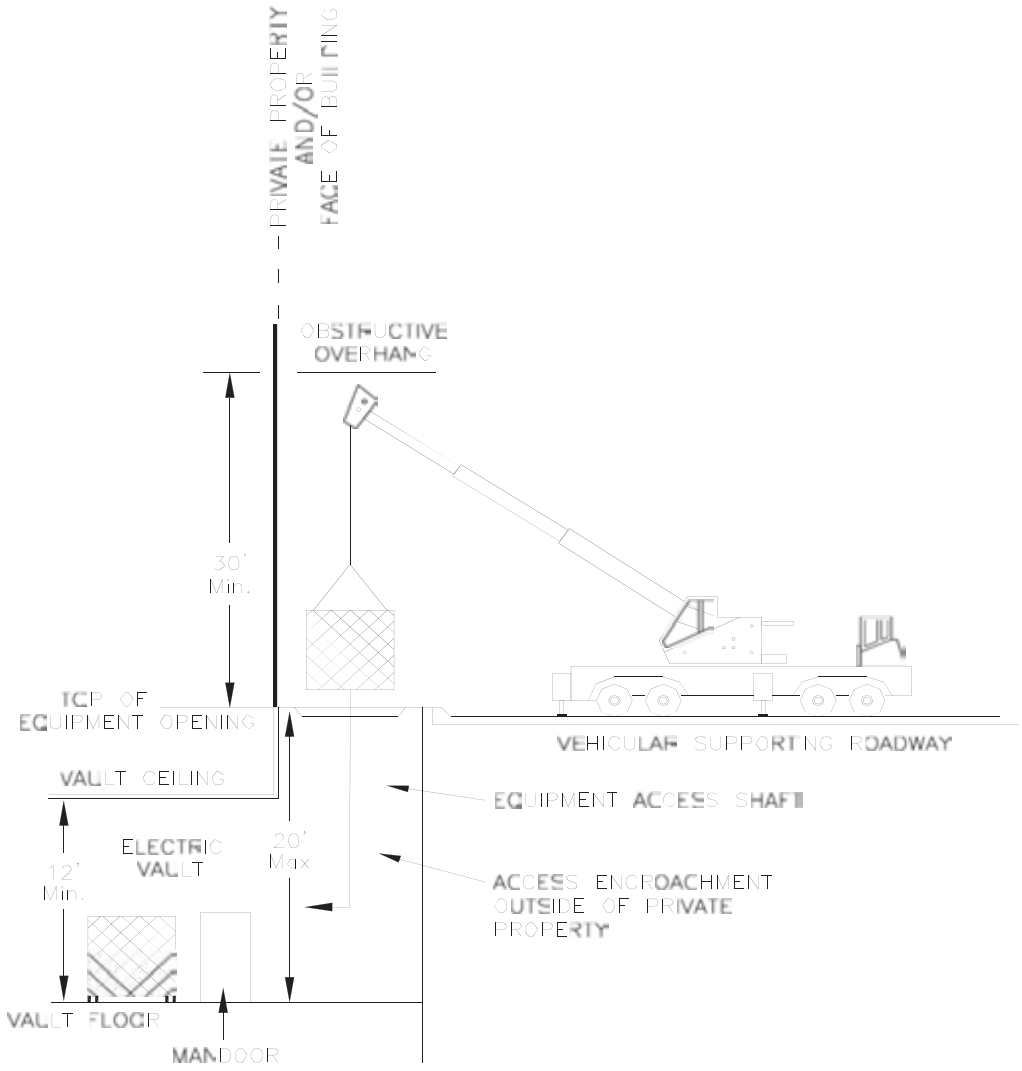

Figure 7 - Access to equipment for Below Grade vaults.

© 1998 – 2018 San Diego Gas & Electric Company. All rights reserved. Removal of this copyright notice without expressed written consent is not permitted under law.

TABLE OF CONTENTS

24. VAULT INTERNAL DIMENSIONS: BELOW GRADE & STREET LEVEL VAULTS

Customer Type	Number of Transformers (26.1)		Clear and unobstructed space (26.1/.2 /.3 /.5)	Equipment opening & personnel access opening
	1Ø	3Ø		
Residential Only	1	1	18' X 16' (at grade)	(not required at grade)
	1	1	18' X 16' (below grade)	17' X 12' (min)
Commercial or Combination w/ Residential		1	20' X 44' (26.4)	17' X 12' (min) (not required at grade)
		2	36½' X 29' or 20' x 57'	17' X 12' (min) (not required at grade)
		3	20' x 70'	17' X 12' (min) (not required at grade)

Table 4 – Vault dimensions based on type of service and equipment needs.

24.1. Customer must contact SDG&E Project Management department to determine dimensions for transformer combinations not listed. Contact SDG&E prior to submitting architectural building plans for Municipal approval.

24.2. Customer desiring deviation from standard vault dimensions must make formal written request to SDG&E Project Management department for consideration. Requests must be submitted to SDG&E prior to submitting architectural building plans for Municipal approval.

24.3. If customer is not able to provide clear & unobstructed space (no columns) in the dimensions specified above, please contact SDG&E Project Management department to determine acceptable alternative to prescribed dimensions above. Customer must coordinate with SDG&E prior to submitting architectural building plans for Municipal approval.

24.4. Customer may use 36½ft x 29ft dimensions if convenient.

24.5. Customer may provide larger vault than minimum dimensions listed above.

TABLE OF CONTENTS

© 1998 – 2018 San Diego Gas & Electric Company. All rights reserved. Removal of this copyright notice without expressed written consent is not permitted under law.

25. LADDER INSTALLATION FOR VAULTS GREATER THAN 12ft (Below Grade)

25.1. Minimum Vault Depth 12ft, Maximum Vault Depth 20ft.

25.2. Sump hole required, centered directly below personnel access opening

25.3. Installation of permanent ladder not required in personnel access opening. SDG&E will supply ladder when needed.

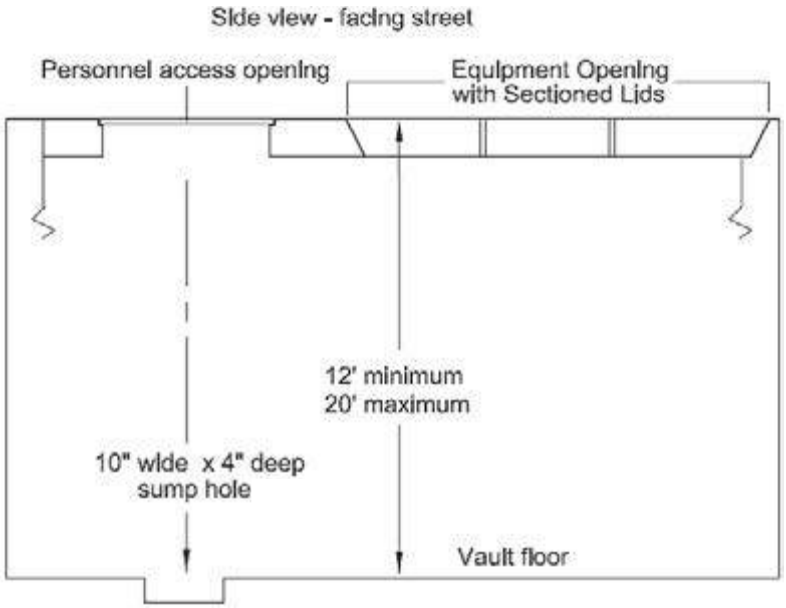

Figure 8 - Ladder installation details.

TABLE OF CONTENTS

© 1998 – 2018 San Diego Gas & Electric Company. All rights reserved. Removal of this copyright notice without expressed written consent is not permitted under law.

26. VAULT EQUIPMENT COVER and PERSONNEL ACCESS OPENING (Below Grade)

26.1. Inside dimension of equipment opening shall measure 10ft x 10ft. Customer shall provide removable three-hour fire rated three-part concrete equipment opening covers. No coverings or facades are permitted over these covers unless an integral part of the covers themselves. Maximum weight of each section is not to exceed 4,800 lbs.

26.2. Customer to provide 4 lifting inserts with removable plugs (to keep out debris) near each corner of each equipment opening cover/section. Lifting inserts shall be 1in threaded coil inserts with 4,500 lbs safe working load tension – see section 3 & 4.

26.3. Personnel access opening (manhole) shall measure 30 inches in diameter with 34 inch diameter cast iron cover and recessed stainless steel penta-head bolts (4 total). See SDG&E Underground Standards page 3332. Personnel access opening to be at final grade. No coverings are permitted over this opening.

26.4. Customer to submit plans approved by a civil engineer registered in the State of California verifying the structural integrity of equipment opening covers and personnel access opening cover to withstand (AASHTO) HS-20 loading. Equipment opening cover shall be designed in accordance with SDG&E Underground Construction Standards. Plans to be submitted to SDG&E prior to construction/manufacture of vault roof and sectioned equipment opening.

26.5. Café fences, railings, partitions, enclosures, screens, barriers, walls, tables, chairs, umbrellas, podiums, or any other miscellaneous structures or furniture are not permitted above equipment opening cover or personnel access opening cover, temporarily or otherwise. Twenty four hour access for emergency and/or routine removal of covers is to be maintained at all times.

26.6. Equipment opening covers and personnel access open cover to sit flush with and at same grade as surrounding sidewalk.

26.7. Customer shall install felt insulation between concrete equipment opening covers and metal side rails/struts - to prevent surface vacuum buildup between covers and side rails. Install felt insulation such that top horizontal surface of insulation is ½ inch – 1inch below top surface of covers. Customer to seal perimeter of equipment opening covers with removable ultraviolet/water/oil resistant caulking.

TABLE OF CONTENTS

© 1998 – 2018 San Diego Gas & Electric Company. All rights reserved. Removal of this copyright notice without expressed written consent is not permitted under law.

26.8. Equipment Opening & Personnel Access Opening shall be no more than 2 ft from edge of curb*.

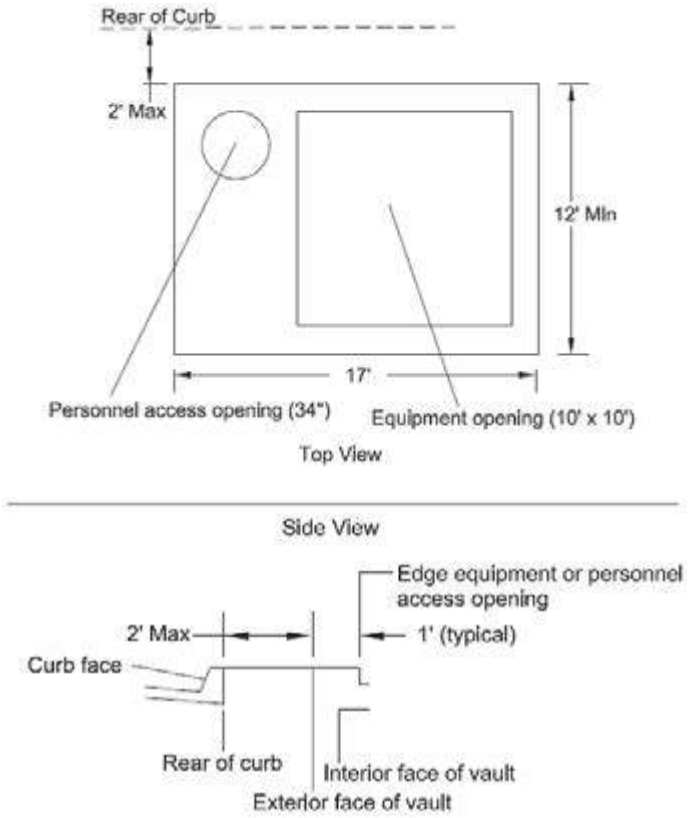

Figure 9 - Proximity of Below Grade Vault equipment and personnel access opening to street.

*Note: Customer is not permitted to install tables, chairs, partitions, posts, signs, screens, walls, fences, railings or barriers of any nature above or in front of SDG&E equipment opening or personnel access opening.

26.9. The following depiction shows typical arrangements of the “Clear& Unobstructed Space” (vault space for equipment) to the “Equipment and Personnel Access Opening”.

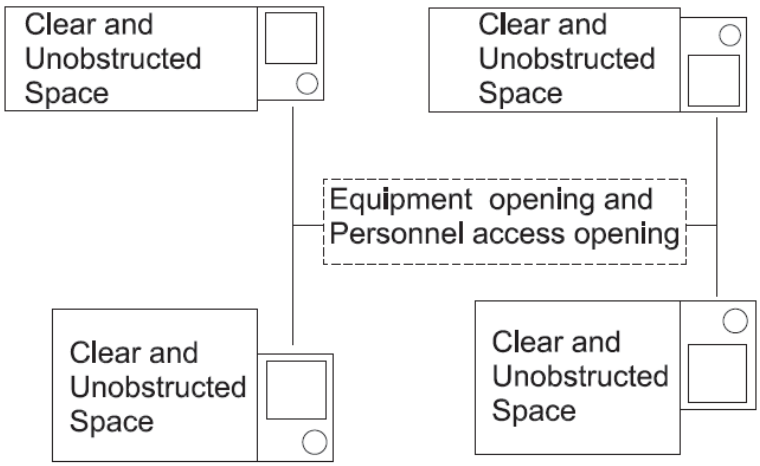

Figure 10 - Typical arrangement of vault room in relation to equipment and personnel access opening.

© 1998 – 2018 San Diego Gas & Electric Company. All rights reserved. Removal of this copyright notice without expressed written consent is not permitted under law.

TABLE OF CONTENTS

27. TYPICAL VAULT CONFIGURATIONS (AT & BELOW GRADE)

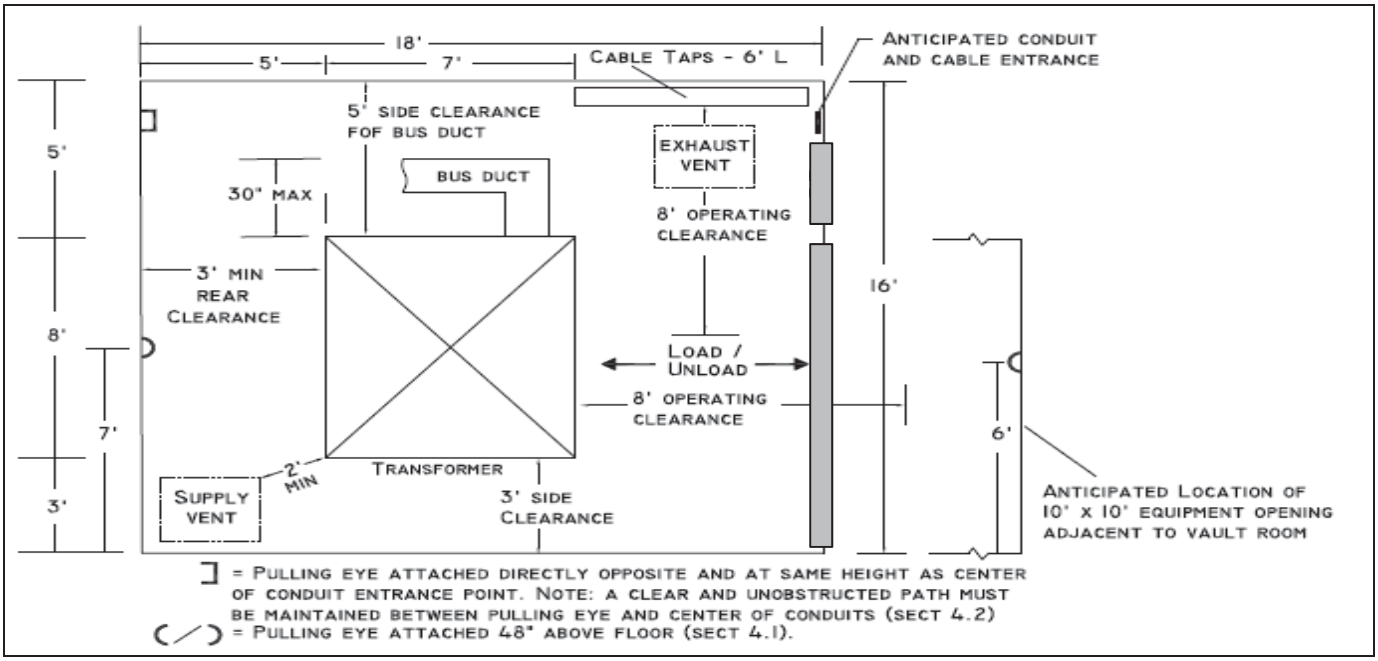

Figure 11 - Typical below grade residential vault configuration for one transformer.

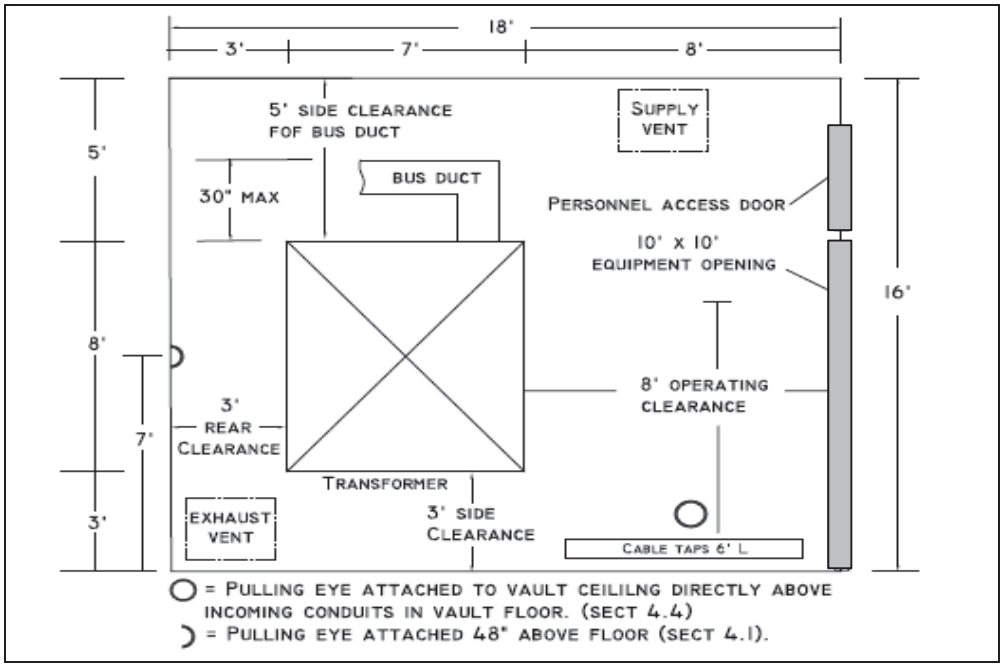

Figure 12 - Typical at grade residential vault configuration for one transformer

© 1998 – 2018 San Diego Gas & Electric Company. All rights reserved. Removal of this copyright notice without expressed written consent is not permitted under law.

TABLE OF CONTENTS

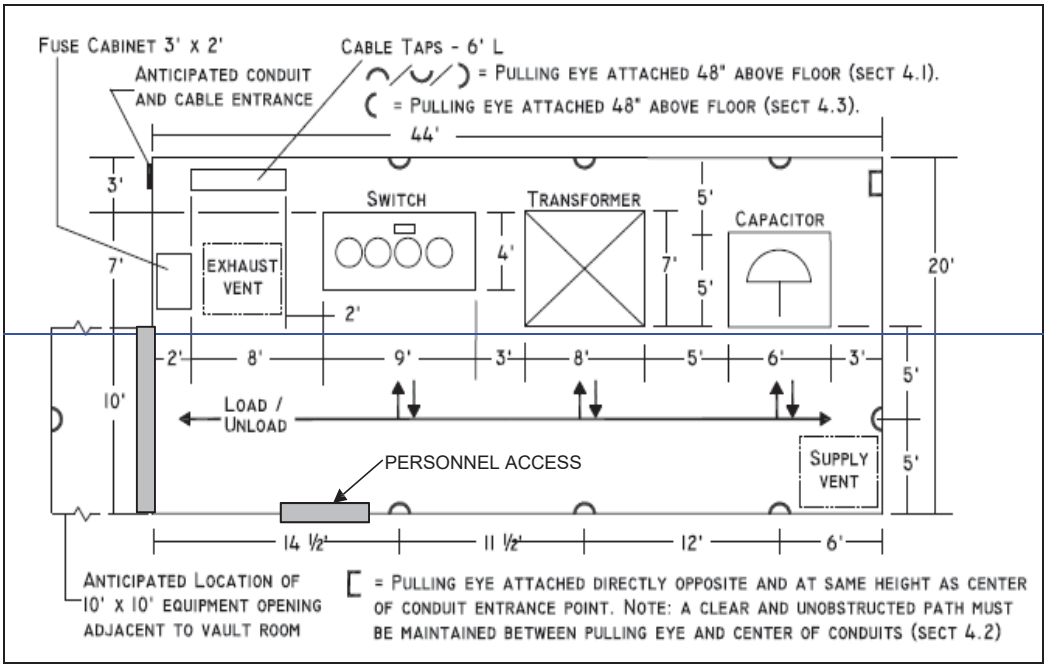

Figure 13 - Typical below grade commercial vault configuration for one transformer.

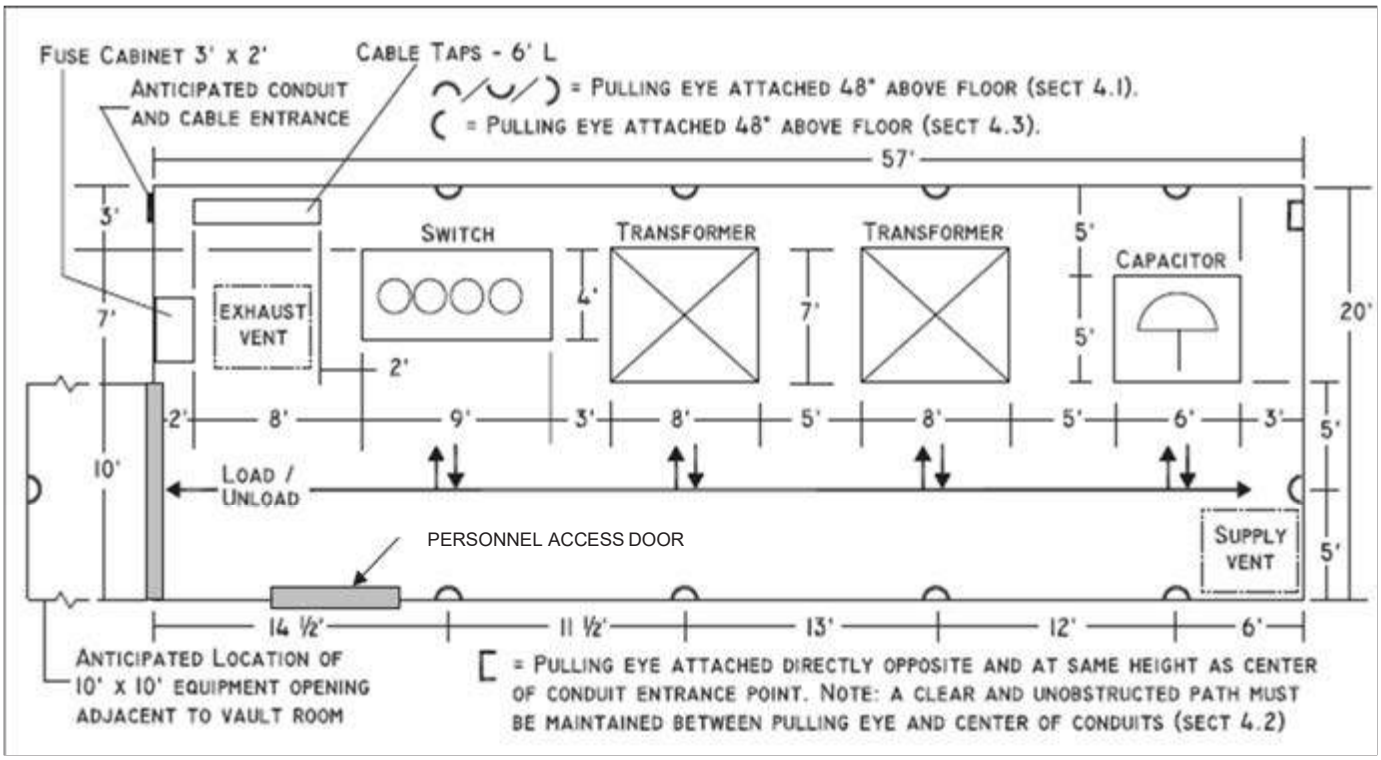

Figure 14 - Typical below grade commercial vault configuration for two transformers.

© 1998 – 2018 San Diego Gas & Electric Company. All rights reserved. Removal of this copyright notice without expressed written consent is not permitted under law.

TABLE OF CONTENTS

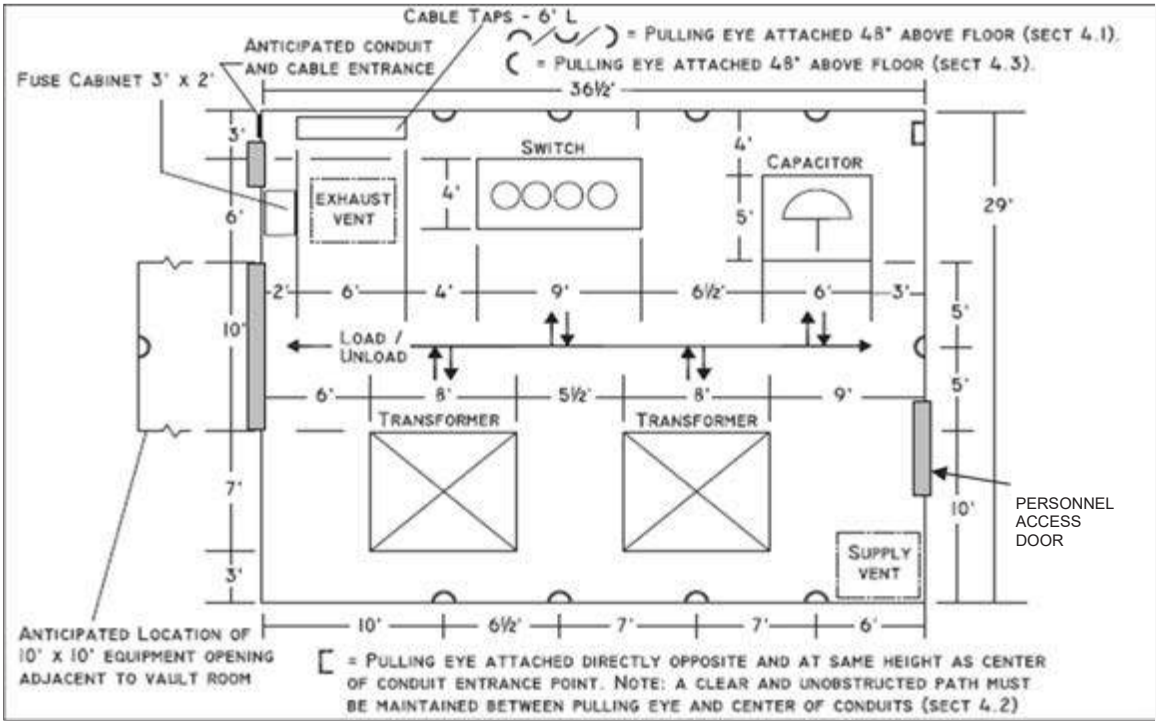

Figure 15 - Typical (square) below grade commercial vault configuration for two transformers.

TABLE OF CONTENTS

© 1998 – 2018 San Diego Gas & Electric Company. All rights reserved. Removal of this copyright notice without expressed written consent is not permitted under law.

28. CONSTRUCTION & MAINTENANCE RESPONSIBILITIES:

The customer / owner shall furnish, construct and own the transformer vault facilities as specified. The customer / owner will be responsible for the maintenance of the vault facilities installed for the duration of service. This includes any portion of the vault structure extending into the public right-of-way, or outside of the project boundary.

The customer, owner or authorized representative agrees to provide, construct and maintain permanent truck & equipment access, and boom clearance for SDG&E's use at any equipment access opening located within the customer /owner's land. See sections 3.3 - 3.8 for specific requirements. Customer, owner or authorized representative also agrees to position equipment access opening that is adjacent to public right-of-way or in public right-of-way such that it provides the same access as when located within customer / owner's land. Access route shall be capable of supporting truck weight class H20 (20 tons per axel).

SDG&E will be represented in the field by an inspector and all work and material shall be subject at all times to inspection. Our inspector may be contacted prior to the start of your construction to answer any question you may have concerning your project. Final acceptance by SDG&E will be made when you have completed all work to the satisfaction of our inspector. The meters can only be set after final acceptance of your work, completion of our work, application for service, and receipt of final building inspection clearance.

All materials, work and work areas shall comply with the CAL-OSHA, Federal OSHA, and all other applicable federal, state, or local safety laws or rules that are necessary to protect applicant's and utility's employees, the public, and workers during the time of construction.

By proceeding with this installation, it is understood that you agree to all the stipulations set forth in these specifications and drawings indicated herein.

Customer / Owner_____Date_____

Customer (print name) _____

Authorized customer representative_____Date_____

Authorized customer representative (print name) _____

SDG&E representative_____Date_____

SDG&E representative (print name) _____

© 1998 – 2018 San Diego Gas & Electric Company. All rights reserved. Removal of this copyright notice without expressed written consent is not permitted under law.

TABLE OF CONTENTS

5000- TRENCHLESS CONSTRUCTION

5000- TRENCHLESS CONSTRUCTION

MAIN TABLE OF CONTENTS

PAGE	SUBJECT
5001	TABLE OF CONTENTS
5010	TRENCHLESS CONSTRUCTION - GENERAL
5020	TRENCHLESS CONSTRUCTION - JACK AND BORE - REQUIREMENTS
5030	TRENCHLESS CONSTRUCTION - JACK AND BORE - HORIZONTAL AND VERTICAL LAYOUT
5040	TRENCHLESS CONSTRUCTION - HORIZONTAL DIRECTIONAL DRILLING - REQUIREMENTS
5050	TRENCHLESS CONSTRUCTION - HORIZONTAL DIRECTIONAL DRILLING - HORIZONTAL AND VERTICAL LAYOUT
5060	TRENCHLESS CONSTRUCTION - SECTION VIEWS - CASING BORE
5070	TRENCHLESS CONSTRUCTION - SECTION VIEWS - EARTH BORE

REV	CHANGE	DRWN	BY	CHKD	APVD	DATE
C	-	-	-	-	-	-
B	REVISED TO 3D FORMAT	NV5	JIK	-	-	05/30/2024
A	ORIGINAL ISSUE	EDM	ARW	JES	CZH	02/29/2020

© 1998 - 2024 San Diego Gas and Electric Company. All rights reserved. Removal of this copyright notice without permission is not permitted under law.

SDG&E ELECTRIC UNDERGROUND CONSTRUCTION STANDARDS

TRENCHLESS CONSTRUCTION
TABLE OF CONTENTS

SCALE: NOT TO SCALE

DRAWING NO: UG5001.1

SHEET: 1 OF 1

X Indicates Latest Revision | Completely Revised | New Page | Information Removed

SCOPE: THE SCOPE OF THIS STANDARD IS TO PROVIDE GENERAL REQUIREMENTS FOR TRENCHLESS CONSTRUCTION METHODS USED TO CONSTRUCT UNDERGROUND ELECTRIC DISTRIBUTION FACILITIES.

INSTALLATION: NONE

BILL OF MATERIALS: NONE

NOTES:

I. POLICY:

a. A QUALIFIED ELECTRICAL WORKER (QEW) SHALL BE PRESENT DURING ALL TRENCHLESS OPERATIONS.

b. REFER TO UG3002 FOR SAFETY, PEDESTRIAN CONTROL PLANS, BARRICADING, ACCESSIBILITY AND OTHER APPLICABLE POLICIES.

c. REFER TO UG3370 AND UG3371 FOR HORIZONTAL AND VERTICAL UTILITY SEPARATION AND DEPTH REQUIREMENTS.

d. THE TRENCHLESS CONTRACTOR MUST ATTEND THE PRECONSTRUCTION MEETING.

II. **RESPONSIBILITIES & QUALIFICATIONS:**

a. **TRENCHLESS CONTRACTOR** SHALL HAVE A MINIMUM OF 5 YEARS EXPERIENCE OF SUCCESSFUL TRENCHLESS CONSTRUCTION. ADDITIONALLY, THIS CONTRACTOR SHALL ENSURE THAT THE END ELEVATIONS OF THE NEW TRENCHLESS ALIGNMENT MATCH THE UNDERGROUND SEGMENTS TO WHICH THEY ARE TO BE CONNECTED.

b. **DISTRIBUTION DISTRICTS** ARE RESPONSIBLE FOR THE IMPLEMENTATION OF THIS DOCUMENT.

c. **ENGINEER** IS RESPONSIBLE FOR THE DESIGN OF CASING AND/OR EARTH BORES AS WELL AS THE CONDUIT CONFIGURATION IN CONFORMANCE WITH THIS STANDARD. THE ENGINEER WILL PROVIDE THE FOLLOWING DELIVERABLES: DRAWINGS, SPECIFICATIONS AND CALCULATIONS. CERTAIN PROJECTS WILL REQUIRE ADDITIONAL DELIVERABLES AT THE DETERMINATION OF THE DISTRIBUTION ENGINEER/CSE: GEOTECHNICAL INVESTIGATION, SWPPP, WPCP AND/OR DEWATERING PLAN.

d. **DISTRIBUTION ENGINEER/CSE** IS RESPONSIBLE FOR REVIEW OF DESIGN AND SUBMITTALS FOR CONFORMANCE WITH THIS STANDARD.

e. **FIELD EMPLOYEES** ARE RESPONSIBLE FOR ADHERENCE TO THIS STANDARD REGARDING SAFETY AND CONSTRUCTION QUALITY.

f. REFER TO UG3002 FOR ADDITIONAL EMPLOYEE DUTIES AND RESPONSIBILITIES.

III. **DEFINITIONS:**

CARRIER PIPE - THESE ARE THE ELECTRICAL CONDUITS INSTALLED IN A CASING PIPE OR AN EARTH BORE.

CASING PIPE - THE OUTERMOST PIPE WHICH CARRIES THE LOADING FROM VERTICAL LIVE AND DEAD LOADING AS WELL AS LOADING DURING INSTALLATION.

GOVERNING AGENCY/RESPONSIBLE AUTHORITY - THE AGENCY OR OWNER WHICH IS RESPONSIBLE FOR THE LOCATION IN WHICH THE WORK WILL BE PERFORMED. THIS INCLUDES BUT IS NOT LIMITED TO COUNTIES, CITIES, RAILWAY AGENCIES, HIGHWAY AGENCIES AND OWNERS OF BELOW GRADE UTILITIES.

"GREENBOOK" - STANDARD SPECIFICATIONS FOR PUBLIC WORKS CONSTRUCTION, LATEST EDITION.

JACK & BORE - A METHOD OF TRENCHLESS CONSTRUCTION BY WHICH A TUNNEL IS DRILLED BY A BORING UNIT AND A CASING PIPE IS JACKED FORWARD WITHIN THE TUNNEL.

HORIZONTAL DIRECTIONAL DRILLING (HDD) - A METHOD OF TRENCHLESS CONSTRUCTION THAT INVOLVES DRILLING A PILOT HOLE, REAMING THE PILOT HOLE TO A LARGER SIZE AND PULLING A CARRIER PIPE THROUGH.

PORTAL STABILIZATION - WHERE THE NEW TUNNELED PIPELINE ENTERS OR EXITS A STABILIZED SHAFT.

TABLE OF CONTENTS

© 1998 - 2020 San Diego Gas & Electric Company. All Rights Reserved. Removal Of This Copyright Notice Without Permission Is Not Permitted Under Law.

REV	CHANGE	DR	BY	DSN	APV	DATE	REV	CHANGE	DR	BY	DSN	APV	DATE
C							F						
B							E						
A	ORIGINAL ISSUE	EDM	ARW	JES	CZH	2/29/2020	D						

Indicates Latest Revision | Completely Revised [X] | New Page | Information Removed

NOTES (CONT.):

IV. ABBREVIATIONS:

BNSF	BURLINGTON NORTHERN SANTA FE RAILWAY
CLSM	CONTROLLED LOW STRENGTH MATERIAL
CSE	SDG&E CIVIL/STRUCTURAL ENGINEERING DEPARTMENT
DR	PIPE DIMENSION RATION (OUTSIDE DIAMETER/WALL THICKNESS)
HDPE	HIGH DENSITY POLYETHYLENE
MTS	METROPOLITAN TRANSIT SYSTEM
OD	OUTER DIAMETER
PE	POLYETHYLENE
ROW	RIGHT OF WAY
SWPPP	STORM WATER POLLUTION PREVENTION PLAN
t	PIPE WALL THICKNESS
WPCP	WATER POLLUTION CONTROL PLAN

V. GEOTECHNICAL INVESTIGATION:

a. GEOTECHNICAL INVESTIGATIONS SHALL BE CONDUCTED AT THE DISCRETION OF THE CONTRACTOR OR WHEN DIRECTED BY SDG&E. WHETHER INVESTIGATIONS ARE CONDUCTED OR NOT, THE CONTRACTOR TAKES FULL RESPONSIBILITY FOR THE GEOTECHNICAL CONDITIONS. IF A GEOTECHNICAL INVESTIGATION IS PERFORMED IT SHALL BE INCLUDED AS A BID ITEM.

b. WHEN A GEOTECHNICAL INVESTIGATION IS WARRANTED IT SHALL INCLUDE THE FOLLOWING: GRADATION CURVES FOR GRANULAR SOIL, STANDARD PENETRATION TEST VALUES, CORED SAMPLES OF ROCK WITH LITHOLOGIC DESCRIPTION ROCK QUALITY DESIGNATION, UNCONFINED COMPRESSIVE STRENGTH OF ROCK, MOHS HARDNESS FOR ROCK SAMPLES, UNIT WEIGHT, ATTERBERG LIMITS, COHESION COEFFICIENT, SOIL FRICTION ANGLE, SOIL CONTAMINATIONS, AND RECOMMENDATIONS.

VI. GROUNDWATER ELEVATION:

a. IF THE GROUNDWATER ELEVATION IS WITHIN TWO (2) FEET OF THE BOTTOM OF THE CASING PIPE OR DRILLED HOLE, THE CONTRACTOR WILL BE REQUIRED TO PERFORM DEWATERING PROCEDURES

VII. PERMITTING:

a. REQUIRED RAILWAY CROSSING (MTS/BNSF) PERMITS INCLUDE BUT ARE NOT LIMITED TO TTRAFFIC CONTROL, ENCROACHMENT, SWPPP, ENVIRONMENTAL, AND THIRD-PARTY UTILITIES. FOLLOW MTS/BNSF REQUIREMENTS.

b. REQUIRED SIDEWALK/ROADWAY CROSSING PERMITS INCLUDE BUT ARE NOT LIMITED TO TTRAFFIC CONTROL, ENCROACHMENT, SWPPP, ENVIRONMENTAL, AND THIRD-PARTY UTILITIES. FOLLOW GOVERNING AGENCY REQUIREMENTS.

c. THE CONTRACTOR IS RESPONSIBLE FOR SUBMITTING PERMITTING PACKAGE(S) TO GOVERNING AGENCIES FOR REVIEW AND APPROVAL.

TABLE OF CONTENTS

© 1998 - 2020 San Diego Gas & Electric Company. All Rights Reserved. Removal Of This Copyright Notice Without Permission Is Not Permitted Under Law.

REV	CHANGE	DR	BY	DSN	APV	DATE	REV	CHANGE	DR	BY	DSN	APV	DATE
C							F						
B							E						
A	ORIGINAL ISSUE	EDM	ARW	JES	CZH	2/29/2020	D						

Indicates Latest Revision | Completely Revised X | New Page | Information Removed

NOTES (CONT.):

VIII. **INSPECTION REQUIREMENTS:**

a. JACK & BORE: PUSH AN INSPECTION CAMERA THROUGH THE ENTIRE INSERTED CASING PIPE. ALL POTENTIAL OBSTRUCTIONS SHALL BE REMOVED PRIOR TO INSERTION OF THE CARRIER PIPE.

b. STANDBY REQUIREMENTS APPLY TO TRENCHLESS ALIGNMENTS THAT CROSS ELECTRIC AND/OR GAS LINES.

c. CONTRACTOR SHALL COORDINATE INSPECTION REQUIREMENTS WITH GOVERNING AGENCIES, UTILITY OWNERS, ROAD AND RAILWAY AGENCIES.

d. AN MTS REPRESENTATIVE SHALL BE PRESENT AT ALL TIME DURING CONSTRUCTION IN MTS ROW. WORK PERFORMED WITHOUT AN MTS INSPECTOR OR WITHOUT WRITTEN APPROVAL FROM MTS WILL NOT BE ACCEPTED.

IX. **WELDING:**

a. ANY AND ALL WELDING SHALL BE PERFORMED IN ACCORDANCE WITH STRUCTURAL WELDING CODE AWS D1.1 AND GREENBOOK SECTION 304-1.

b. WELDERS SHALL BE QUALIFIED IN ACCORDANCE WITH AWS QC7.

XI. **MANDREL TESTING:**

a. PERFORM MANDREL TESTING ON ALL PLASTIC PIPES TO CONFIRM DEFLECTION HAS NOT EXCEEDED 5% OF TOTAL LENGTH.

XII. **CASING PIPE MATERIAL:**

a. CASING PIPE SHALL BE STEEL MANUFACTURED IN ACCORDANCE WITH ASTM A53, GRADE A OR B.

b. PIPE CONNECTIONS SHALL BE WELDED CONNECTIONS.

c. COATINGS FOR CORROSION OR ABRASION RESISTANCE MAY BE REQUIRED BASED ON GEOTECHNICAL INVESTIGATION AT THE DETERMINATION OF THE ENGINEER.

XIII. **CARRIER PIPE MATERIALS:**

a. ACCEPTABLE MATERIALS INCLUDE PVC, PE OR HDPE.

b. PLASTIC PIPE SHALL BE DR 11 OR GREATER.

c. ALL JOINTS FOR HDD SHALL BE FUSHION TYPE

d. FOR APPLICATIONS WITHOUT A STEEL CASING, A CONDUCTIVE TRACER WIRE SHALL BE INSTALLED.

XIV. **BORING UNIT:**

a. BORING UNIT MUST BE OF SUFFICIENT SIZE TO MEET TORQUE REQUIREMENTS FOR TRENCHLESS INSTALLATION.

XV. **GROUT:**

a. VOID SPACE BETWEEN CASING AND CARRIER PIPE SHALL BE FILLED WITH CLSM PER SECTION 201-6 OF THE GREENBOOK.

XVI. **SUBMITTALS:**

a. WHEN A GEOTECHNICAL INVESTIGATION IS PERFORMED IT SHALL BE SUBMITTED TO SDG&E FOR RECORD PURPOSES.

b. DESIGN PLANS, SPECIFICATIONS AND CALCULATIONS FOR TEMPORARY SHORING AND SUB STRUCTURES SHALL BE SUBMITTED FOR REVIEW BY DISTRIBUTION ENGINEERING. ALL SUBMITTALS SHALL BE STAMPED BY A REGISTERED CIVIL ENGINEER WITH A MINIMUM 5 YEARS EXPERIENCE IN SIMILAR STRUCTURAL DESIGN.

1. INDICATE LOCATIONS OF ENTRY AND EXIT POINT, LAYDOWN AREAS, PROPOSED DRILL PATH ALIGNMENT (PLAN & PROFILE), LOCATION/ELEVATION OF PROPOSED CLEARANCES OF EXISTING UTILITIES AND STRUCTURES, PROPOSED COVER DEPTH, PRODUCT MATERIAL, ROW LINES, PROPERTY AND OTHER UTILITY ROW AND/OR EASEMENT LINES.
2. ESTABLISH SURVEY GRID FOR MONITORING GROUND SURFACE MOVEMENT DUE TO DRILLING OPERATIONS.

c. CONTRACTOR SHALL SUBMIT FOR REVIEW SHOP DRAWINGS FOR ALL PIPE AND FITTINGS TO BE USED ON THE PROJECT.

d. WELDING PROCEDURES FOR STEEL PIPE AND WELDER QUALIFICATIONS

TABLE OF CONTENTS

© 1998 - 2020 San Diego Gas & Electric Company. All Rights Reserved. Removal Of This Copyright Notice Without Permission Is Not Permitted Under Law.

REV	CHANGE	DR	BY	DSN	APV	DATE	REV	CHANGE	DR	BY	DSN	APV	DATE
C							F						
B							E						
A	ORIGINAL ISSUE	EDM	ARW	JES	CZH	2/29/2020	D						

	Indicates Latest Revision		Completely Revised	X	New Page		Information Removed

NOTES (CONT.):

e. CONTRACTOR SHALL SUBMIT SCHEDULE OF ACTIVITY FOR REVIEW 15 DAYS PRIOR TO COMMENCEMENT OF WORK.

1. BORING ACTIVITIES WITHIN BNSF ROW SHALL CONTINUE 24 HOURS A DAY UNTIL THE WORK WITHIN ROW IS COMPLETED.

f. DETAILED AS-BUILT DRAWINGS INCLUDING THE MATERIAL, SIZE AND DEPTH OF THE PIPE ALONG THE ENTIRE TUNNEL SHALL BE RECORDED AND SUBMITTED BY THE CONTRACTOR TO SDG&E.

XVI. **SETTLEMENT MONITORING:**

a. SETTLEMENT SHALL MONITORED DURING TUNNELING PROCEDURES FOR THE PIPE ALIGNMENT AS WELL AS NEARBY STRUCTURES. SETTLEMENT MONITORING READINGS SHALL BE TAKEN PRIOR TO THE ZONE OF ACTIVE EXCAVATION, WHEN THE TUNNEL FACE REACHES THE MONITORING POINT, AND WHEN THE ZONE OF ACTIVE EXCAVATION HAS PASSED AND NO FURTHER MOVEMENT IS DETECTED.

b. IF SETTLEMENT IS DETECTED, THE ENGINEER SHALL BE NOTIFIED IMMEDIATELY, AND THE TUNNELING ACTIVITY SHALL BE HALTED UNTIL THE CAUSE OF THE SETTLEMENT CAN BE IDENTIFIED AND ADDRESSED.

XVIII. **UTILITY CROSSINGS:**

a. CONTACT DIG ALERT TWO (2) WORKING DAYS PRIOR TO BEGINNING INSTALLATION.

b. THE CONTRACTOR SHALL CHECK THE ENTIRE AREA OF THE INTENDED BORE BY SWEEPING AND/OR DIRECT CONNECTION WITH A PIPE LOCATOR TO VERIFY KNOWN SUBSTRUCTURES AND DETECT ANY UNKNOWN FACILITIES.

1. IDENTIFIED UTILITY CROSSINGS SHALL BE POTHOLED TO CONFIRM LOCATION, DEPTH AND PIPE SIZE.

XIX. **CLEANUP:**

a. THE CONTRACTOR SHALL REMOVE ALL TEMPORARY FACILITIES CONSTRUCTED ON PUBLIC ROW IN ADDITION TO DEBRIS, TRASH AND OTHER DELETERIOUS MATERIAL. CONTRACTOR SHALL NOTIFY THE GOVERNING AGENCY WITHIN 24 HOURS THAT ALL CONSTRUCTION HAS BEEN COMPLETED.

b. ENSURE THAT ALL DRILLING FLUIDS ARE DISPOSED OF IN A MANNER ACCEPTABLE TO THE GOVERNING AGENCIES.

REFERENCE:

a. BNSF UTILITY ACCOMMODATION POLICY

b. MTS JACK AND BORE DESIGN CRITERIA, STANDARD CONSTRUCTION NOTES

c. ASTM A53, A716, F1962

d. AASHTO LRFD BRIDGE DESIGN SPECIFICATIONS

e. ASCE MANUAL NO. 27, MANUAL NO. 108

f. AWWA M11 STEEL PIPE DESIGN & INSTALLATION GUIDE

g. AWS WELDING STANDARDS D1.1, QC7

h. PLASTIC PIPE INSTITUTE: CH. 12 HDD

i. SDG&E EMPLOYEE HANDBOOK FOR PERSONAL PROTECTIVE EQUIPMENT

j. REFER TO GAS STANDARD D7255 FOR RAILWAY CROSSING REQUIREMENTS.

TABLE OF CONTENTS

© 1998 - 2020 San Diego Gas & Electric Company. All Rights Reserved. Removal Of This Copyright Notice Without Permission Is Not Permitted Under Law.

REV	CHANGE	DR	BY	DSN	APV	DATE	REV	CHANGE	DR	BY	DSN	APV	DATE
C							F						
B							E						
A	ORIGINAL ISSUE	EDM	ARW	JES	CZH	2/29/2020	D						

Indicates Latest Revision | Completely Revised X | New Page | Information Removed

TABLE OF CONTENTS

SCOPE: THE SCOPE OF THIS STANDARD IS TO DETAIL THE REQUIREMENTS FOR THE JACK & BORE METHOD OF TRENCHLESS CONSTRUCTION.

INSTALLATION: NONE

BILL OF MATERIALS: NONE

NOTES:

I. **VENT REQUIREMENTS:**

a. PROVIDE, OPERATE AND MAINTAIN AN OSHA-COMPLIANT VENTILATION SYSTEM FOR THE DURATION OF THE CASING PROJECT.

II. **CONTROLLING LINE AND GRADE:**

a. CONTINUOUSLY MONITOR LINE AND GRADE DURING INSTALLATION OF THE CASING PIPE.

b. MAXIMUM ALLOWABLE DEVIATION FROM LINE AND GRADE IS 1" PER 100'.

III. **ANNULAR SPACE:**

a. CONTRACTOR SHALL BE RESPONSIBLE FOR GROUTING THE ANNULAR SPACE BETWEEN SOIL AND THE CASING PIPE.

IV. **CARRIER PIPE:**

a. SPACERS SHALL BE NON-METALLIC, HAVE A MINIMUM COMPRESSIVE STRENGTH OF 3,000 PSI. CONTRACTOR SHALL PROVIDE SPACERS AT REGULAR INTERVALS NOT TO EXCEED 5'.

V. **JACKING AND RECEIVING PIT:**

a. BRACING AND SUPPORT SYSTEM SHALL BE CONSTRUCTED OF DRIVEN STEEL SHEET PILINGS, STEEL SOLDIER BEAMS AND/OR STEEL PLATES.

b. CONTRACTOR'S WORK PLAN SHALL INCLUDE PROVISIONS FOR KEEPING WATER, ANIMALS AND OTHER UNWANTED THINGS FROM ENTERING THE PITS AND/OR CASING PIPE WHEN WORK IS AND IS NOT BEING PERFORMED.

c. PLACEMENT

1. LOCATION TO BE COORDINATED WITH SDG&E AND GOVERNING AGENCY.
2. ALL JACKING PITS FOR RAILWAY CROSSINGS SHALL BE SET-UP OUTSIDE OF RAILROAD ROW UNLESS OTHERWISE APPROVED BY BNSF/MTS.
3. JACKING PITS ARE PREFERRED TO BE LOCATED AS FAR AWAY FROM TRAVELED WAY AS FEASIBLE AND ARE TO BE COORDINATED WITH RESPONSIBLE/GOVERNING AGENCY.
4. ALL SHORING AND EQUIPMENT NEAR ROADWAYS AND RAILWAYS SHALL BE FENCED OFF AND CLEARLY MARKED WITH REFLECTORS.
5. CONTRACTOR TO PROVIDE ADEQUATE FENCING OR TYPE-K BARRIERS (K RAILS).

VI. **BACKFILL:**

a. BACKFILL SHALL BE IN ACCORDANCE WITH GREENBOOK SECTION 300-4.

VII. **BACKSTOP PLATE:**

a. BACKSTOP PLATE DIMENSIONS SHOWN ON UG5030.2 ASSUME A MINIMUM OF 3' COVER OVER THE CASING PIPE, 30° INTERNAL SOIL FRICTION, NO COHESION, 125 POUNDS PER CUBIC FOOT (PCF) SOIL, AND A SKIN FRICTION OF 0.2, IF A GEOTECHNICAL REPORT IS PERFORMED, THE BACKSTOP DESIGN CAN BE OPTIMIZED BY THE ENGINEER.

REFERENCE: NONE

REV	CHANGE	DRWN	BY	CHKD	APVD	DATE
C	-	-	-	-	-	-
B	REVISED TO 3D FORMAT	NV5	JIK	-	-	03/11/2024
A	ORIGINAL ISSUE	EDM	ARW	JES	CZH	02/29/2020

SDGE

SDG&E ELECTRIC UNDERGROUND CONSTRUCTION STANDARDS

TRENCHLESS CONSTRUCTION
JACK & BORE - REQUIREMENTS

SCALE: NOT TO SCALE

DRAWING NO: UG5020.1

SHEET: 1 OF 1

© 1998 - 2024 San Diego Gas and Electric Company. All rights reserved. Removal of this copyright notice without permission is not permitted under law.

X Indicates Latest Revision | Completely Revised | New Page | Information Removed

SCOPE: THIS STANDARD SHOWS THE HORIZONTAL AND VERTICAL LAYOUT OF JACK & BORE CONSTRUCTION.

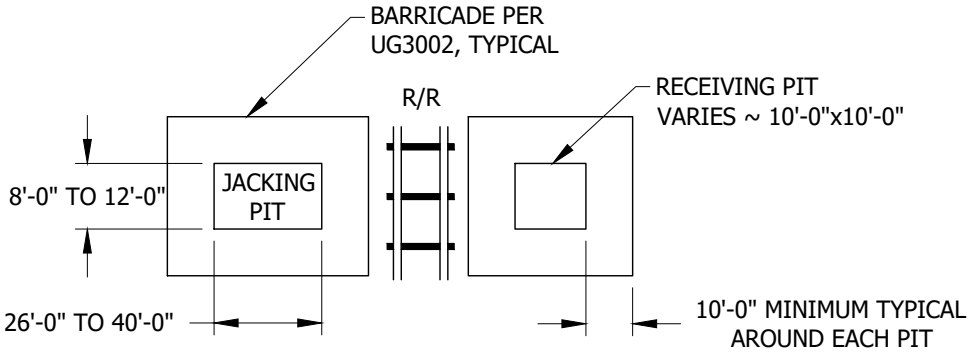

PLAN VIEW

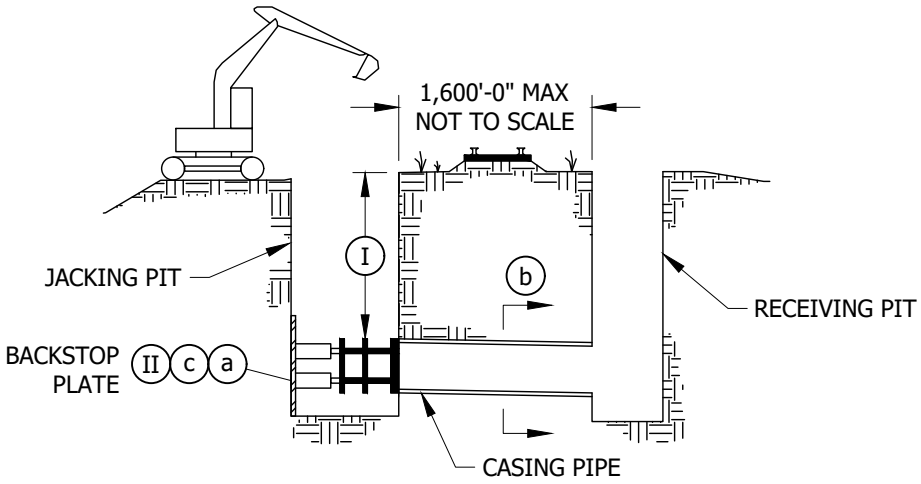

PROFILE VIEW

FIGURE 1

INSTALLATION: NONE

BILL OF MATERIALS: NONE

NOTES:

(I) MINIMUM COVER SHALL BE 3' UNLESS THERE IS A CONFLICT WITH OTHER REQUIREMENTS. (a)

(II) ALTERNATIVE BACKSTOP MATERIALS MAY BE SELECTED AT THE DISCRETION OF THE ENGINEER AND PENDING SDG&E APPROVAL.

REFERENCE:

(a) SEE REFERENCES ON UG5010.5

(b) SEE UG5060 FOR CASING BORE SECTION VIEWS.

(c) SEE DETAIL ON UG5030.2 FOR STANDARD BACKSTOP PLATE DIMENSIONS.

(d) REFER TO UG5020.5 FOR DESIGN ASSUMPTIONS.

© 1998 - 2020 San Diego Gas & Electric Company. All Rights Reserved. Removal Of This Copyright Notice Without Permission Is Not Permitted Under Law.

REV	CHANGE	DR	BY	DSN	APV	DATE	REV	CHANGE	DR	BY	DSN	APV	DATE
C							F						
B							E						
A	ORIGINAL ISSUE	EDM	ARW	JES	CZH	2/29/2020	D						

Indicates Latest Revision | Completely Revised | X New Page | Information Removed

SDG&E ELECTRIC UNDERGROUND CONSTRUCTION STANDARDS

TRENCHLESS CONSTRUCTION
JACK & BORE - LAYOUT

UG5030.1

TABLE OF CONTENTS

SCOPE: THIS STANDARD SHOWS TYPICAL BACKSTOP PLATE DIMENSIONS.

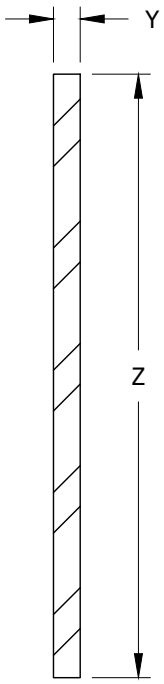

FIGURE 1
SIDE VIEW
BACKSTOP PLATE

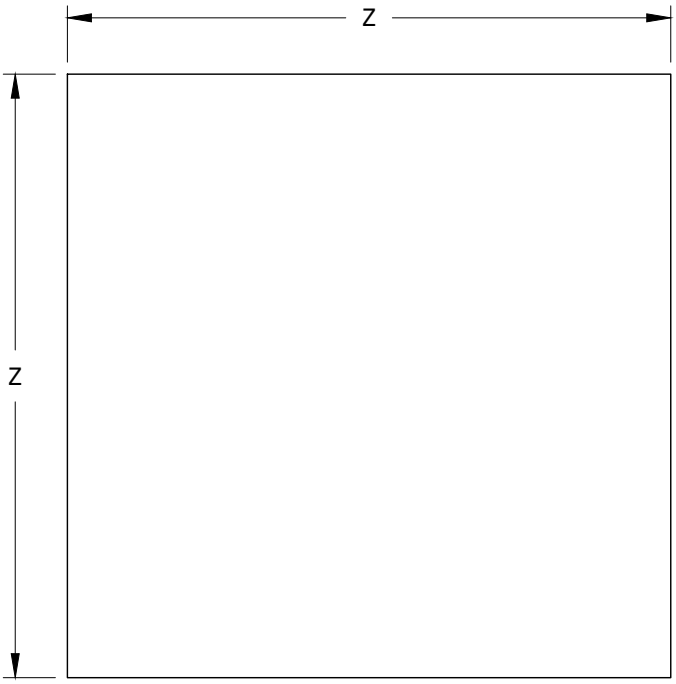

FIGURE 1
TOP VIEW
BACKSTOP PLATE

TABLE 1

BACKSTOP PLATE DIMENSIONS		
CASING NOMINAL DIAMETER	**PLATE THICKNESS "Y"**	**PLATE HEIGHT & WIDTH "Z"**
12"	1 1/4"	6'-0"
16"	1 3/8"	6'-6"
18"	1 1/2"	7'-0"
20"	1 5/8"	7'-6"
24"	1 3/4"	7'-9"

INSTALLATION: NONE

BILL OF MATERIALS: NONE

NOTES: NONE

REFERENCE:

a. REFER TO UG5020 FOR UNDERLYING ASSUMPTIONS.

© 1998 - 2020 San Diego Gas & Electric Company. All Rights Reserved. Removal Of This Copyright Notice Without Permission Is Not Permitted Under Law.

REV	CHANGE	DR	BY	DSN	APV	DATE	REV	CHANGE	DR	BY	DSN	APV	DATE
C							F						
B							E						
A	ORIGINAL ISSUE	EDM	ARW	JES	CZH	2/29/2020	D						

Indicates Latest Revision | Completely Revised | X New Page | Information Removed

SDG&E ELECTRIC UNDERGROUND CONSTRUCTION STANDARDS

TRENCHLESS CONSTRUCTION
JACK & BORE - LAYOUT

UG5030.2

TABLE OF CONTENTS

SCOPE: THE SCOPE OF THIS STANDARD IS TO DETAIL THE REQUIREMENTS FOR THE HORIZONTAL DIRECTIONAL DRILLING (HDD) METHOD OF TRENCHLESS CONSTRUCTION.

INSTALLATION: NONE

BILL OF MATERIALS: NONE

NOTES:

I. SET-UP:

a. IF PRACTICAL, ALL DRILLING EQUIPMENT SHALL BE SET-UP OUTSIDE OF RAILROAD OR ROADWAY ROW.

b. ALL SHORING AND EQUIPMENT NEAR ROADWAYS AND RAILWAYS SHALL BE FENCED OFF AND CLEARLY MARKED WITH REFLECTORS.

II. DRILLING PILOT HOLE:

a. CONTROLLING LINE AND GRADE

1. LINE AND GRADE SHALL BE VERIFIED AT A MINIMUM OF ONCE EACH DRILL ROD ADDITION AND ANY DEVIATIONS FROM THE PROPOSED LINE AND GRADE SHALL BE CORRECTED IMMEDIATELY.

b. DRILLING FLUID

1. DRILLING FLUID SHALL BE USED TO STABILIZE HOLE DURING DRILLING AND REAMING
2. DRILLING FLUID ADDITIVE MATERIALS SHALL BE CHEMICALLY INERT, BIODEGRADABLE AND NON-TOXIC SO AS TO NOT POLLUTE GROUNDWATER DURING THE TUNNELING PROCESS.
3. USE OF DRILLING FLUID SHALL BE MONITORED TO ENSURE FLUID IS NOT BEING LOST DURING DRILLING. IF THE RETURN OF FLUID IS MEASURED LESS THAN 95%, THE CONTRACTOR SHALL NOTIFY THE ENGINEER AND INVESTIGATE THE CAUSE OF FLUID LOSS.
4. PROPER DISPOSAL OF DRILLING FLUID SHALL BE THE RESPONSIBILITY OF THE TRENCHLESS CONTRACTOR. DEPENDING ON THE MIX IT MAY NEED TO BE DISPOSED OF AT A HAZARDOUS WASTE FACILITY.

c. BEND RADIUS

1. MINIMUM RADIUS OF CURVATURE FOR STEEL PIPE SHALL BE EQUAL TO 100 FEET PER INCH OF DIAMETER OF THE PIPE TO BE INSTALLED. FOR INSTANCE, A 24-INCH DIAMETER PIPE WOULD REQUIRE A MINIMUM RADIUS OF 2,400 FEET.
2. ALLOWABLE RADIUS OF CURVATURE FOR HDPE PIPE SHALL BE PROVIDED BY THE MANUFACTURER.

III. REAM PILOT HOLE:

a. PRE-REAMING BEFORE INSTALLATION OF THE CARRIER PIPE MAY NOT BE NECESSARY FOR SMALLER DIAMETER PIPES IN SOFT SOIL AT THE DETERMINATION OF THE ENGINEER.

b. THE REAMED HOLE SHALL BE SIZED TO APPROXIMATELY 1.5 TIMES THE DIAMETER OF THE CASING PIPE.

IIV. CARRIER PIPE:

a. PROVIDE AXIAL TENSION FORCE MONITORING. UTILIZE A "WEAK LINK" BREAKAWAY PULLER. AXIAL TENSION FORCE SHALL NOT EXCEED VALUES SHOWN IN TABLE 1.

b. PULL BACK OF THE CARRIER PIPE SHOULD BE DONE IN A SINGLE UNINTERRUPTED OPERATION. IF SPACE PERMITS, ALL SECTIONS OF HDPE SHOULD BE PRE-FUSED TO AVOID HALTING OF OPERATION FOR JOINT FUSING.

c. IF THE CARRIER PIPE IS HDPE, A STEEL CASING SHALL BE INSTALLED AT RAILWAY CROSSINGS.

TABLE OF CONTENTS

© 1998 - 2020 San Diego Gas & Electric Company. All Rights Reserved. Removal Of This Copyright Notice Without Permission Is Not Permitted Under Law.

REV	CHANGE	DR	BY	DSN	APV	DATE	REV	CHANGE	DR	BY	DSN	APV	DATE
C							F						
B							E						
A	ORIGINAL ISSUE	EDM	ARW	JES	CZH	2/29/2020	D						

Indicates Latest Revision | Completely Revised [X] | New Page | Information Removed

SDG&E ELECTRIC UNDERGROUND CONSTRUCTION STANDARDS

TRENCHLESS CONSTRUCTION
HDD - REQUIREMENTS

UG5040.1

NOTES (CONT.):

V. HDD PIPE MATERIALS AND CHARACTERISTICS:

a. CSE IS RESPONSIBLE FOR DESIGNING THE PIPE TO WITHSTAND PULLBACK LOADS WHICH INCLUDE TENSILE PULL FORCES, EXTERNAL HYDROSTATIC PRESSURE, TENSILE BENDING STRESSES, EXTERNAL SERVICE LOADS (POST-INSTALLATION SOIL, GROUNDWATER, AND SURCHARGE LOADS OCCURRING OVER THE LIFE OF THE PIPELINE).

b. SEE TABLE 1 FOR VALUES OF A716 DUCTILE IRON AND DR11 HDPE.

1. THE ALLOWABLE TENSILE FORCES FOR HDPE IN TABLE 1 ARE BASED ON DR11, 3XXX PE MATERIAL. THE VALUES ARE GIVEN FOR A DURATION OF CONTINUOUS LOADING OVER 12 HOURS AND FOR A PIPE TEMPERATURE OF 73°F. FOR OTHER TEMPERATURES, A TEMPERATURE COMPENSATING MULTIPLIER WILL BE REQUIRED. OTHER PE PIPE DESIGNATIONS AND MATERIALS MAY BE SELECTED BY THE CSE DURING THE PIPE DESIGN PROCESS.

TABLE 1

DUCTILE IRON AND HDPE ALLOWABLE TENSILE FORCES		
NOMINAL PIPE SIZE (INCHES)	ALLOWABLE TENSILE FORCE	
	DUCTILE IRON A716, Fy=42kips (KIPS)	HDPE (VI) DR11 12 HOUR PULL (KIPS)
12	N/A	46
16	550	73
18	640	92
20	733	114
24	930	164
26	N/A	193

(VI) PE 3XXX STANDARD PE CODE DESIGNATION.

REFERENCE: NONE

TABLE OF CONTENTS

© 1998 - 2020 San Diego Gas & Electric Company. All Rights Reserved. Removal Of This Copyright Notice Without Permission Is Not Permitted Under Law.

REV	CHANGE	DR	BY	DSN	APV	DATE	REV	CHANGE	DR	BY	DSN	APV	DATE
C							F						
B							E						
A	ORIGINAL ISSUE	EDM	ARW	JES	CZH	2/29/2020	D						

Indicates Latest Revision | Completely Revised X | New Page | Information Removed

SDG&E ELECTRIC UNDERGROUND CONSTRUCTION STANDARDS

TRENCHLESS CONSTRUCTION
HDD - REQUIREMENTS

UG5040.2

SCOPE: THIS STANDARD SHOWS THE HORIZONTAL AND VERTICAL LAYOUT OF HORIZONTAL DIRECTIONAL DRILLING (HDD) CONSTRUCTION.

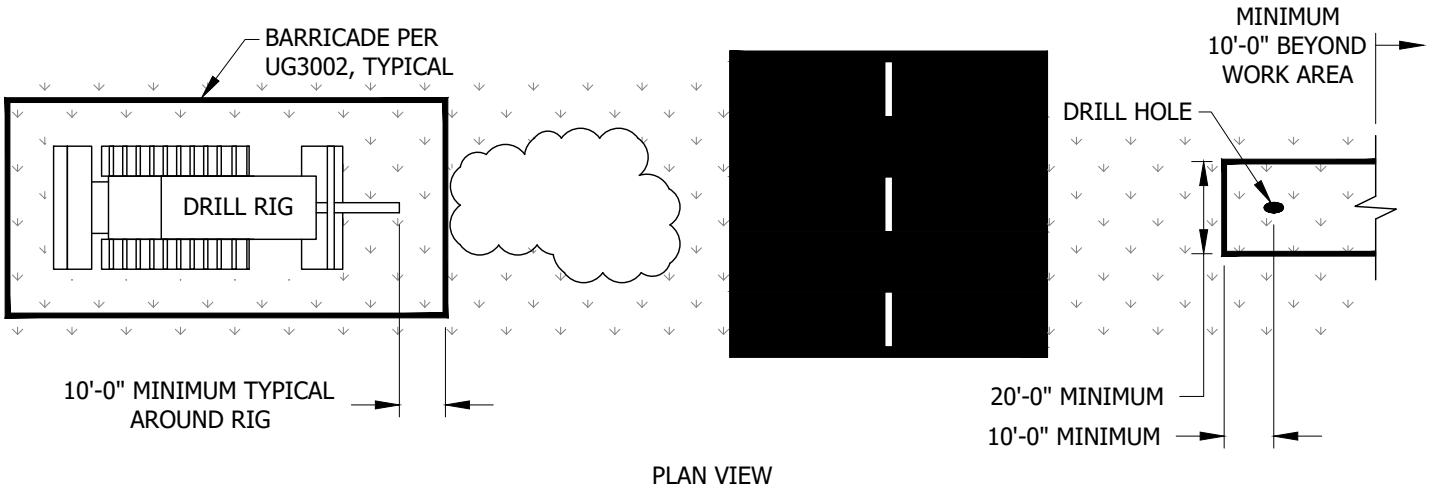

PLAN VIEW

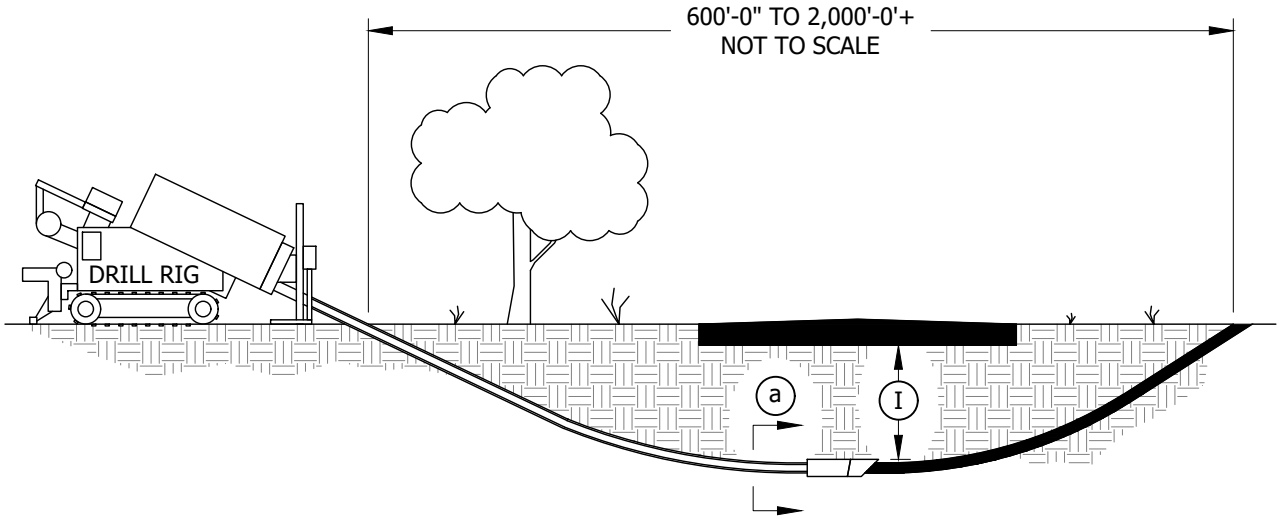

PROFILE VIEW

FIGURE 1

INSTALLATION: NONE

BILL OF MATERIALS: NONE

NOTES:

(I) MINIMUM COVER SHALL BE 3' BELOW BASE OF PAVEMENT UNLESS THERE IS A CONFLICT WITH OTHER REQUIREMENTS. (b)

REFERENCE:

(a) FOR SECTION VIEWS, SEE UG5060 FOR CASING BORES OR UG5070 FOR EARTH BORES.

(b) SEE REFERENCES ON UG5010.5.

© 1998 - 2020 San Diego Gas & Electric Company. All Rights Reserved. Removal Of This Copyright Notice Without Permission Is Not Permitted Under Law.

REV	CHANGE	DR	BY	DSN	APV	DATE	REV	CHANGE	DR	BY	DSN	APV	DATE
C							F						
B							E						
A	ORIGINAL ISSUE	EDM	ARW	JES	CZH	2/29/2020	D						

	Indicates Latest Revision		Completely Revised	X New Page	Information Removed

SDG&E ELECTRIC UNDERGROUND CONSTRUCTION STANDARDS

SHEET 1 OF 1

TRENCHLESS CONSTRUCTION
HDD - LAYOUT

UG5050.1

TABLE OF CONTENTS

SCOPE: THIS STANDARD SHOWS EXAMPLES OF CONDUIT CONFIGURATIONS THAT ARE ACCEPTABLE FOR CASING BORES.

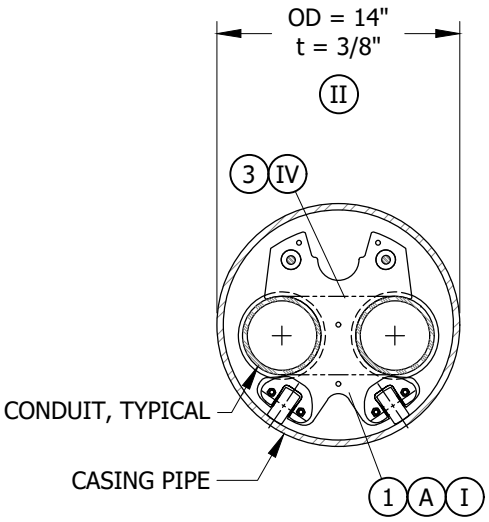

FIGURE 1
1 OR 2 CONDUITS

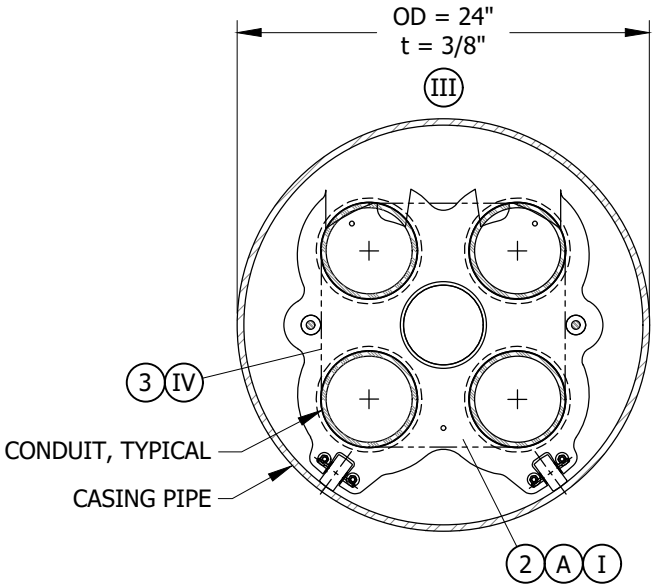

FIGURE 2
3 OR 4 CONDUITS

INSTALLATION:

(A) INSTALL PER SPACER MANUFACTURER'S REQUIREMENTS.
(B) INSTALL ONE SPACER EVER FIVE FEET OF TRENCHLESS ALIGNMENT.
(C) INSTALL TWO BANDS FOR EVERY SPACER (ONE ON EACH SIDE).

BILL OF MATERIALS:

ITEM	DESCRIPTION	QUANTITY	STANDARD PAGE	STOCK NUMBER	DESIGN UNITS
1	BORE SPACER (I)	(B)	-	-	-
2	BORE SPACER (I)	(B)	-	-	-
3	5/8" WIDE X 0.03" THICK BANDS & BUCKLES (I)	(C)	-	-	-

NOTES:

(I) MATERIAL SHALL BE PROVIDED BY APPROVED MANUFACTURER.
(II) CASING PIPE DIMENSIONS APPLY TO A 2- 4" CONDUIT CONFIGURATION.
(III) CASING PIPE DIMENSIONS APPLY TO A 4- 5" CONDUIT CONFIGURATION.
(IV) BANDS & BUCKLES SHALL BE 201 STAINLESS STEEL WITH ALUMINUM BREAKING STRENGTH = 1,875 POUNDS.

REFERENCE: NONE

TABLE OF CONTENTS

© 1998 - 2024 San Diego Gas & Electric Company. All Rights Reserved. Removal Of This Copyright Notice Without Permission Is Not Permitted Under Law.

REV	CHANGE	DR	BY	DSN	APV	DATE	REV	CHANGE	DR	BY	DSN	APV	DATE
C	BILL OF MATERIALS UPDATE	GLC	ADW	EJA	KRG	01/22/2024	F						
B	NOTES UPDATE	GLC	EJA	MRF	KRG	05/30/2023	E						
A	ORIGINAL ISSUE	EDM	ARW	JES	CZH	02/29/2020	D						

X Indicates Latest Revision | Completely Revised | New Page | Information Removed

SDG&E ELECTRIC UNDERGROUND CONSTRUCTION STANDARDS

TRENCHLESS CONSTRUCTION
SECTION VIEWS - CASING BORES

UG5060.1

SCOPE: THIS STANDARD SHOWS EXAMPLES OF CONDUIT CONFIGURATIONS THAT ARE ACCEPTABLE FOR EARTH BORES (NO CASING PIPE).

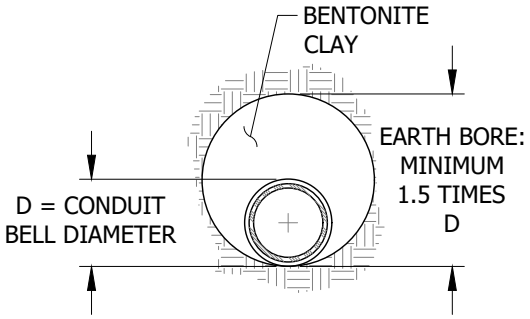

FIGURE 1
1 CONDUIT

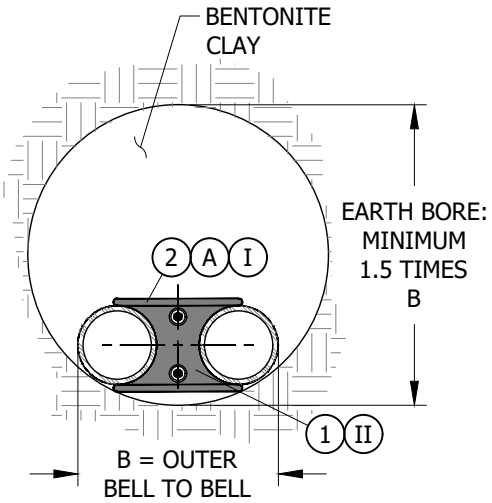

FIGURE 2
2 CONDUITS

INSTALLATION:

(A) INSTALL PER SPACER MANUFACTURER'S REQUIREMENTS.
(B) INSTALL ONE SPACER EVER FIVE FEET OF TRENCHLESS ALIGNMENT.
(C) INSTALL TWO BANDS FOR EVERY SPACER (ONE ON EACH SIDE).

BILL OF MATERIALS:

ITEM	DESCRIPTION	QUANTITY	STANDARD PAGE	STOCK NUMBER	DESIGN UNITS
1	CONDUIT SPACER (EARTH BORE)	(B)	-	-	-
2	5/8" WIDE X 0.03" THICK BANDS & BUCKLES	(C)	-	-	-

NOTES:

(I) MATERIAL SHALL BE MANUFACTURED BY UNDERGROUND DEVICES OR APPROVED EQUAL.
(II) BANDS & BUCKLES SHALL BE 201 STAINLESS STEEL WITH ALUMINUM BREAKING STRENGTH = 1,875 POUNDS.

REFERENCE: NONE

TABLE OF CONTENTS

© 1998 - 2020 San Diego Gas & Electric Company. All Rights Reserved. Removal Of This Copyright Notice Without Permission Is Not Permitted Under Law.

REV	CHANGE	DR	BY	DSN	APV	DATE	REV	CHANGE	DR	BY	DSN	APV	DATE
C							F						
B							E						
A	ORIGINAL ISSUE	EDM	ARW	JES	CZH	2/29/2020	D						

Indicates Latest Revision | Completely Revised X | New Page | Information Removed

SHEET
1 OF 1

SDG&E ELECTRIC UNDERGROUND CONSTRUCTION STANDARDS

TRENCHLESS CONSTRUCTION
SECTION VIEWS - EARTH BORES

UG5070.1