2023
SERVICE STANDARDS & GUIDE

Historical Record: 8/25/2023
External Version



SDGE™

GENERAL INFORMATION	000
RESIDENTIAL, COMMERCIAL & INDUSTRIAL OVERHEAD	100
CUSTOMER-OWNED METER POLES	200
UNDERGROUND ELECTRIC SERVICE	300
ELECTRIC SERVICE & METERING EQUIPMENT	500
MEDIUM VOLTAGE ELECTRIC SERVICE & METERING EQUIPMENT	600
ELECTRIC TERMINATING ENCLOSURES, 0-600 VOLTS	700
CUSTOMER GENERATION	800
GAS	1000
DISCLAIMER & CONTACTS	
SUMMARY OF CHANGES	
DETAILED TABLE OF CONTENTS	
SERVICE ORDER TEAMS & REGIONAL PROJECT MANAGEMENT OFFICES	
PROJECT MANAGEMENT REGIONAL BOUNDARY MAP	
FREQUENTLY REFERENCED STANDARDS	
ALPHABETICAL SUBJECT INDEX	
SIGNIFICANT REVISION LIST	
SAN DIEGO AREA ELECTRICAL NEWSLETTER	

ATTENTION:

THESE STANDARDS WERE DEVELOPED FOR MAINTAINING SAFETY AND RELIABILITY OF THE ELECTRIC DISTRIBUTION AND SERVICE SYSTEMS.

THE INTENT OF THIS STANDARD IS TO GUIDE ENGINEERS, DESIGNERS/PLANNERS AND CONSTRUCTION PERSONNEL AND PROVIDE TYPICAL CONSTRUCTION METHODS FOR ELECTRIC DISTRIBUTION. NOT ALL ARRANGEMENTS ARE DEPICTED AND IT IS THE USER'S RESPONSIBILITY TO APPLY THESE STANDARDS APPROPRIATELY. ALL USERS MUST USE GOOD JUDGMENT. STANDARDS ARE UPDATED AS NEEDED. CONSULT EDE FOR LATEST VERSION. SDG&E STANDARDS MUST BE APPLIED. PRE-CONSTRUCTION APPROVAL OF A "DEVIATION REQUEST" IS REQUIRED FOR ANY EXCEPTION TO THESE STANDARDS. ANY ALTERATIONS, MODIFICATIONS OR IMPROVEMENTS TO THIS AND ALL STANDARDS MUST BE REVIEWED, APPROVED AND DOCUMENTED BY EDE-CONSTRUCTION STANDARDS AND DISTRICT C&O'S.

THE CPUC'S GENERAL ORDER 95 RULES/REQUIREMENTS ARE NOT INTENDED FOR USE AS COMPLETE CONSTRUCTION SPECIFICATIONS BUT EMPLOY ONLY THE MINUMUM REQUIREMENTS WHICH ARE MOST IMPORTANT FROM THE STANDPOINT OF **SAFETY AND RELIABILITY.** SDG&E MAY IMPOSE STRICTER RULES AND REQUIREMENT IN THE INTREST MAINTANANING SAFETY AND RELIABILTY OF OUR ELECTRICAL SYSTEM.

CONSTRUCTION SHALL BE ACCORDING TO ACCEPTED GOOD PRACTICE FOR GIVEN LOCAL CONDITIONS IN ALL SITUATIONS NOT SPECIFIED IN THE STANDARD.

SDG&E WILL NOT ACCEPT ANY SYSTEM DESIGN OR INSTALLATION WHICH DOES NOT CONFORM TO THESE STANDARDS

DEVIATIONS CANNOT BE GRANTED WHICH CONFLICT WITH THE CPUC GENERAL ORDERS OR OTHER GOVERNING AGENCIES. THESE MAY INCLUDE SEPARATION FROM ENERGIZED FACILITIES AND WORKING CLEARANCES.

BASED ON UNUSUAL OR UNSAFE SITE CONDITIONS SDG&E MAY IN THE INTEREST OF SAFETY OR RELIABILITY REQUIRE CONSTRUCTION MEASURES BEYOND THOSE SPECIFICALLY STATED IN THIS MANUAL.

EXCEPT FOR A REQUIREMENT TO IMMEDIATELY ADOPT NEWLY PUBLISHED STANDARDS, THE APPLICATION OF NEWLY PUBLISHED STANDARDS IS REQUIRED FOR ALL WORK UP TO THE 30% PROJECT DESIGN APPROVAL LEVEL. ALL DESIGN AND CONSTRUCTION WORK AFTER 30% PROJECT DESIGN APPROVAL MAY USE CONSTRUCTION STANDARDS THAT IMMEDIATELY PRECEDE THE NEWLY UPDATED STANDARD, UNLESS THE IMMEDIATE ADOPTION OF NEWLY PUBLISHED STANDARDS IS MANDATED.

USE OF "BLOCK STOCK" MUST BE COORDINATED WITH INVENTORY & LOGISTICS AND IS GENERALLY ONLY APPLIED AS A "LAST RESORT" AFTER CONSULTATION AND AGREEMENT WITH STAKEHOLDERS AND AN ALTERNATE SOLUTION, SUPPLIER, MATERIAL OR METHOD IS DEEMED ACCEPTABLE AND AVAILABLE.

MAIN TABLE OF CONTENTS

IF YOU HAVE ANY QUESTIONS REGARDING THE CONTENT OF THESE MANUALS PLEASE EMAIL CONSTRUCTIONSTANDARDSADMINISTRATORS@SEMPRAUTILITIES.COM OR CONTACT:

MANUAL	CONTACT	EMAIL ADDRESS	PHONE
Electric Distribution Design Manual	Martha Lachmayr	mlachmayr@sdge.com	(858) 654-8245
Overhead Construction Standards	Mike Forchette	mforchette@sdge.com	(619) 244-7495
Service Standards & Guide	Israel Juarez	ijuarez@sdge.com	(858) 636-3941
Electric Vehicle Supply Equipment Standards	Israel Juarez	ijuarez@sdge.com	(858) 636-3941
Underground Construction Standards	Eddie Alcobia	ealcobia@sdge.com	(619) 574-4988
Electric Standard Practices	Joey Kucharyski	jkucharyski@sdge.com	(760) 566-5919
Tool Catalog	Roy Guilao	rguilao@sdge.com	(760) 672-6211

PRINTED COPIES:

FOR PRINTED VERSIONS, WITH BINDER AND TAPS, OF THE **OVERHEAD CONSTRUCTION STANDARDS** PLEASE CONTACT CONSTRUCTIONSTANDARDSADMINISTRATORS@SEMPRAUTILITIES.COM. THESE WILL BE PROVIDED AT THE COST OF YOUR DEPARTMENT. PLEASE INCLUDE IN THE EMAIL:

- NAME, COST CENTER #, I/O #, MAIL STOP #

SUMMARY OF CHANGES

DATE	STANDARD PAGES	FILE NAME
01/24/20	NEW FORMAT RELEASE	SG2020v0124.pdf
02/19/20	2	SG2020v0219.pdf
04/24/20	301, 320	SG2020v0424.pdf
05/22/20	001, 021, 022, 023, 024, INTERNAL SERVER UPGRADE	SG2020v0522.pdf
12/18/20	201, 202, 203, 204, 205, 206, 207, 208, 209, 210	SG2020v1218.pdf
01/22/21	COVER PAGE, DISCLAIMER	SG2021v0122.pdf
02/19/21	24, 301, (308 MOVED TO FMO)	SG2021v0219.pdf
07/23/21	301, 302, 303, 304, 305, 306, 307, 309, 310, 311, 312, 313, 314, 315, 316, 317, 318, 319, 320	SG2021v0723.pdf
01/21/22	Cover Page	SG2022v0121.pdf
04/22/22	SG1, SG6	SG2022v0422.pdf
10/14/22	003, 524	SG2022v1014.pdf
12/22/22	5	SG2022v1222.pdf
01/20/23	COVER PAGE, DISCLAIMER, 006, 019, 806	SG2023v0120.pdf
04/21/23	004, 009, 011, 012	SG2023v0421.pdf
05/19/23	101, 102, 103, 104, 105, 106, 107, 108, 109, 110, 111, 112	SG2023v0519.pdf
06/23/23	013, 015, 016, Electrical Newsletter	SG2023v0623.pdf
08/25/23	311	SG2023v0825.pdf

MAIN TABLE OF CONTENTS

ARCHIVED BOOKS AVAILABLE ON THE INTERNAL VERSION

MAIN TABLE OF CONTENTS

INTRODUCTION
STANDARDS MANUAL OWNER CONTACT INFORMATION, TABLE OF CONTENTS, SERVICE ORDER TEAMS & REGIONAL PROJECT MANAGEMENT OFFICES, PROJECT MANAGEMENT REGIONAL BOUNDARY MAP, ALPHABETICAL SUBJECT INDEX, SIGNIFICANT REVISIONS LIST

SECTION 000 – GENERAL INFORMATION
DEFINITIONS OF TERMS, GENERAL INFORMATION, LINE TRUCK ACCESS

SECTION 100 – RESIDENTIAL, COMMERCIAL & INDUSTRIAL OVERHEAD
OVERHEAD SERVICE INFORMATION

SECTION 200 – CUSTOMER-OWNED METER POLES
CUSTOMER-OWNED METER POLES & TEMPORARY SERVICE INSTALLATIONS

SECTION 300 – UNDERGROUND ELECTRIC SERVICE
UNDERGROUND ELECTRIC SERVICE INFORMATION

SECTION 500 – ELECTRIC SERVICE & METERING EQUIPMENT
GENERAL REQUIREMENTS, LOW VOLTAGE SERVICE & METERING REQUIREMENTS

SECTION 600 – MEDIUM VOLTAGE ELECTRIC SERVICE & METERING EQUIPMENT
SERVICE & METERING REQUIREMENTS FOR MEDIUM VOLTAGE SERVICE

SECTION 700 – ELECTRIC TERMINATING ENCLOSURES, 0 – 600V
GENERAL REQUIREMENTS FOR TERMINATING ENCLOSURES, CONDUCTOR IDENTIFICATION, PHASE ARRANGEMENT

SECTION 800 – CUSTOMER GENERATION
STAND-BY & DISTRIBUTED GENERATION

SECTION 1000 – GAS
GENERAL INFORMATION, GAS SERVICE & METERING EQUIPMENT, GAS SERVICE POLICIES & METER LOCATIONS, BARRICADES, GAS FACILITIES NEAR UG SUBSTRUCTURES

UG – UNDERGROUND CONSTRUCTION STANDARDS
PADS, GROUNDING, CONNECTORS, RETAINING WALLS & CLEARANCES, WIRELESS COMMUNICATIONS ATTACHMENT TO DISTRIBUTION POLE

ELECTRICAL NEWSLETTERS
INTERNATIONAL CODE COUNCIL (ICC) SAN DIEGO AREA ELECTRICAL NEWSLETTERS

© 1998 - 2022 San Diego Gas & Electric Company. All rights reserved. Removal of this copyright notice without permission is not permitted under law.

REV	CHANGE	DR	BY	DSN	APV	DATE	REV	CHANGE	DR	BY	DSN	APV	DATE
C							F						
B	FORMATTING	EDM	JIK	-	-	03/29/2022	E						
A	EDITORIAL CHANGES	-	LSM	IPJ	TPM	11/01/2017	D						

	X	Indicates Latest Revision		Completely Revised		New Page		Information Removed

SIGNIFICANT REVISION LIST

SIGNIFICANT REVISION LIST

SCOPE: THIS STANDARD DETAILS SG SIGNIFICANT REVISIONS LIST.

INSTALLATION: NONE

BILL OF MATERIALS: NONE

NOTES:

I. ENTIRE MANUAL

a. REVISED INFORMATION IN THE PAGE FOOTER TO INCLUDE DOCUMENT CHANGE HISTORY AND NUMBER OF SHEETS IN A SPECIFIC STANDARD.
b. ADDED A NEW TABLE OF CONTENTS AT THE BEGINNING OF EACH SECTION.
c. REPLACED EXISTING INDEX SECTIONS WITH NEW ALPHABETICAL SECTION INDEXES AT THE BEGINNING OF EACH SECTION.
d. ADDED STANDARD REFERENCES AT THE BOTTOM LEFT SIDE OF EACH PAGE, WHEN APPLICABLE.
e. INCREASED THE NUMBER OF PAGES NEEDED TO IMPROVE READABILITY.
f. CHANGED STANDARD TITLES WHEN NEEDED TO MORE ACCURATELY REFLECT THE SUBJECT.

II. INTRODUCTION SECTION

a. ADDED SG6, SIGNIFICANT REVISIONS LIST.

III. SECTION 000 – GENERAL INFORMATION

a. DIVIDED "ELECTRIC SERVICE POLICIES – NEW AND EXISTING CUSTOMER" (OLD PAGES 013.1 – 013.12) INTO FOUR NEW STANDARDS, AS FOLLOWS:
   1. "ELECTRIC SERVICE POLICIES – NEW & EXISTING CUSTOMERS" (SG011)
   2. "ELECTRIC SERVICE POLICIES – NEW PROJECT TYPES" (SG012)
   3. "ELECTRIC SERVICE POLICIES – EXISTING CUSTOMER" (SG013)
   4. "ELECTRIC SERVICE POLICIES – EXISTING CUSTOMER FEEDER EXCEPTIONS" (SG014)
b. ON PAGES SG012.1 AND SG013, TO ASSIST SDG&E PLANNERS AND CUSTOMERS IN THE PLANNING PHASE OF THEIR PROJECT, ADDED A NEW PARAGRAPH AS FOLLOWS:
   1. GENERAL SERVICE REQUIREMENT TO MULTIPLE MULTI-UNIT BUILDINGS ON A SINGLE PREMISES – WHEN THERE IS MORE THAN ONE MULTI-UNIT BUILDING ON A SINGLE PREMISES, AN INDIVIDUAL SDG&E SERVICE IS GENERALLY REQUIRED TO EACH OF THE MULTI-UNIT BUILDINGS. BOTH RESIDENTIAL AND NON-RESIDENTIAL APPLICATIONS ARE SUBJECT TO THIS REQUIREMENT. REFER TO SG014 FOR FURTHER DETAIL.

IV. SECTION 100 – RESIDENTIAL, COMMERCIAL & INDUSTRIAL OVERHEAD

a. MOVED OLD PAGE 123 TO SG107.3 AND REVISED CONTENT TO CLARIFY THE 8-FOOT SERVICE DROP CLEARANCE AS SPECIFIED IN G.O. 95 THAT IS REQUIRED ABOVE BUILDINGS ON ADJACENT PREMISES EXCEPT AS DEFINED IN NOTES ON PAGE SG107.7.

V. SECTION 200 – CUSTOMER-OWNED METER POLES

a. NO SIGNIFICANT CHANGES.

VI. SECTION 300 – UNDERGROUND ELECTRIC SERVICE

a. NO SIGNIFICANT CHANGES.

VII. SECTION 500 – ELECTRIC SERVICE & METERING EQUIPMENT (NEW SECTION)

a. DIVIDED EXISTING SECTION 600 INTO TWO SECTIONS BY CREATING NEW SECTION 500 FOR LOW VOLTAGE ELECTRIC SERVICE AND METERING EQUIPMENT AND CHANGING TERMINOLOGY FROM "HIGH" TO "MEDIUM" VOLTAGE ELECTRIC SERVICE AND METERING EQUIPMENT IN SECTION 600.
b. HOUSEKEEPING PAD WITHIN A BUILDING MUST BE FLUSH WITH THE SERVICE EQUIPMENT. ADDED A NEW REQUIREMENT "WORKING SPACE FOR NON-RESIDENTIAL SERVICE PANELS REQUIRES A PERMANENT CONCRETE SLAB" ON PAGE SG504.5. THIS NEW REQUIREMENT REPLACES NOTE 5 ON OLD PAGE 604.1.
c. OLD PAGE 604.2 IS NOW NEW PAGE SG506.1. UNDER "DOORS", THE CALIFORNIA ELECTRIC CODE CHANGED THE REQUIREMENT FOR SERVICES RATED 1200A, OR MORE, TO NOW APPLY TO SERVICES RATED 800A, OR MORE.

MAIN TABLE OF CONTENTS

© 1998 - 2022 San Diego Gas & Electric Company. All rights reserved. Removal of this copyright notice without permission is not permitted under law.

REV	CHANGE	DR	BY	DSN	APV	DATE	REV	CHANGE	DR	BY	DSN	APV	DATE
C							F						
B	FORMATTING	EDM	JIK	-	-	03/29/2022	E						
A	EDITORIAL CHANGES	-	LSM	LSM	TPM	11/01/2017	D						

NOTES (CONT'D):

d. OLD PAGE 604.2, NEW PAGE SG506.1, UNDER "DEDICATED ELECTRICAL SPACE", EXCEPTION 2, HAS BEEN REVISED AS, "DRY PIPES AND/OR DUCTS NOT CONTAINING FLUIDS, AND INSTALLED FOR THE SOLE PURPOSE OF VENTING ARE PERMITTED WITHIN THE 6-FOOT (1.8M) ZONE."
e. REMOVED THE COMMUNICATIONS INFORMATION FROM THE ILLUSTRATION ON PAGE SG510.3, OLD PAGE 607.3, REMOVED NOTE 6 FROM OLD PAGE 607.4, NEW PAGE SG510.4, AND ADDED "METERING COMMUNICATIONS" INFORMATION REFERENCING NEW PAGE SG525 AT THE BOTTOM OF PAGE SG510.4.
f. REVISED THE HEADING "BUS TAP DRAWINGS FOR APPROVAL" ON PAGE SG517.1, OLD PAGE 623, TO "SWITCHBOARD BUS/WIRE TAP DRAWINGS FOR APPROVAL." ADDED A REQUIREMENT FOR BUS TAP DRAWINGS PREPARED BY A QUALIFIED ENGINEER WHENEVER MECHANICAL LUGS ARE BEING ADDED TO EXISTING BUS, OR MANUFACTURER INSTALLED WIRE CONDUCTORS ARE TO BE TAPPED.
g. ADDED NEW PAGES SG524.8–10, "UNMETERED ELECTRIC SERVICE", TO PROVIDE A STANDARD FOR INSTALLATION OF A CUSTOMER-OWNED AND INSTALLED WIRELESS COMMUNICATIONS ANTENNA ATTACHMENT ON A DIRECT BURIAL OR FOUNDATION POLE WITH CONVENTIONAL LUMINAIRE FOR ROADWAY LIGHTING OWNED BY SDG&E.
h. ADDED NEW PAGE SG525, "METERING COMMUNICATIONS", TO PROVIDE DIRECTION FOR ESTABLISHING EFFECTIVE METERING COMMUNICATIONS WHEN A METER LOCATION DOES NOT FACILITATE STANDARD "SMART METER" COMMUNICATION METHODS.

VIII. SECTION 600 – MEDIUM VOLTAGE ELECTRIC SERVICE & METERING EQUIPMENT

a. DIVIDED EXISTING SECTION 600 INTO TWO SECTIONS BY CREATING NEW SECTION 500 FOR LOW VOLTAGE ELECTRIC SERVICE AND METERING EQUIPMENT AND CHANGING TERMINOLOGY FROM "HIGH" TO "MEDIUM" VOLTAGE ELECTRIC SERVICE AND METERING EQUIPMENT IN SECTION 600.

IX. SECTION 700 – ELECTRIC TERMINATING ENCLOSURES, 0 – 600V

a. REVISED "PHASE ARRANGEMENT" INFORMATION ON OLD PAGE 700, NEW PAGE, SG703, TO REQUIRE THE HIGH LEG TO BE IN THE "C" PHASE POSITION.
b. EXPANDED OLD PAGE 707 INTO NEW PAGES SG707.1–2, "RESIDENTIAL SINGLE-PHASE MULTI-METER STACK". REVISED THE DESCRIPTION AT THE TOP OF THE PAGE BY ADDING "FACTORY-MANUFACTURED PULL CAN AND METER STACK(S)" AND, "THIS STANDARD DOES NOT APPLY TO FIELD INSTALLED PULL CANS WITH RACEWAYS AND CABLING TO INDIVIDUAL METER PANELS." ADDED A NEW NOTE 10 TO PAGE SG707.2, AS FOLLOWS:
   1. THE SDG&E PLANNER SHALL PROVIDE THE CUSTOMER WITH A COPY OF THIS STANDARD WITH THE ELECTRIC METER & SERVICE LOCATION FORM BECAUSE IT IS A SPECIAL APPLICATION. IT IS IMPORTANT FOR THE CUSTOMER TO UNDERSTAND THE EQUIPMENT MUST BE FACTORY-MANUFACTURED WITH HORIZONTAL BUSSING FROM THE PULL CAN TO THE METERING SECTION(S).

XI. SECTION 800 – CUSTOMER GENERATION

a. MODIFIED PAGE SG806.13 PER NEW 36-INCH CLEARANCE REQUIREMENTS SPECIFIED ON PAGES SG1007.1-4.

XII. SECTION 1000 – GAS

a. ADDED A DEFINITION FOR LARGE GAS FIELD SERVICE VEHICLE ACCESS ON PAGE SG1003.1.
b. ADDED "SIGNAGE REQUIREMENTS FOR GAS SERVICE LOCATIONS ON MULTI-TENANT BUILDINGS" ON PAGES SG1003.2-3.
c. CHANGED "WELD HOLE" TO "TIE-IN HOLE" ON PAGES SG1004.1–2.
d. CHANGED "NUMBER OF SERVICES ALLOWED TO A BUILDING – NEW PROJECTS" TO "GAS SERVICE POLICY FOR NEW PROJECTS – NUMBER OF SERVICES ALLOWED", ON PAGES SG1006.2–3 (OLD PAGE 1007), REFORMATTED THIS SECTION, AND CHANGED THE TITLES OF SUBSECTIONS 1, 3, AND 4.
e. OLD PAGES 1008.1–2 ARE NOW PAGES SG1007.1–5, WITH NEW 36-INCH CLEARANCE REQUIREMENTS FROM GAS RISER.
f. OLD PAGES 1008.3–4 ARE NOW PAGES SG1008.1–3, WITH THE LATEST PRODUCT INFORMATION, ILLUSTRATIONS AND MANUFACTURER'S CONTACT INFORMATION. ON PAGE SG1008.1, THE NEW 36-INCH CLEARANCE REQUIREMENTS FROM GAS RISER ARE SPECIFIED.
g. TABLES ON OLD PAGES 1010 AND 1011 HAVE BEEN REVISED AND ARE NOW ON PAGES SG1009.2 AND SG1009.3.
h. OLD PAGES 1241–1243 ARE NOW PAGES SG1012.1–4.
i. ADDED NEW PAGE SG1010.8, "ADEQUATE SUPPORT FOR WALL-MOUNTED METER HEADERS", TO THE "GAS METERS GROUPED ON METER HEADERS" STANDARD.

MAIN TABLE OF CONTENTS

© 1998 - 2022 San Diego Gas & Electric Company. All rights reserved. Removal of this copyright notice without permission is not permitted under law.

REV	CHANGE	DR	BY	DSN	APV	DATE	REV	CHANGE	DR	BY	DSN	APV	DATE
C							F						
B	FORMATTING	EDM	JIK	-	-	03/29/2022	E						
A	EDITORIAL CHANGES	-	LSM	LSM	TPM	11/01/2017	D						

X Indicates Latest Revision | Completely Revised | New Page | Information Removed

000 - GENERAL INFORMATION

000 - GENERAL INFORMATION

MAIN TABLE OF CONTENTS

PAGE	SUBJECT
001	TABLE OF CONTENTS
002	GENERAL INFORMATION INDEX
003	DEFINITIONS OF TERMS
004	GENERAL INFORMATION
005	LISTING OF LOCKSMITHS AUTHORIZED TO SELL SCHLAGE RESTRICTED VTQP QUAD SECTION KEYWAY
006	UTILITY'S CONTRIBUTION TO FAULT CURRENT
007	SDG&E TRANSFORMER FUSING INFORMATION
008	UTILITY'S CONTRIBUTION TO FAULT CURRENT – SECONDARY VOLTAGE SERVICE EXAMPLES
009	TRANSFORMER VAULTS
010	TESTING REQUIREMENTS FOR METAL-ENCLOSED SERVICE ENTRANCE & UNMETERED FEEDER BUSWAYS
011	ELECTRIC SERVICE POLICIES – NEW & EXISTING CUSTOMERS
012	ELECTRIC SERVICE POLICIES – NEW PROJECT TYPES
013	ELECTRIC SERVICE POLICIES – EXISTING CUSTOMER
014	ELECTRIC SERVICE POLICIES – EXISTING CUSTOMER FEEDER EXCEPTIONS
015	LINE TRUCK ACCESS REQUIREMENTS
016	PULLING DEVICES FOR INSTALLATION OF SERVICE LATERAL CONDUCTORS IN PARKING STRUCTURES
017	PLAQUE SPECIFICATIONS & EXAMPLES
018	MEDIUM-VOLTAGE CONDUCTOR CLEARANCES FOR NON-UTILITY WORKERS & EQUIPMENT
019	CLEARANCES OF OVERHEAD FACILITIES FROM TANKS CONTAINING FLAMMABLE OR EXPLOSIVE MIXTURE
020	PRODUCT DISTRIBUTORS
021	SERVICE ORDER TEAMS & REGIONAL PROJECT MANAGEMENT OFFICES
022	PROJECT MANAGEMENT REGIONAL BOUNDARY MAP
023	FREQUENTLY REFERENCED STANDARDS
024	ALPHABETICAL SUBJECT INDEX

© 1998 - 2020 San Diego Gas & Electric Company. All rights reserved. Removal of this copyright notice without permission is not permitted under law.

REV	CHANGE	DR	BY	DSN	APV	DATE	REV	CHANGE	DR	BY	DSN	APV	DATE
C							F						
B	FORMATTING	EDM	JIK	--	--	5/22/2020	E						
A	NEW PAGE		LSM	LSM	TPM	11/1/2017	D						

	X	Indicates Latest Revision		Completely Revised		New Page		Information Removed	

SUBJECT	PAGE #
Accessibility	SG 004.5
Accessible Meter Locations	SG 005.1
Adding Load to Existing Meter Panels	SG 004.2 – 004.3
Addressing Conventions	SG 004.6
Billing Account Establishment – Application for a Billing Account	SG 003.1, SG 004.3
Character of Service	SG 004.3 – 004.4
Clearances of Overhead Facilities from Tanks Containing Flammable or Explosive Mixture	SG 019
Clearances, Medium-Voltage Conductor Clearances for Non-Utility Workers & Equipment	SG 018.1 – 018.2
Connection or Disconnection of Service	SG 004.4
Definitions of Terms	SG 003.1 – 003.3
Electric Service Policies – Existing Customer Requesting Additional Services or Remote Meter Locations	SG 013.1 – 013.3
General Service Requirement to Multiple Multi-Unit Buildings on a Single Premises	SG 013.1
Multi-Family Residential Buildings – Less Than 3 Stories High	SG 013.1
Residential Contiguous Dwellings – Townhouses (Row Homes)	SG 013.1 – 013.2
Residential or Mixed Use Buildings – 3 Stories or Greater	SG 013.1
Single Premise – Multiple Non-Residential Enterprises	SG 013.2
Single Premise – Multiple Residential Customers	SG 013.3
Single Premise – Single Non-Residential Enterprise	SG 013.2 – 013.3
Single Premise – Single Residential Customer with Other Electric Uses	SG 013.3
Electric Service Policies – Existing Customer Feeder Exceptions	SG 014.1 – 014.5
Electric Service Policies – New & Existing Customers	SG 011.1 – 011.3
Alternate Service Delivery Point Requests	SG 011.2
General Information	SG 011.1
General Requirements	SG 011.1 – 011.2

© 1998-2017 San Diego Gas & Electric Company. All rights reserved. Removal of this copyright notice without permission is not permitted under law.

REV	CHANGE	BY	DSGN	APPV	DATE	REV	CHANGE	BY	DSGN	APPV	DATE
A	Editorial Changes	LSM	LSM	TPM	11/01/17	D					
B						E					
C						F					

	Indicates Latest Revision	X	Completely Revised		New Page		Information Removed

SUBJECT	PAGE #
Rights of Way	SG 011.3
Secondary Serving Voltages & Classification of Service Information	SG 011.3
Service Locations	SG 011.2
Electric Service Policies – New Project Types	SG 012.1 – 012.3
General Service Requirement to Multiple Multi-Unit Buildings on a Single Premises	SG 012.1
Multi-Family Residential Buildings – Less than 3 Stories High	SG 012.1
Residential Contiguous Dwellings – Townhouses (Row Homes)	SG 012.1 – 012.2
Residential or Mixed Use Buildings – 3 Stories or Greater	SG 012.1
Single Premise – Multiple Residential Customers	SG 012.3
Single Premise – Single Non-Residential Enterprise	SG 012.2 – 012.3
Single Premise – Single Residential Customer with Other Electric Uses	SG 012.3
Single-Premise – Multiple Non-Residential Enterprises	SG 012.2
Equipment Responsibilities – Customer & SDG&E	SG 004.4
Fault Current, Utility's Contribution	SG 006.1 – 006.2
Fault Current, Utility's Contribution – Secondary Voltage Service Examples	SG 008.1 – 008.7
Gas & Electric Meter Access	SG 005.1
General Information	SG 004.1 – 004.6
Inaccessible Meter Locations	SG 005.1
Line Truck Access Requirements	SG 015
Locksmiths, Listing of	SG 005.1 – 005.2
Markout Service	SG 004.5
Medium-Voltage Conductor Clearances for Non-Utility Workers & Equipment	SG 018.1 – 018.2
Permit & Inspection	SG 004.3
Plaque Specifications & Examples	SG 017.1 – 017.3

© 1998-2017 San Diego Gas & Electric Company. All rights reserved. Removal of this copyright notice without permission is not permitted under law.

REV	CHANGE	BY	DSGN	APPV	DATE	REV	CHANGE	BY	DSGN	APPV	DATE
A	Editorial Changes	LSM	LSM	TPM	11/01/17	D					
B						E					
C						F					

	Indicates Latest Revision	X	Completely Revised		New Page		Information Removed

SUBJECT	PAGE #
Product Distributors	SG 020
Pulling Devices for Installation of Service Lateral Conductors in Parking Structures	SG 016.1 – 016.2
Purpose	SG 004.1
Request for Service	SG 004.2
Sample Plaque for Electrical Equipment Labels	SG 017.1
Scope	SG 004.1 – 004.2
SDG&E Transformer Fusing Information	SG 007.1 – 007.2
Sealing of Meter & Service Facilities	SG 004.5
Secondary Fault Current Calculations	SG 006.1 – 006.2
Secondary Serving Voltages & Classification of Service Information	SG 011.3
Service Delivery Point Policy	SG 011.1 – 011.2
Service Planning	SG 004.2
Testing Requirements for Metal-Enclosed Service Entrance & Unmetered Feeder Busways	SG 010
Transformer Fusing Information, SDG&E	SG 007.1 – 007.2
Transformer Vaults	SG 009.1 – 009.4
Trench Inspections	SG 004.5
Typical Plaque for Existing Buildings with Intermixed Services	SG 017.3
Typical Plaque for New Buildings or Existing Buildings with Separate Service Areas	SG 017.2
Utility's Contribution to Fault Current	SG 006.1 – 006.2
Utility's Contribution to Fault Current – Secondary Voltage Service Examples	SG 008.1 – 008.7
Work on Utility-Owned Poles	SG 004.5

© 1998-2017 San Diego Gas & Electric Company. All rights reserved. Removal of this copyright notice without permission is not permitted under law.

REV	CHANGE	BY	DSGN	APPV	DATE	REV	CHANGE	BY	DSGN	APPV	DATE
A	Editorial Changes	LSM	LSM	TPM	11/01/17	D					
B						E					
C						F					

	Indicates Latest Revision	X	Completely Revised		New Page		Information Removed

APPROVED: ACCEPTABLE AND IN CONFORMANCE WITH SDG&E'S (UTILITY'S) RULES AND POLICIES AND GOVERNMENTAL AUTHORITIES' HAVING JURISDICTION (AHJ'S) LAWS, CODES, AND ORDINANCES.

BILLING ACCOUNT ESTABLISHMENT: A REQUEST TO THE UTILTY FOR ELECTRIC AND/OR GAS SERVICE AS DISTINGUISHED FROM AN INQUIRY AS TO THE AVAILABILITY OF OR CHANGES FOR SUCH SERVICE. CONTACT THE UTILITY'S CUSTOMER CONTACT CENTER AT 1-800-411-7343, TO "MAKE APPLICATION" FOR A BILLING ACCOUNT AS SOON AS THE STREET ADDRESS HAS BEEN ASSIGNED BY THE AHJ.

BUILDING: NORMALLY A STRUCTURE WHICH STANDS ALONE AND IS USED OR INTENDED FOR SUPPORTING OR SHELTERING ANY USE OR OCCUPANCY. WHENEVER THERE IS A QUESTION WHETHER OR NOT THE STRUCTURE IS A SEPARATE BUILDING, THE APPROPRIATE AHJ SHALL MAKE THAT DETERMINATION.

CUSTOMER GENERATION: PRODUCTION OF ELECTRICAL ENERGY NOT GENERATED BY THE UTILITY.

FINAL GRADE: THE GRADE AFTER PAVING OR IMPROVEMENTS HAVE BEEN COMPLETED.

GOVERNMENTAL AUTHORITY HAVING JURISDICTION (AHJ): SEE INSPECTION AUTHORITY.

INSPECTION AUTHORITY: AN AGENCY RESPONSIBLE FOR ISSUING PERMITS, MAKING INSPECTIONS OF THE CUSTOMER'S ELECTRICAL WIRING SYSTEM (PREMISES WIRING), AND NOTIFYING THE UTILITY THAT SUCH WIRING AND SYSTEM COMPONENTS MEET THE CRITERIA ENFORCED BY THE AGENCY. INSPECTION AUTHORITIES INCLUDE CITY, COUNTY, STATE, AND FEDERAL AGENCIES, INDIAN RESERVATIONS AUTHORIZED TO MAKE ELECTRICAL INSPECTIONS, APPROPRIATE SECTIONS OF SCHOOL, PORT, TRANSIT, AND WATER DISTRICTS AND OTHER ENTITIES WITH LEGAL JURISDICTION OVER PREMISES WIRING.

METER ROOM: A WEATHERPROOF, ILLUMINATED ROOM PROVIDED BY THE CUSTOMER AT THEIR OPTION AND APPROVED BY SDG&E FOR THE LOCATION OF ELECTRIC METERING EQUIPMENT.

METER SEQUENCE: THE SEQUENTIAL RELATIONSHIP BETWEEN THE SERVICE SWITCH AND THE UTILITY'S BILLING METER IN A SERIES ARRANGMENT. THE TERM 'NEW SEQUENCE' MEANS A METER-SWITCH-FUSE SEQUENCE. 'OLD SEQUENCE' MEANS A SWITCH-FUSE-METER-SEQUENCE.

METERED CIRCUITS: THOSE CONDUCTORS EXTENDED FROM THE METER AND OTHER SERVICE EQUIPMENT TO THE LOADS OR OUTLETS CONNECTED TO SUCH CIRCUITS. METERED CIRCUITS ARE NOT PERMITTED TO SERVCE ANOTHER PREMISE.

PREMISES: ALL OF THE REAL PROPERTY AND APPARATUS EMPLOYED IN A SINGLE ENTERPRISE ON AN INTEGRAL PARCEL OF LAND UNDIVIDED, EXCEPT IN THE CASE OF INDUSTRIAL, AGRICULTURAL, OIL FIELDS, RESORT ENTERPRISES AND PUBLIC OR QUASI-PUBLIC INSTITUTIONS BY A DEDICATED STREET, HIGHWAY, OR OTHER PUBLIC THOROUGHFARE, OR A RAILWAY. AUTOMOBILE PARKING LOTS CONSITUTING A PART OF, AND ADJACENT TO, A SINGLE ENTERPRISE MAY BE SEPARATED BY AN ALLEY FROM THE REMAINDER OF THE PREMISES SERVED.

PREMISES - AGRICULTURAL: REAL PROPERTY USED FOR AGRICULTURAL PURPOSES WHERE SPRINKLERS, SPRAYERS, PORTABLE IRRIGATION PIPE, ETC. ARE USED, INCLUDING PROPERTY IN AN AGRICULTURAL AREA NOT UNDER CULTIVATION, WHICH IS CAPABLE OF BEING TRAVERSED BY VEHICLES OR AGRICULTURAL EQUIPMENT.

PREMISES - COMMERCIAL: REAL PROPERTY FROM WHICH SERVICES ARE OFFERED AND RENDERED TO THE PUBLIC, OR FROM WHICH PRODUCTS ARE SOLD AND DISTRIBUTED FOR GAIN, INCLUDING PREMISES WHERE RESIDENTIAL UNITS ARE COMBINED WITH COMMERCIAL ENTERPRISES. FOR RESIDENTIAL LIVING UNITS EXCEEDING TWO IN NUMBER ON THE SAME PREMISES, SEE "PREMISES-RESIDENTIAL."

© 1998 - 2022 San Diego Gas & Electric Company. All rights reserved. Removal of this copyright notice without permission is not permitted under law.

REV	CHANGE	DR	BY	DSN	APV	DATE	REV	CHANGE	DR	BY	DSN	APV	DATE
C							F						
B	2022 FORMAT UPDATE	ARC	JIK	IPJ	KRG	09/29/2022	E						
A	EDITORIAL CHANGES	--	LSM	IPJ	TPM	11/01/2017	D						

PREMISES - IDENTIFICATION: APPROVED NUMBERS OR ADDRESSES TO BE PLACED FOR ALL NEW BUILDINGS OR STRUCTURES IN SUCH A POSITION AS TO BE PLAINLY VISIBLE AND LEGIBLE FROM THE STREET OR ROAD FRONTING THE PROPERTY.

PREMISES - INDUSTRIAL: REAL PROPERTY UPON WHICH AN ENTERPRISE IS ENGAGED IN PROCESSSING OR MANUFACTURING RAW OR UNFINISHED MATERIALS INTO ANOTHER FORM OR PRODUCT.

PREMISES - RESIDENTAL: REAL PROPERTY USED SOLEY FOR RESIDENTIAL PURPOSES AND COMPLYING WITH THE FOLLOWING PROVISIONS:

I. PREMISES FROM WICH SERIVCES ARE NOT OFFERED OR RENDERED TO THE PUBLIC, OR FROM WHICH PRODUCTS ARE NOT COMMERCIALLY PRODUCED, SOLD, OR DISTRIBUTED FOR GAIN.

II. PREMISES UPON WHICH ANY COMBINATION OF RESIDENTIAL LIVING UNITS DOES NOT EXCEED TWO IN NUMBER, WHETHER ON ONE LEVEL OR MORE.

NOTE: RESIDENTIAL LIVING UNITS EXCEEDING TWO IN NUMBER ON THE SAME PREMISES ARE CLASSIFIED AS A COMMERICAL ENTERPRISE AND COMMERCIAL PREMISES REQUIRING COMMERICAL SERVICE DROP CLEARANCES; HOWEVER, METERING PROVISIONS FOR INDIVIDUAL LIVING UNITS SHALL COMPLY WITH RESIDENTIAL REQUIREMENTS. (SEE PAGES SG 006.1-006.2 FOR UTILITY'S CONTRIBUTION TO FAULT CURRENT VALUES.)

PULL BOX: A SUBSURFACE BOX, USUALLY CONCRETE, USED FOR PULLING OR SPLICING UTILITY CABLES. ALSO KNOWN AS A HANDHOLE. (NOT TO BE USED TO TERMINATE CUSTOMER'S SERVICE ENTRANCE CONDUCTORS.)

PULL CAN: A WALL-MOUNTED ENCLOSURE USED FOR PULLING, ROUTING, OR CONNECTING THE UTILITY'S SERVICE CONDUCTORS TO THE CUSTOMER'S SERVICE EQUIPMENT.

PULL SECTION: AN UNDERGROUND PULL SECTION (UGPS) IS A SEPARATE COMPARTMENT OF A FREESTANDING, METAL OR METALCLAD SWITCHBOARD, WHICH IS USED FOR CONNECTING THE UTILITY'S SERVICE CONDUCTORS TO THE CUSTOMER'S SERVICE EQUIPMENT.

READILY ACCESSIBLE: CAPABLE OF BEING REACHED QUICKLY AND CONVENIENTLY 24 HOURS A DAY FOR CONSTRUCTION, OPERATION, MAINTENANCE, INSPECTION, TESTING, OR READING, WITHOUT REQUIRING THOSE SEEKING ACCESS TO CLIMB OVER OR REMOVE OBSTACLES, OR TO OBTAIN SPECIAL PERMISSION OR SECURITY CLEARANCES.

SERVICE DELIVERY POINT: THE POINT OF CONNECTION OF THE UTILITY'S SERVICE CONDUCTORS AND THE CUSTOMER'S SERVICE ENTRANCE CONDUCTORS.

SERVICE DROP CONDUCTORS: THE UTILITY'S OVERHEAD CONDUCTORS EXTENDING FROM ITS POLE LINE TO THE POINT OF SERVICE DROP SUPPORT ON A BUILDING OR STRUCTURE.

SERVICE ENTRANCE CONDUCTORS - OVERHEAD: THE CUSTOMER'S CONDUCTORS OR BUS BARS EXTENDING FROM THE SERVICE EQUIPMENT TO THE POINT OF CONNECTION TO THE UTILITY'S SERVICE DROP CONDUCTORS.

SERVICE ENTRANCE CONDUCTORS - UNDERGROUND: ALL CONDUCTORS OR BUS BARS INSTALLED BY THE CUSTOMER BEYOND AND INCLUDING THE POINT OF CONNECTION TO THE UTILITY'S SERVICE LATERAL CONDUCTORS.

SERVICE LATERAL: THE UNDERGROUND SERVICE LATERAL CONDUCTORS IN THE CUSTOMER'S CONDUIT, INSTALLED BY THE UTILITY FROM THE DESIGNATED SOURCE TO THE POINT OF CONNECTION WITH THE CUSTOMER'S SERVICE ENTRANCE CONDUCTORS.

© 1998 - 2022 San Diego Gas & Electric Company. All rights reserved. Removal of this copyright notice without permission is not permitted under law.

REV	CHANGE	DR	BY	DSN	APV	DATE	REV	CHANGE	DR	BY	DSN	APV	DATE
C							F						
B	2022 FORMAT UPDATE	ARC	JIK	IPJ	KRG	09/29/2022	E						
A	EDITORIAL CHANGES	--	LSM	IPJ	TPM	11/01/2017	D						

	X	Indicates Latest Revision		Completely Revised		New Page		Information Removed

SERVICE POINT: THE POINT OF CONNECTION BETWEEN THE FACILITIES OF THE SERVING UTILITY AND THE PREMISES WIRING.

"SHALL," "SHOULD," "WILL," AND "MAY": THROUGHOUT THIS SERVICE STANDARDS & GUIDE, THE WORDS "SHALL" AND "WILL" ARE USED TO INDICATE THE MORE RIGID REQUIREMENTS OF THE UTILITY OR AHJ, WHILE "SHOULD" AND "MAY" ARE USED TO INDICATE RECOMMENDATIONS, OR THAT WHICH IS ADVISED BUT NOT NECESSARILY REQUIRED.

SINGLE ENTERPRISE: A SEPARATE BUSINESS OR OTHER INDIVIDUAL ACTIVITY CARRIED ON BY A CUSTOMER. THE TERM DOES NOT APPLY TO ASSOCIATIONS OR COMBINATIONS OF CUSTOMERS. ONE PERSON MAY BE CONDUCTING SEVERAL ACTIVITES OF WHICH ONE ACTIVITY MAY BE A SINGLE ENTERPRISE.

SUBMETERS: CUSTOMER-FURNISHED, -INSTALLED, -OWNED, AND -MAINTAINED METERES BEHIND A MASTER UTILITY METER. RESIDENTIAL SUBMETERS MAY BE PERMITTED IN CERTAIN SPECIAL CIRCUMSTANCES. SUBMETERING OF NON-RESIDENTIAL SERVICE IS PROHIBITED.

TERMINATING ENCLOSURE: A UTILITY-APPROVED PULL CAN OR PULL SECTION AT THE SERVICE DELIVERY POINT FOR CONNECTING THE UTILITY'S UNDERGROUND SERVICE LATERAL CONDUCTORS AND THE CUSTOMER'S SERVICE ENTRANCE CONDUCTORS. SEE SG 703 FOR 0 – 600 VOLT TERMINATING ENCLOSURES AND SG 608.1 – 608.3 FOR SWITCHGEAR UNDERGROUND SERVICE TERMINATING PULL SECTIONS.

UTILITY METERS: UTILITY-FURNISHED, -INSTALLED, -OWNED, AND -MAINTAINED METERS USED TO MEASURE CONSUMPTION FOR BILLING PURPOSES

UTILITY'S OPERATING CONVENIENCE: THE UTILIZATION, UNDER CERTAIN CIRCUMSTANCES, OF FACILITIES OR PRACTICES NOT ORDINARILY EMPLOYED WHICH CONTRIBUTE TO THE OVERALL EFFICIENCY OF THE UTILITY'S OPERATIONS.

© 1998 - 2022 San Diego Gas & Electric Company. All rights reserved. Removal of this copyright notice without permission is not permitted under law.

REV	CHANGE	DR	BY	DSN	APV	DATE	REV	CHANGE	DR	BY	DSN	APV	DATE
C							F						
B	2022 FORMAT UPDATE	ARC	JIK	IPJ	KRG	09/29/2022	E						
A	EDITORIAL CHANGES	--	LSM	IPJ	TPM	11/01/2017	D						

X	Indicates Latest Revision		Completely Revised		New Page		Information Removed	

SCOPE: SAN DIEGO GAS ELECTRIC COMPANY (SDG&E) IS AN INVESTOR-OWNED UTILITY COMMITTED TO BUILDING THE CLEANEST, SAFEST, AND MOST RELIABLE ENERGY INFRASTRUCTURE COMPANY IN AMERICA AND PROVIDING THE BEST POSSIBLE SERVICE TO ITS CUSTOMERS IN THE COMPANY'S 4,105 SQUARE MILE SERVICE AREA.

- THE SERVICE STANDARDS & GUIDE CONTAINS INFORMATION ESSENTIAL TO THE ESTABLISHMENT OF SERVICE TO NEW FACILITIES, OR TO REMODELED OR EXPANDED FACILITIES WHERE LOAD HAS BEEN ADDED. THIS INFORMATION IS INTENDED FOR USE BY ALL INTERESTED CUSTOMERS AND PARTICULARLY BY MEMBERS OF TECHNICAL AND PROFESSIONAL TRADES CONCERNED WITH THE DESIGN AND BUILDING OF FACILITIES TO RECEIVE SERVICE FROM SDG&E'S SYSTEM.
- THE SERVICE STANDARDS & GUIDE PRESENTS GENERAL AND DETAILED INFORMATION TO HELP ENSURE THAT A SERVICE INSTALLATION WILL BE ADEQUATE FOR PRESENT AND FUTURE POWER NEEDS. THE MANUAL SEEKS TO OUTLINE SERVICE REQUIREMENTS IN ACCORDANCE WITH THE REGULATIONS OF THE GOVERNMENTAL AUTHORITY OF HAVING JURISDICTION (AHJ) WHO WILL INSPECT THE SERVICE CONNECTION PRIOR TO PERMITTING THE UTILITY TO ESTABLISH SERVICE.
- THE SERVICE STANDARDS ARE BASICALLY FOUNDED UPON STANDARDS OF GOOD SAFETY PRACTICES AND ELECTRICAL CODES ENFORCED BY THE AHJS IN THE UTILITY'S SERVICE AREA. WE HAVE ENDEAVORED TO BRING THEM ALL TOGETHER IN A SINGLE, CONVENIENT FORM FOR EASY USE.

INSTALLATION: NONE

BILL OF MATERIALS: NONE

NOTES:

I. FOLLOWING IS A LIST OF REFERENCES ON WHICH THIS MANUAL IS BASED:
   a. RULES FOR OVERHEAD ELECTRIC LINE CONSTRUCTION: GENERAL ORDER 95 OF THE PUBLIC UTILITIES COMMISSION, STATE OF CALIFORNIA.
   b. RULES FOR CONSTRUCTION OF UNDERGROUND ELECTRICAL SUPPLY AND COMMUNICATION SYSTEMS: GENERAL ORDER 128 OF THE PUBLIC UTILITIES COMMISSION, STATE OF CALIFORNIA.
   c. TITLE 24. STATE BUILDING STANDARDS ELECTRICAL CODE, FORMERLY KNOWN AS ELECTRICAL SAFETY ORDERS OF THE DIVISION OF INDUSTRIAL SAFETY, DEPARTMENT OF INDUSTRIAL RELATIONS, STATE OF CALIFORNIA.
   d. NATIONAL ELECTRICAL CODE (NFPA 70), AN ANSI STANDARD, PUBLISHED BY THE NATIONAL FIRE PROTECTION ASSOCIATION, 1 BATTERYMARCH PARK, QUINCY, MA 02169-7471.
   e. APPLICABLE LAWS AND ORDINANCES OF THE COUNTY OR CITY WHERE THE SERVICE CONNECTION IS INSTALLED.

II. THE CONTENTS OF THE SERVICE STANDARDS & GUIDE ARE TAKEN FROM A NUMBER OF AUTHORITATIVE SOURCES, AND SINCE THEY ARE COMPILED IN A FORM WE BELIEVE WILL BEST SUIT YOUR INTERESTS, WE HAVE AVOIDED PRECISE FOOTNOTING OF REFERENCES.

III. WHEN AN UNUSUAL SITUATION CONFRONTS YOU, ONE THAT DOESN'T APPEAR TO BE SPELLED OUT SPECIFICALLY IN THIS MANUAL, PLEASE CONTACT YOUR PROJECT PLANNER OR SERVICE STANDARDS FOR CLARIFICATION.

IV. DESIGN & PROJECT MANAGEMENT IS THE SPECIAL DEPARTMENT THAT WILL ANSWER YOUR INDIVIDUAL QUESTIONS AND AID YOU IN THE DESIGN AND CONSTRUCTION OF SERVICE CONNECTIONS. YOU WILL FIND A LIST OF THE OFFICES WEHRE REPRESENTATIVES MAY BE REACHED IN THE FRONT OF THIS MANUAL ON PAGE SG 2.

V. THE PROJECT PLANNER WILL MEET WITH YOU TO DISCUSS YOUR PARTICULAR PROJECT, AND WORK OUT A SOLUTION WHICH WILL BE SATISFYING FOR YOUR AND FOR THE FUTURE CUSTOMERS THE UTILITY WILL SERVE WITH SAFE AND RELIABLE ENERGY.

VI. SERVICE PLANNING
   a. PLEASE BE ADVISED THAT WHENEVER DESIGN OF ELECTRICAL PLANS IS CONSIDERED FOR A COMMERICAL, INDUSTRIAL, OR RESIDENTAL STRUCTURE, CONTACT THE UTILITY AS SOON AS POSSIBLE.
   b. FOLLOWING ARE THE REASONS WHY:
      i. THE UTILITY WILL WORK WITH YOU TO ESTABLISH THE SERVING VOLTAGE AND AN ACCEPTABLE METER AND SERVICE LOCATION.
      ii. EARLY DISCUSSION OF THE PROJECT WILL ENABLE THE UTILITY TO DETERMINE THE MOST FAVORABLE RATE SCHEDULE FOR THE CUSTOMER AND PROVIDE THE UTILITY THE ABILITY TO MEET YOUR CONSTRUCTION SCHEDULE.
      iii. YOU CAN PREVENT THE UNNECESSARY EXPENSE OF REDESIGN, CONSTRUCTION CHARGES, OR DELAYS BY NOT ASSUMING THE TYPE OF SERVICE THE UTILITY WILL PROVIDE.

TABLE OF CONTENTS

© 1998 - 2023 San Diego Gas & Electric Company. All rights reserved. Removal of this copyright notice without permission is not permitted under law.

REV	CHANGE	DR	BY	DSN	APV	DATE	REV	CHANGE	DR	BY	DSN	APV	DATE
C							F						
B	EDITORIAL CHANGES	ARC	IPJ	IPJ	KRG	12/06/22	E						
A	EDITORIAL CHANGES	--	LSM	LSM	TPM	11/01/17	D						

	X	Indicates Latest Revision		Completely Revised		New Page		Information Removed	

NOTES (CONT'D):

VII. REQUEST FOR SERVICE
- a. AT THE TIME OF THIS INITIAL CONTACT, SIMPLY PROVIDE THE FOLLOWING INFORMATION:
  - i. STREET ADDRESS AND LEGAL DESCRIPTION OF THE PROPERTY, AND
  - i. PLOT, GRADING, ELEVATION, AND SITE IMPROVEMENT PLANS.
- b. FOR ANY OF YOUR BUILDING PROJECT NEEDS, YOU CAN FIND BROCHURES AND FORMS AT SDG&E'S BUILDER SERVICES RESOURCE PAGE ONLINE AT HTTP://WWW.SDGE.COM/BUILDER-SERVICES
- c. AVAILABLE FORMS INCLUDE:
  - i. REQUEST FOR SERVICE – RESIDENTIAL SINGLE-FAMILY DWELLING
  - ii. REQUEST FOR SERVICE – RESIDENTIAL SUBDIVISION/DEVELOPMENT
  - iii. REQUEST FOR SERVICE – RESIDENTIAL COMMERICAL/INDUSTRIAL DEVELOPMENT
- d. ALSO, YOU MAY UTILIZE THE REGIONAL SDG&E CONTACTS NOTED IN SG 2.
- e. SDG&E TARIFFS INCLUDING RULE 15 CAN BE ACCESSED AT HTTP://WWW.SDGE.COM/RATES-REGULATIONS/CURRENT-AND-EFFECTIVE-TARIFFS/CURRENT-AND-EFFECTIVE-TARIFFS/.

VIII. ADDING LOAD TO EXISTING METER PANELS
- a. EXISTING CUSTOMERS RECEIVING ELECTRIC SERVICE AT 480 VOLTS, OR LESS, SHALL PROVIDE WRITTEN NOTIFICATION TO THE UTILITY A MINIMUM OF 30 DAYS IN ADVANCE OF CONNECTING ALL NEW ELECTRIC LOADS WITH A RATING OF 30 KW, OR GREATER, OR SMALLER LOADS ADDED OVER A 12-MONTH PERIOD OF TIME WITH AGGREGATE RATING TOTALING 20KW, OR GREATER.
- b. EXISTING CUSTOMERS RECEIVING ELECTRIC SERVICE AT OVER 480 VOLTS SHALL PROVIDE WRITTEN NOTIFICATION TO THE UTILITY A MINIMUM OF 30 DAYS IN ADVANCE OF CONNECTING ALL NEW ELECTRIC LOADS WITH A RATING OF 200 KW, OR GREATER, OR SMALLER LOADS ADDED OVER A 12-MONTH PERIOD OF TIME WITH AGGREGATE RATINGS TOTALING 200KW, OR GREATER.
- c. IT IS THE CUSTOMER'S RESPONSIBILITY TO NOTIFY THE UTILITY, IN WRITING, WITHIN 15 DAYS IF THE CUSTOMER MAKES ANY CHANGE IN THE CONNECTED LOAD, OR THE SIZE OR CHARACTER OF THEIR APPLIANCES OR APPARATUS. SUCH CHANGES MAY REQUIRE A NEW APPLICATION FOR SERVICE AND/OR A CHANGE IN THE UTILITY'S SERVICE FACILITIES.
- d. REFER TO RULE 2, B.9 AND B.10 AND RULE 3, C. SDG&E TARIFFS, INCLUDING RULES 2 AND 3, CAN BE ACCESSED AT HTTP://WWW.SDGE.COM/RATES-REGULATIONS/CURRENT-AND-EFFECTIVE-TARIFFS/CURRENT-AND-EFFECTIVE-TARIFFS/.

IX. APPLICATION FOR A BILLING ACCOUNT
- a. THE INITIAL CONTACT WITH THE UTILITY FOR METER AND SERVICE REQUIREMENTS IS NOT AN APPLICATION FOR SERVICES. THERE IS ANOTHER SIMPLE STEP WHICH IS TAKEN CARE OF THROUGH A SEPARATE CHANNEL AT SDG&E. AN APPLICATION FOR A BILLING ACCOUNT MUST BE MADE BEFORE SERVICE CAN BE ESTABLISHED. APPLICATIONS CAN USUALLY BE MADE BY TELEPHONE. THIS SHOULD BE DONE AT THE TIME OF INITIAL CONTACT OR SHORTLY THEREAFTER TO AVOID DELAYS IN ESTABLISHING SERVICE. FOR ADDITIONAL INFORMATION, SEE PAGE SG 003.1, "BILLING ACCOUNT ESTABLISHMENT."

X. PERMIT & INSPECTION
- a. PRIOR TO SERVICE BEING ENERGIZED, AN INSPECTION BY THE AHJ IS REQUIRED. ALL ENERGY CONSUMPTION MUST BE METERED.
- b. BRIEFLY, THE STEPS ARE:
  - i. AN ELECTRICAL PERMIT IS OBTAINED FROM THE APPROPRIATE AHJ BY THE CONTRACTOR OR OTHER QUALIFIED PERSON.
  - ii. WIRING FOR THE FACILITY IS COMPLETED BY AN ELECTRICIAN OR OTHER QUALIFIED PERSON.
  - iii. INSPECTION OF THE INSTALLATION IS MADE BY THE AHJ WHO NOTIFIES THE UTILITY OF ACCEPTANCE.
  - iv. THE INSTALLATION IS CLEARED TO THE UTILITY.
  - v. THE UTILITY CONNECTS TO THE CUSTOMER'S SERVICE EQUIPMENT AND SETS THE METER.
- c. MODIFICATIONS, ALTERATIONS, OR RE-ESTABLISHMENT OF ELECTRIC SERVICE MAY REQUIRE AN INSPECTION CLEARANCE BY THE AHJ.

TABLE OF CONTENTS

© 1998 - 2023 San Diego Gas & Electric Company. All rights reserved. Removal of this copyright notice without permission is not permitted under law.

REV	CHANGE	DR	BY	DSN	APV	DATE	REV	CHANGE	DR	BY	DSN	APV	DATE
C							F						
B	EDITORIAL CHANGES	ARC	IPJ	IPJ	KRG	12/06/22	E						
A	EDITORIAL CHANGES	--	LSM	LSM	TPM	11/01/17	D						

NOTES (CONT'D):

XI. CHARACTER OF SERVICE

a. SERVICE SUPPLIED THROUGHOUT THE UTILITY'S SERVICE AREA IS ALTERNATING CURRENT AT A FREQUENCY OF APPROXIMATELY 60 CYCLES PER SECOND, AND AT THE NORMAL VOLTAGE AVAILABLE AT ANY SPECIFIC LOCATION ON THE DISTRIBUTION SYSTEM. A DETAILED DESCRIPTION OF SERVICE IS OUTLINED IN RULE 2 OF THE COMPANY'S RULES FOR THE SALE OF ELECTRIC ENERGY, AS FILED WITH THE CALIFORNIA PUBLIC UTILITIES COMMISSION.

b. SINGLE-FAMILY RESIDENCES ON INDIVIDUAL LOTS AND MOST SMALL COMMERCIAL LOADS ARE NORMALLY SERVED BY A 3-WIRE, SINGLE-PHASE, 120/240-VOLT SERVICE. MULTI-FAMILY RESIDENTIAL DEVELOPMENTS, INDUSTRIAL LOADS, SUBSTANTIAL COMMERICAL LOADS, AND THREE-PHASE LOADS USUALLY REQUIRE SPECIAL ENGINEERING STUDIES TO ESTABLISH THE SERVING VOLTAGE, AND SHOULD BE REFERRED TO THE NEAREST SDG&E OFFICE AT AN EARLY PLANNING STAGE.

c. SERVICE STANDARDS AND THE APPROPRIATE AHJ MAY APPROVE A 2-WIRE, SINGLE-PHASE, 120 VOLTS WERE THE LOAD DOES NOT EXCEED ONE 15-AMP AND ONE 20-AMP BRANCH CIRCUIT.

d. A 4-WIRE, THREE-PHASE, 208Y/120-VOLT SERVICE MAY BE PROVIDED TO MULTI-FAMILY BUILDINGS; HOWEVER, THE INDIVIDUAL OCCUPANCIES MUST BE SERVED AND METERED SINGLE-PHASE, 200 AMPS MAXIMUM. IN MIXED-USE BUILDINGS, COMMERCIAL SERVICE MAY BE METERED SINGLE-PHASE, 200 AMPS MAXIMUM.

e. THREE-PHASE, 480-VOLT SERVICE FROM AN OVERHEAD TRANSFORMER STATION, WHERE AVAILABLE, IS SUPPLIED 3-WIRE, DELTA-CONNECTED, WITH B-PHASE GROUNDED AND A SEPARATE 4TH WIRE SERVICE GROUND CONDUCTOR (REDUNDANT GROUND, NOT A "NEUTRAL").

f. ALL CUSTOMER REQUESTS FOR 480-VOLT SERVICE FROM A PADMOUNT TRANSFORMER WILL BE SERVED THREE-PHASE, 4-WIRE, 480Y/277 VOLTS.

g. ALL CUSTOMER REQUESTS FOR 480-VOLT SERVICE FROM A PADMOUNT TRANSFORMER WILL BE SERVED THREE-PHASE, 4-WIRE, 480Y/277 VOLTS.

h. THREE WIRE, SINGLE PHASE 240/480 VOLTS SERVICE IS AVAILABLE, 200 AMPS MAXIMUM. THIS IS TYPICALLY PROVIDED FOR HIGH POWER LIGHTING LOADS SUCH AS CALTRANS HIGHWAY LIGHTING SYSTEMS.

i. ALL CUSTOMERS ON THE UTILITY'S ELECTRIC DISTRIBUTION SYSTEM ARE OCCASIONALLY SUBJECTED TO MOMENTARY FLUCTUATIONS IN SERVING VOLTAGE. THESE ARE CAUSE BY DISTURBANCES SUCH AS LIGHTING SURGES AND SHORT CIRCUITS AND ARE IMPOSSIBLE TO PREVENT. ANY CUSTOMER HAVING OR PLANNING TO INSTALL VOLTAGE-SENSITIVE EQUIPMENT (SUCH AS SOLID-STATE CONTROLS) WHICH CANNOT OVERRIDE MOMENTARY VOLTAGE FLUCTUATIONS SHOULD CONSIDER INSTALLING SPECIALLY DESIGNED PROTECTIVE APPARATUS AS PART OF THEIR OWN ELECTRICAL SYSTEM.

j. MAXIMUM SERVICE PANEL SIZE ALLOWED TO BE SERVED BY A 120/240-VOLT, 3-PHASE DELTA TRANSFORMER INSTALLATION (OVERHEAD OR UNDERGROUND) IS 600 AMPS.

k. MAXIMUM SERVICE PANEL SIZE ALLOWED TO BE SERVED BY AN OVERHEAD 480-VOLT, 3-PHASE DELTA TRANSFORMER INSTALLAION IS 600 AMPS.

XII. EQUIPMENT RESPONSIBILITIES

a. CUSTOMER:

i. THE CUSTOMER IS TO PROVIDE AND INSTALL THEIR OWN SERVICE EQUIPMENT. THIS INCLUDES, BUT IS NOT LIMITED TO, THE FOLLOWING EQUIPMENT:

1. SERVICE ENTRANCE CONDUCTORS (NO. 8 AWG MINIMUM FOR OVERHEAD SERVICES
2. SERVICE TERMINATING EQUIPMENT
3. SERVICE SWITCHES AND CIRCUIT BREAKERS
4. FUSES
5. METER SOCKETS AND A STAINLESS STEEL OR ALUMINUM RETAINER (FLIMSY) RING FOR EACH SOCKET
6. METER AND INSTRUMENT TRANSFORMER HOUSINGS
7. SERVICE SWITCHBOARDS AND ASSOCIATED DEVICES
8. OTHER RELATED EQUIPMENT AS REQUIRED BY THE UTILITY

ii. AFTER THE CUSTOMER HAS INSTALLED THEIR EQUIPMENT IN ACCORDANCE WITH THE REQUIREMENTS OF THE APPROPRIATE AHJ AND THE UTILITY, THE CUSTOMER WILL BE RESPONSIBLE FOR ITS MAINTENANCE.

b. UTILITY: ALL METERS, METERING TRANSFORMERS, TEST SWITCHES, AND OTHER ASSOCIATED METERING EQUIPMENT WILL BE PROVIDED, INSTALLED, OWNED, AND MAINTAINED BY THE UTILITY IN ACCORDANCE WITH OUR FILED RULE 16. SEE DEFINITION OF "UTILITY METERS" ON PAGE SG 003.3.

TABLE OF CONTENTS

© 1998 - 2023 San Diego Gas & Electric Company. All rights reserved. Removal of this copyright notice without permission is not permitted under law.

REV	CHANGE	DR	BY	DSN	APV	DATE	REV	CHANGE	DR	BY	DSN	APV	DATE
C							F						
B	EDITORIAL CHANGES	ARC	IPJ	IPJ	KRG	12/06/22	E						
A	EDITORIAL CHANGES	--	LSM	LSM	TPM	11/01/17	D						

NOTES (CONT'D):

c. CUSTOMER RESPONSIBILITY TO MEET SERVICE STANDARDS REQUIREMENTS: MEETING THE SERVICE EQUIPMENT REQUIREMENTS SET BY THE SDG&E SERVICE STANDARDS & GUIDE IS A CONDITION OF RECEIVING SERVICE. AVOID TURN DOWNS THAT COST THE BUILDER EXTRA TIME AND RESOURCES. IF SERVICE EQUIPMENT MEETING STANDARD CANNOT BE FOUND TO COMPLETE A PROJECT AND ALTERNATIVES THAT DO NOT MEET STANDARD ARE BEING CONSIDERED, CONSULT WITH YOUR SDG&E PROJECT PLANNER FIRST.

XIII. CONNECTION OR DISCONNECTION OF SERVICE

THE UTILITY WILL BE RESPONSIBLE FOR ANY CONNECTION OR DISCONNECTION OF SERVICE BETWEEN COMPANY POWER LINES AND CUSTOMER-OWNED FACILITIES. ONLY AUTHORIZED EMPLOYEES OR AGENTS OF THE COMPANY ARE PERMITTED TO DO THIS WORK. ARRANGEMENTS MAY BE MADE FOR THIS WORK TO BE DONE ON A SPECIFIC DAY. IT IS ADVISED TO GIVE AS MUCH ADVANCE NOTICE AS POSSIBLE FOR A TURN-ON OR SHUT-OFF OF SERVICE.

XIV. WORK ON UTILITY-OWNED POLES

a. BECAUSE OF SAFETY RULES AND SPECIAL TRAINING REQUIRED, PROPERLY QUALIFIED UTILITY LINEMEN ARE THE ONLY PERSONS PERMITTED TO CLIMB THE UTILITY'S POLES.

XV. SEALING OF METER & SERVICE FACILITIES

a. THE UTILITY WILL SEAL ALL SERVICE RACEWAYS, PULL CANS, PULL SECTIONS, METERING COMPARTMENTS WITH DOORS OR REMOVABLE COVERS, METERS, TEST SWITCHES, AND OTHER FACILITIES FOR SERVICE AND METERING INSTALLATIONS. THE SEAL IS A BOND OF MUTUAL PROTECTION FOR THE UTILITY AND FOR THE CUSTOMER. AS SUCH, IT MAY NOT BE BROKEN BY ANYONE BUT AN AUTHORIZED REPRESENTATIVE OF THE UTILITY. SEE PAGE SG 503 FOR ADDITIONAL SEALING REQUIREMENTS.
b. IF IT BECOMES NECESSARY FOR ANY PERSON TO BREAK A SEAL FOR ANY LEGITIMATE REASON, THEY SHALL SECURE PERMISSION TO DO SO BY CALLING THE NEAREST PROJECT MANAGEMENT REGIONAL OFFICE LISTED IN FRONT OF THIS MANUAL ON PAGE SG 2.

XVI. ACCESSIBILITY

a. IN THE EXPRESS INTERESTS OF PROVIDING THE BEST POSSIBLE ELECTRIC SERVICE TO ALL CUSTOMERS, THE UTILITY MUST HAVE IMMEDIATE 24-HOUR ACCESS TO THEIR FACILITIES LOCATED ON THE CUSTOMER'S PREMISES. THE UTILITY MAKES EVERY EFFORT TO WORK WITH THE LEAST INCONVENIENCE TO THE CUSTOMER.
b. WHEN A SERVICE CONNECTION IS TERMINATED, THE UTILITY MUST REMOVE ITS PROPERTY FROM THE PREMISES.
c. ELECTRICALLY OPERATED GATES, WHICH DO NOT PERMIT IMMEDIATE 24-HOUR ACCESS TO ELECTRIC AND GAS FACILITIES FOR SDG&E AND LOCAL FIRE DEPARTMENT PERSONNEL, COULD POSE A SAFETY HAZARD. IF AN ELECTRICALLY OPERATED SECURITY GATE IS TO BE INSTALLED, THE CUSTOMER IS RESPONSIBLE FOR INSTALLING A SDG&E SCHLAGE RESTRICTED VTQP QUAD SECTION CYLINDER IN A KEY SWITCH WIRED TO THE GATE CONTROLLER. THE KEY SWITCH SHOULD BE LOCATED IN A HOUSING THAT ALLOWS AN AUTHORIZED UTILITY EMPLOYEE, OR AUTHORIZED AGENT, TO DRIVE UP AND INSERT THEIR KEY IN THE CYLINDER TO ACTIVATE THE GATE CONTROLLER WITHOUT HAVING TO LEAVE THEIR VEHICLE. IF SITE CONDITIONS MAKE THIS REQUIREMENT IMPRACTICAL, CONTACT SDG&E'S PROJECT PLANNER FOR APPROVAL OF AN ALTERNATE LOCATION. SEE PAGES SG 005.1 – 005.2 FOR A LIST OF LOCKSMITHS AUTHORIZED TO SELL UTILIY-APPROVED LOCKS. YOU SHOULD CONTACT THE FIRE DEPARTMENT WHICH SERVICES YOUR AREA TO OBTAIN THE REQUIREMENTS. THE CUSTOMER IS ALSO REQURED TO PROVIDE A MEANS OF OPENING THE GATE FROM THE INSIDE WITHOUT THE USE OF A VEHICLE TO ACTIVATE THE CONTROLLER. THIS MAY REQUIRE THE INSTALLATION OF AN ADDITIONAL KEY SWITCH INSIDE THE GATE IF THERE IS NOT AN UNSECURED SWITCH AVAILABLE FOR THE UTILITY'S USE.

XVII. MARKOUT SERVICE

a. BEFORE YOU BEGIN DIGGING AT YOUR BUILDING SITE, CALL DIGALERT AT 811 (UNDERGROUND SERVICE ALERT OF SOUTHER CALIFORNIA [USA]) FOR MARKOUT SERVICE. BY CONTACTING DIGALERT, YOU CAN AVOID CONFLICT WITH EXISTING UNDERGROUND FACILITIES. YOU MAY CALL DIGALERT AT 811, OR VISIT THEIR WEBSITE AT HTTPS://WWW.DIGALERT.ORG.

XVIII. TRENCH INSPECTIONS

a. TO REQUEST INSPECTIONS FOR GAS AND/OR ELECTRIC TRENCHES, SEE PAGE SG 2 FOR CONTACT INFORMATION.

TABLE OF CONTENTS

© 1998 - 2023 San Diego Gas & Electric Company. All rights reserved. Removal of this copyright notice without permission is not permitted under law.

REV	CHANGE	DR	BY	DSN	APV	DATE	REV	CHANGE	DR	BY	DSN	APV	DATE
C							F						
B	EDITORIAL CHANGES	ARC	IPJ	IPJ	KRG	12/06/22	E						
A	EDITORIAL CHANGES	--	LSM	LSM	TPM	11/01/17	D						

NOTES (CONT'D):

TABLE 1:

ADDRESSING CONVENTIONS	
ABBREVIATION	**DESCRIPTION**
AL	ALARM
CG	CUSTOMER GENERATION (GENERAL OUTPUT METER)
CP	CONTROL POWER (FOR PRIMARY SERVICES)
CS	CELL SITE
EL	ELEVATOR
EV	ELECTRIC VEHICLE
FA	FIRE ALARM
FC	FUEL CELL (FOR GAS)
FM	FACILITY METER
FP	FIRE PUMP
HM	HOUSE METER
IR	IRRIGATION
MC	METER CABINET
ND	NETWORK DEVICE
PS	PUMP SERVICE (DOMESTIC, AGRICULTURAL, OR COMMERCIAL)
REC	RECREATION ROOM
RR	RAILROAD
SPK	SPRINKLER
SL	STREETLIGHT
TEL	TELEPHONE
TP	TEMPORARY POWER
TR	TROLLEY
TS	TRAFFIC SIGNAL
TV	CABLE TV

REFERENCE: NONE

TABLE OF CONTENTS

© 1998 - 2023 San Diego Gas & Electric Company. All rights reserved. Removal of this copyright notice without permission is not permitted under law.

REV	CHANGE	DR	BY	DSN	APV	DATE	REV	CHANGE	DR	BY	DSN	APV	DATE
C							F						
B	EDITORIAL CHANGES	ARC	IPJ	IPJ	KRG	12/06/22	E						
A	EDITORIAL CHANGES	--	LSM	LSM	TPM	11/01/17	D						

SCOPE: THIS STANDARD SHOWS THE LISTING OF LOCKSMITHS TO SELL SCHLAGE RESTRICTED VTQP QUAD SECTION KEYWAY.

INSTALLATION: NONE

BILL OF MATERIALS: NONE

NOTES:

I. **GAS & ELECTRIC METER ACCESS** – IN ORDER TO PROVIDE THE BEST POSSIBLE GAS AND ELECTRIC SERVICE TO ALL OUR CUSTOMERS, SDG&E (UTILITY) MUST HAVE IMMEDIATE 24-HOUR ACCESS TO OUR METERS LOCATED ON THE CUSTOMER'S PREMISES. WE MAKE EVERY EFFORT TO DO OUR WORK WITH THE LEAST INCONVENIENCE TO YOU, OUR CUSTOMER. THE UTILITY MAY ALSO REQUIRE LINE TRUCK ACCESS TO LARGER SERVICES AND DISTRIBUTION FACILITIES ON THE CUSTOMER'S PROPERTY. CONSULT WITH THE UTILITY'S PROJECT PLANNER TO DETERMINE IF LINE TRUCK ACCESS IS REQUIRED. SEE PAGE SG 2 FOR PROJECT MANAGEMENT CONTACT INFORMATION.

II. **ACCESSIBLE METER LOCATION** - AN ACCESSILBE METER LOCATION IS CAPABLE OF BEING REACHED QUICKLY 24-HOURS A DAY FOR INSTALLATION, READING, TESTING, INSPECTION, MAINTENANCE, OR IN THE EVENT OF AN EMERGENCY. LOCKED DOORS AND GATES WHICH THE UTILITY'S EMPLOYEES MUST PASS THROUGH FOR ACCESS TO OUR FACILITIES MUST UTILIZE THE UTILITY'S SCHLAGE RESTRICTED VTQP QUAD SECTION KEYWAY.

III. **INACCESSIBLE METER LOCATION** – AN INACCESSIBLE METER LOCATION REFERES TO A METER IN A LOCATION WHERE THE UTILITY'S EMPLOYEE/AGENT DOES NOT HAVE 24-HOUR ACCESS TO INSTALL, READ, TEST, INSPECT, MAINTAIN, OR RESPOND IN THE EVENT OF AN EMERGENCY.

IV. BELOW IS A LIST OF LOCKSMITHS AUTHORIZED BY THE UTILITY TO SELL THE SCHLAGE RESTRICTED VTQP QUAD SECTION KEYWAY THAT WILL ALLOW THE UTILITY'S PERSONNEL ACCESS TO ITS FACILITIES:

TABLE 1:

SAN DIEGO AREA		
A-ADVANCED LOCKSMITHS 8280 CLAIREMONT MESA BLVD #135 SAN DIEGO, CA 92111 858-277-4358	**ACCURATE SECURITY PROS** 9919 HIBERT ST #D SAN DIEGO, CA 92131 858-271-1155	**ADAMS AVENUE LOCK & KEY** 2948 IMPERIAL AVE SAN DIEGO, CA 92102 619-280-0800
BUSY BEES LOCKS & KEYS 1747 KETTNER BLVD SAN DIEGO, CA 92101 619-733-0172	**CALIFORNIA COMMERCIAL SECURITY** 9560 RIDGEHAVEN CT #C SAN DIEGO, CA 92123 800-286-2555 / 858-503-7500	**COMMERCIAL LOCK & SAFE** 7094 MIRAMAR RD #118 SAN DIEGO, CA 92121 858-566-6065
CONVOY STREET LOCKSMITH SHOP 4204 CONVOY ST SAN DIEGO, CA 92111 858-715-8533	**CORONADO LOCK AND KEY** 1016 9TH ST SAN DIEGO, CA 92118 619-435-5363	**GRAH SAFE & LOCK** 939 UNIVERSITY AVE #100 SAN DIEGO, CA 92103 619-234-4829
LA JOLLA LOCKSMITH CORPORATION 8677 VILLA LA JOLLA DR #1140 SAN DIEGO, CA 92037 858-453-6868	**LABANN LOCK & SAFE** 2038 HANCOCK ST SAN DIEGO, CA 92110 619-291-2038 (SERVES ALL AREAS)	
SOUTH BAY AREA		
BUSY BEES LOCKS & KEYS 386 EAST H ST STE 209 SAN DIEGO, CA 91910 619-271-6364	**CHULA VISTA SECURITY CENTER** CHULA VISTA, CA 91909 619-476-1333 (ALSO SERVES SAN DIEGO AREA)	**PROFESSIONAL LOCKSMITH SERVICES** 1111 SEACOAST DR IMPERIAL BEACH, CA 91932 619-429-0813
EAST COUNTY AREA		
A AARON LOCK & KEY 3027 LEMON GROVE AVE LEMON GROVE, CA 91945 619-462-3381	**A GARAGE DOOR & GATE STORE** 9901 MAINE AVE LAKESIDE, CA 92040 619-561-9370	**KWIK-KEY LOCKSMITHS** 7368 EL CAJON BLVD LA MESA, CA 91941 619-667-5120
LYNN'S LOCKSMITH SERVICE 1380 EAST MAIN ST EL CAJON, CA 92021 619-447-7332		

© 1998 - 2022 San Diego Gas & Electric Company. All rights reserved. Removal of this copyright notice without permission is not permitted under law.

REV	CHANGE	DR	BY	DSN	APV	DATE	REV	CHANGE	DR	BY	DSN	APV	DATE
C							F						
B	EDITORIAL CHANGES	ARC	IPJ	IPJ	KRG	11/04/22	E						
A	EDITORIAL CHANGES	--	LSM	LSM	TPM	11/01/17	D						

X Indicates Latest Revision	Completely Revised	New Page	Information Removed

SDG&E ELECTRIC SERVICE STANDARDS & GUIDES

LISTING OF LOCKSMITHS AUTHORIZED TO SELL SCHLAGE RESTRICTED VTQP QUAD SECTION KEYWAY

SG005.1

TABLE 1 (CONT'D):

NORTH COUNTY AREA		
A-1 LOCK & SAFE 6020-B PASEO DEL NORTE CARLSBAD, CA 92011 760-431-5397	**ADOBE LOCK & SAFE** 184 SOUTH RANCHO SANTA FE RD SAN MARCOS, CA 92078 760-727-5470	**B&B LOCK & SAFE** 250 WOODWARD AVE #C ESCONDIDO, CA 92025 760-746-8060
CARLSBAD VILLAGE LOCK & KEY 3138 ROOSEVELT ST #E CARLSBAD, CA 92008 760-434-6600	**FOOTHILL LOCK & SECURITY** 1650 ORD WAY OCEANSIDE, CA 92056 760-806-9000 / 858-999-4400	**PRO-TEC LOCK & SAFE** 601 OCEANSIDE BLVD #A OCEANSIDE, CA 92056 760-722-1479
QUALITY LOCK & SAFE 340 EAST BROADWAY VISTA, CA 92084 760-945-4545	**RAMONA LOCKSMITH** 811 ½ D ST RAMONA, CA 92065 760-789-4189	**RL HELMS LOCK & DOOR** 4140 OCEANSIDE BLVD UNIT 159-406 OCEANSIDE, CA 92056 760-685-2794
SUPERIOR LOCKSMITH ESCONDIDO, CA 760-580-8777 (MOBILE)	**VISTA LOCK & SAFE CO** 1025 SOUTH SANTA FE AVE #A VISTA, CA 92083 760-726-0310	
ORANGE COUNTY AREA		
CAPISTRANO LOCK AND SAFE 32118 PASEO ADELANTO, #5AR SAN JUAN CAPISTRANO, CA 92675 949-496-5625	**CONTROLLED KEY SYSTEMS, INC.** 17248 RED HILL AVE IRVINE, CA 92614 949-756-1121	**CUSTOM LOCK & KEY** SERVES ALL ORANGE COUNTY 714-788-9660 / 949-233-4422
MARIN LOCK & SAFE COMPANY 26072 MERIT CIR #108 LAGUNA HILLS, CA 92653 949-582-5652	**TONY'S LOCKSMITH & SAFE SERVICE** 429 AVE DE LA ESTRELLA SAN CLEMENTE, CA 92672 949-492-5700	

REFERENCE: NONE

© 1998 - 2022 San Diego Gas & Electric Company. All rights reserved. Removal of this copyright notice without permission is not permitted under law.

REV	CHANGE	DR	BY	DSN	APV	DATE	REV	CHANGE	DR	BY	DSN	APV	DATE
C							F						
B	EDITORIAL CHANGES	ARC	IPJ	IPJ	KRG	11/04/22	E						
A	EDITORIAL CHANGES	--	LSM	LSM	TPM	11/01/17	D						

X Indicates Latest Revision | Completely Revised | New Page | Information Removed

SDG&E ELECTRIC SERVICE STANDARDS & GUIDES

LISTING OF LOCKSMITHS AUTHORIZED TO SELL SCHLAGE RESTRICTED VTQP QUAD SECTION KEYWAY

SG005.2

SCOPE: THE CALIFORNIA ELECTRICAL CODE REQUIRES THE INSTALLATION OF SERVICE EQUIPMENT WITH OVERCURRENT PROTECTIVE DEVICES WITH A SHORT CIRCUIT CURRENT RATING EQUAL TO, OR NOT LESS THAN, THE AVAILABLE FAULT CURRENT PROVIDED BY SDG&E (UTILITY), AND WHEN APPLICABLE, THE CONTRIBUTION TO FAULT CURRENT FROM CUSTOMER'S MOTOR CONTRIBUTION.

INSTALLATION: NONE

BILL OF MATERIALS: NONE

NOTES:

I. THE UTILITY'S MAXIMUM CONTRIBUTION TO FAULT CURRENT IS STATED AS FOLLOWS:

a. RESIDENTIAL - APPLICABLE TO A SINGLE-FAMILY RESIDENCE OR DUPLEX AS DEFINED IN RULE 1 (WHICH MAY INCLUDE A HOUSE METER FOR A TOTAL OF 3 METERS), MULTI-FAMILY RESIDENTIAL SERVICE CONSISTING OF 3 OR MORE DWELLING UNITS, OR A MOBILE HOME; ALSO APPLICABLE TO SERVICE USED IN COMMON FOR RESIDENTIAL PURPOSES IN A MULTI-FAMILY DWELLING, ON A SINGLE PREMISES, WHETHER SEPARATELY METERED OR COMBINED WITH SERVICE TO AN INDIVIDUAL DWELLING UNIT. THE UTILITY'S CONTRIBUTION TO THE AVAILABLE FAULT CURRENT AT THE POINT OF CONNECTION OF SERVICE CONDUCTORS TO THE CUSTOMER'S FACILITIES WILL NOT EXCEED THE VALUES LISTED IN TABLE 1.

TABLE 1:

PHASE	SERVING VOLTAGE (VOLTS)	SERVICE ENTRANCE AMPACITY (AMPS)	UTILITY'S CONTRIBUTION TO FAULT CURRENT WILL NOT EXCEED (AMPS)
1Ø	120/240	225 OR LESS	10,000
1Ø	120/240	226 – 600	22,000
1Ø	120/208	200 OR LESS	42,000
1Ø (Ib)	120/240	800	42,000
3Ø	120/240	600 OR LESS (SEE ITEM 4)	42,000
3Ø	208Y/120	3,000 OR LESS	42,000
3Ø	208Y/120	3,001 – 4,000	65,000

(b) BY EXCEPTION ONLY: 800 AMPS AND ABOVE SINGLE PHASE RESIDENTIAL MAY BE CONSIDERED ONLY ON A CASE BY CASE BASIS WHEN THE SDG&E DISTRIBUTION SYSTEM SERVING THE AREA IS ONLY SINGLE PHASE AND 3 PHASE DISTRIBUTION IS A CONSIDERABLE DISTANCE AWAY. THIS EXCEPTION REQUIRES REVIEW AND DEVIATION APPROVAL BY SDG&E SERVICE STANDARDS IN ELECTRIC DISTRIBUTION ENGINEERING.

c. NON-RESIDENTIAL – APPLICABLE TO ALL NON-RESIDENTIAL OCCUPANCIES SUCH AS, BUT NOT LIMITED TO, COMMERCIAL, INDUSTRIAL, AGRICULTURAL, GOVERNMENTAL, EDUCATIONAL INSTITUTIONS, HOSPITALS, MEDICAL CLINICS, ETC. THE UTILITY'S CONTRIBUTION TO THE AVAILABLE FAULT CURRENT AT THE POINT OF CONNECTION OF THE UTILITY'S SERVICE CONDUCTORS TO THE CUSTOMER'S FACILITIES WILL NOT EXCEED THE VALUES LISTED IN TABLE 2.

TABLE 2:

PHASE	SERVING VOLTAGE (VOLTS)	SERVICE ENTRANCE AMPACITY (AMPS)	UTILITY'S CONTRIBUTION TO FAULT CURRENT WILL NOT EXCEED (AMPS)
1Ø	120/208	200 OR LESS	42,000
1Ø	120/240	400 OR LESS	42,000
1Ø	240/480	200 OR LESS	10,000
3Ø	120/240	600 OR LESS (SEE Ie)	42,000
3Ø	208Y/120	3,000 OR LESS	42,000
3Ø	208Y/120	3,001 – 4,000	65,000
3Ø	480	600 OR LESS (SEE If)	30,000

© 1998 - 2023 San Diego Gas & Electric Company. All rights reserved. Removal of this copyright notice without permission is not permitted under law.

REV	CHANGE	DR	BY	DSN	APV	DATE	REV	CHANGE	DR	BY	DSN	APV	DATE
C							F						
B	EDITORIAL CHANGES	ARC	IPJ	IPJ	KRG	11/07/22	E						
A	EDITORIAL CHANGES	--	LSM	LSM	TPM	11/01/17	D						

NOTES (CONT'D):

TABLE 2 (CONT'D):

PHASE	SERVING VOLTAGE (VOLTS)	SERVICE ENTRANCE AMPACITY (AMPS)	UTILITY'S CONTRIBUTION TO FAULT CURRENT WILL NOT EXCEED (AMPS)
3Ø	480Y/277	2,000 OR LESS	30,000
3Ø	480Y/277	2,001 – 3,000	45,000
3Ø	480Y/277	3,001 – 4,000	65,000

d. SDG&E'S AVAILABLE FAULT CURRENT FOR MEDIUM AND HIGH VOLTAGE SERVICES WILL BE CALCULATED ON AN INDIVIDUAL BASIS AND WILL BE QUOTED FOR BOTH THE INITIAL AND ULTIMATE THREE-PHASE, LINE-TO-LINE, AND LINE-TO-GROUND FAULT CURRENT VALUES.

e. MAXIMUM SERVICE PANEL SIZE ALLOWED TO BE SERVED BY A 120/240 VOLT, THREE-PHASE DELTA-CONNECTED TRANSFORMER INSTALLATION, OVERHEAD OR UNDERGROUND, IS 600 AMPS.

f. MAXIMUM SERVICE PANEL SIZE ALLOWED TO BE SERVED BY AN OVERHEAD 480 VOLT, THREE-PHASE DELTA-CONNECTED TRANSFORMER INSTALLATION IS 600 AMPS.

REFERENCE:

a. REFER TO DM6142

© 1998 - 2023 San Diego Gas & Electric Company. All rights reserved. Removal of this copyright notice without permission is not permitted under law.

REV	CHANGE	DR	BY	DSN	APV	DATE	REV	CHANGE	DR	BY	DSN	APV	DATE
C							F						
B	EDITORIAL CHANGES	ARC	IPJ	IPJ	KRG	11/07/22	E						
A	EDITORIAL CHANGES	--	LSM	LSM	TPM	11/01/17	D						

SCOPE: This standard provides primary fusing information for SDG&E distribution transformers.

REPLACEMENT FUSE FOR BAY-O-NET						
Transformer			Catalog Number			
kV	KVA	Fuse Size Amps	Kearney	RTE	Voltage	Impedance
2.4	25	15	124080-15	4038105C07		1.2%
	50	35	124080-35	-		1.8%
	50	40	-	4038105C11		1.8%
4.16	75	15	124080-15	4038105C07		1.3%
	150	30	124080-30	-		1.3%
	500	100	-	4000353C16		3.5%
6.9	25	6	124080-6	4038105C04		1.2%
	50	12	124080-12	4038105C06		1.8%
	75	15	124080-15	4038105C07		1.8%
12.0	75	6	124080-6	4038105C04		1.3%
	150	12	124080-12	4038105C06		1.3%
	225	15	124080-15	4038105C07	2400/4160Y/2400 OR 2400/4160GrdY/2400	4.63%
			124080-15	4038105C07	240/120 3Ø 4W	1.6%
	300	25	124080-25	4038105C09	208Y/120	2.2%
			124080-25	4038105C09	480Y/277	1.3%
	500	40	-	4000353C12	2400/4160Y/2400 OR 2400/4160GrdY/2400	4.63%
			-	4000353C12	208Y/120	3.5%
			-	4000353C12	480Y/277	2.2%
	750	65	-	4000353C14		5.32%
	1000	65	-	4000353C14		5.32%
	1500	100	-	4038361C04CB		5.32%
	2000	125	-	4038361C05CB		5.32%
	2500	125	-	4038361C05CB		5.32%

© 1998-2017 San Diego Gas & Electric Company. All rights reserved. Removal of this copyright notice without permission is not permitted under law.

REV	CHANGE	BY	DSGN	APPV	DATE	REV	CHANGE	BY	DSGN	APPV	DATE
A	Editorial Changes	LSM	IPJ	TPM	11/01/17	D					
B						E					
C						F					

X Indicates Latest Revision | Completely Revised | New Page | Information Removed

SDG&E SERVICE STANDARDS & GUIDE

SDG&E TRANSFORMER FUSING INFORMATION

LIVE FRONT TRANSFORMER FUSING TABLE, THREE-PHASE, 12KV TYPE SM-4 RATED 14.4KV				
Nominal Voltage-kV	Transformer Rating-KVA	Fuse Size Amps	S&C Catalog No.	Impedance
14.4	1500	125	122200R4	5.32%
14.4	2000	150	122250R4	5.32%
14.4	2500, 3000	200	122300R4	5.32%

Note: This information may be used by the customer's engineers when calculating the incident energy levels for arc flash conditions, or performing protection coordination studies for secondary voltage services.

© 1998-2017 San Diego Gas & Electric Company. All rights reserved. Removal of this copyright notice without permission is not permitted under law.

REV	CHANGE	BY	DSGN	APPV	DATE	REV	CHANGE	BY	DSGN	APPV	DATE
A	Editorial Changes	LSM	IPJ	TPM	11/01/17	D					
B						E					
C						F					

X Indicates Latest Revision	Completely Revised	New Page	Information Removed

EXAMPLE 1

Application: Applies to two dwelling units with grouped meters with a combined service disconnect rating of 225 amps maximum.

Exception: Two main service disconnects rated 125 amps each is permissible.

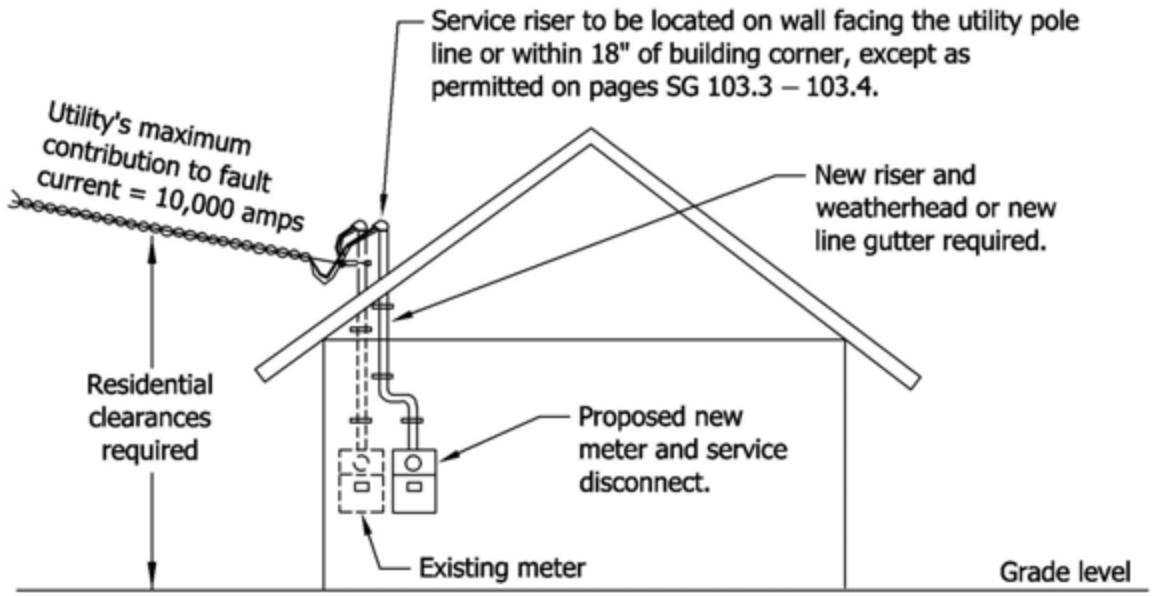

Conclusion:

New dwelling unit meter plus existing must not exceed 225 amps maximum, single-phase, 120/240 volts. Residential metering equipment is acceptable. Utility contribution to fault current will not exceed 10,000 amps. See page SG 006.1 Table 1. Residential clearances apply per G.O. 95.

Note:

Electrician shall provide equipment rated for the fault current of the system.

© 1998-2017 San Diego Gas & Electric Company. All rights reserved. Removal of this copyright notice without permission is not permitted under law.

REV	CHANGE	BY	DSGN	APPV	DATE	REV	CHANGE	BY	DSGN	APPV	DATE
A	Editorial Changes	LSM	BRB	TPM	11/01/17	D					
B						E					
C						F					

X Indicates Latest Revision	Completely Revised	New Page	Information Removed	
SHEET 1 OF 7	SDG&E SERVICE STANDARDS & GUIDE			SG 008.1
	UTILITY'S CONTRIBUTION TO FAULT CURRENT SECONDARY VOLTAGE SERVICE EXAMPLES			

EXAMPLE 2

Application: Applies to multi-family residential buildings with 3 or more residential dwelling units with grouped meters.

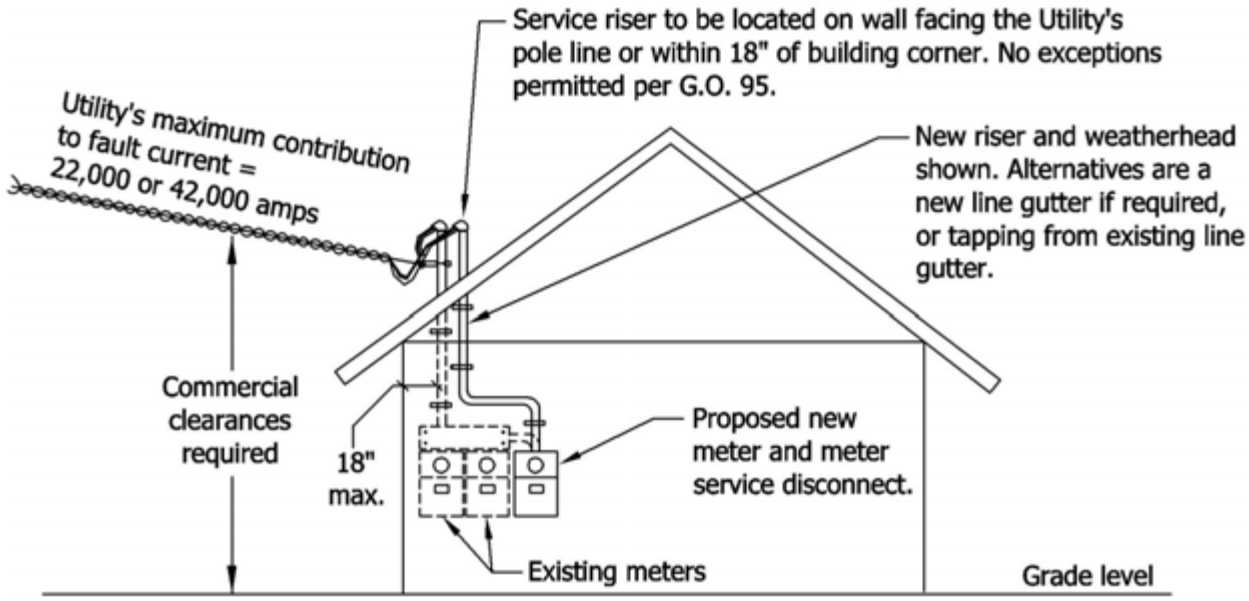

Conclusion:

New dwelling unit meter must not exceed 225 amps maximum, single-phase, 120/240 volts. Test-bypass facilities are not required. Utility's contribution to fault current will not exceed the values shown on page SG 006.1 Table 1 and are based on the service ampacity. Commercial clearances apply per G.O. 95.

Notes:

1. Electrician shall provide equipment rated for the fault current of the system.
2. A main disconnect is required ahead of 7 or more meter service disconnects.

© 1998-2017 San Diego Gas & Electric Company. All rights reserved. Removal of this copyright notice without permission is not permitted under law.

REV	CHANGE	BY	DSGN	APPV	DATE	REV	CHANGE	BY	DSGN	APPV	DATE
A	Editorial Changes	LSM	BRB	TPM	11/01/17	D					
B						E					
C						F					

EXAMPLE 3

Application: Applies to adding one new residential meter set to two existing dwelling units with grouped meters **600 amps or less service ampacity**.

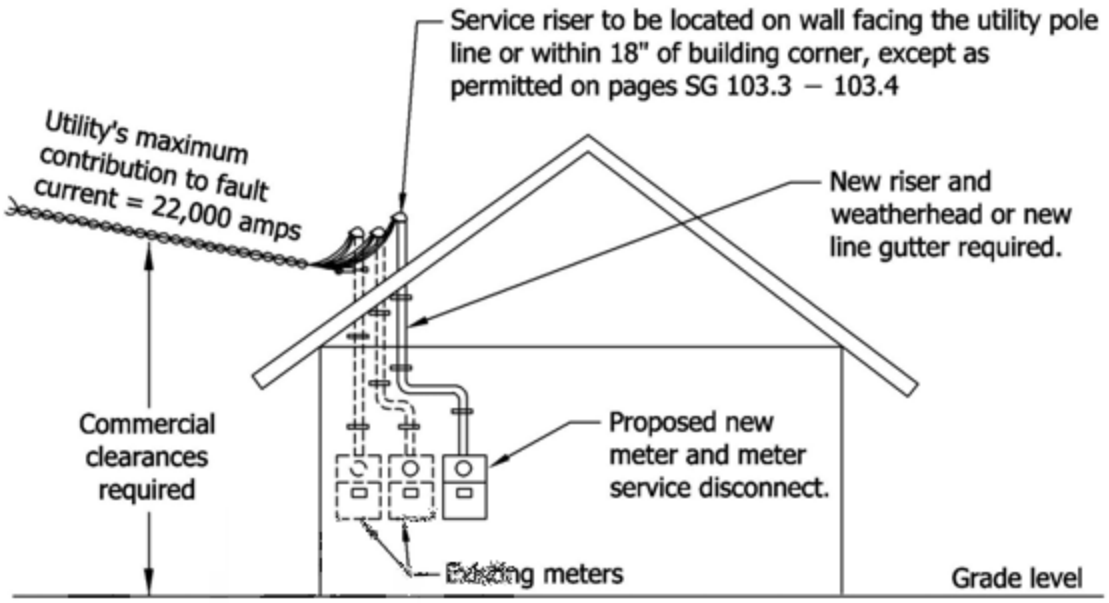

Conclusion:

600 amps maximum service size, single-phase, 120/240 volts. Test-bypass facilities are not required. Utility contribution to fault current will not exceed the values shown on page SG 006.1 Table 1. Commercial clearances apply per G.O. 95.

If service amperage exceeds 600 amps, refer to page SG 006.1 Table 1 for Utility's maximum contribution to fault current.

Note:

Electrician shall provide equipment rated for the fault current of the system.

© 1998-2017 San Diego Gas & Electric Company. All rights reserved. Removal of this copyright notice without permission is not permitted under law.

REV	CHANGE	BY	DSGN	APPV	DATE	REV	CHANGE	BY	DSGN	APPV	DATE
A	Editorial Changes	LSM	BRB	TPM	11/01/17	D					
B						E					
C						F					

X Indicates Latest Revision	Completely Revised	New Page	Information Removed	
SHEET 3 OF 7	SDG&E SERVICE STANDARDS & GUIDE			SG 008.3
	UTILITY'S CONTRIBUTION TO FAULT CURRENT SECONDARY VOLTAGE SERVICE EXAMPLES			

EXAMPLE 4

Application: Applies to multi-family residential buildings with 3 or more residential units with grouped meters.

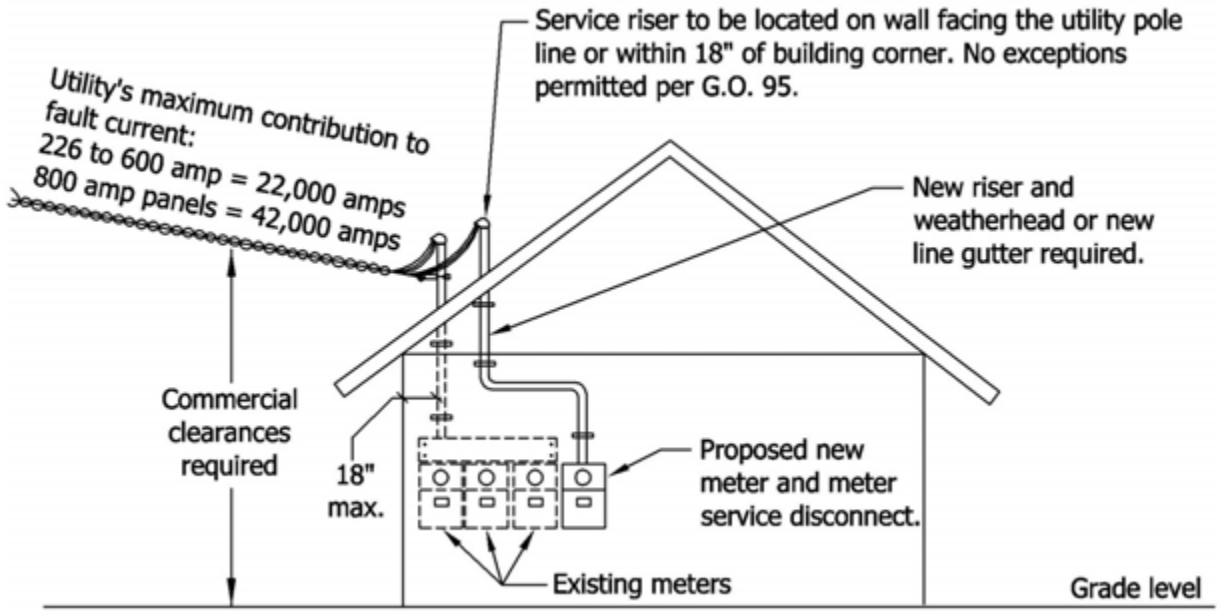

Conclusion:

New house meter – 225 amps maximum, 1 phase, 120/240 volts. Test-bypass facilities are not required. Utility's contribution to fault current will not exceed the values shown on page SG 006.1 Table 1 and are based on the service ampacity. Commercial clearances apply per G.O. 95.

Notes:

1. Electrician shall provide equipment rated for the fault current of the system.
2. A main disconnect is required ahead of 7 or more meter service disconnects.

© 1998-2017 San Diego Gas & Electric Company. All rights reserved. Removal of this copyright notice without permission is not permitted under law.

REV	CHANGE	BY	DSGN	APPV	DATE	REV	CHANGE	BY	DSGN	APPV	DATE
A	Editorial Changes	LSM	BRB	TPM	11/01/17	D					
B						E					
C						F					

EXAMPLE 5

Application: Applies to residential units (3 or more) with grouped meters in a meter cabinet (doors not shown) with a serving voltage of single-phase, 3-wire, 120/240 volts, **600 amps maximum**.

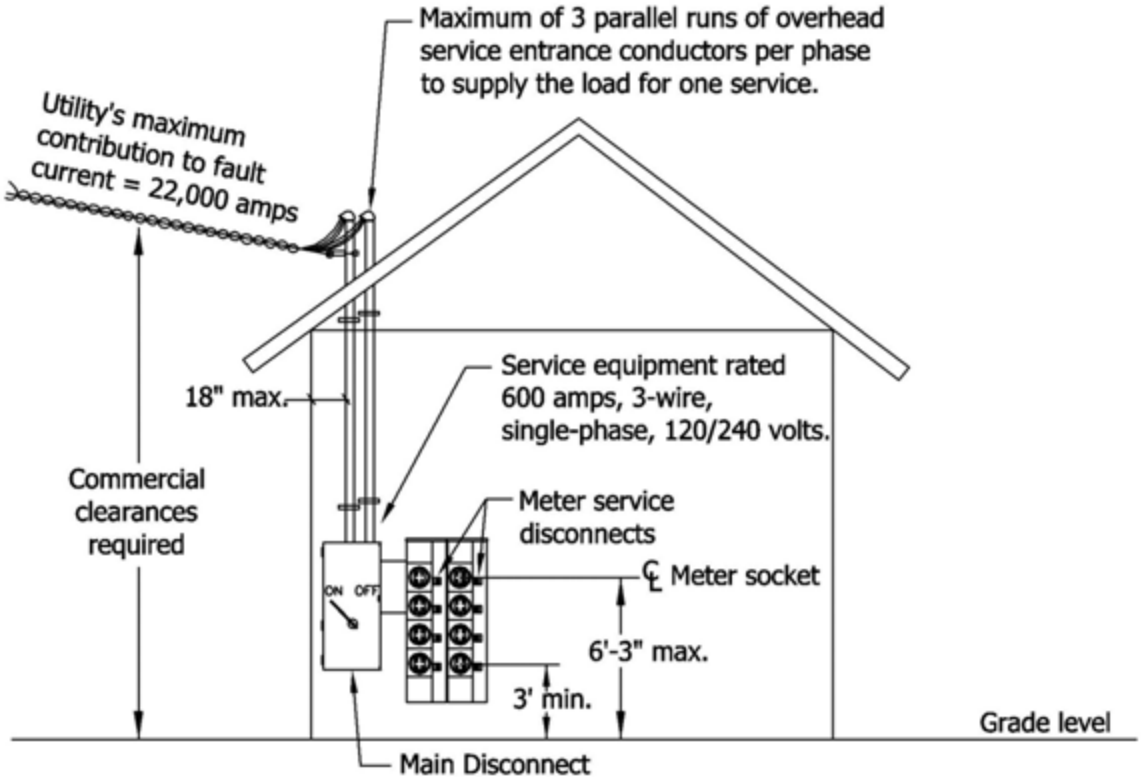

Conclusion:

Utility contribution to fault current will not exceed the values shown on page SG 006.1 Table 1 and are based on the service ampacity. Commercial clearances apply per G.O. 95.

Notes:

1. Electrician shall provide equipment rated for the fault current of the system.
2. A main disconnect is required ahead of 7 or more meter service disconnects.

© 1998-2017 San Diego Gas & Electric Company. All rights reserved. Removal of this copyright notice without permission is not permitted under law.

REV	CHANGE	BY	DSGN	APPV	DATE	REV	CHANGE	BY	DSGN	APPV	DATE
A	Editorial Changes	LSM	BRB	TPM	11/01/17	D					
B						E					
C						F					

EXAMPLE 6

Application: Applies to commercial or industrial grouped metering.

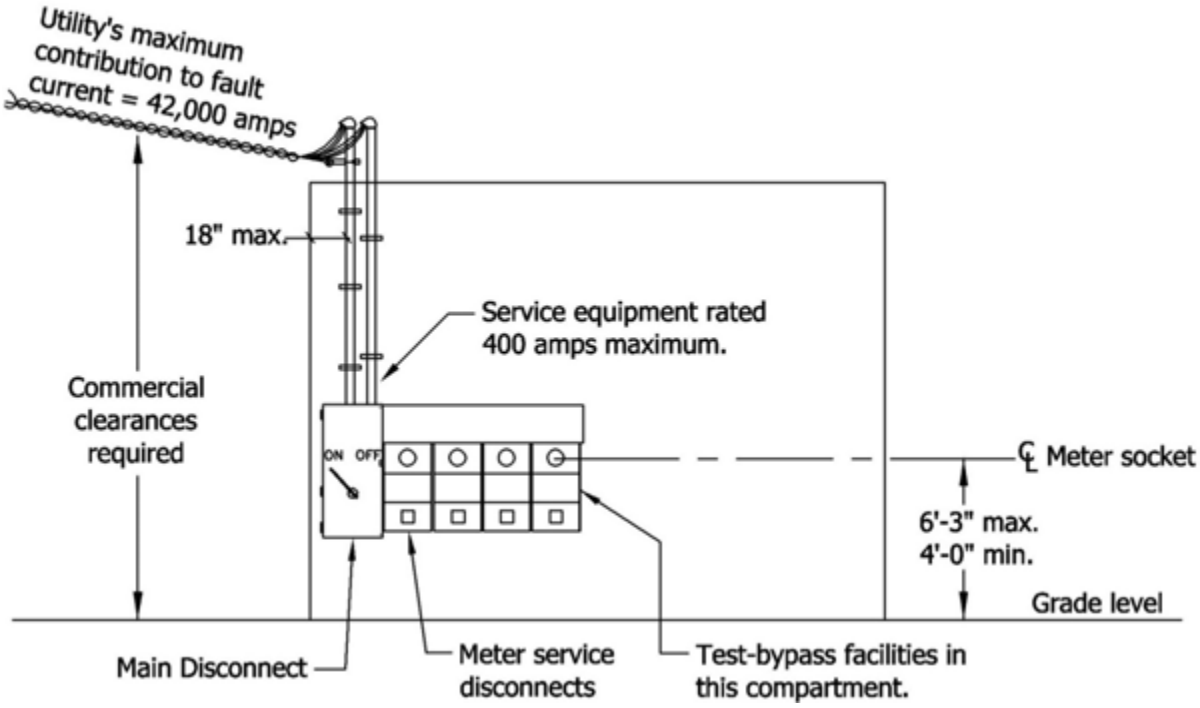

Conclusion:

Utility contribution to fault current will not exceed the values shown on page SG 006.2 Table 2 and are based on the service ampacity. Commercial clearances apply per G.O. 95.

Notes:

1. Electrician shall provide equipment rated for the fault current of the system.
2. A main disconnect is required ahead of 7 or more meter service disconnects.
3. Factory-installed test-bypass facilities are required for 100 and 200 amp commercial/industrial service equipment.

© 1998-2017 San Diego Gas & Electric Company. All rights reserved. Removal of this copyright notice without permission is not permitted under law.

REV	CHANGE	BY	DSGN	APPV	DATE	REV	CHANGE	BY	DSGN	APPV	DATE
A	Editorial Changes	LSM	BRB	TPM	11/01/17	D					
B						E					
C						F					

EXAMPLE 7

Application: Applies to temporary service – overhead or underground to serve residential and commercial/industrial premises with a 200 amp maximum, single-phase or three-phase service.

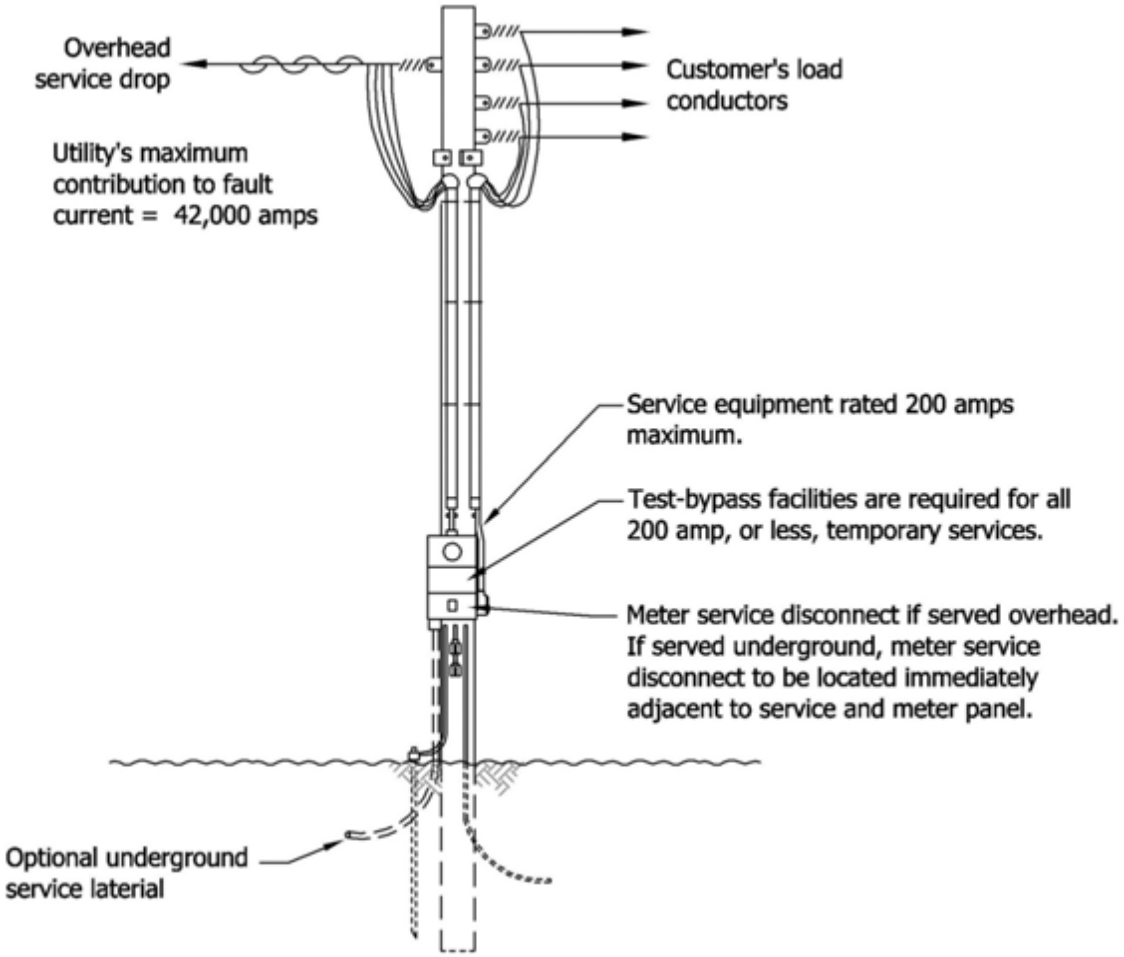

Conclusion:

Utility contribution to fault current will not exceed the values shown on page SG 006.2 Table 2 and are based on the service ampacity. Commercial clearances apply per G.O. 95.

Notes:

1. Electrician shall provide equipment rated for the fault current of the system.
2. Factory-installed test-bypass facilities are required for 100 and 200 amp commercial/industrial service equipment.

© 1998-2017 San Diego Gas & Electric Company. All rights reserved. Removal of this copyright notice without permission is not permitted under law.

REV	CHANGE	BY	DSGN	APPV	DATE	REV	CHANGE	BY	DSGN	APPV	DATE
A	Editorial Changes	LSM	BRB	TPM	11/01/17	D					
B						E					
C						F					

SCOPE: THIS SECTION OF THE SERVICE GUIDE COVERS TRANSFORMER VAULTS.

INSTALLATION: NONE

BILL OF MATERIALS: NONE

NOTES:

I. ALL REQUESTS FOR VAULT DESIGN MUST BE REVIEWED AND APPROVED BY SDG&E (UTILITY) DURING THE ARCHITECTURAL DESIGN PHASE OF THE PROJECT. A MEETING WITH UTILITY REPRESENTATIVES IS BENEFICIAL TO ALL PARTIES EARLY IN THE DESIGN PHASE TO ENSURE PROPER COMPLIANCE WITH VAULT STANDARDS. THE MAIN ELEMENTS THAT WILL BE REVIEWED DURING THE MEETING INCLUDE THE FOLLOWING:
   a. ACCESS FOR TRANSFORMER INSTALLATION AND MAINTENANCE.
   b. ACCESS TO INSTALL AND MAINTAIN THE SERVICE LATERAL CONDUCTORS.
   c. OTHER REQUIREMENTS APPLICABLE TO VAULT INSTALLATIONS SUCH AS POWER VENTILATION, LIGHTING, PERSONNEL ACCESS, ETC.

II. THE FOLLOWING GENERAL INFORMATION HAS BEEN COMPILED AS A GUIDE FOR A TYPICAL INSTALLAION OF UTILITY DISTRIBUTION FACILITIES IN A CUSTOMER-OWNED VAULT. THE INFORMATION IS TO BE USED ONLY AS A GUIDELINE AND NOT FOR THE DESIGN OR CONSTRUCTION OF THE VAULT, OR INSTALLATION OF ELECTRICAL EQUIPMENT.

III. THE DIMENSIONS WILL VARY IN SIZE DEPENDING UPON THE BUS AMPACITY OF THE CUSTOMER SERVICE ENTRANCE EQUIPMENT, SERVING VOLTAGE AND SIZE OF THE TRANSFORMER TO BE INSTALLED BY SDG&E. A TYPICAL VAULT SIZE COULD RANGE ANYWHERE FROM 13'-6" X 9'-6" X 8'-0" HIGH (FOR A 400 AMP SERVICE) TO 20'-0" X 16'-6" X 12'-0" HIGH (FOR A 4,000 AMP SERVICE) PROVIDED NO EQUIPMENT OTHER THAN THE TRANSFORMER IS REQUIRED IN THE VAULT.

IV. VAULT INSTALLATIONS MUST BE IN COMPLIANCE WITH ALL APPLICABLE RULES OF THE ELECTRICAL SAFETY ORDERS OF THE DIVISION OF INDUSTRIAL SAFETY, DEPARTMENT OF INDUSTRY RELATIONS, STATE OF CALIFORNIA, NATIONAL ELECTRICAL CODE, OTHER GOVERNING CODES AND ORDINANCES, AND COMPLY WITH REQUIREMENTS OF THE UTILITY.

V. **CUSTOMER SHALL FURNISH, INSTALL, OWN & MAINTAIN:**
   a. VAULT:
      i. THE WALLS AND ROOF SHALL BE CONSTRUCTED OF 6" MINIMUM REINFORCED CONCRETE, REINFORCED CONCRETE BLOCK, OR 8" MINIMUM REINFORCED BRICK. ALL CONCRETE BLOCK OR BRICK JOINTS ARE TO BE MORTARED SOLID. A 6" THRESHOLD FOR OIL RETENTION IS REQUIRED AT ALL ACCESS OPENINGS INTO THE VAULT. THE VAULT FLOOR IS TO BE CAPABLE OF SUPPORTING COMBINED EQUIPMENT WEIGHT AS REQUIRED.
      ii. WHEREVER A VAULT IS CONSTRUCTED OVER SUB LEVELS OF A STRUCTURE, THE CUSTOMER IS TO PROVIDE SDG&E WITH A CERTIFICATE FROM A REGISTERED CIVIL ENGINEER VERIFYING THE STRUCTURAL ADEQUACY OF THE BUILDING TO SUPPORT THE TRANSFORMERS UNDER NORMAL AND STRUCTURAL FIRE CONDITIONS AS WELL AS FIRE WITHSTANDING CAPABILITIES OF THE STRUCTURE FLOOR, CEILING, AND WALLS.
      iii. ANY VAULT CONSTRUCTION BELOW FINISHED GRADE IS TO BE CONSIDERED A DRY VAULT. THE EXTERIOR SURFACES OF A DRY VAULT WHICH ARE EXPOSED TO SURROUNDING EARTH CONDITIONS WILL BE MOISTURE-PROOFED AGAINST WATER ENTRY. A VAULT MUST BE CONNECTED TO THE BUILDING OR STRUCTURE WITH A MAIN DOOR FOR ENTRANCE AND EXIT.
      iv. NO DUCTS, PIPES, OR CONDUITS, EXCEPT THOSE WHICH ARE PART OF THE ELECTRICAL INSTALLATION, SHALL BE INSTALLED IN OR THROUGH THE VAULT. WATER-TYPE FIRE SPRINKLER SYSTEMS ARE PROHIBITED IN ANY VAULT. CUSTOMER MUST INFORM THE UTILITY WHEN ANY PRE-STRESSED CONCRETE PORTIONS OF A VAULT ARE PROPOSED FOR CONSTRUCTION.
   b. CONDUIT & BUS DUCT:
      i. PRIMARY CONDUITS SHALL BE EITHER DIRECT-BURIED OR CONCRETE-ENCASED AS SPECIFIED BY SDG&E.
      ii. THERE ARE NO RESTRICTIONS ON THE APPLICATION OF CUSTOMER-SUPPLIED BUS DUCT. ANY SIZE PANEL MAY BE FED BY BUS DUCT, AT THE OPTION OF THE CUSTOMER. THE ONLY EXCEPTION IS BUS DUCT CANNOT BE APPLIED IN CASES WHERE MORE THAN ONE SERVICE POINT WILL BE SERVED BY A SINGLE TRANSFORMER.
      iii. CUSTOMERS MAY ELECT THE OPTION OF HAVING THE UTILITY INSTALL AND MAINTAIN SERVICE LATERAL CONDUCTORS, REGARDLESS OF BOARD SIZE, GIVEN THE REQUIRED CRITERIA ARE MET TO THE SATISFACTION OF THE UTILITY.
      iv. THE TRANSFORMER TO THE TERMINATING ENCLOSURE DISTANCE IS LIMITED TO 75 CONDUIT FEET, WHICH INCLUDES THE ELBOWS.

TABLE OF CONTENTS

© 1998 - 2023 San Diego Gas & Electric Company. All rights reserved. Removal of this copyright notice without permission is not permitted under law.

REV	CHANGE	DR	BY	DSN	APV	DATE	REV	CHANGE	DR	BY	DSN	APV	DATE
C							F						
B	EDITORIAL CHANGES	ARC	IPJ	IPJ	KRG	12/06/22	E						
A	EDITORIAL CHANGES	--	LSM	LSM	TPM	11/01/17	D						

	X	Indicates Latest Revision		Completely Revised		New Page		Information Removed	

NOTES (CONT'D):

c. CUSTOMER'S METERING FACILITIES:
   i. SERVICE EQUIPMENT IS TO BE INSTALLED IN ACCORDANCE WITH SDG&E'S SERVICE STANDARDS & GUIDE. METERS AND SERVICE EQUIPMENT ARE NOT PERMITTED IN THE VAULT.

d. DRAINAGE SYSTEM:
   i. STANDARD FLOOR DRAINS MUST DRAIN TO DRY SUMP LOCATION AS DETERMINED AND APPROVED BY THE APPROPRIATE INSPECTION AUTHORITY. FLOOR DRAINS ARE NOT TO BE CONNECTED TO THE SEWER OR DRAIN SYSTEM.

e. EQUIPMENT OPENINGS:
   i. BELOW GRADE: WHEN THE EQUIPMENT OPENING IS TO BE THROUGH A VAULT CEILING, THE CUSTOMER SHALL PROVIDE A REMOVABLE 3-HOUR FIRE APPROVED CONCRETE COVER. BOTH OPENING AND COVER SHALL HAVE MATCHING BEVELED EDGES, WITH MINIMUM ½" VERTICAL DEFLECTION. FOUR LIFTING INSERTS ARE TO BE PROVIDED FOR REMOVAL OF THE COVER. LIFTING INSERTS ARE TO BE 1" MINIMUM COIL, WITH SLOTTED SETTING STUDS, AS SUPPLIED BY A PROFESSIONAL CONCRETE ACCESSARY PRODUCTS COMPANY. THE EQUIPMENT OPENING INSIDE AND OUT MUST BE KEPT CLEAR AND UNOBSTRUCTED BY CUSTOMER-INSTALLED EQUIPMENT. PROPER CLEARANCE FOR OPERATION OF HEAVY EQUIPMENT, INCLUDING CRANES, MUST BE PROVIDED ABOVE THE OPENING FOR INSTALLATION AND REMOVAL OF MATERIAL AND EQUIPMENT IN AND OUT OF THE VAULT. CONTACT THE UTILITY FOR REQUIRED CLEARANCES. CUSTOMER SHALL SEAL THE COVER TO PREVENT WATER ENTRY FOLLOWING INSTALLATION OF EQUIPMENT.
   ii. ON GRADE: EQUIPMENT OPENING IS TO BE THROUGH AN EXTERIOR VAULT WALL, AND THE EQUIPMENT DOOR IS TO BE 3-HOUR FIRE APPROVED. CUSTOMER IS TO PROVIDE AND INSTALL A SCHLAGE VTQP QUAD SECTION MA SERIES KEY SECTION IN A STOREROOM FUNCTION (SELF-LOCKING) RHODES SERIES LOCKSET. SDG&E WILL REPLACE THE MA SERIES CYLINDER WITH AN ELECTRIC SERIES CYLINDER PRIOR TO ENERGIZING EQUIPMENT IN THE VAULT. THE CUSTOMER IS REQUIRED TO NOTIFY SDG&E'S INSPECTOR WHEN THE LOCKSET IS INSTALLED. THE UTILITY WILL REPLACE THE MA SERIES CYLINDER PRIOR TO ENERGIZING THE SERVICE. A PERMANENT 6' CLEAR AND LEVEL WORKING AREA IS REQUIRED AT THE VAULT FLOOR LEVEL OUTSIDE THE ACCESS DOOR. DOOR SHALL PROVIDE 24-HOUR DIRECT ACCESS FOR UTILITY PERSONNEL.

f. GROUNDING SYSTEM:
   i. A GROUNDING GRID WILL BE REQUIRED WITHIN THE VAULT, AND THE REQUIREMENTS WILL BE SPECIFIED ON THE DRAWINGS PROVIDED BY SDG&E.

g. LIGHTING:
   i. THE VAULT IS TO BE ILLUMINATED. THE VENTILATION BLOWER MOTOR AND VAULT LIGHTING SYSTEM ARE TO BE SEPARATELY PROTECTED.

h. PERSONNEL ACCESS DOOR:
   i. A MINIMUM 3' WIDE X 6'-8" HIGH 3-HOUR FIRE RATED SELF-CLOSING PERSONNEL ACCESS DOOR IS REQUIRED. REFER TO THE SDG&E ELECTRIC VAULT REQUIREMENTS AND SPECIFICATIONS DOCUMENT.
   ii. ACCESS MUST BE THROUGH A DOOR ON AN EXTERIOR WALL OF THE BUILDING TO PROVIDE IMMEDIATE 24-HOUR-A-DAY ACCESS. THE DOOR MUST SWING OUT OF THE ROOM IN THE DIRECTION OF EGRESS, AND IT MUST BE EQUIPPED WITH PANIC HARDWARE. IF THE DOOR IS TO BE LOCKED DURING CONSTRUCTION AND PRIOR TO ENERGIZING ELECTRICAL EQUIPMENT IN THE VAULT, THE CUSTOMER IS REQUIRED TO PROVIDE AND INSTALL A SCHLAGE VTQP QAD SECTION MA SERIES KEY SECTION IN A STOREROOM FUNCTION (SELF-LOCKING) RHODES SERIES LOCKSET. THE CUSTOMER IS REQUIRED TO NOTIFY SDG&E'S INSPECTOR WHEN THE LOCKSET IS INSTALLED. SDG&E WILL REPLACE THE MA SERIES CYLINDER WITH AN ELECTRIC SERIES CYLINDER PRIOR TO ENERGIZING EQUIPMENT IN THE VAULT.
   iii. THE DOOR THRESHOLD IS TO BE 6" ABOVE THE VAULT FLOOR FOR OIL RETENTION.
   iv. THE CUSTOMER SHALL PROVIDE SDG&E WITH AN APPROVED ROUTE AND ACCESS EASEMENT TO THE PERSONNEL ACCESS DOOR IN THE VAULT. THE DOOR SHALL PROVIDE 24-HOUR ACCESS FOR UTILITY PERSONNEL.

i. PICK UP INSERTS & PULLING EYES:
   i. PICK UP INSERTS AND PULLING EYES ARE REQUIRED FOR INSTALLATION OF THE TRANSFORMER, AND THE PULLING AND TRAINING OF THE CABLES.

j. VENTILATION SYSTEMS:
   i. A CUSTOMER SHALL PROVIDE FOR ADEQUATE VENTILATION, ALL VENTS OR DUCTING, AND RELATED FACILITIES AS REQUIRED BY SDG&E.
   ii. INSTALLATION IS TO COMPLY WITH ALL LOCAL CODES AND ORDINANCES.
   iii. FIRE DAMPERS MAY BE REQUIRED BY THE APPROPIRATE INSPECTION AUTHORITY.
   iv. WHEN TRANSFORMER VAULTS ARE IMPROPERLY CONSTRUCTED BECAUSE THE UTILITY WAS NOT CONTACTED IN ADVANCE, THE CUSTOMER WILL BE RESPONSIBLE FOR ALL MODIFICATIONS.

TABLE OF CONTENTS

© 1998 - 2023 San Diego Gas & Electric Company. All rights reserved. Removal of this copyright notice without permission is not permitted under law.

REV	CHANGE	DR	BY	DSN	APV	DATE	REV	CHANGE	DR	BY	DSN	APV	DATE
C							F						
B	EDITORIAL CHANGES	ARC	IPJ	IPJ	KRG	12/06/22	E						
A	EDITORIAL CHANGES	--	LSM	LSM	TPM	11/01/17	D						

X	Indicates Latest Revision		Completely Revised		New Page		Information Removed

NOTES (CONT'D):

VI. **SDG&E WILL FURNISH, INSTALL, OWN & MAINTAIN:**

a. TRANSFORMERS
b. PRIMARY DISTRIBUTION CABLE AND EQUIPMENT
c. SERVICE LATERAL CONDUCTORS (IN CUSTOMER'S CONDUIT) FROM THE TRANSFORMER SECONDARY TERMINALS TO THE CUSTOMER'S TERMINATING ENCLOSURE (UNDERGROUND PULL SECTION)
d. SERVICE LATERAL CONDUCTORS FROM THE TRANSFORMER SECONDARY TERMINALS TO THE BUS STUBS WHERE THE CUSTOMER PROVIDES A BUS DUCT SERVICE.

REFERENCE: NONE

TABLE OF CONTENTS

© 1998 - 2023 San Diego Gas & Electric Company. All rights reserved. Removal of this copyright notice without permission is not permitted under law.

REV	CHANGE	DR	BY	DSN	APV	DATE	REV	CHANGE	DR	BY	DSN	APV	DATE
C							F						
B	EDITORIAL CHANGES	ARC	IPJ	IPJ	KRG	12/06/22	E						
A	EDITORIAL CHANGES	--	LSM	LSM	TPM	11/01/17	D						

	X Indicates Latest Revision	Completely Revised	New Page	Information Removed
SHEET 3 OF 3	SDG&E ELECTRIC SERVICE STANDARDS & GUIDES			SG009.3
	TRANSFORMER VAULTS			

SCOPE: This standard outlines the SDG&E (Utility) requirement for third-party testing of metal-enclosed service entrance and unmetered feeder busways.

The Utility requires the inspection and testing of metal-enclosed "service entrance and unmetered feeder busways" in accordance with the latest edition of the International Electrical Testing Association, Inc. (NETA), Acceptance Testing Specifications for Electric Power Distribution Equipment and Systems as follows:

3. Qualifications of Testing Organization and Personnel

3.1 Testing Organization – as published. Note: A testing organization that does not have a "Full Membership" in NETA but meets all other requirements of section 3.1 and 3.2, and tests in compliance with NETA specifications noted below, may be allowed to perform the testing if acceptable to the Authority Having Jurisdiction (AHJ) and the Utility.

3.2 Testing Personnel – as published

7.4 Metal-Enclosed Busways

7.4.1 Visual and Mechanical Inspection – as published

7.4.2 Electrical Tests – as published

7.4.3 Test Values – as published

The installer of the system shall provide a written test report to the AHJ and the Utility's Inspector A. The AHJ will not release an inspection clearance to the Utility, nor will the Utility energize its transformer and the service until receipt, review, and acceptance of the written test report.

© 1998-2017 San Diego Gas & Electric Company. All rights reserved. Removal of this copyright notice without permission is not permitted under law.

REV	CHANGE	BY	DSGN	APPV	DATE	REV	CHANGE	BY	DSGN	APPV	DATE
A	Editorial Changes	LSM	IPJ	TPM	11/01/17	D					
B						E					
C						F					

X	Indicates Latest Revision		Completely Revised		New Page		Information Removed

SDG&E SERVICE STANDARDS & GUIDE

SHEET 1 OF 1

TESTING REQUIREMENTS FOR METAL-ENCLOSED SERVICE ENTRANCE & UNMETERED FEEDER BUSWAYS

SG 010

SCOPE: THIS SECTION ADDRESSES THE ELECTRIC SERVICE POLICES FOR NEW AND EXISTING CUSTOMERS.

INSTALLATION: NONE

BILL OF MATERIALS: NONE

NOTES:

I. SDG&E (UTILITY) WILL NOT NORMALLY PROVIDE MORE THAN ONE ELECTRIC SERVICE EXTENSION FOR ANY ONE BUILDING OR GROUP OF BUILDINGS, FOR A SINGLE ENTERPRISE ON A SINGLE PREMISE, EXCEPT:

- **TARRIF SCHEDULES** - WHERE OTHERWISE ALLOWED OR REQUIRED UNDER THE UTILITY'S TARIFF SCHEDULES, OR
- **UTILITY CONVENIENCE** – AT THE OPTION OF, AND AS DETERMINED BY THE UTILITY, FOR ITS OPERATING CONVENIENCE, CONSISTENT WITH ITS ENGINEERING DESIGN FOR DIFFERENT VOLTAGE AND PHASE CLASSIFICATION, OR WHEN REPLACING AN EXISTING SERVICE, OR
- **ORDINANCE** – WHERE REQUIRED BY ORDINANCE OR OTHER APPLICABLE LAW, FOR SUCH THINGS AS FIRE PUMPS, FIRE ALARM SYSTEMS, ETC.

II. **GENERAL INFORMATION**

a. SERVICE DELIVERY POINT POLICY – NEW UNDERGROUND ELECTRIC SERVICE INSTALLATIONS SHALL COMPLY WITH THE UTILITY'S SERVICE DELIVERY POINT POLICY.

DEFINITIONS

- PRACTICABLE: IN REFERENCE TO THE SERVICE DELIVERY POINT, PRACTICABLE IS DEFINED AS ANY BUILDING SURFACE, OTHER THAN THE BUILDING ENTRANCE (DOORS), GLASS WALLS, OR WINDOWS, WHICH IS ACCESSIBLE. DECORATIVE WALLS WILL BE CONSIDERED AS A PRACTICABLE LOCATION FOR THE PURPOSE OF LOCATING SERVICE TERMINATING ENCLOSURES.
- ACCESSIBLE: IN REFERENCE TO TERMINATING ENCLOSURES, ACCESSIBLE IS DEFINED AS BEING READILY AND PERMANENTLY LOCATED ON OR RECESSED IN AN EXTERIOR WALL OF THE BUILDING SERVED, FACING OUTWARD.

b. NOTE – A TERMINATING ENCLOSURE SHALL BE PERMANENTLY ACCESSIBLE WITHOUT ENTERING THE BUILDING, SHALL NO PROJECT INTO ANY DRIVEWAY, WALK OR PUBLIC WAY, AND SHALL PROVIDE ACCESS AND WORKING SPACE IN COMPLIANCE WITH ALL SERVICE STANDARDS & GUIDE REQUIREMENTS. BY SPECIAL PERMISSION, THE TERMINATING ENCLOSURE MAY BE INSTALLED IN AN ELECTRIC METER ROOM OR IN A PARKING STRUCTURE WHEN APPROVED BY THE UTILITY AND INSTALLED PER THE UTILITY'S APPLICABLE STANDARDS. REFERENCE PAGES SG 506.1 – 506.4 FOR ELECTRIC METER ROOM STANDARDS AND PAGES SG 016.1 – 016.2 FOR PULLING DEVICES FOR INSTALLATION OF SERVICE LATERAL CONDUCTORS IN PARKING STRUCTURES.

III. **GENERAL REQUIREMENTS**

a. ONE SERVICE DELIVERY POINT WILL NORMALLY BE ESTABLISHED AS NEAR AS PRACTICABLE TO THE CLOSEST CORNER OF THE BUILDING WALL WHICH IS ACCESSIBLE, WITH A MINIMUM LENGTH OF SERVICE LATERAL CONDUCTORS FROM THE UTILITY'S SOURCE. AESTHETICS WILL NOT BE CONSIDERED WHEN DETERMINING THE SERVICE DELIVERY POINT.

i. ALL UTILITY METERS AND ASSOCIATED METERING EQUIPMENT SHALL BE LOCATED AT SOME PROTECTED LOCATION ON APPLICANT'S PREMISES AS APPROVED BY THE UTILITY.

ii. IN A BUILDING WITH TWO OR MORE TENANTS, OR WHERE THE UTILITY FURNISHES MORE THAN ONE METERE ON THE SAME PREMISES, UTILITY'S METERS NORMALLY SHALL BE GROUPED AT ONE CENTRAL LOCATION.

iii. MORE THAN ONE GROUP OF METERS MAY BE ESTABLISHED WHERE ACCEPTABLE TO THE UTILITY, PROVIDED THE APPLICANT INSTALLS, OWNS, AND MAINTAINS THE SERVICE ENTRANCE CONDUIT(S) AND CONDUCTORS FROM THE SERVICE DELIVERY POINT (TERMINATING ENCLOSURE) TO EACH METER LOCATION IN COMPLIANCE WITH THE UTILITY'S REQUIREMENTS AND RECEIVES PRIOR APPROVAL FROM THE GOVERNMENTAL AUTHORITY HAVING JURISDICTION (AHJ).

iv. FOR SINGLE- AND MULTI-FAMILY RESIDENTIAL BUILDINGS, AND SINGLE- AND MULTI-OCCUPANCY COMMERCIAL AND INDUSTRIAL BUILDINGS, METERS MAY BE INSTALLED:

1. OUTDOOR-MOUNTED ON OR RECESSED IN AN EXTERIOR BUILDING WALL.
2. IN AN APPROVED METER ROOM. REFERENCE PAGES SG 506.1 – 506.4.
3. METER LOCATIONS ARE NOT REQUIRED TO BE AT OR NEAR THE SERVICE DELIVERY POINT, BUT ARE TO BE LOCATED IN ACCORDANCE WITH THE UTILITY'S RULES AND SERVICE STANDARDS. REFERENCE PAGES SG 510.1 – 510.5 FOR ELECTRICAL METERING IN MID- AND HIGH-RISE BUILDINGS.

TABLE OF CONTENTS

© 1998 - 2023 San Diego Gas & Electric Company. All rights reserved. Removal of this copyright notice without permission is not permitted under law.

REV	CHANGE	DR	BY	DSN	APV	DATE	REV	CHANGE	DR	BY	DSN	APV	DATE
C							F						
B	EDITORIAL CHANGES	ARC	IPJ	IPJ	KRG	03/10/23	E						
A	EDITORIAL CHANGES	--	LSM	LSM	TPM	11/01/17	D						

X	Indicates Latest Revision		Completely Revised		New Page		Information Removed

NOTES (CONT'D):

b. TWO SERVICE DELIVERY POINTS TO A SINGLE BUILDING OR PREMISES MAY BE ESTABLISHED AT THE UTILITY'S OPTION IF ALL OF THE FOLLOWING REQURIEMENTS ARE MET:
   i. ALL ELECTRIC SERVICE POLICIES FOR NEW PROJECTS & EXISTING CUSTOMERS AS OUTLINED IN THIS STANDARD ARE MET; AND
   ii. METERS ARE GROUPED AT OR NEAR EACH SERVICE DELIVERY POINT OR AT A LOCATION APPROVED BY THE UTILITY; AND
   iii. THE APPROPRIATE AHJ APPROVES THE INSTALLATION.

IV. **ALTERNATE SERVICE DELIVERY POINT REQUESTS**

a. AN APPLICANT MAY REQUEST AN ALTERNATE SERVICE DELIVERY POINT THAT IS NOT NECESSARILY THE CORNER OF THE BUILDING WALL CLOSEST TO THE UTILITY'S UNDERGROUND OR OVERHEAD SOURCE. THE REQUEST MAY BE APPROVED PROVIDED THE REQUESTED LOCATION IS ACCEPTABLE TO THE UTILITY'S PROJECT PLANNER, AND THE APPLICANT AGREES TO PAY FOR THE ADDITIONAL FACILITIES REQUIRED PER THE PROVISIONS OF RULE 2, I. SPECIAL FACILITIES AND MAINTENANCE. CONSULT WITH THE UTILITY'S PROJECT PLANNER FOR APPROVAL OF AN ALTERNATE SERVICE DELIVERY POINT IN THE PROJECT'S DESIGN PHASE TO AVOID PROJECT DELAYS AND TO OBTAIN COST INFORMATION.

V. **SERVICE LOCATIONS**

a. THE SERVICE DELIVERY POINT MUST BE CONFIRMED IN WRITING BY THE UTILITY'S PROJECT PLANNER. IT IS IMPORTANT TO CONTACT THE UTILITY'S DESIGN & PROJECT MANAGEMENT REGIONAL OFFICE (SEE LISTING ON PAGE SG 2) AND REQUREST AN ELECTRIC METER & SERVICE LOCATION FORM FOR THE FOLLOWING:
   i. A NEW SERVICE CONNECTION IS BEING CONSIDERED FOR ANY TYPE OF PROJECT.
   ii. ADDITIONS, ALTERATIONS, RENEWALS, OR A CHANGE IN THE ELECTRIC SERVICE DELIVERY POINT LOCATION IS BEING PROPOSED TO AN EXISTING SERVICE. THIS INCLUDES, BUT IS NOT LIMITED TO, REPLACEMENT OF CUSTOMER-OWNED SERVICE ENTRANCE CONDUITS, CONDUCTORS, SERVICE EQUIPMENT, OR METERING ENCLOSURES.

VI. **RIGHTS OF WAY**

a. THE UTILITY WILL OWN, OPERATE, AND MAINTAIN DISTRIBUTION LINE EXTENSION FACILITIES ONLY AS FOLLOWS:
   i. ALONG PUBLIC STREETS, ALLEYS, ROADS, HIGHWAYS, AND OTHER PUBLICLY DEDICATED WAYS AND PLACES WHICH THE UTILITY HAS THE LEGAL RIGHT TO OCCUPY (FRANCHISE AREAS); AND
   ii. ON PUBLIC LANDS AND PRIVATE PROPERTY ACROSS WHICH RIGHTS OF WAY AND PERMITS SATISFACTORY TO THE UTILITY MAY BE OBTAINED WITHOUT COST TO OR CONDEMNATION BY THE UTILITY.

b. THE CUSTOMER IS RESPONSIBLE FOR PROVIDING A CLEAR ROUTE, FREE OF OBSTRUCTIONS, WHICH WOULD INHIBIT THE CONSTRUCTION OF EITHER UNDERGROUND OR OVERHEAD SERVICE EXTENSIONS ON THEIR PROPERTY.

c. THE UTILITY CANNOT BE RESPONSIBLE FOR CORRECTING ANY PORTION OF THE CUSTOMER'S SERVICE INSTALLATION NECESSITATED BY THE CUSTOMER'S OR THEIR CONTRACTOR'S DJEVIATION FROM THE UTILITY'S SERVICE STANDARD & GUIDE REQUIREMENTS, OR WHERE THE SERVICE EQUIPMENT LOCATION WAS ASSUMED AND CONFLICTS WITH THE LOCATION APPROVED BY THE UTILITY'S PROJECT PLANNER.

d. A SERVICE LOCATION DOES NOT CONSTITUTE AN "APPLICATION FOR SERVICE." SEE PAGE SG 004.3 FOR "APPLICATION FOR A BILLING ACCOUNT" INFORMATION. ENSURING AN APPLICATION FOR SERVICE HAS BEEN MADE FOR THE BILLING ACCOUNT CAN HELP AVOID DELAYS IN ESTABLISHING NEW ELECTRIC SERVICE.

VII. **SECONDARY SERVING VOLTAGES & CLASSIFICATION OF SERVICE INFORMATION**

a. THE FOLLOWING ARE THE UTILITY'S STANDARD SECONDARY SERVING VOLTAGES:
   i. SINGLE-PHASE – 120/240, 120/208, AND 240/480 (FOR HIGHWAY LIGHTING) VOLTS
   ii. THREE-PHASE DELTA SERVING VOLTAGES – 120/240 AND 480 (CONER-GROUNDED) VOLTS
   iii. THREE-PHASE WYE SERVING VOLTAGES - 208Y/120 AND 480Y/277 VOLTS
   iv. A DIFFERENT CLASS OF SERVICE SHALL BE CONSIDERED TWO SERVICES WITH EACH HAVING A DIFFERENT "PHASE-TO-NEUTRAL" OR "PHASE-TO-GROUND" VOLTAGE

b. THE FOLLOWING THREE-PHASE VOLTAGES ARE CONSIDERED DIFFERENT CLASSES OF SERVICE BY THE UTILITY:
   i. 208Y/120 OR 120/240 VOLTS
   ii. 480 (CONER-GROUNDED) VOLTS
   iii. 480Y/277 VOLTS

c. NOTE: "SINGLE-PHASE 120/208 VOLTS AND THREE-PHASE 208Y/120 VOLTS" ARE THE SAME CLASS OF SERVICE AND ARE NOT CONSIDERED BY THE UTILITY AS A DIFFERENT CLASS OF SERVICE THAN "SINGLE-PHASE OR THREE-PHASE 120/240 VOLTS." THIS IS BECAUSE THE PHASE-TO-NEUTRAL VOLTAGE IS THE SAME FOR ALL OF THEM (120 VOLTS).

REFERENCE: NONE

© 1998 - 2023 San Diego Gas & Electric Company. All rights reserved. Removal of this copyright notice without permission is not permitted under law.

REV	CHANGE	DR	BY	DSN	APV	DATE	REV	CHANGE	DR	BY	DSN	APV	DATE
C							F						
B	EDITORIAL CHANGES	ARC	IPJ	IPJ	KRG	03/10/23	E						
A	EDITORIAL CHANGES	--	LSM	LSM	TPM	11/01/17	D						

X	Indicates Latest Revision		Completely Revised		New Page		Information Removed

© 1998 - 2023 San Diego Gas & Electric Company. All rights reserved. Removal of this copyright notice without permission is not permitted under law.

SCOPE: THE FOLLOWING INFORMATION IS INTENDED TO PROVIDE GUIDANCE TO DEVELOPERS, ARCHITECTS, ENGINEERS, ELECTRICAL CONTRACTORS, AND CONSULTANTS PLANNING CUSTOMERS' NEW ELECTRICAL SERVICE NEEDS.

INSTALLATION: NONE

BILL OF MATERIALS: NONE

NOTES:

I. **GENERAL SERVICE REQUIREMENT TO MULTIPLE MULTI-UNIT BUILDINGS ON A SINGLE PREMISES**
   a. FOR PREMISES HAVING MORE THAN ONE MULTI-UNIT BUILDING ON THEM, A SEPARATE SDG&E SERVICE IS REQUIRED TO SERVE ANY BUILDINGS HAVING MORE THAN 6 UNITS, OR MORE THAN 5 UNITS AND A HOUSE METER. BOTH RESIDENTIAL AND NON-RESIDENTIAL APPLICATIONS ARE SUBJECT TO THIS REQUIREMENT.

II. **MULTI-FAMILY RESIDENTIAL BUILDINGS – LESS THAN 3 STORIES HIGH**
   a. ONE SERVICE PER BUILDING WILL BE GRANTED, UNLESS THE DISTANCE BETWEEN SERVICE POINTS AND METER LOCATIONS IS 300', OR GREATER. IF THE SERVICE SIZE EXCEEDS 4,000 AMPS AND A SECOND SERVICE OF THE SAME CLASS IS REQUIRED, THE SERVICE POINTS WILL BE GROUPED AT ONE LOCATION UNLESS THE DISTANCE BETWEEN SERVICE POINTS IS 300', OR GREATER. A SEPARATE SERVICE OF A DIFFERENT CLASS, NORMALLY 480Y/277-VOLTS FOR SERVING HOUSE LOADS, MAY BE GRANTED AND GROUPED WITH THE SERVICE(S) FOR THE MULTI-FAMILY DWELLING UNITS OR LOCATED AT A MORE CONVENIENT LOCATION ACCEPTABLE TO SDG&E'S (UTILITY'S) PROJECT PLANNER BASED ON THE DESIGN OF THE CUSTOMER'S ELECTRICAL SYSTEM AND THE UTILITY'S SERVICE DELIVERY POINT POLICY, AND WITH APPROVAL FROM THE GOVERNMENTAL AUTHORITY HAVING JURISDICTION (AHJ). THERE IS NO MINIMUM DISTANCE REQUIRED BETWEEN SERVICES OF A DIFFERENT CLASS. RULE 16 WILL APPLY, AND THE RULE 15 RESIDENTIAL AND NON-RESIDENTIAL ALLOWANCES WILL BE APPLIED TO THE COST OF ALL SERVICES MEETING THE CRITERIA ABOVE.

III. **RESIDENTIAL OR MIXED USE BUIDLINGS – 3 STORIES OR GREATER**
   a. THE CUSTOMER MAY RECEIVE AS MANY 3-PHASE, 208Y/120-VOLBSERVICES AS REQUIRED, NORMALLY GROUPED AT ONE LOCATION, TO SERVE THE DWELLING UNITS THAT MUST BE INDIVIDUALLY METERED BY THE UTILITY. THE PLANNER MAY APPROVE MORE THAN ONE SERVICE POINT AND METER LOCATION FOR SERVICES OF THE SAME CLASS IF THE DISTANCE BETWEEN THEM IS 300', OR GREATER, OR WHEN IT IS IN THE BEST INTEREST OF THE UTILITY TO PROVIDE MULTIPLE SERVICE POINTS AND METER LOCATIONS. A SEPARATE SERVICE OF A DIFFERENT CLASS, NORMALLY 480Y/277-VOLTS, MAY BE GRANTED FOR HOUSE LOADS AND MAY BE GROUPED WITH THE SERVICE(S) FOR THE MULTI-FAMILY DWELLING UNITS OR LOCATED AT A MORE CONVENIENT LOCATION ACCEPTABLE TO THE PROJECT PLANNER BASED ON THE DESIGN OF THE CUSTOMER'S ELECTRICAL SYSTEM AND THE UTILITY'S SERVICE DELIVERY POINT POLICY, AND WITH APPROVAL FROM THE AHJ. THERE IS NO MINIMUM DISTANCE REQUIRED BETWEEN SERVICES OF A DIFFERENT CLASS. RULE 16 WILL APPLY AND THE RULE 15 RESIDENTIAL AND NON-RESIDENTIAL ALLOWANCES WILL BE APPLIED TO THE COST OF ALL SERVICES MEETING THE CRITERIA ABOVE.

IV. **RESIDENTIAL OR CONTIGUOUS DWELLINGS – TOWNHOUSES (ROW HOMES)**
   a. EACH INDIVIDUAL TOWNHOUSE OR DUPLEX LOCATED ON A PARCEL OF LAND BOUNDED BY LEGAL PROPERTY LINES MUST BE PROVIDED WITH AN INDIVIDUAL ELECTRIC SERVICE AND METER(S) LOCATED ON THE PROPERTY SERVED. EACH INDIVIDUAL TOWNHOUSE OR DUPLEX LOCATED ON A SINGLE PARCEL OF PROPERTY DIVIDED WITH "ASSUMED PROPERTY LINES" MAY BE:
      i. PROVIDED WITH AN INDIVIDUAL ELECTRIC SERVICE AND METER(S) LOCATED ON THE TOWNHOUSE BOUNDED BY ASSUMED PROPERTY LINES, OR
      ii. SERVED THROUGH A SINGLE SERVICE POINT, WITH METERS GROUPED AT ONE LOCATION IN A COMMON AREA REMOTE FROM THE BUILDINGS. EASEMENTS WILL BE REQUIRED TO BE ESTABLISHED AND RECORDED IN THE DEED OF EVERY TOWNHOUSE ALLOWING FOR PRIVATELY-OWNED ELECTRIC LINES TO CROSS ASSUMED PROPERTY LINES. THE UTILITY IS NOT INVOLVED IN THE EASEMENT PROCESS, BUT IT IS IMPORTANT FOR DEVELOPERS TO UNDERSTAND THIS REQUIREMENT. MAIN ELECTRIC SERVICE DISCONNECTS (MAXIMUM OF SIX) MAY BE GROUPED AT ONE LOCATION TO ACCOMMODATE GROUPING OF THE ELECTRIC SERVICE AND OF THE ELECTRIC SERVICE AND METERING EQUIPMENT. IF THE NUMBER OF SERVICE DISCONNECTS EXCEEDS SIX, A MAIN DISCONNECT WILL BE REQUIRED AHEAD OF ALL METERS AND THEIR RELATED METER SERVICE DISCONNECT. THE METER SERVICE DISCONNECT MUST BE LOCATED AT OR IMMEDIATELY ADJACENT TO THE METER. A %" OR LARGER ELECTRICAL CONDUIT MUST BE INSTALLED, PER THE REQUIREMENTS OF THE CALIFORNIA ELECTRICAL CODE AND APPROVED BY THE AHJ, BETWEEN THE GROUPED METER LOCATION AND EACH INDIVIDUAL TOWNHOUSE. THIS CONDUIT WILL PROVIDE ACCESS FOR FUTURE INSTALLATION OF ALTERNATIVE ENERGY SOURCES, SUCH AS PHOTOVOLTAIC SYSTEMS.

TABLE OF CONTENTS

© 1998 - 2023 San Diego Gas & Electric Company. All rights reserved. Removal of this copyright notice without permission is not permitted under law.

REV	CHANGE	DR	BY	DSN	APV	DATE	REV	CHANGE	DR	BY	DSN	APV	DATE
C							F						
B	EDITORIAL CHANGES	ARC	IPJ	IPJ	KRG	12/06/22	E						
A	EDITORIAL CHANGES	--	LSM	LSM	TPM	11/01/17	D						

X	Indicates Latest Revision		Completely Revised		New Page		Information Removed

SDG&E ELECTRIC SERVICE STANDARDS & GUIDES

ELECTRIC SERVICE POLICIES
NEW & EXISTING CUSTOMERS

NOTES (CONT'D):

V. **SINGLE PREMISE - MULTIPLE NON-RESIDENTIAL ENTERPRISES (SUCH AS SHOPPING CENTERS & OFFICE BUILDINGS)**

a. ONE SERVICE PER BUILDING WILL BE GRANTED, UNLESS THE DISTANCE BETWEEN METER LOCATIONS IS GREATER THAN 300', OR THE CUSTOMER IS REQUESTING TWO CLASSES OF SERVICE. IN THE CASE OF TWO CLASSES OF SERVICE, THE SERVICES MAY BE GROUPED AT THE SAME LOCATION, OR LOCATED AT TWO SEPARATE MORE CONVENIENT LOCATIONS ACCEPTABLE TO THE UTILITY'S PROJECT PLANNER BASED ON THE DESIGN OF THE CUSTOMER'S ELECTRICAL SYSTEM AND THE UTILITY'S SERVICE DELIVERY POINT POLICY, AND WITH APPROVAL FROM THE AHJ. THERE IS NO MINIMUM DISTANCE REQUIRED BETWEEN SERVICES OF A DIFFERENT CLASS. RULE 16 FOR SERVICE EXTENSIONS WILL APPLY, AND THE NON-RESIDENTIAL ALLOWANCES PER RULE 15 WILL BE APPLIED TO THE COST OF ALL SERVICES MEETING THE CRITERIA ABOVE.

VI. **SINGLE PREMISE - SINGLE NON-RESIDENTIAL ENTERPRISE (CUSTOMER)**

a. NORMALLY, ONE SERVICE PER PREMISE SERVING/A SINGLE ENTERPRISE WILL BE GRANTED, FOR EXAMPLE, SCHOOLS, CHURCH COMPLEXES, MANUFACTURING PLANTS, HOSPITALS, LARGE COMMERCIAL, ETC.

b. IF THE PLANNED SECONDARY VOLTAGE SERVICE EXCEEDS 4,000 AMPS, THE UTILITY WILL PROVIDE A MAXIMUM OF 3 SECONDARY VOLTAGE SERVICES RATED AT NOT MORE THAN 4,000 AMPS EACH FOR A SINGLE PREMISES AT A LOCATION APPROVED BY THE PROJECT PLANNER AND THE AHJ, BASED ON THE CONFIGURATION AND CAPACITY THE UTILITY'S DISTRIBUTION SYSTEM AND GOOD ENGINEERING PRACTICE. LOADS GREATER THAN 3 AT 4,000 AMPS (MAXIMUM 12,000 AMPS AT SECONDARY VOLTAGE) WILL REQUIRE THE CUSTOMER TO INSTALL A MEDIUM VOLTAGE SERVICE AND PRIMARY METERING EQUIPMENT.

c. IF MORE THAN ONE SECONDARY VOLTAGE SERVICE IS REQUIRED BECAUSE THE SERVICE SIZE EXCEEDS 4,000 AMPS, RULE 16 FOR SERVICE EXTENSIONS WILL APPLY AND RULE 15 NON-RESIDENTIAL ALLOWANCES WILL BE APPLIED TO THE COST OF ALL SERVICES GROUPED AT ONE LOCATION. WHEN THE UTILITY DETERMINES IT IS IN THE CUSTOMER'S BEST INTEREST FOR THE UTILITY TO APPROVE A SECOND OR THIRD SECONDARY VOLTAGE SERVICE OF THE SAME CLASS NOT GROUPED AT ONE LOCATION, THE CUSTOMER WILL PAY FOR ONLY THE ADDITIONAL FACILITIES REQUIRED PER THE PROVISIONS OF RULE 2, SPECIAL FACILITIES, UNLESS THE MINIMUM DISTANCE BETWEEN ALL SERVICES IS AS FOLLOWS:

i. 120/240-VOLTS OR 208Y/120-VOLTS – 500' MINIMUM SEPARATION BETWEEN SERVICES OF THE SAME CLASS IS REQUIRED.

ii. 480Y/277-VOLTS – 1,000' MINIMUM SEPARATION BETWEEN SERVICES OF THE SAME CLASS

d. IF THE CUSTOMER REQUESTS A SECOND CLASS OF SECONDARY VOLTAGE SERVICE, ALL SERVICES MAY BE GROUPED AT THE SAME LOCATION, OR THE SERVICE OF A DIFFERENT CLASS MAY BE LOCATED AT A MORE CONVENIENT LOCATION ACCEPTABLE TO THE PROJECT PLANNER AND THE AHJ BASED ON THE DESIGN OF THE CUSTOMER'S ELECTRICAL SYSTEM AND THE UTILITY'S SERVICE DELVIERY POINT POLICY. THERE IS NO MINIMUM DISTANCE REQUIRED BETWEEN SERVICES OF A DIFFERENT CLASS. RULE 16 FOR SERVICE EXTENSIONS WILL APPLY AND THE NON-RESIDENTIAL ALLOWANCES PER RULE 15 WILL BE APPLIED TO THE COST OF THE SECOND SERVICE OF A DIFFERENT CLASS.

VII. **SINGLE PREMISE - SINGLE RESIDENTIAL CUSTOMER WITH OTHER ELECTRIC USES**

a. ONE SERVICE PER PREMISE WILL BE GRANTED. A SECOND SERVICE MAY BE APPROVED FOR OTHER ELECTRIC USES SUCH AS AN ACCESSORY DWELLING UNIT (ADU), WELLS, BARNS, GARAGES, ETC., PROVIDED THE LOCATION IS MORE THAN 150' FROM THE EXISTING SERVICE AND METER LOCATION AT THE RESIDENCE, AND THE AHJ APPROVES A SECOND SERVICE AND METER ON THE PROPERTY. WHEN BOTH OF THESE CONDITIONS ARE MET, RULE 16 WILL APPLY, AND THE RULE 15 NON- RESIDENTIAL ALLOWANCE WILL BE APPLIED TO THE COST OF THE SECOND SERVICE.

VIII. **SINGLE PREMISE – MULTIPLE RESIDENTIAL CUSTOMERS**

a. EACH SEPARATE STRUCTURE CONTAINING SIX, OR MORE LEGAL DWELLING UNITS, OR FIVE LEGAL DWELLING UNITS AND A HOUSE METER, MUST BE INDIVIDUALLY SERVED BY THE UTILITY. EACH DWELLING UNIT MUST BE INDIVIDUALLY METERED BY THE UTILITY. RULE 16 FOR SERVICE EXTENSIONS AND THE RESIDENTIAL ALLOWANCES PER RULE 15 FOR EACH DWELLING UNIT WILL APPLY TO EACH SERVICE. APPROVAL BY THE AHJ IS REQUIRED.

REFERENCE: NONE

TABLE OF CONTENTS

© 1998 - 2023 San Diego Gas & Electric Company. All rights reserved. Removal of this copyright notice without permission is not permitted under law.

REV	CHANGE	DR	BY	DSN	APV	DATE	REV	CHANGE	DR	BY	DSN	APV	DATE
C							F						
B	EDITORIAL CHANGES	ARC	IPJ	IPJ	KRG	12/06/22	E						
A	EDITORIAL CHANGES	--	LSM	LSM	TPM	11/01/17	D						

X	Indicates Latest Revision		Completely Revised		New Page		Information Removed

SCOPE: THE FOLLOWING INFORMATION IS INTENDED TO PROVIDE GUIDANCE TO DEVELOPERS, ARCHITECTS, ENGINEERS, ELECTRICAL CONTRACTORS, AND CONSULTANTS WORKING WITH AN EXISTING CUSTOMER PLANNING FOR ADDITIONS TO THEIR ELECTRICAL SERVICE(S) OR REMOTE METER LOCATIONS.

INSTALLATION: NONE

BILL OF MATERIALS: NONE

NOTES:

I. **GENERAL SERVICE REQUIREMENT TO MULTIPLE MULTI-UNIT BUILDINGS ON A SINGLE PREMISES**

a. FOR PREMISES HAVING MORE THAN ONE MULTI-UNIT BUILDING ON THEM, A SEPARATE SDG&E SERVICE IS REQUIRED TO SERVE ANY BUILDINGS HAVING MORE THAN 6 UNITS, OR MORE THAN 5 UNITS AND A HOUSE METER. BOTH RESIDENTIAL AND NON-RESIDENTIAL SUBJECT TO THIS REQUIREMENT.

II. **MULTI-FAMILY RESIDENTIAL BUILDINGS — LESS THAN 3 STORIES HIGH**

a. CUSTOMER REQUESTS FOR A SECOND SERVICE OF THE SAME CLASS WILL NOT BE GRANTED UNLESS THE SERVICE SIZE EXCEEDS 4,000 AMPS. WHEN THE SERVICE SIZE WILL EXCEED 4,000 AMPS, A SECOND SERVICE OF THE SAME CLASS MAY BE GROUPED AS CLOSE AS PRACTICAL TO THE EXISTING SERVICE OR A SECOND SERVICE OF A MINIMUM OF 300' APART MAY BE GRANTED. RULE 16 WILL APPLY, AND RULE 15 ALLOWANCES MAY BE GRANTED FOR THE SECOND SERVICE REQUEST BASED ON THE TYPE OF LOAD ADDITIONS. FOR EXAMPLE, IF THE LOAD ADDITIONS ARE IN EXISTING DWELLING UNITS ONLY, NO ALLOWANCES WILL BE GIVEN. IF HOUSE LOADS ARE BEING ADDED THROUGH A NEW SERVICE AND METER, ALLOWANCES FOR THE INCREMENTAL LOAD INCREASE WILL BE GRANTED.

b. A SEPARATE SERVICE OF A DIFFERENT CLASS, NORMALLY 480Y/277-VOLTS, MAY BE GRANTED FOR HOUSE LOADS AND MAY BE GROUPED WITH THE SERVICE(S) FOR THE MULTI-FAMILY DWELLING UNITS OR LOCATED AT A MORE CONVENIENT LOCATION ACCEPTABLE TO THE PROJECT PLANNER BASED ON THE DESIGN OF THE CUSTOMER'S ELECTRICAL SYSTEM AND THE UTILITY'S SERVICE DELIVERY POINT POLICY AND WITH APPROVAL FROM THE GOVERNMENTAL AUTHORITY HAVING JURISDICTION (AHJ). THERE IS NO MINIMUM DISTANCE REQUIRED BETWEEN SERVICES OF A DIFFERENT CLASS. RULE 16 FOR SERVICE EXTENSIONS AND THE NON-RESIDENTIAL ALLOWANCES FOR THE INCREMENTAL LOAD INCREASE PER RULE 15 WILL APPLY TO THE SECOND SERVICE.

III. **RESIDENTIAL OR MIXED USE BUILDINGS – 3 STORIES OR GREATER**

a. THE CUSTOMER MAY RECEIVE AS MANY 3-PHASE, 208Y/120-VOLT SERVICES AS REQUIRED, NORMALLY GROUPED AT ONE LOCATION, TO SERVE THE DWELLING UNITS THAT MUST BE INDIVIDUALLY METERED BY THE UTILITY. THE PROJECT PLANNER MAY APPROVE MORE THAN ONE SERVICE POINT AND METER LOCATION FOR SERVICES OF THE SAME CLASS IF THE DISTANCE BETWEEN THEM IS 300', OR GREATER, OR WHEN IT IS IN THE BEST INTEREST OF THE UTILITY TO PROVIDE MULTIPLE SERVICE POINTS AND METER LOCATIONS. A SEPARATE SERVICE OF A DIFFERENT CLASS, NORMALLY 480Y/277-VOLTS, MAY BE GRANTED FOR HOUSE LOADS AND MAY BE GROUPED WITH THE SERVICE(S) FOR THE MULTI-FAMILY DWELLING UNITS OR LOCATED AT A MORE CONVENIENT LOCATION ACCEPTABLE TO THE PROJECT PLANNER BASED ON THE DESIGN OF THE CUSTOMER'S ELECTRICAL SYSTEM AND THE UTILITY'S SERVICE DELIVERY POINT POLICY, AND WITH APPROVAL FROM THE AHJ. THERE IS NO MINIMUM DISTANCE REQUIRED BETWEEN SERVICES OF A DIFFERENT CLASS. RULE 16 WILL APPLY, AND THE RULE 15 RESIDENTIAL AND NON-RESIDENTIAL ALLOWANCES WILL BE APPLIED TO THE COST OF ALL SERVICES MEETING THE CRITERIA ABOVE.

IV. **RESIDENTIAL CONTIGUOUS DWELLINGS – TOWNHOUSES (ROW HOMES)**

a. EACH INDIVIDUAL TOWNHOUSE OR DUPLEX LOCATED ON A PARCEL OF LAND BOUNDED BY LEGAL PROPERTY LINES MUST BE PROVIDED WITH AN INDIVIDUAL ELECTRIC SERVICE AND METER(S) LOCATED ON THE PROPERTY SERVED. EACH INDIVIDUAL TOWNHOUSE OR DUPLEX LOCATED ON A SINGLE PARCEL OF PROPERTY DIVIDED WITH "ASSUMED PROPERTY LINES" MAY BE:

i. PROVIDED WITH AN INDIVIDUAL ELECTRIC SERVICE AND METER(S) LOCATED ON THE TOWNHOUSE BOUNDED BY ASSUMED PROPERTY LINES, OR

TABLE OF CONTENTS

© 1998 - 2023 San Diego Gas & Electric Company. All rights reserved. Removal of this copyright notice without permission is not permitted under law.

REV	CHANGE	DR	BY	DSN	APV	DATE	REV	CHANGE	DR	BY	DSN	APV	DATE
C							F						
B	EDITORIAL CHANGES	ARC	IPJ	IPJ	KRG	12/06/22	E						
A	EDITORIAL CHANGES	--	LSM	LSM	TPM	11/01/17	D						

X Indicates Latest Revision | Completely Revised | New Page | Information Removed

NOTES (CONT'D):

ii. SERVED THROUGH A SINGLE SERVICE POINT, WITH METERS GROUPED AT ONE LOCATION IN A COMMON AREA REMOTE FROM THE BUILDINGS. EASEMENTS WILL BE REQUIRED TO BE ESTABLISHED AND RECORDED IN THE DEED OF EVERY TOWNHOUSE ALLOWING FOR PRIVATELY-OWNED ELECTRIC LINES TO CROSS ASSUMED PROPERTY LINES. THE UTILITY IS NOT INVOLVED IN THE EASEMENT PROCESS, BUT IT IS IMPORTANT FOR DEVELOPERS TO UNDERSTAND THIS REQUIREMENT. MAIN ELECTRIC SERVICE DISCONNECTS (MAXIMUM OF 6) MAY BE GROUPED AT ONE LOCATION TO ACCOMMODATE GROUPING OF THE ELECTRIC SERVICE AND OF THE ELECTRIC SERVICE AND METERING EQUIPMENT. THE METER SERVICE DISCONNECT MUST BE LOCATED AT OR IMMEDIATELY ADJACENT TO THE METER. A 3/4" OR LARGER ELECTRICAL CONDUIT MUST BE INSTALLED, PER THE REQUIREMENTS OF THE CALIFORNIA ELECTRICAL CODE AND APPROVED BY THE AHJ, BETWEEN THE GROUPED METER LOCATION AND EACH INDIVIDUAL TOWNHOUSE. THIS CONDUIT WILL PROVIDE ACCESS FOR FUTURE INSTALLATION OF ALTERNATIVE ENERGY SOURCES, SUCH AS PHOTOVOLTAIC SYSTEMS.

V. **SINGLE PREMISE – MULTIPLE NON-RESIDENTIAL ENTERPRISES (SUCH AS SHOPPING CENTERS & OFFICE BUILDINGS)**

a. CUSTOMER REQUESTS FOR A SECOND SERVICE OF THE SAME CLASS TO SERVE AN EXISTING BUILDING WILL NOT BE GRANTED UNLESS THE SERVICE SIZE EXCEEDS 4,000 AMPS. WHEN THE SERVICE SIZE WILL EXCEED 4,000 AMPS, A SECOND SERVICE OF THE SAME CLASS MAY BE GROUPED AS CLOSE AS PRACTICAL TO THE EXISTING SERVICE OR A SECOND SERVICE A MINIMUM OF 300' APART MAY BE GRANTED. RULE 15 ALLOWANCES WILL BE GRANTED FOR THE SECOND SERVICE REQUEST BASED ON THE INCREMENTAL LOAD INCREASE.

b. REQUESTS FOR A SECOND CLASS OF SERVICE WILL BE GRANTED AND MAY BE GROUPED WITH THE EXISTING SERVICE(S) OR LOCATED AT A MORE CONVENIENT LOCATION ACCEPTABLE TO THE PLANNER AND THE AHJ BASED ON THE DESIGN OF THE CUSTOMER'S ELECTRICAL SYSTEM AND THE UTILITY'S SERVICE DELIVERY POINT POLICY. THERE IS NO MINIMUM DISTANCE REQUIRED BETWEEN SERVICES OF A DIFFERENT CLASS. THIS APPLIES TO AN EXISTING PRIMARY METERED CUSTOMER WHO IS ALLOWING A NEW SEPARATE ENTERPRISE TO OPERATE A BUSINESS ON THE SINGLE PREMISES. A SECONDARY VOLTAGE SERVICE WILL BE GRANTED AT A LOCATION APPROVED BY THE PROJECT PLANNER AND THE AHJ. RULE 16 FOR SERVICE EXTENSIONS AND THE NON-RESIDENTIAL ALLOWANCES PER RULE 15 WILL APPLY TO THE SECOND SERVICE.

ATTENTION: AREA SEPARATION WALLS CONSTRUCTED AS PART OF A TENANT IMPROVEMENT MAY RESULT IN THE CREATION OF A SEPARATE BUILDING CONTIGUOUS WITH THE EXISTING BUILDING. WHEN THE BUILDING OFFICIAL CONFIRMS IN WRITING A NEW SEPARATE BUILDING HAS BEEN CREATED, A NEW GAS AND/OR ELECTRIC SERVICE IS ALLOWED PROVIDED THERE IS SPACE ON THE BUILDING FOR THE SERVICE AND METERING EQUIPMENT. RULE 16 FOR SERVICE EXTENSIONS WILL APPLY AND THE NON-RESIDENTIAL ALLOWANCES PER RULE 15 MAY BE GRANTED FOR THE NEW SERVICE REQUEST IF THERE IS AN INCREMENTAL LOAD INCREASE.

VI. **SINGLE PREMISE – SINGLE NON-RESIDENTIAL ENTERPRISE (CUSTOMER)**

a. THE CUSTOMER WILL NOT BE GRANTED BOTH A PRIMARY METERED SERVICE AND A SECONDARY VOLTAGE SERVICE, EVEN THOUGH THE SERVICES ARE TECHNICALLY A DIFFERENT CLASS. IF A COSTUMER'S LOAD REQUIREMENTS EXCEED 3 AT 4,000 AMPS SECONDARY VOLTAGE SERVICE, THE COSTUMER WILL BE REQUIRED TO TAKE SERVICE AT A PRIMARY VOLTAGE LEVEL AND INSTALL PRIMARY METERING MEDIUM VOLTAGE SWITCHGEAR.

EXCEPTION: WHEN AN EXISTING PRIMARY METERED CUSTOMER REQUESTS A NEW SECONDARY VOLTAGE SERVICE WITH THE INTENT OF REMOVING THEIR EXISTING PRIMARY METERED SERVICE, WE WILL PROVIDE UP TO 3 SECONDARY VOLTAGE SERVICES, NOT EXCEEDING 3 AT 4,000 AMPS EACH. RULE 15, SECTION 1, ITEM 1, FACILITY RELOCATION OR REARRANGEMENT, WILL APPLY. THE CUSTOMER IS RESPONSIBLE FOR THE TOTAL ESTIMATED INSTALLED COST OF THE NEW FACILITIES AND REMOVAL OF THE EXISTING PRIMARY METERED SERVICE, INCLUDING THE METERING. IF THE CUSTOMER IS ADDING LOAD AND THE EXISTING PRIMARY METERED SERVICE WAS ADEQUATE TO SERVE THE LOAD ADDITIONS, THE CUSTOMER WILL NOT BE GRANTED RULE 15 ALLOWANCES FOR THE INCREMENTAL LOAD INCREASE. THE CUSTOMER IS ALLOWED TO CONTINUE RECEIVING PRIMARY METERED SERVICE AND THE NEW SECONDARY VOLTAGE SERVICE FOR A MAXIMUM OF FIVE YEARS AND SHALL PROVIDE THE PLANNER WRITTEN CONFIRMATION OF THEIR ACCEPTANCE OF THE MAXIMUM TIMEFRAME FOR REMOVAL OF THE EXISTING PRIMARY METERED SERVICE.THIS WILL ALLOW THE CUSTOMER ADEQUATE TIME TO RE-FEED THEIR ELECTRICAL LOADS FROM THE NEW SECONDARY VOLTAGE SOURCE(S) AND FACILITATE A PHASED APPROACH WHEN MORE THAN ONE SECONDARY VOLTAGE SERVICE IS NEEDED. TYPICALLY, PLANNERS WILL RECEIVE THIS TYPE OF REQUEST FROM SCHOOL DISTRICTS OR CAMPUS TYPE FACILITIES.

TABLE OF CONTENTS

© 1998 - 2023 San Diego Gas & Electric Company. All rights reserved. Removal of this copyright notice without permission is not permitted under law.

REV	CHANGE	DR	BY	DSN	APV	DATE	REV	CHANGE	DR	BY	DSN	APV	DATE
C							F						
B	EDITORIAL CHANGES	ARC	IPJ	IPJ	KRG	12/06/22	E						
A	EDITORIAL CHANGES	--	LSM	LSM	TPM	11/01/17	D						

NOTES (CONT'D):

b. WHEN WE DETERMINE IT IS IN THE CUSTOMER'S BEST INTEREST FOR THE UTILITY TO APPROVE A SECOND OR THIRD SECONDARY VOLTAGE SERVICE OF THE SAME CLASS NOT GROUPED WITH THE EXISTING SERVICE AT ONE LOCATION, THE CUSTOMER WILL PAY FOR ONLY THE ADDITIONAL FACILITIES REQUIRED PER THE PROVISIONS OF RULE 2, SECTION I, ITEM 1, SPECIAL FACILITIES AND MAINTENANCE, UNLESS THE MINIMUM DISTANCE BETWEEN THE EXISTING AND ALL PROPOSED NEW SERVICES ARE AS FOLLOWS:
   - 120/240-VOLTS OR 208Y/120-VOLTS – 500' MINIMUM SEPARATION BETWEEN SERVICES OF THE SAME CLASS IS REQUIRED.
   - 480Y/277-VOLTS – 1,000' MINIMUM SEPARATION BETWEEN SERVICES OF THE SAME CLASS

c. RULE 16 FOR SERVICE EXTENSIONS WILL APPLY WHEN THE ABOVE CRITERIA IS MET, AND THE NON-RESIDENTIAL ALLOWANCES PER RULE 15 MAY BE GRANTED FOR THE NEW SERVICE REQUEST IF THERE IS AN INCREMENTAL LOAD INCREASE.

d. REQUESTS FOR A SECOND CLASS OF SECONDARY VOLTAGE SERVICE WILL BE GRANTED AND MAY BE GROUPED WITH THE EXISTING SERVICE(S) OR LOCATED AT A MORE CONVENIENT LOCATION ACCEPTABLE TO THE PROJECT PLANNER AND THE AHJ BASED ON THE DESIGN OF THE CUSTOMER'S ELECTRICAL SYSTEM AND THE UTILITY'S SERVICE DELIVERY POINT POLICY. THERE IS NO MINIMUM DISTANCE REQUIRED BETWEEN SERVICES OF A DIFFERENT CLASS. RULE 16 FOR SERVICE EXTENSIONS AND THE NON-RESIDENTIAL ALLOWANCES PER RULE 15 WILL APPLY TO THE SECOND SERVICE.

VII. **SINGLE PREMISE - SINGLE RESIDENTIAL CUSTOMER WITH OTHER ELECTRIC USES**

a. ONE SERVICE PER PREMISE WILL BE GRANTED. A SECOND SERVICE MAY BE APPROVED FOR OTHER ELECTRIC USES SUCH AS AN ACCESSORY DWELLING UNIT (ADU), WELLS, BARNS, GARAGES, ETC., PROVIDED THE LOCATION IS MORE THAN 150' FROM THE EXISTING SERVICE AND METER LOCATION AT THE RESIDENCE, AND THE AHJ APPROVES A SECOND SERVICE AND METER ON THE PROPERTY. WHEN BOTH OF THESE CONDITIONS ARE MET, RULE 16 WILL APPLY, AND THE RULE 15 NON- RESIDENTIAL ALLOWANCE WILL BE APPLIED TO THE COST OF THE SECOND SERVICE.

VIII. **SINGLE PREMISE – MULTIPLE RESIDENTIAL CUSTOMERS**

a. EACH SEPARATE STRUCTURE CONTAINING SIX, OR MORE LEGAL DWELLING UNITS, OR FIVE LEGAL DWELLING UNITS AND A HOUSE METER, MUST BE INDIVIDUALLY SERVED BY THE UTILITY. EACH DWELLING UNIT MUST BE INDIVIDUALLY METERED BY THE UTILITY. RULE 16 FOR SERVICE EXTENSIONS AND THE RESIDENTIAL ALLOWANCES PER RULE 15 FOR EACH DWELLING UNIT WILL APPLY TO EACH SERVICE. APPROVAL BY THE AHJ IS REQUIRED.

REFERENCE: NONE

TABLE OF CONTENTS

© 1998 - 2023 San Diego Gas & Electric Company. All rights reserved. Removal of this copyright notice without permission is not permitted under law.

REV	CHANGE	DR	BY	DSN	APV	DATE	REV	CHANGE	DR	BY	DSN	APV	DATE
C							F						
B	EDITORIAL CHANGES	ARC	IPJ	IPJ	KRG	12/06/22	E						
A	EDITORIAL CHANGES	--	LSM	LSM	TPM	11/01/17	D						

X Indicates Latest Revision | Completely Revised | New Page | Information Removed

SINGLE PREMISE WITH MULTIPLE BUILDINGS – SERVICE & METERING REQUIREMENTS

For compliance with the California Electrical Code, Article 225.30, an individual SDG&E (Utility) service drop or service lateral will be provided to each building containing 2 or more residential or non-residential units located on a single parcel of land. Each building will have the meters for the units within that building grouped at one central location. The governmental Authority Having Jurisdiction (AHJ) shall approve and inspect the customer's premises wiring system.

Exception: For rewires or conversion of service from overhead to underground on existing parcels with 2 or more multi-unit buildings, it is sometimes impracticable to establish a direct service from the Utility source to rear or remotely located buildings on the parcel. For example, a structure built lot line to lot line between the Utility source and another multi-unit building on the same parcel would be considered impracticable. Customer-owned and -installed service entrance conductors or unmetered feeder will be allowed between buildings in these situations by deviation only. This is by exception and applies only when approved in advance by SDG&E Service Standards. Examples 1 – 3 of possible scenarios are shown on pages SG 014.2 – 014.4.

© 1998-2017 San Diego Gas & Electric Company. All rights reserved. Removal of this copyright notice without permission is not permitted under law.

REV	CHANGE	BY	DSGN	APPV	DATE	REV	CHANGE	BY	DSGN	APPV	DATE
A	Editorial Changes	LSM	IPJ	TPM	11/01/17	D					
B						E					
C						F					

X Indicates Latest Revision	Completely Revised	New Page	Information Removed

EXAMPLE 1

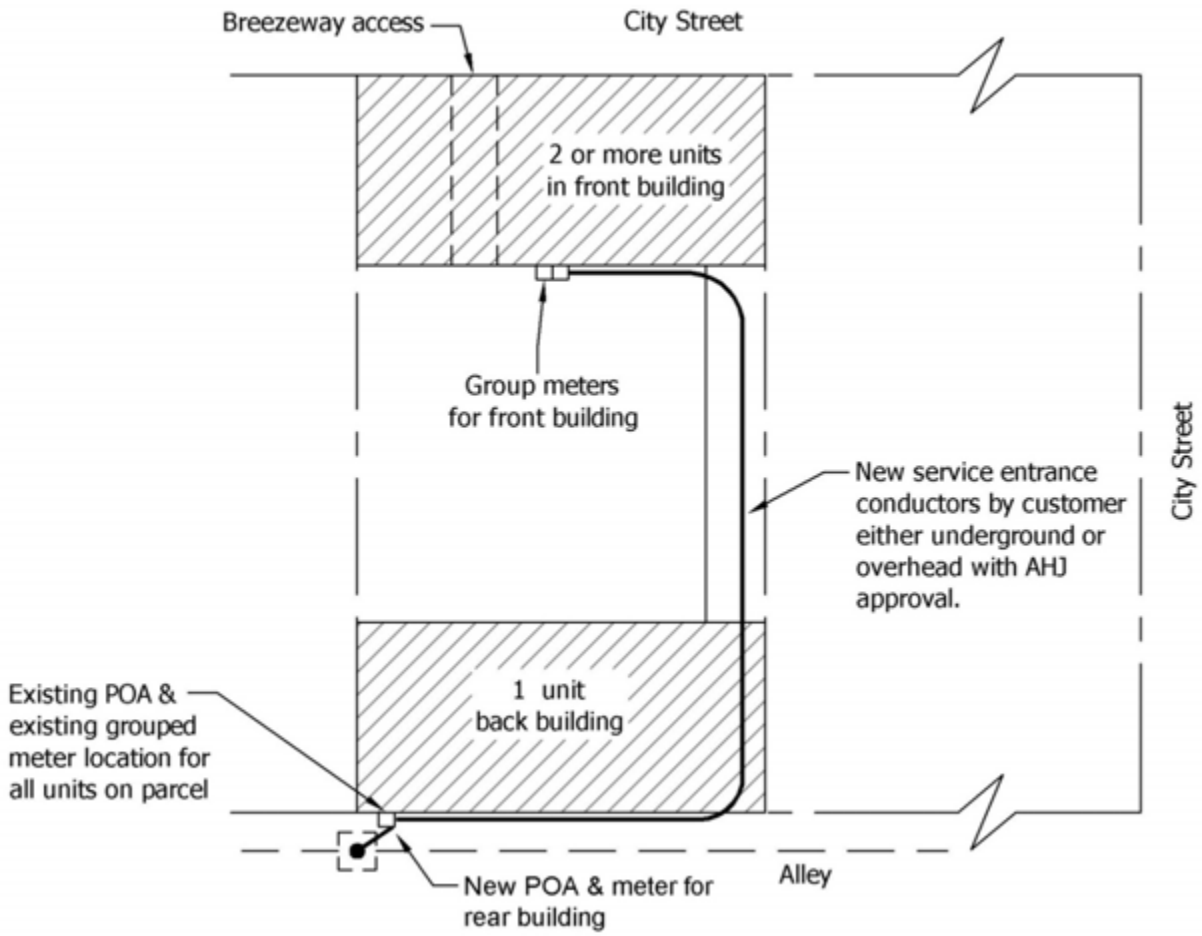

Notes:

1. This standard applies only when standard OH or UG service cannot be established to both buildings due to physical construction limitations. A deviation is required from Service Standards before negotiating this method of service with the customer or their contractor, or on a conversion project.
2. Point of Attachment (POA)
3. SDG&E source in alley and no SDG&E source on street side of parcel
4. A plaque is required at each meter location connected to the service identifying the location of all meter locations served. Refer to pages SG 017.1 – 017.3 for plaque specifications and examples.
5. Service entrance conduits installed underground between buildings shall be concrete-encased (one sack slurry).

© 1998-2017 San Diego Gas & Electric Company. All rights reserved. Removal of this copyright notice without permission is not permitted under law.

REV	CHANGE	BY	DSGN	APPV	DATE	REV	CHANGE	BY	DSGN	APPV	DATE
A	Editorial Changes	LSM	IPJ	TPM	11/01/17	D					
B						E					
C						F					

EXAMPLE 2

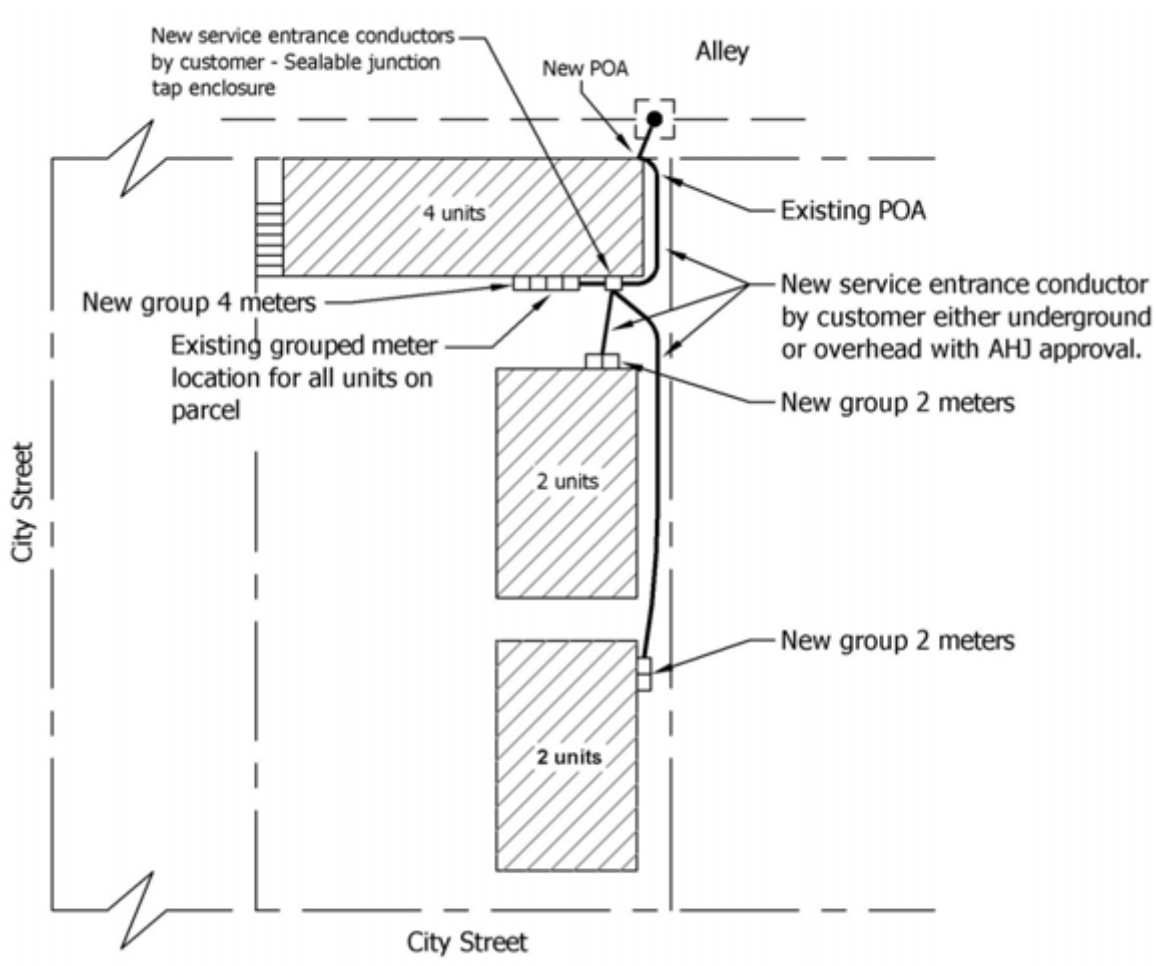

Notes:

1. This standard applies only when standard OH or UG service cannot be established to all buildings due to physical construction limitations. A deviation is required from Service Standards before negotiating this method of service with the customer or their contractor, or on a conversion project.
2. Point of Attachment (POA)
3. SDG&E source in alley and no SDG&E source on street side of parcel.
4. A plaque is required at each meter location connected to the service identifying the location of all meter locations served. Refer to page SG 017.1 – 017.3 for plaque specifications and examples.
5. Service entrance conduits installed underground between buildings shall be concrete-encased (one sack slurry).

© 1998-2017 San Diego Gas & Electric Company. All rights reserved. Removal of this copyright notice without permission is not permitted under law.

REV	CHANGE	BY	DSGN	APPV	DATE	REV	CHANGE	BY	DSGN	APPV	DATE
A	Editorial Changes	LSM	IPJ	TPM	11/01/17	D					
B						E					
C						F					

EXAMPLE 3

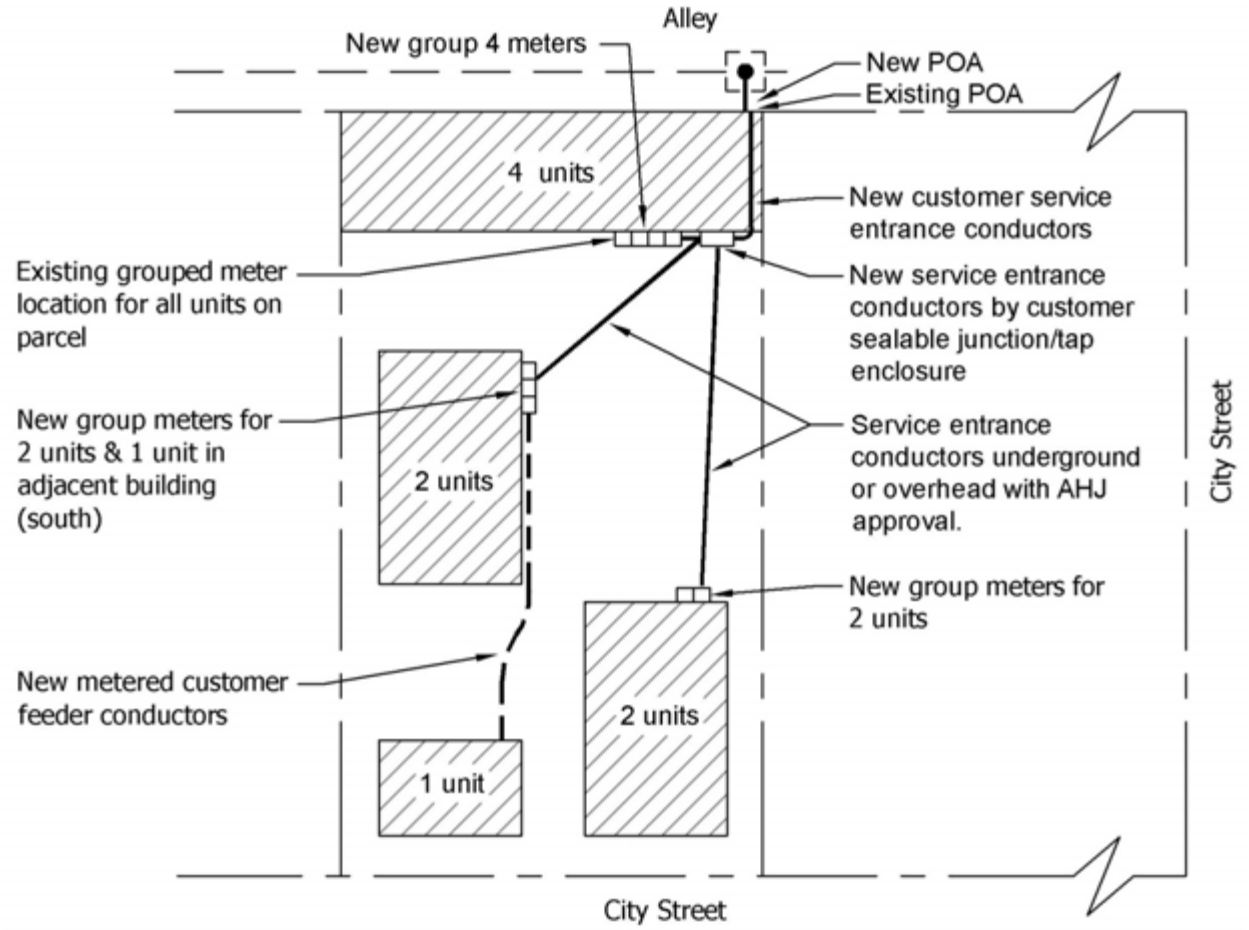

Notes:

1. This standard applies only when standard OH or UG service cannot be established to all buildings with multiple tenants due to physical construction limitations. A deviation is required from Service Standards before negotiating this method of service with the customer or their contractor, or on a conversion project.
2. Point of Attachment (POA)
3. SDG&E source in alley and no SDG&E source on street side of parcel
4. A plaque is required at each meter location connected to the service identifying the location of all meter locations served. Refer to pages SG 017.1 – 017.3 for plaque specifications and examples.
5. Service entrance conduits installed underground between buildings shall be concrete-encased (one sack slurry).

© 1998-2017 San Diego Gas & Electric Company. All rights reserved. Removal of this copyright notice without permission is not permitted under law.

REV	CHANGE	BY	DSGN	APPV	DATE	REV	CHANGE	BY	DSGN	APPV	DATE
A	Editorial Changes	LSM	IPJ	TPM	11/01/17	D					
B						E					
C						F					

EXAMPLE 4

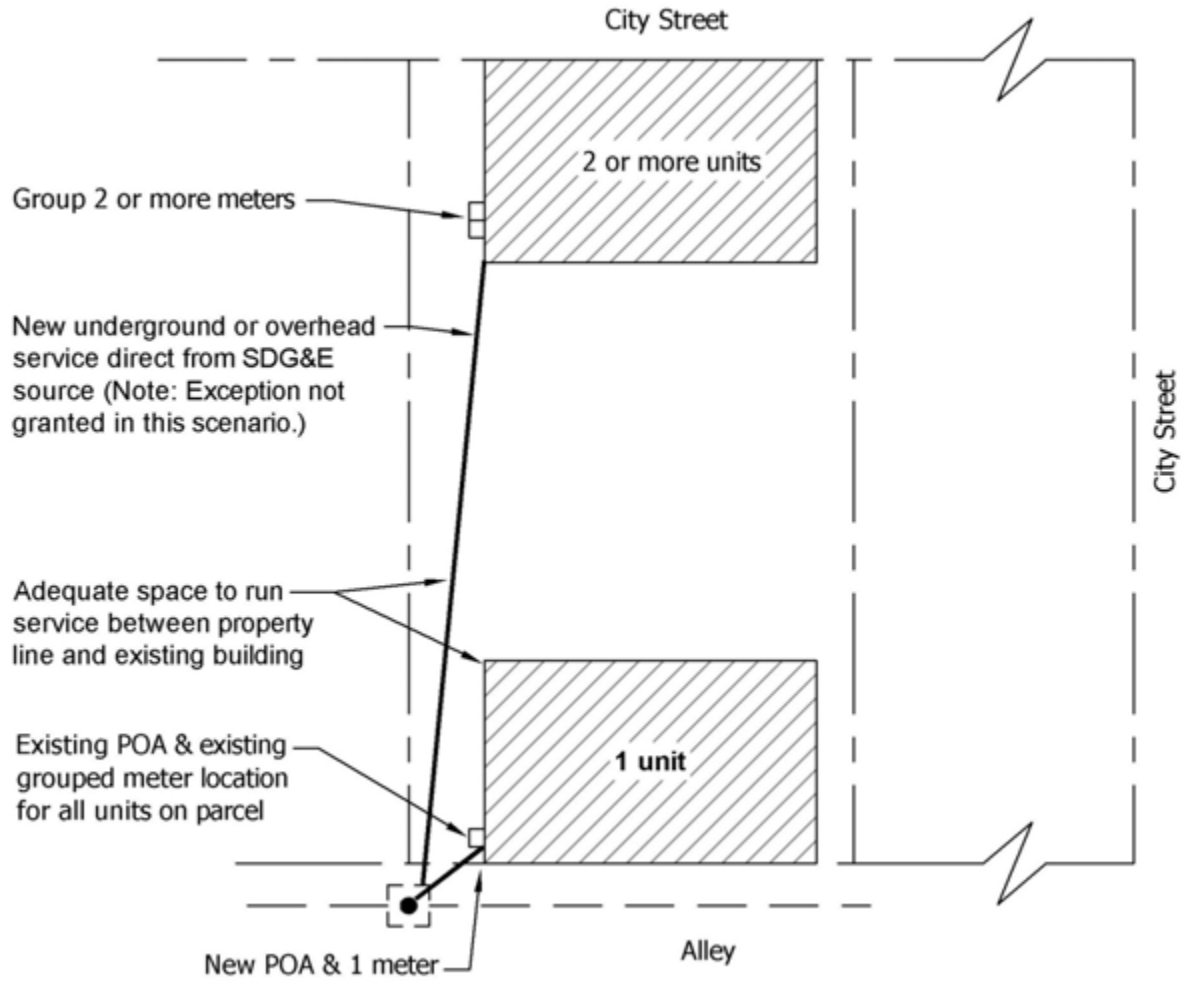

Notes:

1. Point of Attachment (POA)
2. SDG&E source in alley and no SDG&E source on street side of parcel
3. A plaque is required at each meter location connected to the service identifying the location of all meter locations served. Refer to pages SG 017.1 – 017.3 for plaque specifications and examples.

© 1998-2017 San Diego Gas & Electric Company. All rights reserved. Removal of this copyright notice without permission is not permitted under law.

REV	CHANGE	BY	DSGN	APPV	DATE	REV	CHANGE	BY	DSGN	APPV	DATE
A	Editorial Changes	LSM	IPJ	TPM	11/01/17	D					
B						E					
C						F					

X Indicates Latest Revision	Completely Revised	New Page	Information Removed

SCOPE: THIS STANDARD PROVIDES SDG&E (UTILITY) LINE TRUCK ACCESS REQUIREMENTS TO TERMINATING ENCLOSURES.

INSTALLATION: NONE

BILL OF MATERIALS: NONE

NOTES:

I. LINE TRUCK ACCESS IS DEFINED AS A MINIMUM 16' WIDE "ALL WEATHER" DRIVEN WAY OF SUFFICIENT STRENGTH TO SUPPORT A TRUCK WEIGHT CLASS H20 (20 TONS), WITH A CLEAR HEIGHT OF 13'-6" AND A 40' MINIMUM TURNING RADIUS MEASURED FROM INSIDE CURB.

II. THE MAXIMUM DISTANCE FROM LINE TRUCK ACCESS TO AN ELECTRIC METER ROOM DOOR APPLIES WHEN THE TERMINATING ENCLOSURE IS LOCATED IN THE ELECTRIC METER ROOM DIRECTLY IN FRONT OF THE ACCESS DOOR, OR WHEN THE TERMINATING ENCLOSURE IS LOCATED ON AN EXTERIOR BUILDING WALL. THE MAXIMUM DISTANCE IS DEPENDENT UPON THE SIZE OF THE ELECTRIC SERVICE. LARGER SERVICES REQUIRE LARGER DIAMETER AND GREATER NUMBER OF CONDUITS TO SERVE THE CUSTOMER'S ULTIMATE ELECTRICAL NEEDS.

ATTENTION: IF THE TERMINATING ENCLOSURE IS WITHIN A METER ROOM AND LOCATED OTHER THAN DIRECTLY IN FRONT OF THE ACCESS DOOR, PULLING EYE HOOKS AND COIL INSERTS AS SPECIFIED ON SG 016.1 - 016.2 MAY BE REQUIRED TO RIG CABLE PULLING OPERATIONS. CONSULT WITH THE UTILITY'S PROJECT PLANNER IF THIS IS PROPOSED.

III. THE MAXIMUM SIZE CONDUCTOR THE UTILITY INSTALLS IS NO. 1,000 KCMIL ALUMINUM CONDUCTORS IN A 5" CONDUIT. THE MAXIMUM DISTANCES SHOWN IN THE TABLE BELOW HAVE BEEN ESTABLISHED TO HELP ENSURE A SAFE INSTALLATION AND TO SHORTEN RESTORATION TIME SHOULD A CABLE FAILURE OCCUR DURING THE LIFE OF THE SERVICE.

IV. ALL ELECTRIC METER ROOMS WITHOUT THE TERMINATING ENCLOSURE LOCATED INSIDE THE ELECTRIC METER ROOM SHALL BE A MAXIMUM OF 100' FROM PICK-UP TRUCK ACCESS. PICK-UP TRUCK ACCESS IS DEFINED AS A MINIMUM 8' HEIGHT CLEARANCE, 14' MINIMUM TURNING RADIUS MEASURED FROM INSIDE CURB, AND 14' WIDE ALL WEATHER DRIVEN WAY OF SUFFICIENT STRENGTH TO SUPPORT A MINIMUM TRUCK WEIGHT OF 4,000 LBS.

V. IT IS THE CUSTOMER'S RESPONSIBILITY TO PROVIDE AND MAINTAIN THE REQUIRED TRUCK ACCESS FOR THE LIFE OF THE ELECTRICAL SYSTEM.

TABLE 1:

SIZE OF ELECTRIC CONDUIT ENTERING TERMINATING ENCLOSUE	MAXIMUM DISTANCE FROM LINE TRUCK ACCESS TO AN ELECTRIC METER ROOM DOOR OR TERMINATING ENCLOSURE LOCATED ON EXTERIOR OF BUILDING
LESS THAN 4”	30’
4”	20’
5”	10’

REFERENCE: NONE

TABLE OF CONTENTS

© 1998 - 2023 San Diego Gas & Electric Company. All rights reserved. Removal of this copyright notice without permission is not permitted under law.

REV	CHANGE	DR	BY	DSN	APV	DATE	REV	CHANGE	DR	BY	DSN	APV	DATE
C							F						
B	EDITORIAL CHANGES	ARC	IPJ	IPJ	KRG	12/06/22	E						
A	EDITORIAL CHANGES	--	LSM	LSM	TPM	11/01/17	D						

X Indicates Latest Revision | Completely Revised | New Page | Information Removed

SDG&E ELECTRIC SERVICE STANDARDS & GUIDES

ELECTRIC SERVICE POLICIES
NEW & EXISTING CUSTOMERS

SG015

SCOPE: THIS STANDARD PROVIDES AN ALTERNATIVE TO LINE TRUCK ACCESS TO THE EXTERIOR OF AN ELECTRIC METER ROOM DOOR FOR INSTALLATION AND REMOVAL OF SERVICE LATERAL CONDUCTORS IN THE UNDERGROUND TERMINATING ENCLOSURE (UGPS) LOCATED IN A PARKING STRUCTURE. THIS STANDARD MAY BE USED WHEN ALL OF THE REQUIREMENTS CAN BE MET. EXAMPLES 1 AND 2 ARE NOT DRAWN TO SCALE.

ATTENTION: TRUCK ACCESS FOR THIS STANDARD IS DEFINED AS A MINIMUM 8' HEIGHT CLEARANCE AND 14' MINIMUM TURNING RADIUS MEASURED FROM INSIDE CURB.

EXAMPLE 1
MAIN ELECTRICAL ROOM
UGPS ON WALL DIRECTLY OPPOSITE DOORWAY

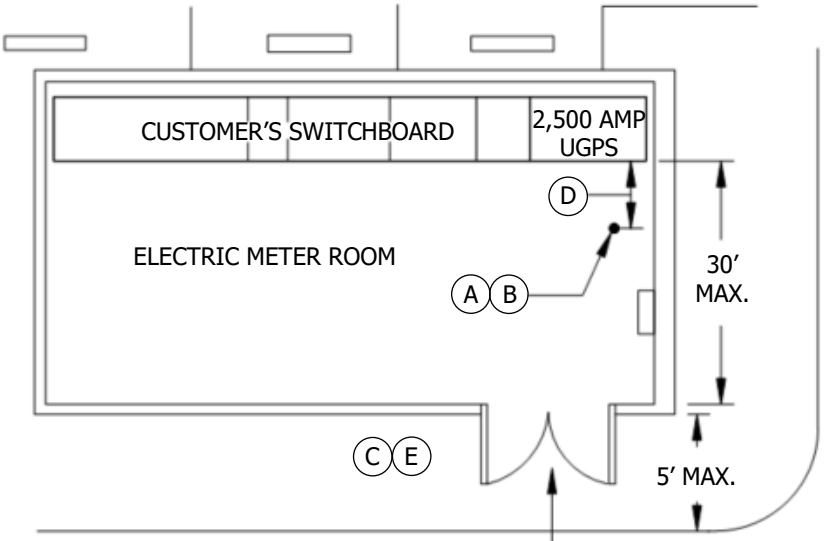

ATTENTION: TRUCK ACCESS REQUIRED. UTILITY MUST BE ABLE TO POSITION PICKUP TRUCK PERPENDICULAR TO ACCESS DOOR.

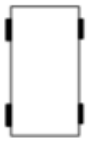

EXAMPLE 2
MAIN ELECTRICAL ROOM
UGPS PERPENDICULAR TO DOORWAY

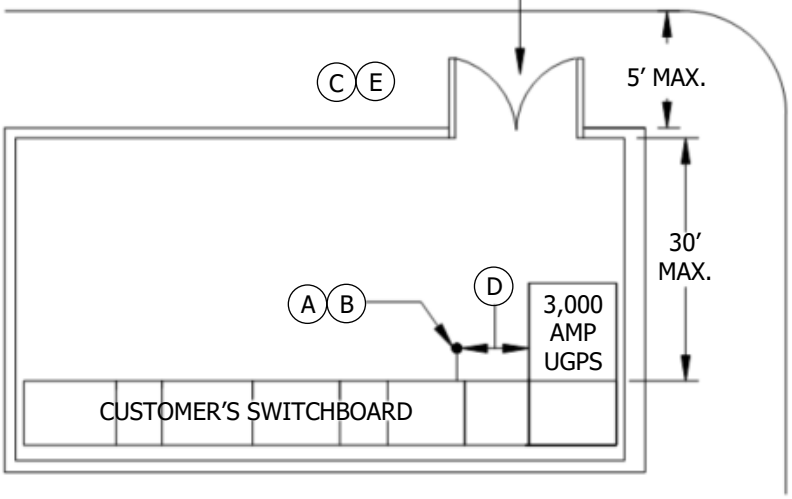

TABLE OF CONTENTS

© 1998 - 2023 San Diego Gas & Electric Company. All rights reserved. Removal of this copyright notice without permission is not permitted under law.

REV	CHANGE	DR	BY	DSN	APV	DATE	REV	CHANGE	DR	BY	DSN	APV	DATE
C							F						
B	EDITORIAL CHANGES	ARC	IPJ	IPJ	KRG	12/06/22	E						
A	EDITORIAL CHANGES	--	LSM	LSM	TPM	11/01/17	D						

X Indicates Latest Revision	Completely Revised	New Page	Information Removed	

SDG&E ELECTRIC SERVICE STANDARDS & GUIDES

PULLING DEVICES FOR INSTALLATION OF SERVICE LATERAL CONDUCTORS IN PARKING STRUCTURES

SG016.1

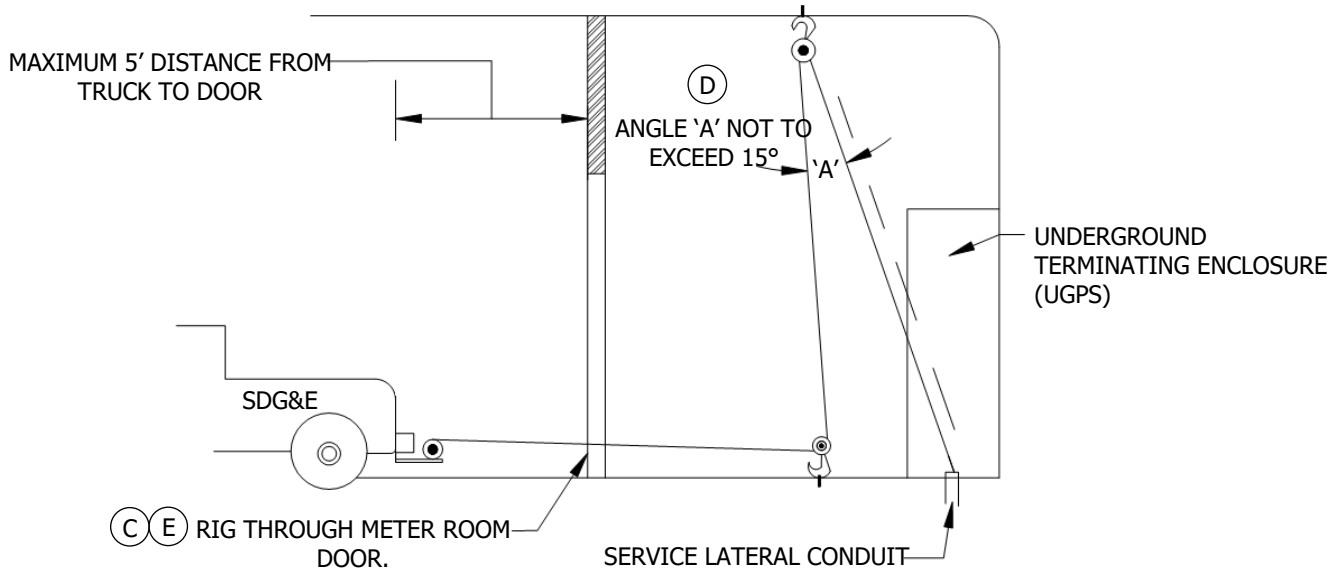

FIGURE 1

INSTALLATION:

(A) CUSTOMER TO PROVIDE PULLING EYE HOOK STRUCTURALLY IN THE CEILING WITH A LOAD CAPACITY OF 8,000 LBS. LOCATE EYE HOOK IN FRONT OF, AND CENTERED TO, THE UGPS. CUSTOMER TO SUBMIT THE STRUCTURAL ENGINEER'S APPROVED DRAWING(S) TO SDG&E'S (UTILITY) PROJECT PLANNER PRIOR TO INSTALLATION OF THE EYE HOOK AND COIL INSERT (REFERENCE NOTE B). COORDINATE THE INSTALLATION WITH THE UTILITY'S INSPECTOR.

(B) CUSTOMER TO PROVIDE A 1" X 4-1/2" DAYTON/RICHMOND FLARED THIN SLAB COIL INSERT (F-63), OR EQUIVALENT, WITH A SAFE WORKING LOAD TENSION OF 4,750 LBS. AND A LOAD OF 8,000 LBS. WHEN USED IN COMBINATION WITH THE COIL INSERT SPECIFIED ABOVE. INSTALL THE COIL INSERT AND SWIVEL LIFTING PLATE DIRECTLY BELOW THE PULLING EYE HOOK SPECIFIED IN NOTE A. COORDINATE THE INSTALLATION WITH THE UTILITY'S INSPECTOR. TO ENSURE SAFETY, INSTALLATION OF THE COIL INSERT AND SWIVEL LIFTING PLATE SHALL BE IN COMPLIANCE WITH THE MANUFACTURER'S INSTALLATION INSTRUCTIONS.

(C) THE RIGGING PATH THROUGH THE METER ROOM DOOR IS TO BE DIRECTLY IN LINE FROM TRUCK ACCESS TO THE FLOOR-MOUNTED COIL INSERT AND SWIVEL LIFTING PLATE THROUGH THE METER ROOM DOOR.

(D) THE PULLING EYE HOOK SPECIFIED IN NOTE A, AND THE FLOOR-MOUNTED COIL INSERT AND SWIVEL LIFTING PLATE SPECIFIED IN NOTE B ARE TO BE POSITIONED AT A DISTANCE OUT FROM THE UGPS SUCH THAT ANGLE 'A' (SEE FIGURE 1) IS NOT GREATER THAN 15 DEGREES. THE RIGGING PATH THROUGH THE FRONT OF THE UGPS IS TO BE UNOBSTRUCTED, AND THE RIGGING IS TO HAVE NO CONTACT WITH THE TOP, BOTTOM, OR SIDES OF THE PULL SECTION OPENING. MAXIMUM ALLOWABLE HEIGHT OF TOP PULLING EYE IS 14'.

(E) CUSTOMER TO PROVIDE THE UTILITY 24-HOUR DIRECT ACCESS TO WITHIN 5' OF THE METER ROOM DOOR(S).

BILL OF MATERIALS: NONE

NOTES:

I. PRECAST CONCRETE COMPANIES STOCK THE PULLING DEVICES SPECIFIED ABOVE TEXT
II. UPON COMPLETION OF INSTALLATION OF PULLING DEVICES, CERTIFICATION OF COMPLIANCE WITH THIS STANDARD IS REQUIRED UNDER STRUCTURAL/MECHNICAL ENGINEER'S SEAL.

REFERENCE: NONE

© 1998 - 2023 San Diego Gas & Electric Company. All rights reserved. Removal of this copyright notice without permission is not permitted under law.

REV	CHANGE	DR	BY	DSN	APV	DATE	REV	CHANGE	DR	BY	DSN	APV	DATE
C							F						
B	EDITORIAL CHANGES	ARC	IPJ	IPJ	KRG	12/06/22	E						
A	EDITORIAL CHANGES	--	LSM	LSM	TPM	11/01/17	D						

X Indicates Latest Revision	Completely Revised	New Page	Information Removed

SAMPLE PLAQUE FOR ELECTRICAL EQUIPMENT LABELS

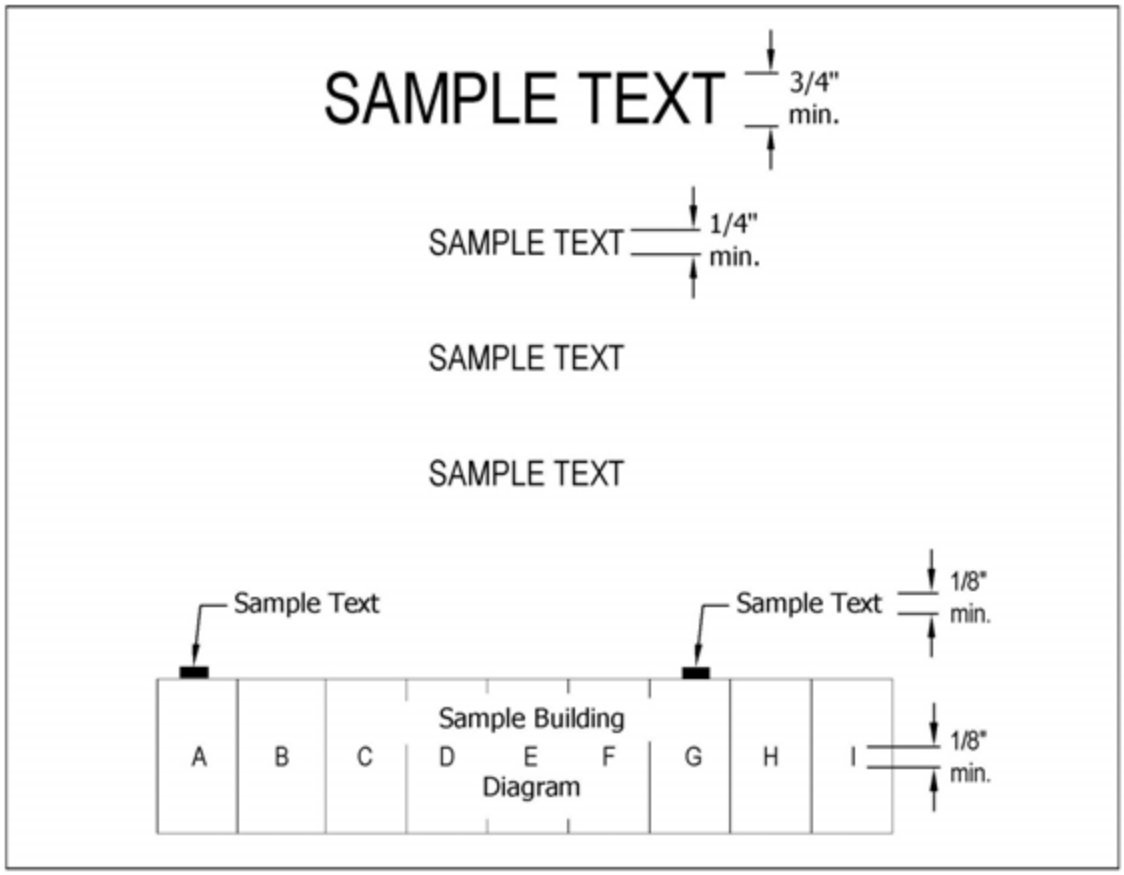

The plaque or directory required by Section 230.2 of the National Electrical Code shall be manufactured in metal or plastic with engraved or machine-printed lettering, or electro-photo-plating, in a contrasting color. The plaque shall include a footprint of the entire building and shall be attached to the service disconnecting means with pop-rivets or other fasteners acceptable to the governmental Authority Having Jurisdiction (AHJ). Epoxy is no longer an acceptable method of securing.

© 1998-2017 San Diego Gas & Electric Company. All rights reserved. Removal of this copyright notice without permission is not permitted under law.

REV	CHANGE	BY	DSGN	APPV	DATE	REV	CHANGE	BY	DSGN	APPV	DATE
A	Editorial Changes	LSM	IPJ	TPM	11/01/17	D					
B						E					
C						F					

X Indicates Latest Revision	Completely Revised	New Page	Information Removed

SDG&E SERVICE STANDARDS & GUIDE

PLAQUE SPECIFICATIONS & EXAMPLES

SG 017.1

TYPICAL PLAQUE FOR NEW BUILDINGS OR EXISTING BUILDINGS WITH SEPARATE SERVICE AREAS

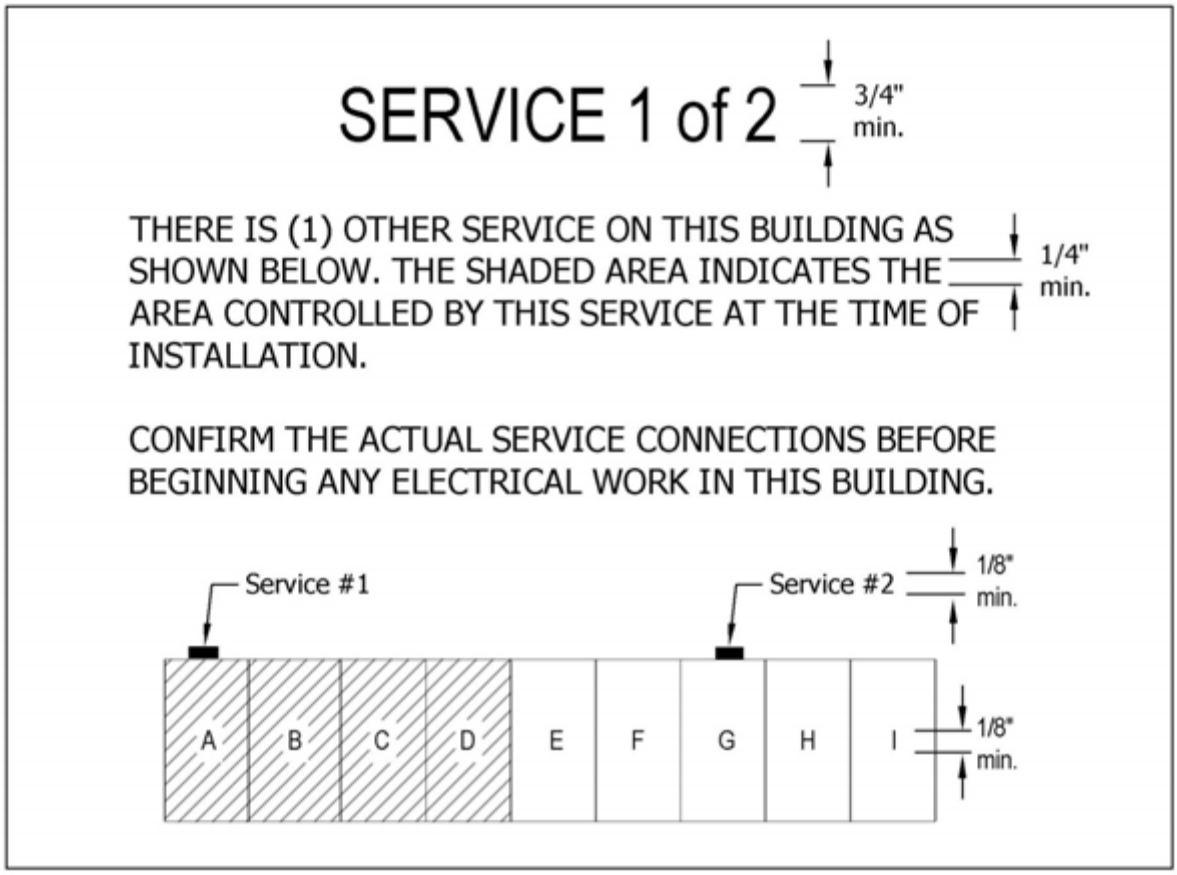

The plaque or directory required by Section 230.2 of the National Electrical Code shall be manufactured in metal or plastic with engraved or machine-printed lettering, or electro-photo-plating, in a contrasting color. The plaque shall include a footprint of the entire building with the area served by each service clearly delineated. The plaque shall be attached to the service disconnecting means with pop-rivets or other fasteners acceptable to the AHJ. Epoxy is no longer an acceptable method of securing.

© 1998-2017 San Diego Gas & Electric Company. All rights reserved. Removal of this copyright notice without permission is not permitted under law.

REV	CHANGE	BY	DSGN	APPV	DATE	REV	CHANGE	BY	DSGN	APPV	DATE
A	Editorial Changes	LSM	IPJ	TPM	11/01/17	D					
B						E					
C						F					

X Indicates Latest Revision	Completely Revised	New Page	Information Removed

TYPICAL PLAQUE FOR EXISTING BUILDINGS WITH INTERMIXED SERVICES

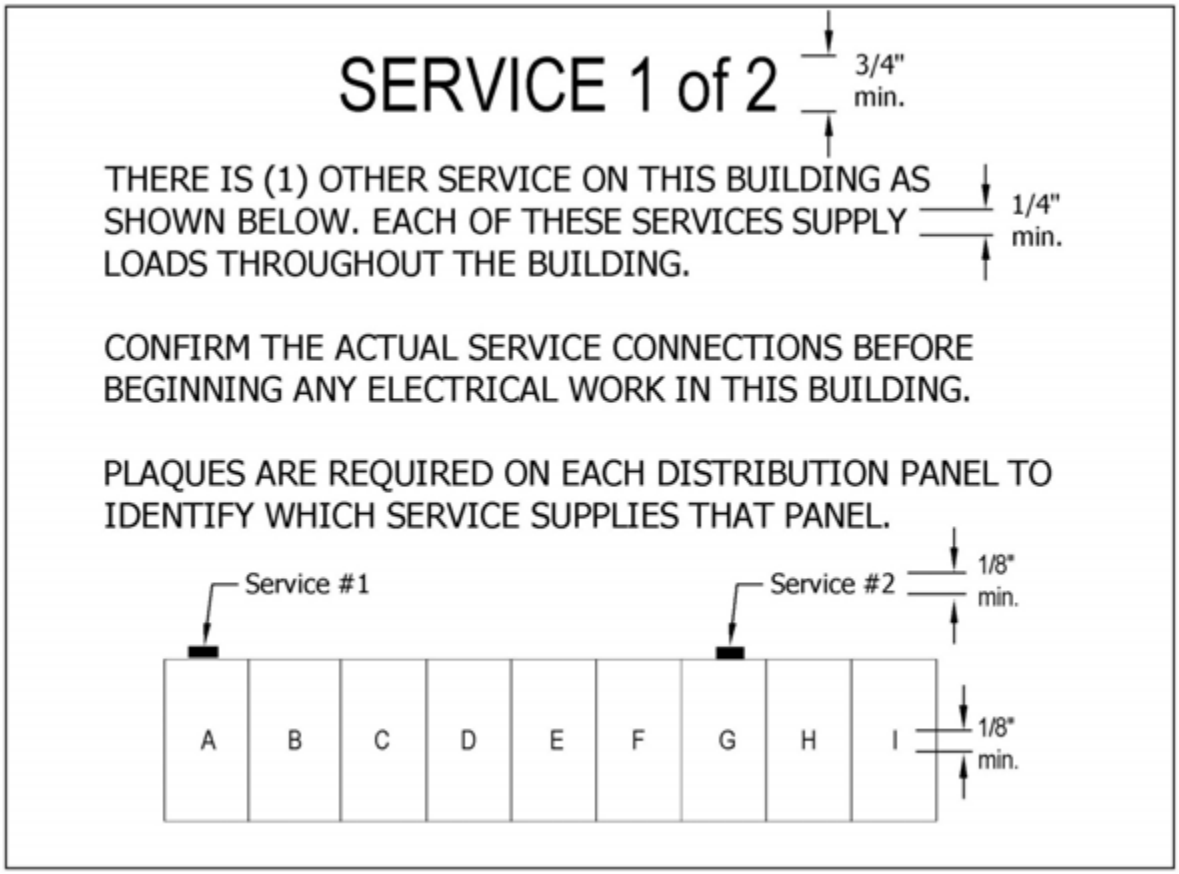

The plaque or directory required by Section 230.2 of the National Electrical Code shall be manufactured in metal or plastic with engraved or machine-printed lettering, or electro-photo-plating, in a contrasting color. The plaque shall include a footprint of the entire building and shall be attached to the service disconnecting means with pop-rivets or other fasteners acceptable to the AHJ. Epoxy is no longer an acceptable method of securing.

© 1998-2017 San Diego Gas & Electric Company. All rights reserved. Removal of this copyright notice without permission is not permitted under law.

REV	CHANGE	BY	DSGN	APPV	DATE	REV	CHANGE	BY	DSGN	APPV	DATE
A	Editorial Changes	LSM	IPJ	TPM	11/01/17	D					
B						E					
C						F					

X	Indicates Latest Revision		Completely Revised		New Page		Information Removed

SCOPE: These clearances apply to all persons who are not qualified electrical workers authorized by SDG&E to work on SDG&E-owned medium-voltage (600V – 50kV) conductors.

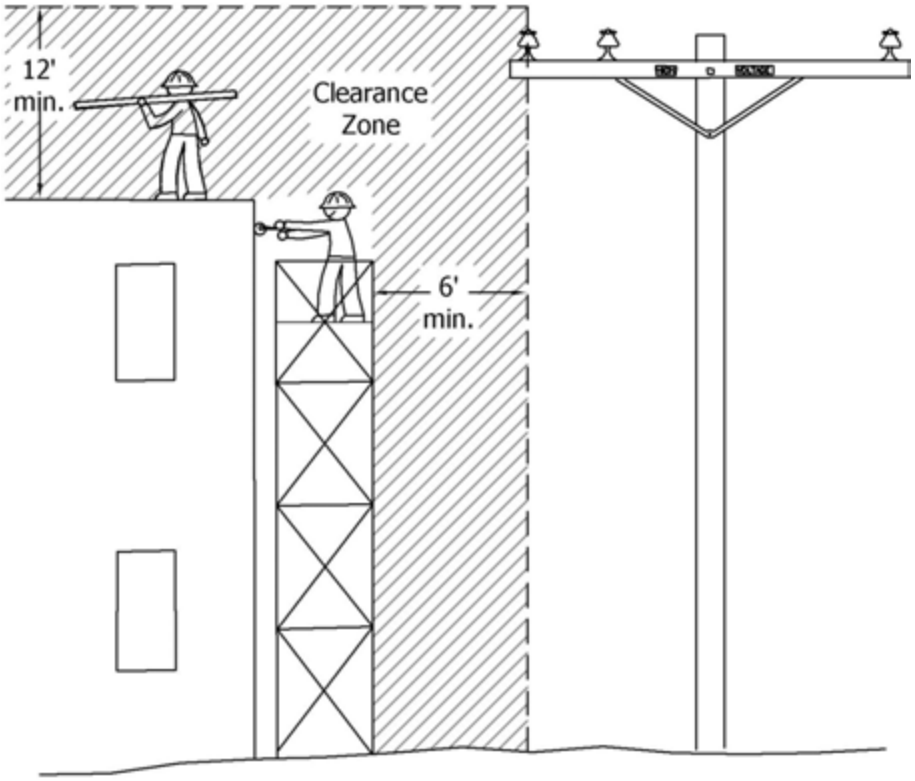

Workers or objects not supported by boom-type equipment must maintain 6' horizontal and 12' vertical clearance from medium-voltage (600V – 50kV) conductors.

Note: Cal-OSHA Electrical Safety Order 2948 makes the customer responsible for notifying SDG&E (Utility) if adjustments need to be made in the electrical system to comply with Title 8. The customer should contact the Utility's Customer Project Planner for the area where the job site is located for available options.

Reference: California Administrative Code Title 8 Industrial Relations Electrical Safety Orders – 2946 & 2948 & Fed-OSHA 1926.1408.

Reference OH 228.1.

© 1998-2017 San Diego Gas & Electric Company. All rights reserved. Removal of this copyright notice without permission is not permitted under law.

REV	CHANGE	BY	DSGN	APPV	DATE	REV	CHANGE	BY	DSGN	APPV	DATE
A	Editorial Changes	LSM	IPJ	TPM	11/01/17	D					
B						E					
C						F					

X Indicates Latest Revision	Completely Revised	New Page	Information Removed	
SHEET 1 OF 2	SDG&E SERVICE STANDARDS & GUIDE			SG 018.1
	MEDIUM-VOLTAGE CONDUCTOR CLEARANCES FOR NON-UTILITY WORKERS & EQUIPMENT			

SCOPE: These clearances apply to all persons who are not qualified electrical workers authorized by SDG&E to work on SDG&E-owned medium-voltage (600V – 50kV) conductors.

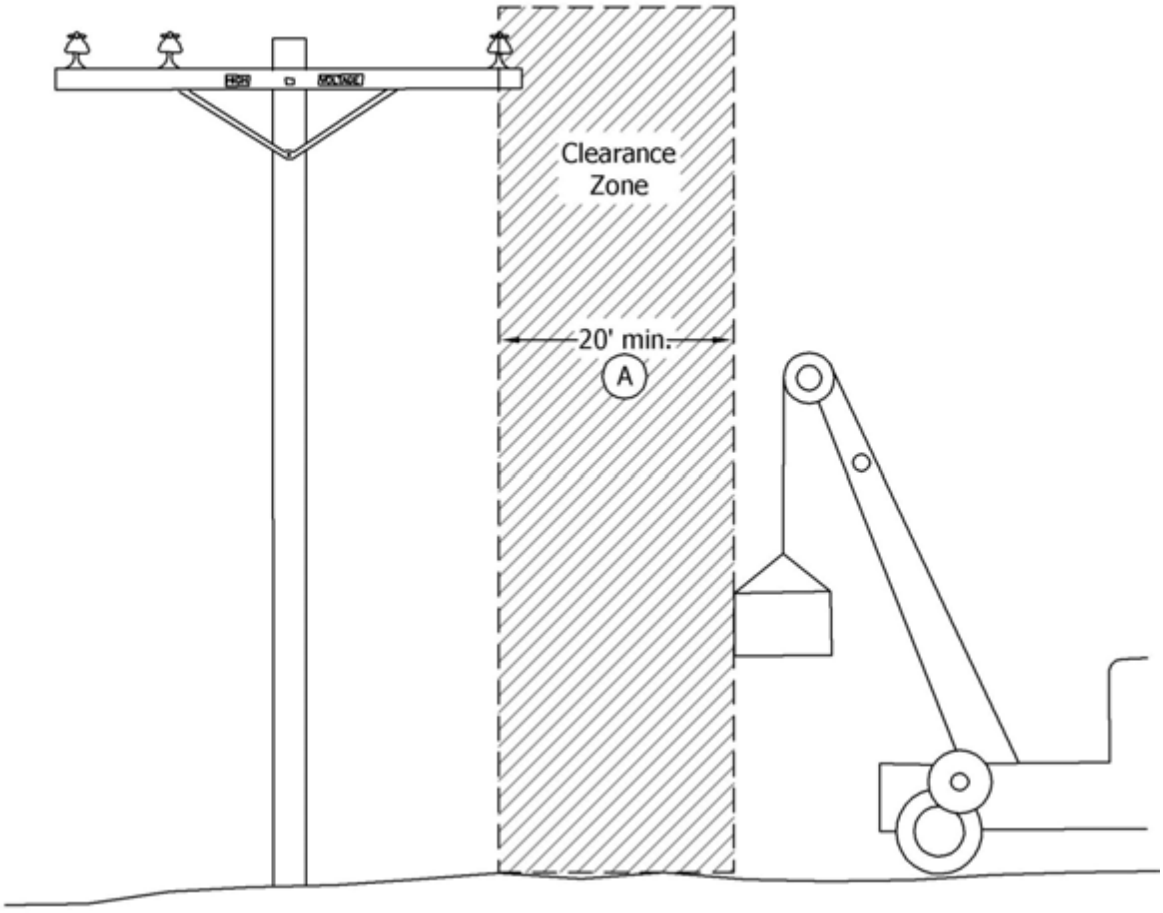

Boom-type lifting or hoisting equipment, including load, must maintain 20' horizontal clearance from medium-voltage (600V – 50kV) conductors.

Ⓐ To reduce minimum distance to 10', refer to "Cranes & Derricks in Construction" in Fed-OSHA 1926.1408.

Note: Cal-OSHA Electrical Safety Order 2948 makes the customer responsible for notifying SDG&E (Utility) if adjustments need to be made in the electrical system to comply with Title 8. The customer should contact the Utility's Customer Project Planner for the area where the job site is located for available options.

Reference: California Administrative Code Title 8 Industrial Relations Electrical Safety Orders – 2946 & 2948 & Fed-OSHA 1926.1408.

Reference OH 228.2.

© 1998-2017 San Diego Gas & Electric Company. All rights reserved. Removal of this copyright notice without permission is not permitted under law.

REV	CHANGE	BY	DSGN	APPV	DATE	REV	CHANGE	BY	DSGN	APPV	DATE
A	Editorial Changes	LSM	IPJ	TPM	11/01/17	D					
B						E					
C						F					

SHEET 2 OF 2	X Indicates Latest Revision		Completely Revised		New Page		Information Removed	SG 018.2
	SDG&E SERVICE STANDARDS & GUIDE							
	MEDIUM-VOLTAGE CONDUCTOR CLEARANCES FOR NON-UTILITY WORKERS & EQUIPMENT							

SCOPE: THIS STANDARD SHOWS THE MINIMUM CLEARANCE AND SEPARATION REQUIREMENTS OF ENERGIZED OVERHEAD CONDUCTORS FROM CONTAINERS OF FLAMMABLE OR EXPLOSIVE MIXTURES.

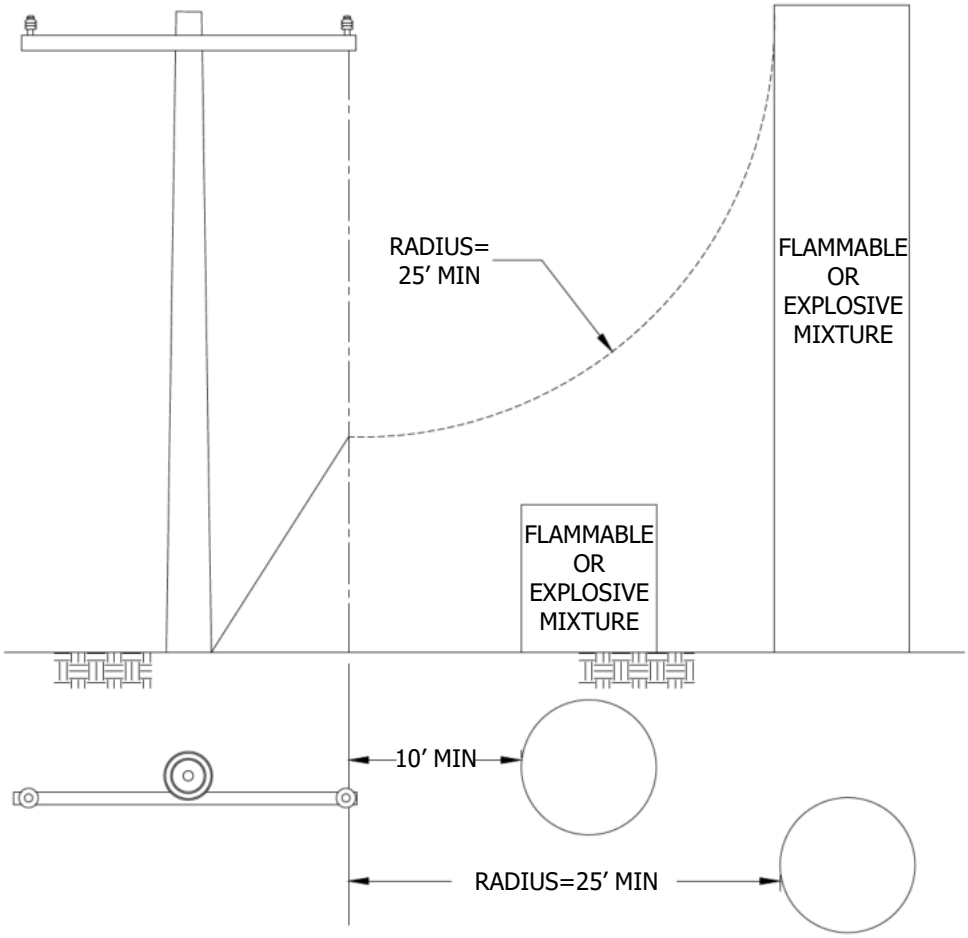

FIGURE 1

INSTALLATION: NONE

BILL OF MATERIALS: NONE

NOTES:

I. ALL ENERGIZED OVERHEAD FACILITIES OF ANY VOLTAGE CLASSIFICATION SHALL HAVE A MINIMUM CLEARANCE OF 10' MEASURED HORIZONTALLY AND A RADIUS OF 25' FROM ANY EXPOSED TANK, VENT, OR FILL TUBE CONTAINING FLAMMABLE OR EXPLOSIVE MIXTURES.

II. THIS STANDARD DOES NOT APPLY TO FACILITIES INSTALLED PRIOR TO NOVEMBER 15, 1983. SEE G.O. 95, RULE 12.3.

REFERENCE:

a. REFER TO TITLE 8 (OSHA) ARTICLE 34
b. REFER TO OH 229.6.

© 1998 - 2023 San Diego Gas & Electric Company. All rights reserved. Removal of this copyright notice without permission is not permitted under law.

REV	CHANGE	DR	BY	DSN	APV	DATE	REV	CHANGE	DR	BY	DSN	APV	DATE
C							F						
B	EDITORIAL CHANGES	ARC	IPJ	IPJ	KRG	01/09/2023	E						
A	EDITORIAL CHANGES	--	LSM	IPJ	TPM	11/01/17	D						

X	Indicates Latest Revision		Completely Revised		New Page		Information Removed

SDG&E ELECTRIC SERVICE STANDARDS & GUIDES

SHEET
1 OF 1

CLEARANCES OF OVERHEAD FACILITIES FROM TANKS CONTAINING A FLAMMABLE OR EXPLOSIVE MIXTURE

SG019.1

Conduit pulling tape, concrete products, and wood poles purchased for use on SDG&E's distribution system and customer-owned meter poles must meet the American Society for Testing & Materials (ASTM) International standards. Below is a current listing of suppliers that carry products approved by SDG&E. Prior to purchase, it is advised that you verify with the supplier that the products you are procuring meet ASTM International standards.

Supplier	Phone Number	Conduit	Concrete Products	Poles	Pulling Tape
Brooks Products – Ontario	909-947-7470		X		
California Electric Supply Chula Vista El Cajon	 619-427-2370 619-579-0711	X			
Consolidated Electric Distributors Carlsbad Escondido Ramona San Clemente San Diego Santee Temecula	 760-438-9691 760-747-2900 760-788-6112 949-492-5161 858-268-1020 619-562-3004 951-296-9555	X			
Crescent Electric Supply Company	855-999-2372	X	X	X	X
CSC (Communications Supply Corporation/WESCO Distribution)	858-279-0233	X			
Grand Electric Supply – Vista	760-727-0400	X			
Graybar Electric Company San Diego San Marcos	 858-547-6550 760-591-4788	X			
Jensen Precast – Fontana	909-350-4111		X		
Oldcastle Precast Escondido Fontana	 760-737-8590 800-626-3860		X		
One Source Distributors El Centro Garden Grove Oceanside San Diego – Miramar San Diego – Kearny Mesa	 760-352-1015 714-685-5340 760-966-4500 858-452-9001 858-565-8866				X
Pine Tree Lumber – Escondido	760-745-0411			X	
ProGlass, Inc. – Gig Harbor (WA)	253-884-4008		X		
Rexel El Cajon Escondido San Diego	 619-442-9255 760-747-2211 858-636-4400	X			

Note: Conduit must be gray.

© 1998-2017 San Diego Gas & Electric Company. All rights reserved. Removal of this copyright notice without permission is not permitted under law.

REV	CHANGE	BY	DSGN	APPV	DATE	REV	CHANGE	BY	DSGN	APPV	DATE
A	Editorial Changes	LSM	IPJ	TPM	11/01/17	D					
B						E					
C						F					

X Indicates Latest Revision	Completely Revised	New Page	Information Removed

PRODUCT DISTRIBUTORS

SCOPE: THIS SERVICE GUIDE EXPLAINS HOW TO OBTAIN A SERVICE AND METER LOCATION FOR NEW ELECTRIC SERVICES, SERVICE RELOCATIONS, AND SERVICE UPGRADES.

TABLE 1:

SERVICE ORDER TEAMS FOR RESIDENTIAL CUSTOMERS UP TO 400 AMPS AND NON-RESIDENTIAL CUSTOMERS UP TO 200 AMPS		
BEACH CITIES 4848 SANTE FE ST SAN DIEGO, CA 92109 (858) 581-7544	METRO 701A 33RD ST SAN DIEGO, CA 92102 (619) 230-7800	NORTH COAST 4940 CARLSBAD BLVD CARLSBAD, CA 92008 (760) 476-5621
NORTHEAST 571 ENTERPRISE ST ESCONDIDO, CA 92029 (760) 480-7745	EASTERN 904 WEST MAIN ST EL CAJON, CA 92020 (619) 441-3969	ORANGE COUNTY 662 CAMINO DE LOS MARES SAN CLEMENTE, CA 92673 (949) 361-8066

TABLE 2:

PROJECT MANAGEMENT OFFICES FOR RESIDENTIAL CUSTOMERS UP TO 400 AMPS AND NON-RESIDENTIAL CUSTOMERS UP TO 200 AMPS		
SOUTHERN REGION (METRO) 8315 CENTURY PARK CT, STE 210 SAN DIEGO, CA 92123-1550 (858) 636-6805	NORTHERN REGION 571 ENTERPRISE ST ESCONDIDO, CA 92029 (760) 480-7603	ORANGE COUNTY REGION 662 CAMINO DE LOS MARES SAN CLEMENTE, CA 92673 (949) 361-8028

IN ALL CASES, YOU MAY ALSO CONTACT SDG&E BY CALLING (877) 789-9866 OR VIA THE INTERNET AT:
https://www.sdge.com/businesses/savings-center/services/service-planning-for-expansionrelocation/service-and-meter-request-form

TO REQUEST A **TRENCH INSPECTION**, CONTACT ONE OF THE FOLLOWING NUMBERS BETWEEN 7:00 A.M. AND 2:00 P.M. BASED ON THE LOCATION OF YOUR PROJECT.

TABLE 3:

SAN DIEGO GAS & ELECTRIC TRENCH INSPECTIONS		
SOUTHERN REGION (METRO) (877) 610-2948	NORTHERN REGION (760) 432-5805	ORANGE COUNTY REGION (949) 361-8061

TABLE OF CONTENTS

FOR SERVICE STANDARDS INTERPRETATIONS OR TO PURCHASE A SERVICE STANDARDS & GUIDE, CONTACT:

ISRAEL JUAREZ
SERVICE STANDARDS TEAM LEAD
ijuarez@sdge.com
(858) 636-3941



© 1998 - 2020 San Diego Gas & Electric Company. All rights reserved. Removal of this copyright notice without permission is not permitted under law.

REV	CHANGE	DR	BY	DSN	APV	DATE	REV	CHANGE	DR	BY	DSN	APV	DATE
C	FORMATTING	EDM	JIK	--	--	5/22/2020	F						
B	EDITORIAL CHANGES		CSE	IPJ	CZH	2/10/2020	E						
A	EDITORIAL CHANGES		LSM	IPJ	TPM	11/1/2017	D						

TABLE OF CONTENTS

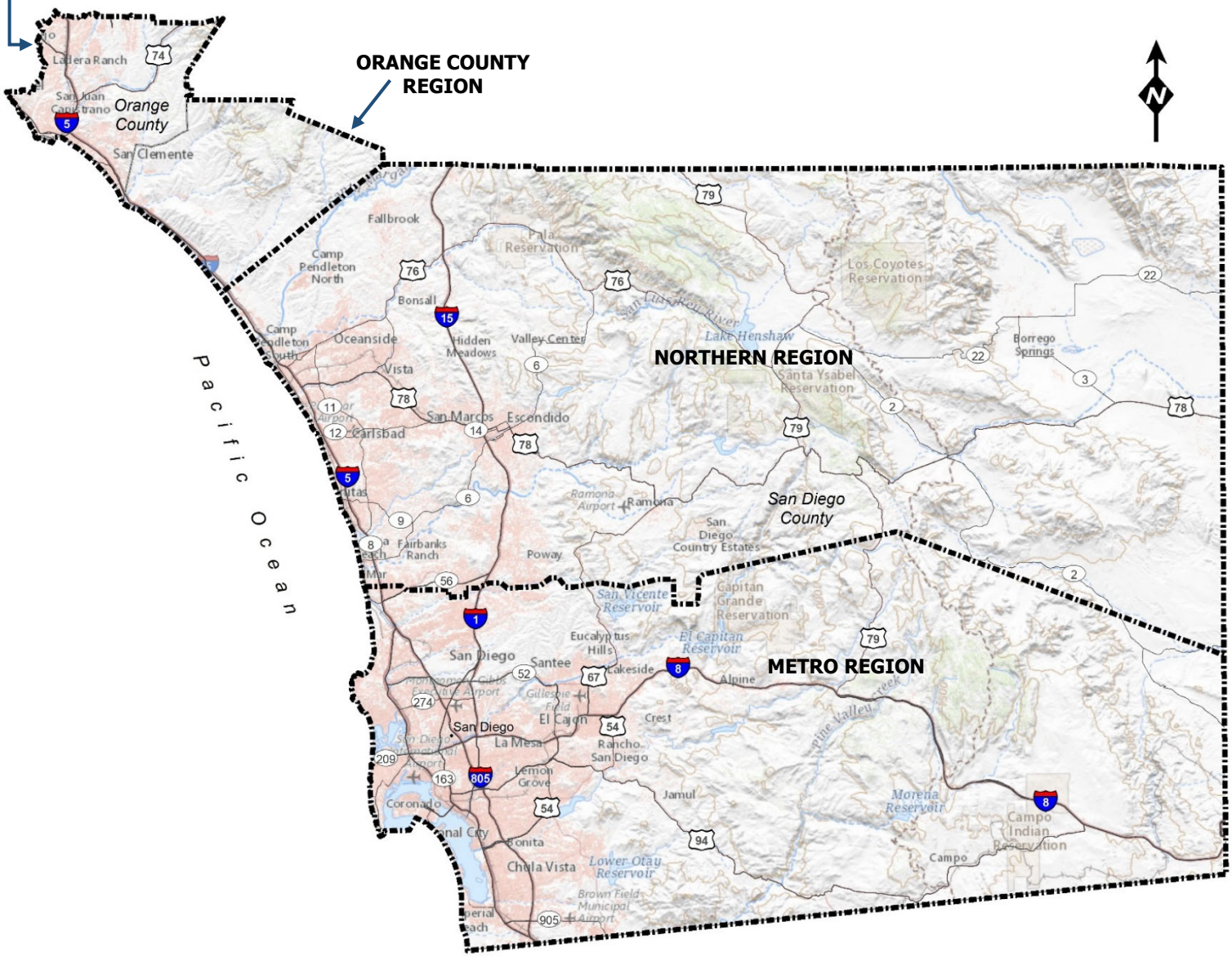

© 1998 - 2020 San Diego Gas & Electric Company. All rights reserved. Removal of this copyright notice without permission is not permitted under law.

REV	CHANGE	DR	BY	DSN	APV	DATE	REV	CHANGE	DR	BY	DSN	APV	DATE
C							F						
B	FORMATTING	EDM	JIK	--	--	5/22/2020	E						
A	EDITORIAL CHANGES		LSM	LSM	TPM	11/1/2017	D						

X	Indicates Latest Revision		Completely Revised		New Page		Information Removed

SHEET 1 OF 1

SDG&E ELECTRIC SERVICE STANDARDS & GUIDES

PROJECT MANAGEMENT
REGIONAL BOUNDARY MAP

SG022.1

SUBJECT – ELECTRIC **PAGE**

CONDUITS, CUSTOMER-OWNED & -INSTALLED ..... 309.1 – 309.3

DEFINITIONS OF TERMS ..... 003.1 – 003.3

ELECTRIC METER CABINETS ..... 509.1 – 509.4

ELECTRIC METER ROOMS ..... 506.1 – 506.4

ELECTRIC SERVICE POLICIES ..... 011.1 – 014.5

FAULT CURRENT, UTILITY'S CONTRIBUTION & EXAMPLES ..... 006.1 – 006.2, 008.1 – 008.7

LOCKSMITHS, LISTING OF ..... 005.1 – 005.2

METER ACCESS 004.5

METER POLES, CUSTOMER-OWNED SERVICE & METER POLES ..... 204.1 – 205.4

METER TYPE & SOCKET CLIP ARRANGEMENT 516

SERVICE LATERAL, UNDERGROUND ELECTRIC SERVICE LATERAL RESIDENTIAL OR COMMERCIAL ..... 309.1 – 309.3

TERMINATING ENCLOSURES

PULL CAN, 0-600 VOLTS ..... 705.1 – 706.2

PULL SECTION, 0-600 VOLTS ..... 708.1 – 708.2

PULL SECTION, MEDIUM-VOLTAGE SWITCHGEAR ..... 608.1 – 608.3

TRENCH INSPECTIONS 21, 004.5

TRUCK ACCESS ..... 015 – 016.2

UNACCEPTABLE METER LOCATIONS ..... 504.3 – 504.4

WORKING SPACE ..... 504.4 – 504.5

SUBJECT – GAS

GAS METER CAPACITY & SELECTION 1005

GAS SERVICE RISER & HOUSELINE SPACING, CLEARANCES, & MINIMUM WORKING SPACE ..... 1009.1 – 1009.3

GAS TRENCH ONLY FOR SAN DIEGO COUNTY ..... 1004.1 – 1004.2

METER CABINET FOR SINGLE RESIDENTIAL GAS METER ..... 1008.1 – 1008.3

UTILITY PLACEMENT IN JOINT TRENCH & GAS METER SET ASSEMBLY INSTALLATION ..... 1007.1 – 1007.5

TABLE OF CONTENTS

© 1998 - 2020 San Diego Gas & Electric Company. All rights reserved. Removal of this copyright notice without permission is not permitted under law.

REV	CHANGE	DR	BY	DSN	APV	DATE	REV	CHANGE	DR	BY	DSN	APV	DATE
C							F						
B	FORMATTING	EDM	JIK	--	--	5/22/2020	E						
A	NEW PAGE		LSM	BRB	TPM	11/1/2017	D						

	X	Indicates Latest Revision		Completely Revised		New Page		Information Removed

SDG&E ELECTRIC SERVICE STANDARDS & GUIDES

SHEET 1 OF 1

FREQUENTLY REFERENCED STANDARDS

SG023.1

ELECTRIC SECTIONS

SUBJECT **PAGE**

ACCESSIBILITY 004.5

ACCESSIBLE/INACCESSIBLE METER LOCATION....005.1

ADDING LOAD TO EXISTING METER PANELS.... 004.2 – 004.3

ADDITIONS, ALTERATIONS OR RENEWAL OF EXISTING SERVICE & METERING EQUIPMENT 504.1

ADDRESSING CONVENTIONS....004.6

ALTERNATE SERVICE DELIVERY POINT REQUESTS....011.2

APPLICATION FOR A BILLING ACCOUNT....004.3

BARRIERS FOR SERVICE & METERING EQUIPMENT 505

BIL RATING....603.4

BUS TAP DRAWINGS FOR APPROVAL .... 517.1 – 517.2, 603.3

BUSWAY SERVICE HEADS.... 110.1 – 110.2

CABLE POLE QUADRANT & RISER IDENTIFICATION.... 314.1 – 314.3

CABLE POLE RISER INSTALLATION .... 315.1 – 315.5

CABLE POLE RISER POSITION USING LADDER ARM BRACKET & SINGLE RISER.... 313.1 – 313.2

CABLE TERMINATION BUS STUBS.... 709.1 – 709.3

CHARACTER OF SERVICE.... 004.3 – 004.4

CLEARANCES OF OVERHEAD FACILITIES FROM TANKS CONTAINING FLAMMABLE OR EXPLOSIVE MIXTURE 019

CLEARANCES, MEDIUM-VOLTAGE CONDUCTORS .... 018.1 – 018.2

CONDUIT BEND & RISER AT BUILDING.... 312.1 – 312.2

CONDUIT, SAFETY OVERFLOW FITTING.... 307

CONNECTION OR DISCONNECTION OF SERVICE 004.4

CONTROL POWER TRANSFORMER METERING 605

CONVERSIONS.... 303, 304.1 – 304.2, 305.1 – 305.2

CURRENT TRANSFORMER DIMENSIONS 606

TABLE OF CONTENTS

© 1998 - 2021 San Diego Gas & Electric Company. All rights reserved. Removal of this copyright notice without permission is not permitted under law.

REV	CHANGE	DR	BY	DSN	APV	DATE	REV	CHANGE	DR	BY	DSN	APV	DATE
C	SG308 MOVED TO FMO	EDM	JIK	IPJ	CZH	02/08/2021	F						
B	FORMATTING	EDM	JIK	--	--	05/22/2020	E						
A	NEW PAGE	--	LSM	LSM	TPM	11/01/2017	D						

	Indicates Latest Revision		Completely Revised		New Page	X	Information Removed

SUBJECT **PAGE**

CUSTOMER GENERATION

- CLEARANCE REQUIREMENTS FROM SDG&E-OWNED ELECTRIC METER & SERVICE & GAS METER ASSEMBLY 806.13
- DISCONNECTION DEVICES ..... 806.2 – 806.4
- DISCONNECTION OF GENERATOR 806.15
- DISTRIBUTED GENERATION ..... 806.1 – 806.16
- GENERAL INFORMATION 803.1
- INSPECTION 806.15
- METERING DEVICES INFORMATION & TABLE 806.14
- METERING EXAMPLES FOR BILLING & PURCHASE OF ENERGY 806.16
- NET GENERATION OUTPUT METERING ..... 806.5 – 806.12
- STAND-BY GENERATOR ..... 805.1 – 805.3
- STAND-BY GENERATOR SAFETY TRANSFER SWITCH 804
- TELEMETERING 806.15
- TRANSFORMER REQUIREMENTS 806.15
- VOLTAGE STANDARDS 806.15

CUSTOMER WILL FURNISH, INSTALL, OWN, & MAINTAIN ..... 009.1 – 009.3

CUSTOMER-OWNED SERVICE & METER

- ADDRESS MARKING 203.2
- MULTIPLE METER INSTALLATION 206, 207
- PERMANENT POLE ..... 204.1 – 204.3
- TEMPORARY POLE ..... 205.1 – 205.4
- TEMPORARY SERVICE FROM AN OVERHEAD SOURCE ..... 205.1 – 205.4, 206
- UNDERGROUND INSTALLATION 207

DEFINITIONS OF TERMS ..... 003.1 – 003.3

DRIP LOOPS 104.5, 112.2, 112.4, 112.6

TABLE OF CONTENTS

© 1998 - 2021 San Diego Gas & Electric Company. All rights reserved. Removal of this copyright notice without permission is not permitted under law.

REV	CHANGE	DR	BY	DSN	APV	DATE	REV	CHANGE	DR	BY	DSN	APV	DATE
C	SG308 MOVED TO FMO	EDM	JIK	IPJ	CZH	02/08/2021	F						
B	FORMATTING	EDM	JIK	--	--	05/22/2020	E						
A	NEW PAGE	--	LSM	LSM	TPM	11/01/2017	D						

SUBJECT **PAGE**

ELECTRIC METER & SERVICE LOCATION – COMMERCIAL & RESIDENTIAL PREMISES

COMMERCIAL & INDUSTRIAL, METER LOCATIONS ..... 504.2 – 504.3

GENERAL INFORMATION ..... 504.1 – 504.2

INACCESSIBLE 005.1

MID-RISE & HIGH-RISE BUILDINGS ..... 510.1 – 510.5

REQUESTS, ELECTRIC METER & SERVICE LOCATION 503, 504.1

RESIDENTIAL, METER LOCATIONS 504.2

SINGLE OR MULTIPLE METER INSTALLATIONS ..... 507.1 – 507.2

UNACCEPTABLE METER LOCATIONS ..... 504.3 – 504.4

ELECTRIC METER CABINET – COMMERCIAL OR RESIDENTIAL MULTI-METER INSTALLATIONS ..... 509.1 – 509.4

ELECTRIC METER ROOM ..... 506.1 – 506.4

ELECTRIC SERVICE DISCONNECTS & METER SERVICE DISCONNECTS ..... 511.1 – 511.3, 515.1

ELECTRIC SERVICE POLICIES ..... 011.1 – 014.5

ELECTRIC TERMINATING ENCLOSURES, 0 – 600 VOLTS 703

GENERAL INFORMATION 003.3, 703

OVERHEAD SERVICE TERMINATING ENCLOSURE 704

UNDERGROUND PULL SECTION ..... 708.1 – 708.2

EQUIPMENT PROVIDED, BY CUSTOMER & UTILITY 004.4

EXISTING CUSTOMERS REQUESTING ADDITIONAL SERVICES OR REMOTE METER LOCATIONS ..... 013.1 – 013.3

EXISTING GAS METER BELOW ELECTRIC SERVICE & METERING EQUIPMENT ..... 504.1 – 504.2

FACILITIES 004.5, 503

FIELD HEATING SERVICE LATERAL CONDUITS 306

GAS & ELECTRIC METER ACCESS 005.1

GENERAL INFORMATION ..... 004.1 – 004.5

GROUNDING & BONDING 112.3

INGRESS & EGRESS TO ELECTRIC SERVICE & METERING EQUIPMENT ..... 504.2 – 504.3

TABLE OF CONTENTS

© 1998 - 2021 San Diego Gas & Electric Company. All rights reserved. Removal of this copyright notice without permission is not permitted under law.

REV	CHANGE	DR	BY	DSN	APV	DATE	REV	CHANGE	DR	BY	DSN	APV	DATE
C	SG308 MOVED TO FMO	EDM	JIK	IPJ	CZH	02/08/2021	F						
B	FORMATTING	EDM	JIK	--	--	05/22/2020	E						
A	NEW PAGE	--	LSM	LSM	TPM	11/01/2017	D						

SUBJECT **PAGE**

INSPECTION AUTHORITY 003.1

INSTRUMENT TRANSFORMER MOUNTING SPECIFICATIONS 607

LOCKSMITHS, LISTING OF ..... 005.1 – 005.2

MANUFACTURER'S DRAWINGS FOR APPROVAL 517.1, 603.1

MARKOUT SERVICE 004.5

MEDIUM-VOLTAGE CONDUCTOR CLEARANCES FOR NON-UTILITY WORKERS & EQUIPMENT ..... 018.1 – 018.2

MEDIUM VOLTAGE METERING CUBICLE ..... 604.1 – 604.6

MEDIUM VOLTAGE SERVICE & METERING EQUIPMENT ..... 603.1 – 603.6

METER CABINET RECESS ..... 508.1 – 508.2

METER HEIGHTS 504.1

METER LOCATIONS (REFER TO ELECTRIC METER & SERVICE LOCATION – COMMERCIAL & RESIDENTIAL PREMISES ON PAGE 024.3)

METER MARKING 504.1

METER PEDESTAL FOUNDATION DETAILS 519.5

METER PEDESTAL, COMMERCIAL ..... 519.1 – 519.5

METER PEDESTAL, FIELD REPLACEMENT OF EXISTING 120-VOLT METER PEDESTAL ..... 520.1 – 520.2

METER PEDESTAL, RESIDENTIAL ..... 518.2 – 518.3

METER SOCKET SEALING RINGS 503

METER TYPE & SOCKET CLIP ARRANGEMENT 516

METERED & UNMETERED CONDUCTORS 503

METERING COMMUNICATIONS 525

MID-RISE & HIGH-RISE BUILDINGS ..... 510.1 – 510.5

MOBILE HOME PARK SERVICE & METER PEDESTALS ..... 518.1 – 518.3

MULTI-FAMILY RESIDENTIAL BUILDINGS – LESS THAN 3 STORIES HIGH 012.1, 013.1

OVERHEAD ELECTRIC CLEARANCES OVER SWIMMING POOLS ..... 108.1 – 108.2

PERMIT & INSPECTION 004.3

PLAQUE SPECIFICATIONS & EXAMPLES ..... 017.1 – 017.3

TABLE OF CONTENTS

© 1998 - 2021 San Diego Gas & Electric Company. All rights reserved. Removal of this copyright notice without permission is not permitted under law.

REV	CHANGE	DR	BY	DSN	APV	DATE	REV	CHANGE	DR	BY	DSN	APV	DATE
C	SG308 MOVED TO FMO	EDM	JIK	IPJ	CZH	02/08/2021	F						
B	FORMATTING	EDM	JIK	--	--	05/22/2020	E						
A	NEW PAGE	--	LSM	LSM	TPM	11/01/2017	D						

SUBJECT **PAGE**

PRODUCT DISTRIBUTORS 020

PULLING DEVICES FOR INSTALLATION OF SERVICE LATERAL CONDUCTORS IN PARKING STRUCTURES..... 016.1 – 016.2

PURPOSE 004.1

READILY ACCESSIBLE DEFINITION 503

REQUEST FOR SERVICE..... 021, 004.2

RESIDENTIAL OR MIXED USE BUILDINGS – 3 STORIES OR GREATER 012.1, 013.1

RESIDENTIAL SINGLE-PHASE MULTI-METER STACK..... 707

RESIDENTIAL CONTIGUOUS DWELLINGS – TOWNHOUSES (ROW HOMES) .....012.1 – 012.2, 013.1 – 013.2

RIGHTS OF WAY 011.3

RISERS

- METALLIC CONDUIT RISERS ..... 105.1 – 105.2
- SOLID WOOD RISERS ..... 106.1 – 106.2

SAFETY SOCKET METER CANS ..... 514.1 – 514.5

SAMPLE PLAQUE FOR ELECTRICAL EQUIPMENT LABELS.....017.1

SCOPE 004.1

SDG&E TRANSFORMER FUSING INFORMATION ..... 007.1 – 007.2

SDG&E WILL FURNISH, INSTALL, OWN, & MAINTAIN 009.4

SEALING OF METER & SERVICE FACILITIES 004.5, 503

SECONDARY SERVING VOLTAGES & CLASSIFICATION OF SERVICE INFORMATION 011.3

SERVICE DROPS

- ATTACHMENTS..... 103.1 – 103.5, 105.1 – 105.2, 106.1 – 106.2
- CLEARANCES .....107.1 – 107.11
- CLEARANCES OVER SWIMMING POOLS..... 108.1 – 108.2
- GENERAL INFORMATION.....103.1
- LENGTH 103.1
- SUPPORTS..... 104.1 – 104.5

TABLE OF CONTENTS

© 1998 - 2021 San Diego Gas & Electric Company. All rights reserved. Removal of this copyright notice without permission is not permitted under law.

REV	CHANGE	DR	BY	DSN	APV	DATE	REV	CHANGE	DR	BY	DSN	APV	DATE
C	SG308 MOVED TO FMO	EDM	JIK	IPJ	CZH	02/08/2021	F						
B	FORMATTING	EDM	JIK	--	--	05/22/2020	E						
A	NEW PAGE	--	LSM	LSM	TPM	11/01/2017	D						

SUBJECT **PAGE**

SERVICE & METERING EQUIPMENT, RESIDENTIAL SELF-CONTAINED

COMBINATION PULL & METER CANS ..... 512.1 – 512.8

EQUIPMENT CONNECTED AHEAD OF A MAIN SERVICE DISCONNECT 512.1

METER SOCKET CLOSING DEVICES 512.1

METER SOCKET CONNECTIONS 512.1

SELF-CONTAINED METER SOCKETS 512.1

SERVICE ENTRANCE CONDUCTORS, 0 – 600 VOLTS ..... 112.1 – 112.6

SERVICE ENTRANCE LIMITATIONS 503

SERVICE ENTRANCE RACEWAYS 111

SERVICE HEADS ..... 109.1 – 109.2

SERVICE LOCATIONS 011.2

SERVICE PLANNING 004.2

SINGLE PREMISE – MULTIPLE NON-RESIDENTIAL ENTERPRISES 012.2, 013.2

SINGLE PREMISE – MULTIPLE RESIDENTIAL CUSTOMERS 012.3, 013.3

SINGLE PREMISE – SINGLE NON-RESIDENTIAL ENTERPRISE ..... 012.2, 013.2 – 013.3

SINGLE PREMISE – SINGLE RESIDENTIAL CUSTOMER WITH OTHER ELECTRIC USES 012.3, 013.3

SINGLE PREMISE WITH MULTIPLE BUILDINGS – SERVICE & METERING REQUIREMENTS ..... 014.1 – 014.5

STANDARD SWITCHBOARD SERVICE SECTIONS ..... 517.1 – 517.20

SWITCHGEAR UNDERGROUND TERMINATING PULL SECTION, MEDIUM VOLTAGE ..... 608.1 – 608.3

TEST-BYPASS FACILITIES FOR SAFETY SOCKETS 513

TESTING REQUIREMENTS FOR METAL-ENCLOSED SERVICE ENTRANCE & UNMETERED FEEDER BUSWAYS 010

TRANSFORMER FUSING INFORMATION, SDG&E ..... 007.1 – 007.2

TRANSFORMER RATED METER [CURRENT TRANSFORMER (CT)] ..... 515.1 – 515.6

TRANSFORMER VAULTS ..... 009.1 – 009.4

TRENCH INSPECTIONS 004.5

TROLLEY TRACTION STATION, 12KV SERVICE POINT CONNECTION 609

TABLE OF CONTENTS

© 1998 - 2021 San Diego Gas & Electric Company. All rights reserved. Removal of this copyright notice without permission is not permitted under law.

REV	CHANGE	DR	BY	DSN	APV	DATE	REV	CHANGE	DR	BY	DSN	APV	DATE
C	SG308 MOVED TO FMO	EDM	JIK	IPJ	CZH	02/08/2021	F						
B	FORMATTING	EDM	JIK	--	--	05/22/2020	E						
A	NEW PAGE	--	LSM	LSM	TPM	11/01/2017	D						

SUBJECT **PAGE**

TRUCK ACCESS REQUIREMENTS, LINE 015

TYPICAL PLAQUE FOR EXISTING BUILDINGS WITH INTERMIXED SERVICES 017.3

TYPICAL PLAQUE FOR NEW BUILDINGS OR EXISTING BUILDINGS WITH SEPARATE SERVICE AREAS 017.2

UNACCEPTABLE METER LOCATIONS ..... 504.3 – 504.4

UNDERGROUND ELECTRIC SERVICE LATERAL CLEARANCES

- GASOLINE DISPENSING & SERVICE STATIONS 316, 318
- LEACH FIELDS 319
- PROPANE TANKS ..... 317.1 – 317.2, 318

UNDERGROUND ELECTRIC SERVICE LATERAL CONDUIT REQUIREMENTS ..... 309.1 – 309.3

UNDERGROUND PULL CAN WITH CABLE TERMINATION BUS STUBS ..... 706.1 – 706.2

UNDERGROUND PULL CAN WITH OR WITHOUT MECHANICAL LUGS ..... 705.1 – 705.4

UNDERGROUND PULL SECTION (SEE ELECTRIC TERMINATING ENCLOSURES, 0 – 600 VOLTS ON PAGE SG 024.3)

UNDERGROUND SERVICE FROM OVERHEAD FACILITIES (LOW VOLTAGE) ..... 310.1 – 310.2

UNDERGROUND SERVICE FROM OVERHEAD FACILITIES-PADMOUNT TRANSFORMER ..... 311.1 – 311.2

UNMETERED ELECTRIC SERVICE ..... 524.1 – 524.10

UTILITY METERS 003.3

UTILITY'S CONTRIBUTION TO FAULT CURRENT ..... 006.1 – 006.2

UTILITY'S CONTRIBUTION TO FAULT CURRENT SECONDARY VOLTAGE SERVICE EXAMPLES ..... 008.1 – 008.7

VENTILATION 517.2, 603.5

WIRELESS COMMUNICATIONS ON PRIVATE PROPERTY ..... 522.1 – 522.2

WIRELESS COMMUNICATIONS PROVIDER – METERED ELECTRIC SERVICE ..... 523.1 – 523.3

WORK ON UTILITY-OWNED POLES 004.5

WORKING SPACE

- LOW VOLTAGE (0 – 600 VOLTS) ..... 504.4 – 504.5
- MEDIUM-VOLTAGE SWITCHGEAR ..... 603.3 – 603.4

TABLE OF CONTENTS

© 1998 - 2021 San Diego Gas & Electric Company. All rights reserved. Removal of this copyright notice without permission is not permitted under law.

REV	CHANGE	DR	BY	DSN	APV	DATE	REV	CHANGE	DR	BY	DSN	APV	DATE
C	SG308 MOVED TO FMO	EDM	JIK	IPJ	CZH	02/08/2021	F						
B	FORMATTING	EDM	JIK	--	--	05/22/2020	E						
A	NEW PAGE	--	LSM	LSM	TPM	11/01/2017	D						

GAS SECTION

SUBJECT **PAGE**

ASSISTANCE & INFORMATION AVAILABLE....1003.3

BARRICADES FOR GAS METER SETS....1014.1 – 1014.3

BILLING ACCOUNT ESTABLISHMENT....1003.3

BUILDING RECESS FOR GAS SERVICE & METERS....1012.1 – 1012.4

CUSTOMER RESPONSIBILITY FOR APPLIANCES....1003.3

DEFINITIONS OF TERMS....1003.1 – 1003.2

ELECTRIC BONDING & GROUNDING OF GAS PIPE....1003.5

ESTABLISHING GAS METER LOCATION & LOCATION OF CUSTOMER'S HOUSELINE....1003.2

EXISTING GAS SERVICE – CUSTOMER REQUESTS FOR ADDITIONAL SERVICES....1006.3 – 1006.4

GAS FACILITIES NEAR UNDERGROUND PADMOUNTED EQUIPMENT OR SUBSTRUCTURES....1015.1 – 1015.7

GAS METER CAPACITY & SELECTION....1005

GAS METERS GROUPED ON METER HEADERS....1010.1 – 1010.8

GAS SERVICE & METERING....1003.2

GAS SERVICE & METER BEHIND WING WALLS....1011

GAS SERVICE RISER & HOUSELINE SPACING, CLEARANCES, & MINIMUM WORKING SPACE....1009.1 – 1009.3

GAS TRENCH ONLY FOR SAN DIEGO COUNTY....1004.1 – 1004.2

HOUSELINE MODIFICATIONS....1003.4

MARKOUT SERVICE....1003.5

METER & SERVICE LOCATION....1006.1 – 1006.5

METER CABINET FOR SINGLE RESIDENTIAL GAS METER....1008.1 – 1008.3

METER LOCATIONS....1006.1 – 1006.2

MOBILE HOME METER PAD....1013

NUMBER OF SERVICES ALLOWED TO A BUILDING....1006.2 – 1006.3

OWNERSHIP & MAINTENANCE OF UTILITY'S FACILITIES....1003.4

TABLE OF CONTENTS

© 1998 - 2021 San Diego Gas & Electric Company. All rights reserved. Removal of this copyright notice without permission is not permitted under law.

REV	CHANGE	DR	BY	DSN	APV	DATE	REV	CHANGE	DR	BY	DSN	APV	DATE
C	SG308 MOVED TO FMO	EDM	JIK	IPJ	CZH	02/08/2021	F						
B	FORMATTING	EDM	JIK	--	--	05/22/2020	E						
A	NEW PAGE	--	LSM	LSM	TPM	11/01/2017	D						

SUBJECT **PAGE**

PURPOSE 1003.1

RESALE OF NATURAL GAS 1003.5

SCOPE 1003.1

SERVICE LOCATIONS 1006.5

SIGNAGE REQUIREMENTS FOR GAS SERVICE LOCATIONS ON MULTI-TENANT BUILDINGS ..... 1003.2 – 1003.3

TERRITORY SERVED 1003.1

UTILITY PLACEMENT IN JOINT TRENCH & GAS METER SET ASSEMBLY INSTALLATION ..... 1007.1 – 1007.5

UTILITY'S RIGHT OF ACCESS TO CUSTOMER'S PREMISES ..... 1003.3 – 1003.4

TABLE OF CONTENTS

© 1998 - 2021 San Diego Gas & Electric Company. All rights reserved. Removal of this copyright notice without permission is not permitted under law.

REV	CHANGE	DR	BY	DSN	APV	DATE	REV	CHANGE	DR	BY	DSN	APV	DATE
C	SG308 MOVED TO FMO	EDM	JIK	IPJ	CZH	02/08/2021	F						
B	FORMATTING	EDM	JIK	--	--	05/22/2020	E						
A	NEW PAGE	--	LSM	LSM	TPM	11/01/2017	D						

100 - RESIDENTIAL, COMMERCIAL & INDUSTRIAL OVERHEAD

100 - RESIDENTIAL, COMMERCIAL & INDUSTRIAL OVERHEAD

PAGE	SUBJECT
102	RESIDENTIAL, COMMERCIAL AND INDUSTRIAL OVERHEAD ALPHABETICAL SUBJECT INDEX
103	SERVICE DROPS – OVERHEAD ELECTRIC
104	SERVICE DROP SUPPORTS
105	OVERHEAD SERVICE ATTACHMENT FOR METALLIC CONDUIT RISERS
106	OVERHEAD SERVICE ATTACHMENT FOR SOLID WOOD RISERS
107	SERVICE DROP CONDUCTOR CLEARANCES, 0–600V
108	OVERHEAD ELECTRIC CLEARANCES OVER SWIMMING POOLS
109	SERVICE HEADS
110	BUSWAY SERVICE HEADS
111	SERVICE ENTRANCE RACEWAYS
112	SERVICE ENTRANCE CONDUCTORS, 0–600V

MAIN TABLE OF CONTENTS

© 1998 - 2023 San Diego Gas & Electric Company. All rights reserved. Removal of this copyright notice without permission is not permitted under law.

REV	CHANGE	DR	BY	DSN	APV	DATE	REV	CHANGE	DR	BY	DSN	APV	DATE
C							F						
B	FORMATTING	EDM	JIK	-	-	04/24/2023	E						
A	NEW PAGE	-	LSM	LSM	TPM	11/01/2017	D						

X Indicates Latest Revision | Completely Revised | New Page | Information Removed

SUBJECT **PAGE**

ALUMINUM SERVICE ENTRANCE CONDUCTORS 112.6

BUSWAY SERVICE HEADS 110

CLEARANCES

- ABOVE COMMERCIAL OR INDUSTRIAL BUILDINGS AND STRUCTURES, SERVICE ENTRANCE CONDUCTORS, 0-600V 112.6
- ABOVE GROUND, THOROUGHFARES, DRIVEWAYS AND PUBLIC/PRIVATE PROPERTY 107.8
- COMMERCIAL OR INDUSTRIAL PREMISES SERVICE DROP CONDUCTOR, 0–600V 107.6
- FROM BUILDINGS AND STRUCTURES, RESIDENTIAL, COMMERCIAL/INDUSTRIAL PREMISES 107.11, 112.6
- FROM DOORS, EXITS, WINDOWS, FIRE ESCAPES, BALCONIES, ETC. 107.4
- FROM OTHER CONDUCTORS 107.9
- FROM SIGNS 107.10
- HORIZONTAL AND VERTICAL CLEARANCES OF SUPPLY AND SERVICE DROP CONDUCTORS FROM BUILDINGS, BRIDGES AND OTHER STRUCTURES 107.7
- OVER BUILDINGS AND STRUCTURES ..... 107.1 – 107.3
- OVER THOROUGHFARES, FROM BUILDINGS AND AT POINT OF ATTACHMENT TO BUILDING
  - RESIDENTIAL PREMISES 107.5
  - COMMERCIAL OR INDUSTRIAL PREMISES 107.6
- SWIMMING POOLS 108

CONNECTION OF SERVICE ENTRANCE CONDUCTORS TO SERVICE DROP CONDUCTORS 112.4

DRIP LOOPS 103.4, 104.5, 112.4, 112.6

GALVANIZED RIGID CONDUIT RISER OR INTERMEDIATE METALLIC CONDUIT FOR OVERHEAD SERVICE ATTACHMENT 105

GENERAL INFORMATION

- BUSWAY SERVICE HEADS 110
- OVERHEAD ELECTRIC CLEARANCES OVER SWIMMING POOLS 108
- SERVICE DROPS, OVERHEAD ELECTRIC 103.1, 103.4
- SERVICE DROP SUPPORT 104
- SERVICE DROP CONDUCTOR CLEARANCES, 0-600V 107.1, 107.8

TABLE OF CONTENTS

© 1998 - 2023 San Diego Gas & Electric Company. All rights reserved. Removal of this copyright notice without permission is not permitted under law.

REV	CHANGE	DR	BY	DSN	APV	DATE	REV	CHANGE	DR	BY	DSN	APV	DATE
C							F						
B	FORMATTING	EDM	JIK	-	-	04/24/2023	E						
A	EDITORIAL CHANGES	-	LSM	LSM	TPM	11/01/2017	D						

X Indicates Latest Revision | Completely Revised | New Page | Information Removed

SUBJECT **PAGE**

SERVICE ENTRANCE CONDUCTORS, 0-600V ..... 112.1, 112.3 – 112.4

SERVICE ENTRANCE RACEWAYS 111

SERVICE HEADS 109

GROUNDING AND BONDING 112.6

IDENTIFICATION, SERVICE ENTRANCE CONDUCTORS, 0–600V 112.4

INSTALLATION METHOD, SERVICE ENTRANCE RACEWAYS 111

OVERHEAD ELECTRIC CLEARANCES OVER SWIMMING POOLS 108

MINIMUM VERTICAL AND RADIAL CLEARANCES OVER SWIMMING POOLS 108

OVERHEAD SERVICE ATTACHMENT FOR METALLIC CONDUIT RISERS 105

OVERHEAD SERVICE ATTACHMENT FOR SOLID WOOD RISERS 106

RISERS

CLEARANCE RISERS OR STRUCTURES 104

METALLIC CONDUIT RISERS 105

SOLID WOOD RISERS 106

SEALING SERVICE ENTRANCE RACEWAYS AND METERING ENCLOSURES 111

SERVICE DROPS 103

ATTACHMENTS 103, 105, 106

COMMERCIAL AND INDUSTRIAL BUILDINGS OR STRUCTURES ..... 103.2 – 103.4

CONDUCTOR CLEARANCES 107

GENERAL INFORMATION 103.4

IMPAIRED CLEARANCES 103.5

LENGTH 103.1

RESIDENTIAL BUILDINGS OR STRUCTURES ..... 103.1, 103.2 – 103.4, 103.5

SUPPORTS 104

SWIMMING POOLS 108

TABLE OF CONTENTS

© 1998 - 2023 San Diego Gas & Electric Company. All rights reserved. Removal of this copyright notice without permission is not permitted under law.

REV	CHANGE	DR	BY	DSN	APV	DATE	REV	CHANGE	DR	BY	DSN	APV	DATE
C							F						
B	FORMATTING	EDM	JIK	-	-	04/24/2023	E						
A	EDITORIAL CHANGES	-	LSM	LSM	TPM	11/01/2017	D						

X Indicates Latest Revision | Completely Revised | New Page | Information Removed

SUBJECT **PAGE**

SERVICE DROP SUPPORTS 104

ATTACHMENT RISER, ANGLE IRON RACK 104.1

BUILDINGS OTHER THAN WOOD 104.4

CLEARANCE RISERS OR STRUCTURES 104.4

GENERAL INFORMATION 104.1

INSTALLATION ..... 104.4 – 104.5

MAINTENANCE RESPONSIBILITY AND LIABILITY 104.5

WOOD BUILDINGS 104.4

WOOD-REINFORCING BLOCK 104.4

SERVICE ENTRANCE CABLE 112.5

SERVICE ENTRANCE CONDUCTORS, 0–600V 112

CONNECTION OF SERVICE ENTRANCE CONDUCTORS TO SERVICE DROP CONDUCTORS 112.4

DEFINITIONS 112.1

IDENTIFICATION 112.4

MAXIMUM LENGTH OF SERVICE ENTRANCE CONDUCTORS 112.4

OTHER CONDUCTORS IN SERVICE ENTRANCE RACEWAYS 112.5

SERVICE ENTRANCE CABLE 112.5

SIZE AND CAPACITY 112.5

TAPS AND SPLICES IN SERVICE RACEWAYS 112.5

SERVICE ENTRANCE RACEWAYS 111

SERVICE HEADS 109

LOCATION 109.1

MULTIPLE SERVICE HEAD INSTALLATIONS 109.2

TABLE OF CONTENTS

© 1998 - 2023 San Diego Gas & Electric Company. All rights reserved. Removal of this copyright notice without permission is not permitted under law.

REV	CHANGE	DR	BY	DSN	APV	DATE	REV	CHANGE	DR	BY	DSN	APV	DATE
C							F						
B	FORMATTING	EDM	JIK	-	-	04/24/2023	E						
A	EDITORIAL CHANGES	-	LSM	LSM	TPM	11/01/2017	D						

X Indicates Latest Revision | Completely Revised | New Page | Information Removed

SCOPE: THIS STANDARD PROVIDES REQUIREMENTS FOR OVERHEAD ELECTRIC SERVICE DROPS FOR RESIDENTIAL AND COMMERCIAL BUILDINGS OR STRUCTURES.

ATTENTION:

* WHERE SDG&E'S DISTRIBUTION POLE LINE IS LOCATED ON THE CUSTOMER'S PREMISES, OR ON A STREET, HIGHWAY, LANE, ALLEY, ROAD, OR PRIVATE EASEMENT CONTIGUOUS THERETO, SDG&E (UTILITY) WILL, AT ITS OWN EXPENSE, FURNISH AND INSTALL A SERVICE DROP (SINGLE SPAN OF SERVICE WIRES) FROM ITS POLE LINE TO THE CUSTOMER'S PERMANENT SERVICE DROP SUPPORT. UPON THE UTILITY'S RECEIPT OF APPROVAL FROM THE GOVERNMENTAL AUTHORITY HAVING JURISDICTION (AHJ), THE UTILITY WILL CONNECT TO THE CUSTOMER'S SERVICE ENTRANCE CONDUCTORS PROVIDED SUCH SUPPORT IS OF A TYPE ACCEPTABLE TO THE UTILITY.

** THE CUSTOMER IS REQUIRED TO PROVIDE, OR PAY FOR, A CLEAR ROUTE ON ANY PRIVATE PROPERTY THAT IS CLEAR OF OBSTRUCTIONS WHICH WOULD INHIBIT THE CONSTRUCTION OF OVERHEAD SERVICE FACILITIES. THIS INCLUDES TREE TRIMMING, OR TREE REMOVAL, IF REQUIRED.

*** THE MAXIMUM LENGTH OF SERVICE DROP NORMALLY SHALL NOT EXCEED 100 FEET. IN ORDER TO MINIMIZE SERVICE DROP STRESS ON THE BUILDING, THE POINT OF ATTACHMENT SHALL BE LOCATED AS NEAR AS PRACTICABLE TO THE UTILITY'S SERVICE POLE. WHERE THE CHARACTER OF LOAD NECESSITATES HEAVY SERVICE DROP CONDUCTORS WITH EXCESSIVE SAG AND STRESS, THE MAXIMUM LENGTH OF SERVICE DROP SHALL BE SUBJECT TO APPROVAL OF THE UTILITY'S SERVICE PLANNER.

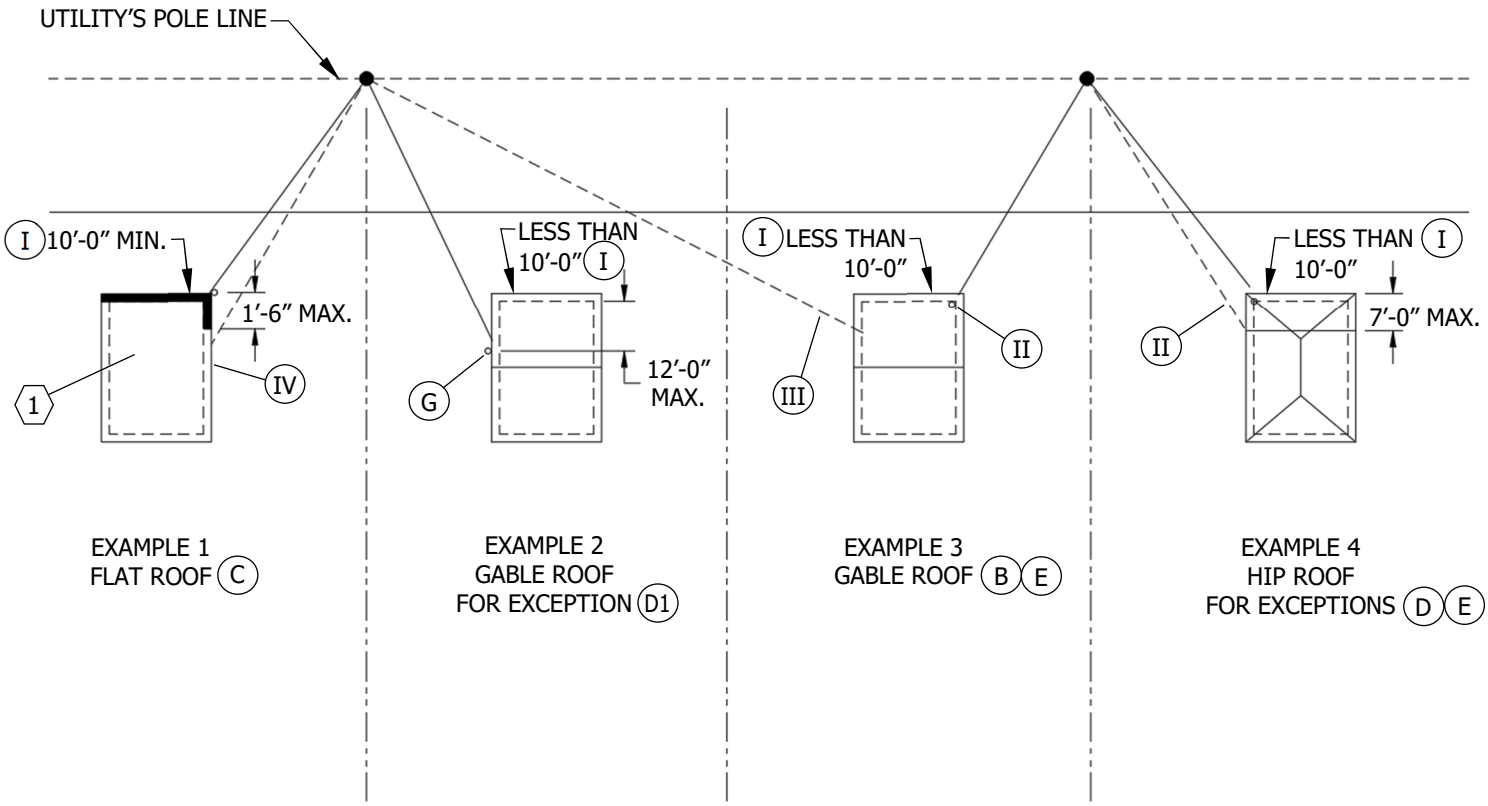

FIGURE 1
RESIDENTIAL BUILDINGS OR STRUCTURES
PLAN VIEW
SEE TABLE 1

© 1998 - 2023 San Diego Gas & Electric Company. All rights reserved. Removal of this copyright notice without permission is not permitted under law.

REV	CHANGE	DR	BY	DSN	APV	DATE	REV	CHANGE	DR	BY	DSN	APV	DATE
C							F						
B	FORMATTING	EDM	JIK	-	-	04/24/2023	E						
A	EDITORIAL CHANGES	-	LSM	IPJ	TPM	11/01/2017	D						

X	Indicates Latest Revision		Completely Revised		New Page		Information Removed

TABLE OF CONTENTS

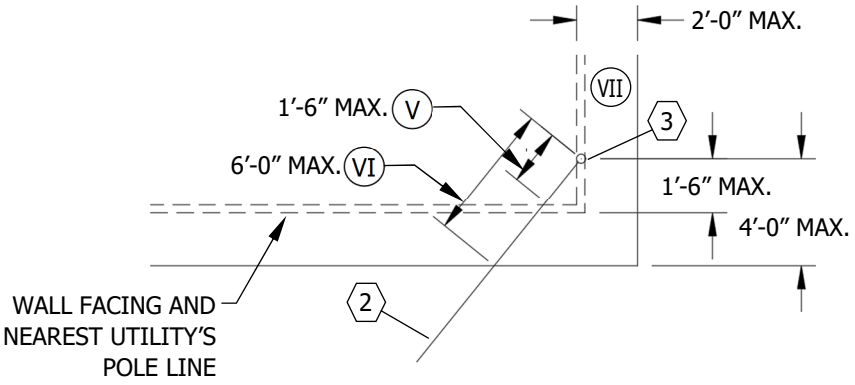

FIGURE 2
MAXIMUM PERMISSIBLE LENGTH OF SERVICE DROP OVER ROOF
TO SERVICE DROP ATTACHMENT RISER
PLAN VIEW
SEE TABLE 1

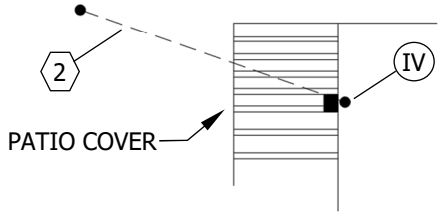

FIGURE 3
NO TRUCK OR LADDER ACCESS
PLAN VIEW
SEE TABLE 1

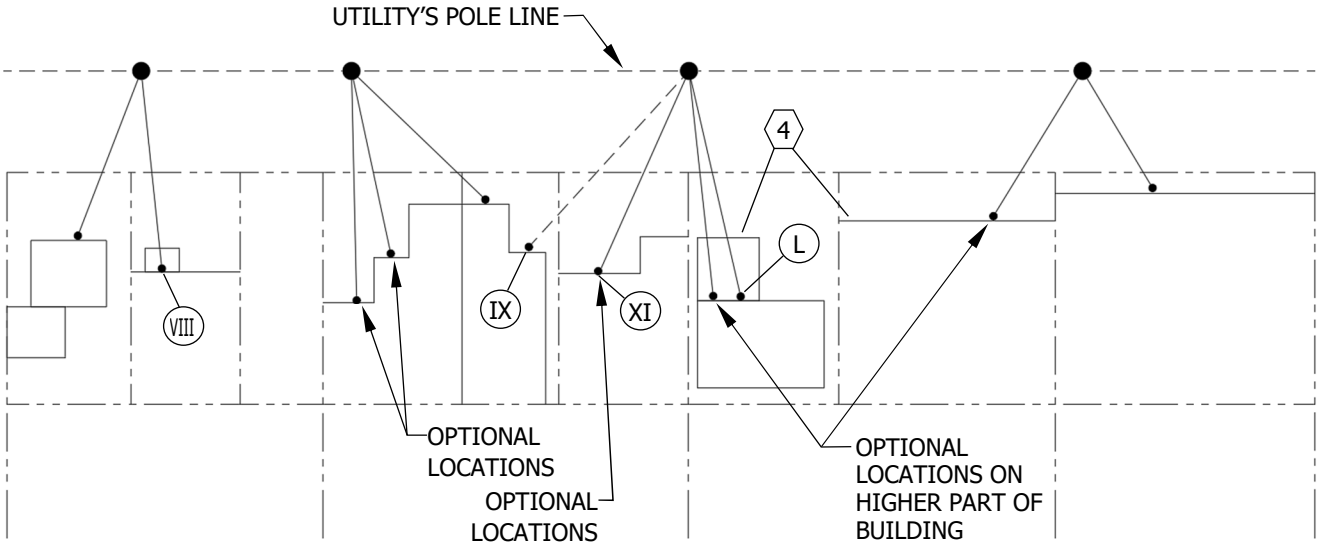

EXAMPLE 1
WALL FACING AND
NEAREST LINE AFFORDING (B)
ADEQUATE CLEARANCE
PLAN VIEW

EXAMPLE 2
PLAN VIEW (J)

EXAMPLE 3
LOW SHED-TYPE (K) (XII)
BUILDING WALLS
PLAN VIEW

EXAMPLE 4
INADEQUATE (K) (XIII)
CLEARANCES

FIGURE 4
COMMERCIAL AND INDUSTRIAL BUILDINGS OR STRUCTURES
SEE TABLE 1

TABLE OF CONTENTS

© 1998 - 2023 San Diego Gas & Electric Company. All rights reserved. Removal of this copyright notice without permission is not permitted under law.

REV	CHANGE	DR	BY	DSN	APV	DATE	REV	CHANGE	DR	BY	DSN	APV	DATE
C							F						
B	FORMATTING	EDM	JIK	-	-	04/24/2023	E						
A	EDITORIAL CHANGES	-	LSM	IPJ	TPM	11/01/2017	D						

X	Indicates Latest Revision		Completely Revised		New Page		Information Removed

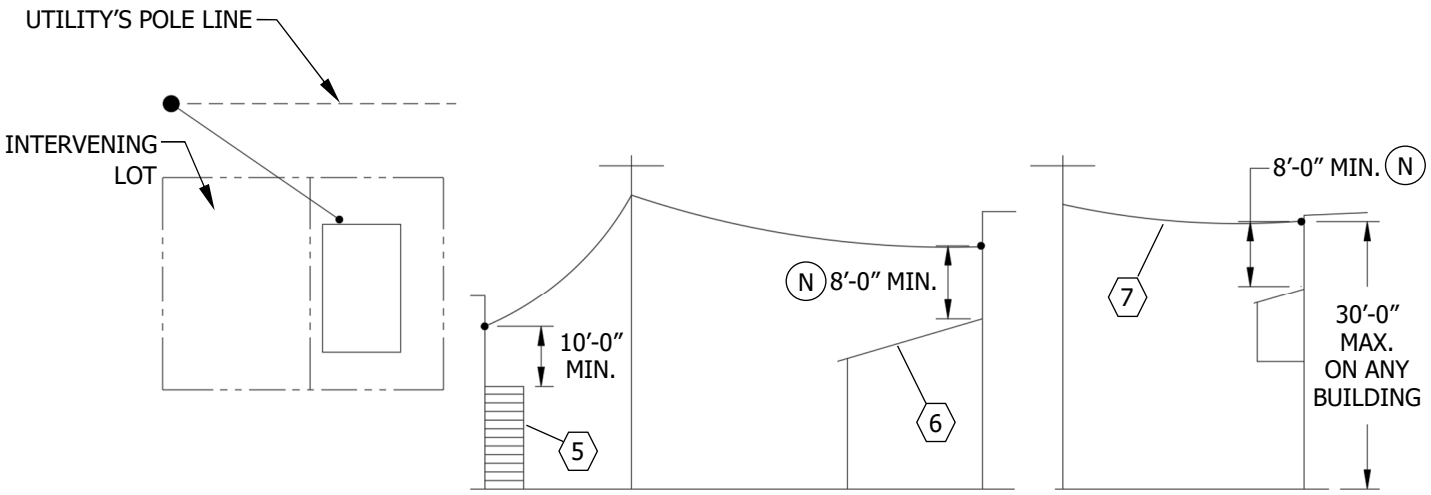

EXAMPLE 5
SERVICE DROP OVER INTERVENING LOT (B)(M) NOT PERMITTED
PLAN VIEW

EXAMPLE 6
SERVICE DROP CLEARANCE OVER STAIRWAYS AND SHED-TYPE BUILDING PROJECTIONS
PROFILE VIEW

EXAMPLE 7
MAXIMUM HEIGHT SERVICE DROP ATTACHMENT
PROFILE VIEW

FIGURE 4 (CONT'D)
COMMERCIAL AND INDUSTRIAL BUILDINGS OR STRUCTURES
SEE TABLE 1

TABLE 1

SERVICE DROPS DESCRIPTION LIST	
ITEM	**DESCRIPTION**
1	ATTACHMENT, SERVICE DROP
2	SERVICE DROP
3	RISER, SERVICE DROP ATTACHMENT
4	BUILDING PROJECTIONS, SHED-TYPE, LOW
5	STAIRWAYS, ETC.
6	BUILDING PROJECTIONS, SHED-TYPE
7	SERVICE DROP CROSSING OVER ROOF PROJECTION TO NEAREST WALL

TABLE OF CONTENTS

© 1998 - 2023 San Diego Gas & Electric Company. All rights reserved. Removal of this copyright notice without permission is not permitted under law.

REV	CHANGE	DR	BY	DSN	APV	DATE	REV	CHANGE	DR	BY	DSN	APV	DATE
C							F						
B	FORMATTING	EDM	JIK	-	-	04/24/2023	E						
A	EDITORIAL CHANGES	-	LSM	IPJ	TPM	11/01/2017	D						

X	Indicates Latest Revision		Completely Revised		New Page		Information Removed

INSTALLATION:

SERVICE DROP ATTACHMENT

A. THE POINT OF SERVICE DROP ATTACHMENT SHALL NORMALLY BE LOCATED ON THAT PORTION OF A BUILDING OR STRUCTURE FACING AND NEAREST THE STREET, ALLEY, EASEMENT, OR PUBLIC WAY ON WHICH THE UTILITY'S POLE LINE IS LOCATED, AND INSTALLED AT A HEIGHT NOT LESS THAN SPECIFIED HEREIN FOR RESIDENTIAL, COMMERCIAL AND INDUSTRIAL BUILDINGS. THIS IS TO PERMIT THE SERVICE DROP CONDUCTORS TO BE:

1. INSTALLED AND MAINTAINED IN ACCORDANCE WITH VERTICAL, HORIZONTAL AND RADIAL CLEARANCES REQUIRED ABOVE GROUND AND FROM ROOFS, OBSTRUCTIONS, WINDOWS, DOORWAYS, OPENINGS, BALCONIES, FIRE ESCAPES, SWIMMING POOLS AND OTHER CONDUCTORS.
2. RUN FREE OF OBSTRUCTION FROM TREES, STRUCTURES, POLES, MASTS, ANTENNAS, VENTS, FLOOD LIGHTS, ETC. AN 18-INCH RADIAL CLEARANCE IS REQUIRED FROM ELECTRIC RISERS SUPPORTING SERVICE CONDUCTORS TO VENTS OR CHIMNEYS CONVEYING PRODUCTS OF COMBUSTION TO THE OUTSIDE ATMOSPHERE, SUCH AS A WATER HEATER VENT OR WOOD BURNING STOVE VENT. A VENT SHALL NOT BE INSTALLED WITHIN THE WORKING SPACE OF THE ELECTRICAL EQUIPMENT. 12-INCH MINIMUM RADIAL CLEARANCE IS REQUIRED FROM VENTS TO SERVICE DROP CONDUCTORS CROSSING OVER A STRUCTURE TO WITHIN 18 INCHES OF THE RISER.
3. INSTALLED AT AN APPROACH ANGLE OF NOT LESS THAN 30 DEGREES WITH THE BUILDING WALL WHEN SERVICE ATTACHES BELOW ROOFLINE.
4. READILY ACCESSIBLE FOR INSTALLATION, INSPECTION AND MAINTENANCE.
5. INSTALLED AT A LOCATION WHERE THE WEATHERHEAD AND POINT OF ATTACHMENT ARE SAFELY ACCESSIBLE FROM A LADDER PLACED ON THE GROUND. DISTANCE FROM THE LADDER TO THE WEATHERHEAD AND POINT OF ATTACHMENT ARE NOT TO EXCEED 24 INCHES.
6. ATTACHED AT ONLY ONE POINT ON THE BUILDING AND WITHOUT INTERMEDIATE SUPPORT.
7. ATTACHED IN THE PROXIMITY OF THE SERVICE ENTRANCE SO THAT THE OPEN WIRING BETWEEN THE SERVICE DROP AND THE SERVICE HEAD (DRIP LOOP) DOES NOT EXCEED 3 FEET.
8. ATTACHED AT NOT MORE THAN 30 FEET ABOVE THE GROUND.
9. SO ARRANGED AS NOT TO HAMPER OR ENDANGER WORKERS AND FIREMEN IN THE PERFORMANCE OF THEIR DUTIES.
10. SUBSTANTIALLY SUPPORTED AT THE BUILDING.

(B) THE SERVICE DROP WILL NORMALLY BE RUN TO THE BUILDING OR STRUCTURE FROM THE UTILITY'S NEAREST POLE ADJACENT TO THE PREMISES. UNDER THIS CONDITION THE SERVICE DROP MAY, WHERE APPROVED BY THE UTILITY, CROSS AN ADJOINING PREMISES PROVIDED THE NECESSARY RIGHTS-OF-WAY CAN BE OBTAINED AT NO COST TO THE UTILITY. IN EVERY CASE, THE POINT OF SERVICE DROP ATTACHMENT SHALL BE LOCATED ON THE WALL FACING AND NEAREST THE UTILITY'S POLE LINE OR WITHIN 18 INCHES OF THAT POINT TO PERMIT THE UTILITY, AS NECESSITATED FOR ITS OPERATING CONVENIENCE, TO INSTALL A SERVICE DROP FROM SOME POINT ALONG ITS LINE PASSING THE PREMISES SERVED WHETHER OR NOT A POLE EXISTS. SEE FIGURE 1 – EXAMPLE 3, AND FIGURE 3 – EXAMPLES 1 AND 5.

RESIDENTIAL BUILDINGS OR STRUCTURES

(C) THE POINT OF SERVICE DROP ATTACHMENT ON A RESIDENTIAL BUILDING OR STRUCTURE SHALL NORMALLY BE LOCATED ON THE WALL FACING AND NEAREST THE UTILITY'S POLE LINE, AND SO LOCATED THAT THE SERVICE HEAD, SERVICE DROP AND OPEN WIRES BETWEEN THE SERVICE HEAD AND POINT OF CONNECTION TO THE SERVICE DROP (DRIP LOOP) WILL HAVE NOT LESS THAN 12-FOOT CLEARANCE ABOVE FINAL GRADE ON RESIDENTIAL PREMISES, AND WHENEVER NECESSARY, BE LOCATED AT A GREATER HEIGHT TO OBTAIN REQUIRED CLEARANCES. THE 12-FOOT CLEARANCE MAY BE REDUCED FOR INSULATED SERVICES (SSC) TO NOT LESS THAN 10 FEET. SEE FIGURE 1 – EXAMPLE 1.

RESIDENTIAL DWELLING UNITS EXCEEDING TWO IN NUMBER ON THE SAME PREMISES ARE CLASSIFIED AS A COMMERCIAL ENTERPRISE AND PREMISES, REQUIRING THE SERVICE DROP ATTACHMENT TO BE LOCATED AT A POINT AFFORDING COMMERCIAL SERVICE DROP CLEARANCES.

TABLE OF CONTENTS

© 1998 - 2023 San Diego Gas & Electric Company. All rights reserved. Removal of this copyright notice without permission is not permitted under law.

REV	CHANGE	DR	BY	DSN	APV	DATE	REV	CHANGE	DR	BY	DSN	APV	DATE
C							F						
B	FORMATTING	EDM	JIK	-	-	04/24/2023	E						
A	EDITORIAL CHANGES	-	LSM	IPJ	TPM	11/01/2017	D						

X	Indicates Latest Revision		Completely Revised		New Page		Information Removed

INSTALLATION (CONT'D):

(D) THE POINT OF SERVICE DROP ATTACHMENT MAY BE SELECTED ON A RESIDENCE SIDE WALL WHICH IS AT RIGHT ANGLES TO THE UTILITY'S POLE LINE, WHERE THE WALL OF THE RESIDENCE FACING AND NEAREST THE UTILITY'S POLE LINE DOES NOT AFFORD SUFFICIENT SERVICE DROP CLEARANCE ABOVE GROUND OR FROM OBSTRUCTIONS. SUCH A LOCATION IS SUBJECT TO APPROVAL BY THE SERVICE PLANNER, AND TO CONFORMANCE WITH PROVISIONS OF THE FOLLOWING EXCEPTIONS:

(1) **EXCEPTION FOR OBTAINING GROUND CLEARANCE**
WHERE THE HEIGHT OF A RESIDENCE WALL FACING AND NEAREST THE UTILITY'S POLE LINE IS INSUFFICIENT TO OBTAIN SERVICE DROP CONDUCTOR CLEARANCE WITHOUT THE INSTALLATION OF A CLEARANCE RISER OR STRUCTURE ON THE FRONT OF THE RESIDENCE, A POINT OF SERVICE DROP ATTACHMENT MAY BE LOCATED UP THE GABLE WALL NOT FARTHER BACK THAN IS NECESSARY TO OBTAIN SERVICE DROP CLEARANCE, BUT IN NO CASE MORE THAN 12 FEET BACK FROM THE WALL FACING THE UTILITY'S POLE LINE NOR FURTHER BACK THAN THE PEAK OF A GABLE ROOF. SEE FIGURE 1 – EXAMPLE 2. THE SERVICE DROP CONDUCTORS MAY NOT PASS OVER THE ROOF (EXCLUDING EAVES) OF THE RESIDENCE SERVED.

2. **EXCEPTION FOR CLEARING WINDOWS AND OBSTRUCTIONS**
WHERE WINDOWS OR OTHER BUILDING COMPONENTS CONFLICT WITH PROVIDING AN ACCEPTABLE POINT OF SERVICE DROP ATTACHMENT ON THE WALL FACING AND NEAREST THE UTILITY'S POLE LINE, OR WITHIN 18 INCHES OF THAT POINT, A RISER OR STRUCTURE MAY BE LOCATED ON A RESIDENCE SIDE WALL. THIS LOCATION MAY NOT BE FARTHER BACK THAN IS NECESSARY TO OBTAIN SERVICE DROP CLEARANCES, BUT IN NO CASE MORE THAN 7 FEET BACK FROM THE WALL FACING THE POLE LINE. SERVICE DROP CONDUCTORS MAY NOT PASS OVER THE ROOF (EXCLUDING EAVES) OF THE RESIDENCE SERVED.

IN EITHER EXCEPTION, THE SERVICE DROP ATTACHMENT SHALL BE LOCATED AT A POINT WHICH WILL NOT REQUIRE THE SERVICE DROP TO PASS OVER AN ADJACENT LOT OR A BUILDING SITE ON THE SAME PREMISES.

(E) WHERE THE HEIGHT OF A RESIDENCE WILL NOT AFFORD SUFFICIENT SERVICE DROP CLEARANCE ABOVE GROUND OR FROM OBSTRUCTIONS, A SERVICE DROP SUPPORT RISER OR STRUCTURE SHALL BE INSTALLED ON THE WALL FACING, OR WITHIN 18 INCHES OF THAT POINT, AND NEAREST THE UTILITY'S POLE LINE TO PROVIDE CLEARANCE. SEE FIGURE 1 – EXAMPLES 3 AND 4.

IMPAIRED CLEARANCES

F. WHEN ANY OF THE SERVICE DROP CLEARANCES REQUIRED BY THE UTILITY, OR THE AHJ, BECOME IMPAIRED BECAUSE OF CHANGES CREATED BY THE TENANT OR OWNER OF THE PREMISES, IT IS INCUMBENT UPON THE CUSTOMER, AT THEIR EXPENSE, TO PROVIDE A MEANS TO CORRECT THE INFRACTION.

(G) TO OBTAIN PROPER CLEARANCES, THE POINT OF SERVICE DROP ATTACHMENT MAY BE SELECTED NOT MORE THAN 12 FEET BACK FROM WALL FACING UTILITY'S POLE LINE TO AVOID INSTALLATION OF RISER ON FACE OF RESIDENCE.

ATTENTION:

* WHEN THE DISTANCE FROM BUILDING TO AN OBSTRUCTION WILL NOT ACCOMMODATE SAFE USE OF A LADDER FOR ACCESS, BUCKET TRUCK ACCESS IS REQUIRED.

COMMERCIAL – INDUSTRIAL BUILDINGS OR STRUCTURES

H. THE POINT OF SERVICE DROP ATTACHMENT ON A COMMERCIAL OR INDUSTRIAL BUILDING SHALL NORMALLY BE LOCATED ON THE WALL FACING AND NEAREST THE UTILITY'S POLE LINE, AND SO LOCATED THAT THE SERVICE HEAD, SERVICE DROP AND THE OPEN WIRES BETWEEN THE SERVICE HEAD AND POINT OF CONNECTION TO THE SERVICE DROP WILL HAVE NOT LESS THAN 16 FEET OF CLEARANCE ABOVE FINISHED GRADE, AND WHENEVER NECESSARY BE LOCATED AT A GREATER HEIGHT TO OBTAIN REQUIRED CLEARANCES. THE 16-FOOT CLEARANCE MAY BE REDUCED FOR INSULATED SERVICES (SSC) TO NOT LESS THAN 10 FEET IN AREAS ACCESSIBLE TO PEDESTRIANS ONLY. (a)

(J) WHERE THE SERVICE DROP WILL PASS OVER ONLY THE PREMISES SERVED, THE POINT OF SERVICE DROP ATTACHMENT MAY BE ON ANY WALL OF THE BUILDING FACING AND PARALLEL TO THE UTILITY'S POLE LINE. SEE FIGURE 4 – EXAMPLE 2.

(K) WHERE THE BUILDING WALL FACING AND NEAREST THE UTILITY'S POLE LINE IS ON A SHED OR SIMILAR BUILDING PROJECTION, WHICH WALL DOES NOT AFFORD SUFFICIENT SERVICE DROP CLEARANCE WITHOUT THE INSTALLATION OF A SERVICE DROP SUPPORT RISER OR STRUCTURE, AND THERE IS ANOTHER WALL OF ADEQUATE HEIGHT FACING THE UTILITY'S POLE LINE, THE POINT OF SERVICE DROP ATTACHMENT MAY BE LOCATED ON SUCH WALL, PROVIDED APPLICABLE CLEARANCES CAN BE OBTAINED. SEE FIGURE 4 – EXAMPLE 3. THIS OPTION DOES NOT APPLY TO A BUILDING OF NORMAL HEIGHT OR CONSTRUCTION HAVING A

TABLE OF CONTENTS

© 1998 - 2023 San Diego Gas & Electric Company. All rights reserved. Removal of this copyright notice without permission is not permitted under law.

REV	CHANGE	DR	BY	DSN	APV	DATE	REV	CHANGE	DR	BY	DSN	APV	DATE
C							F						
B	FORMATTING	EDM	JIK	-	-	04/24/2023	E						
A	EDITORIAL CHANGES	-	LSM	IPJ	TPM	11/01/2017	D						

	X	Indicates Latest Revision		Completely Revised		New Page		Information Removed

INSTALLATION (CONT'D):

HIGHER SECTION SET BACK FROM THE WALL FACING AND NEAREST THE UTILITY'S POLE LINE, SUCH AS A HIP ROOF. WHEN SERVICE DROP CLEARANCES CANNOT BE MET, A SERVICE DROP SUPPORT RISER OR STRUCTURE SHALL BE PROVIDED ON THE WALL FACING AND NEAREST THE UTILITY'S POLE LINE TO OBTAIN REQUIRED CLEARANCES. SEE FIGURE 4 – EXAMPLE 4.

(L) BUCKET TRUCK ACCESS REQUIRED IF DISTANCE FROM LADDER TO WEATHERHEAD AND POINT OF ATTACHMENT EXCEEDS 24 INCHES OR REQUIRED WORKING SPACE FOR A LADDER IS NOT MET.

(M) SERVICE DROP ATTACHMENT TO BE LOCATED WHERE DIRECTED BY THE UTILITY.

(N) ROOF CLEARANCE APPLIES TO ALL COMMERCIAL AND INDUSTRIAL BUILDINGS AND TO METAL ROOFS.

BILL OF MATERIALS: NONE

NOTES:

(I) NEAREST WALL HEIGHT

(II) SERVICE DROP ATTACHMENT RISER IS REQUIRED.

(III) SERVICE DROP ATTACHMENT NOT PERMITTED WHEN SERVICE DROP CROSSES ADJOINING PREMISES.

(IV) SERVICE DROP ATTACHMENT NOT PERMITTED.

(V) MAXIMUM LENGTH OF SERVICE DROP OVER ROOF.

(VI) OVER ROOF AND OVERHANG LIMITED TO 6 FEET OF CONDUCTOR.

(VII) MAXIMUM EAVE OVERHANG (FOR LADDER ACCESS TO WEATHERHEAD AND POINT OF ATTACHMENT)

(VIII) LOCATION OVER SHED-TYPE PROJECTIONS NOT RECOMMENDED DUE TO CLEARANCE REQUIREMENTS.

(IX) LOCATION NOT APPROVED. SERVICE DROP CROSSES ADJOINING PREMISES.

(XI) ANOTHER WALL FACING LINE. SERVICE DROPS PERMITTED ONLY ACROSS PREMISES SERVED.

(XII) DO NOT PROVIDE CLEARANCE WITHOUT INSTALLATION OF A RISER. OPTIONAL SERVICE DROP ATTACHMENT LOCATION PERMITTED ON HIGHER PART OF BUILDING.

(XIII) FOR A WALL WITH INADEQUATE SERVICE DROP CLEARANCE, RISER IS REQUIRED. WHEN NEAREST WALL DOES NOT AFFORD CLEARANCE, SERVICE DROP SUPPORT RISER REQUIRED.

REFERENCE:

(a) SEE SG107.

TABLE OF CONTENTS

© 1998 - 2023 San Diego Gas & Electric Company. All rights reserved. Removal of this copyright notice without permission is not permitted under law.

REV	CHANGE	DR	BY	DSN	APV	DATE	REV	CHANGE	DR	BY	DSN	APV	DATE
C							F						
B	FORMATTING	EDM	JIK	-	-	04/24/2023	E						
A	EDITORIAL CHANGES	-	LSM	IPJ	TPM	11/01/2017	D						

X	Indicates Latest Revision		Completely Revised		New Page		Information Removed

SCOPE: THIS STANDARD PROVIDES REQUIREMENTS FOR SERVICE DROP SUPPORTS.

ATTENTION:

* A SERVICE DROP WILL BE ATTACHED AT ONLY ONE POINT OF SUPPORT ON A BUILDING. AT THIS POINT OF SUPPORT, THE BUILDING SHALL HAVE ADEQUATE STRENGTH TO SAFELY WITHSTAND THE STRESS OF THE SERVICE DROP CONDUCTORS.

** WHERE, IN THE OPINION OF SDG&E (UTILITY), A BUILDING DOES NOT AFFORD SUFFICIENT STRENGTH TO SAFELY SUPPORT SERVICE DROP CONDUCTORS, AN UNDERGROUND SERVICE OR A CUSTOMER-OWNED SERVICE AND METER POLE SHOULD BE INSTALLED.

*** WHERE THE SIZE OF SERVICE ENTRANCE CONDUCTORS INDICATES UNUSUALLY HEAVY SERVICE DROP CONDUCTORS WILL BE REQUIRED, CONTACT THE UTILITY'S NEAREST PROJECT MANAGEMENT REGIONAL OFFICE. (a)

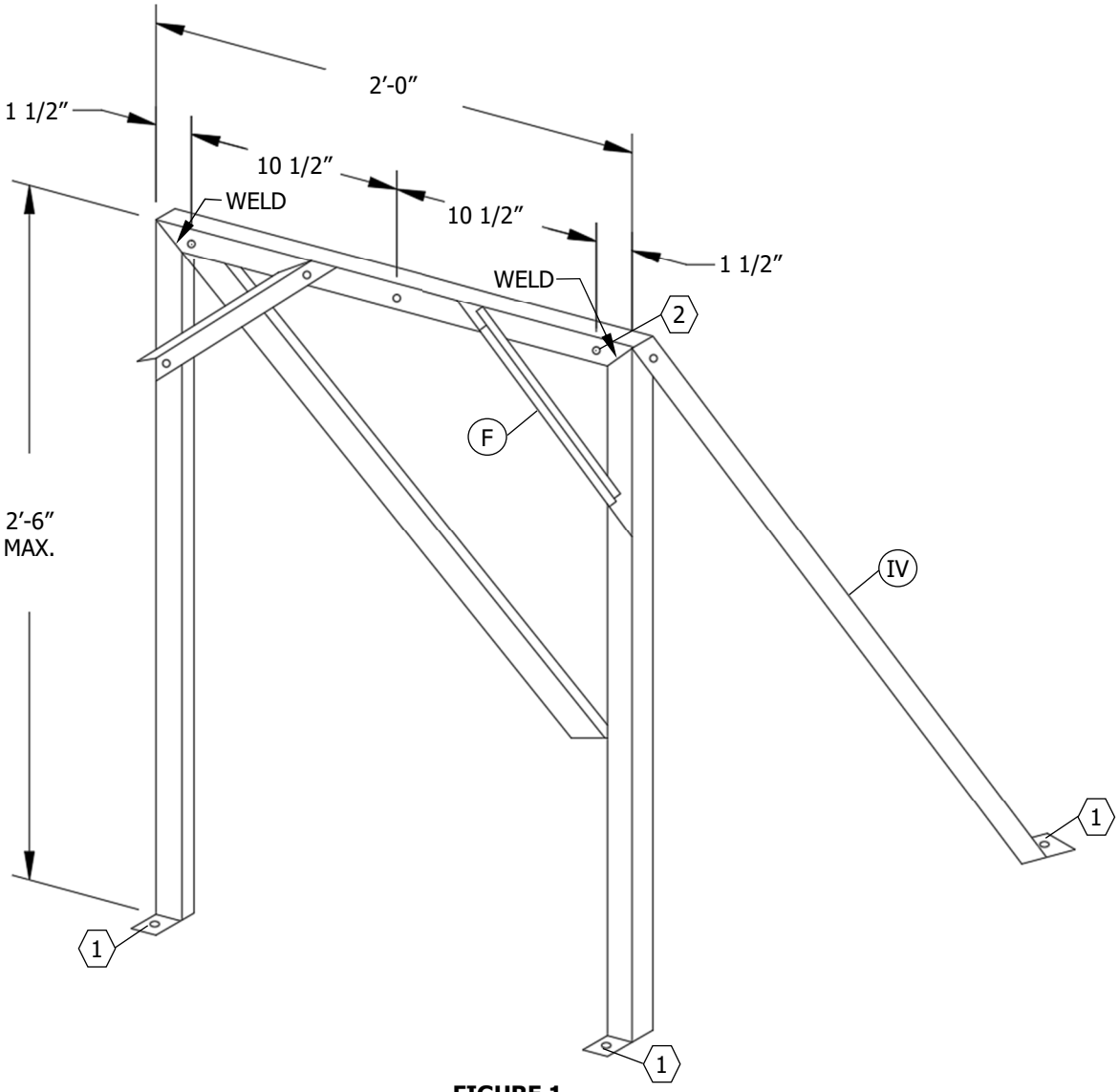

FIGURE 1
SERVICE DROP ATTACHMENT RISER (III)
ANGLE IRON RACK
SEE TABLE 1

© 1998 - 2023 San Diego Gas & Electric Company. All rights reserved. Removal of this copyright notice without permission is not permitted under law.

REV	CHANGE	DR	BY	DSN	APV	DATE	REV	CHANGE	DR	BY	DSN	APV	DATE
C							F						
B	FORMATTING	EDM	JIK	-	-	04/24/2023	E						
A	EDITORIAL CHANGES	-	LSM	IPJ	TPM	11/01/2017	D						

X	Indicates Latest Revision		Completely Revised		New Page		Information Removed

TABLE OF CONTENTS

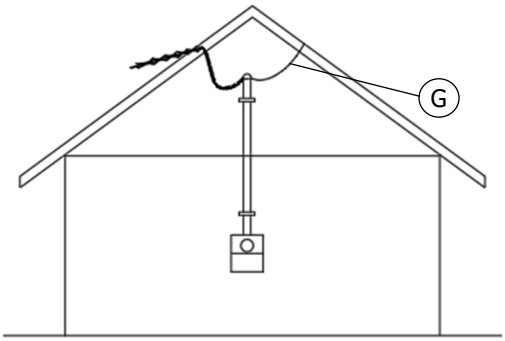

FIGURE 2
TYPICAL INSTALLATION
SERVICE HEAD IS BELOW POINT OF ATTACHMENT

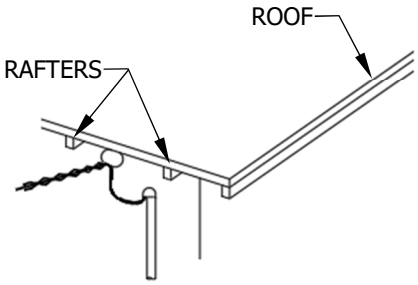

EXAMPLE 1
RAFTER ENDS

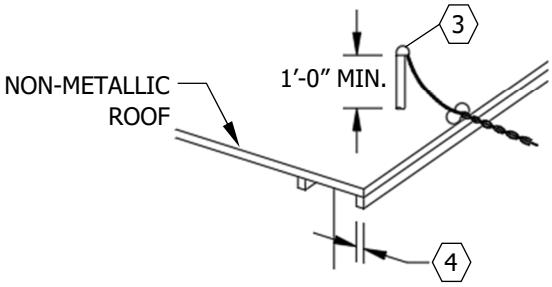

EXAMPLE 2
UN-ENCLOSED EAVE OR ROOF OVERHANG

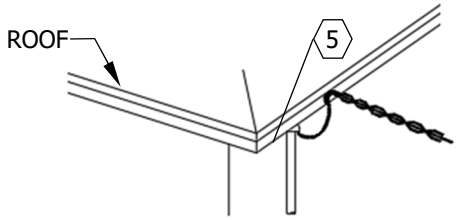

EXAMPLE 3
FASCIA BOARD-ENCLOSED OR
UN-ENCLOSED EAVES

FIGURE 3
SEE TABLE 1

TABLE OF CONTENTS

© 1998 - 2023 San Diego Gas & Electric Company. All rights reserved. Removal of this copyright notice without permission is not permitted under law.

REV	CHANGE	DR	BY	DSN	APV	DATE	REV	CHANGE	DR	BY	DSN	APV	DATE
C							F						
B	FORMATTING	EDM	JIK	-	-	04/24/2023	E						
A	EDITORIAL CHANGES	-	LSM	IPJ	TPM	11/01/2017	D						

X	Indicates Latest Revision		Completely Revised		New Page		Information Removed

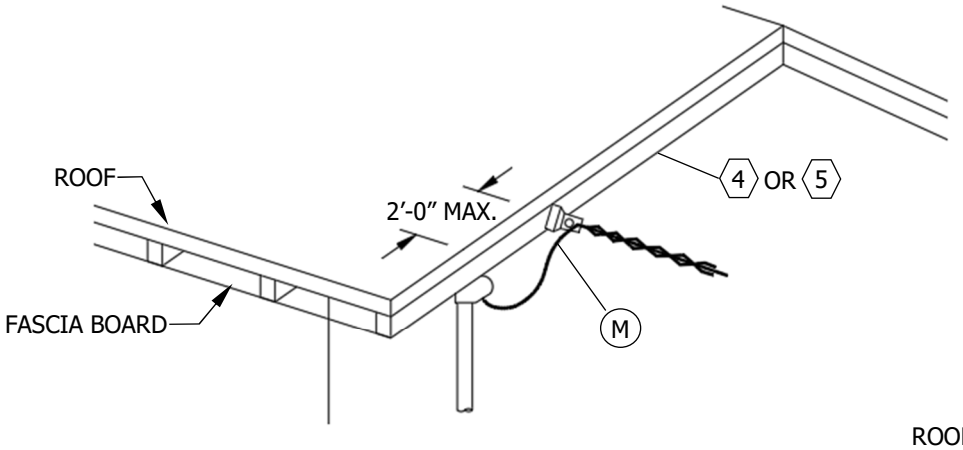

EXAMPLE 4
BARGEBOARD

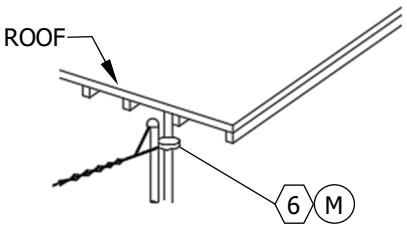

EXAMPLE 5
CONCEALED STUDS OR TIMBERS

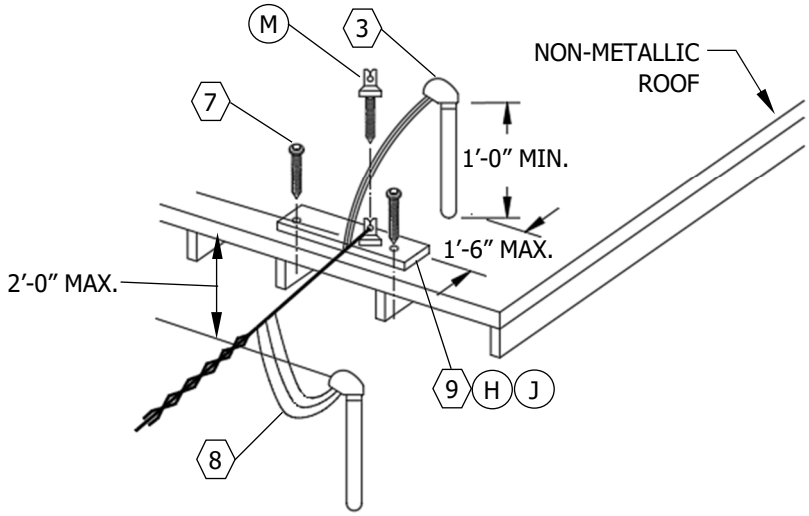

EXAMPLE 6
WOOD REINFORCING BLOCK

FIGURE 3 (CONT'D)
SEE TABLE 1

TABLE OF CONTENTS

© 1998 - 2023 San Diego Gas & Electric Company. All rights reserved. Removal of this copyright notice without permission is not permitted under law.

REV	CHANGE	DR	BY	DSN	APV	DATE	REV	CHANGE	DR	BY	DSN	APV	DATE
C							F						
B	FORMATTING	EDM	JIK	-	-	04/24/2023	E						
A	EDITORIAL CHANGES	-	LSM	IPJ	TPM	11/01/2017	D						

X Indicates Latest Revision	Completely Revised	New Page	Information Removed	

TABLE 1

SERVICE DROP SUPPORT ITEM DESCRIPTIONS	
ITEM	**DESCRIPTION**
1	HOLES, 5/16" DIA., FOR 1/4" X 3" LAG SCREWS
2	HOLES, 5/16" DIA., FOR 1/4" DIAMETER GALV. BOLTS
3	SERVICE HEAD, PREFERRED POSITION
4	BARGEBOARD, 2" NOMINAL THICKNESS
5	FASCIA BOARD, 2" NOMINAL THICKNESS
6	INSULATOR, SERVICE, SCREWED INTO STUDS
7	SCREWS, LAG, 3/8" X 5", MIN. 2
	WASHER, LARGE, ROUND FLAT
8	SERVICE HEAD, ALTERNATE POSITION
9	BOARD, PRESSURE TREATED, 2" X 4"

INSTALLATION:

WOOD BUILDINGS:

A. THE UTILITY WILL FURNISH, AT THE CONTRACTOR'S REQUEST, A SERVICE BRACKET OR INSULATORS TO SUPPORT SERVICE DROP CONDUCTORS ON A WOOD FRAME OR STUCCO BUILDING, PROVIDED THE WOOD BUILDING MEMBERS HAVE NOT LESS THAN A 2-INCH NOMINAL THICKNESS AND ARE PROPERLY LOCATED WITH RESPECT TO A POINT OF SERVICE DROP ATTACHMENT ACCEPTABLE TO THE UTILITY. THE FOLLOWING WOOD STRUCTURAL MEMBERS ARE APPROVED FOR SUPPORTING SERVICE DROP CONDUCTORS:

1. AN UN-ENCLOSED, NON-METALLIC ROOF OVERHANG, EAVE OR RAFTER END PROJECTING OUTSIDE AN EXTERIOR WALL.
2. A FASCIA, BARGEBOARD, OR AN UN-ENCLOSED EAVE PROJECTING OUTSIDE AN EXTERIOR WALL.

WOOD REINFORCING BLOCK:

B. WHERE THE WOOD ROOF OR EAVE OVERHANG MEMBERS AT THE POINT OF SERVICE DROP SUPPORT HAVE LESS THAN A 2-INCH NOMINAL THICKNESS, OR ARE OTHERWISE CONSIDERED TO BE INADEQUATE TO WITHSTAND THE PULL OF THE SERVICE DROP CONDUCTORS, A 2" X 4" MINIMUM WOOD REINFORCING BLOCK OF SUFFICIENT LENGTH SHALL BE LAGGED OR BOLTED TO THE ROOF RAFTERS TO PROVIDE A SAFE ANCHORAGE FOR INSTALLATION OF SERVICE INSULATORS BY THE UTILITY.

C. SERVICE INSULATORS OR WOOD REINFORCING BLOCKS FOR THE SUPPORT OF SERVICE INSULATORS SHALL NOT BE INSTALLED IN ANY ROOF SECTION INSIDE THE OUTER FACE OF AN EXTERIOR WALL OR ROOF SURFACE OF AN ENCLOSED CORNICE OR WITHIN A SOFFIT. SEE FIGURE 3 – EXAMPLE 6.

D. **BUILDINGS OTHER THAN WOOD:**

THE CONTRACTOR SHALL INSTALL BOLTS, SERVICE INSULATORS OR OTHER SUITABLE MEANS OF SERVICE DROP CONDUCTOR SUPPORT ON BUILDINGS CONSTRUCTED OF TILE, BRICK, CONCRETE, ADOBE, STONE, METAL OR SIMILAR MATERIAL. THE UTILITY WILL FURNISH, AT THE CONTRACTOR'S REQUEST, BOLTS OR INSULATORS NECESSARY TO SUPPORT THE SERVICE DROP CONDUCTORS.

E. **CLEARANCE RISERS OR STRUCTURES:**

WHERE A SERVICE DROP RISER OR STRUCTURE IS NECESSARY ON A BUILDING TO OBTAIN SERVICE DROP CLEARANCE, A GALVANIZED RIGID CONDUIT RISER, INTERMEDIATE METALLIC CONDUIT, OR UN-SPLICED TIMBER SHALL BE SECURELY LAGGED OR BOLTED TO THE BUILDING TO SUPPORT SERVICE INSULATORS FURNISHED AND INSTALLED BY THE UTILITY. GALVANIZED CONDUIT RISERS ARE PREFERRED. (b)

TABLE OF CONTENTS

© 1998 - 2023 San Diego Gas & Electric Company. All rights reserved. Removal of this copyright notice without permission is not permitted under law.

REV	CHANGE	DR	BY	DSN	APV	DATE	REV	CHANGE	DR	BY	DSN	APV	DATE
C							F						
B	FORMATTING	EDM	JIK	-	-	04/24/2023	E						
A	EDITORIAL CHANGES	-	LSM	IPJ	TPM	11/01/2017	D						

(F) WELD OR BOLT KNEE BRACES.

(G) SERVICE HEAD TO BE LOCATED WITHIN 24 INCHES FROM THE POINT OF ATTACHMENT. DRIP LOOP NOT TO EXCEED 3 FEET.

(H) INSTALL 2" X 4" PRESSURE TREATED BOARD LAGGED TO RAFTERS. NAILING IS NOT ACCEPTABLE.

(J) WOOD BLOCKS FOR SERVICE INSULATOR SUPPORT, OR SERVICE INSULATORS, SHALL NOT BE INSTALLED IN ANY ROOF SECTION INSIDE THE OUTER FACE OF AN EXTERIOR WALL OR ROOF SURFACE OF AN ENCLOSED CORNICE OR WITHIN A SOFFIT.

K. SERVICE DROP ATTACHMENT SHOULD NORMALLY BE LOCATED ON THE WALL FACING AND NEAREST THE UTILITY'S POLE LINE.

L. IT IS RECOMMENDED THAT SERVICE HEADS BE INSTALLED 1-FOOT ABOVE THE POINT OF SERVICE DROP ATTACHMENT TO PREVENT SIPHONING OF MOISTURE INTO THE SERVICE CONDUIT. WHERE SERVICE HEADS ARE INSTALLED BELOW THE POINT OF SERVICE DROP ATTACHMENT, DRIP LOOPS SHALL BE FORMED IN OPEN SERVICE ENTRANCE CONDUCTORS. TO PREVENT WATER FROM SIPHONING INTO THE SERVICE RACEWAY AND EQUIPMENT, AN INVERTED "V" NOTCH SHOULD BE CUT THROUGH THE INSULATION TO THE CURRENT-CARRYING STRAND(S) AT THE LOWEST POINT ON THE BOTTOM SIDE OF EACH SERVICE ENTRANCE DRIP LOOP.

(M) INSULATORS WILL BE PROVIDED BY THE UTILITY AND INSTALLED BY THE CONTRACTOR OR CUSTOMER.

N. COMMUNICATION DROPS, ATTACHMENT SUPPORTS AND ANTENNAE ARE TO HAVE A MINIMUM 12-INCH RADIAL CLEARANCE FROM THE SDG&E SERVICE DROP AND SERVICE DROP SUPPORT.

BILL OF MATERIALS: NONE

NOTES:

MAINTENANCE RESPONSIBILITY AND LIABILITY:

I. ANY SERVICE DROP CLEARANCE RISER OR STRUCTURE INSTALLED SHALL BE PROPERLY MAINTAINED AT THE EXPENSE OF THE PROPERTY OWNER OR CUSTOMER.

II. THE UTILITY WILL NOT ASSUME LIABILITY FOR ANY DAMAGE CAUSED BY:

a. ROOF LEAKAGE AROUND A RISER OR ANY OTHER TYPE OF SERVICE DROP SUPPORT.

b. MECHANICAL FAILURE OF A RISER OR ANY OTHER TYPE OF SERVICE DROP SUPPORT.

c. FAILURE OF ANY PART OF THE BUILDING AT THE POINT WHERE A RISER OR ANY OTHER TYPES OF SERVICE DROP SUPPORT IS ATTACHED.

(III) ALL ANGLE IRON IS TO BE 1 1/4" X 1 1/4" X 1/8".

(IV) LENGTH OF BRACE VARIES WITH HEIGHT OF RACK AND PITCH OF ROOF.

V. ANGLE IRON RACK FOR ATTACHMENT OF UTILITY SERVICE DROP PROVIDED AND INSTALLED BY CUSTOMER.

VI. STEEL CLEARANCE STRUCTURES SHALL BE HOT-DIPPED GALVANIZED AFTER FABRICATION.

REFERENCE:

(a) SEE SG021.

(b) FOR METHODS OF ATTACHING SERVICE DROPS TO GALVANIZED CONDUIT AND SOLID WOOD SERVICE DROP SUPPORT RISERS, SEE SG105 – SG106.

c. FOR SERVICE DROP CLEARANCES, SEE SG107.

d. SEE OH229.

TABLE OF CONTENTS

© 1998 - 2023 San Diego Gas & Electric Company. All rights reserved. Removal of this copyright notice without permission is not permitted under law.

REV	CHANGE	DR	BY	DSN	APV	DATE	REV	CHANGE	DR	BY	DSN	APV	DATE
C							F						
B	FORMATTING	EDM	JIK	-	-	04/24/2023	E						
A	EDITORIAL CHANGES	-	LSM	IPJ	TPM	11/01/2017	D						

X	Indicates Latest Revision		Completely Revised		New Page		Information Removed	

SCOPE: THIS STANDARD PROVIDES REQUIREMENTS FOR OVERHEAD SERVICE ATTACHMENT FOR METALLIC CONDUIT RISERS.

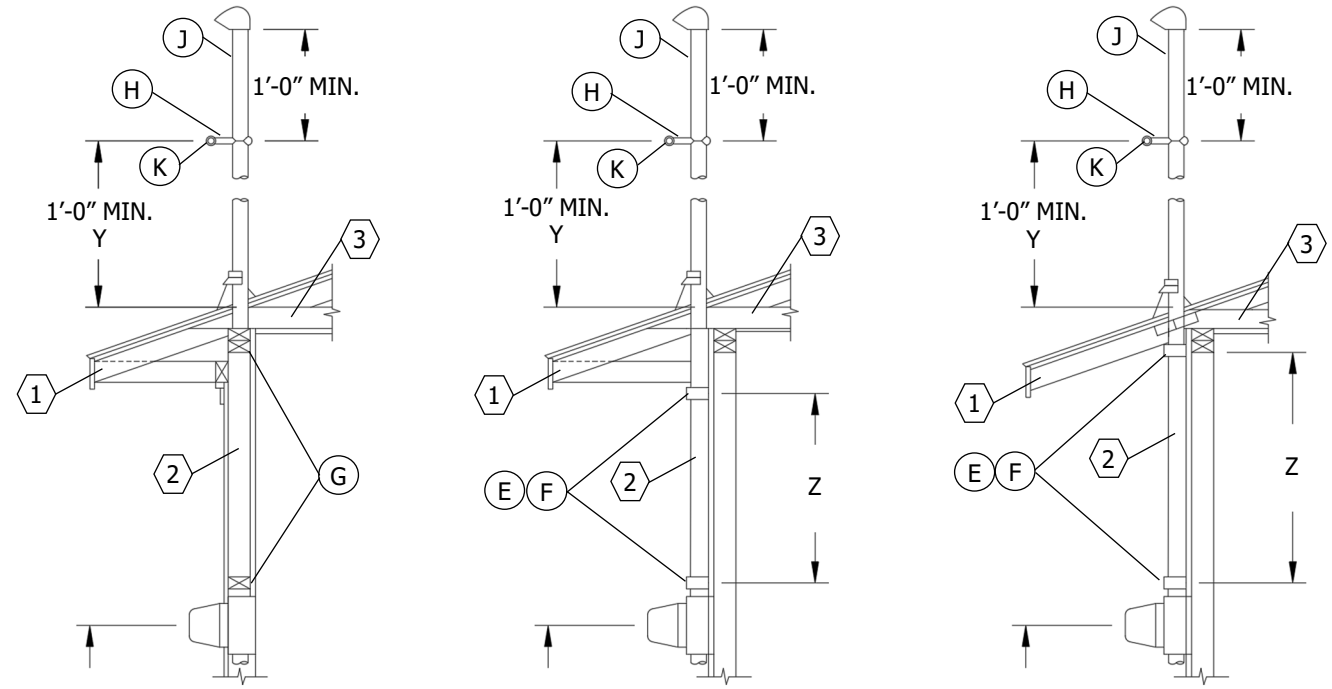

FIGURE 1
GALVANIZED RIGID CONDUIT RISER OR INTERMEDIATE METALLIC CONDUIT
FOR OVERHEAD SERVICE ATTACHMENT
SEE TABLES 1, 2 AND 3

TABLE 1

MINIMUM SUPPORT DISTANCE MEASURED FROM CENTERLINE OF HEAVY DUTY PIPE STRAPS	
CONDUIT SIZE (IN)	**Z (IN)**
1 1/4	12
1 1/2	15
2	22
2 1/2	30

TABLE 2

MAXIMUM DISTANCE OF CENTERLINE OF LOAD ABOVE ROOF	
CONDUIT SIZE (IN)	**Y (IN)**
1 1/4	30
1 1/2	40
2	60
2 1/2	96

© 1998 - 2023 San Diego Gas & Electric Company. All rights reserved. Removal of this copyright notice without permission is not permitted under law.

REV	CHANGE	DR	BY	DSN	APV	DATE	REV	CHANGE	DR	BY	DSN	APV	DATE
C							F						
B	FORMATTING	EDM	JIK	-	-	04/24/2023	E						
A	EDITORIAL CHANGES	-	LSM	IPJ	TPM	11/01/2017	D						

X	Indicates Latest Revision		Completely Revised		New Page		Information Removed

SDG&E ELECTRIC SERVICE STANDARDS & GUIDES

SHEET 1 OF 2

OVERHEAD SERVICE ATTACHMENT FOR METALLIC CONDUIT RISERS

SG105.1

TABLE OF CONTENTS

TABLE 3

RISER ITEM DESCRIPTIONS	
ITEM	**DESCRIPTION**
1	RAFTER
2	STUD
3	JOIST, CEILING

INSTALLATION:

A. SDG&E (UTILITY) WILL NOT BE RESPONSIBLE FOR ANY DAMAGE TO THE BUILDING CAUSED BY RAIN OR STRUCTURAL FAILURE.

B. THESE METHODS ARE SUGGESTED TO OBTAIN THE REQUIRED GROUND AND ROOF CLEARANCES AS REQUIRED BY THE GOVERNMENTAL AUTHORITIES HAVING JURISDICTION (AHJ). WHEN THIS METHOD IS USED, IT WILL BE ACCEPTABLE TO THE UTILITY PROVIDED THE DIMENSIONS AND CONSTRUCTION DETAILS ARE IN COMPLIANCE WITH THIS STANDARD.

C. NO COUPLINGS WILL BE PERMITTED BETWEEN, OR ABOVE, THE TOP TWO PIPE STRAP SUPPORTS FOR CONDUIT SIZES 1 1/4 TO 2 INCHES INCLUSIVE. IF A COUPLING IS NECESSARY IN THE 2 1/2-INCH SIZE CONDUIT TO OBTAIN THE MAXIMUM POINT OF ATTACHMENT OF 8 FEET ABOVE THE TOP SUPPORT OR ROOFLINE, THE COUPLING SHALL BE INSTALLED AT THE UPPER END NEAR THE WEATHERHEAD.

D. SERVICE DROP ATTACHMENT SHALL NORMALLY BE LOCATED ON THE WALL FACING AND NEAREST SDG&E'S POLE LINE. (e)

(E) HEAVY DUTY TWO-HOLE PIPE STRAPS. UPPER STRAP MUST BE DIRECTLY BELOW SOFFIT (SEE FIGURE 1-EXAMPLE 2) OR SCREWED WITH 3/8" X 3" LAG SCREWS INTO PLATE (SEE FIGURE 1-EXAMPLE 3). 1/4-INCH TOGGLE BOLTS MAY BE USED IN LIEU OF LAG SCREWS. ZANAC NAIL HEADS 1/4" X 1 7/8" (MUSHROOM) MAY BE USED IN PLACE OF LAG SCREWS WHEN ATTACHING TO CINDER BLOCK OR CONCRETE WALLS.

(F) HEAVY DUTY ONE-HOLE PIPE STRAPS ARE ACCEPTABLE IF USED WITH 3/8" X 3" LAG CREW (MIN. SIZE) INTO WALL STUD OR PLATE. ZANAC NAIL HEADS 1/4" X 1 7/8" (MUSHROOM) MAY BE USED IN PLACE OF LAG SCREWS WHEN ATTACHING TO CINDER BLOCK OR CONCRETE WALLS.

(G) ENCLOSED RISERS MUST BE SECURELY SUPPORTED AT THE PLATE AND IMMEDIATELY ABOVE THE METER SOCKET ENCLOSURE.

(H) THE UTILITY WILL PROVIDE THE CLAMP AND INSULATOR FOR ATTACHMENT OF THE SERVICE DROP TO THE CUSTOMER'S RISER.

(J) ONLY THE UTILITY'S SERVICE DROP CONDUCTORS SHALL BE PERMITTED TO BE ATTACHED TO THE SERVICE RISER. THIS IS A UTILITY AND CALIFORNIA ELECTRICAL CODE REQUIREMENT.

(K) BUCKET TRUCK ACCESS REQUIRED IF DISTANCE FROM LADDER TO WEATHERHEAD AND POINT OF ATTACHMENT EXCEEDS 24 INCHES.

BILL OF MATERIALS: NONE

NOTES: NONE

REFERENCE:

a. FOR RECESSED RESIDENTIAL METER INSTALLATION, SEE SG507.

b. FOR SINGLE RESIDENTIAL METER INSTALLATION ENCLOSED IN A METER CABINET, SEE SG508.

c. FOR COMMERCIAL OR RESIDENTIAL MULTI-METER ENCLOSED IN A CABINET, SEE SG509.

d. FOR COMMERCIAL OR RESIDENTIAL MULTI-METER LOCATED IN A METER ROOM, SEE SG506.

(e) FOR EXCEPTIONS TO OBTAIN SERVICE DROP CLEARANCES ON RESIDENTIAL BUILDINGS OR STRUCTURES, SEE SG103.

f. SEE OH641.

© 1998 - 2023 San Diego Gas & Electric Company. All rights reserved. Removal of this copyright notice without permission is not permitted under law.

REV	CHANGE	DR	BY	DSN	APV	DATE	REV	CHANGE	DR	BY	DSN	APV	DATE
C							F						
B	FORMATTING	EDM	JIK	-	-	04/24/2023	E						
A	EDITORIAL CHANGES	-	LSM	IPJ	TPM	11/01/2017	D						

X Indicates Latest Revision | Completely Revised | New Page | Information Removed

SDG&E ELECTRIC SERVICE STANDARDS & GUIDES

SHEET 2 OF 2

OVERHEAD SERVICE ATTACHMENT FOR METALLIC CONDUIT RISERS

SG105.2

TABLE OF CONTENTS

SCOPE: THIS STANDARD PROVIDES REQUIREMENTS FOR OVERHEAD SERVICE ATTACHMENTS FOR SOLID WOOD RISERS.

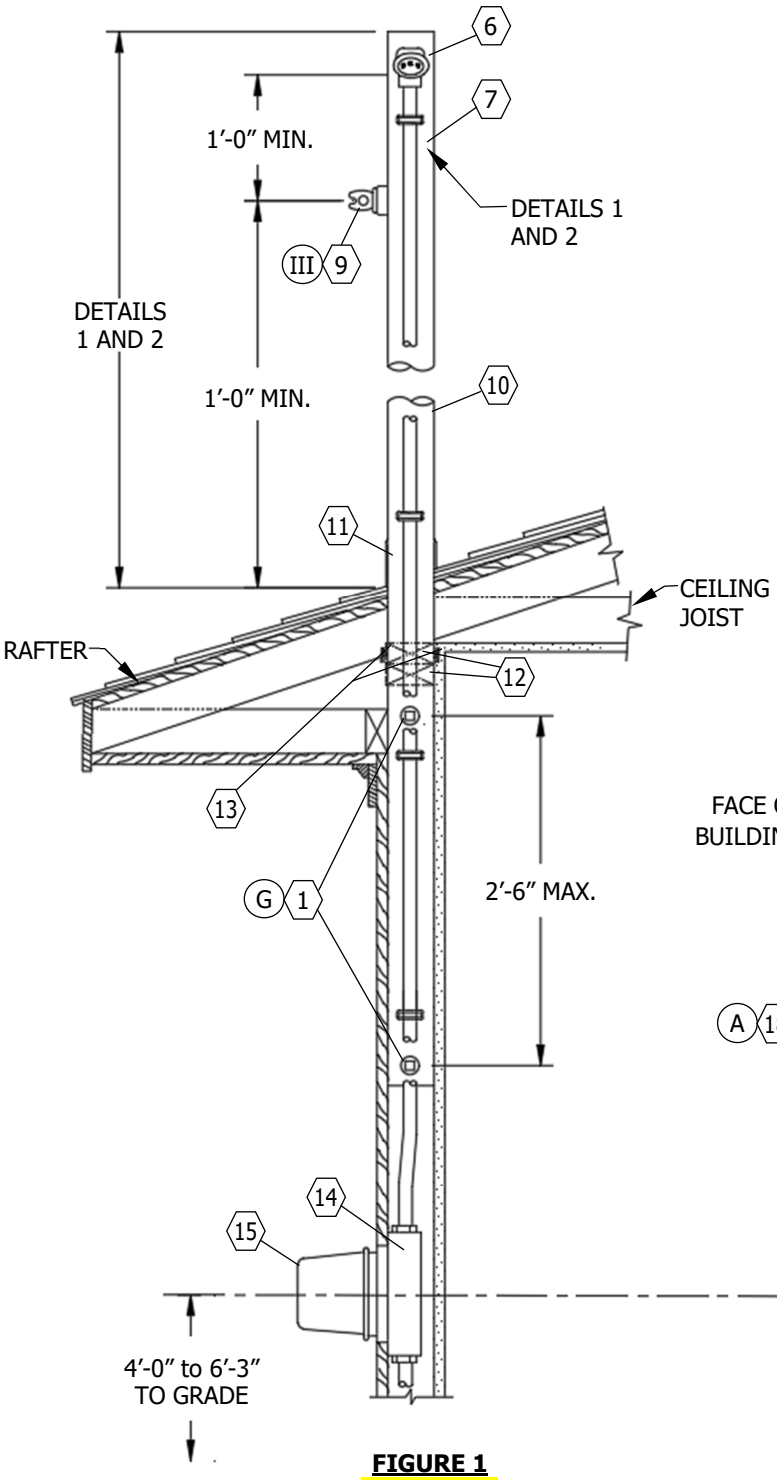

FIGURE 1
SEE TABLE 1

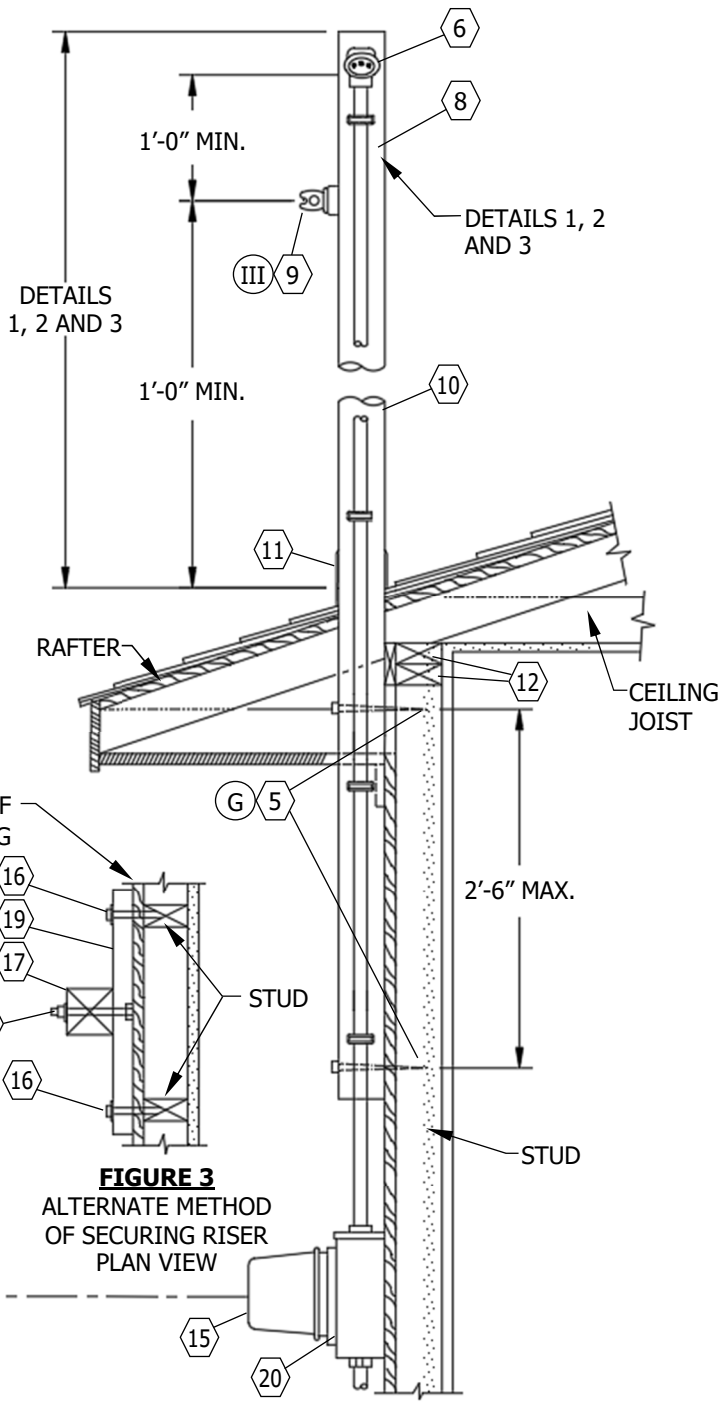

FIGURE 3
ALTERNATE METHOD OF SECURING RISER PLAN VIEW

FIGURE 2
SEE TABLE 1

© 1998 - 2023 San Diego Gas & Electric Company. All rights reserved. Removal of this copyright notice without permission is not permitted under law.

REV	CHANGE	DR	BY	DSN	APV	DATE	REV	CHANGE	DR	BY	DSN	APV	DATE
C							F						
B	FORMATTING	EDM	JIK	-	-	04/24/2023	E						
A	EDITORIAL CHANGES	-	LSM	IPJ	TPM	11/01/2017	D						

X	Indicates Latest Revision		Completely Revised		New Page		Information Removed

SDG&E ELECTRIC SERVICE STANDARDS & GUIDES

OVERHEAD SERVICE ATTACHMENT FOR SOLID WOOD RISERS

SG106.1

TABLE OF CONTENTS

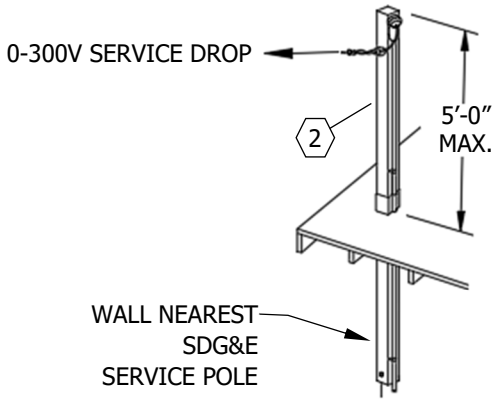

DETAIL 1
SEE TABLE 1

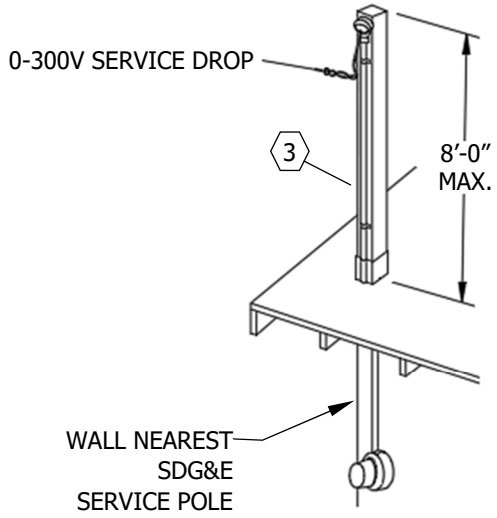

DETAIL 2
SEE TABLE 1 F

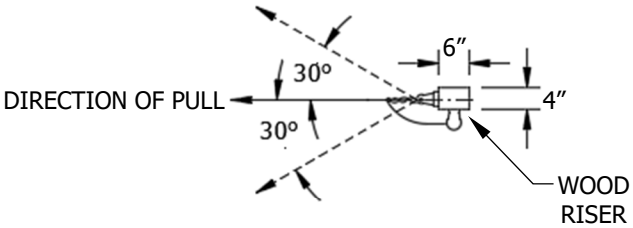

DETAIL 1
PLAN VIEW
SEE TABLE 1 B

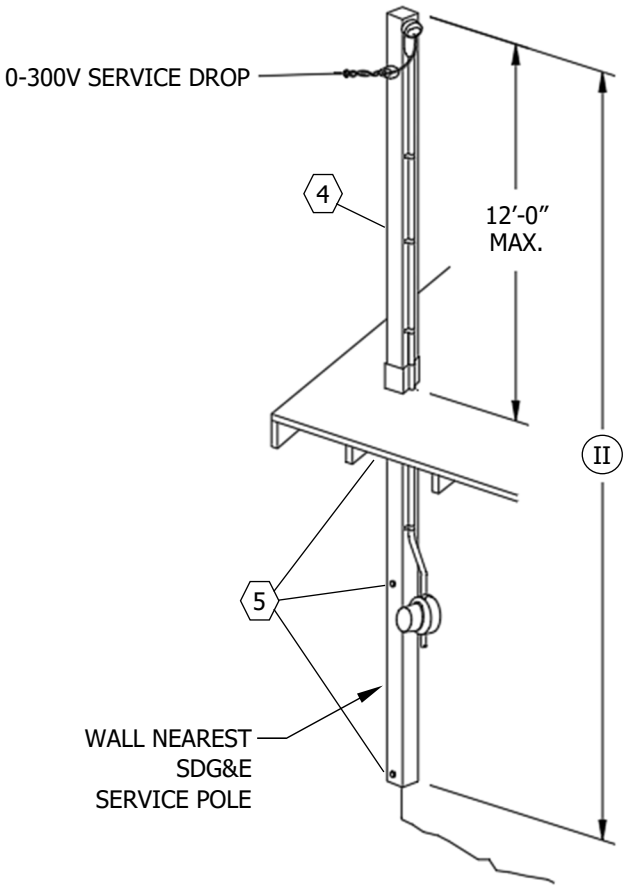

DETAIL 3
SEE TABLE 1

TABLE OF CONTENTS

© 1998 - 2023 San Diego Gas & Electric Company. All rights reserved. Removal of this copyright notice without permission is not permitted under law.

REV	CHANGE	DR	BY	DSN	APV	DATE	REV	CHANGE	DR	BY	DSN	APV	DATE
C							F						
B	FORMATTING	EDM	JIK	-	-	04/24/2023	E						
A	EDITORIAL CHANGES	-	LSM	IPJ	TPM	11/01/2017	D						

X	Indicates Latest Revision		Completely Revised		New Page		Information Removed

TABLE OF CONTENTS

TABLE 1

OVERHEAD SERVICE ATTACHMENT ITEM DESCRIPTIONS		
ITEM	**DESCRIPTION**	
1	BOLT AND WASHER, 1/2", (QTY 2)	
2	RISER, SOLID WOOD, 4" X 4"	
3	RISER, SOLID WOOD, 4" X 6"	
4	RISER, SOLID WOOD, 6" X 6"	
5	BOLTS, 1/2" DIA. OR LAG SCREWS	
6	SERVICE CAP	
7	RISER, SOLID WOOD, PRESSURE TREATED	4" X 4"
		4" X 6"
8	RISER, SOLID WOOD, PRESSURE TREATED	4" X 4"
		4" X 6"
		6" X 6"
9	SERVICE KNOB	
10	E.M.T., I.M.T. OR SCH 40 PVC	
11	FLASHING	
12	PLATES	
13	STRAPS, ON PLATES	
14	SOCKET BOX, METER, FLUSH TYPE	
15	METER	
16	SCREW, LAG, 1/4" X 4"	
17	RISER, WOOD	
18	BOLT, MACH., 1/2" DIA.	
19	2" X 4"	
20	SOCKET BOX, METER, SURFACE MOUNTED TYPE	

INSTALLATION:

A. BOLT HEAD TO BE RECESSED IN 2 X 4. BOLT 2 X 4 TO WOOD RISER BEFORE INSTALLING.

B. SERVICE DROP ATTACHMENT SHALL NORMALLY BE LOCATED ON THE WALL FACING AND NEAREST THE UTILITY'S POLE LINE. C

C. WOOD RISERS SHALL NOT BE SPLICED OR OF LAMINATED CONSTRUCTION, 2 X 4'S, 2 X 6'S, ETC. NAILED OR BOLTED TOGETHER RISERS ARE NOT ACCEPTABLE.

D. BUCKET TRUCK ACCESS IS REQUIRED IF THE DISTANCE FROM LADDER TO WEATHERHEAD AND POINT OF ATTACHMENT EXCEEDS 24 INCHES.

© 1998 - 2023 San Diego Gas & Electric Company. All rights reserved. Removal of this copyright notice without permission is not permitted under law.

REV	CHANGE	DR	BY	DSN	APV	DATE	REV	CHANGE	DR	BY	DSN	APV	DATE
C							F						
B	FORMATTING	EDM	JIK	-	-	04/24/2023	E						
A	EDITORIAL CHANGES	-	LSM	IPJ	TPM	11/01/2017	D						

X Indicates Latest Revision | Completely Revised | New Page | Information Removed

INSTALLATION (CONT'D):

E. ONLY THE UTILITY'S SERVICE DROP CONDUCTORS SHALL BE PERMITTED TO BE ATTACHED TO THE SOLID WOOD RISER STRUCTURE. THIS IS A UTILITY AND CALIFORNIA ELECTRICAL CODE REQUIREMENT.

(F) SERVICE KNOBS TO BE INSTALLED ON 4-INCH FACE OF TIMBER ONLY.

(G) SECURE RISER TO STUD.

BILL OF MATERIALS: NONE

NOTES:

(I) SDG&E (UTILITY) WILL NOT BE RESPONSIBLE FOR ANY DAMAGE TO THE BUILDING CAUSED BY RAIN OR STRUCTURAL FAILURE.

(II) WOOD RISER TO EXTEND TO TOP OF FOUNDATION.

(III) FURNISHED AND INSTALLED BY SDG&E

REFERENCE:

a. SEE OH641.

b. FOR SERVICE DROP CLEARANCES, SEE SG107.

(c) FOR EXCEPTIONS TO OBTAIN SERVICE DROP CLEARANCES ON RESIDENTIAL BUILDINGS OR STRUCTURES, SEE SG103.

TABLE OF CONTENTS

© 1998 - 2023 San Diego Gas & Electric Company. All rights reserved. Removal of this copyright notice without permission is not permitted under law.

REV	CHANGE	DR	BY	DSN	APV	DATE	REV	CHANGE	DR	BY	DSN	APV	DATE
C							F						
B	FORMATTING	EDM	JIK	-	-	04/24/2023	E						
A	EDITORIAL CHANGES	-	LSM	IPJ	TPM	11/01/2017	D						

X	Indicates Latest Revision		Completely Revised		New Page		Information Removed	

SCOPE: THIS STANDARD PROVIDES REQUIREMENTS FOR 0-600V SERVICE DROP CONDUCTOR CLEARANCES.

ATTENTION:

* THE VERTICAL, HORIZONTAL AND RADIAL SERVICE DROP CONDUCTOR (INCLUDING THE DRIP LOOP) CLEARANCES TABULATED AND ILLUSTRATED THROUGHOUT THIS MANUAL ARE MINIMUM REQUIREMENTS OF STATE, COUNTY OR MUNICIPAL CODES, LAWS AND ORDINANCES. DEVIATION FROM THESE MINIMUM CLEARANCE REQUIREMENTS CANNOT BE GRANTED BY SDG&E (UTILITY).

** THE UTILITY PRIMARILY USES INSULATED ABRASION-RESISTANT SELF-SUPPORTING CABLE (SSC) FOR SERVICE DROP CONDUCTORS. HOWEVER, THE UTILITY USED TO INSTALL OPEN-WIRE WEATHERPROOF (WP) UNINSULATED SERVICE DROP CONDUCTORS. THE OLDER WP SERVICE DROPS STILL EXIST, THOUGH THEY ARE NOT COMMON.

*** THE USE OF OPEN-WIRE SERVICE DROP CONDUCTORS IN COMMERCIAL/INDUSTRIAL APPLICATIONS MAY OCCUR TODAY WHEN THE ESTIMATED LOAD REQUIRES A HIGHER AMPACITY RATING FOR THE SERVICE DROP CONDUCTORS THAT ARE ONLY AVAILABLE IN OPEN-WIRE CONDUCTOR SIZES. THE ABBREVIATIONS SSC AND WP ARE COMMONLY USED THROUGHOUT THIS SECTION.

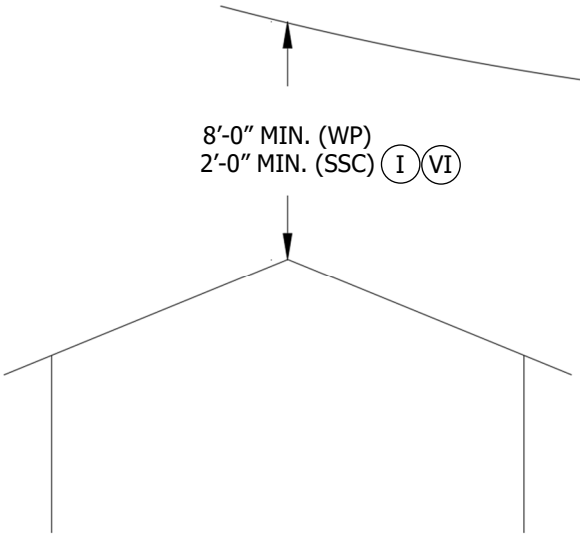

FIGURE 1
CLEARANCE ABOVE RESIDENTIAL, COMMERCIAL, OR INDUSTRIAL BUILDINGS ON PREMISES SERVED OTHER THAN THE BUILDING SERVED

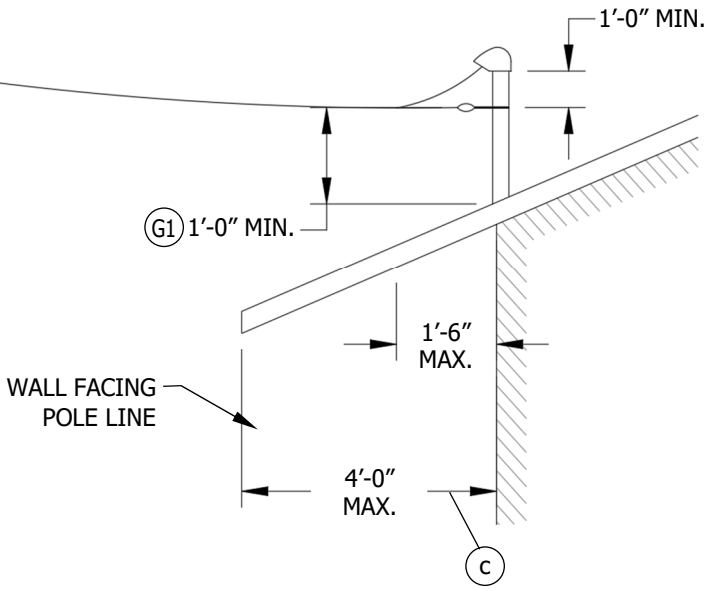

FIGURE 2
REDUCED 0-300V WP SERVICE DROP CLEARANCE ABOVE A RESIDENTIAL ROOF OR EAVE ON THE BUILDING SERVED

TABLE OF CONTENTS

© 1998 - 2023 San Diego Gas & Electric Company. All rights reserved. Removal of this copyright notice without permission is not permitted under law.

REV	CHANGE	DR	BY	DSN	APV	DATE	REV	CHANGE	DR	BY	DSN	APV	DATE
C							F						
B	FORMATTING	EDM	JIK	-	-	04/24/2023	E						
A	EDITORIAL CHANGES	-	LSM	IPJ	TPM	11/01/2017	D						

X	Indicates Latest Revision		Completely Revised		New Page		Information Removed

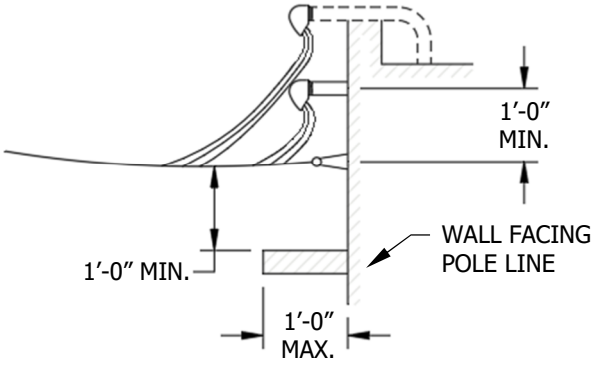

EXAMPLE 1

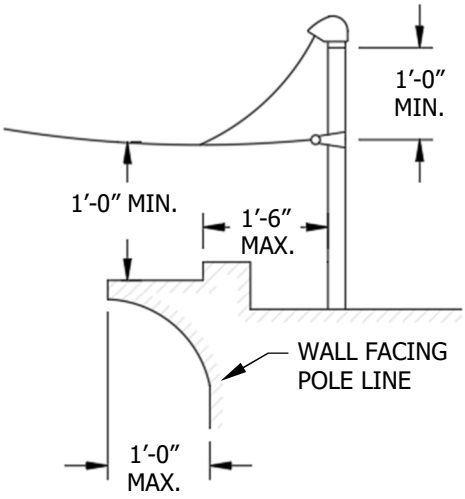

EXAMPLE 2

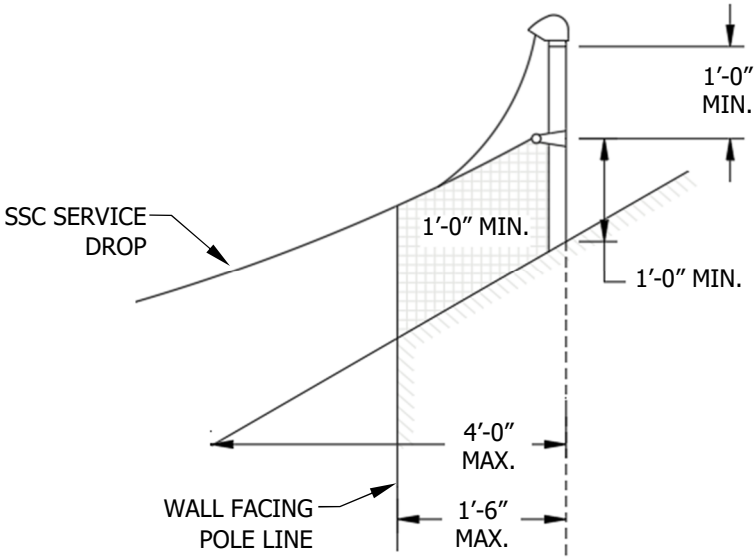

EXAMPLE 3 (II)

FIGURE 3
EXCEPTIONS FOR REDUCED CLEARANCE ABOVE (G2)(XIV)
COMMERCIAL AND INDUSTRIAL BUILDINGS

© 1998 - 2023 San Diego Gas & Electric Company. All rights reserved. Removal of this copyright notice without permission is not permitted under law.

REV	CHANGE	DR	BY	DSN	APV	DATE	REV	CHANGE	DR	BY	DSN	APV	DATE
C							F						
B	FORMATTING	EDM	JIK	-	-	04/24/2023	E						
A	EDITORIAL CHANGES	-	LSM	IPJ	TPM	11/01/2017	D						

X Indicates Latest Revision | Completely Revised | New Page | Information Removed

TABLE OF CONTENTS

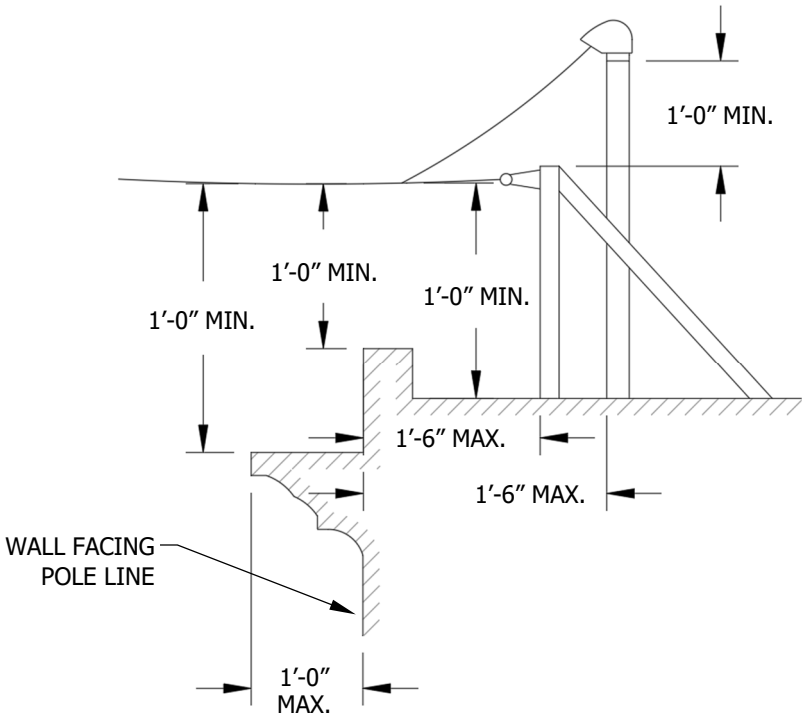

EXAMPLE 4

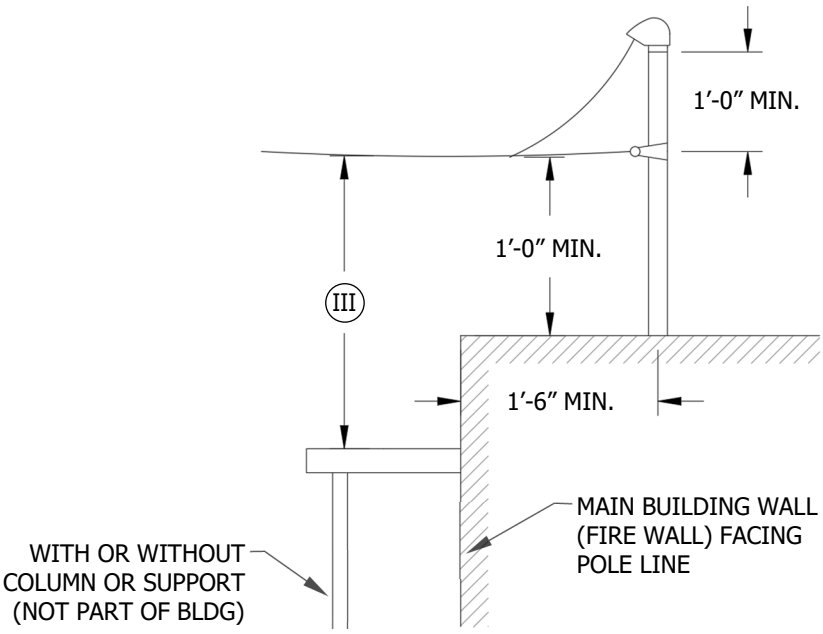

EXAMPLE 5

FIGURE 3 (CONT'D)
EXCEPTIONS FOR REDUCED CLEARANCE ABOVE (G2)(XIV)
COMMERCIAL AND INDUSTRIAL BUILDINGS

© 1998 - 2023 San Diego Gas & Electric Company. All rights reserved. Removal of this copyright notice without permission is not permitted under law.

REV	CHANGE	DR	BY	DSN	APV	DATE	REV	CHANGE	DR	BY	DSN	APV	DATE
C							F						
B	FORMATTING	EDM	JIK	-	-	04/24/2023	E						
A	EDITORIAL CHANGES	-	LSM	IPJ	TPM	11/01/2017	D						

X Indicates Latest Revision	Completely Revised	New Page	Information Removed	

TABLE OF CONTENTS

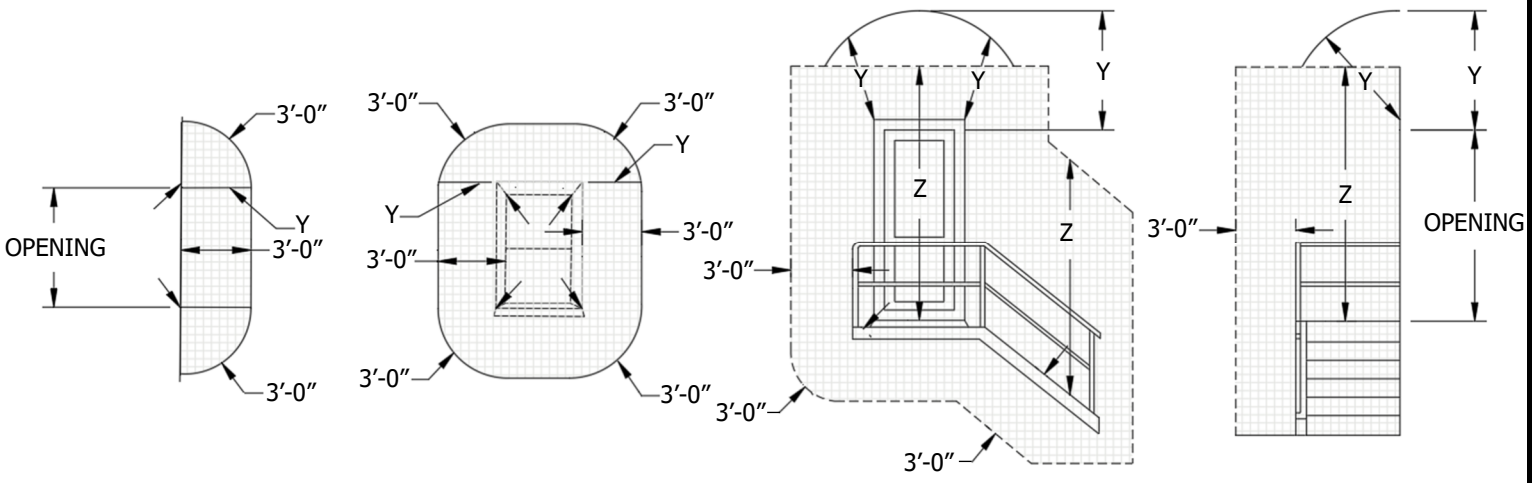

EXAMPLE 1 SIDE VIEW | EXAMPLE 1 FRONT VIEW | EXAMPLE 2 FRONT VIEW | EXAMPLE 2 SIDE VIEW

FIGURE 4

SERVICE DROP CONDUCTOR CLEARANCES, 0-600V, FROM DOORS, EXITS, WINDOWS, FIRE ESCAPES, BALCONIES, ETC. (II) (V) (VII)

SEE TABLE 1

TABLE OF CONTENTS

TABLE 1

VERTICAL, HORIZONTAL, AND RADIAL SERVICE DROP CONDUCTOR (INCLUDING THE DRIP LOOP) CLEARANCES		
CONDITION	**MINIMUM CLEARANCE**	
	Z (FT)	**Y (FT)**
VERTICALLY ABOVE WALKABLE SURFACES OF FIRE ESCAPES, BALCONIES, STAIRWAYS AND WALKWAYS	8	--
HORIZONTALLY AND RADIALLY FROM FIRE ESCAPES, EXITS, OPENABLE WINDOWS, DOORS, AND OTHER POINTS AT WHICH HUMAN CONTACT MIGHT BE EXPECTED	--	3

© 1998 - 2023 San Diego Gas & Electric Company. All rights reserved. Removal of this copyright notice without permission is not permitted under law.

REV	CHANGE	DR	BY	DSN	APV	DATE	REV	CHANGE	DR	BY	DSN	APV	DATE
C							F						
B	FORMATTING	EDM	JIK	-	-	04/24/2023	E						
A	EDITORIAL CHANGES	-	LSM	IPJ	TPM	11/01/2017	D						

X Indicates Latest Revision | Completely Revised | New Page | Information Removed

TABLE OF CONTENTS

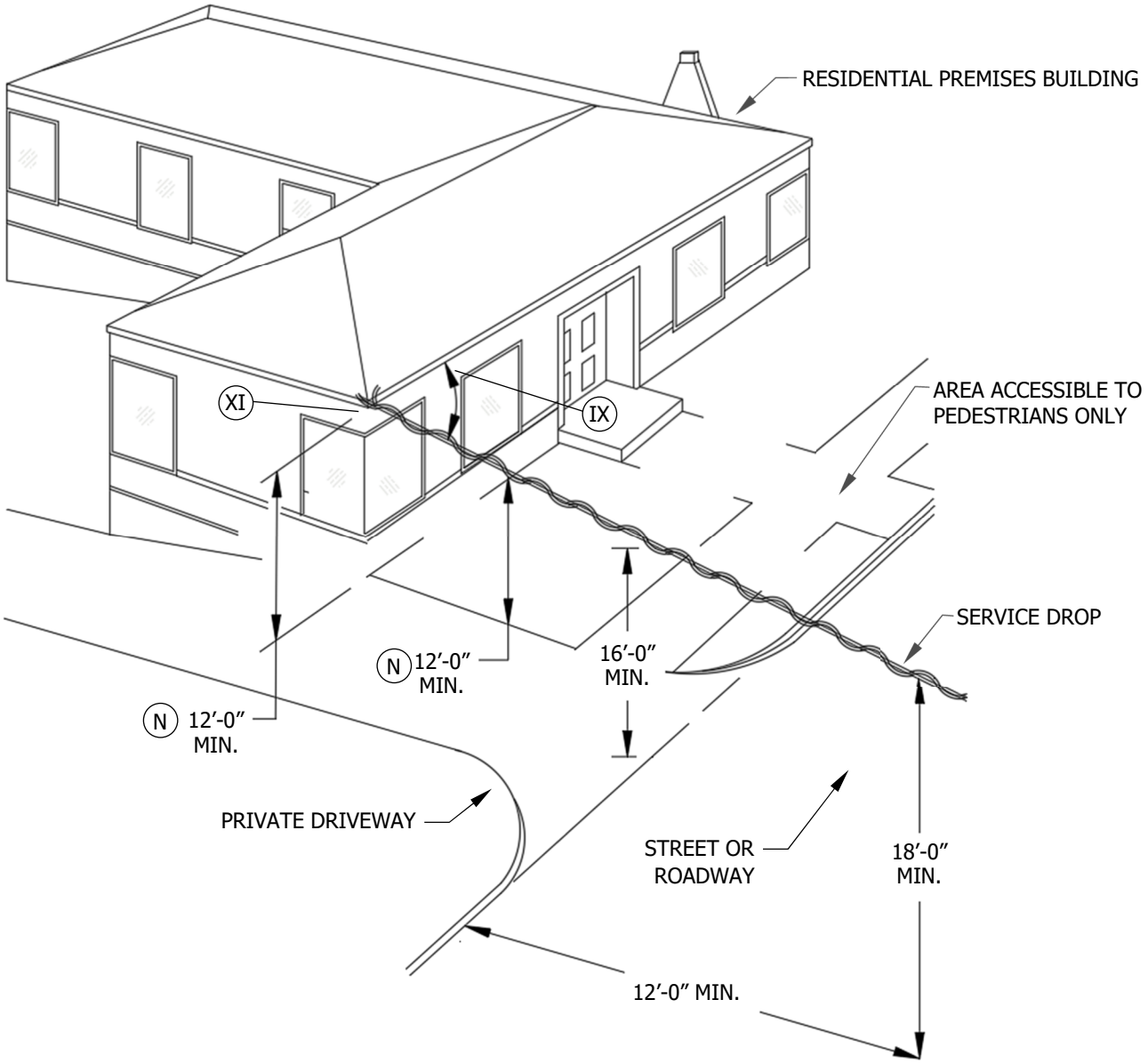

FIGURE 5
RESIDENTIAL PREMISES
MINIMUM CLEARANCES REQUIRED FOR SERVICE DROP CONDUCTORS OVER THOROUGHFARES, (F)
FROM BUILDINGS, AT POINT OF ATTACHMENT TO BUILDING, AND CROSS REFERENCE PAGES

© 1998 - 2023 San Diego Gas & Electric Company. All rights reserved. Removal of this copyright notice without permission is not permitted under law.

REV	CHANGE	DR	BY	DSN	APV	DATE	REV	CHANGE	DR	BY	DSN	APV	DATE
C							F						
B	FORMATTING	EDM	JIK	-	-	04/24/2023	E						
A	EDITORIAL CHANGES	-	LSM	IPJ	TPM	11/01/2017	D						

X	Indicates Latest Revision		Completely Revised		New Page		Information Removed

TABLE OF CONTENTS

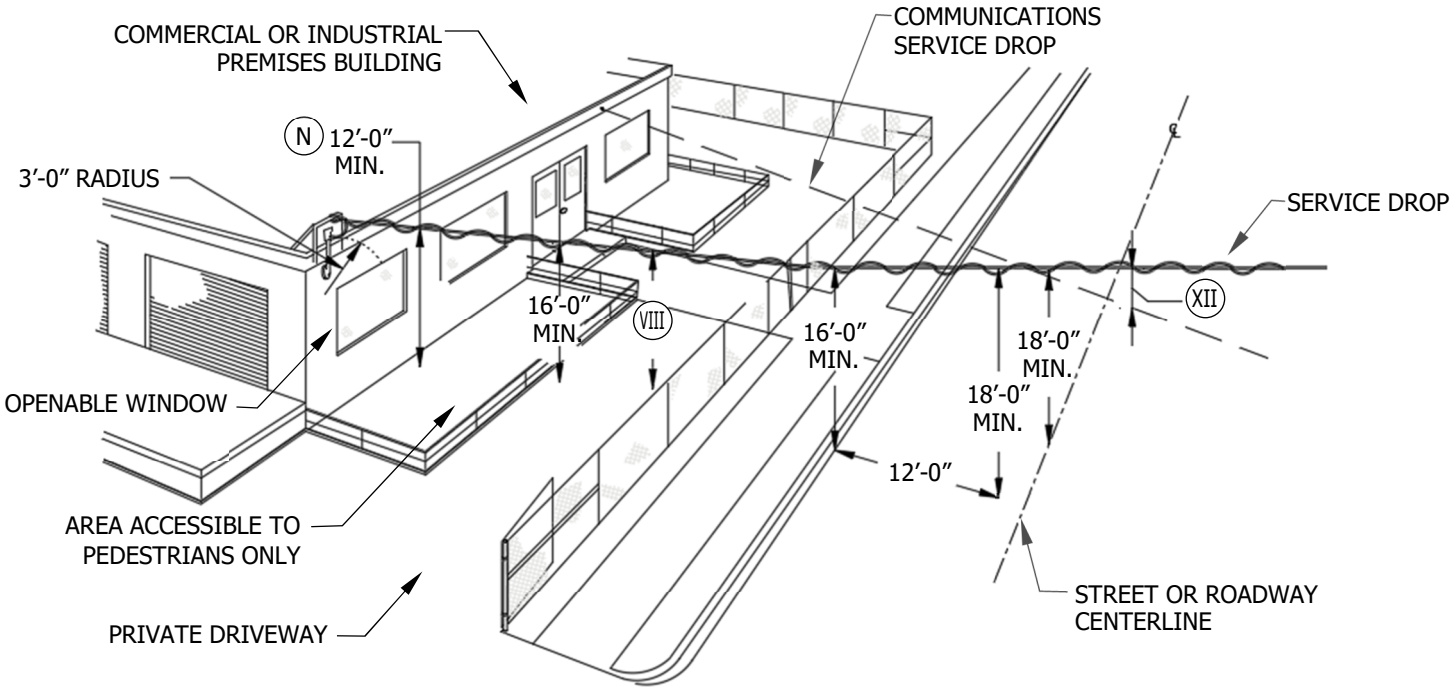

EXAMPLE 1

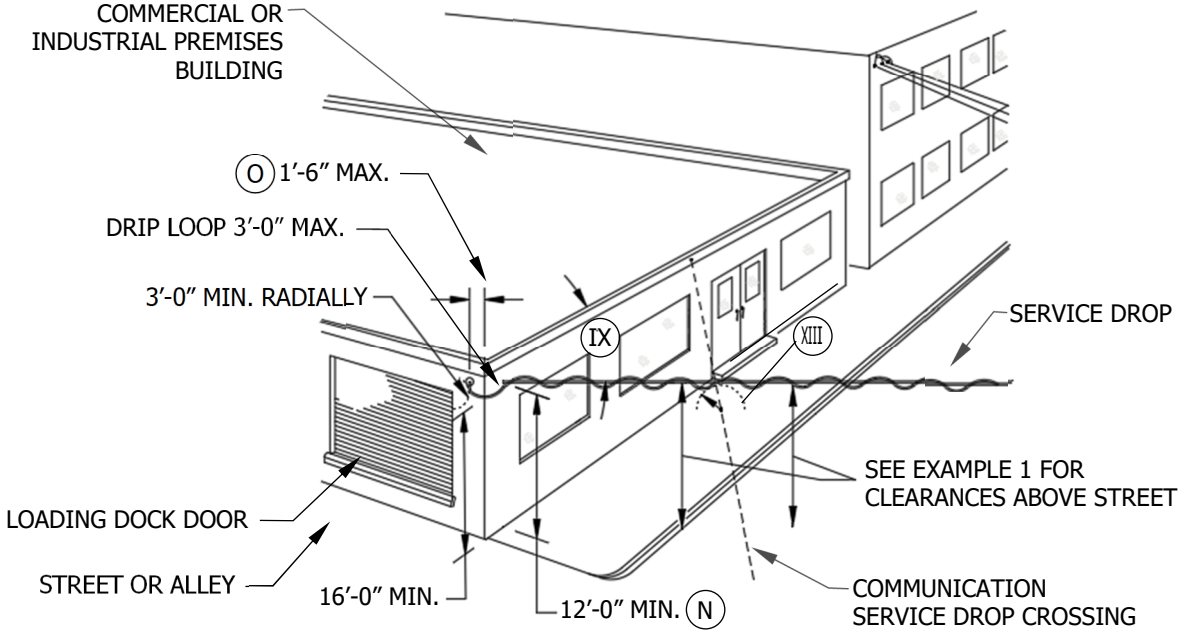

EXAMPLE 2

FIGURE 6
COMMERCIAL OR INDUSTRIAL PREMISES
MINIMUM CLEARANCES REQUIRED FOR SERVICE DROP CONDUCTORS OVER THOROUGHFARES, (F)
FROM BUILDINGS, AT POINT OF ATTACHMENT TO BUILDING, AND CROSS REFERENCE PAGES

© 1998 - 2023 San Diego Gas & Electric Company. All rights reserved. Removal of this copyright notice without permission is not permitted under law.

REV	CHANGE	DR	BY	DSN	APV	DATE	REV	CHANGE	DR	BY	DSN	APV	DATE
C							F						
B	FORMATTING	EDM	JIK	-	-	04/24/2023	E						
A	EDITORIAL CHANGES	-	LSM	IPJ	TPM	11/01/2017	D						

X	Indicates Latest Revision		Completely Revised		New Page		Information Removed

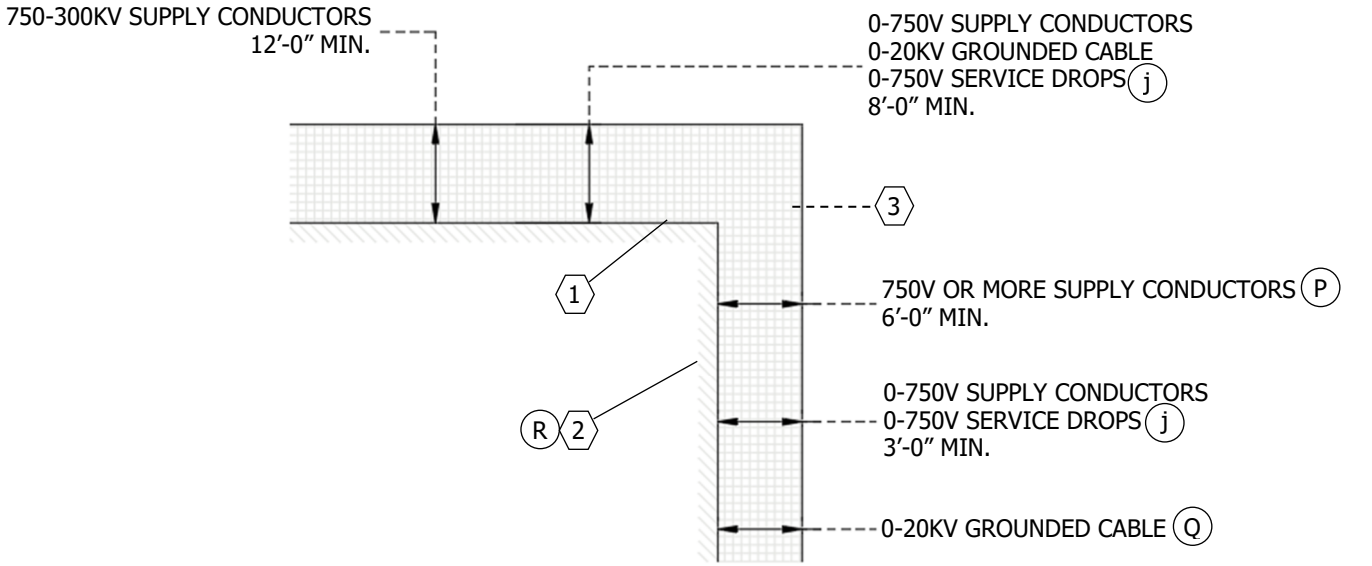

EXAMPLE 1
BUILDINGS, BRIDGES, AND OTHER STRUCTURES

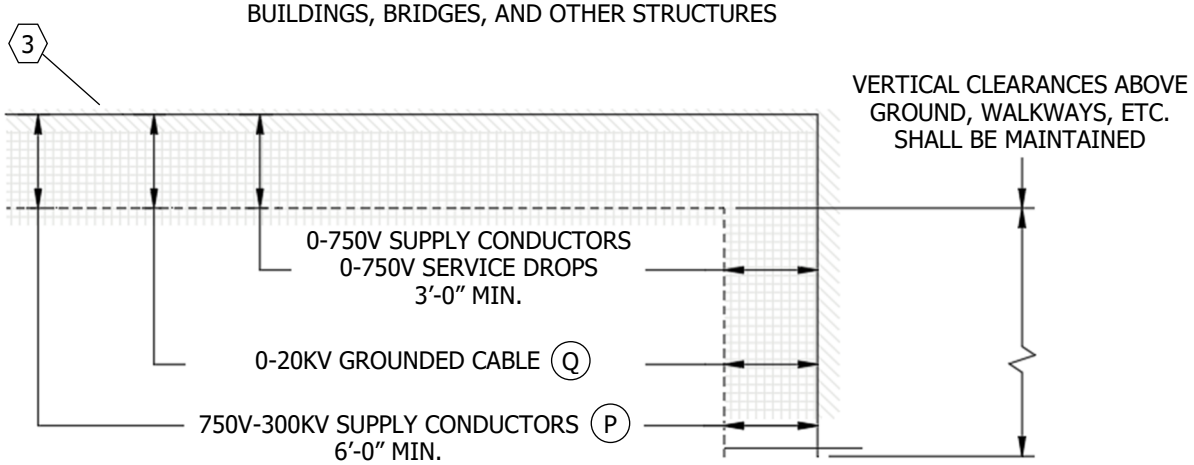

EXAMPLE 2
UNDER OR THRU BRIDGES, VIADUCTS OR SIMILAR STRUCTURES

FIGURE 7
HORIZONTAL AND VERTICAL CLEARANCES OF SUPPLY AND SERVICE DROP (g) (h) CONDUCTORS FROM BUILDINGS, BRIDGES, AND OTHER STRUCTURES
SEE TABLE 2

TABLE 2

APPURTENANCE LIST	
ITEM	**DESCRIPTION**
1	WALKABLE SURFACE
2	NEAREST PROJECTING SURFACE (R)
3	CLEARANCE ZONE

© 1998 - 2023 San Diego Gas & Electric Company. All rights reserved. Removal of this copyright notice without permission is not permitted under law.

REV	CHANGE	DR	BY	DSN	APV	DATE	REV	CHANGE	DR	BY	DSN	APV	DATE
C							F						
B	FORMATTING	EDM	JIK	-	-	04/24/2023	E						
A	EDITORIAL CHANGES	-	LSM	IPJ	TPM	11/01/2017	D						

X	Indicates Latest Revision		Completely Revised		New Page		Information Removed

SDG&E ELECTRIC SERVICE STANDARDS & GUIDES

SERVICE DROP CONDUCTOR CLEARANCES
0-600V

SG107.7

TABLE OF CONTENTS

INSTALLATION:

A. WEATHER AND TIME ADVERSELY AFFECT SERVICE DROP CONDUCTORS AND THE SERVICE SUPPORT, RESULTING IN ULTIMATE SERVICE DROP CONDUCTOR SAG GREATER THAN THE INITIAL SAG OBTAINED AT THE TIME OF INSTALLATION. ACCORDINGLY, WHEN SELECTING A POINT OF ATTACHMENT METHOD PROVIDE A HEIGHT THAT WILL PERMIT THE SERVICE DROP CONDUCTORS TO BE MAINTAINED IN COMPLIANCE WITH APPLICABLE CLEARANCE REQUIREMENTS FOR THE ULTIMATE SAG.

B. A SERVICE DROP SUPPORT RISER OR RACK SHALL NOT BE LOCATED MORE THAN 18 INCHES BACK FROM THE FRONT FACE OF THE BUILDING WALL FACING THE UTILITY'S POLE LINE, EXCEPT AS PERMITTED FOR RESIDENTIAL BUILDINGS.

C. SERVICE SUPPORT INSULATORS OR BRACKET SHALL NOT BE INSTALLED ON THE TOP OF ANY CORNICE, APPENDAGE, EAVE, ROOF OR PARAPET WALL OF A BUILDING, EXCEPT AS ALLOWED ON SG104. (d)

D. WHERE NON-INSULATED (WP) OPEN WIRE SERVICE DROP CONDUCTORS APPROACH A BUILDING WALL AT ANY ANGLE OF LESS THAN 60 DEGREES, THE SPACING OF THE INSULATORS IN HORIZONTAL CONFIGURATION AT THE POINT OF ATTACHMENT SHALL BE INCREASED TO PROVIDE AT LEAST 8 INCHES CONDUCTOR SEPARATION. VERTICAL CONFIGURATION IS PREFERABLE WHERE THE ANGLE BETWEEN THE SERVICE DROP AND THE WALL IS LESS THAN 60 DEGREES AND IS ACCEPTABLE FOR ANY ANGLE.

E. SERVICE DROPS SHOULD BE ARRANGED SO AS NOT TO HINDER OR ENDANGER WORKERS AND FIREFIGHTERS WHILE PERFORMING THEIR DUTIES.

(F) **CLEARANCES ABOVE GROUND, THOROUGHFARES, DRIVEWAYS, AND PUBLIC/PRIVATE PROPERTY:**

VERTICAL CLEARANCES ABOVE GROUND FOR SERVICE DROP CONDUCTORS CROSSING OVER PUBLIC OR PRIVATE THOROUGHFARES, DRIVEWAYS, AND PROPERTIES SHALL BE NOT LESS THAN THOSE SPECIFIED IN TABLE 3. THE GOVERNMENTAL AUTHORITY HAVING JURISDICTION (AHJ) MAY IN SOME INSTANCES REQUIRE GREATER CLEARANCES THAN THOSE SHOWN. (i)

TABLE 3

VERTICAL CLEARANCES ABOVE GROUND FOR SERVICE DROP CONDUCTORS	
CONDITION	**MINIMUM VERTICAL CLEARANCE (FT)**
CROSSING RAILROAD TRACKS	25
CROSSING PUBLIC THOROUGHFARES (PUBLIC OR PRIVATELY OWNED ROADWAYS MAINTAINED BY A PUBLIC AGENCY, I.E. COUNTY SERVICE AREA)	18
EXCEPTION: THIS CLEARANCE MAY BE REDUCED FROM 18 FEET AT A POSITION NOT MORE THAN 12 FEET HORIZONTALLY FROM THE CURB LINE TO A CLEARANCE AT THE CURB LINE OF NOT LESS THAN (WHERE NO CURB EXISTS, THE OUTER LIMITS OF POSSIBLE VEHICULAR MOVEMENT SHALL BE USED IN LIEU OF A CURB LINE)	16
CROSSING PRIVATE DRIVEWAYS, LANES, OR OTHER PRIVATE PROPERTY AREAS ACCESSIBLE TO VEHICLES ON COMMERCIAL OR INDUSTRIAL PREMISES (INCLUDES PRIVATELY-OWNED ROADWAYS NOT MAINTAINED BY A PUBLIC AGENCY)	16
CROSSING PREMISES ACCESSIBLE TO AGRICULTURAL EQUIPMENT	15
CROSSING PRIVATE DRIVEWAYS, LANES, OR OTHER AREAS ACCESSIBLE TO VEHICLES ON RESIDENTIAL PREMISES	12
EXCEPTION: THIS CLEARANCE MAY BE REDUCED FOR INSULATED SERVICES (SSC) TO NOT LESS THAN	10
CROSSING AREAS ON RESIDENTIAL, COMMERCIAL OR INDUSTRIAL PREMISES THAT ARE ACCESSIBLE ONLY TO PEDESTRIANS	12
EXCEPTION: THIS CLEARANCE MAY BE REDUCED FOR INSULATED SERVICES (SSC) TO NOT LESS THAN	10
CROSSING OVER OR IN PROXIMITY TO SWIMMING POOLS AND/OR RELATED DIVING BOARDS, DIVING PLATFORMS, SLIDES, ETC.	(a)

TABLE OF CONTENTS

© 1998 - 2023 San Diego Gas & Electric Company. All rights reserved. Removal of this copyright notice without permission is not permitted under law.

REV	CHANGE	DR	BY	DSN	APV	DATE	REV	CHANGE	DR	BY	DSN	APV	DATE
C							F						
B	FORMATTING	EDM	JIK	-	-	04/24/2023	E						
A	EDITORIAL CHANGES	-	LSM	IPJ	TPM	11/01/2017	D						

INSTALLATION (CONT'D):

(G) CLEARANCES OVER BUILDINGS AND STRUCTURES:

0–600V SERVICE DROP CONDUCTORS SHALL BE MAINTAINED AT A VERTICAL CLEARANCE OF NOT LESS THAN 8 FEET IF WP, OR 2 FEET IF SSC, ABOVE ANY PORTION OF A METALLIC OR NON-METALLIC RESIDENTIAL, COMMERCIAL OR INDUSTRIAL BUILDING OR STRUCTURE, INCLUDING ANY OTHER BUILDING OR STRUCTURE ON THE PREMISES EXCEPT THAT 0–300V SERVICE DROP CONDUCTORS MAY BE REDUCED IN ACCORDANCE WITH THE FOLLOWING:

(1) EXCEPTION FOR WP REDUCED CLEARANCE ABOVE RESIDENTIAL BUILDING SERVED (SEE TABLE 6):

0–300V WP SERVICE DROP CONDUCTORS MAY BE LESS THAN 8 FEET, BUT SHALL BE MAINTAINED AT A CLEARANCE OF NOT LESS THAN 12 INCHES ABOVE A METALLIC OR NON-METALLIC RESIDENTIAL ROOF OR EAVE OF THE BUILDING SERVED, PROVIDED:

- THE SERVICE DROP CONDUCTORS ARE SUPPORTED ON A RISER OR RACK LOCATED NOT MORE THAN 18 INCHES BACK FROM THE WALL FACING THE UTILITY'S POLE LINE, AND
- THE POINT OF SERVICE SUPPORT IS LOCATED NOT MORE THAN 4 FEET BACK FROM THE OUTER EDGE OF THE ROOF EAVES EXTENDING BEYOND THE WALL FACING THE UTILITY'S POLE LINE.

(2) EXCEPTION FOR REDUCED CLEARANCE ABOVE COMMERCIAL AND INDUSTRIAL BUILDINGS:

SERVICE DROP CONDUCTORS MAY BE LESS THAN 8 FEET, BUT NOT LESS THAN 1 FOOT ABOVE A METALLIC OR NON-METALLIC ROOF, EAVE, PARAPET WALL, CORNICE, OR DECORATIVE APPENDAGE OF THE BUILDING SERVED PROVIDED:

- ANY CORNICE OR DECORATIVE APPENDAGE DOES NOT EXTEND MORE THAN 1 FOOT FROM THE FRONT FACE OF THE BUILDING WALL FACING THE UTILITY'S POLE LINE, AND
- THE POINT OF ATTACHMENT OF THE SERVICE DROP IS NOT MORE THAN 18 INCHES BACK FROM THE FRONT FACE OF THE BUILDING WALL FACING THE UTILITY'S POLE LINE, AND
- THE SERVICE DROP CONDUCTORS ARE INSULATED (SSC) FOR THE VOLTAGE BEING SUPPLIED.

H. CLEARANCES FROM OTHER CONDUCTORS:

THE VERTICAL CLEARANCE OF SERVICE DROP CONDUCTORS FROM OTHER CONDUCTORS AT CROSSINGS AND RADIALLY WHERE APPROACHING CROSSINGS SHALL NOT BE LESS THAN THE MINIMUM CLEARANCES SPECIFIED:

TABLE 4

VERTICAL CLEARANCES OF SERVICE DROP CONDUCTORS FROM OTHER CONDUCTORS	
CONDITION	**MINIMUM VERTICAL CLEARANCE (FT)**
BELOW TELEPHONE CABLE SUPPORTED ON A MESSENGER	4
BELOW OPEN-WIRE TELEPHONE AND FIRE ALARM	2
ABOVE TELEPHONE CABLE, OPEN-WIRE TELEPHONE AND FIRE ALARM CONDUCTORS	2
RADIAL FROM TELEPHONE SERVICE DROPS	2
EXCEPT WHERE WITHIN 15' OF THE POINT OF ATTACHMENT ON A BUILDING THIS CLEARANCE MAY BE REDUCED TO	1
FROM OTHER ELECTRIC SERVICE DROPS	2

TABLE OF CONTENTS

© 1998 - 2023 San Diego Gas & Electric Company. All rights reserved. Removal of this copyright notice without permission is not permitted under law.

REV	CHANGE	DR	BY	DSN	APV	DATE	REV	CHANGE	DR	BY	DSN	APV	DATE
C							F						
B	FORMATTING	EDM	JIK	-	-	04/24/2023	E						
A	EDITORIAL CHANGES	-	LSM	IPJ	TPM	11/01/2017	D						

J. **CLEARANCES FROM SIGNS:**

THE VERTICAL AND HORIZONTAL SERVICE DROP CONDUCTOR CLEARANCE FROM SIGNS, WHETHER MOUNTED ON A BUILDING, ISOLATED STRUCTURES, OR OTHERWISE CONSTRUCTED, SHALL NOT BE LESS THAN THE MINIMUM CLEARANCES SPECIFIED:

TABLE 5

CLEARANCES OF SERVICE DROP CONDUCTORS FROM SIGNS	
CONDITION	**MINIMUM CLEARANCE (IV) (FT)**
VERTICAL CLEARANCE ABOVE SIGNS UPON WHICH A PERSON CAN WALK	8
VERTICAL CLEARANCE ABOVE SIGNS UPON WHICH A PERSON CANNOT WALK	2
VERTICAL CLEARANCE UNDER SIGNS WHICH ARE ILLUMINATED	2
VERTICAL CLEARANCE UNDER SIGNS WHICH ARE NON-ILLUMINATED	1
HORIZONTAL CLEARANCE FROM SIGNS WHICH ARE ILLUMINATED	3
HORIZONTAL CLEARANCE FROM SIGNS WHICH ARE NON-ILLUMINATED	1

(K) **CLEARANCES FROM BUILDINGS AND STRUCTURES, RESIDENTIAL, COMMERCIAL/INDUSTRIAL PREMISES:**

TABLE 6

G.O. 95 TABLE 10: MINIMUM ALLOWABLE CLEARANCE OF SERVICE DROPS OF 0-750V FROM BUILDINGS (G1) (VIII)		
	MINIMUM CLEARANCE FROM BUILDINGS (FT)	
	WEATHER RESISTANT COVERED CONDUCTORS 0-750V	**INSULATED CONDUCTORS (RULE 20.8-G) 0-750V**
VERTICAL CLEARANCE ABOVE:		
1) ALL PORTIONS OF BUILDINGS INCLUDING METALLIC OR NON-METALLIC CORNICE, DECORATIVE APPENDAGE, EAVES, ROOF OR PARAPET WALL OF THE BUILDING SERVED.	8	(K1) (K2)
2) METALLIC OR NON-METALLIC NON-WALKABLE OVERHANG, PATIO COVER, OR OTHER STRUCTURE.		
3) OTHER BUILDINGS ON THE SAME PREMISES.		2 (L)
4) BUILDINGS ON OTHER PREMISES.		(K3) (M)
HORIZONTAL AND RADIAL CLEARANCES:		
1) FROM FIRE ESCAPES, EXITS, WINDOWS AND DOORS.	3	3

(1) NO LIMIT IS SPECIFIED BUT THE GREATEST PRACTICABLE CLEARANCE SHOULD BE OBTAINED. SDG&E MINIMUM REQUIREMENT IS 1 FOOT.

(2) THE POINT OF ATTACHMENT OF THE SERVICE DROP FOR INDUSTRIAL AND COMMERCIAL PREMISES IS NOT TO BE MORE THAN 18 INCHES BACK OF THE FRONT FACE OF THE BUILDING WALL FACING THE POLE LINE FROM WHICH THE SERVICE DROP ORIGINATES.

TABLE OF CONTENTS

© 1998 - 2023 San Diego Gas & Electric Company. All rights reserved. Removal of this copyright notice without permission is not permitted under law.

REV	CHANGE	DR	BY	DSN	APV	DATE	REV	CHANGE	DR	BY	DSN	APV	DATE
C							F						
B	FORMATTING	EDM	JIK	-	-	04/24/2023	E						
A	EDITORIAL CHANGES	-	LSM	IPJ	TPM	11/01/2017	D						

INSTALLATION (CONT'D):

(K) **CLEARANCES FROM BUILDINGS AND STRUCTURES, RESIDENTIAL, COMMERCIAL/INDUSTRIAL PREMISES (CONT'D):**

(3) REDUCE TO 2 FEET FOR NON-METALLIC ROOFS, MORE THAN 3/8 PITCH (APPROXIMATELY 37 DEGREES FROM HORIZONTAL).

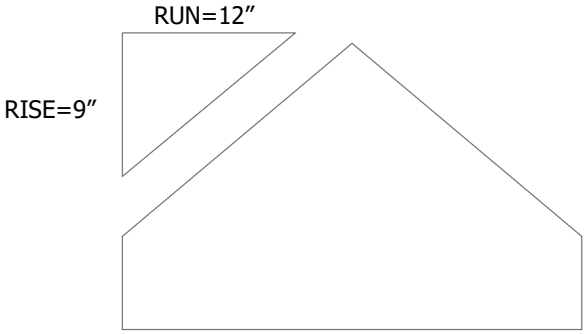

FIGURE 8 (K3)

(L) THE AHJ MAY ENFORCE THE MORE RESTRICTIVE CALIFORNIA ELECTRICAL CODE REQUIREMENT OF 8 FEET MINIMUM CLEARANCE, OR 3 FEET MINIMUM CLEARANCE WHEN THE VOLTAGE BETWEEN CONDUCTORS DOES NOT EXCEED 300V AND THE ROOF HAS A SLOPE OF NOT LESS THAN 4 INCHES IN 12 INCHES. IT IS THE CUSTOMER'S RESPONSIBILITY TO VERIFY THE LOCAL AHJ'S REQUIREMENTS BEFORE START OF CONSTRUCTION.

(M) NON-WALKABLE DEFINITION – THOSE SURFACES NOT NORMALLY INTENDED TO SUPPORT HUMANS, SUCH AS BUT NOT LIMITED TO: HANDRAILS, FENCES, WALLS, CHIMNEYS, PARAPET WALLS, CORNICES, ALUMINUM OR LATH PATIO COVERS AND DECORATIVE APPENDAGES OR OTHER LIGHT WEIGHT MATERIAL USED FOR PATIO COVERS. HOWEVER, SUCH SURFACES, WHEN USED FOR A DUAL PURPOSE AS IN THE CASE OF A WIDE SURFACE USED AS A PLATFORM TO WORK ON LIGHTS, SIGNS, ETC., MUST BE CONSIDERED AS A SURFACE THAT A PERSON MIGHT NORMALLY WALK UPON. ALL CLEARANCES OF THIS TYPE MUST BE MEASURED FROM THE WALKABLE SURFACE.

(N) CLEARANCE MAY BE REDUCED FOR INSULATED SERVICES (SSC) TO NOT LESS THAN 10 FEET. CLEARANCE IS MEASURED FROM THE LOWEST POINT, WHICH INCLUDES THE DRIP LOOP, TO FINISHED GRADE.

(O) THE POINT OF SERVICE DROP ATTACHMENT ON ANY RISER SHALL IN NO CASE BE MORE THAN 18 INCHES BACK OF THE FRONT FACE OF THE WALL FACING THE POLE LINE TO WHICH THE SERVICE DROP ORIGINATES, EXCEPT AS PERMITTED ON SG103.(C)

(P) HORIZONTAL CLEARANCE OF 750–7,500V CONDUCTORS FROM BUILDING WALLS MAY BE REDUCED TO 4 FEET WHERE CONDUCTORS ARE IN EXCESS OF 35 FEET ABOVE GROUND. REDUCED CLEARANCE DOES NOT APPLY TO BRIDGES, FIRE ESCAPES, WINDOWS, BALCONIES, OR STRUCTURES WHERE HUMAN CONTACT MAY BE EXPECTED.

(Q) NO LIMIT REQUIRED BUT THE GREATEST PRACTICABLE CLEARANCE SHOULD BE MAINTAINED. PROVIDE MECHANICAL (PHYSICAL) CLEARANCE FOR CABLE PROTECTION.

(R) INCLUDES CORNICES, BALCONIES, EXITS, FIRE ESCAPES, BAY WINDOWS, CATWALKS, ETC.

BILL OF MATERIALS: NONE

NOTES:

(I) ONLY IF THIS BUILDING IS ON THE PREMISES SERVED

(II) NO SUPPLY SERVICE WIRES PERMITTED WITHIN SHADED ZONE.

(III) A WALKABLE MARQUEE, BUILDING PROJECTION, CANOPY, ROOF SECTION, OR EAVES EXTENDED FROM A BUILDING WALL TO FORM A SHELTER OVER A WALKWAY, DRIVEWAY, PASSENGER LOADING AREA, ETC., OUTSIDE THE BUILDING FIRE WALL REQUIRES 8 FEET MINIMUM CLEARANCE. IF NON-WALKABLE, MAY REDUCE TO 2 FEET PROVIDED SERVICE DROP IS INSULATED (SSC).

TABLE OF CONTENTS

© 1998 - 2023 San Diego Gas & Electric Company. All rights reserved. Removal of this copyright notice without permission is not permitted under law.

REV	CHANGE	DR	BY	DSN	APV	DATE	REV	CHANGE	DR	BY	DSN	APV	DATE
C							F						
B	FORMATTING	EDM	JIK	-	-	04/24/2023	E						
A	EDITORIAL CHANGES	-	LSM	IPJ	TPM	11/01/2017	D						

	X	Indicates Latest Revision		Completely Revised		New Page		Information Removed	

NOTES (CONT'D):

(IV) THESE CLEARANCES DO NOT APPLY TO SERVICE DROP CONDUCTORS WHICH ARE ATTACHED TO SIGNS FOR THE PURPOSE OF SERVING SUCH SIGN. ALL CLEARANCES OF MORE THAN 6 INCHES SHALL BE APPLICABLE FROM THE CENTERLINE OF THE CONDUCTORS CONCERNED. LESSER CLEARANCES SHALL BE APPLICABLE FROM THE CONDUCTOR SURFACE. (f)

(V) SERVICE DROP CONDUCTORS ARE NOT PERMITTED WITHIN SHADED ZONES.

(VI) CLEARANCE REQUIREMENT FOR RESIDENTIAL, COMMERCIAL, OR INDUSTRIAL 0-600V SERVICE DROPS ABOVE BUILDINGS OTHER THAN SERVED (G)

(VII) THE PORCH RAIL ILLUSTRATED IS NOT CONSIDERED A WALKABLE SURFACE. THE CLEARANCE WILL BE MEASURED FROM THE PORCH DECK.

(VIII) CLEARANCE REQUIREMENTS FOR NON-WALKABLE SURFACES ARE 2 FEET, AND FOR WALKABLE SURFACES ARE 8 FEET. SEE TABLE 6 FOR WALKABLE SURFACE CLEARANCES AND DEFINITION OF "NON-WALKABLE". (M)

(IX) HORIZONTAL ANGLE SERVICE MAKES WITH BUILDING MUST NOT BE LESS THAN 30 DEGREES.

(XI) 3-FOOT MINIMUM RADIAL CLEARANCE ABOVE OPENABLE WINDOWS (SEE SHEET 4)

(XII) 24 INCHES MINIMUM RADIALLY WHERE MORE THAN 15 FEET FROM POINT OF ATTACHMENT OF EITHER SERVICE

(XIII) 12 INCHES MINIMUM RADIALLY WHERE 15 FEET OR LESS FROM POINT OF ATTACHMENT OF EITHER SERVICE

(XIV) BUCKET TRUCK ACCESS IS REQUIRED IF THE DISTANCE FROM A LADDER TO THE WEATHERHEAD AND POINT OF ATTACHMENT EXCEEDS 24 INCHES.

REFERENCE:

(a) SEE SG108.

b. SEE OH220 AND OH225.

(c) FOR RESIDENTIAL, COMMERCIAL, OR INDUSTRIAL SERVICE DROPS, SEE SG103.

(d) SEE SG104.

e. FOR RADIAL CLEARANCES FROM OTHER CONDUCTORS, SEE OH225.

(f) FOR MINIMUM CLEARANCES OF WIRES (0–750V SERVICE DROPS AND 750V–300KV SUPPLY CONDUCTORS AND CABLES) TO ILLUMINATED AND NON-ILLUMINATED SIGNS, SEE OH229.

(g) FOR SIGNAGE REQUIREMENTS ON BRIDGES, VIADUCTS, ETC., WHEN ATTACHING CONDUCTORS 750-22,500V BENEATH OR THROUGH SAME, SEE G.O. 95 RULE 54.4I.

(h) SEE G.O. 95, TABLE 1, CASES 6 AND 7 AND RULE 54.4H.

(i) SEE CPUC GENERAL ORDER 95.

(j) FOR 0-300V SERVICE DROP CLEARANCES, SEE OH262.

TABLE OF CONTENTS

© 1998 - 2023 San Diego Gas & Electric Company. All rights reserved. Removal of this copyright notice without permission is not permitted under law.

REV	CHANGE	DR	BY	DSN	APV	DATE	REV	CHANGE	DR	BY	DSN	APV	DATE
C							F						
B	FORMATTING	EDM	JIK	-	-	04/24/2023	E						
A	EDITORIAL CHANGES	-	LSM	IPJ	TPM	11/01/2017	D						

	X	Indicates Latest Revision		Completely Revised		New Page		Information Removed

SCOPE: THIS STANDARD PROVIDES REQUIREMENTS FOR OVERHEAD ELECTRIC CLEARANCES OVER SWIMMING POOLS.

DEFINITIONS:

- THE STATE OF CALIFORNIA GENERAL ORDER 95 DEFINES SWIMMING POOL AS "THAT PORTION OF ANY NATURAL OR ARTIFICIALLY CONTAINED BODY OF WATER WHICH IS 24 INCHES OR MORE IN DEPTH AT ANY POINT BELOW THE HIGHEST WATER LEVEL, WHICH IS INTENDED FOR USE FOR SWIMMING, BATHING OR OTHER SIMILAR RECREATIONAL PURPOSES, AND WHICH HAS A SURFACE AREA EXCEEDING 100 SQUARE FEET." (b)

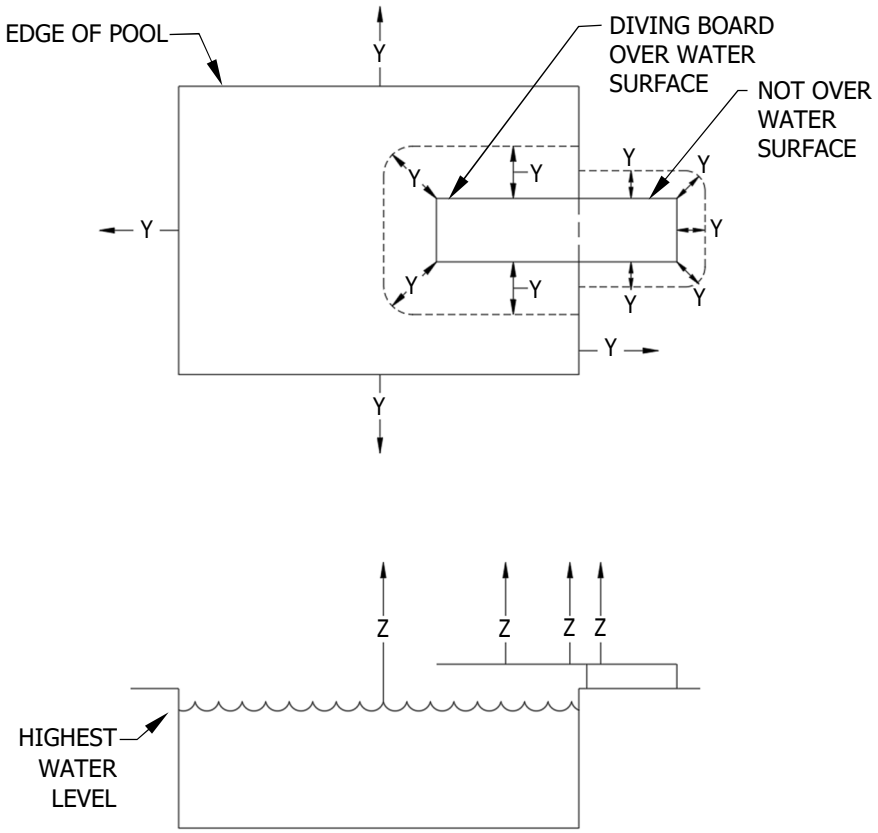

FIGURE 1
SEE TABLE 1

TABLE 1

CLEARANCES OVER SWIMMING POOLS		
MINIMUM VERTICAL AND RADIAL CLEARANCES OVER SWIMMING POOLS (III) (IV)	**Z MINIMUM VERTICAL (FT)**	**Y MINIMUM RADIAL (FT)**
UNPROTECTED LINE CONDUCTORS (VERTICAL OVER HIGHEST WATER LEVEL AND RADIAL FROM TOP EDGE OF POOL WALLS)		
1. 0-750V	20	20
2. 750-22,500V	25	25
3. 22.5-300KV	30	30
SERVICE DROPS (VERTICAL OVER HIGHEST WATER LEVEL AND RADIAL FROM TOP EDGE OF POOL WALLS)		
4. POOLS PUBLIC AND COMMERCIAL	16	16
5. POOLS RESIDENTIAL	12	12
SERVICE DROPS (OVER DIVING BOARDS OR PLATFORMS)		
6. PORTION OF BOARD OR PLATFORM THAT IS OVER WATER SURFACE	16	8
7. PORTION OF BOARD OR PLATFORM THAT IS NOT OVER WATER SURFACE	12	3

© 1998 - 2023 San Diego Gas & Electric Company. All rights reserved. Removal of this copyright notice without permission is not permitted under law.

REV	CHANGE	DR	BY	DSN	APV	DATE	REV	CHANGE	DR	BY	DSN	APV	DATE
C							F						
B	FORMATTING	EDM	JIK	-	-	04/24/2023	E						
A	EDITORIAL CHANGES	-	LSM	IPJ	TPM	11/01/2017	D						

X	Indicates Latest Revision		Completely Revised		New Page		Information Removed

TABLE OF CONTENTS

TABLE 1 (CONT'D)

CLEARANCES OVER SWIMMING POOLS		
MINIMUM VERTICAL AND RADIAL CLEARANCES OVER SWIMMING POOLS (III)(IV)	**Z MINIMUM VERTICAL (FT)**	**Y MINIMUM RADIAL (FT)**
GUYS (UNGROUNDED PORTIONS)		
8. OVER HIGHEST WATER LEVEL AND FROM TOP EDGE OF POOL WALLS	18	18
9. OVER DIVING BOARD OR PLATFORM (THE PORTION THAT IS OVER THE WATER SURFACE)	18	8
10. OVER DIVING BOARD OR PLATFORM (THE PORTION THAT IS NOT OVER THE WATER SURFACE)	12	6
GUYS (GROUNDED PORTIONS)		
11. OVER THE HIGHEST WATER LEVEL	16	-
12. OVER DIVING BOARD OR PLATFORM (THE PORTION THAT IS OVER THE WATER SURFACE)	16	8
13. OVER DIVING BOARD OR PLATFORM (THE PORTION THAT IS NOT OVER THE WATER SURFACE)	8	3

INSTALLATION: NONE

BILL OF MATERIALS: NONE

NOTES:

I. CONTACT SDG&E (UTILITY) TO OBTAIN AN ACCEPTABLE POINT OF SERVICE DROP ATTACHMENT WHENEVER A SWIMMING POOL IS PROPOSED TO BE CONSTRUCTED IN AN AREA BETWEEN THE UTILITY'S POLE LINE AND THE BUILDING TO BE SERVED, OR A SWIMMING POOL HAS BEEN CONSTRUCTED CREATING A G.O. 95 OVERHEAD ELECTRIC CLEARANCE INFRACTION.

II. INSTALLATION of 0–600V SERVICE DROP CONDUCTORS ABOVE A PUBLIC OR PRIVATE SWIMMING POOL AND ADJACENT RECREATIONAL AREA SHALL BE AVOIDED. SERVICE CONDUCTORS SHALL BE ROUTED AROUND THESE AREAS AT A HORIZONTAL CLEARANCE SUFFICIENT TO PROVIDE FOR HUMAN SAFETY, AND TO AVOID CONTAMINATION AND NUISANCE CAUSED BY "DROPPINGS" FROM BIRDS RESTING ON CONDUCTORS. SUFFICIENT HORIZONTAL CLEARANCE IS DEFINED AS A CLEARANCE DIMENSION AS CONDITIONS WARRANT TO PREVENT PERSONS IN THE POOL AREA FROM COMING INTO ACCIDENTAL CONTACT WITH SERVICE CONDUCTORS, OR BRINGING CONDUCTING MATERIALS INTO CONTACT WITH SERVICE CONDUCTORS BY USE OF POOL CLEANING OR MAINTENANCE EQUIPMENT.

(III) SWIMMING POOLS SHALL NOT BE PLACED UNDER EXISTING OVERHEAD CONDUCTORS, INCLUDING SERVICE DROPS AND ANY OTHER OPEN OVERHEAD WIRING, UNLESS THE UTILITY DETERMINES ANY NECESSARY EASEMENTS HAVE BEEN GRANTED TO THE UTILITY, AND ALL MINIMUM CLEARANCES ARE MET.

(IV) WHERE IT IS NOT PRACTICABLE TO CLEAR A SWIMMING POOL AND RECREATIONAL AREA AT A HORIZONTAL CLEARANCE AS SPECIFIED, SERVICE DROP CONDUCTORS SHALL BE MAINTAINED AT A RADIAL AND VERTICAL CLEARANCE OF NOT LESS THAN SHOWN.

a. PRACTICABLE AS DEFINED BY THE RULES FOR OVERHEAD LINE CONSTRUCTION MEANS CAPABLE OF BEING ACCOMPLISHED BY REASONABLY AVAILABLE AND ECONOMIC MEANS.

V. CLEARANCE REQUIREMENTS FOR SPAS, HOT TUBS, ETC. MAY VARY ACCORDING TO THE GOVERNMENTAL AUTHORITY HAVING JURISDICTION (AHJ). MOST AHJS REQUIRE SWIMMING POOL CLEARANCES BE MET OVER ALL OUTDOOR SPAS, REGARDLESS OF SIZE.

VI. UNDERGROUND ELECTRIC SERVICE CONDUIT AND GAS SERVICES ARE TO MAINTAIN A MINIMUM 5-FOOT SEPARATION FROM THE OUTSIDE WALL OF SWIMMING POOLS AND SPAS.

REFERENCE:

a. SEE G.O. 95 RULE 54.4-A3.

(b) SEE G.O. 95 RULE 23.6.

TABLE OF CONTENTS

© 1998 - 2023 San Diego Gas & Electric Company. All rights reserved. Removal of this copyright notice without permission is not permitted under law.

REV	CHANGE	DR	BY	DSN	APV	DATE	REV	CHANGE	DR	BY	DSN	APV	DATE
C							F						
B	FORMATTING	EDM	JIK	-	-	04/24/2023	E						
A	EDITORIAL CHANGES	-	LSM	IPJ	TPM	11/01/2017	D						

X Indicates Latest Revision	Completely Revised	New Page	Information Removed

SCOPE: THIS STANDARD PROVIDES REQUIREMENTS FOR SERVICE HEADS.

ATTENTION:

* A SERVICE HEAD OF A TYPE APPROVED BY THE GOVERNMENTAL AUTHORITY HAVING JURISDICTION (AHJ) SHALL BE PROVIDED ON THE SUPPLY END OF EVERY SERVICE RACEWAY TERMINATED ABOVE GROUND FOR AN OVERHEAD SERVICE CONNECTION.

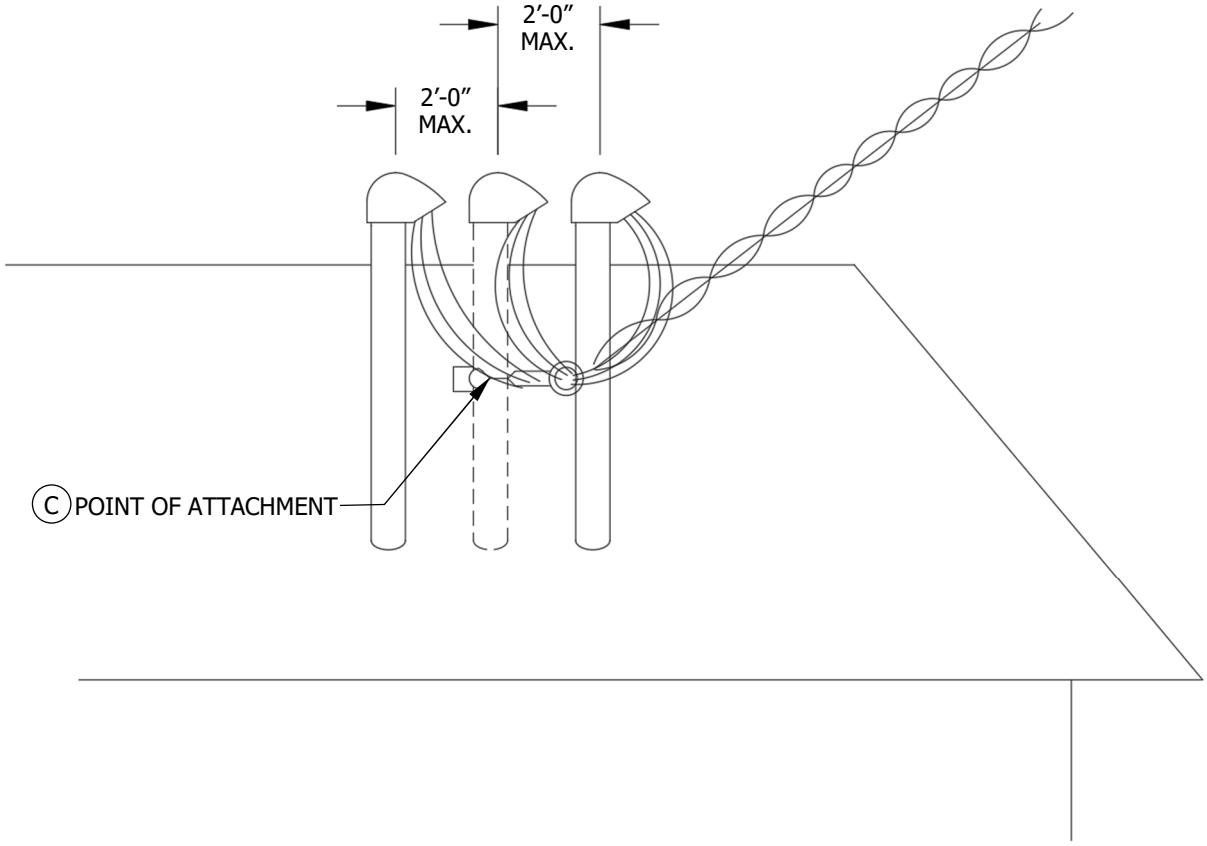

FIGURE 1 (B)

INSTALLATION:

A. **LOCATION**:

THE SERVICE HEAD SHALL NORMALLY BE LOCATED ABOVE OR ON THE WALL OF THE BUILDING FACING AND NEAREST THE UTILITY'S POLE LINE. IT MAY BE LOCATED BELOW THE ROOF OF THE BUILDING SERVED UNDER THE CONDITIONS OUTLINED BELOW. (A2) IN ANY CASE, IT SHALL BE LOCATED SO THE SERVICE HEAD AND POINT OF CONNECTION TO THE SERVICE DROP CONDUCTORS WILL COMPLY WITH CLEARANCES REQUIRED BY APPLICABLE ELECTRICAL CODES AND ORDINANCES ENFORCED BY THE AHJ, AS WELL AS PROVISIONS SPECIFIED ON OTHER PAGES OF THIS SERVICE STANDARDS & GUIDE AND THE FOLLOWING:

1. THE SERVICE HEAD SHALL BE LOCATED SO THAT ONLY ONE POINT OF ATTACHMENT IS REQUIRED TO SUPPORT THE SERVICE DROP ON A BUILDING OR STRUCTURE AND SHOULD, WHERE PRACTICABLE, BE AT LEAST ONE FOOT ABOVE THE LEVEL OF THE POINT OF SERVICE DROP SUPPORT.

TABLE OF CONTENTS

© 1998 - 2023 San Diego Gas & Electric Company. All rights reserved. Removal of this copyright notice without permission is not permitted under law.

REV	CHANGE	DR	BY	DSN	APV	DATE	REV	CHANGE	DR	BY	DSN	APV	DATE
C							F						
B	FORMATTING	EDM	JIK	-	-	04/24/2023	E						
A	EDITORIAL CHANGES	-	LSM	IPJ	TPM	11/01/2017	D						

X	Indicates Latest Revision		Completely Revised		New Page		Information Removed

(2) WHERE IT IS IMPRACTICAL TO LOCATE THE SERVICE HEAD ABOVE THE POINT OF ATTACHMENT, THE SERVICE HEAD MAY BE LOCATED NOT MORE THAN 24 INCHES RADIALLY FROM THE POINT OF ATTACHMENT. THE SERVICE HEAD SHALL BE LOCATED SO THE LENGTH OF OPEN SERVICE ENTRANCE CONDUCTORS BETWEEN THE SERVICE HEAD AND THE POINT OF CONNECTION OF THE UTILITY'S SERVICE DROP CONDUCTORS (DRIP LOOP) WILL NOT EXCEED 3 FEET.

3. WHERE MORE THAN ONE SERVICE HEAD FOR THE SAME PHASE AND VOLTAGE IS INSTALLED ON A BUILDING OR STRUCTURE, ALL SUCH SERVICE HEADS SHALL BE LOCATED SO THEY MAY BE SERVED THROUGH A SINGLE SERVICE DROP. THE MAXIMUM NUMBER OF SERVICE HEADS PERMITTED IS THREE. SEE INSTALLATION NOTE B FOR MULTIPLE SERVICE HEAD INSTALLATIONS.
4. WHERE SERVICE HEADS FOR DIFFERENT PHASE OR VOLTAGE ARE INSTALLED ON A BUILDING FOR WHICH A SINGLE POINT OF DELIVERY IS ESTABLISHED, SUCH SERVICE HEADS SHALL BE LOCATED AS CLOSE TOGETHER AS PRACTICABLE OR AS OTHERWISE DIRECTED BY THE SDG&E SERVICE PLANNER.
5. A SERVICE HEAD SHALL NOT BE LOCATED ON ANY WALL OR STRUCTURE WHICH FACES AND IS LESS THAN 3 FEET FROM A COMMON PROPERTY LINE.
6. A RADIAL DISTANCE OF NOT LESS THAN 3 FEET SHALL BE MAINTAINED FROM A SERVICE HEAD, SERVICE ENTRANCE CONDUCTORS AND SERVICE DROP TO ANY OPEN LOAD CONDUCTORS OR YARD LIGHTING.
7. A SERVICE HEAD SHALL NOT BE LOCATED MORE THAN 30 FEET ABOVE GRADE LEVEL MEASURED FROM THE STANDING SURFACE NEAREST SUCH HEAD.

(B) **NUMBER OF SERVICE HEADS PERMITTED**:

MORE THAN ONE SERVICE HEAD MAY BE INSTALLED ON A BUILDING UP TO A MAXIMUM OF THREE PROVIDED THE INSTALLATION CONFORMS TO APPLICABLE ELECTRICAL CODES AND ORDINANCES ENFORCED BY THE AHJ PERTAINING TO THE PERMISSIBLE NUMBER OF SERVICES TO A BUILDING, AND CONFORMS TO ALL METER LOCATION AND ACCESS REQUIREMENTS FOR THEIR LOCATION IN ACCORDANCE WITH THE PROVISIONS OF THE SERVICE STANDARDS & GUIDE.

(C) THE POINT OF ATTACHMENT IS TO BE ON THE CENTER RISER, WHICH IS TO MEET ALL STANDARD REQUIREMENTS FOUND ON SG105. (a)

D. DRIP LOOPS ARE NOT TO EXCEED 3 FEET IN OVERALL CABLE LENGTH PER SERVICE HEAD. (b)

E. THE UTILITY SERVICE DROP IS NOT TO CROSS OVER MORE THAN 6 FEET OF ROOF TO REACH THE POINT OF ATTACHMENT. (c)

BILL OF MATERIALS: NONE

NOTES:

I. ACTUAL CONFIGURATION WILL VARY BASED ON SITE CONDITIONS.

II. THE BUILDER'S ACTUAL DESIGN AND INSTALLATION ARE SUBJECT TO ALL APPROVALS, PERMITS, AND INSPECTIONS REQUIRED BY THE AHJ.

III. ALL PROPOSED METER LOCATIONS FOR THIS APPLICATION REQUIRE UTILITY APPROVAL AND A "METER LOCATION & SERVICE ORDER" FORM FROM AN SDG&E SERVICE PLANNER PRIOR TO CONSTRUCTION.

REFERENCE:

(a) SEE SG105.

(b) SEE SG112.

(c) SEE SG103.

TABLE OF CONTENTS

© 1998 - 2023 San Diego Gas & Electric Company. All rights reserved. Removal of this copyright notice without permission is not permitted under law.

REV	CHANGE	DR	BY	DSN	APV	DATE	REV	CHANGE	DR	BY	DSN	APV	DATE
C							F						
B	FORMATTING	EDM	JIK	-	-	04/24/2023	E						
A	EDITORIAL CHANGES	-	LSM	IPJ	TPM	11/01/2017	D						

	X	Indicates Latest Revision		Completely Revised		New Page		Information Removed

SCOPE: THIS STANDARD PROVIDES REQUIREMENTS FOR BUSWAY SERVICE HEADS.

ATTENTION:

* BUSWAY TYPE SERVICE ENTRANCE SHALL BE LIMITED TO 600V MAXIMUM AND IS A REQUIREMENT WHEN MORE THAN THREE PARALLELED OVERHEAD SERVICE ENTRANCE CONDUCTORS PER PHASE ARE NECESSARY TO SUPPLY THE LOAD FOR ONE METERING LOCATION.

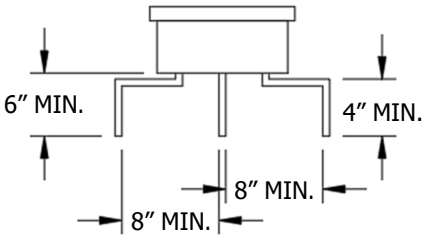

CONFIGURATION 1
STUBS IN SAME PLACE
END VIEW

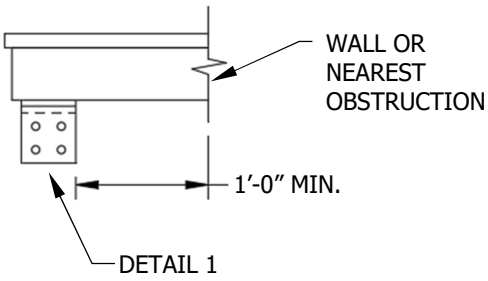

CONFIGURATION 1
STUBS IN SAME PLACE
SIDE VIEW

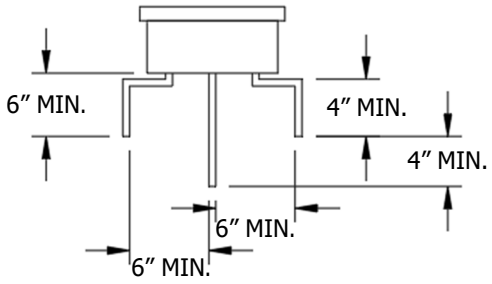

CONFIGURATION 2
STUBS STAGGERED VERTICALLY
END VIEW

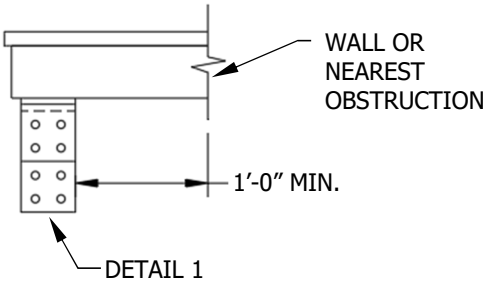

CONFIGURATION 2
STUBS STAGGERED VERTICALLY
SIDE VIEW

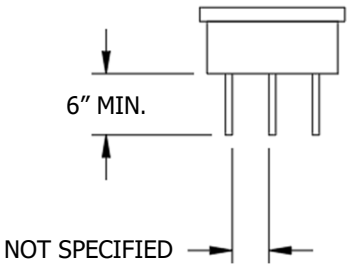

CONFIGURATION 3
STUBS STAGGERED HORIZONTALLY
END VIEW
SEE TABLE 1

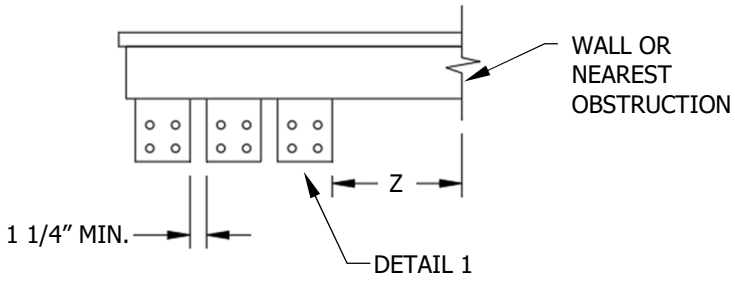

CONFIGURATION 3
STUBS STAGGERED HORIZONTALLY
SIDE VIEW
SEE TABLE 1

FIGURE 1
SINGLE-PHASE, THREE-WIRE SERVICE

© 1998 - 2023 San Diego Gas & Electric Company. All rights reserved. Removal of this copyright notice without permission is not permitted under law.

REV	CHANGE	DR	BY	DSN	APV	DATE	REV	CHANGE	DR	BY	DSN	APV	DATE
C							F						
B	FORMATTING	EDM	JIK	-	-	04/24/2023	E						
A	EDITORIAL CHANGES	-	LSM	IPJ	TPM	11/01/2017	D						

X	Indicates Latest Revision		Completely Revised		New Page		Information Removed

TABLE OF CONTENTS

TABLE OF CONTENTS

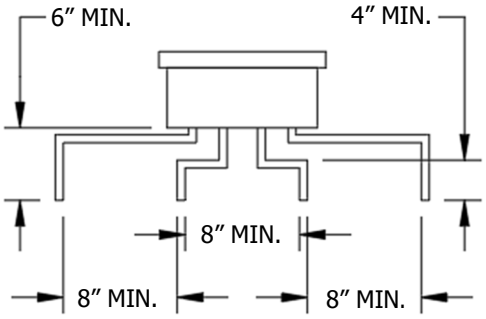

CONFIGURATION 1
STUBS IN SAME PLACE
END VIEW

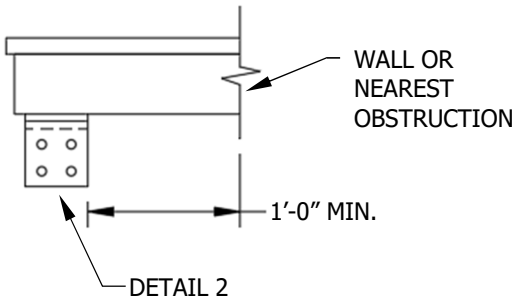

CONFIGURATION 1
STUBS IN SAME PLACE
SIDE VIEW

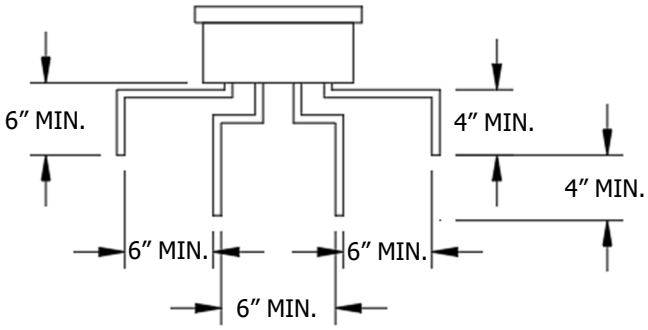

CONFIGURATION 2
STUBS STAGGERED VERTICALLY
END VIEW

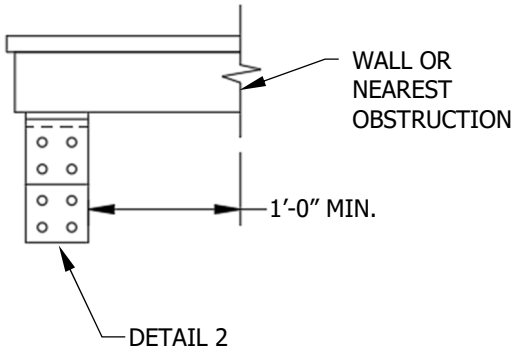

CONFIGURATION 2
STUBS STAGGERED VERTICALLY
SIDE VIEW

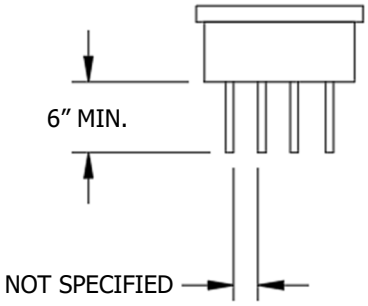

CONFIGURATION 3
STUBS STAGGERED HORIZONTALLY
END VIEW
SEE TABLE 1

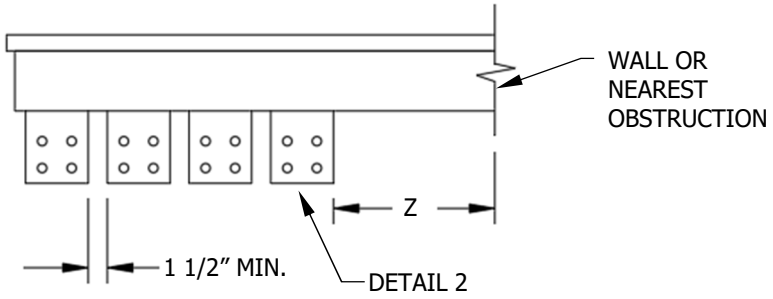

CONFIGURATION 3
STUBS STAGGERED HORIZONTALLY
SIDE VIEW
SEE TABLE 1

FIGURE 2
THREE-PHASE, FOUR-WIRE, WYE OR DELTA-CONNECTED SERVICE

© 1998 - 2023 San Diego Gas & Electric Company. All rights reserved. Removal of this copyright notice without permission is not permitted under law.

REV	CHANGE	DR	BY	DSN	APV	DATE	REV	CHANGE	DR	BY	DSN	APV	DATE
C							F						
B	FORMATTING	EDM	JIK	-	-	04/24/2023	E						
A	EDITORIAL CHANGES	-	LSM	IPJ	TPM	11/01/2017	D						

X	Indicates Latest Revision		Completely Revised		New Page		Information Removed

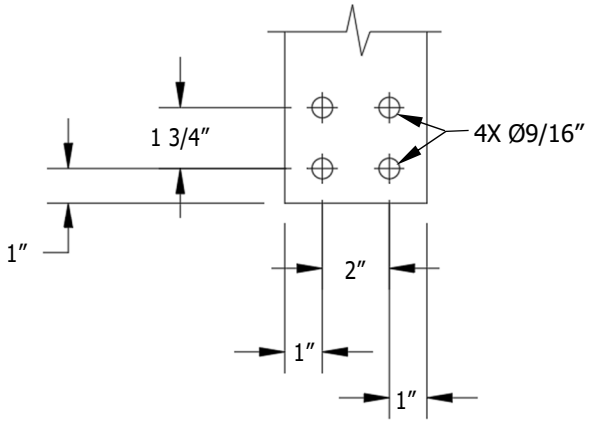

DETAIL 1
DRILLING DETAILS FOR STUBOUTS

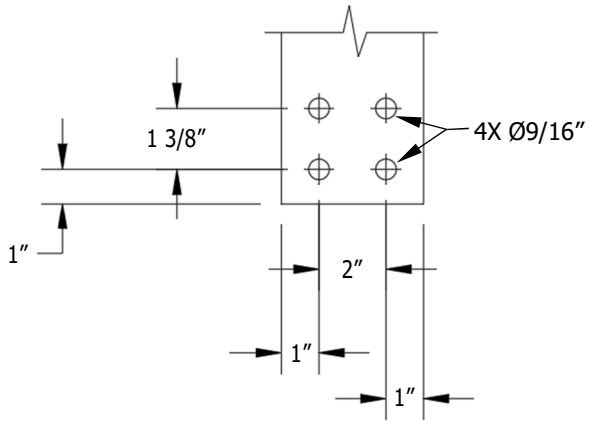

DETAIL 2
DRILLING DETAILS FOR STUBOUTS

TABLE 1

MINIMUM DISTANCE FROM NEAREST OBSTRUCTION/WALL Z (IN)	
TO NEUTRAL CONNECTION	7
TO LINE CONNECTION	12

INSTALLATION:

A. BUS STUBS SHALL BE DRILLED AS SHOWN IN DETAILS 1 AND 2.

BILL OF MATERIALS: NONE

NOTES:

I. MANUFACTURER SHALL PROVIDE AN INSULATED BARRIER TO SHIELD THE BUS BARS. ONLY THE STUBS ARE TO BE EXPOSED FOR CONNECTION OF SERVICE DROP CONDUCTORS BY SDG&E'S CREW.

II. ALL NEUTRAL AND DELTA POWER LEG BUS STUBS SHALL BE PERMANENTLY IDENTIFIED (MARKED) IN A MANNER CONFORMING TO THE REQUIREMENTS OF THE GOVERNMENTAL AUTHORITY HAVING JURISDICTION (AHJ) AND SDG&E. (a)

III. SDG&E WILL FURNISH LUGS AND INSULATE THE CONNECTIONS BELOW THE BARRIER.

IV. CONTACT THE APPROPRIATE PROJECT MANAGEMENT REGIONAL OFFICE FOR VAULT INSTALLATIONS. (b)

REFERENCE:

(a) FOR IDENTIFICATION, SEE SG112.

(b) SEE SG021.

TABLE OF CONTENTS

© 1998 - 2023 San Diego Gas & Electric Company. All rights reserved. Removal of this copyright notice without permission is not permitted under law.

REV	CHANGE	DR	BY	DSN	APV	DATE	REV	CHANGE	DR	BY	DSN	APV	DATE
C							F						
B	FORMATTING	EDM	JIK	-	-	04/24/2023	E						
A	EDITORIAL CHANGES	-	LSM	IPJ	TPM	11/01/2017	D						

X	Indicates Latest Revision		Completely Revised		New Page		Information Removed

SCOPE: THIS STANDARD DESCRIBES REQUIREMENTS FOR SERVICE ENTRANCE RACEWAYS.

INSTALLATION:

A. **GENERAL INFORMATION:**

FOR EACH OVERHEAD SERVICE CONNECTION, THE CONTRACTOR FURNISHES AND INSTALLS AN APPROVED RAINTIGHT SERVICE ENTRANCE RACEWAY, INCLUDING ALL FITTINGS, FROM THE SERVICE EQUIPMENT TO THE POINT OF SERVICE DROP ATTACHMENT. SUCH A SERVICE RACEWAY MAY BE CONCEALED OR EXPOSED. THE INSTALLATION MUST COMPLY WITH ALL APPLICABLE ELECTRICAL CODES AND ORDINANCES OF THE GOVERNMENTAL AUTHORITY HAVING JURISDICTION (AHJ).

B. **INSTALLATION METHOD:**

THE SERVICE ENTRANCE RACEWAY SHOULD BE CONTINUOUS AND WITHOUT CONDULET OR JUNCTION BOX. HOWEVER, WITH THE PRIOR APPROVAL OF THE AHJ AND SDG&E (UTILITY), SUCH DEVICES MAY BE INSTALLED WHEN EXCESSIVE LENGTH AND BENDS IN THE SERVICE ENTRANCE RACEWAY MAKE A CONTINUOUS RUN IMPRACTICAL.

1. IF EXPOSED TO WEATHER, THE DEVICES SHALL BE RAINTIGHT.
2. IF A CONDULET OR JUNCTION BOX IS APPROVED IN THE SERVICE ENTRANCE RACEWAY, IT WILL NEED TO BE EQUIPPED WITH ACCESSORIES TO PERMIT SEALING.
3. BETWEEN THE METERING EQUIPMENT AND THE SERVICE ENTRANCE CONNECTION, THE DEVICES SHALL BE LOCATED SO THAT THEY ARE PLAINLY VISIBLE FOR PERPETUAL INSPECTION BY THE UTILITY.

C. **SEALING SERVICE ENTRANCE RACEWAYS AND METERING ENCLOSURES:**

THE UTILITY WILL SEAL AUXILIARY RACEWAYS, GUTTERS, OR METER TROUGHS CONTAINING SERVICE ENTRANCE CONDUCTORS (UNMETERED CONDUCTORS), INCLUDING METER ENCLOSURES, METER SOCKET BOXES AND SIMILAR ENCLOSURES WHICH FORM A PART OF THE SERVICE ENTRANCE INSTALLATION THAT IS ON THE SUPPLY (LINE) SIDE OF THE METERING EQUIPMENT. IT IS NOT ACCEPTABLE TO INSTALL THE CUSTOMER'S FEEDER (METERED) CONDUCTORS IN A SERVICE ENTRANCE RACEWAY, LINE GUTTER OR METER TROUGH, OR IN A METERING ENCLOSURE AHEAD (ON THE LINE SIDE) OF THE OVERCURRENT PROTECTIVE DEVICE. ELECTRICALLY PROTECTED (FUSED) AND UNPROTECTED (UNFUSED) CONDUCTORS ARE NOT ALLOWED TO OCCUPY THE SAME RACEWAY OR LINE GUTTER. (a)

BILL OF MATERIALS: NONE

NOTES: NONE

REFERENCE:

(a) FOR SEALING OF METERS AND METERING EQUIPMENT AND SEALING REQUIREMENTS, SEE SG503.

TABLE OF CONTENTS

© 1998 - 2023 San Diego Gas & Electric Company. All rights reserved. Removal of this copyright notice without permission is not permitted under law.

REV	CHANGE	DR	BY	DSN	APV	DATE	REV	CHANGE	DR	BY	DSN	APV	DATE
C							F						
B	FORMATTING	EDM	JIK	-	-	04/24/2023	E						
A	EDITORIAL CHANGES	-	LSM	IPJ	TPM	11/01/2017	D						

X	Indicates Latest Revision		Completely Revised		New Page		Information Removed

SDG&E ELECTRIC SERVICE STANDARDS & GUIDES

SHEET 1 OF 1

SERVICE ENTRANCE RACEWAYS

SG111.1

SCOPE: THIS STANDARD DESCRIBES REQUIREMENTS FOR 0-600V SERVICE ENTRANCE CONDUCTORS.

DEFINITIONS:

- **SERVICE ENTRANCE CONDUCTORS (OVERHEAD):** CUSTOMER-OWNED CONDUCTORS EXTENDING FROM THE SERVICE EQUIPMENT TO THE POINT OF CONNECTION TO THE UTILITY SERVICE DROP CONDUCTORS.
- **SERVICE DROP CONDUCTORS:** SDG&E (UTILITY'S) OVERHEAD CONDUCTORS EXTENDING FROM ITS POLE LINE TO THE POINT OF SERVICE DROP SUPPORT ON A BUILDING OR STRUCTURE.

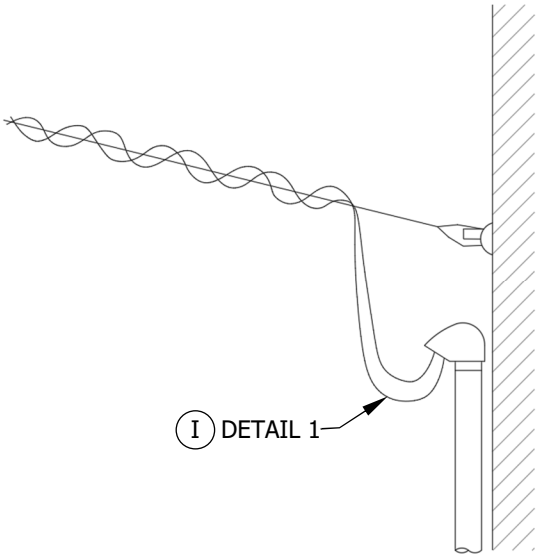

FIGURE 1
DRIP LOOPS (U)

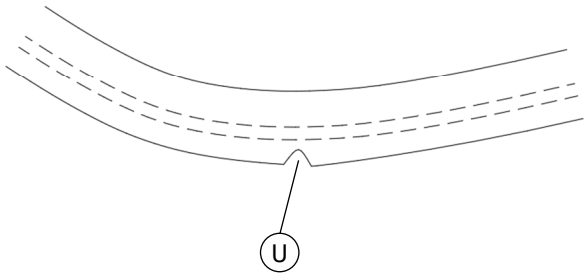

DETAIL 1
DRIP LOOP

TABLE OF CONTENTS

© 1998 - 2023 San Diego Gas & Electric Company. All rights reserved. Removal of this copyright notice without permission is not permitted under law.

REV	CHANGE	DR	BY	DSN	APV	DATE	REV	CHANGE	DR	BY	DSN	APV	DATE
C							F						
B	FORMATTING	EDM	JIK	-	-	04/24/2023	E						
A	EDITORIAL CHANGES	-	LSM	IPJ	TPM	11/01/2017	D						

X Indicates Latest Revision	Completely Revised	New Page	Information Removed	

TABLE OF CONTENTS

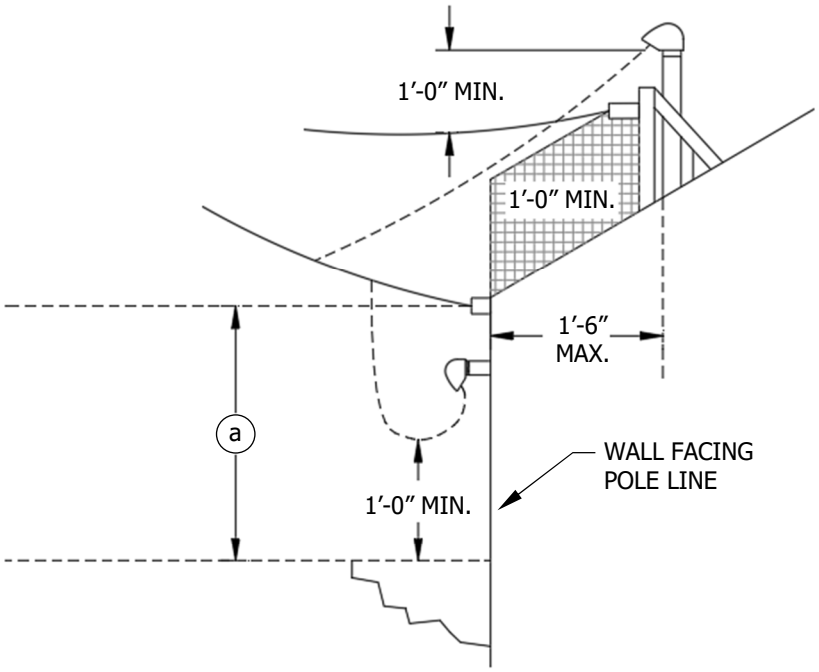

EXAMPLE 1
DECORATIVE APPENDAGE AND/OR ROOF

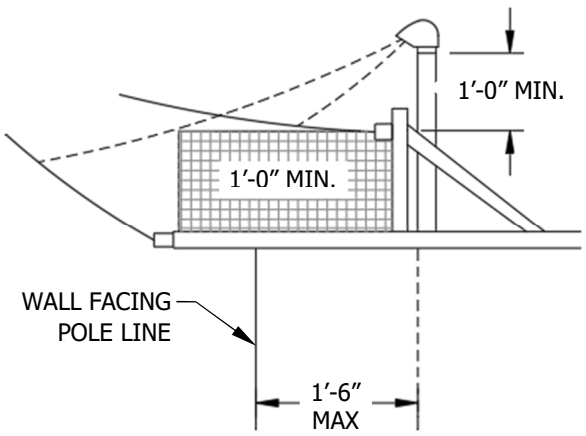

EXAMPLE 2
FLAT OR SLOPING EAVE OR ROOF

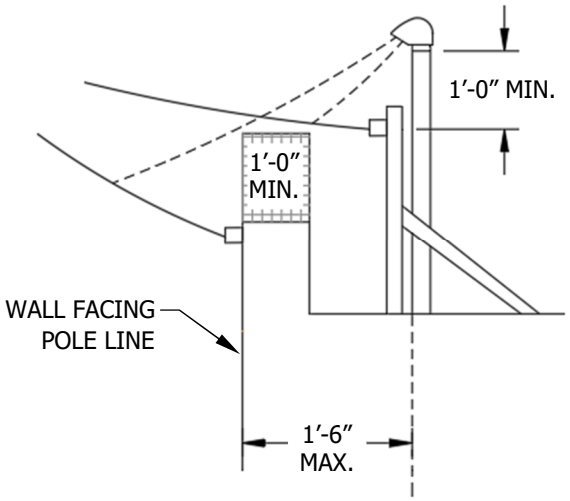

EXAMPLE 3
PARAPET WALL

FIGURE 2
0-600V CLEARANCE ABOVE A METALLIC OR
NON-METALLIC DECORATIVE APPENDAGE, EAVE, ROOF OR PARAPET WALL (F)(G)(II)(III)(IV)(a)

© 1998 - 2023 San Diego Gas & Electric Company. All rights reserved. Removal of this copyright notice without permission is not permitted under law.

REV	CHANGE	DR	BY	DSN	APV	DATE	REV	CHANGE	DR	BY	DSN	APV	DATE
C							F						
B	FORMATTING	EDM	JIK	-	-	04/24/2023	E						
A	EDITORIAL CHANGES	-	LSM	IPJ	TPM	11/01/2017	D						

X	Indicates Latest Revision		Completely Revised		New Page		Information Removed

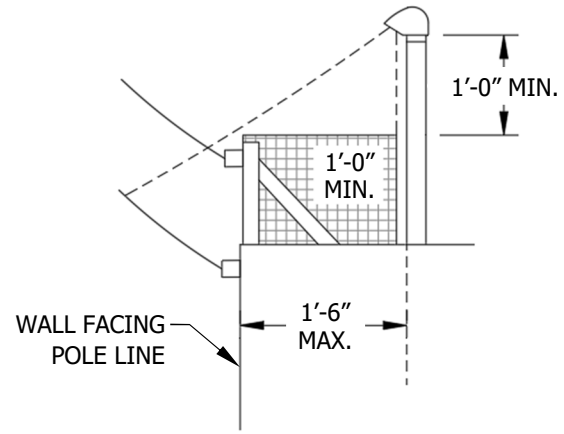

EXAMPLE 4
FLAT ROOF

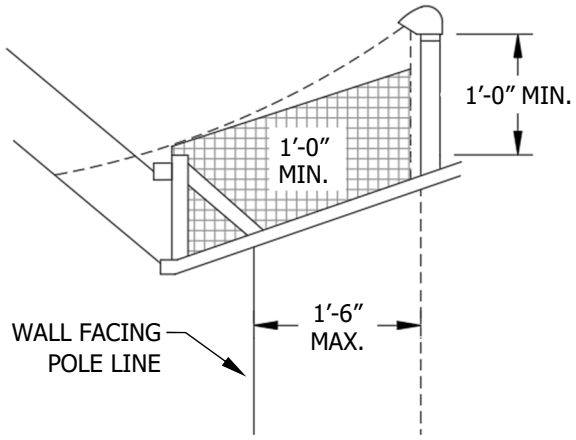

EXAMPLE 5
FLAT OR SLOPING EAVE OR ROOF

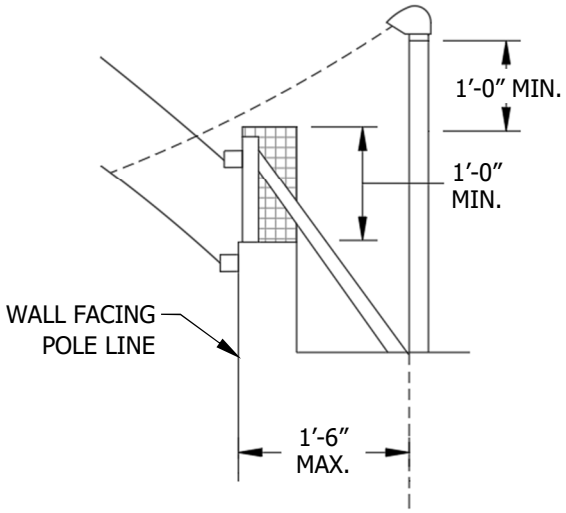

EXAMPLE 6
PARAPET WALL

FIGURE 2 (CONT'D)
0-600V CLEARANCE ABOVE A METALLIC OR
NON-METALLIC DECORATIVE APPENDAGE, EAVE, ROOF OR PARAPET WALL (F)(G)(II)(III)(IV)(a)

INSTALLATION:

GENERAL INFORMATION:

A. FOR EACH OVERHEAD SERVICE CONNECTION, THE CONTRACTOR FURNISHES AND INSTALLS SERVICE ENTRANCE CONDUCTORS FROM THE SERVICE EQUIPMENT TO THE POINT OF CONNECTION TO THE UTILITY'S SERVICE DROP CONDUCTORS. THESE CONDUCTORS MAY BE AN INDIVIDUAL SET OR PARALLEL SETS IN CONDUIT RACEWAYS, BUSWAY OR SERVICE ENTRANCE CABLE OF TYPES APPROVED BY THE GOVERNMENTAL AUTHORITY HAVING JURISDICTION (AHJ).

B. BUSWAY TYPE SERVICE ENTRANCE SHALL BE REQUIRED WHERE MORE THAN THREE PARALLELED OVERHEAD SERVICE ENTRANCE CONDUCTORS PER PHASE ARE NECESSARY TO SUPPLY THE LOAD FOR ONE METERING LOCATION. (b)

© 1998 - 2023 San Diego Gas & Electric Company. All rights reserved. Removal of this copyright notice without permission is not permitted under law.

REV	CHANGE	DR	BY	DSN	APV	DATE	REV	CHANGE	DR	BY	DSN	APV	DATE
C							F						
B	FORMATTING	EDM	JIK	-	-	04/24/2023	E						
A	EDITORIAL CHANGES	-	LSM	IPJ	TPM	11/01/2017	D						

X	Indicates Latest Revision		Completely Revised		New Page		Information Removed

TABLE OF CONTENTS

INSTALLATION (CONT'D):

GENERAL INFORMATION (CONT'D):

C. IN GENERAL, A BUILDING SHOULD HAVE ONLY ONE SET OF SERVICE ENTRANCE CONDUCTORS, EXCEPT AS FOLLOWS:

1. WHERE PERMITTED BY THE AHJ, BUILDINGS WITH MULTIPLE TYPES OF OCCUPANCY MAY HAVE TWO OR MORE SEPARATE SETS OF SERVICE ENTRANCE CONDUCTORS WHICH ARE TAPPED FROM A SINGLE POINT OF SERVICE DELIVERY. UP TO SIX SETS OF SERVICE ENTRANCE CONDUCTORS MAY BE TAPPED FROM A SINGLE SET OF MAIN SERVICE ENTRANCE CONDUCTORS PROVIDED THE PHASE-TO-PHASE VOLTAGE BETWEEN THE CONDUCTORS DOES NOT EXCEED 300V. WHERE MAIN SERVICE ENTRANCE CONDUCTORS SUPPLY SEVERAL UNITS OF A MULTIPLE OCCUPANCY BUILDING, THE JUNCTION BOXES IN WHICH SUB-SERVICE ENTRANCE CONDUCTORS ARE CONNECTED TO THE MAIN SERVICE NEED TO BE IN A READILY ACCESSIBLE AND VISIBLE LOCATION ON THE EXTERIOR OF THE BUILDING OR IN A PUBLIC AREA. THEY MUST BE SEALABLE AND IF EXPOSED TO WEATHER, RAINTIGHT.
2. BUILDINGS OF UNUSUALLY LARGE AREA MAY HAVE MORE THAN ONE POINT OF SERVICE DELIVERY. (C)
3. A SEPARATE SET OF SERVICE ENTRANCE CONDUCTORS MAY BE INSTALLED IF REQUIRED FOR FIRE PUMPS OR FOR EMERGENCY LIGHTING PURPOSES.
4. ADDITIONAL SERVICE ENTRANCE CONDUCTORS MAY BE INSTALLED FOR A SECOND CLASS OF SERVICE (DIFFERENT VOLTAGE) WHEN APPROVED BY THE UTILITY.

SIZE AND CAPACITY:

D. THE CAPACITY OF SERVICE ENTRANCE CONDUCTORS SHALL COMPLY WITH ELECTRICAL CODES AND ORDINANCES ENFORCED BY THE AHJ. THE SMALLEST SIZE SHOULD NOT BE LESS THAN 6 AWG, EXCEPT THAT 8 AWG MAY BE USED IN EITHER TWO-WIRE, OR THREE-WIRE SERVICE ENTRANCE INSTALLATIONS WHICH SUPPLY NOT MORE THAN TWO 2-WIRE BRANCH CIRCUITS, WITH A MAXIMUM OF ONE 15A AND ONE 20A CIRCUIT.

IDENTIFICATION:

E. ALL NEUTRAL CONDUCTORS SHALL BE PERMANENTLY IDENTIFIED WHITE OR GRAY IN COLOR IN A MANNER ACCEPTABLE TO THE AHJ. FOR THREE-PHASE DELTA-CONNECTED SERVICES, THE POWER LEG SHALL BE PERMANENTLY IDENTIFIED ORANGE IN COLOR IN A MANNER ACCEPTABLE TO THE AHJ. THE IDENTIFICATION FOR BOTH NEUTRAL AND POWER LEG CONDUCTORS SHALL BE APPLIED ON THE OPEN CONDUCTORS (DRIP LOOP) EXTENDED FROM A SERVICE HEAD OR ON THE BUS STUBS OF A BUSWAY SERVICE HEAD, WHICHEVER IS APPLICABLE, AND THROUGHOUT THE METER AND SERVICE EQUIPMENT. THE UTILITY DOES NOT REQUIRE OTHER CONDUCTORS TO BE IDENTIFIED.

MAXIMUM LENGTH OF SERVICE ENTRANCE CONDUCTORS EXTENDED FROM SERVICE HEAD AND THE DRIP LOOP:

(F) THE LENGTH OF OPEN SERVICE ENTRANCE CONDUCTORS BETWEEN THE SERVICE HEAD AND THE POINT OF CONNECTION TO THE UTILITY'S SERVICE DROP (DRIP LOOP) SHALL NOT EXCEED 3 FEET.

(G) THE CONTRACTOR SHOULD ENSURE THAT THE SERVICE ENTRANCE CONDUCTORS EXTENDED FROM THE SERVICE HEAD HAVE SUFFICIENT LENGTH TO BE CONNECTED TO THE UTILITY'S SERVICE DROP CONDUCTORS. SPLICES ARE NOT PERMITTED IN THE CUSTOMER-OWNED SERVICE ENTRANCE CONDUCTORS. WHEN THE ACTUAL LENGTH REQUIRED IS NOT KNOWN, 3 FEET WILL BE SUFFICIENT.

H. SEE DRIP LOOP INSTALLATION INSTRUCTIONS WHEN, BY NECESSITY, A SERVICE HEAD IS INSTALLED BELOW THE POINT OF SERVICE DROP ATTACHMENT. (U)

CONNECTION OF SERVICE ENTRANCE CONDUCTORS TO SERVICE DROP CONDUCTORS:

J. THE UTILITY WILL COMPLETE THE SERVICE CONNECTION BY:

1. CONNECTING THE CUSTOMER'S SERVICE ENTRANCE CONDUCTORS TO ITS SERVICE DROP CONDUCTORS, OR

TABLE OF CONTENTS

© 1998 - 2023 San Diego Gas & Electric Company. All rights reserved. Removal of this copyright notice without permission is not permitted under law.

REV	CHANGE	DR	BY	DSN	APV	DATE	REV	CHANGE	DR	BY	DSN	APV	DATE
C							F						
B	FORMATTING	EDM	JIK	-	-	04/24/2023	E						
A	EDITORIAL CHANGES	-	LSM	IPJ	TPM	11/01/2017	D						

INSTALLATION (CONT'D):

CONNECTION OF SERVICE ENTRANCE CONDUCTORS TO SERVICE DROP CONDUCTORS (CONT'D):

2. CONNECTING ITS SERVICE DROP CONDUCTORS TO BUSWAY SERVICE HEAD BUS-DUCT STUBS, EXCEPT WHEN VOLTAGE RATED INSULATED SERVICE ENTRANCE CONDUCTORS ARE REQUIRED BETWEEN BUSWAY BUS-DUCT STUBS AND SERVICE DROP CONDUCTORS AT LOCATIONS WHERE SERVICE ENTRANCE CONDUCTORS WILL PASS ABOVE ANY PORTION OF A BUILDING AT THE REDUCED CLEARANCE PERMITTED BY SOME EXCEPTIONS. INSULATED SERVICE ENTRANCE CONDUCTORS, IN SUCH A CASE, SHALL BE FURNISHED AND CONNECTED TO BUS-DUCT STUBS BY THE CONTRACTOR AND BE OF SUFFICIENT LENGTH FOR CONNECTION TO THE UTILITY'S SERVICE DROP CONDUCTORS. (W)

SERVICE ENTRANCE CABLE:

K. WHERE PERMITTED BY THE AHJ, STANDARD TYPES OF SERVICE ENTRANCE CABLE WITH APPROVED RAINTIGHT FITTINGS MAY BE FURNISHED AND INSTALLED BY THE CONTRACTOR IN LIEU OF SERVICE ENTRANCE CONDUCTORS IN RACEWAYS.

L. SERVICE ENTRANCE CABLES SHALL BE INSTALLED ON THE SURFACE OF THE BUILDING.

TAPS AND SPLICES IN SERVICE RACEWAYS:

M. THE CONDUCTORS SHALL BE CONTINUOUS WITHOUT TAPS OR SPLICES, EXCEPT AS FOLLOWS:

1. APPROVED CLAMPED OR BOLTED CONNECTIONS MAY BE MADE IN JUNCTION BOXES OR APPROVED DEVICES. (d)
2. TAPS MAY BE MADE IN APPROVED JUNCTION BOXES WHERE SUBSETS OF INDIVIDUAL SERVICE ENTRANCE CONDUCTORS ARE PERMITTED TO BE EXTENDED FROM MAIN BUS SERVICE ENTRANCE CONDUCTOR RUN.
3. TAPS MAY BE MADE IN AUXILIARY GUTTERS OR METER TROUGHS WHERE INDIVIDUAL SETS OF SERVICE ENTRANCE CONDUCTORS ARE PERMITTED TO BE TAPPED TO AN APPROVED GROUP OF INDIVIDUAL SERVICE SWITCHES.
4. THE NEUTRAL SHALL BE CONTINUOUS WITHOUT SPLICE UNTIL TERMINATED AT THE GROUNDING BUS. TAPS MAY BE MADE AS INDICATED PREVIOUSLY. NEUTRAL CONDUCTORS BROKEN AT AN APPROVED LANDING BLOCK OR BUS SHALL BE CONSIDERED AS CONTINUOUS.

OTHER CONDUCTORS IN SERVICE ENTRANCE RACEWAYS:

N. NO CONDUCTORS OTHER THAN SERVICE ENTRANCE CONDUCTORS ARE PERMITTED IN THE SERVICE ENTRANCE RACEWAY, EXCEPT WHEN CONTINUOUS BONDING WIRES ARE REQUIRED BY THE APPROPRIATE INSPECTION AUTHORITY TO CONNECT MULTIPLE SECTIONS OF THE CUSTOMER'S SERVICE EQUIPMENT. WHERE A MAIN DISCONNECT IS INSTALLED ON THE LINE SIDE OF A GROUP OF METERS AND SERVICE SWITCHES, THE CONDUCTORS ON THE LINE SIDE OF THE MAIN DISCONNECT, AND ANY UNMETERED CONDUCTORS (FEEDERS) ON THE LOAD SIDE OF THE MAIN DISCONNECT TO THE METERS WILL BE TREATED AS SERVICE ENTRANCE CONDUCTORS. THE PURPOSE OF THIS RULING IS TO PROHIBIT METERED AND UNMETERED CONDUCTORS IN THE SAME RACEWAY.

O. LINE SIDE (UNMETERED) AND LOAD SIDE (METERED) CONDUCTORS ARE PROHIBITED FROM OCCUPYING THE SAME RACEWAY, EXCEPT IN METER SOCKETS AND TERMINATING ENCLOSURES.

P. NO CONDUCTORS FROM THE LOAD SIDE OF ANY OR FROM A SIMILAR, SOURCE MAY RE-ENTER AN AUXILIARY GUTTER OR METER TROUGH CONTAINING UNMETERED FEEDER OR SERVICE ENTRANCE CONDUCTORS, EXCEPT IN A SEPARATELY BARRIERED SECTION.

Q. A MAIN GROUNDING CONNECTION FROM THE GROUNDING ELECTRODE OR WATER PIPE TO A NEUTRAL CONDUCTOR OF THE SERVICE MAY BE IN AN AUXILIARY GUTTER OR METER TROUGH WHERE MORE THAN ONE METER IS INVOLVED, PROVIDED THE INSTALLATION IS MADE SO AS TO MINIMIZE INTERFERENCE AND APPROVED BY THE AHJ.

TABLE OF CONTENTS

© 1998 - 2023 San Diego Gas & Electric Company. All rights reserved. Removal of this copyright notice without permission is not permitted under law.

REV	CHANGE	DR	BY	DSN	APV	DATE	REV	CHANGE	DR	BY	DSN	APV	DATE
C							F						
B	FORMATTING	EDM	JIK	-	-	04/24/2023	E						
A	EDITORIAL CHANGES	-	LSM	IPJ	TPM	11/01/2017	D						

X	Indicates Latest Revision		Completely Revised		New Page		Information Removed

INSTALLATION (CONT'D):

GROUNDING AND BONDING:

R. THE SERVICE RACEWAY, METERING ENCLOSURE AND SERVICE EQUIPMENT FOR ALL CLASSES OF SERVICE, INCLUDING ANY NEUTRAL SERVICE ENTRANCE CONDUCTOR, NEEDS TO BE BONDED AND GROUNDED IN COMPLIANCE WITH ELECTRICAL CODES AND ORDINANCES ENFORCED BY THE AHJ. IN ADDITION, A NEUTRAL BOND CONNECTION SHALL BE MADE BY THE CONTRACTOR, CONNECTING THE NEUTRAL SERVICE ENTRANCE CONDUCTOR TO THE INTERIOR OF THE METER SOCKET, ENCLOSURE FOR MULTIPLE SOCKETS, OR SEALED SERVICE GUTTER. IN SUCH CASES, THE COMPLETE NEUTRAL BOND CONNECTION SHALL BE ENTIRELY WITHIN THE PART OF THE ENCLOSURE WHICH IS UNDER THE UTILITY'S SEAL. IN COMBINATION METER SOCKET AND BREAKER ENCLOSURES, THE NEUTRAL BOND CONNECTION SHALL BE ENTIRELY ON THE SUPPLY SIDE OF THE BARRIER BETWEEN THE UPPER PART OF THE DEVICE AND THE BREAKER COMPARTMENT.

S. ELECTRIC BONDING TO, OR USE OF SDG&E GAS SERVICE PIPING, GAS RISERS OR GAS METER FACILITIES FOR ELECTRIC BONDING AND GROUNDING IS NOT PERMITTED.

ALUMINUM SERVICE ENTRANCE CONDUCTORS:

T. ALUMINUM SERVICE ENTRANCE CONDUCTORS MAY BE USED PROVIDED THE TERMINALS AND CONNECTORS MAKING CONNECTIONS, TAPS OR SPLICES IN METER AND SERVICE DEVICES ARE OF A TYPE SUITABLE FOR RECEIVING ALUMINUM CONDUCTORS AND ARE FURNISHED AND INSTALLED BY THE CONTRACTOR IN ACCORDANCE WITH APPLICABLE ELECTRICAL CODES ENFORCED BY THE AHJ.

DRIP LOOPS:

(U) WHERE BY NECESSITY A SERVICE HEAD IS INSTALLED BELOW THE POINT OF SERVICE DROP ATTACHMENT, DRIP LOOPS SHOULD BE FORMED IN THE OPEN SERVICE ENTRANCE CONDUCTORS. TO PREVENT SIPHONING OF WATER INTO SERVICE RACEWAY OR EQUIPMENT, AN INVERTED "V" NOTCH SHOULD BE CUT THROUGH THE INSULATION ON THE CURRENT CARRYING STRANDS AT THE LOWEST POINT ON THE BOTTOM SIDE OF EACH SERVICE ENTRANCE CONDUCTOR DRIP LOOP AS SHOWN IN FIGURE 1.

CLEARANCES ABOVE COMMERCIAL OR INDUSTRIAL BUILDINGS AND STRUCTURES:

(W) THE LEGAL REQUIREMENT FOR 0–600V OPEN WIRE SERVICE ENTRANCE CONDUCTORS IS A VERTICAL CLEARANCE OF NOT LESS THAN 8 FEET ABOVE ANY PORTION OF A METALLIC OR NON-METALLIC BUILDING OR STRUCTURE SERVED, EXCEPT:

1. 0–300V SERVICE ENTRANCE CONDUCTORS MAY BE LESS THAN 8 FEET BUT NOT LESS THAN 12 INCHES ABOVE A NON-METALLIC DECORATIVE APPENDAGE, EAVE, ROOF, OR PARAPET WALL, PROVIDED THE SERVICE HEAD IS LOCATED NOT MORE THAN 18 INCHES BACK OF THE EXTERIOR FACE OF THE BUILDING WALL.
2. 0–300V SERVICE ENTRANCE CONDUCTORS MAY BE LESS THAN 8 FEET BUT NOT LESS THAN 12 INCHES ABOVE A METALLIC EAVE, ROOF OR PARAPET WALL, PROVIDED THE SERVICE HEAD IS NOT MORE THAN 18 INCHES BACK OF THE OUTER EDGE OF THE EAVE, ROOF, OR PARAPET WALL.
3. 0-600V SERVICE ENTRANCE CONDUCTORS MAY BE LESS THAN 8 FEET BUT NOT LESS THAN 12 INCHES ABOVE A METALLIC OR NON-METALLIC EAVE, ROOF, OR PARAPET WALL, PROVIDED THE SERVICE HEAD IS NOT MORE THAN 18 INCHES BACK OF THE OUTER EDGE OF THE EAVE, ROOF, OR PARAPET WALL.

BILL OF MATERIALS: NONE

NOTES:

(I) FORM DRIP LOOPS IN SERVICE ENTRANCE CONDUCTORS WHERE SERVICE HEAD IS BELOW SERVICE DROP ATTACHMENT. 3 FEET MAXIMUM LENGTH

(II) NO SUPPLY SERVICE WIRES PERMITTED WITHIN SHADED ZONE.

(III) SERVICE ENTRANCE CONDUCTORS AND SERVICE DROP CONDUCTORS ARE NOT PERMITTED WITHIN THE SHADED ZONES ILLUSTRATED.

(IV) 0–600V SERVICE DROP CONDUCTORS AND SUPPORTING SERVICE INSULATOR MAY BE ATTACHED TO A CONDUIT RISER IN LIEU OF THE SUPPORT RACK PROVIDED THE SERVICE ENTRANCE CONDUCTORS AND SERVICE DROP CONDUCTORS DO NOT PASS THROUGH THE SHADED ZONES ILLUSTRATED.

© 1998 - 2023 San Diego Gas & Electric Company. All rights reserved. Removal of this copyright notice without permission is not permitted under law.

REV	CHANGE	DR	BY	DSN	APV	DATE	REV	CHANGE	DR	BY	DSN	APV	DATE
C							F						
B	FORMATTING	EDM	JIK	-	-	04/24/2023	E						
A	EDITORIAL CHANGES	-	LSM	IPJ	TPM	11/01/2017	D						

X	Indicates Latest Revision		Completely Revised		New Page		Information Removed		

TABLE OF CONTENTS

REFERENCE:

(a) FOR SERVICE DROP CLEARANCES ABOVE BUILDINGS, A CORNICE OR APPENDAGE, SEE SG107.

(b) SEE SG109 AND SG110.

(c) FOR ELECTRIC SERVICE POLICIES, SEE SG013.

(d) SEE SG111.

TABLE OF CONTENTS

© 1998 - 2023 San Diego Gas & Electric Company. All rights reserved. Removal of this copyright notice without permission is not permitted under law.

REV	CHANGE	DR	BY	DSN	APV	DATE	REV	CHANGE	DR	BY	DSN	APV	DATE
C							F						
B	FORMATTING	EDM	JIK	-	-	04/24/2023	E						
A	EDITORIAL CHANGES	-	LSM	IPJ	TPM	11/01/2017	D						

X	Indicates Latest Revision		Completely Revised		New Page		Information Removed

SDG&E ELECTRIC SERVICE STANDARDS & GUIDES

SHEET 7 OF 7

SERVICE ENTRANCE CONDUCTORS 0-600V

SG112.7

TABLE OF CONTENTS

200 - CUSTOMER-OWNED METER POLES

200 - CUSTOMER-OWNED METER POLES

PAGE	SUBJECT
202	ALPHABETICAL SUBJECT INDEX
203	GENERAL INFORMATION
204	CUSTOMER-OWNED SERVICE & METER POLE PERMANENT/CLIMBABLE, 0 – 600 VOLTS
205	CUSTOMER-OWNED SERVICE & METER POLES TEMPORARY/NON-CLIMBABLE, 0 – 600 VOLTS
206	CUSTOMER-OWNED SERVICE & METER POLE WITH MULTIPLE METERS PERMANENT OR TEMPORARY INSTALLATION
207	CUSTOMER-OWNED SERVICE WITH MULTIPLE METERS FOR UNDERGROUND PERMANENT OR TEMPORARY INSTALLATION
208	TEMPORARY SERVICE FROM SDG&E HANDHOLE TO CUSTOMER-OWNED SERVICE & METER INSTALLATION
209	TEMPORARY SERVICE FROM SDG&E POLE OR PADMOUNT TRANSFORMER TO CUSTOMER-OWNED SERVICE & METER INSTALLATION
210	TEMPORARY SERVICE TO PERMANENT SERVICE & METERING ENCLOSURE (TSPB)

© 1998 - 2020 San Diego Gas & Electric Company. All rights reserved. Removal of this copyright notice without permission is not permitted under law.

REV	CHANGE	DR	BY	DSN	APV	DATE	REV	CHANGE	DR	BY	DSN	APV	DATE
C							F						
B	FORMATTING	EDM	JIK	--	--	12/07/2020	E						
A	NEW PAGE	--	LSM	LSM	TPM	11/01/2017	D						

	Indicates Latest Revision		Completely Revised		New Page	X	Information Removed

TABLE OF CONTENTS

SUBJECT **PAGE**

ADDRESS MARKING....203.2

AVAILABLE SECONDARY FAULT CURRENT....203.2

CUSTOMER-OWNED SERVICE & METER POLE FOR PERMANENT OR TEMPORARY SERVICE, 0 – 600 VOLTS....203.1 - 203.2

CUSTOMER-OWNED SERVICE & METER POLES PERMANENT/CLIMBABLE, 0 – 600 VOLTS....204.1 – 204.3

CUSTOMER-OWNED SERVICE & METER POLES TEMPORARY/NON-CLIMBABLE, 0 – 600 VOLTS....205.1 – 205.4

CUSTOMER-OWNED SERVICE & METER POLE WITH MULTIPLE METERS PERMANENT OR TEMPORARY INSTALLATION....206

CUSTOMER-OWNED SERVICE WITH MULTIPLE METERS FOR UNDERGROUND PERMANENT OR TEMPORARY INSTALLATION....207

GENERAL INFORMATION....203.1

GENERAL REQUIREMENTS....203.1

MARKING, ADDRESS....203.2

MULTIPLE METER INSTALLATION....206, 207

PERMANENT POLES....204.1 – 204.3

PERMANENT OR TEMPORARY SERVICE INSTALLATIONS....206, 207

SERVICE & METER POLE SPECIFICATIONS....203.1

SERVICE DROP CLEARANCES....203.1, 204.2, 205.3

STEEL SERVICE & METER POLES....203.1 – 203.2

TEMPORARY POLES....205.1 – 205.4

TEMPORARY SERVICE FROM AN OVERHEAD SOURCE....205.1 – 205.4, 206, 209.1 – 209.2

TEMPORARY SERVICE FROM AN UNDERGROUND SOURCE....207, 208, 209

TEMPORARY SERVICE FROM SDG&E HANDHOLE TO CUSTOMER-OWNED SERVICE & METER INSTALLATION....208.1 – 208.2

TEMPORARY SERVICE FROM SDG&E POLE OR PADMOUNT TRANSFORMER TO CUSTOMER-OWNED SERVICE & METER INSTALLATION....209.1 – 209.2

TEMPORARY SERVICE TO PERMANENT METERING ENCLOSURE (TSPB)....210

© 1998 - 2020 San Diego Gas & Electric Company. All rights reserved. Removal of this copyright notice without permission is not permitted under law.

REV	CHANGE	DR	BY	DSN	APV	DATE	REV	CHANGE	DR	BY	DSN	APV	DATE
C							F						
B	FORMATTING	EDM	JIK	--	--	12/07/2020	E						
A	EDITORIAL CHANGES	--	LSM	LSM	TPM	11/01/2017	D						

X Indicates Latest Revision | Completely Revised | New Page | Information Removed

SCOPE: THIS SERVICE GUIDE PROVIDES GENERAL INFORMATION REGARDING SERVICE AND METER POLES OR POLE-TYPE STRUCTURES.

INSTALLATION: NONE

BILL OF MATERIALS: NONE

NOTES:

I. ALL PERMANENT CUSTOMER-OWNED SERVICE AND METER POLES OR POLE-TYPE STRUCTURES ON WHICH SDG&E (UTILITY) OVERHEAD SERVICE DROP CONDUCTORS ARE TO BE SUPPORTED ARE DEFINED BY THE CALIFORNIA PUBLIC UTILITIES COMMISSION AS BEING CLIMBABLE. FOR THIS REASON, THEY ARE SUBJECT TO COMPLIANCE WITH CALIFORNIA PUBLIC UTILITIES COMMISSION RULES FOR OVERHEAD ELECTRIC LINE CONSTRUCTION, GENERAL ORDER 95. EXCEPTED ARE POLES OR WOODEN TIMBERS PERMANENTLY ATTACHED TO BUILDINGS IN SUCH A MANNER THAT THEY ARE CONSIDERED TO BE NON-CLIMBABLE AND PART OF THE BUILDING STRUCTURE, IN WHICH CASE THEY ARE TREATED AS A SERVICE DROP ATTACHMENT RISER AND ARE SUBJECT TO COMPLIANCE WITH APPLICABLE STRENGTH AND CLEARANCE REQUIREMENTS. THE UTILITY HAS DETERMINED TEMPORARY CUSTOMER-OWNED SERVICE AND METER POLES WILL NOT BE CLIMBED.

II. MINIMUM REQUIREMENTS FOR CUSTOMER-OWNED SERVICE AND METER POLES ARE SPECIFIED AND ILLUSTRATED ON THE FOLLOWING PAGES. COMPLIANCE WITH THESE MINIMUM REQUIREMENTS IS THE RESPONSIBILITY OF THE CUSTOMER OR CONTRACTOR. SERVICE CANNOT BE ESTABLISHED TO ANY INSTALLATION NOT COMPLYING WITH THESE MINIMUM REQUIREMENTS, OR WHERE PERMIT AND INSPECTION CLEARANCE FROM THE GOVERNMENTAL AUTHORITY HAVING JURISDICTION (AHJ) HAS NOT BEEN OBTAINED. THE FOLLOWING INFORMATION PROVIDES ASSISTANCE IN DETERMINING A CORRECT AND UNIFORM INTERPRETATION OF REQUIREMENTS FOR CUSTOMER-OWNED PERMANENT OR TEMPORARY SERVICE AND METER POLES.

III. **GENERAL REQUIREMENTS**
THE REQUIREMENTS ON DIMENSIONS PERTAINING TO SEPARATION, ELEVATION, LOCATION OF CONSTRUCTION UNITS, DESCRIPTION OF APPROVED MATERIALS, CONSTRUCTION METHODS AND CLEARANCES ARE BASIC MINIMUMS SPECIFIED BY LOCAL CODES AND ORDINANCES, STATE OF CALIFORNIA BUILDING STANDARDS, CALIFORNIA ELECTRICAL CODE AND CALIFORNIA PUBLIC UTILITIES COMMISSION RULES FOR OVERHEAD ELECTRIC LINE CONSTRUCTION, GENERAL ORDER 95. DEVIATION FROM THESE MINIMUM REQUIREMENTS, OR SUBSTITUTION OF MATERIAL OTHER THAN SPECIFIED, CANNOT BE GRANTED BY THE UTILITY.

IV. **SERVICE DROP CLEARANCES**
SERVICE DROP CLEARANCES ABOVE GROUND ARE SHOWN ON THE ACCOMPANYING SPECIFICATIONS AND DRAWINGS. FOR SERVICE DROP CLEARANCE REQUIRED OVER ROOFS, FROM BUILDINGS, STRUCTURES, OBSTRUCTIONS, AND OTHER CONDUCTORS, REFER TO SG112. (a)

V. **SERVICE & METER POLE SPECIFICATIONS**
SEE DRAWINGS AND GENERAL NOTES IN SG204 AND SG205 FOR PERMANENT AND TEMPORARY SERVICE AND METER POLE REQUIREMENTS. (b) (c)

VI. **STEEL SERVICE & METER POLE**

a. A STEEL POLE MAY BE USED FOR BOTH A TEMPORARY OR PERMANENT SERVICE AND METER POLE, PROVIDED ITS STRENGTH IS ADEQUATE AND IS APPROVED BY THE UTILITY. SUCH POLE SHALL BE SELF-SUPPORTING AND IN OTHER RESPECTS COMPLY WITH SPECIFICATIONS AND DRAWINGS ILLUSTRATING PERMANENT OR TEMPORARY CUSTOMER-OWNED SERVICE AND METER POLE AS APPLICABLE FOR ITS INTENDED USE.

b. THE COVERING OF METALLIC CONDUIT RISERS AND WOOD BLOCKS OVER THE TOPS OF THE RISERS WILL NOT BE REQUIRED, PROVIDED THE POLE IS GROUNDED IN ACCORDANCE WITH GOVERNING CODES AND TITLE 24, STATE BUILDING STANDARDS; AND PROVIDED ALL METALLIC CONDUITS ARE ADEQUATELY BONDED TO THE POLE MECHANICALLY WITH APPROVED CLAMPS OR CONNECTORS.

c. A STEEL POLE SHALL BE SET IN AN ADEQUATE CONCRETE FOUNDATION TO ENSURE THE SELF-SUPPORTING CONDITION. THE POLE SHALL BE PAINTED OR, PREFERABLY, GALVANIZED TO PREVENT CORROSION. STEEL POLES SHALL BE OF HEAVY WALL PIPE 3 INCHES OR LARGER IN DIAMETER.

TABLE OF CONTENTS

© 1998 - 2020 San Diego Gas & Electric Company. All rights reserved. Removal of this copyright notice without permission is not permitted under law.

REV	CHANGE	DR	BY	DSN	APV	DATE	REV	CHANGE	DR	BY	DSN	APV	DATE
C							F						
B	FORMATTING	EDM	JIK	--	--	12/07/2020	E						
A	EDITORIAL CHANGES	--	LSM	IPJ	TPM	11/01/2017	D						

d. THE CUSTOMER-OWNED STEEL SERVICE AND METER POLE MUST BE LOCATED WITHIN A 20' RADIUS FROM A ROAD OR OTHER DRIVABLE SURFACE SO THE UTILITY CAN CONNECT AND MAINTAIN THE SERVICE DROP FROM A BUCKET TRUCK. IF THE SERVICE AND METER POLE CANNOT BE LOCATED WITHIN THE 20' RADIUS, A PERMANENT/CLIMBABLE POLE MUST BE INSTALLED. (b)

e. CONSULT THE UTILITY FOR APPROVAL IN ALL CASES WHERE A STEEL POLE IS PROPOSED TO BE USED.

VII. **ADDRESS MARKING**
ALL METER POLES, TEMPORARY OR PERMANENT, MUST HAVE THE NUMERIC PORTION OF THE ADDRESS PERMANENTLY MARKED ON THE POLE OR SERVICE EQUIPMENT.

VIII. **AVAILABLE SECONDARY FAULT CURRENT**
THE UTILITY'S CONTRIBUTION TO SECONDARY FAULT CURRENT INFORMATION MAY BE FOUND IN SG006. FOR SHORT CIRCUIT CURRENT AND OVERLOAD PROTECTION REQUIREMENTS, CONSULT WITH THE AHJ. (d)

REFERENCE:

(a) REFER TO SG112.

(b) REFER TO SG204.

(c) REFER TO SG205.

(d) REFER TO SG206.

TABLE OF CONTENTS

© 1998 - 2020 San Diego Gas & Electric Company. All rights reserved. Removal of this copyright notice without permission is not permitted under law.

REV	CHANGE	DR	BY	DSN	APV	DATE	REV	CHANGE	DR	BY	DSN	APV	DATE
C							F						
B	FORMATTING	EDM	JIK	--	--	12/07/2020	E						
A	EDITORIAL CHANGES	--	LSM	IPJ	TPM	11/01/2017	D						

SHEET 2 OF 2

X Indicates Latest Revision | Completely Revised | New Page | Information Removed

SDG&E ELECTRIC SERVICE STANDARDS & GUIDES

GENERAL INFORMATION

SG203.2

SCOPE: THIS STANDARD SHOWS AND DESCRIBES THE INSTALLATION OF A CUSTOMER-OWNED PERMANENT/CLIMBABLE SERVICE AND METER POLE.

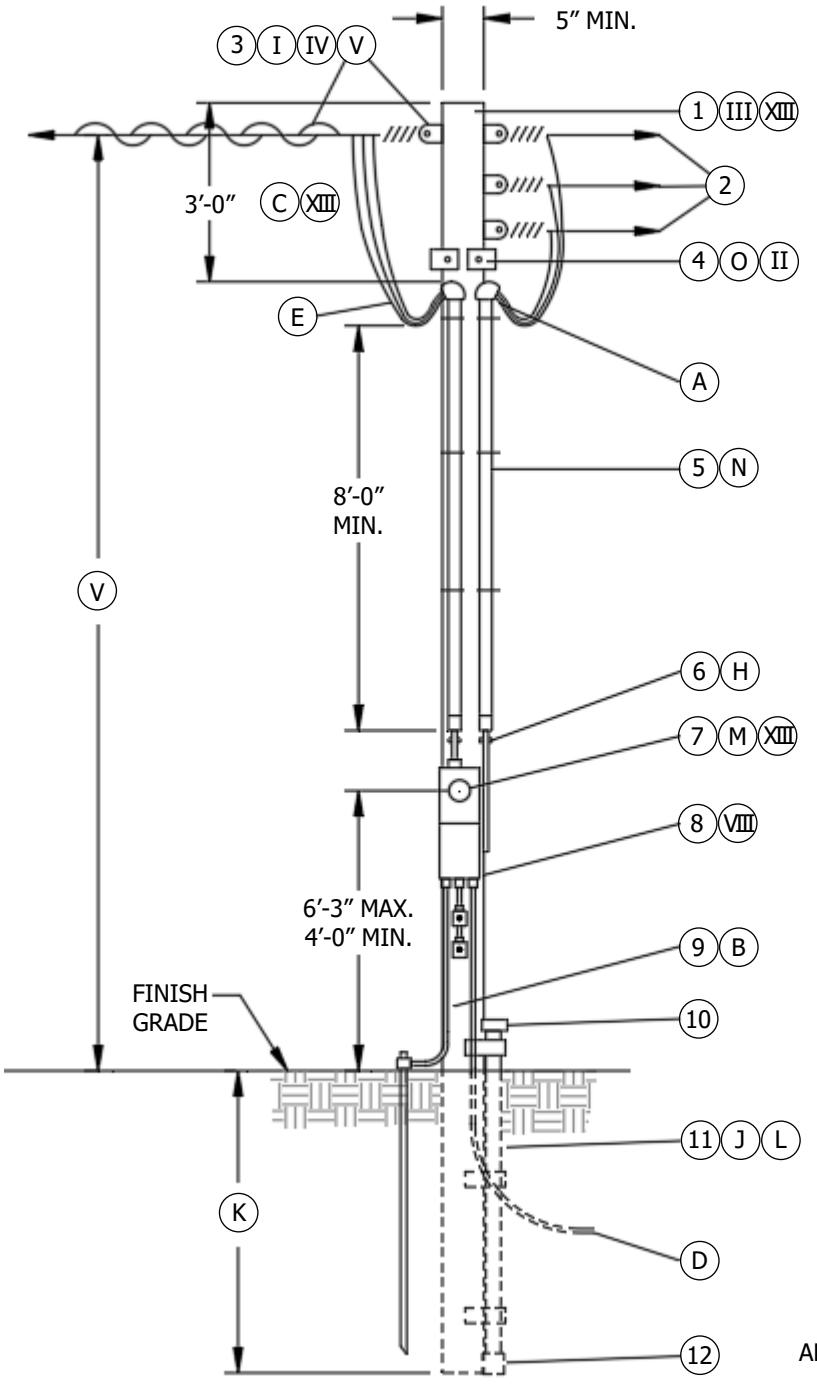

FIGURE 1



METHOD 1
IMPREGNATED FIBER CONDUIT
1/4" MIN. THICKNESS



METHOD 2
WOOD MOULDING
1 1/2" MIN. THICKNESS



METHOD 3
BOXING OF WOOD
1 1/2" MIN. THICKNESS G



METHOD 4
POLE DEPTH CONDUIT
TOP VIEW

FIGURE 2
ALTERNATE METHODS OF COVERING F
SERVICE ENTRANCE CONDUITS

TABLE OF CONTENTS

© 1998 - 2020 San Diego Gas & Electric Company. All rights reserved. Removal of this copyright notice without permission is not permitted under law.

REV	CHANGE	DR	BY	DSN	APV	DATE	REV	CHANGE	DR	BY	DSN	APV	DATE
C							F						
B	FORMATTING	EDM	JIK	--	--	12/07/2020	E						
A	EDITORIAL CHANGES	--	LSM	IPJ	TPM	11/01/2017	D						

X Indicates Latest Revision | Completely Revised | New Page | Information Removed

SDG&E SERVICE STANDARDS & GUIDES

SHEET 1 OF 5

CUSTOMER-OWNED SERVICE & METER POLE
PERMANENT/CLIMBABLE, 0 – 600V

SG204.1

INSTALLATION:

(A) EXTEND PROTECTIVE COVERING OVER METALLIC CONDUIT TO BOTTOM OF SERVICE HEADS. DO NOT LEAVE CONDUITS EXPOSED.

(B) SERVICE GROUND TO COMPLY TO CALIFORNIA ELECTRIC CODE AND BE MECHANICALLY PROTECTED IN COMPLIANCE WITH G.O. 95 PER ONE OF THE FOLLOWING METHODS:

1. ENCASED IN RIGID STEEL CONDUIT.
2. MINIMUM NO. 8 AWG ARMORED COPPER GROUND WIRE.
3. COVERED BY A MINIMUM OF:

   HARDWOOD MOULDING (OF OAK OR ROCK ELM) 3/8-INCH THICKNESS, OR

   DOUGLAS FIR MOULDING ½-INCH THICKNESS, OR

   RIGID CONDUIT OR RIGID U-SHAPED MOULDING OF A MINIMUM SCHEDULE 40 PVC, OR

   POLY PROTECTED GROUND WIRE.

(C) CUSTOMER TO WIRE OUT 3 FEET BELOW TOP OF POLE.

(D) WHEN CUSTOMER'S LOAD CONDUCTORS ARE UNDERGROUND, INSTALL CONDUIT AS INDICATED BY DASHED LINES.

(E) PROVIDE AT LEAST 18 INCHES OF WIRE OUTSIDE OF SERVICE HEAD.

(F) COVERING TO BE STRAPPED TO POLE WITH GALVANIZED TWO-HOLE PIPE STRAPS SPACED NOT TO EXCEED 3 FEET APART.

(G) COVER TO BE NAILED TO SIDE PIECES.

(H) INSTALL STRAPS BELOW FIBER CONDUITS TO PREVENT SLIPPING.

(J) CAP ON BOTTOM AND STRAP TO POLE.

(K) POLE SETTING DEPTH

TABLE 1

POLE SETTING DEPTH	
HEIGHT	**SETTING DEPTH**
25'-0"	5'-0"
30'-0"	5'-6"
35'-0"	5'-6"

(L) CUSTOMER TO DIG POLE HOLE IN NATURAL SOIL. BACKFILL MUST BE COMPACTED TO 90% MINIMUM WITHIN A 5-FOOT RADIUS OF THE POLE. POLE DEPTH WILL BE CONFIRMED BY INSERTION OF A GROUND ROD OR SIMILAR PROBE INTO THE PCV DEPTH CONDUIT ATTACHED TO CLIMBABLE POLE. INSTALL REMOVABLE CAP ON TOP OF CONDUIT TO PREVENT FALLING DEBRIS ENTERING CONDUIT. GUY WIRES ARE NOT PERMITTED AS A MEANS OF SUPPORTING A METER POLE.

(M) ALL METER POLES MUST HAVE THE NUMERIC PORTION OF THE STREET ADDRESS FIRMLY ATTACHED AND FACING THE STREET OR DRIVABLE SURFACE. PLASTIC OR METALLIC NUMBERS OF THE TYPE USED FOR HOUSE ADDRESSES ARE ACCEPTABLE.

(N) ALL CONDUIT FITTINGS MUST BE RAINTIGHT. APPROVED WIRE, NOT LESS THAN NO. 8 AWG, SHALL BE USED IN THE SERVICE ENTRANCE CONDUIT.

(O) BOLTED TO POLE IN 1/2-INCH GAINS.

TABLE OF CONTENTS

© 1998 - 2020 San Diego Gas & Electric Company. All rights reserved. Removal of this copyright notice without permission is not permitted under law.

REV	CHANGE	DR	BY	DSN	APV	DATE	REV	CHANGE	DR	BY	DSN	APV	DATE
C							F						
B	FORMATTING	EDM	JIK	--	--	12/07/2020	E						
A	EDITORIAL CHANGES	--	LSM	IPJ	TPM	11/01/2017	D						

X Indicates Latest Revision | Completely Revised | New Page | Information Removed

BILL OF MATERIALS:

ITEM	DESCRIPTION		QUANTITY	STANDARD PAGE	STOCK NUMBER	DESIGN UNITS
1	POLE, TREATED, FULL LENGTH ROUND, 25'-0", CLASS 5 MIN.		1	--	--	--
2	CUSTOMER LOAD CONDUCTORS		AS REQ'D	--	--	--
3	HOLDER, SERVICE DROP & WIRE		AS REQ'D	--	--	--
	RACK, SERVICE			--	--	--
4	WOOD BLOCK, 4" X 4" X 6"		AS REQ'D	--	--	--
5	CONDUIT, SERVICE ENTRANCE	PVC, SCHEDULE 40, PLASTIC (PREFERRED)	AS REQ'D	--	--	--
		IRON, RIGID, GALV., 3/4" MIN. WITH PROTECTIVE COVERING (ALTERNATE)				
6	STRAP, PIPE		AS REQ'D	--	--	--
7	METER		AS REQ'D	--	--	--
8	SAFETY SOCKET CAN WITH BYPASS TEST FACILITIES (IF REQUIRED)		AS REQ'D	--	--	--
9	SERVICE GROUND		AS REQ'D	--	--	--
10	REMOVABLE CAP		AS REQ'D	--	--	--
11	CONDUIT, PVC, SCHEDULE 40, 6'-0", 3/4", POLE DEPTH		AS REQ'D	--	--	--
12	CONDUIT CAP		AS REQ'D	--	--	--

NOTES:

(I) MAXIMUM LENGTH OF SERVICE DROP SPAN SHALL BE 100 FEET.

(II) BLOCK NOT REQUIRED FOR PVC, SCHEDULE 40 PLASTIC CONDUIT RUNS.

(III) THESE ARE MINIMUM REQUIREMENTS FOR PERMANENT CUSTOMER-OWNED SERVICE AND METER POLES. THEY ARE APPROVED FOR TEMPORARY INSTALLATIONS. (V)

(IV) **POLE LOCATION:**

a. POLE SHALL BE SET NOT MORE THAN 100 FEET NOR LESS THAN 10 FEET FROM THE SURFACE OF SDG&E'S SERVICE POLE AND SO LOCATED THAT ALL REQUIRED SERVICE DROP CLEARANCES WILL BE OBTAINED FROM GROUND, BUILDINGS, STRUCTURES AND OTHER CONDUCTORS ON SDG&E'S POLE INCLUDING FOREIGN COMMUNICATION AND SUPPLY CONDUCTORS. IN SELECTING THE POLE LOCATION, CONSIDERATION SHOULD BE GIVEN TO PROVIDING ADEQUATE CLEARANCE IN AREAS WHERE:

- CONSTRUCTION EQUIPMENT WILL BE OPERATED.
- CHANGES IN GRADE OF STREETS, DRIVEWAY, AND OTHER LANDS ARE PROPOSED.
- BUILDINGS OR STRUCTURES ARE PROPOSED TO BE ADDED DURING THE PERIOD OF PERMANENT OR TEMPORARY SERVICE

b. ADEQUATE CLEARANCE SHALL BE PROVIDED, WHETHER OR NOT SUCH AREAS OF CONFLICT OR OBSTRUCTION ARE ON THE PREMISES SERVED.

c. CONTACT SDG&E AT ANY REGIONAL PROJECT MANAGEMENT OFFICE AND REQUEST AN ELECTRIC METER AND SERVICE LOCATION FORM. (b)

TABLE OF CONTENTS

© 1998 - 2020 San Diego Gas & Electric Company. All rights reserved. Removal of this copyright notice without permission is not permitted under law.

REV	CHANGE	DR	BY	DSN	APV	DATE	REV	CHANGE	DR	BY	DSN	APV	DATE
C							F						
B	FORMATTING	EDM	JIK	--	--	12/07/2020	E						
A	EDITORIAL CHANGES	--	LSM	IPJ	TPM	11/01/2017	D						

(V) **SERVICE DROP MINIMUM CLEARANCES:**

TABLE 2

SERVICE DROP MINIMUM CLEARANCES (VII)	
LOCATION	**MIN. CLEARANCE (FT)**
AT CENTER OF STREET OR 12'-0" FROM CURB, WHICHEVER IS LESS	18
AT CURB LINE	16
OVER COMMERCIAL OR INDUSTRIAL DRIVEWAYS, PARKING AREAS OR AREAS CAPABLE OF BEING TRAVERSED BY VEHICLES	16
OVER RESIDENTIAL DRIVEWAYS	12 (VI)
OVER AGRICULTURAL AREAS	15
OVER RAILROADS OR FOR OTHER SPECIAL CONDITIONS	CONSULT YOUR SDG&E PROJECT PLANNER

(VI) MAY BE REDUCED TO 10 FEET IF SELF-SUPPORTING CABLE (SSC) SERVICE. SERVICE DROP CABLE (SSC) SHALL BE USED BY SDG&E. THE TYPE OF CONSTRUCTION USED BY THE CUSTOMER IS THEIR OPTION.

(VII) WHERE CLEARANCES CANNOT BE OBTAINED WITH THE 25-FOOT POLE SHOWN, A 35-FOOT MAXIMUM POLE SHALL BE USED.

(VIII) SAFETY SOCKET CAN WITH TEST-BYPASS FACILITIES IS REQUIRED WHEN POLE IS TO BE USED FOR TEMPORARY SERVICE OR PERMANENT NON-RESIDENTIAL SERVICE. SERVICE EQUIPMENT AND RECEPTACLES MUST BE RAINTIGHT, PROPERLY RATED FOR THE LOAD TO BE SERVED, AND SHALL BE ADEQUATELY BONDED AND GROUNDED.

IX. RECEPTACLES USED TO CONNECT PORTABLE TOOLS SHALL BE 3-POLE TYPE FOR SINGLE-PHASE MOTORS AND 4-POLE TYPE FOR THREE-PHASE MOTORS, ONE CONTACT TO BE USED FOR GROUNDING CONNECTION. WHERE MORE THAN ONE VOLTAGE TYPE IS USED, RECEPTACLES SHALL BE NON-INTERCHANGEABLE.

XI. PERMIT AND INSPECTION MUST BE OBTAINED FROM THE GOVERNMENTAL AUTHORITY HAVING JURISDICTION (AHJ) BEFORE SERVICE WILL BE CONNECTED AND A METER SET BY SDG&E

XII. CONSULT SDG&E FOR SERVICE REQUIREMENTS WHENEVER THREE-PHASE SERVICE IS DESIRED.

XIII. SDG&E WILL FURNISH AND INSTALL THE METER, SERVICE DROP AND SERVICE DROP RACK OR WIRE HOLDERS. ALL OTHER EQUIPMENT, INCLUDING THE POLE, SHALL BE FURNISHED AND INSTALLED BY THE CUSTOMER.

XIV. FLOOD LIGHTS, SIGNS, ROPES AND ANY SIMILAR EQUIPMENT SHALL NOT BE ATTACHED TO SERVICE AND METER POLES.

XV. A TELEPHONE AND/OR CABLE TV SERVICE DROP MAY ATTACH TO A METER POLE PROVIDED:

a. THE ATTACHMENT IS OUTSIDE THE CLIMBING SPACE,

b. A MINIMUM RADIAL CLEARANCE OF 12 INCHES IS MAINTAINED FROM ANY PORTION OF THE DRIP LOOP, AND

c. IT MEETS ALL G.O. 95 REQUIREMENTS.

XVI. REQUIRED WORK AREA AROUND CLIMBABLE METER AND SERVICE POLES: 8 FEET OF UNOBSTRUCTED RADIAL CLEARANCE AROUND THE POLE IS REQUIRED.

XVII. REQUIRED WORKING SPACE IN FRONT OF THE METER PANEL: A MINIMUM OF 3-FOOT BY 3-FOOT CLEAR AND LEVEL WORKING SPACE IS REQUIRED IN FRONT OF THE METER PANEL MEASURED FROM FACE OF PANEL.

XVIII. TO MAINTAIN SAFE, CLEAR AND LEVEL WORKING SPACE IN FRONT OF NEW OR EXISTING NON-RESIDENTIAL METER AND SERVICE EQUIPMENT, A CONCRETE SLAB IS REQUIRED FOR THE FULL WORKING SPACE. (C)

TABLE OF CONTENTS

© 1998 - 2020 San Diego Gas & Electric Company. All rights reserved. Removal of this copyright notice without permission is not permitted under law.

REV	CHANGE	DR	BY	DSN	APV	DATE	REV	CHANGE	DR	BY	DSN	APV	DATE
C							F						
B	FORMATTING	EDM	JIK	--	--	12/07/2020	E						
A	EDITORIAL CHANGES	--	LSM	IPJ	TPM	11/01/2017	D						

X Indicates Latest Revision | Completely Revised | New Page | Information Removed

SDG&E SERVICE STANDARDS & GUIDES

CUSTOMER-OWNED SERVICE & METER POLE
PERMANENT/CLIMBABLE, 0 – 600V

SG204.4

REFERENCE:

a. REFER TO OH645.

b REFER TO SG021.

c REFER TO SG504.5.

TABLE OF CONTENTS

© 1998 - 2020 San Diego Gas & Electric Company. All rights reserved. Removal of this copyright notice without permission is not permitted under law.

REV	CHANGE	DR	BY	DSN	APV	DATE	REV	CHANGE	DR	BY	DSN	APV	DATE
C							F						
B	FORMATTING	EDM	JIK	--	--	12/07/2020	E						
A	EDITORIAL CHANGES	--	LSM	IPJ	TPM	11/01/2017	D						

X Indicates Latest Revision | Completely Revised | New Page | Information Removed

SHEET 5 OF 5

SDG&E SERVICE STANDARDS & GUIDES

CUSTOMER-OWNED SERVICE & METER POLE PERMANENT/CLIMBABLE, 0 – 600V

SG204.5

SCOPE: THIS STANDARD SHOWS AND DESCRIBES THE INSTALLATION OF A CUSTOMER-OWNED TEMPORARY/NON-CLIMBABLE SERVICE AND METER POLE.

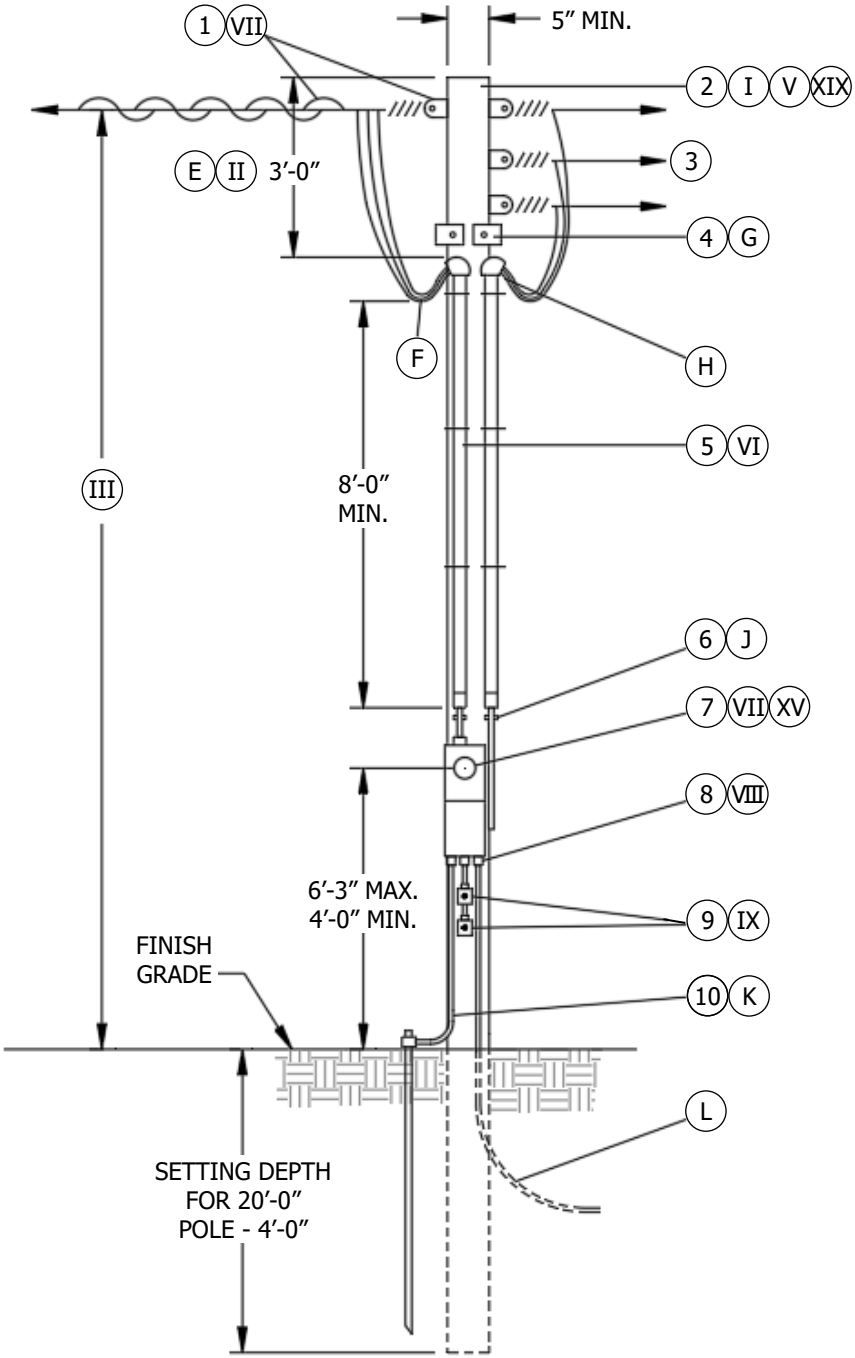

FIGURE 1



METHOD 1
IMPREGNATED FIBER CONDUIT
1/4" MIN. THICKNESS



METHOD 2
WOOD MOULDING
1 1/2" MIN. THICKNESS

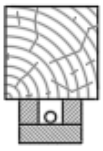

METHOD 3
BOXING OF WOOD (N)
1 1/2" MIN. THICKNESS

FIGURE 2
ALTERNATE METHODS OF COVERING (M)
SERVICE ENTRANCE CONDUITS

TABLE OF CONTENTS

© 1998 - 2020 San Diego Gas & Electric Company. All rights reserved. Removal of this copyright notice without permission is not permitted under law.

REV	CHANGE	DR	BY	DSN	APV	DATE	REV	CHANGE	DR	BY	DSN	APV	DATE
C	FORMATTING	EDM	JIK	--	--	12/07/2020	F						
B	EDITORIAL CHANGES	--	LSM	IPJ	TPM	11/01/2017	E						
A	NO CHANGES-REAFFIRMED	--	JC	TPM	MDJ	08/06/2015	D						

X	Indicates Latest Revision		Completely Revised		New Page		Information Removed

SDG&E ELECTRIC SERVICE STANDARDS & GUIDES

CUSTOMER-OWNED SERVICE & METER POLE
TEMPORARY/NON-CLIMBABLE, 0 – 600V

SG205.1

INSTALLATION:

A. NO SDG&E EMPLOYEE SHALL PLACE A LADDER AGAINST OR OTHERWISE CLIMB THE TEMPORARY POLE FOR THE PURPOSE OF INSTALLING, REPAIRING, OR REMOVING THE ELECTRIC SERVICE CONNECTIONS.

B. TEMPORARY SERVICE OR METER POLES SHALL NOT BE SET AT ANY LOCATION WHERE A CHANGE TO PERMANENT STATUS IS PLANNED.

C. THE TEMPORARY/NON-CLIMBABLE POLE MUST BE LOCATED WITHIN A 20-FOOT RADIUS FROM A ROAD OR OTHER DRIVABLE SURFACE SO SDG&E CAN CONNECT AND MAINTAIN THE SERVICE DROP FROM A BUCKET TRUCK. TRUCK ACCESS MUST BE MAINTAINED DURING THE PERIOD OF TEMPORARY SERVICE. (I)

D. ANY SERVICE OR METER POLES THAT CANNOT BE LOCATED WITHIN THE 20-FOOT RADIUS MUST BE BUILT TO THE STANDARD OF A PERMANENT/CLIMBABLE POLE.

(E) CUSTOMER TO WIRE OUT 3 FEET BELOW TOP OF POLE.

(F) PROVIDE AT LEAST 18 INCHES OF WIRE OUTSIDE OF SERVICE HEAD.

(G) WOOD BLOCKS TO BE BOLTED TO POLE WITH 1/2-INCH GAINS. BLOCK NOT REQUIRED FOR SCHEDULE 40 PVC PLASTIC CONDUIT RUNS.

(H) EXTEND PROTECTIVE COVERING OVER METALLIC CONDUIT TO BOTTOM OF SERVICE HEADS. DO NOT LEAVE CONDUITS EXPOSED.

(J) INSTALL STRAPS BELOW FIBER CONDUITS TO PREVENT SLIPPING.

(K) SERVICE GROUND TO COMPLY TO CALIFORNIA ELECTRIC CODE AND BE MECHANICALLY PROTECTED IN COMPLIANCE WITH G.O. 95 PER ONE OF THE FOLLOWING METHODS:

1. ENCASED IN RIGID STEEL CONDUIT.
2. MINIMUM NO. 8 AWG ARMORED COPPER GROUND WIRE.
3. COVERED BY A MINIMUM OF:
   - HARDWOOD MOULDING (OF OAK OR ROCK ELM) 3/8-INCH IN THICKNESS, OR
   - DOUGLAS FIR MOULDING 1/2-INCH IN THICKNESS, OR
   - RIGID CONDUIT OR RIGID U-SHAPED MOULDING OF A MINIMUM SCHEDULE 40 PVC.

(L) WHEN CUSTOMER'S LOAD CONDUCTORS ARE UNDERGROUND, INSTALL CONDUIT AS INDICATED BY DASHED LINES.

(M) COVERING TO BE STRAPPED TO POLE WITH GALVANIZED TWO-HOLE PIPE STRAPS SPACED NOT TO EXCEED 3 FEET APART.

(N) COVER TO BE NAILED TO THE SIDE PIECES.

BILL OF MATERIALS:

ITEM	DESCRIPTION	QUANTITY	STANDARD PAGE	STOCK NUMBER	DESIGN UNITS
1	HOLDER, WIRE RACK, SERVICE	AS REQ'D	--	--	--
2	TIMBER, SELF-SUPPORTING, 6" X 6" X 20'-0" POLE, ROUND, 20' POLE, SELF-SUPPORTING, METER, 20'-0"	1	--	--	--
3	CONDUCTOR, LOAD, CUSTOMER-OWNED	AS REQ'D	--	--	--
4	WOOD BLOCK, 4" X 4" X 6"	AS REQ'D	--	--	--
5	CONDUIT, PVC, SCHEDULE 40, PLASTIC (SERVICE ENTRANCE – PREFERRED) CONDUIT, IRON, RIGID, GALV. 3/4" MIN. (SERVICE ENTRANCE – ALTERNATE)	AS REQ'D	--	--	--

© 1998 - 2020 San Diego Gas & Electric Company. All rights reserved. Removal of this copyright notice without permission is not permitted under law.

REV	CHANGE	DR	BY	DSN	APV	DATE	REV	CHANGE	DR	BY	DSN	APV	DATE
C	FORMATTING	EDM	JIK	--	--	12/07/2020	F						
B	EDITORIAL CHANGES	--	LSM	IPJ	TPM	11/01/2017	E						
A	NO CHANGES-REAFFIRMED	--	JC	TPM	MDJ	08/06/2015	D						

X Indicates Latest Revision | Completely Revised | New Page | Information Removed

SHEET 2 OF 4

SDG&E ELECTRIC SERVICE STANDARDS & GUIDES

CUSTOMER-OWNED SERVICE & METER POLE
TEMPORARY/NON-CLIMBABLE, 0 – 600V

SG205.2

TABLE OF CONTENTS

BILL OF MATERIALS (CONT'D):

ITEM	DESCRIPTION	QUANTITY	STANDARD PAGE	STOCK NUMBER	DESIGN UNITS
6	STRAP, PIPE	AS REQ'D	--	--	--
7	METER	AS REQ'D	--	--	--
8	SAFETY SOCKET CAN WITH BYPASS TEST FACILITIES	AS REQ'D	--	--	--
9	BOXES AND RECEPTACLES, WEATHERPROOF	AS REQ'D	--	--	--
10	SERVICE GROUND	AS REQ'D	--	--	--

NOTES:

(I) THESE ARE MINIMUM REQUIREMENTS FOR ALL TEMPORARY SERVICES. TEMPORARY SERVICE IS FOR A PERIOD OF ONE YEAR, OR LESS.

(II) **POLE LOCATION:**

a. MAXIMUM LENGTH OF SERVICE DROP SHALL BE 100 FEET. POLE SHALL BE SET NOT MORE THAN 100 FEET, NOR LESS THAN 10 FEET, FROM THE SURFACE OF SDG&E'S SERVICE POLE AND SO LOCATED THAT ALL REQUIRED SERVICE DROP CLEARANCES WILL BE OBTAINED FROM GROUND, BUILDINGS, STRUCTURES, AND OTHER CONDUCTORS ON SDG&E'S POLE INCLUDING FOREIGN COMMUNICATION AND SUPPLY CONDUCTORS. IT ALSO MUST BE LOCATED WITHIN A 20-FOOT RADIUS FROM A ROAD OR OTHER DRIVABLE SURFACE SO SDG&E CAN CONNECT AND MAINTAIN THE SERVICE DROP FROM A BUCKET TRUCK. IN SELECTING THE POLE LOCATION, CONSIDERATION SHOULD BE GIVEN TO PROVIDING ADEQUATE CLEARANCE IN AREAS WHERE:

- CONSTRUCTION EQUIPMENT WILL BE OPERATED.
- CHANGES IN GRADE OF STREETS, DRIVEWAY, AND OTHER LANDS ARE PROPOSED.
- BUILDINGS OR STRUCTURES ARE PROPOSED TO BE ADDED DURING THE PERIOD OF PERMANENT OR TEMPORARY SERVICE.

b. ADEQUATE CLEARANCE SHALL BE PROVIDED, WHETHER OR NOT SUCH AREAS OF CONFLICT OR OBSTRUCTION ARE ON THE PREMISES SERVED.

c. CONTACT SDG&E AT ANY REGIONAL PROJECT MANAGEMENT OFFICE AND REQUEST AN ELECTRIC METER & SERVICE LOCATION FORM. (b)

(III) **SERVICE DROP MINIMUM CLEARANCES:**

TABLE 1

SERVICES DROP MINIMUM CLEARANCES	
LOCATION	**MIN. CLEARANCE (FT)**
AT CENTER OF STREET OR 12'-0" FROM CURB, WHICHEVER IS LESS	18
AT CURB LINE	16
OVER COMMERCIAL OR INDUSTRIAL DRIVEWAYS, PARKING AREAS OR AREAS CAPABLE OF BEING TRAVERSED BY VEHICLES	16
OVER RESIDENTIAL DRIVEWAYS	12 (IV)
OVER AGRICULTURAL AREAS	15
OVER RAILROADS OR FOR OTHER SPECIAL CONDITIONS	CONSULT YOUR SDG&E PROJECT PLANNER

(IV) MAY BE REDUCED TO 10 FEET IF SELF-SUPPORTING CABLE (SSC) SERVICE. SERVICE DROP CABLE (SSC) SHALL BE USED BY SDG&E. THE TYPE OF CONSTRUCTION USED BY THE CUSTOMER IS THEIR OPTION.

(V) WHERE CLEARANCES CANNOT BE OBTAINED WITH THE 20-FOOT POLE SHOWN, A PERMANENT/CLIMBABLE POLE IS REQUIRED.

© 1998 - 2020 San Diego Gas & Electric Company. All rights reserved. Removal of this copyright notice without permission is not permitted under law.

REV	CHANGE	DR	BY	DSN	APV	DATE	REV	CHANGE	DR	BY	DSN	APV	DATE
C	FORMATTING	EDM	JIK	--	--	12/07/2020	F						
B	EDITORIAL CHANGES	--	LSM	IPJ	TPM	11/01/2017	E						
A	NO CHANGES-REAFFIRMED	--	JC	TPM	MDJ	08/06/2015	D						

TABLE OF CONTENTS

NOTES (CONT'D.):

(VI) ALL CONDUIT FITTINGS MUST BE RAINTIGHT. APPROVED WIRE, NOT LESS THAN NO. 8 AWG, SHALL BE USED IN THE SERVICE ENTRANCE CONDUIT. SEE FIGURE 2 FOR RIGID IRON PROTECTIVE COVERING.

(VII) FURNISHED & INSTALLED BY SDG&E.

(VIII) SAFETY SOCKET CAN WITH TEST-BYPASS FACILITIES IS REQUIRED WHEN POLE IS TO BE USED FOR TEMPORARY/ CONSTRUCTION POWER. SERVICE EQUIPMENT AND RECEPTACLES MUST BE RAINTIGHT, PROPERLY RATED FOR THE LOAD TO BE SERVED, AND SHALL BE ADEQUATELY BONDED AND GROUNDED.

(IX) RECEPTACLES USED TO CONNECT PORTABLE TOOLS SHALL BE 3-POLE TYPE FOR SINGLE-PHASE MOTORS AND 4-POLE TYPE FOR THREE-PHASE MOTORS, ONE CONTACT TO BE USED FOR GROUNDING CONNECTION. WHERE MORE THAN ONE VOLTAGE TYPE IS USED, RECEPTACLES SHALL BE NON-INTERCHANGEABLE.

XI. PERMIT AND INSPECTION MUST BE OBTAINED FROM THE GOVERNMENTAL AUTHORITY HAVING JURISDICTION (AHJ) BEFORE SERVICE WILL BE CONNECTED AND A METER SET BY SDG&E.

XII. CONSULT SDG&E FOR SERVICE REQUIREMENTS WHENEVER THREE-PHASE SERVICE IS DESIRED.

XIII. FLOOD LIGHTS, SIGNS, ROPES AND ANY SIMILAR EQUIPMENT SHALL NOT BE ATTACHED TO SERVICE AND METER POLES.

XIV. COVERING OF METALLIC CONDUIT WILL NOT BE REQUIRED ON METAL POLES, PROVIDED THE METAL POLE IS EFFECTIVELY GROUNDED AND PROVIDED ALL METALLIC CONDUITS ARE ADEQUATELY BONDED TO THE METAL POLE WITH APPROVED CLAMPS OR CONNECTORS.

(XV) ALL METER POLES MUST HAVE THE NUMERIC PORTION OF THE STREET ADDRESS FIRMLY ATTACHED AND FACING THE STREET OR DRIVABLE SURFACE. PLASTIC OR METALLIC NUMBERS OF THE TYPE USED FOR HOUSE ADDRESSES ARE ACCEPTABLE.

XVI. A TELEPHONE AND/OR CABLE TV SERVICE DROP MAY ATTACH TO A METER POLE PROVIDED:

a. THE ATTACHMENT IS OUTSIDE THE CLIMBING SPACE,

b. A MINIMUM RADIAL CLEARANCE OF 12 INCHES IS MAINTAINED FROM ANY PORTION OF THE DRIP LOOP, AND

c. IT MEETS ALL G.O. 95 REQUIREMENTS.

XVII. REQUIRED WORKING SPACE IN FRONT OF THE METER PANEL: A MINIMUM 3-FOOT BY 3-FOOT CLEAR AND LEVEL WORKING SPACE IS REQUIRED IN FRONT OF THE METER PANEL MEASURED FROM FACE OF PANEL.

XVIII. TO MAINTAIN SAFE, CLEAR AND LEVEL WORKING SPACE IN FRONT OF NEW OR EXISTING NON-RESIDENTIAL METER AND SERVICE EQUIPMENT, A CONCRETE SLAB IS REQUIRED FOR THE FULL WORKING SPACE. (c)

(XIX) SELF-SUPPORTING METER POLE SHALL MEET EQUIVALENT STRENGTH REQUIREMENTS.

REFERENCE:

a. REFER TO OH646 TEMPORARY SERVICE AND METER POLES.

(b) REFER TO SG021.

(c) REFER TO SG504.5.

TABLE OF CONTENTS

© 1998 - 2020 San Diego Gas & Electric Company. All rights reserved. Removal of this copyright notice without permission is not permitted under law.

REV	CHANGE	DR	BY	DSN	APV	DATE	REV	CHANGE	DR	BY	DSN	APV	DATE
C	FORMATTING	EDM	JIK	--	--	12/07/2020	F						
B	EDITORIAL CHANGES	--	LSM	IPJ	TPM	11/01/2017	E						
A	NO CHANGES-REAFFIRMED	--	JC	TPM	MDJ	08/06/2015	D						

X Indicates Latest Revision | Completely Revised | New Page | Information Removed

SDG&E ELECTRIC SERVICE STANDARDS & GUIDES

CUSTOMER-OWNED SERVICE & METER POLE
TEMPORARY/NON-CLIMBABLE, 0 – 600V

SG205.4

SCOPE: THIS SERVICE GUIDE DESCRIBES PERMANENT OR TEMPORARY INSTALLATION OF CUSTOMER-OWNED SERVICE OR METER POLE WITH MULTIPLE METERS.

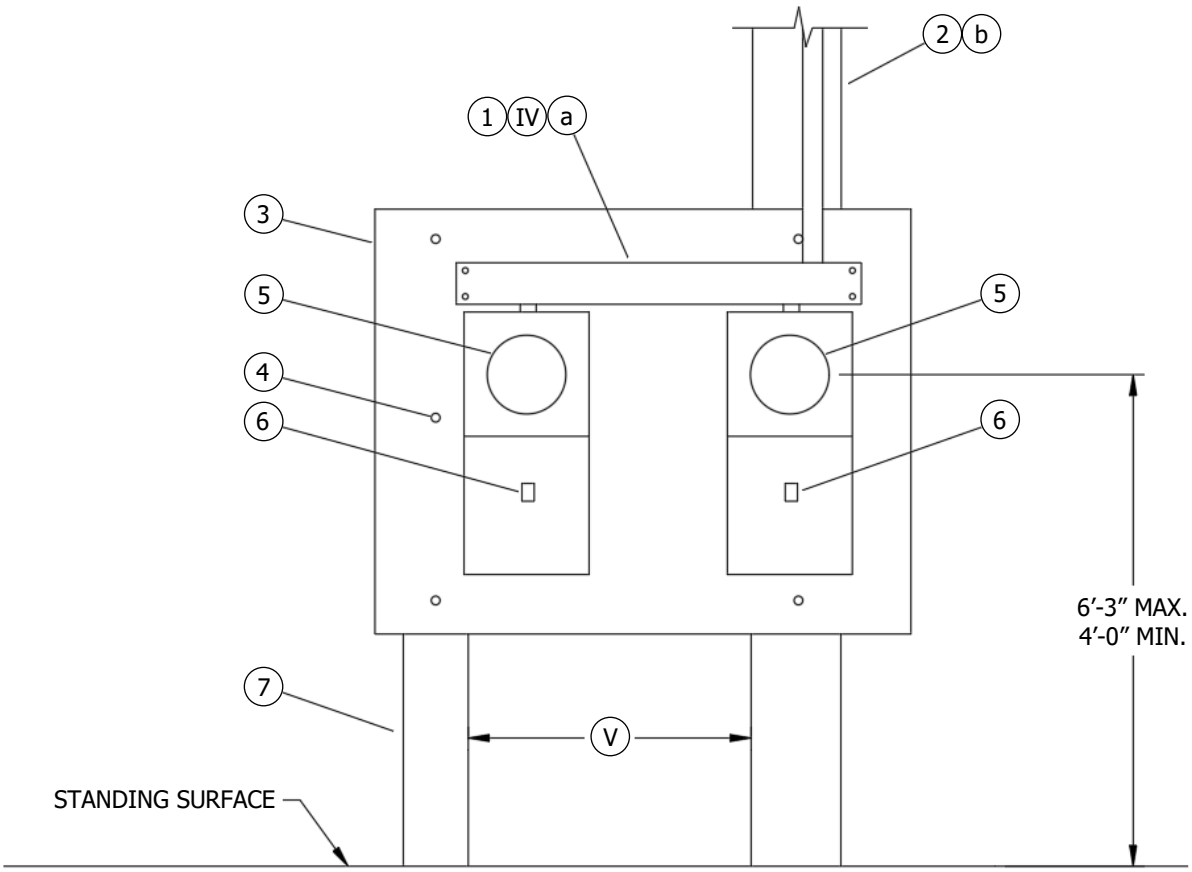

FIGURE 1

INSTALLATION: NONE

BILL OF MATERIALS:

ITEM	DESCRIPTION	QUANTITY	STANDARD PAGE	STOCK NUMBER	DESIGN UNITS
1	LINE GUTTER, SEALABLE	AS REQ'D	--	--	--
2	POLE, SERVICE & METER, APPROVED	AS REQ'D	--	--	--
3	BACKBOARD, PLYWOOD, EXTERIOR GRADE, 3/4" MIN	AS REQ'D	--	--	--
4	THRU BOLT, NUT & BOLT ASSY, 1/2" (TYP)	AS REQ'D	--	--	--
5	METER	AS REQ'D	--	--	--
6	METER SERVICE DISCONNECTS	AS REQ'D	--	--	--
7	TREATED WOOD, 4" X 4"	AS REQ'D	--	--	--

© 1998 - 2020 San Diego Gas & Electric Company. All rights reserved. Removal of this copyright notice without permission is not permitted under law.

REV	CHANGE	DR	BY	DSN	APV	DATE	REV	CHANGE	DR	BY	DSN	APV	DATE
C	FORMATTING	EDM	JIK	--	--	12/07/2020	F						
B	EDITORIAL CHANGES	--	LSM	IPJ	TPM	11/01/2017	E						
A	NO CHANGES-REAFFIRMED	--	JC	TPM	MDJ	08/06/2015	D						

X Indicates Latest Revision | Completely Revised | New Page | Information Removed

TABLE OF CONTENTS

NOTES:

I. A LINE GUTTER IS REQUIRED WHEN SERVING FOUR OR MORE METERS. A SECOND RISER FOR TWO METERS, OR A THIRD RISER FOR THREE METERS, MAY BE INSTALLED IN PLACE OF A LINE GUTTER. VERIFY METHOD OF INSTALLATION WITH THE SDG&E PLANNER AND THE GOVERNMENTAL AUTHORITY HAVING JURISDICTION (AHJ) PRIOR TO START OF CONSTRUCTION.

II. THIS APPLICATION IS LIMITED TO A SINGLE-PHASE OR THREE-PHASE SERVICE, 600 AMPS MAXIMUM. A MAIN SWITCH IS REQUIRED AHEAD OF MORE THAN 6 METER SERVICE DISCONNECTS. THERE IS NO LIMIT TO THE NUMBER OF METERS THAT CAN BE INSTALLED PER THIS STANDARD.

III. WHEN THE INSTALLATION IS PERMANENT, NO RISERS, WIRE, OR EQUIPMENT ARE PERMITTED ON THE REAR HALF OF THE METER POLE IN ORDER TO PROVIDE THE LEGALLY REQUIRED CLIMBING SPACE.

(IV) BUS DUCT OR CABLE MAY BE USED FOR SERVICE ENTRANCE CONDUCTORS IN LINE GUTTER.

(V) DISTANCE BETWEEN POLE AND POST AS REQUIRED.

REFERENCE:

(a) REFER TO SG503 FOR SEALING REQUIREMENTS.

(b) REFER TO SG204 OR SG205, WHICHEVER IS APPLICABLE.

TABLE OF CONTENTS

© 1998 - 2020 San Diego Gas & Electric Company. All rights reserved. Removal of this copyright notice without permission is not permitted under law.

REV	CHANGE	DR	BY	DSN	APV	DATE	REV	CHANGE	DR	BY	DSN	APV	DATE
C	FORMATTING	EDM	JIK	--	--	12/07/2020	F						
B	EDITORIAL CHANGES	--	LSM	IPJ	TPM	11/01/2017	E						
A	NO CHANGES-REAFFIRMED	--	JC	TPM	MDJ	08/06/2015	D						

	X	Indicates Latest Revision		Completely Revised		New Page		Information Removed

SDG&E ELECTRIC SERVICE STANDARDS & GUIDES

SHEET 2 OF 2

CUSTOMER-OWNED SERVICE & METER POLE WITH MULTIPLE METERS PERMANENT OR TEMPORARY INSTALLATION

SG206.2

SCOPE: THIS SERVICE GUIDE DESCRIBES THE INSTALLATION OF CUSTOMER OWNED PERMANENT OR TEMPORARY UNDERGROUND SERVICE WITH MULTIPLE METERS.

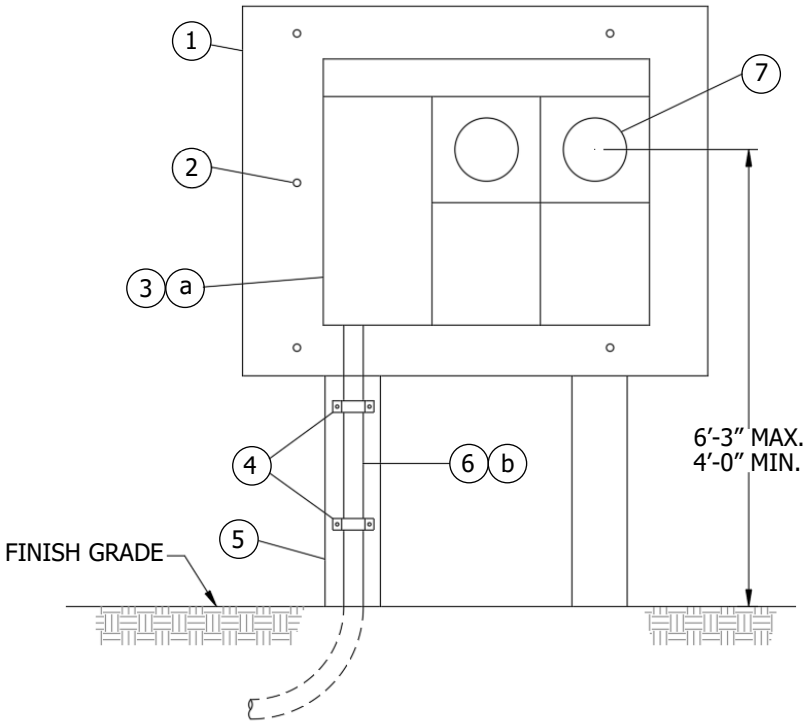

FIGURE 1

TABLE OF CONTENTS

INSTALLATION: NONE

BILL OF MATERIALS:

ITEM	DESCRIPTION	QUANTITY	STANDARD PAGE	STOCK NUMBER	DESIGN UNITS
1	PLYWOOD BACKBOARD, EXTERIOR GRADE, 3/4" MIN.	AS REQ'D	--	--	--
2	THRU BOLT, NUT & BOLT ASSY, 1/2" (TYP)	AS REQ'D	--	--	--
3	PULL CAN	AS REQ'D	--	--	--
4	STRAP, PIPE	AS REQ'D	--	--	--
5	WOOD, TREATED, 4" X 4"	AS REQ'D	--	--	--
6	CONDUIT, PVC, SCHEDULE 80	AS REQ'D	--	--	--
7	METER	AS REQ'D	--	--	--

NOTES:

I. CUSTOMER SHALL FURNISH, INSTALL, OWN AND MAINTAIN AT THEIR EXPENSE:
   a. POST, TERMINATING AND METER ENCLOSURE, TRENCH, CONDUIT AND CONDUIT RISER TO SDG&E'S EQUIPMENT, OR AS DIRECTED BY THE SDG&E INSPECTOR.
   b. PROVIDE SHADE MATERIAL AND BACKFILL TO FINISHED GRADE AFTER CONDUIT HAS BEEN INSTALLED, INSPECTED, AND APPROVED BY THE SDG&E INSPECTOR.

REFERENCE:

a REFER TO SECTION 700; ELECTRIC TERMINATING ENCLOSURES.

b REFER TO SG309; UNDERGROUND ELECTRIC SERVICE LATERAL CONDUIT REQUIREMENTS.

© 1998 - 2020 San Diego Gas & Electric Company. All rights reserved. Removal of this copyright notice without permission is not permitted under law.

REV	CHANGE	DR	BY	DSN	APV	DATE	REV	CHANGE	DR	BY	DSN	APV	DATE
C	FORMATTING	EDM	JIK	--	--	12/07/2020	F						
B	EDITORIAL CHANGES	--	LSM	IPJ	TPM	11/01/2017	E						
A	NO CHANGES-REAFFIRMED	--	JC	TPM	MDJ	08/06/2015	D						

X Indicates Latest Revision | Completely Revised | New Page | Information Removed

SDG&E ELECTRIC SERVICE STANDARDS & GUIDES

SHEET 1 OF 1

CUSTOMER-OWNED SERVICE WITH MULTIPLE METERS FOR UNDERGROUND PERMANENT OR TEMPORARY INSTALLATION

SG207.1

SCOPE: THIS SERVICE GUIDE DESCRIBES THE INSTALLATION OF TEMPORARY SERVICE FROM SDG&E HANDHOLES TO CUSTOMER-OWNED SERVICE AND METERS.

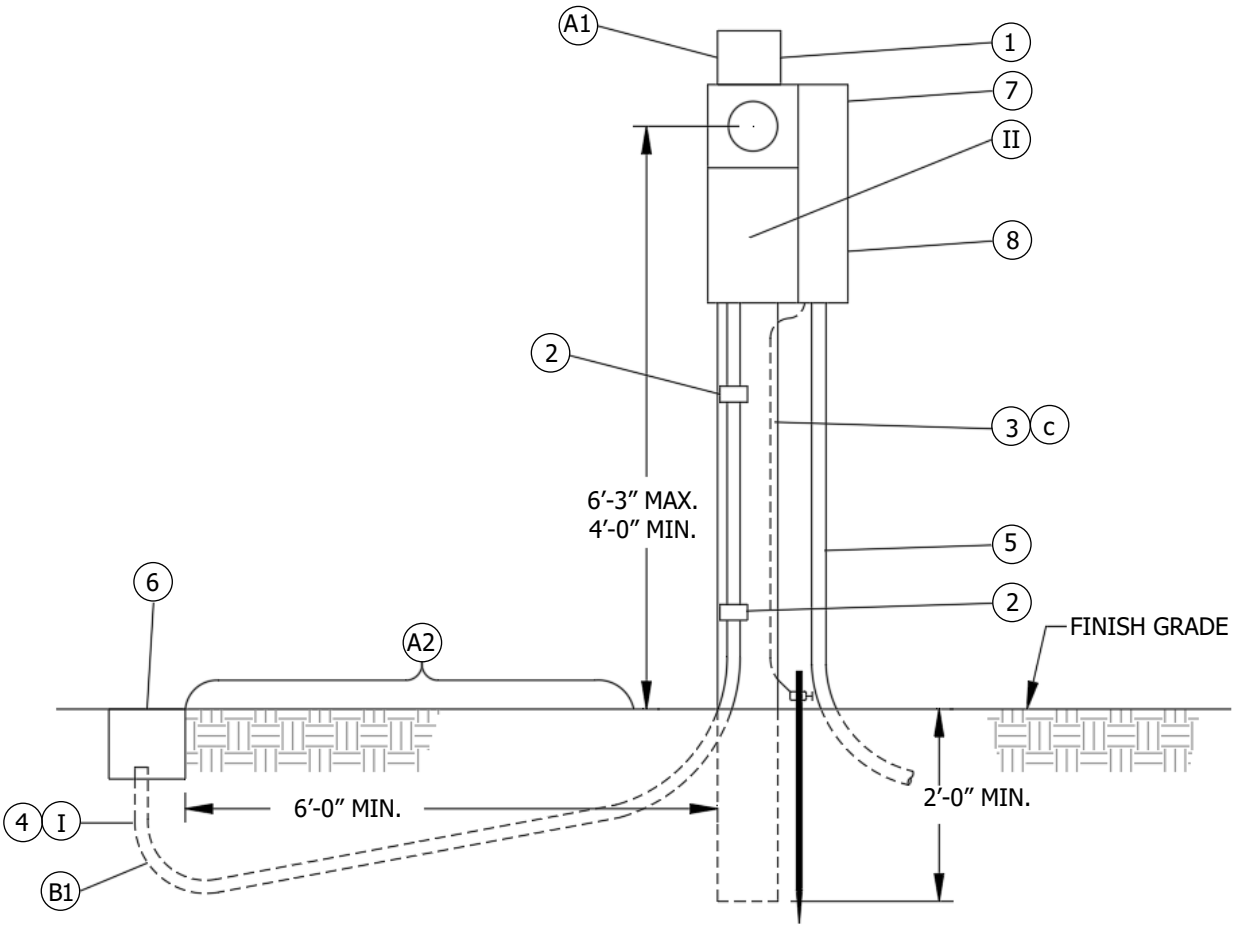

FIGURE 1

INSTALLATION:

A. CUSTOMER SHALL FURNISH, INSTALL, OWN AND MAINTAIN AT THEIR EXPENSE:

(1) POST, TERMINATING AND METER ENCLOSURE, TRENCH, CONDUIT AND CONDUIT RISER TO SDG&E'S SECONDARY HANDHOLE AS ILLUSTRATED ABOVE.

(2) PROVIDE SHADE MATERIAL AND BACKFILL TO FINISHED GRADE AFTER CONDUIT HAS BEEN INSTALLED, INSPECTED AND APPROVED BY SDG&E'S INSPECTOR.

B. SDG&E WILL FURNISH AND INSTALL AT CUSTOMER'S EXPENSE:

(1) SERVICE LATERAL CONDUCTORS FROM CUSTOMER'S METER PANEL ON POST TO SDG&E'S SECONDARY HANDHOLE AND REMOVE SERVICE LATERAL CONDUCTORS AT DISCONTINUANCE OF SERVICE.

C. SERVICE AND METER INSTALLATION SHALL COMPLY WITH LOCAL CODES AND STATE OF CALIFORNIA DIVISION OF INDUSTRIAL SAFETY REGULATIONS, AND SHALL BE SUBJECT TO INSPECTION CLEARANCE BY THE GOVERNMENTAL AUTHORITY HAVING JURISDICTION (AHJ).

© 1998 - 2020 San Diego Gas & Electric Company. All rights reserved. Removal of this copyright notice without permission is not permitted under law.

REV	CHANGE	DR	BY	DSN	APV	DATE	REV	CHANGE	DR	BY	DSN	APV	DATE
C	FORMATTING	EDM	JIK	--	--	12/07/2020	F						
B	EDITORIAL CHANGES	--	LSM	IPJ	TPM	11/01/2017	E						
A	EDITORIAL CHANGES	--	JC	BRB	MDJ	08/06/2015	D						

TABLE OF CONTENTS

BILL OF MATERIALS:

ITEM	DESCRIPTION	QUANTITY	STANDARD PAGE	STOCK NUMBER	DESIGN UNITS
1	POST, 4" X 4" MIN.	AS REQ'D	--	--	--
2	STRAP, PIPE	AS REQ'D	--	--	--
3	SERVICE GROUND	AS REQ'D	--	--	--
4	CONDUIT, BEND AND RISERS	AS REQ'D	--	--	--
5	CONDUCTOR, LOAD, CUSTOMER OWNED	AS REQ'D	--	--	--
6	HANDHOLE, SECONDARY, SDG&E OWNED	AS REQ'D	--	--	--
7	SAFETY SOCKET CAN WITH TEST-BYPASS FACILITIES	AS REQ'D	--	--	--
8	MAIN	AS REQ'D	--	--	--

NOTES:

(I) FOR SINGLE-PHASE, 2" CONDUIT WITH 2'-0" MIN. RADIUS REQUIRED. FOR THREE-PHASE, 3" CONDUIT WITH 3'-0" RADIUS REQUIRED. (a)

(II) REQUIRED FOR ALL TEMPORARY SERVICE UP TO 200A. (b)

III. SERVICE METHOD SHOWN IS FOR A MAXIMUM OF 200A. FOR GREATER CAPACITY, CONTACT THE SDG&E PLANNER.

IV. CONTACT THE PLANNER AT THE NEAREST SDG&E REGIONAL PROJECT MANAGEMENT OFFICE FOR AN ELECTRIC METER AND SERVICE LOCATION FORM AND NEGOTIATION OF TEMPORARY SERVICE CHARGES. (d)

V. WHERE THE CUSTOMER PROPOSES TO EXTEND TEMPORARY OVERHEAD CONDUCTORS VIA CUSTOMER-OWNED LINES, A 6" X 6" X 20'-0" MINIMUM SELF-SUPPORTING POLE SHALL BE SUBSTITUTED FOR THE 4" X 4" MINIMUM POST SHOWN.

REFERENCE:

(a) REFER TO SG309 NOTE C.

(b) REFER TO SG210 FOR TSPB AND SG513.1 FOR TSPB EXCEPTION.

(c) SERVICE GROUND TO COMPLY WITH CALIFORNIA ELECTRICAL CODE.

(d) REFER TO SG021.

TABLE OF CONTENTS

© 1998 - 2020 San Diego Gas & Electric Company. All rights reserved. Removal of this copyright notice without permission is not permitted under law.

REV	CHANGE	DR	BY	DSN	APV	DATE	REV	CHANGE	DR	BY	DSN	APV	DATE
C	FORMATTING	EDM	JIK	--	--	12/07/2020	F						
B	EDITORIAL CHANGES	--	LSM	IPJ	TPM	11/01/2017	E						
A	EDITORIAL CHANGES	--	JC	BRB	MDJ	8/06/2015	D						

X Indicates Latest Revision | Completely Revised | New Page | Information Removed

SDG&E ELECTRIC SERVICE STANDARDS & GUIDES

TEMPORARY SERVICE FROM SDG&E HANDHOLE TO CUSTOMER-OWNED SERVICE & METER INSTALLATION

SCOPE: THIS SERVICE GUIDE DESCRIBES INSTALLATION OF TEMPORARY SERVICE FROM AN SDG&E POLE OR PADMOUNT TRANSFORMER TO CUSTOMER-OWNED SERVICE AND METER.

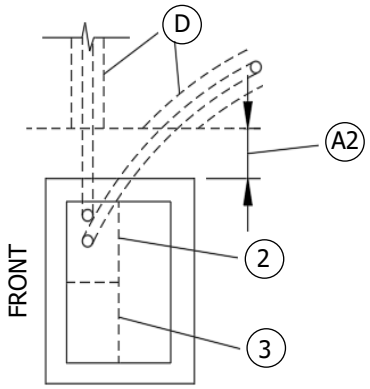

FIGURE 1
PLAN VIEW

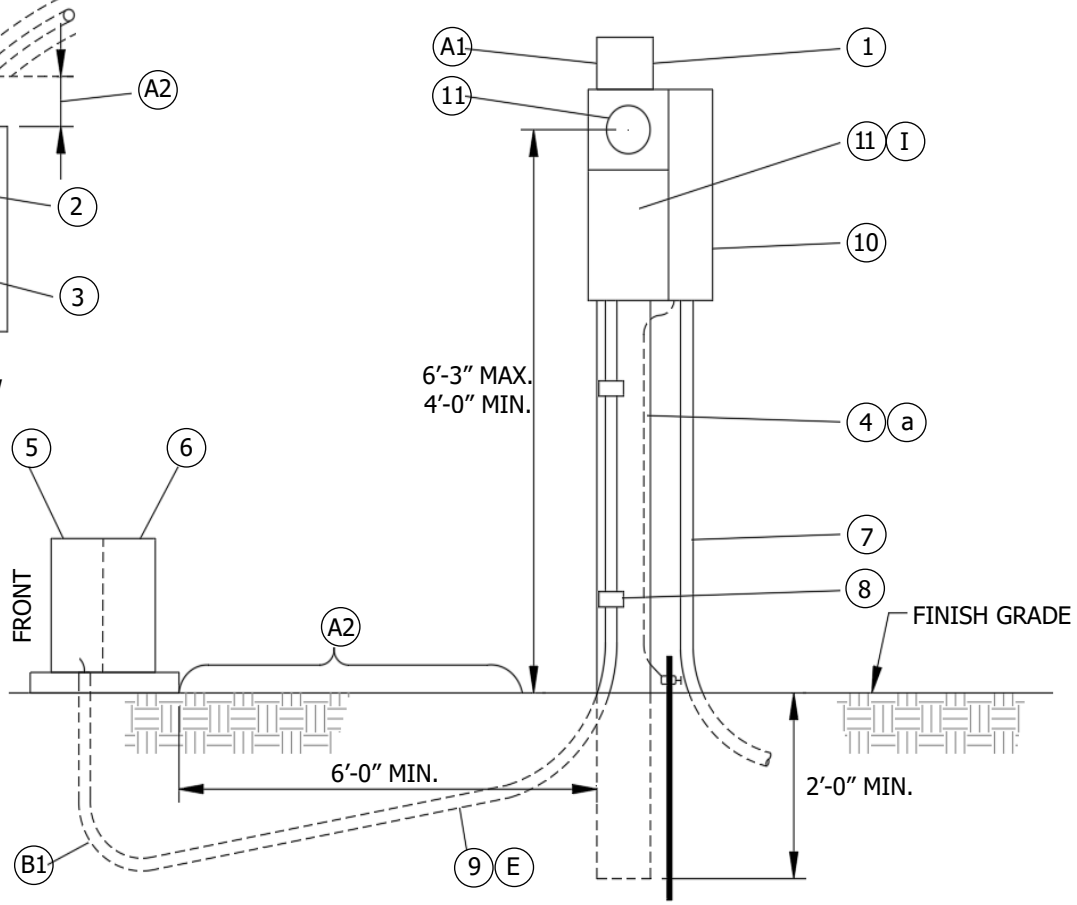

FIGURE 1
SIDE ELEVATION

INSTALLATION:

A. CUSTOMER SHALL FURNISH, INSTALL, OWN AND MAINTAIN AT THEIR EXPENSE:

(1) POST, SAFETY SOCKET METER CAN, TRENCH, CONDUIT AND CONDUIT RISER AS ILLUSTRATED ABOVE.

(2) SHADING MATERIAL AND BACKFILL TO FINISHED GRADE AFTER CONDUIT HAS BEEN INSTALLED, INSPECTED AND APPROVED BY SDG&E'S INSPECTOR.

B. SDG&E WILL FURNISH AND INSTALL AT CUSTOMER'S EXPENSE:

(1) SERVICE LATERAL CONDUCTORS FROM CUSTOMER'S METER PANEL ON POST TO SDG&E'S POLE OR PADMOUNT TRANSFORMER. SDG&E WILL REMOVE SERVICE LATERAL CONDUCTORS AT DISCONTINUANCE OF SERVICE.

C. THE SERVICE AND METER INSTALLATION SHALL COMPLY WITH LOCAL CODES AND STATE OF CALIFORNIA DIVISION OF INDUSTRIAL SAFETY REGULATIONS, AND SHALL BE SUBJECT TO INSPECTION CLEARANCE BY THE GOVERNMENTAL AUTHORITY HAVING JURISDICTION (AHJ).

© 1998 - 2020 San Diego Gas & Electric Company. All rights reserved. Removal of this copyright notice without permission is not permitted under law.

REV	CHANGE	DR	BY	DSN	APV	DATE	REV	CHANGE	DR	BY	DSN	APV	DATE
C	FORMATTING	EDM	JIK	--	--	12/07/2020	F						
B	EDITORIAL CHANGES	--	LSM	IPJ	TPM	11/01/2017	E						
A	EDITORIAL CHANGES	--	JC	BRB	MDJ	08/06/2015	D						

X	Indicates Latest Revision		Completely Revised		New Page		Information Removed

TABLE OF CONTENTS

(D) ALTERNATE DIRECTION OF SERVICE TRENCH. TERMINATE TRENCH AT LOCATION THAT WILL PERMIT SERVICE TO ENTER SIDE OF SECONDARY COMPARTMENT.

(E) 24-INCH MINIMUM RADIUS BEND REQUIRED.

BILL OF MATERIALS:

ITEM	DESCRIPTION	QUANTITY	STANDARD PAGE	STOCK NUMBER	DESIGN UNITS
1	POST, 4" X 4" MIN.	AS REQ'D	--	--	--
2	DEADFRONT SINGLE-PHASE PADMOUNT TRANSFORMER SECONDARY AREA	AS REQ'D	--	--	--
3	LIVEFRONT OR THREE-PHASE PADMOUNT TRANSFORMER SECONDARY AREA	AS REQ'D	--	--	--
4	SERVICE GROUND	AS REQ'D	--	--	--
5	COMPARTMENT, SECONDARY	AS REQ'D	--	--	--
6	PADMOUNT TRANSFORMER OR POLE, SDG&E-OWNED	AS REQ'D	--	--	--
7	CONDUCTOR, LOAD, CUSTOMER-OWNED	AS REQ'D	--	--	--
8	STRAP, PIPE	AS REQ'D	--	--	--
9	CONDUIT, 2", BEND AND RISER	AS REQ'D	--	--	--
10	MAIN	1	--	--	--
11	SAFETY SOCKET CAN WITH TEST BY-PASS FACILITIES	AS REQ'D	--	--	--

NOTES:

(I) SAFETY SOCKET CAN WITH TEST BY-PASS FACILITIES REQUIRED FOR ALL TEMPORARY SERVICES.

II. THE SERVICE METHOD SHOWN IS FOR A MAXIMUM OF 200 AMPS. FOR GREATER CAPACITY, CONTACT THE SDG&E PLANNER.

III. WHERE THE CUSTOMER PROPOSES TO EXTEND TEMPORARY OVERHEAD CONDUCTORS VIA CUSTOMER-OWNED LINES, A 6-INCH X 6-INCH X 20-FOOT MINIMUM SELF-SUPPORTING POLE SHALL BE SUBSTITUTED FOR THE 4-INCH X 4-INCH MINIMUM POST SHOWN.

IV. CONTACT THE PLANNER AT THE NEAREST SDG&E REGIONAL PROJECT MANAGEMENT OFFICE FOR AN ELECTRIC METER AND SERVICE LOCATION FORM AND NEGOTIATION OF TEMPORARY SERVICE CHARGES. (b)

REFERENCE:

(a) SERVICE GROUND TO COMPLY WITH CALIFORNIA ELECTRICAL CODE.

(b) REFER TO SG021.

c. WHEN SERVICE IS PROVIDED FROM AN OVERHEAD POLE, SEE SG315 FOR CABLE POLE RISER INSTALLATION.

TABLE OF CONTENTS

© 1998 - 2020 San Diego Gas & Electric Company. All rights reserved. Removal of this copyright notice without permission is not permitted under law.

REV	CHANGE	DR	BY	DSN	APV	DATE	REV	CHANGE	DR	BY	DSN	APV	DATE
C	FORMATTING	EDM	JIK	--	--	12/07/2020	F						
B	EDITORIAL CHANGES	--	LSM	IPJ	TPM	11/01/2017	E						
A	EDITORIAL CHANGES	--	JC	BRB	MDJ	08/06/2015	D						

X Indicates Latest Revision | Completely Revised | New Page | Information Removed

SDG&E ELECTRIC SERVICE STANDARDS & GUIDES

TEMPORARY SERVICE FROM SDG&E POLE OR PADMOUNT TRANSFORMER TO CUSTOMER-OWNED SERVICE & METER INSTALLATION

SCOPE: THIS STANDARD DESCRIBES THE INSTALLATION OF TEMPORARY SERVICE TO PERMANENT SERVICE & METERING EQUIPMENT (TSPB).

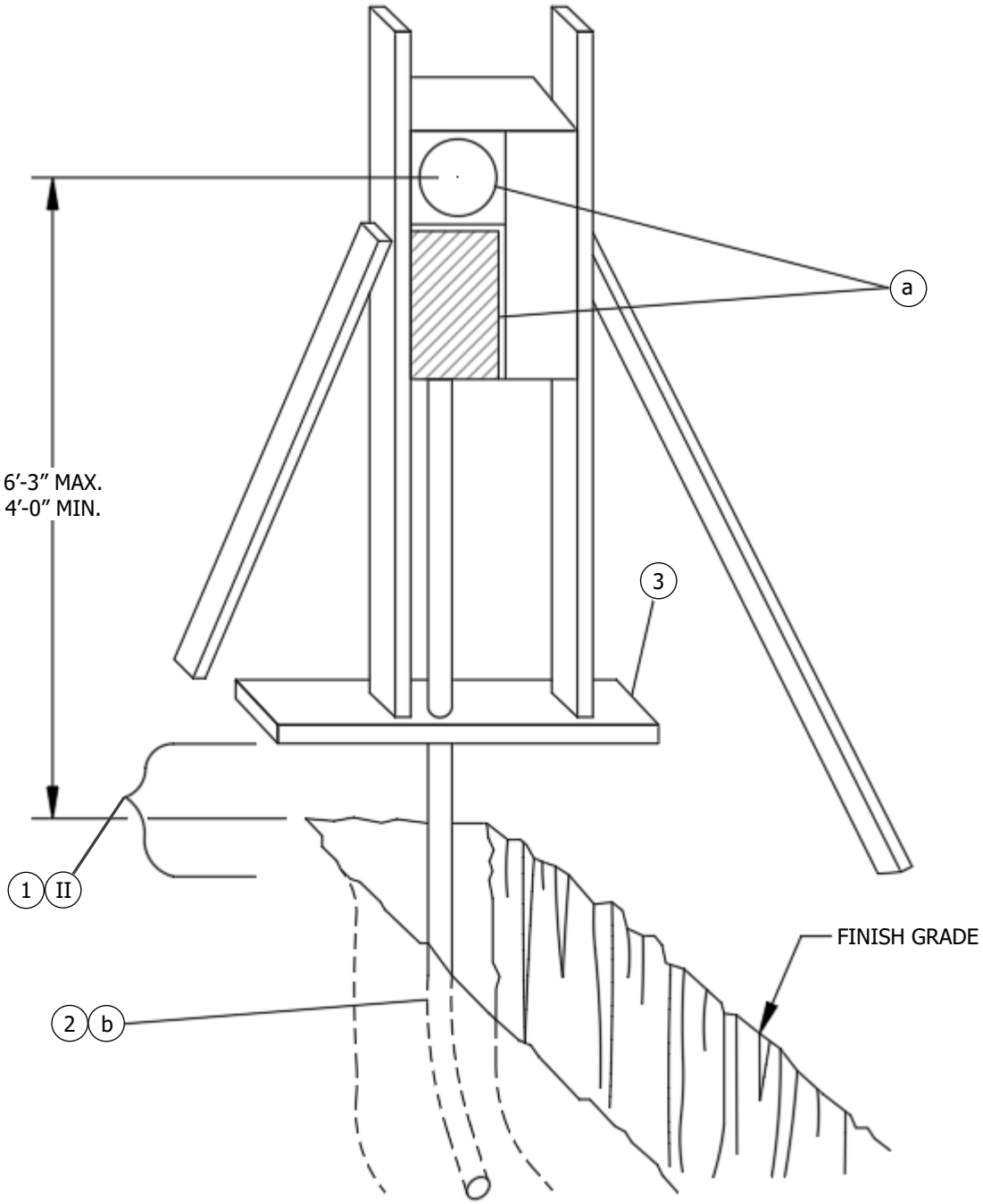

FIGURE 1
TSPB (TEMPORARY SERVICE PERMANENT BASE)

© 1998 - 2020 San Diego Gas & Electric Company. All rights reserved. Removal of this copyright notice without permission is not permitted under law.

REV	CHANGE	DR	BY	DSN	APV	DATE	REV	CHANGE	DR	BY	DSN	APV	DATE
C	FORMATTING	EDM	JIK	--	--	12/07/2020	F						
B	EDITORIAL CHANGES	--	LSM	IPJ	TPM	11/01/2017	E						
A	NO CHANGES-REAFFIRMED	--	JC	BRB	MDJ	08/06/2015	D						

X	Indicates Latest Revision		Completely Revised		New Page		Information Removed	

SDG&E ELECTRIC SERVICE STANDARDS & GUIDES

SHEET 1 OF 2

TEMPORARY SERVICE TO PERMANENT SERVICE & METERING EQUIPMENT (TSPB)

SG210.1

TABLE OF CONTENTS

INSTALLATION:

A. FOUNDATION TO BE INSTALLED PRIOR TO SERVICE CONNECTION AND METER SET.

B. THE TERMINATING ENCLOSURE SHALL BE MOUNTED ON PERMANENT STUDDING OR ON TEMPORARY 2" X 4" SUPPORTING STRUCTURE. BRACES SHOWN, AND ANY ADDITIONAL BRACES, SHALL BE PROVIDED AS NECESSARY TO SUBSTANTIALLY SUPPORT THE PERMANENT FACILITIES. SERVICE CONNECTION AND METER SET IS SUBJECT TO THE AHJ'S (AUTHORITIES HAVING JURISDICTION) AND SDG&E'S APPROVAL OF THE SUITABILITY OF THE SUPPORTING STRUCTURE AND BRACING.

C. SERVICE LATERAL CONDUIT TO BE CONNECTED TO TERMINATING ENCLOSURE WITH HUB OR SUPPORTED WITH REINFORCEMENT PLATE TO PREVENT BREAK AWAY OF KNOCKOUT RINGS.

D. BONDING AND GROUNDING PROVISIONS SHALL BE INSTALLED PRIOR TO INSTALLATION OF UNDERGROUND SERVICE LATERAL CONDUCTORS. (c)

BILL OF MATERIALS:

ITEM	DESCRIPTION	QUANTITY	STANDARD PAGE	STOCK NUMBER	DESIGN UNITS
1	FOUNDATION AREA	AS REQ'D	--	--	--
2	CONDUIT, SERVICE, PERMANENT	AS REQ'D	--	--	--
3	SILL	AS REQ'D	--	--	--

NOTES:

I. RESIDENTIAL METER PANEL IS ACCEPTABLE FOR USE IN TSPB APPLICATIONS.

(II) VARIABLE FOUNDATION DETAILS NOT SHOWN.

III. THIS INSTALLATION IS SUBJECT TO THE APPROVAL OF THE GOVERNMENTAL AUTHORITY HAVING JURISDICTION (AHJ).

IV. TEMPORARY SERVICE SUPPLIED IN ACCORDANCE WITH THIS STANDARD IS SUBJECT TO THE CONTINUING APPROVAL OF THE AHJ THROUGHOUT THE BUILDING CONSTRUCTION PERIOD.

V. USE OF THIS SERVICE IS NOT INTENDED FOR DWELLING OR COMMERCIAL PURPOSES PRIOR TO FINAL INSPECTION CLEARANCE. SERVICE IS SUBJECT TO DISCONNECTION AND METER REMOVAL IF USED FOR OTHER THAN TEMPORARY CONSTRUCTION POWER.

VI. THE UTILITY WILL FURNISH AND INSTALL THE SERVICE LATERAL CONDUCTORS AND CONNECT DIRECTLY TO THE LANDING LUGS.

VII. CONTACT THE PLANNER AT THE NEAREST SDG&E REGIONAL PROJECT MANAGEMENT OFFICE TO THE JOB LOCATION FOR AN ELECTRIC METER AND SERVICE LOCATION FORM. (d)

VIII. TEMPORARY SERVICE ON A PERMANENT BASE (TSPB) IS NOT PERMITTED WHEN THE METER PANEL IS TO BE LOCATED IN A METER CABINET, METER ROOM OR NON-RESIDENTIAL INSTALLATIONS.

REFERENCE:

(a) SEE SECTION 500 FOR APPROVED COMBINATION PULL AND METER CANS.

(b) REFER TO SG309 FOR CUSTOMER-OWNED RIGID SERVICE CONDUIT REQUIREMENTS.

(c) REFER TO CALIFORNIA ELECTRICAL CODE.

(d) SEE SG021.

e. FOR TRENCH INFORMATION, SEE UG3370 FOR SAN DIEGO COUNTY AND UG3371 FOR ORANGE COUNTY.

TABLE OF CONTENTS

© 1998 - 2020 San Diego Gas & Electric Company. All rights reserved. Removal of this copyright notice without permission is not permitted under law.

REV	CHANGE	DR	BY	DSN	APV	DATE	REV	CHANGE	DR	BY	DSN	APV	DATE
C	FORMATTING	EDM	JIK	--	--	12/07/2020	F						
B	EDITORIAL CHANGES	--	LSM	IPJ	TPM	11/01/2017	E						
A	NO CHANGES-REAFFIRMED	--	JC	BRB	MDJ	08/06/2015	D						

300 - UNDERGROUND ELECTRIC SERVICE

300 - UNDERGROUND ELECTRIC SERVICE

PAGE #	SUBJECT
302	ALPHABETICAL SUBJECT INDEX
303	CUSTOMER AND UTILITY RESPONSIBILITIES FOR UNDERGROUND INSTALLATION TO REPLACE OVERHEAD ELECTRIC SERVICE
304	ACCEPTABLE METHODS FOR RESIDENTIAL ELECTRIC SERVICE CONVERSION
305	OVERHEAD TO UNDERGROUND SERVICE CONVERSION – CONTRACTOR AND SDG&E CREW COORDINATION METHODS
306	FIELD HEATING SERVICE LATERAL CONDUITS
307	SAFETY OVERFLOW FITTING FOR INDOOR USE ONLY ON WALL-MOUNTED SERVICE EQUIPMENT
309	UNDERGROUND ELECTRIC SERVICE LATERAL CONDUIT REQUIREMENTS
310	UNDERGROUND SERVICE FROM OVERHEAD FACILITIES (LOW VOLTAGE)
311	PRIMARY AND SECONDARY VOLTAGE UNDERGROUND SYSTEM ON CUSTOMER PREMISES FROM CABLE POLE
312	CUSTOMER-OWNED CONDUIT BEND AND RISER AT BUILDING
313	STANDARD JOINT CABLE POLE RISER POSITION USING LADDER ARM BRACKE AND SINGLE RISER
314	CABLE POLE QUADRANT AND RISER IDENTIFICATION
315	UNDERGROUND ELECTRIC CABLE POLE RISER INSTALLATION
316	UNDERGROUND ELECTRIC SERVICE LATERAL GASOLINE DISPENSING AND SERVICE STATIONS
317	UNDERGROUND ELECTRIC SERVICE LATERAL AND METER PANELS IN PROXIMITY TO PROPANE TANKS
318	UNDERGROUND ELECTRIC SERVICE NEAR GASOLINE DISPENSING EQUIPMENT AND PROPANE TANKS
319	UNDERGROUND ELECTRIC SERVICE LATERAL FROM LEACH FIELDS
320	EXISTING SIDA SERVICE FOR PANEL REWIRES, UPGRADES, AND RELOCATIONS

© 1998 – 2021 San Diego Gas & Electric Company. All rights reserved. Removal of this copyright notice without permission is not permitted under law.

REV	CHANGE	DR	BY	DSN	APV	DATE	REV	CHANGE	DR	BY	DSN	APV	DATE
C	SG308 MOVED TO FMO	EDM	JIK	IPJ	CZH	02/08/2021	F						
B	ADDED SG 320	-	CSE	IPJ	CZH	04/13/2020	E						
A	NEW PAGE	-	LSM	LSM	TPM	11/01/2017	D	FORMATTING	EDM	JIK	-	-	07/19/2021

SUBJECT **PAGE**

ACCEPTABLE METHODS FOR RESIDENTIAL ELECTRIC SERVICE CONVERSION ..... 304.1 – 304.2

CABLE POLE QUADRANT AND RISER IDENTIFICATION ..... 314.1 – 314.3

CABLE POLE RISER INSTALLATION ..... 315.1 – 315.5

CABLE POLE RISER POSITION USING LADDER ARM BRACKET AND SINGLE RISER ..... 313.1 – 313.2

CONDUIT BEND AND RISER AT BUILDING, CUSTOMER-OWNED ..... 312.1 – 312.2

CONDUIT SEALING ..... 308.1 – 308.2

CONDUIT, SAFETY OVERFLOW FITTING 307

CONVERSIONS ..... 303, 304.1 – 304.2, 305.1 – 305.2

CUSTOMER AND UTILITY RESPONSIBILITIES FOR UNDERGROUND INSTALLATION TO REPLACE OVERHEAD ELECTRIC SERVICE 303

CUSTOMER-OWNED CONDUIT BEND AND RISER AT BUILDING ..... 312.1 – 312.2

FIELD HEATING SERVICE LATERAL CONDUITS 306

GASOLINE DISPENSING AND SERVICE STATIONS, UNDERGROUND ELECTRIC SERVICE LATERAL CLEARANCES 316, 318

LEACH FIELDS, UNDERGROUND ELECTRIC SERVICE LATERAL CLEARANCES 319

OVERHEAD TO UNDERGROUND SERVICE CONVERSION CONTRACTOR AND SDG&E CREW COORDINATION METHODS ..... 305.1 – 305.2

PRIMARY AND SECONDARY VOLTAGE UNDERGROUND SYSTEM ON CUSTOMER PREMISES FROM CABLE POLE ..... 311.1 – 311.2

PROPANE TANKS, UNDERGROUND ELECTRIC SERVICE LATERAL AND METER PANEL CLEARANCES ..... 317.1 – 317.2, 318

RESIDENTIAL ELECTRIC SERVICE CONVERSION ..... 304.1 – 304.2

SAFETY OVERFLOW FITTING FOR INDOOR USE ONLY ON WALL-MOUNTED SERVICE EQUIPMENT 307

STANDARD JOINT CABLE POLE RISER POSITION USING LADDER ARM BRACKET AND SINGLE RISER ..... 313.1 – 313.2

UNDERGROUND ELECTRIC CABLE POLE RISER INSTALLATION ..... 315.1 – 315.5

UNDERGROUND ELECTRIC SERVICE LATERAL AND METER PANELS IN PROXIMITY TO PROPANE TANKS ..... 317.1 – 317.2

UNDERGROUND ELECTRIC SERVICE LATERAL FROM LEACH FIELDS 319

TABLE OF CONTENTS

© 1998 - 2021 San Diego Gas & Electric Company. All rights reserved. Removal of this copyright notice without permission is not permitted under law.

REV	CHANGE	DR	BY	DSN	APV	DATE	REV	CHANGE	DR	BY	DSN	APV	DATE
C							F						
B	FORMATTING	EDM	JIK	-	-	07/19/2021	E						
A	EDITORIAL CHANGES	-	LSM	LSM	TPM	11/01/2017	D						

SUBJECT **PAGE**

UNDERGROUND ELECTRIC SERVICE LATERAL GASOLINE DISPENSING AND SERVICE STATIONS..... 316

UNDERGROUND ELECTRIC SERVICE LATERAL RESIDENTIAL OR COMMERCIAL.....309.1 – 309.3

UNDERGROUND ELECTRIC SERVICE NEAR GASOLINE DISPENSING EQUIPMENT AND PROPANE TANKS 318

UNDERGROUND PRIMARY SYSTEM FROM CABLE POLE TO PADMOUNT TRANSFORMER.....311.1 – 311.2

UNDERGROUND SERVICE FROM OVERHEAD FACILITIES (LOW VOLTAGE).....310.1 – 310.2

TABLE OF CONTENTS

© 1998 - 2021 San Diego Gas & Electric Company. All rights reserved. Removal of this copyright notice without permission is not permitted under law.

REV	CHANGE	DR	BY	DSN	APV	DATE	REV	CHANGE	DR	BY	DSN	APV	DATE
C							F						
B	FORMATTING	EDM	JIK	-	-	07/19/2021	E						
A	EDITORIAL CHANGES	-	LSM	LSM	TPM	11/01/2017	D						

X	Indicates Latest Revision		Completely Revised		New Page		Information Removed	

SCOPE: THIS STANDARD DESCRIBES CUSTOMER AND UTILITY RESPONSIBILITIES FOR UNDERGROUND INSTALLATION TO REPLACE OVERHEAD ELECTRIC SERVICE.

ATTENTION:

* CONTACT THE SERVICE PLANNER AT THE REGIONAL PROJECT MANAGEMENT OFFICE CLOSEST TO THE PROJECT LOCATION FOR AN "ELECTRIC METER & SERVICE LOCATION" FORM BEFORE STARTING CONSTRUCTION. (a)

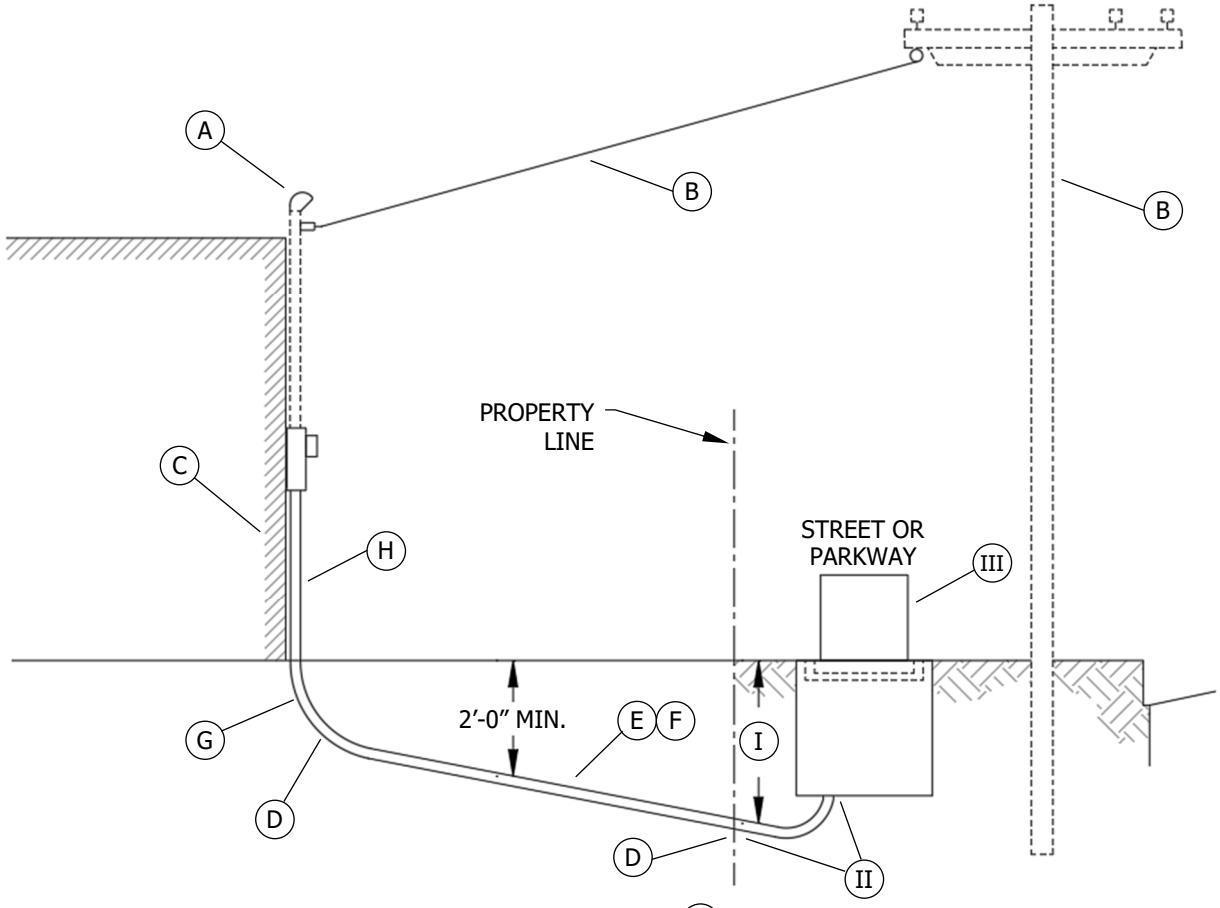

FIGURE 1 (b)

INSTALLATION:

(A) TO BE REMOVED BY CUSTOMER

(B) TO BE REMOVED BY UTILITY

(C) CONDUIT, ELBOW, PULL CAN AND WIRING ON BUILDING TO BE INSTALLED BY CUSTOMER.

(D) CUSTOMER TO PROVIDE TRENCH, BACKFILL AND PAVEMENT REPAIR.

CUSTOMER TO FURNISH, INSTALL, OWN AND MAINTAIN:

(E) CONDUIT SIZE AND NUMBER OF CONDUIT RUNS TO BE DESIGNED BY SDG&E. CONDUIT MANUFACTURER MUST BE SDG&E-APPROVED.

(F) TRENCH PER SDG&E STANDARDS. BACKFILL SHALL BE COMPACTED IN ACCORDANCE WITH SDG&E AND LOCAL GOVERNMENTAL REQUIREMENTS.

© 1998 - 2021 San Diego Gas & Electric Company. All rights reserved. Removal of this copyright notice without permission is not permitted under law.

REV	CHANGE	DR	BY	DSN	APV	DATE	REV	CHANGE	DR	BY	DSN	APV	DATE
C							F						
B	FORMATTING	EDM	JIK	-	-	07/19/2021	E						
A	EDITORIAL CHANGES	-	LSM	IPJ	TPM	11/01/2017	D						

X	Indicates Latest Revision		Completely Revised		New Page		Information Removed

SDG&E ELECTRIC SERVICE STANDARDS & GUIDES

CUSTOMER & UTILITY RESPONSIBILITIES FOR UNDERGROUND INSTALLATION TO REPLACE OVERHEAD ELECTRIC SERVICE

SG303.1

TABLE OF CONTENTS

TABLE 1

CONDUIT RISER BEND MINIMUM BENDING RADII	
BEND SIZE (IN)	**RADIUS (IN)**
2	24
3	36
4	36
5	36

(G) CONDUIT RISER BENDS SIZE AND MINIMUM BENDING RADIUS SHOWN IN TABLE 1. MINIMUM SCHEDULE 40 PVC REQUIRED. **DO NOT CUT BENDS.**

(H) TYPE & SCHEDULE OF CONDUIT PER THE BUILDING INSPECTOR'S REQUIREMENTS. NORMALLY, SCHEDULE 40 PVC IS ALLOWED INSIDE THE BUILDING WALL, AND SCHEDULE 80 PVC IS REQUIRED WHEN EXPOSED ON AN EXTERIOR WALL. CONSULT WITH THE APPROPRIATE BUILDING INSPECTOR. FLEX CONDUIT IS NOT PERMITTED.(c)

BILL OF MATERIALS: NONE

NOTES:

(I) DEPTH OF TRENCH IS DETERMINED BY TYPE OF SUBSTRUCTURE AT SOURCE. VERIFY WITH SDG&E INSPECTOR PRIOR TO EXCAVATION.

(II) CUSTOMER OR UTILITY DEPENDING ON CONVERSION RULE. CONSULT WITH PLANNER.

(III) SOURCE: MANHOLE, HANDHOLE OR PADMOUNT TRANSFORMER.

REFERENCE:

(a) SEE SG021.

(b) SEE SG304 INSTALLATION NOTES A-F FOR CABLE AND CONDUIT RESPONSIBILITIES BETWEEN PROPERTY LINE AND STRUCTURE.

(c) SEE SG306 FOR FIELD HEATING SERVICE LATERAL CONDUIT.

TABLE OF CONTENTS

© 1998 - 2021 San Diego Gas & Electric Company. All rights reserved. Removal of this copyright notice without permission is not permitted under law.

REV	CHANGE	DR	BY	DSN	APV	DATE	REV	CHANGE	DR	BY	DSN	APV	DATE
C							F						
B	FORMATTING	EDM	JIK	-	-	07/19/2021	E						
A	EDITORIAL CHANGES	-	LSM	IPJ	TPM	11/01/2017	D						

X Indicates Latest Revision | Completely Revised | New Page | Information Removed

SDG&E ELECTRIC SERVICE STANDARDS & GUIDES

CUSTOMER & UTILITY RESPONSIBILITIES FOR UNDERGROUND INSTALLATION TO REPLACE OVERHEAD ELECTRIC SERVICE

SG303.2

SCOPE: THIS STANDARD DESCRIBES ACCEPTABLE METHODS FOR RESIDENTIAL ELECTRIC SERVICE CONVERSION.

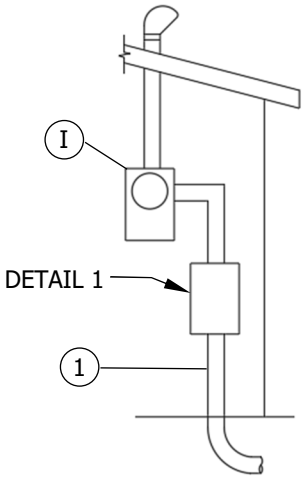

FIGURE 1 (II)
RISER

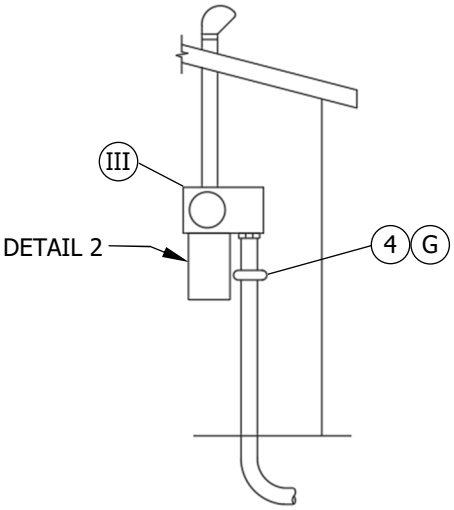

FIGURE 2
METER ADAPTER

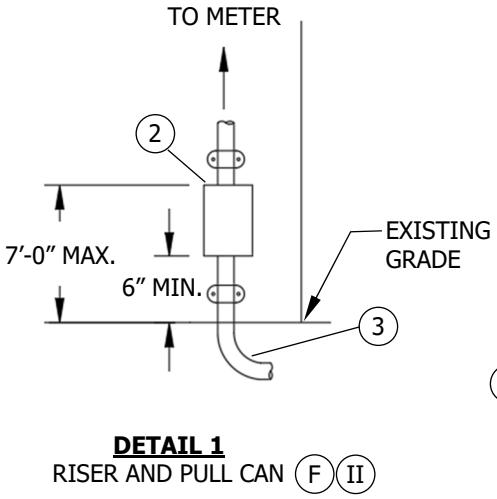

DETAIL 1
RISER AND PULL CAN (F) (II)

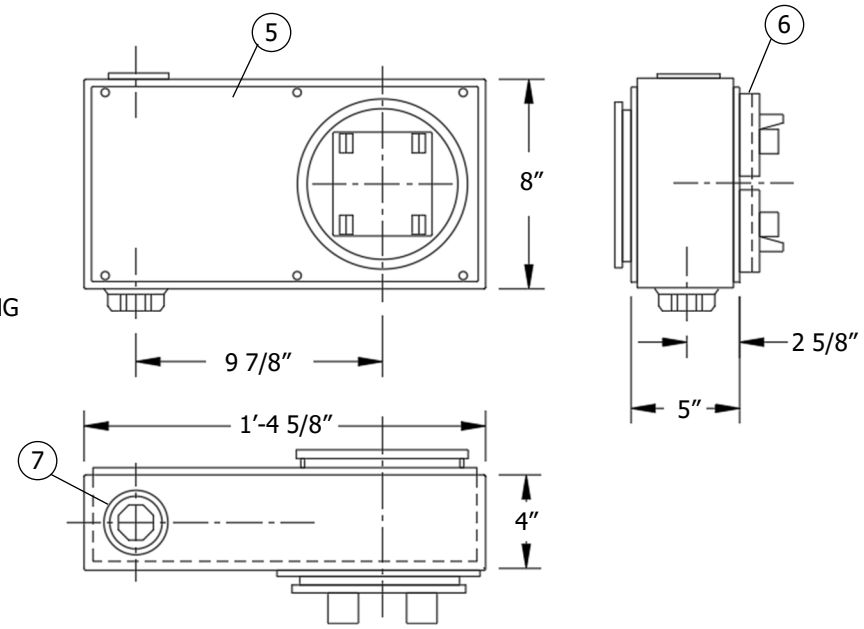

DETAIL 2
METER ADAPTER
100A/200A

© 1998 - 2021 San Diego Gas & Electric Company. All rights reserved. Removal of this copyright notice without permission is not permitted under law.

REV	CHANGE	DR	BY	DSN	APV	DATE	REV	CHANGE	DR	BY	DSN	APV	DATE
C							F						
B	FORMATTING	EDM	JIK	-	-	07/19/2021	E						
A	EDITORIAL CHANGES	-	LSM	IPJ	TPM	11/01/2017	D						

X	Indicates Latest Revision		Completely Revised		New Page		Information Removed

TABLE OF CONTENTS

INSTALLATION:

A. THE CUSTOMER WILL PROVIDE A SUITABLE TRENCH FROM THE CONDUIT RISER TO THE PROPERTY LINE, OR SOURCE. CONSULT WITH A PLANNER. (a)

B. THE CUSTOMER WILL PROVIDE AND INSTALL A SUITABLE CONDUIT FROM THE ELBOW TO THE PROPERTY LINE, OR SOURCE. CONSULT WITH A PLANNER.

C. THE CUSTOMER WILL PROVIDE AND INSTALL ALL EQUIPMENT NEEDED TO MODIFY THE SERVICE ENTRANCE WHEN CHANGING FROM OVERHEAD TO UNDERGROUND SERVICE. THE CUSTOMER WILL ALSO REMOVE ALL THEIR EXISTING SERVICE EQUIPMENT NO LONGER REQUIRED UPON COMPLETION OF SERVICE CONVERSION TO UNDERGROUND.

D. SDG&E (UTILITY) WILL FURNISH AND INSTALL UG SERVICE LATERAL CONDUCTORS AND MAKE CONNECTIONS AT THE SERVICE PULL CAN.

E. THE METER ADAPTER SHOWN IN FIGURE 2 IS APPROVED FOR SINGLE-METER RESIDENTIAL EQUIPMENT INSTALLATIONS ONLY. MULTIPLE METER CONVERSIONS WILL REQUIRE USE OF A LINE GUTTER OR MULTIPLE METER SERVICE EQUIPMENT

(F) IF SERVICE ENTRANCE CONDUCTORS ARE ENERGIZED, THE CONTRACTOR IS RESPONSIBLE TO IDENTIFY AS ENERGIZED OR "HOT".

(G) METER ADAPTER INSTALLATIONS REQUIRE THE RISER TO BE SECURED TO THE WALL WITH A HEAVY DUTY TWO-HOLE PIPE STRAP PLACED 3 INCHES BELOW BOTTOM OF METER ADAPTER WITH 3/8" X 3" LAG SCREWS INTO PLATE. 1/4-INCH TOGGLE BOLTS MAY BE USED IN LIEU OF LAG SCREWS. A ZANAC NAIL HEAD 1/4" X 1 7/8" (MUSHROOM) MAY BE USED IN PLACE OF A LAG SCREW WHEN ATTACHING IT TO A CINDER BLOCK OR CONCRETE WALL. INSTALL CROSS-BRACING (UNISTRUT) AS REQUIRED TO FIT TO WALL STUDS. TIGHTEN THE PIPE STRAP FIRMLY OVER THE RISER TO SECURE IT FROM SHIFTING DOWNWARD AS THE TRENCH SETTLES OVER TIME.

H. AN INSPECTION AND RELEASE FROM THE GOVERNMENTAL AUTHORITY HAVING JURISDICTION (AHJ) IS NOT REQUIRED FOR INSTALLATION OF A METER ADAPTER. WHEN THE METER ADAPTER IS INSTALLED, THE ELECTRICAL CONTRACTOR MUST REROUTE THE EXISTING NEUTRAL CONDUCTOR INTO THE METER ADAPTER AND CONNECT TO THE NEUTRAL LUG SUPPLIED BY THE MANUFACTURER. THE UTILITY'S SERVICE CREW WILL CHECK THE NEUTRAL CONNECTIONS IN THE NEW METER ADAPTER AND IN THE EXISTING SERVICE EQUIPMENT FOR TIGHTNESS.

BILL OF MATERIALS:

ITEM	DESCRIPTION	QUANTITY	STANDARD PAGE	STOCK NUMBER	DESIGN UNITS
1	RISER, CONDUIT	AS REQ'D	--	--	--
2	PULL CAN, UNDERGROUND SERVICE	AS REQ'D	--	--	--
3	ELBOW, 90°, 24" MIN. RADIUS	AS REQ'D	--	--	--
4	STRAP, PIPE	AS REQ'D	--	--	--
5	COVER, GASKETED (SEALABLE)	AS REQ'D	--	--	--
6	RING, ADAPTER	AS REQ'D	--	--	--
7	HUB, 3"	AS REQ'D	--	--	--

NOTES:

(I) EXISTING SURFACE-MOUNT METER SOCKET CAN.

(II) CONDUIT RISER SIZE BASED ON SERVICE EQUIPMENT AMPACITY. (2" MIN.)

(III) EXISTING SEMI-FLUSH METER SOCKET.

REFERENCE:

(a) SEE UG3370 (SAN DIEGO COUNTY) OR UG3371 (ORANGE COUNTY) FOR TRENCH AND UTILITY POSITIONING DETAILS.

TABLE OF CONTENTS

© 1998 - 2021 San Diego Gas & Electric Company. All rights reserved. Removal of this copyright notice without permission is not permitted under law.

REV	CHANGE	DR	BY	DSN	APV	DATE	REV	CHANGE	DR	BY	DSN	APV	DATE
C							F						
B	FORMATTING	EDM	JIK	-	-	07/19/2021	E						
A	EDITORIAL CHANGES	-	LSM	IPJ	TPM	11/01/2017	D						

X Indicates Latest Revision | Completely Revised | New Page | Information Removed

SDG&E ELECTRIC SERVICE STANDARDS & GUIDES

ACCEPTABLE METHODS FOR RESIDENTIAL ELECTRIC SERVICE CONVERSION

SCOPE: THIS STANDARD DESCRIBES THE COORDINATION METHODS WITH CONTRACTORS AND SDG&E CREWS FOR OVERHEAD TO UNDERGROUND SERVICE CONVERSION.

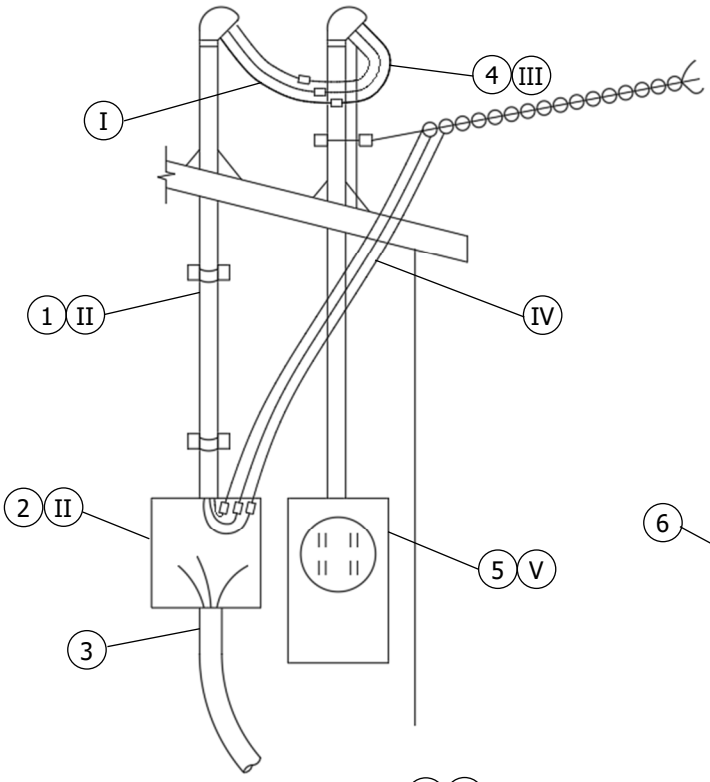

FIGURE 1 (A) (B)
JUNCTION BOX CONNECTION

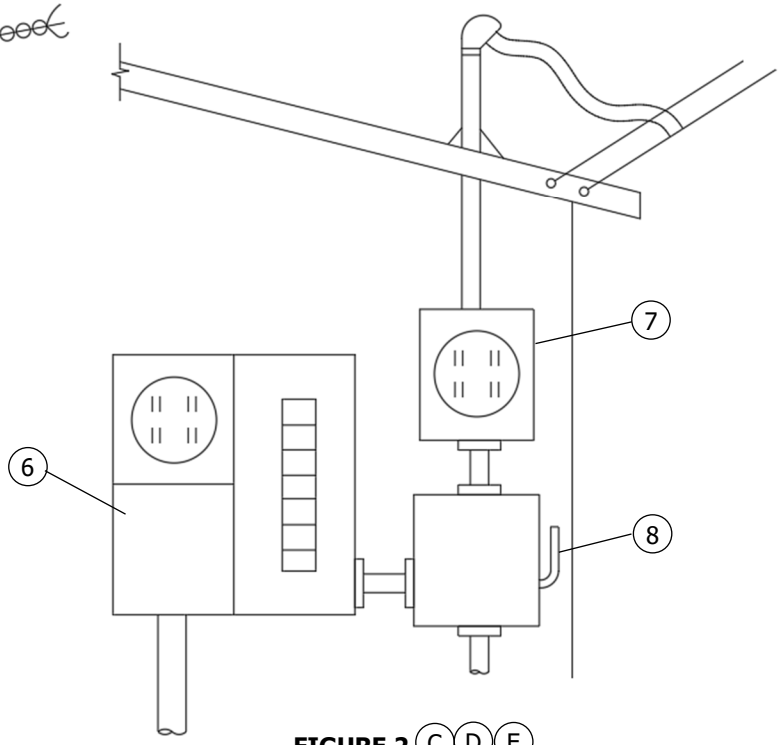

FIGURE 2 (C) (D) (E)
OLD 2-WIRE METER CONNECTION

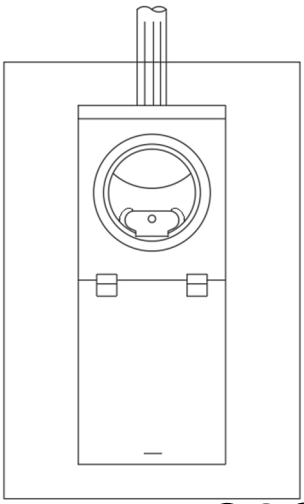

FIGURE 3 (F) (G) (H) (J)
METER ADAPTER CONNECTION
TYPICAL OVERHEAD SERVICE INSTALLATION

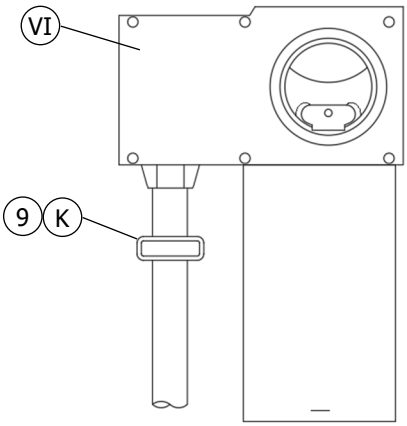

FIGURE 4 (F) (G) (H) (J)
METER ADAPTER CONNECTION
SAME INSTALLATION AFTER CONVERSION FOR UNDERGROUND SERVICE USING METER ADAPTER

TABLE OF CONTENTS

© 1998 - 2021 San Diego Gas & Electric Company. All rights reserved. Removal of this copyright notice without permission is not permitted under law.

REV	CHANGE	DR	BY	DSN	APV	DATE	REV	CHANGE	DR	BY	DSN	APV	DATE
C							F						
B	FORMATTING	EDM	JIK	-	-	07/19/2021	E						
A	EDITORIAL CHANGES	-	LSM	IPJ	TPM	11/01/2017	D						

X	Indicates Latest Revision		Completely Revised		New Page		Information Removed

INSTALLATION:

(A) THE CONTRACTOR COMPLETES INSTALLATION OF UG PULL CAN, UG RISER, RISER, CONDUIT, JUNCTION BOX, WIRE FROM JUNCTION BOX TO PULL CAN, AND CONNECTS TEMPORARY JUMPERS TO SERVICE DROP AND LANDING LUGS. IF THE SERVICE ENTRANCE CONDUCTORS ARE ENERGIZED, THE CONTRACTOR IS TO IDENTIFY THEM AS ENERGIZED OR "HOT".

(B) SDG&E (UTILITY) INSTALLS NEW UG SERVICE LATERAL CONDUCTORS TO THE PULL CAN. ON INSPECTION, THE UTILITY REMOVES TEMPORARY JUMPERS AND THE OH SERVICE DROP, CONNECTS WIRES IN THE PULL CAN, SEALS THE PULL CAN AND JUNCTION BOX, AND RESETS OR RESEALS THE METER AS REQUIRED.

(C) THE CONTRACTOR INSTALLS THE NEW METER PANEL, UG RISER, WIRE AND NIPPLE FROM THE BREAKER PANEL TO THE SERVICE SWITCH. THE NEW CIRCUIT BREAKER IS TO BE LOCKED OR TAPED IN THE OFF POSITION.

(D) THE UTILITY WILL INSTALL UG SERVICE LATERAL CONDUCTORS. ON INSPECTION AND RELEASE BY THE GOVERNMENTAL AUTHORITY HAVING JURISDICTION (AHJ), THE UTILITY DISCONNECTS THE OH SERVICE AT THE WEATHERHEAD, CONNECTS NEW CONDUCTORS TO THOSE ON THE LOAD-SIDE OF SERVICE SWITCH, CONNECTS THE NEW UG SERVICE, AND SETS THE METER.

(E) THE CONTRACTOR IS TO FOLLOW UP WITH THE REMOVAL OF THE SERVICE CONDUIT, METER BASE, SERVICE SWITCHBLADES, ETC.

(F) THE METER ADAPTER MAY BE INSTALLED EITHER FOR LEFT OR RIGHT HAND FEED BY SIMPLY REVERSING THE DIRECTION OF INSERTION INTO THE EXISTING METER SOCKET.

(G) ON REQUEST, PERMISSION IS GRANTED BY THE PLANNER FOR THE CONTRACTOR TO BREAK THE METER SEAL, PULL METER AND INSERT IN THE ADAPTER. THE METER ADAPTER IS BUSSED THROUGH SO THE UNIT MAY BE INSERTED INTO THE EXISTING METER SOCKET, THE SCREW TYPE SEALING RING FURNISHED WITH THE UNIT INSTALLED IN THE GROOVE OF THE ADAPTER RING AND OVER THE EXISTING SOCKET RING, AND WHEN SECURELY IN PLACE, THE EXISTING METER INSERTED IN THE ADAPTER WILL OPERATE CORRECTLY STILL CONNECTED TO THE OVERHEAD SERVICE. (a)

(H) AFTER THE CONTRACTOR INSTALLS THE UNDERGROUND SERVICE LATERAL CONDUIT AND TRENCH, AND THE UTILITY'S INSPECTOR APPROVES, A JOINT MEET WILL BE SCHEDULED AND THE FOLLOWING WORK IS TO BE PERFORMED:

1. **UTILITY CREW WILL:** PULL THE METER AND INSTALL SERVICE LATERAL CONDUCTORS INTO THE PULL BOX OF THE METER ADAPTER. CUT OVERHEAD SERVICE AT THE DRIP LOOP. SWING THE METER ADAPTER OUT FROM THE METER SOCKET.
2. **CONTRACTOR WILL:** PULL ENOUGH NEUTRAL SERVICE ENTRANCE CONDUCTOR DOWN FROM THE SERVICE CONDUIT RISER TO REACH THROUGH THE SLOT IN THE METER SOCKET TO THE NEUTRAL LUG LANDING IN THE PULL BOX OF THE METER ADAPTER (APPROXIMATELY 18 INCHES). REMOVE THE PHASE WIRES FROM THE EXISTING METER SOCKET LINE TERMINALS.
3. **UTILITY CREW WILL:** RE-INSERT THE METER ADAPTER INTO THE EXISTING METER SOCKET (FEEDING THE NEUTRAL CONDUCTOR THROUGH THE SLOT IN THE ADAPTER RING).
4. **CONTRACTOR WILL:** CONNECT THE NEUTRAL CONDUCTOR TO THE NEUTRAL TERMINAL IN THE PULL BOX OF THE METER ADAPTER.
5. **UTILITY CREW WILL:** CONNECT THE UNDERGROUND PHASE WIRES TO THE UPPER TERMINALS OF THE METER ADAPTER SOCKET (NO CONNECTION IS MADE TO THE LOWER TERMINALS). INSERT THE METER IN THE METER ADAPTER AND ENERGIZE UNDERGROUND SERVICE. RESEAL THE METER AND SEAL THE METER ADAPTER.

(J) THE CONVERSION IS COMPLETED WITH THE UTILITY'S REMOVAL OF THE OVERHEAD SERVICE DROP AND THE CONTRACTOR'S REMOVAL OF THE OVERHEAD SERVICE ENTRANCE CONDUCTORS AND CONDUIT RISER.

(K) THE METER ADAPTER INSTALLATIONS REQUIRE THE RISER TO BE SECURED TO THE WALL WITH A HEAVY DUTY TWO-HOLE PIPE STRAP PLACED 3 INCHES BELOW THE BOTTOM OF THE METER ADAPTER WITH 3/8-INCH X 3-INCH LAG SCREWS INTO THE PLATE. 1/4- INCH TOGGLE BOLTS MAY BE USED IN LIEU OF LAG SCREWS. A ZANAC NAIL HEAD 1/4-INCH X 1 7/8-INCH (MUSHROOM) MAY BE USED IN PLACE OF A LAG SCREW WHEN ATTACHING IT TO A CINDER BLOCK OR CONCRETE WALLS. INSTALL CROSSBRACING (UNISTRUT) AS REQUIRED TO FIT TO THE WALL STUDS. TIGHTEN THE PIPE STRAP FIRMLY OVER THE RISER TO SECURE IT FROM SHIFTING DOWNWARD AS THE TRENCH SETTLES OVER TIME.

TABLE OF CONTENTS

© 1998 - 2021 San Diego Gas & Electric Company. All rights reserved. Removal of this copyright notice without permission is not permitted under law.

REV	CHANGE	DR	BY	DSN	APV	DATE	REV	CHANGE	DR	BY	DSN	APV	DATE
C							F						
B	FORMATTING	EDM	JIK	-	-	07/19/2021	E						
A	EDITORIAL CHANGES	-	LSM	IPJ	TPM	11/01/2017	D						

X	Indicates Latest Revision		Completely Revised		New Page		Information Removed

SDG&E ELECTRIC SERVICE STANDARDS & GUIDES

OVERHEAD TO UNDERGROUND SERVICE CONVERSION – CONTRACTOR & SDG&E CREW COORDINATION METHODS

SG305.2

BILL OF MATERIALS:

ITEM	DESCRIPTION	QUANTITY	STANDARD PAGE	STOCK NUMBER	DESIGN UNITS
1	CONDUCTORS, SERVICE ENTRANCE, NEW	AS REQ'D	--	--	--
2	CAN, PULL	AS REQ'D	--	--	--
3	RISER, SERVICE, U.G.	AS REQ'D	--	--	--
4	OPEN LOOP AND BOND OR JUNCTION BOX, WITH SEALING SCREWS	AS REQ'D	--	--	--
5	CAN, METER SOCKET, FLUSH MOUNTED	AS REQ'D	--	--	--
6	CAN, NEW U.G. COMBINATION PULL AND METER, WITH CIRCUIT BREAKER DISTRIBUTION SECTION	AS REQ'D	--	--	--
7	SOCKET, METER, OLD	AS REQ'D	--	--	--
8	SWITCH, SERVICE	AS REQ'D	--	--	--
9	STRAP, PIPE	AS REQ'D	--	--	--

NOTES:

(I) CONNECTIONS BY CONTRACTOR.

(II) BY CUSTOMER.

(III) SIZED PER CODE AND BONDED TO OLD RISER.

(IV) SDG&E MAY INSTALL TEMPORARY SERVICE DROP CONDUCTORS FOR JOB COORDINATION.

(V) EXISTING.

(VI) PULL BOX AREA OF METER ADAPTER.

REFERENCE:

(a) SEE SG304.

TABLE OF CONTENTS

© 1998 - 2021 San Diego Gas & Electric Company. All rights reserved. Removal of this copyright notice without permission is not permitted under law.

REV	CHANGE	DR	BY	DSN	APV	DATE	REV	CHANGE	DR	BY	DSN	APV	DATE
C							F						
B	FORMATTING	EDM	JIK	-	-	07/19/2021	E						
A	EDITORIAL CHANGES	-	LSM	IPJ	TPM	11/01/2017	D						

X Indicates Latest Revision | Completely Revised | New Page | Information Removed

SCOPE: THIS STANDARD PROVIDES THE REQUIREMENTS AND CONDITIONS ALLOWING FIELD HEATING OF SERVICE LATERAL CONDUITS INSTALLED ABOVE GRADE ONLY.

ATTENTION:

* THIS STANDARD PROVIDES A MEANS TO AVOID EXCAVATING INTO AN EXISTING BUILDING FOOTING WHEN CONVERTING EXISTING OVERHEAD SERVICES TO UNDERGROUND (SEE FIGURE 1). IT ALSO APPLIES TO EXISTING OR NEW SERVICES WHEN A HORIZONTAL OFFSET IS REQUIRED DUE TO FIELD CONDITIONS (SEE FIGURE 2).

** THIS STANDARD IS NOT INTENDED TO CORRECT POOR WORKMANSHIP.

*** CARE SHOULD BE TAKEN TO INSTALL SERVICE EQUIPMENT IN A MANNER ALLOWING THE SERVICE LATERAL CONDUIT RISER TO EXIT THE GROUND AND RUN STRAIGHT UP INTO THE TERMINATING ENCLOSURE EXCEPT WHERE PRE-EXISTING FIELD CONDITIONS EXIST.

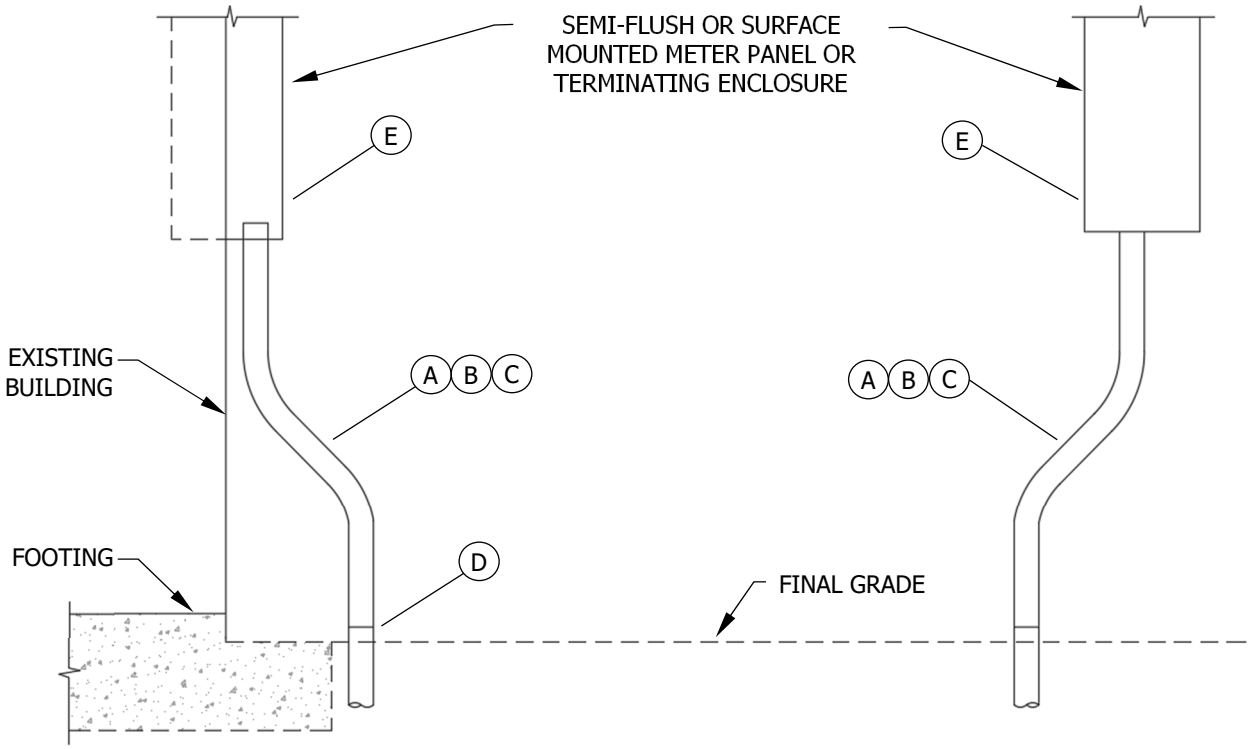

FIGURE 1
VERTICAL OFFSET
SIDE VIEW

FIGURE 2
HORIZONTAL OFFSET
FRONT VIEW

INSTALLATION:

(A) THIS STANDARD APPLIES TO 2-INCH, 3-INCH AND 4-INCH CONDUIT SIZES ONLY.

(B) ONLY MANUFACTURER'S RECOGNIZED FIELD CONDUIT HEATING EQUIPMENT SHALL BE USED. DEGRADATION OF THE CONDUIT'S SHAPE, WRINKLES, DISCOLORATION, BURN MARKS, OR PAINT IS NOT ALLOWED. SDG&E'S INSPECTOR WILL DETERMINE IF THE HEATED CONDUIT IS ACCEPTABLE.

© 1998 - 2021 San Diego Gas & Electric Company. All rights reserved. Removal of this copyright notice without permission is not permitted under law.

REV	CHANGE	DR	BY	DSN	APV	DATE	REV	CHANGE	DR	BY	DSN	APV	DATE
C							F						
B	FORMATTING	EDM	JIK	-	-	07/19/2021	E						
A	EDITORIAL CHANGES	-	LSM	IPJ	TPM	11/01/2017	D						

X	Indicates Latest Revision		Completely Revised		New Page		Information Removed

TABLE OF CONTENTS

INSTALLATION (CONT'D):

(C) 45 DEGREES IS THE MAXIMUM ALLOWABLE DEFLECTION ON THE RISER. THE DEFLECTION IN THE RISER IS INCLUDED IN THE MAXIMUM 270 DEGREE TOTAL DEFLECTION IN THE SERVICE LATERAL CONDUIT RUN. (b)

(D) WHEN CONVERTING AN EXISTING SERVICE TO UNDERGROUND, MANDREL NEW CONDUIT TO THE TOP OF THE ELBOW EXTENDING TO GRADE PRIOR TO CONNECTING THE RISER CONDUIT. ALLOW ENOUGH PULL ROPE TO EXTEND THROUGH THE RISER, WITH A MINIMUM 12-INCH TAIL TO BE LEFT IN THE TERMINATING ENCLOSURE.

(E) NEW SERVICES REQUIRE MANDRELING OF ALL NEW CONDUITS, INCLUDING THE CONDUIT RISER.

BILL OF MATERIALS: NONE

NOTES: NONE

REFERENCE:

a. REFER TO UG3950.

(b) REFER TO SG309, INSTALLATION ITEM B, FOR ADDITIONAL INFORMATION.

TABLE OF CONTENTS

© 1998 - 2021 San Diego Gas & Electric Company. All rights reserved. Removal of this copyright notice without permission is not permitted under law.

REV	CHANGE	DR	BY	DSN	APV	DATE	REV	CHANGE	DR	BY	DSN	APV	DATE
C							F						
B	FORMATTING	EDM	JIK	-	-	07/19/2021	E						
A	EDITORIAL CHANGES	-	LSM	IPJ	TPM	11/01/2017	D						

X Indicates Latest Revision	Completely Revised	New Page	Information Removed	
SDG&E ELECTRIC SERVICE STANDARDS & GUIDES				
SHEET 2 OF 2	FIELD HEATING SERVICE LATERAL CONDUITS			SG306.2

SCOPE: THIS STANDARD PROVIDES INSTRUCTIONS FOR INSTALLING A SAFETY OVERFLOW FITTING FOR FLUSH OR SEMI-FLUSH MOUNTED SERVICE EQUIPMENT WHERE THE SDG&E SOURCE IS AT A HIGHER ELEVATION THAN THE SERVICE EQUIPMENT.

ATTENTION:

* THIS FITTING IS RECOMMENDED, BUT NOT REQUIRED BY SDG&E.

** THE PURPOSE OF INSTALLING THIS DEVICE IS THAT IT MAY HELP PREVENT WATER ENTRY INTO THE SERVICE EQUIPMENT.

*** THIS FITTING IS FOR INDOOR USE ONLY.

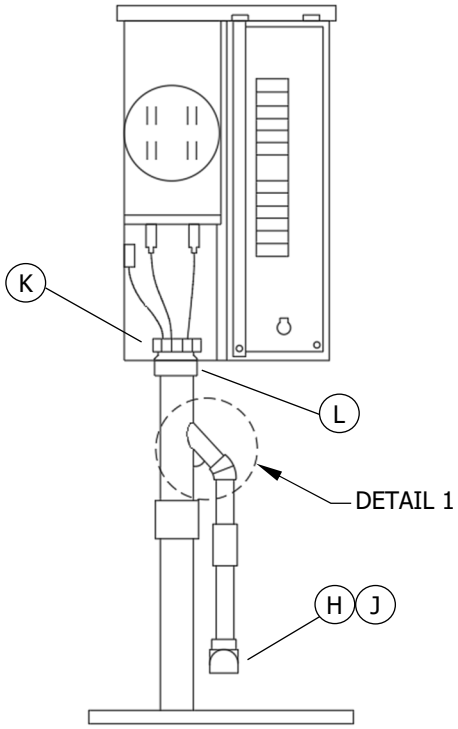

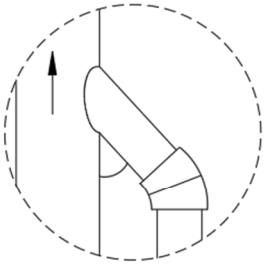

DETAIL 1

FIGURE 1

INSTALLATION:

A. THIS FITTING IS FOR CONDUITS INSTALLED INSIDE BUILDING WALLS ONLY. USE LISTED ELECTRICAL RIGID PVC SCHEDULE 40 CONDUIT AND FITTINGS FOR EXTENDING THE DRAIN FITTING OUTSIDE THE WALL OR FOUNDATION. IT IS THE INSTALLER'S RESPONSIBILITY TO COMPLY WITH ALL APPLICABLE BUILDING AND ELECTRICAL CODES.

B. ASSEMBLE THE DRAIN BY MEANS OF CEMENT THAT IS, OR CONTAINS, A SOLVENT FOR POLYVINYL CHLORIDE.

C. ENSURE THE ARROW ON THE 2-INCH FITTING IS POINTING "UP" WHEN INSTALLING. DO NOT CUT OR MODIFY THE SAFETY OVERFLOW FITTING.

D. CLEAN THE SAFETY OVERFLOW FITTING APPROXIMATELY 2 INCHES FROM EACH END THOROUGHLY WITH CLEANING FLUID. LET THE FITTING DRY COMPLETELY.

© 1998 - 2021 San Diego Gas & Electric Company. All rights reserved. Removal of this copyright notice without permission is not permitted under law.

REV	CHANGE	DR	BY	DSN	APV	DATE	REV	CHANGE	DR	BY	DSN	APV	DATE
C							F						
B	FORMATTING	EDM	JIK	-	-	07/19/2021	E						
A	EDITORIAL CHANGES	-	LSM	IPJ	TPM	11/01/2017	D						

X	Indicates Latest Revision		Completely Revised		New Page		Information Removed

TABLE OF CONTENTS

INSTALLATION (CONT'D):

E. THE DRAIN MUST BE FULLY INSERTED INTO THE BODY AND EXTENDED IN THE DOWNWARD POSITION.

F. AFTER USING THE CEMENT SOLVENT, MAKE A QUARTER TURN AND THEN LET DRY COMPLETELY.

G. REPEAT THE CLEANING AND GLUING PROCESS AT EACH JOINT.

(H) EXTEND THE 1-INCH FITTING UNTIL IT IS OUTSIDE THE WALL OR FOUNDATION AT LEAST 1 1/2 INCHES TO 2 INCHES.

(J) AFTER EXTENDING THE CONDUIT OUTSIDE THE WALL OR FOUNDATION, INSTALL A 90-DEGREE ELBOW POINTING DOWN AND A MINIMUM OF 18 INCHES ABOVE GROUND. INSTALL A MESH SCREEN TO PREVENT DIRT OR INSECTS FROM ENTERING CONDUIT. DO NOT CONNECT THE 1-INCH FITTING TO ANY OUTSIDE WATER DRAINS.

(K) USE THE PROPER END COUPLING AND LOCKING NUT INSIDE THE CABLE TERMINATION CAN.

(L) SDG&E CREW WILL SEAL THE SERVICE LATERAL CONDUIT IN THE TERMINATING ENCLOSURE.

BILL OF MATERIALS: NONE

NOTES: NONE

REFERENCE:

a. REFER TO UG3960 FOR REQUIREMENTS RELATING TO ELEVATION OF CUSTOMER FACILITIES AND WATER ENTRY PREVENTION.

TABLE OF CONTENTS

© 1998 - 2021 San Diego Gas & Electric Company. All rights reserved. Removal of this copyright notice without permission is not permitted under law.

REV	CHANGE	DR	BY	DSN	APV	DATE	REV	CHANGE	DR	BY	DSN	APV	DATE
C							F						
B	FORMATTING	EDM	JIK	-	-	07/19/2021	E						
A	EDITORIAL CHANGES	-	LSM	IPJ	TPM	11/01/2017	D						

X	Indicates Latest Revision		Completely Revised		New Page		Information Removed

SDG&E ELECTRIC SERVICE STANDARDS & GUIDES

SAFETY OVERFLOW FITTING FOR INDOOR USE ONLY ON WALL-MOUNTED SERVICE EQUIPMENT

SG307.2

SCOPE: THIS STANDARD PROVIDES REQUIREMENTS FOR CUSTOMER-INSTALLED CONDUIT AND ADDITIONAL REQUIREMENTS FOR A RESIDENTIAL OR COMMERCIAL SERVICE LATERAL.

TABLE 1

CUSTOMER-INSTALLED SERVICE EQUIPMENT, BUS AND ASSOCIATED CONDUITS				
SERVICE EQUIPMENT OR BUS AMPACITY (B) (AMPS)	SERVICE RISER BEND AND SERVICE LATERAL CONDUIT SIZE FOR 3- OR 4-WIRE RUN (3)(6)(7)(K)			
	RESIDENTIAL AND MULTI-FAMILY SERVICE (III)		COMMERCIAL AND INDUSTRIAL SERVICE (III)	
	QTY.	SIZE (IN)	QTY.	SIZE (IN)
0 - 200 (I)	1	3 (C)	1	3 (C)
201 - 400 (SINGLE-PHASE)	1	3 (IV)	1	3
201 - 400 (THREE-PHASE)	1	4	1	4
401 - 800	2	4 (V)(j)	2	4
801 - 1,200	3	4	3	5
1,201 - 1,600	3	4	4	5
1,601 - 2,000	4	4	5	5
2,001 – 2,500	5	4	6	5
2,501 – 3,000	4	5	7	5
3,001 – 3,500	5	5	8	5
3,501 – 4,000	7	5	10	5

TABLE 2

CONDUIT BENDS	
CONDUIT RISER BEND SIZE (IN)	MINIMUM BENDING RADIUS (IN) (6)(7)
2 (C)	24
3	36
4	36
5	36

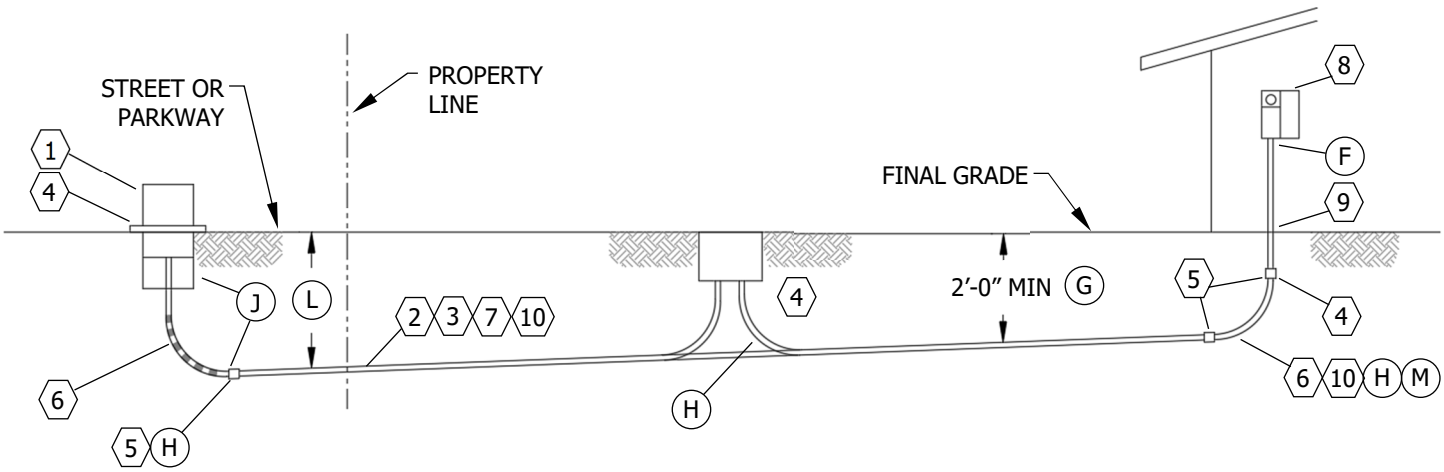

FIGURE 1

© 1998 - 2021 San Diego Gas & Electric Company. All rights reserved. Removal of this copyright notice without permission is not permitted under law.

REV	CHANGE	DR	BY	DSN	APV	DATE	REV	CHANGE	DR	BY	DSN	APV	DATE
C							F						
B	FORMATTING	EDM	JIK	-	-	07/19/2021	E						
A	EDITORIAL CHANGES	-	LSM	IPJ	TPM	11/01/2017	D						

X Indicates Latest Revision | Completely Revised | New Page | Information Removed

TABLE OF CONTENTS

TABLE 3

ITEM	DESCRIPTION	RESPONSIBLE PARTY
⟨1⟩	SOURCE: MANHOLE, HANDHOLE OR PADMOUNT TRANSFORMER.	SDG&E WILL FURNISH, INSTALL, OWN AND MAINTAIN, SUBJECT TO INSTALLATION CHARGES
⟨2⟩	SERVICE LATERAL CONDUCTORS AND CONNECTORS FROM SDG&E UNDERGROUND DISTRIBUTION SYSTEM ITEM 1 TO CUSTOMER'S SERVICE TERMINATING FACILITY ITEM 8. SDG&E WILL MAKE CONNECTIONS.	
⟨3⟩	A CLEAR ROUTE ON ANY PRIVATE PROPERTY, THAT IS CLEAR OF OBSTRUCTIONS WHICH WOULD INHIBIT THE CONSTRUCTION OF SERVICE FACILITIES. SERVICE LATERAL CONDUIT FROM SOURCE ITEM 1 TO TERMINATING FACILITY ITEM 8. CONDUIT SIZE SHALL BE BASED ON THE NAMEPLATE RATING OF THE SERVICE EQUIPMENT AND DISTANCE FROM TRANSFORMER TO THE TERMINATING FACILITY. CONDUIT MATERIAL FROM ITEM 1 TO ITEM 8 SHALL BE APPROVED NON-METALLIC CONDUIT IN ACCORDANCE WITH UG3373. BETWEEN ITEM 6 AND ITEM 8, THE CONDUIT INSTALLER MUST PROVIDE A 3/4-INCH PULLING AND MEASURING TAPE IN EACH CONDUIT. THE PULLING TAPE MUST BE APPROVED BY SDG&E, HAVE A MINIMUM AVERAGE TENSILE STRENGTH OF 2,500 POUNDS AND BE WOVEN POLYESTER HIGH STRENGTH, CONTINUOUS FILAMENT, PRE-LUBRICATED WITH FOOTAGE MARKING. PULLING TAPE TAILS OF 24 INCHES SHALL BE SECURED AT EACH END OF THE CONDUIT. THE PULLING TAPE SHALL BE PULLED IN BEHIND THE MANDREL. WHEN THE PULLING AND MEASURING TAPE IS INSTALLED, IT SHALL BE ONE CONTINUOUS LENGTH WITHOUT KNOTS FOR THE ACCURATE MEASUREMENT FOR CONDUCTOR INSTALLATION AND THE PULLING OF CONDUCTORS OR WINCH LINES. LEAVE AT LEAST 2 FEET BEYOND EACH END OF CONDUIT RUN. FLEX CONDUIT IS NOT PERMITTED.	CUSTOMER SHALL FURNISH, INSTALL, OWN AND MAINTAIN AT THEIR EXPENSE
⟨4⟩	TRENCH, BACKFILL, PAVEMENT REPAIR, AND STRUCTURES SHALL BE IN ACCORDANCE WITH SDG&E AND THE GOVERNMENTAL AUTHORITY HAVING JURISDICTION (AHJ) REQUIREMENTS. IF THE CUSTOMER INSTALLS A SECONDARY HANDHOLE ON PRIVATE PROPERTY, THE LID SHALL BE MARKED "SDG&E". THE CUSTOMER IS TO OBTAIN AN EXCAVATION PERMIT FOR TRENCHING IN STREET RIGHT-OF-WAY AS REQUIRED BY THE GOVERNMENTAL AHJ. SDG&E INSPECTION IS REQUIRED PRIOR TO SHADING AND BACKFILLING TRENCH.	
⟨5⟩	ADAPTER COUPLINGS FOR CONNECTING BENDS TO STRAIGHT CONDUIT.	
⟨6⟩	CONDUIT RISER BEND. (SEE TABLE 2)	
⟨7⟩	SIZE AND NUMBER OF CONDUIT RUNS TO BE DESIGNATED BY SDG&E. (SEE TABLE 1)	
⟨8⟩	SERVICE TERMINATING ENCLOSURE PER SG700.	
⟨9⟩	TYPE AND SCHEDULE OF CONDUIT ON OR WITHIN A BUILDING OR STRUCTURE TO BE INSTALLED PER BUILDING INSPECTOR'S REQUIREMENTS AND MUST BE LISTED AND LABELED. NORMALLY SCHEDULE 40 PVC IS ALLOWED INSIDE A BUILDING WALL AND SCHEDULE 80 PVC IS REQUIRED WHEN EXPOSED ON AN EXTERIOR WALL. CONSULT WITH THE APPROPRIATE AHJ. FLEX CONDUIT IS NOT PERMITTED.	
⟨10⟩	CONDUIT MANUFACTURER AND MATERIAL MUST BE SDG&E-APPROVED. ASBESTOS-CONTAINING MATERIAL (ACM) IS NOT APPROVED.	

TABLE OF CONTENTS

INSTALLATION:

A. CONTACT PROJECT MANAGEMENT AT THE NEAREST SDG&E REGIONAL OFFICE CLOSEST TO THE JOB SITE FOR AN ELECTRIC METER & SERVICE LOCATION FORM PRIOR TO THE START OF CONSTRUCTION. SEE SG3.

(B) THE SERVICE LATERAL CONDUIT SPECIFIED IN THE CONDUIT TABLE IS LIMITED TO 150 FEET IN LENGTH, WITH NOT MORE THAN THREE 90 DEGREE HORIZONTAL OR VERTICAL BENDS OR 270 DEGREES TOTAL DEFLECTION THROUGH THE SERVICE RUN. IF GREATER THAN 150 FEET, REFER TO UG4005-UG4007. PLANNER AND ELECTRIC CONSTRUCTION SUPERVISOR APPROVAL IS REQUIRED IF LIMITATIONS ARE EXCEEDED.

(C) A 3-WIRE, 100A, SINGLE-PHASE SERVICE AND METER PANEL CAN BE SERVED BY A 2-INCH CONDUIT. A 3-WIRE, 200A, OR LESS, SINGLE-PHASE SERVICE AND METER PANEL FOR TEMPORARY CONSTRUCTION POWER CAN BE SERVED BY A 2-INCH CONDUIT. ITEM 3 SHALL BE THE SAME SIZE AND TYPE MATERIAL STOCKED BY SDG&E AS SHOWN ON UG3373.

D. ENGINEERS' AND ARCHITECTS' PROPOSALS FOR ALL SWITCHBOARDS RATED 1,000A, OR LARGER, SHALL BE SUBMITTED BY THE MANUFACTURER TO THE SDG&E SERVICE STANDARDS SECTION FOR REVIEW AND APPROVAL. REFER TO SG517 FOR FURTHER INFORMATION ON THE MANUFACTURER'S DRAWINGS FOR APPROVAL PROCESS.

E. REPLACEMENT OR ENLARGEMENT OF SERVICE LATERAL CONDUITS DUE TO RELOCATION OR INCREASED LOAD WILL BE ACCOMPLISHED BY THE CUSTOMER UNDER THE PROVISIONS OF TABLE 3, ITEMS 3 THROUGH 10. MAINTENANCE OF THE CUSTOMER'S SERVICE LATERAL CONDUITS OUTSIDE THE BUILDING WALL WILL BE UNDERTAKEN BY SDG&E UNDER EMERGENCY CONDITIONS AND MAY BE DONE AT THE CUSTOMER'S EXPENSE. CONSULT WITH THE SDG&E PLANNER.

(F) CONDUITS SHALL BE SEALED PER UG3948. (e)(k)

© 1998 - 2021 San Diego Gas & Electric Company. All rights reserved. Removal of this copyright notice without permission is not permitted under law.

REV	CHANGE	DR	BY	DSN	APV	DATE	REV	CHANGE	DR	BY	DSN	APV	DATE
C							F						
B	FORMATTING	EDM	JIK	-	-	07/19/2021	E						
A	EDITORIAL CHANGES	-	LSM	IPJ	TPM	11/01/2017	D						

X Indicates Latest Revision | Completely Revised | New Page | Information Removed

SDG&E ELECTRIC SERVICE STANDARDS & GUIDES

UNDERGROUND ELECTRIC SERVICE LATERAL CONDUIT REQUIREMENTS

SG309.2

(G) A 24-INCH MINIMUM COVER OVER THE CONDUIT IS REQUIRED FOR ALL NORMAL INSTALLATIONS ON PRIVATE PROPERTY AND A 30-INCH MINIMUM COVER IS REQUIRED IN RIGHT-OF-WAY OR PUBLIC PROPERTY. IN ALL INSTALLATIONS WHERE THE MINIMUM COVER CANNOT BE MET, G.O. 128 REQUIRES ONE OF THE FOLLOWING:

1. SCHEDULE 40 PVC OR SCHEDULE 80 PVC CONDUIT WITH A MINIMUM WALL THICKNESS OF 1/8-INCH.
2. AT LEAST A 3-INCH LAYER OF CONCRETE ABOVE (2 SACK 3/8-INCH ROCK) AND 2 INCHES ON EACH SIDE OF THE CONDUIT. REDUCED DEPTHS MUST BE APPROVED BY THE SDG&E PLANNER AND INSPECTOR.

(H) THE TRENCH MUST HAVE AN EVEN SLOPING GRADE TO ALLOW ROOM FOR A 90-DEGREE BEND INTO THE BOTTOM OF ANY CUSTOMER-OWNED OR SDG&E FACILITY. DO NOT CUT BENDS. THE TRENCH DEPTH IS TO BE DETERMINED AT THE PRECONSTRUCTION MEETING.

(J) WHEN TRENCHING TO AN EXISTING SDG&E FACILITY, THE APPLICANT/CONTRACTOR SHALL COMPLETE THE TRENCH AND INSTALLATION OF CONDUIT UP TO THE EXISTING FACILITY UNLESS IT IS DETERMINED BY AN AUTHORIZED SDG&E EMPLOYEE THAT SUCH AN INSTALLATION PERFORMED BY THE APPLICANT/CONTRACTOR WOULD EXPOSE WORKERS TO, OR CREATE, A HAZARD. IN THIS CASE, SDG&E WOULD PERFORM TRENCHING AS INDICATED ON THE CONSTRUCTION WORK ORDER. DIGGING UNDER ENERGIZED PAD MOUNTED EQUIPMENT AND INSTALLATION OF CONDUIT INTO ENERGIZED PAD MOUNTED EQUIPMENT WILL ALWAYS BE THE RESPONSIBILITY OF SDG&E.

(K) A SERVICE CONDUIT WILL ONLY BE ALLOWED UNDERNEATH THE BUILDING BEING SERVED BY THE CABLE IN THE CONDUIT. NO CONDUIT IS ALLOWED UNDER ONE BUILDING TO SERVE ANOTHER BUILDING.

(L) DEPTH OF TRENCH IS DETERMINED BY TYPE OF SUBSTRUCUTRE AT SOURCE. VERIFY WITH SDG&E INSPECTOR PRIOR TO EXCAVATION.

(M) INSTALL CONDUIT ON EVEN SLOPING GRADE FROM CONDUIT RISER BEND TO SDG&E SOURCE.

BILL OF MATERIALS: NONE

NOTES:

(I) 225A RESIDENTIAL SERVICE EQUIPMENT.

II. AMPACITY RANGE BASED ON 75 DEGREES CELSIUS ALUMINUM WIRE.

(III) THESE ARE MINIMUM REQUIREMENTS. CONDUIT REQUIREMENTS MAY INCREASE WITH DIFFERENT ESTIMATED DEMANDS AND LENGTH OF SERVICE, DUE TO VOLTAGE DROP AND/OR FLICKER (INRUSH CURRENT). FUTURE LOADS SHOULD ALSO BE CONSIDERED.

(IV) INCLUDES 300A RESIDENTIAL SERVICE EQUIPMENT. (i)

(V) 2-3-INCH CONDUITS MINIMUM FOR MULTI-FAMILY 600A SERVICES.

REFERENCE:

a. SEE UG3367 FOR TRENCH PARALLELING FOUNDATIONS.

b. SEE UG3372 FOR CONDUIT SIZING AND UG3373 FOR CONDUIT AND FITTINGS.

c. SEE UG3376 FOR CONCRETE SLURRY REQUIREMENTS.

d. SEE UG3421, UG3425, UG3426 AND UG3427 FOR CONDUIT PLACEMENT.

(e) SEE UG3941 FOR RESIDENTIAL RISER AND CONDUIT AND UG3948 FOR CONDUIT SEALING.

f. SEE UG3944 FOR MATERIAL REQUIREMENTS OF AN UG SERVICE FROM OH FACILITIES.

g. SEE OH1404UG4204 FOR CABLE POLE CONDUIT REQUIREMENTS.

h. SEE UG3942.

(i) SEE SG512.6.

(j) SEE SG707 FOR SPECIAL APPLICATION.

(k) SEE G.O. 128, RULE 31.6.

© 1998 - 2021 San Diego Gas & Electric Company. All rights reserved. Removal of this copyright notice without permission is not permitted under law.

REV	CHANGE	DR	BY	DSN	APV	DATE	REV	CHANGE	DR	BY	DSN	APV	DATE
C							F						
B	FORMATTING	EDM	JIK	-	-	07/19/2021	E						
A	EDITORIAL CHANGES	-	LSM	IPJ	TPM	11/01/2017	D						

X	Indicates Latest Revision		Completely Revised		New Page		Information Removed

SDG&E ELECTRIC SERVICE STANDARDS & GUIDES

SHEET 3 OF 3

UNDERGROUND ELECTRIC SERVICE LATERAL CONDUIT REQUIREMENTS

SG309.3

TABLE OF CONTENTS

SCOPE: THIS STANDARD PROVIDES REQUIREMENTS FOR INSTALLATION, OWNERSHIP AND MAINTENANCE OF A SINGLE LOW-VOLTAGE UNDERGROUND SERVICE FED FROM OVERHEAD FACILITIES.

ATTENTION:

* CONTACT THE SDG&E INSPECTOR FOR INSTRUCTIONS ON TRENCHING NEAR THE POLE.

** SDG&E INSPECTION IS REQUIRED PRIOR TO BACKFILLING TRENCH.

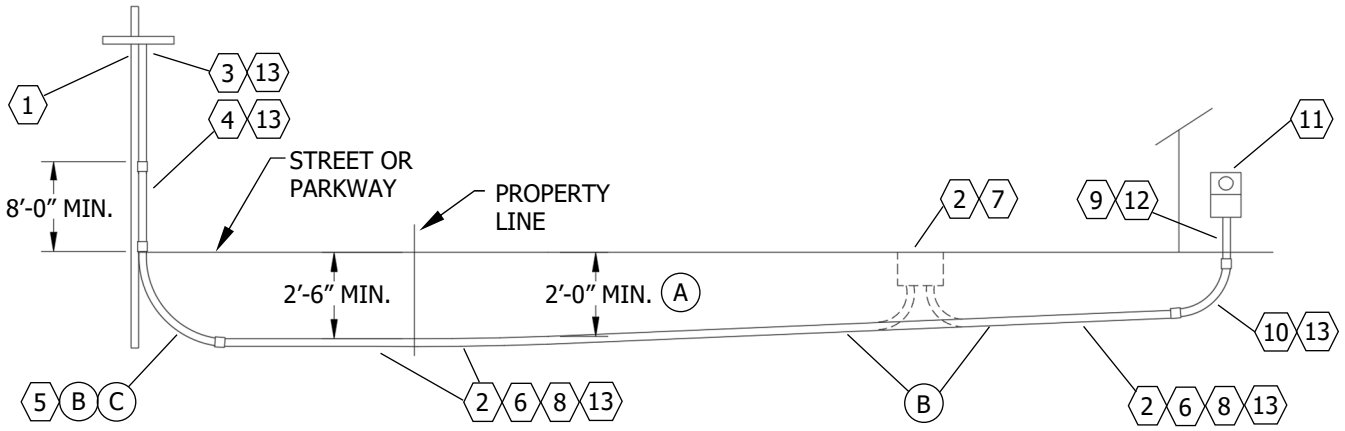

FIGURE1

TABLE 1

ITEM	DESCRIPTION	RESPONSIBLE PARTY
1	SOURCE POLE AS DESIGNATED BY SDG&E PLANNER. CONTACT PROJECT MANAGEMENT AT THE NEAREST SDG&E REGIONAL OFFICE CLOSEST TO THE JOB SITE FOR AN ELECTRIC METER & SERVICE LOCATION FORM PRIOR TO THE START OF CONSTRUCTION. (i)	SDG&E OVERHEAD DISTRIBUTION SYSTEM
2	SERVICE LATERAL CONDUCTORS AND CONNECTORS	SDG&E TO FURNISH, INSTALL, OWN AND MAINTAIN, SUBJECT TO INSTALLATION CHARGES
3	SCHEDULE 40 PVC CONDUIT	CUSTOMER TO PROVIDE, SDG&E TO INSTALL, OWN AND MAINTAIN
4	SCHEDULE 80 PVC CONDUIT	
5	SCHEDULE 80 PVC CONDUIT BEND. THE LARGER RADIUS AT THE POLES IS NECESSARY TO ALLOW FOR VERTICAL CABLE PULLING TENSION. (SEE TABLE 2)	CUSTOMER SHALL FURNISH, INSTALL, OWN AND MAINTAIN AT THEIR EXPENSE
6	A CLEAR ROUTE ON ANY PRIVATE PROPERTY, THAT IS CLEAR OF OBSTRUCTIONS WHICH WOULD INHIBIT THE CONSTRUCTION OF SERVICE FACILITIES. SERVICE LATERAL CONDUIT FROM SOURCE (ITEM 1) TO TERMINATING FACILITY (ITEM 11). CONDUIT SIZE SHALL BE BASED ON THE NAMEPLATE RATING OF THE SERVICE EQUIPMENT AND DISTANCE FROM TRANSFORMER TO THE TERMINATING FACILITY.	
7	SECONDARY HANDHOLE. VERIFY IF IT IS REQUIRED WITH THE SDG&E PLANNER. IF A HANDHOLE IS REQUIRED, THE LID SHALL BE MARKED "SDG&E".	
8	TRENCH, BACKFILL, PAVEMENT REPAIR AND STRUCTURES SHALL BE IN ACCORDANCE WITH SDG&E'S AND THE GOVERNMENTAL AUTHORITY HAVING JURISDICTION'S (AHJ) REQUIREMENTS. SPECIAL NOTE: CONTACT THE SDG&E INSPECTOR FOR INSTRUCTIONS FOR TRENCHING NEAR THE SDG&E POLE. THE CUSTOMER IS TO OBTAIN AN EXCAVATION PERMIT FOR TRENCHING IN THE STREET RIGHT-OF-WAY AS REQUIRED BY THE AHJ. SDG&E INSPECTION IS REQUIRED PRIOR TO SHADING AND BACKFILLING THE TRENCH.	

© 1998 - 2021 San Diego Gas & Electric Company. All rights reserved. Removal of this copyright notice without permission is not permitted under law.

REV	CHANGE	DR	BY	DSN	APV	DATE	REV	CHANGE	DR	BY	DSN	APV	DATE
C							F						
B	FORMATTING	EDM	JIK	-	-	07/19/2021	E						
A	EDITORIAL CHANGES	-	LSM	IPJ	TPM	11/01/2017	D						

X Indicates Latest Revision | Completely Revised | New Page | Information Removed

TABLE 1 (CONT'D)

ITEM	DESCRIPTION	RESPONSIBLE PARTY
⟨9⟩	ITEMS 3, 4, 5 AND 6 SHALL BE NON-METALLIC CONDUIT PER UG3373 AND UG4204. BETWEEN ITEM 5 AND ITEM 9 THE CONDUIT INSTALLER SHALL PROVIDE A 3/4-INCH PULLING AND MEASURING TAPE IN EACH CONDUIT. THE PULLING TAPE MUST BE APPROVED BY SDG&E, HAVE A MINIMUM AVERAGE TENSILE STRENGTH OF 2,500 POUNDS AND BE WOVEN POLYESTER HIGH STRENGTH, CONTINUOUS FILAMENT, PRE-LUBRICATED WITH FOOTAGE MARKING. PULLING TAPE TAILS OF 24 INCHES SHALL BE SECURED AT EACH END OF THE CONDUIT. THE PULLING TAPE SHALL BE PULLED IN BEHIND THE MANDREL. WHEN THE PULLING AND MEASURING TAPE IS INSTALLED IT SHALL BE ONE CONTINUOUS LENGTH WITHOUT KNOTS FOR THE ACCURATE MEASUREMENT FOR CONDUCTOR INSTALLATION AND THE PULLING OF CONDUCTORS OR WINCH LINES. LEAVE AT LEAST 2 FEET BEYOND EACH END OF THE CONDUIT RUN. FLEX CONDUIT IS NOT PERMITTED.	CUSTOMER SHALL FURNISH, INSTALL, OWN AND MAINTAIN AT THEIR EXPENSE
⟨10⟩	CONDUIT RISER BEND. (j)	
⟨11⟩	SERVICE TERMINATING ENCLOSURE PER SECTION 700 REQUIREMENTS.	
⟨12⟩	TYPE AND SCHEDULE OF CONDUIT ON OR WITHIN A BUILDING OR STRUCTURE SHALL BE INSTALLED PER THE AHJ'S REQUIREMENTS AND MUST BE LISTED AND LABELED. NORMALLY SCHEDULE 40 PVC IS ALLOWED INSIDE A BUILDING WALL AND SCHEDULE 80 PVC IS REQUIRED WHEN EXPOSED ON AN EXTERIOR WALL. CONSULT WITH THE APPROPRIATE AHJ. FLEX CONDUIT IS NOT PERMITTED.	
⟨13⟩	CONDUIT MANUFACTURER MUST BE SDG&E-APPROVED.	

TABLE 2

MINIMUM CONDUIT BEND RADIUS	
CONDUIT SIZE (IN)	MINIMUM BENDING RADIUS (IN)
3	36
4	48
5	48

TABLE OF CONTENTS

INSTALLATION:

(A) A 24-INCH MINIMUM COVER OVER THE CONDUIT IS REQUIRED FOR ALL NORMAL INSTALLATIONS ON PRIVATE PROPERTY, AND A 30-INCH MINIMUM COVER IS REQUIRED IN RIGHT-OF-WAY OR ON PUBLIC PROPERTY. IN ALL INSTALLATIONS WHERE THE MINIMUM COVER CANNOT BE MET, G.O. 128 REQUIRES ONE OF THE FOLLOWING ALTERNATIVES THAT ARE ACCEPTABLE TO SDG&E:

1. SCHEDULE 40 PVC OR SCHEDULE 80 PVC CONDUIT WITH A MINIMUM WALL THICKNESS OF 1/8-INCH.
2. AT LEAST A 3-INCH LAYER OF CONCRETE (2 SACK 3/8-INCH ROCK) ABOVE AND 2 INCHES ON EACH SIDE OF THE CONDUIT. REDUCED DEPTHS MUST BE APPROVED BY THE SDG&E PLANNER AND INSPECTOR.

(B) THE TRENCH MUST HAVE AN EVEN SLOPING GRADE TO ALLOW ROOM FOR A 90 DEGREE BEND INTO THE BOTTOM OF ANY CUSTOMER-OWNED OR SDG&E FACILITY. DO NOT CUT BENDS. THE TRENCH DEPTH IS TO BE DETERMINED AT THE PRE-CONSTRUCTION MEETING.

(C) WHEN TRENCHING TO AN EXISTING SDG&E FACILITY, THE APPLICANT/CONTRACTOR SHALL COMPLETE THE TRENCH AND INSTALLATION OF CONDUIT UP TO THE EXISTING FACILITY UNLESS IT IS DETERMINED BY AN AUTHORIZED SDG&E EMPLOYEE THAT SUCH AN INSTALLATION PERFORMED BY THE APPLICANT/CONTRACTOR WOULD EXPOSE WORKERS TO OR CREATE A POTENTIAL HAZARD. IN THIS CASE, SDG&E WOULD PERFORM TRENCHING AS INDICATED ON THE CONSTRUCTION WORK ORDER. DIGGING UNDER ENERGIZED PAD MOUNTED EQUIPMENT AND INSTALLATION OF CONDUIT INTO ENERGIZED PAD MOUNTED EQUIPMENT WILL ALWAYS BE THE RESPONSIBILITY OF SDG&E.

BILL OF MATERIALS: NONE

NOTES: NONE

© 1998 - 2021 San Diego Gas & Electric Company. All rights reserved. Removal of this copyright notice without permission is not permitted under law.

REV	CHANGE	DR	BY	DSN	APV	DATE	REV	CHANGE	DR	BY	DSN	APV	DATE
C							F						
B	FORMATTING	EDM	JIK	-	-	07/19/2021	E						
A	EDITORIAL CHANGES	-	LSM	IPJ	TPM	11/01/2017	D						

X Indicates Latest Revision | Completely Revised | New Page | Information Removed

REFERENCE:

a. SEE UG3367 FOR TRENCH PARALLELING FOUNDATIONS.

b. SEE UG3373 FOR SDG&E CONDUIT AND FITTINGS.

c. SEE UG3376 FOR CONCRETE SLURRY REQUIREMENTS.

d. SEE UG3941 FOR RESIDENTIAL RISER AND CONDUIT.

e. SEE UG3944 FOR MATERIAL REQUIREMENTS OF AN UG SERVICE FROM OH FACILITIES.

f. SEE UG3948 FOR CONDUIT SEALING.

g. SEE OH1404UG4204 FOR CABLE POLE CONDUIT REQUIREMENTS.

h. SEE UG3950 FOR FIELD HEATING SERVICE LATERAL CONDUITS.

(i) SEE SG3.

(j) SEE SG309.1 FOR MINIMUM BENDING RADIUS.

TABLE OF CONTENTS

© 1998 - 2021 San Diego Gas & Electric Company. All rights reserved. Removal of this copyright notice without permission is not permitted under law.

REV	CHANGE	DR	BY	DSN	APV	DATE	REV	CHANGE	DR	BY	DSN	APV	DATE
C							F						
B	FORMATTING	EDM	JIK	-	-	07/19/2021	E						
A	EDITORIAL CHANGES	-	LSM	IPJ	TPM	11/01/2017	D						

X Indicates Latest Revision	Completely Revised	New Page	Information Removed	

SCOPE: THIS STANDARD PROVIDES REQUIREMENTS FOR INSTALLATION, OWNERSHIP AND MAINTANENCE OF A PRIMARY AND SECONDARY VOLTAGE UNDERGROUND SYSTEM FED FROM A NEW CABLE POLE.

ATTENTION:

* CONTACT THE SDG&E INSPECTOR FOR INSTRUCTIONS ON TRENCHING NEAR THE POLE.

** SDG&E INSPECTION IS REQUIRED PRIOR TO BACKFILLING TRENCH.

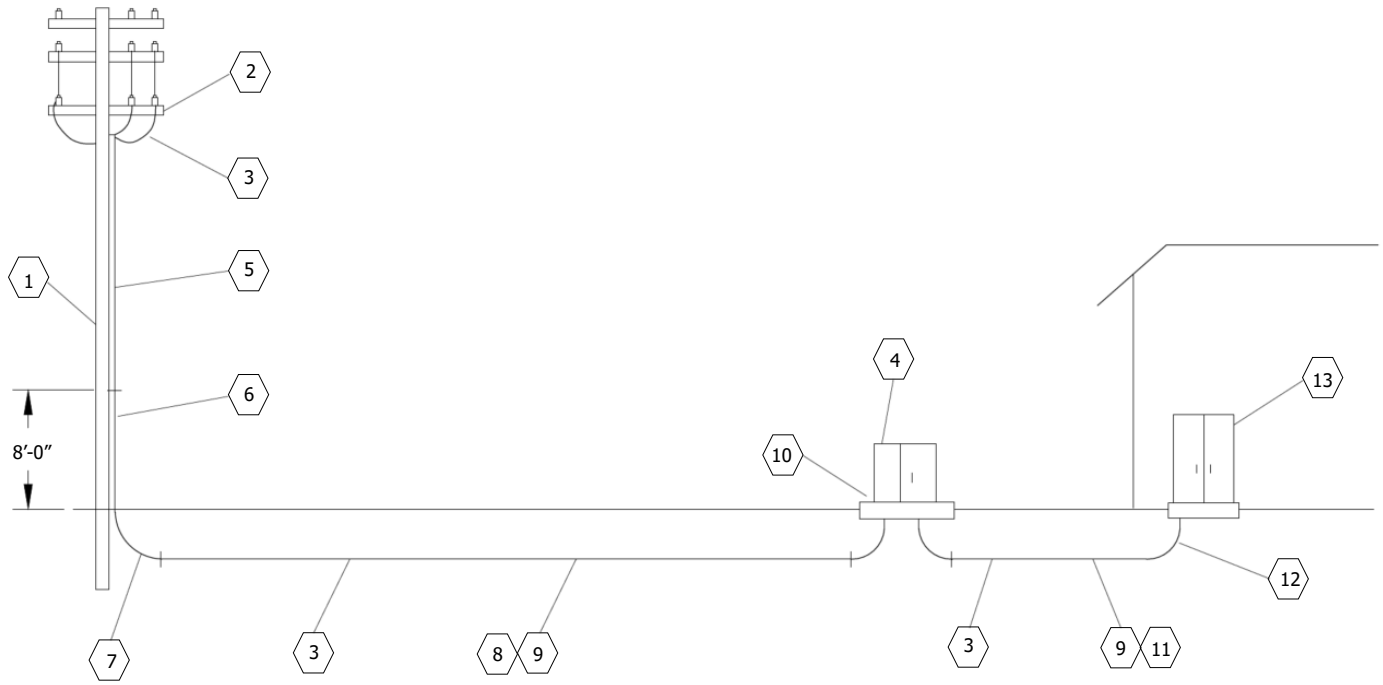

FIGURE 1

TABLE 1:

ITEM	DESCRIPTION	RESPONSIBLE PARTY
1	SOURCE POLE AS DESIGNATED BY SDG&E PLANNER, CONTACT PROJECT MANAGEMENTS AT THE NEAREST SDG&E REGIONAL OFFICE CLOSEST TO THE JOB SITE FOR AN ELECTRIC METER & SERVICE LOCATION FORM PRIOR TO THE START OF CONSTRUCTION.	SDG&E OVERHEAD DISTRIBUTION SYSTEM
2	MEDIUM-VOLTAGE TERMINALS	SDG&E TO FURNISH, INSTALL, OWN AND MAINTAIN, SUBJECT TO INSTALLATION CHARGES
3	MEDIUM-VOLTAGE AND LOW VOLTAGE CABLE AND CONNECTIONS	
4	TRANSFORMER	
5	SCHEDULE 40 PVC CONDUIT	
6	SCHEDULE 80 PVC CONDUIT	

© 1998 - 2023 San Diego Gas & Electric Company. All rights reserved. Removal of this copyright notice without permission is not permitted under law.

REV	CHANGE	DR	BY	DSN	APV	DATE	REV	CHANGE	DR	BY	DSN	APV	DATE
C	EDITORIAL CHANGES	ARC	IPJ	IPJ	KRG	08/07/2023	F						
B	FORMATTING	EDM	JIK	-	-	07/19/2021	E						
A	EDITORIAL CHANGES	-	LSM	IPJ	TPM	11/01/2017	D						

X Indicates Latest Revision | Completely Revised | New Page | Information Removed

TABLE OF CONTENTS

TABLE 1 (CONT'D):

ITEM	DESCRIPTION	RESPONSIBLE PARTY
7	SCHEDULE 80 PVC CONDUIT BEND. THE LARGER THE RADIUS AT THE POLES IS NECESSARY TO ALLOW FOR VERTICAL CABLE PULLING TENSION.	CUSTOMER SHALL FURNISH, INSTALL, OWN AND MAINTAIN AT THEIR EXPENSE
8	PRIMARY CONDUIT SIZED AND SPECIFIED BY SDG&E ON THE CONSTRUCTION WORK ORDER. THE CONDUIT MANUFACTURER MUST BE SDG&E-APPROVED. BETWEEN ITEM 7 AND ITEM 12, THE CONDUIT INSTALLER SHALL PROVIDE A 3/4-INCH PULLING AND MEASURING TAPE IN EACH CONDUIT. THE PULLING TAPE MUST BE APPROVED BY SDG&E, HAVE A MINIMUM AVERAGE TENSILE STRENGTH OF 2,500 POUNDS, AND BE WOVEN POLYESTER HIGH STRENGTH, CONTINOUS FILAMENT, PRE-LUBRICATED WITH FOOTAGE MARKING. PULLING TAPE TAILS OF 24 INCHES SHALL BE SECURED AT EACH END OF THE CONDUIT. THE PULLING TAPE SHALL BE PULLED IN BEHIND THE MANDREL. WHEN THE PULLING AND MEASURING	
9	A CLEAR ROUTE ON ANY PRIVATE PROPERTY, THAT IS CLEAR OF OBSTRUCTIONS WHICH WOULD INHIBIT THE CONSTRUCTION OF PRIMARY AND SERVICE FACILITIES. TRENCH, BACKFILL, PAVEMENT REPAIR AND STRUCTURES SHALL BE IN ACCORDANCE WITH SDG&E AND THE LOCAL GOVERNMENTAL AUTHORITY HAVING JURISDICTION (AHJ) REQUIREMENTS. ATTENTION: *CONTACT THE SDG&E INSPECTOR FOR INSTRUCTION ON TRENCHING NEAR THE SDG&E POLE. THE CUSTOMER IS TO OBTAIN AN EXCAVATION PERMIT FOR TRENCHING IN STREET RIGHT-OF-WAY AS REQUIRED BY THE AHJ. SDG&E INSPECTIONS IS REQUIRED PRIOR TO SHADING AND BACKFILLING THE TRENCH.	
10	TRANSFORMER PAD AND GROUNDING. THE PAD SIZE IS SPECIFIED ON THE CONSTRUCTION WORK ORDER. (f)	
11	SERVICE LATERAL CONDUIT SIZED AND SPECIFIED BY SDG&E ON THE CONSTRUCTION WORK ORDER OR ON A SEPARATE SERVICE ORDER. CONDUIT MANUFACTURER MUST BE SDG&E APPROVED. (g)	
12	TYPE AND SCHEDULE OF CONDUIT ON OR WITHIN A BUILDING OR STRUCTURE SHALL BE INSTALLED PER THE AHJ'S REQUIREMENTS AND MUST BE LISTED AND LABELED. NORMALLY, SCHEDULE 40 PVC IS ALLOWED INSIDE A BUILDING WALL AND SCHEDULE 80 PVC IS REQUIRED WHEN EXPOSED ON AN EXTERIOR WALL. CONSULT WITH THE APPROPIATE AHJ. FLEX CONDUIT IS NOT PERMITTED.	
13	SERVICE TERMINATING ENCLOSURE PER SECTION 700 REQUIREMENTS.	
14	IF A SECONDARY HANDHOLE IS REQUIRED BETWEEN THE NEW TRANSFORMER AND THE SERVICE AND METERING EQUIPMENT, THE LID SHALL BE MARKED "SDG&E". HANDHOLE NOT SHOWN ON FIGURE 1.	

TABLE 2:

SCHEDULE 80 PVC CONDUIT BEND	
CONDUIT SIZE (IN)	RADIUS (IN)
2, 3	36
4, 5	48

INSTALLATION:

A. A 24-INCH MINIMUM COVER OVER THE CONDUIT IS REQUIRED FOR ALL NORMAL INSTALLATIONS ON PRIVATE PROPERTY AND A 30-INCH MINIMUM COVER IS REQUIRED IN RIGHT-OF-WAY OR ON PUBLIC PROPERTY. IN ALL INSTALLATIONS WHERE THE MINIMUM COVER CANNOT BE MET, G.O. 128 REQUIRES ONE OF THE FOLLOWING:

1. STEEL CONDUIT.
2. SCHEDULE 40 PVC OR SCHEDULE 80 PVC CONDUIT WITH A MINIMUM WALL THICKNESS OF 1/8-INCH.
3. AT LEAST A 3-INCH LAYER OF CONCRETE (2 SACKS 3/8-INCH ROCK) ABOVE AND 2 INCHES ON EACH SIDE OF THE CONDUIT. REDUCED DEPTHS MUST BE APPROVED BY THE SDG&E PROJECT PLANNER AND INSPECTOR.

B. THE TRENCH MUST HAVE AN EVEN SLOPING GRADE TO ALLOW ROOM FOR A 90 DEGREE BEND INTO THE BOTTOM OF ANY CUSTOMER-OWNED OR SDG&E FACILITY. DO NOT CUT BENDS. THE TRENCH DEPTH IS TO BE DETERMINED AT THE PRE-CONSTRUCTION MEETING.

© 1998 - 2023 San Diego Gas & Electric Company. All rights reserved. Removal of this copyright notice without permission is not permitted under law.

REV	CHANGE	DR	BY	DSN	APV	DATE	REV	CHANGE	DR	BY	DSN	APV	DATE
C	EDITORIAL CHANGES	ARC	IPJ	IPJ	KRG	08/07/2023	F						
B	FORMATTING	EDM	JIK	-	-	07/19/2021	E						
A	EDITORIAL CHANGES	-	LSM	IPJ	TPM	11/01/2017	D						

INSTALLATION (CONT'D):

C. WHEN TRENCHING TO AN EXISTING SDG&E FACILITY, THE APPLICANT/CONTRACTOR SHALL COMPLETE THE TRENCH AND INSTALLATION OF CONDUIT UP TO THE EXISTING FACILITY UNLESS IT IS DETERMINED BY AN AUTHORIZED SDG&E EMPLOYEE THAT SUCH AN INSTALLATION PERFORMED BY THE APPLICANT/CONTRACTOR WOULD EXPOSE WORKERS TO, OR CREATE, A POTENTIAL HAZARD. IN THIS CASE, SDG&E WOULD PERFORM TRENCHING AS INDICATED ON THE CONSTRUCTION WORK ORDER. DIGGING UNDER ENERGIZED PAD MOUNTED EQUIPMENT AND INSTALLATION OF CONDUIT INTO ENERGIZED PAD MOUNTED EQUIPMENT WILL ALWAYS BE THE RESPONSIBILITY OF SDG&E.

BILL OF MATERIALS: NONE

NOTES: NONE

REFERENCE:

a. SEE UG3373 FOR SDG&E CONDUIT AND FIITINGS.

b. SEE UG3376 FOR CONCRETE SLURRY EQUIPMENTS.

c. SEE UG3941 FOR RESIDENDTILA RISER AND CONDUIT.

d. SEE UG3948 FOR SEALING CONDUITS.

e. SEE OH1404UG4204 FOR CABLE POLE CONDUIT REQUIREMENTS.

(f.) SEE UG4500 FOR GROUNDING SPECIFICATIONS.

(g.) SEE SG309 FOR ADDITIONAL INFORMATION.

TABLE OF CONTENTS

© 1998 - 2023 San Diego Gas & Electric Company. All rights reserved. Removal of this copyright notice without permission is not permitted under law.

REV	CHANGE	DR	BY	DSN	APV	DATE	REV	CHANGE	DR	BY	DSN	APV	DATE
C	EDITORIAL CHANGES	ARC	IPJ	IPJ	KRG	08/07/2023	F						
B	FORMATTING	EDM	JIK	-	-	07/19/2021	E						
A	EDITORIAL CHANGES	-	LSM	IPJ	TPM	11/01/2017	D						

X	Indicates Latest Revision		Completely Revised		New Page		Information Removed

SCOPE: THIS STANDARD SHOWS A TERMINATION OF A CUSTOMER-OWNED 2-INCH OR 3-INCH CONDUIT BEND AND RISER AT A BUILDING.

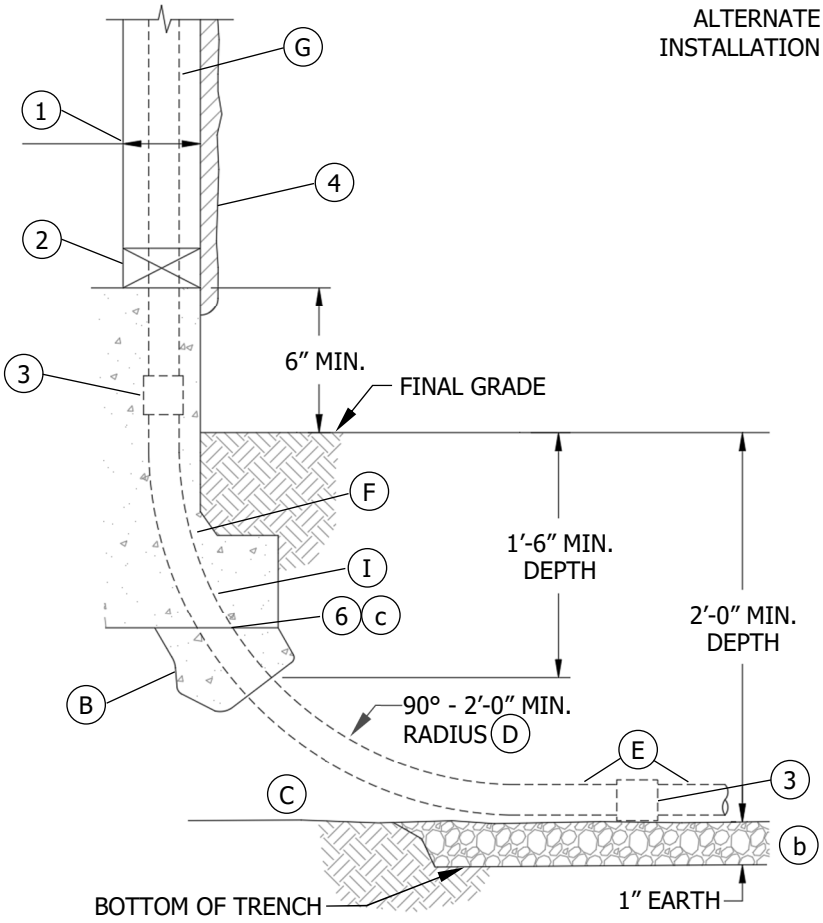

FIGURE 1
TYPICAL ELEVATION

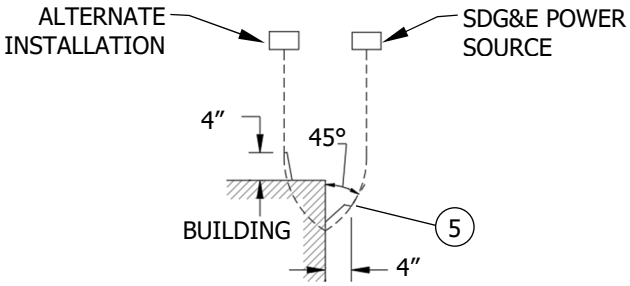

FIGURE 1
TYPICAL PLAN

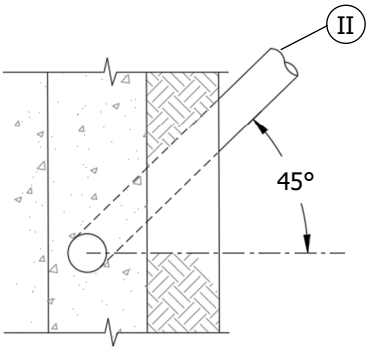

FIGURE 2
PLAN

INSTALLATION:

A. CONTACT PROJECT MANAGEMENT AT THE NEAREST SDG&E REGIONAL OFFICE CLOSEST TO THE JOB SITE FOR AN ELECTRIC METER & SERVICE LOCATION FORM PRIOR TO THE START OF CONSTRUCTION. (g)

(B) G.O. 128 RULE 33.4-D REQUIRES ONE OF THE FOLLOWING DOWN TO AN 18-INCH DEPTH ON PRIVATE PROPERTY:

1. STEEL CONDUIT
2. SCHEDULE 40 PVC OR SCHEDULE 80 PVC CONDUIT WITH A MINIMUM WALL THICKNESS OF 1/8-INCH
3. AT LEAST A 3-INCH LAYER OF CONCRETE ABOVE AND 2 INCHES ON EACH SIDE OF THE CONDUIT

© 1998 - 2021 San Diego Gas & Electric Company. All rights reserved. Removal of this copyright notice without permission is not permitted under law.

REV	CHANGE	DR	BY	DSN	APV	DATE	REV	CHANGE	DR	BY	DSN	APV	DATE
C							F						
B	FORMATTING	EDM	JIK	-	-	07/19/2021	E						
A	EDITORIAL CHANGES	-	LSM	IPJ	TPM	11/01/2017	D						

X	Indicates Latest Revision		Completely Revised		New Page		Information Removed

SDG&E ELECTRIC SERVICE STANDARDS & GUIDES

SHEET 1 OF 2

CUSTOMER – OWNED CONDUIT
BEND & RISER AT BUILDING

SG312.1

TABLE OF CONTENTS

INSTALLATION (CONT'D):

(C) WHEN THE TRENCH IS BUTTED AGAINST THE BUILDING, THE END OF THE TRENCH SHALL BE EXCAVATED AT A ONE-TO-ONE SLOPE IF UNDERMINING IS SUSPECTED AT THE BUILDING.

(D) THE 90 DEGREE BEND MUST BE INSTALLED DEEP ENOUGH TO CONNECT TO THE CONDUIT ON THE BOTTOM OF THE TRENCH.

(E) CONDUIT MANUFACTURER MUST BE SDG&E APPROVED.

(F) TYPE AND SCHEDULE OF CONDUIT ON OR WITHIN A BUILDING OR STRUCTURE TO BE INSTALLED PER THE BUILDING INSPECTOR'S REQUIREMENTS AND MUST BE LISTED AND LABELED. NORMALLY SCHEDULE 40 PVC IS ALLOWED INSIDE A BUILDING WALL AND SCHEDULE 80 PVC IS REQUIRED WHEN EXPOSED ON AN EXTERIOR WALL. CONSULT WITH THE APPROPRIATE INSPECTION AUTHORITY HAVING JURISDICTION (AHJ). FLEX CONDUIT IS NOT PERMITTED.

(G) SERVICE LATERAL CONDUIT SIZED AND SPECIFIED BY SDG&E. CONSULT WITH THE SDG&E PLANNER.

BILL OF MATERIALS:

ITEM	DESCRIPTION	QUANTITY	STANDARD PAGE	STOCK NUMBER	DESIGN UNITS
1	STUD, 2" X 4" (MIN.)	AS REQ'D	--	--	--
2	MUDSILL	AS REQ'D	--	--	--
3	COUPLING, CONDUIT	AS REQ'D	--	--	--
4	SURFACING MATERIAL, EXTERIOR	AS REQ'D	--	--	--
5	BEND, RISER	AS REQ'D	--	--	--
6	BEND, CONDUIT, 3"	AS REQ'D	--	--	--

NOTES:

(I) A STRAIGHT PIECE OF 3-INCH CONDUIT AND A 90 DEGREE BEND WITH A 36-INCH MINIMUM RADIUS IS REQUIRED. (f)

(II) POINT CONDUIT STUB IN THE DIRECTION OF SUPPLY SOURCE NORMALLY AT 45 DEGREE ANGLE FROM OUTER FACE OF BUILDING WALL.

REFERENCE:

a. SEE UG3367 FOR TRENCH PARALLELING FOUNDATIONS.

(b) SEE UG3370 (SAN DIEGO COUNTY) OR UG3371 (ORANGE COUNTY) FOR TRENCH DEPTHS, SHADING AND BACKFILL REQUIREMENTS.

(c) SEE UG3942 FOR MINIMUM BENDING RADIUS.

d. SEE UG3948 FOR SEALING CONDUITS.

e. SEE UG3950 FOR FIELD HEATING SERVICE LATERAL CONDUITS.

(f) SEE UG3942, NOTE C FOR 2-INCH CONDUIT INSTALLATIONS.

(g) SEE SG3.

(h) SEE UG3941.

(i) SEE SG309 FOR ADDITIONAL INFORMATION.

TABLE OF CONTENTS

© 1998 - 2021 San Diego Gas & Electric Company. All rights reserved. Removal of this copyright notice without permission is not permitted under law.

REV	CHANGE	DR	BY	DSN	APV	DATE	REV	CHANGE	DR	BY	DSN	APV	DATE
C							F						
B	FORMATTING	EDM	JIK	-	-	07/19/2021	E						
A	EDITORIAL CHANGES	-	LSM	IPJ	TPM	11/01/2017	D						

	X	Indicates Latest Revision		Completely Revised		New Page		Information Removed

SDG&E ELECTRIC SERVICE STANDARDS & GUIDES

SHEET 2 OF 2

CUSTOMER – OWNED CONDUIT BEND & RISER AT BUILDING

SG312.2

SCOPE: THIS STANDARD SHOWS TYPICAL CABLE POLE RISER POSITIONS FOR SDG&E AND COMMUNICATION COMPANIES.

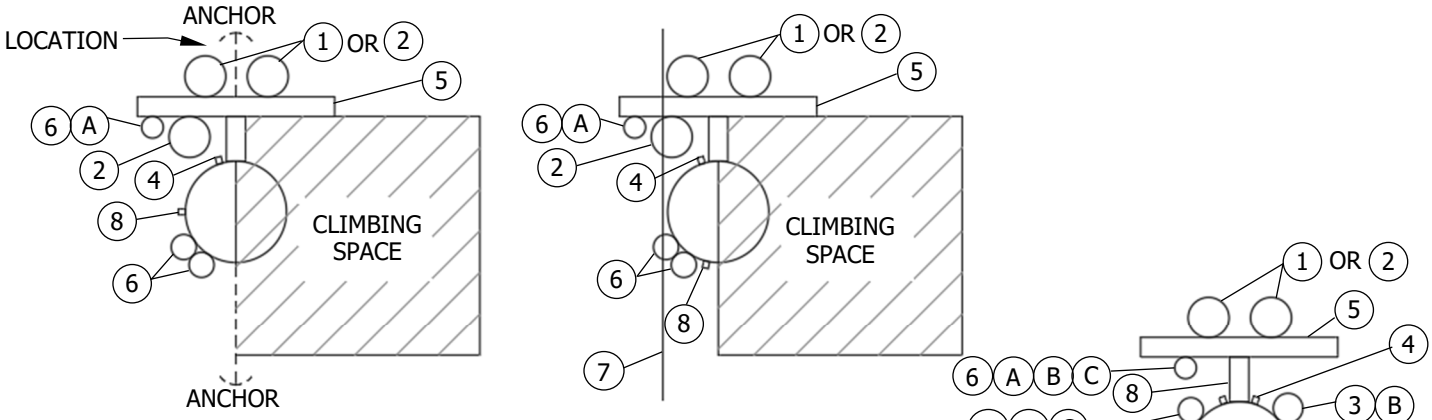

CONFIGURATION 1
DEADEND MULTIPLE POWER RISER

CONFIGURATION 2
THROUGH MULTIPLE POWER RISER

FIGURE 1
PREFERRED CONSTRUCTION

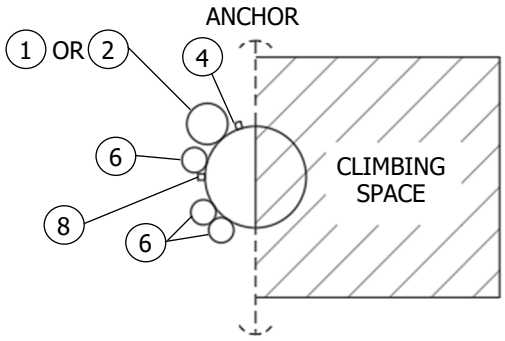

CONFIGURATION 1
DEADEND SINGLE POWER RISER

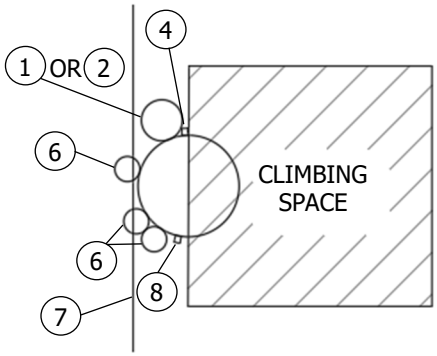

CONFIGURATION 2
THROUGH SINGLE POWER RISER

FIGURE 2
ALTERNATE CONSTRUCTION

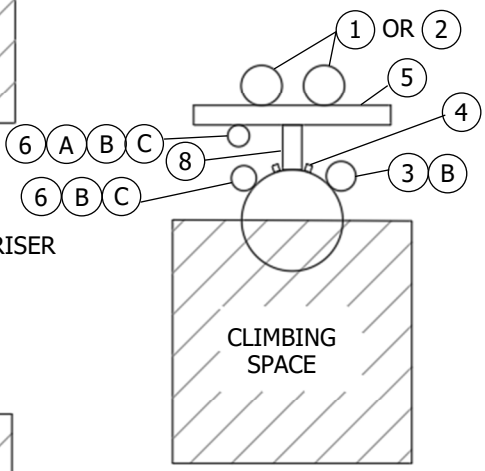

FIGURE 3
NEW CONSTRUCTION
WITH EXISTING SDG&E RISER
DEADEND OR THROUGH
CONSTRUCTION
MULTIPLE RISER

INSTALLATION:

(A) COMMUNICATIONS ONLY POINT OF ATTACHMENT FOR LADDER ARM BRACKET CONSTRUCTION SHALL BE ON THE BACKSIDE OF LADDER ARM BRACKET ASSEMBLY. GALVANIZED UNISTRUT PIPE CLAMPS SHALL BE USED TO SECURE THE CONDUIT. COMMUNICATIONS MAY ATTACH ON THE BACK OF THE LADDER ARM ASSEMBLY ALONGSIDE SDG&E'S RISER. LADDER ARMS MAY BE INSTALLED BY COMMUNICATIONS COMPANIES PROVIDED THEY ARE INSTALLED PER SDG&E CONSTRUCTION STANDARDS AND MEET SDG&E MATERIAL SPECIFICATIONS.

(B) FOR NEW CONSTRUCTION WITH AN EXISTING SDG&E RISER ON THE POLE (FIGURE 3), ONE 3-INCH RISER MAXIMUM ON THE POLE AND ONE 3-INCH RISER MAXIMUM ON THE BACKSIDE OF THE LADDER ARM BRACKET ARE PERMITTED BACK-TO-BACK.

(C) WHEN A LADDER ARM IS EXISTING, AND THE BACK OF LADDER ARM POSITIONS AND POLE POSITIONS ON COMMUNICATIONS SIDE OF POLE ARE OCCUPIED, ADDITIONAL COMMUNICATIONS RISERS MUST BE PLACED ON ANOTHER POLE.

© 1998 - 2021 San Diego Gas & Electric Company. All rights reserved. Removal of this copyright notice without permission is not permitted under law.

REV	CHANGE	DR	BY	DSN	APV	DATE	REV	CHANGE	DR	BY	DSN	APV	DATE
C							F						
B	FORMATTING	EDM	JIK	-	-	07/19/2021	E						
A	EDITORIAL CHANGES	-	LSM	IPJ	TPM	11/01/2017	D						

X	Indicates Latest Revision		Completely Revised		New Page		Information Removed

TABLE OF CONTENTS

BILL OF MATERIALS:

ITEM	DESCRIPTION	QUANTITY	STANDARD PAGE	STOCK NUMBER	DESIGN UNITS
1	RISER, PRIMARY, SDG&E	AS REQ'D	--	--	--
2	RISER, SECONDARY, SDG&E	AS REQ'D	--	--	--
3	RISER, EXISTING, SDG&E	AS REQ'D	--	--	--
4	GROUND, ELECTRIC, SDG&E	AS REQ'D	--	--	--
5	ASSEMBLY, BRACKET, LADDER ARM	AS REQ'D	--	--	--
6	RISER, POSITION, COMMUNICATION	AS REQ'D	--	--	--
7	TANGENT THROUGH POSITION, COMMUNICATION	AS REQ'D	--	--	--
8	GROUND, COMMUNICATION	AS REQ'D	--	--	--

NOTES:

I. 1/2 POLE CLIMBING SPACE APPLIES TO A LEVEL 4 FEET BELOW THE LOWEST LEVEL OF FACILITIES (COMMUNICATIONS, SECONDARY, PRIMARY, ETC.). (h)

II. CHANGES TO THESE STANDARD RISER POSITIONS MUST NOT REDUCE THE CLIMBING SPACE TO LESS THAN 1/2 POLE.

III. CONDUIT RISER AT BASE OF POLE NOT TO INFRINGE ON CURB OR SIDEWALK POSITIONS.

IV. SPARE CONDUITS ARE NOT CONSIDERED AS RISERS.

REFERENCE:

a. PVC RISERS ARE NOT PERMITTED WITHIN THE CLIMBING SPACE PER OH1414UG4214.

b. NO CATV OR TELCO JUMPERS ALLOWED IN CLIMBING SPACE PER G.O. 95 RULE 84.7.

c. SEE OH225 FOR ALLOWABLE G.O. 95 CLIMBING SPACE OBSTRUCTIONS.

d. SEE OH363UG4205 FOR INSTALLATION OF POLE STEPS.

e. SEE OH1403UG4203 FOR POLE QUADRANT AND RISER IDENTIFICATION.

f. SEE OH1404UG4204 WHEN INSTALLING A SINGLE RISER, MODIFYING EXISTING CABLE POLE TO INCLUDE SECOND RISER, OR FOR MULTIPLE CONDUIT RUNS AND JOINT POLE INSTALLATION.

g. SEE UG4620 FOR TELECOMMUNICATIONS INSTALLATION.

(h) SEE OH430 FOR CLIMBING SPACE REQUIREMENTS.

(i) SEE UG4202.

TABLE OF CONTENTS

© 1998 - 2021 San Diego Gas & Electric Company. All rights reserved. Removal of this copyright notice without permission is not permitted under law.

REV	CHANGE	DR	BY	DSN	APV	DATE	REV	CHANGE	DR	BY	DSN	APV	DATE
C							F						
B	FORMATTING	EDM	JIK	-	-	07/19/2021	E						
A	EDITORIAL CHANGES	-	LSM	IPJ	TPM	11/01/2017	D						

X Indicates Latest Revision | Completely Revised | New Page | Information Removed

SDG&E ELECTRIC SERVICE STANDARDS & GUIDES

STANDARD JOINT CABLE POLE RISER POSITION USING LADDER ARM BRACKET & SINGLE RISER

SG313.2

SCOPE: THIS STANDARD SHOWS CABLE POLE RISER LOCATIONS, SDG&E QUADRANT AND SIGN FOR MARKING POLE RISER INSTALLATIONS.

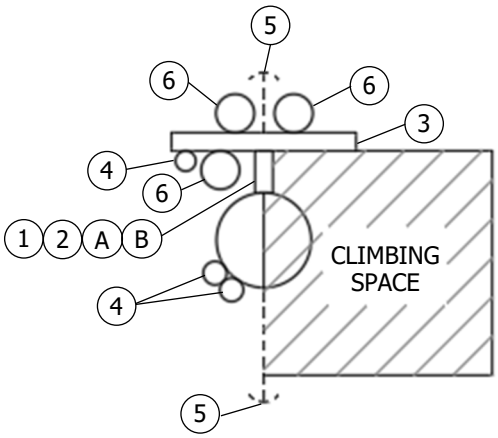

FIGURE 1
DEADEND CONSTRUCTION MULTIPLE POWER RISER

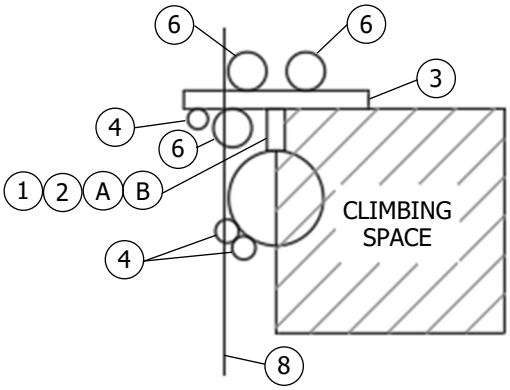

FIGURE 2
THROUGH CONSTRUCTION MULTIPLE POWER RISER

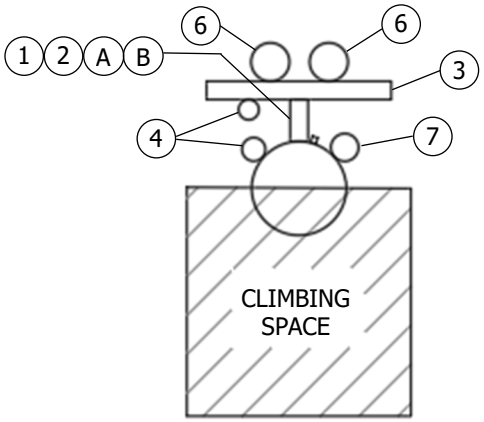

FIGURE 3
THROUGH CONSTRUCTION MULTIPLE POWER RISER

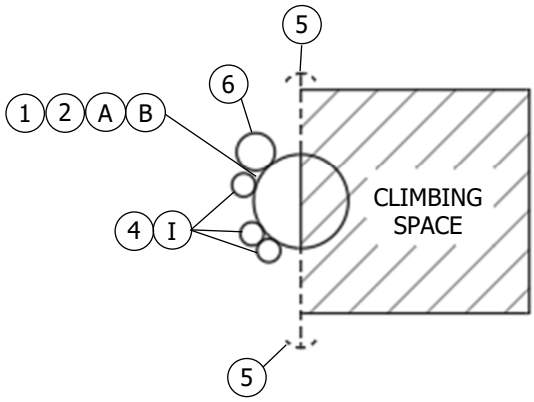

FIGURE 4
DEADEND CONSTRUCTION SINGLE POWER RISER

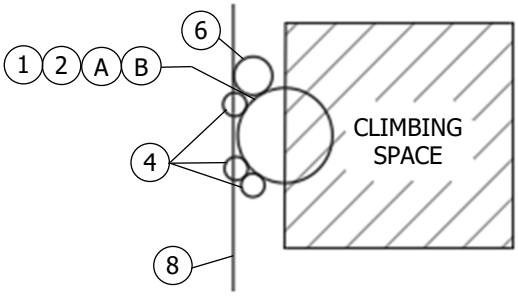

FIGURE 5
THROUGH CONSTRUCTION SINGLE POWER RISER

TABLE OF CONTENTS

© 1998 - 2021 San Diego Gas & Electric Company. All rights reserved. Removal of this copyright notice without permission is not permitted under law.

REV	CHANGE	DR	BY	DSN	APV	DATE	REV	CHANGE	DR	BY	DSN	APV	DATE
C							F						
B	FORMATTING	EDM	JIK	-	-	07/19/2021	E						
A	EDITORIAL CHANGES	-	LSM	IPJ	TPM	11/01/2017	D						

X	Indicates Latest Revision		Completely Revised		New Page		Information Removed

SDG&E ELECTRIC SERVICE STANDARDS & GUIDES

CABLE POLE QUADRANT & RISER IDENTIFICATION

SG314.1

INSTALLATION:

(A) NAIL THE SIGN TO THE RISER POLE APPROXIMATELY 5 FEET ABOVE GROUND WITH THE PROPER SIDE SHOWING.

(B) USE ONE MARKER TO SHOW SDG&E RISER LOCATION.

BILL OF MATERIALS:

ITEM	DESCRIPTION	QUANTITY	STANDARD PAGE	STOCK NUMBER	DESIGN UNITS
1	SIGN, MARKER, YELLOW PLASTIC	1	1403/4203	S476312	--
2	NAILS, GALV. 1 3/4"	AS REQ'D	--	S492192	--
3	BRACKET, LADDER ARM	AS REQ'D	--	--	--
4	COMMUNICATIONS	AS REQ'D	--	--	--
5	ANCHOR	AS REQ'D	--	--	--
6	SDG&E	AS REQ'D	--	--	--
7	RISER, EXISTING, SDG&E	AS REQ'D	--	--	--
8	TELCO OR CATV	AS REQ'D	--	--	--

NOTES:

(I) NO LARGER THAN 3 INCHES.

REFERENCE:

a. SEE OH1402UG4202 FOR STANDARD JOINT CABLE POLE RISER POSITIONS.

b. SEE OH1404UG4204 FOR CABLE POLE RISER INSTALLATION.

(c) SEE UG4203.

TABLE OF CONTENTS

© 1998 - 2021 San Diego Gas & Electric Company. All rights reserved. Removal of this copyright notice without permission is not permitted under law.

REV	CHANGE	DR	BY	DSN	APV	DATE	REV	CHANGE	DR	BY	DSN	APV	DATE
C							F						
B	FORMATTING	EDM	JIK	-	-	07/19/2021	E						
A	EDITORIAL CHANGES	-	LSM	IPJ	TPM	11/01/2017	D						

X Indicates Latest Revision | Completely Revised | New Page | Information Removed

SDG&E ELECTRIC SERVICE STANDARDS & GUIDES

CABLE POLE QUADRANT & RISER IDENTIFICATION

SG314.2

SCOPE: THIS STANDARD SHOWS THE SIGN USED FOR MARKING POLE RISER INSTALLATIONS.

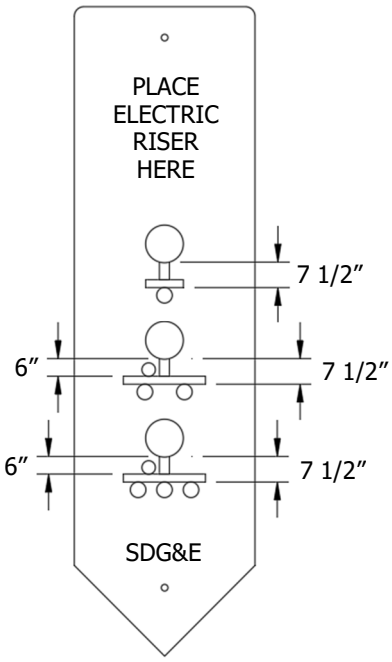

FIGURE 1
PREFERRED CONSTRUCTION
FRONT

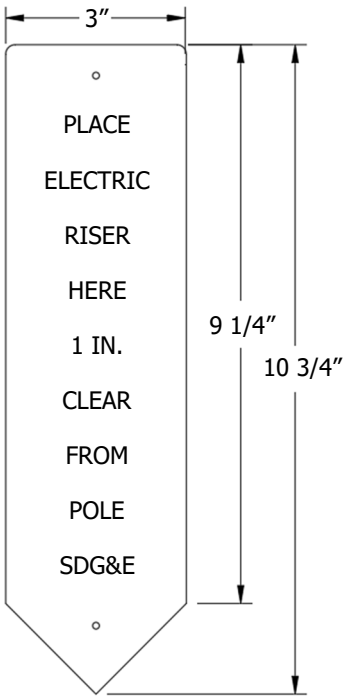

FIGURE 1
ALTERNATE CONSTRUCTION
REVERSE

TABLE OF CONTENTS

INSTALLATION:

A. USE THE SIDE OF THE SIGN STATING, "PLACE ELECTRIC RISER HERE" (FRONT), WHEN LADDER ARM BRACKETS ARE INSTALLED.

B. FOR ALTERNATE CONSTRUCTION, USE THE SIDE OF THE SIGN STATING, "PLACE ELECTRIC RISER HERE 1 IN. CLEAR FROM POLE" (REVERSE), WHEN A SINGLE SDG&E CONDUIT IS INSTALLED.

C. REMOVE SIGN WHEN POLE RISER(S) IS/ARE INSTALLED.

BILL OF MATERIALS: NONE

NOTES:

I. A SIGN IS AVAILABLE TO MARK SDG&E RISER LOCATIONS ON THE CABLE POLE. THE SIGN IS MADE OF FLEXIBLE PLASTIC, WITH RAISED LETTERING ON EACH SIDE. SIGNS ARE TO BE ATTACHED TO POLES WITH 1 3/4-INCH NAILS. SEE BILL OF MATERIALS ON PAGE 2 FOR STOCK NUMBERS.

II. "PLACE ELECTRIC RISER HERE, SDGE" IS PRINTED ON THE FRONT SIDE, SHOWING 3 POLE RISER POSITIONS, with "PLACE ELECTRIC RISER HERE 1 IN. CLEAR FROM POLE, SDGE" PRINTED ON THE REVERSE SIDE.

III. WHEN THE RISER LOCATION HAS BEEN DETERMINED, THE SIGNS ARE TO BE PLACED ON THE POLE, APPROXIMATELY 5 FEET ABOVE GROUND LEVEL BY THE CUSTOMER PROJECT PLANNER, PROJECT COORDINATOR, ELECTRIC SUPERVISOR, INSPECTOR, OR WORKING FOREMAN SETTING THE POLE.

REFERENCE:

a. SEE REFERENCES ON PAGE 2.

b. SEE UG4203.

© 1998 - 2021 San Diego Gas & Electric Company. All rights reserved. Removal of this copyright notice without permission is not permitted under law.

REV	CHANGE	DR	BY	DSN	APV	DATE	REV	CHANGE	DR	BY	DSN	APV	DATE
C							F						
B	FORMATTING	EDM	JIK	-	-	07/19/2021	E						
A	EDITORIAL CHANGES	-	LSM	IPJ	TPM	11/01/2017	D						

X	Indicates Latest Revision		Completely Revised		New Page		Information Removed

SCOPE: THIS STANDARD SHOWS NEW CONSTRUCTION FOR SINGLE AND MULTIPLE CONDUIT RISERS.

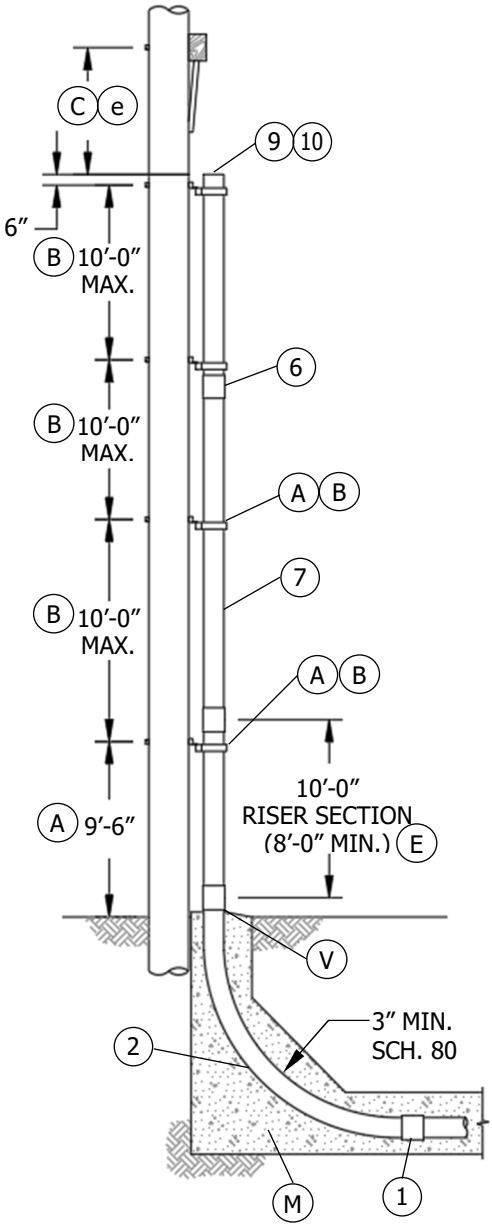

FIGURE 1 (N)
SIDE VIEW

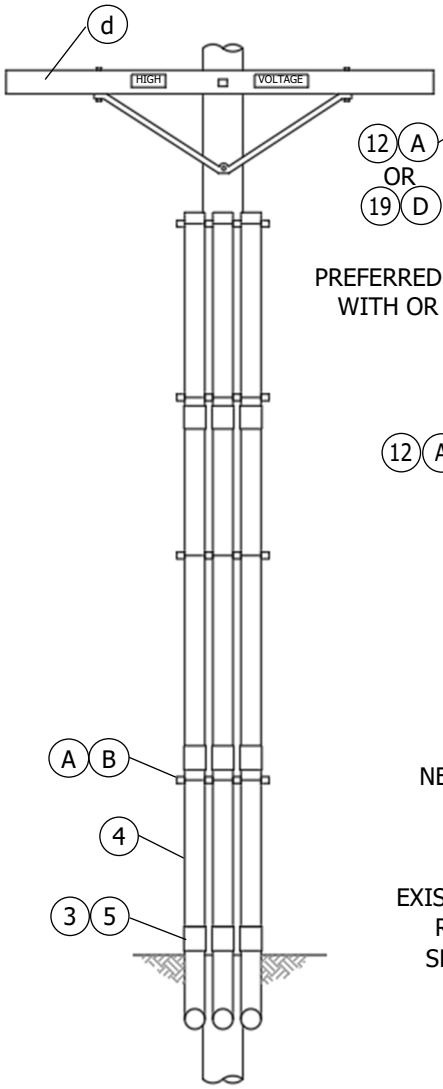

FIGURE 1 (N)
FRONT VIEW

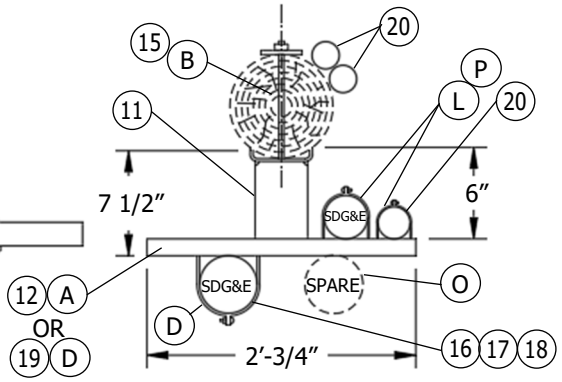

FIGURE 2
PREFERRED CONSTRUCTION FOR NEW SINGLE RISER WITH OR WITHOUT EXISTING RISER(S) ON POLE (G)

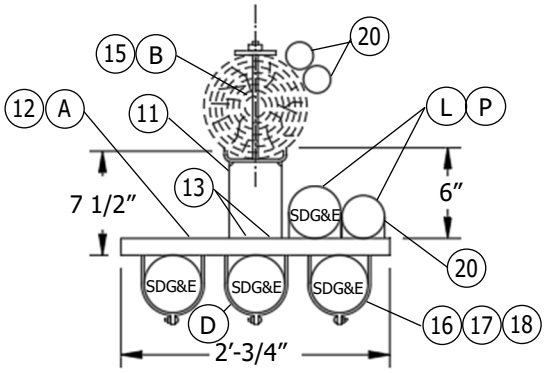

FIGURE 3
NEW MULTIPLE RISER CONSTRUCTION (H)

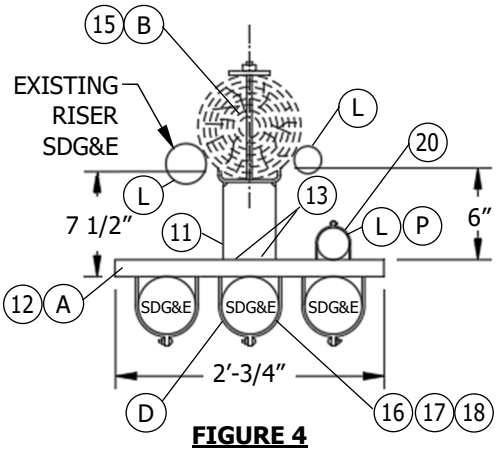

FIGURE 4
EXISTING RISER(S)
NEW MULTIPLE RISER CONSTRUCTION
WITH RISER(S) ON POLE (J)

© 1998 - 2021 San Diego Gas & Electric Company. All rights reserved. Removal of this copyright notice without permission is not permitted under law.

REV	CHANGE	DR	BY	DSN	APV	DATE	REV	CHANGE	DR	BY	DSN	APV	DATE
C							F						
B	FORMATTING	EDM	JIK	-	-	07/19/2021	E						
A	EDITORIAL CHANGES	-	LSM	IPJ	TPM	11/01/2017	D						

X	Indicates Latest Revision		Completely Revised		New Page		Information Removed

SDG&E ELECTRIC SERVICE STANDARDS & GUIDES

SHEET 1 OF 5

UNDERGROUND ELECTRIC CABLE POLE RISER INSTALLATION

SG315.1

TABLE OF CONTENTS

TABLE OF CONTENTS

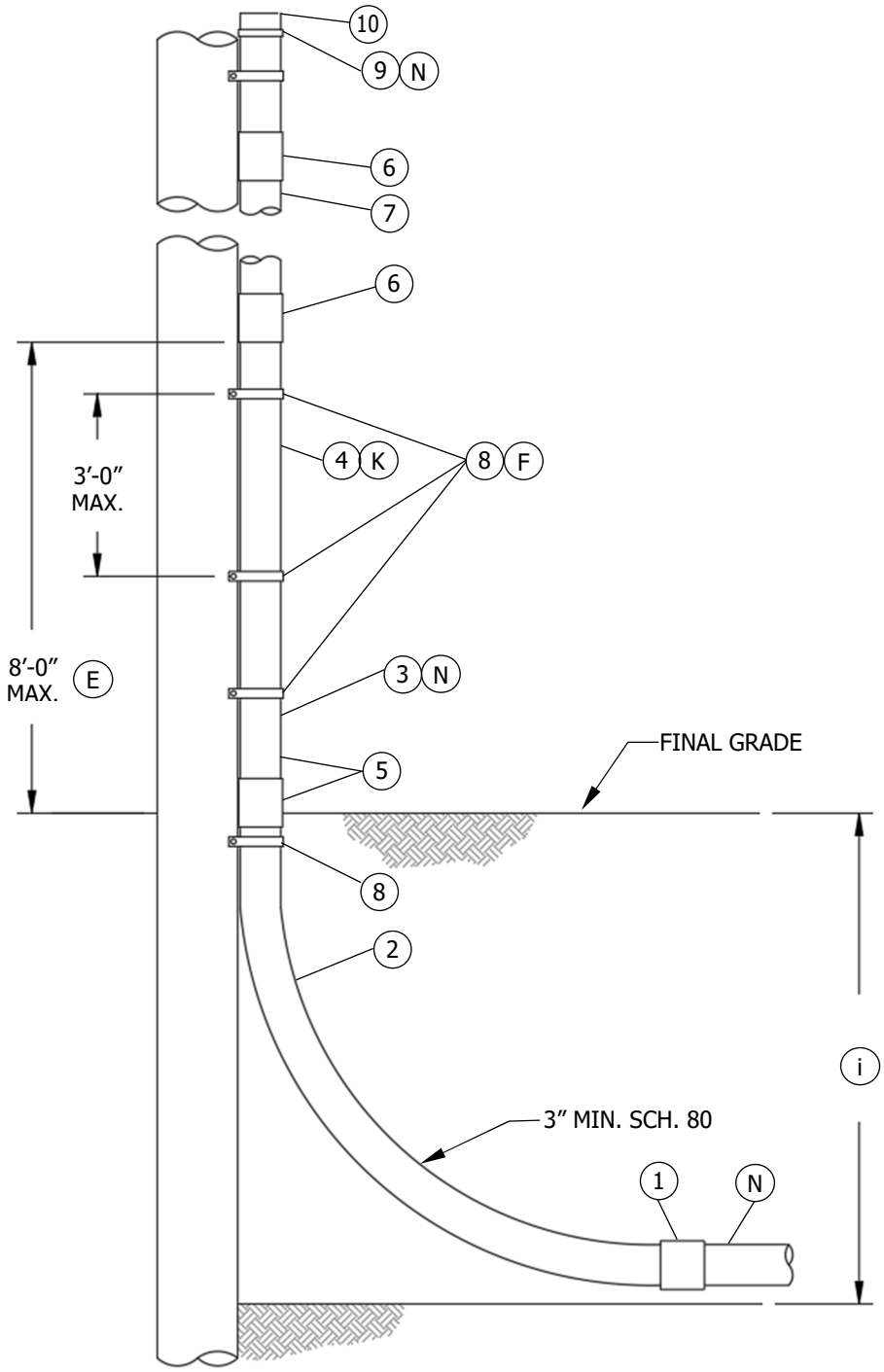

FIGURE 5
ALTERNATE NEW CONSTRUCTION
FOR ONE RISER
UP TO 3" CABLE POLE RISER DETAIL (K)

© 1998 - 2021 San Diego Gas & Electric Company. All rights reserved. Removal of this copyright notice without permission is not permitted under law.

REV	CHANGE	DR	BY	DSN	APV	DATE	REV	CHANGE	DR	BY	DSN	APV	DATE
C							F						
B	FORMATTING	EDM	JIK	-	-	07/19/2021	E						
A	EDITORIAL CHANGES	-	LSM	IPJ	TPM	11/01/2017	D						

X Indicates Latest Revision | Completely Revised | New Page | Information Removed

DEFINITIONS:

- **FUTURE SPARE CONDUITS:** THE TERM "FUTURE SPARE CONDUIT" REFERS TO AN EMPTY CONDUIT SPECIFIED BY EITHER THE PLANNER OR DISTRIBUTION PLANNING FOR AREAS WITH GROWTH POTENTIAL. FUTURE FEEDER CONDUIT SPECIFIED BY DISTRIBUTION PLANNING MUST BE SUPPORTED BY THE LONG TERM FEEDER ARRANGEMENT PLAN.
- **SPARE CONDUITS:** THE TERM "SPARE CONDUIT" REFERS TO AN EMPTY CONDUIT THAT IS SPECIFIED BY THE PLANNER FOR OPERATING AND MAINTENANCE REQUIREMENTS.

INSTALLATION:

(A) MOUNT FIRST BRACKET LADDER ARM NO LOWER THAN 9 FEET 6 INCHES. IF THE FIRST BRACKET EXTENDS TOWARD A STREET OR DRIVEWAY, OFFSET THE UNISTRUT CHANNEL TO CLEAR LARGE VEHICLES.

(B) INSTALL AT LEAST ONE LADDER ARM BRACKET FOR EACH COUPLING JOINT OF CONDUIT, WITH A MAXIMUM 10-FOOT DISTANCE BETWEEN BRACKETS. ALL LADDER ARM BRACKETS TO BE ATTACHED TO THE POLE WITH BOLTS, NOT LAG SCREWS.

(C) REFER TO INDIVIDUAL CABLE POLE STANDARD FOR CORRECT MEASUREMENT.

(D) CENTER CONDUIT POSITION SHALL BE USED FOR MULTIPLE SDG&E SECONDARY RUNS OR SDG&E TELECOMMUNICATION CONDUIT. OTHER CONDUIT POSITIONS ON THE FRONT OF THE BRACKET SHALL BE USED FOR A SINGLE OR DOUBLE CONDUIT. THE 8-INCH UNISTRUT CHANNEL (ITEM 19) MAY BE INSTALLED FOR A SINGLE RISER WHERE NO COMMUNICATIONS ARE ANTICIPATED.

(E) RISERS OF PLASTIC CONDUIT SHALL BE EPC-80 PVC SCHEDULE 80, FROM THE GROUND LINE TO A LEVEL NOT LESS THAN 8 FEET ABOVE THE GROUND LINE PER G.O. 95 RULE 54.6-E AND SDG&E CONDUIT SIZING REQUIREMENTS.

(F) FOR SINGLE RISER CONSTRUCTION, SEPARATION OF PIPE STRAPS (ITEM 8) SHALL BE 3 FEET MAXIMUM.

(G) USE FIGURE 2, PREFERRED CONSTRUCTION FOR A SINGLE RISER WHEN:

1. INSTALLING A SINGLE RISER.
2. ADDING A SINGLE RISER TO AN EXISTING RISER POLE. AN EXISTING SINGLE SDG&E RISER WOULD REMAIN ON THE POLE UNLESS IT IS CREATING A G.O. 95 INFRACTION. IF AN INFRACTION EXISTS, MOVE THE EXISTING RISER TO THE LADDER ARM BRACKET ALONG WITH THE NEW RISER SHOWN IN FIGURE 3.

(H) USE FIGURE 3 WHEN INSTALLING MORE THAN ONE RISER.

(J) USE FIGURE 4 WHEN ADDING A RISER(S) TO AN EXISTING SDG&E RISER POLE. AN EXISTING SINGLE SDG&E RISER WOULD REMAIN ON THE POLE UNLESS IT IS CREATING A G.O. 95 INFRACTION. IF AN INFRACTION EXISTS, MOVE THE EXISTING RISER TO THE LADDER ARM BRACKET.

(K) USE FIGURE 5 ALTERNATE CONSTRUCTION FOR A SINGLE RISER WHEN:

1. FIELD CONDITIONS DO NOT ALLOW ROOM FOR LADDER ARM BRACKETS (I.E., CONDUIT WOULD EXTEND INTO THE STREET, SIDEWALK, DRIVEWAY, ETC.). THIS INSTALLATION WOULD BE LIMITED TO ONE SDG&E RISER, UP TO 3 INCHES. (NO OTHER RISER(S) LARGER THAN 3 INCHES WOULD BE ON THE POLE.) ONE HALF OF THE POLE MUST REMAIN CLEAR FOR CLIMBING SPACE, AND G.O. 95 REQUIREMENTS MUST BE FOLLOWED.
2. AN EXISTING RISER IS ALREADY ON THE POLE AND IT MAY BE RE-USED (I.E., REMOVING A STREET LIGHT FUSE BOX FROM A POLE, AND NEW CONDUIT WILL CONNECT TO THE EXISTING CONDUIT WHERE THE FUSE BOX WAS LOCATED, CUSTOMER RE-WIRE JOB, ETC.).

(L) ONE RISER ON THE POLE 3 INCHES MAXIMUM AND ONE RISER ON THE BACK SIDE OF THE LADDER ARM BRACKET 3 INCHES MAXIMUM ARE PERMITTED BACK-TO-BACK. A MAXIMUM OF TWO 4-INCH COMMUNICATIONS RISERS ARE PERMITTED ON THE BACK SIDE OF A LADDER ARM ASSEMBLY. THE ADJACENT POLE QUADRANT MUST BE VACANT TO INSTALL ANY 4-INCH RISER ON THE BACK OF THE LADDER ARM BRACKET AND MUST REMAIN VACANT AFTER INSTALLATION.

(M) CONCRETE ENCASEMENT IS REQUIRED AROUND THE ELBOW(S) FOR 5-INCH PRIMARY CONDUIT(S).

TABLE OF CONTENTS

© 1998 - 2021 San Diego Gas & Electric Company. All rights reserved. Removal of this copyright notice without permission is not permitted under law.

REV	CHANGE	DR	BY	DSN	APV	DATE	REV	CHANGE	DR	BY	DSN	APV	DATE
C							F						
B	FORMATTING	EDM	JIK	-	-	07/19/2021	E						
A	EDITORIAL CHANGES	-	LSM	IPJ	TPM	11/01/2017	D						

X Indicates Latest Revision | Completely Revised | New Page | Information Removed

SDG&E ELECTRIC SERVICE STANDARDS & GUIDES

UNDERGROUND ELECTRIC
CABLE POLE RISER INSTALLATION

SG315.3

INSTALLATION (CONT'D):

(N) EACH CONDUIT RUN BETWEEN SUBSTRUCTURES, PADS, CUSTOMER SERVICE RISERS, ETC., SHALL BE ONE SIZE CONDUIT CONTINUOUSLY, I.E. NO REDUCERS ARE ALLOWED WITHIN A CONDUIT RUN EXCEPT WHERE THE CONDUIT ENTERS A SUBSTRUCTURE OR ABOVE GROUND LEVEL ON A RISER POLE. IF A 3-INCH RISER IS ALREADY INSTALLED, AND THE GRIP SIZE REQUIRES A 2-INCH RISER, A 2-INCH TO 3-INCH REDUCER MAY BE USED TO ACCOMMODATE THE GRIP. THE SAME WOULD APPLY TO OTHER SIZE CONDUITS AS HAS BEEN DESCRIBED. GRIPS ARE NOT REQUIRED ON SECONDARY RISERS.

(O) SPARE CONDUITS SHOULD BE CONSIDERED OR INSTALLED WHEN:

1. REQUESTED BY A CUSTOMER AT THEIR OWN EXPENSE, BUT NOT TO EXCEED CONDUIT LIMITATIONS IN THIS STANDARD.
2. IT IS ECONOMICAL TO INSTALL CONDUIT IN LIEU OF CONCRETE, BUT NOT TO EXCEED CONDUIT LIMITATIONS OF THIS STANDARD.
3. BASED ON FUTURE CONSTRUCTION LIMITATIONS SUCH AS BENEATH BRIDGES, ROADWAYS AND RAILROAD TRACKS, BUT NOT TO EXCEED CONDUIT LIMITATIONS IN THIS STANDARD.
4. IN CONVERSION OR NEW BUSINESS PROJECTS TO ALLOW EASY BYPASS OF THE POLE DURING REMOVAL. CONDUITS INSTALLED FOR THIS PURPOSE SHALL NOT GO UP THE POLE BUT SHALL EXTEND PAST THE POLE A MINIMUM OF 6 INCHES.

(P) COMMUNICATIONS ONLY POINT OF ATTACHMENT FOR LADDER ARM BRACKET CONSTRUCTION SHALL BE ON THE BACK SIDE OF THE LADDER ARM BRACKET ASSEMBLY. GALVANIZED UNISTRUT PIPE CLAMPS SHALL BE USED TO SECURE THE CONDUIT. COMMUNICATIONS MAY ATTACH ON THE BACK OF THE ASSEMBLY ALONGSIDE SDG&E'S RISER.

BILL OF MATERIALS:

ITEM	DESCRIPTION		WIRE SIZE	QUANTITY	STANDARD PAGE	STOCK NUMBER	DESIGN UNITS
1	COUPLING, SIZE AS REQUIRED	3″	--	AS REQ'D	390	S279904	--
		4″	--			S279936	--
		5″	--			S280032	--
2	CONDUIT RISER BEND, SCHEDULE 80, SIZE AS REQUIRED	3″-36″ R	--			S322472	CP-B
		4″-48″ R	--			S322480	CP-B
		5″-48″ R	--			S322488	CP-B
3	REDUCER, PVC, SCHEDULE 80, SIZE AS REQUIRED	4″ TO 3″	--			S573408	4-3RED
		5″ TO 4″	--			S573424	5-4RED
4	CONDUIT RISER, PVC, SCHEDULE 80, SIZE AS REQUIRED	3″	--			S251552	S80
		4″	--			S251584	S80
		5″	--			S251592	S80
5	COUPLING, PVC, SCHEDULE 80	3″	--			S280544	--
		4″	--			S280576	--
		5″	--			S280592	--
6	COUPLING, PVC, SCHEDULE 40, SIZE AS REQUIRED	3″	--			S280448	--
		4″	--			S280480	--
		5″	--			S280496	--
7	COUNDUIT, PVC, SCHEDULE 40, SIZE AS REQUIRED	3″	--			S251360	S40
		4″	--			S251392	S40
		5″	--			S251408	S40
8	STRAP, PIPE, GALVANIZED, 2-16D NAILS, GALVANIZED (VI)	3″	--			S697920	--
		4″	--			S697952	--
		5″	--			S697984	--
9	GRIP, CABLE SIZE AS REQUIRED FOR PRIMARY RISERS ONLY (N)	3″	1/C#2 SOL			S393984	2G1#2A
		3″	2-1/C#2 SOL			S394048	3G2#2A
		3″	3-1/C#2 SOL			S394048	3G3#2A
		4″	3-1/C#2 SOL			S394104	4G3#2A
		4″	3-1/C#2 SOL			S394080	4G#2/0
		4″	350 KCMIL			S394100	4G-350
		5″	350 KCMIL			S394102	5G-350
		5″	750 KCMIL			S394096	5G-750
		5″	1000 KCMIL			S394098	5G1000
		4″	4/0			S394080	4G4/0C
		5′	500 KCMIL			S394096	5G500C
10	PROTECTOR, NYLON CABLE	--	--			S558720	--

TABLE OF CONTENTS

© 1998 - 2021 San Diego Gas & Electric Company. All rights reserved. Removal of this copyright notice without permission is not permitted under law.

REV	CHANGE	DR	BY	DSN	APV	DATE	REV	CHANGE	DR	BY	DSN	APV	DATE
C							F						
B	FORMATTING	EDM	JIK	-	-	07/19/2021	E						
A	EDITORIAL CHANGES	-	LSM	IPJ	TPM	11/01/2017	D						

X Indicates Latest Revision | Completely Revised | New Page | Information Removed

SDG&E ELECTRIC SERVICE STANDARDS & GUIDES

UNDERGROUND ELECTRIC CABLE POLE RISER INSTALLATION

SG315.4

BILL OF MATERIALS (CONT'D):

ITEM	DESCRIPTION	WIRE SIZE	QUANTITY	STANDARD PAGE	STOCK NUMBER	DESIGN UNITS
11	BRACKET, LADDER ARM (B)	--	AS REQ'D	390	S167186 (X)	LA-ARM
12	CHANNEL, DOUBLE GALV., 24 3/4" X 7/8" X 2 3/4" (B)	--			S216702 (X)	
13	NUT, CLAMPING CHANNEL, W/ SPRING, 1/2"	--			S503488	--
14	CLAMP, PIPE, STEEL, GALV., UNISTRUT, 2" (VII)	--			S229536	CL-2IN
15	BOLT, MACHINE, GALV., 5/8" X (LENGTH AS REQ'D), 1-SQUARE WASHER & DOUBLE COIL SPRING WASHER (B)	--			--	--
16	CLAMP, PIPE, STEEL, GALV., UNISTRUT, 4"	--			S229664	CL-4IN
17	CLAMP, PIPE, STEEL, GALV., UNISTRUT, 5"	--			S229668	CL-5IN
18	CLAMP, PIPE, STEEL, GALV., UNISTRUT, 3"	--			S229632	CL-3IN
19	CHANNEL, GALV., 8" (D)	--			S216840	--
20	COMMUNICATIONS	--		--	--	--

NOTES:

I. ALL CABLE POLE RISERS, PRIMARY AND SECONDARY, SHALL BE 3-INCH MINIMUM CONDUIT.

II. THIS CONSTRUCTION IS LIMITED TO A MAXIMUM OF FOUR SDG&E RISERS (NO MORE THAN TWO PRIMARY RISERS).

III. WHEN POSSIBLE, THE RISER SHOULD BE INSTALLED ON THE SIDE OF THE POLE OPPOSITE TRAFFIC FLOW TOWARDS SIDEWALK. THIS INCLUDES SINGLE RISER INSTALLATIONS.

IV. SPARE CONDUITS SHALL BE CAPPED JUST ABOVE GROUND LEVEL TO PREVENT MOISTURE OR WIRE ENTRY AND TO KEEP OUT DEBRIS. SPARE CONDUITS ARE NOT TO BE CONSIDERED A RISER.

(V) SLOPE SLURRY ENCASEMENT 1/4-INCH ABOVE GRADE OF PAVED AREA TO DRAIN WATER AWAY FROM CONDUIT RISER.

(VI) SINGLE RISER CONSTRUCTION, 4-INCH AND SMALLER.

(VII) NOT SHOWN ON FIGURES.

(X) THIS ITEM IS EXEMPT.

REFERENCE:

a. SEE OH363UG4205 FOR POLE STEPS.

b. SEE UG3944 FOR UG SERVICE FROM OH FACILITIES, MATERIAL REQUIREMENTS, ETC.

c. SEE OH1402UG4202 FOR POSITIONING OF RISERS INVOLVING MORE THAN ONE UTILITY.

(d) SEE OH1440UG4240 FOR NON-PORCELAIN TERMINAL MOUNTING BRACKET INSTALLATION AND MATERIALS.

(e) SEE OH1414UG4214 FOR 0–750V UNDERGROUND SERVICE FROM AN OVERHEAD LINE.

f. SEE UG4620 FOR TELECOMMUNICATIONS INSTALLATION.

g. PVC RISERS ARE NOT PERMITTED WITHIN THE CLIMBING SPACE PER G.O. 95 RULE 22.2C.

(h) SEE UG4204.

(i) SEE UG3370 FOR DEPTH REQUIREMENTS.

TABLE OF CONTENTS

© 1998 - 2021 San Diego Gas & Electric Company. All rights reserved. Removal of this copyright notice without permission is not permitted under law.

REV	CHANGE	DR	BY	DSN	APV	DATE	REV	CHANGE	DR	BY	DSN	APV	DATE
C							F						
B	FORMATTING	EDM	JIK	-	-	07/19/2021	E						
A	EDITORIAL CHANGES	-	LSM	IPJ	TPM	11/01/2017	D						

X Indicates Latest Revision | Completely Revised | New Page | Information Removed

SDG&E ELECTRIC SERVICE STANDARDS & GUIDES

UNDERGROUND ELECTRIC CABLE POLE RISER INSTALLATION

SG315.5

SCOPE: THIS STANDARD SHOWS REQUIREMENTS FOR INSTALLING AN UNDERGROUND ELECTRIC SERVICE LATERAL TO GASOLINE DISPENSING AND SERVICE STATIONS. A GASOLINE DISPENSING AND SERVICE STATION IS DEFINED AS A LOCATION WHERE GASOLINE OR OTHER VOLATILE FLAMMABLE LIQUIDS OR LIQUEFIED FLAMMABLE GASES ARE TRANSFERRED TO FUEL TANKS (INCLUDING AUXILIARY FUEL TANKS) OR SELF-PROPELLED VEHICLES.

TABLE 1

CLASSIFIED SHADED AREAS		
CLASS/DIVISION	**DESCRIPTION**	**SYMBOL**
CLASS 1, DIVISION 1	FLAMMABLE GASES OR VAPORS, HIGHLY HAZARDOUS, I.E. IGNITABLE CONCENTRATIONS CONFINED IN A PIT.	
CLASS 1, DIVISION 2	LIQUID, VAPOR OR GASES WILL NORMALLY BE CONFINED WITHIN CLOSED CONTAINERS OR CLOSED SYSTEMS.	

ATTENTION:

* UTILITY-OWNED UNDERGROUND FACILITIES ARE NOT ALLOWED BELOW THE SURFACE OF A CLASS 1, DIVISION 1 OR CLASS 1, DIVISION 2 LOCATION. (a)

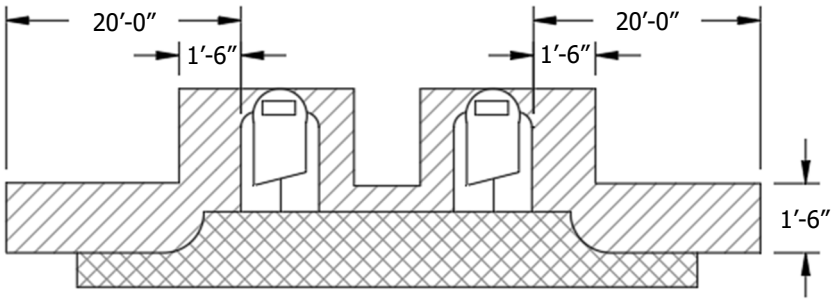

FIGURE 1
FRONT VIEW

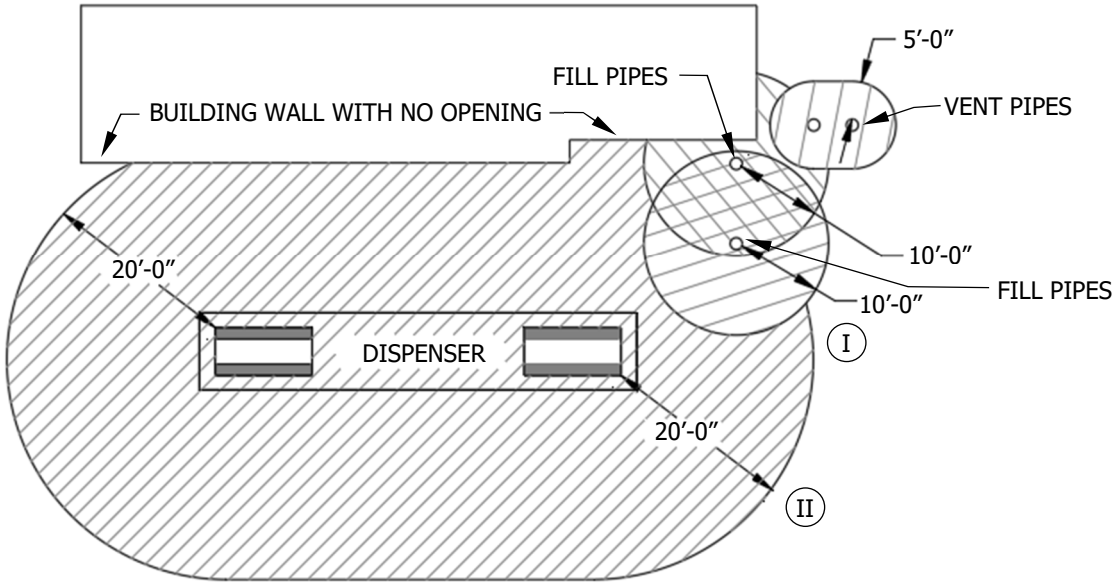

FIGURE 1
PLAN VIEW

© 1998 - 2021 San Diego Gas & Electric Company. All rights reserved. Removal of this copyright notice without permission is not permitted under law.

REV	CHANGE	DR	BY	DSN	APV	DATE	REV	CHANGE	DR	BY	DSN	APV	DATE
C							F						
B	FORMATTING	EDM	JIK	-	-	07/19/2021	E						
A	EDITORIAL CHANGES	-	LSM	IPJ	TPM	11/01/2017	D						

X	Indicates Latest Revision		Completely Revised		New Page		Information Removed

TABLE OF CONTENTS

INSTALLATION: NONE

BILL OF MATERIALS: NONE

NOTES:

(I) 5-FOOT RADIUS FROM TIGHT FILL CONNECTIONS, 10-FOOT RADIUS FROM LOOSE FILL CONNECTIONS.

(II) UTILITY UNDERGROUND SERVICE LATERALS ARE NOT PERMITTED IN CLASS 1, DIVISION 1 OR CLASS 1, DIVISION 2 LOCATIONS.

REFERENCE:

(a) SEE SG318 FOR INSTALLATION NOTES.

TABLE OF CONTENTS

© 1998 - 2021 San Diego Gas & Electric Company. All rights reserved. Removal of this copyright notice without permission is not permitted under law.

REV	CHANGE	DR	BY	DSN	APV	DATE	REV	CHANGE	DR	BY	DSN	APV	DATE
C							F						
B	FORMATTING	EDM	JIK	-	-	07/19/2021	E						
A	EDITORIAL CHANGES	-	LSM	IPJ	TPM	11/01/2017	D						

X	Indicates Latest Revision		Completely Revised		New Page		Information Removed	

SCOPE: THIS STANDARD SHOWS REQUIREMENTS FOR INSTALLING UNDERGROUND ELECTRIC SERVICE LATERALS AND ELECTRIC METER PANELS IN PROXIMITY TO ABOVE GROUND PROPANE TANKS.

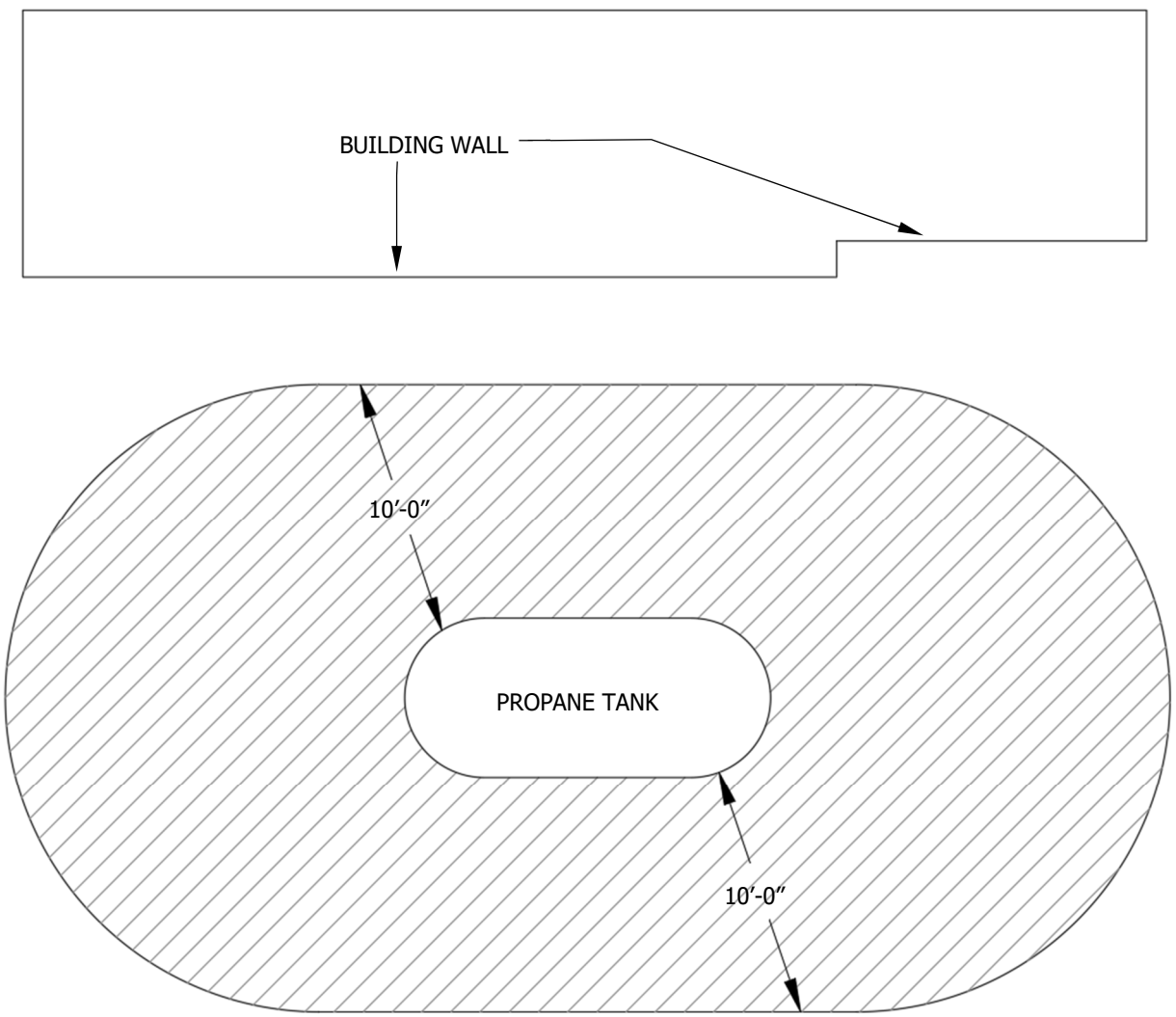

FIGURE 1
FOR TANKS UP TO 500
GALLONS IN SIZE
PLAN VIEW

INSTALLATION: NONE

BILL OF MATERIALS: NONE

NOTES:

I. UNDERGROUND ELECTRIC SERVICE LATERALS ARE NOT TO PASS WITHIN THE 10-FOOT CLEARANCE AREA AROUND THE PROPANE TANKS UP TO 500 GALLONS WHETHER IT IS ABOVE GROUND OR SUBTERRANEAN (25 FEET FOR ABOVE GROUND TANKS RANGING FROM 501 TO 2,000 GALLONS).

© 1998 - 2021 San Diego Gas & Electric Company. All rights reserved. Removal of this copyright notice without permission is not permitted under law.

REV	CHANGE	DR	BY	DSN	APV	DATE	REV	CHANGE	DR	BY	DSN	APV	DATE
C							F						
B	FORMATTING	EDM	JIK	-	-	07/19/2021	E						
A	EDITORIAL CHANGES	-	LSM	IPJ	TPM	11/01/2017	D						

X Indicates Latest Revision | Completely Revised | New Page | Information Removed

SDG&E ELECTRIC SERVICE STANDARDS & GUIDES

SHEET
1 OF 4

UNDERGROUND ELECTRIC SERVICE LATERAL &
METER PANELS IN PROXIMITY TO PROPANE TANKS

SG317.1

TABLE OF CONTENTS

NOTES (CONT'D):

II. FOR TANKS LARGER THAN 2,000 GALLONS, CONSULT SDG&E SERVICE STANDARDS. UTILITY-OWNED UNDERGROUND FACILITIES ARE NOT ALLOWED BELOW THE SURFACE OF A CLASS 1, DIVISION 1 OR CLASS 1, DIVISION 2 LOCATION. (a)

III. ABOVE GROUND PROPANE TANKS:

a. PROPANE TANKS COME IN THREE MAIN SIZES: 330, 500 AND 1,000 GALLONS. THE SIZE SELECTED NORMALLY DEPENDS ON THE PROPANE REQUIREMENTS AND THE SIZE OF THE STRUCTURE USING THE FUEL.

b. ELECTRIC METER PANELS ARE A SOURCE OF IGNITION FOR PROPANE GAS AND SHALL BE INSTALLED IN COMPLIANCE WITH THE FOLLOWING CLEARANCE REQUIREMENTS:

TABLE 1

RADIAL HORIZONTAL CLEARANCE REQUIREMENTS AROUND TANKS	
TANK SIZE (GALLONS)	**RADIAL CLEARANCE (FEET)**
UP TO 500	10 MINIMUM
501 TO 2,000	25 MINIMUM

REFERENCE:

(a) SEE INSTALLATION NOTES ON SG318.

TABLE OF CONTENTS

© 1998 - 2021 San Diego Gas & Electric Company. All rights reserved. Removal of this copyright notice without permission is not permitted under law.

REV	CHANGE	DR	BY	DSN	APV	DATE	REV	CHANGE	DR	BY	DSN	APV	DATE
C							F						
B	FORMATTING	EDM	JIK	-	-	07/19/2021	E						
A	EDITORIAL CHANGES	-	LSM	IPJ	TPM	11/01/2017	D						

X Indicates Latest Revision | Completely Revised | New Page | Information Removed

SCOPE: THIS STANDARD SHOWS REQUIREMENTS FOR INSTALLING UNDERGROUND ELECTRIC SERVICE LATERALS AND ELECTRIC METER PANELS IN PROXIMITY TO SUBTERRANEAN PROPANE TANKS.

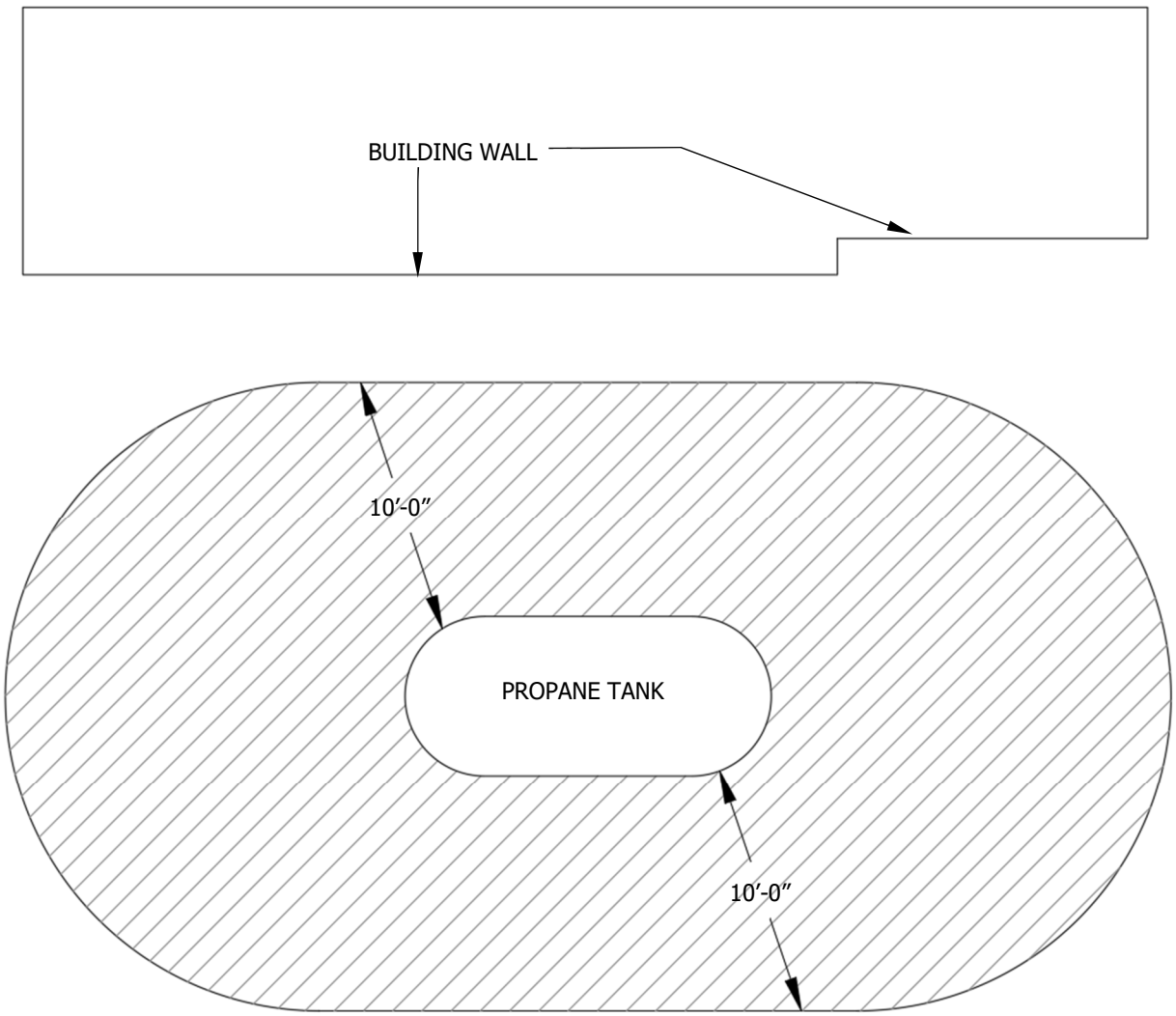

FIGURE 2
CLEARANCE REQUIREMENT FOR
SUBTERRANEAN TANKS UP TO
2,000 GALLONS
PLAN VIEW

INSTALLATION: NONE

BILL OF MATERIALS: NONE

NOTES:

I. UNDERGROUND ELECTRIC SERVICE LATERALS ARE NOT TO PASS WITHIN THE 10-FOOT CLEARANCE AREA AROUND THE PROPANE TANK WHETHER IT IS ABOVE GROUND OR SUBTERRANEAN.

© 1998 - 2021 San Diego Gas & Electric Company. All rights reserved. Removal of this copyright notice without permission is not permitted under law.

REV	CHANGE	DR	BY	DSN	APV	DATE	REV	CHANGE	DR	BY	DSN	APV	DATE
C							F						
B	FORMATTING	EDM	JIK	-	-	07/19/2021	E						
A	EDITORIAL CHANGES	-	LSM	IPJ	TPM	11/01/2017	D						

X Indicates Latest Revision | Completely Revised | New Page | Information Removed

SDG&E ELECTRIC SERVICE STANDARDS & GUIDES

UNDERGROUND ELECTRIC SERVICE LATERAL &
METER PANELS IN PROXIMITY TO PROPANE TANKS

SG317.3

NOTES (CONT'D):

II. FOR TANKS LARGER THAN 2,000 GALLONS, CONSULT SDG&E SERVICE STANDARDS. (C)

III. SUBTERRANEAN PROPANE TANKS:

a. SUBTERRANEAN TANKS UP TO 2,000 GALLONS REQUIRE A 10-FOOT MINIMUM HORIZONTAL CLEARANCE FROM SOURCES OF IGNITION. THE ONLY VISIBLE PART OF THESE TANKS IS THE RISER COVER, WHICH IS ABOUT 1-FOOT HIGH AND 1-FOOT DIAMETER.

b. FOR THE PURPOSES OF PLANNING THE PLACEMENT OF AN UNDERGROUND ELECTRIC SERVICE LATERAL AND METER LOCATION, THE CUSTOMER IS RESPONSIBLE FOR PROVIDING THE TANK SIZE AND DIMENSION SPECIFICATIONS FOR SUBTERRANEAN TANKS, AND MARKING OUT THE FOOTPRINT OF THE TANK AT THE JOB SITE. THE 10-FOOT CLEARANCE REQUIREMENT WILL BE MEASURED FROM THE OUTSIDE EDGE OF THE MARKED OUT FOOTPRINT.

REFERENCE:

a. FOR LIQUEFIED PETROLEUM GAS CODE, SEE NFPA 58.

b. SEE CALIFORNIA FIRE CODE: LIQUEFIED PETROLEUM GASES, CHAPTER 38.

(C) SEE INSTALLATION NOTES ON SG318.

TABLE OF CONTENTS

© 1998 - 2021 San Diego Gas & Electric Company. All rights reserved. Removal of this copyright notice without permission is not permitted under law.

REV	CHANGE	DR	BY	DSN	APV	DATE	REV	CHANGE	DR	BY	DSN	APV	DATE
C							F						
B	FORMATTING	EDM	JIK	-	-	07/19/2021	E						
A	EDITORIAL CHANGES	-	LSM	IPJ	TPM	11/01/2017	D						

X Indicates Latest Revision | Completely Revised | New Page | Information Removed

SDG&E ELECTRIC SERVICE STANDARDS & GUIDES

UNDERGROUND ELECTRIC SERVICE LATERAL & METER PANELS IN PROXIMITY TO PROPANE TANKS

SG317.4

SCOPE: THIS STANDARD PROVIDES REQUIREMENTS FOR INSTALLING UNDERGROUND ELECTRIC SERVICE LATERALS AND SERVICE AND METERING EQUIPMENT NEAR GASOLINE DISPENSING EQUIPMENT AND PROPANE TANKS.

INSTALLATION:

A. IF THE SERVICE LATERAL, USING THE SHORTEST PRACTICABLE ROUTE, WILL NOT EXTEND THROUGH A "HAZARDOUS (CLASSIFIED) LOCATION", THE SERVICE AND METERING EQUIPMENT MAY BE LOCATED ON THE BUILDING.

B. IF THE SERVICE LATERAL, USING THE SHORTEST PRACTICABLE ROUTE, WOULD EXTEND THROUGH A "HAZARDOUS (CLASSIFIED) LOCATION", THE SERVICE AND METERING EQUIPMENT MUST BE GROUPED AND LOCATED OUTSIDE, AND PRIOR TO, THE "HAZARDOUS (CLASSIFIED) LOCATION". THE CUSTOMER WOULD THEN EXTEND THEIR METERED CONDUCTORS AS PREMISES WIRING IN ACCORDANCE WITH REQUIREMENTS OF THE GOVERNMENTAL AUTHORITY HAVING JURISDICTION (AHJ).

C. IF THERE IS AN ACCEPTABLE LOCATION ON THE BUILDING FOR THE SERVICE AND METERING EQUIPMENT WHICH IS "OUTSIDE THE HAZARDOUS (CLASSIFIED) LOCATION", AND ADDITIONAL FACILITIES COULD BE INSTALLED SO THE SERVICE LATERAL WOULD NOT ENCROACH IN THE "HAZARDOUS (CLASSIFIED) LOCATION", BUT WOULD NOT BE THE SHORTEST PRACTICABLE ROUTE FOR THE SERVICE LATERAL FROM THE SDG&E CLOSEST SOURCE, THE CUSTOMER MAY BE GIVEN THE OPTION TO:

1. LOCATE THEIR EQUIPMENT AS STATED IN B, OR
2. PAY THE TOTAL ESTIMATED RULE 2, I, SPECIAL FACILITIES AND MAINTENANCE, CHARGES FOR THE ADDITIONAL SERVICE LATERAL CONDUCTORS REQUIRED TO AVOID THE "HAZARDOUS (CLASSIFIED) LOCATION".

CAUTION:

* CONFIRM THAT THE FUTURE EXPANSION OF TANKS, PUMPS, ETC., WILL NOT ENCROACH INTO THE AREA OF SDG&E'S SERVICE LATERAL CONDUCTORS INSTALLED WITHIN THE CUSTOMER'S CONDUIT.

BILL OF MATERIALS: NONE

NOTES: NONE

REFERENCE:

a. REFER TO SG019 FOR MINIMUM CLEARANCE AND SEPARATION REQUIREMENTS OF ENERGIZED OVERHEAD CONDUCTORS FROM CONTAINERS OF FLAMMABLE OR EXPLOSIVE MIXTURES, SUCH AS PROPANE TANKS.

TABLE OF CONTENTS

© 1998 - 2021 San Diego Gas & Electric Company. All rights reserved. Removal of this copyright notice without permission is not permitted under law.

REV	CHANGE	DR	BY	DSN	APV	DATE	REV	CHANGE	DR	BY	DSN	APV	DATE
C							F						
B	FORMATTING	EDM	JIK	-	-	07/19/2021	E						
A	EDITORIAL CHANGES	-	LSM	IPJ	TPM	11/01/2017	D						

	X	Indicates Latest Revision		Completely Revised		New Page		Information Removed

SDG&E ELECTRIC SERVICE STANDARDS & GUIDES

SHEET 1 OF 1

UNDERGROUND ELECTRIC SERVICE NEAR GASOLINE DISPENSING EQUIPMENT & PROPANE TANKS

SG318.1

SCOPE: THIS STANDARD PROVIDES CLEARANCE REQUIREMENTS FOR CUSTOMER-OWNED UNDERGROUND ELECTRIC SERVICE LATERAL CONDUIT, AND SUBSTRUCTURE(S) WHEN REQUIRED, FROM LEACH FIELDS.

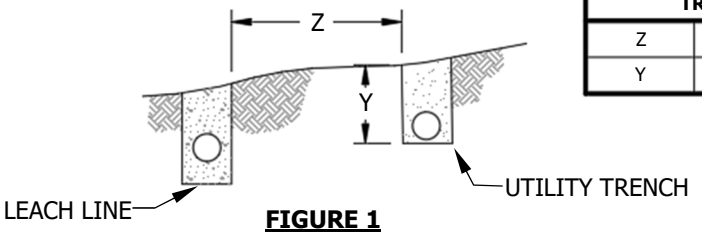

FIGURE 1
TRENCH TYPICAL

TABLE 1

TRENCH SETBACKS	
Z	5 X Y
Y	DEPTH OF UTILTY TRENCH

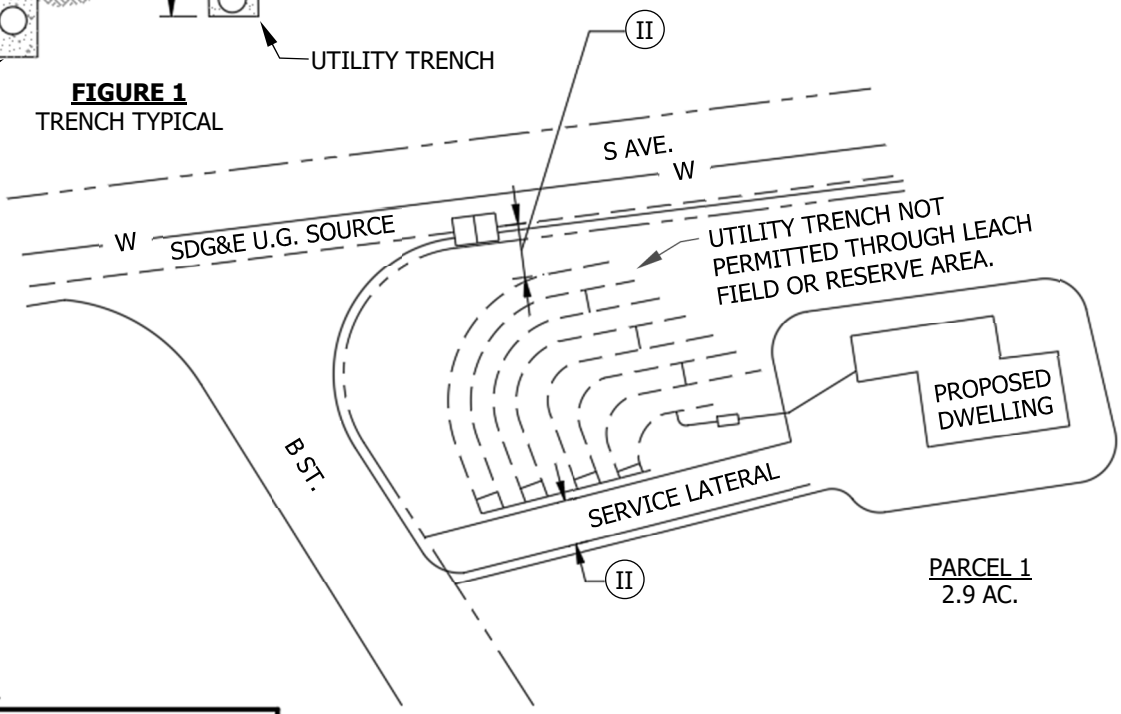

FIGURE 2

TABLE 2

LEGEND	
LEACH LINES	———
RESERVE AREA	— — —

INSTALLATION: NONE

BILL OF MATERIALS: NONE

NOTES:

I. SAN DIEGO COUNTY DEPARTMENT OF HEALTH SERVICES ESTABLISHES THE STANDARD FOR THE PROXIMITY OF LEACH LINES AND SEEPAGE PITS TO UTILITY TRENCHES. THIS STANDARD MAY AFFECT THE ROUTE AND POSITION OF CUSTOMER GAS AND ELECTRIC SERVICE LATERALS.

(II) THERE SHALL BE A FIVE (5) TO ONE (1) SETBACK REQUIRED FROM ALL UTILITY TRENCHES TO THE TILE LINES (LEACH LINES) OR SEEPAGE PIT. THE SETBACK SHALL BE MEASURED FROM THE TOP OF THE UTILITY TRENCHES TO THE CLOSEST EDGE OF THE TILE LINE OR SEEPAGE PIT. THE DEPTH OF THE UTILITY TRENCH SHALL BE MEASURED FROM THE GROUND SURFACE TO THE BOTTOM OF THE TRENCH.

© 1998 - 2021 San Diego Gas & Electric Company. All rights reserved. Removal of this copyright notice without permission is not permitted under law.

REV	CHANGE	DR	BY	DSN	APV	DATE	REV	CHANGE	DR	BY	DSN	APV	DATE
C							F						
B	FORMATTING	EDM	JIK	-	-	07/19/2021	E						
A	EDITORIAL CHANGES	-	LSM	IPJ	TPM	11/01/2017	D						

X Indicates Latest Revision | Completely Revised | New Page | Information Removed

SDG&E ELECTRIC SERVICE STANDARDS & GUIDES

UNDERGROUND ELECTRIC SERVICE LATERAL FROM LEACH FIELDS

SG319.1

TABLE OF CONTENTS

NOTES (CONT'D):

III. A 2-FOOT MINIMUM SEPARATION IS REQUIRED BETWEEN SERVICE LATERAL CONDUITS AND SEPTIC TANKS AND TIGHT LINES.

IV. ALTHOUGH THE CUSTOMER OR THEIR CONTRACTOR HAS THE ULTIMATE RESPONSIBILITY FOR ADHERING TO THESE REQUIREMENTS, THE PLANNER SHOULD BE AWARE OF THE LOCATION OF THE LEACH LINES IN ORDER TO AVOID ESTABLISHING SERVICE ROUTES THROUGH THESE AREAS.

REFERENCE: NONE

TABLE OF CONTENTS

© 1998 - 2021 San Diego Gas & Electric Company. All rights reserved. Removal of this copyright notice without permission is not permitted under law.

REV	CHANGE	DR	BY	DSN	APV	DATE	REV	CHANGE	DR	BY	DSN	APV	DATE
C							F						
B	FORMATTING	EDM	JIK	-	-	07/19/2021	E						
A	EDITORIAL CHANGES	-	LSM	IPJ	TPM	11/01/2017	D						

X Indicates Latest Revision	Completely Revised	New Page	Information Removed	

SDG&E ELECTRIC SERVICE STANDARDS & GUIDES

UNDERGROUND ELECTRIC SERVICE
LATERAL FROM LEACH FIELDS

SG319.2

SCOPE: THIS STANDARD DESCRIBES REQUIREMENTS FOR EXISTING SIDA SERVICE FOR PANEL REWIRES, UPGRADES AND RELOCATIONS.

DEFINITIONS:

- **SIDA DESCRIPTION:** SECONDARY-IN-DUCT ALUMINUM (SIDA) AND CABLE IN CONDUIT (CIC) IS A CABLE ASSEMBLY THAT INCLUDED INSULATED CONDUCTORS WITHIN FLEXIBLE DUCT. BOTH NAMES REFER TO THE SAME PRODUCT. THIS PRODUCT WAS PUT IN PRODUCTION IN 1968 AND DISCONTINUED THE USE AROUND 1978.

INSTALLATION:

A. CUSTOMERS REWIRING, UPGRADING, AND/OR RELOCATING THEIR SERVICE PANEL MUST ADHERE TO CURRENT SDG&E UNDERGROUND CONSTRUCTION STANDARDS (INCLUDING CONDUIT); HOWEVER, IF SIDA SERVICE EXISTS, IT MAY REMAIN PROVIDED THE FOLLOWING CONDITIONS ARE MET:

1. MAXIMUM PANEL SIZE IS NOT EXCEEDED BY SIDA CABLE SIZE AS SHOWN ON THE SIDA TABLE.
2. EXTENDING OR SPLICING FROM EXISTING SIDA IS NOT ALLOWED; NEW TERMINATION POINTS MUST BE AT OR BELOW EXISTING POINTS.
3. THE EXISTING SIDA SERVICE APPEARS TO BE IN GOOD CONDITION, FREE OF DEFECTS AND IMPERFECTIONS WHICH MAY IMPACT SAFETY AND RELIABILITY.
4. IF, FOR ANY REASON, THE EXISTING SIDA SERVICE CANNOT BE UTILIZED, THE CUSTOMER MUST PROVIDE NEW TRENCH AND CONDUIT TO THE EXISTING SOURCE PER CURRENT SDG&E STANDARD SG309.

TABLE 1

SIDA TABLE		
EXISTING SIDA TABLE (AL)	**EXISTING CONDUIT SIZE (IN)**	**MAXIMUM PANEL REPLACEMENT (AMPS)**
#2	1 1/4	125
1/0	1 1/2	150
3/0	2	200
350	2 1/2	225

BILL OF MATERIALS: NONE

NOTES:

I. ELECTRIC SERVICE PANEL RELOCATIONS REQUIRE TRENCHING AND NEW CONDUIT FROM NEW PANEL LOCATION TO SDG&E SOURCE.

II. INTERCEPTING SIDA SERVICE WITH A HANDHOLE, OR ANOTHER SUBSTRUCTURE IS NOT ALLOWED.

III. NON-PLASTIC CONDUIT, SUCH AS STEEL CONDUIT, DOES NOT MEET CURRENT SDG&E CONSTRUCTION STANDARDS.

IV. THE PLANNER WILL DETERMINE WHETHER THE CUSTOMER MUST POTHOLE EXISTING SERVICE TO DETERMINE WHETHER SIDA EXISTS. POTHOLES ARE THE CUSTOMER'S RESPONSIBILITY AND DIGALERT NOTIFICATION IS REQUIRED PRIOR TO DIGGING.

REFERENCE: NONE

TABLE OF CONTENTS

© 1998 - 2021 San Diego Gas & Electric Company. All rights reserved. Removal of this copyright notice without permission is not permitted under law.

REV	CHANGE	DR	BY	DSN	APV	DATE	REV	CHANGE	DR	BY	DSN	APV	DATE
C	FORMATTING	EDM	JIK	-	-	07/19/2021	F						
B	REVISION	-	CSE	IPJ	CZH	04/13/2020	E						
A	NEW PAGE	-	IPJ	SSH	TPM	08/20/2019	D						

X	Indicates Latest Revision		Completely Revised		New Page		Information Removed		

SDG&E ELECTRIC SERVICE STANDARDS & GUIDES

EXISTING SIDA SERVICE - PANEL REWIRES, UPGRADES AND RELOCATIONS

SG320.1

500 - ELECTRIC SERVICE & METER EQUIPMENT

500 - ELECTRIC SERVICE & METER EQUIPMENT

MAIN TABLE OF CONTENTS

PAGE #	SUBJECT
SG 501	Table of Contents
SG 502.1 – 502.4	Alphabetical Subject Index
SG 503	General Information
SG 504.1 – 504.5	Electric Meter & Service Location – Commercial & Residential Premises
SG 505	Barriers for Service & Metering Equipment
SG 506.1 – 506.4	Electric Meter Room
SG 507.1 – 507.2	Single or Multiple Meter Installations – Commercial or Residential Applications
SG 508.1 – 508.2	Meter Cabinet Recess – Single Meter Residential Application Only
SG 509.1 – 509.4	Electric Meter Cabinet – Commercial or Residential Multi-Meter Installations
SG 510.1 – 510.5	Electric Metering in Mid-Rise & High-Rise Buildings
SG 511.1 – 511.3	Electric Service Disconnects & Meter Service Disconnects
SG 512.1 – 512.8	Residential Self-Contained Service & Metering Equipment
SG 513.1 – 513.3	Test-Bypass Facilities for Safety Sockets
SG 514.1 – 514.5	Safety Socket Meter Cans
SG 515.1 – 515.6	Transformer Rated Meters & Wall-Mounted Service & Metering Equipment
SG 516	Meter Type & Socket Clip Arrangement
SG 517.1 – 517.20	Standard Switchboard Service Sections
SG 518.1 – 518.3	Mobile Home Park Service & Meter Pedestals
SG 519.1 – 519.5	Commercial Meter Pedestals
SG 520.1 – 520.2	Field Replacement of Existing 120-Volt Meter Pedestal
SG 522.1 – 522.2	Wireless Communications on Private Property
SG 523.1 – 523.3	Wireless Communications Provider – Metered Electric Service
SG 524.1 – 524.10	Unmetered Electric Service
SG 525	Metering Communications

Note: SG 521 has been intentionally omitted.

© 1998-2017 San Diego Gas & Electric Company. All rights reserved. Removal of this copyright notice without permission is not permitted under law.

REV	CHANGE	BY	DSGN	APPV	DATE	REV	CHANGE	BY	DSGN	APPV	DATE
A	New Page	LSM	LSM	TPM	11/01/17	D					
B						E					
C						F					

	Indicates Latest Revision		Completely Revised	X	New Page		Information Removed

TABLE OF CONTENTS

SUBJECT	PAGE #
Electric Service Disconnects & Meter Service Disconnects	SG 511.1 – 511.3
General Information	SG 503
Additions, Alterations or Renewal of Existing Service & Metering Equipment	SG 504.1
Electric Meter & Service Location Request	SG 503, SG 504.1
Existing Gas Meter below Electric Service & Metering	SG 504.1
Ingress & Egress to Electric Service & Metering Equipment	SG 504.2
Meter Heights	SG 504.1
Meter Marking	SG 504.1
Metered & Unmetered Conductors	SG 503
Meter Socket Sealing Rings	SG 503
Readily Accessible Definition	SG 503
Sealing of Meters & Metering Equipment	SG 503
Sealing Requirements	SG 503
Service Entrance Limitations	SG 503
Meter Locations	
Barriers for Service & Metering Equipment	SG 505
Commercial & Industrial	SG 504.2 – 504.3
Electric Meter Cabinets	SG 509.1 – 509.4
Electric Meter Cabinet Recess, Single Meter Residential Application	SG 508.1 – 508.2
Electric Meter Rooms	SG 506.1 – 506.4
Meter Heights	SG 504.1
Meter Markings	SG 504.1
Meter Pedestal, Commercial 0 – 200 Amps	SG 519.1 – 519.2
Meter Pedestal, Commercial 600 Amps Maximum, Multi-Meter	SG 519.3 – 519.4

© 1998-2017 San Diego Gas & Electric Company. All rights reserved. Removal of this copyright notice without permission is not permitted under law.

REV	CHANGE	BY	DSGN	APPV	DATE	REV	CHANGE	BY	DSGN	APPV	DATE
A	Editorial Changes	LSM	LSM	TPM	11/01/17	D					
B						E					
C						F					

	Indicates Latest Revision	X	Completely Revised		New Page		Information Removed

TABLE OF CONTENTS

SUBJECT PAGE #

Meter Pedestal, Field Replacement of Existing 120-Volt Meter Pedestal ..... SG 520.1 – 520.2

Meter Pedestal Foundation Details ..... SG 519.5

Meter Pedestal, Residential ..... SG 518.2 – 518.3

Mid-Rise & High-Rise Buildings ..... SG 510.1 – 510.5

Residential ..... SG 504.2

Unacceptable Meter Locations ..... SG 504.3 – 504.4

Meter Type & Socket Clip Arrangement ..... SG 516

Metering Communications ..... SG 525

Mobile Home Park Service & Metering Equipment ..... SG 518.1 – 518.3

Residential Self-Contained Service & Metering Equipment

Combination Pull & Meter Cans for UG or OH Service ..... SG 512.1 – 512.3, SG 512.8

Combination Pull & Meter Cans for UG Service ..... SG 512.1, 512.4 – 512.7

Equipment Connected Ahead of a Main Service Disconnect ..... SG 512.1

Meter Socket Closing Devices ..... SG 512.1

Meter Socket Connections ..... SG 512.1

Self-Contained Meter Sockets Defined ..... SG 512.1

Self-Contained Meter Sockets ..... SG 512.1

Safety Socket Meter Cans ..... SG 514.1 – 514.5

Aluminum Conductors in Safety Socket Meter Cans ..... SG 514.1

Neutral or Ground Conductor in Safety Socket Meter Cans ..... SG 514.1

Multiple Safety Socket Can Grouping Arrangements for

Commercial Installations with Self-Contained Meters ..... SG 514.4

Safety Socket Can 100 Amps (Standard Duty) ..... SG 514.2

Safety Socket Can 200 Amps (Heavy Duty) ..... SG 514.3

© 1998-2017 San Diego Gas & Electric Company. All rights reserved. Removal of this copyright notice without permission is not permitted under law.

REV	CHANGE	BY	DSGN	APPV	DATE	REV	CHANGE	BY	DSGN	APPV	DATE
A	Editorial Changes	LSM	LSM	TPM	11/01/17	D					
B						E					
C						F					

	Indicates Latest Revision	X	Completely Revised		New Page		Information Removed

TABLE OF CONTENTS

SUBJECT — PAGE #

Safety Socket Meter Can Used for Underground Service ..... SG 514.5

Wiring of Safety Socket Meter Cans ..... SG 514.1

Standard Switchboard Service Sections ..... SG 517.1 – 517.20

Bus Tap Drawings for Approval ..... SG 517.1

Electric Utility Service Equipment Requirement Committee (EUSERC) ..... SG 517.1

Manufacturer's Drawings for Approval ..... SG 517.1

Meter Socket & Test Switch Panel Layout ..... SG 517.8 – 517.9

Switchboard Service Section Defined ..... SG 517.1

Switchboard Service Sections Pictured ..... SG 517.2

Standard Switchboard Service Section 0 – 600 Volts ..... SG 517.3 – 517.5

Standard Switchboard Service Section 0 – 600 Volts Outdoor/Raintight Enclosure ..... SG 517.6 – 517.7

Standard Switchboard Service Section 0 – 600 Volts Self-Contained Metering, 200 Amp Maximum Meter Socket Capacity ..... SG 517.10 – 517.11

Standard Switchboard Service Section, 0 – 600 Volts, Instrument Transformer Compartment 201 – 400 Amps Single-Phase Service ..... SG 517.12

Standard Switchboard Service Section, 0 – 600 Volts, Instrument Transformer Compartment 201 – 1,000 Amps Three-Phase Service ..... SG 517.13 – 517.14

Standard Switchboard Service Section, 0 – 600 Volts, Instrument Transformer Compartment 1,001 – 3,000 Amps, Three-Phase Service ..... SG 517.15 – 517.16

Standard Switchboard Service Section, 0 – 600 Volts, 1,001 – 3,000 Amps, Removable Link & CT Support for Instrument Transformer Compartments with 4" Bus ..... SG 517.17

Standard Switchboard Service Section, 0 – 600 Volts, Instrument Transformer Compartment 3,001 – 4,000 Amps, Three-Phase Service ..... SG 517.18 – 517.19

Standard Switchboard Service Section, 0 – 600 Volts, 3,001 Amps & Larger, Removable Link & CT Support for Instrument Transformer Compartments with 5" Bus ..... SG 517.20

Test-Bypass Facilities for Safety Sockets ..... SG 513.1 – 513.3

Ventilation ..... SG 517.2

© 1998-2017 San Diego Gas & Electric Company. All rights reserved. Removal of this copyright notice without permission is not permitted under law.

REV	CHANGE	BY	DSGN	APPV	DATE	REV	CHANGE	BY	DSGN	APPV	DATE
A	Editorial Changes	LSM	LSM	TPM	11/01/17	D					
B						E					
C						F					

Indicates Latest Revision | X Completely Revised | New Page | Information Removed

TABLE OF CONTENTS

SUBJECT	PAGE #
Transformer Rated Meter [Current Transformer (CT)]	SG 515.1 – 515.6
Combination CT & Meter Socket Can-OH Service-Wall Mounted	SG 515.1, SG 515.4
Combination CT & Meter Socket Can-UG Service-Wall Mounted	SG 515.1, SG 515.5 – 515.6
CT Mounting Base, 0 – 400 Amps, 0 – 600 Volts Service	SG 515.2
CT Mounting Base, 201 – 800 Amps, 0 – 600 Volts Service	SG 515.3
Meter Service Disconnect	SG 515.1
Sockets for Transformer Rated Meters	SG 515.1
Unmetered Electric Service	SG 524.1 – 524.10
Wireless Communications on Private Property	SG 522.1 – 522.2
Wireless Communications Provider – Metered Electric Service	SG 523.1 – 523.3
Working Space, Electric Service & Metering Equipment, 0 – 600 Volts	SG 504.4 – 504.5
Working Space for Non-Residential Service Panels Requires a Permanent Concrete Slab	SG 504.5

© 1998-2017 San Diego Gas & Electric Company. All rights reserved. Removal of this copyright notice without permission is not permitted under law.

REV	CHANGE	BY	DSGN	APPV	DATE	REV	CHANGE	BY	DSGN	APPV	DATE
A	Editorial Changes	LSM	LSM	TPM	11/01/17	D					
B						E					
C						F					

Indicates Latest Revision | X Completely Revised | New Page | Information Removed

ELECTRIC METER & SERVICE LOCATION REQUEST

Contact the Service Planner at the Regional Project Management Office closest to the job location for an "Electric Meter & Service Location" form before starting construction. See page SG 2. You may also request via the Internet at: http://www2.sdge.com/serviceform/mainpage.htm

METERED & UNMETERED CONDUCTORS

Line side (unmetered) and load side (metered) conductors are prohibited from occupying the same raceway or enclosure by both SDG&E (Utility) policy and the California Electrical Code. Exception: Meter sockets and safety socket cans.

METER SOCKET SEALING RINGS

Meter sockets shall be equipped with approved sealing rings as a part of the meter socket installation and shall be provided by the manufacturer.

READILY ACCESSIBLE DEFINITION

Capable of being reached quickly and conveniently 24-hours a day for construction, operation, maintenance, inspection, testing, or meter reading without requiring those seeking access to climb over or remove obstacles; or to obtain special permission or security clearances. Truck access may be required.

SEALING OF METERS & METERING EQUIPMENT

All meters and enclosures for meters, metering equipment, and service entrance equipment on the line side of the meter, except as approved for access to replace fuses used for over-current protection, will be sealed by the Utility. The Utility seal shall not be broken except by an authorized representative of the Utility, or with the Utility's permission granted in response to a request warranting approval. No person is permitted to tamper, or in any way interfere, with a meter or its connections as placed by the Utility. All removable access covers for compartments containing unmetered conductors shall be sealable. When a raceway, conduit or condulet is necessary for unmetered conductors, it shall be sealable. No removable panel or cover requiring sealing shall be located behind other panels, covers or doors (except NEMA 3R outdoor raintight enclosure doors). All 400 amp, and above, service switches or breakers shall have provisions for locking in the open/off positions.

SEALING REQUIREMENTS

Sealing latches, stud and wing-nuts, or sealing screws shall be provided as the means of sealing removable or hinged access covers. Studs and wing-nut assemblies shall consist of a ¼" x 20 (minimum) stud and an associated wing-nut, each drilled 0.0635" (minimum) for sealing purposes. Sealing screws shall be drilled 0.0635" (minimum) for sealing purposes. Latching devices shall be designed to permit positive locking and be made of a durable corrosion resistant material.

SERVICE ENTRANCE LIMITATIONS

Single-phase service is normally limited to 400 amps maximum. Individual three-phase switchboards are limited to 4,000 amps maximum. Refer to the Switchboard Service Section on pages SG 517.1 – 517.20 for further information.

© 1998-2017 San Diego Gas & Electric Company. All rights reserved. Removal of this copyright notice without permission is not permitted under law.

REV	CHANGE	BY	DSGN	APPV	DATE	REV	CHANGE	BY	DSGN	APPV	DATE
A	Editorial Changes	LSM	IPJ	TPM	11/01/17	D					
B						E					
C						F					

SHEET 1 OF 1	X	Indicates Latest Revision		Completely Revised		New Page		Information Removed
	SDG&E SERVICE STANDARDS & GUIDE							
	GENERAL INFORMATION							SG 503

TABLE OF CONTENTS

TABLE OF CONTENTS

GENERAL INFORMATION

1. On new installations, it is necessary that the location for the meter and its related service disconnect be approved in writing by an SDG&E (Utility) Planner. This can be accomplished by the customer or contractor calling the Utility's nearest Regional Office (see page SG 2) and requesting an Electric Meter & Service Location form, or via the Internet at: http://www2.sdge.com/serviceform/mainpage.htm

2. The location for the meter and service disconnect shall comply with applicable codes, laws and ordinances of the governmental Authority Having Jurisdiction (AHJ), and with the requirements of the Utility's Service Standards & Guide.

3. Meter Heights

   a. When meters are located in a meter room or when fully enclosed in a cabinet, the minimum height of the meter socket may be 3' and the maximum height shall not exceed 6'-3". These heights are measured from the standing surface to the centerline of the meter socket. Cabinets shall not impair working space.

   b. When meters are wall- or surface-mounted, but not located in a meter room or cabinet, the minimum height of the meter socket shall be 4' and maximum height shall not exceed 6'-3". These heights are measured from the standing surface to the centerline of the meter socket. Exception: for multi-meter panels located on an exterior wall, the minimum meter height may be reduced to 36". See Figure 2 on page SG 507.1.

4. Meter Marking

   a. Each meter socket and its related service disconnect shall be clearly and permanently marked with minimum ½" number/letters by the contractor or customer to indicate the occupancy or load served. Marking with felt pen or fingernail polish is not acceptable.

   b. Examples of permanent marking are:

      1) An identification plate secured by screws, rivets or equivalent secure adhesive

      2) Weatherproof paint applied with stencil or legible lettering

      3) Commercially available decals

   c. Identification means a street, apartment or suite number.

   Exceptions: In a multi-metering section where the service disconnect is located immediately adjacent to the meter socket (to the side), it is acceptable to mark only the service disconnect. At the option of the Utility, marking may be omitted or done in other manners for a single-family residence.

5. Whenever any addition, alteration or renewal is contemplated in existing service lateral conduits, service entrance conductors or metering equipment, the customer or contractor shall contact the area Planner for an approved Electric Meter & Service Location form. This is imperative to provide advice regarding correction of any existing unacceptable conditions.

© 1998-2017 San Diego Gas & Electric Company. All rights reserved. Removal of this copyright notice without permission is not permitted under law.

REV	CHANGE	BY	DSGN	APPV	DATE	REV	CHANGE	BY	DSGN	APPV	DATE
A	Editorial Changes	LSM	BRB	TPM	11/01/17	D					
B						E					
C						F					

X Indicates Latest Revision	Completely Revised	New Page	Information Removed	

6. Existing electrical service and metering equipment located above existing gas meter set assembly (GMA) are considered non-compliant with current standards but may remain as is. Any upgrades and/or rewires of the electrical service and metering equipment will require the relocation of either the electric or gas service.

7. Additional meters may be grouped with those already in service provided the existing service and meter location is acceptable to the Utility. The added service equipment must be located and installed in conformance with applicable codes, laws and ordinances enforced by the AHJ, and with the requirements of the Utility.

8. All meters serving multiple buildings or other remote loads must be grouped on or at the building or structure where the Utility's service connection is made. See examples on pages SG 008.1 – 008.6.

9. Meter locations and service connections on exterior walls of bedrooms or normally occupied spaces should be avoided whenever possible.

10. The minimum ingress and egress to service equipment and meter locations is 24" in width. This requirement allows a safe access and exit route for installation, testing and maintenance of the service and metering equipment.

METER LOCATIONS – RESIDENTIAL

1. For single and multi-family residential buildings, meters and metering equipment may be installed:

   a. Outdoors and mounted on, or recessed in, an exterior building wall. See Note 7 above, SG 504.1 and pages SG 507.1 – 508.2.

   b. In a room within a building, approved by the Utility for the location of electric meters, with provision for proper illumination, and with access only by a door opening to the outside of the building. See pages SG 506.1 – 506.4 for additional electric meter room and locking requirements.

2. For multi-family residential buildings less than three floors, meters and metering equipment are to be grouped in one central location that is readily accessible to the Utility 24-hours a day in accordance with 1a or 1b above. Refer to pages SG 011.1 – 012.3 for Electric Service Policies.

3. Refer to pages SG 510.1 – 510.5 for Electrical Metering in Mid-Rise and High-Rise Buildings. Consult with the Utility Planner for approval of meter and metering equipment locations in the early planning phases of the project to avoid re-engineering and possible delays.

TABLE OF CONTENTS

© 1998-2017 San Diego Gas & Electric Company. All rights reserved. Removal of this copyright notice without permission is not permitted under law.

REV	CHANGE	BY	DSGN	APPV	DATE	REV	CHANGE	BY	DSGN	APPV	DATE
A	Editorial Changes	LSM	BRB	TPM	11/01/17	D					
B						E					
C						F					

X Indicates Latest Revision	Completely Revised	New Page	Information Removed	

METER LOCATIONS – COMMERCIAL & INDUSTRIAL

1. For single-occupancy buildings, meters and metering equipment may be installed:

   a. Outdoors and mounted on, or recessed in, an exterior building wall. See pages SG 507.1 – 507.2.

   b. In a room within a building, approved by the Utility for the location of electric meters, with provision for proper illumination, and with access only by a door opening to the outside of the building. See pages SG 506.1 – 506.4 for additional electric meter room requirements.

2. For multi-occupancy buildings not exceeding two floors, meters and metering equipment are to be grouped in one central location that is readily accessible 24-hours a day to Utility personnel in accordance with the conditions prescribed by 1a or 1b above. Refer to pages SG 011.1 – 012.3 for Electric Service Policies.

3. Refer to pages SG 510.1 – 510.5 for Electrical Metering in Mid-Rise and High-Rise Buildings. Consult with the Utility's Planner for approval of meter and metering equipment locations in the early planning phases of the project to avoid re-engineering and possible delays.

4. For service stations, the Utility's underground service lateral conductors may not extend through a hazardous (classified) Class 1 location as defined by Article 514 of the California Electrical Code. The underground service and metering equipment shall be located outside, and prior to, the hazardous area at a location approved by the Utility's Planner. See pages SG 316 and SG 318.

UNACCEPTABLE METER LOCATIONS

For reasons of public safety, maintenance of service, and reliability of metering, it is not permissible to install meters and metering equipment:

1. Inside any building, unless located within an acceptable electric meter room. See pages SG 506.1 – 506.4 for requirements of an electric meter room.

2. In commercial or residential carports or garages, or under a patio cover.

3. In a location not readily accessible 24-hours a day for reading, maintenance, or replacement of the metering equipment by the Utility. See definition of "readily accessible" on page SG 503.

4. In a substation area or in a transformer vault containing transformer(s) or medium-voltage equipment.

5. In any location which is hazardous or unsuitable for entry by meter readers or service personnel, i.e. uncontrolled or unrestrained animals, etc.

6. On any surface subject to excessive vibration.

7. In rest, bath, shower, powder or toilet room.

8. In an elevated area (such as balcony or mezzanine) or a depressed area (such as basement, cellar or underground room) that does not have access by means of a stairway of normal rise (4" to 7") and

© 1998-2017 San Diego Gas & Electric Company. All rights reserved. Removal of this copyright notice without permission is not permitted under law.

REV	CHANGE	BY	DSGN	APPV	DATE	REV	CHANGE	BY	DSGN	APPV	DATE
A	Editorial Changes	LSM	BRB	TPM	11/01/17	D					
B						E					
C						F					

run (11" minimum) conforming to building code requirements. Shipboard ladders are unacceptable for ingress and egress. Minimum headroom of 6'-6" must be maintained in all cases.

9. In a place where excessive moisture, fumes, dust or similar deteriorating agents will interfere with its operation, unless it is enclosed in a manner approved by the Utility. For example, at a carwash in an area exposed to excessive moisture and deteriorating agents, service and metering equipment is not allowed.

10. In a room which does not meet the requirements of an electric meter room. See pages SG 506.1 – 506.4.

11. On poles owned by the Utility. See pages SG 203.1 – 205.4 for customer-owned meter pole requirements.

12. On buildings or other structures that are not directly served by the Utility's service connection.

13. Medium-voltage installations that do not have vehicle access to the service and metering equipment.

14. Directly over any stairway, ramp or steps.

15. In any area protected by alarm systems, security gates or doors, guard dogs, etc., unless approved by the Utility. See definition of "readily accessible" on page SG 503.

16. On any portion of a building where future landscaping, fencing or other building construction will make the meter(s) inaccessible.

WORKING SPACE – ELECTRIC SERVICE & METERING EQUIPMENT, 0 – 600 VOLTS

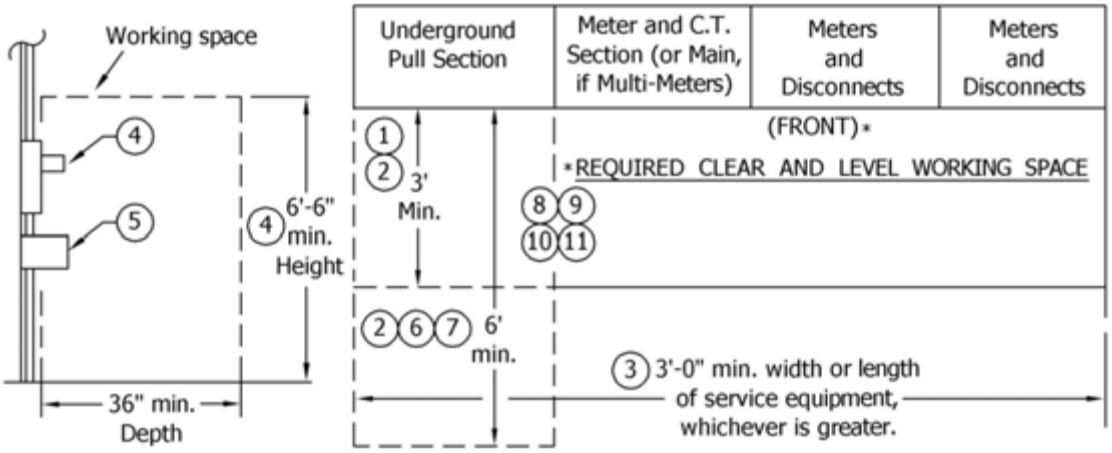

Notes:

(1) To permit access to the metering installation and to provide safe working conditions for personnel, a working and standing space entirely on the property of the customer is to be provided in front of all service and metering equipment. (See page SG 505 for barrier requirements.)

© 1998-2017 San Diego Gas & Electric Company. All rights reserved. Removal of this copyright notice without permission is not permitted under law.

REV	CHANGE	BY	DSGN	APPV	DATE	REV	CHANGE	BY	DSGN	APPV	DATE
A	Editorial Changes	LSM	BRB	TPM	11/01/17	D					
B						E					
C						F					

TABLE OF CONTENTS

(2) A minimum of 3’ clear and level work space is required for underground pull sections, current transformer metering sections, and metering equipment. Pull cans/sections requiring 5" conduits must allow a minimum of 6’ clear and level working space in front of the pull can/section. Verify location of pull sections with the SDG&E Planner prior to installation. The working space is to be kept clear and unobstructed.

(3) The width and depth of the working space must allow ready access to complete the service and metering installation, and in no case be less than 3’. Refer to Note 10 on page SG 504.2 for minimum ingress and egress requirements.

(4) Meter height will be measured from the standing surface of the working space to the centerline of the meter socket. The height clearances for the working space must be no less than 6’-6” as measured from the clear and level working surface to any overhead obstruction. Refer to meter heights on page SG 504.1.

(5) Equipment associated with the electrical equipment and installed below the meter panel(s) may extend into the working space up to 6”.

(6) When non-raintight service equipment is installed within a building on an elevated portion of the floor, or "housekeeping pad", **the pad must be flush with the service equipment**.

CAUTION: If a switchboard is installed on a housekeeping pad or slab greater than 2-½” thick, a meter height problem could result. The 6’-3” maximum allowable meter height applies to all installations.

(7) When outdoor raintight service equipment is installed on a housekeeping pad, the housekeeping pad must be level and extend a minimum of 3' measured from the face of the meter panel, or 6' when 5" conduit is required. If the enclosure doors are wider than 3', the housekeeping pad shall extend 1” beyond the outer edge of the equipment doors when opened at 90 degrees. See pages SG 517.6 – 517.7 for outdoor raintight enclosure (NEMA 3R) requirements.

(8) For 480-volt service, consult with the AHJ for their requirements.

(9) For medium-voltage switchgear, refer to Section 600.

(10) To maintain a safe, clear, and level working area in front of new or existing non-residential meter and service equipment, a concrete slab acceptable to the Utility Inspector is required. This also applies to residential living units exceeding two in number on the same premises, which are classified as a commercial enterprise and premises.

(11) In addition, the concrete slab is to extend a minimum of 6’ clear and level for working space in front of service cable terminating pull sections when 5” service conduit is required. For drainage purposes, the slope of the working space is not to exceed ¼” per foot sloping away from the equipment.

TABLE OF CONTENTS

© 1998-2017 San Diego Gas & Electric Company. All rights reserved. Removal of this copyright notice without permission is not permitted under law.

REV	CHANGE	BY	DSGN	APPV	DATE	REV	CHANGE	BY	DSGN	APPV	DATE
A	Editorial Changes	LSM	BRB	TPM	11/01/17	D					
B						E					
C						F					

X Indicates Latest Revision	Completely Revised	New Page	Information Removed	
SHEET 5 OF 5	SDG&E SERVICE STANDARDS & GUIDE			SG 504.5
	ELECTRIC METER & SERVICE LOCATION COMMERCIAL & RESIDENTIAL PREMISES			

TABLE OF CONTENTS

The customer will provide and install "non-removable" barriers to provide the clearances where working space is exposed to vehicle or hazardous conditions. Service and metering equipment located on public or private property must be installed a minimum of 5' back from face of curb or is considered subject to vehicular contact and requires barriers. An SDG&E Inspector will determine if a barrier can be omitted when existing structures can protect personnel and equipment. Meters will not be set until the barriers are installed.

Barrier posts are used to protect meter and service equipment and personnel from vehicular contact and to prohibit encroachment into the working space. For example: Loading zones, driveways, congested areas, alleys, off street parking, etc.

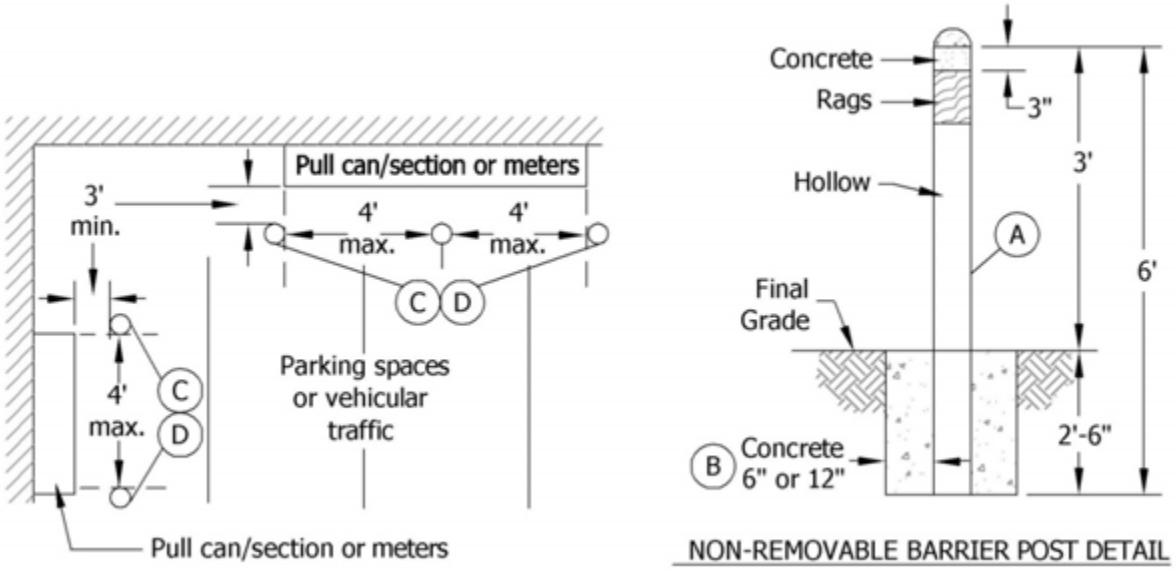

NON-REMOVABLE BARRIER POST DETAIL

Note: Meters located on a wall adjacent to any parking area or area accessible to vehicular traffic must be protected by non-removable barriers. Wheel stops and removable barriers are not acceptable substitutes. Maintain a minimum of 3' clear and level working space in front of the cabinets or enclosures. Barriers must be so positioned to allow the doors to be opened 90 degrees.

Installation:

(A) Use 4" steel pipe, black or galvanized steel, with a minimum wall thickness of 0.188".

(B) The concrete encasement shall be a minimum of 6" thick in stable soil and 12" thick in sandy or unstable soil.

(C) Barriers must be installed in line with each end of service equipment to prevent vehicle contact. Distance between barriers may not exceed 4'.

(D) Refer to SG 504.4 – 504.5 for working space clearances. Barriers are not allowed in the required working space.

E. Before you install barriers, call DigAlert at 811 and/or visit http://www.digalert.org/ for markout service at least two working days prior to excavating.

© 1998- 2017 San Diego Gas & Electric Company. All rights reserved. Removal of this copyright notice without permission is not permitted under law.

REV	CHANGE	BY	DSGN	APPV	DATE	REV	CHANGE	BY	DSGN	APPV	DATE
A	Editorial Changes	LSM	IPJ	TPM	11/01/17	D					
B						E					
C						F					

X Indicates Latest Revision	Completely Revised	New Page	Information Removed

SHEET 1 OF 1

SDG&E SERVICE STANDARDS & GUIDE

BARRIERS FOR SERVICE & METERING EQUIPMENT

SG 505

ELECTRIC METER ROOM DEFINITION – An electric meter room is a weatherproof, illuminated room provided by the customer at their option and approved by SDG&E (Utility) for the location of the electric service and/or metering equipment. Chain link fence is not acceptable as a separating wall. All requirements of this standard shall apply.

ACCESS – Access must be through a door on the building exterior to provide immediate 24 hour-a-day access. The door shall open out of the electric meter room in the direction of egress. If the door is to be locked, the lock must be keyed to SDG&E's Restricted VTQP Schlage Quad Section keyway. A lockbox for customer keys is not acceptable. If a second door or opening in the electric meter room permits access to the building interior, the building owner, and other parties as determined by the Utility, will be required to sign a Meter Access Easement which will release the Utility from any loss or injury arising from the access. This door shall swing out of the meter room in the direction of egress.

COMMUNICATION EQUIPMENT – Telephone, CATV, data processing equipment and other types of communication equipment are not permitted in an electric meter room. A single conduit containing communication wiring or cables may be installed in a straight, continuous section, running vertically through an electric meter room provided the conduit is not located in the dedicated electrical space and it does not encroach into the working space. Conduit should not be run horizontally through an electric meter room because it may encumber space needed for future expansion of the customer's electrical system. Access to communication equipment rooms or spaces through an electric meter room is not permitted.

Exceptions:

1. Communication equipment is allowed in a meter room serving a single family residence.
2. Communication conduit, wiring and other related devices for automated meter reading are allowed in electric meter rooms.

DEDICATED ELECTRICAL SPACE – The space equal to the width and depth of the equipment and extending from the floor to a height of 6′ (1.8 m) above the equipment or to the structural ceiling, whichever is lower, shall be dedicated to the electrical installation. No piping ducts, leak protection apparatus, or other equipment foreign to the electrical installation shall be located in this zone.
Exception: Suspended ceilings with removable panels shall be permitted within the 6′ (1.8m) zone.

DOORS – The entrance to the electric meter room shall be through a vertical doorway not less than 3'-0" wide or the width of the pull section, whichever is greater, and 6'-6″ high. The door shall open out in the direction of egress, and shall utilize lever operated" hardware. Lever-operated hardware is a type that permits the door to be opened from inside the room without the use of hands. For electric meter rooms containing services rated 800 amps or more, the door shall be equipped with panic bars, pressure plates, or other devices that are normally latched but open under simple pressure. When the pull section is not directly in front of the meter room door, a double-door assembly is required. If two doors are required by code for emergency egress, both doors must be equipped with panic hardware. On double-door assemblies, both doors must be equipped with panic hardware. The maximum allowable doorsill height is 2″. Security alarm systems may be connected to a meter room access door provided the alarm is deactivated Monday through Saturday between the hours of 7:00 a.m. and 9:00 p.m., excluding holidays.

This will enable Utility personnel to access Utility-owned equipment during our normal business hours without activating the alarm. Should Utility employees, or their agents, activate the alarm while

© 1998-2017 San Diego Gas & Electric Company. All rights reserved. Removal of this copyright notice without permission is not permitted under law.

REV	CHANGE	BY	DSGN	APPV	DATE	REV	CHANGE	BY	DSGN	APPV	DATE
A	Editorial Changes	LSM	IPJ	TPM	11/01/17	D					
B						E					
C						F					

X Indicates Latest Revision	Completely Revised	New Page	Information Removed

TABLE OF CONTENTS

performing their duties; the Utility will not be responsible for the cost of law enforcement or security company response calls.

FOREIGN SYSTEMS – The following equipment is not permitted within the electrical equipment room. Such equipment includes, but is not limited to, the following:

1. Gas equipment, including customer gas piping.
2. Water heaters, boilers and other mechanical equipment.
3. Communications equipment. See Communications Equipment information on page SG 506.1.
4. Storage of any materials, liquids, paints, etc.
5. Fire and security alarm systems.
6. Wet filled batteries and battery charging equipment. Note: Batteries that are part of a UPS system that are a sealed type, non-gassing and non-venting, are allowed in an electric meter room provided they do not encroach in the working space or the minimum 24" access and exit route.
7. Irrigation and sprinkler controllers.
8. Diesel and combustible fuel tanks.
9. Refrigerant pipe lines.

Exception: Lighting controllers are allowed in an electric meter room when the branch circuit over current device for the lighting is located in the meter room.

Sprinkler Protection: Sprinkler protection shall be permitted for the dedicated space where the piping is installed in compliance with the "Dedicated Electrical Space" and "Foreign Systems" requirements noted above. Note: Only sprinkler supply piping and heads required per State and local fire and building codes to protect the room itself are allowed. A "Main Fire Sprinkler" line is not allowed to pass through an electric meter room unless a sprinkler head serving the room is connected directly to the main line. Placement of sprinkler heads and shielding requirements are the responsibility of the Fire Marshall or Building Inspector, not the Utility.

HEADROOM – The minimum headroom in an electric meter room shall be 6'-6" high. The actual height of the room will be determined by the customer in order to obtain the 8” clearance required from centerline of the highest meter socket.

IDENTIFICATION/MARKING REQUIREMENTS – Each meter socket/base and its related meter service disconnect shall be clearly and permanently marked by the contractor or customer to indicate the occupancy or load served, i.e. unit or suite number, fire alarm, house meter, etc. Examples of permanent marking are as follows: (1) an identification plate secured by screws, rivets, or equivalent secure adhesive, (2) weatherproof paint applied with stencil or clear lettering, or (3) commercially available decals. Identification means a street, apartment, or suite number. Felt pen or fingernail polish is not acceptable. At the option of the Utility, marking may be omitted or identified differently for a single-family residence. Exception: In a multi-metering section where the meter service disconnects are located immediately adjacent to the meter sockets (to the side, above or below) it is acceptable to mark only the service disconnects.

ILLUMINATION – The light must be controlled by an on-off wall switch. Timers or motion detectors are not allowed to control the light. For the safety of electrical workers, the Utility recommends 30” candles measured at the floor as the minimum lighting level in an electric meter room.

METER CLEARANCES – All meter installations must provide minimum clearances as shown on page SG 506.4.

© 1998-2017 San Diego Gas & Electric Company. All rights reserved. Removal of this copyright notice without permission is not permitted under law.

REV	CHANGE	BY	DSGN	APPV	DATE	REV	CHANGE	BY	DSGN	APPV	DATE
A	Editorial Changes	LSM	IPJ	TPM	11/01/17	D					
B						E					
C						F					

	X Indicates Latest Revision		Completely Revised		New Page		Information Removed	
SHEET 2 OF 4	SDG&E SERVICE STANDARDS & GUIDE							SG 506.2
	ELECTRIC METER ROOM							

TABLE OF CONTENTS

METER HEIGHTS – The minimum height of the meter shall be 3’ and the maximum height shall be 6’-3” as measured from the standing surface to the centerline of the meter socket.

ROOF ACCESS LADDERS – Ladders used for roof access are allowed in a meter room provided they are located outside the required working space area. The Utility does not recommend roof access through an opening in an electric room due to roof hatches being inadvertently left open allowing water entry during rain storms.

PULL SECTIONS – The position of a pull section in a meter room is subject to approval by the Utility.

1. Pull sections should be positioned:
   a) Opposite the access door to allow use of the doorway as additional working space for cable pulling equipment; or
   b) On a wall perpendicular to the access door.
   Note: Do not locate on the same wall as the access door.
2. Pull sections that require 2", 3" or 4" conduits must allow a minimum of 3’ clear and level working space in front of the section. For medium voltage pull section clearances, refer to pages SG 608.1 – 608.3.
3. Pull sections requiring 5" conduits must allow a minimum of 6' clear and level working space in front of the section.
4. Refer to page SG 309.1 for required conduit size.
5. Additional clearances may be required by the local Authority Having Jurisdiction (AHJ) for 480 volt services.

READILY ACCESSIBLE – Capable of being reached quickly and conveniently 24 hours a day for construction, operation, maintenance, inspection, testing or reading, without requiring those seeking access to climb over or remove obstacles; or to obtain special permission or security clearances. A stairway of normal rise (4" to 7") and run (11" minimum) conforming to building code requirements is acceptable. Shipboard ladders are unacceptable.

ROOM & SUITE IDENTIFICATION – The meter room must be permanently identified on the exterior of the door as shown in the example on page SG 506.4. Decals are available from the Utility but must be installed by customer. When a building has more than one meter room, a plaque identifying the room and the suites served from the service in the room must be secured to the exterior of the door. See pages SG 017.1 – 017.3 for plaque requirements.

STRUCTURAL CEILING – Drop, suspended and similar ceilings not intended to add strength to the building structure are not structural ceilings.

VEHICLE ACCESS – Permanent vehicle access to the meter room is required for the installation and maintenance of the service lateral conductors and metering equipment. Under some conditions, as determined by the Utility, the vehicle access requirement may be waived. See pages SG 016.1 – 016.2 for Pulling Devices for Installation of Service Lateral Conductors in Parking Structures.

VENTILATION – The Utility does not have a requirement for ventilation of electric meter rooms. The AHJ is responsible for enforcement of ventilation in electrical meter rooms, when required, for compliance with the California Electric Code, Building Code or Mechanical Code.

TABLE OF CONTENTS

© 1998-2017 San Diego Gas & Electric Company. All rights reserved. Removal of this copyright notice without permission is not permitted under law.

REV	CHANGE	BY	DSGN	APPV	DATE	REV	CHANGE	BY	DSGN	APPV	DATE
A	Editorial Changes	LSM	IPJ	TPM	11/01/17	D					
B						E					
C						F					

X	Indicates Latest Revision		Completely Revised		New Page		Information Removed

ELECTRIC METER ROOM

TABLE OF CONTENTS

ELECTRIC METER ROOM

THIS ROOM IS FOR ELECTRICAL & METERING EQUIPMENT ONLY

STORAGE OF MATERIALS INSIDE IS PROHIBITED

SEE SDG&E TERMS & CONDITION OF SERVICE - STANDARD SG 506

REFERENCE:
- STATE FIRE CODE: §8509.1
- CAL OSHA CODE: §2340.16. Work Space About Electric Equipment

FOR ROUTINE WORK, CONTACT THE PROPERTY MANAGER FOR ACCESS.
IN CASE OF AN EMERGENCY, CONTACT SDG&E AT 1-800-411-7343.

Example of Identification Plaque

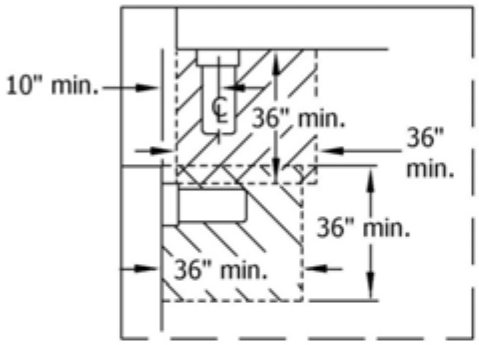

FIGURE 1 - Plan View

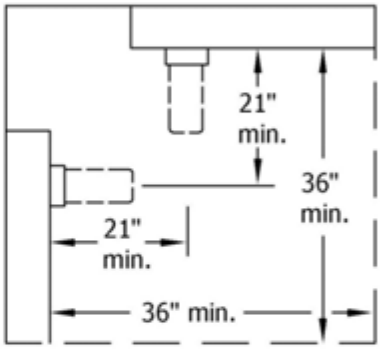

FIGURE 2 - Plan View

NOTE: The meter from one panel cannot be in the working space of another meter in a different panel.

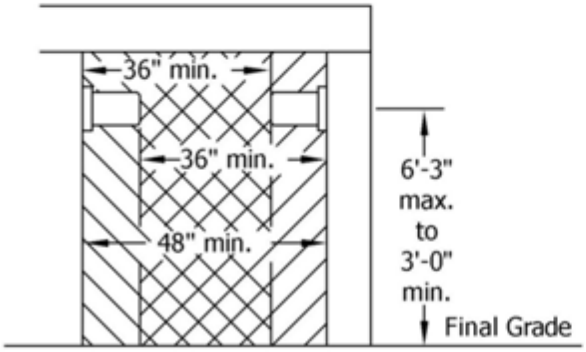

FIGURE 3 - Side View

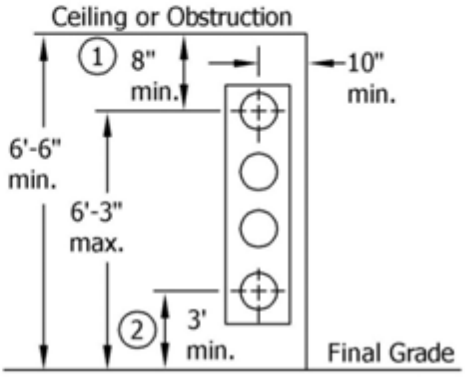

FIGURE 4 - Front View

(1) 8" minimum clearance extends for entire width and depth of the 3' working space.

(2) The 3' minimum meter height shown is for meter rooms, cabinets or exterior multi-meter installations only.

© 1998-2017 San Diego Gas & Electric Company. All rights reserved. Removal of this copyright notice without permission is not permitted under law.

REV	CHANGE	BY	DSGN	APPV	DATE	REV	CHANGE	BY	DSGN	APPV	DATE
A	Editorial Changes	LSM	IPJ	TPM	11/01/17	D					
B						E					
C						F					

X Indicates Latest Revision	Completely Revised	New Page	Information Removed

TABLE OF CONTENTS

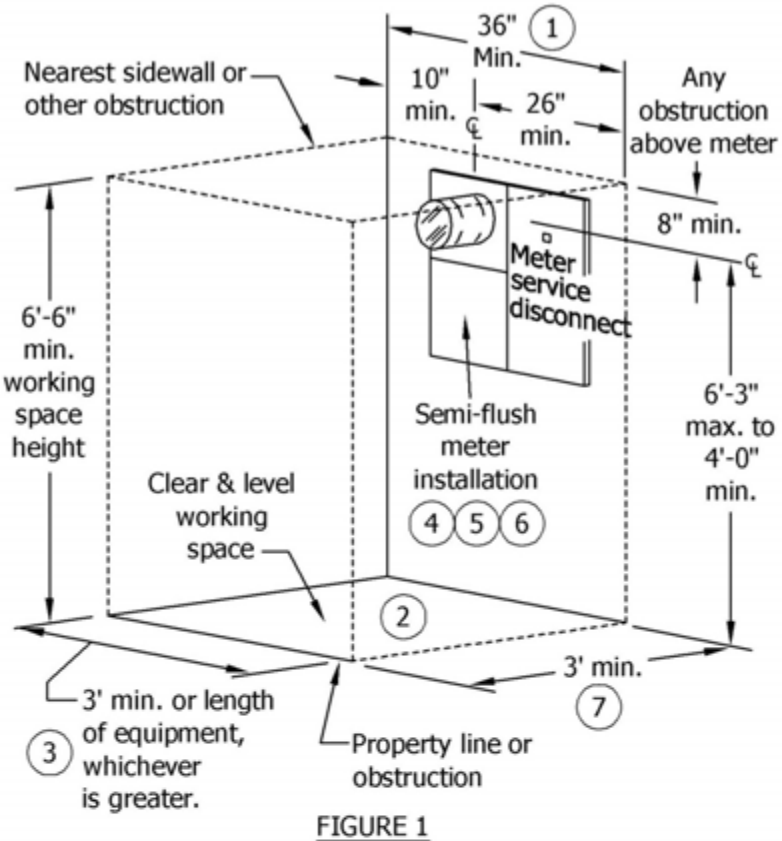

FIGURE 1
Semi-Flush Exterior Meter Installation

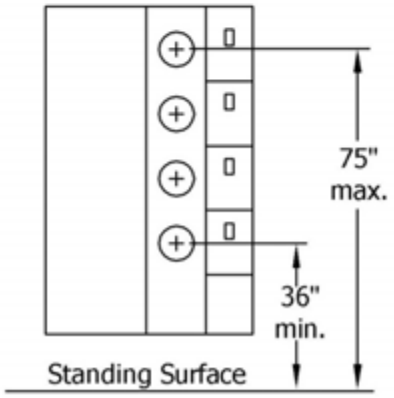

FIGURE 2
Multiple Meter Installation for Exterior Locations Commercial or Residential

© 1998-2017 San Diego Gas & Electric Company. All rights reserved. Removal of this copyright notice without permission is not permitted under law.

REV	CHANGE	BY	DSGN	APPV	DATE	REV	CHANGE	BY	DSGN	APPV	DATE
A	Editorial Changes	LSM	IPJ	TPM	11/01/17	D					
B						E					
C						F					

X Indicates Latest Revision	Completely Revised	New Page	Information Removed	
SHEET 1 OF 2	SDG&E SERVICE STANDARDS & GUIDE			SG 507.1
	SINGLE OR MULTIPLE METER INSTALLATIONS COMMERCIAL OR RESIDENTIAL APPLICATIONS			

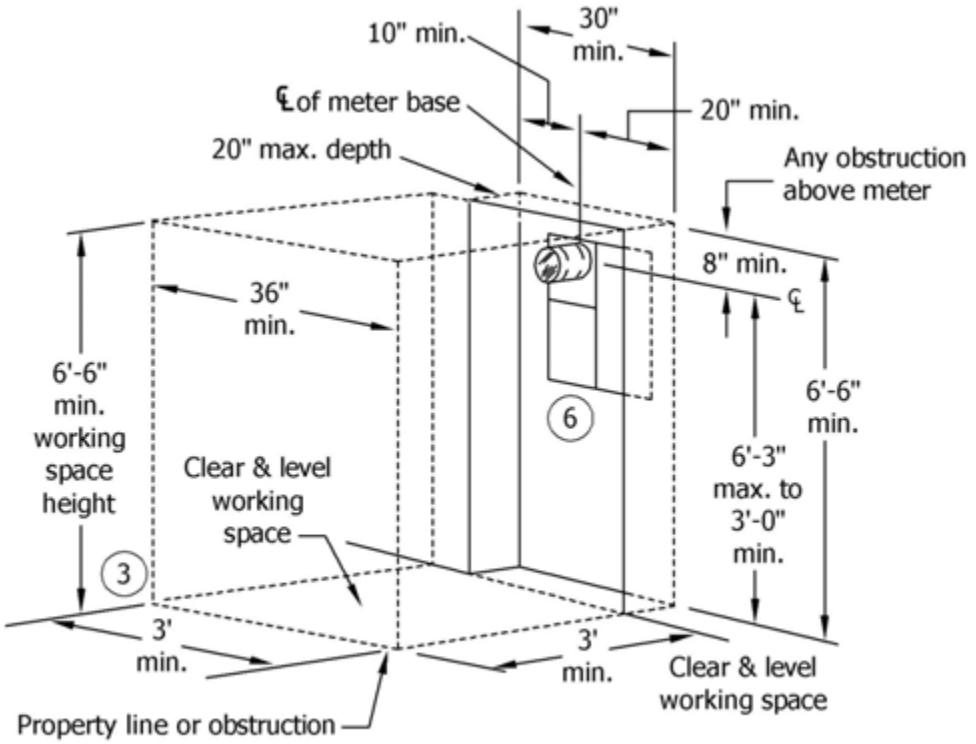

FIGURE 3
Recess Single Meter "Residential Application Only"

Notes to Figures 1 – 3:

(1) The 10" and 26" dimensions may vary depending on site conditions and equipment configuration, but in no case shall the left or right side clearance from centerline of the meter socket to an obstruction be less than 10", and the overall width of working space must be 36" minimum.

(2) For hardscape working space requirements, refer to Notes 6, 7, 10 and 11 on page SG 504.5.

(3) For barrier requirements see page SG 505.

(4) Residential equipment shown, however, this standard is also applicable to commercial equipment (not shown).

(5) This standard also applies to wall-mounted and free-standing switchboards (not shown).

(6) See pages SG 508.1 – 508.2 for additional Meter Cabinet Recess requirements.

(7) See page SG 504.5, Note 8 for 480-volt service, and Note 9 for medium-voltage switchgear.

TABLE OF CONTENTS

© 1998-2017 San Diego Gas & Electric Company. All rights reserved. Removal of this copyright notice without permission is not permitted under law.

REV	CHANGE	BY	DSGN	APPV	DATE	REV	CHANGE	BY	DSGN	APPV	DATE
A	Editorial Changes	LSM	IPJ	TPM	11/01/17	D					
B						E					
C						F					

X Indicates Latest Revision	Completely Revised	New Page	Information Removed	

GENERAL INFORMATION

A meter cabinet recess is allowed for a single meter residential application only and is limited to single-phase service.

The meter cabinet recess must have sufficient depth to provide clearance for the meter in addition to the depth required for the meter panel. All clearances must be met to insure the meter can be installed safely.

DEPTH OF RECESS

A 7" minimum clearance is required from face of meter panel to inside of cabinet door. 11" maximum from face of meter panel to the outside of cabinet door and the exterior building wall is required. See Figure 1 and Figure 3 page SG 508.2.

WIDTH OF RECESS

A 10" minimum clearance measured from the vertical centerline of the meter socket to the hinged door side is required. A 20" minimum clearance measured from the vertical centerline of the meter socket to the side opposite the hinged door is required. See Figure 2 and Figure 3 on page SG 508.2.

DOOR REQUIREMENTS

The door must be a minimum of 6'-6" high, full length, side-hinged, and designed to secure in the open position at 90 degrees or more. Should the door, when opened to 90 degrees obstruct the exit route, it must be hinged to allow the door to open between 90 and 180 degrees to obtain the minimum 24" exit route. See Figure 3 on page SG 508.2. It is not permissible to cut an opening in the door through which the meter will protrude. The meter could be hit causing a person to be injured or damage to the meter. An opening may be cut and covered with a hinged polycarbonate viewing window for meter reading purposes.

The illustrations on page SG 508.2 are for 125 – 225 amp socket-based meter installations. This standard may also be applied to 400 amp (class 320) residential meter panels (not pictured), and 600 amp Current Transformer (CT) rated commercial meter panels used for residential application (not pictured).

TABLE OF CONTENTS

© 1998-2017 San Diego Gas & Electric Company. All rights reserved. Removal of this copyright notice without permission is not permitted under law.

REV	CHANGE	BY	DSGN	APPV	DATE	REV	CHANGE	BY	DSGN	APPV	DATE
A	Editorial Changes	LSM	IPJ	TPM	11/01/17	D					
B						E					
C						F					

X Indicates Latest Revision	Completely Revised	New Page	Information Removed	
SHEET 1 OF 2	SDG&E SERVICE STANDARDS & GUIDE			SG 508.1
	METER CABINET RECESS FOR SINGLE METER RESIDENTIAL APPLICATION ONLY			

TABLE OF CONTENTS

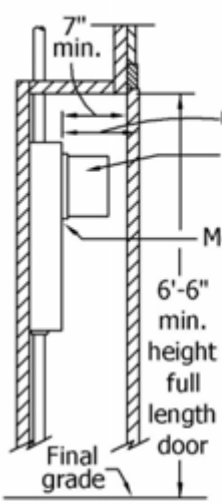

FIGURE 1
Side View

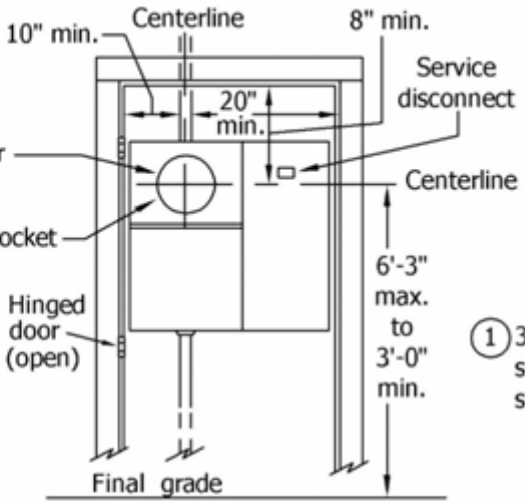

FIGURE 2
Front View

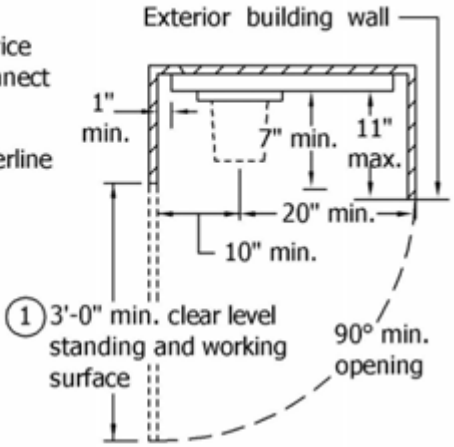

FIGURE 3
Plan View

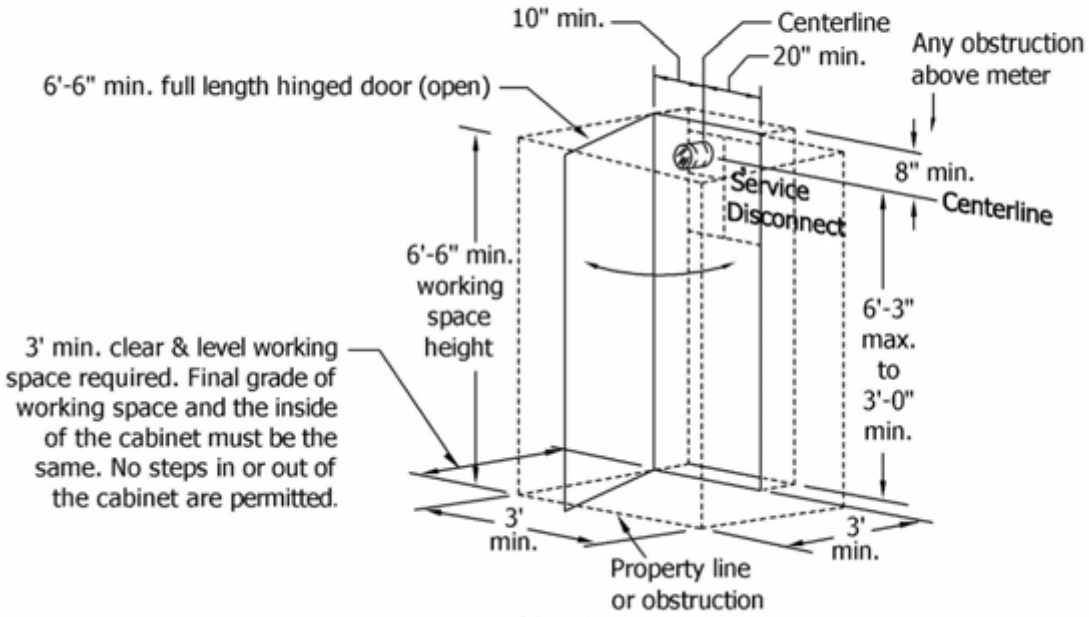

FIGURE 4

Notes:

1. If the interior width of the cabinet is 36", or greater, the working space can be measured from the face of the meter panel provided the grade does not exceed a ¼" drop per foot sloping away from the panel.

2. For barrier requirements, see page SG 505.

© 1998-2017 San Diego Gas & Electric Company. All rights reserved. Removal of this copyright notice without permission is not permitted under law.

REV	CHANGE	BY	DSGN	APPV	DATE	REV	CHANGE	BY	DSGN	APPV	DATE
A	Editorial Changes	LSM	IPJ	TPM	11/01/17	D					
B						E					
C						F					

X Indicates Latest Revision	Completely Revised	New Page	Information Removed

SHEET 2 OF 2

SDG&E SERVICE STANDARDS & GUIDE

METER CABINET RECESS FOR SINGLE METER RESIDENTIAL APPLICATION ONLY

SG 508.2

GENERAL REQUIREMENTS – A meter cabinet is allowed for a commercial or residential multi-metered installation provided it meets all of the following requirements.

No obstructions such as door jams, vertical posts, etc. are permitted within the cabinet opening. Communication equipment is allowed in the same cabinet with electrical but may not encroach in the working space. No other equipment foreign to the electrical or communication systems is allowed within the cabinet.

DEPTH OF CABINET – 11" minimum, 35" maximum, measured from the face of meter panel to inside of cabinet door. The change in elevation within the required working space shall not exceed ¼" per foot sloping away from the meter panel, and the illumination requirements shown below are met. Cabinets with a depth greater than 35" will be considered a meter room and all requirements for electric meter rooms shall be met.

WIDTH OF CABINET – A 36" width is required with 10" minimum side clearance measured from the vertical centerline of the meter socket. If electrical equipment is equipped with hinged doors, the cabinet opening must allow for equipment doors to be opened a minimum of 90 degrees.

NOTE: When an electric meter cabinet is constructed deeper than 18", measured from the face of the meter panel to the inside of the cabinet door(s), but less than 36", the illumination requirements of an electric meter room shall be met. If the distance when measured from the face of the meter panel to the inside of the door(s) is 36" or more, this is no longer a meter cabinet, it is an electric meter room. Reference pages SG 506.1 – 506.4 for electric meter room standards. Refer to pages SG 510.1 – 510.5 for additional requirements in mid- and high-rise buildings.

TABLE OF CONTENTS

DOOR REQUIREMENTS – Meter cabinet doors must be side-hinged. The door must be designed to secure in the open position at 90 degrees, or more. Should the doors, when opened to 90 degrees, obstruct the 24" minimum exit route, they must be hinged to 180 degrees. See page SG 509.4, Figure 3. Doors must be a minimum of 6'-6" in height. ROLL UP DOORS AND SLIDING DOORS ARE NOT ACCEPTABLE due to injuries to SDG&E (Utility) personnel resulting from improper installation and lack of proper maintenance. If existing roll up or sliding doors require replacement, new side hinged doors are required. The maximum allowable door sill height is 2".

ILLUMINATION REQUIREMENTS – Illumination is required in meter cabinets installed in mid-rise and high-rise buildings, and in outdoor locations without direct sunlight. Meter cabinets constructed with a depth of 18", or greater, are required to be illuminated. Meter cabinets located outside of a building in an area of direct sunlight are not required to have illumination.

LOCKING REQUIREMENTS – The Utility does not require meter cabinets to be locked. If the customer chooses to lock the doors, a locking device approved by the Utility is required.

MINIMUM CLEAR & LEVEL STANDING & WORKING SPACE – The following requirements apply:

1. Shall not be less than 6'-6'" high measured vertically from the floor, permanent platform, or final grade.
2. Shall not be less than 3'-0" measured from the face of the meter cabinet to the nearest obstruction or property line.
3. Shall extend the full width of the cabinet opening which shall not be less than 3'-0".

© 1998-2017 San Diego Gas & Electric Company. All rights reserved. Removal of this copyright notice without permission is not permitted under law.

REV	CHANGE	BY	DSGN	APPV	DATE	REV	CHANGE	BY	DSGN	APPV	DATE
A	Editorial Changes	LSM	IPJ	TPM	11/01/17	D					
B						E					
C						F					

X Indicates Latest Revision	Completely Revised	New Page	Information Removed	

SDG&E SERVICE STANDARDS & GUIDE

ELECTRIC METER CABINET – COMMERCIAL OR RESIDENTIAL MULTI-METER INSTALLATIONS

CABINET & SUITE IDENTIFICATION

The meter cabinet must be permanently identified on the exterior of the door as shown in example below. Decals are available from the Utility but must be installed by customer. When a building has more than one meter cabinet, a plaque identifying the cabinet and the suites served from the service in the cabinet must be secured to the exterior of the cabinet door. See pages SG 017.1 – 017.3 for plaque requirements.

ELECTRIC METER CABINET

THIS SPACE IS FOR ELECTRICAL & METERING EQUIPMENT ONLY

STORAGE OF MATERIALS INSIDE IS PROHIBITED

SEE SDG&E TERMS & CONDITIONS OF SERVICE - STANDARD SG 509

REFERENCE:
- **STATE FIRE CODE: §8509.1**
- **CAL OSHA CODE: §2340.16. Work Space About Electric Equipment**

FOR ROUTINE WORK, CONTACT THE PROPERTY MANAGER FOR ACCESS.
IN CASE OF AN EMERGENCY, CONTACT SDG&E AT 1-800-411-7343.

Example of Identification Plaque

IDENTIFICATION/MARKING REQUIREMENTS

Each meter socket/base and its related metered service disconnect shall be clearly and permanently marked by the contractor or customer to indicate the occupancy or load served, i.e. unit or suite number, fire alarm, house meter, etc. Examples of permanent marking are: (1) an identification plate secured by screws, rivets or equivalent secure adhesive; (2) weatherproof paint applied with stencil or clear lettering; or (3) commercially available decals. Identification means a street, apartment or suite number. Felt pen or fingernail polish is not acceptable. At the option of the Utility, marking may be omitted or identified differently for a single-family residence.

Exception: In a multi-metering section where the service disconnect is located immediately adjacent to the meter socket (to the side, above or below), it is acceptable to mark only the service disconnect or the meter socket.

VENTILATION

SDG&E does not have a requirement for ventilation of electric meter cabinets. The Authority Having Jurisdiction (AHJ) is responsible for enforcement of ventilation in electrical meter cabinets, when required, for compliance with the California Electric Code, Building Code or Mechanical Code.

© 1998-2017 San Diego Gas & Electric Company. All rights reserved. Removal of this copyright notice without permission is not permitted under law.

REV	CHANGE	BY	DSGN	APPV	DATE	REV	CHANGE	BY	DSGN	APPV	DATE
A	Editorial Changes	LSM	IPJ	TPM	11/01/17	D					
B						E					
C						F					

TABLE OF CONTENTS

TABLE OF CONTENTS

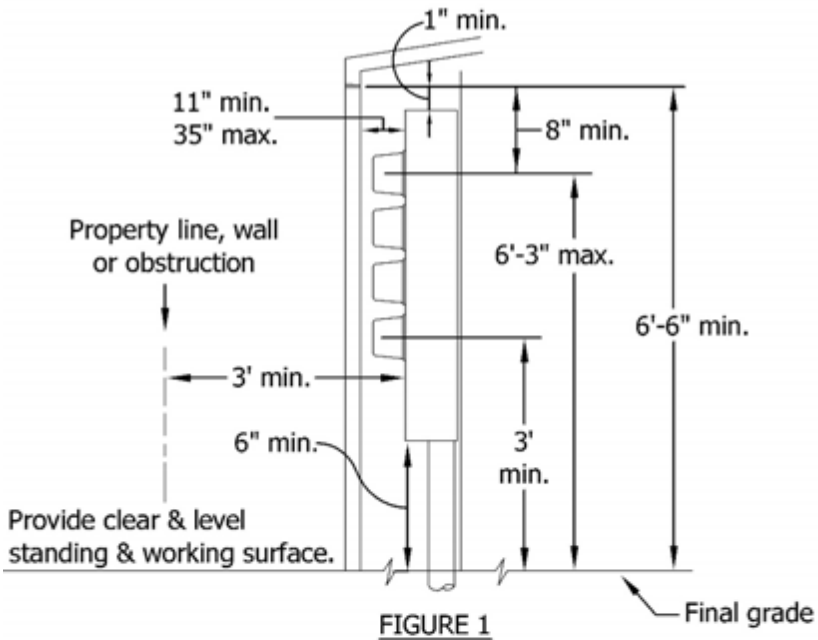

FIGURE 1
Side View

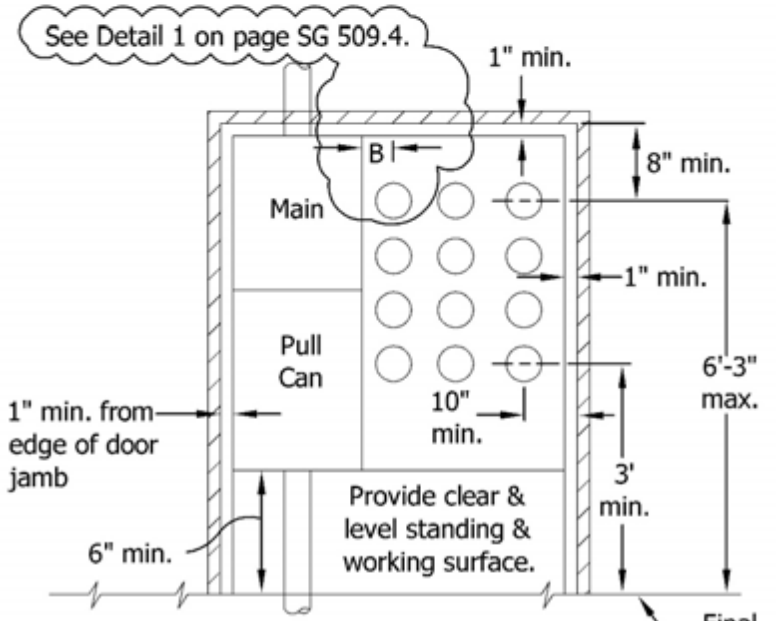

FIGURE 2
Front View

© 1998-2017 San Diego Gas & Electric Company. All rights reserved. Removal of this copyright notice without permission is not permitted under law.

REV	CHANGE	BY	DSGN	APPV	DATE	REV	CHANGE	BY	DSGN	APPV	DATE
A	Editorial Changes	LSM	IPJ	TPM	11/01/17	D					
B						E					
C						F					

X Indicates Latest Revision	Completely Revised	New Page	Information Removed

SHEET
3 OF 4

SDG&E SERVICE STANDARDS & GUIDE

ELECTRIC METER CABINET – COMMERCIAL OR RESIDENTIAL MULTI-METER INSTALLATIONS

SG 509.3

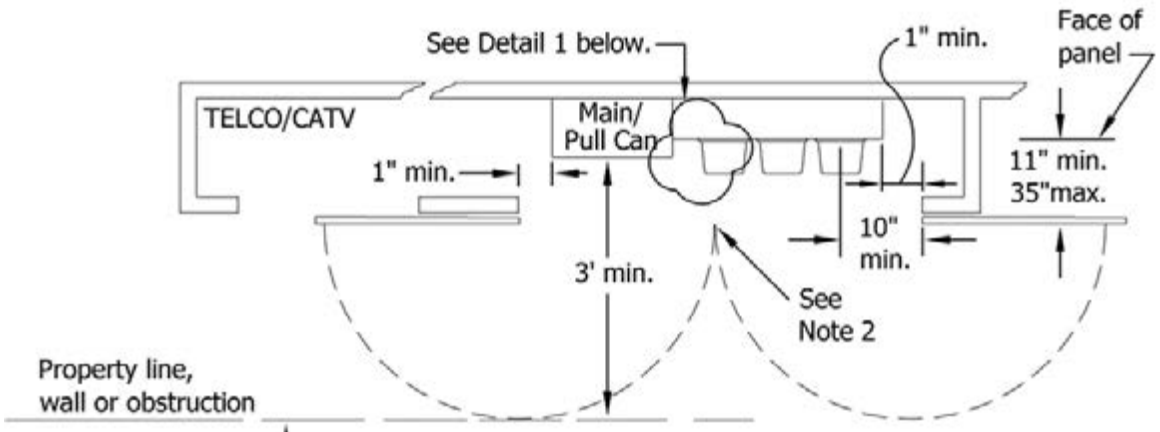

FIGURE 3 - TOP VIEW

Note: Hinged doors when opened, may not block the 24" min. exit route.

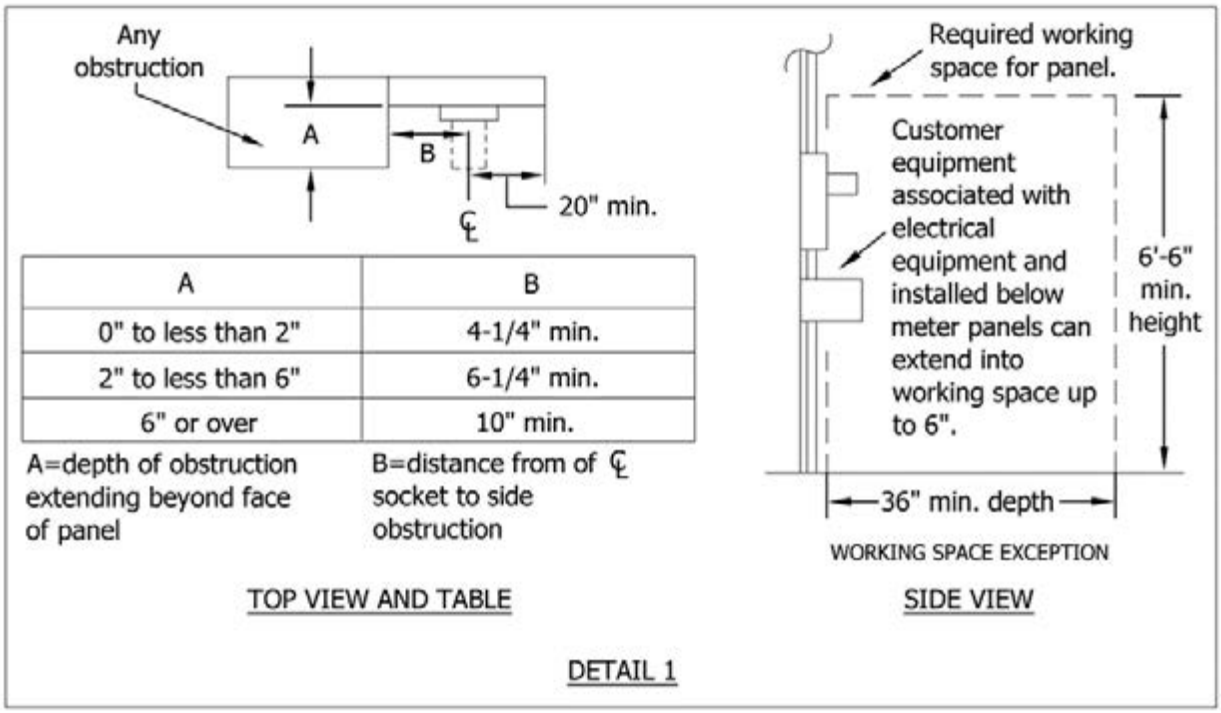

A	B
0" to less than 2"	4-1/4" min.
2" to less than 6"	6-1/4" min.
6" or over	10" min.

A=depth of obstruction extending beyond face of panel

B=distance from of ℄ socket to side obstruction

TOP VIEW AND TABLE

SIDE VIEW

DETAIL 1

TABLE OF CONTENTS

© 1998-2017 San Diego Gas & Electric Company. All rights reserved. Removal of this copyright notice without permission is not permitted under law.

REV	CHANGE	BY	DSGN	APPV	DATE	REV	CHANGE	BY	DSGN	APPV	DATE
A	Editorial Changes	LSM	IPJ	TPM	11/01/17	D					
B						E					
C						F					

X Indicates Latest Revision | Completely Revised | New Page | Information Removed

SDG&E SERVICE STANDARDS & GUIDE

SHEET 4 OF 4

ELECTRIC METER CABINET – COMMERCIAL OR RESIDENTIAL MULTI-METER INSTALLATIONS

SG 509.4

GENERAL INFORMATION

This standard provides the policy and requirements for electric metering in buildings or structures three stories, and above, in height. The purposes of the standard are to establish requirements for an electrical system with individual metering located on multiple floors in a manner that will provide for safe access, operations, and maintenance of the electrical system and help ensure reliable service to the occupants for the life of the building.

This standard applies to buildings or structures used for commercial and residential use, including mixed-use buildings, such as, but not limited to, a hotel with residential dwelling units located on the upper floors of the building, or a building with commercial space on the lower floors and residential dwelling units located on the upper floors.

Each dwelling unit in a mid- or high-rise building must be individually metered by SDG&E (Utility). (Reference Public Utilities Code Section 780.5.)

Non-residential enterprises must be individually metered by the Utility in mid-rise buildings. The customer has the option of installing a master meter to serve all non-residential enterprises in high-rise buildings where the non-residential enterprises are located on or above the sixth floor used for human occupancy, or requesting individual meters by the Utility for each separate enterprise. The Utility's filed Electric Rule 19 prohibits submetering of non-residential service. A customer shall not charge others for electricity received through a single meter except where the cost of electricity is absorbed in the rent for each individual tenant. The rent shall not vary with electric consumption. A separate identifiable charge to the tenants for electricity is not allowed.

TABLE OF CONTENTS

DEFINITIONS

High-Rise Building: For the purpose of this standard, a high-rise building is a structure having floors used for human occupancy located more than 75' above the lowest level of fire department vehicle access.

Mid-Rise Building: For the purpose of this standard, a mid-rise building is a structure having a minimum of three floors used for human occupancy and constructed at a height less than is required to meet the definition of a high-rise building.

REMOTE ELECTRIC METER ROOM & CABINET SPECIFICATIONS

All Utility-owned meters shall be located in an electric meter room or cabinet approved by the Utility. In addition to the requirements shown on pages SG 506.1 – 506.4 for meter rooms, or SG 509.1 – 509.4 for meter cabinets, each remote meter room/cabinet shall have emergency lighting, a telephone with a dedicated phone line for use in an emergency, and an information plaque placed at eye level on the inside of the door containing the following information:

1. 24-hour property management emergency contact telephone number
2. Total number of meters for that particular location
3. Floor number and nearest elevator of all other meter room/cabinet locations in the building
4. Map showing the following:
   a. Present location
   b. Exits (elevators and stairs) from present location to the outside of the building
   c. All meter rooms and cabinets in relationship to the elevators.

© 1998-2017 San Diego Gas & Electric Company. All rights reserved. Removal of this copyright notice without permission is not permitted under law.

REV	CHANGE	BY	DSGN	APPV	DATE	REV	CHANGE	BY	DSGN	APPV	DATE
A	Editorial Changes	LSM	IPJ	TPM	11/01/17	D					
B	No Changes-Reaffirmed	JC	IJ	TPM	10/15/15	E					
C	Editorial Changes	JC	BRB	MDJ	08/06/15	F					

Meter cabinets normally require two safety cones to be placed inside the cabinet for use by individuals when work is being performed. Refer to page SG 510.5 for safety cone specifications.

Refer to the metering communication requirements shown on page SG 525.

METER ACCESS EASEMENT

The building owner shall execute a "Meter Access Easement" provided by SDG&E, at the owner's expense, and return to the Utility during the planning phase of the project.

SERVICE & METERING POLICIES

Refer to the Electric Service Policies on pages SG 011.1 – 013.3 for additional information.

MID-RISE & HIGH-RISE BUILDING REQUIREMENTS

Electric meter rooms or meter cabinets may be located on every floor. The electric meter rooms/cabinets should be located as close as practical to the elevator that will be used by SDG&E employees to access the floors, but in no case further than 50 feet walking distance from the elevator. The elevator must be equipped with an SDG&E approved Schlage VTQP Quad Section key way and key switch wired to the control panel to allow 24-hour access to the floors where Utility meters are located. SDG&E will not check in with a security guard during our normal business hours.

The customer has the option of installing multiple meter locations on the same floor and omitting meter locations on every floor provided:

1. The total number of meter locations does not exceed the total number of occupied building floors.
2. All meter locations are within 50 feet walking distance from the elevator that will be used by SDG&E employees to access the floors. Meter location entrances shall be located directly off the common corridor used to access the elevator. It is not acceptable to enter another space or room before entering the meter room/cabinet.
3. The customer may provide access to multiple meter rooms/cabinets located on the same floor from different elevators. This is more common in high-rise podium construction projects.

MID-RISE BUILDING EXCEPTION

An exception may be granted to allow multiple meter rooms in a subterranean parking structure in lieu of meter rooms/cabinets located on the occupied floors provided all SDG&E applicable standards are met. The customer should consult with SDG&E's Planner to use this exception in the conceptual design phase of the project.

SERVICE STANDARDS REVIEW

The SDG&E Planner shall have Service Standards, in Electric Distribution Engineering, review the building project plans for mid- and high-rise building to ensure the grounding electrode conductor is appropriately placed and other engineering related issues are resolved during the design phase of the project.

© 1998-2017 San Diego Gas & Electric Company. All rights reserved. Removal of this copyright notice without permission is not permitted under law.

REV	CHANGE	BY	DSGN	APPV	DATE	REV	CHANGE	BY	DSGN	APPV	DATE
A	Editorial Changes	LSM	IPJ	TPM	11/01/17	D					
B	No Changes-Reaffirmed	JC	IJ	TPM	10/15/15	E					
C	Editorial Changes	JC	BRB	MDJ	08/06/15	F					

TABLE OF CONTENTS

APPROVAL PROCESS

The local Project Management office shall be contacted to approve the mid- or high-rise building main service and meter room location and the remote electric meter room or cabinet locations. The Utility's approval shall be obtained prior to the installation of the electrical service and metering equipment. Any service and metering equipment that has been installed without the Utility's approval shall be modified or relocated at the customer's/contractor's expense as necessary to meet all Utility Standards.

Mid-Rise & High-Rise Electric Metering Schematic

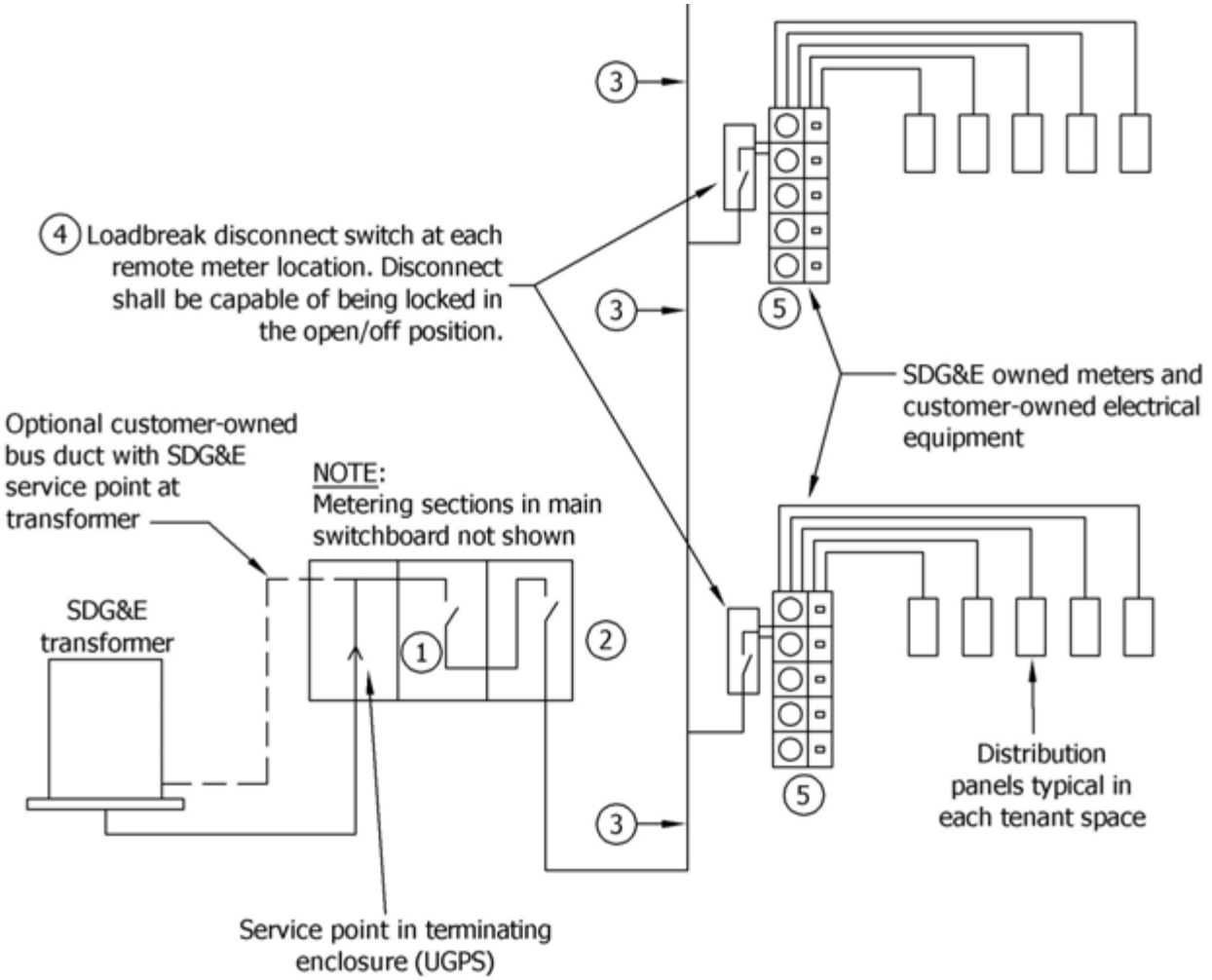

© 1998-2017 San Diego Gas & Electric Company. All rights reserved. Removal of this copyright notice without permission is not permitted under law.

REV	CHANGE	BY	DSGN	APPV	DATE	REV	CHANGE	BY	DSGN	APPV	DATE
A	Editorial Changes	LSM	IPJ	TPM	11/01/17	D					
B	No Changes-Reaffirmed	JC	IJ	TPM	10/15/15	E					
C	Editorial Changes	JC	BRB	MDJ	08/06/15	F					

X Indicates Latest Revision	Completely Revised	New Page	Information Removed

TABLE OF CONTENTS

Notes:

(1) The main electric room shall contain a master directory showing all meter locations within the building. This directory may be located on the interior or exterior of the meter room door, or mounted on a wall within the room in a conspicuous location. Refer to page SG 017.1 for plaque specifications, with the exception that all letter sizes may be reduced to ⅛". It is acceptable to mount a site map denoting the meter locations and access route between Plexiglas in lieu of a plaque.

Each main service disconnect shall meet the requirements on pages SG 511.1 – 511.2.

Example 1 Plaque is required at the service point and is to be located on the exterior panel cover of the terminating enclosure where SDG&E conductors terminate. If the service point is at SDG&E's transformer, Example 2 Plaque shall be installed on the exterior panel cover at the main service disconnect location. See plaque examples on page SG 510.5. Refer to Page SG 017.1 for plaque specifications, with the exception that all letter sizes may be reduced to ⅛".

(2) Feeder disconnects controlling electricity to remote meter locations shall have a permanent plaque affixed to each of the feeder disconnects stating:

> THIS DISCONNECT CONTROLS POWER TO METERS LOCATED IN REMOTE LOCATIONS ON FLOORS _____. SEE DIAGRAM ON WALL/DOOR INDICATING THE LOCATION AND ACCESS ROUTE TO THE REMOTE METER LOCATIONS.

(3) Feed conductors (cable or busway) shall be installed per the California Electrical Code and approved by the Authority Having Jurisdiction (AHJ). When cable is installed in a raceway containing a condulet and/or junction box, they shall be located no higher than 9' feet above standing surface and shall provide a means for installation of Utility seals. Bus duct housing or concealed raceways containing unmetered conductors are not required to be sealed.

(4) A load-break disconnect switch, capable of being locked in the open/off position, is required within sight of each group of meters controlled by a feed originating from the main electric meter room.

(5) Each meter socket and its related meter service disconnect shall meet all of the Utility's Standards.

Metering Communications:

For metering communication requirements, refer to page SG 525, and consult with SDG&E's Smart Meter Operations via Email: networkdevice@semprautilities.com

TABLE OF CONTENTS

© 1998-2017 San Diego Gas & Electric Company. All rights reserved. Removal of this copyright notice without permission is not permitted under law.

REV	CHANGE	BY	DSGN	APPV	DATE	REV	CHANGE	BY	DSGN	APPV	DATE
A	Editorial Changes	LSM	IPJ	TPM	11/01/17	D					
B	No Changes-Reaffirmed	JC	IJ	TPM	10/15/15	E					
C	Editorial Changes	JC	BRB	MDJ	08/06/15	F					

CAUTION: ENERGIZED EQUIPMENT – DO NOT OPEN

THE "SERVICE POINT" IS IN THIS ENCLOSURE AT THE CABLE TERMINATIONS. ALL ELECTRICAL WIRING AND EQUIPMENT BEYOND THE SERVICE POINT, EXCEPT SDG&E SERVICE AND METERING EQUIPMENT, ARE CUSTOMER-OWNED, CONTROLLED, SECURED, SAFEGUARDED AND MAINTAINED BY THE CUSTOMER. ONLY AUTHORIZED SDG&E EMPLOYEES ARE ALLOWED ACCESS INTO UTILITY-SEALED ENCLOSURES OR COMPARTMENTS. ALL UTILITY SEALS ARE TO REMAIN INTACT WITHOUT BEING CUT OR REMOVED.

Example 1 Plaque

CAUTION: ENERGIZED EQUIPMENT – DO NOT OPEN

THE "SERVICE POINT" IS AT THE SECONDARY OF UTILITY'S TRANSFORMER. ALL CONDUCTORS IN THIS ENCLOSURE ARE CUSTOMER-OWNED. ALL ELECTRICAL WIRING AND EQUIPMENT BEYOND THE SERVICE POINT, EXCEPT SDG&E SERVICE AND METERING EQUIPMENT, ARE CUSTOMER-OWNED, CONTROLLED, SECURED, SAFEGUARDED AND MAINTAINED BY THE CUSTOMER. ONLY AUTHORIZED SDG&E EMPLOYEES ARE ALLOWED ACCESS INTO UTILITY-SEALED ENCLOSURES OR COMPARTMENTS. ALL UTILITY SEALS ARE TO REMAIN INTACT WITHOUT BEING CUT OR REMOVED.

Example 2 Plaque

Safety cones constructed of rugged plastic are required for electric meter cabinets. The safety cones are to be placed inside the cabinet prior to the Utility energizing the main service to the building, unless the cabinet has not been constructed at the time the service is energized. Two safety cones are required for each meter cabinet unless the position of the cabinet is such that foot traffic is limited to one direction, in which case, upon approval by the Utility's Inspector, only one safety cone is required.

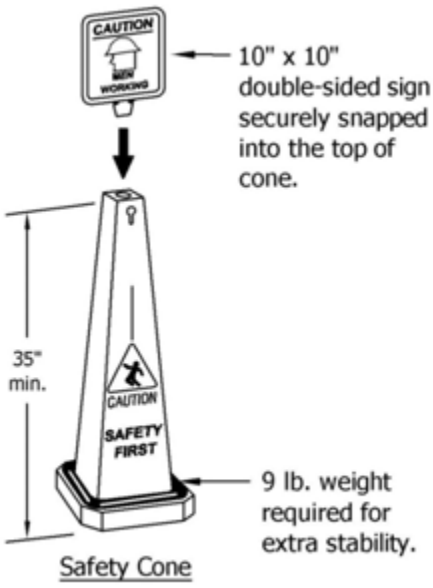

Safety Cone

© 1998-2017 San Diego Gas & Electric Company. All rights reserved. Removal of this copyright notice without permission is not permitted under law.

REV	CHANGE	BY	DSGN	APPV	DATE	REV	CHANGE	BY	DSGN	APPV	DATE
A	Editorial Changes	LSM	IPJ	TPM	11/01/17	D					
B	No Changes-Reaffirmed	JC	IJ	TPM	10/15/15	E					
C	Editorial Changes	JC	BRB	MDJ	08/06/15	F					

TABLE OF CONTENTS

TABLE OF CONTENTS

GENERAL INFORMATION

A service disconnect is a device, or group of devices, or other means by which the conductors of a circuit can be disconnected from their source of supply.

All service equipment other than that provided by SDG&E (Utility) is to be provided and installed by the customer in compliance with the requirements of the governmental Authority Having Jurisdiction (AHJ). See page SG 004.4 for equipment provided by the customer.

DISCONNECT AMPACITY & AMPERE INTERRUPTING CAPACITY (AIC) RATING

The meter service disconnect and main service disconnect shall meet all code requirements as determined by the AHJ.

Refer to pages SG 006.1 – 006.2 for information on the Utility's contribution to fault current when determining the necessary short circuit current rating and AIC rating for a service or meter service disconnect device.

METER SERVICE DISCONNECT

For each meter installed on a service of 600 volts, or less, a single fusible switch(s), circuit breaker(s), or other approved disconnecting means shall be located on the load side of the meter and shall control all of and only the energy registered by that meter.
Exception 1: Two meter service disconnects are acceptable in 300 or 400 amp residential service equipment. 300 amp service equipment is limited to one 200 amp main breaker and one 100 amp main breaker. 400 amp service equipment is limited to two 200 amp main breakers.
Exception 2: Multiple meter service disconnects are acceptable for Current Transformer (CT) metering applications.

The meter service disconnect must be located at or immediately adjacent to the meter. For example, the meter service disconnect may not be located inside the building served if the meter is located outside.

MAIN SERVICE DISCONNECT

For multi-meter installations, electrical codes, enforced by the AHJ, may require the installation of a main service disconnect located on the supply (line) side of the meters. When a main service disconnect is installed, each meter will also be required to have its own meter service disconnect.

If multiple meter locations within a building have been approved by the Utility and AHJ, each group of meters will be required to have a feeder disconnect grouped with the main service disconnect(s). A permanent plaque must be affixed to each feeder disconnect stating:

"THIS DISCONNECT SERVES METERS LOCATED ON FLOORS(S) _____ /IN ROOMS _____.
SEE DIAGRAM ON WALL TO THE LEFT/RIGHT FOR LOCATIONS OF METERS."

The diagram indicating the meter locations must be a permanent plaque affixed to the wall. See page SG 017.1 for plaque specifications and installation requirements. The main service will not be energized until this requirement is complete.

© 1998-2017 San Diego Gas & Electric Company. All rights reserved. Removal of this copyright notice without permission is not permitted under law.

REV	CHANGE	BY	DSGN	APPV	DATE	REV	CHANGE	BY	DSGN	APPV	DATE
A	Editorial Changes	LSM	IPJ	TPM	11/01/17	D					
B						E					
C						F					

	X Indicates Latest Revision		Completely Revised		New Page		Information Removed	

For single meter installations, a main service disconnect is not permitted on the supply (line) side of the meter.

Refer to pages SG 510.1 – 510.5 for specific requirements in mid-rise and high-rise buildings.

Service Disconnect Location with Respect to Meter & Meter Service Disconnect

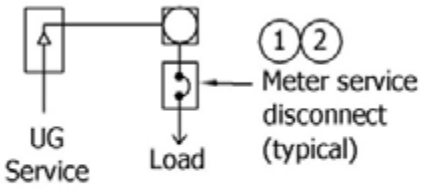

FIGURE 1
Single meter installation

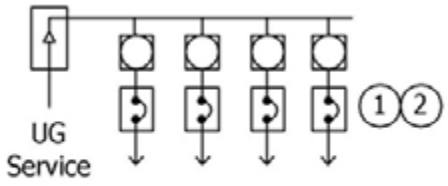

FIGURE 2
Multi-meter installation 2 to 6 meters without main disconnect

Notes:

(1) Meter service disconnect(s) on load side of meter.

(2) Ampacity and AIC ratings of meter service disconnect proper for protection of load conductors and available fault current.

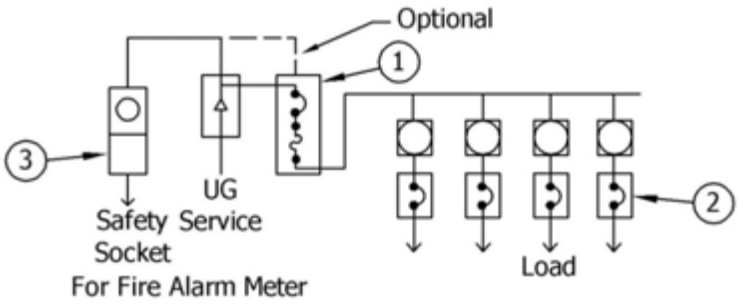

FIGURE 3
Multi-Meter Installation, 2 to 6 Meters with Main Disconnect

Notes:

(1) Main disconnect ahead of 2 to 6 meters, either fusible switch or circuit breaker.

(2) Ampacity rating of meter service disconnect proper for protection of load conductors; AIC rating coordinated with let-through current of current-limiting fuse device ahead of meters, or a series-rated system.

(3) A safety socket can with test-bypass facilities is required in all cases, whether separately metered or served through a house meter. Alarm meter source may be connected on the line side of a main disconnect. Consult with the AHJ for point of connection.

© 1998-2017 San Diego Gas & Electric Company. All rights reserved. Removal of this copyright notice without permission is not permitted under law.

REV	CHANGE	BY	DSGN	APPV	DATE	REV	CHANGE	BY	DSGN	APPV	DATE
A	Editorial Changes	LSM	IPJ	TPM	11/01/17	D					
B						E					
C						F					

TABLE OF CONTENTS

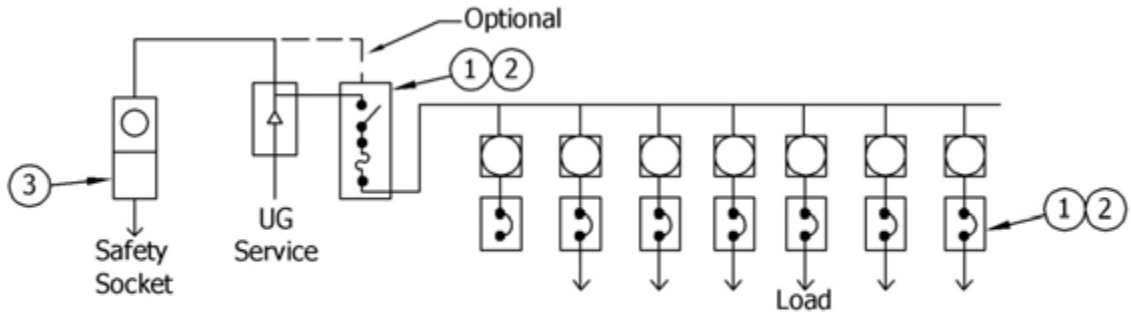

FIGURE 4
Multi-meter installation, numbering 7 or more meters.

Notes:

1. A main disconnect located ahead of more than 6 meter service disconnects is required per the California Electric Code.

2. Ampacity and AIC ratings of main service disconnect and meter service disconnects shall meet all electrical code requirements enforced by the AHJ.

3. A safety socket can with test-bypass facilities is required in all cases, whether separately metered or served through a house meter. Alarm meter source may be connected on the line side of the main disconnect. Consult with the AHJ for acceptable point of connection.

TABLE OF CONTENTS

© 1998-2017 San Diego Gas & Electric Company. All rights reserved. Removal of this copyright notice without permission is not permitted under law.

REV	CHANGE	BY	DSGN	APPV	DATE	REV	CHANGE	BY	DSGN	APPV	DATE
A	Editorial Changes	LSM	IPJ	TPM	11/01/17	D					
B						E					
C						F					

X Indicates Latest Revision	Completely Revised	New Page	Information Removed

METER SOCKET CONNECTIONS

Meter sockets for all self-contained meters shall be connected to the service entrance conductors by the contractor. Connection diagrams for the various types of service equipment are shown on succeeding pages in this manual.

An SDG&E (Utility) employee will provide and install the wiring used in meter sockets located in Current Transformer (CT) compartments.

SELF-CONTAINED METERS DEFINED

A self-contained meter is one which is capable of carrying the total current and voltage of the electric service supplied to the customer. This type of meter is connected directly to the service entrance conductors when it is inserted into the meter socket.

SELF-CONTAINED METER SOCKETS

Sockets for use with self-contained meters are available in two approved ratings. When connected to properly sized service entrance conductors, the approved standard-duty socket has a nominal capacity of 100 amps commercial and 125 amps residential. The approved heavy-duty socket has a nominal capacity of 200 amps commercial and residential.

METER SOCKET CLOSING DEVICES

Meter sockets may not be equipped with circuit closing or by-pass devices which automatically close when the meter is removed from the meter socket.

EQUIPMENT CONNECTED AHEAD OF A MAIN SERVICE DISCONNECT

Circuits supplying fire alarms, fire sprinklers, fire pumps, and exit lighting may be connected on the line side of the main service disconnect through suitable protection. All such circuits must be metered, either through a house meter or a separate meter. See page SG 511.2, Figure 3, and page SG 511.3, Figure 4.

COMBINATION PULL & METER CANS FOR UNDERGROUND OR OVERHEAD RESIDENTIAL SERVICE

Residential service equipment is manufactured with a combination pull section and terminating section, designed for the Utility to install their service lateral conductors and terminate on the factory provided termination lugs, a self-contained meter socket, and a distribution section for the customer's main breaker (also referred to as the meter service disconnect) and feeder/branch circuit breakers. See illustrations of this type of service equipment and installation notes on pages SG 512.2 – 512.8.

Refer to pages SG 518.2 – 518.3 for residential meter pedestals.

TABLE OF CONTENTS

© 1998-2017 San Diego Gas & Electric Company. All rights reserved. Removal of this copyright notice without permission is not permitted under law.

REV	CHANGE	BY	DSGN	APPV	DATE	REV	CHANGE	BY	DSGN	APPV	DATE
A	Editorial Changes	LSM	IPJ	TPM	11/01/17	D					
B						E					
C						F					

X Indicates Latest Revision	Completely Revised	New Page	Information Removed	
SHEET 1 OF 8	SDG&E SERVICE STANDARDS & GUIDE			SG 512.1
	RESIDENTIAL SELF-CONTAINED SERVICE & METERING EQUIPMENT			

Combination Pull & Meter Cans for Underground or Overhead Residential Service
225 Amps Maximum, Single-Phase, 3-Wire, 0 – 600 Volts

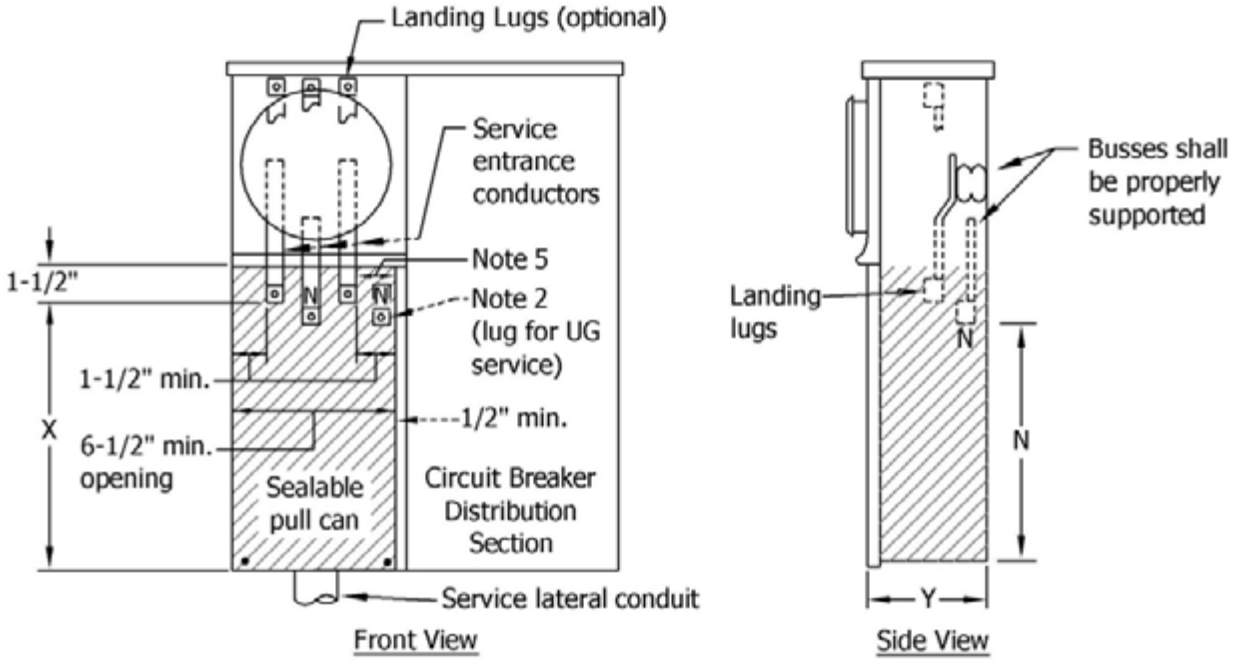

Service Entrance Nominal Current Capacity	Service Lateral Conduit Size		Minimum Pull Section Dimensions			Utility Maximum Wire Size Allowed Without Pin Adapters	Utility Maximum Wire Size Allowed With Pin Adapters
	Min.	Max.	"X"	"N"	"Y"		
125 AMPS	2" See 309.2 Ⓒ	3"	8"	6"	4"	#1/0 kCMIL	#3/0 kCMIL
225 AMPS	3"	3"	11"	8-1/2"	5-1/2"	#3/0 kCMIL	#350 kCMIL

TABLE OF CONTENTS

© 1998-2017 San Diego Gas & Electric Company. All rights reserved. Removal of this copyright notice without permission is not permitted under law.

REV	CHANGE	BY	DSGN	APPV	DATE	REV	CHANGE	BY	DSGN	APPV	DATE
A	Editorial Changes	LSM	IPJ	TPM	11/01/17	D					
B						E					
C						F					

Installation Notes:

1. This equipment may be constructed for OH, UG or for combination overhead/underground service applications. When constructed as an OH/UG device, a yellow caution label (2" x 3" minimum) shall be installed below the terminations in the pull section reading:

   "CAUTION: BUS ENERGIZED AT ALL TIMES"

2. Terminals for service conductors shall be aluminum bodied range taking lugs with a range of No. 6 through No. 1/0 AWG for the 125 amp device and No. 4 through No. 250 kCMIL for the 225 amp device. The Utility may install a maximum No. 3/0 kCMIL using pin adapters in 125 amp devices and No. 350 kCMIL using pin adapters in 225 amp devices. The Utility Planner shall note if pin adapters are required on the Electric Meter and Service Location form as follows: "Pin adapters required per UG Standard 4171.3."

3. Bonding according to the California Electrical Code shall be installed prior to installation of underground service conductors. Bonding connections for service lateral conduits only is permitted at bottom of can. Any other bonding or grounding connection must be made above the pull can area and no grounding or bonding conductor is permitted to pass through the pull can area. The pull can area will be under Utility seal, therefore, it is deemed inaccessible to the Authority Having Jurisdiction (AHJ) for inspection. Provide a bonding screw or jumper if the neutral is insulated from the enclosure.

4. Service lateral conduit shall enter the bottom of the pull section.

5. A minimum radial clearance of 1-½" shall be provided between hot bus terminals and grounded surfaces or the neutral bus or termination lug.

6. Residential pull cans shall be accessible without entering the building, and when exposed to the weather, shall be raintight.

7. This device cannot supply other meters.

Reference UG 4171.3.

© 1998-2017 San Diego Gas & Electric Company. All rights reserved. Removal of this copyright notice without permission is not permitted under law.

REV	CHANGE	BY	DSGN	APPV	DATE	REV	CHANGE	BY	DSGN	APPV	DATE
A	Editorial Changes	LSM	IPJ	TPM	11/01/17	D					
B						E					
C						F					

X Indicates Latest Revision	Completely Revised	New Page	Information Removed	
SHEET 3 OF 8	SDG&E SERVICE STANDARDS & GUIDE			SG 512.3
	RESIDENTIAL SELF-CONTAINED SERVICE & METERING EQUIPMENT			

TABLE OF CONTENTS

Combination Pull & Meter Cans for Underground Residential Service Only
225 Amps Maximum, Single-Phase, 3-Wire, 0 – 600 Volts

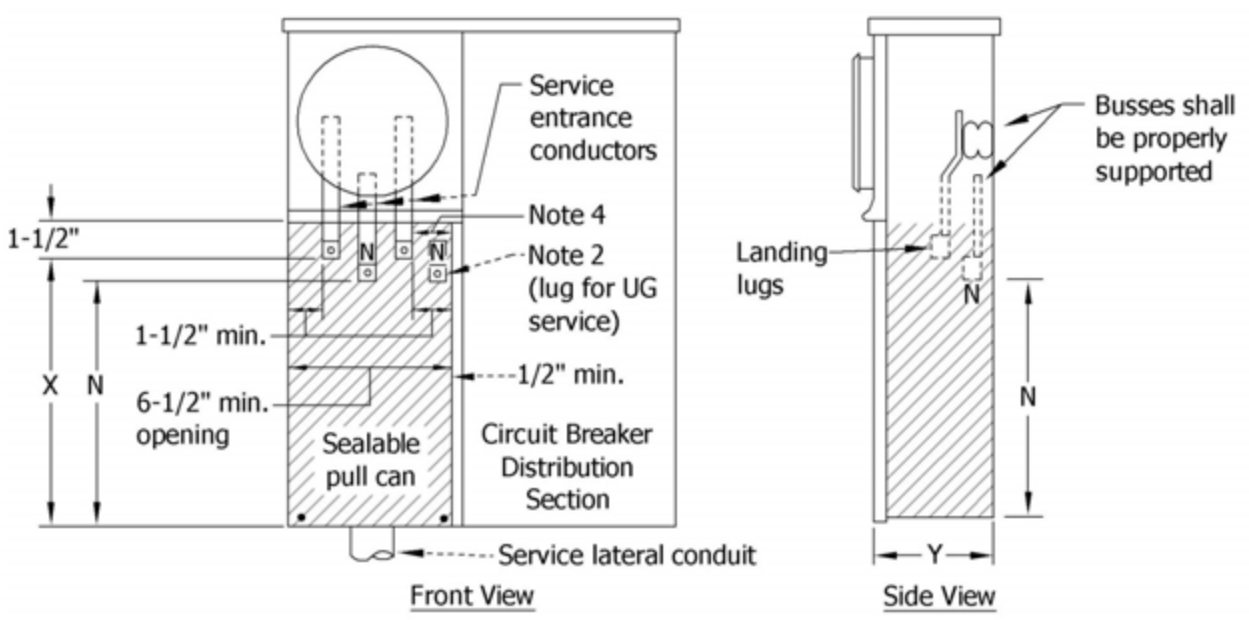

Service Entrance Nominal Current Capacity	Service Lateral Conduit Size		Minimum Pull Section Dimensions			Utility Maximum Wire Size Allowed Without Pin Adapters	Utility Maximum Wire Size Allowed Using Pin Adapters
	Min.	Max.	"X"	"N"	"Y"		
125 AMPS	2" See 309.3 Ⓒ	3"	8"	6"	4"	#1/0 kCMIL	#3/0 kCMIL
225 AMPS	3"	3"	11"	8-1/2"	5-1/2"	#3/0 kCMIL	#350 kCMIL

TABLE OF CONTENTS

© 1998-2017 San Diego Gas & Electric Company. All rights reserved. Removal of this copyright notice without permission is not permitted under law.

REV	CHANGE	BY	DSGN	APPV	DATE	REV	CHANGE	BY	DSGN	APPV	DATE
A	Editorial Changes	LSM	IPJ	TPM	11/01/17	D					
B						E					
C						F					

Installation Notes:

1. Terminals for service conductors shall be aluminum bodied range taking lugs with a range of No. 6 through No. 1/0 AWG for the 125 amp device and No. 4 through No. 250 kCMIL for the 225 amp device. The Utility may install a maximum No. 3/0 kCMIL using pin adapters in 125 amp devices and No. 350 kCMIL using pin adapters in 225 amp devices. The Utility Planner shall note if pin adapters are required on the Electric Meter and Service Location form as follows: "Pin adapters required per UG Standard 4171.3."

2. Bonding according to the California Electrical Code shall be installed prior to the installation of underground service conductors. Bonding connections for service lateral conduits only is permitted at the bottom of the can. Any other bonding or grounding connection must be made above the pull can area and no grounding or bonding conductor is permitted to pass through the pull can area. The pull can area will be under Utility seal, therefore, it is deemed inaccessible to the AHJ for inspection. Provide a bonding screw or jumper if the neutral is insulated from the enclosure.

3. Service lateral conduit shall enter the bottom of the pull section.

4. A minimum radial clearance of 1-½" shall be provided between hot bus terminals and grounded surfaces or the neutral bus or termination lug.

5. Residential pull cans shall be accessible without entering the building, and when exposed to the weather, shall be raintight.

6. This device cannot supply other meters.

TABLE OF CONTENTS

Reference UG 4171.3.

© 1998-2017 San Diego Gas & Electric Company. All rights reserved. Removal of this copyright notice without permission is not permitted under law.

REV	CHANGE	BY	DSGN	APPV	DATE	REV	CHANGE	BY	DSGN	APPV	DATE
A	Editorial Changes	LSM	IPJ	TPM	11/01/17	D					
B						E					
C						F					

X Indicates Latest Revision	Completely Revised	New Page	Information Removed	

SDG&E SERVICE STANDARDS & GUIDE

RESIDENTIAL SELF-CONTAINED SERVICE & METERING EQUIPMENT

Combination Pull & Meter Cans for Underground Residential Service Only
300 – 400 Amps, Single-Phase, 3-Wire, 120/240 Volts

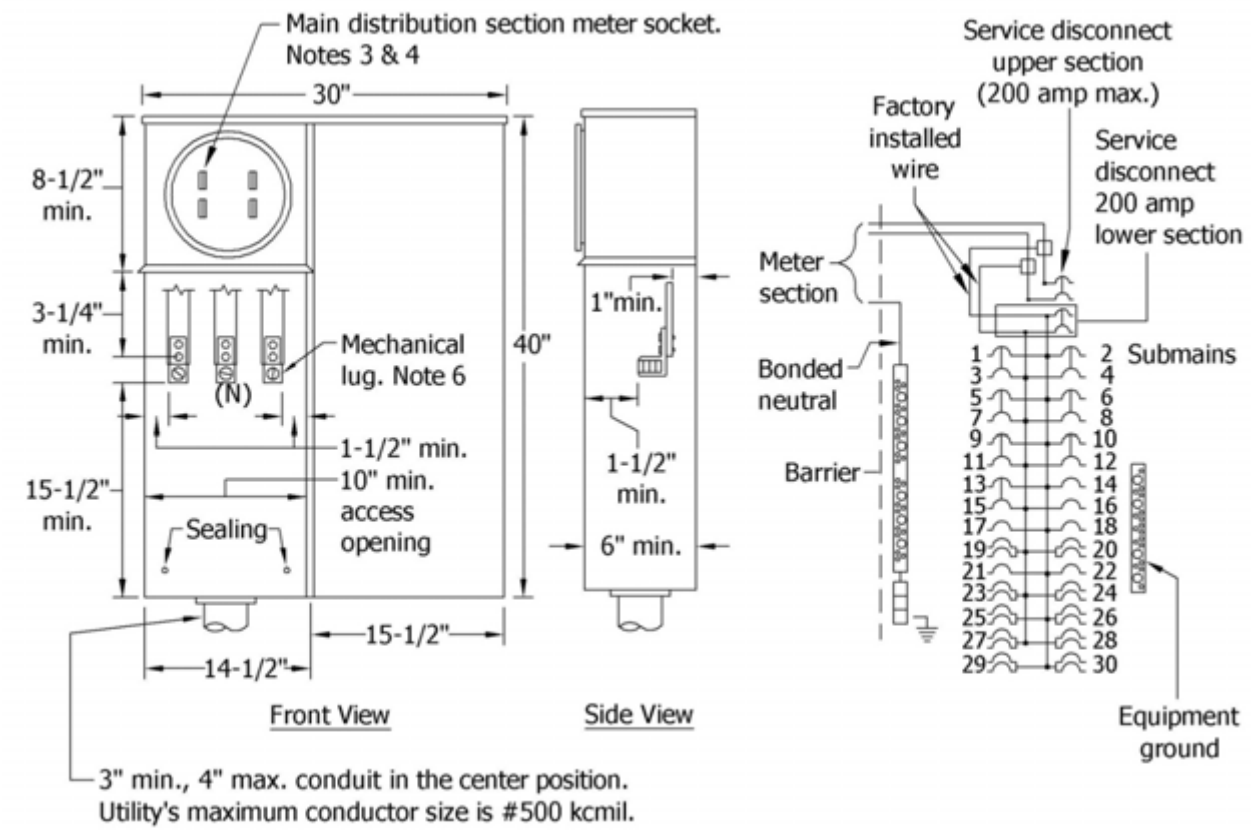

© 1998-2017 San Diego Gas & Electric Company. All rights reserved. Removal of this copyright notice without permission is not permitted under law.

REV	CHANGE	BY	DSGN	APPV	DATE	REV	CHANGE	BY	DSGN	APPV	DATE
A	Editorial Changes	LSM	IPJ	TPM	11/01/17	D					
B						E					
C						F					

X Indicates Latest Revision	Completely Revised	New Page	Information Removed

TABLE OF CONTENTS

Installation Notes:

1. The panel shown is a combination device having both a Utility Section (i.e. pull section and metering section) and a customer section.
2. The panel shall be marked with either a rating of "320 amperes continuous" or "400 amperes maximum (320 continuous)".
3. A ring-type socket is required. The panel shall be provided with a sealing ring and the meter socket shall be rigidly mounted on a support and attached to the meter panel.
4. The meter socket may be located above, to the left or right of the terminating pull section.
5. Pull section cover panels shall be removable, sealable and provided with two lifting handles.
6. The 10" minimum access opening dimension shown is measured between the return flanges. When viewed from the front of the pull section area, return flanges shall not extend closer than ¾" from the outside edge of the mechanical lugs.
7. Terminations for service conductors shall be aluminum-bodied mechanical lugs with a range of No. 1 AWG through 600 kCMIL. The lugs shall be secured to assure vertical alignment. A minimum radial clearance of 1-½" shall be provided between hot bus terminals and grounded surfaces or neutral bus or termination lug. The 1-½" dimension may be less if insulating material is provided.
8. When an overhead service drop will supply power to this equipment, the customer's service entrance conductors must enter the lower left side of the underground service section and connect to the mechanical lugs referred to in Note 7 above. A condulet will be required and shall be visible and sealable. See "Detail for Surface-Mounted or Semi-Flush Installations Only" on page SG 512.8.
9. Refer to pages SG 508.1 – 508.2 for Meter Cabinet Recess specifications.
10. This device cannot supply other meters.

TABLE OF CONTENTS

© 1998-2017 San Diego Gas & Electric Company. All rights reserved. Removal of this copyright notice without permission is not permitted under law.

REV	CHANGE	BY	DSGN	APPV	DATE	REV	CHANGE	BY	DSGN	APPV	DATE
A	Editorial Changes	LSM	IPJ	TPM	11/01/17	D					
B						E					
C						F					

X Indicates Latest Revision	Completely Revised	New Page	Information Removed	

SDG&E SERVICE STANDARDS & GUIDE

RESIDENTIAL SELF-CONTAINED SERVICE & METERING EQUIPMENT

Combination Pull & Meter Cans for Overhead Residential Service Only
Using Service Equipment per Pages SG 512.6 – 512.7
300 – 400 Amps, Single-Phase, 3-Wire, 120/240 Volts

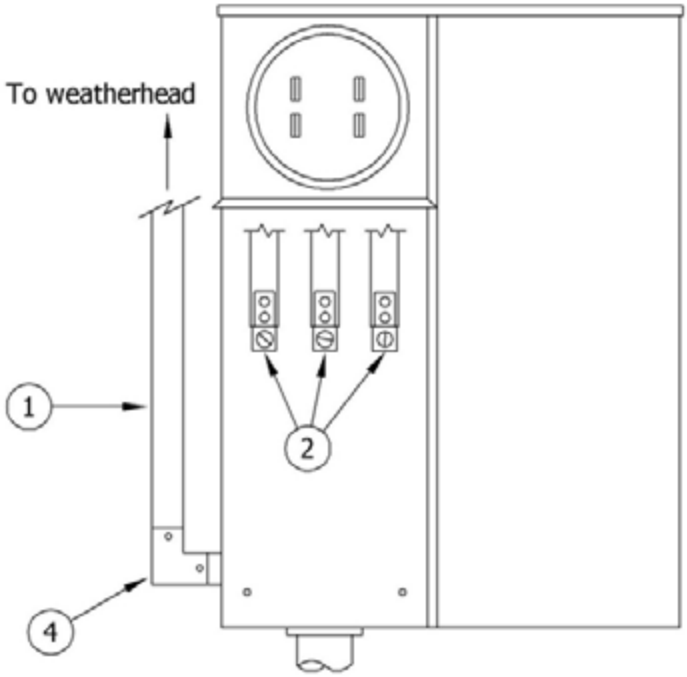

Front View

THIS IS AN ACCEPTABLE METHOD FOR OVERHEAD SERVICE CONNECTION
FOR SURFACE-MOUNTED OR SEMI-FLUSH INSTALLATIONS ONLY.

Installation Notes:

(1) Refer to pages SG 105.1 – 105.2 for metallic conduit riser requirements.

(2) Service entrance conductors to be connected to the lugs in the pull can by the contractor.

3. The installation shall be inspected by the AHJ prior to the Utility energizing their service drop conductors and installing the meter. Once the service is energized, the pull can cover will be sealed by the Utility and will no longer be accessible to the AHJ Inspector.

(4) A visible and sealable condulet for surface-mounted and semi-flush installations only is required.

5. For "flush-mounted" installations, a solid one-piece riser acceptable to the Utility and the AHJ is required.

© 1998-2017 San Diego Gas & Electric Company. All rights reserved. Removal of this copyright notice without permission is not permitted under law.

REV	CHANGE	BY	DSGN	APPV	DATE	REV	CHANGE	BY	DSGN	APPV	DATE
A	Editorial Changes	LSM	IPJ	TPM	11/01/17	D					
B						E					
C						F					

X Indicates Latest Revision	Completely Revised	New Page	Information Removed	
SHEET 8 OF 8	SDG&E SERVICE STANDARDS & GUIDE			SG 512.8
	RESIDENTIAL SELF-CONTAINED SERVICE & METERING EQUIPMENT			

TABLE OF CONTENTS

TABLE OF CONTENTS

TEST-BYPASS REQUIREMENTS

1. The general text and illustrations for safety socket cans and test-bypass facilities are shown in this standard.

2. Bussed test-bypass facilities are to be factory-installed for installations of safety socket cans up to 200 amps.

3. These devices isolate the meter socket from the electric source, and are a safety measure to protect SDG&E personnel involved in metering work.

4. Additionally, the devices permit testing or replacement of meters without interrupting the customer's electric service. This avoids problems such as loss of computer data, resetting time controls, loss of perishable food or material process, etc.

5. Test-bypass facilities must be installed for all non-residential meter installations. Minimal loads such as fire alarms, landscape sprinkler, controls or sign boards are not exempt from this requirement.

6. Test-bypass facilities are required on temporary service for construction power to build residential single-family dwellings and duplexes, on single lots or in subdivisions, with single-phase, 120/240-volts, 200 amps maximum.
   Exception: Residential meter panels are acceptable for Temporary Service in a Permanent Base (TSPB). Refer to page SG 210.

7. A meter and service installation to a gate for a single family residence also requires test-bypass facilities. This also applies to gates to access gated communities.

8. Service used in common for residential purposes in a multi-family dwelling development located on a single parcel of land qualifies for the domestic residential DR Rate Schedule (reference Special Condition 8). For example, service to a recreation building in a condominium or apartment complex. Test-bypass facilities are not required. All three-phase installations must be equipped with test-bypass facilities.

9. The safety socket meter can may be used as a combination pull and meter can for underground service, either residential or commercial. Refer to pages SG 514.2 – 514.5 for details.

10. An agricultural well used for irrigation only regardless of type of ownership may be served on a general service "Commercial" or "Agricultural" Rate Schedule regardless of the phase of service. This equipment must be equipped with test-bypass facilities.

11. An individual private domestic well which is solely-owned and primarily used for domestic purposes will be served on the A or PA Rate Schedule. Test-bypass facilities are required.

© 1998-2017 San Diego Gas & Electric Company. All rights reserved. Removal of this copyright notice without permission is not permitted under law.

REV	CHANGE	BY	DSGN	APPV	DATE	REV	CHANGE	BY	DSGN	APPV	DATE
A	Editorial Changes	LSM	CTG	TPM	11/01/17	D					
B						E					
C						F					

X Indicates Latest Revision	Completely Revised	New Page	Information Removed

Test-Bypass Facilities for Safety Sockets 100 & 200 Amps, 0 – 600 Volts

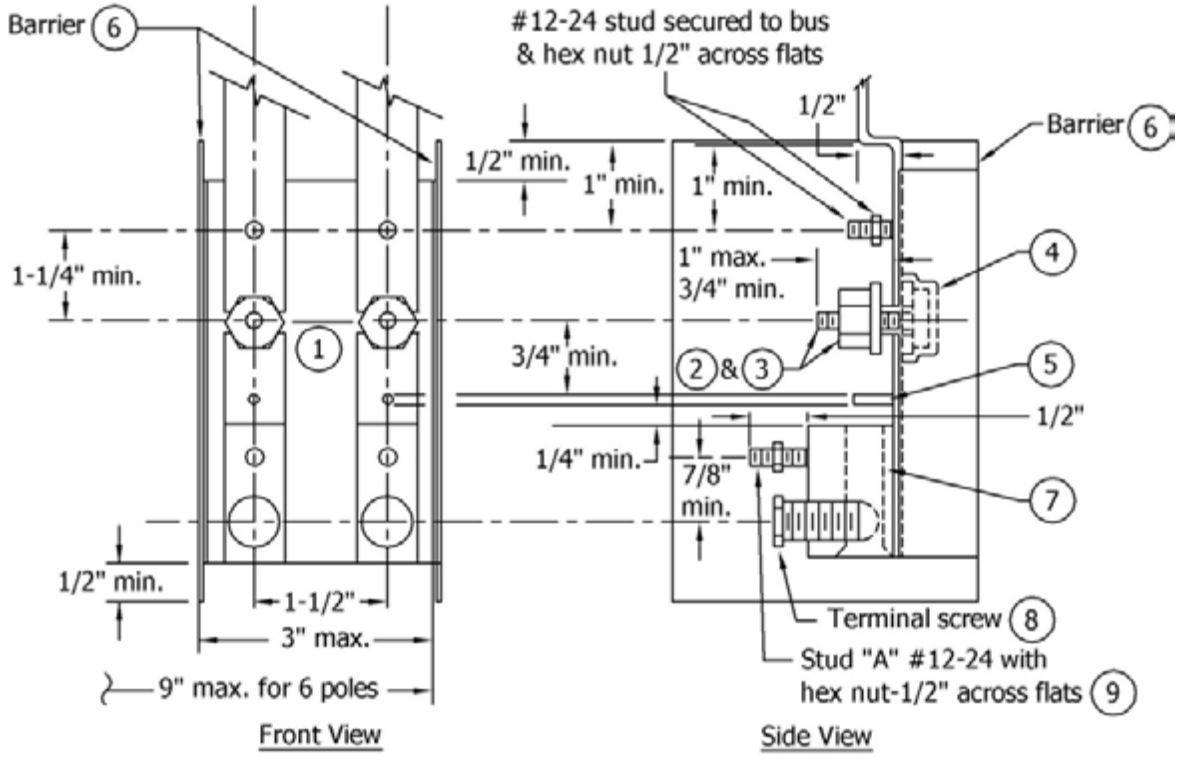

Notes:

1. Strike distance between upper and lower bus sections shall not be less than ¼" when the circuit-closing nut is backed off.
2. Circuit-closing nut shall be a hex nut ⅝" across flats with plated copper washer attached and have threads counter-bored at bottom to facilitate re-installation. Bolt head shall be secured in place to prevent turning and backout.
3. Circuit-closing nut and bolt assembly shall maintain the applied contact pressure between the plated copper washer and the bus members of the test-bypass block.
4. Insulating washer shall be made from dimensionally stable, non-tracking material and shall provide a minimum of ⅛" creep distance between the bolt and the bus sections. Bus sections shall be plated.
5. Wire stops shall extend to center of terminal opening or beyond.
6. Rigid insulating barriers shall project at least ¼" beyond any energized parts when the maximum wire size is installed.
7. Terminals shall be aluminum bodied. For required conductor range, see pages SG 514.1 – 514.3. The opening shall extend through the terminal body and, if wire hole is round, shall be chamfered as necessary to facilitate installation of the largest size wire.
8. The terminal screw may be Allen type (3/16" across flats for 100 amp, 5/16" across flats for 200 amp).
9. Stud "A" may be located either on the terminal body, on the bus member between the circuit-closing nut, and the wire stop or incorporated as part of the wire stop.

© 1998-2017 San Diego Gas & Electric Company. All rights reserved. Removal of this copyright notice without permission is not permitted under law.

REV	CHANGE	BY	DSGN	APPV	DATE	REV	CHANGE	BY	DSGN	APPV	DATE
A	Editorial Changes	LSM	CTG	TPM	11/01/17	D					
B						E					
C						F					

X Indicates Latest Revision	Completely Revised	New Page	Information Removed

TABLE OF CONTENTS

Test-Bypass Facilities for Safety Sockets, 100 & 200 Amps, 0 – 600 Volts
Bussed &/or Cable Terminations

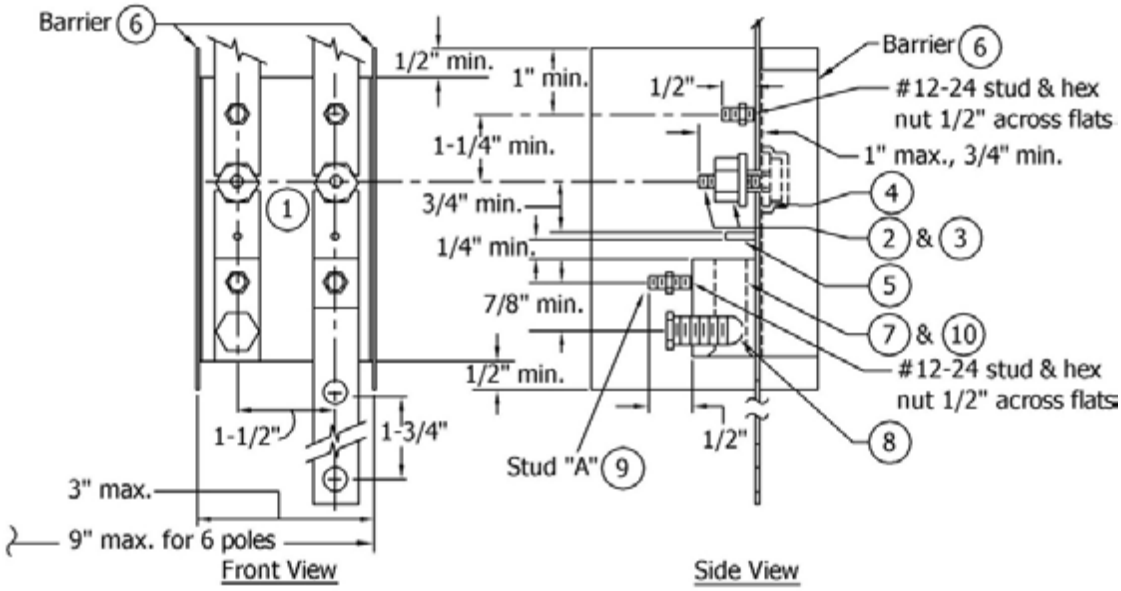

Notes:

1. Strike distance between upper and lower bus sections shall not be less than ¼" when the circuit-closing nut is backed off.
2. Circuit-closing nut shall be a hex nut ⅝" across flats with plated copper washer attached and have threads counter-bored at bottom to facilitate re-installation. Bolt head shall be secured in place to prevent turning and backout.
3. Circuit-closing nut and bolt assembly shall maintain the applied contact pressure between the plated copper washer and the bus members of the test-bypass block.
4. Insulating washer shall be made from dimensionally stable, non-tracking material and shall provide a minimum of ⅛" creep distance between the bolt and the bus sections. Bus sections shall be plated.
5. Wire stops are not required if line and/or loads are connected with bus bar. If cable terminals are used, page SG 513.2 construction requirements shall apply.
6. Rigid insulating barriers shall project at least ¼" beyond any energized parts when the maximum wire size is installed.
7. Termination of bus bar and cable line or load conductors may be cable or bus. If bus and cable terminations are used together, proper locations and alignment of stud "A" must be maintained to facilitate the installation of bypass jumper.
8. The terminal screw may be Allen type (3/16" across flats for 100 amp, 5/16" across flats for 200 amp).
9. Stud "A" may be located either on the terminal body, on the bus member between the circuit-closing nut, and the wire stop or incorporated as part of the wire stop.
10. For serviceability purposes, the line and/or load bus is to be connected to the bus block member in a manner which will allow ready replacement of the test-bypass block assembly.

© 1998-2017 San Diego Gas & Electric Company. All rights reserved. Removal of this copyright notice without permission is not permitted under law.

REV	CHANGE	BY	DSGN	APPV	DATE	REV	CHANGE	BY	DSGN	APPV	DATE
A	Editorial Changes	LSM	CTG	TPM	11/01/17	D					
B						E					
C						F					

X Indicates Latest Revision	Completely Revised	New Page	Information Removed

TABLE OF CONTENTS

TABLE OF CONTENTS

WIRING OF SAFETY SOCKET METER CANS

1. Service entrance and load conductors installed in separate raceways may enter or exit the safety socket meter can at either the top, bottom, side or rear. The electrical contractor shall connect those conductors to the factory-installed test-bypass facilities.

2. No connections may be made in a safety socket meter can to supply any other meter, and not more than one load circuit may leave the can.

3. In multi-meter installations of safety socket meter cans, a main switch or breaker can only be installed on the supply side of two or more meters, except when required by the governmental Authority Having Jurisdiction (AHJ).

4. When used to terminate SDG&E (Utility) service lateral conductors, the service conduit shall enter the bottom of the can. The load conductors may not exit the rear of the can behind the test-bypass facilities.

5. The Utility will not supply 2-wire, 120-volt service or metering without approval from Service Standards. See Character of Service on page SG 004.3. Single-phase service will be 3-wire regardless of the voltage, i.e. 120/208 volt or 120/240 volt.

NEUTRAL OR GROUND CONDUCTOR IN SAFETY SOCKET METER CANS

1. The neutral service entrance conductor for a self-contained meter shall connect in the safety socket meter can and may be continuous.

2. On overhead service installations the service ground conductor, provided as the redundant 4th wire corner-ground conductor of a 480-volt delta service, will be connected to the customer's identified equipment grounding conductor at the point of service connection (drip loop). See page SG 516. The customer shall identify B-phase red in color.

ALUMINUM CONDUCTORS IN SAFETY SOCKET METER CANS

1. Test-bypass facilities with aluminum bodied lugs will be provided and installed by the manufacturer. The contractor will make the connections to the bypass facilities, unless the equipment is used as a pull can, in which case the Utility will terminate their service lateral conductors to the line side lug of each test block.

2. Customer maximum conductor sizes in aluminum shall not exceed No. 1/0 AWG for use in the standard duty can and No. 250 MCM in the heavy duty can. The Utility may use a maximum No. 3/0 AWG in a standard duty can and No. 350 MCM in the heavy duty can using pin adapters.

3. The use of a joint compound or oxidation inhibitor is recommended for all aluminum connections. However, the use of oxidation inhibitors is no substitute to having an approved aluminum wire terminal.

Reference UG 4171.3.

© 1998-2017 San Diego Gas & Electric Company. All rights reserved. Removal of this copyright notice without permission is not permitted under law.

REV	CHANGE	BY	DSGN	APPV	DATE	REV	CHANGE	BY	DSGN	APPV	DATE
A	Editorial Changes	LSM	CTG	TPM	11/01/17	D					
B						E					
C						F					

SHEET 1 OF 5	X Indicates Latest Revision		Completely Revised		New Page		Information Removed	SG 514.1
	SDG&E SERVICE STANDARDS & GUIDE							
	SAFETY SOCKET METER CANS							

Safety Socket Can with Factory-Installed Test-Bypass Facilities 100 Amps (Standard Duty)

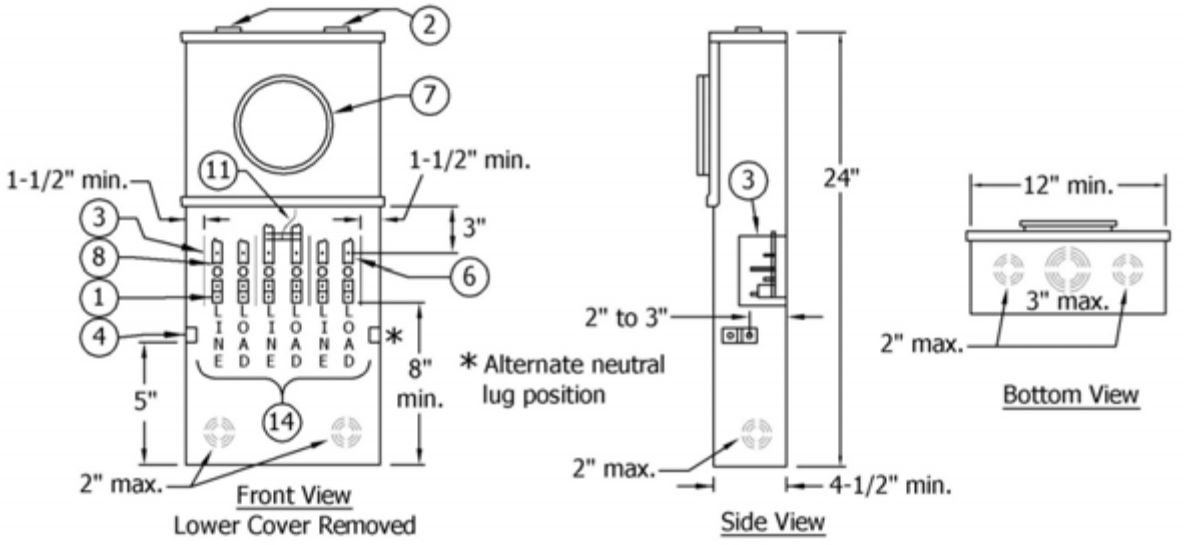

Notes:

(1) Aluminum bodied terminals for No. 6 through No. 1/0 MCM CU-AL wire. The Utility may install a maximum No. 3/0 wire using pin adapters.

(2) Hubs capped off if used for underground feed.

(3) Rigid insulating barriers. See page SG 513.2.

(4) Vertical lay-in, double neutral lug with No. 1/0 MCM CU-AL wire capacity, mounted on either sidewall.

5. Test-bypass blocks shall be bussed or wired to socket jaws or terminals. See page SG 516 for meter socket clip requirements.

(6) Upper test connector studs.

(7) All covers shall be independently removable. Upper cover shall be non-removable when meter is in place. Meter socket shall be mounted on support and attached to panel. Lower cover shall be sealable and permanently labeled: "DO NOT BREAK SEALS. NO FUSES INSIDE." See page SG 503 for sealing requirements.

(8) Test-bypass block detail on separate drawing located on page SG 513.2.

9. For 3-phase, 4-wire, connect 7th jaw to body of neutral lug with No. 12 copper wire, white in color.

10. For 3-phase, 4-wire delta, identify right hand test-bypass block (2 poles) as power leg, orange in color (C phase).

(11) For 3-phase, 3-wire, install bus to connect line and load poles together at top of center test-bypass block and connect 5th jaw to this bus using No. 12 wire, red in color.

12. For single-phase, 3-wire, provide 2 test-bypass blocks mounted in the outer positions and a 4-jaw socket.

13. For single-phase, 3-wire, 120/208 volts, provide 2 test-bypass blocks mounted in the outer positions and a 5-jaw socket. Connect 5th jaw of meter socket to body of neutral lug with No. 12 copper wire, white in color.

(14) Permanent labels on inside back of enclosure in ¾" (minimum) high block letters.

Reference UG 4171.3.

© 1998-2017 San Diego Gas & Electric Company. All rights reserved. Removal of this copyright notice without permission is not permitted under law.

REV	CHANGE	BY	DSGN	APPV	DATE	REV	CHANGE	BY	DSGN	APPV	DATE
A	Editorial Changes	LSM	CTG	TPM	11/01/17	D					
B						E					
C						F					

TABLE OF CONTENTS

Safety Socket Can with Factory-Installed Test-Bypass Facilities 200 Amps (Heavy Duty)

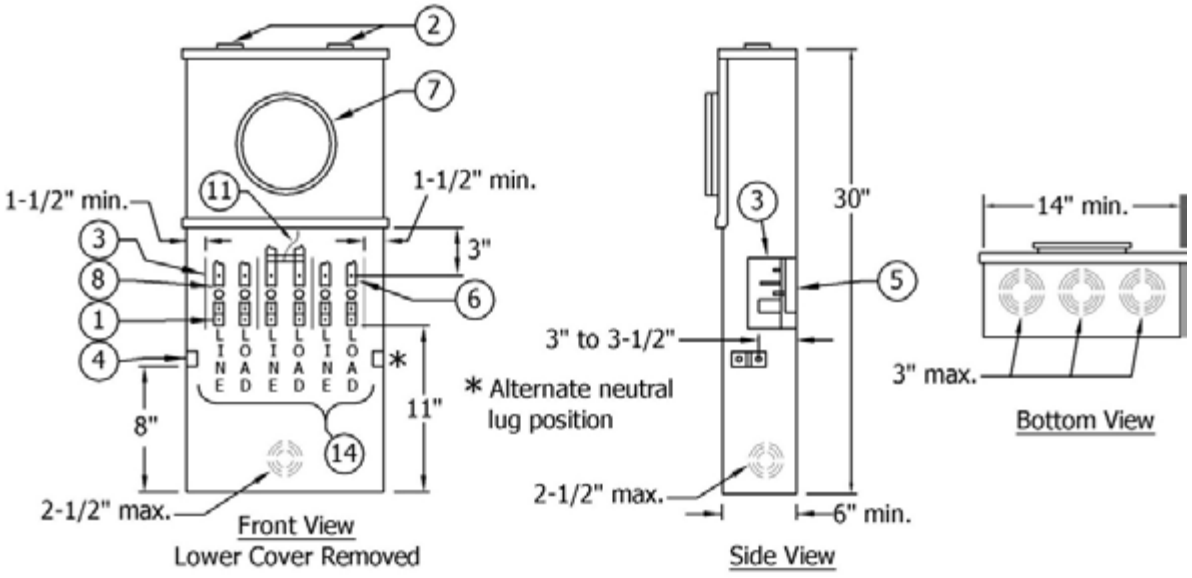

Notes:

(1) Aluminum bodied terminals for No. 1/0 through No. 250 MCM CU-AL wire. The Utility may install a maximum No. 350 wire using pin adapters.

(2) Hubs capped off if used for underground feed.

(3) Rigid insulating barriers. See page SG 513.2.

(4) Vertical lay-in, double neutral lug with No. 250 MCM CU-AL wire capacity, mounted on either sidewall.

(5) Test-bypass blocks shall be bussed or wired to socket jaws or terminals. See page SG 516 for meter socket clip requirements.

(6) Upper test connector studs.

(7) All covers shall be independently removable. Upper cover shall be non-removable when meter is in place. Meter socket shall be mounted on support and attached to panel. Lower cover shall be sealable and permanently labeled: "DO NOT BREAK SEALS. NO FUSES INSIDE." See page SG 503 for sealing requirements.

(8) Test-bypass block detail on separate drawing located on page SG 513.2.

9. For 3-phase, 4-wire, connect 7th jaw to body of neutral lug with No. 12 copper wire, white in color.

10. For 3-phase, 4-wire delta, identify right hand test-bypass block (2 poles) as power leg, orange in color (C phase).

(11) For 3-phase, 3-wire, install bus to connect line and load poles together at top of center test-bypass block and connect 5th jaw to this bus using No. 12 wire, red in color.

12. For single-phase, 3-wire, provide 2 test-bypass blocks mounted in the outer positions and a 4-jaw socket.

13. For single-phase, 3-wire, 120/208 volts, provide 2 test-bypass blocks mounted in the outer positions and a 5-jaw socket. Connect 5th jaw of meter socket to body of neutral lug with No. 12 copper wire, white in color.

(14) Permanent labels on inside back of enclosure in ¾" (minimum) high block letters.

Reference UG 4171.3.

© 1998-2017 San Diego Gas & Electric Company. All rights reserved. Removal of this copyright notice without permission is not permitted under law.

REV	CHANGE	BY	DSGN	APPV	DATE	REV	CHANGE	BY	DSGN	APPV	DATE
A	Editorial Changes	LSM	CTG	TPM	11/01/17	D					
B						E					
C						F					

X Indicates Latest Revision | Completely Revised | New Page | Information Removed

TABLE OF CONTENTS

Typical Multiple Safety Socket Can Grouping Arrangements for Commercial Installations with Self-Contained Meters

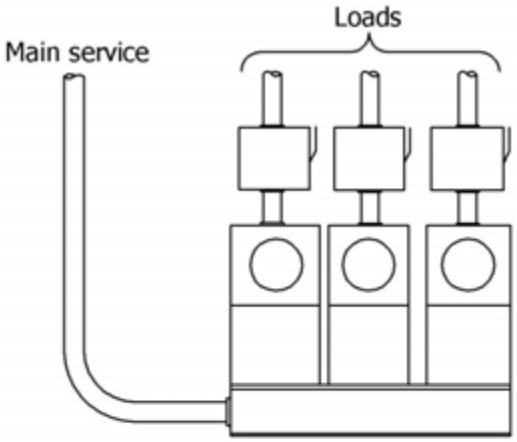

FIGURE 1
Six Meters and Switches or Less

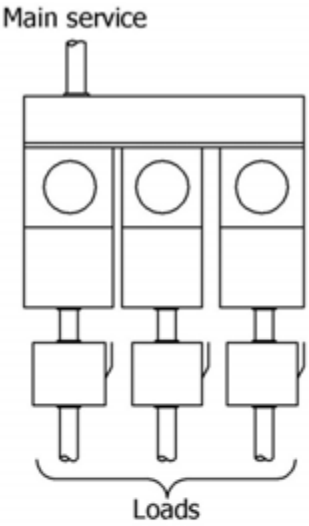

FIGURE 2
Six Meters and Switches or Less

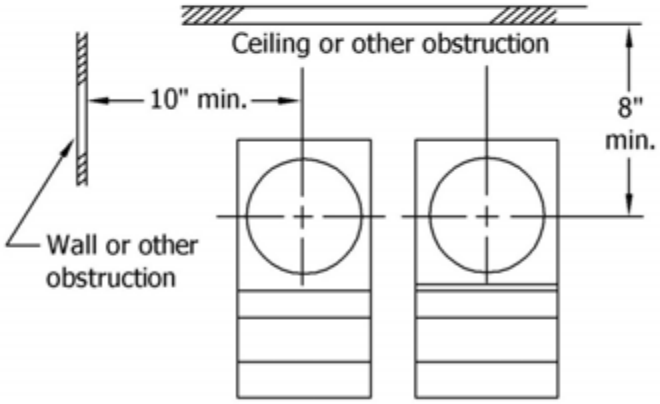

FIGURE 3
Self Contained Meters

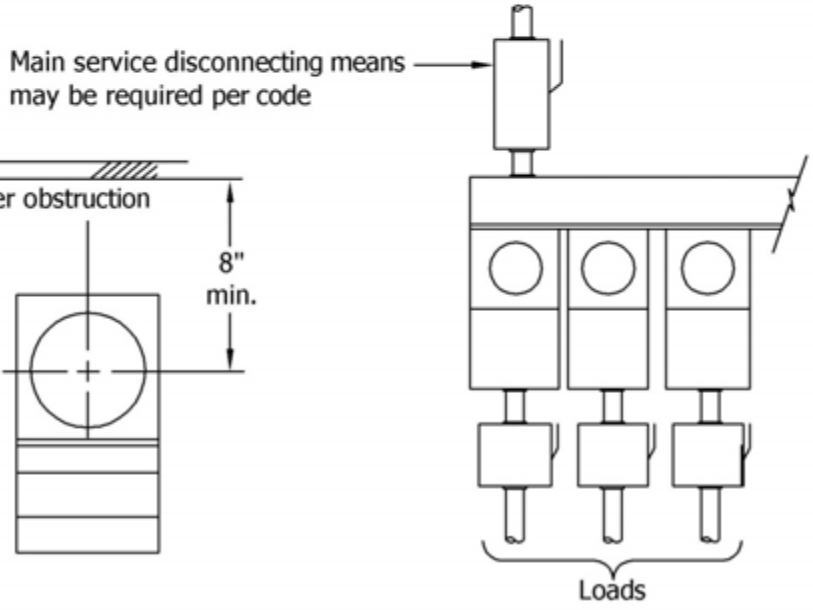

FIGURE 4
More Than Six Meters and Switches

TABLE OF CONTENTS

© 1998-2017 San Diego Gas & Electric Company. All rights reserved. Removal of this copyright notice without permission is not permitted under law.

REV	CHANGE	BY	DSGN	APPV	DATE	REV	CHANGE	BY	DSGN	APPV	DATE
A	Editorial Changes	LSM	CTG	TPM	11/01/17	D					
B						E					
C						F					

X Indicates Latest Revision	Completely Revised	New Page	Information Removed	
SHEET 4 OF 5	SDG&E SERVICE STANDARDS & GUIDE			SG 514.4
	SAFETY SOCKET METER CANS			

Safety Socket Meter Can Used for Underground Service

The safety socket meter can may be used as a combination service terminating pull and meter can for an underground service, either residential or commercial/industrial. The underground service riser shall enter the bottom of the can as shown in Figure 1. See page SG 514.1 for wiring of safety socket meter cans.

Normal UG service connection for standard safety socket meter can Post-Mounted

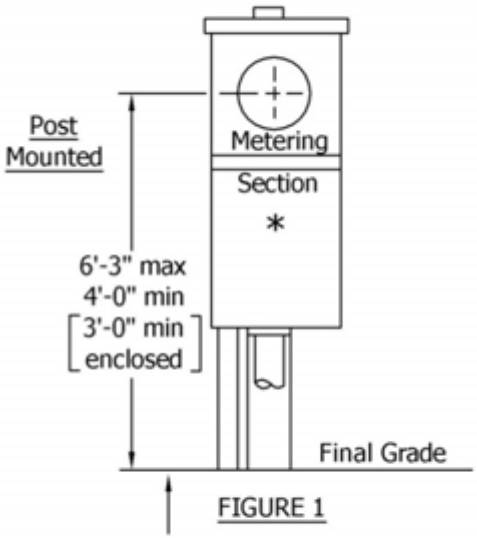

FIGURE 1

Alternate Methods for UG Service Connection Wall-Mounted

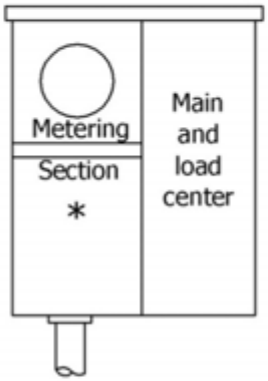

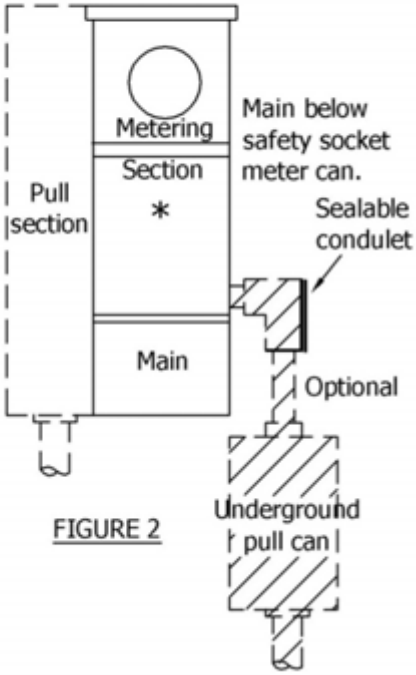

FIGURE 2

The safety socket meter can must be securely mounted on a 3" minimum rigid metal pipe or 4" x 4" treated wood post.
The pipe or post must be firmly set.
The underground conduit may NOT be utilized as the support.

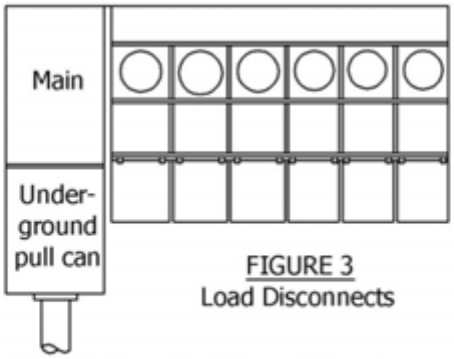

FIGURE 3
Load Disconnects

Ganged installation of safety socket meter cans. Main ahead of 7 or more meter service disconnects is required per code.

© 1998-2017 San Diego Gas & Electric Company. All rights reserved. Removal of this copyright notice without permission is not permitted under law.

REV	CHANGE	BY	DSGN	APPV	DATE	REV	CHANGE	BY	DSGN	APPV	DATE
A	Editorial Changes	LSM	CTG	TPM	11/01/17	D					
B						E					
C						F					

X Indicates Latest Revision	Completely Revised	New Page	Information Removed

SHEET 5 OF 5

SDG&E SERVICE STANDARDS & GUIDE

SAFETY SOCKET METER CANS

SG 514.5

TABLE OF CONTENTS

TRANSFORMER RATED METERS

When the electrical supply needs of the customer exceeds the 200 amp capacity of the self-contained meter and its heavy duty socket, Current Transformers (CTs), which connect to the service entrance conductors, must be used. A transformer rated meter is installed to measure the energy delivered to the customer. A CT capacity multiplier is applied to the billing register on the meter. Both the CTs and the meter are furnished and installed by SDG&E (Utility).

The transformer rated meter, when inserted in its socket, is wired to the CT. The CTs must be located behind the meter and test switch panel cover(s). Customer-owned equipment and wiring is not allowed within the Utility-sealed CT and metering compartment.

The customer furnishes and installs an approved CT enclosure and meter socket. See pages SG 512.6 – 512.8 for special 400 amp residential installation.

SOCKETS FOR TRANSFORMER RATED METERS

A CT rated socket is used with transformer rated meters. The socket is furnished and installed by the customer. The Utility will furnish, install, own and maintain the necessary instrument transformers, test facilities and meters.

COMBINATION CURRENT TRANSFORMER & METER SOCKET CAN – OVERHEAD SERVICE

When the electric service is 201 – 800 amps, a combination can (see page SG 515.4) is one type of approved enclosure which the customer may furnish to house and support the CTs and meter. In this case, a CT mounting base, with amperage capacity of 400 amps, is also furnished. The service entrance conductors are connected to the CT mounting base by the contractor.

No connections shall be made in the CT can to supply any other meter.

COMBINATION CURRENT TRANSFORMER & METER SOCKET CAN – UNDERGROUND SERVICE

When the electric service is rated 201 – 800 amps, a combination can (see page SG 515.5) may be used for residential or commercial service.

No connections shall be made in the CT can to supply any other meter.

The contractor shall furnish and install a CT mounting base and conductors of the proper type and shall connect the conductors from the termination section of the CT mounting base.

Refer to page SG 515.6 for 400 – 800 amp, three-phase, 4-wire, wall-mounted underground pull can with CT, meter socket and main disconnect(s) in adjacent section.

METER SERVICE DISCONNECT

All meter service disconnects on transformer rated meter installations shall have a provision for locking in the open/off position.

TABLE OF CONTENTS

© 1998-2017 San Diego Gas & Electric Company. All rights reserved. Removal of this copyright notice without permission is not permitted under law.

REV	CHANGE	BY	DSGN	APPV	DATE	REV	CHANGE	BY	DSGN	APPV	DATE
A	Editorial Changes	LSM	CTG	TPM	11/01/17	D					
B						E					
C						F					

SHEET 1 OF 6	X Indicates Latest Revision		Completely Revised		New Page		Information Removed	SG 515.1
	SDG&E SERVICE STANDARDS & GUIDE							
	TRANSFORMER RATED METERS & WALL-MOUNTED SERVICE & METERING EQUIPMENT							

Current Transformer Mounting Base for Installation in Current Transformer Enclosure
0 – 400 Amps Maximum, 0 – 600 Volts, Single-Phase, Three-Wire Service

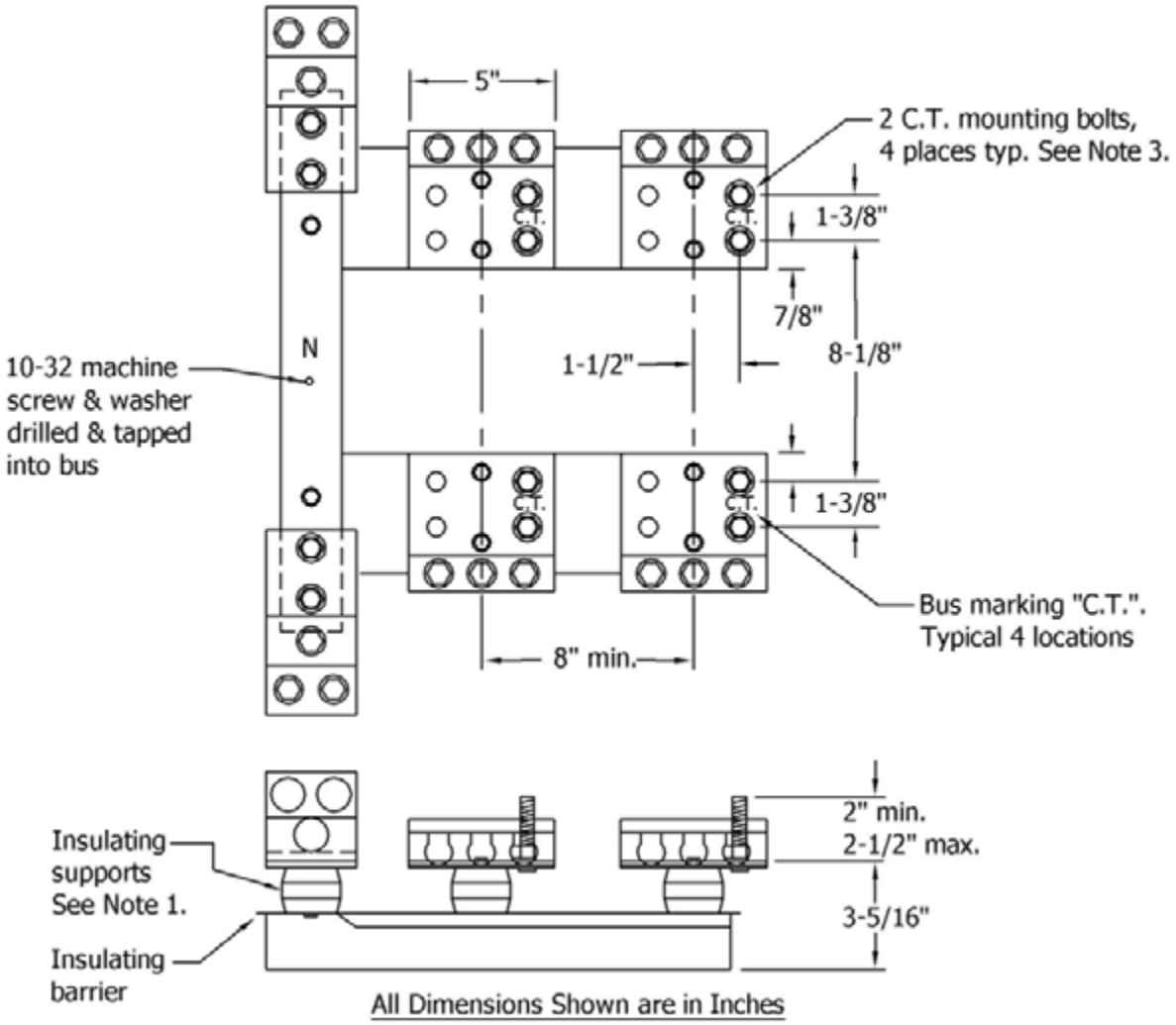

Notes:

1. Mounting base accepts bar type CTs only.
2. Two ½" steel bolts shall be provided for each CT mounting position. Each bolt shall be secured in place and furnished with a spring washer and a nut. The spring washers may be either a cone-type (Belleville) or a split-ring washer and a flat washer. All parts shall be plated to prevent corrosion.
3. Terminations for service conductors shall be three-position, aluminum-bodied mechanical lugs with a range accepting one No. 4 AWG through No. 500 kCMIL conductor.
4. For applications, see pages SG 515.4 – 515.6.

© 1998-2017 San Diego Gas & Electric Company. All rights reserved. Removal of this copyright notice without permission is not permitted under law.

REV	CHANGE	BY	DSGN	APPV	DATE	REV	CHANGE	BY	DSGN	APPV	DATE
A	Editorial Changes	LSM	CTG	TPM	11/01/17	D					
B						E					
C						F					

X Indicates Latest Revision	Completely Revised	New Page	Information Removed	
SHEET 2 OF 6	SDG&E SERVICE STANDARDS & GUIDE **TRANSFORMER RATED METERS & WALL-MOUNTED SERVICE & METERING EQUIPMENT**			SG 515.2

TABLE OF CONTENTS

Current Transformer Mounting Base for Installation in Current Transformer Enclosure
201 – 800 Amps Maximum, 0 – 600 Volts
Three-Phase, Three-Wire or Four-Wire, Wye or Delta-Connected Service

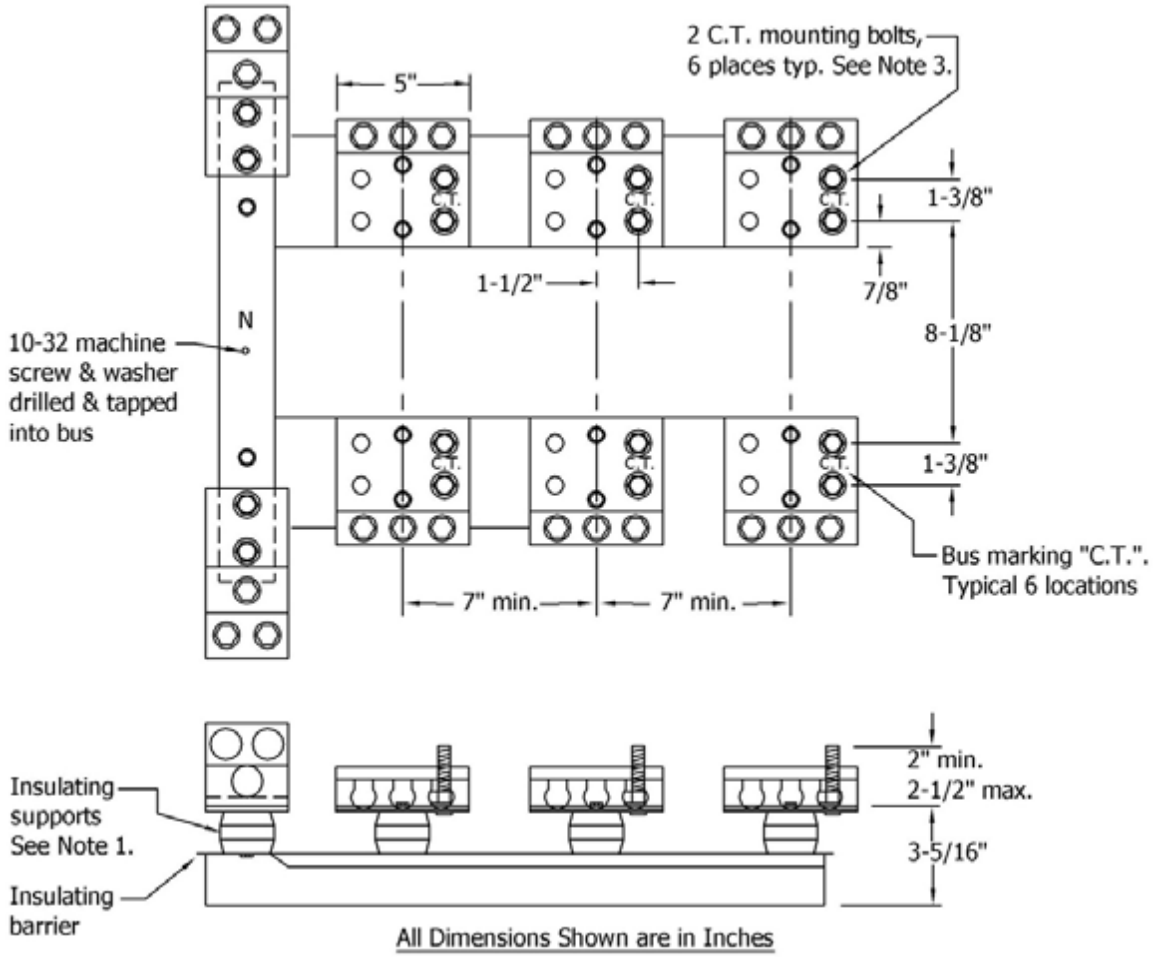

All Dimensions Shown are in Inches

Notes:

1. Mounting base accepts bar type CTs only. CT center phase position shall be bussed straight through for 3-phase, 3-wire, service voltage installations.
2. Two ½" steel bolts shall be provided for each current-transformer mounting position. Each bolt shall be secured in place and furnished with a spring washer and a nut. The spring washers may be either a cone-type (Belleville) or a split-ring washer and a flat washer. All parts shall be plated to prevent corrosion.
3. Terminations for service conductors shall be three-position, aluminum-bodied mechanical lugs with a range accepting one No. 4 AWG through No. 500 kCMIL conductor.
4. For applications, see pages SG 515.4 – 515.6.

© 1998-2017 San Diego Gas & Electric Company. All rights reserved. Removal of this copyright notice without permission is not permitted under law.

REV	CHANGE	BY	DSGN	APPV	DATE	REV	CHANGE	BY	DSGN	APPV	DATE
A	Editorial Changes	LSM	CTG	TPM	11/01/17	D					
B						E					
C						F					

X Indicates Latest Revision	Completely Revised	New Page	Information Removed

TABLE OF CONTENTS

Combination Current Transformer & Meter Socket Can for Residential or Commercial/Industrial Use – Overhead Service Only

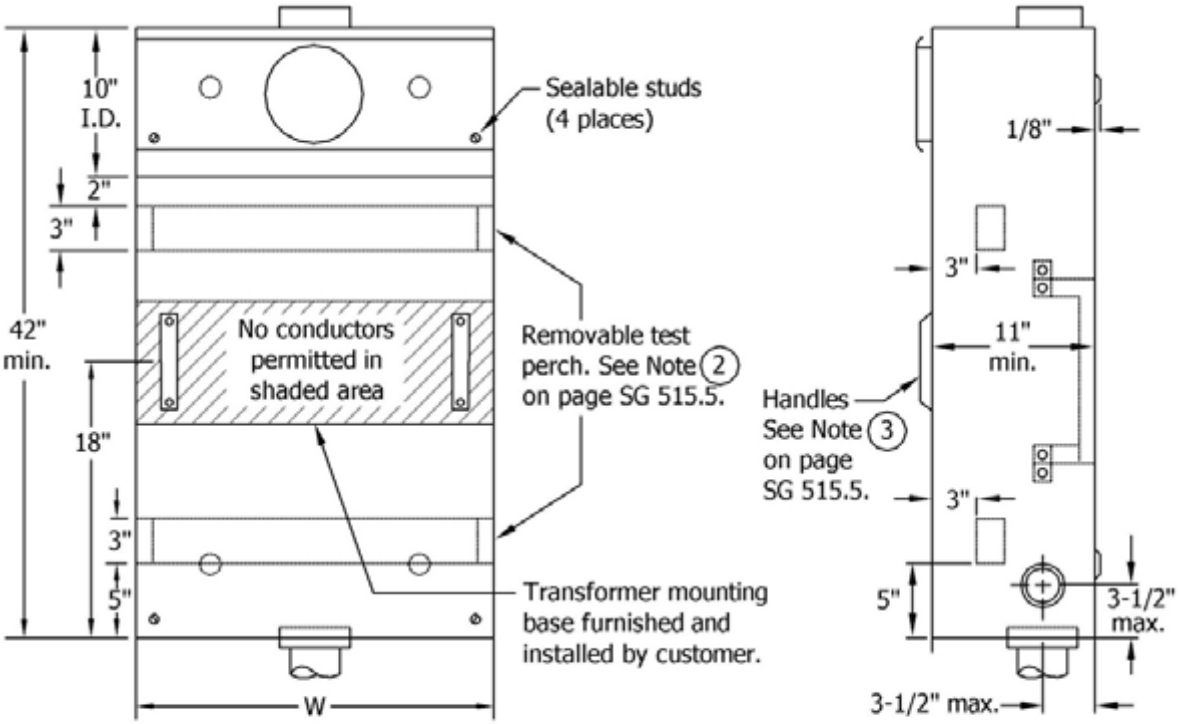

Minimum Box Dimensions

W (min.)	
3Ø 3-wire or 4-wire △ or Y	1Ø
36"	24"

Notes:

1. Maximum Ampere Capacity:
   a. 400 amps for single-phase commercial
   b. 600 amps for single-phase residential
   c. 800 amps for three-phase residential or commercial
2. Service entrance conductors must enter above the test perch. Load conductors must exit below the CT mounting base. The can must be installed in vertical position as shown.
3. On overhead 3-phase, 3-wire delta services, the redundant ground conductor, marked green, or green with yellow stripes in color, shall pass through the CT can, be continuous and grounded to the can.
4. Grounding may be accomplished with a No. 8 minimum tap from the neutral or by removing the conductor insulation and connecting the conductor directly to a lay-in grounding lug in the can.
5. Provide a ground conductor termination at the service termination point. A bonding lug shall be provided for a minimum No. 1/0 AWG bonding conductor. A jumper shall be provided for connection to the neutral or grounded service termination lug.

© 1998-2017 San Diego Gas & Electric Company. All rights reserved. Removal of this copyright notice without permission is not permitted under law.

REV	CHANGE	BY	DSGN	APPV	DATE	REV	CHANGE	BY	DSGN	APPV	DATE
A	Editorial Changes	LSM	CTG	TPM	11/01/17	D					
B						E					
C						F					

Combination Current Transformer & Meter Socket Can, 0 – 600 Volts Maximum, Residential or Commercial/Industrial Use – Underground Service Only

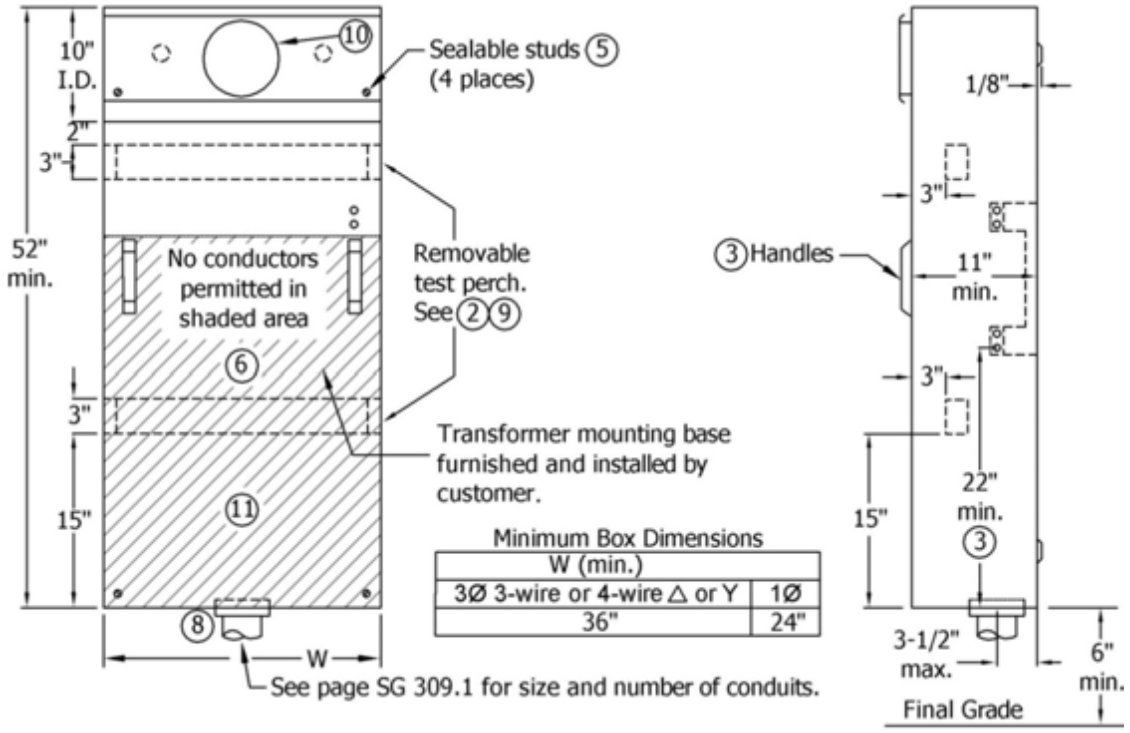

Notes:

1. Maximum Ampere Capacity:
   a. 400 amperes for single-phase commercial
   b. 600 amperes for single phase residential
   c. 800 amperes for three-phase residential or commercial
2. Removable test switch perch shall be drilled and tapped as per pages SG 517.8 – 517.9.
3. Transformer mounting base cover shall have two lifting handles, be a maximum of 9 square feet, and a caution sign reading: "DO NOT BREAK SEALS. NO FUSES INSIDE."
4. Provision shall be made for bonding the neutral to the enclosure.
5. All securing screws shall be captive. All panels and covers shall be sealable.
6. Provision shall be made in the CT compartment for a mechanical lug bondable termination of the serving Utility's neutral. This termination may be installed on the CT mounting base as shown on pages SG 515.2 – 515.3.
7. The minimum distance to the lowest mechanical lug is 22". The height of the neutral termination lug may be reduced to 20" minimum.
8. The underground service conduit shall enter the bottom of the can.
9. Load conductors must exit above the CT mounting base and test perch.
10. See page SG 504.1 for meter height requirements.
11. Shaded area is for Utility service lateral conductors only.

© 1998-2017 San Diego Gas & Electric Company. All rights reserved. Removal of this copyright notice without permission is not permitted under law.

REV	CHANGE	BY	DSGN	APPV	DATE	REV	CHANGE	BY	DSGN	APPV	DATE
A	Editorial Changes	LSM	CTG	TPM	11/01/17	D					
B						E					
C						F					

TABLE OF CONTENTS

Wall-Mounted Underground Pull Can Equipped with Mechanical Lugs with Current Transformer Compartment, Meter Socket & Main Disconnect(s) in Adjacent Section
0 – 600 Volts, 400 – 800 Amps Maximum, 3-Phase, 4-Wire Service

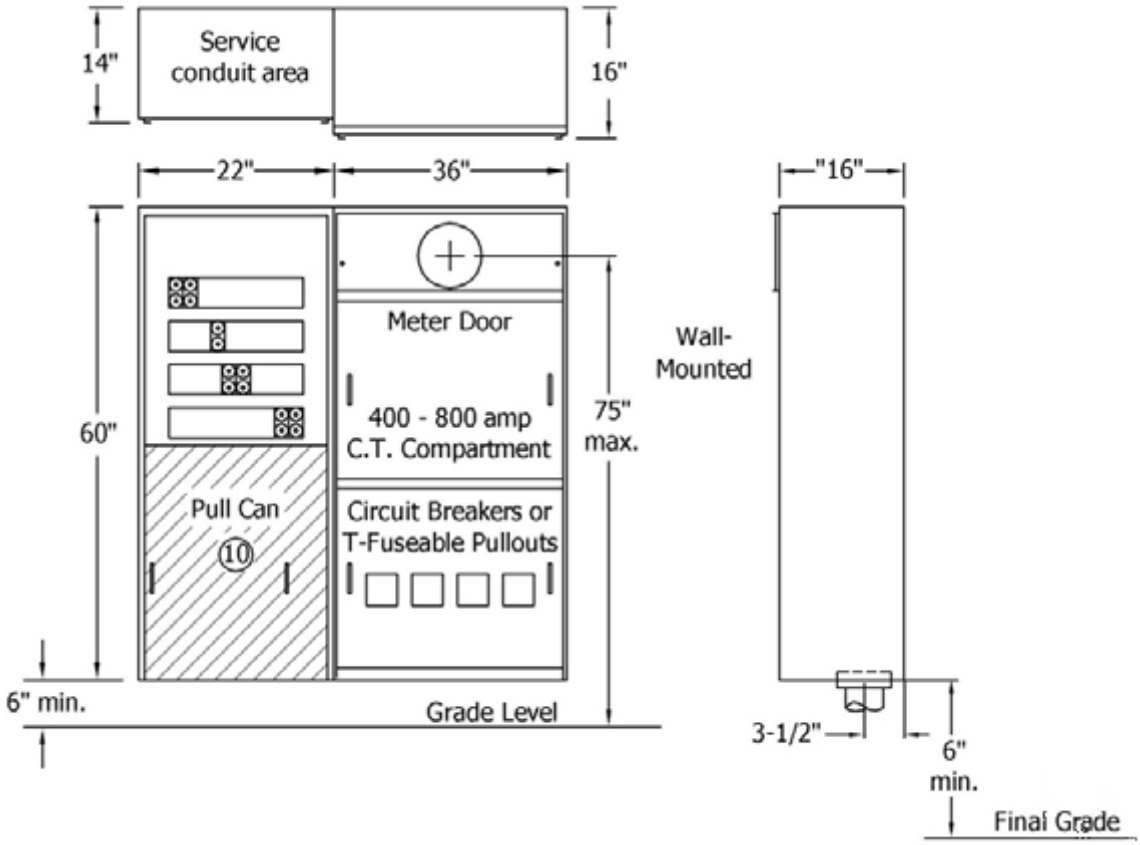

Notes:

1. Service lateral conduits, firmly secured with locknut, hub or bushing, must enter bottom of pull can. Maximum conduit intrusion inside can is 1". Load conduits must exit above shaded area.
2. Bonding connection for service lateral conduits only is permitted at bottom of can. Any other bonding or grounding connection must be made above the shaded area and no grounding or bonding conductor is permitted to pass through shaded area.
3. Removable test switch perch shall be drilled and tapped as per pages SG 517.8 – 517.9.
4. CT compartment cover shall have two lifting handles, be a maximum of 9 square feet, and a caution sign reading: "DO NOT BREAK SEALS, NO FUSES INSIDE."
5. All securing screws shall be captive. All panels and covers shall be sealable.
6. See page SG 515.3 for Transformer Base Details.
7. The minimum distance from base of pull can to the lowest mechanical lug is 26".
8. See page SG 504.1 for meter height requirements.
9. See page SG 515.1 for additional Transformer Rated Metering information.

(10) Shaded area is for Utility service lateral conductors only.

© 1998-2017 San Diego Gas & Electric Company. All rights reserved. Removal of this copyright notice without permission is not permitted under law.

REV	CHANGE	BY	DSGN	APPV	DATE	REV	CHANGE	BY	DSGN	APPV	DATE
A	Editorial Changes	LSM	CTG	TPM	11/01/17	D					
B						E					
C						F					

X Indicates Latest Revision	Completely Revised	New Page	Information Removed

TABLE OF CONTENTS

TABLE OF CONTENTS

The meter type and number of socket clips and their arrangement varies with the phase and voltage of service supplied to the customer. The following table lists these requirements:
S = Socket Meter, N = Network 120/208 Meter, P = Poly Phase Autoranging 120-480

SELF-CONTAINED METER				
Type of Service	Meter Forms	Socket (Amps)	Meter Clips	Smart Meter Type
1 Phase 2 Wire 120 Volt ④	1S CL200	200 or Less	4	C2SODL1
1 Phase 3 Wire 120/208 Volt ⑥	12S Network CL200	200 or Less	5	CN2SODL12
1 Phase 3 Wire 120/240 Volt	2S CL200	200 or Less	4	C2SODL2
1 Phase 3 Wire 120/240 Volt	2S CL320	400	4	C2SOL2E
1 Phase 3 Wire 240/480 Volt	2S CL200	200 or Less	4	CP2SOL2
3 Phase 4 Wire 120/208 Volt WYE	16S CL200	200 or Less	7	CP1SOL16
3 Phase 4 Wire 120/240 DELTA	16S CL200	200 or Less	7	CP1SOL16
3 Phase 4 Wire 277/480 Volt WYE	16S CL200	200 or Less	7	CP1SOL16
3 Phase 3 Wire (4th wire grounding conductor required) 240 VOLT Corner GRD ②④ 480 corner GRD ②⑤	12S CL200	200 or Less	5	CP1SOL12

CURRENT TRANSFORMER RATED METER			
Type of Service	Meter Forms	Meter Clips ①	Smart Meter Type
1 Phase 3 Wire 120/240 Volt	4S	6	C2SOL4
3 Phase 4 Wire 120/208 Volt WYE	9S	15	CP1SAL9
3 Phase 4 Wire 120/240 DELTA	9S	15	CP1SAL9
3 Phase 4 Wire 277/480 Volt WYE	9S	15	CP1SAL9
3 Phase 3 Wire (4th wire grounding conductor required) 240 VOLT Corner GRD ②④ 480 corner GRD ②⑤	5S	15	CP1SAL5
3 Phase 3 Wire 12 KV	5S	15	CP1SAL5
3 Phase 4 Wire 12 KV	9S	15	CP1SAL9

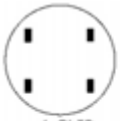

4 CLIP
Applicable to Smart Meter Types:
C2SOL1
C2SODL1
C2SOL2
C2SODL2
C2SOL2E

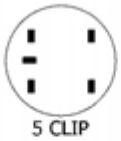

5 CLIP
Self-contained meters ③
Applicable to Smart Meter Types:
CNSOL12
CNSODL12
CPSOL12



6 CLIP
Trans rated meters
Applicable to Smart Meter Types:
C2SOL4



7 CLIP
Applicable to Smart Meter Types:
CP1SOL16



8 CLIP
Not for new installations. Not longer an acceptable meter use



15 CLIP
Applicable to Smart Meter Types:
CP1SAL9
CP1SAL5
CP1SOL9
CP1SOL5
CP2SAZ9

① All meter socket terminal clips must be back connected. (Except pages SG 515.4 and SG 515.5.)
② 4th wire (redundant grounding conductor only – not a neutral), delta-connected with B phase.
③ The required position of the 5th clip for self-contained meter sockets is 9 o'clock (270 degrees).
④ Not acceptable for new installations or old sets, or for any vacant existing single-phase, 2-wire 210-volt meter bases. FIELD MAINTENANCE ONLY.
⑤ ONLY APPLICABLE WHEN FED FROM AN OVERHEAD TRANSFORMER STATION.
⑥ Reference page SG 004.4 for multi-family residential requirement for single-phase metering.
7. Effective with Smart Meter implementation, Form 16 meters will also replace all Form 14s and 15s.

© 1998-2017 San Diego Gas & Electric Company. All rights reserved. Removal of this copyright notice without permission is not permitted under law.

REV	CHANGE	BY	DSGN	APPV	DATE	REV	CHANGE	BY	DSGN	APPV	DATE
A	Editorial Changes	LSM	CTG	TPM	11/01/17	D					
B						E					
C						F					

X Indicates Latest Revision | Completely Revised | New Page | Information Removed

SHEET 1 OF 1

SDG&E SERVICE STANDARDS & GUIDE

METER TYPE & SOCKET CLIP ARRANGEMENT

SG 516

TABLE OF CONTENTS

ELECTRIC UTILITY SERVICE EQUIPMENT REQUIREMENTS COMMITTEE (EUSERC)

EUSERC is an organization comprised of Utility representatives from the Western region of the United States which works to promote the standardization of electric service requirements and the design and engineering of metering and service requirement. Switchboard service sections, approved for use in the area served by SDG&E (Utility), are generally built to the requirements developed by EUSERC, and are available to the customer and contractor through electrical wholesale distributors.

SWITCHBOARD SERVICE SECTION DEFINED

A standard switchboard service section is a free-standing unit of service equipment which contains bussing for the termination of service entrance or service lateral conductors, bussing for the connection and mounting of Current Transformers (CTs), factory installed test-bypass devices, meter socket, and a service main disconnect switch or breaker, and in many cases, distribution feeder breakers or switches.

The standard switchboard service section is usually built to serve the customer with heavy electrical supply needs, and is available with service main switch or breaker ratings from 201 – 4,000 amps.

Standards for service switchboards have also been developed for self-contained meters, both residential and commercial, and with either standard-duty or heavy-duty meter sockets. These sections of switchboards are normally built on special order to meet the needs of the customer's electric service.

MANUFACTURER'S DRAWINGS FOR APPROVAL

The manufacturer of the secondary (0 – 600 volts) electrical equipment rated 1,000 amps and above shall submit four (4) copies of the drawings prior to fabrication to:

SDG&E Service Standards
8316 Century Park Court, CP52F
San Diego, CA 92123-1582

TABLE OF CONTENTS

The address of the job must be shown on drawings in order to process. One copy will be returned to the sender with approvals or corrections as needed. When a parallel, stand-by or emergency generation system is existing or is to be installed in connection with new service equipment, a one-line electrical diagram showing the relationship of the generator with the service equipment, including the transfer device and its sequence of operation, is to be submitted with the switchboard drawings. The electrical one-line diagram submittal requirement applies to all systems regardless of size.

This practice will ensure the Utility's requirements are met and the service equipment will be acceptable to the Utility.

SWITCHBOARD BUS/WIRE TAP DRAWINGS FOR APPROVAL

If there are adequate factory-installed existing customer side mechanical lugs available in the Underground Pull Section (UGPS) for new service entrance conductors to be added, tap drawings are not required. If mechanical lugs must be added to an existing bus, or manufacturer installed wire conductors are to be tapped, bus tap drawings prepared by a qualified engineer are required. Submit four (4) copies of the drawings prior to fabrication to SDG&E Service Standards. See mailing address above under Manufacturer's Drawings for Approval.

© 1998-2017 San Diego Gas & Electric Company. All rights reserved. Removal of this copyright notice without permission is not permitted under law.

REV	CHANGE	BY	DSGN	APPV	DATE	REV	CHANGE	BY	DSGN	APPV	DATE
A	Editorial Changes	LSM	CTG	TPM	11/01/17	D					
B						E					
C						F					

SHEET 1 OF 20	X Indicates Latest Revision	Completely Revised	New Page	Information Removed	SDG&E SERVICE STANDARDS & GUIDE	SG 517.1
					STANDARD SWITCHBOARD SERVICE SECTIONS	

The address of the job must be shown on drawings in order to process. One copy will be returned to the sender with approvals or corrections as needed. Both the governmental Authority Having Jurisdiction (AHJ) and the Utility will inspect the bus tap, and the Utility must receive the inspection clearance from the AHJ as a condition of energizing.

VENTILATION

All switchboard sections containing unmetered conductors shall comply with UL 891 (8.5.3) for protection of energized parts. The Utility's Inspectors do not inspect for this requirement. It is the equipment manufacturer's responsibility to ensure compliance with the UL Standard.

SWITCHBOARD SERVICE SECTIONS OUTLINE

The following information has been included to help you visualize the appearance of standard switchboard service sections.

1. The standard switchboard sections as shown may be used for single-phase service.
   a. The switchboard bussing arrangement in the instrument transformer compartment for single-phase service capacity in the range of 201 – 400 amps is shown on page SG 517.12.
   b. The 6-clip meter socket for a single-phase, 120/240 volt, 3-wire transformer rated meter will be provided as shown on page SG 516.
   c. Refer to pages SG 517.3 – 517.20 for Standard Switchboard Section details.
2. The Standard Switchboard Sections as shown may be used for three-phase service.
   a. The switchboard bussing arrangement in the instrument transformer compartment for service capacity in the range of 201 – 1,000 amps is shown on pages SG 517.13 – 517.14.
   b. The switchboard bussing arrangement in the instrument transformer compartment for service capacity in the range of 1,001 – 3,000 amps is shown on pages SG 517.15 – 517.17.
   c. The switchboard bussing arrangement in the instrument transformer compartment for service capacity in the range of 3,001 – 4,000 amps is shown on pages SG 517.18 – 517.20.
   d. The 15-clip meter socket is required for all three-phase transformer rated installations, as shown on page SG 516.
   e. For Standard Switchboard Section details, refer to pages SG 517.6 – 517.7, SG 517.10 – 517.11, and SG 517.13 – 517.20.
3. Multiple metering switchboards for residential service may use either standard-duty meter sockets, with nominal capacity of 125 amps, or heavy-duty meter sockets, with nominal capacity of 200 amps.

   When mounted in switchboards, preferably one but not more than two meter sockets may be mounted on any single front panel.

   When the installation is complete, all meter panels must be removable for inspection of wiring. Panel design shall permit convenient replacement of any meter socket without interruption of service to other meters.
4. Multiple meter switchboards for commercial service, either for single or multiple metering, must have factory-installed test-bypass facilities.

TABLE OF CONTENTS

© 1998-2017 San Diego Gas & Electric Company. All rights reserved. Removal of this copyright notice without permission is not permitted under law.

REV	CHANGE	BY	DSGN	APPV	DATE	REV	CHANGE	BY	DSGN	APPV	DATE
A	Editorial Changes	LSM	CTG	TPM	11/01/17	D					
B						E					
C						F					

SHEET 2 OF 20	X Indicates Latest Revision		Completely Revised		New Page		Information Removed	SG 517.2
	SDG&E SERVICE STANDARDS & GUIDE							
	STANDARD SWITCHBOARD SERVICE SECTIONS							

Standard Switchboard Service Section, 0 – 600 Volts

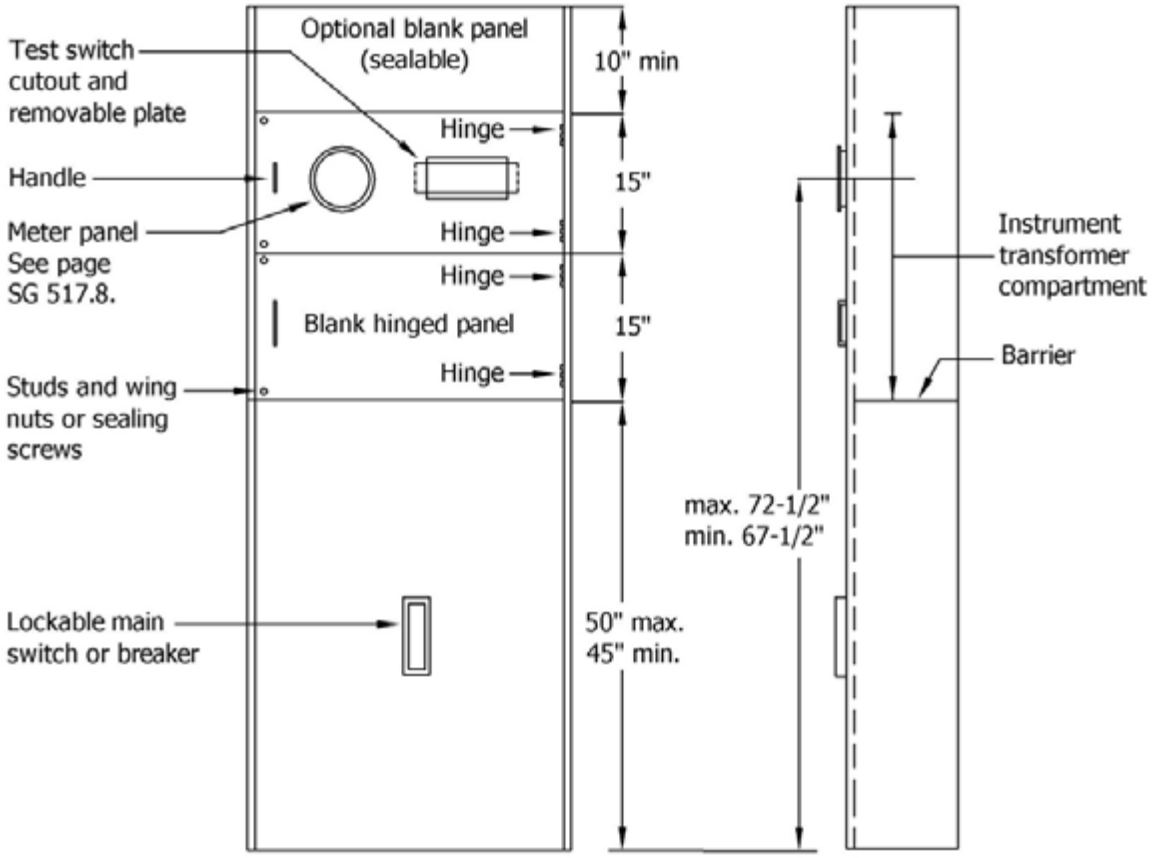

Notes:

1. The width and depth are determined by type and amperage of service.
2. For outdoor/raintight (NEMA 3R) enclosures, see pages SG 517.6 – 517.7.
3. Instrument transformer compartments shall be bussed with rectangular bus bar.
4. The grounding connection shall be made in the main switch or breaker compartment.
5. Meter panels shall be constructed of 12-gauge steel (minimum) and shall be reversible, sealable, hinged and interchangeable.
6. The meter panel shall be mounted in the upper position and have a handle attached at the unsupported end.
7. Hinges shall be readily interchangeable, right or left, on the job site.
8. Width of meter panels may in some cases require the service section to be wider than the minimum allowable width of transformer compartment. For minimum dimensions of instrument transformer compartments, refer to page SG 517.2, Notes 1 and 2, for page references.
9. All panels and covers shall be sealable.
10. See pages SG 504.4 – 504.5 for working space and clearance requirements, 0 – 600 volts.

© 1998-2017 San Diego Gas & Electric Company. All rights reserved. Removal of this copyright notice without permission is not permitted under law.

REV	CHANGE	BY	DSGN	APPV	DATE	REV	CHANGE	BY	DSGN	APPV	DATE
A	Editorial Changes	LSM	CTG	TPM	11/01/17	D					
B						E					
C						F					

X Indicates Latest Revision	Completely Revised	New Page	Information Removed

TABLE OF CONTENTS

Standard Switchboard Service Section, 0 – 600 Volts

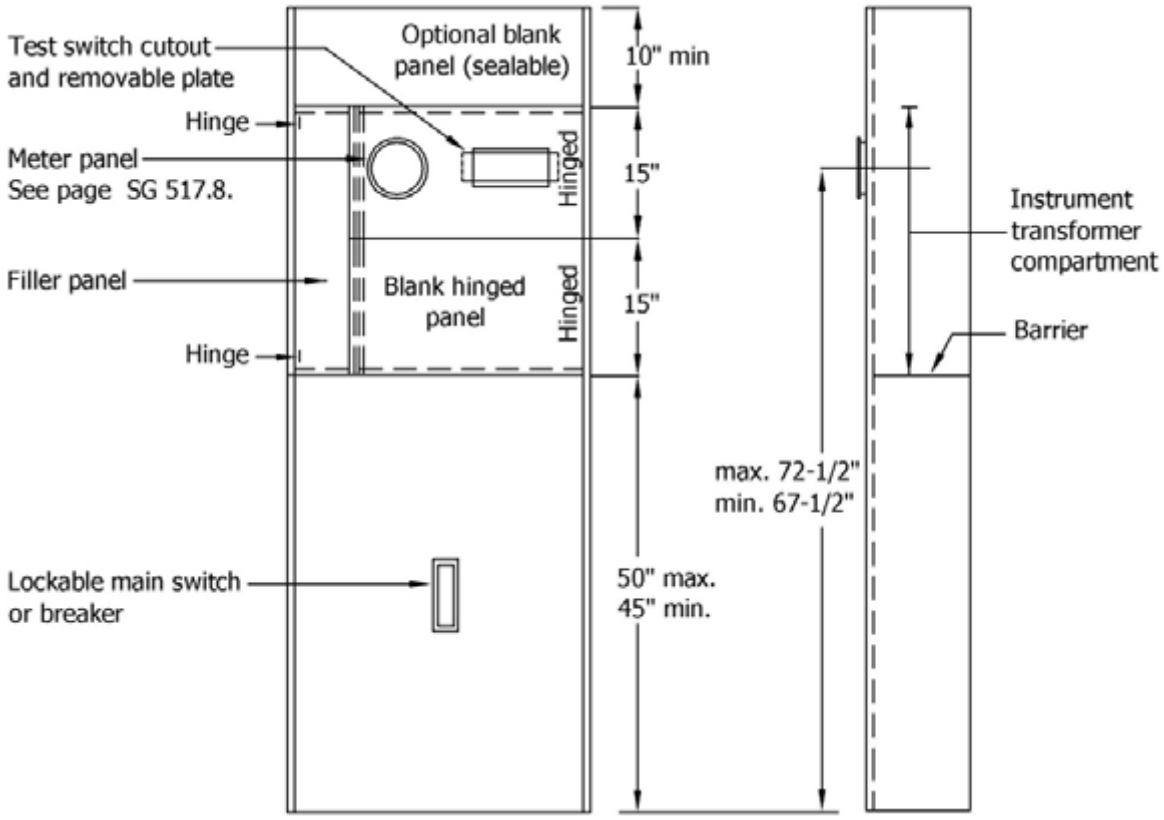

Notes:

1. The width and depth are determined by type and amperage of service.
2. Instrument transformer compartments shall be bussed with rectangular bus bar.
3. Filler panels shall be used where switchboard width exceeds maximum allowable meter panel width.
4. The grounding connection shall be made in the main switch or breaker compartment.
5. Meter panels shall be constructed of 12-gauge steel (minimum) and shall be reversible, sealable, hinged and interchangeable.
6. The meter panel shall be mounted in the upper position and have a handle attached at the unsupported end.
7. Hinges shall be readily interchangeable, right or left, on the job site.
8. Width of meter panels may in some cases require the service section to be wider than the minimum allowable width of transformer compartment. For minimum dimensions of instrument transformer compartments refer to page SG 517.2, Notes 1 and 2, for page references.
9. All panels and covers shall be sealable.
10. See pages SG 504.4 – 504.5 for working space and clearance requirements, 0 – 600 volts.
11. For outdoor/raintight (NEMA 3R) enclosure, see pages SG 517.6 – 517.7.

© 1998-2017 San Diego Gas & Electric Company. All rights reserved. Removal of this copyright notice without permission is not permitted under law.

REV	CHANGE	BY	DSGN	APPV	DATE	REV	CHANGE	BY	DSGN	APPV	DATE
A	Editorial Changes	LSM	CTG	TPM	11/01/17	D					
B						E					
C						F					

X Indicates Latest Revision	Completely Revised	New Page	Information Removed

TABLE OF CONTENTS

Standard Switchboard Service Section, 0 – 600 Volts

This drawing shows a separate barrier creating a load wireway at the upper right side of the switchboard in order to route the load conductors out the top. Load conductors may not be routed through the instrument transformer compartment in order to exit the switchboard.

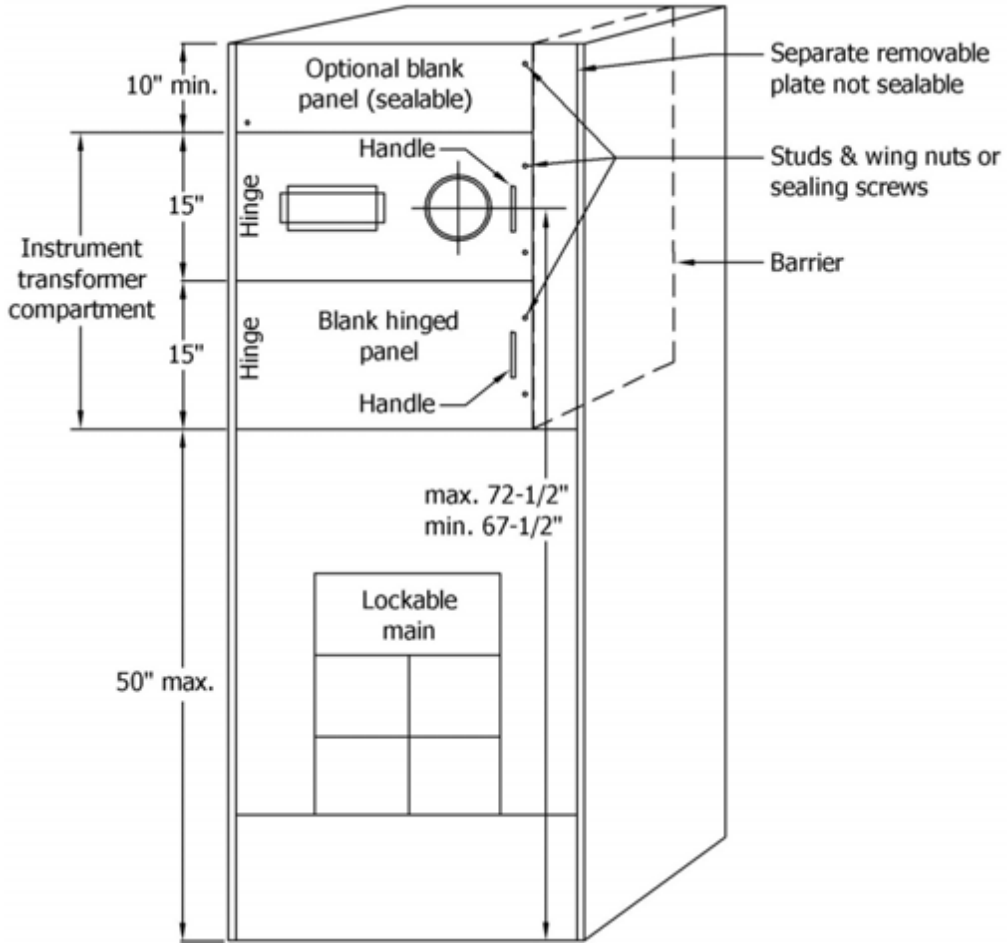

Notes:

1. The width and depth are determined by type and amperage of service.
2. Refer to page SG 517.3 for additional dimensions and details.
3. Access to customer's distribution wireways shall not require opening or removing sealable panels.
4. All panels and covers shall be sealable.
5. See pages SG 504.4 – 504.5 for working space and clearance requirements, 0 – 600 volts.

© 1998-2017 San Diego Gas & Electric Company. All rights reserved. Removal of this copyright notice without permission is not permitted under law.

REV	CHANGE	BY	DSGN	APPV	DATE	REV	CHANGE	BY	DSGN	APPV	DATE
A	Editorial Changes	LSM	CTG	TPM	11/01/17	D					
B						E					
C						F					

X Indicates Latest Revision	Completely Revised	New Page	Information Removed

TABLE OF CONTENTS

Standard Switchboard Service Section, 0 – 600 Volts
Outdoor/Raintight Enclosure (NEMA 3R)

This drawing shows the construction for an outdoor raintight unit with enclosed meter panels and main disconnect switch or breaker.

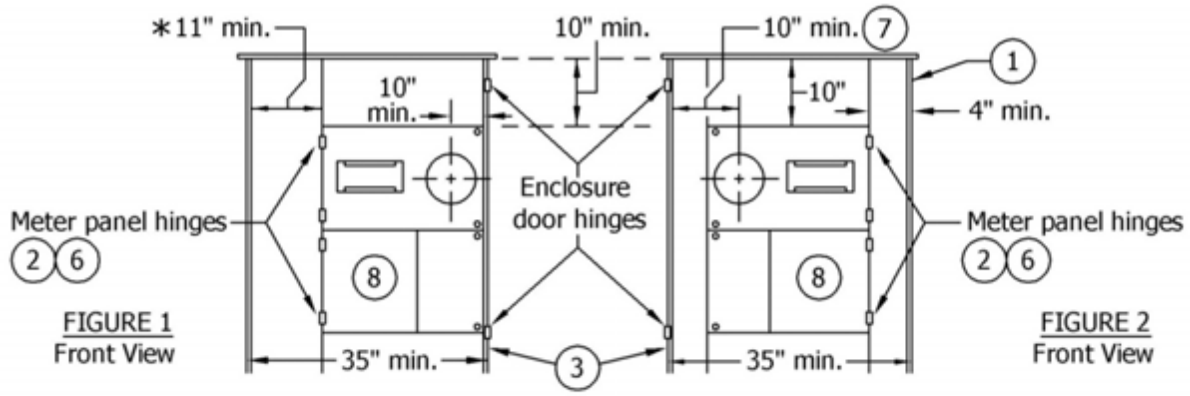

FIGURE 1
Front View

FIGURE 2
Front View

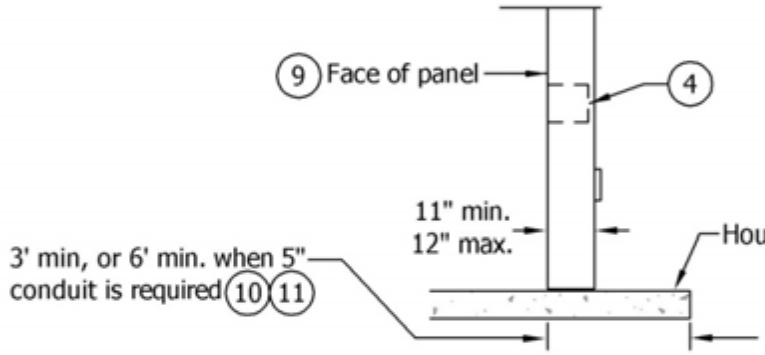

FIGURE 3 - Side View

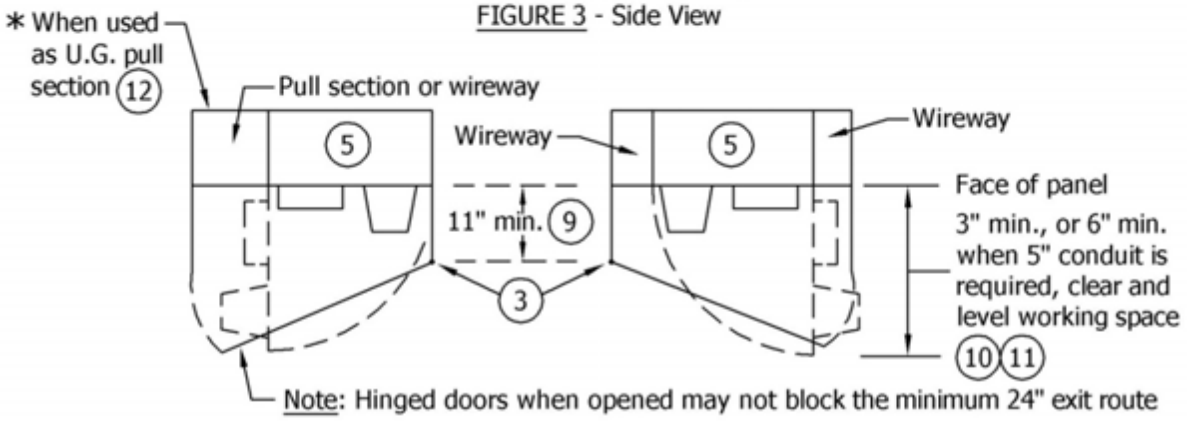

FIGURE 4 - Top Views

© 1998-2017 San Diego Gas & Electric Company. All rights reserved. Removal of this copyright notice without permission is not permitted under law.

REV	CHANGE	BY	DSGN	APPV	DATE	REV	CHANGE	BY	DSGN	APPV	DATE
A	Editorial Changes	LSM	CTG	TPM	11/01/17	D					
B						E					
C						F					

X Indicates Latest Revision | Completely Revised | New Page | Information Removed

TABLE OF CONTENTS

Standard Switchboard Service Section, 0 – 600 Volts
Outdoor/Raintight Enclosure (NEMA 3R)

Notes to Figures 1-4:

1. The width and depth are determined by type and ampacity of service.
2. Hinged meter panels shall be capable of being opened 90 degrees with meter and test facilities in place. The hinges shall be readily interchangeable right or left on the job sight. For other details, see pages SG 517.8 – 517.9. All meter panels must be hinged from the test switch side.
3. The enclosure door shall be hinged opposite from the meter panel door when necessary to allow 90 degree opening of the meter panel door with Utility equipment in place. When enclosure door(s) is locked, a double hasp is required. The enclosure door(s) shall be designed to secure in the open position at 90 degrees or more. A full height hinged door with a three-point locking mechanism and provision for a Utility furnished padlock is required.
4. The meter heights specified on page SG 504.1 apply in full switchboard height meter enclosures.
5. For meter socket and test switch panel layout, see pages SG 517.8 – 517.9. For instrument transformer compartment information, see pages SG 517.12 – 517.20.
6. If the panel is hinged at the side wall of the NEMA 3R recess, the edge of the test switch slots shall be 1" plus the depth of the recess from the hinged side.
7. Where an adjacent obstruction extends 11" or more perpendicular from the face of the meter socket, a 10" minimum dimension to centerline of meter is required. This also applies to multi-meter installations. See pages SG 509.1 – 509.4 for meter cabinet requirements.
8. All panels and covers shall be sealable.
9. The 11" clearance from meter panel to inside of door is required for all types of meters.
10. When outdoor raintight service equipment is installed on a "housekeeping pad", that pad must be level and extend a minimum of 3' measured from the face of the meter panel, or a minimum of 6' when 5" conduit is required. See Figures 3 and 4 on page SG 517.6. If the enclosure doors are wider than 3', the housekeeping pad shall extend 1" beyond the outer edge of the equipment doors when opened at 90 degrees.
11. See pages SG 504.4 – 504.5 for working space and clearance requirements, 0 – 600 volts.
12. See Section 700 for terminating enclosure UGPS requirements.

TABLE OF CONTENTS

© 1998-2017 San Diego Gas & Electric Company. All rights reserved. Removal of this copyright notice without permission is not permitted under law.

REV	CHANGE	BY	DSGN	APPV	DATE	REV	CHANGE	BY	DSGN	APPV	DATE
A	Editorial Changes	LSM	CTG	TPM	11/01/17	D					
B						E					
C						F					

X	Indicates Latest Revision		Completely Revised		New Page		Information Removed

Standard Switchboard Service Section, 0 – 600 Volts
Meter Socket & Test Switch Panel Layout

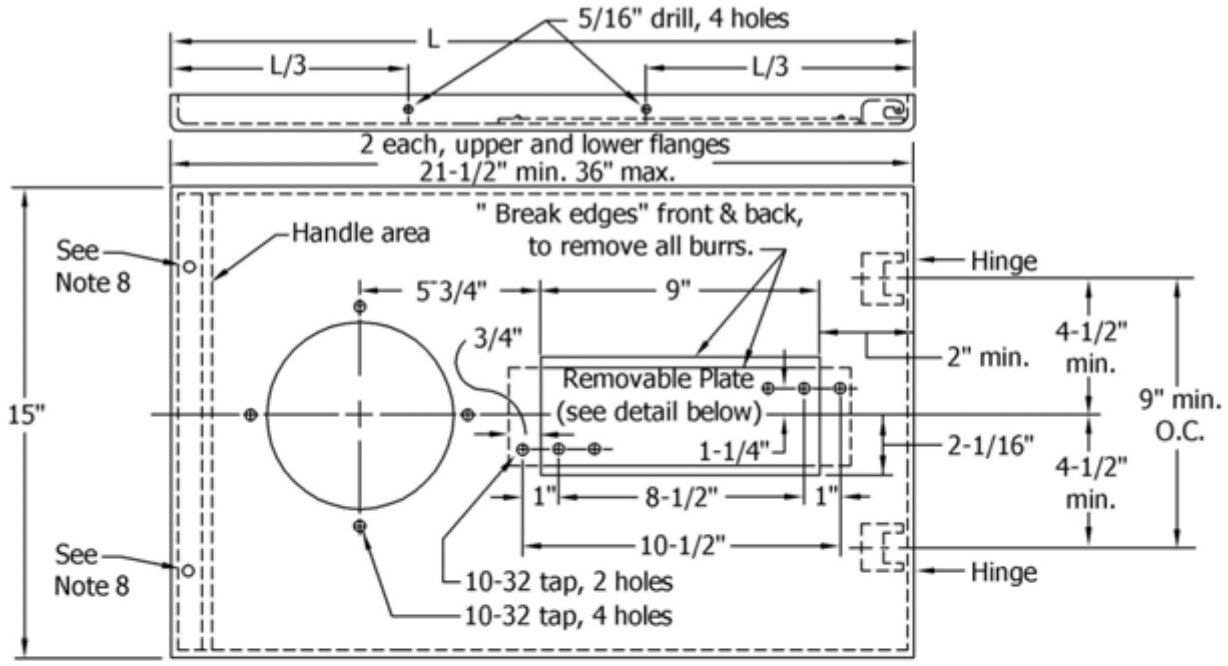

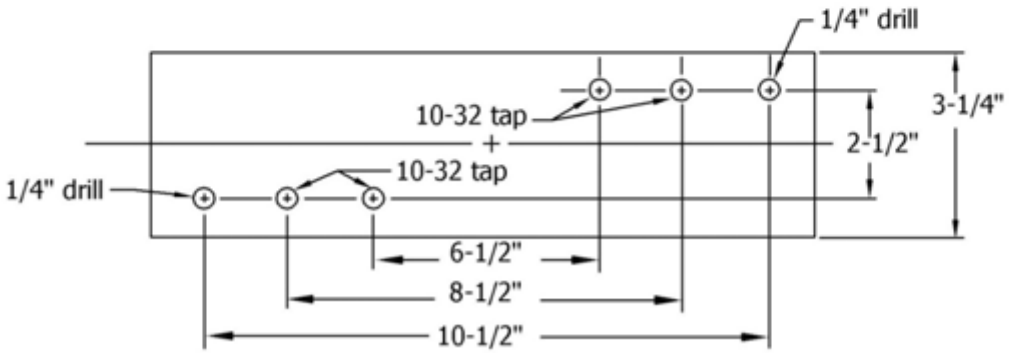

Removable Plate

TABLE OF CONTENTS

© 1998-2017 San Diego Gas & Electric Company. All rights reserved. Removal of this copyright notice without permission is not permitted under law.

REV	CHANGE	BY	DSGN	APPV	DATE	REV	CHANGE	BY	DSGN	APPV	DATE
A	Editorial Changes	LSM	CTG	TPM	11/01/17	D					
B						E					
C						F					

X Indicates Latest Revision	Completely Revised	New Page	Information Removed	

Notes:

1. The switchboard manufacturer shall drill, tap and slot the panel as shown for secondary test switches and shall furnish and install sockets complete with sealing rings.
2. Meter panels shall be constructed of 12-gauge steel (minimum) and shall be hinged at the test switch side by the manufacturer. Meter panels shall be sealable, and must be reversible and interchangeable if field conditions require such change.
3. Meter panels shall have a handle attached at the unsupported end.
4. Hinges must support a 25-pound load applied at the unsupported end with ⅛" maximum sag when open.
5. Hinges shall be readily interchangeable, right or left, on the job site.
6. Removable plate shall be secured to rear of panel by screws of such length so as not to protrude through face of panel.
7. Meter panels shall be capable of being opened 90 degrees with meter and test facilities in place.
8. All securing screws and sealing screws on panels shall be captive. Studs and wing nuts shall be sealable when used.

TABLE OF CONTENTS

© 1998-2017 San Diego Gas & Electric Company. All rights reserved. Removal of this copyright notice without permission is not permitted under law.

REV	CHANGE	BY	DSGN	APPV	DATE	REV	CHANGE	BY	DSGN	APPV	DATE
A	Editorial Changes	LSM	CTG	TPM	11/01/17	D					
B						E					
C						F					

X Indicates Latest Revision	Completely Revised	New Page	Information Removed	
SHEET 9 OF 20	SDG&E SERVICE STANDARDS & GUIDE			SG 517.9
	STANDARD SWITCHBOARD SERVICE SECTIONS			

Standard Switchboard Service Section, 0 – 600 Volts
For Self-Contained Metering, 200 Amp Maximum Meter Socket Capacity
Single-Phase, 3-Wire & Three-Phase, 4-Wire Services

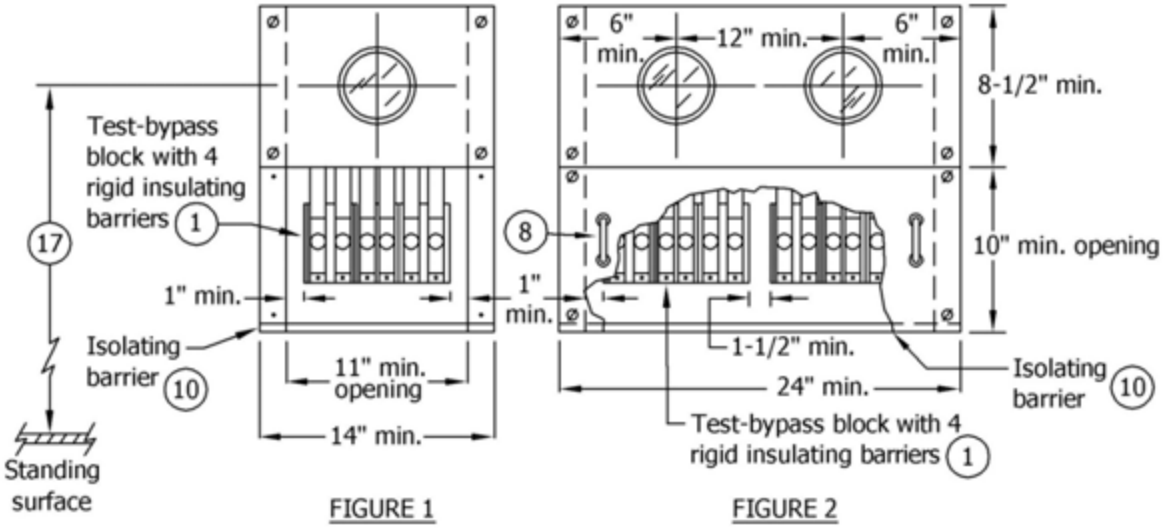

FIGURE 1 FIGURE 2

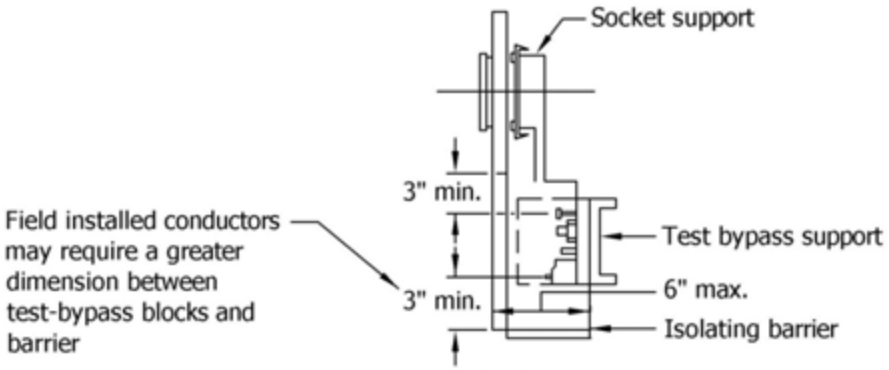

FIGURE 3

Notes:

(1) Test-bypass facilities with rigid insulating barriers shall be furnished, installed, and wired or bussed to the meter socket by the manufacturer. Blocks and barriers shall conform to page SG 513.2 requirements with physical arrangement conforming to pages SG 514.2 – 514.3. Connection sequence is line-load, line-load, line-load from left to right.

2. Separate line and load conductors shall be installed and connected by the contractor or manufacturer for each test-bypass position.

3. Metered conductors shall not pass through adjacent metering compartments except in closed wireways. To ensure proper identification of cables in factory cabled equipment, metered cables

© 1998-2017 San Diego Gas & Electric Company. All rights reserved. Removal of this copyright notice without permission is not permitted under law.

REV	CHANGE	BY	DSGN	APPV	DATE	REV	CHANGE	BY	DSGN	APPV	DATE
A	Editorial Changes	LSM	CTG	TPM	11/01/17	D					
B						E					
C						F					

X Indicates Latest Revision	Completely Revised	New Page	Information Removed

TABLE OF CONTENTS

(except in the test-bypass area), shall be either physically barriered or bundled so as to separate them from unmetered cable or permanently marked and isolated from unmetered cables. Physical barriers will not be required if the unmetered conductors are bus.

4. Minimum access opening to test-bypass blocks shall be 11" x 10" for Figure 1 and 21-½" x 10" for Figure 2.
5. Rigid insulating barriers shall be installed as shown.
6. Upper test connector stud shall be a minimum of 3" below upper panel.
7. Meter panels shall be removable, but shall be non-removable when the meter is in place. The meter socket shall be supported independent of, and attached to, the meter panel. When mounted in switchboards, preferably one but not more than two sockets may be mounted on any single front panel.
8. Test-bypass cover panels shall be sealable and fitted with a lifting handle. All panels exceeding 16" in width shall require two lifting handles.
9. When a neutral is required for metering or testing, an insulated neutral terminal shall be provided behind each test-bypass cover panel. The terminal shall be readily accessible when the cover panel is removed and shall be individually connected to the neutral bus with a minimum No. 12 copper wire.
10. Factory-installed full-width insulating barriers with a maximum deflection of ½" from an applied force of 25 pounds downward, shall be located at the bottom of each test-bypass compartment. In addition, a full width and depth isolating barrier shall be located below the bottom test-bypass compartments and above the load terminals of the meter disconnect devices. If a factory-installed rear-load wireway is provided, the isolating barrier shall extend back to that wireway. Ventilation openings, when provided, shall not exceed a maximum diameter of ⅜". A slot in the isolating barrier provided for the load conductors supplied from the test-bypass blocks shall be a maximum of 1-½" in depth and may extend to the width of the meter disconnect devices. The slot may not be located in the front 6" of the test by-pass compartment insulating barrier.
11. For three-phase, 4-wire, connect 7th jaw to neutral terminal with a white No. 12 copper wire.
12. For three-phase, 4-wire, delta, identify right hand test-bypass block (2 poles) as power leg, orange in color (C phase).
13. For single-phase, 3-wire, omit center test-bypass block.
14. For single-phase, 3-wire, 208Y/120 volts, omit center test-bypass block. Connect 5th jaw to neutral terminal with a white No. 12 copper wire.
15. All securing screws shall be captive. All panels and covers shall be sealable.
16. Each line and load position shall be clearly identified by ¾" MINIMUM block letter labeling.
17. See page SG 504.1 for meter mounting heights.
18. Enclosures must allow a minimum of 11" to a maximum of 12" from the face of the meter panel to the inside of the door, and 10" measured from the vertical centerline of the socket to any side obstruction including the door-jamb or flange. This 10" side clearance extends a minimum of 3' from the face of the meter panel. See pages SG 509.1 – 509.4 for meter cabinet details and SG 517.6 – 517.7 for outdoor/raintight enclosure details.

TABLE OF CONTENTS

© 1998-2017 San Diego Gas & Electric Company. All rights reserved. Removal of this copyright notice without permission is not permitted under law.

REV	CHANGE	BY	DSGN	APPV	DATE	REV	CHANGE	BY	DSGN	APPV	DATE
A	Editorial Changes	LSM	CTG	TPM	11/01/17	D					
B						E					
C						F					

X	Indicates Latest Revision		Completely Revised		New Page		Information Removed

Standard Switchboard Service Section, 0 – 600 Volts
Instrument Transformer Compartment
201 – 400 Amps Single-Phase Service

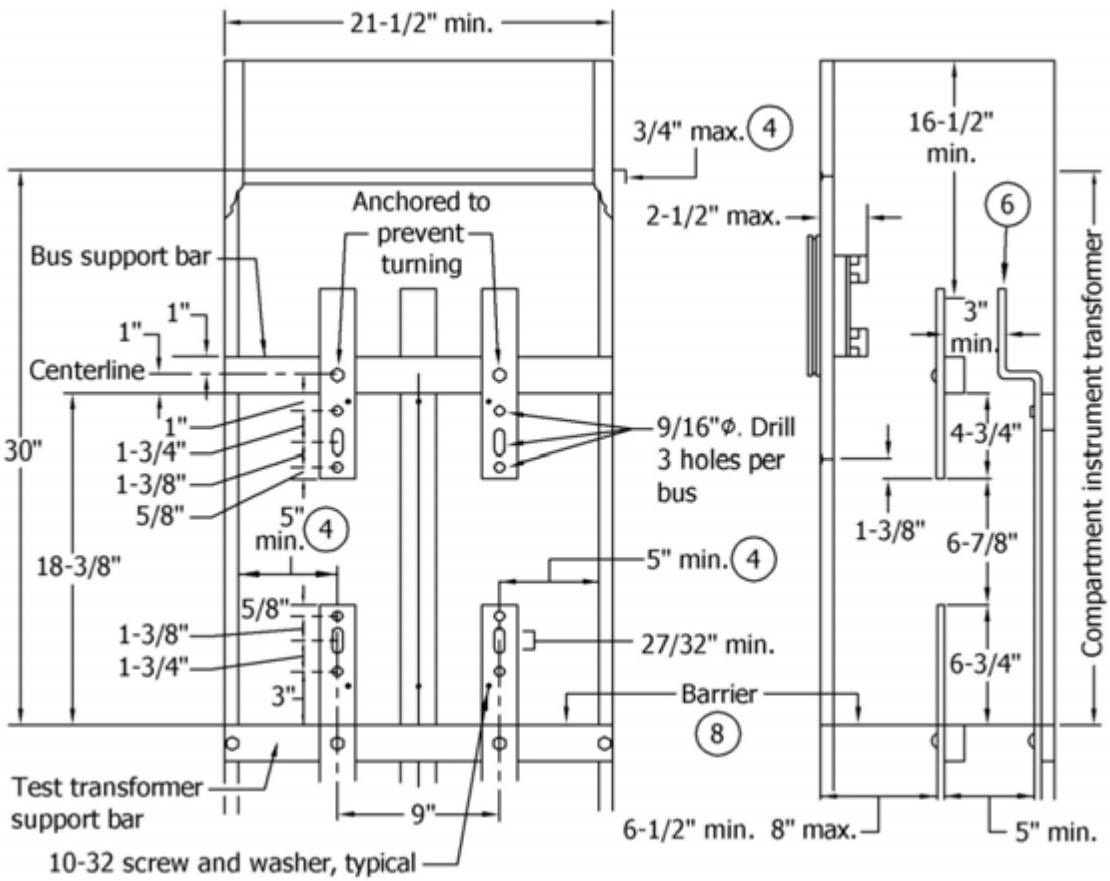

Notes:

1. Bus arrangement and supports are required as shown above, except that neutral may be located on the side wall or at either side.
2. Compartment shall be on the supply side of the main switch or breaker.
3. Direction of feed may be from top or bottom. No other conductors shall pass through this compartment.

(4) Return flanges for lower and upper meter panel support shall not project more than ¾" up or down from adjacent switchboard panels.

5. When main switch is over 400 amps and for all underground services, see pages SG 708.1 – 708.2 and consult the Utility's Planner. See page SG 2 for contact information.

(6) When a laminated bus is used, there shall be no space between laminations in the compartment.

7. Bus dimensions: Maximum - ¾" x 2"; Minimum - ¼" x 2".

(8) The barrier shall be of insulating material and a have minimum of 24 vent holes of ⅜" diameter.

© 1998-2017 San Diego Gas & Electric Company. All rights reserved. Removal of this copyright notice without permission is not permitted under law.

REV	CHANGE	BY	DSGN	APPV	DATE	REV	CHANGE	BY	DSGN	APPV	DATE
A	Editorial Changes	LSM	CTG	TPM	11/01/17	D					
B						E					
C						F					

X Indicates Latest Revision	Completely Revised	New Page	Information Removed

TABLE OF CONTENTS

Standard Switchboard Service Section, 0 – 600 Volts
Instrument Transformer Compartment
201 – 1,000 Amps, Three-Phase, 3 & 4-Wire Services

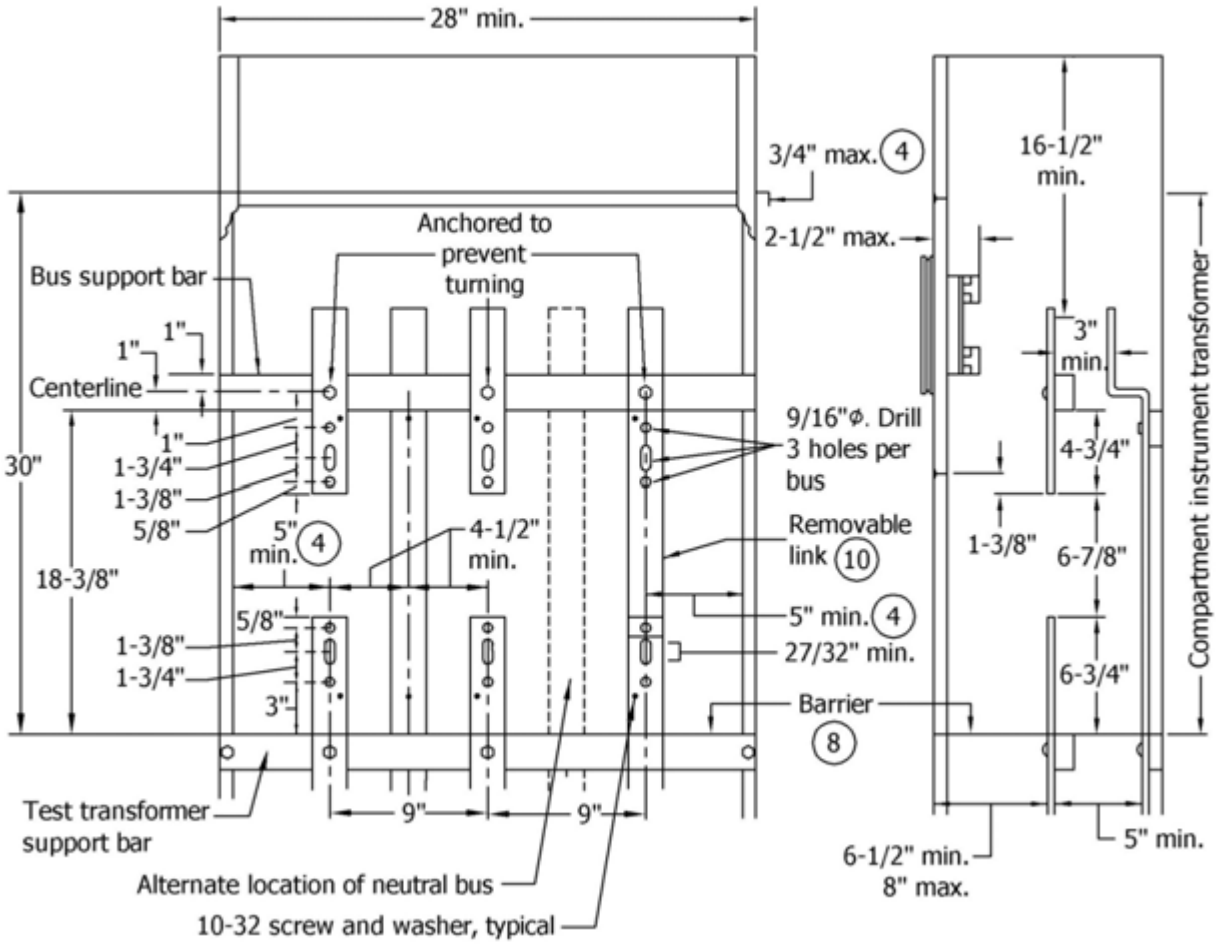

© 1998-2017 San Diego Gas & Electric Company. All rights reserved. Removal of this copyright notice without permission is not permitted under law.

REV	CHANGE	BY	DSGN	APPV	DATE	REV	CHANGE	BY	DSGN	APPV	DATE
A	Editorial Changes	LSM	CTG	TPM	11/01/17	D					
B						E					
C						F					

X Indicates Latest Revision | Completely Revised | New Page | Information Removed

TABLE OF CONTENTS

Notes:

1. Bus arrangement and supports are required as shown above, except that the neutral may be located on the side wall or at either side.
2. The compartment shall be on the supply side of the main switch or breaker.
3. The direction of feed may be from the top or bottom. No other conductors shall pass through this compartment. A neutral bus bar extension shall be provided in the instrument transformer compartment above the lower CT bus support when the service section phase busses are supplied from horizontal cross bussing.

(4) Return flanges for lower and upper meter panel support shall not project more than ¾" up or down from adjacent switchboard panels.

5. When main switch is over 400 amps and for all underground services, see pages SG 708.1 – 708.2 and consult the Utility's Planner. See page SG 2 for contact information.
6. When laminated bus is used, there shall be no space between laminations in the compartment.
7. Bus dimensions: Maximum - ¾" x 2"; Minimum - ¼" X 2".

(8) The barrier shall be of insulating material and a have minimum of 24 vent holes of ⅜" diameter.

9. The power leg (high leg) for a four-wire delta service shall be identified by an outer finish that is orange in color or by tagging or by other effective means acceptable to the Utility and the AHJ on the right of C Phase.

(10) A removable link shall be installed in the right side phase bus.

TABLE OF CONTENTS

© 1998-2017 San Diego Gas & Electric Company. All rights reserved. Removal of this copyright notice without permission is not permitted under law.

REV	CHANGE	BY	DSGN	APPV	DATE	REV	CHANGE	BY	DSGN	APPV	DATE
A	Editorial Changes	LSM	CTG	TPM	11/01/17	D					
B						E					
C						F					

X Indicates Latest Revision	Completely Revised	New Page	Information Removed	
SHEET 14 OF 20	SDG&E SERVICE STANDARDS & GUIDE			SG 517.14
	STANDARD SWITCHBOARD SERVICE SECTIONS			

Standard Switchboard Service Section, 0 – 600 Volts
Instrument Transformer Compartment
1,001 – 3,000 Amps, Three-Phase, 3 & 4-Wire Services

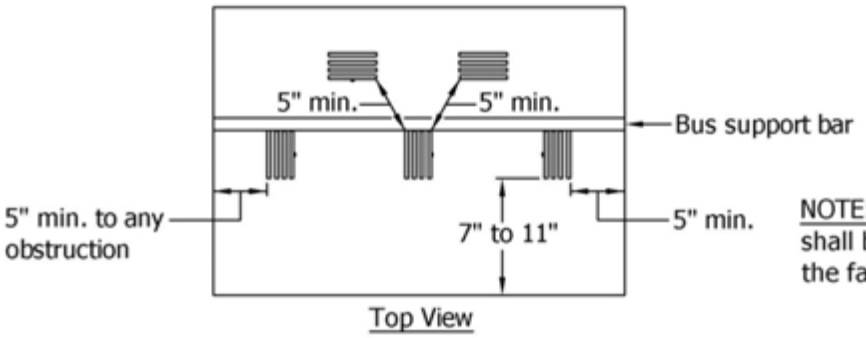

Top View

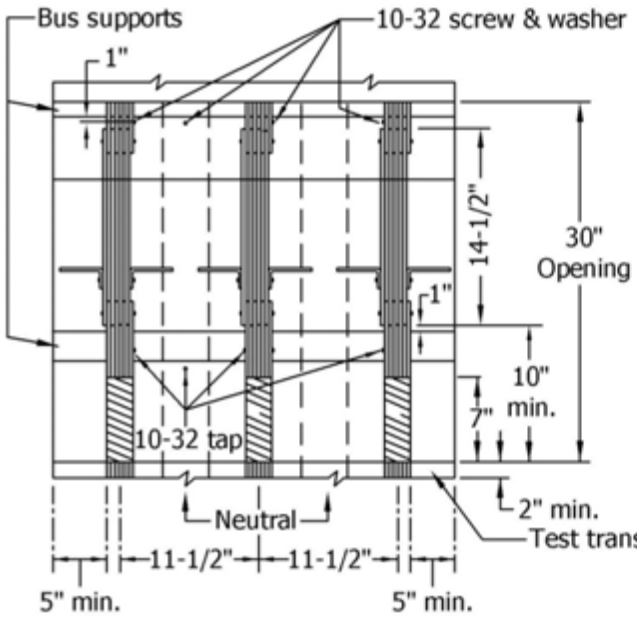

Front View

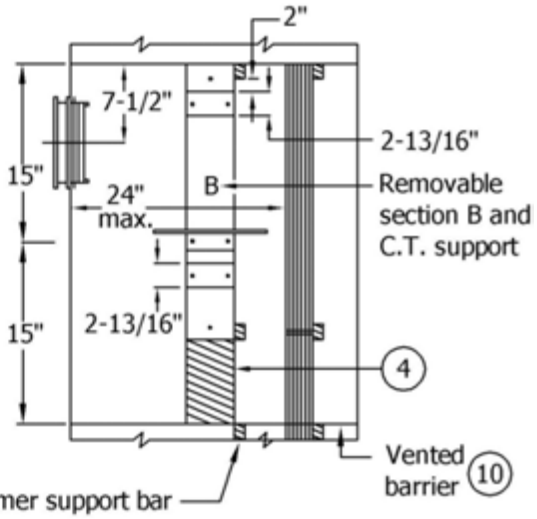

Side View

TABLE OF CONTENTS

© 1998-2017 San Diego Gas & Electric Company. All rights reserved. Removal of this copyright notice without permission is not permitted under law.

REV	CHANGE	BY	DSGN	APPV	DATE	REV	CHANGE	BY	DSGN	APPV	DATE
A	Editorial Changes	LSM	CTG	TPM	11/01/17	D					
B						E					
C						F					

X Indicates Latest Revision	Completely Revised	New Page	Information Removed

Notes:

1. The bus anchorage shall be such that busses will remain in position when removable section "B" is out.
2. The direction of feed may be from the top or bottom. No other conductors shall pass through this compartment.
3. The instrument transformer compartment shall be on the supply side of the main switch or breaker.
4. Round bus corners as necessary to prevent damage to insulation. Bus insulation to be adequate for the voltage involved.
5. For underground services installed by the Utility, the busses shall extend into the UGPS per pages SG 708.1 – 708.2. Consult the Utility's Planner. See page SG 2 for contact information.
6. The maximum permissible bus unit shall consist of four ¼" X 4" bars spaced ¼".
7. The barrier should not be less than 45" and shall not be more than 50" above the standing surface.
8. Clearance to the side of the compartment shall be increased by the amount by which the corner angle exceeds 1".
9. Return flanges for lower and upper meter panel support shall not project more than ¾" up or down from adjacent switchboard panels.
10. The barrier shall be of insulating material and a have minimum of 24 vent holes of ⅜" diameter.

TABLE OF CONTENTS

© 1998-2017 San Diego Gas & Electric Company. All rights reserved. Removal of this copyright notice without permission is not permitted under law.

REV	CHANGE	BY	DSGN	APPV	DATE	REV	CHANGE	BY	DSGN	APPV	DATE
A	Editorial Changes	LSM	CTG	TPM	11/01/17	D					
B						E					
C						F					

X Indicates Latest Revision	Completely Revised	New Page	Information Removed	
SHEET 16 OF 20	SDG&E SERVICE STANDARDS & GUIDE			SG 517.16
	STANDARD SWITCHBOARD SERVICE SECTIONS			

Standard Switchboard Service Section, 0 – 600 Volts
1,001 – 3,000 Amps Removable Link & Current-Transformer Support for Instrument Transformer Compartments with 4" Bus

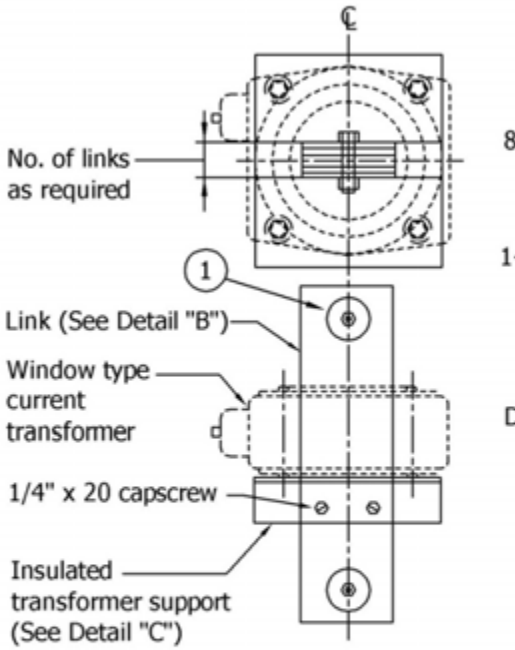

Removable Link Assembly
(Furnished by Manufacturer)

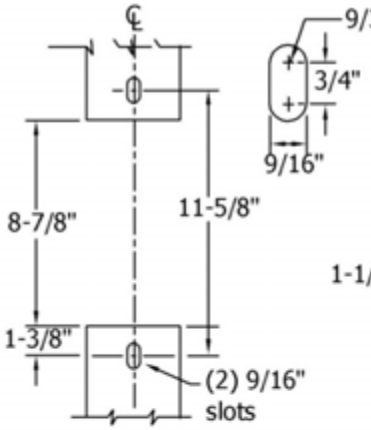

DETAIL "A"
Drilling and Spacing of Bus

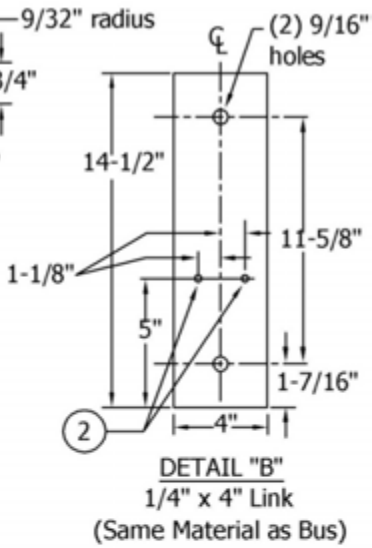

DETAIL "B"
1/4" x 4" Link
(Same Material as Bus)

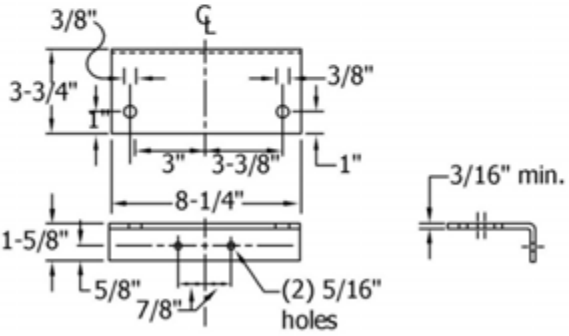

DETAIL "C"
Insulated Support for Current Transformer
(Material: Insulating, Non-Tracking)

Notes:

1. The manufacturer shall secure the removable bus link to the upper and lower CT bus units using ½" hex-head steel bolts, nuts (as shown) with a spring washer and a nut. The spring washer may be either a cone-type (Belleville) or a split ring washer with a flat washer. Bolts shall be grade 5 (min.), and long enough to extend a minimum of ½" beyond the nut. Washers (Belleville or flat) shall be 2- ¼" (min.).

2. Drill and tap two holes as shown on the outer units for ¼" x 20 capscrews.

© 1998-2017 San Diego Gas & Electric Company. All rights reserved. Removal of this copyright notice without permission is not permitted under law.

REV	CHANGE	BY	DSGN	APPV	DATE	REV	CHANGE	BY	DSGN	APPV	DATE
A	Editorial Changes	LSM	CTG	TPM	11/01/17	D					
B						E					
C						F					

X Indicates Latest Revision	Completely Revised	New Page	Information Removed

TABLE OF CONTENTS

Standard Switchboard Service Section, 0 – 600 Volts
Instrument Transformer Compartment
3,001 – 4,000 Amps, Three-Phase, 3 & 4-Wire Services

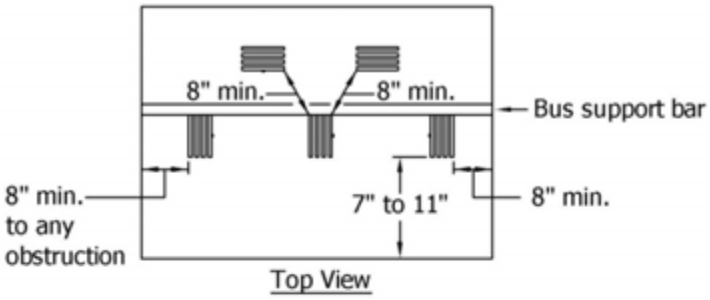

Top View

Maximum number of bus bars:
4-1/4" x 4" spaced 1/4"
6-1/4" x 5" spaced 1/4"
4-3/8" x 5" spaced 3/8"
5-3/8" x 5" spaced 1/4"

NOTE: All bus supports shall be mounted behind the face of the bus.

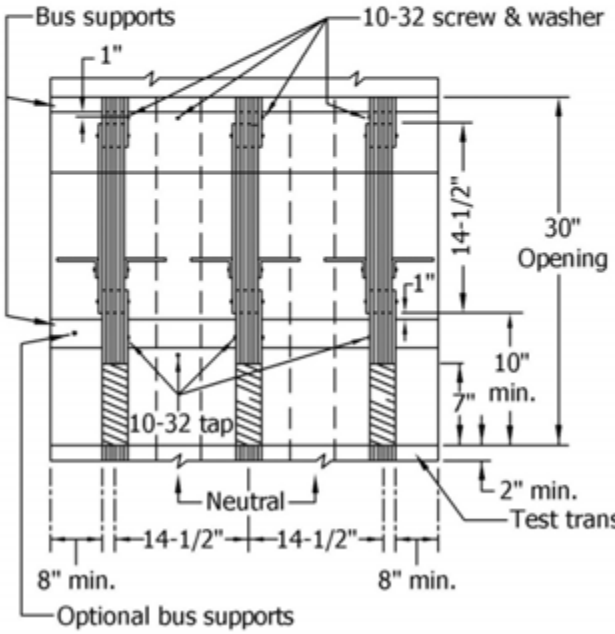

Front View

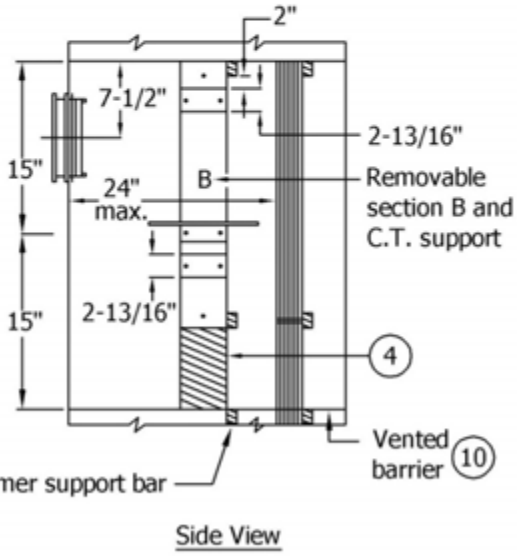

Side View

© 1998-2017 San Diego Gas & Electric Company. All rights reserved. Removal of this copyright notice without permission is not permitted under law.

REV	CHANGE	BY	DSGN	APPV	DATE	REV	CHANGE	BY	DSGN	APPV	DATE
A	Editorial Changes	LSM	CTG	TPM	11/01/17	D					
B						E					
C						F					

X Indicates Latest Revision	Completely Revised	New Page	Information Removed

TABLE OF CONTENTS

Notes:

1. The bus anchorage shall be such that busses will remain in position when removable section "B" is out.
2. The direction of feed may be from the top or bottom. No other conductors shall pass through this compartment.
3. The instrument transformer compartment shall be on the supply side of the main switch or breaker.
4. Round bus corners as necessary to prevent damage to insulation. Bus insulation to be adequate for the voltage involved.
5. For underground services installed by the Utility, the busses shall extend into the UGPS per pages SG 708.1 – 708.2. Consult the Utility's Planner. See page SG 2 for contact information.
6. The maximum permissible bus unit shall consist of six ¼" X 5" bars spaced ¼".
7. The barrier should not be less than 45" and shall not be more than 50" above the standing surface.
8. Clearance to the side of the compartment shall be increased by the amount by which the corner angle exceeds 1".
9. Return flanges for lower and upper meter panel support shall not project more than ¾" up or down from adjacent switchboard panels.
10. Barrier shall be of insulating material and a have minimum of 40 vent holes of ⅜" diameter.

TABLE OF CONTENTS

© 1998-2017 San Diego Gas & Electric Company. All rights reserved. Removal of this copyright notice without permission is not permitted under law.

REV	CHANGE	BY	DSGN	APPV	DATE	REV	CHANGE	BY	DSGN	APPV	DATE
A	Editorial Changes	LSM	CTG	TPM	11/01/17	D					
B						E					
C						F					

X Indicates Latest Revision	Completely Revised	New Page	Information Removed	
SHEET 19 OF 20	SDG&E SERVICE STANDARDS & GUIDE			SG 517.19
	STANDARD SWITCHBOARD SERVICE SECTIONS			

Standard Switchboard Service Section, 0-600 Volts
3,001 Amps & Larger Removable Link & Current-Transformer Support for Instrument Transformer Compartments with 5" Bus

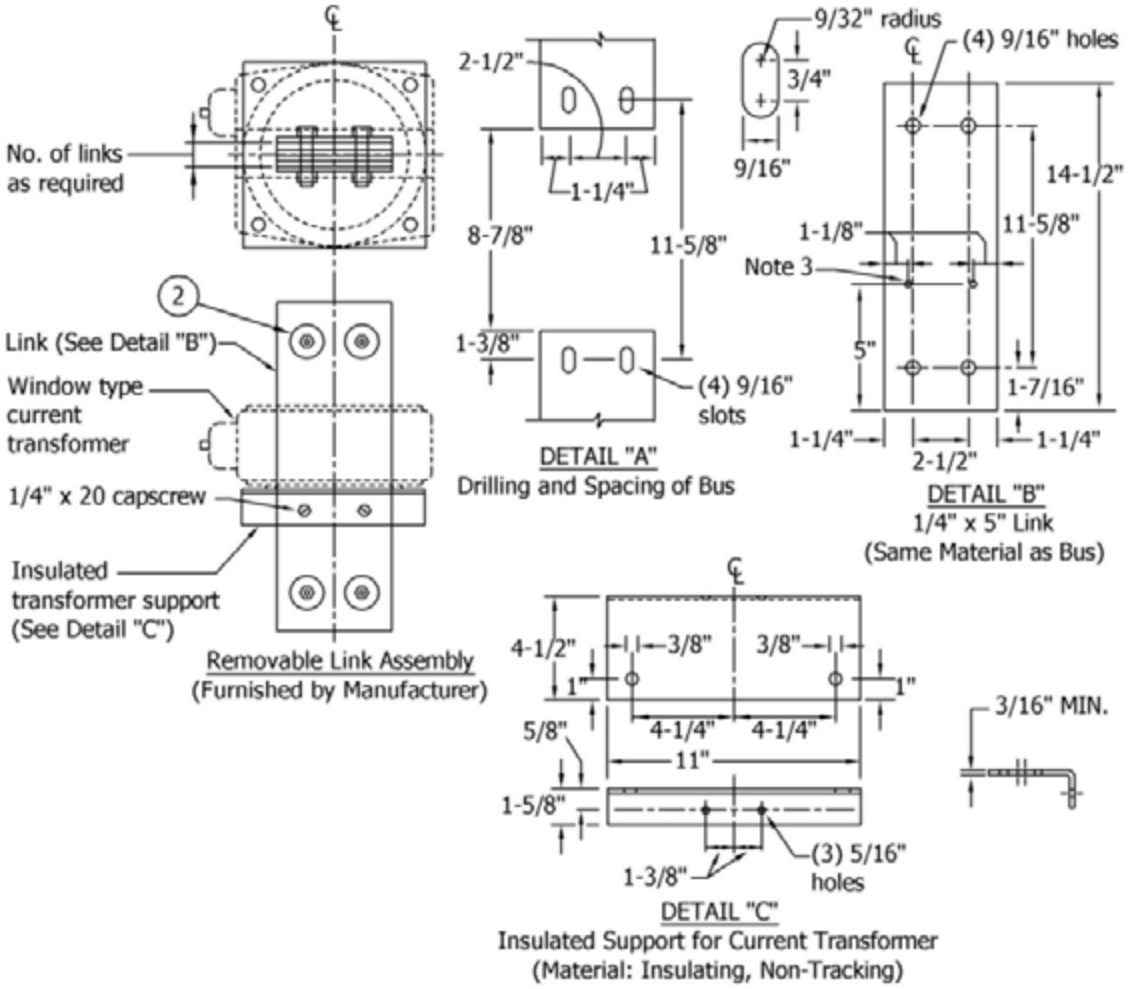

Notes:

1. The manufacturer shall secure the removable bus link to the upper and lower CT bus units using ½" hex-head steel bolts, nuts (as shown) with a spring washer and a nut. The spring washer may be either a cone-type (Belleville) or a split ring washer with a flat washer. Bolts shall be grade 5 (min.), and long enough to extend a minimum of ½" beyond the nut. Washers (Belleville or flat) shall be 2-¼" (min.).

(2) Drill and tap two holes as shown on the outer units for ¼" x 20 capscrews.

3. Consult the Utility for the use of bus bars larger than 5".

© 1998-2017 San Diego Gas & Electric Company. All rights reserved. Removal of this copyright notice without permission is not permitted under law.

REV	CHANGE	BY	DSGN	APPV	DATE	REV	CHANGE	BY	DSGN	APPV	DATE
A	Editorial Changes	LSM	CTG	TPM	11/01/17	D					
B						E					
C						F					

X Indicates Latest Revision	Completely Revised	New Page	Information Removed

TABLE OF CONTENTS

ELECTRIC SERVICE REQUIREMENTS FOR MOBILE HOME PARKS

Underground electric service to a mobile home lot is to be installed along the shortest, most practical route from the SDG&E (Utility) source to the nearest meter and service location acceptable to the Utility.

This location may be:

1. On a permanently installed structure located near the lot line of the mobile home lot closest to the Utility's source.
2. A Utility-approved meter post/pedestal located at or near the closest corner of the mobile home lot to the Utility's source.
3. In accordance with Title 25, Article 7, Sections 1322, 1333 and 1333.5, mobile homes, manufactured homes, or commercial coaches, installed on foundation systems are permitted to be served by the Utility in a manner applicable to buildings. The location of the meter and service equipment will be determined by the Utility's Planner.
4. Each mobile home park space/unit constructed after January 1, 1997, must be individually served by the Utility.
5. Public Utilities Code Sections 2791 through 2799 is a result of Assembly Bill 622 and outlines the process whereby the owner of a mobile home park may transfer ownership of the park's distribution system to the Utility. Contact the Project Management Regional Office nearest to the mobile home park location and request information for transfer of ownership to the Utility. See page SG 2 for a listing of the Regional Offices.

TABLE OF CONTENTS

© 1998-2017 San Diego Gas & Electric Company. All rights reserved. Removal of this copyright notice without permission is not permitted under law.

REV	CHANGE	BY	DSGN	APPV	DATE	REV	CHANGE	BY	DSGN	APPV	DATE
A	Editorial Changes	LSM	CTG	TPM	11/01/17	D					
B						E					
C						F					

SHEET 1 OF 3	X	Indicates Latest Revision		Completely Revised		New Page		Information Removed
	SDG&E SERVICE STANDARDS & GUIDE							
	MOBILE HOME PARK SERVICE & METER PEDESTALS							
SG 518.1								

Typical Underground Service & Meter Post/Pedestal

This standard applies to single-family or mobile home residential services rated 100 amps minimum, 225 amps maximum, single-phase, 120/208 volts or 120/240 volts.

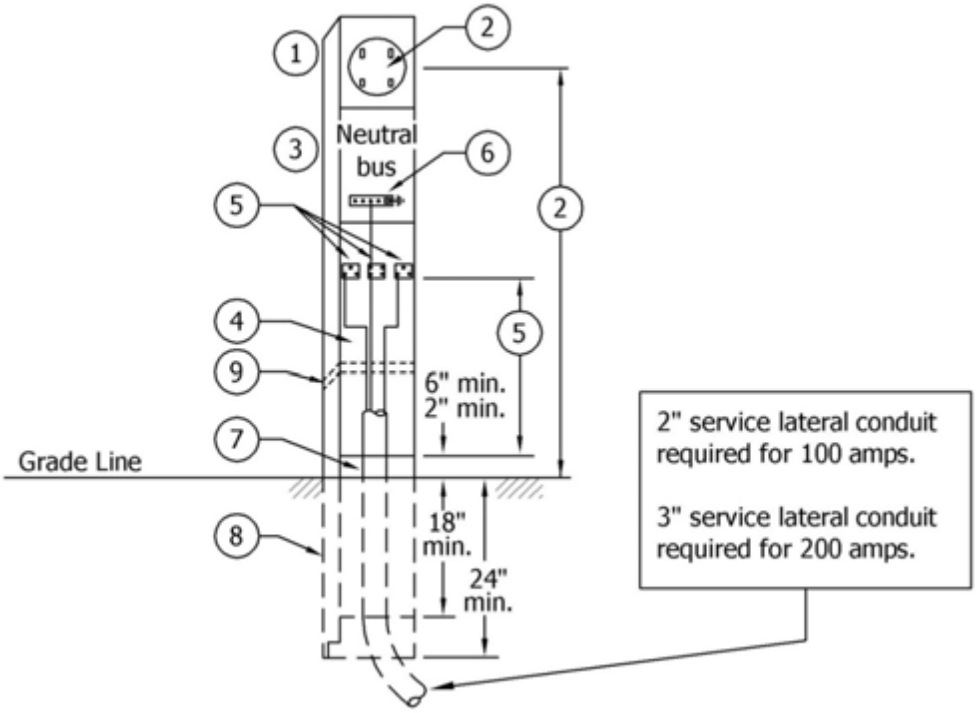

Notes:

(1) The service and metering equipment shall be tested, listed and labeled by a nationally recognized testing laboratory. This service and metering equipment shall be installed per the manufacturer's installation instructions and Utility standards. An electrical inspection clearance from the governmental Authority Having Jurisdiction (AHJ) must be given to the Utility before service can be established and a meter set.

(2) The meter socket shall be provided with a sealing ring. The meter socket shall be mounted on a support and attached to the meter panel. The socket shall be factory-wired with the conductors in a separate or barriered raceway from the service terminating lugs to the meter socket. These conductors shall be inaccessible from the main disconnect and power outlet section. The conductors which extend to the meter socket shall be connected at the service terminating lugs independently of the connection for the service lateral conductors. The minimum meter height is 36" above grade line when the meter is enclosed, or 48" minimum if exposed. Meter panels shall be removable, but shall be non-removable when the meter is in place. If the meter is enclosed, the enclosing cover shall be hinged and self-supporting, equipped with a reading window, and be removable for meter testing or inspection.

© 1998-2017 San Diego Gas & Electric Company. All rights reserved. Removal of this copyright notice without permission is not permitted under law.

REV	CHANGE	BY	DSGN	APPV	DATE	REV	CHANGE	BY	DSGN	APPV	DATE
A	Editorial Changes	LSM	CTG	TPM	11/01/17	D					
B						E					
C						F					

X Indicates Latest Revision	Completely Revised	New Page	Information Removed

TABLE OF CONTENTS

3. The service main disconnect and power outlet section shall have barriers installed to prevent access to the service cable pull and terminating section and to unmetered conductors which connect to the socket.

4. The service cable pull and terminating section shall be covered with a sealable and removable panel or panels, extending from 2" to 6" above grade, and when removed, give full access to the service terminating lugs. Access to the service terminating lugs may be either the front or the rear of the pedestal. Access shall be unrestricted by load conduits or raceways.

5. A minimum 12" opening shall be maintained from the terminating lugs to any fixed panel below the lugs. The minimum lug height is 17" above grade line, the maximum is 48". The service terminating lugs shall be No. 2 to 250 kCMIL aluminum bodied pressure type for connection of the service lateral conductors. A single terminating lug per phase and neutral is preferred. If two terminating lugs are provided per phase, the Utility requires one of the lug's set screw to be removed and the hole to be filled with a compound acceptable to the manufacturer. This requirement is necessary to avoid energy diversion. The space between terminating lugs, from lugs to sides of post, or from lugs to panel above, shall be 1-½" minimum. Rigid insulating barriers are required and shall project ¼" minimum beyond any energized parts when this space is reduced. Terminating lugs may be positioned either in-line or staggered, and access shall be unobstructed when all service conductors are in place. The neutral terminating lug shall be bonded to the post/pedestal.

6. An acceptable grounding terminal shall be provided to accommodate the range of grounding conductor sizing as specified by California Electrical Code for the size of the service equipment.

7. The post/pedestal shall have a minimum cross sectional dimension of 4" x 8" ID. A fixed panel shall extend 2" minimum and 6" maximum above grade and 18" minimum below grade.

8. The minimum depth of the post/pedestal in the ground shall be 24" with openings at the base to permit the service lateral conduit to enter into the post/pedestal without cutting the 24" minimum radius bend.

9. A moisture barrier, located below all terminals and other live parts, or adequate ventilation, shall be provided to inhibit the condensation of moisture.

10. For authorization to attach telephone and cable TV terminating facilities, consult the Utility.

TABLE OF CONTENTS

© 1998-2017 San Diego Gas & Electric Company. All rights reserved. Removal of this copyright notice without permission is not permitted under law.

REV	CHANGE	BY	DSGN	APPV	DATE	REV	CHANGE	BY	DSGN	APPV	DATE
A	Editorial Changes	LSM	CTG	TPM	11/01/17	D					
B						E					
C						F					

X Indicates Latest Revision	Completely Revised	New Page	Information Removed	
SHEET 3 OF 3	SDG&E SERVICE STANDARDS & GUIDE			SG 518.3
	MOBILE HOME PARK SERVICE & METER PEDESTALS			

TABLE OF CONTENTS

Commercial Meter Pedestals, 0 – 200 Amps

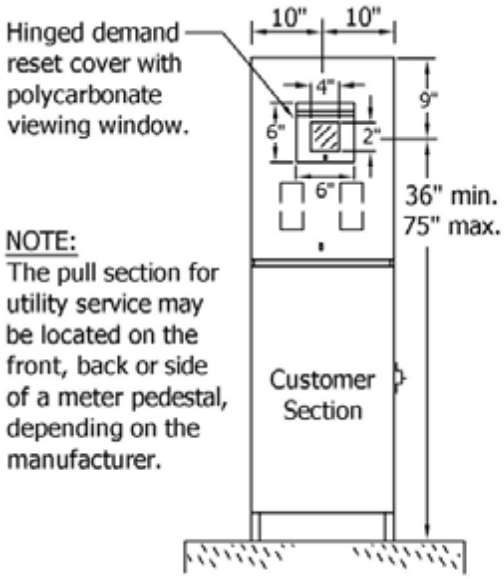

FIGURE. 1
Front View (Single)

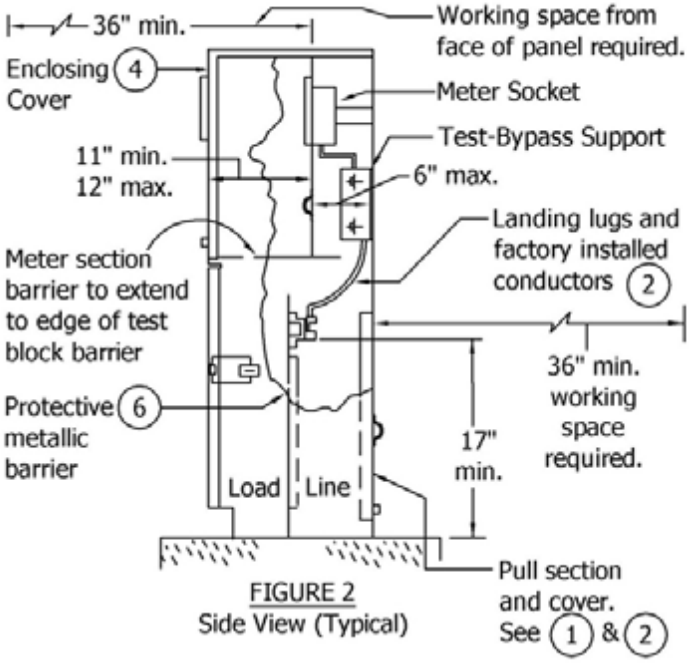

FIGURE 2
Side View (Typical)

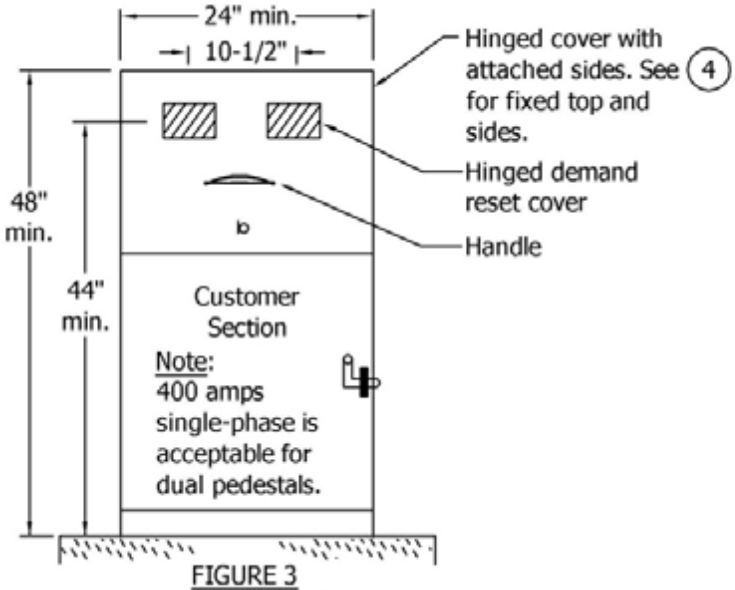

FIGURE 3
Front View (Dual)

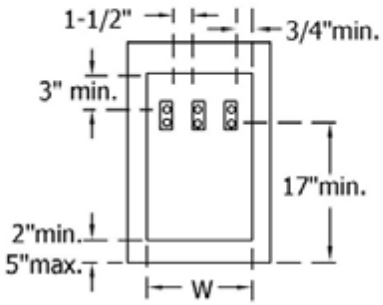

Table 1 - Min. Dimensions

Service	W
1 Phase	10-1/2"
3 Phase	12-1/2"

FIGURE 4
Utility Termination Section

Refer to page SG 519.5 for Meter Pedestal Foundation Details.

© 1998-2017 San Diego Gas & Electric Company. All rights reserved. Removal of this copyright notice without permission is not permitted under law.

REV	CHANGE	BY	DSGN	APPV	DATE	REV	CHANGE	BY	DSGN	APPV	DATE
A	Editorial Changes	LSM	CTG	TPM	11/01/17	D					
B						E					
C						F					

X Indicates Latest Revision | Completely Revised | New Page | Information Removed

Notes:

(1) Utility termination section shall be dimensioned as shown in Figure 4. These dimensions are the minimum access openings allowed for these types of termination sections. The depth of the wireway shall accept a minimum 3" conduit, and the cover shall be equipped with a lifting handle.

(2) Service conductors are to terminate on landing lugs. The service termination lugs shall be No. 6 through No. 250 kCMIL pressure-type, CU-AL listed. Insulated cable or bus shall be installed between the landing lugs and the test-bypass facilities.

3. Pedestals serving both metered and unmetered loads, i.e. traffic signals and street lighting, must have landing lugs, with customer wire from lugs to test blocks (if not bussed) to serve metered loads and from lugs to breakers to serve unmetered loads.

(4) The meter shall be enclosed and the enclosing cover shall be hinged to allow the top, front and sides to rotate back exposing the metering compartment in order to provide clearances.

5. Internal equipment attached to the outer walls of the enclosure shall be secured in place with devices that may not be loosened from the outside. Screws or bolts requiring special tools for installation or removal are not acceptable.

(6) A protective metallic barrier (16-gauge minimum) shall be installed between the Utility termination section and the customer distribution section. There shall be a ¼" minimum clearance between the customer section and protective barrier to prevent screws and bolts from protruding into the termination section.

7. Test-bypass blocks with rigid insulating barrier shall be furnished, installed and wired or bussed to the meter socket by the manufacturer. Connection sequence is LINE-LOAD from left to right. Each line and load position shall be clearly identified by ¾" minimum block letter labeling. Test-bypass cover panels shall be sealable and fitted with a lifting handle. All panels exceeding 16" in width shall require two lifting handles.
8. All Utility compartments [meter cover, demand reset cover and Underground Pull Section (UGPS)] shall be sealable and padlockable.
9. For identification purposes, the numeric portion of the address must be painted with weatherproof paint or reflective decals on the exterior face of the portion of the pedestal facing the street or drivable surface in numbers at least 1".
10. Plastic pads are acceptable, provided the supporting pull box is filled with gravel or earth compacted to a minimum of 90%. For other structural mounting and support of the pedestal, consult with the SDG&E Trench Inspector.
11. Residential type pedestals are not acceptable for temporary construction power for any type of premises. To serve temporary power, a meter pedestal with test-bypasses, or a properly mounted safety socket can is required. Reference page SG 514.5, Figure 1.
12. Photoelectric cells are not permitted in the Utility area, i.e. UGPS/meter section.
13. SDG&E will no longer supply two-wire, 120-volt service or metering to pedestals. Single-phase service will be three-wire regardless of the voltage, i.e. 120/208 volts, 120/240 volts, or 240/480 volts. Reference pages SG 520.1 – 520.2 for field replacement of an existing 120-volt meter pedestal.
14. To maintain a safe, clear and level working space when a housekeeping pad has not been installed, a concrete slab acceptable to the SDG&E Inspector is required. This requirement is for pedestals on private property and does not apply to pedestals installed in parkway areas of the street where there is a sidewalk.

TABLE OF CONTENTS

© 1998-2017 San Diego Gas & Electric Company. All rights reserved. Removal of this copyright notice without permission is not permitted under law.

REV	CHANGE	BY	DSGN	APPV	DATE	REV	CHANGE	BY	DSGN	APPV	DATE
A	Editorial Changes	LSM	CTG	TPM	11/01/17	D					
B						E					
C						F					

X	Indicates Latest Revision		Completely Revised		New Page		Information Removed

TABLE OF CONTENTS

Commercial Meter Pedestals, 600 Amps Maximum

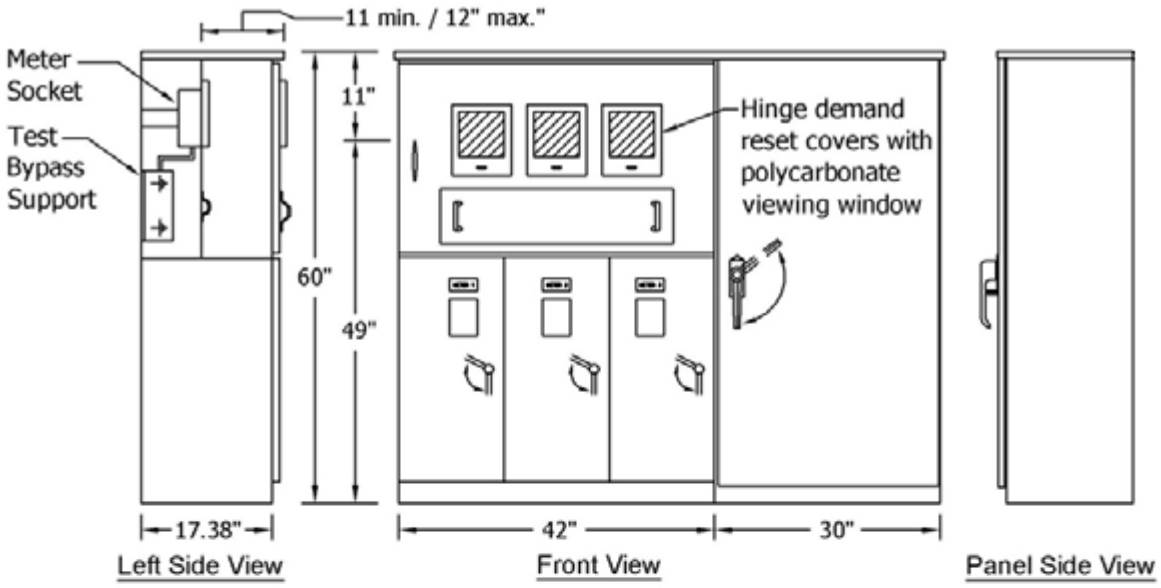

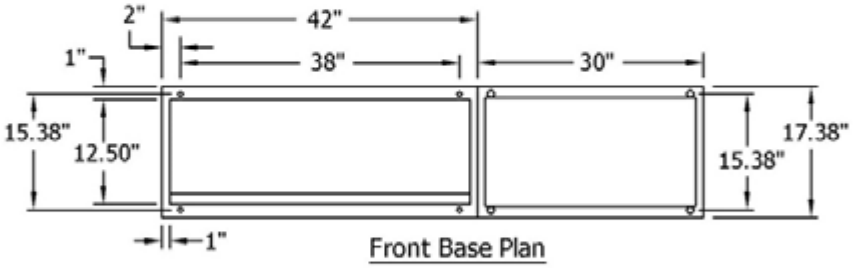

Front Base Plan

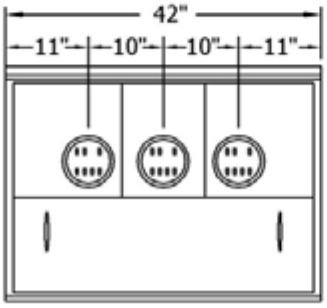

Metering Compartment
Weatherproof door removed meter & test block barriers in place

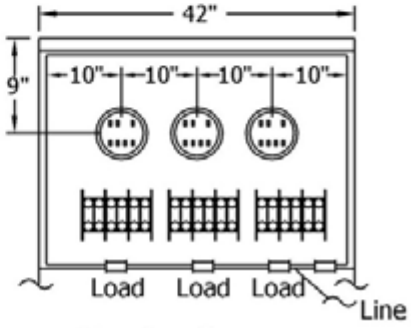

Metering Compartment
Weatherproof door removed meter & test block barriers in place

© 1998-2017 San Diego Gas & Electric Company. All rights reserved. Removal of this copyright notice without permission is not permitted under law.

REV	CHANGE	BY	DSGN	APPV	DATE	REV	CHANGE	BY	DSGN	APPV	DATE
A	Editorial Changes	LSM	CTG	TPM	11/01/17	D					
B						E					
C						F					

X Indicates Latest Revision	Completely Revised	New Page	Information Removed

Notes:

1. Commercial meter pedestals rated 401 – 600 amps require three-phase, 4-wire service. Single-phase service is not available for commercial applications 401 amps, and larger.
2. This equipment is designed for a maximum of three meter sockets.
3. Terminating facilities for the Utility's service lateral conductors shall be aluminum-bodied mechanical lugs with a range accepting a No. 4 AWG through No. 500 kCMIL conductor. Two lugs per phase shall be provided for terminations rated 401 – 600 amps in this meter pedestal application.
4. Internal equipment attached to the outer walls of the enclosure shall be secured in place with devices that may not be loosened from the outside. Screws or bolts requiring special tools for installation or removal are not acceptable.
5. A protective metallic barrier (16-gauge minimum) shall be installed between the Utility termination section and the customer distribution section.
6. Test-bypass blocks with rigid insulating barrier shall be furnished, installed and wired or bussed to the meter socket by the manufacturer. Connection sequence is LINE-LOAD from left to right. Each line and load position shall be clearly identified by ¾" minimum block letter labeling. Test-bypass cover panels shall be sealable and fitted with a lifting handle. All panels exceeding 16" in width shall require two lifting handles.
7. All Utility compartments (meter cover, demand reset cover and UGPS) shall be sealable and padlockable.
8. For identification purposes, the numeric portion of the addresses must be painted with weatherproof paint or reflective decals on the exterior face of the portion of the pedestal facing the street or drivable surface in numbers at least 1" high.
9. Photoelectric cells are not permitted in the Utility area, i.e. UGPS/meter section.
10. When service equipment is installed on a "housekeeping pad", that pad must be level and extend a minimum of 3' measured from the face of the meter panel, or a minimum of 6' when 5" conduit is required. See Figures 3 and 4 on page SG 517.6 as they also apply to this installation. If the enclosure doors are wider than 3', the housekeeping pad shall extend 1" beyond the outer edge of the equipment doors when opened at 90 degrees.
11. See pages SG 504.4 – 504.5 for working space and clearance requirements, 0 – 600 volts.

TABLE OF CONTENTS

© 1998-2017 San Diego Gas & Electric Company. All rights reserved. Removal of this copyright notice without permission is not permitted under law.

REV	CHANGE	BY	DSGN	APPV	DATE	REV	CHANGE	BY	DSGN	APPV	DATE
A	Editorial Changes	LSM	CTG	TPM	11/01/17	D					
B						E					
C						F					

X Indicates Latest Revision	Completely Revised	New Page	Information Removed	
SHEET 4 OF 5	SDG&E SERVICE STANDARDS & GUIDE			SG 519.4
	COMMERCIAL METER PEDESTALS			

Meter Pedestal Foundation Details

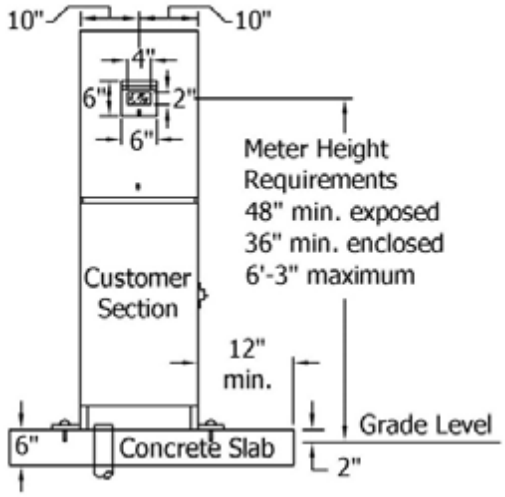

FIGURE 1
Pedestal on slab front view

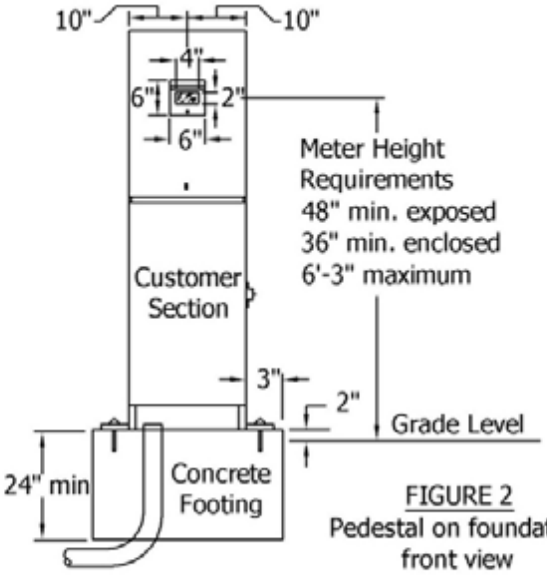

FIGURE 2
Pedestal on foundation
front view

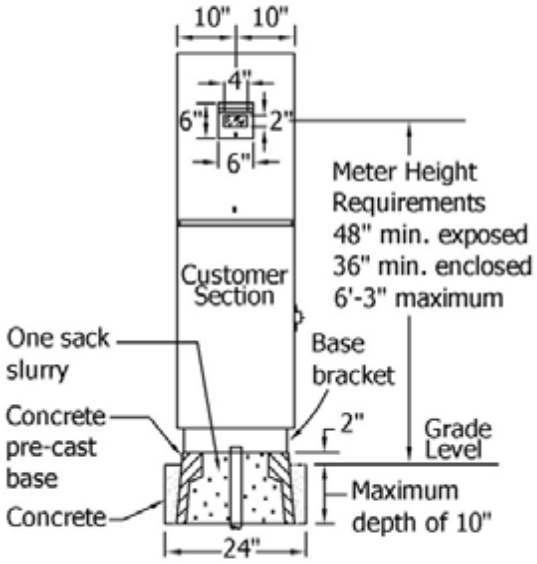

FIGURE 3
Pedestal on pre-cast base front view

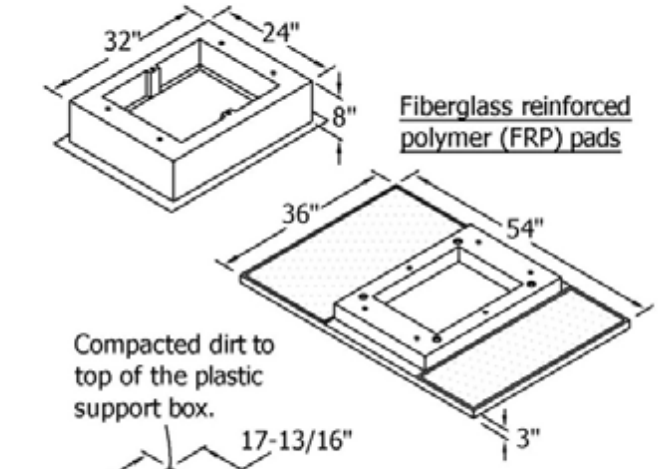

FIGURE 4
Pedestal on pad with
plastic support box
(pedestal not shown)

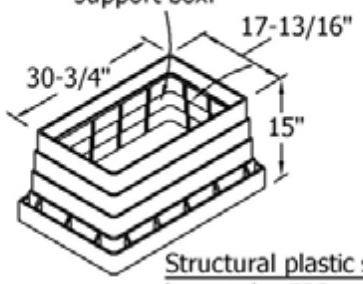

Structural plastic support
box under FRP pads

© 1998-2017 San Diego Gas & Electric Company. All rights reserved. Removal of this copyright notice without permission is not permitted under law.

REV	CHANGE	BY	DSGN	APPV	DATE	REV	CHANGE	BY	DSGN	APPV	DATE
A	Editorial Changes	LSM	CTG	TPM	11/01/17	D					
B						E					
C						F					

X Indicates Latest Revision	Completely Revised	New Page	Information Removed

TABLE OF CONTENTS

SCOPE: This standard applies to residential service only. The replacement option is not available for non-residential applications in which case a new single-phase 3-wire, 120/240 volt commercial pedestal is required. Refer to Commercial Meter Pedestals on pages SG 519.1 – 519.5.

GENERAL INFORMATION

SDG&E (Utility) Planner approval is required in advance of replacing an existing 120-volt, single-phase, 2-wire meter pedestal.

The replacement pedestal shall be listed as equipment suitable for use as service equipment and meet all requirements of the governmental Authority Having Jurisdiction (AHJ) and Utility. The total ampacity of the breakers is not to exceed 30 amps, with no more than 2 breakers.

METER PEDESTAL

The following is an illustration of the pedestal and a list of materials for a normal meter pedestal replacement. This is not intended to be all inclusive but provides the most common requirements.

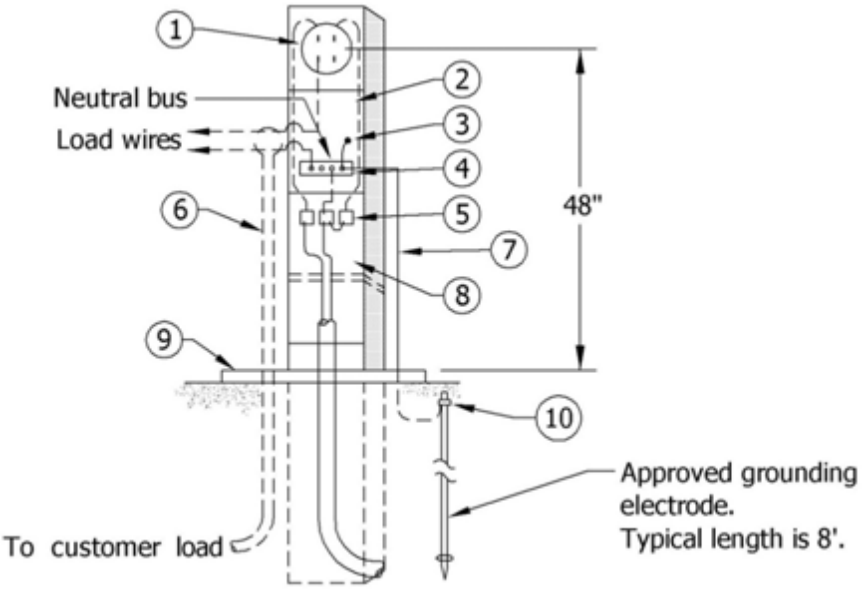

Notes:

(1) The meter socket, breaker compartment and Underground Pull Section (UGPS) must be raintight equipment. Meter socket jaws or clips shall be free of foreign material (mud, paint, plaster, etc.). RINGLESS METER SOCKETS ARE NOT ACCEPTABLE. The socket shall have a minimum rating of 100 amps and be factory-wired with the conductors in a separate or barriered wireway from the service termination lugs to the meter socket. The conductors which extend to the meter shall be connected at the service termination lugs independent of the connections for the service lateral conductors. The minimum meter height shall be 48", measured from the standing surface to centerline of meter socket. If the meter is enclosed, the minimum height may be reduced to 36".

© 1998-2017 San Diego Gas & Electric Company. All rights reserved. Removal of this copyright notice without permission is not permitted under law.

REV	CHANGE	BY	DSGN	APPV	DATE	REV	CHANGE	BY	DSGN	APPV	DATE
A	Editorial Changes	LSM	CTG	TPM	11/01/17	D					
B						E					
C						F					

X Indicates Latest Revision	Completely Revised	New Page	Information Removed	
SHEET 1 OF 2	SDG&E SERVICE STANDARDS & GUIDE			SG 520.1
	FIELD REPLACEMENT OF EXISTING 120-VOLT METER PEDESTAL			

TABLE OF CONTENTS

(2) Breaker compartment. The pedestal shall have a minimum 10,000 amp withstand rating and the breaker(s) shall have a minimum 10,000 amp Ampere Interrupting Capacity (AIC) rating.

(3) Pedestal bond lug. (May be a band screw in some models.)

(4) Customer's neutral landing block.

(5) A minimum 12" opening shall be maintained from the terminating lugs to any fixed panel below the lugs. The minimum lug height is 17" above grade line, the maximum is 48". The service terminating lugs shall be No. 8 to No. 2 aluminum-bodied pressure type for connection of the service lateral conductors.

(6) Load conductors shall not be run through the Utility's UGPS.

(7) The ground wire (No. 4 bare copper) shall be continuous from the neutral landing block in the breaker compartment to a grounding electrode system in compliance with NEC Article 250. The ground wire must be properly supported and attached to the outside of the pedestal at 24" intervals. When attaching the ground wire to the pedestal, the method of attachment shall not result in sharp projections, such as metal screws into the wire way below the neutral landing block. See the illustration on page SG 520.1 for the preferred method of installing the grounding electrode conductor.

(8) The Utility's UGPS shall be covered with a sealable, removable panel, extending from at least 2" to 6" above the concrete pad, and when removed, allow full access to the service termination lugs. Access to the Utility UGPS shall not be blocked in any manner. No customer wiring or equipment is allowed in this area.

(9) The pedestal at grade line shall have a minimum cross-sectional dimension of 4" x 8". The fixed panel for the final grade and concrete pour shall extend 2" x 6" above grade and a minimum of 18" below grade. The pedestal shall extend 24" below grade. That portion of the pedestal buried in concrete and earth shall be coated with an approved corrosion-resistant material such as zinc, cadmium or enamel to withstand deterioration. Poured concrete slab shall be 24" x 24" minimum size and have a 3-½" minimum thickness. The customer shall be responsible for the final grade of the Utility island and the included meter pedestal.

(10) The approved ground electrode clamp and conductor shall be buried, flush or somehow protected from physical damage. The clamp shall be listed for underground use. Ground rod shall not be installed in or beneath the concrete slab.

11. The new pedestal installation shall be inspected and approved by the AHJ before the Utility can energize and set the meter.

TABLE OF CONTENTS

© 1998-2017 San Diego Gas & Electric Company. All rights reserved. Removal of this copyright notice without permission is not permitted under law.

REV	CHANGE	BY	DSGN	APPV	DATE	REV	CHANGE	BY	DSGN	APPV	DATE
A	Editorial Changes	LSM	CTG	TPM	11/01/17	D					
B						E					
C						F					

X Indicates Latest Revision	Completely Revised	New Page	Information Removed	
SHEET 2 OF 2	SDG&E SERVICE STANDARDS & GUIDE			SG 520.2
	FIELD REPLACEMENT OF EXISTING 120-VOLT METER PEDESTAL			

TABLE OF CONTENTS

GENERAL INFORMATION

This standard establishes the requirements for installing new electric service and metering for wireless communication systems on private property. A communication system includes a communication equipment enclosure and communication antennae.

When an existing meter room or cabinet does not have space remaining to group the new meter panel with the existing, special permission may be granted by the SDG&E Planner and the governmental Authority Having Jurisdiction (AHJ) to locate the new meter panel and meter service disconnect as close as practical to the existing meter location outside the meter room or cabinet.

The following scenarios provide examples of acceptable meter and service locations to communication systems. It is important to note that a structure includes a water tank, light pole and similar types of construction.

SCENARIO I – COMMUNICATION SYSTEM LOCATED IN OR ON A BUILDING

The electric service to the communication system shall be served from the existing building service. The new meter shall be grouped with the existing meter(s) in accordance with all other service standards requirements. The antennae location may be in or on the building, or remotely located from the building.

Scenario I Example

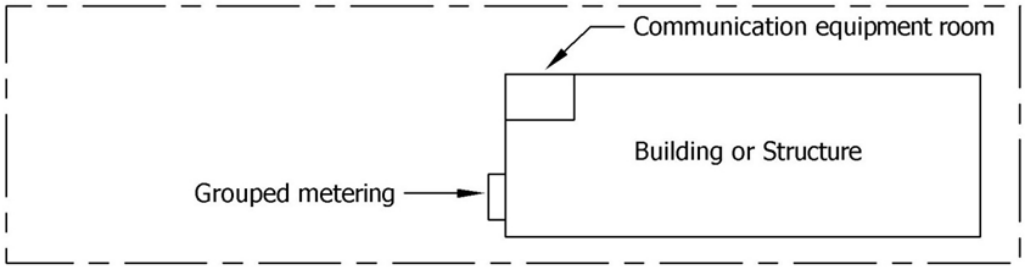

SCENARIO II – COMMUNICATION ANTENNAE IN OR ON A BUILDING WITH COMMUNICAITON EQUIPMENT REMOTE FROM BUILDING

The electric service to the communication system shall be served from the existing building service. The new meter shall be grouped with the existing meter(s) in accordance with all other service standards requirements.

Scenario II Example

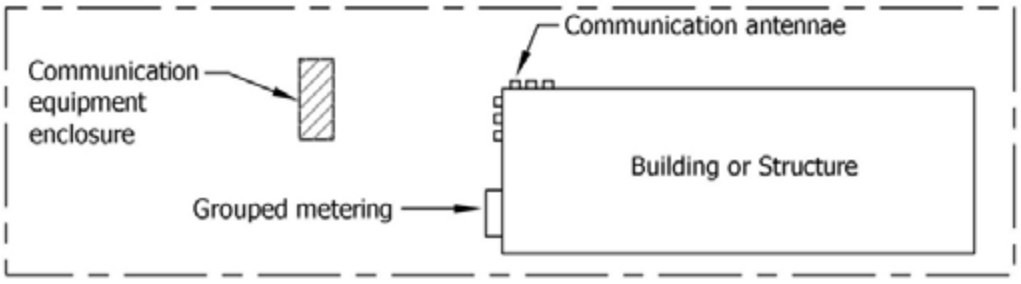

© 1998-2017 San Diego Gas & Electric Company. All rights reserved. Removal of this copyright notice without permission is not permitted under law.

REV	CHANGE	BY	DSGN	APPV	DATE	REV	CHANGE	BY	DSGN	APPV	DATE
A	Editorial Changes	LSM	BRB	TPM	11/01/17	D					
B						E					
C						F					

X Indicates Latest Revision	Completely Revised	New Page	Information Removed

SDG&E SERVICE STANDARDS & GUIDE

WIRELESS COMMUNICATIONS ON PRIVATE PROPERTY

SG 522.1

SCENARIO III – COMMUNICATION SYSTEM COMPLETELY SEPARATE FROM A RESIDENTIAL OR COMMERCIAL/INDUSTRIAL STRUCTURE WITH AN EXISTING ELECTRIC SERVICE

Scenario III Example

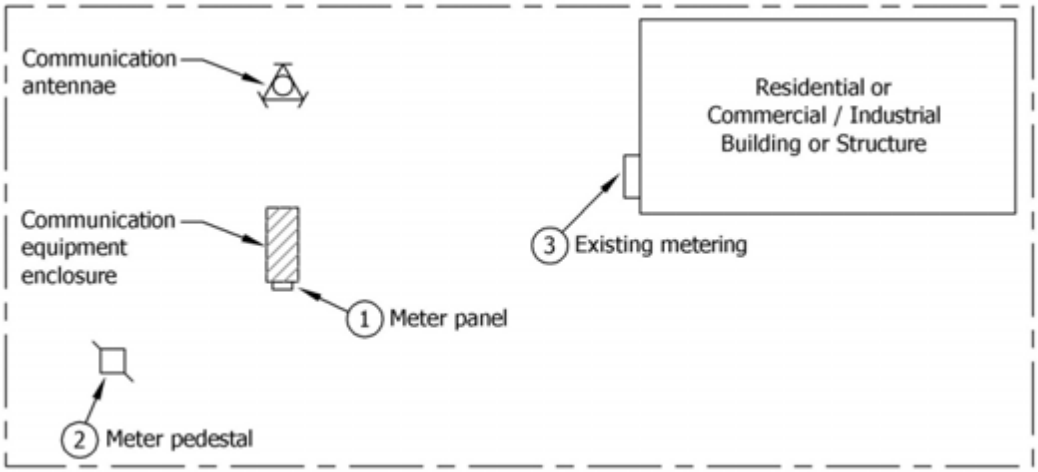

Notes:

(1) A new meter panel and service on the equipment enclosure separate from the building is acceptable.

(2) A new service and meter pedestal may be installed separate from the building and equipment enclosure. The meter pedestal shall not be located within the required property line setbacks established by the AHJ. The customer is to consult with the AHJ for setback requirements.

(3) A new meter panel grouped with existing building meter(s) is acceptable.

4. The California Electrical Code requires that grounding systems must be electrically bonded to one another when multiple services maintain electrical and/or communications systems on the same structure.

TABLE OF CONTENTS

© 1998-2017 San Diego Gas & Electric Company. All rights reserved. Removal of this copyright notice without permission is not permitted under law.

REV	CHANGE	BY	DSGN	APPV	DATE	REV	CHANGE	BY	DSGN	APPV	DATE
A	Editorial Changes	LSM	BRB	TPM	11/01/17	D					
B						E					
C						F					

X Indicates Latest Revision	Completely Revised	New Page	Information Removed

TABLE OF CONTENTS

GENERAL INFORMATION

This standard shows a customer-owned and -installed wireless communications antenna attachment on an SD&GE wood distribution pole for metered electric service.

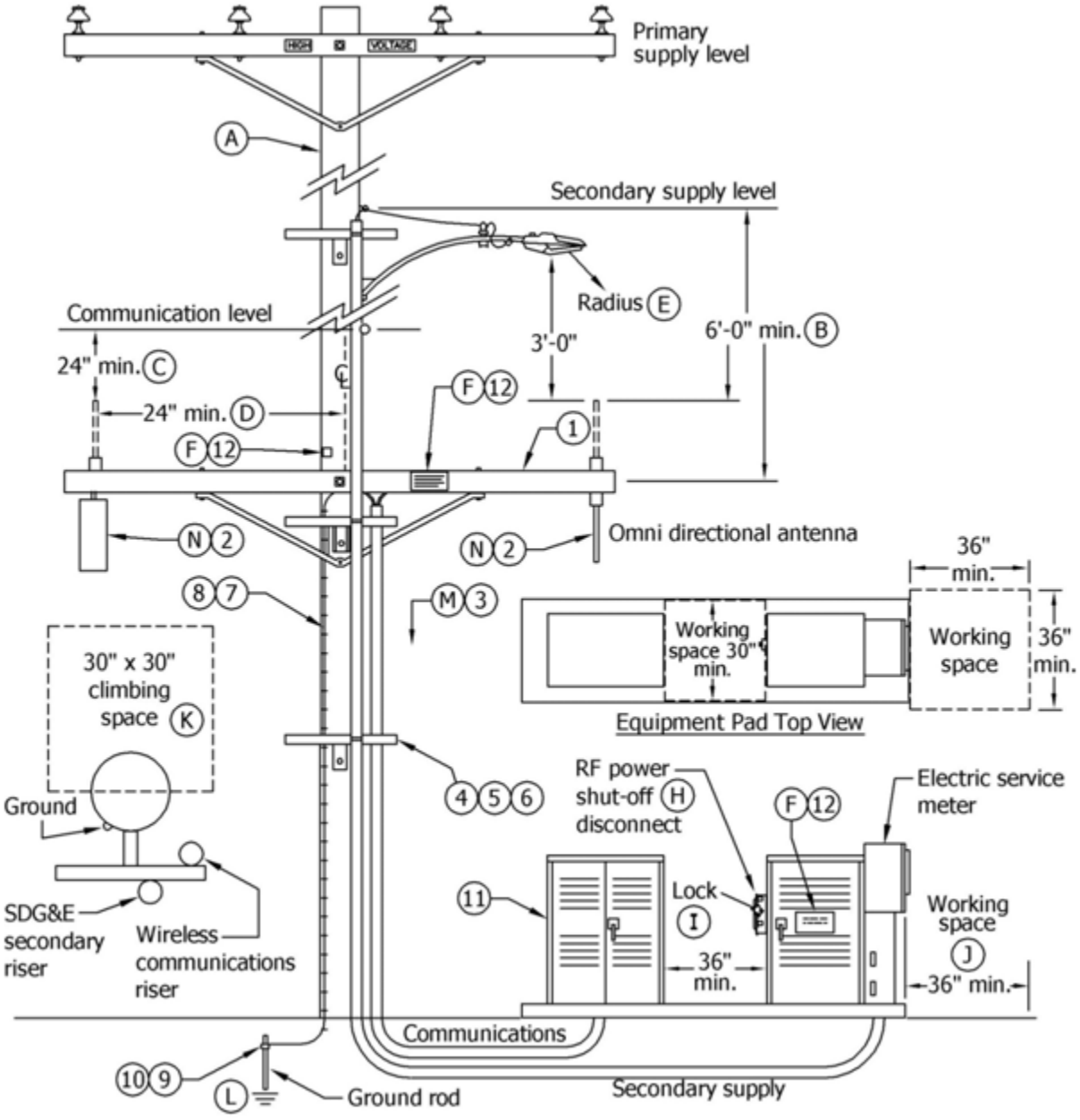

Reference OH 575.1 / UG 4650.1.

© 1998-2017 San Diego Gas & Electric Company. All rights reserved. Removal of this copyright notice without permission is not permitted under law.

REV	CHANGE	BY	DSGN	APPV	DATE	REV	CHANGE	BY	DSGN	APPV	DATE
A	Editorial Changes	LSM	CTG	TPM	11/01/17	D					
B						E					
C						F					

X Indicates Latest Revision	Completely Revised	New Page	Information Removed

SHEET 1 OF 3

SDG&E SERVICE STANDARDS & GUIDE

WIRELESS COMMUNICATIONS PROVIDER METERED ELECTRIC SERVICE

SG 523.1

Bill of Material:

Item	Description	Quantity	Const. Std. or Page No.	Stock Number
(1)	Crossarm, 3-¾" x 5-¾" x 10'-0" (8'-0" min.)	As Required	---	(G)
(2)	Customer-Owned Antenna, Directional or Omni-Directional	As Required	---	(G)
(3)	Riser Construction	As Required	1404/4204	---
(4)	Bracket, Ladder Arm	As Required	1404/4204	(G)
(5)	Channel, Double, Galvanized, 24"	As Required	1404/4204	(G)
(6)	Nut, Clamping Channel, with Spring ½"	As Required	1404/4204	(G)
(7)	#4 CU Solid Ground Wire, PVC Covered (L)	As Required	---	(G)
(8)	Staples, Galvanized, for PVC Covered Ground Wire	As Required	---	(G)
(9)	Steel Ground Rod, Copper Jacketed, ⅝" x 8'	As Required	---	(G)
(10)	Copper Bonded Ground Connector	As Required	---	(G)
(11)	Customer-Owned Ancillary Equipment	As Required	---	(G)
(12)	Tag, Ownership I.D.	1	209	(F)

Installation:

(A) Do not install a telecommunication antenna on a pole containing a three-phase transformer, booster, service restorer, capacitor, regulator, primary metering, hookstick or gang-operated switch, cutouts, or primary risers.

(B) A minimum 6' of vertical and radial clearance must be maintained from the telecommunications antennas or supporting equipment to any SDG&E supply conductor level.

(C) Antennas and supporting elements shall maintain a minimum 24" of vertical separation from communication conductors and equipment.

(D) Antennas shall maintain 24" horizontal clearance from the centerline of pole.

(E) Antennas shall maintain 36" vertical and radial clearance from street lights and mast arms.

(F) This installation must be clearly marked with the appropriate signage, per FCC, CPUC and Utility regulations. Signage to be installed and maintained by the telecommunication antenna owner. See OH Standard 209.

(G) These items supplied and installed by the telecommunication antenna owner.

Reference OH 575.2 / UG 4650.2.

© 1998-2017 San Diego Gas & Electric Company. All rights reserved. Removal of this copyright notice without permission is not permitted under law.

REV	CHANGE	BY	DSGN	APPV	DATE	REV	CHANGE	BY	DSGN	APPV	DATE
A	Editorial Changes	LSM	CTG	TPM	11/01/17	D					
B						E					
C						F					

X Indicates Latest Revision	Completely Revised	New Page	Information Removed	

SDG&E SERVICE STANDARDS & GUIDE

WIRELESS COMMUNICATIONS PROVIDER METERED ELECTRIC SERVICE

SG 523.2

TABLE OF CONTENTS

(H) A municipally approved radio frequency (RF), power shutoff disconnects, with test points, will be installed and clearly marked by the telecommunication antenna owner. This disconnect, when open, will prevent the antennas from generating RF including when on battery back-up (see Electric Standard Practice 124). Per the California Electrical Code, maintain a minimum of 36" deep by 30" wide clear working space.

(I) A cut-away lock will be provided by the telecommunication antenna owner for securing the RF power shutoff disconnect.

(J) A clear and level working space with both a width and depth of 36" must be maintained from face of meter panel.

References:

(K) Allowable working and climbing space – See OH Standard 251.

(L) Grounding methods – See OH Standard 1002.

(M) Riser Position – See OH Standard 1402 / UG Standard 4206.

(N) Any communication antenna attachments must comply with the CPUC G.O. 95 and 128 Rules.

TABLE OF CONTENTS

Reference OH 575.2 / UG 4650.2.

© 1998-2017 San Diego Gas & Electric Company. All rights reserved. Removal of this copyright notice without permission is not permitted under law.

REV	CHANGE	BY	DSGN	APPV	DATE	REV	CHANGE	BY	DSGN	APPV	DATE
A	Editorial Changes	LSM	CTG	TPM	11/01/17	D					
B						E					
C						F					

X Indicates Latest Revision	Completely Revised	New Page	Information Removed	
SHEET 3 OF 3	SDG&E SERVICE STANDARDS & GUIDE			SG 523.3
	WIRELESS COMMUNICATIONS PROVIDER METERED ELECTRIC SERVICE			

SCOPE: THIS STANDARD SHOWS A CUSTOMER-OWNED AND INSTALLED WIRELESS COMMUNICATIONS ANTENNA ATTACHMENT FOR UNMETERED (UM) ELECTRIC SERVICE ON AN SDG&E WOOD DISTRIBUTION POLE. THIS CONSTRUCTION IS **NOT ALLOWED** ON A POLE WITH EQUIPMENT OR SWITCHES INSTALLED.

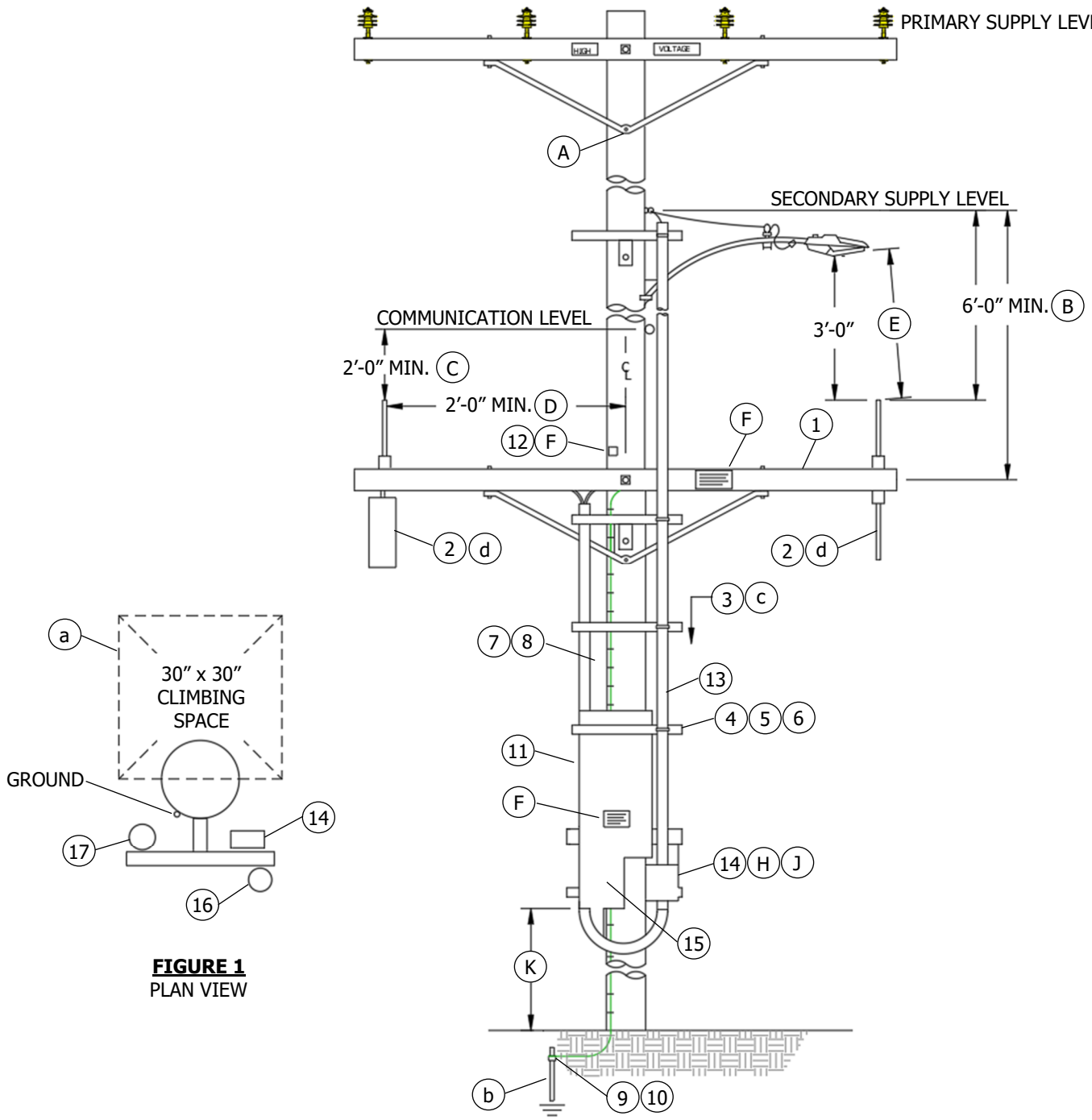

FIGURE 1
PLAN VIEW

FIGURE 1
UNMETERED (UM) ELECTRIC SERVICE FROM AN OVERHEAD SOURCE

© 1998 - 2021 San Diego Gas & Electric Company. All rights reserved. Removal of this copyright notice without permission is not permitted under law.

REV	CHANGE	DR	BY	DSN	APV	DATE	REV	CHANGE	DR	BY	DSN	APV	DATE
C							F						
B	EDITORIAL CHANGES	PEI/EDM	IPJ	IPJ	CZH	08/10/2021	E						
A	EDITORIAL CHANGES	-	LSM	BRB	TPM	11/01/2017	D						

X	Indicates Latest Revision		Completely Revised		New Page		Information Removed

SDG&E ELECTRIC SERVICE STANDARDS & GUIDES

TABLE OF CONTENTS

INSTALLATION:

(A) DO NOT INSTALL A TELECOMMUNICATION ANTENNA ON A POLE CONTAINING A THREE-PHASE TRANSFORMER, BOOSTER, SERVICE RESTORER, CAPACITOR, REGULATOR, PRIMARY METERING, HOOKSTICK OR GANG OPERATED SWITCH, CUTOUTS, OR PRIMARY RISERS.

(B) A MINIMUM 6 FEET OF VERTICAL AND RADIAL CLEARANCE MUST BE MAINTAINED FROM THE TELECOMMUNICATIONS ANTENNAS OR SUPPORTING EQUIPMENT TO ANY SDG&E SUPPLY CONDUCTOR LEVEL.

(C) ANTENNAS AND SUPPORTING ELEMENTS SHALL MAINTAIN A MINIMUM 24 INCHES OF VERTICAL SEPARATION FROM COMMUNICATION CONDUCTORS AND EQUIPMENT.

(D) ANTENNAS SHALL MAINTAIN 24 INCHES HORIZONTAL CLEARANCE FROM CENTERLINE OF POLE.

(E) ANTENNAS SHALL MAINTAIN 36 INCHES VERTICAL AND RADIAL CLEARANCE FROM STREET LIGHTS AND MAST ARMS.

(F) THIS INSTALLATION MUST BE CLEARLY MARKED WITH THE APPROPRIATE SIGNAGE, PER FCC, CPUC AND UTILITY REGULATIONS. SIGNAGE TO BE INSTALLED AND MAINTAINED BY THE TELECOMMUNICATION ANTENNA OWNER. (e)

(G) THESE ITEMS SUPPLIED AND INSTALLED BY THE TELECOMMUNICATION ANTENNA OWNER.

(H) A MUNICIPALLY APPROVED RADIO FREQUENCY (RF), POWER SHUTOFF DISCONNECTS, WITH TEST POINTS, WILL BE INSTALLED AND CLEARLY MARKED BY THE TELECOMMUNICATIONS ANTENNA OWNER. THIS DISCONNECT, WHEN OPEN WILL PREVENT THE ANTENNAS FROM GENERATED RF INCLUDING WHEN ON BATTERY BACKUP. PER THE CALIFORNIA ELECTRICAL CODE, ENFORCED BY THE GOVERNMENTAL AUTHORITY HAVING JURISDICTION (AHJ), MAINTAIN A MINIMUM OF 36 INCHES DEEP AND 30 INCHES WIDE CLEAR WORKING SPACE. (f)

(J) A CUTAWAY LOCK WILL BE PROVIDED BY THE TELECOMMUNICATION ANTENNA OWNER FOR SECURING THE RF POWER SHUTOFF DISCONNECT.

(K) CABINET TO BE MOUNTED AT 10 FEET FROM GROUND LEVEL TO BOTTOM OF CABINET WHEN NOT SUBJECT TO TRAFFIC CONTACT. IF VULNERABLE TO VEHICLE DAMAGE, MOUNT CABINET AT 13'-6" FROM GROUND LEVEL TO BOTTOM OF CABINET. CONSIDER LARGE VEHICLES PARKING NEXT TO CURB.

BILL OF MATERIALS:

TABLE OF CONTENTS

ITEM	DESCRIPTION	QUANTITY	STANDARD PAGE	STOCK NUMBER	DESIGN UNITS
1	CROSSARM, 3 3/4" X 5 3/4" X 10'-0" (8'-0" MIN.)	AS REQ'D	--	(G)	--
2	ANTENNA, CUSTOMER-OWNED, DIRECTIONAL OR OMNI-DIRECTIONAL		--		--
3	RISER CONSTRUCTION		1404/4204	--	--
4	BRACKET, LADDER ARM			(G)	--
5	CHANNEL, DOUBLE, GALVANIZED, 24"				--
6	NUT, CLAMPING CHANNEL, WITH SPRING ½"				--
7	WIRE, #4 CU SOLID GROUND, PVC COVERED (b)		--		--
8	STAPLES, GALVANIZED, FOR PVC COVERED GROUND WIRE		--		--
9	GROUND ROD, STEEL, COPPER JACKETED, 5/8" X 8'-0"		--		--
10	CONNECTOR, GROUND, COPPER BONDED		--		--
11	ANCILLARY EQUIPMENT, CUSTOMER-OWNED		--		--
12	TAG, OWNERSHIP I.D.	3	209	(F)	--
13	RISER, SECONDARY, 2"	AS REQ'D	--	--	--
14	DISCONNECT, RF POWER SHUT-OFF		--	--	--
15	FUSE DEVICE, SECONDARY, POWER SHUT-OFF		--	--	--

© 1998 - 2021 San Diego Gas & Electric Company. All rights reserved. Removal of this copyright notice without permission is not permitted under law.

REV	CHANGE	DR	BY	DSN	APV	DATE	REV	CHANGE	DR	BY	DSN	APV	DATE
C							F						
B	EDITORIAL CHANGES	PEI/EDM	IPJ	IPJ	CZH	08/10/2021	E						
A	EDITORIAL CHANGES	-	LSM	BRB	TPM	11/01/2017	D						

BILL OF MATERIALS (CONT'D):

ITEM	DESCRIPTION	QUANTITY	STANDARD PAGE	STOCK NUMBER	DESIGN UNITS
16	RISER, SECONDARY, SDG&E	AS REQ'D	--	--	--
17	RISER, WIRELESS COMMUNICATIONS		--	--	--

NOTES: NONE

REFERENCE:

(a) FOR ALLOWABLE WORKING AND CLIMBING SPACE, SEE OH251.

(b) FOR GROUNDING METHODS, SEE OH1002.

(c) FOR RISER POSITION, SEE OH1402UG4202.

(d) ANY COMMUNICATION ANTENNA ATTACHMENTS MUST COMPLY WITH CPUC G.O. 95 AND 128 RULES.

(e) SEE OH209

(f) SEE ESP124

TABLE OF CONTENTS

© 1998 - 2021 San Diego Gas & Electric Company. All rights reserved. Removal of this copyright notice without permission is not permitted under law.

REV	CHANGE	DR	BY	DSN	APV	DATE	REV	CHANGE	DR	BY	DSN	APV	DATE
C							F						
B	EDITORIAL CHANGES	PEI/EDM	IPJ	IPJ	CZH	08/10/2021	E						
A	EDITORIAL CHANGES	-	LSM	BRB	TPM	11/01/2017	D						

SCOPE: THIS STANDARD ILLUSTRATES INSTALLATION OF UNMETERED ELECTRIC SERVICE FROM AN UNDERGROUND SOURCE.

ATTENTION:

* THE INSTALLATION AND ALL MATERIALS SHOWN IN THE ILLUSTRATIONS BELOW ARE PROVIDED BY THE CUSTOMER.

** ALL INSTALLATIONS MUST COMPLY WITH THE REQUIREMENTS OF AND BE INSPECTED BY, THE AHJ AND SDG&E (UTILITY).

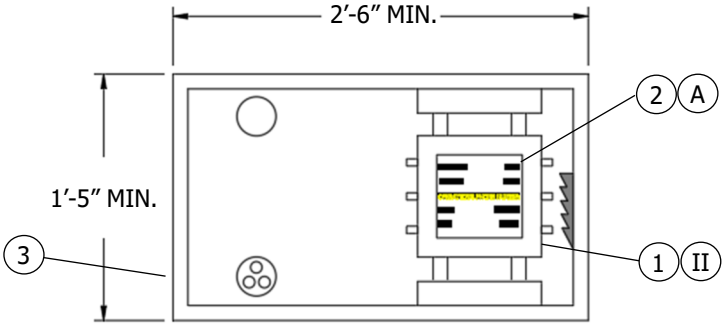

FIGURE 1
TOP VIEW

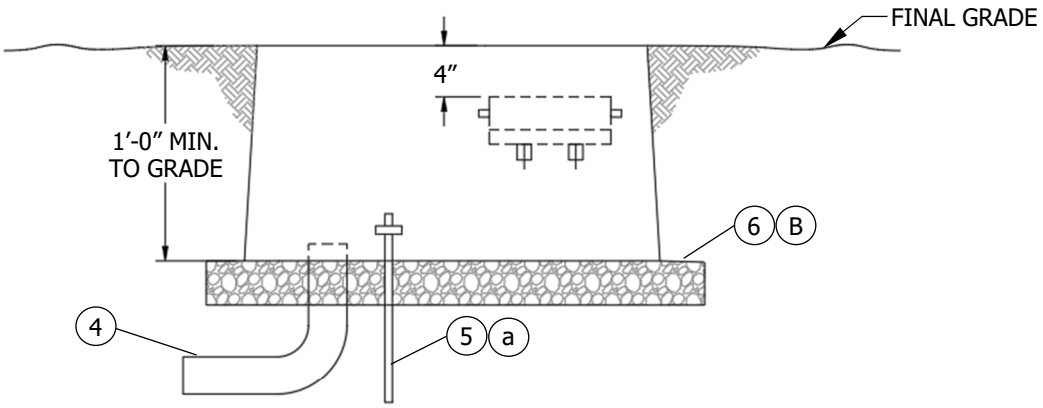

FIGURE 1
SIDE VIEW

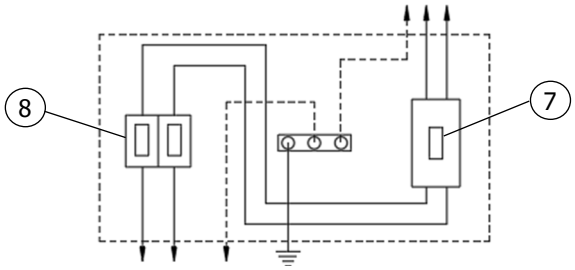

FIGURE 2
WIRING DIAGRAM INSIDE FUSE SPLICE BOX

TABLE OF CONTENTS

© 1998 - 2021 San Diego Gas & Electric Company. All rights reserved. Removal of this copyright notice without permission is not permitted under law.

REV	CHANGE	DR	BY	DSN	APV	DATE	REV	CHANGE	DR	BY	DSN	APV	DATE
C							F						
B	EDITORIAL CHANGES	PEI/EDM	IPJ	IPJ	CZH	08/10/2021	E						
A	EDITORIAL CHANGES	-	LSM	BRB	TPM	11/01/2017	D						

	X	Indicates Latest Revision		Completely Revised		New Page		Information Removed

INSTALLATION:

(A) MOUNT FUSE BOX SECURELY ON SUPPORTS INSIDE.

(B) GRAVEL BASE SUITABLE FOR PROPER DRAINAGE REQUIRED.

BILL OF MATERIALS:

ITEM	DESCRIPTION	QUANTITY	STANDARD PAGE	STOCK NUMBER	DESIGN UNITS
1	FUSE BOX	AS REQ'D	--	--	--
2	PLAQUE, SUITABLE, FUSE BOX, IDENTIFICATION		SHEET 6	--	--
3	HANDHOLE, CUSTOMER OWNED AND INSTALLED		--	--	--
4	CABLE AND CONDUIT, CUSTOMER		--	--	--
5	GROUNDING ELECTRODES		--	--	--
6	GRAVEL BASE		--	--	--
7	BREAKER		--	--	--
8	FUSES		--	--	--

NOTES:

I. ALTERNATE FUSING METHODS:

a. FUSED DISCONNECT SUITABLE FOR UNDERGROUND APPLICATION, OR IN A SUITABLE ENCLOSURE.

(II) FUSE BOX TO BE LOCKED AND SEALED BY SDG&E.

REFERENCE:

(a) SEE CEC/AHJ REQUIREMENTS

TABLE OF CONTENTS

© 1998 - 2021 San Diego Gas & Electric Company. All rights reserved. Removal of this copyright notice without permission is not permitted under law.

REV	CHANGE	DR	BY	DSN	APV	DATE	REV	CHANGE	DR	BY	DSN	APV	DATE
C							F						
B	EDITORIAL CHANGES	PEI/EDM	IPJ	IPJ	CZH	08/10/2021	E						
A	EDITORIAL CHANGES	-	LSM	BRB	TPM	11/01/2017	D						

SCOPE: THIS STANDARD ILLUSTRATES UNMETERED ELECTRIC SERVICE PLAQUE REQUIREMENTS.

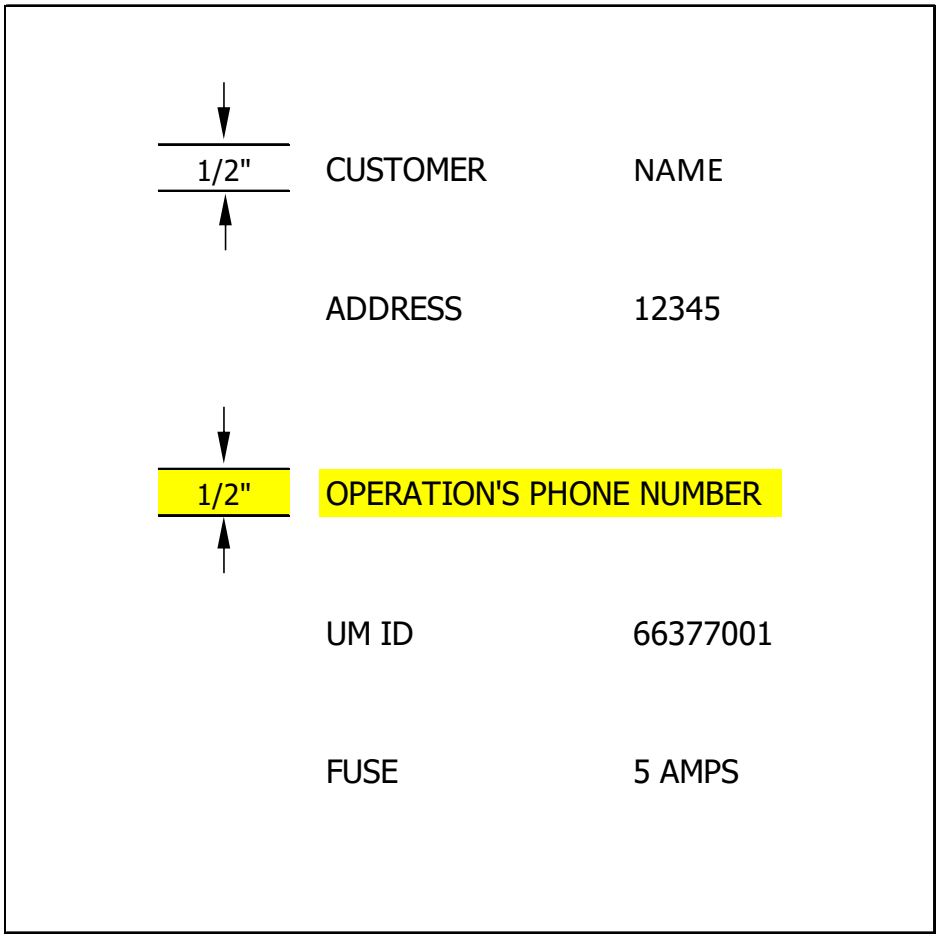

FIGURE 1
TYPICAL PLAQUE CONFIGURATION

INSTALLATION: NONE

BILL OF MATERIALS: NONE

NOTES:

I. THE PLAQUE SHALL BE PLASTIC WITH ENGRAVED OR MACHINE PRINTED LETTERS IN CONTRASTING COLOR TO THE PLAQUE AND SHALL BE PERMANENTLY ATTACHED TO THE FUSE BOX WITH POP RIVETS OR SCREWS.

REFERENCE: NONE

TABLE OF CONTENTS

© 1998 - 2021 San Diego Gas & Electric Company. All rights reserved. Removal of this copyright notice without permission is not permitted under law.

REV	CHANGE	DR	BY	DSN	APV	DATE	REV	CHANGE	DR	BY	DSN	APV	DATE
C							F						
B	EDITORIAL CHANGES	PEI/EDM	IPJ	IPJ	CZH	08/10/2021	E						
A	EDITORIAL CHANGES	-	LSM	BRB	TPM	11/01/2017	D						

X Indicates Latest Revision	Completely Revised	New Page	Information Removed	

SCOPE: THIS STANDARD SHOWS AND DESCRIBES THE INSTALLATION OF A CUSTOMER-OWNED FUSED SERVICE POLE. THIS INSTALLATION IS SUBJECT TO ALL REQUIREMENTS OF AND INSPECTION BY, THE AHJ AND SDG&E (UTILITY).

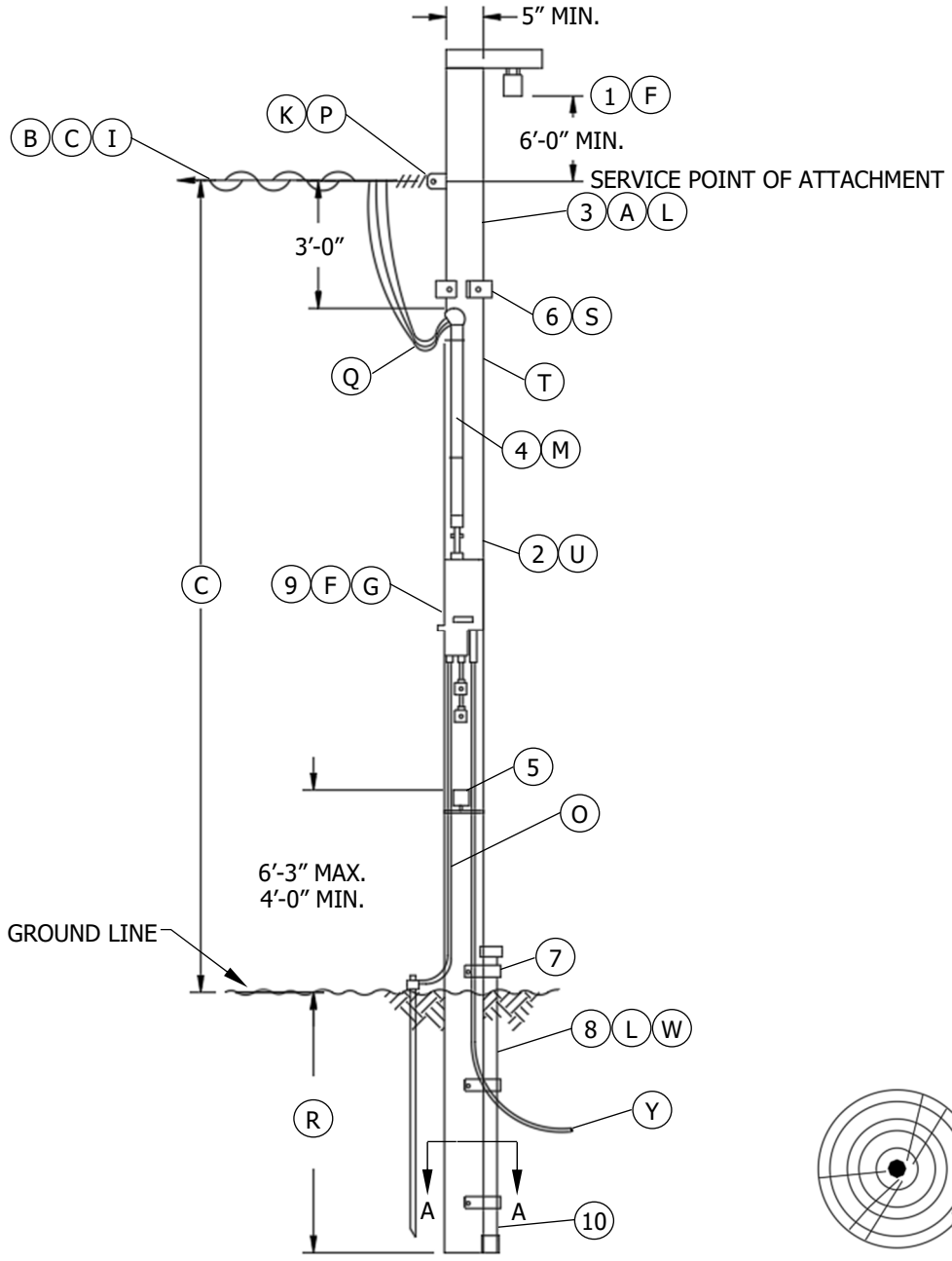

FIGURE 1

FIGURE 1
POLE DEPTH CONDUIT
VIEW A-A

© 1998 - 2021 San Diego Gas & Electric Company. All rights reserved. Removal of this copyright notice without permission is not permitted under law.

REV	CHANGE	DR	BY	DSN	APV	DATE	REV	CHANGE	DR	BY	DSN	APV	DATE
C							F						
B	EDITORIAL CHANGES	PEI/EDM	IPJ	IPJ	CZH	08/10/2021	E						
A	EDITORIAL CHANGES	-	LSM	BRB	TPM	11/01/2017	D						

X Indicates Latest Revision | Completely Revised | New Page | Information Removed

SDG&E ELECTRIC SERVICE STANDARDS & GUIDES

UNMETERED ELECTRIC SERVICE ON CUSTOMER-OWNED SERVICE POLE

SG524.7

TABLE OF CONTENTS



METHOD 1
IMPREGNATED FIBER
CONDUIT OF 1/4"
MINIMUM THICKNESS

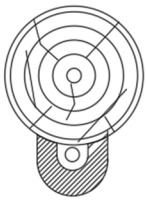

METHOD 2
WOOD MOULDING OF
1 1/2" MINIMUM
THICKNESS

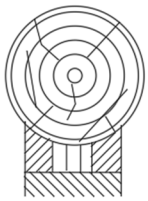

METHOD 3
BOXING OF WOOD
OF 1 1/2" MINIMUM (Z)
THICKNESS

FIGURE 2
ALTERNATE METHODS (N)

INSTALLATION:

(A) THESE ARE MINIMUM REQUIREMENTS FOR A PERMANENT CUSTOMER-OWNED FUSED SERVICE POLES.

(B) POLE LOCATION: THE POLE SHALL BE SET NOT MORE THAN 100 FEET, OR LESS THAN 10 FEET, FROM THE SURFACE OF THE UTILITY'S SERVICE POLE AND SO LOCATED THAT ALL REQUIRED SERVICE DROP CLEARANCES WILL BE OBTAINED FROM GROUND, BUILDINGS, AND STRUCTURES.

(C) **TABLE 2**

SERVICE DROP MINIMUM CLEARANCES	
LOCATION	**MIN. CLEARANCE (FT) (E)**
AT CENTER OF STREET OR 12'-0" FROM CURB, WHICHEVER IS LESS	18
AT CURB LINE	16
OVER COMMERCIAL OR INDUSTRIAL DRIVEWAYS, PARKING AREAS, OR AREAS CAPABLE OF BEING TRAVERSED BY VEHICLES	16
OVER RESIDENTIAL DRIVEWAYS	12 (D)
OVER AGRICULTURAL AREAS	15
OVER RAILROADS OR FOR OTHER SPECIAL CONDITIONS	CONSULT THE UTILITY'S PLANNER

(D) MAY BE REDUCED TO 10 FEET IF SELF-SUPPORTING CABLE (SSC) SERVICE. THE UTILITY WILL USE SSC. THE TYPE OF CONSTRUCTION USE BY THE CUSTOMER IS THEIR OPTION.

(E) WHERE CLEARANCES CANNOT BE OBTAINED WITH THE 25-FOOT POLE SHOWN, A 35-FOOT MAXIMUM POLE SHALL BE USED.

(F) REFER TO SHEETS 1-5 FOR SPECIFICATIONS FOR INSTALLING CUSTOMER-OWNED AND INSTALLED WIRELESS COMMUNICATIONS ANTENNAS.

(G) ALL CUSTOMER EQUIPMENT SHALL HAVE AN IDENTIFYING PLAQUE INDICATING CUSTOMER NAME, ADDRESS, OPERATION'S PHONE NUMBER, UM IDENTIFICATION NUMBER AND FUSE SIZE. THE PLAQUE SHALL BE PLASTIC WITH ENGRAVED OR MACHINE PRINTED LETTERS IN CONTRASTING COLOR TO THE PLAQUE AND SHALL BE PERMANENTLY ATTACHED TO THE FUSE BOX WITH POP RIVETS OR SCREWS. REFER TO SHEETS 4 AND 5 FOR SPECIFICATIONS.

H. PERMIT AND INSPECTION MUST BE OBTAINED FROM THE AHJ BEFORE SERVICE WILL BE CONNECTED BY THE UTILITY.

© 1998 - 2021 San Diego Gas & Electric Company. All rights reserved. Removal of this copyright notice without permission is not permitted under law.

REV	CHANGE	DR	BY	DSN	APV	DATE	REV	CHANGE	DR	BY	DSN	APV	DATE
C							F						
B	EDITORIAL CHANGES	PEI/EDM	IPJ	IPJ	CZH	08/10/2021	E						
A	EDITORIAL CHANGES	-	LSM	BRB	TPM	11/01/2017	D						

TABLE OF CONTENTS

INSTALLATION (CONT'D):

J. CONSULT THE UTILITY'S PLANNER FOR SERVICE REQUIREMENTS WHENEVER THREE PHASE SERVICE IS DESIRED.

(K) THE UTILITY WILL FURNISH AND INSTALL THE SERVICE DROP AND SERVICE DROP RACK OR WIRE HOLDERS. ALL OTHER EQUIPMENT, INCLUDING POLE, SHALL BE FURNISHED AND INSTALLED BY THE CUSTOMER.

(L) THE CUSTOMER IS TO DIG THE HOLE IN NATURAL SOIL. BACKFILL MUST BE COMPACTED TO 90% MINIMUM WITHIN A 5-FOOT RADIUS OF THE POLE. POLE DEPTH WILL BE CONFIRMED BY INSERTION OF A GROUND ROD OR SIMILAR PROBE INTO THE PVC DEPTH CONDUIT ATTACHED TO THE CLIMBABLE POLE. INSTALL A REMOVABLE CAP ON TOP OF THE DEPTH CONDUIT TO PREVENT FALLING DEBRIS FROM ENTERING THE CONDUIT.

(M) ALL CONDUIT FITTINGS MUST BE RAINTIGHT. APPROVED WIRE, NOT LESS THAN 8 AWG, SHALL BE USED IN THE SERVICE ENTRANCE CONDUIT.

(N) COVERING TO BE STRAPPED TO THE POLE WITH GALVANIZED TWO-HOLE PIPE STRAPS SPACED NOT TO EXCEED 3 FEET APART.

(O) THE SERVICE GROUND IS TO COMPLY WITH ALL APPLICABLE CODES AND ORDINANCES AND BE MECHANICALLY PROTECTED IN COMPLIANCE WITH G.O. 95 PER ONE OF THE FOLLOWING METHODS:

1. ENCASED IN RIGID STEEL CONDUIT
2. MINIMUM NO. 8 AWG ARMORED COPPER GROUND WIRE
3. COVERED BY A MINIMUM OF ONE OF THE FOLLOWING:

   HARDWOOD MOLDING (OF OAK OR ROCK ELM) 3/8" IN THICKNESS

   DOUGLAS FIR MOLDING 1/2" IN THICKNESS

   RIGID CONDUIT OR RIGID U-SHAPE MOLDING OF A MINIMUM SCHEDULE 40 PVC

   POLY-PROTECTED GROUND WIRE

(P) CUSTOMER TO WIRE OUT 3 FEET BELOW TOP OF POLE.

(Q) PROVIDE AT LEAST 18 INCHES OF WIRE OUTSIDE OF SERVICE HEAD.

(R) **TABLE 1**

POLE SETTING DEPTH	
POLE HEIGHT (FT)	**SETTING DEPTH**
25	5'-0"
30	5'-6"
35	5'-6"

(S) BOLT WOOD BLOCKS TO POLE IN 1/2-INCH GAINS. BLOCK NOT REQUIRED FOR SCHEDULE 40 PVC PLASTIC CONDUIT RUNS.

(T) EXTEND PROTECTIVE COVERING OVER METALLIC CONDUITS TO BOTTOM OF SERVICE HEADS. DO NOT LEAVE CONDUITS EXPOSED.

(U) INSTALL STRAPS BELOW FIBER CONDUITS TO PREVENT SLIPPING.

(W) CAPPED ON THE BOTTOM AND STRAPPED TO THE POLE

(Y) WHEN CUSTOMER'S LOAD CONDUCTORS ARE UNDERGROUND, INSTALL CONDUIT AS INDICATED BY DASHED LINES.

(Z) COVER IS TO BE NAILED TO SIDE PIECES.

TABLE OF CONTENTS

© 1998 - 2021 San Diego Gas & Electric Company. All rights reserved. Removal of this copyright notice without permission is not permitted under law.

REV	CHANGE	DR	BY	DSN	APV	DATE	REV	CHANGE	DR	BY	DSN	APV	DATE
C							F						
B	EDITORIAL CHANGES	PEI/EDM	IPJ	IPJ	CZH	08/10/2021	E						
A	EDITORIAL CHANGES	-	LSM	BRB	TPM	11/01/2017	D						

BILL OF MATERIALS:

ITEM	DESCRIPTION		QUANTITY	STANDARD PAGE	STOCK NUMBER	DESIGN UNITS
1	ANTENNA		AS REQ'D	--	--	--
2	STRAP, PIPE			--	--	--
3	POLE, TREATED, FULL LENGTH ROUND, 25'-0" CLASS 5 MIN.			--	--	--
4	CONDUIT, SERVICE ENTRANCE	PVC, SCHEDULE 40, PLASTIC (PREFERRED)		--	--	--
		IRON, RIGID, GALV. 3/4" MIN. WITH PROTECTIVE COVERING (ALTERNATE)				
5	FUSE BOX, CUSTOMER-OWNED			--	--	--
6	WOOD BLOCK, 4" X 4" X 6"			--	--	--
7	REMOVABLE CAP			--	--	--
8	CONDUIT, PVC, SCHEDULE 40, 6'-0", 3/4", POLE DEPTH			--	--	--
9	EQUIPMENT, CUSTOMER-OWNED			--	--	--
10	CONDUIT CAP			--	--	--

NOTES:

(I) MAXIMUM LENGTH OF SERVICE DROP SPAN SHALL BE 100 FEET.

REFERENCE:

a. SEE OH645

TABLE OF CONTENTS

© 1998 - 2021 San Diego Gas & Electric Company. All rights reserved. Removal of this copyright notice without permission is not permitted under law.

REV	CHANGE	DR	BY	DSN	APV	DATE	REV	CHANGE	DR	BY	DSN	APV	DATE
C							F						
B	EDITORIAL CHANGES	PEI/EDM	IPJ	IPJ	CZH	08/10/2021	E						
A	EDITORIAL CHANGES	-	LSM	BRB	TPM	11/01/2017	D						

X Indicates Latest Revision | Completely Revised | New Page | Information Removed

SDG&E ELECTRIC SERVICE STANDARDS & GUIDES

UNMETERED ELECTRIC SERVICE ON CUSTOMER-OWNED SERVICE POLE

SG524.10

SCOPE: THIS STANDARD SHOWS AND DESCRIBES THE INSTALLATION OF A CUSTOMER-OWNED AND INSTALLED WIRELESS COMMUNICATIONS ANTENNA ATTACHMENT ON A DIRECT BURIAL OR FOUNDATION POLE WITH CONVENTIONAL LUMINAIRE FOR ROADWAY LIGHTING OWNED BY SDG&E.

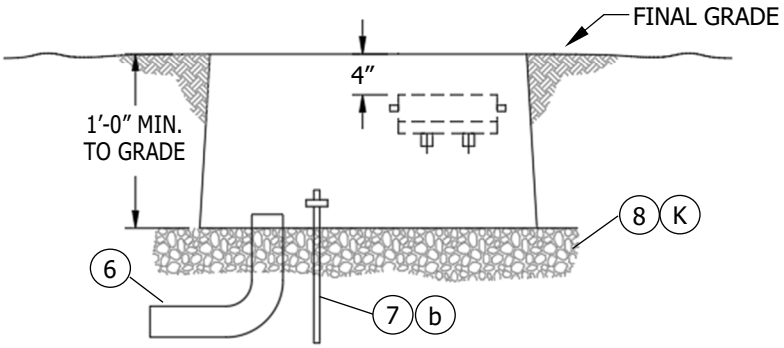

FIGURE 1
SIDE VIEW (H)

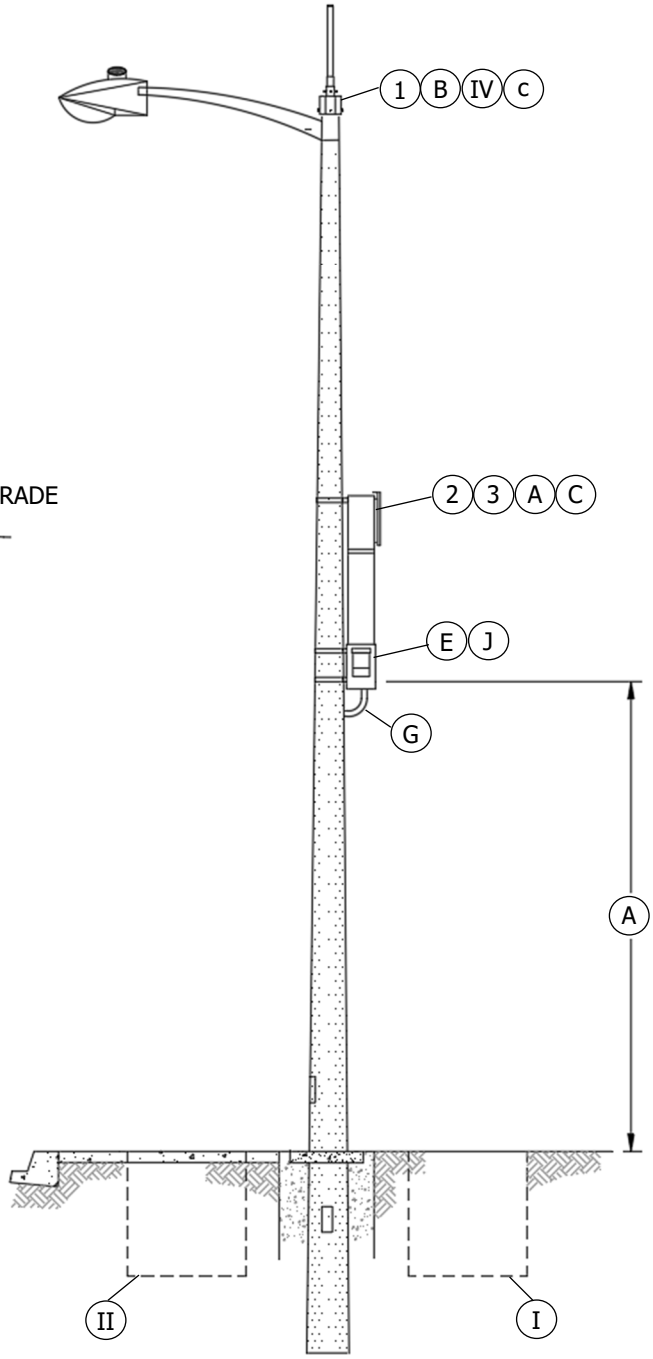

FIGURE 1
UNMETERED ELECTRIC SERVICE ON AN SDG&E-OWNED STREET LIGHT POLE

© 1998 - 2021 San Diego Gas & Electric Company. All rights reserved. Removal of this copyright notice without permission is not permitted under law.

REV	CHANGE	DR	BY	DSN	APV	DATE	REV	CHANGE	DR	BY	DSN	APV	DATE
C							F						
B	EDITORIAL CHANGES	PEI/EDM	IPJ	IPJ	CZH	08/10/2021	E						
A	EDITORIAL CHANGES	-	LSM	BRB	TPM	11/01/2017	D						

X Indicates Latest Revision	Completely Revised	New Page	Information Removed	
SDG&E ELECTRIC SERVICE STANDARDS & GUIDES				
SHEET 11 OF 14	UNMETERED ELECTRIC SERVICE			SG524.11

TABLE OF CONTENTS

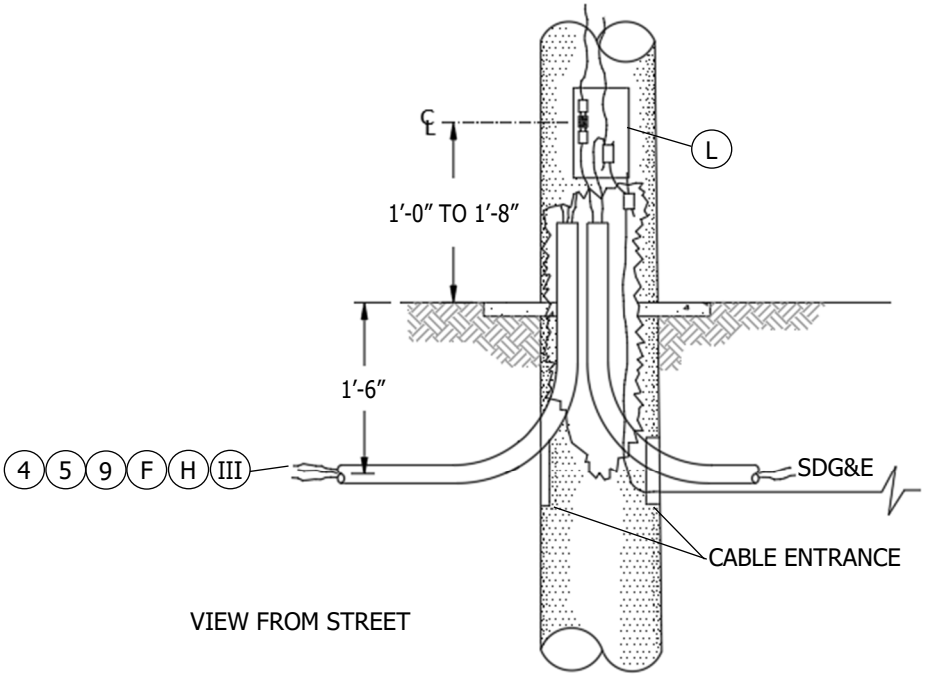

EXAMPLE 1
DIRECT BURIED POLE

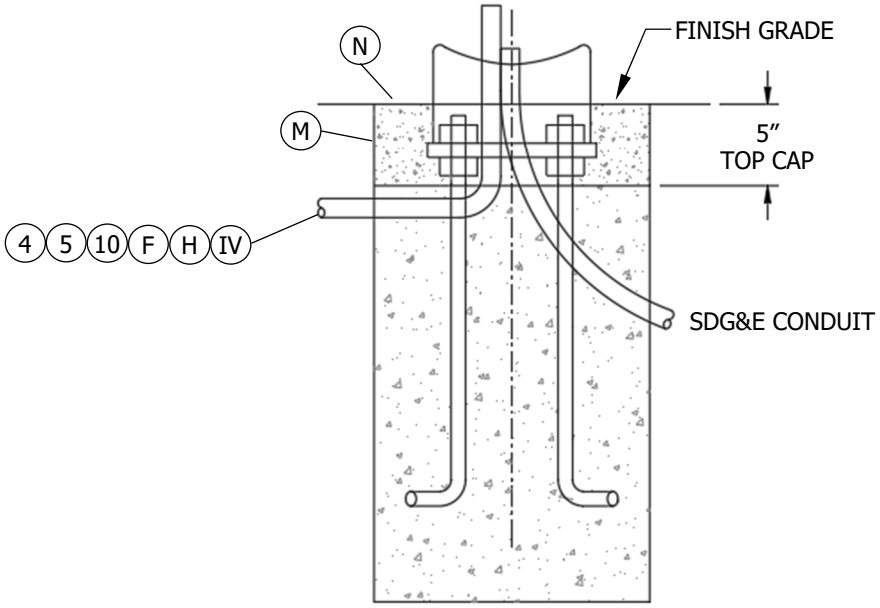

EXAMPLE 2
POURED FOUNDATION POLE

FIGURE 2

© 1998 - 2021 San Diego Gas & Electric Company. All rights reserved. Removal of this copyright notice without permission is not permitted under law.

REV	CHANGE	DR	BY	DSN	APV	DATE	REV	CHANGE	DR	BY	DSN	APV	DATE
C							F						
B	EDITORIAL CHANGES	PEI/EDM	IPJ	IPJ	CZH	08/10/2021	E						
A	EDITORIAL CHANGES	-	LSM	BRB	TPM	11/01/2017	D						

X Indicates Latest Revision | Completely Revised | New Page | Information Removed

SDG&E ELECTRIC SERVICE STANDARDS & GUIDES

TABLE OF CONTENTS

INSTALLATION:

(A) ANCILLARY COMMUNICATIONS EQUIPMENT MUST BE BANDED TO SDG&E'S STREET LIGHT POLE. CABINET TO BE MOUNTED AT 10 FEET FROM GROUND LEVEL TO BOTTOM OF CABINET WHEN NOT SUBJECT TO TRAFFIC CONTACT. IF VULNERABLE TO VEHICLE DAMAGE, MOUNT CABINET AT 13'-6" FROM GROUND LEVEL TO BOTTOM OF CABINET. CONSIDER LARGE VEHICLES PARKING NEXT TO CURB.

(B) THE CUSTOMER-OWNED ANTENNA MUST FIT AND FASTEN SECURELY OVER THE TOP OF THE STREET LIGHT POLE, AND ALL CABLES WILL BE REQUIRED TO BE INSTALLED WITHIN THE HOLLOW PORTION OF THE STREET LIGHT POLE.

(C) THIS INSTALLATION MUST BE CLEARLY MARKED WITH THE APPROPRIATE SIGNAGE, PER FCC, CPUC AND UTILITY REGULATIONS. SIGNAGE TO BE INSTALLED AND MAINTAINED BY THE TELECOMMUNICATION ANTENNA OWNER. (d)

(D) THESE ITEMS SUPPLIED AND INSTALLED BY THE TELECOMMUNICATIONS ANTENNA OWNER.

(E) A MUNICIPALLY APPROVED RADIO FREQUENCY (RF), POWER SHUTOFF DISCONNECTS, WITH TEST POINTS, WILL BE INSTALLED AND CLEARLY MARKED BY THE TELECOMMUNICATIONS ANTENNA OWNER. THIS DISCONNECT, WHEN OPEN WILL PREVENT THE ANTENNAS FROM GENERATED RF INCLUDING WHEN ON BATTERY BACKUP. PER THE CALIFORNIA ELECTRICAL CODE, ENFORCED BY THE GOVERNMENTAL AUTHORITY HAVING JURISDICTION (AHJ), MAINTAIN A MINIMUM OF 36 INCHES DEEP AND 30 INCHES WIDE CLEAR WORKING SPACE. (e)

(F) CUSTOMER-OWNED ANCILLARY EQUIPMENT MUST BE SECURELY GROUNDED PER G.O. 95 AND LOCAL REQUIREMENTS. CUSTOMER TO PROVIDE THEIR OWN GROUNDING SYSTEM. ATTACHMENT TO SDG&E'S GROUNDING SYSTEM, WHICH INCLUDES, BUT IS NOT LIMITED TO, THE GROUNDING ELECTRODE AND GROUNDING ELECTRODE CONDUCTOR, IS NOT ALLOWED. (c)

(G) THERE CAN ONLY BE ONE HOLE DRILLED IN THE STREET LIGHT POLE FOR INSTALLATION OF THE POWER CABLE, COAXIAL CABLE AND SYSTEM GROUND. THIS HOLE IS TO BE NO LARGER THAN 1 1/2" AND MUST BE PERMANENTLY SEALED TO PREVENT WATER ENTRY. DRILL HOLE IN-LINE VERTICALLY WITH ACCESS DOOR, OR AT 90-DEGREE INTERVALS FROM ACCESS DOOR TO AVOID CUTTING EMBEDDED REINFORCING WIRE.

(H) THIS IS THE CUSTOMER'S SCHEDULE UM FUSE BOX INSTALLED IN A CUSTOMER-OWNED HANDHOLE PER SHEET 4. IT WILL NOT BE SERVED BY TAPPING EXISTING SDG&E CONDUCTORS WITHIN STREET LIGHT POLE. IT MUST BE SERVED FROM A SEPARATE SDG&E STRUCTURE SUITABLE FOR USE AS A SERVICE POINT FOR SCHEDULE UM SERVICE. A SERVICE ORDER FROM AN SDG&E SERVICE PLANNER IS REQUIRED.

TABLE OF CONTENTS

(J) A CUT-AWAY LOCK WILL BE PROVIDED BY THE TELECOMMUNICATION ANTENNA OWNER FOR SECURING THE RF POWER SHUT OFF DISCONNECT.

(K) SUITABLE FOR PROPER DRAINAGE

(L) TAPPING EXISTING UTILITY CONDUCTORS WITHIN POLE IS NOT PERMITTED.

(M) GROUT TO BE FILLED IN AFTER TOP CAP IS SAWCUT AND CONDUIT INSTALLED.

(N) TOP OF CONCRETE FLUSH WITH CURB OR SIDEWALK.

BILL OF MATERIALS:

ITEM	DESCRIPTION	QUANTITY	STANDARD PAGE	STOCK NUMBER	DESIGN UNITS
1	ANTENNA, CUSTOMER-OWNED, DIRECTIONAL OR OMNI-DIRECTIONAL (B)(IV)(c)	AS REQ'D	--	(D)	--
2	ANCILLARY EQUIPMENT, CUSTOMER-OWNED		--		--
3	TAG, OWNERSHIP I.D.	1	209	(C)(D)	--
4	WIRE, GROUND, BARE COPPER (F)(III)	AS REQ'D	4431	(D)	--
5	CONNECTOR, GROUND, COMPRESSION, COPPER		--		--
6	CABLE & CONDUIT, CUSTOMER		--	--	--
7	GROUNDING ELECTRODE(S)		--	--	--
8	GRAVEL BASE		--	--	--

© 1998 - 2021 San Diego Gas & Electric Company. All rights reserved. Removal of this copyright notice without permission is not permitted under law.

REV	CHANGE	DR	BY	DSN	APV	DATE	REV	CHANGE	DR	BY	DSN	APV	DATE
C							F						
B	EDITORIAL CHANGES	PEI/EDM	IPJ	IPJ	CZH	08/10/2021	E						
A	EDITORIAL CHANGES	-	LSM	BRB	TPM	11/01/2017	D						

X Indicates Latest Revision | Completely Revised | New Page | Information Removed

BILL OF MATERIALS (CONT'D):

ITEM	DESCRIPTION	QUANTITY	STANDARD PAGE	STOCK NUMBER	DESIGN UNITS
9	CABLE & CONDUIT, CUSTOMER	AS REQ'D	--	--	--
10	CONDUIT, CUSTOMER		--	--	--

NOTES:

(I) PREFERRED HANDHOLE LOCATION

(II) ALTERNATE HANDHOLE LOCATION IN SIDEWALK

(III) FOR GROUNDING METHODS, SEE SHEET 4.

(IV) ALL ANTENNA BRACKETS MUST BE REVIEWED AND APPROVED BY SDG&E BEFORE THEY ARE INSTALLED ON SDG&E'S STREET LIGHT POLES.

REFERENCE:

a. SEE OH645

(b) SEE CEC/AHJ REQUIREMENTS

(c) ANY COMMUNICATION ANTENNA ATTACHMENTS MUST COMPLY WITH THE CPUC G.O. 95 AND 128 RULES.

(d) SEE OH209

(e) SEE ESP124

TABLE OF CONTENTS

© 1998 - 2021 San Diego Gas & Electric Company. All rights reserved. Removal of this copyright notice without permission is not permitted under law.

REV	CHANGE	DR	BY	DSN	APV	DATE	REV	CHANGE	DR	BY	DSN	APV	DATE
C							F						
B	EDITORIAL CHANGES	PEI/EDM	IPJ	IPJ	CZH	08/10/2021	E						
A	EDITORIAL CHANGES	-	LSM	BRB	TPM	11/01/2017	D						

This standard provides direction for establishing effective metering communications when a meter location does not facilitate standard "Smart Meter" communication methods.

Smart Metering Operations (SMO) requirements for type, placement, and quantity of smart meter network devices will vary according to the construction and location of meters throughout the customer's premises, so each premise must be evaluated by SDG&E (Utility) on a case-by-case basis.

For network device placement, contact the Network Device team via email at networkdevice@semprautilities.com.

When new construction has commenced, Project Management shall provide notification of new construction to the Smart Meter Network Expansion team at SmartMeterNetworkExpansion@semprautilities.com.

NETWORK DEVICE WITH CUSTOMER POWER SOURCE

Where the customer will allow the Utility-owned smart meter network devices installed on the customer premises and will provide power outlets for these network devices, the requirement for a communication conduit can be waived.

The power outlets to support network devices shall be installed at locations designated by the Utility's Meter and Network Operations personnel. For each location with one or more network devices, a 2-wire 120-volt AC power outlet shall be co-located. The network device will be installed with a hard wire connection to the power outlet. The power outlet can be located anywhere a conduit can be run from the power outlet to the network device power supply.

NETWORK DEVICE WITHOUT CUSTOMER POWER SOURCE

Where the customer will allow the Utility-owned smart meter network devices installed on the customer premise and will not provide power outlets for these network devices, SMO has specific communication conduit requirements that must be met in order to proceed. Contact with SMO must be made prior to construction in order to obtain the specific requirements and apply them to the customer's electrical conduit installation.

TABLE OF CONTENTS

© 1998-2017 San Diego Gas & Electric Company. All rights reserved. Removal of this copyright notice without permission is not permitted under law.

REV	CHANGE	BY	DSGN	APPV	DATE	REV	CHANGE	BY	DSGN	APPV	DATE
A	New Page	LSM	BRB	TPM	11/01/17	D					
B						E					
C						F					

	Indicates Latest Revision		Completely Revised	X	New Page		Information Removed

600 - MEDIUM VOLTAGE ELECTRIC SERVICE & METERING EQUIPMENT

600 - MEDIUM VOLTAGE ELECTRIC SERVICE & METERING EQUIPMENT

PAGE #	SUBJECT
SG 601	Table of Contents
SG 602.1 – 602.2	Alphabetical Subject Index
SG 603.1 – 603.7	General Information
SG 604.1 – 604.6	Medium-Voltage Metering Cubicle
SG 605	Control Power Transformer Metering
SG 606	Indoor Current Transformer Dimensions
SG 607	Instrument Transformer Mounting Specifications
SG 608.1 – 608.3	Switchgear Underground Service Terminating Pull Section
SG 609	12kV Service Point Connection for Trolley Traction Station

© 1998-2017 San Diego Gas & Electric Company. All rights reserved. Removal of this copyright notice without permission is not permitted under law.

REV	CHANGE	BY	DSGN	APPV	DATE	REV	CHANGE	BY	DSGN	APPV	DATE
A	New Page	LSM	CTG	TPM	11/01/17	D					
B						E					
C						F					

Indicates Latest Revision | Completely Revised | X New Page | Information Removed

SDG&E SERVICE STANDARDS & GUIDE

MEDIUM VOLTAGE ELECTRIC SERVICE & METERING EQUIPMENT TABLE OF CONTENTS

TABLE OF CONTENTS

SUBJECT	PAGE #
Auxiliary Equipment Connected Ahead of Service Main	SG 603.3
Basic Lightning Impulse Insulation Level (BIL) Rating	SG 603.5
Bus Dimension	SG 603.5
Bus Material	SG 603.5
Bus Tap Drawings for Approval	SG 603.3
Conductors Passing Through Compartment Walls	SG 603.6
Control Power Transformer (CPT) Meter Wiring Diagram	SG 605
Current & Voltage Transformer Installation	SG 603.5
Current Transformer, Indoor, Dimensions	SG 606
Current Transformers & Bus Link	SG 603.7
Door Access to Metering Cubicles	SG 603.5
Engineering Specifications	SG 603.1
Fuse Specification	SG 603.7
Instrument Transformer Mounting	SG 603.7, SG 607
Main Service & Meter Disconnect	SG 603.2
Manufacturer's Drawings for Approval	SG 603.1
Medium-Voltage Metering Cubicle	SG 604.1 – 604.6
Enclosure Dimensions	SG 604.3
Field Maintenance Only	SG 604.6
Meter Panel Layout	SG 604.4, SG 604.6
Metering Cubicle	SG 604.1 – 604.2
Pad Layout	SG 604.1
Test Switch Layout	SG 604.5
Meter Panel	SG 603.4

© 1998-2017 San Diego Gas & Electric Company. All rights reserved. Removal of this copyright notice without permission is not permitted under law.

REV	CHANGE	BY	DSGN	APPV	DATE	REV	CHANGE	BY	DSGN	APPV	DATE
A	Editorial Changes	LSM	CTG	TPM	11/01/17	D					
B						E					
C						F					

	Indicates Latest Revision	X	Completely Revised		New Page		Information Removed

SDG&E SERVICE STANDARDS & GUIDE

MEDIUM VOLTAGE ELECTRIC SERVICE & METERING EQUIPMENT ALPHABETICAL SUBJECT INDEX

TABLE OF CONTENTS

SUBJECT PAGE #

Phase Taps Protecting Fuses & Voltage Transformers ..... SG 603.6

Safety Grounding Provisions 603.4

Service Point Connection for 12kV Trolley Traction Station ..... SG 609

Switchgear Underground Service Terminating Pull Section ..... SG 603.1, SG 608.1 – 608.3

Utility Compartment Labeling ..... SG 603.4

Ventilation ..... SG 603.5

Voltage Transformer Disconnect Requirements ..... SG 603.6

Voltage Transformer Fuse Specification ..... SG 603.6

Weatherproofing & Locking ..... SG 603.5

Working Space for Medium-Voltage Switchgear ..... SG 603.4

© 1998-2017 San Diego Gas & Electric Company. All rights reserved. Removal of this copyright notice without permission is not permitted under law.

REV	CHANGE	BY	DSGN	APPV	DATE	REV	CHANGE	BY	DSGN	APPV	DATE
A	Editorial Changes	LSM	CTG	TPM	11/01/17	D					
B						E					
C						F					

	Indicates Latest Revision	X	Completely Revised		New Page		Information Removed

ENGINEERING SPECIFICATIONS

1. SDG&E (Utility) will issue specifications for each medium voltage service installation. These specifications will be based on the application for service, the electrical load, service voltage plans as requested by the customer and the service rules of the Utility. The Utility's Planner may approve medium voltage service and metering equipment in an electric meter room provided all requirements on pages SG 506.1 – 506.4 are met.

2. The installation shall comply with all applicable rules of the California Electrical Code and other governing codes and ordinances.

MANUFACTURER'S DRAWINGS FOR APPROVAL

1. The manufacturer of the medium-voltage switchgear for the customer's service shall submit five (5) copies of the drawings showing the service cable terminating section, the main breaker or switch section and the metering cubicle prior to fabrication to:

   SDG&E Service Standards
   8316 Century Park Court, CP52F
   San Diego, CA 92123-1582

2. The job address must be shown on drawings for review and approval. One copy will be returned to the sender with approvals or corrections as needed. When a parallel stand-by or emergency generation system is existing or is to be installed in connection with new medium voltage service equipment, a one-line electrical diagram showing the relationship of the generator with the service equipment, including the transfer device and its sequence of operation, is to be submitted with the switchgear drawings. The electrical one-line diagram submittal requirement applies to all medium voltage service.

3. This practice will ensure your service equipment meets all of the Utility's requirements and is acceptable for installation.

SWITCHGEAR UNDERGROUND SERVICE TERMINATING UNDERGROUND PULL SECTION

1. All switchgear to which medium voltage service is to be supplied by the Utility shall be equipped with a "separate, fully enclosed" switchgear underground service terminating Underground Pull Section (UGPS). See pages SG 608.1 – 608.3. Space will be provided for the support and connection of the service cables to a bussed section which has standard NEMA drillings for two-hole termination lugs. The Utility will specify the number of cables they will install and terminate in the UGPS. The Utility will furnish and install the terminating lugs.

2. The service cable terminating UGPS shall have a full-height hinged door that is sealable and pad-lockable.

TABLE OF CONTENTS

© 1998-2017 San Diego Gas & Electric Company. All rights reserved. Removal of this copyright notice without permission is not permitted under law.

REV	CHANGE	BY	DSGN	APPV	DATE	REV	CHANGE	BY	DSGN	APPV	DATE
A	Editorial Changes	LSM	CTG	TPM	11/01/17	D					
B	Editorial Changes	JC	BRB	MDJ	07/16/15	E					
C						F					

TABLE OF CONTENTS

MAIN SERVICE & METER DISCONNECT

1. The manufacturer or contractor shall furnish and install a single main service and meter disconnect for each medium voltage service. This main service and meter disconnect shall control all of and only the energy carried by the service and registered by the medium-voltage metering equipment.

2. The service and meter disconnect shall coordinate electrically with the Utility and be installed and connected to the service on the supply (line) side of the metering equipment. This is referred to as "cold sequence metering". Grounding switches shall not be permitted in between Utility pull section and main disconnect.

3. The customer will provide, own and maintain their premises distribution system which is required to coordinate electrically with the Utility's system, and they will provide a one-line diagram of the medium voltage service equipment. This applies to both new switchgear and modifications to existing switchgear.

4. A main breaker with phase and ground relays is required if the customer demand is 2,500 kW, or above. At the Utility's option, a breaker may be required for lesser demands to ensure coordination with the Utility's protective devices, which includes automated sectionalizing devices such as service restorers.

5. If a multifunction protective relay (i.e. microprocessor, solid state, etc.) is used to protect customer's switchgear, then a redundant protection system must be installed, e.g., two (2) multifunction protective relays in parallel. The reason for this requirement is a failure of an internal component(s) (such as a power supply, RAM, ROM, A/D converter, etc.) may disable all protection functions within the protective relay.

6. When breaker protection is provided, the customer will inform the Utility of the breaker manufacturer, type, size, Current Transformer (CT) ratios, protective relay manufacturer, ANSI functions and instantaneous trip current values, etc.

7. The protective relay settings must be approved and a written test report received by the Utility's Protection Engineer before the customer's service is energized.

8. When a service disconnect with fused protection is provided, the customer will inform the Utility of the fuse manufacturer type, ampacity and Time Current Curves (TCC) for review and approval. The customer will permanently label the Utility-approved fuse size and type on the disconnect cover prior to the Utility energizing the service. A permanent plaque shall be affixed to the disconnect cover stating:

DO NOT INCREASE FUSE SIZE, TYPE OF FUSE OR MANUFACTURER
WITHOUT OBTAINING PERMISSION FROM SDG&E.

© 1998-2017 San Diego Gas & Electric Company. All rights reserved. Removal of this copyright notice without permission is not permitted under law.

REV	CHANGE	BY	DSGN	APPV	DATE	REV	CHANGE	BY	DSGN	APPV	DATE
A	Editorial Changes	LSM	CTG	TPM	11/01/17	D					
B	Editorial Changes	JC	BRB	MDJ	07/16/15	E					
C						F					

AUXILIARY EQUIPMENT CONNECTED AHEAD OF SERVICE MAIN

1. Voltage Transformers (VTs) may be installed on the supply side of the MAIN service breaker for voltage indication and protective relays.

2. Cogeneration and other power production sources interconnected directly with the Utility may require control power, conduits for communication and/or High-End Metering. Please refer to the Generation Handbook.

3. A Control Power Transformer (CPT) used exclusively for the protective relays and the control circuit of the MAIN service breaker ONLY may be installed on the supply side of the breaker without the requirement for a separate 4- or 7-clip meter socket.

4. Where a CPT is required for AC control circuits, space heating, lighting and other incidental use within the switchgear, the CPT may be installed in the switchgear and connected to the supply side of the service breaker. The CPT secondary load side will be separately metered. The CPT secondary leads shall be taken through test blocks to a 4-or 7-clip meter socket located on the door above the main service 15-clip meter socket. Refer to page SG 604.6.

5. AC power may be used for breaker control. A capacitor potential device shall be used with a redundant energy source, e.g. device mounted batteries or Uninterruptable Power Supply (UPS).

6. Redundant control power for operating protective relays must be supplied that provides 72 hours minimum sufficient power for tripping operations.

7. Visible indication of sufficient charge for operating the service breaker trip coil must be available from the redundant control power system.

8. New redundant sources of energy not specifically mentioned in this standard may be submitted to SDG&E Service Standards for review and approval. Refer to page SG 603.1 for Service Standards' mailing address.

BUS TAP DRAWINGS FOR APPROVAL

1. Bus taps ahead of the main service and meter disconnect are not permitted except as specified under "Auxiliary Equipment Connected Ahead of Service Main" above. Proposed load side of metering bus taps ahead of the load side main disconnect require Utility approval. Submit five (5) copies of the tap drawing with a one-line diagram of the switchgear to SDG&E Service Standards at the address provided on page SG 603.1.

2. The bus tap drawing must be prepared by a qualified engineer, and the one-line diagram must show the tap location in the switchgear lineup. The job address must be shown on the drawings in order to process.

3. The customer's modified system must coordinate electrically with the Utility's system. Both the governmental Authority Having Jurisdiction (AHJ) and the Utility will inspect the bus tap, and the Utility must receive inspection clearance from the AHJ as a condition of energizing.

© 1998-2017 San Diego Gas & Electric Company. All rights reserved. Removal of this copyright notice without permission is not permitted under law.

REV	CHANGE	BY	DSGN	APPV	DATE	REV	CHANGE	BY	DSGN	APPV	DATE
A	Editorial Changes	LSM	CTG	TPM	11/01/17	D					
B	Editorial Changes	JC	BRB	MDJ	07/16/15	E					
C						F					

TABLE OF CONTENTS

4. An acceptable service disconnect with standard access and working space is required on the tap in immediate proximity to the main switchgear.

WORKING SPACE FOR MEDIUM-VOLTAGE SWITCHGEAR

1. Medium-voltage switchgear shall in every case (indoor or outdoor) be installed with at least 5′ of clear, level and unobstructed working space in the front, rear and sides of any section where such supports or provides access to metering, VTs, CTs, grounding ball studs or testing equipment.

2. A minimum of 8′ clear, level and unobstructed working space in front of the UGPS is required. Front is defined as the section cover that provides access to the Utility landing position termination points and grounding ball studs.

3. Because access is required to both the front and rear of the switchgear, a walkway of at least 2′ wide shall be provided around one end of the medium voltage service and metering equipment. (This is required only if the 5′ provision above is not required in front of an end section.)

4. To maintain a safe, clear and level permanent working area in front of new or existing meter and service equipment, a concrete slab, acceptable to the Utility Inspector, is required. The slope of the working space for drainage is not to exceed ¼″ per foot sloping away from the equipment.

UTILITY COMPARTMENT LABELING

Compartments of the metering enclosure shall be permanently labeled with machine-engraved laminated UV stabilized plastic tags. Quarter-inch white letters and numbers on red-colored material which is readily visible and mechanically attached to the face of the following designated compartments, and shall be worded as follows:

1. UTILITY VOLTAGE TRANSFORMER COMPARTMENT
2. UTILITY VOLTAGE TRANSFORMER FUSE COMPARTMENT
3. UTILITY CURRENT TRANSFORMER COMPARTMENT
4. UTILITY SERVICE TERMINATION COMPARTMENT
5. UTILITY METERING PANEL

SAFETY GROUNDING PROVISIONS

The bare bus 4″ above and below the CT shall be provided to permit application of Utility medium-voltage worker's safety grounds. Grounding ball studs shall be provided on the line and load side of the bus at each CT location.

METER PANEL

1. The Utility will inform the manufacturer of the meter panel layout for the medium-voltage metering cubicle.

TABLE OF CONTENTS

© 1998-2017 San Diego Gas & Electric Company. All rights reserved. Removal of this copyright notice without permission is not permitted under law.

REV	CHANGE	BY	DSGN	APPV	DATE	REV	CHANGE	BY	DSGN	APPV	DATE
A	Editorial Changes	LSM	CTG	TPM	11/01/17	D					
B	Editorial Changes	JC	BRB	MDJ	07/16/15	E					
C						F					

2. The meter panel and hinges are to be designed to adequately support a 25-pound load applied at the unsupported end with ⅛" maximum sag when open. A #4 AWG flexible braided bond wire shall be installed across the hinges.

BASIC LIGHTNING IMPULSE INSULATION LEVEL (BIL) RATING

BIL for the metering enclosure shall be not less than the BIL rating for the customer's associated switchgear. Reference shall be made to ANSI Standards for the minimum accepted BIL ratings for medium-voltage switchgear built to the listed nominal voltage as shown in the tables below.

Refer to Table 1.1-2 Metal-Clad Switchgear Voltage & Insulation Levels (From IEEE Std. C37.20.2-2015) and Table 1.1-3 Metal-Enclosed Switchgear Voltage & Insulation Levels (From IEEE Std. C37.20.3-2013)

VENTILATION

Ventilation openings shall be provided as per ANSI Standards, and shall be louvered or screened and be guarded with internal barriers to prevent access to energized parts.

DOOR ACCESS TO METERING CUBICLES

A full-height hinged door with a 3-point locking mechanism and provisions for a Utility-furnished padlock is required.

WEATHERPROOFING & LOCKING

1. Figures 3 and 4 on page SG 604.2 shows equipment with weatherproof doors. These enclosure doors shall be designed to be secure in the open position 90 degrees or more.

2. The meter panel shall be hinged on the opposite side of the outer door on the weatherproof units to permit 90-degree opening with the meters and test facilities in place. Omit the weatherproof doors if the equipment is located indoors.

3. If the outer door is omitted, furnish a lockable meter panel. The front and rear weatherproof doors shall be single doors equipped with a latch-type handle for a Utility padlock.

CURRENT & VOLTAGE TRANSFORMER INSTALLATION

CTs, VTs, meters, testing facilities and all secondary wiring from the transformers to the meters will be furnished and installed by the Utility.

BUS MATERIAL

All copper or aluminum bus used in the metering enclosure shall be tin or silver-PLATED to prevent the corrosion of the Utility-supplied CTs at the connection points to the bus. This shall also include the CT mounting hardware – bolts, washers and nuts.

TABLE OF CONTENTS

© 1998-2017 San Diego Gas & Electric Company. All rights reserved. Removal of this copyright notice without permission is not permitted under law.

REV	CHANGE	BY	DSGN	APPV	DATE	REV	CHANGE	BY	DSGN	APPV	DATE
A	Editorial Changes	LSM	CTG	TPM	11/01/17	D					
B	Editorial Changes	JC	BRB	MDJ	07/16/15	E					
C						F					

BUS DIMENSION

The maximum bus size shall be ⅜" x 4". Minimum bus size shall be ¼" x 2" unless otherwise indicated on specific drawing. A bus size outside these limits requires special engineering and consultation with the Utility.

CONDUCTORS PASSING THROUGH COMPARTMENT WALLS

Where cable or busses pass through compartment walls, through-the-wall bushings with full voltage rating on the switchgear must be used.

PHASE TAPS FOR FUSES PROTECTING VOLTAGE TRANSFORMERS

Bussed through-wall insulators for phase VT taps are to be furnished with lugs on the VT compartment side. Cable or bus conductor shall be furnished for the tap to the fuse carriage and to the VT compartment maintaining bare bus clearance. Mechanical lugs (equal to ILSCO TA-2) for #6 BARE copper wire shall be provided on the LOAD side of the fuse carriage connecting to the VTs. One (1) mechanical lug (equal to ILSCO TA-2) for #6 BARE cooper wire shall be provided on the GROUND bus for connecting to the VTs. Conductors by SDG&E.

VOLTAGE TRANSFORMER FUSE SPECIFICATION

VT fuses shall be furnished and installed by the Utility. The manufacturer shall provide mounting clips for current limiting fuses with mounting clip separation and fuse ferrule diameter appropriate for the voltage rating of the equipment.

VOLTAGE TRANSFORMER DISCONNECT REQUIREMENTS

Key interlocking is required between the VT disconnect and the VT compartment door so that, for personnel safety, the VT compartment cannot be entered until the following conditions are met:

1. The disconnect is fully and visibly open.
2. When the VT disconnect is fully open, the disconnect blades must ground automatically.
3. Arcing horns are not permitted on no-load disconnect assemblies.
4. The disconnect is locked open with a key interlock system.
5. VT disconnect switch shall be pad-lockable in the closed position.
6. VT disconnect switch to be connected on line side of CTs.

The Utility requires the customer to provide TWO (2) SETS of INTERLOCK KEYS for Utility use prior to energizing the service. One of the keys will be retained by the Utility and one will remain with the service equipment. The key interlock system must prevent closing of the disconnect without first closing and locking the VT compartment door.

Primary contacts for the voltage disconnect shall be of the blade and jaw design or equivalent to ensure continued adequate contact. Wiping or pressure contact is not acceptable.

TABLE OF CONTENTS

© 1998-2017 San Diego Gas & Electric Company. All rights reserved. Removal of this copyright notice without permission is not permitted under law.

REV	CHANGE	BY	DSGN	APPV	DATE	REV	CHANGE	BY	DSGN	APPV	DATE
A	Editorial Changes	LSM	CTG	TPM	11/01/17	D					
B	Editorial Changes	JC	BRB	MDJ	07/16/15	E					
C						F					

As an alternative, the meter panel may be mounted in front of the CT compartment, provided that when the meter panel is opened, the compartment is fully isolated by a hinged barrier.

INSTRUMENT TRANSFORMER MOUNTING

Instrument Transformer Mounting specifications include Current Transformer (CT) Mounting Base and Voltage Transformer (VT) Mounting Rail Detail specifications.

CURRENT TRANSFORMERS & BUS LINK

Bus drilling and spacing shall accommodate 800 amp or less CTs of the proper voltage insulation class. CT center phase position shall be bussed straight through for 3-phase, 3-wire, service voltage installations with a removable link dimensioned the same as the CT bars on the metered phases.

FUSE SPECIFICATION

VT fuses shall be furnished and installed by the Utility. The manufacturer shall provide mounting clips for current limiting fuses with mounting clip separation and fuse ferrule diameter dimensions as indicated under Dimension H in the Enclosure Dimensions table on page SG 604.3.

TABLE OF CONTENTS

© 1998-2017 San Diego Gas & Electric Company. All rights reserved. Removal of this copyright notice without permission is not permitted under law.

REV	CHANGE	BY	DSGN	APPV	DATE	REV	CHANGE	BY	DSGN	APPV	DATE
A	Editorial Changes	LSM	CTG	TPM	11/01/17	D					
B	Editorial Changes	JC	BRB	MDJ	07/16/15	E					
C						F					

This standard provides metering cubicle requirements. See Figures 1 and 2, with notes below. Continue to page SG 604.2 for Figures 3 and 4, with notes. Refer to Switchgear Underground Service Terminating Pull Section Standard on pages SG 608.1 – 608.3.

Metering Cubicle

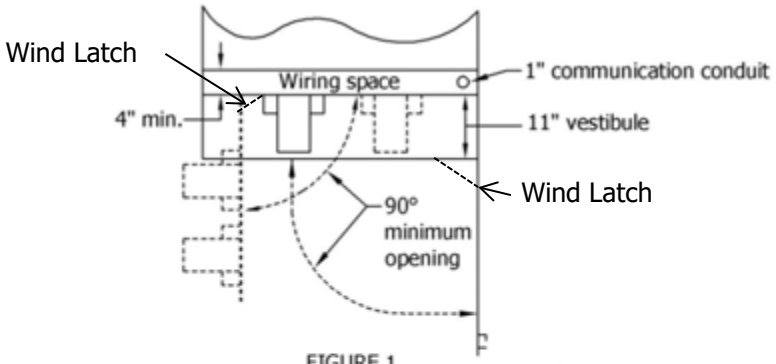

FIGURE 1
Top View

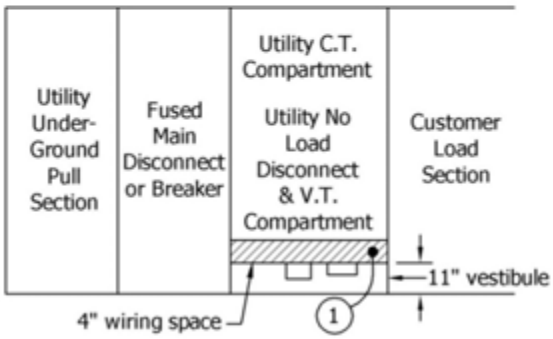

FIGURE 2
Plan View - Pad Layout

Note:

(1) The manufacturer shall install a 1" schedule 40 PVC communication conduit located from the meter compartment to the bottom of the VT compartment on the hinged side of the meter door in the switchgear.

The customer shall provide and install a minimum 1" schedule 40 PVC communication conduit from the switchgear to the communication point of connection service, e.g., Main Point of Entry (MPOE) or Private Branch Exchange (PBX) location.

The customer shall provide and install a 1" liquid-tight non-metallic flexible conduit to connect switchgear PVC conduit.

Consult with the Utility before the installation of the communication conduit. Refer to Metering Communications on page SG 525 for additional requirements.

© 1998-2017 San Diego Gas & Electric Company. All rights reserved. Removal of this copyright notice without permission is not permitted under law.

REV	CHANGE	BY	DSGN	APPV	DATE	REV	CHANGE	BY	DSGN	APPV	DATE
A	Editorial Changes	LSM	CTG	TPM	11/01/17	D					
B	No Changes-Reaffirmed	JC	BRB	MDJ	07/16/15	E					
C						F					

X Indicates Latest Revision	Completely Revised	New Page	Information Removed

TABLE OF CONTENTS

Metering Cubicle

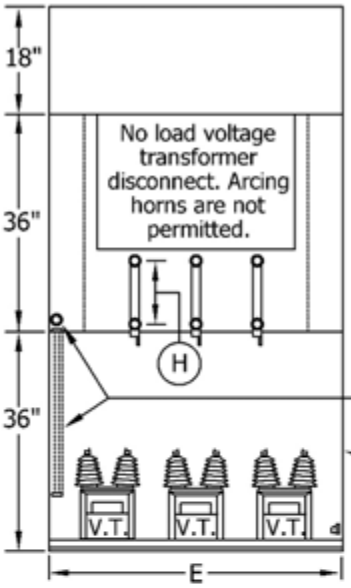

FIGURE 3
Front View

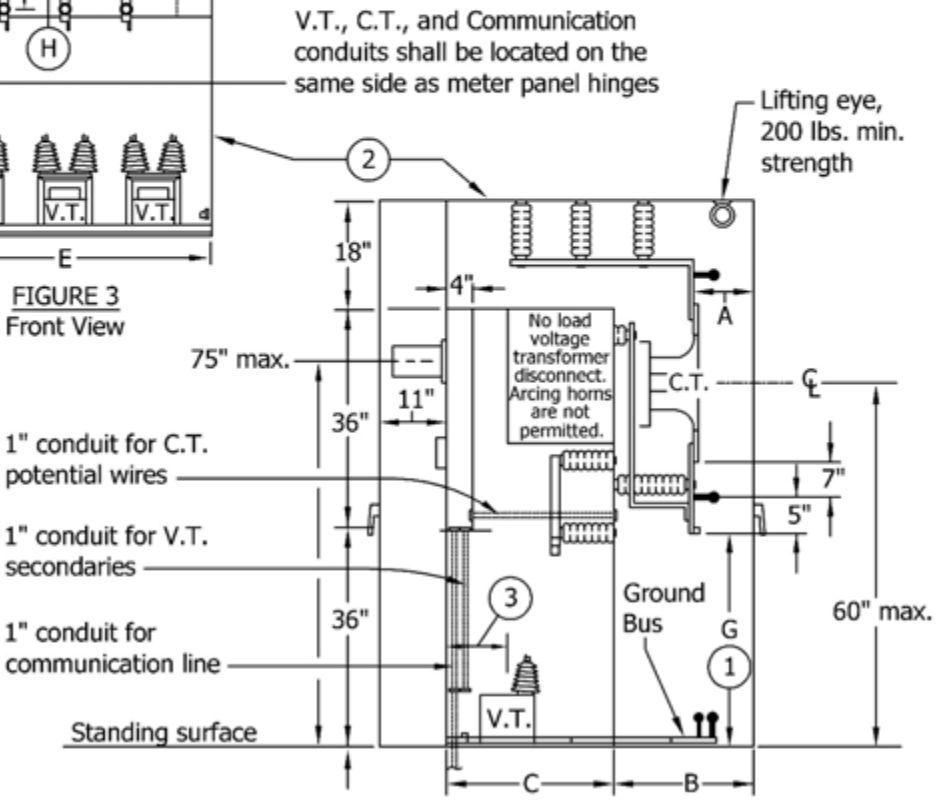

FIGURE 4
Side View

Notes:

(1) Not a cable termination section.

(2) See Enclosure Dimensions Table on page SG 604.3.

(3) See page SG 607.

© 1998-2017 San Diego Gas & Electric Company. All rights reserved. Removal of this copyright notice without permission is not permitted under law.

REV	CHANGE	BY	DSGN	APPV	DATE	REV	CHANGE	BY	DSGN	APPV	DATE
A	Editorial Changes	LSM	CTG	TPM	11/01/17	D					
B	No Changes-Reaffirmed	JC	BRB	MDJ	07/16/15	E					
C						F					

X Indicates Latest Revision	Completely Revised	New Page	Information Removed

TABLE OF CONTENTS

ENCLOSURE DIMENSIONS

The table below provides dimensions for enclosures. The dimensions are referenced in the illustrations on page SG 604.2.

Enclosure Dimensions Table

Specifications	Voltage Rating	
	4160V	**7200/1200V**
Minimum Bare Bus Clearance Ø to Ground	3-½"	6"
Minimum Bare Bus Clearance Ø to Ø	5"	7-½"
Dimension A	5" min. 10" max.	5" min. 10" max.
Dimension B	24" min.	24" min.
Dimension C	24" min.	24" min.
Dimension E	60" min.	60" min.
Dimension G – Not a Cable Termination Section	36" min.	36" min.
Dimension H Fuse Mounting Clip Center	8-½"	11-½"
Dimension H Fuse Ferrule Diameter	1-⅝"	1-⅝"

Notes:

1. Dimensions D and F have been removed from the table in this edition of the Service Standards & Guide. All service equipment shall be considered 3-phase, 4-wire service.
2. The neutral conductor shall be terminated in a bushing-mounted mechanical lug in the pull section.
3. The bushing is connected to a neutral bus extended to the main service breaker or fused switch section. In an accessible area behind the breaker or fused switch, the neutral bus shall have a removable jumper link for testing and a disconnect bonding link to the ground bus and labeled as such.

© 1998-2017 San Diego Gas & Electric Company. All rights reserved. Removal of this copyright notice without permission is not permitted under law.

REV	CHANGE	BY	DSGN	APPV	DATE	REV	CHANGE	BY	DSGN	APPV	DATE
A	Editorial Changes	LSM	CTG	TPM	11/01/17	D					
B	No Changes-Reaffirmed	JC	BRB	MDJ	07/16/15	E					
C						F					

X Indicates Latest Revision | Completely Revised | New Page | Information Removed

TABLE OF CONTENTS

Meter Panel Layout

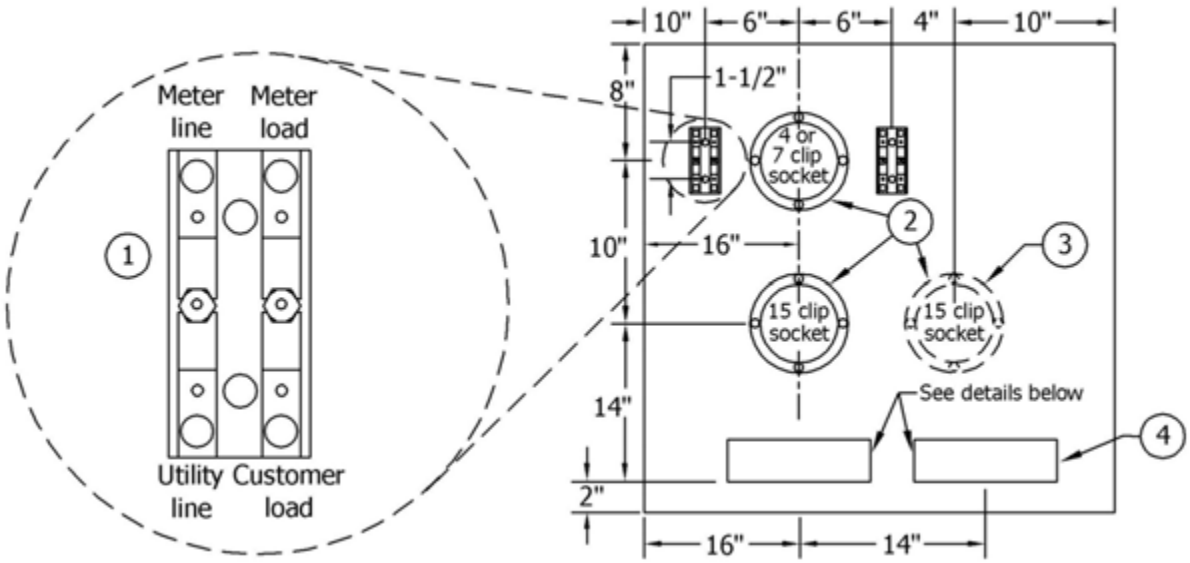

Notes:

(1) Test–bypass blocks supplied by manufacturer and mounted on back side of door. See Test-Bypass Facilities on page SG 513.2 and Control Power Transformer (CPT) Meter Wiring Diagram on page SG 605.

(2) Provide ring meter sockets with number of clips as indicated.

(3) This meter socket is a requirement when California Independent System Operator (ISO) metering is required. Consult with SDG&E Service Standards.

(4) Customer to provide blank plate for second test switch location.

TABLE OF CONTENTS

© 1998-2017 San Diego Gas & Electric Company. All rights reserved. Removal of this copyright notice without permission is not permitted under law.

REV	CHANGE	BY	DSGN	APPV	DATE	REV	CHANGE	BY	DSGN	APPV	DATE
A	Editorial Changes	LSM	CTG	TPM	11/01/17	D					
B	No Changes-Reaffirmed	JC	BRB	MDJ	07/16/15	E					
C						F					

X Indicates Latest Revision	Completely Revised	New Page	Information Removed

Test Switch Layout

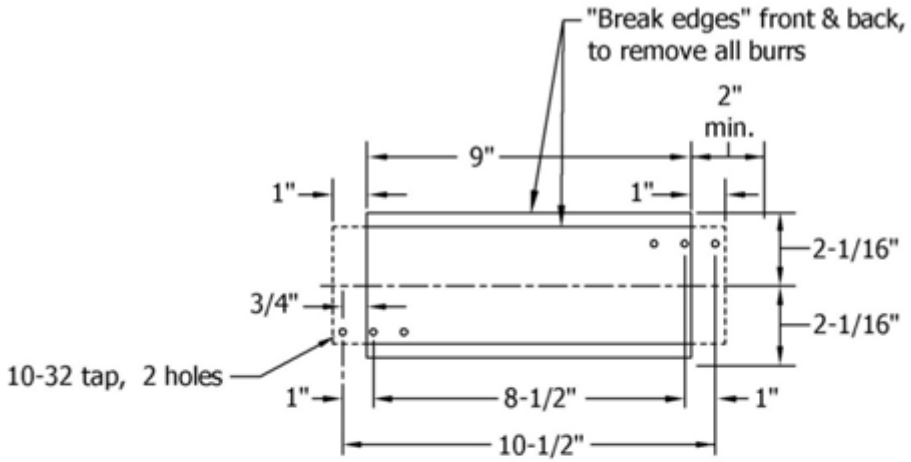

FIGURE 1

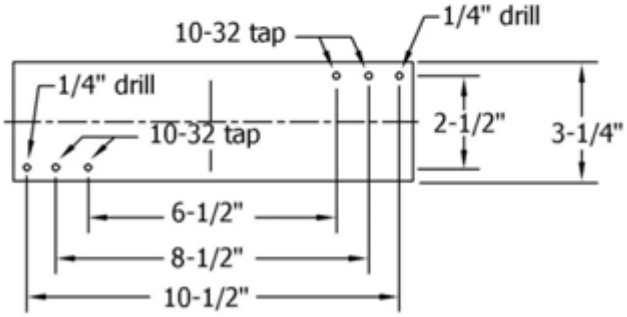

FIGURE 2
Removable Plate Detail

TABLE OF CONTENTS

© 1998-2017 San Diego Gas & Electric Company. All rights reserved. Removal of this copyright notice without permission is not permitted under law.

REV	CHANGE	BY	DSGN	APPV	DATE	REV	CHANGE	BY	DSGN	APPV	DATE
A	Editorial Changes	LSM	CTG	TPM	11/01/17	D					
B	No Changes-Reaffirmed	JC	BRB	MDJ	07/16/15	E					
C						F					

X Indicates Latest Revision	Completely Revised	New Page	Information Removed

THIS PAGE IS FOR FIELD MAINTENANCE ONLY

Meter Panel Layout

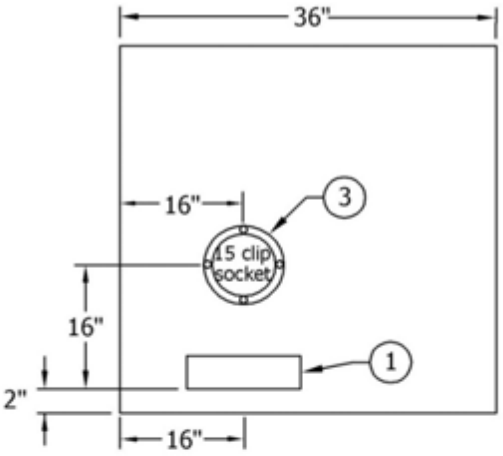

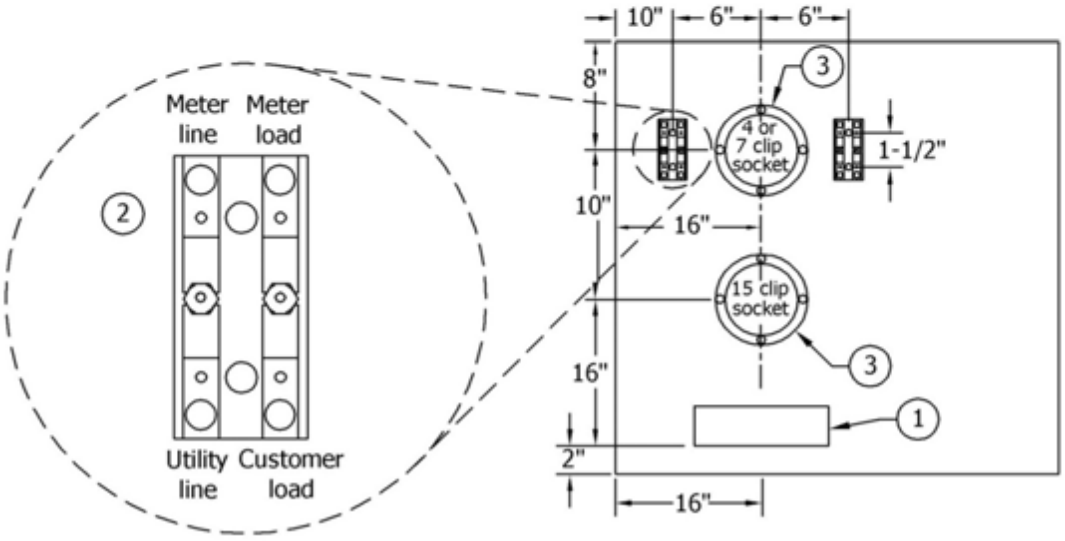

Notes:

(1) Refer to Test Switch Layout specifications on page SG 604.5.

(2) Test–bypass blocks supplied by manufacturer and mounted on inside of meter panel. See Test-Bypass Facilities on page SG 513.2 and Control Power Transformer (CPT) Meter Wiring Diagram on page SG 605.

(3) Provide ring meter sockets with number of clips as indicated.

© 1998-2017 San Diego Gas & Electric Company. All rights reserved. Removal of this copyright notice without permission is not permitted under law.

REV	CHANGE	BY	DSGN	APPV	DATE	REV	CHANGE	BY	DSGN	APPV	DATE
A	Editorial Changes	LSM	CTG	TPM	11/01/17	D					
B	No Changes-Reaffirmed	JC	BRB	MDJ	07/16/15	E					
C						F					

X Indicates Latest Revision	Completely Revised	New Page	Information Removed

TABLE OF CONTENTS

TABLE OF CONTENTS

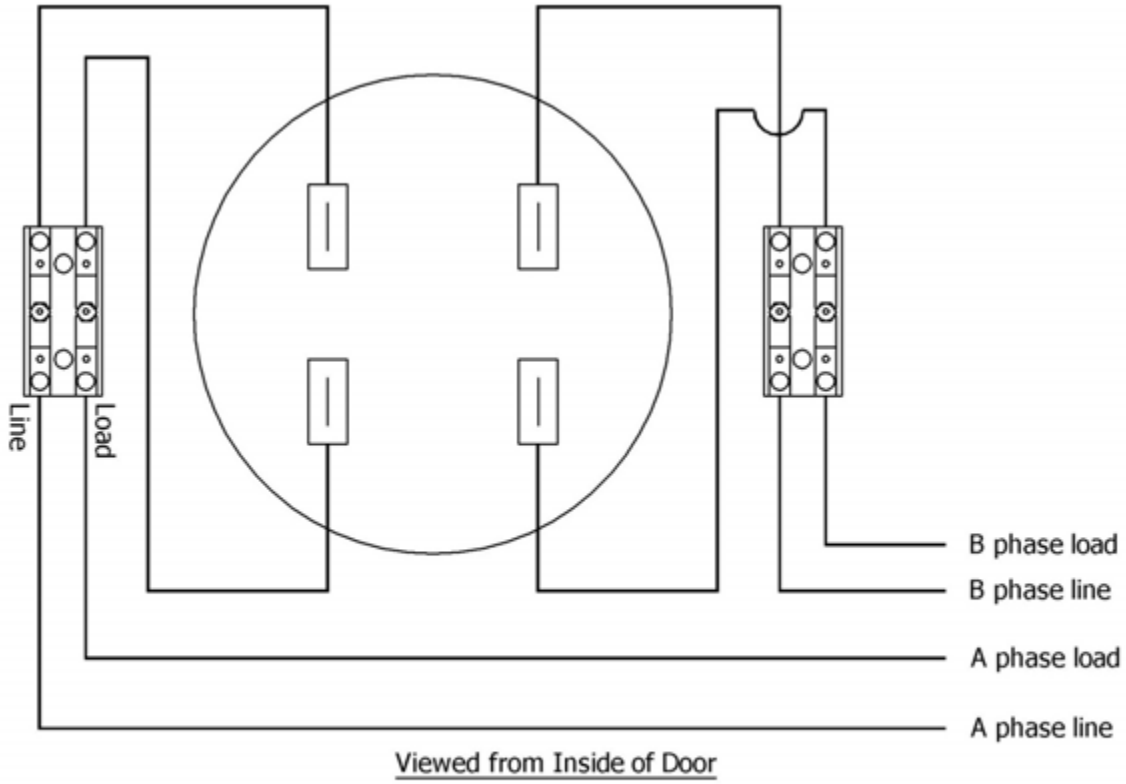

Control Power Transformer (CPT) Meter
Wiring Diagram

© 1998-2017 San Diego Gas & Electric Company. All rights reserved. Removal of this copyright notice without permission is not permitted under law.

REV	CHANGE	BY	DSGN	APPV	DATE	REV	CHANGE	BY	DSGN	APPV	DATE
A	Editorial Changes	LSM	CTG	TPM	11/01/17	D					
B	No Changes-Reaffirmed	JC	BRB	MDJ	07/16/15	E					
C						F					

X Indicates Latest Revision | Completely Revised | New Page | Information Removed

SHEET
1 OF 1

SDG&E SERVICE STANDARDS & GUIDE

CONTROL POWER TRANSFORMER METERING

SG 605

This standard provides indoor current transformer dimensions for 5kV through 15kV metering purposes.

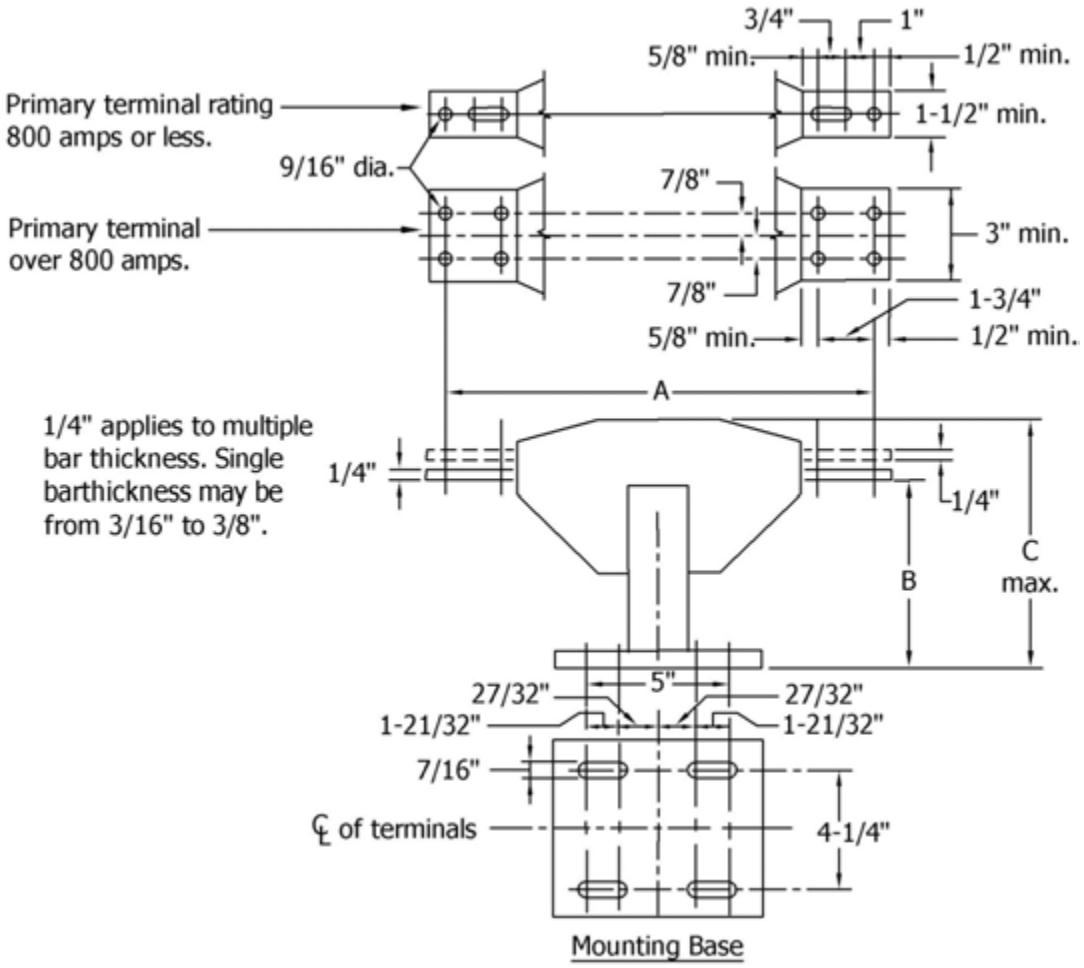

Note: Insulation classes are 5, 8.7 and 15kV. Basic Lightning Impulse Insulation Levels (BILs) for these classes are 60, 75 and 110kV, respectively.

Insulation Class kV	Dimensions (Inches)					
	"A"		"B"		"C" (Maximum)	
	Amps		Amps		Amps	
	10 – 800	1,200-2,000*	10 – 800	1,200-2,000*	10 – 800	1,200-2,000*
5.0	14	---	5-¾	---	8	---
8.7	15	---	8	---	10-½	---
15.0	22	26	9	5-¾	11-¼	13

Unless otherwise indicated, tolerance plus or minus 1/16".
* Consult with SDG&E Service Standards before constructing.

© 1998-2017 San Diego Gas & Electric Company. All rights reserved. Removal of this copyright notice without permission is not permitted under law.

REV	CHANGE	BY	DSGN	APPV	DATE	REV	CHANGE	BY	DSGN	APPV	DATE
A	Editorial Changes	LSM	CTG	TPM	11/01/17	D					
B	No Changes-Reaffirmed	JC	BRB	MDJ	07/16/15	E					
C						F					

X Indicates Latest Revision | Completely Revised | New Page | Information Removed

SDG&E SERVICE STANDARDS & GUIDE

SHEET 1 OF 1

INDOOR CURRENT TRANSFORMER DIMENSIONS

SG 606

TABLE OF CONTENTS

This standard provides specifications for instrument transformer mounting in medium-voltage metering enclosures.

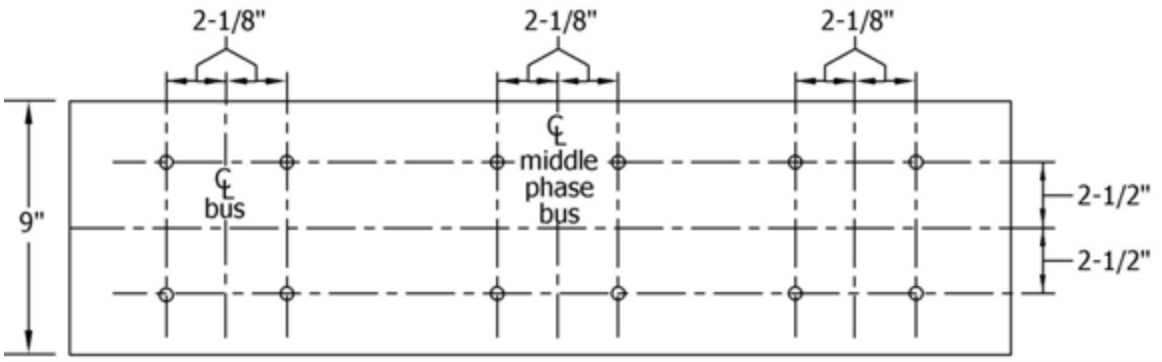

CURRENT TRANSFORMER MOUNTING BASE
Note: All holes tap 3/8"-16

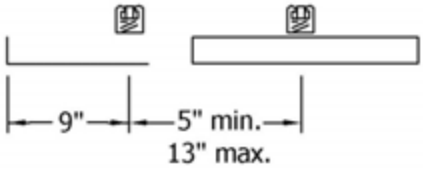

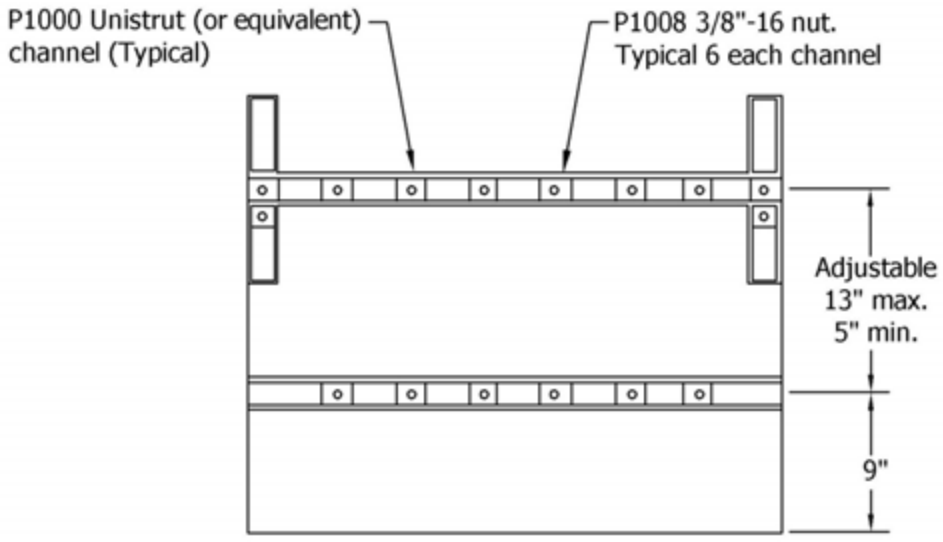

Top View Of Cabinet

VOLTAGE TRANSFORMER MOUNTAIL RAIL DETAIL

© 1998-2016 San Diego Gas & Electric Company. All rights reserved. Removal of this copyright notice without permission is not permitted under law.

REV	CHANGE	BY	DSGN	APPV	DATE	REV	CHANGE	BY	DSGN	APPV	DATE
A	Editorial Changes	LSM	CTG	TPM	11/01/17	D					
B	No Changes-Reaffirmed	JC	BRB	MDJ	07/16/15	E					
C						F					

X Indicates Latest Revision	Completely Revised	New Page	Information Removed

SHEET 1 OF 1

SDG&E SERVICE STANDARDS & GUIDE

INSTRUMENT TRANSFORMER MOUNTING SPECIFICATIONS

SG 607

TABLE OF CONTENTS

This standard provides requirements for switchgear Underground service terminating Pull Sections (UGPS) in the SDG&E (Utility) service territory. This standard applies to the following voltages:

- 5 kV Class: 4,160 Volts, 3-wire and 4-wire services
- 15 kV Class: 6,900 to 15,000 Volts, 3-wire and 4-wire services

Minimum bare bus clearances:

1. 5 kV Class: 3-½" Ø to ground, 5" Ø to Ø
2. 15 kV Class: 6" Ø to ground, 7-½" Ø to Ø

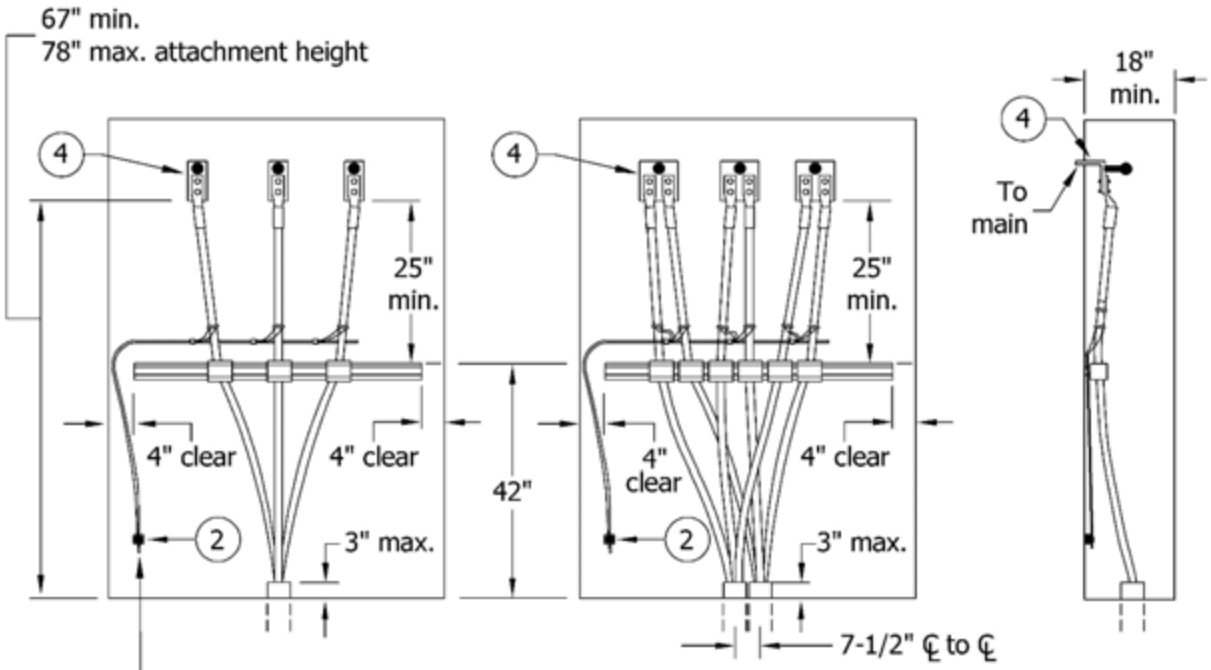

FIGURE 1

FIGURE 2

Terminate concentric neutral on neutral lug for 4-wire services, and on the ground lug for 3-wire services.

TABLE OF CONTENTS

© 1998-2017 San Diego Gas & Electric Company. All rights reserved. Removal of this copyright notice without permission is not permitted under law.

REV	CHANGE	BY	DSGN	APPV	DATE	REV	CHANGE	BY	DSGN	APPV	DATE
A	Editorial Changes	LSM	CTG	TPM	11/01/17	D					
B	Editorial Changes	JC	BRB	MDJ	07/16/15	E					
C						F					

X Indicates Latest Revision	Completely Revised	New Page	Information Removed

SDG&E SERVICE STANDARDS & GUIDE

SWITCHGEAR UNDERGROUND SERVICE TERMINATING PULL SECTION

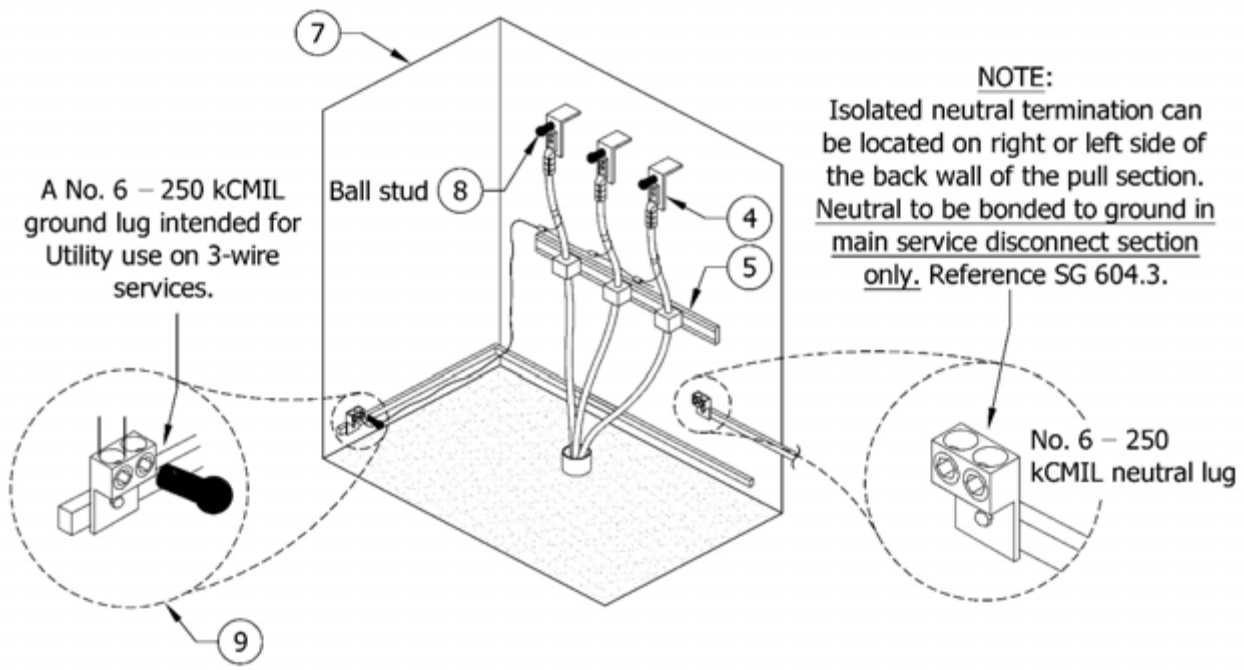

FIGURE 3

Notes:

1. Consult with the Utility for the number of service cables, number, size and location of service conduits, and type of switchgear service terminating UGPS required.

(2) Consult with the Utility to determine if the service is to be 3-wire or 4-wire (3 phases and a neutral) and if an insulated neutral landing with a range No. 6 – 250 kCMIL is required.

3. The removable enclosing panels shall normally be front or back. Removable panels shall be equipped with two lifting handles and attached with studs and wing nuts. Panel cover shall not exceed 9 square feet. Consult with SDG&E Service Standards for special permission to locate the removable enclosing panels on the side. If the removable enclosing panels are located on the side, a 12" minimum access distance to busses shall be provided, measured from the busses to the panels, with the panels in place. The UGPS may be required to be equipped with hinged full opening, sealable access doors, with padlock provisions.

(4) Manufacturer to provide the standard NEMA two-hole drilling pattern for holes on terminating bus. Consult the Utility for the number of landing positions required per phase. The Utility will provide the necessary terminating bolts.

(5) Furnish and install one (1) piece of structural support system equal to Unistrut P1000 as shown.

6. The Basic Lightning Impulse Insulation Level (BIL) rating for the UGPS shall be not less than the BIL rating of the customer's associated switchgear.

© 1998-2017 San Diego Gas & Electric Company. All rights reserved. Removal of this copyright notice without permission is not permitted under law.

REV	CHANGE	BY	DSGN	APPV	DATE	REV	CHANGE	BY	DSGN	APPV	DATE
A	Editorial Changes	LSM	CTG	TPM	11/01/17	D					
B	Editorial Changes	JC	BRB	MDJ	07/16/15	E					
C						F					

X Indicates Latest Revision | Completely Revised | New Page | Information Removed

SDG&E SERVICE STANDARDS & GUIDE

SWITCHGEAR UNDERGROUND SERVICE TERMINATING PULL SECTION

TABLE OF CONTENTS

(7) No customer connections or customer equipment are permitted in the UGPS where the Utility terminates its conductors.

(8) Grounding ball stud 1/2-13 thread, with insulating cover. The ball stud provides a place for Utility medium-voltage workers to test and ground service equipment. Locate the ball stud on the Utility landing position flag.

(9) The ground bus in the rear of the UGPS is to be extended to the front left or right side. Grounding termination devices for Utility grounding and bonding shall be aluminum-bodied mechanical lugs with a range of No. 6 – 250 kCMIL.

TABLE OF CONTENTS

© 1998-2017 San Diego Gas & Electric Company. All rights reserved. Removal of this copyright notice without permission is not permitted under law.

REV	CHANGE	BY	DSGN	APPV	DATE	REV	CHANGE	BY	DSGN	APPV	DATE
A	Editorial Changes	LSM	CTG	TPM	11/01/17	D					
B	Editorial Changes	JC	BRB	MDJ	07/16/15	E					
C						F					

X Indicates Latest Revision	Completely Revised	New Page	Information Removed	
SHEET 3 OF 3	SDG&E SERVICE STANDARDS & GUIDE			SG 608.3
	SWITCHGEAR UNDERGROUND SERVICE TERMINATING PULL SECTION			

SCOPE: This standard provides guidelines for the connection of SDG&E's 12kV distribution system to a primary metered service point for a 600 volt direct current (DC) trolley traction station.

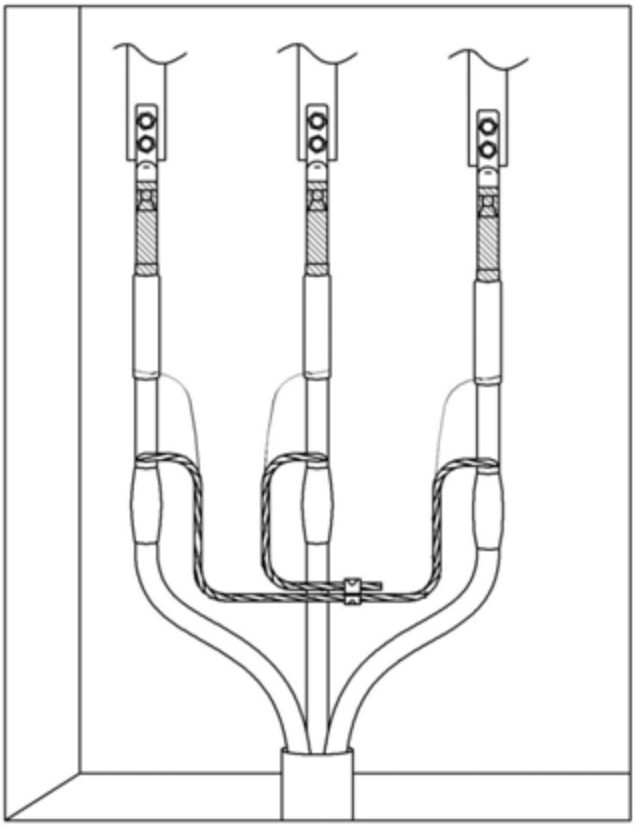

The following requirements shall be met when making this connection:

1. SDG&E (Utility) shall locate its substructure as close as practicable to the customer's ground grid but in no case shall the substructure be in contact with the customer's ground grid (grounding electrode system).
2. The concentric neutrals from the Utility's cable shall not be connected to the customer's equipment.
3. The cable termination in the customer's switchgear cabinet shall be a live-front delta connection.
4. All requirements of the Switchboard Underground Service Terminating Pull Section standard, on pages SG 608.1 – 608.3, shall be met, except as modified by this standard as it pertains to serving voltage and grounding and bonding of the system.

Reference SG 608.1 – 608.3, SPM 254 & UG 4705.

© 1998-2017 San Diego Gas & Electric Company. All rights reserved. Removal of this copyright notice without permission is not permitted under law.

REV	CHANGE	BY	DSGN	APPV	DATE	REV	CHANGE	BY	DSGN	APPV	DATE
A	Editorial Changes	LSM	CTG	TPM	11/01/17	D					
B						E					
C						F					

X Indicates Latest Revision	Completely Revised	New Page	Information Removed

SHEET 1 OF 1

SDG&E SERVICE STANDARDS & GUIDE

12KV SERVICE POINT CONNECTION FOR TROLLEY TRACTION STATION

SG 609

TABLE OF CONTENTS

700 - ELECTRIC TERMINATING ENCLOSURES, 0-600V

700 - ELECTRIC TERMINATING ENCLOSURES, 0-600V

PAGE #	SUBJECT
SG 701	Table of Contents
SG 702	Alphabetical Subject Index
SG 703	Electric Terminating Enclosures, 0 – 600 Volts
SG 704	Overhead Service Terminating Enclosure
SG 705.1 – 705.4	Underground Pull Can with or without Mechanical Lugs
SG 706.1 – 706.2	Underground Pull Can with Cable Termination Bus Stubs
SG 707.1 – 707.2	Residential Single-Phase Multi-Meter Stack
SG 708.1 – 708.2	Underground Pull Section, 0-600 Volts
SG 709.1 – 709.3	Cable Termination Bus Stubs in Underground Pull Cans or Pull Sections

© 1998-2017 San Diego Gas & Electric Company. All rights reserved. Removal of this copyright notice without permission is not permitted under law.

REV	CHANGE	BY	DSGN	APPV	DATE	REV	CHANGE	BY	DSGN	APPV	DATE
A	New Page	LSM	LSM	TPM	11/01/17	D					
B						E					
C						F					

	Indicates Latest Revision		Completely Revised	X	New Page		Information Removed

TABLE OF CONTENTS

SUBJECT PAGE #

Cable Termination Bus Stubs in Underground Pull Cans or Pull Sections ..... SG 709.1 – 709.3

Conductor Identification ..... SG 703

General Information ..... SG 703

Grounding Electrode, Grounding Electrode Conductor ..... SG 703, SG 706.2

Line Truck Access ..... SG 703

Location ..... SG 703

Overhead Service Terminating Enclosure, Standard Switchboard Service Section ..... SG 704

Phase Arrangement ..... SG 703

Residential Single-Phase Multi-Meter Stack "Special Application" ..... SG 707.1 – 707.2

Underground Pull Can with Cable Termination Bus Stubs ..... SG 706.1 – 706.2

Underground Pull Can, with or without Mechanical Lugs ..... SG 705.1 – 705.4

Underground Service Pull Can, with Mechanical Lugs ..... SG 705.3 – 705.4

Underground Service Pull Can, without Mechanical Lugs ..... SG 705.1 – 705.2

Underground Pull Section, 0-600 Volts ..... SG 708.1 – 7 08.2

© 1998-2017 San Diego Gas & Electric Company. All rights reserved. Removal of this copyright notice without permission is not permitted under law.

REV	CHANGE	BY	DSGN	APPV	DATE	REV	CHANGE	BY	DSGN	APPV	DATE
A	Editorial Changes	LSM	LSM	TPM	11/01/17	D					
B						E					
C						F					

	Indicates Latest Revision	X	Completely Revised		New Page		Information Removed

SDG&E (Utility) will pull and terminate its service lateral conductors directly to the customer-furnished service termination facilities which consist of a free standing Underground Pull Section (UGPS) or a wall-mounted underground pull can. No other method of termination in an enclosure is acceptable.

Terminating enclosures may be remote from the metering section; consult the Utility and the appropriate governmental Authority Having Jurisdiction (AHJ) for limitations. See pages SG 016.1 – 016.2 for an alternative to line truck access to terminating enclosures.

A UGPS may not come in contact with the earth and must be located on a suitable foundation or slab.

The grounding electrode and/or the grounding electrode conductor are not to be permitted within the Utility portion of the underground pull can or pull section. The covers are sealed by the Utility and not readily accessible for the AHJ to inspect. For exception, see page SG 706.2, Note 3.

CONDUCTOR IDENTIFICATION

Equipment Grounding Conductors: Green, or green with one or more yellow stripes.

Grounded Conductors: White or gray in color.

High Leg Marking: 4-wire, delta-connected service where the midpoint of one phase is grounded, the service entrance conductor having the higher phase-to-ground voltage (208-volts) shall be marked orange in color.

Grounded Phase Conductor: 3-wire, delta-connected service where "B" phase is corner-grounded, B phase shall be marked red in color.

Ungrounded Conductors: Color other than white, gray, green or orange if color markings are used.

PHASE ARRANGEMENT

The phase arrangement shall be "ABC" front to back, top to bottom, or left to right as viewed from the front of the terminating enclosure and in switchboards.

On a three-phase, 4-wire, 120/240-volt delta-connected service, the high leg shall be in the "C" phase position only. See High Leg Marking identification requirements above.

TABLE OF CONTENTS

© 1998-2017 San Diego Gas & Electric Company. All rights reserved. Removal of this copyright notice without permission is not permitted under law.

REV	CHANGE	BY	DSGN	APPV	DATE	REV	CHANGE	BY	DSGN	APPV	DATE
A	Editorial Changes	LSM	CTG	TPM	11/01/17	D					
B	Editorial Changes	JC	BRB	MDJ	08/26/15	E					
C						F					

STANDARD SWITCHBOARD SERVICE SECTION, 0 – 600 VOLTS

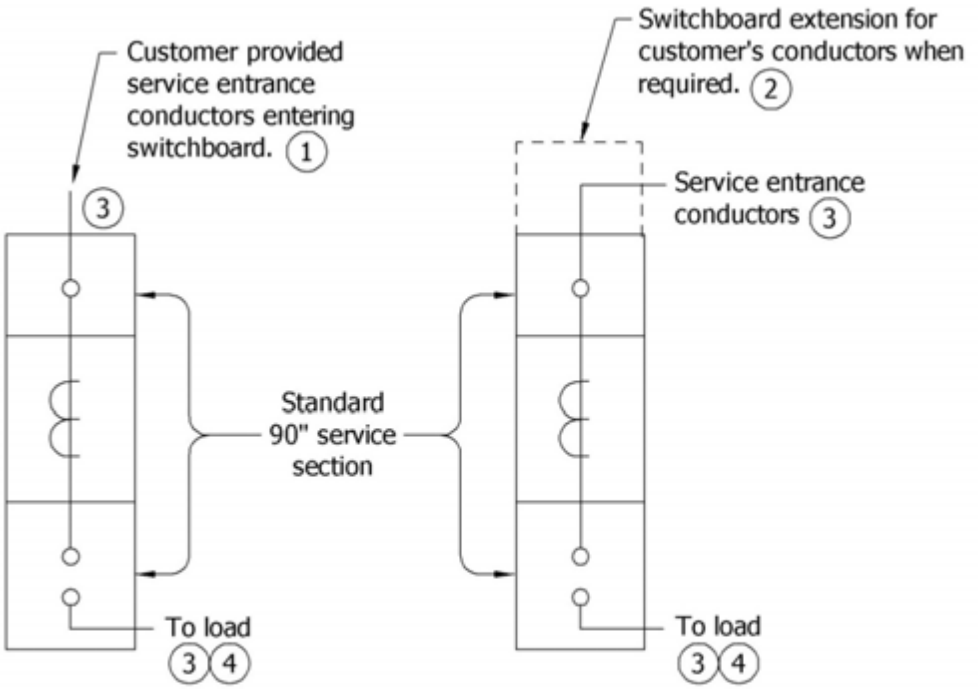

FIGURE 1 FIGURE 2

Notes:

(1) The service entrance conductors as shown in Figure 1, either cable or bus bar, are furnished and installed by the customer in the following manner:

a. When switchboards are served through bus bar conductors, the conductors shall enter through the top, or at the side or back in the upper 10" section.

b. When switchboards are served through cable conductors (800 amps maximum), the service entrance conductors shall enter through the top of the switchboard only as shown in Figure 1.

(2) When the customer requires incoming conduits from the side or rear for the service entrance conductors, an extension as shown in Figure 2 may be used.

(3) The direction of feed is from top to bottom in the standard switchboard service section. Load conductors shall leave below the main switch or breaker, and may not be routed back through the Current Transformer (CT) compartment in order to exit the service section.

(4) The grounding connections shall be made in the main switch or breaker compartment.

© 1998-2017 San Diego Gas & Electric Company. All rights reserved. Removal of this copyright notice without permission is not permitted under law.

REV	CHANGE	BY	DSGN	APPV	DATE	REV	CHANGE	BY	DSGN	APPV	DATE
A	Editorial Changes	LSM	CTG	TPM	11/01/17	D					
B						E					
C						F					

X Indicates Latest Revision	Completely Revised	New Page	Information Removed

SHEET 1 OF 1

SDG&E SERVICE STANDARDS & GUIDE

OVERHEAD SERVICE TERMINATING ENCLOSURE

SG 704

TABLE OF CONTENTS

This standard provides the requirements for underground pull cans with or without mechanical lugs for cable termination.

1. Underground Service Pull Can without Mechanical Lugs

   SDG&E (Utility) accepts underground pull cans rated 0 – 600 volts, 0 – 400 amps maximum, without mechanical lugs for residential or commercial/industrial service provided the requirements of this standard are met. Pull cans are required to be wall-mounted.

   a. Pull cans shall be readily accessible and located in conformance with the requirements for electric meters. Refer to pages SG 504.1 – 504.5.

   b. Pull cans of this type are used to pull and splice connection of the Utility's service lateral conductors to customer-owned service entrance conductors. The service entrance conduit must exit from the top or within 2" of the top of the pull can. Customer shall provide enough wire to reach the bottom of the pull can.

   c. Pull cans without mechanical lugs may only be used when all of the following requirements are met:

      i. Service equipment ampacity rating and the size of the customer's conductors do not exceed the values shown in Table 1.

      ii. Not more than one conductor per phase and neutral of customer service entrance conductors are installed.

      iii. The Utility's service lateral conductors do not exceed 1 run of 3/C or 4/C No. 500 kCMIL.

   When all of the above conditions cannot be met, refer to pages SG 705.3 – 705.4 for a pull can with mechanical lugs.

TABLE OF CONTENTS

© 1998-2017 San Diego Gas & Electric Company. All rights reserved. Removal of this copyright notice without permission is not permitted under law.

REV	CHANGE	BY	DSGN	APPV	DATE	REV	CHANGE	BY	DSGN	APPV	DATE
A	Editorial Changes	LSM	CTG	TPM	11/01/17	D					
B						E					
C						F					

SHEET 1 OF 4	X Indicates Latest Revision		Completely Revised		New Page		Information Removed	SG 705.1

SDG&E SERVICE STANDARDS & GUIDE

UNDERGROUND PULL CAN WITH OR WITHOUT MECHANICAL LUGS

Underground Service Pull Can without Mechanical Lugs

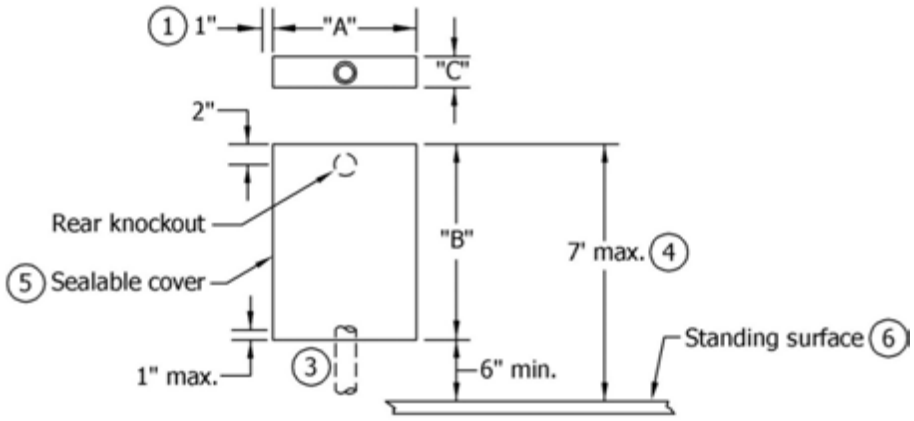

TABLE 1

Type of Service	Customer-Installed		Maximum Size for Customer-Installed Service Lateral Conduit 3W or 4W Service	Minimum Pull Can Dimensions Residential or Commercial		
	Service Equipment Ampacity	Service Entrance Conductors Max. Wire Size		"A"	"B"	"C"
Commercial	0 – 100	#3/0	3" Single-Phase or Three-Phase (2)	10"	12"	4"
Residential	0 – 125			6"	18"	
Commercial	101 – 200	#250 kCMIL	3" Single-Phase or Three-Phase (2)	12"	18"	6"
Residential	126 – 225					
Commercial	201 – 400	#500 kCMIL	3" Single-Phase or 4" Three-Phase	18"	24"	8"
Residential	226 – 400					

Notes:

(1) 1" side clearance is required to any side wall, equipment or obstruction. Any projection which extends more than the depth of the pull can from the surface on which the pull can is mounted shall be considered an obstruction.

(2) See page SG 309.3, Note C, for 3" conduit exception.

(3) Service lateral conduit must be firmly secured to pull can with lock nut, hub or bushing and must enter the bottom of the pull can. Maximum conduit intrusion inside can is 1".

(4) Exception to the 7' maximum mounting height may be granted due to special conditions. Consult with the Utility.

(5) Pull can covers shall be removable and sealable. See page SG 503 for sealing requirements.

(6) 3' x 3' clear and level working space required in front of pull can. See pages SG 504.4 – 504.5 for additional working space clearance requirements.

© 1998-2017 San Diego Gas & Electric Company. All rights reserved. Removal of this copyright notice without permission is not permitted under law.

REV	CHANGE	BY	DSGN	APPV	DATE	REV	CHANGE	BY	DSGN	APPV	DATE
A	Editorial Changes	LSM	CTG	TPM	11/01/17	D					
B						E					
C						F					

X Indicates Latest Revision	Completely Revised	New Page	Information Removed

TABLE OF CONTENTS

2. Underground Service Pull Can With Mechanical Lugs

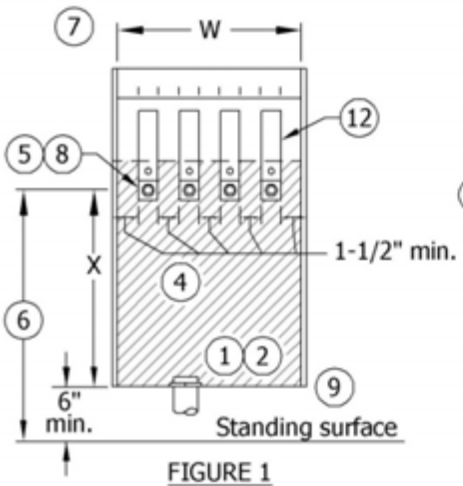

FIGURE 1
Front View

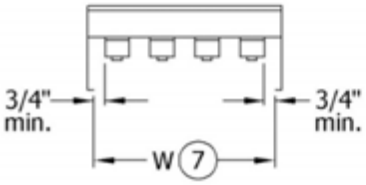

FIGURE 3
Top View

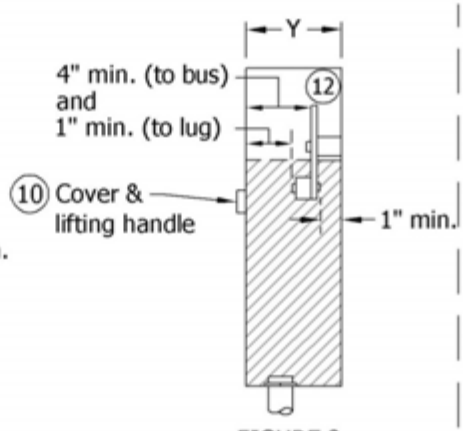

FIGURE 2
Side View

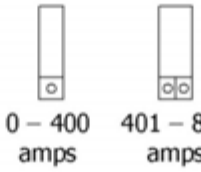

Mechanical Lug Arrangement for Terminating Facilities

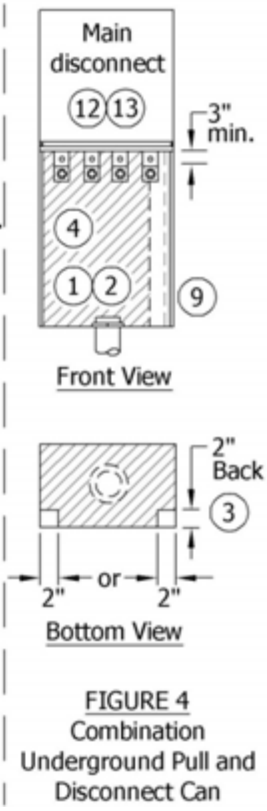

FIGURE 4
Combination Underground Pull and Disconnect Can

The Utility accepts underground pull cans rated 0 – 600 volts, 0 – 800 amps maximum, with mechanical lugs for cable termination for residential or commercial/industrial service provided the requirements of this standard are met. Pull cans are required to be wall-mounted.

TABLE 2

Minimum Pull Can Dimensions				
Service Ampacity	"W" Width		"X" Lug	"Y" Depth
	3W	4W		
0 – 200*	10″	14″	11″	6″
201 – 400	10″	14″	22″	6″
401 – 800	16″	22″	26″	11″

* 225 amps for residential service equipment

© 1998-2017 San Diego Gas & Electric Company. All rights reserved. Removal of this copyright notice without permission is not permitted under law.

REV	CHANGE	BY	DSGN	APPV	DATE	REV	CHANGE	BY	DSGN	APPV	DATE
A	Editorial Changes	LSM	CTG	TPM	11/01/17	D					
B						E					
C						F					

X Indicates Latest Revision | Completely Revised | New Page | Information Removed

TABLE OF CONTENTS

Notes:

(1) Service lateral conduits, firmly secured with a locknut, hub or bushing, must enter bottom of pull can. Maximum conduit intrusion inside pull can is 1". Load conduits must exit above shaded area. See pages SG 309.1 – 309.3 for service lateral conduit requirements.

(2) Bonding connection for service lateral conduits only is permitted at bottom of can. Any other bonding or grounding connection must be made above the shaded area and no grounding or bonding conductor is permitted to pass through shaded area.

(3) In the combination underground pull and disconnect can (see Figure 4) the grounding electrode conductor or bond jumper may be installed in a fully enclosed, factory-installed wireway (2" x 2" maximum) located in either back corner of the pull can area (see Figure 4 Bottom View). The raceway may not impede the required working space or reduce any specific clearances.

(4) Shaded area is for Utility service lateral conductor only. See Note 2 for exception.

(5) Terminating facilities for Utility's service lateral conductors shall be aluminum-bodied mechanical lugs with a range accepting one No. 4 AWG through 500 kCMIL conductor. One lug shall be provided for terminations rated up to 400 amps and 2 lugs for terminations rated 401-800 amps. Refer to page SG 707.2 Note 3 for exception that allows a single lug for 600 ampere special application.

(6) Maximum height from standing surface to centerline of mechanical lug is 60". Utility may approve greater height due to special circumstances. Consult with the Utility.

(7) Dimension "W" is the minimum width of the pull can access opening and is measured between the left side and right side return flanges; not interior walls of pull can.

(8) When viewed from front of pull can, return flanges shall not extend closer than ¾" from the outside edge of mechanical lug.

(9) 1" minimum side clearance is required from side of pull can to any other equipment or obstruction.

(10) All pull cans shall have full front access. Cover panels shall be removable, sealable, provided with two lifting handles, and limited to a maximum of 9 square feet in area. Sealing provisions shall consist of two drilled stud and wing-nut assemblies on opposite sides of the panel. See page SG 503 for sealing requirements. A minimum of 4" is required from the bus to the inside of the panel cover and 1" minimum from the bolt termination to the inside of the panel cover.

11. See page SG 703 for conductor identification and phase arrangement.

(12) In pull cans rated 0 – 800 amps, either bus bar or cable connections may be used from the top of the cable termination bus to serve a Current Transformer (CT) compartment, a single main disconnect, and multiple main disconnects.

(13) A main service or meter service disconnect is not permitted on the supply (line) side of a single meter.

© 1998-2017 San Diego Gas & Electric Company. All rights reserved. Removal of this copyright notice without permission is not permitted under law.

REV	CHANGE	BY	DSGN	APPV	DATE	REV	CHANGE	BY	DSGN	APPV	DATE
A	Editorial Changes	LSM	CTG	TPM	11/01/17	D					
B						E					
C						F					

X Indicates Latest Revision	Completely Revised	New Page	Information Removed	
SHEET 4 OF 4	SDG&E SERVICE STANDARDS & GUIDE			SG 705.4
	UNDERGROUND PULL CAN WITH OR WITHOUT MECHANICAL LUGS			

TABLE OF CONTENTS

This standard provides the requirements for underground pull cans with cable termination bus stubs. SDG&E (Utility) accepts underground pull cans rated 0 – 600 volts, 801 – 1,200 amps maximum, with cable termination bus stubs for residential or commercial/industrial service provided the requirements of this standard are met. Pull cans are required to be wall-mounted.

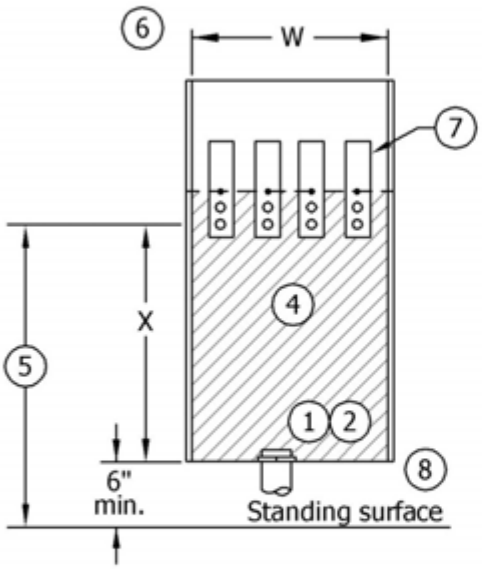

FIGURE 1
Front View

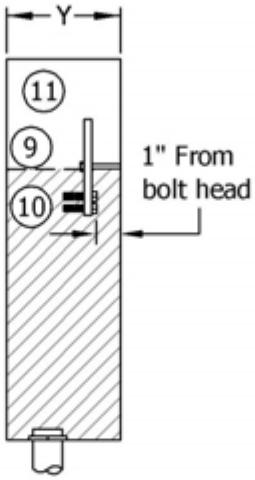

FIGURE 2
Side View

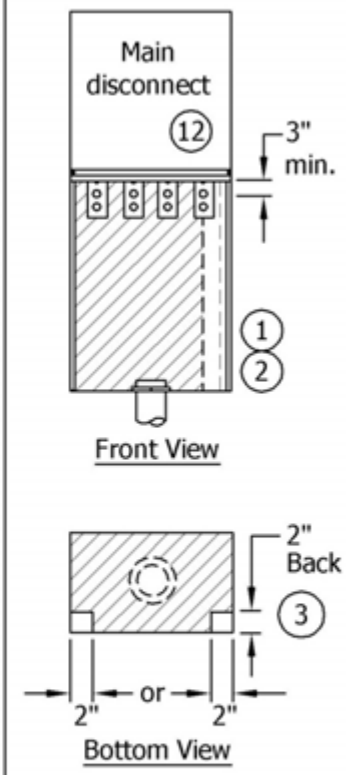

FIGURE 3
Combination
Underground Pull and
Disconnect Can

Minimum Pull Can Dimensions				
Service Ampacity	"W" Width		"X" Lug	"Y" Depth
	3W	4W		
801 – 1,200	---	30"	26"	11"

© 1998-2017 San Diego Gas & Electric Company. All rights reserved. Removal of this copyright notice without permission is not permitted under law.

REV	CHANGE	BY	DSGN	APPV	DATE	REV	CHANGE	BY	DSGN	APPV	DATE
A	Editorial Changes	LSM	CTG	TPM	11/01/17	D					
B						E					
C						F					

X Indicates Latest Revision	Completely Revised	New Page	Information Removed

SHEET
1 OF 2

SDG&E SERVICE STANDARDS & GUIDE

UNDERGROUND PULL CAN
WITH CABLE TERMINATION BUS STUBS

SG 706.1

TABLE OF CONTENTS

Notes:

1. Service lateral conduits, firmly secured with locknut, hub, or bushing, must enter bottom of pull can. Maximum conduit intrusion inside pull can is 1". Load conduits must exit above shaded area. See pages SG 309.1 – 309.3 for service lateral conduit requirements.

2. Bonding connection for service lateral conduits only is permitted at bottom of can. Any other bonding or grounding connection must be made above the shaded area and no grounding or bonding conductor is permitted to pass through the shaded area.

3. In the combination underground pull and disconnect can (see Figure 3) the grounding electrode conductor or bond jumper may be installed in a fully enclosed, factory-installed wireway (2" x 2" maximum) located in either back corner of the pull can area (see Figure 3, Bottom View). The raceway may not impede the required working space or reduce any specified clearances.

4. Shaded area is for Utility service lateral conductor only. See Note 2 for exception.

5. Maximum height from standing surface to centerline of lowest termination bolt is 60". Utility may approve greater height due to special circumstances. Consult with the Utility. 3' x 3' clear and level working space is required in front of the pull can. See pages SG 504.4 – 504.5 for additional working space clearance requirements.

6. Dimension "W" is the minimum width of the pull can access opening and is measured between the left side and right side return flanges; not the interior walls of the pull can.

7. When viewed from front of pull can, return flanges shall not extend past the outside edge of bus stub.

8. 1" minimum side clearance is required from side of pull can to any other equipment or obstruction.

9. All pull cans shall have full front access. Cover panels shall be removable, sealable, provided with two lifting handles, and limited to a maximum of 9 square feet in area. Sealing provisions shall consist of two drilled stud and wing-nut assemblies on opposite sides of the panel. See page SG 503 for sealing requirements. A minimum of 4" is required from the bus to the inside of the panel cover and 1" minimum from the bolt termination to the inside of the panel cover.

10. See page SG 703 for conductor identification and phase arrangement. See pages SG 709.1 – 709.3 for bus and bolt details.

11. In pull cans rated 801 – 1,200 amps, bus bar connections are required from the top of the cable termination bus stubs to serve a Current Transformer (CT) compartment. The reason for requiring bus bar connections is large cable will quite often pull the CT busses out of their vertical alignment, making it difficult or impossible to mount the CTs. Bus bars are not required to serve a main disconnect.

12. A main service or meter service disconnect is not permitted on the supply (line) side of a single meter.

TABLE OF CONTENTS

© 1998-2017 San Diego Gas & Electric Company. All rights reserved. Removal of this copyright notice without permission is not permitted under law.

REV	CHANGE	BY	DSGN	APPV	DATE	REV	CHANGE	BY	DSGN	APPV	DATE
A	Editorial Changes	LSM	CTG	TPM	11/01/17	D					
B						E					
C						F					

	X Indicates Latest Revision		Completely Revised		New Page		Information Removed	

SDG&E SERVICE STANDARDS & GUIDE

SHEET 2 OF 2

UNDERGROUND PULL CAN WITH CABLE TERMINATION BUS STUBS

SG 706.2

TABLE OF CONTENTS

Special Application

This standard provides the requirements for a factory-manufactured pull can and meter stack(s) for residential multi-family occupancy only, rated 600 amps maximum, single-phase, 3-wire, 120/208 volts or 120/240 volts, with 6 meters maximum. This equipment is required to be wall-mounted. This standard does not apply to field installed pull cans with raceways and cabling to individual meter panels.

The SDG&E Planner shall provide the customer with a copy of this standard with the Electric Meter & Service Location form because it is a special application. It is important for the customer to understand the equipment must be factory-manufactured with horizontal bussing from the pull can to the metering section(s).

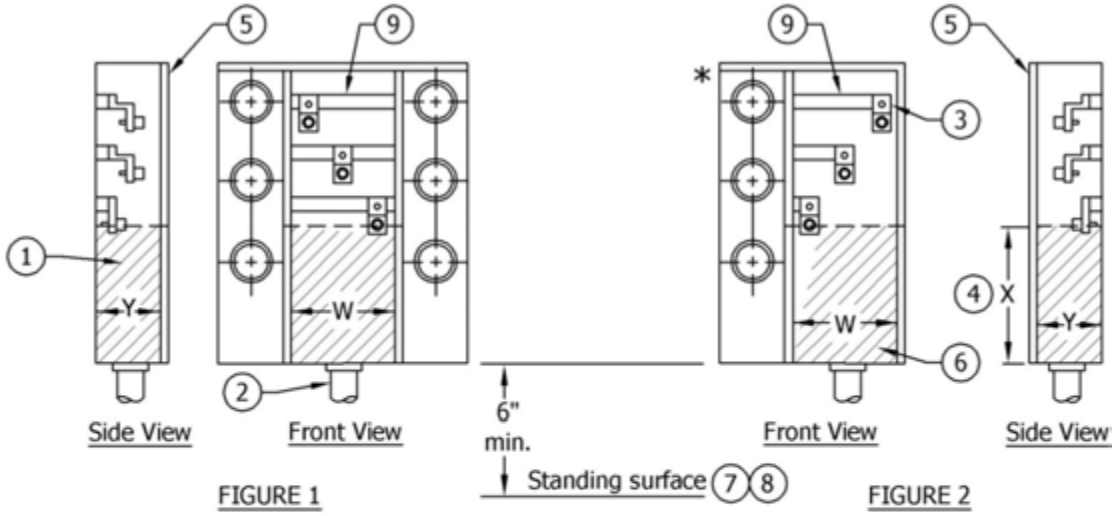

FIGURE 1

FIGURE 2

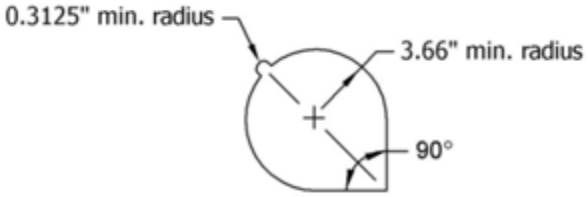

FIGURE 3
Meter Panel Cover Cutout Detail

© 1998-2017 San Diego Gas & Electric Company. All rights reserved. Removal of this copyright notice without permission is not permitted under law.

REV	CHANGE	BY	DSGN	APPV	DATE	REV	CHANGE	BY	DSGN	APPV	DATE
A	Editorial Changes	LSM	CTG	TPM	11/01/17	D					
B						E					
C						F					

X Indicates Latest Revision	Completely Revised	New Page	Information Removed

SDG&E SERVICE STANDARDS & GUIDE

RESIDENTIAL SINGLE-PHASE MULTI-METER STACK

Table for Figures 1 & 2

Service Equipment Rating in Amps	Minimum Service Equipment Dimensions			Minimum Conduit Size	Maximum Conduit Size
	"W"	"Y"	"X"		
0 – 200	6-½"	5-½"	11"	1-3"	1-4"
201 – 400	10-½"	6"	22"	1-3"	1-4"
401 – 600	10-½"	6"	22"	1-4"	1-4"

Notes:

1. Shaded area is for Utility service lateral conductor only. Bonding connection for service lateral conduits only is permitted at bottom of can. Any other bonding or grounding connection must be made above the shaded area and no grounding or bonding conductor is permitted to pass through the shaded area.
2. Service lateral conduits must enter the bottom of the pull can and be firmly secured with a locknut, hub or bushing. The maximum conduit intrusion inside the shaded area is 1". See pages SG 309.1–309.3 for service lateral conduit requirements.
3. See page SG 705.4, Note 5, for mechanical lug details. A "single lug" for 600 amps is permitted for this application only. Service conductors may cross over horizontal busses provided a barrier is installed or the bus is fully insulated.
4. The neutral lug height may be reduced to 8-½".
5. The pull can cover shall be independent of any other service equipment, and shall be removable without disturbing adjacent panels. Pull can covers shall have two lifting handles, and are limited to 9 square feet in area. Covers shall be sealable with two drilled stud and wing-nut assemblies on opposite sides of the panel. See page SG 503 for sealing requirements.
6. Dimension "W" is the minimum width of the pull can access opening and is measured between the left side and right side return flanges, not the interior walls of the pull can.
7. A minimum 3' x 3' clear and level working space is required in front of the pull can. See pages SG 504.4 – 504.5 for additional working space clearance requirements.
8. See pages SG 509.1 – 509.4 for meter cabinet requirements.
9. Bus taps are not permitted in this special application.

TABLE OF CONTENTS

© 1998-2017 San Diego Gas & Electric Company. All rights reserved. Removal of this copyright notice without permission is not permitted under law.

REV	CHANGE	BY	DSGN	APPV	DATE	REV	CHANGE	BY	DSGN	APPV	DATE
A	Editorial Changes	LSM	CTG	TPM	11/01/17	D					
B						E					
C						F					

X Indicates Latest Revision	Completely Revised	New Page	Information Removed

SDG&E (Utility) accepts free-standing Underground Pull Sections (UGPS), rated 0 – 600 volts, 4,000 amps maximum, provided all requirements of this standard are met.

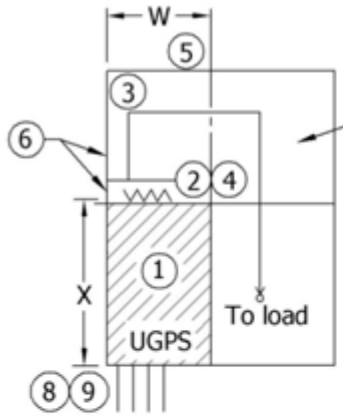

FIGURE 1
Pull section 4,000 amps maximum
Bottom Feed Only

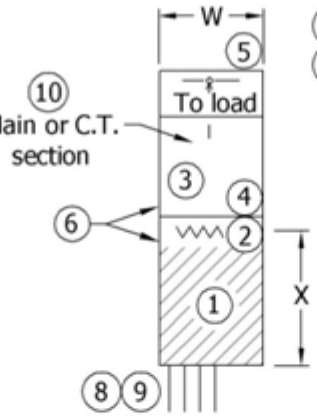

FIGURE 2
Pull section 2,000 amps maximum

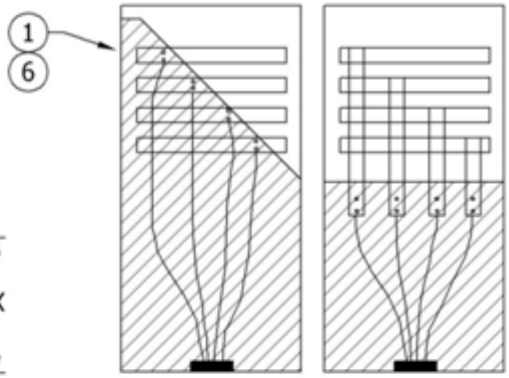

FIGURE 3

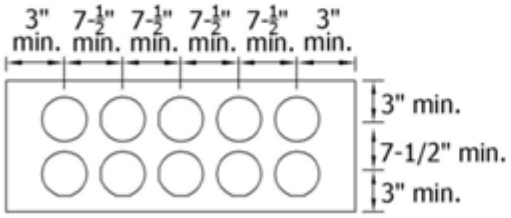

Conduit placement for maximum number of conduits

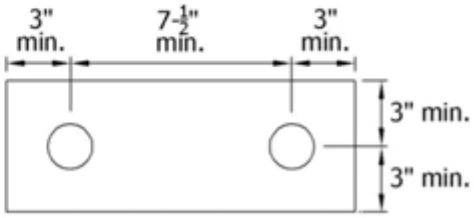

Conduit placement

FIGURE 4
Plan view UGPS

Minimum Pull Section Dimensions (7)			
Pull Section Rating (Amps)	"W" Width (5)		"X" Lug Height
	3W	4W	
0 – 400	10"	14"	22" – 72"
401 – 800	16"	22"	26" – 72"
801 – 1,200	---	30"	26" – 72"
1,201 – 2,000	---	35"	40-¼" – 72"
2,001 – 3,000	---	42"	60" – 72"
3,001 – 4,000	---	44"	60" – 72"

© 1998-2017 San Diego Gas & Electric Company. All rights reserved. Removal of this copyright notice without permission is not permitted under law.

REV	CHANGE	BY	DSGN	APPV	DATE	REV	CHANGE	BY	DSGN	APPV	DATE
A	Editorial Changes	LSM	CTG	TPM	11/01/17	D					
B						E					
C						F					

X Indicates Latest Revision | Completely Revised | New Page | Information Removed

SHEET 1 OF 2

SDG&E SERVICE STANDARDS & GUIDE

UNDERGROUND PULL SECTION, 0 – 600 VOLTS

SG 708.1

TABLE OF CONTENTS

Notes:

1. Underground service lateral conduits shall enter the bottom of the UGPS. The grounding electrode and/or grounding electrode conductor will not be permitted within the Utility portion of the UGPS. No other conductors, equipment or connections are permitted in the shaded area. See pages SG 309.1 – 309.3 for service lateral conduit requirements.

2. Bolt terminations as shown on pages SG 709.1 – 709.3 are required for all UGPS. See table on page SG 708.1 for minimum and maximum termination heights. The Utility will provide the termination lugs, connect the service lateral conductors to the termination lugs, and connect to the customer-provided two-bolt termination bus stubs.

3. Bus bars or cables may extend from the UGPS into switchboard service sections rated up to 800 amps. Bus bars are required when the service section rating exceeds 800 amps, or when a multiple metering section(s) is supplied.

4. Service conductors must terminate in the UGPS and shall not be pulled through the UGPS to land on a main or Current Transformer (CT) bus.

5. Dimension "W", shown in the table on page SG 708.1, is the minimum width of the UGPS access opening and is measured between the left side and right side return flanges, not the interior walls of the UGPS.

6. All UGPS shall have full front access. Cover panels shall be removable, sealable, provided with two lifting handles, and limited to a maximum of 9 square feet in area. Sealing provisions shall consist of two drilled stud and wing-nut assemblies on opposite sides of the panel. See page SG 503 for additional sealing requirements. A minimum of 4" is required from the bus to the inside of the panel cover and 1" minimum from the bolt termination to the inside of the panel cover.

7. There is no minimum depth dimension shown or required by the Utility. The depth of the equipment is determined by meeting the bus clearances shown on pages SG 709.1 - 709.3 and providing space for the conduit entry in accordance with page SG 708.1, Figure 4.

8. Maximum conduit intrusion into the UGPS is 2".

9. UGPS that require 2", 3" or 4" conduits must allow a minimum of 3' clear and level working space in front of the UGPS. UGPS requiring 5" conduits must allow a minimum of 6' clear and level working space in front of the UGPS. See pages SG 504.4 – 504.5 for additional working space clearance requirements.

10. A main service or meter service disconnect is not permitted on the supply (line) side of a single meter.

See pages SG 506.1 – 506.4 for electric meter room requirements. See pages SG 509.1 – 509.4 for meter cabinet requirements.

TABLE OF CONTENTS

© 1998-2017 San Diego Gas & Electric Company. All rights reserved. Removal of this copyright notice without permission is not permitted under law.

REV	CHANGE	BY	DSGN	APPV	DATE	REV	CHANGE	BY	DSGN	APPV	DATE
A	Editorial Changes	LSM	CTG	TPM	11/01/17	D					
B						E					
C						F					

X	Indicates Latest Revision		Completely Revised		New Page		Information Removed

UNDERGROUND PULL SECTION, 0 – 600 VOLTS

This standard provides the requirements for cable termination bus stubs in underground pull cans or Underground Pull Sections (UGPS).

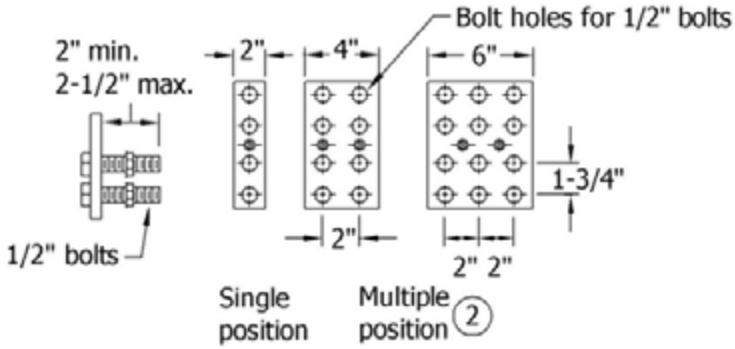

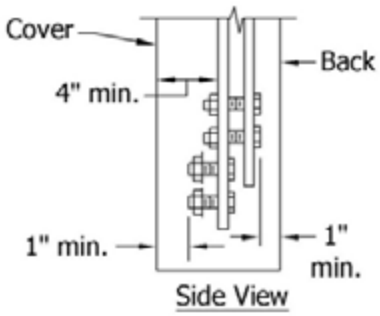

FIGURE 1
Terminating bolt and drilling detail

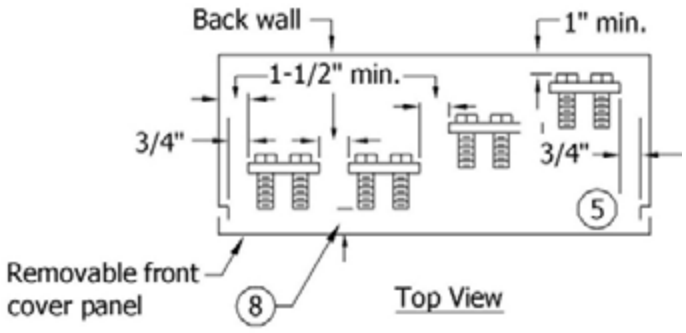

FIGURE 2
Spacing requirements for terminating facilities (side by side, or staggered).

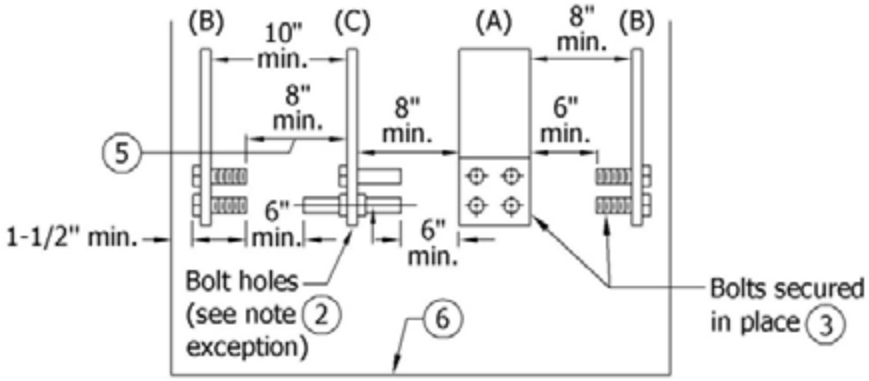

FIGURE 3
Spacing requirements for terminating facilities accessible from (A) front only, (B) one side only, or (C) from either side. (3) (4)

TABLE OF CONTENTS

© 1998-2017 San Diego Gas & Electric Company. All rights reserved. Removal of this copyright notice without permission is not permitted under law.

REV	CHANGE	BY	DSGN	APPV	DATE	REV	CHANGE	BY	DSGN	APPV	DATE
A	Editorial Changes	LSM	CTG	TPM	11/01/17	D					
B						E					
C						F					

X Indicates Latest Revision	Completely Revised	New Page	Information Removed

SDG&E SERVICE STANDARDS & GUIDE

CABLE TERMINATION BUS STUBS IN UNDERGROUND PULL CANS OR PULL SECTIONS

SG 709.1

TABLE OF CONTENTS

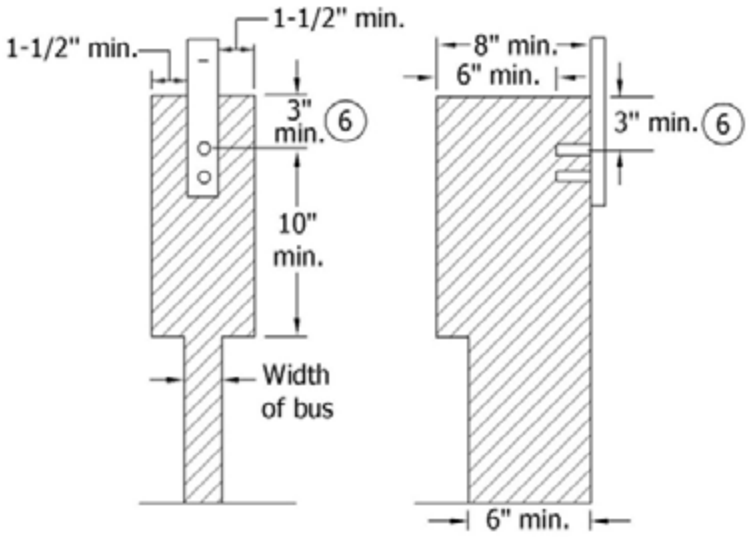

FIGURE 4
Required unobstructed working space for all terminations.

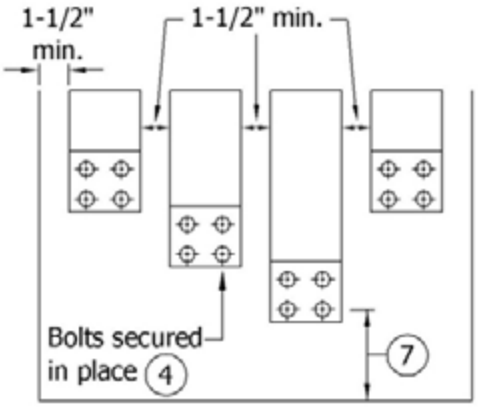

Front View
Spacing requirements for top to bottom stagger of terminating facilities.

4" min. required [assures 1" min. clearance from body of terminating lug (when in place) to front panel].
Exception: See Notes (5) and (6).

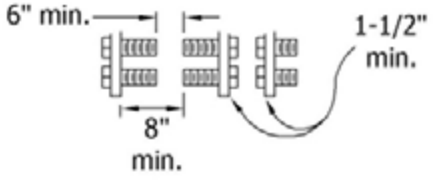

Side View
Bus accessible from one side only with bolt secured in bus.

FIGURE 5

© 1998-2017 San Diego Gas & Electric Company. All rights reserved. Removal of this copyright notice without permission is not permitted under law.

REV	CHANGE	BY	DSGN	APPV	DATE	REV	CHANGE	BY	DSGN	APPV	DATE
A	Editorial Changes	LSM	CTG	TPM	11/01/17	D					
B						E					
C						F					

X Indicates Latest Revision	Completely Revised	New Page	Information Removed

SDG&E SERVICE STANDARDS & GUIDE

CABLE TERMINATION BUS STUBS IN UNDERGROUND PULL CANS OR PULL SECTIONS

SG 709.2

Notes:

1. The bolt terminations shown on pages SG 709.1 – 709.2 are required for pull cans rated over 800 amps, and all UGPS (free standing).

(2) One landing position is required for each 400 amps, or portion thereof, of service capacity. Each landing position shall consist of two ½" steel bolts spaced on 1-¾" vertical centers and extending from 2" to 2-½" from the mounting surface. When multiple positions are required, provide a minimum of 2" of horizontal spacing between positions.
Exception: Edgewise terminating facilities may consist of 9/16" holes having the same spacing as specified for the ½" bolts as specified above and in Figure 1. The unobstructed working space shall be provided on both sides of the termination bus (see Figure 3).

(3) Each terminating bolt shall be provided with a spring washer and a nut. The spring washer may be either a cone-type (Belleville) washer or a split-ring washer and a flat washer. All parts shall be plated to prevent corrosion. Terminating bolts shall not be used to secure the termination bus in place.

(4) Terminating bolts must be secured in place. "Secured in place" shall mean that the stud will not turn, back out, or loosen in any manner when tightening or loosening terminal nuts (including cross-threaded situations).

(5) Each terminating facility shall have an unobstructed working space, accessible from the front of the UGPS as viewed from the access compartment opening, in front of the entire mounting surface as shown in Figures 3 and 4. No more than one termination facility may be mounted along a side wall. When viewed from the front of the pull can or UGPS, no other termination or cables in place shall impair the 8" minimum working clearance. Uninsulated busses of different potentials shall not be permitted below or behind any terminating position as viewed from the front of the UGPS. If cross-bussing is installed below or behind a terminating position, the cross-bussing shall be fully insulated or barriered.
Exception: For terminating facilities with bolts facing the access opening as shown in Figure 2, the required 1-½" side clearance (bus to access opening return flange) may be reduced to ¾".

(6) In the terminal mounting area, which is defined as the area of the terminating facilities shown in Figure 1, a clear space (barrel of proximity) of a minimum 1-½" radially and 3" above the top bolt is required around any terminating facility including its bolts and bolt heads, any other bus, any other terminating facility, or any grounded surface, except as follows:
   a. Minimum clearance to back of UGPS may be reduced to 1".
   b. Minimum clearance to any fully insulated horizontal bus behind terminating facility may be reduced to 1".
   c. Neutral terminating facility may have a minimum clearance of 1" from any grounded surface.
   d. The clearance directly above and measured from the center of the top termination bolt may be reduced to 1" to either an insulated surface or bus of the same potential.

(7) See page SG 706.1 or SG 708.1, whichever is applicable, for minimum termination heights.

(8) For switchboard UGPS, a minimum of 4" is required from the bus to the inside of the panel cover and 1" minimum from bolt termination to the inside of the panel cover.

© 1998-2017 San Diego Gas & Electric Company. All rights reserved. Removal of this copyright notice without permission is not permitted under law.

REV	CHANGE	BY	DSGN	APPV	DATE	REV	CHANGE	BY	DSGN	APPV	DATE
A	Editorial Changes	LSM	CTG	TPM	11/01/17	D					
B						E					
C						F					

X	Indicates Latest Revision		Completely Revised		New Page		Information Removed

SHEET 3 OF 3

SDG&E SERVICE STANDARDS & GUIDE

CABLE TERMINATION BUS STUBS IN UNDERGROUND PULL CANS OR PULL SECTIONS

SG 709.3

TABLE OF CONTENTS

800 - CUSTOMER GENERATION

800 - CUSTOMER GENERATION

PAGE #	SUBJECT
SG 801	Table of Contents
SG 802.1 – 802.2	Alphabetical Subject Index
SG 803.1 – 803.3	General Information
SG 804	Stand-By Generator Safety Transfer Switch
SG 805.1 – 805.3	Stand-By Generator
SG 806.1 – 806.16	Distributed Generation

© 1998-2017 San Diego Gas & Electric Company. All rights reserved. Removal of this copyright notice without permission is not permitted under law.

REV	CHANGE	BY	DSGN	APPV	DATE	REV	CHANGE	BY	DSGN	APPV	DATE
A	New Page	LSM	LSM	TPM	11/01/17	D					
B						E					
C						F					

	Indicates Latest Revision		Completely Revised	X	New Page		Information Removed

TABLE OF CONTENTS

SUBJECT	PAGE #
Customer Generation	
Connection of Customer-Owned Power Generators to SDG&E's Electrical System	SG 803.1
Directory	SG 803.1
General Information	SG 803.1 – 803.3
Net Generation Output Metering	SG 803.1
Permanently or Temporarily Connected Standby Generators	SG 803.2 – 805.3
Violations	SG 803.2
Warning Statements & Labels	SG 803.1 – 803.2
Disconnection Devices	SG 806.2 – 806.4
Circumstances Requiring Disconnects	SG 806.2
Inverter-Based Devices	SG 806.2
Utility AC Disconnect Requirements	SG 806.2 – 806.4
Distributed Generation	SG 806.1 – 806.16
Accessibility	SG 806.3
Billing and Purchase of Energy Meter	SG 806.5
Disconnection Devices	SG 806.2 – 806.4
Disconnection of Energy Source	SG 806.15
General Information	SG 806.1
Interconnection Process	SG 806.1
Interconnection Request Requirements	SG 806.1
Net Generation Output Metering	SG 806.5 – 806.12
Telemetering	SG 806.15
Transformer Requirements	SG 806.15
Inspection Requirements	SG 803.2, SG 806.7, SG 806.15

© 1998-2017 San Diego Gas & Electric Company. All rights reserved. Removal of this copyright notice without permission is not permitted under law.

REV	CHANGE	BY	DSGN	APPV	DATE	REV	CHANGE	BY	DSGN	APPV	DATE
A	Editorial Changes	LSM	LSM	TPM	11/01/17	D					
B						E					
C						F					

	Indicates Latest Revision	X	Completely Revised		New Page		Information Removed

TABLE OF CONTENTS

SUBJECT	PAGE #
Interconnection Process	SG 806.1
Interconnection Request Requirements	SG 806.1
Metering	
Billing and Purchase of Energy Metering	SG 806.5, SG 806.16
Net Generation Output Metering – General Information & Installation	SG 806.5 – 806.12
Typical Metering Devices Required and Installed by SDG&E	SG 806.14
Operating Requirements	SG 806.2
Standby Generators, Permanently or Temporarily Connected	
General Information	SG 803.2
Generators Connected Permanently but NOT Operating in Parallel with SDG&E's System	SG 803.3
Generators NOT Permanently Connected	SG 803.2 – 803.3
Stand-by Generator Safety Transfer Switch	SG 804
Transfer Systems	SG 803.3, SG 804, SG 805.1 – 805.3
Violations	SG 803.2
Warning Statements & Labels	SG 803.1 – 803.2
Working Space & Clearance Requirements from SDG&E-Owned Electric Meter & Gas Meter Set Assembly	SG 806.13

© 1998-2017 San Diego Gas & Electric Company. All rights reserved. Removal of this copyright notice without permission is not permitted under law.

REV	CHANGE	BY	DSGN	APPV	DATE	REV	CHANGE	BY	DSGN	APPV	DATE
A	Editorial Changes	LSM	LSM	TPM	11/01/17	D					
B						E					
C						F					

	Indicates Latest Revision	X	Completely Revised		New Page		Information Removed

All installations of customer-owned electric energy production equipment (hereinafter referred to as generator or generators) require adherence to rules for safeguarding of personnel, SDG&E-owned, and customer-owned equipment. SDG&E (Utility) shall be consulted before a generator is connected to any circuit which is, or can be supplied from the Utility's electrical system. This is to ensure against any unanticipated backfeed of electricity into the Utility's system and compliance with the Utility's tariffs. This standard does not apply to portable generators under circumstances when a customer's cord and plug appliances are connected directly to the generator's receptacles.

DIRECTORY

A permanent plaque or directory, specifying all electrical power sources on or in the premises, shall be installed at each service equipment location (service delivery point) of all generators capable of being interconnected to the Utility's electrical system. Installations with multiple generators may be designated in groups on the plaque. Refer to page SG 017.1 for plaque specifications.

NET GENERATION OUTPUT METERING

Except for emergency or standby generators, used solely during Utility outages and **not** capable of operating in parallel with the Utility's system, customer-owned generators may require the installation of Net Generation Output Metering (NGOM) to satisfy requirements associated with other services applicable to or requested by a customer. Under circumstances when NGOM is required, such requirements may be waived where less intrusive and/or more cost effective options are available for providing generator production data to the Utility. See pages SG 806.5 – 806.12 for additional information about NGOM.

CONNECTION OF CUSTOMER-OWNED GENERATORS TO SDG&E'S ELECTRICAL SYSTEM

The legislature of the State of California intended to prevent electricity generated by permanent or portable electric generators from back feeding into a Utility electrical system by enacting the California Health and Safety Code, Division 104, Part 15, Chapter 5, Sections 119075 through 119090.

In addition, California Code of Regulations, Title 8, Section 2320.9, states:

> No electrical power source, permanent or temporary, shall be connected to a premises wiring system, or parts of such a system, unless positive means are used to prevent the transmission of electricity beyond the premises wiring system, or beyond any intentionally segregated parts of such a system. Exception: When an interconnection has been authorized by the servicing utility.

Positive means is a device which, by its use or operation, interrupts or prevents the flow of current to or from the electrical system and which provides the device operator or user a visual or other definite indication of the existing condition or state of the electrical system.

WARNING STATEMENTS & LABELS

California Health and Safety Code, Section 119080(a), requires:

> Every manufacturer of a portable or permanent electrical generator that is capable of being connected either permanently or temporarily to a commercial, industrial or residential structure's electrical system, shall include a warning statement in the generator's instruction manual and a

TABLE OF CONTENTS

© 1998-2017 San Diego Gas & Electric Company. All rights reserved. Removal of this copyright notice without permission is not permitted under law.

REV	CHANGE	BY	DSGN	APPV	DATE	REV	CHANGE	BY	DSGN	APPV	DATE
A	Editorial Changes	LSM	IPJ	TPM	11/01/17	D					
B						E					
C						F					

legible warning label on the generator which states the requirement of Section 119075 and explains the electrical hazards of backfeed into a Utility's distribution system. The same warning information shall be included in all advertisements offering portable electrical generators.

California Health and Safety Code, Section 119080(b), states: "No person or public agency shall sell, rent to another person or public agency, or offer for sale or rent to another person or public agency a portable electrical generator unless the legible warning label is on a visible surface of the generator."

VIOLATIONS

California Health and Safety Code, Section 119090(a), states: "Any person who violates Sections 119075 to 119085, inclusive, is guilty of a misdemeanor, and subject to a fine of not more than five hundred dollars ($500) or not more than six months' imprisonment."

PERMANENTLY OR TEMPORARILY CONNECTED STANDBY GENERATORS

1. General Information

   a. When a generator is permanently or temporarily connected to a customer's electric system, it has the potential to energize the building's wiring. This type of installation requires a device that isolates the generator from the Utility's electrical system. Refer to item 4, Transfer Systems, on page SG 803.3 for the requirements of such isolation devices.
   b. The generator must be 60-hertz alternating current. If a direct current generator is used, the installation must be arranged so that all motors, radios, and other equipment that will not operate on direct current are disconnected from circuits before the circuits are energized from the generator.
   c. Only a qualified professional, such as a licensed electrical contractor, should install a permanently or temporarily connected standby generator.
   d. A permit and inspection by the governmental Authority Having Jurisdiction (AHJ) are required for all permanent and temporary connections of generators to the customer's electrical system(s).
   e. When installation is complete, the customer must call the Utility at (800) 411-SDGE (7343) and provide the address of the generator location.

2. Generators **Not** Permanently Connected (Temporary Connections)

   Any portable electric generator connected to SDG&E must comply with California Health & Safety Code, Section 119075. Section 119075(b) states:

   > Any portable electrical generator that is capable of being connected temporarily to a customer's electrical system, that is normally supplied by an electrical corporation or state or local public agency, shall be connected only after opening the customer's main switch so as to isolate the customer's electrical system from that of the electrical corporation or state or local agency.

   Article 702.5 of the 2014 National Electrical Code (NEC) requires transfer equipment "suitable for the intended use and designed and installed [so as] to prevent the inadvertent interconnection of normal and alternate sources of supply in any operation of the transfer equipment." A main breaker or fuse, which is not listed as suitable for use as transfer equipment, cannot be used as the transfer device between temporarily connected portable generators and the Utility's system. This applies to any

© 1998-2017 San Diego Gas & Electric Company. All rights reserved. Removal of this copyright notice without permission is not permitted under law.

REV	CHANGE	BY	DSGN	APPV	DATE	REV	CHANGE	BY	DSGN	APPV	DATE
A	Editorial Changes	LSM	IPJ	TPM	11/01/17	D					
B						E					
C						F					

TABLE OF CONTENTS

generator connected as a temporary (non-routine, nonscheduled) or emergency source of electric energy. Any portable electric generator used as a temporary source of power shall be connected as described below in item 4, Transfer Systems.

3. Generators Connected Permanently but **Not** Operating in Parallel with SDG&E

   All generators in this category are to be connected in accordance with SDG&E's CPUC-approved tariffs and California Health and Safety Code 119075(c), which states:

   > Any electrical generator, other than a generator designed to run in parallel with the system of the servicing Utility and approved by that Utility, that is capable of being permanently connected to a customer's electrical system shall be connected only by means of a double throw switch so as to isolate the customer's electrical system from that of the electrical corporation or state or local agency.

4. Transfer Systems

   a. Service Equipment Rated Transfer – Transfer switches listed and labeled as suitable for use as service equipment are permitted for use as main service equipment upon prior approval from the Utility. All other transfer switches shall be connected on the load side of the main service equipment.
   b. Open-Transition Switching – A double throw switch with a mechanically driven break-before-make sequence shall normally be provided to transfer all ungrounded conductors of an emergency lighting or power load to either the generator or the normal supply. (See Figures 1 – 4 on pages SG 805.1 – 805.3 for typical connections). Manual transfer switch installations do not require review and approval by the Utility prior to installation.
   c. Closed-Transition Switching & Auto Transfer – Requests for closed-transition switching (make-before-break) and automatic transfer systems, with a solid state or programmable logic controller, require specification submittal and must be approved by the Utility. The customer's submittal shall include 3 sets of drawings and all of the following: system description, one-line relay functional diagram, logic controller program, and bill of materials. Closed-transition switching limiting parallel operation with the Utility to no greater than 1 second (60 cycles) does not require a written agreement with the Utility. Submittals should be sent to:

      SDG&E Service Standards
      8316 Century Park Court, CP52F
      San Diego, CA 92123-1582

      The customer will receive an approval, or request for changes, after the Utility's review of the request has been completed.
   d. Separately Derived Systems – When an AC generator is installed as a separately derived system, grounding of the neutral conductor shall be in accordance with the California Electrical Code. Separately derived systems require a switched neutral conductor at the transfer switch. Figure 1 on page SG 804 and Figures 1 – 4 on pages SG 805.1 – 805.3 do not show this system configuration.

© 1998-2017 San Diego Gas & Electric Company. All rights reserved. Removal of this copyright notice without permission is not permitted under law.

REV	CHANGE	BY	DSGN	APPV	DATE	REV	CHANGE	BY	DSGN	APPV	DATE
A	Editorial Changes	LSM	IPJ	TPM	11/01/17	D					
B						E					
C						F					

TABLE OF CONTENTS

TABLE OF CONTENTS

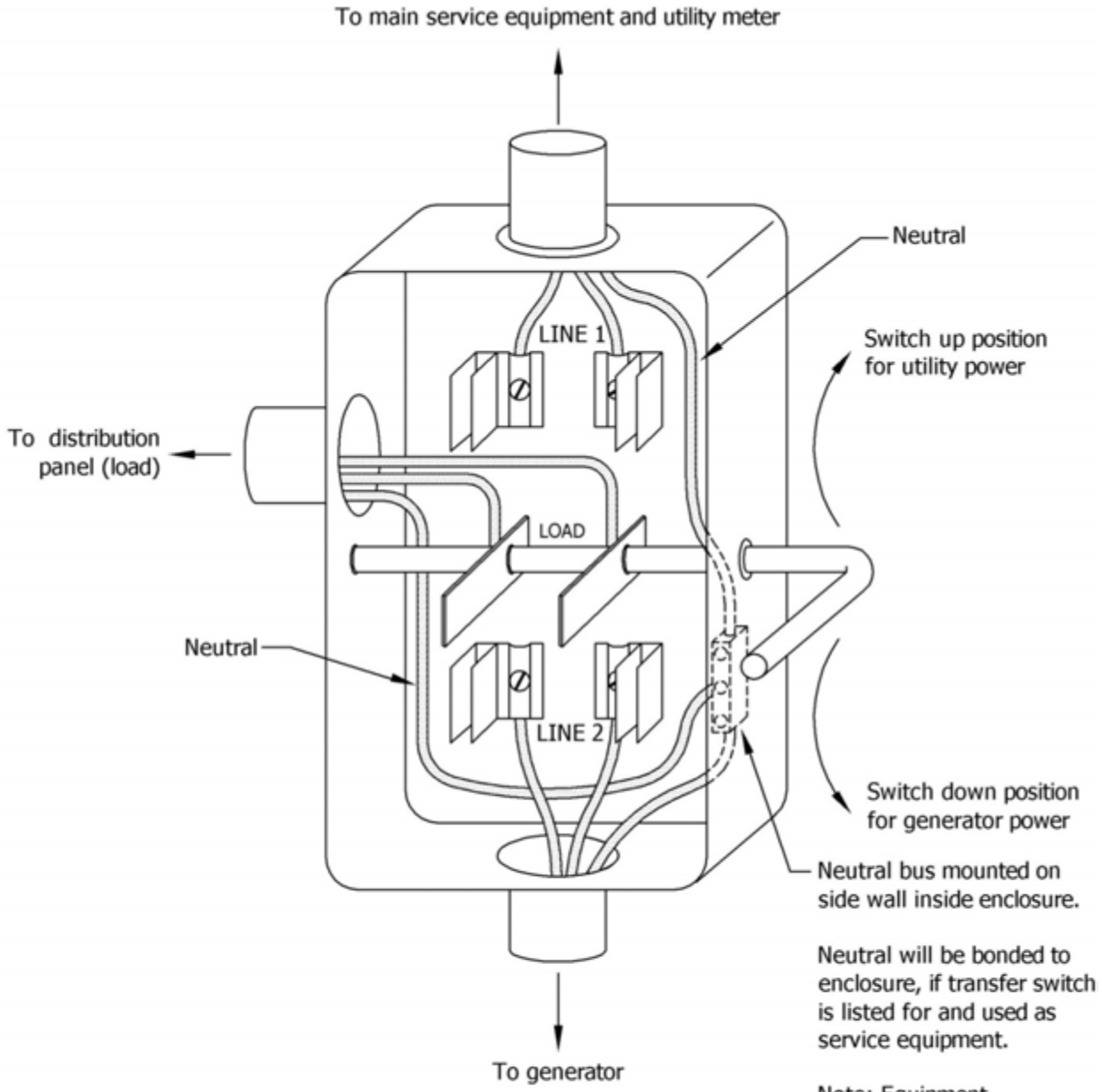

FIGURE 1

STAND-BY ELECTRIC GENERATOR SAFETY TRANSFER SWITCH TYPICAL LAYOUT

© 1998-2017 San Diego Gas & Electric Company. All rights reserved. Removal of this copyright notice without permission is not permitted under law.

REV	CHANGE	BY	DSGN	APPV	DATE	REV	CHANGE	BY	DSGN	APPV	DATE
A	Editorial Changes	LSM	IPJ	TPM	11/01/17	D					
B						E					
C						F					

X Indicates Latest Revision	Completely Revised	New Page	Information Removed	
SHEET 1 OF 1	SDG&E SERVICE STANDARDS & GUIDE			SG 804
	STAND-BY GENERATOR SAFETY TRANSFER SWITCH			

TABLE OF CONTENTS

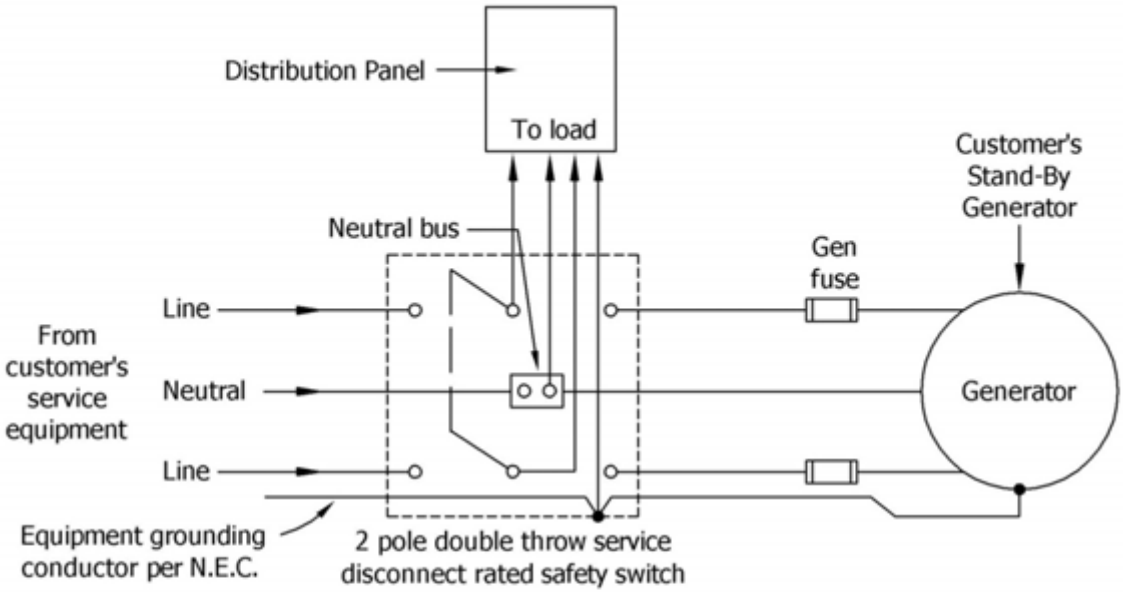

FIGURE 1
CONNECTION OF STAND-BY GENERATOR SUPPLYING CUSTOMER'S ENTIRE LOAD

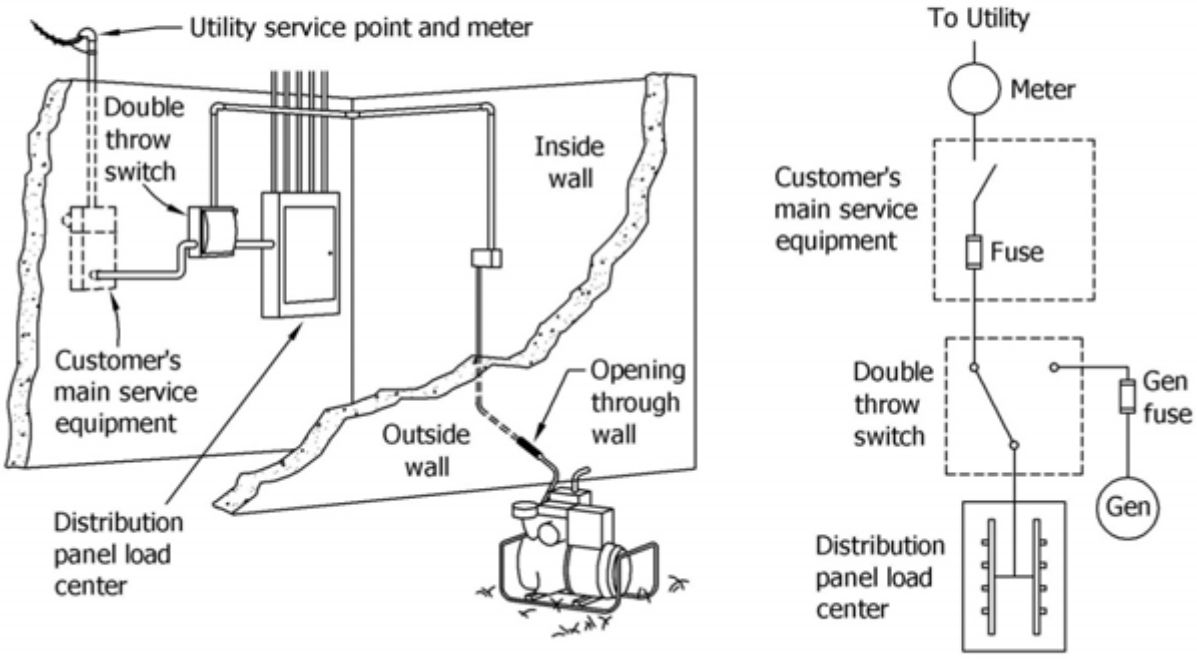

FIGURE 2
STAND-BY GENERATOR NON-PARALLEL OPERATION WITH UTILITY

© 1998-2017 San Diego Gas & Electric Company. All rights reserved. Removal of this copyright notice without permission is not permitted under law.

REV	CHANGE	BY	DSGN	APPV	DATE	REV	CHANGE	BY	DSGN	APPV	DATE
A	Editorial Changes	LSM	IPJ	TPM	11/01/17	D					
B						E					
C						F					

X Indicates Latest Revision	Completely Revised	New Page	Information Removed

SDG&E SERVICE STANDARDS & GUIDE

STANDARD-BY GENERATOR

SG 805.1

TABLE OF CONTENTS

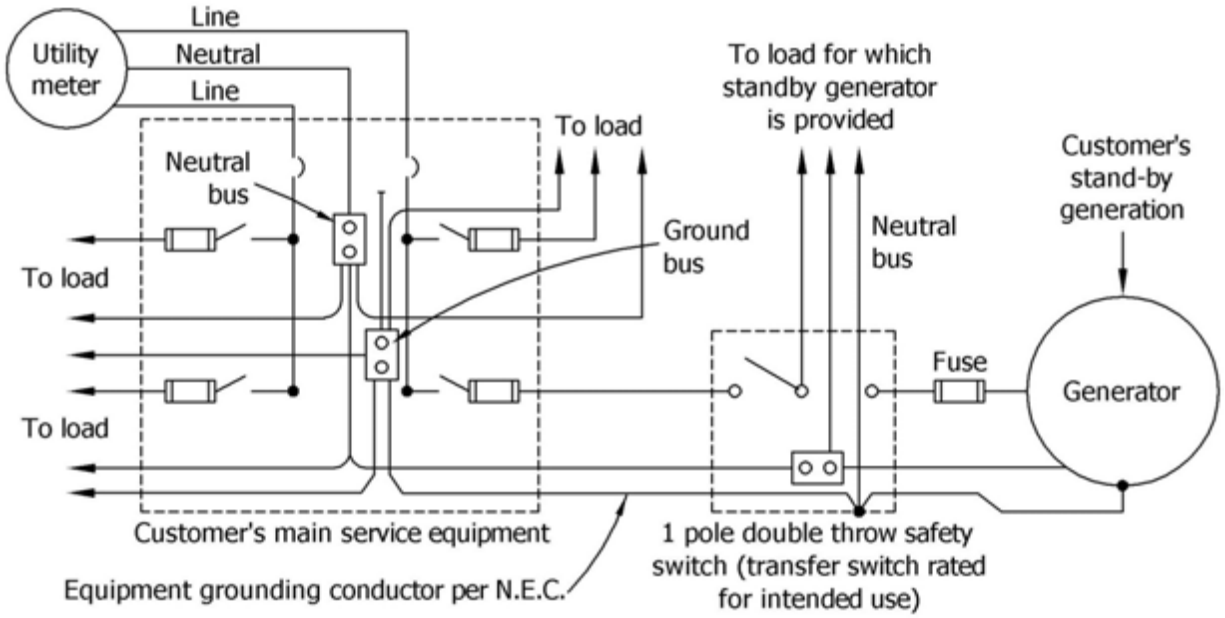

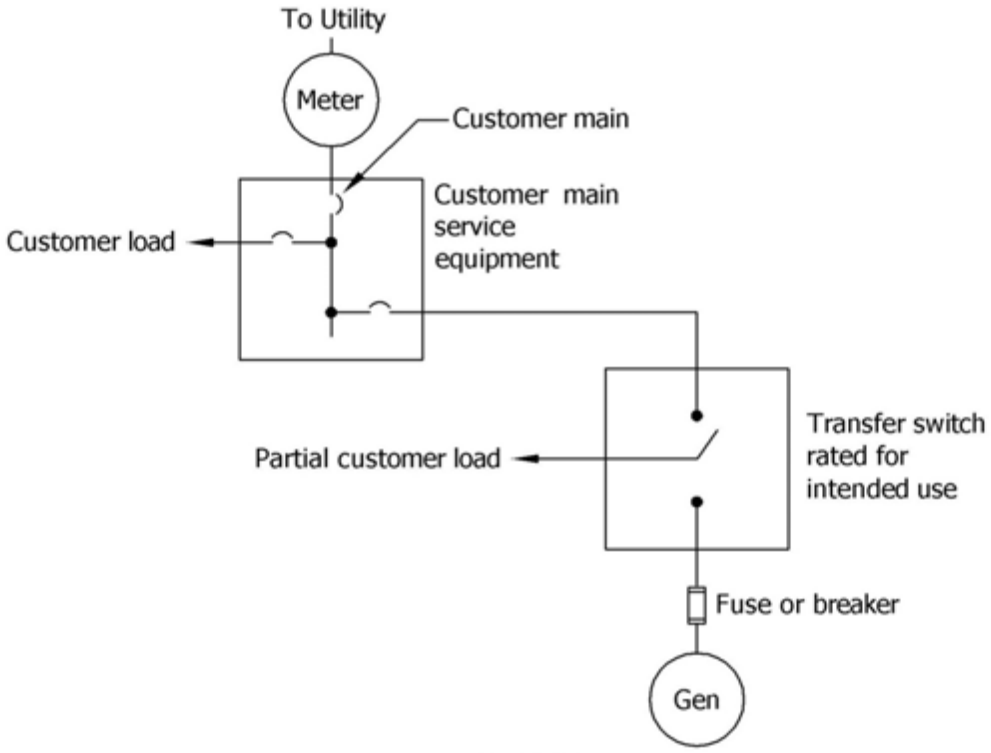

FIGURE 3
CONNECTION OF STAND-BY GENERATOR SUPPLYING ONE 120 VOLT CIRCUIT

© 1998-2017 San Diego Gas & Electric Company. All rights reserved. Removal of this copyright notice without permission is not permitted under law.

REV	CHANGE	BY	DSGN	APPV	DATE	REV	CHANGE	BY	DSGN	APPV	DATE
A	Editorial Changes	LSM	IPJ	TPM	11/01/17	D					
B						E					
C						F					

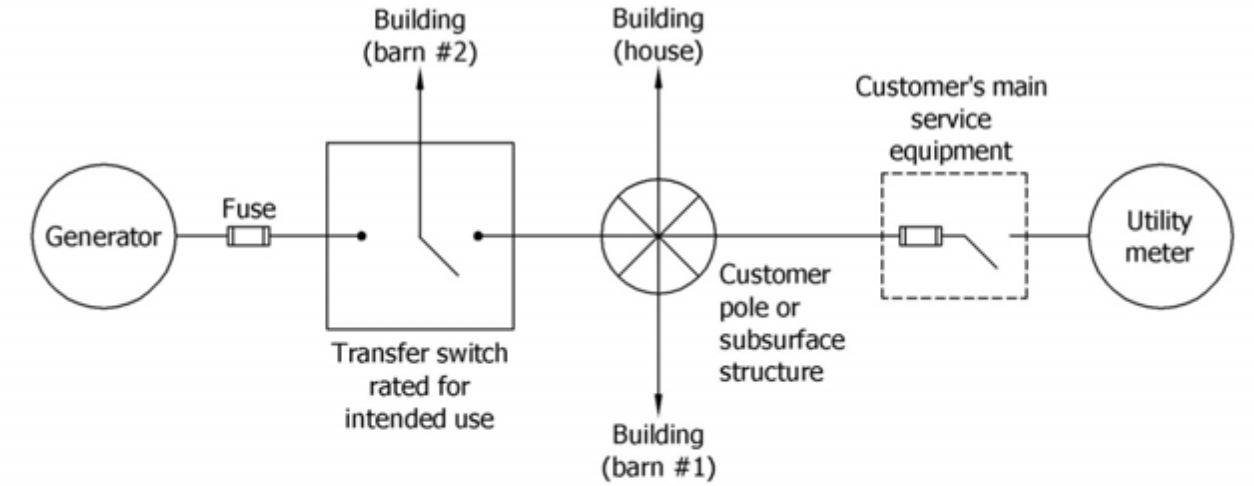

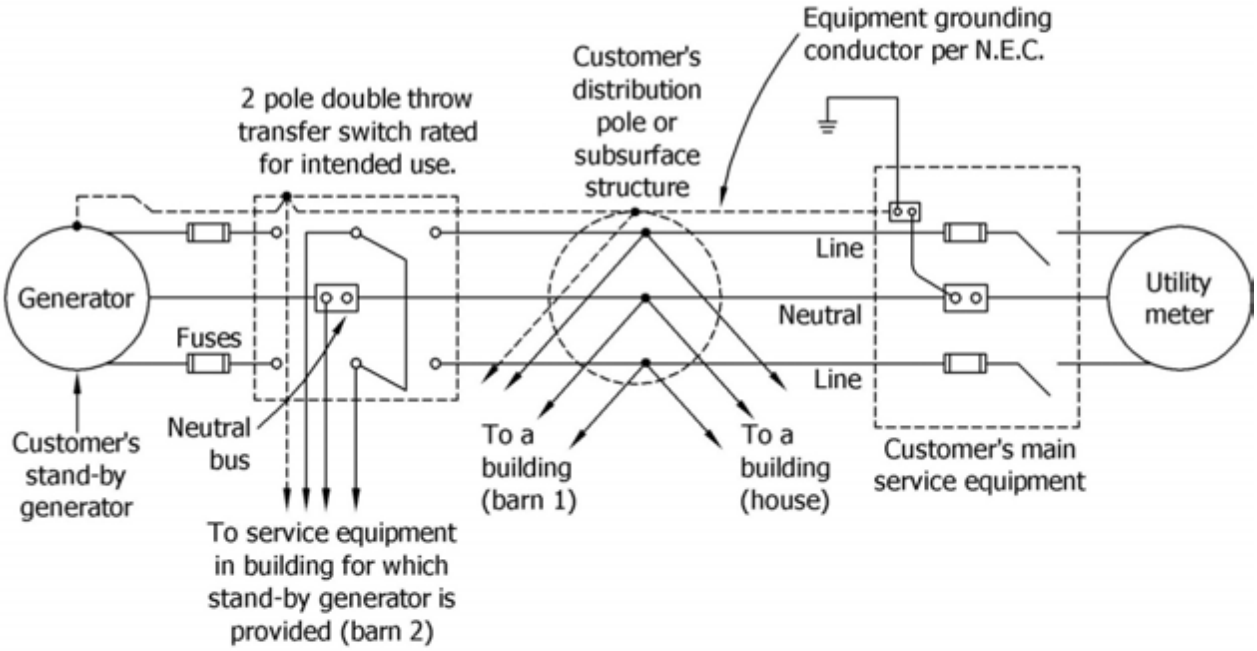

NOTE:
Connections shown are for Utility's service being single-phase, 3-wire, 120/240-volts.

FIGURE 4
CONNECTION OF STAND-BY GENERATOR TO A PORTION OF CUSTOMER LOAD SERVED FROM SINGLE UTILITY SERVICE. EXAMPLE SHOWN IS MULTIPLE BUILDINGS IN RURAL AREAS.

© 1998-2017 San Diego Gas & Electric Company. All rights reserved. Removal of this copyright notice without permission is not permitted under law.

REV	CHANGE	BY	DSGN	APPV	DATE	REV	CHANGE	BY	DSGN	APPV	DATE
A	Editorial Changes	LSM	IPJ	TPM	11/01/17	D					
B						E					
C						F					

X Indicates Latest Revision	Completely Revised	New Page	Information Removed	
SHEET 3 OF 3	SDG&E SERVICE STANDARDS & GUIDE			SG 805.3
	STAND-BY GENERATOR			

TABLE OF CONTENTS

GENERAL INFORMATION:

THIS SECTION PROVIDES AN OVERVIEW OF SDG&E'S REQUIREMENTS FOR INTERCONNECTING CUSTOMER-OWNED GENERATORS TO SDG&E'S ELECTRIC DISTRIBUTION SYSTEM. IT IS NOT INTENDED TO BE A SUBSTITUTE FOR THE SDG&E GENERATION INTERCONNECTION HANDBOOK (INTERCONNECTION HANDBOOK) OR SDG&E'S ELECTRIC RULE 21 (RULE 21) AND SHOULD NOT BE RELIED ON TO DETERMINE THE INTERCONNECTION REQUIREMENTS FOR ANY PROJECT. WHERE THERE IS ANY PERCEIVED OR ACTUAL INCONSISTENCY BETWEEN THIS DOCUMENT AND THE REQUIREMENTS OF RULE 21 OR THE INTERCONNECTION HANDBOOK, RULE 21 SHALL GOVERN. CUSTOMERS PLANNING TO INSTALL A GENERATOR THAT WILL OPERATE IN PARALLEL WITH SDG&E'S ELECTRIC DISTRIBUTION SYSTEM FOR THE PURPOSE OF (1) ONLY SERVING THEIR OWN ELECTRICAL LOAD, (2) SERVING THEIR OWN ELECTRICAL LOAD AND EXPORTING EXCESS POWER TO THE GRID OR (3) ONLY EXPORTING POWER TO THE GRID, MUST SUBMIT AN APPLICATION FOR INTERCONNECTION AND RECEIVE WRITTEN AUTHORIZATION FROM SDG&E TO INTERCONNECT AND OPERATE IN PARALLEL.

I. INTERCONNECTION PROCESS

INTERCONNECTION CAN BE ACHIEVED BY MEANS OF EITHER THE RULE 21 PROCESS OR THE WHOLESALE DISTRIBUTION OPEN ACCESS TARIFF (WDAT) PROCESS. BOTH INTERCONNECTION PROCESSES REQUIRE THE CUSTOMER TO COMPLETE A GENERATING FACILITY TECHNICAL REVIEW OR STUDY AND EXECUTE AN INTERCONNECTION AGREEMENT WITH SDG&E BEFORE THE GENERATING FACILITY IS AUTHORIZED TO INTERCONNECT AND OPERATE IN PARALLEL WITH SDG&E'S ELECTRIC SYSTEM. DETAILED INFORMATION ADDRESSING THE INTERCONNECTION OF CUSTOMER-OWNED GENERATORS IS LOCATED ON SDG&E'S WEBSITE AT HTTPS://WWW.SDGE.COM/MORE-INFORMATION/CUSTOMER-GENERATION

RULE 21 INFORMATION AND DOCUMENTS:
HTTPS://WWW.SDGE.COM/MORE-INFORMATION/CUSTOMER-GENERATION/ELECTRIC-RULE-21

WDAT INFORMATION AND DOCUMENTS:
HTTPS://WWW.SDGE.COM/MORE-INFORMATION/CUSTOMER-GENERATION/WHOLESALE-GENERATOR-TRANSMISSION-INTERCONNECTIONS

SDG&E GENERATION INTERCONNECTION HANDBOOK:
HTTPS://WWW.SDGE.COM/MORE-INFORMATION/CUSTOMER-GENERATION/INTERCONNECTION-TRANSMISSION-FACILITIES

II. INTERCONNECTION REQUEST REQUIREMENTS

a. SINGLE-LINE DIAGRAM – A SINGLE-LINE REPRESENTATION OF THE PROPOSED INTERCONNECTION SYSTEM THAT CLEARLY DISTINGUISHES EXISTING EQUIPMENT FROM PROPOSED EQUIPMENT.

b. COMPLETED INTERCONNECTION APPLICATION, INCLUDING A COMPLETE SET OF SPECIFICATIONS AS FOLLOWS:

I. MAXIMUM KW RATING

II. NOMINAL OUTPUT VOLTAGE

III. ALL NECESSARY RELAYS

IV. POWER FACTOR

V. MAXIMUM FAULT CURRENT CONTRIBUTION

VI. KWH RATING FOR ENERGY STORAGE PROJECTS

VII. MAKE AND MODEL OF INVERTER, IF AN INVERTER WILL BE USED

c. APPLICABLE FEES AND/OR DEPOSITS.

d. DOCUMENTATION DEMONSTRATING PROOF OF SITE EXCLUSIVITY/CONTROL.

III. OPERATING REQUIREMENTS

THE CUSTOMER SHALL OPERATE THE GENERATING FACILITY, WHETHER PERMANENT OR TEMPORARY, IN ACCORDANCE WITH THE INTERCONNECTION AGREEMENT, SDG&E'S ELECTRIC SERVICE REQUIREMENTS, SDG&E'S CPUC-APPROVED TARIFFS, AND ALL APPLICABLE LAWS, CODES AND ORDINANCES. THE CUSTOMER SHALL NOT BE PERMITTED TO ENERGIZE ANY DE-ENERGIZED PORTION OF SDG&E'S DISTRIBUTION SYSTEM.

TABLE OF CONTENTS

© 1998 - 2023 San Diego Gas & Electric Company. All rights reserved. Removal of this copyright notice without permission is not permitted under law.

REV	CHANGE	DR	BY	DSN	APV	DATE	REV	CHANGE	DR	BY	DSN	APV	DATE
C							F						
B	EDITORIAL CHANGES	ARC	JIK	IPJ	KRG	01/09/2023	E						
A	EDITORIAL CHANGES	--	LSM	IPJ	TPM	11/01/2017	D						

DISCONNECTION DEVICES:

I. **INVERTER-BASED SYSTEMS**

a. CUSTOMERS INSTALLING INVERTER-BASED SYSTEMS LESS THAN 30 KW CEC AC WILL NO LONGER BE REQUIRED TO INCLUDE AN AC DISCONNECT SWITCH WHEN THE FACILITY HAS A SELF-CONTAINED BILLING METER (I.E., 0 – 225 AMP SOCKET-BASED METER OR A 400 AMP CLASS 320 SOCKET BASED METER). THESE TYPES OF METERS ARE NOT CURRENT TRANSFORMER (CT) RATED AND ARE USED FOR THE VAST MAJORITY OF ALL SDG&E CUSTOMERS.

b. IN LIEU OF AN AC DISCONNECT, THE BILLING METER MAY TEMPORARILY BE REMOVED BY SDG&E TO ISOLATE THE CUSTOMER'S INVERTER FROM THE ELECTRIC DISTRIBUTION SYSTEM TO MAINTAIN OPERATING SAFETY NEEDS DURING AN EMERGENCY OR MAINTENANCE ON SDG&E'S SYSTEM. REMOVAL OF THE BILLING METER WILL RESULT IN LOSS OF ELECTRICAL SERVICE TO THE CUSTOMER'S FACILITY OR RESIDENCE FOR THE DURATION OF TIME THAT WORK IS ACTIVELY IN PROGRESS. HOWEVER, IT IS HIGHLY RECOMMENDED TO INSTALL AN AC DISCONNECT ON ALL GENERATING FACILITIES, REGARDLESS OF SIZE.

c. A STEEL POLE SHALL BE SET IN AN ADEQUATE CONCRETE FOUNDATION TO ENSURE THE SELF-SUPPORTING CONDITION. THE POLE SHALL BE PAINTED OR, PREFERABLY, GALVANIZED TO PREVENT CORROSION. STEEL POLES SHALL BE OF HEAVY WALL PIPE 3 INCHES OR LARGER IN DIAMETER.

II. **CIRCUMSTANCES REQUIRING DISCONNECTS**

a. INVERTER-BASED SYSTEMS 30 KW CEC AC AND LARGER.

b. INVERTER-BASED INTERCONNECTIONS HAVING A CT RATED METER, I.E., ALL METER PANELS OR SWITCHBOARDS EMPLOYING THE USE OF POTENTIAL AND/OR PTS/CTS.

c. NON INVERTER-BASED GENERATORS, INCLUDING ROTATING OR MACHINE-BASED GENERATORS, REGARDLESS OF WHETHER THE SERVICE METER CONFIGURATION IS CT RATED OR SELF-CONTAINED.

III. **UTILITY AC DISCONNECT REQUIREMENTS**

THE CUSTOMER SHALL FURNISH, INSTALL, OWN AND MAINTAIN AN AC DISCONNECT IN COMPLIANCE WITH THE FOLLOWING:

a. A SINGLE, VISIBLE OPEN, LOCKABLE AC DISCONNECT IS REQUIRED TO ISOLATE ALL GENERATION WITHOUT IMPACTING CUSTOMER LOAD. A SINGLE, VISIBLE OPEN, LOCKABLE AC DISCONNECT MUST BE INSTALLED NEAR THE POINT OF COMMON COUPLING (PCC), ALSO REFERRED TO AS THE SERVICE AND METERING EQUIPMENT, AT A LOCATION APPROVED BY SDG&E. REFER TO PAGES SG 504.3 – 504.4 FOR UNACCEPTABLE METER LOCATIONS. ACCEPTABLE METER LOCATIONS ARE GENERALLY:

I. INSIDE THE ELECTRIC METER ROOM. REFER TO SG 506.1 FOR ELECTRIC METER ROOM ACCESS REQUIREMENTS.

II. IMMEDIATELY OUTSIDE THE ELECTRIC METER ROOM AT A LOCATION APPROVED BY SDG&E AND THE GOVERNMENTAL AUTHORITY HAVING JURISDICTION (AHJ).

b. WHEN ADDING ADDITIONAL GENERATION TO A FACILITY THAT CURRENTLY HAS GENERATION, THE ADDED GENERATION MUST BE CONNECTED TO THE EXISTING DISCONNECTING DEVICE, OR THE REPLACEMENT DISCONNECTING DEVICE IF A LARGER AMPACITY DEVICE IS REQUIRED SO THAT ALL GENERATION CAN BE ISOLATED WITHOUT IMPACTING CUSTOMER LOAD.

c. CONSISTENT WITH METER ROOM ACCESS REQUIREMENTS (SEE SG 506.1), ALL DEVICES USED TO DISCONNECT THE GENERATING FACILITY SHALL BE READILY ACCESSIBLE UNDER ALL CONDITIONS AND AT ALL TIMES, 24 HOURS A DAY. THE SWITCH OPERATION SHALL UTILIZE AN OPEN AIR GAP AND SHALL PROVIDE VISIBLE VERIFICATION.

I. SWITCH BLADES' JAWS, AND THE AIR-GAP BETWEEN THEM, SHALL BE CLEARLY VISIBLE WHEN THE DISCONNECT IS IN THE OPEN POSITION.

II. THE VISIBLE AIR-GAP MUST BE OBSERVED WITHOUT DISASSEMBLING THE DEVICE.

d. THE SWITCH SHALL BE LOCKABLE IN THE OPEN POSITION.

I. THE LOCKING OPERATION SHALL BE ACCOMPLISHED WITH A SINGLE SDG&E LOCK.

II. THE SWITCH PANEL COVER SHALL NOT BE REMOVABLE WITH THE SWITCH PADLOCKED IN THE OPEN POSITION.

© 1998 - 2023 San Diego Gas & Electric Company. All rights reserved. Removal of this copyright notice without permission is not permitted under law.

REV	CHANGE	DR	BY	DSN	APV	DATE	REV	CHANGE	DR	BY	DSN	APV	DATE
C							F						
B	EDITORIAL CHANGES	ARC	JIK	IPJ	KRG	01/09/2023	E						
A	EDITORIAL CHANGES	--	LSM	IPJ	TPM	11/01/2017	D						

TABLE OF CONTENTS

e. CUSTOMERS SHALL INSTALL PLAQUES AT ALL AC DISCONNECTS CLEARLY STATING THEIR PURPOSE IS FOR OPERATION BY THE UTILITY OR AUTHORIZED EMERGENCY RESPONDERS. REFER TO THE FOLLOWING FIGURES 1 – 3 AND NOTES.

TYPICAL SELF-CONTAINED METER <30 KW CEC AC

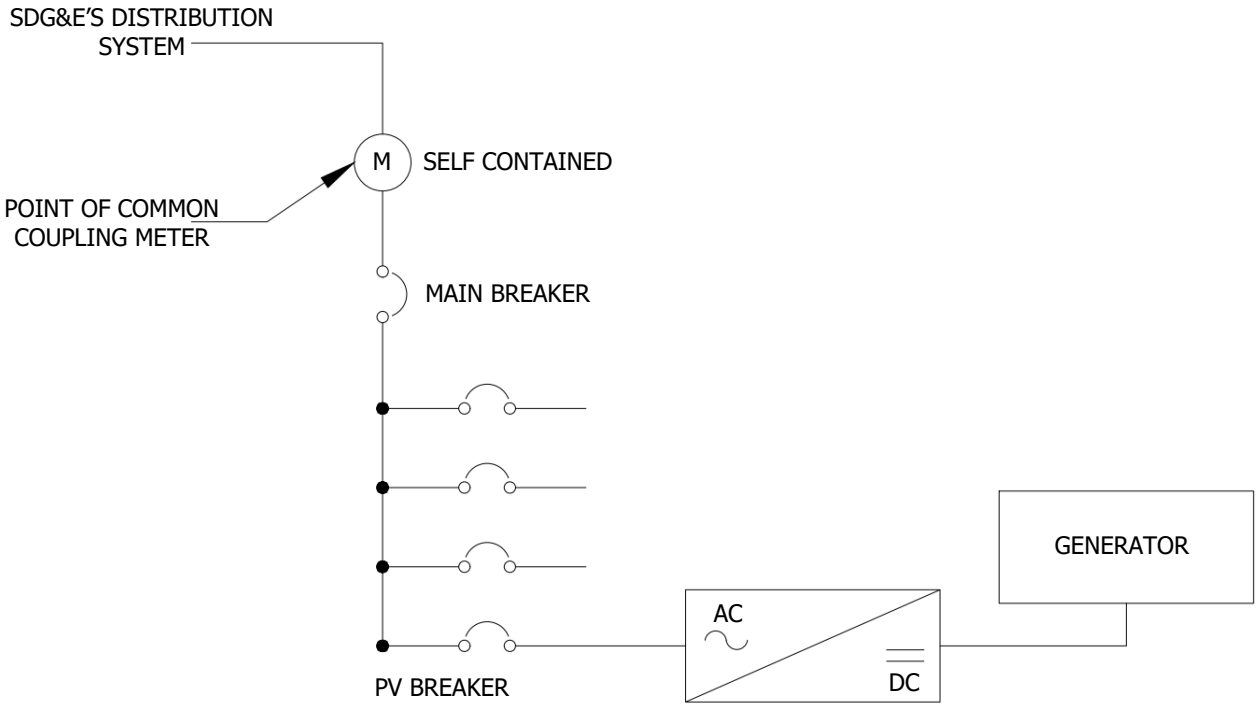

FIGURE 1

NOTES:

I. A SITE PLACARD IS REQUIRED AT THE SERVICE AND METERING EQUIPMENT. SEE PAGE SG 017.1 FOR SITE PLACARD REQUIREMENTS.

II. A DISCONNECT SWITCH IS HIGHLY RECOMMENDED BUT NOT REQUIRED. REFER TO FIGURE 2 ON PAGE SG 806.4 IF YOU CHOOSE TO INSTALL A DISCONNECT SWITCH.

TABLE OF CONTENTS

© 1998 - 2023 San Diego Gas & Electric Company. All rights reserved. Removal of this copyright notice without permission is not permitted under law.

REV	CHANGE	DR	BY	DSN	APV	DATE	REV	CHANGE	DR	BY	DSN	APV	DATE
C							F						
B	EDITORIAL CHANGES	ARC	JIK	IPJ	KRG	01/09/2023	E						
A	EDITORIAL CHANGES	--	LSM	IPJ	TPM	11/01/2017	D						

TYPICAL SELF-CONTAINED METER ≥ 30 KW CEC AC

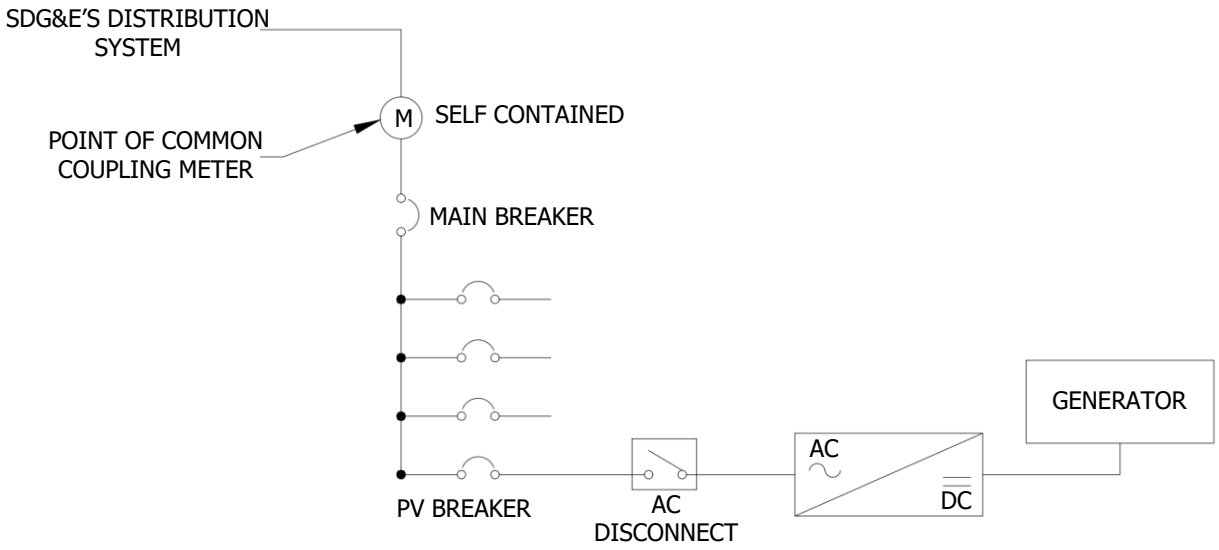

FIGURE 2

TYPICAL INSTRUMENT TRANSFORMER RATED METERING INSTALLATION

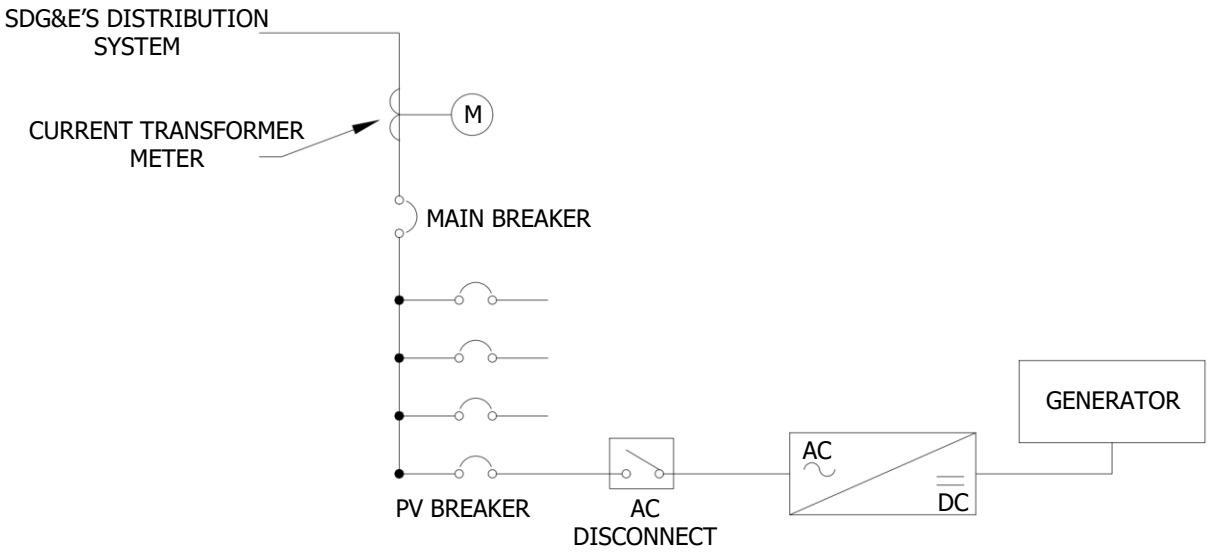

FIGURE 3

NOTES:

I. REFER TO PAGES SG 511.1 – 511.3 FOR DISCONNECT REQUIREMENTS.

II. A SITE PLACARD IS REQUIRED AT THE SERVICE AND METERING EQUIPMENT. SEE PAGE SG 017.1 FOR SITE PLACARD REQUIREMENTS.

III. CUSTOMER SHALL INSTALL A PLACARD ON THE AC DISCONNECT SWITCH LABELED "PV SYSTEM DISCONNECT FOR UTILITY OPERATION" OR "WIND TURBINE, FUEL CELL, BATTERY, ETC., SYSTEM DISCONNECT FOR UTILITY OPERATION", AS APPROPRIATE. THE AC DISCONNECT SHALL BE IDENTIFIED THE SAME ON THE SITE PLACARD.

© 1998 - 2023 San Diego Gas & Electric Company. All rights reserved. Removal of this copyright notice without permission is not permitted under law.

REV	CHANGE	DR	BY	DSN	APV	DATE	REV	CHANGE	DR	BY	DSN	APV	DATE
C							F						
B	EDITORIAL CHANGES	ARC	JIK	IPJ	KRG	01/09/2023	E						
A	EDITORIAL CHANGES	--	LSM	IPJ	TPM	11/01/2017	D						

METERING:

I. BILLING AND POWER PURCHASE METERING

SDG&E WILL PROVIDE AND INSTALL METERING, AT A LOCATION ACCEPTABLE TO SDG&E, TO COMPLY WITH APPLICABLE CPUC-APPROVED TARIFFS, POWER PURCHASE CONTRACTS, AND SDG&E'S REQUIREMENTS. THE INSTALLATION, OPERATION, AND MAINTENANCE COSTS OF THESE METERING FACILITIES SHALL BE BORNE BY THE CUSTOMER IN ACCORDANCE WITH ELECTRIC RULES 21 AND 2. REFER TO EXAMPLES OF TYPICAL BILLING AND POWER PURCHASE METERING ON PAGE SG 806.14. THE CUSTOMER WILL PROVIDE AND MAINTAIN ALL SERVICE EQUIPMENT AND SWITCHBOARDS IN ACCORDANCE WITH SDG&E'S REQUIREMENTS.

II. NET GENERATION OUTPUT METERING – GENERAL INFORMATION AND INSTALLATION

RULE 21 DEFINES NET GENERATION OUTPUT METERING (NGOM) AS "METERING OF THE NET ELECTRICAL POWER OUTPUT IN KW OR ENERGY IN KWH, RESPECTIVELY, FROM A GIVEN GENERATING FACILITY. THIS MAY ALSO BE THE MEASUREMENT OF THE DIFFERENCE BETWEEN THE TOTAL ELECTRICAL ENERGY PRODUCED BY A GENERATOR AND THE ELECTRICAL ENERGY CONSUMED BY THE AUXILIARY EQUIPMENT NECESSARY TO OPERATE THE GENERATOR. FOR A GENERATOR WITH NO HOST LOAD AND/OR SECTION 218 LOAD, METERING THAT IS LOCATED AT THE PCC. FOR A GENERATOR WITH HOST LOAD AND/OR SECTION 218 LOAD, METERING THAT IS LOCATED AT THE GENERATOR BUT AFTER THE POINT OF AUXILIARY LOAD(S) AND PRIOR TO SERVING HOST LOAD AND/OR SECTION 218 LOAD."

A NGOM IS ALWAYS INSTALLED IN THE ELECTRICAL CIRCUITRY USED TO INTERCONNECT A CUSTOMER'S GENERATING FACILITY WITH HOST LOAD. MORE SPECIFICALLY, IT IS LOCATED IN THE CIRCUITRY AT A LOCATION AFTER ANY CONNECTIONS USED TO SERVE THE "AUXILIARY LOADS" USED TO OPERATE THE GENERATING FACILITY, BUT BEFORE ANY CONNECTION TO THE HOST LOAD. SEE FIGURES 1 AND 2 BELOW:

ONE-LINE DIAGRAM OF NET GENERATION OUTPUT METERING (NGOM)
ON LOAD SIDE OF BILLING METER

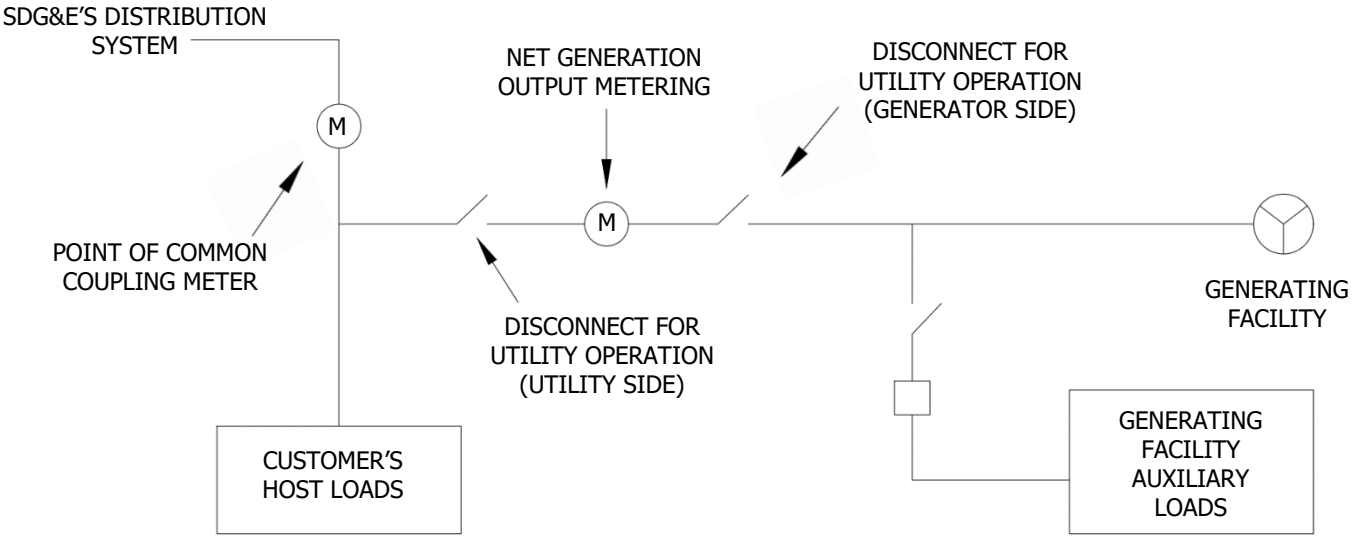

FIGURE 1

© 1998 - 2023 San Diego Gas & Electric Company. All rights reserved. Removal of this copyright notice without permission is not permitted under law.

REV	CHANGE	DR	BY	DSN	APV	DATE	REV	CHANGE	DR	BY	DSN	APV	DATE
C							F						
B	EDITORIAL CHANGES	ARC	JIK	IPJ	KRG	01/09/2023	E						
A	EDITORIAL CHANGES	--	LSM	IPJ	TPM	11/01/2017	D						

VIRTUAL NET METERING & AGGREGATION ONE-LINE DIAGRAM OF NET GENERATION OUTPUT METERING (NGOM) ON LINE SIDE OF SDG&E BILLING METERS FOR PHOTOVOLTAIC (PV) &/OR WIND TURBINE (WT) GENERATION

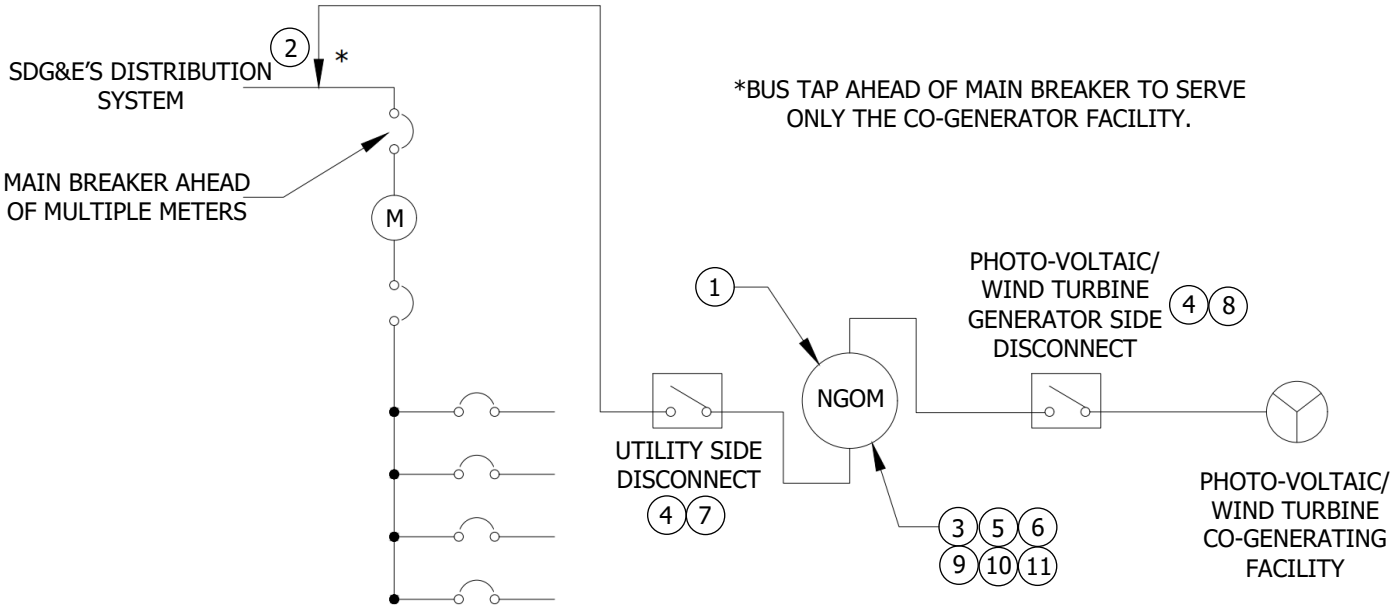

FIGURE 2

NOTES TO FIGURES 1 AND 2:

(1) FOR METERING PURPOSES, THE GENERATOR CONDUCTORS SHALL BE CONNECTED TO THE LINE SIDE OF THE NGOM SOCKET.

(2) FOR BUS TAPS, SEE PAGE SG 517.1.

(3) NGOM PANELS AND DEVICES ARE NORMALLY REQUIRED TO BE GROUPED WITH THE BILLING METER AT THE PCC (ALSO REFERRED TO AS THE SERVICE AND METERING EQUIPMENT).

(4) VISIBLE, OPEN, AND LOCKABLE DISCONNECTS ARE REQUIRED ON EACH SIDE OF THE NGOM EXCEPT AS NOTED IN FIGURES 1 AND 2. SEE PAGES SG 511.1 – 511.3 FOR DISCONNECT REQUIREMENTS.

(5) A SITE PLACARD IS REQUIRED AT THE SERVICE AND METERING EQUIPMENT. SEE PAGE SG 017.1 FOR SITE PLACARD REQUIREMENTS. IF NGOM IS NOT LOCATED IN LINE OF SITE OF THE SERVICE AND METERING EQUIPMENT, AN ADDITIONAL SITE PLACARD IS REQUIRED ON THE NGOM DENOTING THE LOCATION OF THE SERVICE AND METERING EQUIPMENT

(6) AN ADDRESS PLACARD IS REQUIRED ON THE FRONT OF THE NGOM PANEL.

(7) A PLACARD SHALL BE INSTALLED ON THE UTILITY SIDE DISCONNECT LABELED: "PV (OR WT) SYSTEM DISCONNECT FOR UTILITY OPERATION – UTILITY SIDE."

(8) A PLACARD SHALL BE INSTALLED ON THE GENERATOR SIDE DISCONNECT LABELED: "PV (OR WT) SYSTEM DISCONNECT FOR UTILITY OPERATION – GENERATOR SIDE."

(9) CONDUCTORS TERMINATING IN THE NGOM PANEL SHALL BE LABELED "UTILITY" AND "GENERATOR".

(10) FOR INSTRUMENT TRANSFORMER RATED CT NGOM PANELS, A "CURRENT FLOW" PLACARD WITH AN ARROW POINTING TOWARDS THE UTILITY SIDE DISCONNECT SHALL BE INSTALLED ON THE INSIDE SIDE WALL OF PANEL OR ON THE OUTSIDE FRONT OF NGOM PANEL.

(11) IN NO CASE SHALL ANY OF THE HOST LOAD BE CONNECTED TO THE GENERATOR SIDE OF A NGOM PANEL.

© 1998 - 2023 San Diego Gas & Electric Company. All rights reserved. Removal of this copyright notice without permission is not permitted under law.

REV	CHANGE	DR	BY	DSN	APV	DATE	REV	CHANGE	DR	BY	DSN	APV	DATE
C							F						
B	EDITORIAL CHANGES	ARC	JIK	IPJ	KRG	01/09/2023	E						
A	EDITORIAL CHANGES	--	LSM	IPJ	TPM	11/01/2017	D						

WHEN SELF-CONTAINED METERING IS USED FOR NGOM, THE METER PANEL MAY BE EITHER A SAFETY SOCKET CAN WITH FACTORY INSTALLED TEST-BYPASS FACILITIES OR, IF THE AVAILABLE FAULT CURRENT AT THE NGOM LOCATION DOES NOT EXCEED 10,000 AMPS, A RESIDENTIAL SELF-CONTAINED METER PANEL MAY BE USED. REFER TO SG 806.9 – 806.10 FOR A SELF-CONTAINED METER EXAMPLE. WHEN INSTRUMENT TRANSFORMER RATED METERING IS USED FOR NGOM PURPOSES, THE METERING EQUIPMENT SHALL MEET SDG&E'S REQUIREMENTS FOUND IN SECTION 600 FOR MEDIUM VOLTAGE METERING, OR SECTION 500 FOR LOW VOLTAGE METERING. REFER TO SG 806.11 – 806.12 FOR EXAMPLES OF CT METERING USING A COMBINATION CT AND METER SOCKET CAN, COMMONLY REFERRED TO AS AN EXO CAN. TERMINATING SECTIONS UTILIZED FOR DELIVERY OF SDG&E SERVICE LATERAL CABLES SHALL MEET APPLICABLE REQUIREMENTS OF SECTIONS 500, 600 AND 700, WHICHEVER IS APPLICABLE. SWITCHBOARDS AND SWITCHGEAR USED FOR NGOM PURPOSES SHALL NOT EXCEED STANDARD AMPACITIES APPROVED BY SDG&E.

THE SERVICE SECTIONS MUST BE DESIGNED SO THAT THE METERING SECTION CAN BE ISOLATED BY A LOCKABLE OPEN OR RACKABLE CIRCUIT BREAKER AND A VISIBLY OPEN AND LOCKABLE DISCONNECT SWITCH. (THE LOCKABLE OPEN DEVICES NEED TO BE LOCATED ON EACH SIDE OF THE METERING SECTION.)

NGOM PANELS AND DEVICES SHALL BE INSTALLED IN ACCORDANCE WITH ALL OF SDG&E'S APPLICABLE SERVICE STANDARD CLEARANCES AND SPECIFICATIONS AND BE INSPECTED AND APPROVED BY THE AHJ OVER THE CUSTOMER'S FACILITIES PRIOR TO THE INSTALLATION OF THE METER(S).

REFER TO PAGE SG 806.13 FOR THE WORKING SPACE AND CLEARANCE REQUIREMENTS FROM SDG&E-OWNED ELECTRIC METER & GAS METER SET ASSEMBLY STANDARD.

III. PURPOSE AND USE OF NET GENERATION OUTPUT METERING

GENERATING FACILITIES MAY REQUIRE AN NGOM FOR EVALUATION, MONITORING, AND VERIFICATION PURPOSES (I.E., SYSTEM PERFORMANCE MEASUREMENTS UNDER AN INCENTIVE PROGRAM). NGOM MAY ALSO BE REQUIRED TO PARTICIPATE IN CERTAIN CPUC-APPROVED TARIFF PROGRAMS, SUCH AS NEM AGGREGATION AND VIRTUAL NEM. NGOM IS USEFUL FOR DETERMINING ANY APPLICABLE DEMAND CHARGES FOR CUSTOMERS RECEIVING STANDBY SERVICE AND TO PRECISELY CALCULATE ANY APPLICABLE NON-BYPASSABLE DEPARTING LOAD CHARGES, TO SATISFY APPLICABLE CALIFORNIA INDEPENDENT SYSTEM OPERATOR (CAISO) RELIABILITY REQUIREMENTS, AND FOR DISTRIBUTION SYSTEM PLANNING AND OPERATIONS. WHEN NGOM IS REQUIRED, GENERATING FACILITIES ARE NOT REQUIRED TO USE A NGOM WHERE LESS INTRUSIVE AND/OR MORE COST EFFECTIVE OPTIONS, FOR PRODUCER/CUSTOMER, ARE AVAILABLE FOR PROVIDING GENERATOR DATA TO SDG&E. CUSTOMERS MAY ELECT TO INSTALL A NGOM OR HAVE SDG&E INSTALL A NGOM AT THE CUSTOMER'S EXPENSE.

WHEN A CUSTOMER INSTALLS A GENERATING FACILITY TO SUPPLEMENT THE ELECTRIC SERVICE RECEIVED FROM SDG&E, SDG&E RECOMMENDS THE INSTALLATION OF A NGOM BECAUSE BOTH SDG&E AND THE CUSTOMER TYPICALLY NEED TO KNOW WHEN AND HOW MUCH ENERGY IS PRODUCED BY THE GENERATOR(S). IN EACH CASE, THE DATA PROVIDED BY THE METERING INSTALLATION MUST BE READILY COMPATIBLE WITH THE DATA ACQUISITION AND MANAGEMENT SYSTEMS USED TO PROCESS THE DATA PROVIDED BY THE METERING AND CONVERT IT TO USEFUL AND TIMELY INFORMATION FOR THE USER. COMMON USES FOR NGOM ARE: TARIFF ADMINISTRATION – SOME TARIFFS, SUCH AS SDG&E'S SCHEDULE E-DEPART - DEPORTING LOAD – NON-BYPASSABLE CHARGES, USE THE KWH PRODUCTION OF A GENERATOR SERVING A CUSTOMER'S LOAD. REVENUE GRADE METERING IS THE PREFERRED WAY TO ACQUIRE THIS INFORMATION. SDG&E'S SCHEDULE S – STANDBY WILL ALSO USE NGOM IN DETERMINING DEMAND CHARGES THAT MAY BE APPLICABLE.."

TABLE OF CONTENTS

© 1998 - 2023 San Diego Gas & Electric Company. All rights reserved. Removal of this copyright notice without permission is not permitted under law.

REV	CHANGE	DR	BY	DSN	APV	DATE	REV	CHANGE	DR	BY	DSN	APV	DATE
C							F						
B	EDITORIAL CHANGES	ARC	JIK	IPJ	KRG	01/09/2023	E						
A	EDITORIAL CHANGES	--	LSM	IPJ	TPM	11/01/2017	D						

WHEN SDG&E'S CHARGES ARE CALCULATED BASED ON METERED QUANTITIES, THE ACCURACY AND QUALITY OF THE METERING USED IS SUBJECT TO REGULATION BY THE CPUC. IF THE CUSTOMER CHOOSES NOT TO INSTALL AN NGOM, SDG&E WILL ESTIMATE THE DEPARTING LOAD.

a. DISTRIBUTION SYSTEM PLANNING – A CUSTOMER'S GENERATOR MAY BE OPERATED IN SUCH A MANNER THAT IT REDUCES THE LOADING ON SDG&E'S DISTRIBUTION SYSTEM. NGOM DATA CAN BE USED BY SDG&E TO INTEGRATE CUSTOMER GENERATING FACILITY OPERATIONAL AND ENERGY PRODUCTION INFORMATION WITH DISTRIBUTION CIRCUIT LOADING INFORMATION TO BETTER PLAN FOR THE LOADING OF SDG&E'S DISTRIBUTION CIRCUITS.

b. DISTRIBUTION SYSTEM OPERATION – SDG&E'S DISTRIBUTION CIRCUIT OPERATION AND SWITCHING DECISIONS CAN BE IMPROVED WITH TIMELY (I.E., REAL-TIME OR NEAR REAL-TIME) INFORMATION REGARDING THE AMOUNT OF GENERATION OPERATING AT ANY POINT IN TIME ON A PARTICULAR SECTION OF A DISTRIBUTION CIRCUIT. NGOM DATA CAN BE INTEGRATED WITH A COMMUNICATION CIRCUIT AND DATA MANAGEMENT PROGRAM TO PROVIDE A VERY CURRENT SNAPSHOT OF THE NATURE OF A CIRCUIT'S LOAD, THEREBY ALLOWING FOR MORE FINELY TUNED OPERATIONS OF SDG&E'S DISTRIBUTION SYSTEM.

c. CUSTOMER GENERATION OPERATION AND MONITORING – GENERATION OPERATION, ENERGY PRODUCTION, AND SALES NEED TO BE MEASURED BY THE CUSTOMER AND, IN MANY CASES, THIRD PARTIES WHO ARE EITHER SELLING THE ENERGY PRODUCED BY THE GENERATOR(S) TO THE CUSTOMER OR WHO HAVE PROVIDED FINANCIAL INCENTIVES TIED TO CERTAIN PERFORMANCE CRITERIA BASED ON THE ENERGY PRODUCED. NGOM CAN BE USED WITH VARIOUS DATA MANAGEMENT PROGRAMS TO PROVIDE BOTH REAL-TIME AND CUMULATIVE DATA THAT CAN BE USED FOR THESE PURPOSES.

d. MULTIPLE TARIFF METERING – WHERE A GENERATING FACILITY INCLUDES MULTIPLE GENERATORS ELIGIBLE FOR SERVICE UNDER MORE THAN ONE NET ENERGY METERING (NEM) RATE SCHEDULE (E.G. NEM OR NEM-FC), OR WHERE A GENERATING FACILITY CONSISTS OF ONE OR MORE NEM-ELIGIBLE GENERATORS IN COMBINATION WITH ONE OR MORE NON-NEM ELIGIBLE GENERATORS WITHOUT NON-EXPORT RELAYS, METERING WILL BE REQUIRED AT THE PCC AND AT EACH OF THE NEM-ELIGIBLE GENERATOR GROUPS TO ENSURE PROPER TARIFF ADMINISTRATION. WHERE A ENERATING FACILITY CONSISTS OF ONE OR MORE NEM-ELIGIBLE GENERATOR GROUPS IN COMBINATION WITH ONE OR MORE NON-NEM GENERATORS, METERING OF THE NON-NEM GENERATORS IS NOT REQUIRED.

IV. EXCEPTIONS TO SDG&E'S NGOM REQUIREMENTS

a. NGOM IS NOT NORMALLY REQUIRED FOR SMALL (<10 KW) GENERATING FACILITIES THAT ARE ELIGIBLE FOR SERVICE UNDER SDG&E'S NET ENERGY METERING (NEM) TARIFF. SHOULD SDG&E DETERMINE IT NECESSARY THAT NGOM IS REQUIRED AT A NEM-ELIGIBLE LOCATION, SUCH METERING WILL BE INSTALLED AT SDG&E'S EXPENSE.

b. NGOM IS NOT REQUIRED FOR GENERATORS THAT ARE INSTALLED ONLY FOR EMERGENCY OR BACK-UP SERVICE AND ARE NOT AUTHORIZED TO BE OPERATED IN PARALLEL OUTSIDE OF A MOMENTARY TRANSFER. SDG&E WILL SCREEN GENERATING FACILITY INTERCONNECTION APPLICATIONS AND ADVISE CUSTOMERS ON THE USE OF NGOM.

c. AN NGOM IS NOT USUALLY REQUIRED FOR GENERATING FACILITIES THAT ONLY EXPORT POWER TO SDG&E'S ELECTRIC DISTRIBUTION SYSTEM. SDG&E WILL INSTALL A METER THAT IS CAPABLE OF RECORDING BOTH THE GENERATING FACILITY'S ENERGY CONSUMPTION AND POWER EXPORTED TO THE ELECTRIC DISTRIBUTION SYSTEM.

TABLE OF CONTENTS

© 1998 - 2023 San Diego Gas & Electric Company. All rights reserved. Removal of this copyright notice without permission is not permitted under law.

REV	CHANGE	DR	BY	DSN	APV	DATE	REV	CHANGE	DR	BY	DSN	APV	DATE
C							F						
B	EDITORIAL CHANGES	ARC	JIK	IPJ	KRG	01/09/2023	E						
A	EDITORIAL CHANGES	--	LSM	IPJ	TPM	11/01/2017	D						

NET GENERATION OUTPUT METERING (NGOM) SAFETY SOCKET CAN WITH FACTORY-INSTALLED TEST-BYPASS FACILITIES, 0 – 600 VOLTS, 100 AMPS (STANDARD DUTY), 200 AMPS (HEAVY DUTY)

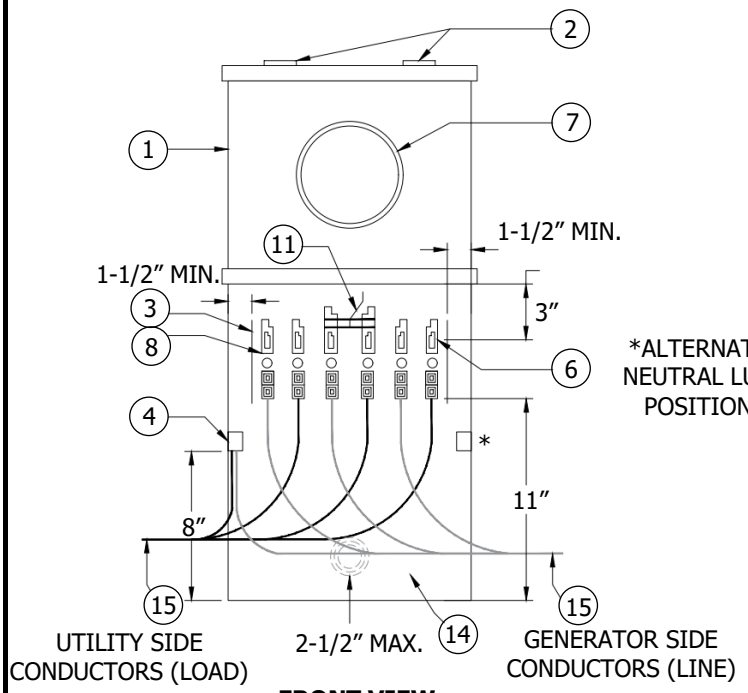

FRONT VIEW (LOWER COVER REMOVED)

*ALTERNATE NEUTRAL LUG POSITION

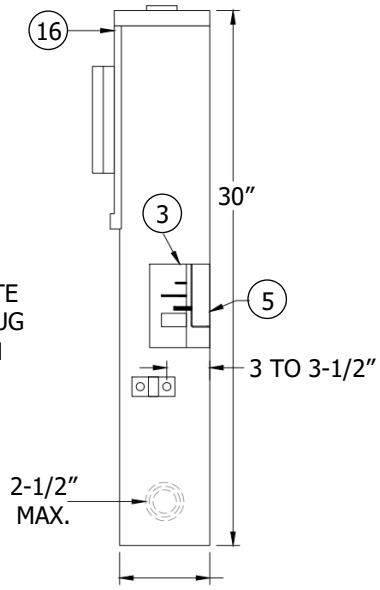

SIDE VIEW

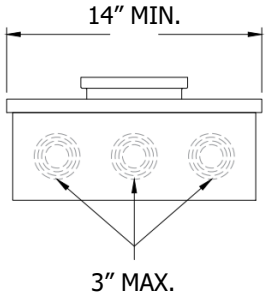

BOTTOM VIEW

NOTES:

1. REFER TO PAGE SG 514.2 FOR 100 AMP AND SG 514.3 FOR 200 AMP SAFETY SOCKET CAN SPECIFICATIONS.
2. HUBS CAPPED OFF IF USED FOR UNDERGROUND FEED. R BUS TAPS, SEE PAGE SG 517.1.
3. RIGID INSULATING BARRIERS. SEE PAGE SG 513.2.
4. VERTICAL LAY-IN, DOUBLE NEUTRAL LUG WITH NO. 250 MCM CU-AL WIRE CAPACITY, MOUNTED ON EITHER SIDEWALL.
5. TEST-BYPASS BLOCKS SHALL BE BUSSED OR WIRED TO SOCKET JAWS OR TERMINALS. SEE PAGE SG 516 FOR METER SOCKET CLIP REQUIREMENTS.
6. UPPER TEST CONNECTOR STUDS.
7. ALL COVERS SHALL BE INDEPENDENTLY REMOVABLE. UPPER COVER SHALL BE NON-REMOVABLE WHEN METER IS IN PLACE. METER SOCKET SHALL BE MOUNTED ON SUPPORT AND ATTACHED TO PANEL. LOWER COVER SHALL BE SEALABLE AND PERMANENTLY LABELED: "DO NOT BREAK SEALS. NO FUSES INSIDE." SEE PAGE SG 503.1 FOR SEALING REQUIREMENTS.
8. TEST-BYPASS BLOCK DETAIL ON SEPARATE DRAWING LOCATED ON PAGE SG 513.2.
9. FOR 3-PHASE, 4-WIRE, CONNECT 7TH JAW TO BODY OF NEUTRAL LUG WITH A NO. 12 COPPER WIRE, WHITE IN COLOR.
10. FOR 3-PHASE, 4-WIRE DELTA, IDENTIFY RIGHT HAND TEST-BYPASS BLOCK (2 POLES) AS POWER LEG, ORANGE IN COLOR (C PHASE).
11. FOR 3-PHASE, 3-WIRE, INSTALL BUS TO CONNECT LINE AND LOAD POLES TOGETHER AT TOP OF CENTER TEST-BYPASS BLOCK AND CONNECT 5TH JAW TO THIS BUS USING A NO. 12 WIRE, RED IN COLOR.

© 1998 - 2023 San Diego Gas & Electric Company. All rights reserved. Removal of this copyright notice without permission is not permitted under law.

REV	CHANGE	DR	BY	DSN	APV	DATE	REV	CHANGE	DR	BY	DSN	APV	DATE
C							F						
B	EDITORIAL CHANGES	ARC	JIK	IPJ	KRG	01/09/2023	E						
A	EDITORIAL CHANGES	--	LSM	IPJ	TPM	11/01/2017	D						

12. FOR 3-PHASE, 4-WIRE, CONNECT 7TH JAW TO BODY OF NEUTRAL LUG WITH A NO. 12 COPPER WIRE, WHITE IN COLOR.

13. FOR 3-PHASE, 4-WIRE DELTA, IDENTIFY RIGHT HAND TEST-BYPASS BLOCK (2 POLES) AS POWER LEG, ORANGE IN COLOR (C PHASE).

(14) PERMANENT LABELS INDICATING LINE AND LOAD CONNECTIONS FOR THE TEST BLOCKS ON INSIDE BACK OF ENCLOSURE IN ¾" (MINIMUM) HIGH BLOCK LETTERS. REFER TO PAGE SG 514.3.

(15) LABEL CONDUCTORS IN METER PANEL "GENERATOR" AND "UTILITY".

(16) AN ADDRESS PLACARD IS REQUIRED ON THE FRONT OF THE NGOM PANEL. A SITE PLACARD IS REQUIRED AT THE SERVICE AND METERING EQUIPMENT. SEE PAGE SG 017.1 FOR ADDRESS AND SITE PLACARD REQUIREMENTS. IF NGOM IS NOT LOCATED IN LINE OF SITE OF THE SERVICE AND METERING EQUIPMENT, AN ADDITIONAL SITE PLACARD IS REQUIRED ON THE NGOM SHOWING THE LOCATION OF THE SERVICE AND METERING EQUIPMENT.

TABLE OF CONTENTS

© 1998 - 2023 San Diego Gas & Electric Company. All rights reserved. Removal of this copyright notice without permission is not permitted under law.

REV	CHANGE	DR	BY	DSN	APV	DATE	REV	CHANGE	DR	BY	DSN	APV	DATE
C							F						
B	EDITORIAL CHANGES	ARC	JIK	IPJ	KRG	01/09/2023	E						
A	EDITORIAL CHANGES	--	LSM	IPJ	TPM	11/01/2017	D						

NET GENERATION OUTPUT METERING (NGOM) ONLY – COMBINATION CURRENT TRANSFORMER & METER SOCKET CAN, 0 – 600 VOLTS, 800 AMPS MAXIMUM

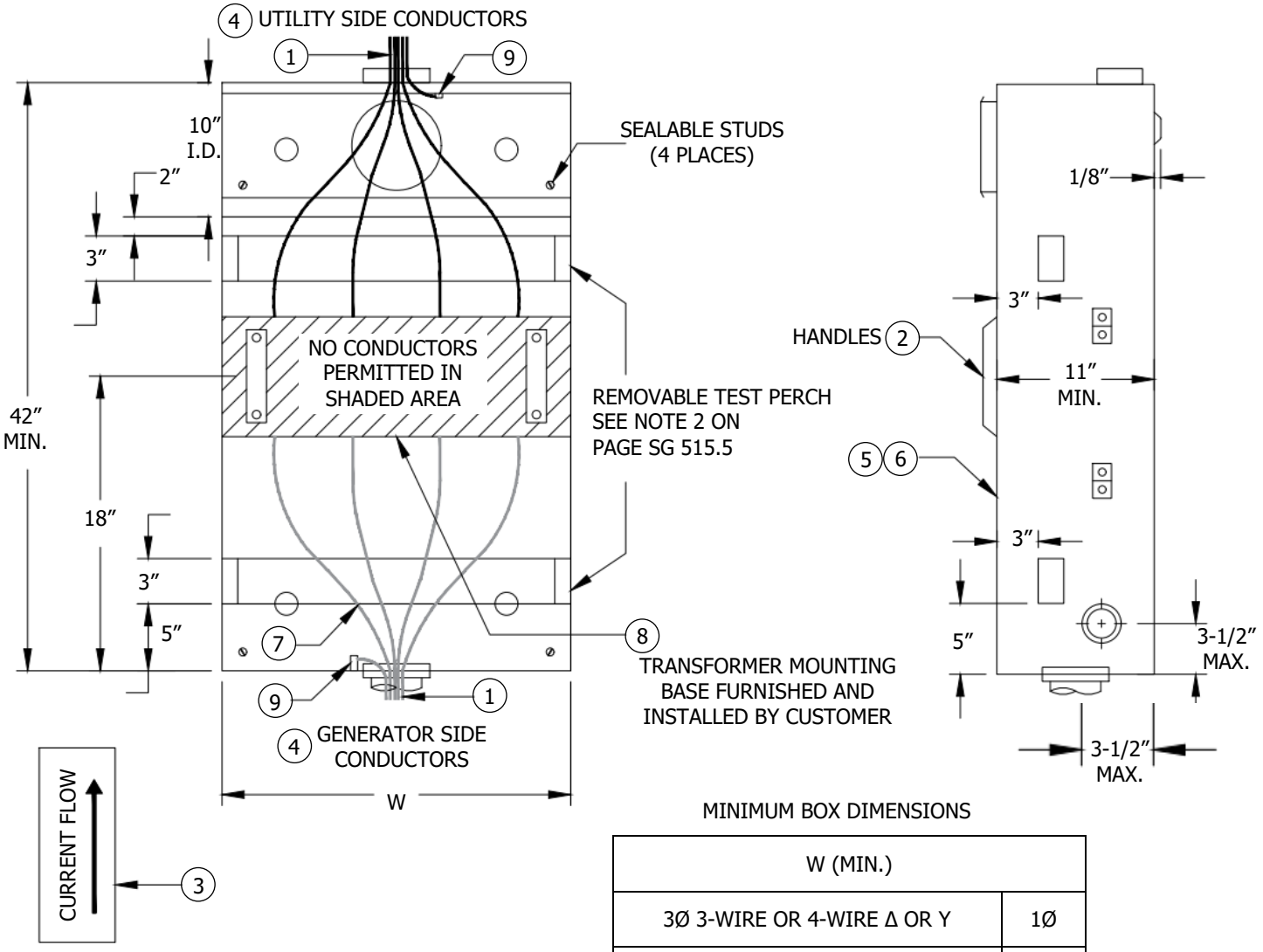

MINIMUM BOX DIMENSIONS

W (MIN.)	
3Ø 3-WIRE OR 4-WIRE Δ OR Y	1Ø
36″	24″

NOTES:

1. GENERATOR AND UTILITY SIDE CONDUCTORS MUST ENTER ABOVE THE TEST PERCH AND BELOW THE CT MOUNTING BASE. SEE PAGE SG 515.4 FOR OVERHEAD-FED CAN AND PAGE SG 515.5 FOR UNDERGROUND-FED CANS.
2. COVER SHALL HAVE TWO LIFTING HANDLES, BE A MAXIMUM OF 9 SQUARE FEET, AND A CAUTION SIGN THAT READS, "DO NOT BREAK SEALS, NO FUSES INSIDE."

© 1998 - 2023 San Diego Gas & Electric Company. All rights reserved. Removal of this copyright notice without permission is not permitted under law.

REV	CHANGE	DR	BY	DSN	APV	DATE	REV	CHANGE	DR	BY	DSN	APV	DATE
C							F						
B	EDITORIAL CHANGES	ARC	JIK	IPJ	KRG	01/09/2023	E						
A	EDITORIAL CHANGES	--	LSM	IPJ	TPM	11/01/2017	D						

TABLE OF CONTENTS

3. INSTALL "CURRENT FLOW" PLACARD ON INSIDE SIDE PANEL OR OUTSIDE FRONT OF METER PANEL. CURRENT FLOW ARROW SHOULD BE POINTED TOWARD UTILITY SIDE CONDUCTOR.

4. LABEL CONDUCTORS IN METER PANEL "GENERATOR" AND "UTILITY".

5. AN ADDRESS PLACARD IS REQUIRED ON THE FRONT OF THE NGOM PANEL.

6. SITE PLACARD IS REQUIRED AT THE SERVICE AND METERING EQUIPMENT. SEE PAGE SG 017.1 FOR SITE PLACARD REQUIREMENTS. IF NGOM IS NOT LOCATED IN LINE OF SIGHT OF THE SERVICE AND METERING EQUIPMENT, AN ADDITIONAL SITE PLACARD IS REQUIRED ON THE NGOM.

7. PROVISION SHALL BE MADE IN THE CT COMPARTMENT FOR A MECHANICAL LUG BONDABLE TERMINATION OF THE UTILITY'S NEUTRAL. THIS TERMINATION MAY BE INSTALLED ON THE CT MOUNTING BASE. THE GROUNDING ELECTRODE CONDUCTOR MAY NOT ENTER OR TERMINATE INSIDE THE PANEL.

8. SEE PAGES SG 515.2 – 515.3 FOR TRANSFORMER MOUNTING BASE DETAILS.

9. BOND EQUIPMENT GROUNDING CONDUCTOR TO THE BONDING LUG ON THE BUSHING.

TABLE OF CONTENTS

© 1998 - 2023 San Diego Gas & Electric Company. All rights reserved. Removal of this copyright notice without permission is not permitted under law.

REV	CHANGE	DR	BY	DSN	APV	DATE	REV	CHANGE	DR	BY	DSN	APV	DATE
C							F						
B	EDITORIAL CHANGES	ARC	JIK	IPJ	KRG	01/09/2023	E						
A	EDITORIAL CHANGES	--	LSM	IPJ	TPM	11/01/2017	D						

WORKING CLEARANCE REQUIREMENTS FROM SDG&E-OWNED ELECTRIC METER & GAS METER SET ASSEMBLY

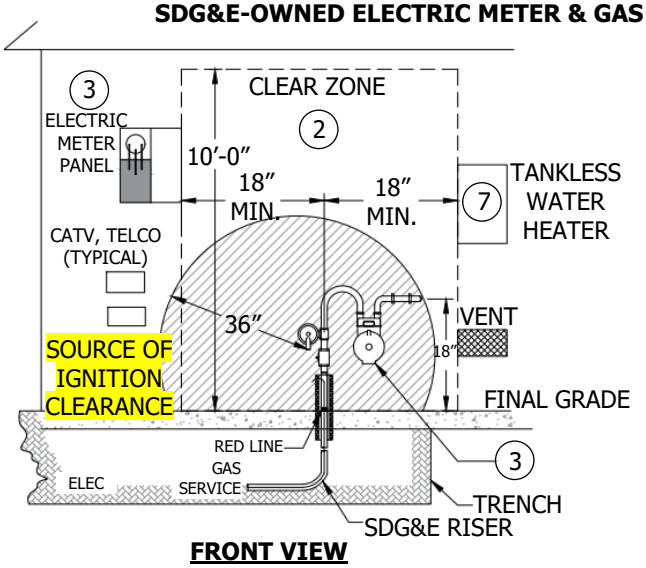

FRONT VIEW

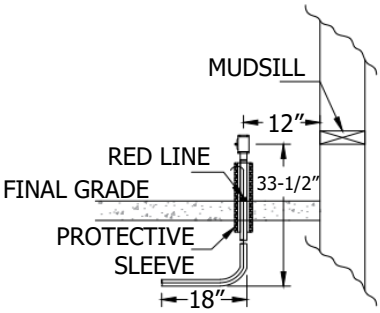

TYPICAL RISER PLACEMENT

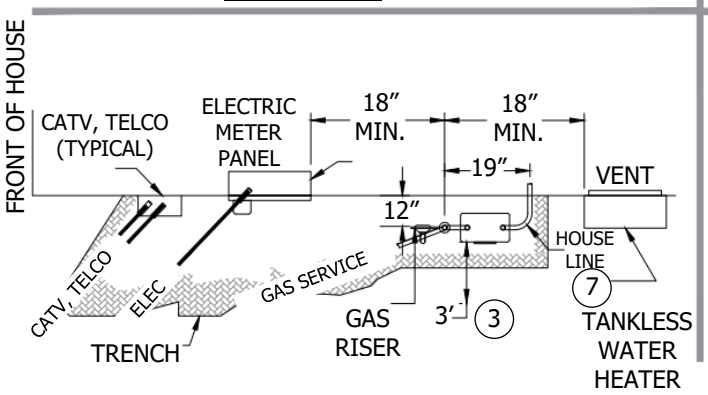

PLAN VIEW

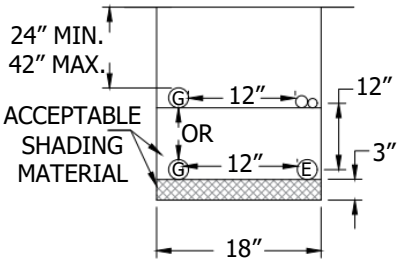

TYPICAL JOINT SERVICE TRENCH

NOTES:

1. SIZE AND DIMENSIONS OF PANELS MAY VARY. ILLUSTRATION IS NOT TO SCALE.

(2) WALL AREA BEHIND METER SET ASSEMBLY INCLUDING HEADERS, MUST BE FREE OF ANY OBSTRUCTIONS SUCH AS WATER PIPES, HOSE BIBS, SEWER CLEAN OUTS, DRAIN SPOUTS, ELECTRIC CONDUITS, ETC. NO BUILDING VENT, WINDOW OR OTHER OPENINGS, COVERED OR UNCOVERED, ARE ALLOWED WITHIN 18" FROM THE UTILITY GAS RISER VENT, AND FROM FINAL GRADE TO A HEIGHT OF 10'. FIXED WINDOWS ARE ACCEPTABLE. EQUIPMENT, SUCH AS BUT NOT LIMITED TO, CABLE TV, TELEPHONE, INVERTERS, DISCONNECTING DEVICES, TRANSFER SWITCHES, ETC., ARE ALSO NOT ALLOWED WITHIN 36" RADIALLY OF THE UTILITY GAS RISER VENT, AND FROM FINAL GRADE TO A HEIGHT OF 10' ABOVE THE GAS METER SET ASSEMBLY AS INDICATED BY THE CLEAR ZONE.

(3) MAINTAIN 36" CLEAR AND LEVEL WORKING SPACE IN FRONT OF GAS AND ELECTRIC METERS.

5. ELECTRIC BONDING TO OR USE OF THE UTILITY'S GAS SERVICE PIPING, GAS RISERS OR METER FACILITIES FOR ELECTRIC GROUNDING IS NOT PERMITTED.

(7) TANKLESS WATER HEATERS REQUIRE A MINIMUM 36" RADIAL CLEARANCE FROM THE UTILITY GAS RISER VENT TO A HEIGHT OF 10' ABOVE GRADE AND OUTSIDE CLEAR ZONE. A MINIMUM 12" SIDE CLEARANCE TO THE ELECTRIC METER PANEL IS REQUIRED. THE TANKLESS WATER HEATER IS NOT TO BE INSTALLED DIRECTLY UNDER ELECTRICAL SERVICE AND METERING EQUIPMENT.

NOTES 4 AND 6 HAVE BEEN INTENTIONALLY OMITTED.

© 1998 - 2023 San Diego Gas & Electric Company. All rights reserved. Removal of this copyright notice without permission is not permitted under law.

REV	CHANGE	DR	BY	DSN	APV	DATE	REV	CHANGE	DR	BY	DSN	APV	DATE
C							F						
B	EDITORIAL CHANGES	ARC	JIK	IPJ	KRG	01/09/2023	E						
A	EDITORIAL CHANGES	--	LSM	IPJ	TPM	11/01/2017	D						

TYPICAL METERING DEVICES REQUIRED AND INSTALLED BY SDG&E:

THE FOLLOWING TABLE LISTS THE TYPE OF METERS AND RELATED MONITORING EQUIPMENT SDG&E MAY REQUIRE TO MEASURE THE NET ENERGY OUTPUT OF A CUSTOMER'S GENERATING FACILITY AND, IN SOME CASES, TO MONITOR THE STATUS OF THE CUSTOMER'S EQUIPMENT USED TO INTERCONNECT THE GENERATING FACILITY. UNLESS OTHERWISE AGREED TO BETWEEN SDG&E AND THE CUSTOMER, THE CUSTOMER WILL SUPPLY THE METERING PANEL AND RELATED HARDWARE AND SDG&E WILL PROVIDE THE METERS OR MONITORING EQUIPMENT AT THE CUSTOMER'S EXPENSE.

NOTE: SDG&E'S CHARGES FOR SUCH DEVICES ARE REGULATED BY THE CPUC.

TOTAL RATED KW OF GENERATING FACILITY	TYPICAL METERING DEVICES INSTALLED BY SDG&E
< 200	NON-TIME OF USE (TOU) REVENUE GRADE METERS MEASURING NET GENERATION OUTPUT. INTERVAL DATA RECORDING (IDR) METERS MAY BE REQUIRED TO DETERMINE COMPLIANCE UNDER VARIOUS INCENTIVE PROGRAMS.
200 ≤ X < 1000	REVENUE GRADE LDR METERS MEASURING NET GENERATION OUTPUT AND CUSTOMER LOAD. NO TELEMETRY REQUIRED.
1,000 ≤ X < 10,000	REVENUE GRADE REAL-TIME ENERGY METERING (RTEM) METERS CAPABLE OF NEAR REAL-TIME TELEMETRY MEASURING NET GENERATION OUTPUT AND CUSTOMER LOAD, WATTS, VARS, WATT-HOUR, VAR HOUR, AMPS AND VOLTS.
WIND PROJECTS ≥ 1,000	REVENUE GRADE IDR METERS MEASURING NET GENERATION OUTPUT AND CUSTOMER LOAD, PLUS REAL-TIME (SCADA) TELEMETRY REQUIRED TO MEASURE/MONITOR TOTAL WATTS, VARS, CIRCUIT BREAKER (CB) STATUS AND VOLTAGE OF GENERATING FACILITY. REAL-TIME TELEMETERING REQUIREMENTS FOR WIND PROJECTS LESS THAN 10 MW WILL BE EVALUATED ON A CASE-BY-CASE BASIS.
≥10,000	REVENUE GRADE IDR METERS MEASURING NET GENERATION OUTPUT AND CUSTOMER LOAD, PLUS REAL-TIME (SCADA) TELEMETRY REQUIRED TO MEASURE AT LEAST TWO OF THE FOLLOWING THREE PARAMETERS: (1) TOTAL GROSS GENERATION, (2) CUSTOMER LOAD, OR (3) NET FLOW TO/FROM UTILITY INTERFACE. SCADA TELEMETRY ALSO REQUIRED TO MONITOR WATTS, VARS, AMPS, VOLTS (GENERATOR BUS) AND INTERFACE CB STATUS. ACTUAL POINTS WILL VARY DEPENDING ON CUSTOMER CONFIGURATION.
GENERATING FACILITIES WHERE ANY SINGLE GENERATOR > 10,000	REVENUE GRADE IDR METERS MEASURING NET GENERATION OUTPUT AND CUSTOMER LOAD, PLUS REAL-TIME (SCADA) TELEMETRY WILL BE REQUIRED TO MEASURE/MONITOR EACH INDIVIDUAL UNIT'S WATTS, VARS, AMPS, VOLTS (GENERATOR BUS) AND UNIT CB STATUS.

NOTE: WHERE GENERATION IS CONNECTED DIRECTLY TO SDG&E THROUGH A CUSTOMER OR SDG&E SWITCHYARD INTERFACE AT 69 KV AND ABOVE, SDG&E ALSO REQUIRES REAL-TIME (SCADA) TELEMETRY FOR SWITCHYARD CB STATUS, BUS VOLTS, AND LINE WATTS AND VARS.

TABLE OF CONTENTS

© 1998 - 2023 San Diego Gas & Electric Company. All rights reserved. Removal of this copyright notice without permission is not permitted under law.

REV	CHANGE	DR	BY	DSN	APV	DATE	REV	CHANGE	DR	BY	DSN	APV	DATE
C							F						
B	EDITORIAL CHANGES	ARC	JIK	IPJ	KRG	01/09/2023	E						
A	EDITORIAL CHANGES	--	LSM	IPJ	TPM	11/01/2017	D						

VOLTAGE STANDARDS

IF A CUSTOMER INSTALLS A GENERATOR UTILIZING A VOLTAGE NOT LISTED IN SDG&E'S SERVICE STANDARDS & GUIDE, THEN THE CUSTOMER WILL BE REQUIRED TO INSTALL, OWN AND MAINTAIN A TRANSFORMER TO MATCH THE UTILITY'S SERVICE VOLTAGE. NGOM PANELS OR SWITCHGEAR MUST BE LOCATED ON THE UTILITY SIDE OF THE VOLTAGE-MATCHING TRANSFORMER.

INSPECTION

ALL CONDITIONS SPECIFIED IN THESE REQUIREMENTS MUST BE MET AND VERIFIED BY AN AUTHORIZED SDG&E REPRESENTATIVE. IN ADDITION, APPROVAL FROM THE AHJ, FOR PORTIONS OF THE ELECTRIC SYSTEM UNDER THEIR JURISDICTION, IS REQUIRED BEFORE INTERCONNECTION IS ALLOWED.

DISCONNECTION OF GENERATOR

WHENEVER IT IS DETERMINED BY SDG&E THAT THE CUSTOMER'S GENERATOR IS ADVERSELY AFFECTING ITS ELECTRIC DISTRIBUTION SYSTEM, SDG&E RESERVES THE RIGHT TO DISCONNECT THE GENERATOR FROM ITS SYSTEM UNTIL THE CUSTOMER HAS CORRECTED THE PROBLEM. UNDER EMERGENCY CONDITIONS, SDG&E RESERVES THE RIGHT TO DISCONNECT THE CUSTOMER'S GENERATOR FROM ITS ELECTRIC DISTRIBUTION SYSTEM WITHOUT NOTIFICATION.

ACCESSIBILITY

ALL DEVICES USED TO DISCONNECT THE GENERATOR SHALL BE ACCESSIBLE UNDER ALL CONDITIONS AND AT ALL TIMES, 24 HOURS A DAY, TO SDG&E'S AUTHORIZED EMPLOYEES OR AGENTS.

TRANSFORMER REQUIREMENTS

WHERE SERVICE IS PROVIDED AT OR BELOW 480 VOLTS, THE CUSTOMER IS TO BE SERVED BY A DEDICATED TRANSFORMER WITH THE FOLLOWING EXCEPTIONS:

- EXCEPTION 1: NOT REQUIRED FOR GENERATION UNDER 10 KW
- EXCEPTION 2: NOT REQUIRED FOR INDUCTION GENERATION UNDER 100 KW

TELEMETERING

FOR GENERATION FACILITIES THAT ARE RATED ONE MEGAWATT AND ABOVE, SDG&E REQUIRES TELEMETERING EQUIPMENT AT THE SOURCE (AT THE CUSTOMER'S EXPENSE), TO PROVIDE A CONTINUOUS GENERATION OUTPUT DATA TO SDG&E'S OPERATIONS PERSONNEL. THE CUSTOMER SHALL PROVIDE A DEDICATED COMMUNICATION SERVICE AND 120-VOLT UNINTERRUPTABLE POWER SOURCE AT EACH TELEMETERING INSTALLATION.

TABLE OF CONTENTS

© 1998 - 2023 San Diego Gas & Electric Company. All rights reserved. Removal of this copyright notice without permission is not permitted under law.

REV	CHANGE	DR	BY	DSN	APV	DATE	REV	CHANGE	DR	BY	DSN	APV	DATE
C							F						
B	EDITORIAL CHANGES	ARC	JIK	IPJ	KRG	01/09/2023	E						
A	EDITORIAL CHANGES	--	LSM	IPJ	TPM	11/01/2017	D						

BELOW ARE EXAMPLES OF TYPICAL BILLING AND POWER PURCHASE METERS. DETENTED METERS WILL BE REQUIRED ON ALL INSTALLATIONS.

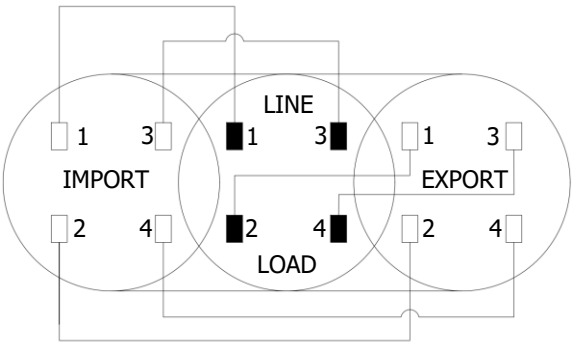

METERING ADAPTER (TYPICAL)

NOTE: THE HORIZONTAL SERIES METER ADAPTER MUST HAVE THE BILLING METER IN THE LEFT-HAND SOCKET AND THE POWER PURCHASE METER IN THE RIGHT-HAND SOCKET. THE VERTICAL SERIES METER ADAPTER MUST HAVE THE BILLING METER IN THE TOP SOCKET AND THE POWER PURCHASE METER IN THE BOTTOM SOCKET.

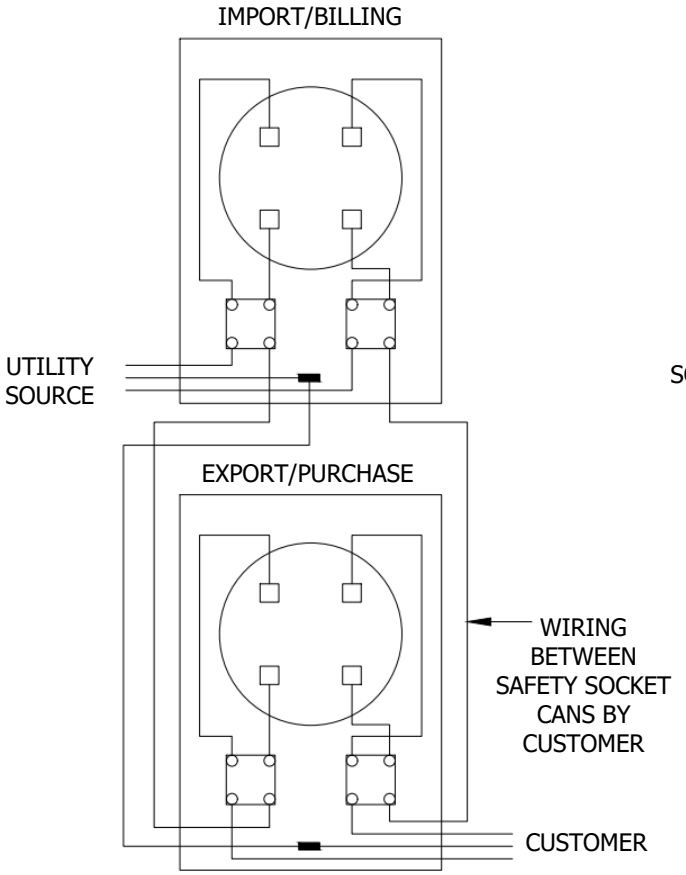

SAFETY SOCKET CAN (TYPICAL)

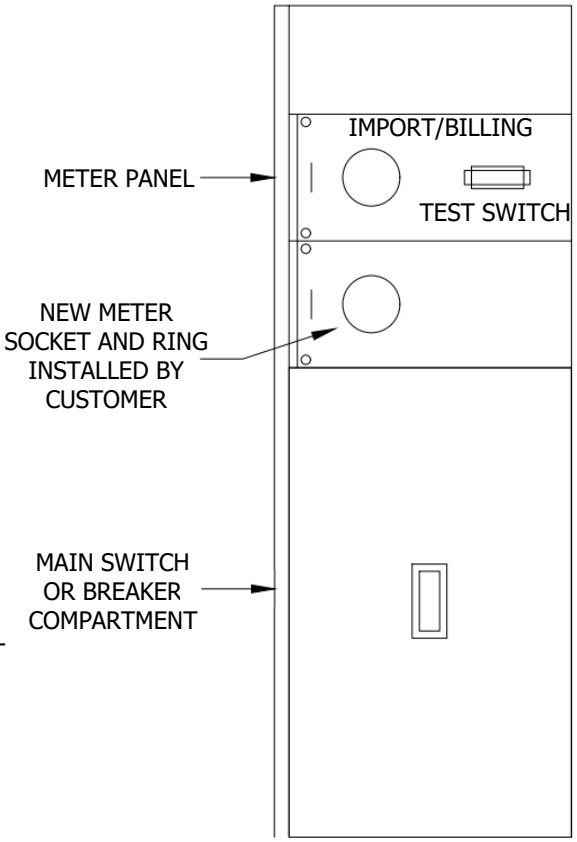

C.T. PANEL (TYPICAL)

TABLE OF CONTENTS

© 1998 - 2023 San Diego Gas & Electric Company. All rights reserved. Removal of this copyright notice without permission is not permitted under law.

REV	CHANGE	DR	BY	DSN	APV	DATE	REV	CHANGE	DR	BY	DSN	APV	DATE
C							F						
B	EDITORIAL CHANGES	ARC	JIK	IPJ	KRG	01/09/2023	E						
A	EDITORIAL CHANGES	--	LSM	IPJ	TPM	11/01/2017	D						

	X	Indicates Latest Revision		Completely Revised		New Page		Information Removed

1000 - GAS

1000 - GAS

PAGE #	SUBJECT
SG 1001	Table of Contents
SG 1002.1 – 1002.2	Alphabetical Subject Index
SG 1003.1 – 1003.5	General Information
SG 1004.1 – 1004.2	Gas Trench Only for San Diego County
SG 1005	Gas Meter Capacity & Selection
SG 1006.1 – 1006.5	Gas Service Policies & Meter Locations
SG 1007.1 – 1007.5	Utility Placement in Joint Trench & Gas Meter Set Assembly Installation
SG 1008.1 – 1008.3	Meter Cabinet for Single Residential Gas Meter
SG 1009.1 – 1009.3	Gas Service Riser & Houseline Spacing, Clearances & Minimum Working Space
SG 1010.1 – 1010.8	Gas Meters Grouped on Meter Headers
SG 1011	Gas Service & Meter Behind Wing Walls
SG 1012.1 – 1012.4	Building Recess for Gas Service & Meters
SG 1013	Mobile Home Meter Pad
SG 1014.1 – 1014.3	Barricades for Gas Meter Sets
SG 1015.1 – 1015.7	Gas Facilities near Underground Padmounted Equipment or Substructures

© 1998-2017 San Diego Gas & Electric Company. All rights reserved. Removal of this copyright notice without permission is not permitted under law.

REV	CHANGE	BY	DSGN	APPV	DATE	REV	CHANGE	BY	DSGN	APPV	DATE
A	New Page	LSM	LSM	TPM	11/01/17	D					
B						E					
C						F					

	Indicates Latest Revision		Completely Revised	X	New Page		Information Removed

TABLE OF CONTENTS

SUBJECT	PAGE #
Access to Customer's Premises	SG 1003.1, SG 1003.3
Alcove	SG 1003.1
Assistance & Information for Equipment Selection & Energy Savings	SG 1003.3
Barricades for Gas Meter Sets	SG 1014.1 – 1014.3
Billing Account Establishment	SG 1003.3
Customer Responsibility for Appliances	1003.3
Definition of Terms	SG 1003.1 – 1003.2, SG 1009.2
Electric Bonding & Grounding of Gas Pipe	SG 1003.5
Establishing the Gas Meter Location & Location of Customer's Houseline	SG 1003.2
Gas Facilities near Underground Padmounted Equipment or Substructures	SG 1015.1 – 1015.7
Gas Meter Capacity & Selection	SG 1005
Gas Meters Grouped on Meter Headers	SG 1010.1 – 1010.8
Adequate Support for Wall Mounted Meter Headers	SG 1010.8
Customer Built Header Support	SG 1010.6 – 1010.7
Left Hand Headers	SG 1010.2 – 1010.3
Right Hand Headers	SG 1010.1, 1010.4 – 1010.5
Gas Service & Metering	SG 1003.2
Behind Wing Walls	SG 1011
Building Recess for Gas Service & Meters	SG 1012.1 – 1012.4
Meter Cabinet for Single Residential Gas Meter	SG 1008.1 – 1008.3
Gas Service Policies & Meter Locations	SG1006.1 – 1006.5
Existing Gas Service – Customer Requests for Additional Services	SG 1006.3 – 1006.4
Gas Meter Assembly Installation	SG 1007.1 – 1007.5
Gas Service & Metering	SG 1003.2
Meter Locations	SG 1006.1 – 1006.2

© 1998-2017 San Diego Gas & Electric Company. All rights reserved. Removal of this copyright notice without permission is not permitted under law.

REV	CHANGE	BY	DSGN	APPV	DATE	REV	CHANGE	BY	DSGN	APPV	DATE
A	Editorial Changes	LSM	LSM	TPM	11/01/17	D					
B						E					
C						F					

	Indicates Latest Revision	X	Completely Revised		New Page		Information Removed

TABLE OF CONTENTS

SUBJECT	PAGE #
Meter & Service Location	SG 1006.1
Number of Services Allowed to a Building – New Projects	SG 1006.2 – 1006.3
Service Locations	SG 1006.5
Gas Service Riser & Houseline Spacing, Clearances & Minimum Working Space	SG 1009.1 – 1009.3
Clear & Level Working Space	SG 1009.2 – 1009.3
Clearances from Building Walls & Corners	SG 1009.1
Installation Space & Dimensions	SG 1009.2 – 1009.3
Gas Trench Only for San Diego County	SG 1004.1 – 1004.2
High-Pressure Metering	SG 1003.1, SG 1009.2
Houseline Modifications	SG 1003.4
Large Gas Field Service Vehicle Access	SG 1003.1
Markout Service	SG 1003.5
Meter Set Assembly (MSA)	SG 1003.1
Mobile Home Meter Pad	SG 1013
Orange County District Meter Clearances	SG 1007.5
Ownership & Maintenance of Utility's Facilities	SG 1003.4
Recess (Building)	SG 1003.1, SG 1012.1 – 12012.4
Resale of Natural Gas	SG 1003.5
Signage Requirements for Gas Service Locations on Multi-Tenant Buildings	SG 1003.2 – 1003.3
Standard Cubic Feet per Hour (SCFH)	SG 1003.1
Utility Placement in Joint Trench & Gas Meter Assembly Installation	SG 1007.1 – 1007.5
Vent	SG 1003.1
Vented Appliance	SG 1003.1
Vented Decorative Appliance	SG 1003.2
Venting System	SG 1003.2

© 1998-2017 San Diego Gas & Electric Company. All rights reserved. Removal of this copyright notice without permission is not permitted under law.

REV	CHANGE	BY	DSGN	APPV	DATE	REV	CHANGE	BY	DSGN	APPV	DATE
A	Editorial Changes	LSM	LSM	TPM	11/01/17	D					
B						E					
C						F					

	Indicates Latest Revision	X	Completely Revised		New Page		Information Removed

SCOPE

The Gas Section presents general and detailed information concerning the location, accessibility, and ventilation of gas meters, risers, service regulators and gas services for new installations and relocations.

PURPOSE

The Service Standards & Guide Gas Section is for use by plumbers, architects, builders and others interested in designing and building a proper gas service and meter(s) installation.

DEFINITIONS OF TERMS

Accessible: Capable of being reached quickly and conveniently 24 hours a day for construction, operation, maintenance, inspection, testing or reading, without requiring those seeking access to climb over or remove obstacles; or to obtain special permission or security clearances.

Alcove: An enclosed, normally recessed, area where gas meters are installed. Enclosed alcoves are not permitted for any new project submitted to the Utility. Existing alcoves are grandfathered. If modifications are made to the customer's gas system, such as load additions requiring a larger gas meter, the gas meter will not be allowed to stay in the alcove.

Large Gas Field Service Vehicle Access: A minimum 16' wide "all weather" driven way of sufficient strength to support truck weight class H20 (20 tons), with a clear height of 13'-6" and a 40' minimum turning radius measured from inside curb.

Meter Set Assembly (MSA): Service riser, regulator, meter, and associated piping.

Recess: An indentation of a building wall, foundation, and floor. A recess is open on the front so that the meter set assembly is visible. No doors, lattice work, or covers of any type are permitted. The building foundation must not cross any portion of the recess. See pages SG 1012.1 – 1012.4 for minimum requirements for a recess.

Standard Cubic feet per Hour (SCFH): A unit of measure to represent the rate of flow of gas, adjusted to standard temperature and pressure conditions.

High-Pressure Metering: Gas pressure higher than the standard 7" water column.

Vent: A listed factory-made vent pipe and vent fittings for conveying flue gases to the outside atmosphere.

Vented Appliance: An appliance that requires a venting system. See definition of Venting System.

Vented Decorative Appliance: A vented appliance whose only function is providing an esthetic effect of flames. In very rare cases when the heat value of the vented decorative appliance (fireplace or gas log appliance) is being used in the space heating calculations for Title 24 energy calculations, the appliance is no longer considered "decorative only" and will require individual gas metering by the Utility. When this occurs, all individual vented and un-vented gas appliances serving a dwelling unit must be individually metered by the Utility.

TABLE OF CONTENTS

© 1998-2017 San Diego Gas & Electric Company. All rights reserved. Removal of this copyright notice without permission is not permitted under law.

REV	CHANGE	BY	DSGN	APPV	DATE	REV	CHANGE	BY	DSGN	APPV	DATE
A	Editorial Changes	LSM	IPJ	TPM	11/01/17	D					
B	No Changes – Reaffirmed	JC	TPM	MDJ	07/23/15	E					
C						F					

Venting System: Consists of the vent or chimney and its connectors, assembled to form a continuous open passageway from an appliance to the outside atmosphere for the purpose of removing products of combustion. This definition shall also include a venting assembly which is an integral part of an appliance.

GAS SERVICE & METERING

Each new single or multi-family residential dwelling unit, where the tenant can use gas directly in gas appliances which require venting, shall be individually metered by the Utility.

Exception: If the only vented appliances serving the dwelling units are decorative appliances the unit is not required to be separately metered and may receive its gas supply through a master meter effective January 1, 2005. See vent-related definitions above. This exception does not apply to log lighters. Log lighters are a vented appliance, and are not considered to be decorative.

The Utility supplies natural gas at a heating value that may change from time to time due to the supply from various gas fields as gathered and transmitted to the Utility.

ESTABLISHING THE GAS METER LOCATION & LOCATION OF CUSTOMER'S HOUSELINE

When building plans have been completed and gas loads are known, the Utility's Planner should be contacted. Refer to page SG 2 for contact information. After reviewing building plans and gas load information, the Planner will provide a written "Gas Service and Meter Location" form. This will establish where the gas meter(s) and houseline(s) are to be located. Buildings requiring multiple meters shall have all meters located at one location. See pages SG 1006.2 – 1006.4 for information on additional services. All houselines shall be clearly and permanently marked by the contractor or customer to identify the unit to be served.

When any gas design load is over 1,000 SCFH, or "high pressure" gas service is required, the Utility will initiate a gas load study. This study will be based on information supplied by the customer or their representative. The Utility will confirm the results of the load study to the customer or their representative via certified mail. The Utility's Planner will advise if large gas field service vehicle access will be required. See definition on page SG 1003.1. Extensions of gas mains and services will be made in accordance with the Utility's filed rules.

SIGNAGE REQUIREMENTS FOR GAS SERVICE LOCATIONS ON MULTI-TENANT BUILDINGS

Identification plaques are required for each gas service/header serving a multi-tenant building. They are to have a directory diagram showing all the gas service points and meter locations for the building, and must identify the particular service point being identified with the serving pressure to the header, and a listing of the units/suites served by it. See page SG 017.1 for plaque specifications, with the exception that all letter sizes may be reduced to ⅛".

In addition to the information specified above, plaques for 2-PSIG services to multi-family buildings are to show the location and access route to the 7" water column regulators for each unit served by the header being identified.

© 1998-2017 San Diego Gas & Electric Company. All rights reserved. Removal of this copyright notice without permission is not permitted under law.

REV	CHANGE	BY	DSGN	APPV	DATE	REV	CHANGE	BY	DSGN	APPV	DATE
A	Editorial Changes	LSM	IPJ	TPM	11/01/17	D					
B	No Changes – Reaffirmed	JC	TPM	MDJ	07/23/15	E					
C						F					

The plaque is to be permanently affixed to the wall of the building served in immediate proximity to the header, or it is to be installed as a permanent self-supporting sign next to the header in a manner that does not impede required clearances and working space requirements for the header/meter set assembly.

BILLING ACCOUNT ESTABLISHMENT

A request to the Utility for electric and/or gas service is different than an inquiry into the availability of or charges for such service. Contact the Utility's Customer Contact Center at (800) 411-7343, to make an application for a billing account as soon as the street address has been assigned by the city/county.

CUSTOMER RESPONSIBILITY FOR APPLIANCES

The customer will maintain all gas piping and equipment in good safe condition beyond the point of service connection to the houseline. The Utility will not be responsible for any loss or damage caused by the customer's negligence, want of proper care, or wrongful act in maintaining the equipment.

The Utility has the right to refuse or to cease to deliver gas to any customer if any part of the piping, appliances or apparatus shall at any time be unsafe or if use is prohibited under any law, municipal ordinance or regulation.

The Utility does not assume the duty of inspecting the customer's piping, appliances or equipment and therefore, assumes no liability.

Gas service will not be supplied to apparatus or appliances where their operation will be detrimental to our gas system or other customers. Gas service will be discontinued to customers who continue to use such apparatus or equipment after being notified.

UTILITY'S RIGHT OF ACCESS TO CUSTOMER'S PREMISES

The Utility shall at all times have the right to enter and leave Applicant's Premises for any purpose connected with the furnishing of gas service (meter reading, inspection, testing, routine repairs, replacement, maintenance, emergency work, etc.) and the exercise of any and all rights secured to it by law, or under Utility's tariff schedules. These rights include but are not limited to:

1. The use of a Utility-approved locking device, if Applicant desires to prevent unauthorized access to Utility's facilities.
2. Safe and ready access for Utility personnel free from unrestrained animals.
3. Unobstructed ready access for Utility's vehicles and equipment to install, remove, repair or maintain its facilities.
4. Removal of any and all of its property installed on applicants premises after the termination of service.

TABLE OF CONTENTS

© 1998-2017 San Diego Gas & Electric Company. All rights reserved. Removal of this copyright notice without permission is not permitted under law.

REV	CHANGE	BY	DSGN	APPV	DATE	REV	CHANGE	BY	DSGN	APPV	DATE
A	Editorial Changes	LSM	IPJ	TPM	11/01/17	D					
B	No Changes – Reaffirmed	JC	TPM	MDJ	07/23/15	E					
C						F					

OWNERSHIP & MAINTENANCE OF UTILITY'S FACILITIES

Service pipe, meters, headers, regulators and other facilities furnished and installed by the Utility will continue to be the property of the Utility. They may be repaired or replaced by the Utility at any time and may be removed on termination of service. No rent or other charge may be made against the Utility for placing or maintaining its facilities on the customer's premises. The customer will exercise reasonable care to prevent the facilities from being damaged or destroyed.

In the event that the customer finds the gas service to be defective, they should notify the Utility immediately by calling (800) 411-SDGE (7343).

A typical meter installation consists of the service riser coming up out of the ground to the pressure regulator which connects to the meter. The houseline, installed by the customer' plumber, is connected by the Utility to the outlet side of the meter. Any changes to the houseline thereafter will be made by the customer or their plumber at the customer' expense in accordance with applicable codes and regulations. Adequate working space and access must be provided 24 hours per day for inspection and servicing by the Utility.

Large meters (8C or larger) must be located so as to be available for servicing with large gas field service vehicle access to the meter location. See definition on page SG 1003.1. In all cases, it is highly advisable that a meter location be established by the Utility before detailed design of the building and awarding of the plumbing contract is done.

HOUSELINE MODIFICATIONS

In cases where a customer's planned improvement or alteration to a building requires relocation or change to their houseline, such work must be done by the customer prior to the Utility re-routing its service pipe. It is the customer's responsibility to tie-in a new houseline(s) to the existing houseline(s). It is also the customer's responsibility to pay to the Utility any relocation charges for any service pipe which is relocated.

An inspection clearance from the governmental Authority Having Jurisdiction (AHJ) is required before a new houseline can be connected or an altered houseline can be reconnected.

Should it be necessary to extend or enlarge a houseline because of added load, call the Planner at the Project Management Regional Office nearest your job location prior to connecting the houseline. (See page SG 2.) Large added gas loads, such as pool heaters, may require the replacement of the existing gas meter with a larger one to assure adequate pressure and flow.

In many instances, a "hot change tee" has been installed on the outlet side of the gas meter. This tee is used to improve our service to the customer by allowing a meter change or test to be performed without interrupting the customer's gas service. The tee is designed for use by the Utility only and must not be used for any other purpose by the customer or their plumber.

TABLE OF CONTENTS

© 1998-2017 San Diego Gas & Electric Company. All rights reserved. Removal of this copyright notice without permission is not permitted under law.

REV	CHANGE	BY	DSGN	APPV	DATE	REV	CHANGE	BY	DSGN	APPV	DATE
A	Editorial Changes	LSM	IPJ	TPM	11/01/17	D					
B	No Changes – Reaffirmed	JC	TPM	MDJ	07/23/15	E					
C						F					

RESALE OF NATURAL GAS

It is not permissible for a customer to resell any of the gas received from the Utility to any other person, firm or corporation, except that the owner or lessee of any existing "Master Metered" mobile home park may resell to their tenants. Such resale of gas must be at rates identical to those rates the Utility would apply in the event that gas was supplied to the sub-consumer directly by the Utility.

ELECTRIC BONDING & GROUNDING OF GAS PIPE

The following are not permitted:

1. Electric bonding to the Utility's gas service piping, gas risers, or meter facilities.
2. Using the Utility's gas service piping, gas risers, or meter facilities for electrical grounding, or in a manner that the gas piping or other gas facilities become current-carrying conductors.

MARKOUT SERVICE

Before you begin digging at your building site, contact DigAlert for markout service, to avoid conflict with existing underground facilities. You may contact DigAlert by calling 811, Monday through Friday, 6:00 a.m. – 7:00 p.m., or visit their website, https://www.digalert.org/. For emergency markout service only, call Service Dispatch at (619) 725-5100.

TABLE OF CONTENTS

© 1998-2017 San Diego Gas & Electric Company. All rights reserved. Removal of this copyright notice without permission is not permitted under law.

REV	CHANGE	BY	DSGN	APPV	DATE	REV	CHANGE	BY	DSGN	APPV	DATE
A	Editorial Changes	LSM	IPJ	TPM	11/01/17	D					
B	No Changes – Reaffirmed	JC	TPM	MDJ	07/23/15	E					
C						F					

This standard applies to new 3" or smaller gas services tapped off a 4" or smaller gas main or service. The trench and tie-in hole (weld hole) in which your service will be installed must conform to the minimum standards which appear below and on page SG 1004.2.

GAS TRENCH ONLY TRENCH DETAIL

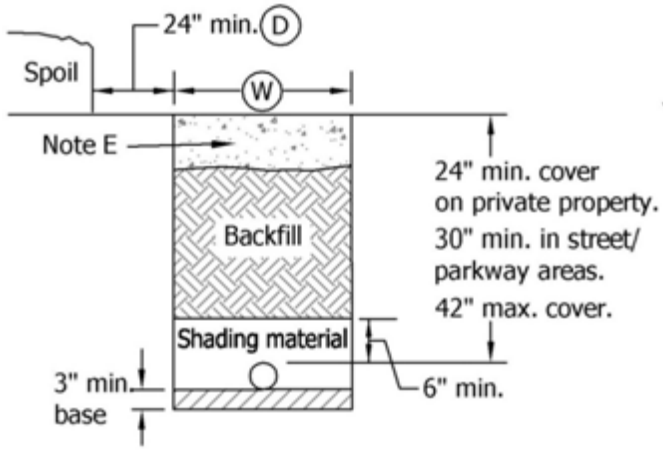

TIE-IN HOLE DIMENSIONS

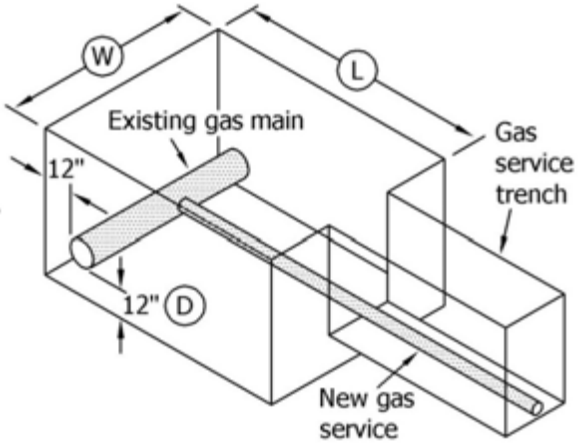

W Minimum Dimensions for Width of Trench	
Gas Pipe Size	Width
1" or Less	6"
2"	9"
3"	12"*

D Depth = 12" below existing gas main
W Width = 48" minimum
L Length = 60" minimum

Note: The SDG&E Inspector will advise if field conditions warrant additional excavation.

* Width at coupling locations must be increased to 18" for 5' on each end of coupling.

Notes:

A. Customer to contact the local city or county for an excavation permit and their requirements prior to excavation in the public right-of-way. State law requires you to contact DigAlert at 811 or visit www.digalert.org, at least 2 working days prior to excavation.

B. A 3" base is required to prevent damage from rocks, sags or pockets. Imported material consisting of natural sand or manufactured sand, existing native material or combinations may be used for base and shading material provided it complies with SDG&E (Utility) standards and the compaction requirements of the governmental agencies. Shading material must have a mixture of particle sizes all smaller than ½". A minimum cover of 4" of compacted shading material (4" after compaction) shall be installed above gas pipe. A minimum cover of 12" of compacted shading material will be required if in the opinion of the Inspector there is an excessive amount of rocks and clods in the backfill. The shading material must be installed before the trench is backfilled to prevent damage from rocks, etc. The backfill material shall meet the requirements of all applicable codes, ordinances, and the Utility's Standards and be free of debris and organic matter. The coarse material shall be well

© 1998-2017 San Diego Gas & Electric Company. All rights reserved. Removal of this copyright notice without permission is not permitted under law.

REV	CHANGE	BY	DSGN	APPV	DATE	REV	CHANGE	BY	DSGN	APPV	DATE
A	Editorial Changes	LSM	IPJ	TPM	11/01/17	D					
B	Editorial Changes	JC	TPM	MDJ	09/16/15	E					
C						F					

X Indicates Latest Revision | Completely Revised | New Page | Information Removed

SHEET 1 OF 2

SDG&E SERVICE STANDARDS & GUIDE

GAS TRENCH ONLY FOR SAN DIEGO COUNTY

SG 1004.1

TABLE OF CONTENTS

distributed throughout the finer material. All base, shading and backfill must be approved by the Utility's Inspector.

C. After the Utility's Inspector approves the trench, tie-in excavation, base shading and backfill material, the Utility will install and energize the gas service. When the gas service is energized, it must be covered during the same working day. The Utility's Inspector must approve installation of shading material prior to backfilling.

(D) Where Utility employees, or their contractors, are required to enter the trench, spoil must be placed a minimum of 24" from edge of trench. (See Gas Trench Only Trench Detail figure on page SG 1004.1.) If excavation at the gas main is 5' or more in depth, all safety requirements, including shoring the tie-in hole (weld hole), must be met.

E. No wet utilities, such as water, sewer or irrigation pipes are allowed in the service trench. A minimum 12" horizontal separation of undisturbed soil is required between your service trench and any water, sewer or drain pipe. A minimum 6" vertical separation is required for crossings.

F. All trench resurfacing shall be done according to the governmental agencies' requirements.

TABLE OF CONTENTS

© 1998-2017 San Diego Gas & Electric Company. All rights reserved. Removal of this copyright notice without permission is not permitted under law.

REV	CHANGE	BY	DSGN	APPV	DATE	REV	CHANGE	BY	DSGN	APPV	DATE
A	Editorial Changes	LSM	IPJ	TPM	11/01/17	D					
B	Editorial Changes	JC	TPM	MDJ	09/16/15	E					
C						F					

X Indicates Latest Revision	Completely Revised	New Page	Information Removed

Table 1
Standard 7" Water Column (WC) Service Pressure Gas Meter Capacity & Section

Meter Type & Size D=Diaphragm R=Rotary	Meter Capacity at 7" WC in SCFH	Maximum SDG&E Riser Size at 7" WC	SDG&E Riser to Houseline Spacing Dimension
D 250-275	250-275	¾" STL x ½" PE	19"
D 425	425	¾" STL x ½" PE	19"
D 630	630	¾" STL x ½" PE	19"
R 8C	800	1"	30"
R 11C 175	1,100	1"	30"
R 15C 175	1,500	1"	36"
R 2M 175	2,000	1"	48"
R 3M 175	3,000	1"	48"
R 5M 175	5,000	1"	75"
R 7M 175	7,000	1"	75"

Table 2
High Pressure (5 PSIG) Service Pressure Gas Meter Capacity & Section

Meter Type & Size D=Diaphragm R=Rotary	Meter Capacity at 7" WC in SCFH	Maximum SDG&E Riser Size at 7" WC	SDG&E Riser to Houseline Spacing Dimension
D 425	1,030	1"	48"
R 8C	1,100	1"	48"
D 630	1,500	1"	48"
R 2M 175	2,600	1"	48"
R 3M 175	4,000	1"	48"
R 5M 175	6,600	1"	75"
R 7M 175	9,200	1"	75"
R 11M 175	14,500	1"	90"
R 16M 175	21,100	1"	90"

Notes:

1. Rotary type meters require truck access for installation and maintenance.
2. The SDG&E riser diameter selected for a meter does not need to match the service pipe diameter. Use the "Maximum SDG&E Riser Size" column in the appropriate table above to make your selection.
3. The houseline should be located to the right of the meter set assembly. The flow of gas from inlet to outlet should be left to right.

TABLE OF CONTENTS

© 1998-2017 San Diego Gas & Electric Company. All rights reserved. Removal of this copyright notice without permission is not permitted under law.

REV	CHANGE	BY	DSGN	APPV	DATE	REV	CHANGE	BY	DSGN	APPV	DATE
A	Editorial Changes	LSM	IPJ	TPM	11/01/17	D					
B						E					
C						F					

X Indicates Latest Revision	Completely Revised	New Page	Information Removed

SHEET 1 OF 1

SDG&E SERVICE STANDARDS & GUIDE

GAS METER CAPACITY & SELECTION

SG 1005

METER & SERVICE LOCATION

Location for gas meters and services shall comply with the provisions of this manual and applicable codes, laws, and ordinances of the governmental Authority Having Jurisdiction (AHJ) for inspection.

It is necessary that the location for the meter and service be approved in writing by an SDG&E Planner. This can be accomplished by the customer or contractor contacting the Utility's nearest Service Planning or Project Management Regional Office by telephone or the internet and requesting a "Meter and Service Location" form. See page SG 2 for contact information.

METER LOCATIONS

1. Gas meters and regulators must be installed by the Utility in a readily accessible location, approved by the Utility on the customer's premises. They must be capable of being reached quickly and conveniently 24 hours a day by an unobstructed access route for construction, operation, maintenance, inspection, testing or reading, and without requiring those seeking access to climb over or remove obstacles, or obtain special permission or security clearances. The access route must not be prone to flooding, or planted with anything other than grass or artificial turf.

2. The Utility's gas meters and service pipe are not permitted on, in, over or under a house, building, underground structure, breezeway, patio, wood deck, asphalt, concrete pad, carport or bio-retention facilities.

3. Large meters (8C or larger) must be located so as to be available for servicing with large gas field service vehicles. See definition of "Large Gas Field Service Vehicle Access" on page SG 1003.1.

4. Doors, gates or other such facilities which restrict access to any meter location, must be locked only with locking devices acceptable to the Utility.

5. For single and multiple occupancy buildings, meter and metering equipment may be installed:

   a. Outdoors and adjacent to a building

   b. Behind a wing wall

   c. For multiple occupancy buildings, meters and metering equipment are to be grouped at one location

6. For mobile home lots, meters and metering equipment may be installed:

   a. At or near the corner of the mobile home, closest to the Utility's source

   b. On a permanently installed structure near the front lot line of the mobile home lot

   c. At or near the corner of the mobile home lot, closest to the Utility's source

   Note: Meters shall not depend on a flex gas houseline for support. A post, bracket or other means of rigid support is to be provided by the customer when required by the appropriate AHJ or Utility. See page SG 1013 for mobile home meter pad information.

© 1998-2017 San Diego Gas & Electric Company. All rights reserved. Removal of this copyright notice without permission is not permitted under law.

REV	CHANGE	BY	DSGN	APPV	DATE	REV	CHANGE	BY	DSGN	APPV	DATE
A	Editorial Changes	LSM	IPJ	TPM	11/01/17	D					
B	No Changes – Reaffirmed	JC	TPM	MDJ	07/23/15	E					
C						F					

7. Meter headers are limited to two tiers to ensure safety of personnel and meter accessibility.

8. Meters must be located in a ventilated area.

9. A minimum of 3' clear and level working space is required directly in front of any portion of the Meter Set Assembly (MSA) or recess. See pages SG 1012.1 – 1012.2 for minimum working space requirements for a building recess.

10. Gas regulators must be located away from openings into a building in order to allow gas to escape freely to the outside atmosphere in the event of a leak. The Utility is installing service regulators with internal relief valves for over pressure protection which may release gas through the regulator vent opening. See pages SG 1007.1 – 1007.5 for specific requirements.

11. Gas meters and service regulators must be protected from damage due to corrosion, extreme temperatures, vehicular traffic and moisture. Exposure to pool chemicals, dryer vents, lawn sprinklers, etc., must be avoided.

GAS SERVICE POLICY FOR NEW PROJECTS – NUMBER OF SERVICES ALLOWED

1. Multi-family Residential Buildings – Less than 3 Stories High

   One service per building will typically be granted. At the Utility's discretion, and with approval from the AHJ, a second service may be granted if space is not available to group all the meters at one location. Gas Rule 16 will apply and residential allowances will be applied to the cost of the second service.

   Note: The 300' rule that applies to electric service policies does not apply to gas. Justification for a second service is based on space constraints for meters, building layout, etc.

2. Residential or Mixed Use Buildings – 3 Stories or Greater

   One service per building will typically be granted. At the Utility's discretion, and with approval from the AHJ, a second service may be granted if space is not available to group all meters at one location. Gas Rule 16 will apply and residential allowances will be applied to the cost of the second service.

   Note: The 300' rule that applies to electric service policies does not apply to gas. Justification for a second service is based on space constraints for meters, building layout, etc.

3. Residential Contiguous Dwellings – Townhouses (Row Homes)

   a. Each individual townhouse or duplex located on a parcel of land bounded by legal property lines must be provided with an individual gas service and meter(s) located on the property served.

   b. Each individual townhouse or duplex located on a single parcel of property divided with "assumed property lines" with approval from the AHJ may be provided with:

      i. An individual gas service and meter(s) located on the townhouse bounded by assumed property lines, or

© 1998-2017 San Diego Gas & Electric Company. All rights reserved. Removal of this copyright notice without permission is not permitted under law.

REV	CHANGE	BY	DSGN	APPV	DATE	REV	CHANGE	BY	DSGN	APPV	DATE
A	Editorial Changes	LSM	IPJ	TPM	11/01/17	D					
B	No Changes – Reaffirmed	JC	TPM	MDJ	07/23/15	E					
C						F					

ii. May be served through a single gas service, with meters grouped at one location in a common area. The header must be supported independent of the buildings containing dwelling units.

Easements will be required to be established and recorded in the deed of every townhouse allowing for privately-owned gas lines to cross assumed property lines. The Utility is not involved in the easement process but it is important for developers to understand this requirement.

4. Single Premise – Multiple Non-Residential Enterprises (such as Shopping Centers & Office Buildings)

One service per building will typically be granted. At the Utility's discretion, and with approval from the AHJ, a second service may be granted if space is not available to group all meters at one location. Gas Rule 16 will apply and non-residential allowances will be applied to the cost of the second service.

Note: The 300' rule that applies to electric service policies does not apply to gas. Justification for a second service is based on space constraints for meters, building layout, etc.

5. Single Premise – Single Non-Residential Enterprise (Customer)

One service per premise serving a single enterprise will be granted. If a second service is approved, the customer will be required to pay the total estimated installed cost as a non-refundable payment. No allowances will be granted for the second service.

6. Single Premise – Multiple Residential Customers

Each separate structure containing two or more legal dwelling units must be individually served by the Utility. Each dwelling unit must be individually metered by the Utility. Gas Rule 16 for Service Extensions and the residential allowances per Rule 15 for each dwelling unit will apply to each service. Approval by the AHJ is required.

GAS SERVICE POLICY FOR EXISTING CUSTOMERS – REQUESTS FOR ADDITIONAL SERVICE

1. Multi-Family Residential Buildings – Less than 3 Stories High

The customer should be instructed to plumb to the existing meter location. If field conditions make it impractical, a second service can be granted. The customer will be billed total installed cost. Master to individual requests requiring a second service to accommodate all of the individual meters will be billed total installed cost.

2. Residential or Mixed Use Buildings – 3 Stories or Greater

The customer should be instructed to plumb to the existing meter location. If field conditions make it impractical, a second service can be granted. The customer will be billed total installed cost.

Master to individual requests requiring a second service to accommodate all of the individual meters will be billed total installed cost.

© 1998-2017 San Diego Gas & Electric Company. All rights reserved. Removal of this copyright notice without permission is not permitted under law.

REV	CHANGE	BY	DSGN	APPV	DATE	REV	CHANGE	BY	DSGN	APPV	DATE
A	Editorial Changes	LSM	IPJ	TPM	11/01/17	D					
B	No Changes – Reaffirmed	JC	TPM	MDJ	07/23/15	E					
C						F					

TABLE OF CONTENTS

3. Residential Contiguous Dwellings – Townhouses (Row Homes)

   a. Each individual townhouse or duplex located on a parcel of land bounded by legal property lines must be provided with an individual gas service and meter(s) located on the property served.

   b. Each individual townhouse or duplex located on a single parcel of property divided with "assumed property lines" may be provided with:

      i. An individual gas service and meter(s) located on the townhouse bounded by assumed property lines, or

      ii. May be served through a single gas service, with meters grouped at one location in a common area. The header must be supported independent of the buildings containing dwelling units.

      Easements will be required to be established and recorded in the deed of every townhouse allowing for privately-owned gas lines to cross assumed property lines. The Utility is not involved in the easement process but it is important for developers to understand this requirement.

4. Single Premise – Multiple Non-Residential Enterprises (such as Shopping Centers & Office Buildings)

   The customer should be instructed to plumb to the existing meter location if same pressure. If high pressure is required, set new meter adjacent to existing meter location. Allowances will be granted towards Rule 16 costs.

5. Single Premise, Single Non-Residential Enterprise (Customer)

   The customer should be instructed to plumb to the existing meter location if same pressure. If high pressure is required, set new meter adjacent to existing meter location. Allowances will be granted towards Rule 16 costs. If reinforcement is required, customer will pay incremental cost of reinforcement less the allowance for new load. At the Utility's discretion, a new service may be less expensive than the reinforcement of the existing service. If so, the customer would pay the cost for the new service less the allowance granted for the new load

6. Single Premise – Multiple Residential Customer

   The customer should be instructed to plumb to the existing meter location. For new service requests, each separate structure containing two or more legal dwelling units must be individually served by the Utility. Each dwelling unit must be individually metered by the Utility. Gas Rule 16 for Service Extensions and the residential allowances per Rule 15 for each dwelling unit will apply to each service. Approval by the AHJ is required.

TABLE OF CONTENTS

© 1998-2017 San Diego Gas & Electric Company. All rights reserved. Removal of this copyright notice without permission is not permitted under law.

REV	CHANGE	BY	DSGN	APPV	DATE	REV	CHANGE	BY	DSGN	APPV	DATE
A	Editorial Changes	LSM	IPJ	TPM	11/01/17	D					
B	No Changes – Reaffirmed	JC	TPM	MDJ	07/23/15	E					
C						F					

TABLE OF CONTENTS

SERVICE LOCATIONS

1. Gas services are to be installed along the shortest most practical route from the Utility's closest source to the meter location acceptable to the Utility. Install services perpendicular to the gas main. Diagonal installation shall not be permitted. See pages SG 1006.1 – 1006.2 for meter locations.

   A joint service is limited to two risers per service line.

2. Each gas service must have a shutoff valve located outside of the building in a readily accessible location. The shutoff valve is not permitted in a locked security area.

3. Location of the Utility's gas service pipe will be designed to avoid hazards or obstructions (particularly retaining walls, trees, plowed land, excessive moisture, and steep banks).

4. Service pipe must not be run under or through a building, underground structure, breezeway, patio (asphalt, concrete pad, or wood decking) or carport.

5. The route of the gas service pipe must be accessible for leakage patrol and maintenance. The service pipe must not be installed in a steep bank that is higher than 8' and has a slope greater than a 3-to-1 ratio. The Utility must approve installation in slopes greater than 3-to-1.

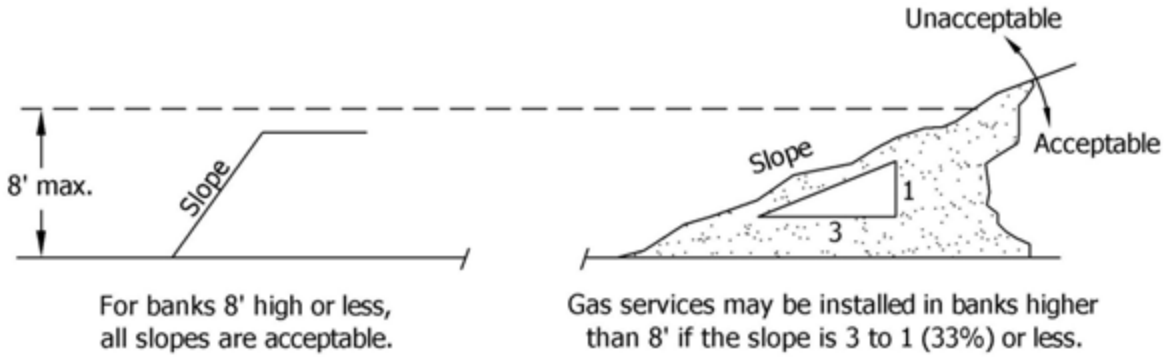

For banks 8' high or less, all slopes are acceptable.

Gas services may be installed in banks higher than 8' if the slope is 3 to 1 (33%) or less.

6. During construction, if the area around the riser is to be paved, a 4" minimum diameter or square opening around the riser is required. This includes mobile home meter pads. This must be provided to prevent damage to the riser and to provide an escape route in the event of a gas leak.

© 1998-2017 San Diego Gas & Electric Company. All rights reserved. Removal of this copyright notice without permission is not permitted under law.

REV	CHANGE	BY	DSGN	APPV	DATE	REV	CHANGE	BY	DSGN	APPV	DATE
A	Editorial Changes	LSM	IPJ	TPM	11/01/17	D					
B	No Changes – Reaffirmed	JC	TPM	MDJ	07/23/15	E					
C						F					

This Standard provides typical preferred and alternate utility placement in a joint trench for gas and electric service and meter installations, and gas meter set assembly separation requirements from electric meters, communication equipment, building openings, and miscellaneous equipment such as, but not limited to, tankless water heaters. The illustrations shown are typical for a residential single meter installation, but may be modified for multiple gas meter header installations and commercial/industrial premises.

TYPICAL INSTALLATION WITH SERVICES & METERING ON RIGHT SIDE OF STRUCTURE AND ELECTRIC METER LOCATED LEFT OF THE GAS METER (PREFERRED LOCATION)

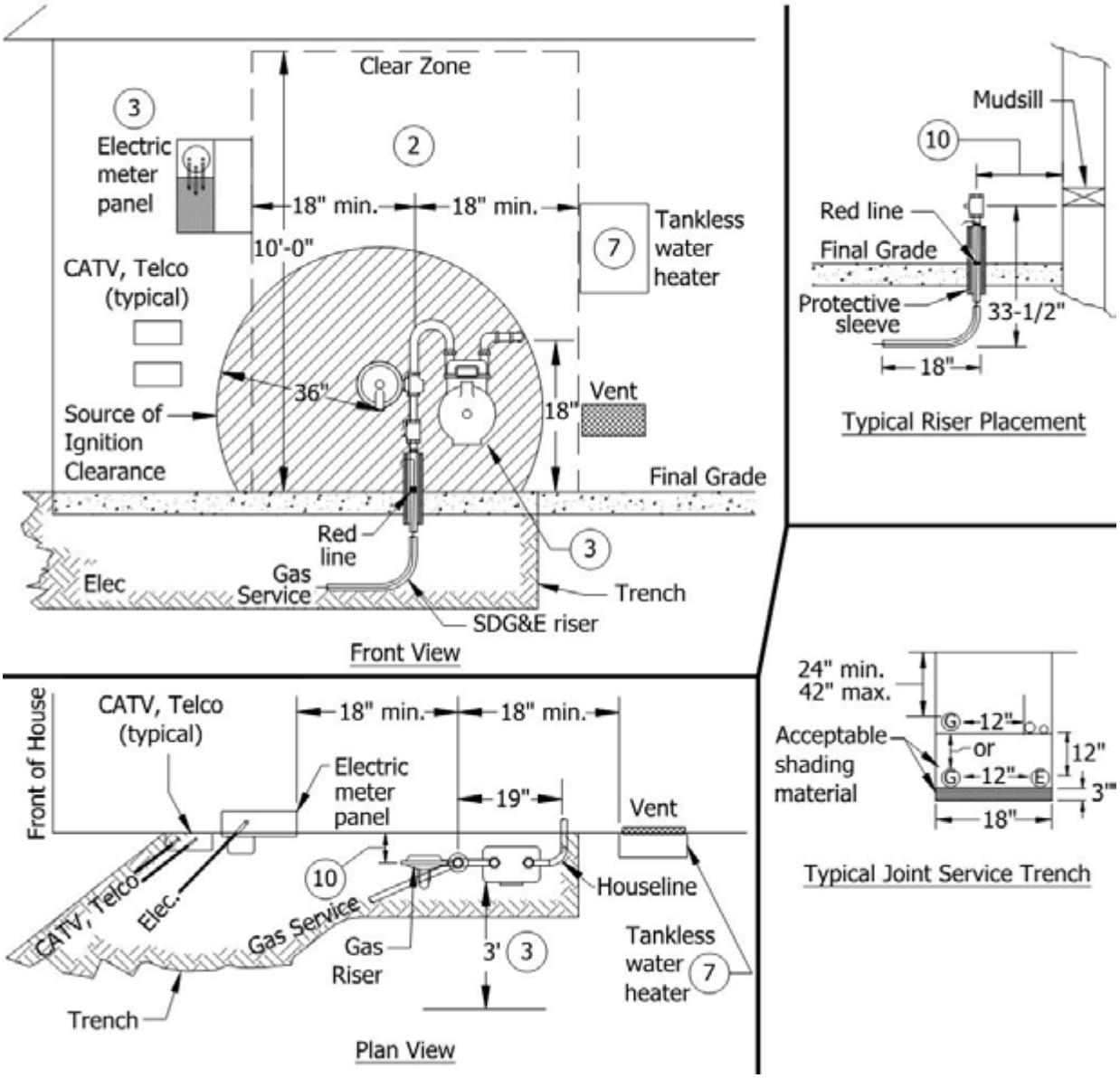

Reference D7103

Not to Scale

© 1998- 2019 San Diego Gas & Electric Company. All rights reserved. Removal of this copyright notice without permission is not permitted under law.

REV	CHANGE	BY	DSGN	APPV	DATE	REV	CHANGE	BY	DSGN	APPV	DATE
A	EDITORIAL CHANGES	LSM	BRB	TPM	08/16/16	D					
B	EDITORIAL CHANGES	IPJ	IPJ	CZH	10/15/19	E					
C						F					

	Indicates Latest Revision	X	Completely Revised		New Page		Information Removed

SHEET 1 OF 5

SDG&E SERVICE STANDARDS & GUIDE

UTILITY PLACEMENT IN JOINT TRENCH & GAS METER SET ASSEMBLY INSTALLATION

SG 1007.1

TABLE OF CONTENTS

TYPICAL INSTALLATION WITH SERVICES & METERING ON RIGHT SIDE OF STRUCTURE & ELECTRIC METER LOCATED RIGHT OF THE GAS METER (ALTERNATE LOCATION)

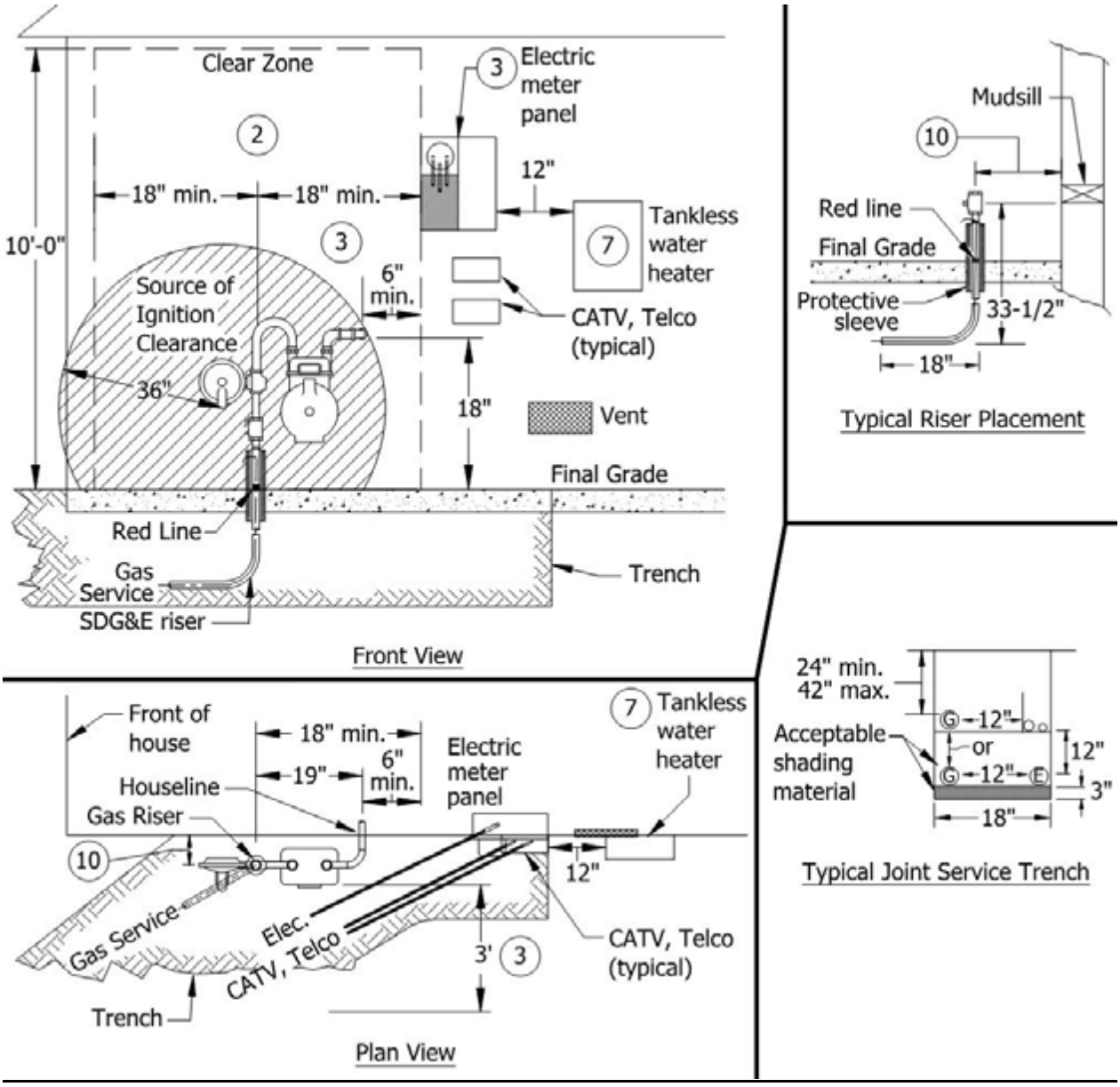

Reference D7103

Not to Scale

© 1998- 2019 San Diego Gas & Electric Company. All rights reserved. Removal of this copyright notice without permission is not permitted under law.

REV	CHANGE	BY	DSGN	APPV	DATE	REV	CHANGE	BY	DSGN	APPV	DATE
A	EDITORIAL CHANGES	LSM	BRB	TPM	08/16/16	D					
B	EDITORIAL CHANGES	IPJ	IPJ	CZH	10/15/19	E					
C						F					

	Indicates Latest Revision	X	Completely Revised		New Page		Information Removed

SHEET 2 OF 5

SDG&E SERVICE STANDARDS & GUIDE

UTILITY PLACEMENT IN JOINT TRENCH & GAS METER SET ASSEMBLY INSTALLATION

SG 1007.2

TABLE OF CONTENTS

TYPICAL INSTALLATION WITH SERVICES & METERING ON LEFT SIDE OF STRUCTURE & ELECTRIC METER LOCATED RIGHT OF THE GAS METER (PREFERRED LOATION)

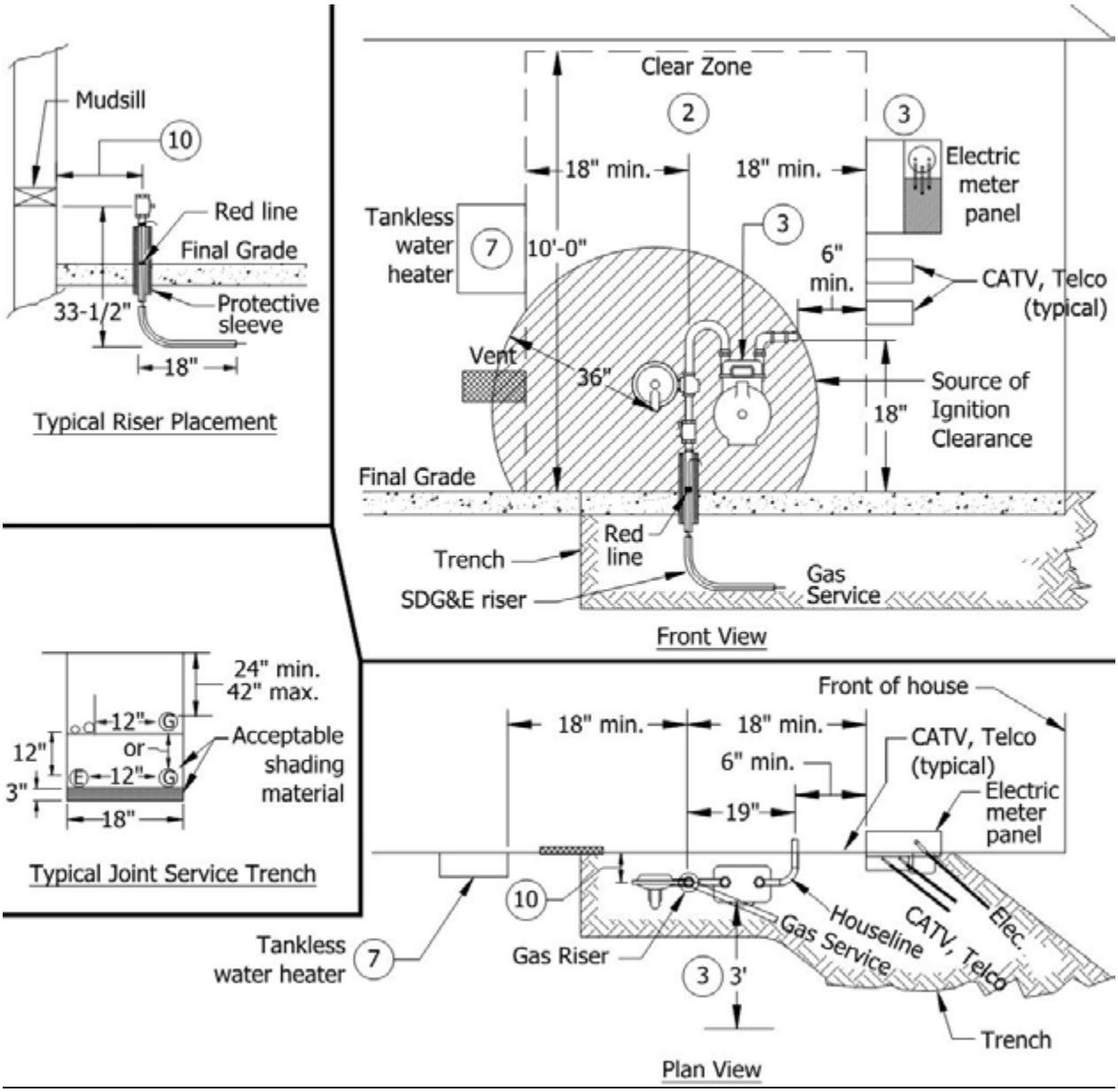

Reference D7103

No to Scale

© 1998- 2019 San Diego Gas & Electric Company. All rights reserved. Removal of this copyright notice without permission is not permitted under law.

REV	CHANGE	BY	DSGN	APPV	DATE	REV	CHANGE	BY	DSGN	APPV	DATE
A	EDITORIAL CHANGES	LSM	BRB	TPM	08/16/16	D					
B	EDITORIAL CHANGES	IPJ	IPJ	CZH	10/15/19	E					
C						F					

	Indicates Latest Revision	X	Completely Revised		New Page		Information Removed

SHEET 3 OF 5

SDG&E SERVICE STANDARDS & GUIDE

UTILITY PLACEMENT IN JOINT TRENCH & GAS METER SET ASSEMBLY INSTALLATION

SG 1007.3

TABLE OF CONTENTS

TYPICAL INSTALLATION WITH SERVICES & METERING ON LEFT SIDE OF STRUCTURE AND ELECTRIC METER LOCATED LEFT OF THE GAS METER (ALTERNATE LOCATION)

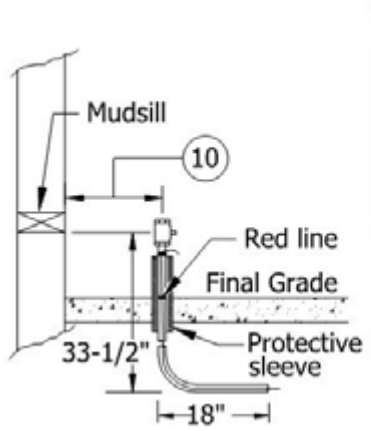

Typical Riser Placement

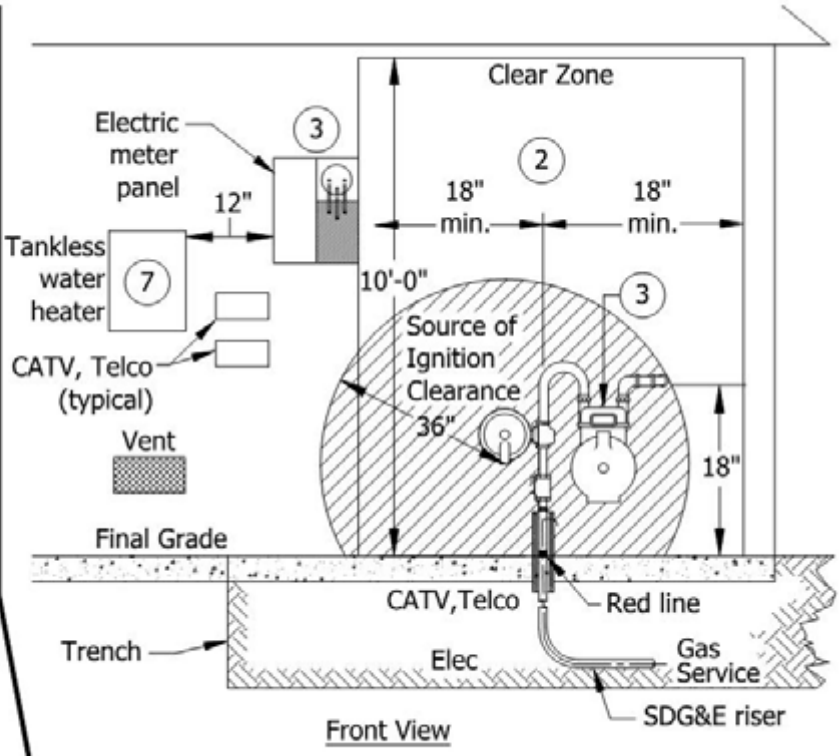

Front View

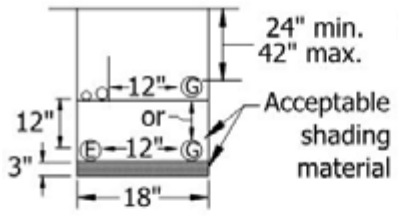

Typical Joint Service Trench

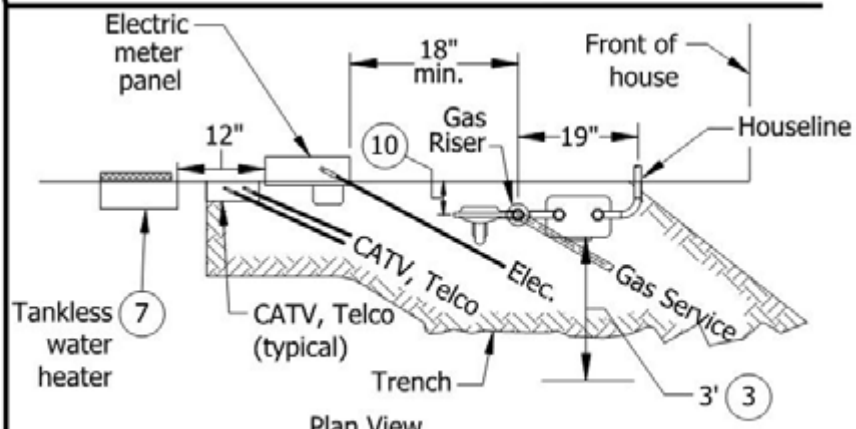

Plan View

Reference D7103

Not to Scale

© 1998- 2019 San Diego Gas & Electric Company. All rights reserved. Removal of this copyright notice without permission is not permitted under law.

REV	CHANGE	BY	DSGN	APPV	DATE	REV	CHANGE	BY	DSGN	APPV	DATE
A	EDITORIAL CHANGES	LSM	BRB	TPM	08/16/16	D					
B	EDITORIAL CHANGES	IPJ	IPJ	CZH	10/15/19	E					
C						F					

	Indicates Latest Revision	X	Completely Revised		New Page		Information Removed

SHEET 4 OF 5

SDG&E SERVICE STANDARDS & GUIDE

UTILITY PLACEMENT IN JOINT TRENCH & GAS METER SET ASSEMBLY INSTALLATION

SG 1007.4

TABLE OF CONTENTS

Notes:

1. Size and dimensions of panels may vary. Illustrations on pages SG 1007.1 – 1007.4 are not to scale.

(2) Wall area behind meter set assembly including headers, must be free of any obstructions such as water pipes, hose bibs, sewer clean outs, drain spouts, electric conduits, etc. No building vent, window or other openings, covered or uncovered, are allowed within 18" from the Utility gas riser vent, and from final grade to a height of 10'. Fixed windows are acceptable. Equipment, such as but not limited to, cable TV, telephone, inverters, disconnecting devices, transfer switches, etc., are also not allowed within 36" radially of the Utility gas riser vent, and from final grade to a height of 10' above the gas meter set assembly as indicated by the clear zone.

(3) Maintain 36" clear and level working space in front of gas and electric meters.

5. Electric bonding to or use of the Utility's gas service piping, gas risers or meter facilities for electric grounding is not permitted.

(7) Tankless water heaters require a minimum 36" radial clearance from the Utility gas riser vent to a height of 10' above grade and outside clear zone. A minimum 12" side clearance to the electric meter panel is required. The tankless water heater is not to be installed directly under electrical service and metering equipment.

8. Utility locations at property line connection point may vary.

9. Trench depth or width may vary according to what utilities are installed. Contact the SDG&E Planner or Inspector for further information.

(10) The minimum distance between the gas riser and the building exterior is 12". Refer to page SG 1009.1 for additional information on minimum clearances from building walls and corners and page SG 1009.3 for gas riser to wall spacing for larger meters.

NOTE: For relocations or upgrades on existing installations, contact an SDG&E Planner.

TABLE OF CONTENTS

Reference D7103

Notes 4 and 6 have been intentionally omitted.

© 1998- 2019 San Diego Gas & Electric Company. All rights reserved. Removal of this copyright notice without permission is not permitted under law.

REV	CHANGE	BY	DSGN	APPV	DATE	REV	CHANGE	BY	DSGN	APPV	DATE
A	EDITORIAL CHANGES	LSM	BRB	TPM	08/16/16	D					
B	EDITORIAL CHANGES	IPJ	IPJ	CZH	10/15/19	E					
C						F					

	Indicates Latest Revision	X	Completely Revised		New Page		Information Removed

SDG&E SERVICE STANDARDS & GUIDE

UTILITY PLACEMENT IN JOINT TRENCH & GAS METER SET ASSEMBLY INSTALLATION

This standard provides illustrations and requirements for a prefabricated field installed gas meter cabinet for a single residential gas meter only.

Meter Cabinet Installation

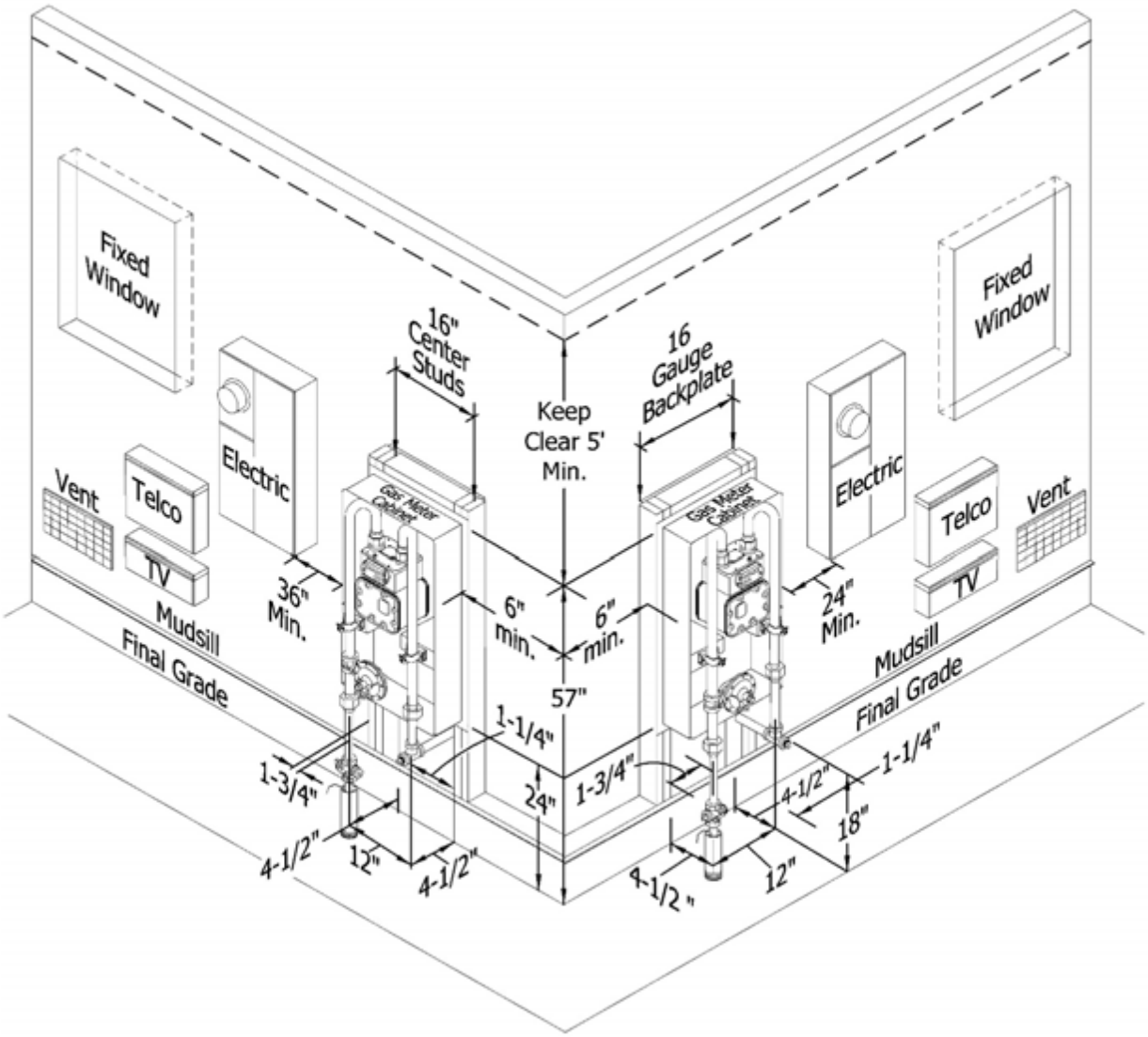

FIGURE 1

Reference GAS D7103.

© 1998-2017 San Diego Gas & Electric Company. All rights reserved. Removal of this copyright notice without permission is not permitted under law.

REV	CHANGE	BY	DSGN	APPV	DATE	REV	CHANGE	BY	DSGN	APPV	DATE
A	Editorial Changes	LSM	IPJ	TPM	11/01/17	D					
B						E					
C						F					

X Indicates Latest Revision	Completely Revised	New Page	Information Removed

TABLE OF CONTENTS

TABLE OF CONTENTS

Installation Requirements

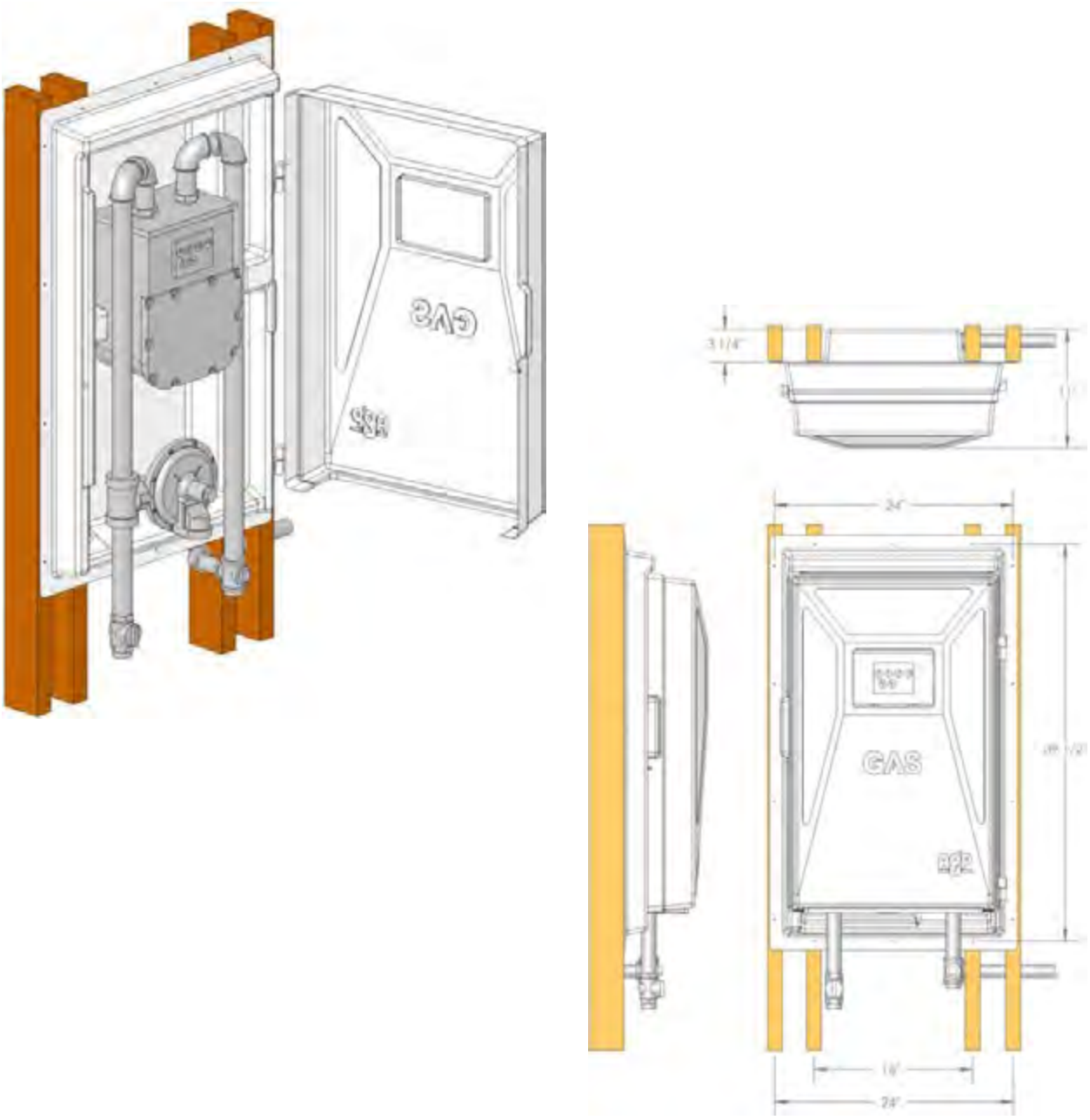

FIGURE 2

Reference GAS D7103.

© 1998-2017 San Diego Gas & Electric Company. All rights reserved. Removal of this copyright notice without permission is not permitted under law.

REV	CHANGE	BY	DSGN	APPV	DATE	REV	CHANGE	BY	DSGN	APPV	DATE
A	Editorial Changes	LSM	IPJ	TPM	11/01/17	D					
B						E					
C						F					

X Indicates Latest Revision	Completely Revised	New Page	Information Removed	
SHEET 2 OF 3	SDG&E SERVICE STANDARDS & GUIDE			SG 1008.2
	METER CABINET FOR SINGLE RESIDENTIAL GAS METER			

TABLE OF CONTENTS

Installation Notes:

1. Overall dimensions 39 ½" x 24". Maximum distance between bottom of cabinet and mudsill is 16". Allow houseline stub to extend 3" outside of stucco. Center of SDG&E riser should be 4-½" from stucco. Meter sizes D 250 – 630 will fit in the cabinet.
2. The cabinet is designed to fit between studs on 16" centers. Add a second 2" x 4" on each side of the bay to support the flange. Cabinet back fits flush against inside wall.
3. Wall area behind meter cabinet must be free of any obstructions such as water pipes, spigots, clean outs, drain spouts, electric conduits, etc.
4. Maintain 3' clear and level working space in front of gas meter cabinet.
5. No building vent, window, CATV, TELCO or other openings (covered or uncovered) are allowed within 36" from the SDG&E meter cabinet gas riser, and 5' from the top of the meter cabinet. Fixed windows are acceptable.
6. The horizontal distance between the electric panel and gas riser must be a minimum of 36".
7. Meter cabinet must be a minimum of 6" from the edge of the building.
8. The cabinet cover may be painted to match the building.

The prefabricated American Gas Products (AGP) ABS plastic cabinet, part number J-40 (with solid cover), is an approved cabinet. For more information, visit their website at https://www.americangasproducts.com/, or contact American Gas Products (AGP) Inc., P.O. Box 4777, Anaheim, CA 92803, via phone at (714) 235-6007 or email at AGP4777@gmail.com.

Reference GAS D7103.

© 1998-2017 San Diego Gas & Electric Company. All rights reserved. Removal of this copyright notice without permission is not permitted under law.

REV	CHANGE	BY	DSGN	APPV	DATE	REV	CHANGE	BY	DSGN	APPV	DATE
A	Editorial Changes	LSM	IPJ	TPM	11/01/17	D					
B						E					
C						F					

X Indicates Latest Revision	Completely Revised	New Page	Information Removed	
SHEET 3 OF 3	SDG&E SERVICE STANDARDS & GUIDE			SG 1008.3
	METER CABINET FOR SINGLE RESIDENTIAL GAS METER			

This standard provides service riser and houseline spacing, clearances and minimum working space requirements for single and multiple gas meter installations.

Minimum Clearance from Building Walls & Corners

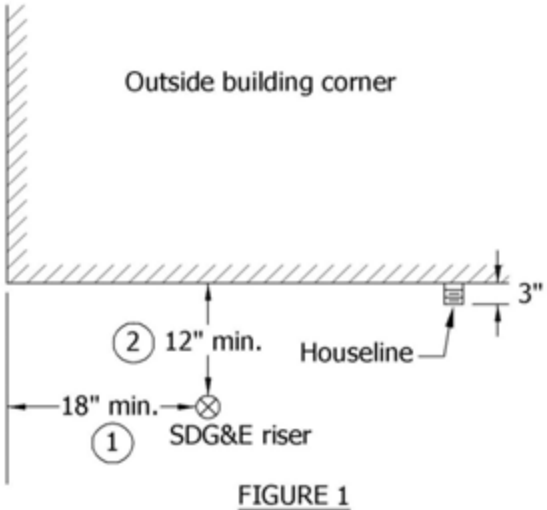

FIGURE 1

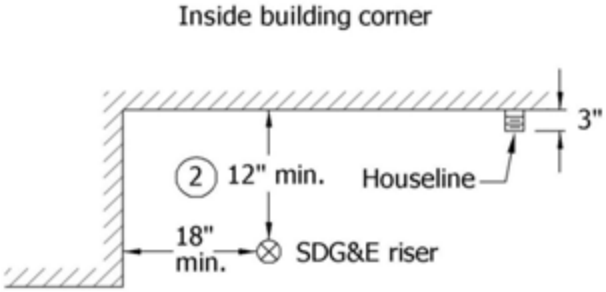

FIGURE 2

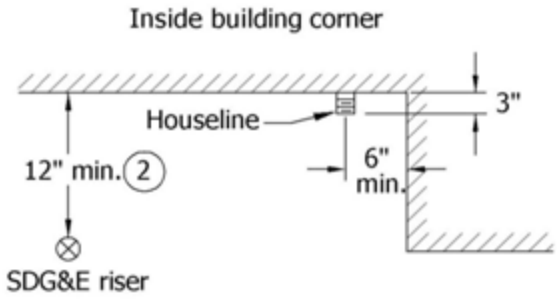

FIGURE 3

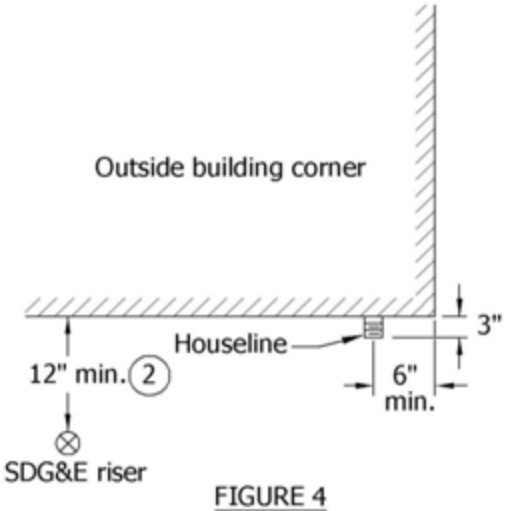

FIGURE 4

Notes:

(1) 18" may be reduced if there is no tripping hazard due to the building configuration.

(2) The SDG&E riser for grouped meters is to be installed 18" out from building wall. Refer to page SG 1010.1, Note 3.

Reference GAS D9157.

© 1998-2017 San Diego Gas & Electric Company. All rights reserved. Removal of this copyright notice without permission is not permitted under law.

REV	CHANGE	BY	DSGN	APPV	DATE	REV	CHANGE	BY	DSGN	APPV	DATE
A	Editorial Changes	LSM	IPJ	TPM	11/01/17	D					
B						E					
C						F					

X Indicates Latest Revision	Completely Revised	New Page	Information Removed	

SDG&E SERVICE STANDARDS & GUIDE

GAS SERVICE RISER & HOUSELINE SPACING, CLEARANCES & MINIMUM WORKING SPACE

TABLE OF CONTENTS

Installation Dimensions, Spacing, Clear & Level Working Space

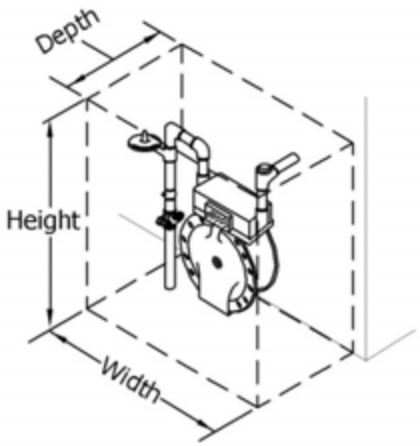

FIGURE 4
Installation Space

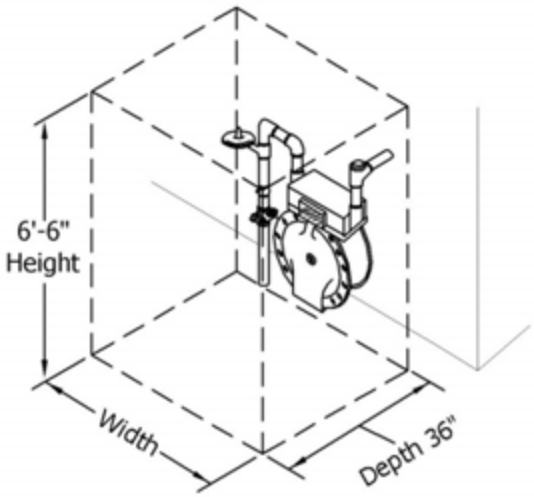

FIGURE 5
Clear and Level Working Space

Notes:

1. Refer to Table 1 – Single Standard (7" WC) Pressure Meter Outside Installations and Table 2 – Single High Pressure (5 PSIG) Meter Outside Installation for dimensions and spacing requirements on page SG 1009.3.
2. Minimum clear and level working space is the area directly in front of the meter set assembly and extends 6'-6" above grade. Refer to Tables 1 and 2 on page SG 1009.3.

General Notes:

1. Definitions: "High Pressure Metering" is gas pressure above 7" water column (WC) (¼ PSIG). "Standard Pressure Metering" is gas pressure equal to 7" WC (¼ PSIG at the meter outlet).
2. The Distribution Engineering and Gas Planning Sections of Gas Engineering must be consulted at least eight (8) weeks prior to the proposed meter installation date for the following cases:
   a. Any meter larger than an 11M Roots Meter.
   b. Any meter with a serving pressure greater than 5 PSIG.
   c. All proposed vault and curb meter box installations.
   d. The proposed installation of a gas header operating at 5 PSIG.
   e. The proposed use of a gas meter room.

Reference GAS D9157.

© 1998-2017 San Diego Gas & Electric Company. All rights reserved. Removal of this copyright notice without permission is not permitted under law.

REV	CHANGE	BY	DSGN	APPV	DATE	REV	CHANGE	BY	DSGN	APPV	DATE
A	Editorial Changes	LSM	IPJ	TPM	11/01/17	D					
B						E					
C						F					

X Indicates Latest Revision	Completely Revised	New Page	Information Removed	

TABLE OF CONTENTS

Table 1 – Single Standard (7" WC) Pressure Meter – Outside Installation

Meter Size	Riser to Wall	Riser to Houseline (Horizontal)	Installation Space			Minimum Clear & Level Working Space – 78" Height x Width x 36" Deep
			Height	Width	Depth	
250-630	12"	19"	42"	37"	18"	78" x 37" x 36"
8C	14"	30"	42"	57"	25"	78" x 57" x 36"
11C	14"	30"	42"	57"	25"	78" x 57" x 36"
1.5M/15C	14"	36"	42"	57"	25"	78" x 57" x 36"
2M175	14"	56"	48"	77"	25"	78" x 77" x 36"
3M175	14"	56"	48"	77"	25"	78" x 77" x 36"
5M175	14"	75"	54"	95"	25"	78" x 95" x 36"
7M175	14"	75"	54"	95"	30"	78" x 95" x 36"

Table 2 – Single High Pressure (5-10 PSIG) Meter – Outside Installation

Meter Size	Riser to Wall	Riser to Houseline (Horizontal)	Installation Space			Minimum Clear & Level Working Space – 78" Height x Width x 36" Deep
			Height	Width	Depth	
425-630	12"	56"	36"	77"	28"	78" x 77" x 36"
8C TQM	14"	48"	52"	68"	28"	78" x 68" x 36"
15C	14"	48"	52"	68"	25"	78" x 57" x 36"
2M TQM	14"	48"	52"	68"	25"	78" x 57" x 36"
3M TQM	14"	48"	52"	68"	25"	78" x 68" x 36"
5M175	14"	75"	56"	95"	25"	78" x 68" x 36"
7M175	14"	75"	56"	95"	30"	78" x 95" x 36"
11M175	18"	90"	56"	111"	30"	78" x 95" x 36"

Note:

For serving pressures greater than 10 PSIG and for 16M meters, consult with SDG&E Planner who will coordinate with Region Engineering in Gas Technical Services – Miramar.

Reference GAS D9157.

© 1998-2017 San Diego Gas & Electric Company. All rights reserved. Removal of this copyright notice without permission is not permitted under law.

REV	CHANGE	BY	DSGN	APPV	DATE	REV	CHANGE	BY	DSGN	APPV	DATE
A	Editorial Changes	LSM	IPJ	TPM	11/01/17	D					
B						E					
C						F					

X Indicates Latest Revision	Completely Revised	New Page	Information Removed	
SHEET 3 OF 3	SDG&E SERVICE STANDARDS & GUIDE			SG 1009.3
	GAS SERVICE RISER & HOUSELINE SPACING, CLEARANCES & MINIMUM WORKING SPACE			

TABLE OF CONTENTS

TABLE OF CONTENTS

Typical Grouped Gas Meters (Residential)

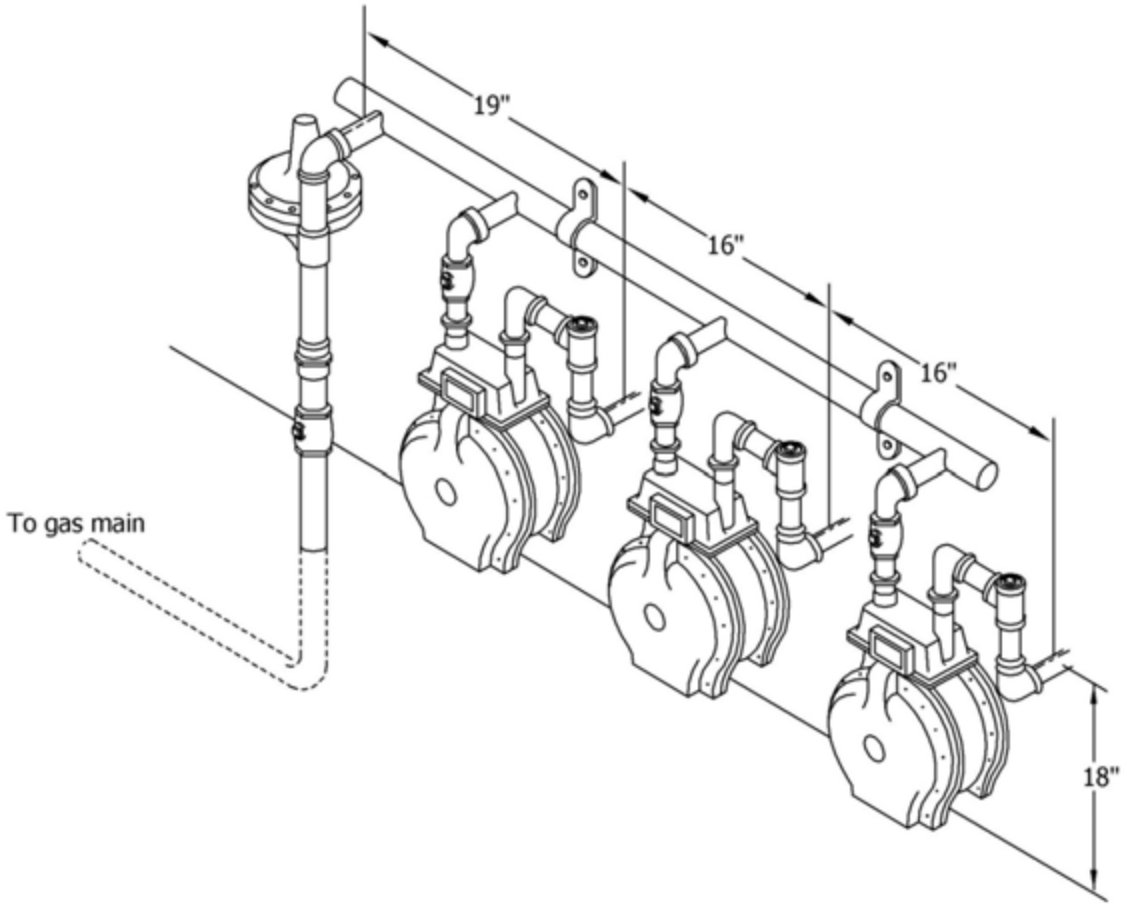

Typical Right Hand Header for Size 250 – 425 Gas Meters

Quantity of Meters	Riser to 1st Houseline Spacing	Additional Houseline Spacing
2-24	19″	16″
2-24 with 1 large gas meter in 1st position (11C max. size)	27″	16″

Notes:

1. Meter headers are limited to two tiers to ensure meter accessibility and safety of personnel.
2. Wall area for gas meters must be entirely free of any obstructions such as water pipes, faucets, sewer cleanouts, drain spouts, electrical conduits, cable TV or telephone equipment.
3. The SDG&E service riser is to be installed 18″ out from building wall on grouped meter locations.
4. See page SG 1010.8 for Adequate Support for Wall Mounted Meter Headers.

Reference GAS D9157.

© 1998-2017 San Diego Gas & Electric Company. All rights reserved. Removal of this copyright notice without permission is not permitted under law.

REV	CHANGE	BY	DSGN	APPV	DATE	REV	CHANGE	BY	DSGN	APPV	DATE
A	New Page	LSM	BRB	TPM	11/01/17	D					
B						E					
C						F					

	Indicates Latest Revision	X	Completely Revised		New Page		Information Removed

Houseline Spacing for Single Tier Left Hand Headers

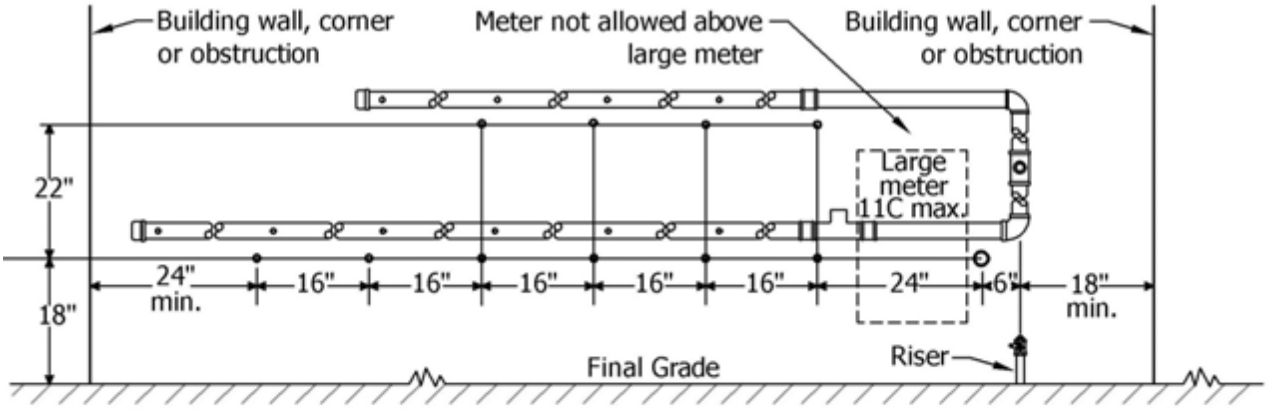

NOTE: Use bottom row for odd houseline.

Dual Tier Header With Large Meter

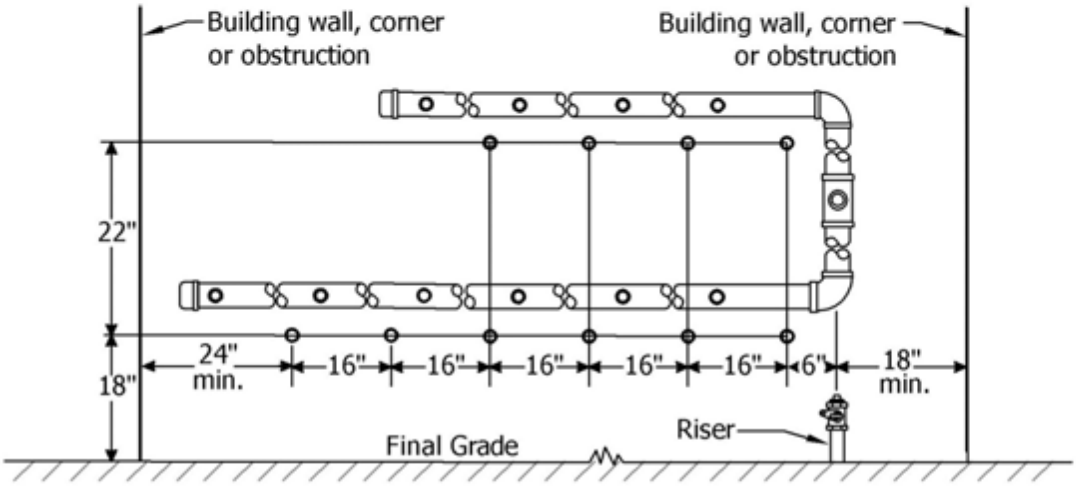

NOTE: Use bottom row for odd houseline.

Dual Tier Header

Reference GAS D9157.

© 1998-2017 San Diego Gas & Electric Company. All rights reserved. Removal of this copyright notice without permission is not permitted under law.

REV	CHANGE	BY	DSGN	APPV	DATE	REV	CHANGE	BY	DSGN	APPV	DATE
A	New Page	LSM	BRB	TPM	11/01/17	D					
B						E					
C						F					

	Indicates Latest Revision	X	Completely Revised		New Page		Information Removed

TABLE OF CONTENTS

Houseline Spacing for Dual Tier Left Hand Headers

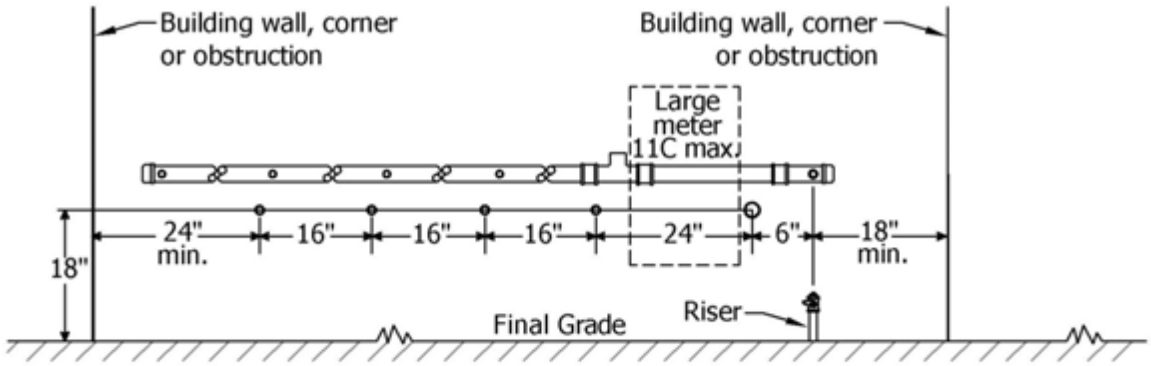

Single Tier Header for 4 with Large Meter

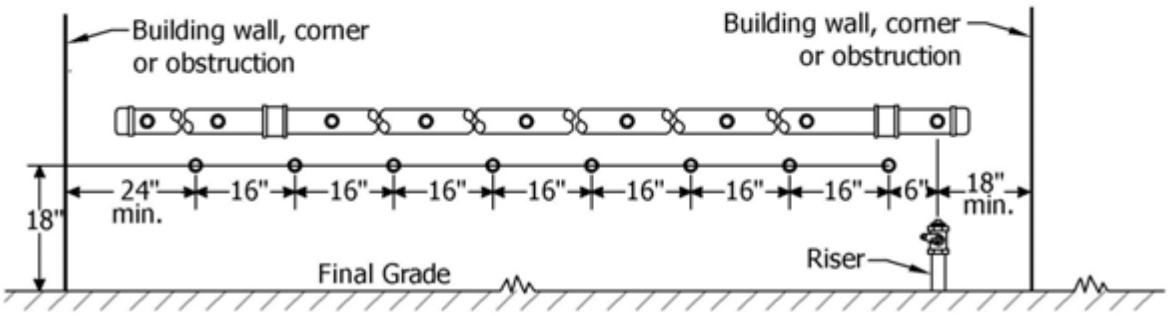

Single Tier Header

Reference GAS D9157.

© 1998-2017 San Diego Gas & Electric Company. All rights reserved. Removal of this copyright notice without permission is not permitted under law.

REV	CHANGE	BY	DSGN	APPV	DATE	REV	CHANGE	BY	DSGN	APPV	DATE
A	New Page	LSM	BRB	TPM	11/01/17	D					
B						E					
C						F					

	Indicates Latest Revision	X	Completely Revised		New Page		Information Removed

TABLE OF CONTENTS

Houseline Spacing for Single Tier Right Hand Headers

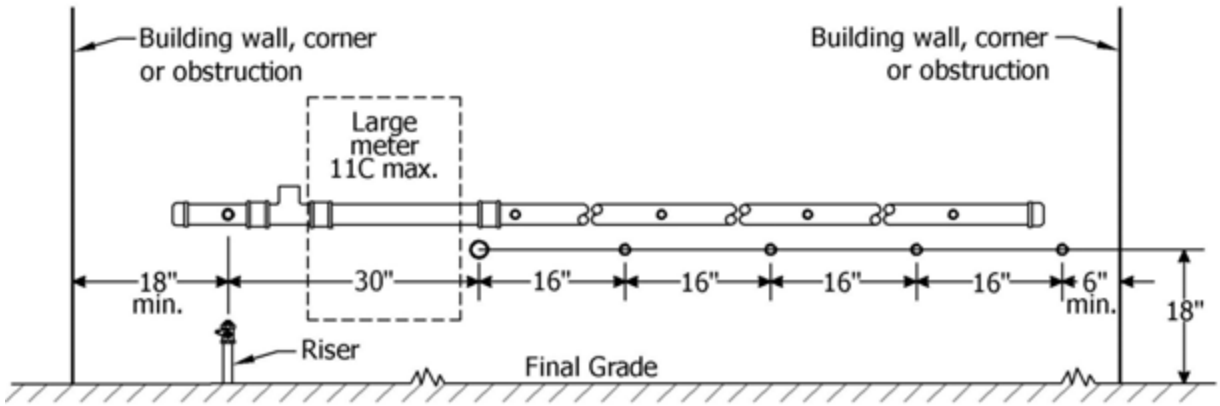

Single Tier Header for 4 with Large Meter

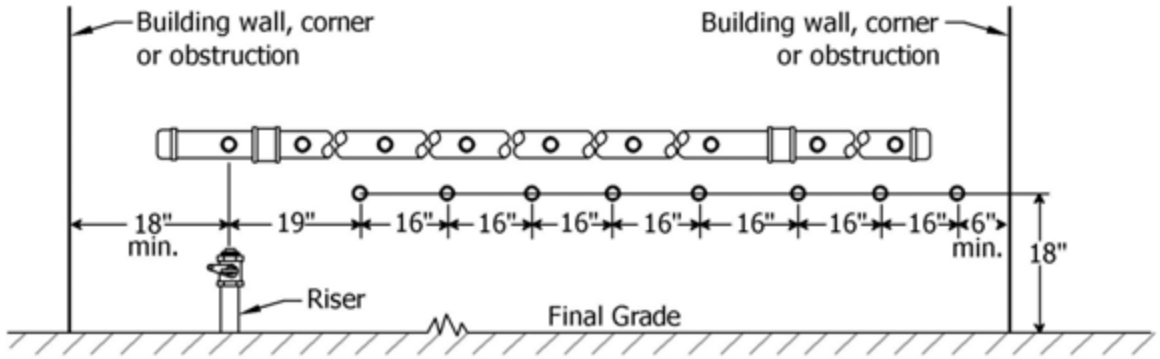

Single Tier Header

Reference GAS D9157.

© 1998-2017 San Diego Gas & Electric Company. All rights reserved. Removal of this copyright notice without permission is not permitted under law.

REV	CHANGE	BY	DSGN	APPV	DATE	REV	CHANGE	BY	DSGN	APPV	DATE
A	New Page	LSM	BRB	TPM	11/01/17	D					
B						E					
C						F					

	Indicates Latest Revision	X	Completely Revised		New Page		Information Removed

TABLE OF CONTENTS

Houseline Spacing for Dual Tier Right Hand Headers

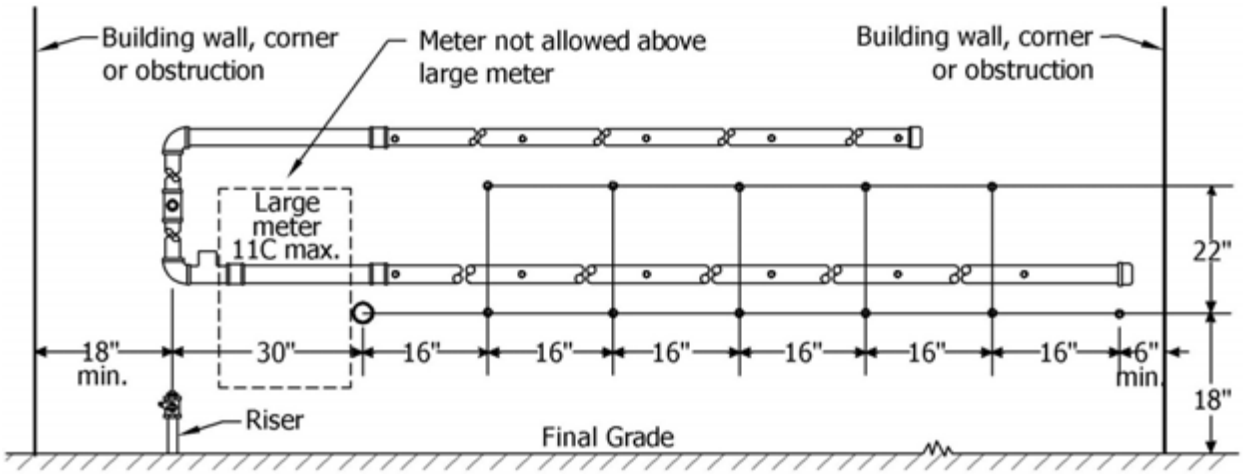

NOTE: Use bottom row for odd houseline.

Dual Tier Header with Large Meter

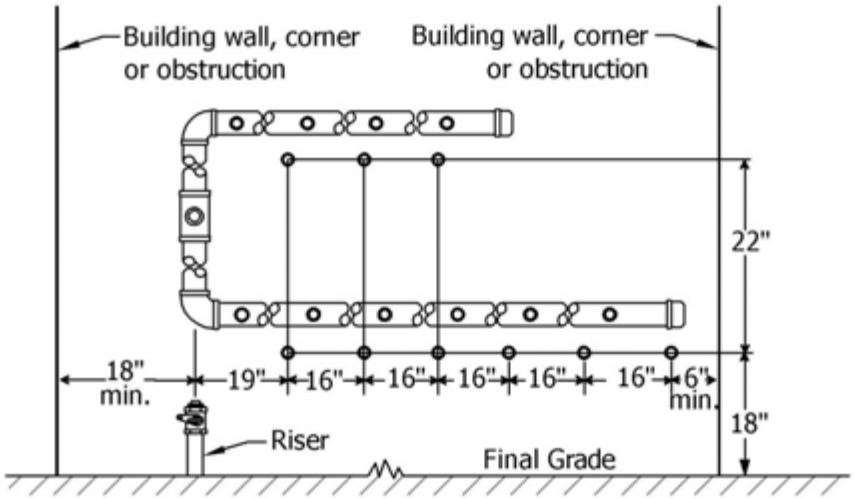

NOTE: Use bottom row for odd houseline.

Dual Tier Header

Reference GAS D9157.

© 1998-2017 San Diego Gas & Electric Company. All rights reserved. Removal of this copyright notice without permission is not permitted under law.

REV	CHANGE	BY	DSGN	APPV	DATE	REV	CHANGE	BY	DSGN	APPV	DATE
A	New Page	LSM	BRB	TPM	11/01/17	D					
B						E					
C						F					

	Indicates Latest Revision	X	Completely Revised		New Page		Information Removed

SHEET 5 OF 8

SDG&E SERVICE STANDARDS & GUIDE

GAS METERS GROUPED ON METER HEADERS

SG 1010.5

TABLE OF CONTENTS

TABLE OF CONTENTS

Customer-Built Header Support

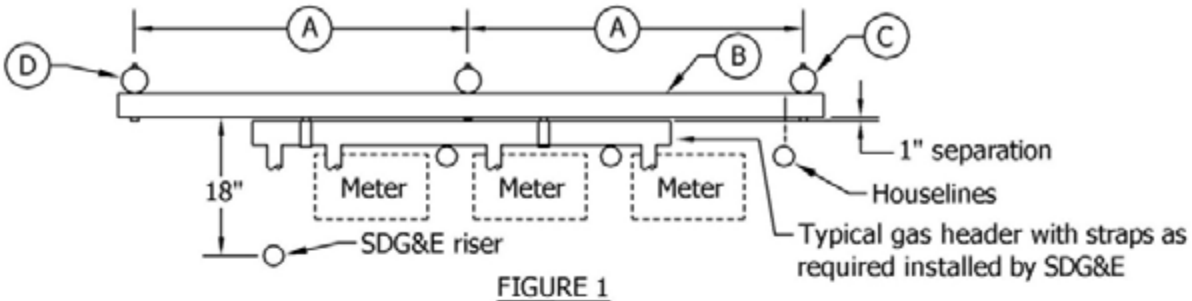

FIGURE 1
Top View

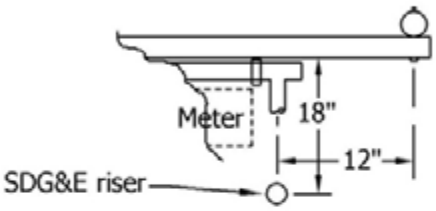

FIGURE 3
Top View
Riser Placement for
Left Handheader

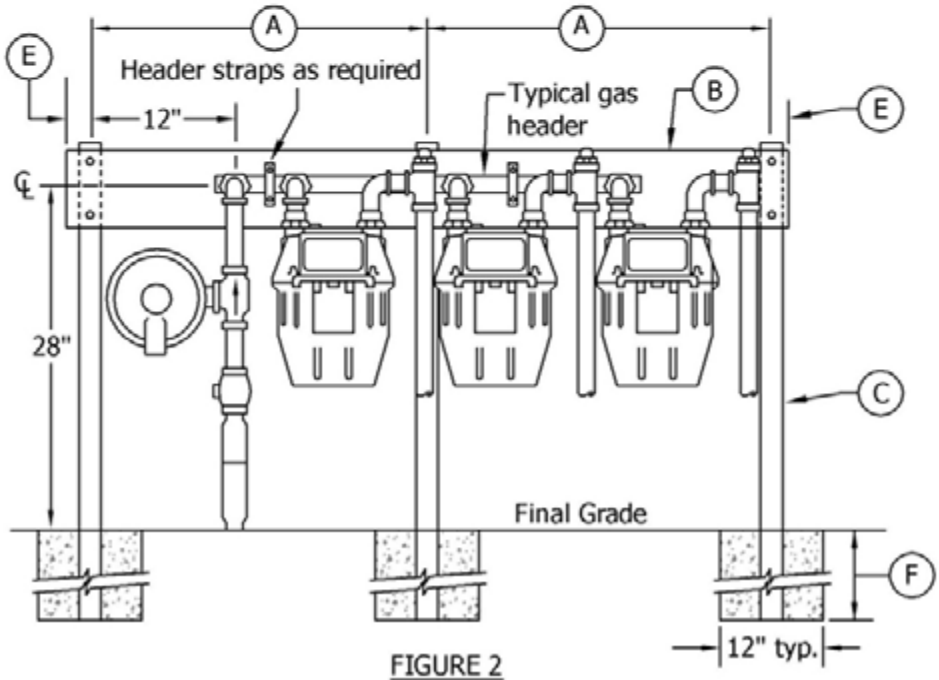

FIGURE 2
Elevation View

Reference GAS D7107.

© 1998-2017 San Diego Gas & Electric Company. All rights reserved. Removal of this copyright notice without permission is not permitted under law.

REV	CHANGE	BY	DSGN	APPV	DATE	REV	CHANGE	BY	DSGN	APPV	DATE
A	New Page	LSM	BRB	TPM	11/01/17	D					
B						E					
C						F					

	Indicates Latest Revision	X	Completely Revised		New Page		Information Removed

SHEET 6 OF 8

SDG&E SERVICE STANDARDS & GUIDE

GAS METERS GROUPED ON METER HEADERS

SG 1010.6

Notes:

(A) 60″ maximum to center of each stanchion.

(B) 2″ x 6″ treated Douglas fir backing for header. See Length Table below for sizing.

(C) 2-½″ steel pipe (minimum) set in concrete.

(D) Minimum attachment is two ⅜″ through bolts per stanchion.

(E) 3″ maximum

(F) 24″ minimum

Length (in Inches) Table for Customer-Built Header Support

Number of Meters	2	3	4	5	6	7	8	9	10	11	12
Right Hand Header	57	73	89	105	121	137	153	169	185	201	217
Left Hand Header	53	69	85	101	117	133	149	165	181	197	213

TABLE OF CONTENTS

Reference GAS D7107.

© 1998-2017 San Diego Gas & Electric Company. All rights reserved. Removal of this copyright notice without permission is not permitted under law.

REV	CHANGE	BY	DSGN	APPV	DATE	REV	CHANGE	BY	DSGN	APPV	DATE
A	New Page	LSM	BRB	TPM	11/01/17	D					
B						E					
C						F					

	Indicates Latest Revision	X	Completely Revised		New Page		Information Removed

SDG&E SERVICE STANDARDS & GUIDE

GAS METERS GROUPED ON METER HEADERS

TABLE OF CONTENTS

ADEQUATE SUPPORT FOR WALL MOUNTED METER HEADERS

The purpose of this standard is to specify requirements which customers/builders must meet to provide adequate support for wall-mounted meter headers. The requirements are detailed below.

When a header is required to serve a newly constructed structure, it is the customer's/builder's responsibility to provide adequate backing for the header attachment.

The mounting wall must meet one of the following requirements:

1. Void-filled concrete block
2. Solid concrete (3½" minimum thickness)
3. 2" x 12" lumber blocking installed between studs and 2" above all houselines. (See Figure 1.)

Mounting wall must be free from any obstructions for mounting the header such as water pipes, water spigots, clean outs, drain spouts, electric conduits, decorative wall finishes with irregular surfaces, etc.

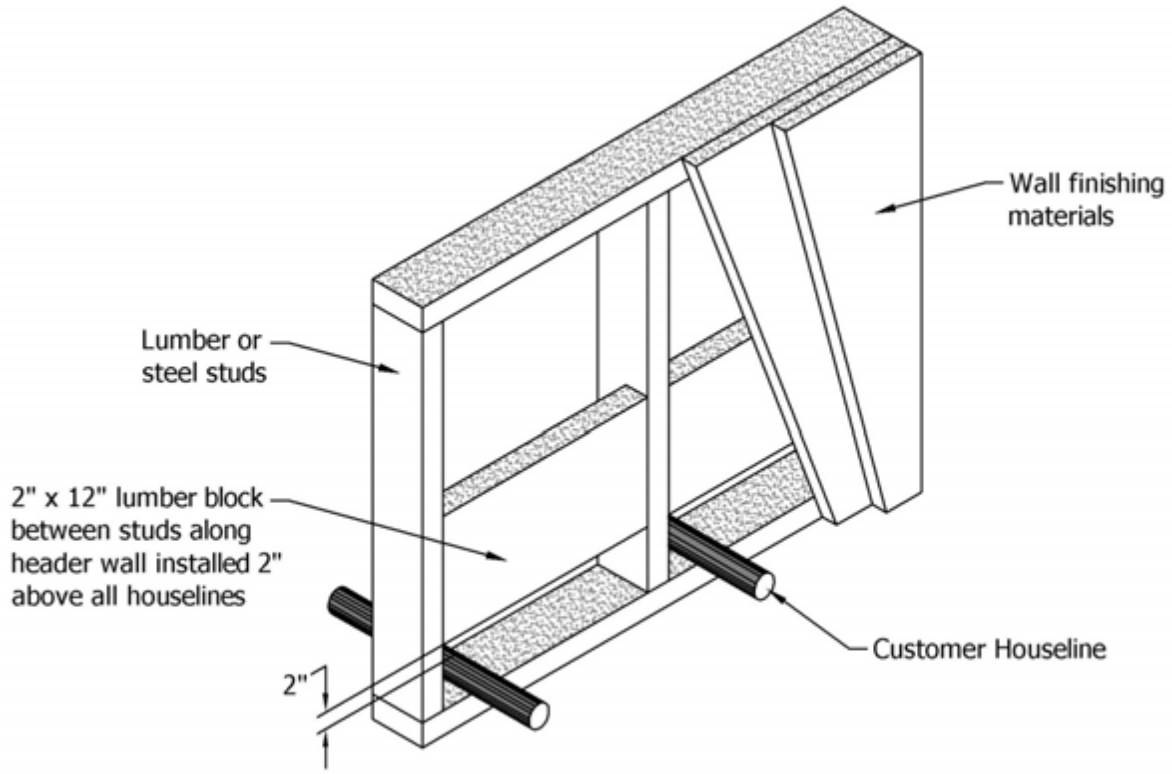

FIGURE 1

Reference GAS D9157.

© 1998-2017 San Diego Gas & Electric Company. All rights reserved. Removal of this copyright notice without permission is not permitted under law.

REV	CHANGE	BY	DSGN	APPV	DATE	REV	CHANGE	BY	DSGN	APPV	DATE
A	New Page	LSM	BRB	TPM	11/01/17	D					
B						E					
C						F					

	Indicates Latest Revision	X	Completely Revised		New Page		Information Removed	

This standard provides the requirements for meter locations behind wing walls.

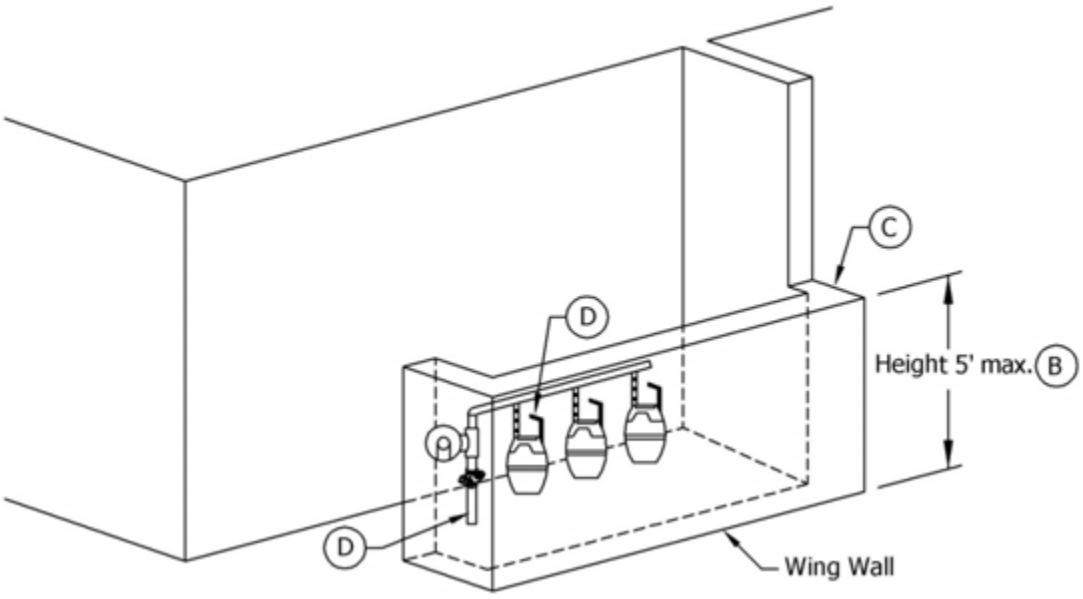

FIGURE 1
Front View

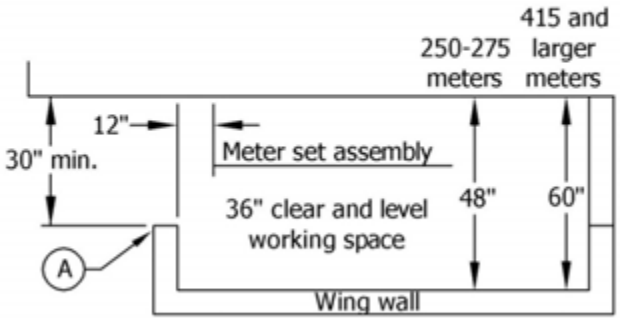

FIGURE 2
Plan View

Notes:

(A) No door or roof allowed.

(B) When possible, wing wall height should not exceed 5'.

(C) Length and width of meter location are determined by size and number of meters to be installed.

(D) For riser and houseline positions, refer to pages SG 1012.2 – 1012.4.

Reference GAS D7103.

© 1998-2017 San Diego Gas & Electric Company. All rights reserved. Removal of this copyright notice without permission is not permitted under law.

REV	CHANGE	BY	DSGN	APPV	DATE	REV	CHANGE	BY	DSGN	APPV	DATE
A	Editorial Changes	LSM	IPJ	TPM	11/01/17	D					
B						E					
C						F					

X Indicates Latest Revision	Completely Revised	New Page	Information Removed

SHEET
1 OF 1

SDG&E SERVICE STANDARDS & GUIDE

GAS SERVICE & METER BEHIND WING WALLS

SG 1011

TABLE OF CONTENTS

For dimension requirements of meter recesses refer to pages SG 1012.2 - SG 1012.4.

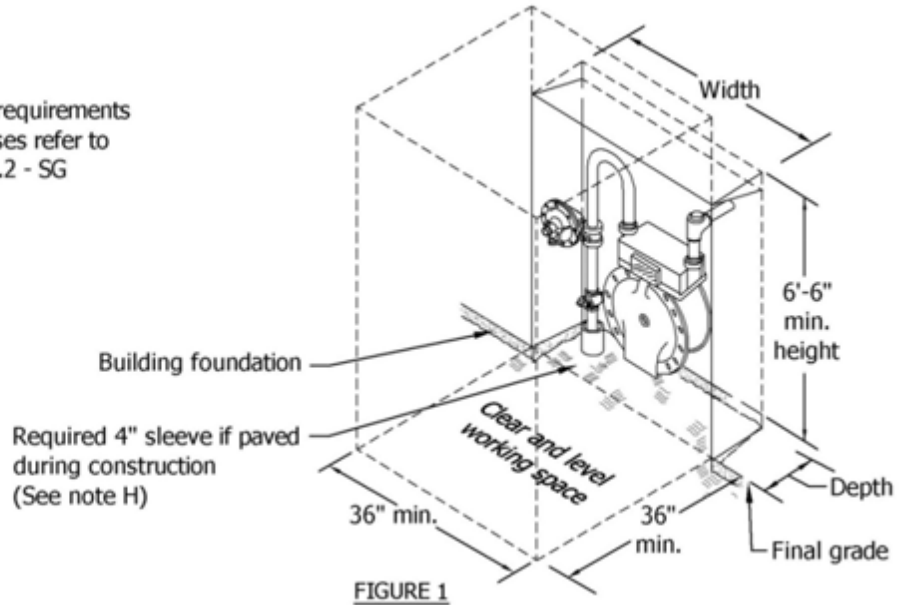

FIGURE 1

Gas Meter Recess Dimensions, Riser & Houseline Spacing for Typical Header Installations

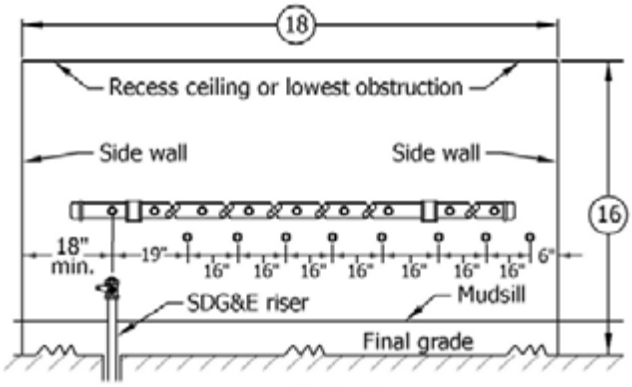

FIGURE 2
Typical Right Hand Header

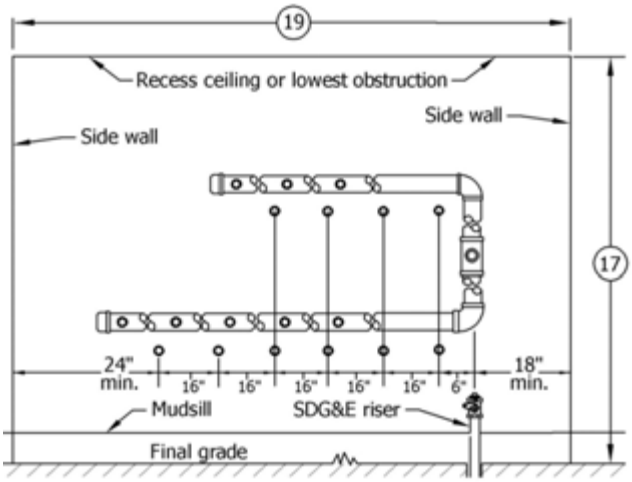

FIGURE 3
Typical Left Hand Header

Reference GAS D9157.

© 1998-2017 San Diego Gas & Electric Company. All rights reserved. Removal of this copyright notice without permission is not permitted under law.

REV	CHANGE	BY	DSGN	APPV	DATE	REV	CHANGE	BY	DSGN	APPV	DATE
A	Editorial Changes	LSM	IPJ	TPM	11/01/17	D					
B						E					
C						F					

X Indicates Latest Revision | Completely Revised | New Page | Information Removed

SDG&E SERVICE STANDARDS & GUIDE

BUILDING RECESS FOR GAS SERVICE & METERS

TABLE OF CONTENTS

Single Gas Meter Recess Dimensions, Riser & Houseline Spacing

Table 1: Standard Pressure – 7" Water Column

Meter Size	Riser to Back Wall (Inches)	Riser to Houseline (Inches)	Recess Dimensions (Figure 1)		
			Height (Inches)	Width (Inches)	Depth (Inches)
250-630	12	19	42	37	18
8C	14	30	42	57	25
11C	14	30	42	57	25
1.5M / 15C	14	36	42	57	25
2M	14	56	48	77	25
3M	14	56	48	77	25
5M	14	75	54	95	25
7M	14	75	54	95	30

Table 2: High Pressure – 5 – 10 PSIG

Meter Size	Riser to Back Wall (Inches)	Riser to Houseline (Inches)	Recess Dimensions (Figure 1)		
			Height (Inches)	Width (Inches)	Depth (Inches)
425-630	12	56	36	77	28
8C	14	48	52	68	28
15C	14	48	52	68	25
2M	14	48	52	68	25
3M	14	48	52	68	25
5M	14	75	56	95	25
7M	14	75	56	95	30
11M	18	90	56	111	30

TABLE OF CONTENTS

Reference GAS D9157.

© 1998-2017 San Diego Gas & Electric Company. All rights reserved. Removal of this copyright notice without permission is not permitted under law.

REV	CHANGE	BY	DSGN	APPV	DATE	REV	CHANGE	BY	DSGN	APPV	DATE
A	Editorial Changes	LSM	IPJ	TPM	11/01/17	D					
B						E					
C						F					

X Indicates Latest Revision | Completely Revised | New Page | Information Removed

1. "Building Recess" is an indentation of building wall, foundation and floor. A recess is open on the front so that the meter set assembly is visible. No doors, lattice work, or covers of any type are permitted. The building foundation must not cross any portion of the recess.

2. Only gas-related facilities will be permitted in the recess. Foreign equipment (e.g. ground rods, wires, conduit, electric equipment, CATV and Telco panels, sprinkler controls, water and waste piping, building windows, vents, etc.) is prohibited. Electric bonding to or use of SDG&E gas service piping, gas risers or meter facilities for electric grounding is not permitted. Gas recesses are not to be used for storage areas.

3. The interior of the gas meter access must be gas tight. The recess shall be sealed by the customer at all interior seams, corners, openings, etc., to prevent gas from migrating into any portion of the building or structure. The interior of the recess shall be the same material used on the building exterior provided it is gas tight. Acceptable sealing materials include silicone-based and polyurethane-based compounds (e.g. trade names GE Silicone, Sikaflex 1A or equivalents). Requests for other materials for recess interior may be approved upon prior review by SDG&E.

4. The entire opening of the recess must be clear for installation and maintenance of the meter set assembly. A minimum 3' clear and level working space must be maintained in front of the recess opening. The height of the working space extends 6'-6" minimum above final grade. The wall area above the recess must be free of projections that present a hazard to personnel servicing the meter set assembly. See Figure 1 for details.

5. Electric metering is not permitted above a gas recess.

6. The walls and ceiling of the recess must be flush with the exterior walls. Returns or jams on the side walls or ceiling are prohibited. The ceiling must be level or slope upwards from back to front with a 1" rise per 12" depth.

7. The depth of the recess must not exceed the depth listed for the particular meter size for which the recess was designed to accommodate. When a recess is used on a non-residential structure and the gas load is unknown, the minimum interior height of the recess shall be 66" and the inside depth must not exceed 30".

8. The bottom or floor of the recess may be dirt or paved, and it must be graded to prevent water from collecting inside the recess. During time of construction, if the recess floor is to be paved, an opening 4" in diameter or 4" square must be provided around the SDG&E riser.

9. For a recess housing a single meter, the SDG&E riser shall be 12" from the left side wall. For the riser to back wall dimension, refer to Table 1 and Table 2 below. The customer houseline shall not be closer than 6" to the right side wall.

10. For meter sizes up to and including 11C, houseline(s) must be 18" above final grade. The houselines for the upper level of a tier header must be 40" above the final grade (22" above lower level houselines).

Reference GAS D9157.

© 1998-2017 San Diego Gas & Electric Company. All rights reserved. Removal of this copyright notice without permission is not permitted under law.

REV	CHANGE	BY	DSGN	APPV	DATE	REV	CHANGE	BY	DSGN	APPV	DATE
A	Editorial Changes	LSM	IPJ	TPM	11/01/17	D					
B						E					
C						F					

X Indicates Latest Revision	Completely Revised	New Page	Information Removed	
SHEET 3 OF 4	SDG&E SERVICE STANDARDS & GUIDE			SG 1012.3
	BUILDING RECESS FOR GAS SERVICE & METERS			

TABLE OF CONTENTS

11. For serving pressures greater than 10 PSIG and for 16M meters, the Planner will consult with Region Engineering in Gas Technical Services – Miramar.

Additional Requirements for Multiple Meters

12. For houseline spacing not given in this standard, refer to pages SG 1010.1 – SG 1010.6.

13. Meter headers must be limited to two tiers to ensure meter accessibility and safety of personnel.

14. SDG&E riser placement for all headers to be 12" from back wall and 18" from sidewall.

15. Depth of multiple meter recess for 250-425 meters is 18" maximum; for 675-11C meters 28" maximum.

(16) Height of recess for single level header (Figure 2) is 48" minimum above final grade.

(17) Height of recess for two tier header (Figure 3) is 66" minimum above final grade.

(18) Width of recess for right hand headers

a. Single and dual tier (Figure 2) – 18" riser to left sidewall, 19" riser to first houseline, 6" last houseline to right side wall, plus 16" for each additional houseline (250-425 meters).

(19) Width of recess for left hand headers

a. Single and dual tier (Figure 3) – 18" riser to right sidewall, 6" riser to first houseline, 24" last houseline to left side wall, plus 16" for each additional houseline (250-425 meters).

TABLE OF CONTENTS

Reference GAS D9157.

© 1998-2017 San Diego Gas & Electric Company. All rights reserved. Removal of this copyright notice without permission is not permitted under law.

REV	CHANGE	BY	DSGN	APPV	DATE	REV	CHANGE	BY	DSGN	APPV	DATE
A	Editorial Changes	LSM	IPJ	TPM	11/01/17	D					
B						E					
C						F					

X Indicates Latest Revision	Completely Revised	New Page	Information Removed

TABLE OF CONTENTS

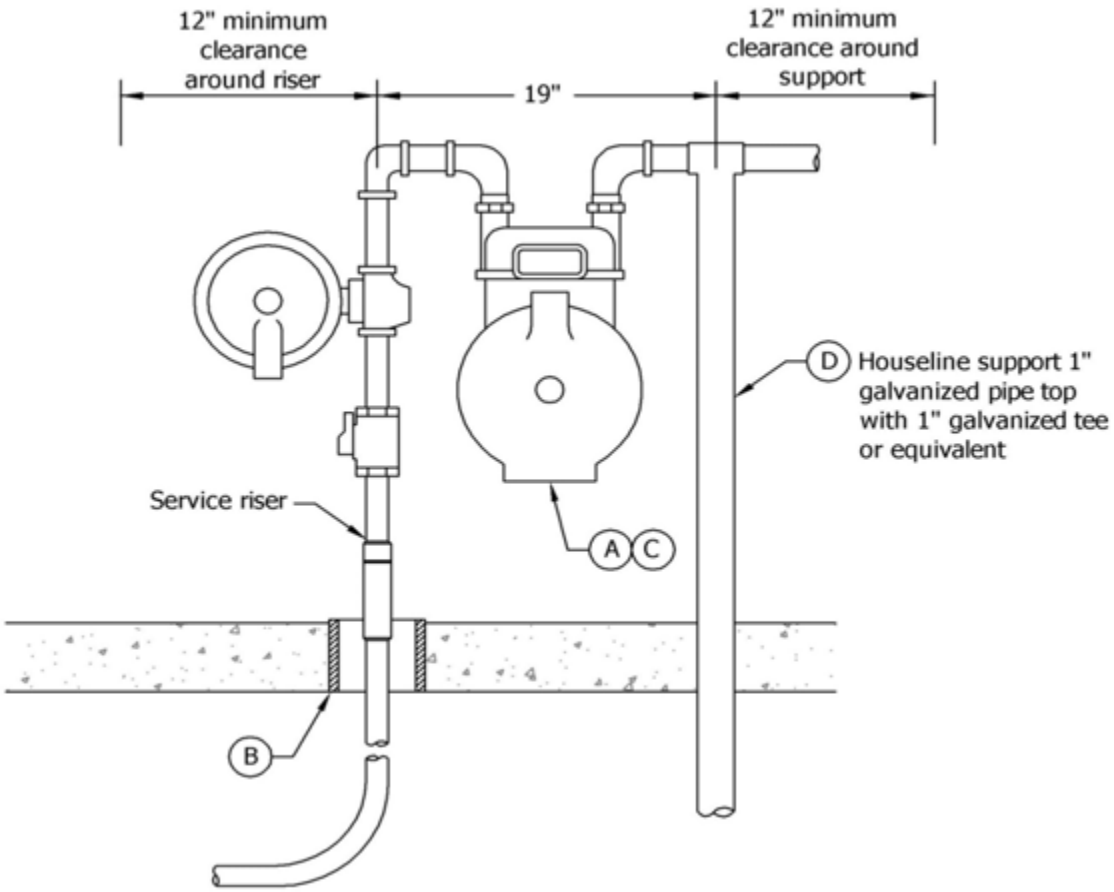

Notes:

(A) 18” minimum horizontal clearance shall be maintained on all sides of the gas meter excluding the gas service riser and houseline.

(B) If the area around the gas riser is to be paved, a 4” minimum diameter or 4” minimum square opening must be provided around the riser.

(C) Meter and metering equipment may be installed:

(1) At or near the mobile home closest SDG&E’s (Utility) source

(2) On a permanently installed structure near the front lot line of the mobile home

(3) At or near the corner of the mobile home lot closest to the Utility’s source

(D) The gas meter set shall not depend on a flex gas houseline for support. A post, bracket or other means of support is to be provided by the customer when required by the governmental Authority Having Jurisdiction (AHJ) or the Utility.

Reference GAS D7103.4.

© 1998-2017 San Diego Gas & Electric Company. All rights reserved. Removal of this copyright notice without permission is not permitted under law.

REV	CHANGE	BY	DSGN	APPV	DATE	REV	CHANGE	BY	DSGN	APPV	DATE
A	Editorial Changes	LSM	IPJ	TPM	11/01/17	D					
B						E					
C						F					

X Indicates Latest Revision	Completely Revised	New Page	Information Removed	
SHEET 1 OF 1	SDG&E SERVICE STANDARDS & GUIDE			SG 1013
	MOBILE HOME METER PAD			

This standard provides the requirements for customer-provided and -installed "non-removable" barricades. Barricade posts are used to protect meter and service equipment and personnel from vehicular contact and to prohibit encroachment into the working space. Examples include loading zones, driveways, congested areas, alleys, off-street parking such as side yards, etc.

Service and metering equipment located on public or private property must be installed a minimum of 5' back from face of curb or is considered subject to vehicular contact and requires barricade posts. Meters located on a wall adjacent to any parking area, or area accessible to vehicular traffic, must be protected by non-removable barricade posts. Wheel stops and removable barricade posts are not acceptable substitutes. Maintain a minimum of 3' clear and level working space in front of the gas meter set assembly. An SDG&E Inspector will determine if a barricade can be omitted when existing structures can protect personnel and equipment. Meters will not be set until the barricades are installed.

Barricades for New Gas Meter Installations
Commercial or Multi-Family (More Than 2 Units)

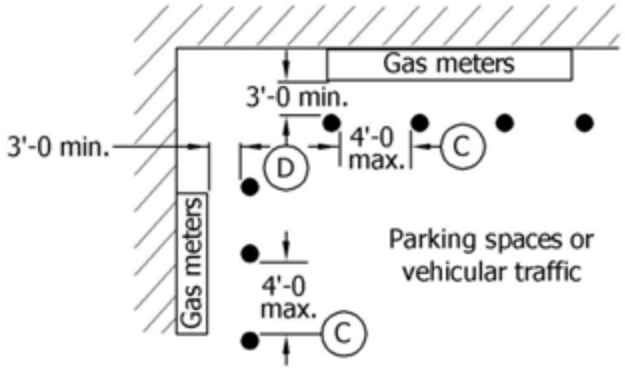

FIGURE 1
Plan View

Heavy Duty and Light Duty Barricade Posts Concrete Footing

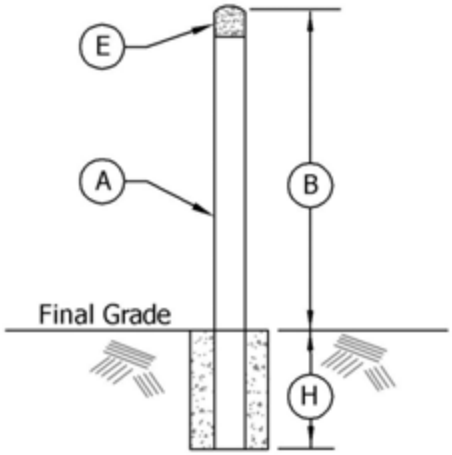

FIGURE 2
Elevation

TABLE OF CONTENTS

© 1998-2017 San Diego Gas & Electric Company. All rights reserved. Removal of this copyright notice without permission is not permitted under law.

REV	CHANGE	BY	DSGN	APPV	DATE	REV	CHANGE	BY	DSGN	APPV	DATE
A	Editorial Changes	LSM	IPJ	TPM	11/01/17	D					
B						E					
C						F					

X Indicates Latest Revision	Completely Revised	New Page	Information Removed

Notes:

(A) Refer to Table 1 below.

(B) Barricade height shall extend 3" above the meter set assembly or 4' above the final grade, whichever is less.

(C) For new meter installations, the barricade post separation shall not exceed 4'.

(D) For new meter installations, the barricade posts must be a minimum of 3' from the face of the meter set.

(E) All barricade post tops at the same barricade site must be finished in the same manner. The top of the post(s) shall be finished with one of the following:

(1) Tack welded steel cap or blank

(2) Top 3" of post filled and crowned with concrete

(3) Post top may be threaded and finished with an iron cap.

(F) Welded and black iron areas of the completed barricade post(s) shall be primed and painted white.

(G) When a stronger barricade is needed, horizontal braces are to be installed as follows:

(1) Bottom row 18" above final grade

(2) Top row no more than ½" below top of post

(3) If the barricade posts are topped with threaded iron caps, the top horizontal brace shall be no more than ½" below bottom of cap.

Table 1

(A) Barricade Steel Post Galvanized or Black			(H) Concrete Footings		(G) Horizontal Pipe Brace Size	
	Pipe Size (Inches)	Minimum Wall Thickness (Inches)	Diameter (Inches)	Depth (Inches)	Pipe Size (Inches)	Minimum Wall Thickness (Inches)
Light Duty	3	.216	12	24	2	.154
Heavy Duty	4	.188	12	30	4	.188

TABLE OF CONTENTS

© 1998-2017 San Diego Gas & Electric Company. All rights reserved. Removal of this copyright notice without permission is not permitted under law.

REV	CHANGE	BY	DSGN	APPV	DATE	REV	CHANGE	BY	DSGN	APPV	DATE
A	Editorial Changes	LSM	IPJ	TPM	11/01/17	D					
B						E					
C						F					

X Indicates Latest Revision | Completely Revised | New Page | Information Removed

SDG&E SERVICE STANDARDS & GUIDE

BARRICADES FOR GAS METER SETS

Light duty bolt-down barricade posts shall be used only for existing residential and mobile home park meter sets. Bolt-down barricades are allowed to protect an existing single meter or headers for two meters only. Bolt-down barricades shall be installed only on good concrete and where there is potential danger of damaging underground facilities when excavating, or when the customer does not want their paving disturbed.

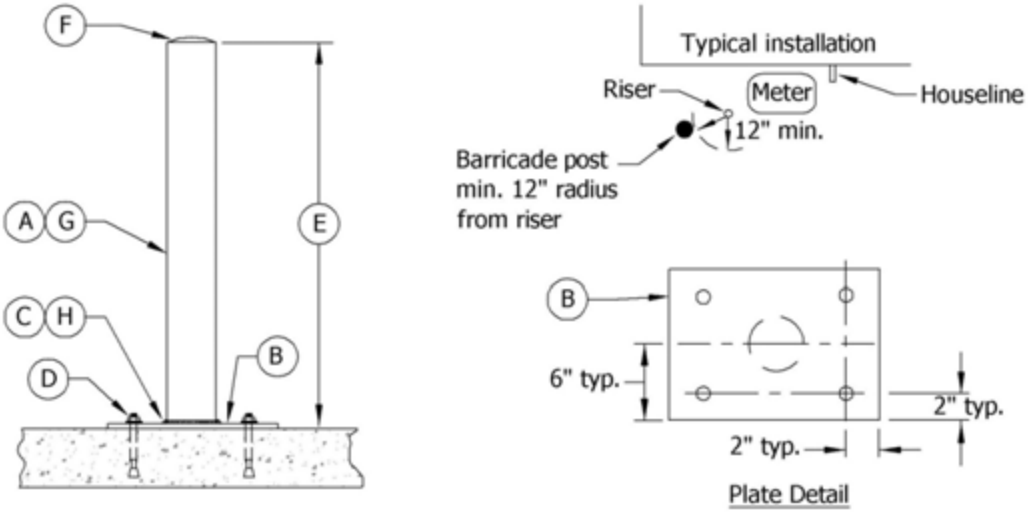

FIGURE 3

Notes:

(A) 3" black or galvanized steel pipe with a minimum wall thickness of .216".

(B) Black or galvanized steel plate ¼" x 12" x 12" minimum.

(C) ¼" fillet weld.

(D) Bolts (4) ⅝" x 4", cadmium coated steel, Hilti "KWIK BOLT" or equivalent with ⅝" flat washer, cadmium coated steel

(E) Post shall extend 3" above the meter set assembly or 45" above final grade, whichever is less.

(F) The top of the post shall be finished with one of the following:

(1) Tack welded steel cap or blank

(2) Top 3" of post filled and crowned with concrete

(3) Post top may be threaded and finished with an iron cap.

(G) Welded and black iron areas of the completed barricade post shall be primed and painted white.

(H) All precautions must be taken to protect workers and passerby from resulting fumes if choosing to weld on galvanized metal.

© 1998-2017 San Diego Gas & Electric Company. All rights reserved. Removal of this copyright notice without permission is not permitted under law.

REV	CHANGE	BY	DSGN	APPV	DATE	REV	CHANGE	BY	DSGN	APPV	DATE
A	Editorial Changes	LSM	IPJ	TPM	11/01/17	D					
B						E					
C						F					

X Indicates Latest Revision	Completely Revised	New Page	Information Removed

SHEET 3 OF 3

SDG&E SERVICE STANDARDS & GUIDE

BARRICADES FOR GAS METER SETS

SG 1014.3

TABLE OF CONTENTS

This standard shows the minimum horizontal clearances for gas mains or services installed near padmounted equipment or substructures.

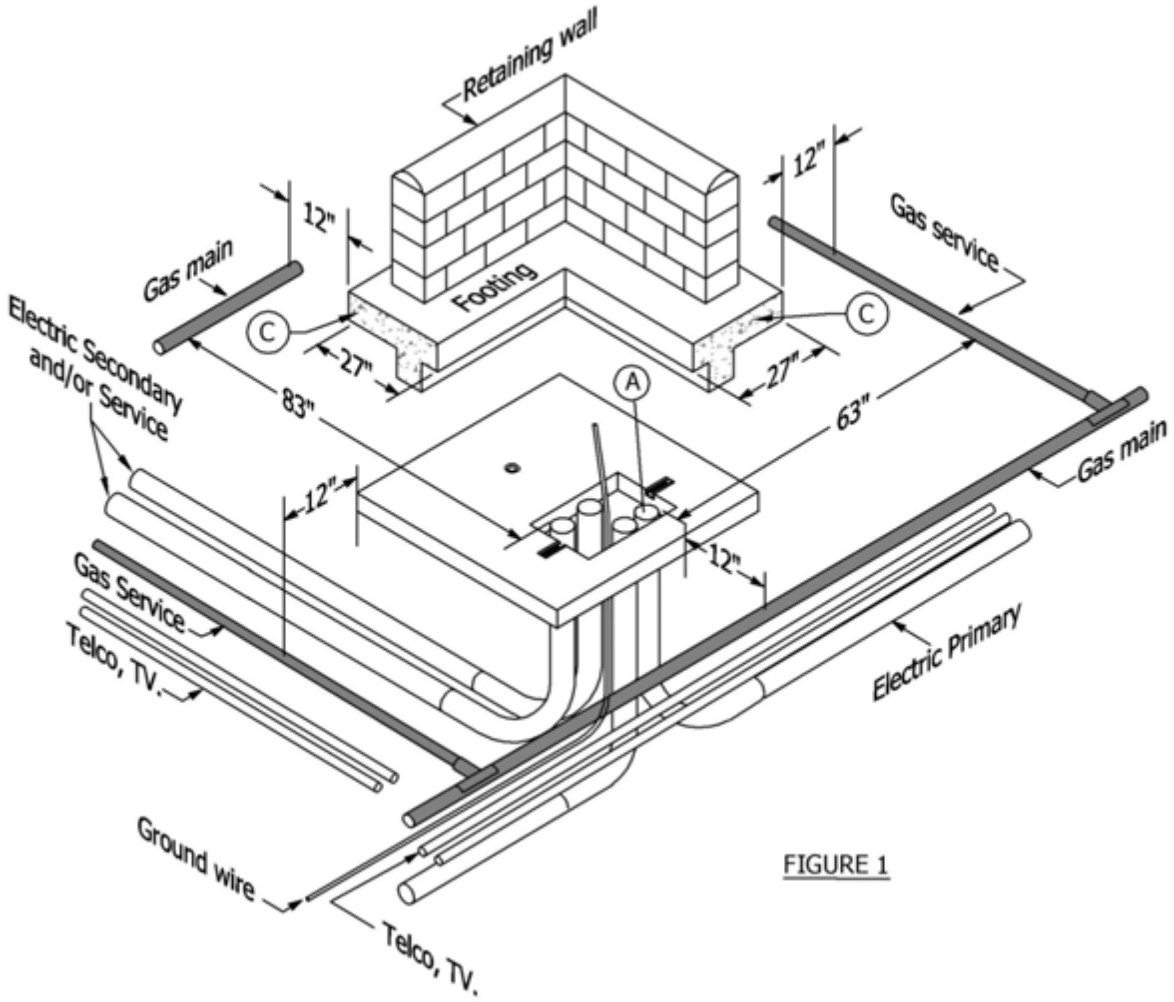

FIGURE 1

Installation Notes:

(A) Positions of primary and secondary conduits entering and leaving padmounted equipment depend on type of equipment, such as single or three-phase transformers.

B. Maintain 12" minimum horizontal separation from edge of pad, handholes, vaults, etc., to gas main/service to prevent damage from driven ground rods and provide access to main/service in the future.

(C) If retaining wall is to be installed, maintain 12" horizontal separation from footing. Footing width in Figure 1 is based on 4'-0" wall height with 3 to 1 slope.

D. Gas pipe must not be located under any facility such as splice boxes, equipment pads, footings, etc.

Reference GAS D7417.1.

© 1998-2017 San Diego Gas & Electric Company. All rights reserved. Removal of this copyright notice without permission is not permitted under law.

REV	CHANGE	BY	DSGN	APPV	DATE	REV	CHANGE	BY	DSGN	APPV	DATE
A	Editorial Changes	LSM	IPJ	TPM	11/01/17	D					
B						E					
C						F					

X Indicates Latest Revision	Completely Revised	New Page	Information Removed

SDG&E SERVICE STANDARDS & GUIDE

GAS FACILITIES NEAR UNDERGROUND PADMOUNTED EQUIPMENT OR SUBSTRUCTURES

TABLE OF CONTENTS

TABLE OF CONTENTS

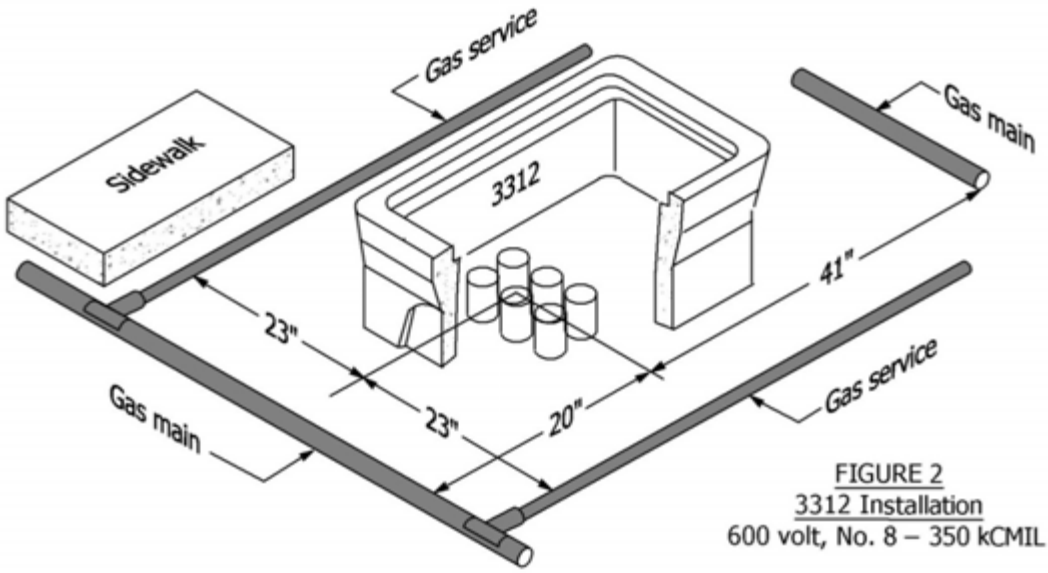

FIGURE 2
3312 Installation
600 volt, No. 8 – 350 kCMIL

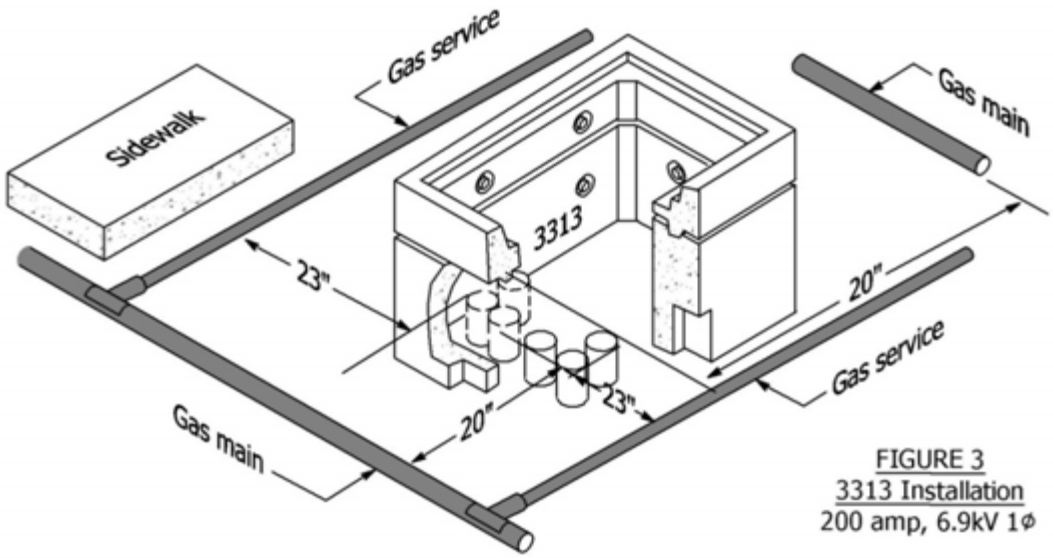

FIGURE 3
3313 Installation
200 amp, 6.9kV 1ϕ

Notes:

(A) Minimum dimensions are shown to obtain 12" horizontal separation from gas pipe to substructure or equipment pad.

(B) Add 12" to dimensions shown if cable TV, telephone and electric conduits are being installed next to substructures or equipment pads in joint trench with gas.

Reference GAS D7417.2.

© 1998-2017 San Diego Gas & Electric Company. All rights reserved. Removal of this copyright notice without permission is not permitted under law.

REV	CHANGE	BY	DSGN	APPV	DATE	REV	CHANGE	BY	DSGN	APPV	DATE
A	Editorial Changes	LSM	IPJ	TPM	11/01/17	D					
B						E					
C						F					

X Indicates Latest Revision	Completely Revised	New Page	Information Removed	

SDG&E SERVICE STANDARDS & GUIDE

GAS FACILITIES NEAR UNDERGROUND PADMOUNTED EQUIPMENT OR SUBSTRUCTURES

TABLE OF CONTENTS

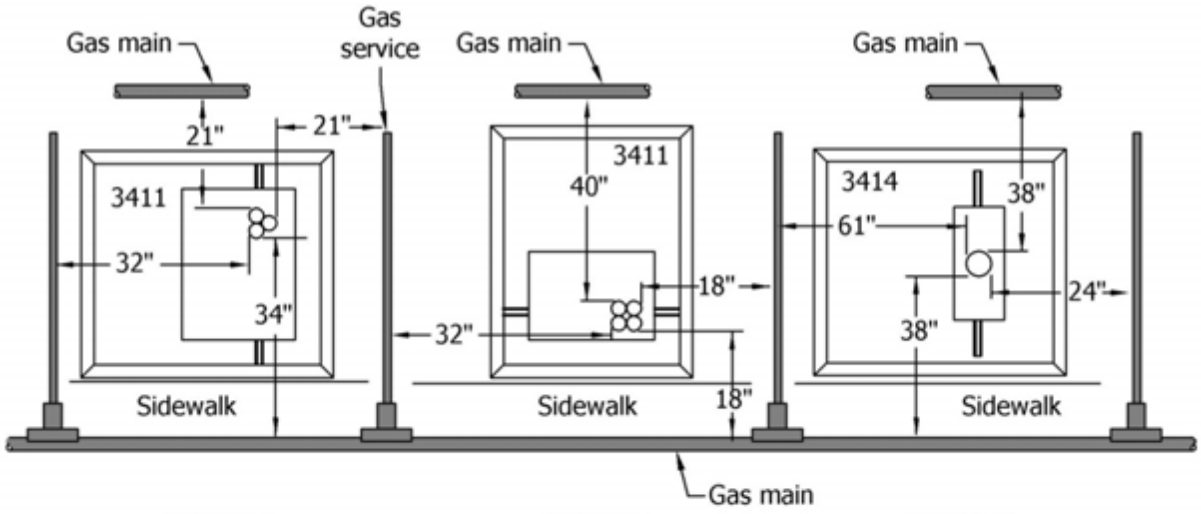

FIGURE 4
3512 Installation
1Φ Fused Switching Cabinet

FIGURE 5
3522 Installation
3Φ Cable Terminator

FIGURE 6
3414 Installation
Capacitor Rod

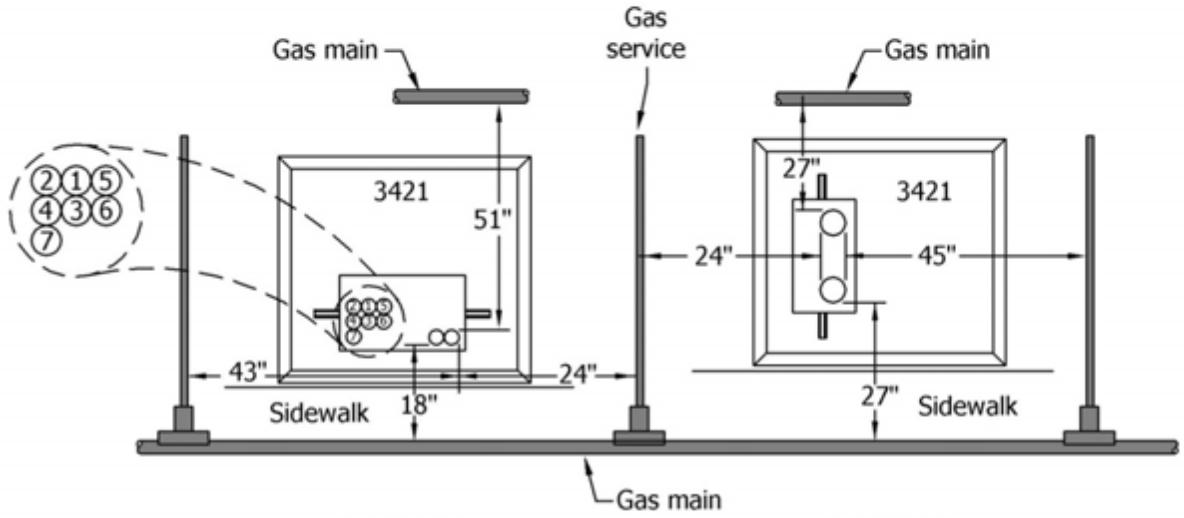

FIGURE 7
3520 Installation
1Φ Terminator, 1Φ Transformer

FIGURE 8
3513 Installation
3Φ Fuse Cabinet

Reference GAS D7417.3.

© 1998-2017 San Diego Gas & Electric Company. All rights reserved. Removal of this copyright notice without permission is not permitted under law.

REV	CHANGE	BY	DSGN	APPV	DATE	REV	CHANGE	BY	DSGN	APPV	DATE
A	Editorial Changes	LSM	IPJ	TPM	11/01/17	D					
B						E					
C						F					

X Indicates Latest Revision	Completely Revised	New Page	Information Removed

TABLE OF CONTENTS

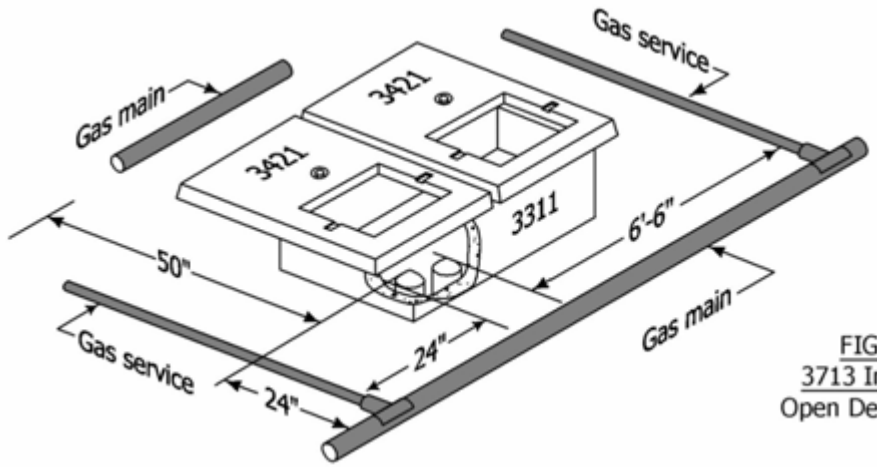

FIGURE 9
3713 Installation
Open Delta Bank 3ϕ

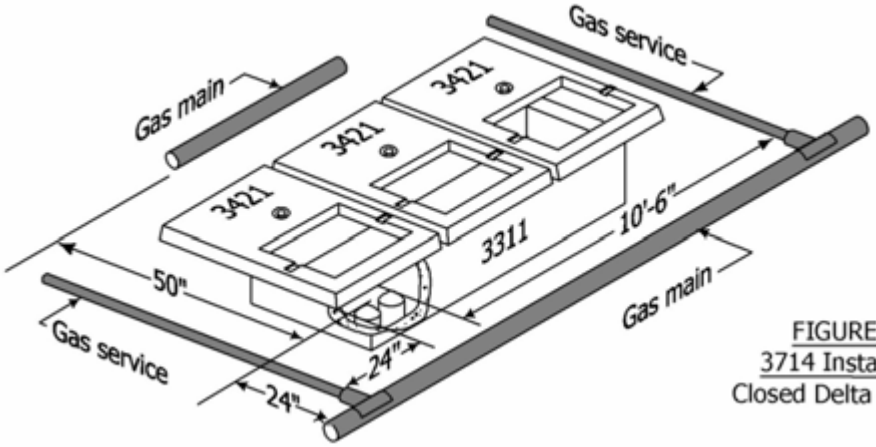

FIGURE 10
3714 Installation
Closed Delta Bank 3ϕ

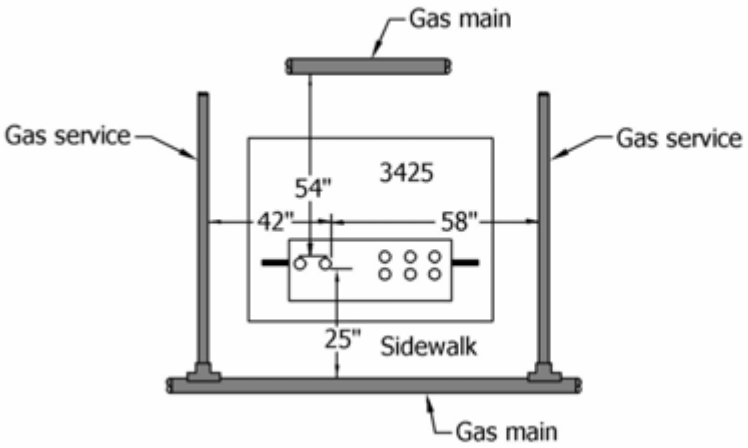

FIGURE 11
3425 Installation
3ϕ Transformer

Reference GAS D7417.4.

© 1998-2017 San Diego Gas & Electric Company. All rights reserved. Removal of this copyright notice without permission is not permitted under law.

REV	CHANGE	BY	DSGN	APPV	DATE	REV	CHANGE	BY	DSGN	APPV	DATE
A	Editorial Changes	LSM	IPJ	TPM	11/01/17	D					
B						E					
C						F					

X Indicates Latest Revision	Completely Revised	New Page	Information Removed

SDG&E SERVICE STANDARDS & GUIDE

GAS FACILITIES NEAR UNDERGROUND PADMOUNTED EQUIPMENT OR SUBSTRUCTURES

TABLE OF CONTENTS

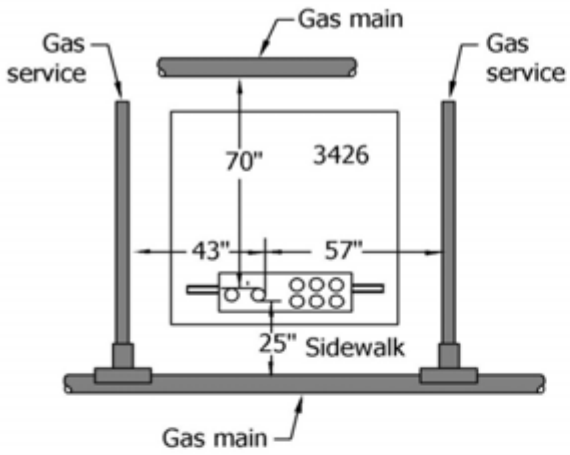

FIGURE 12
3426 Installation
3ϕ Transformer

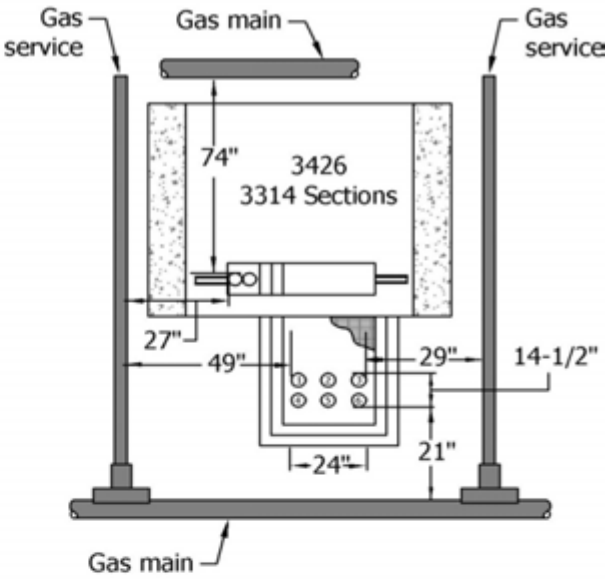

FIGURE 13
3426 Installation - 3314 Sections
3ϕ Transformer

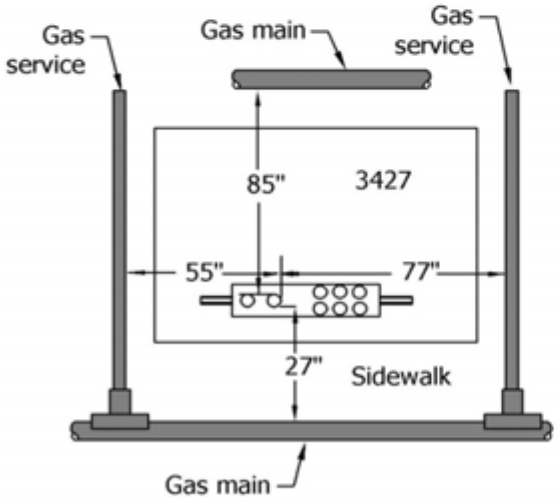

FIGURE 14
3427 Installation
3ϕ Transformer

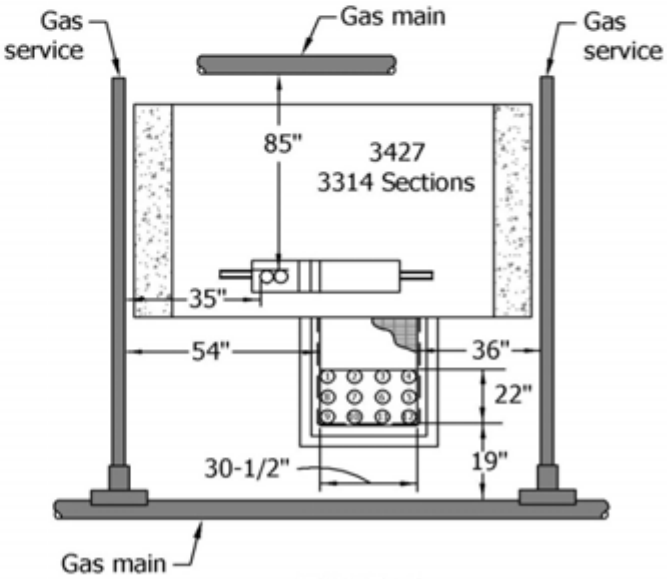

FIGURE 15
3427 Installation - 3314 Sections
3ϕ Transformer

Reference GAS D7417.5.

© 1998-2017 San Diego Gas & Electric Company. All rights reserved. Removal of this copyright notice without permission is not permitted under law.

REV	CHANGE	BY	DSGN	APPV	DATE	REV	CHANGE	BY	DSGN	APPV	DATE
A	Editorial Changes	LSM	IPJ	TPM	11/01/17	D					
B						E					
C						F					

X Indicates Latest Revision	Completely Revised	New Page	Information Removed

SDG&E SERVICE STANDARDS & GUIDE

GAS FACILITIES NEAR UNDERGROUND PADMOUNTED EQUIPMENT OR SUBSTRUCTURES

SG 1015.5

TABLE OF CONTENTS

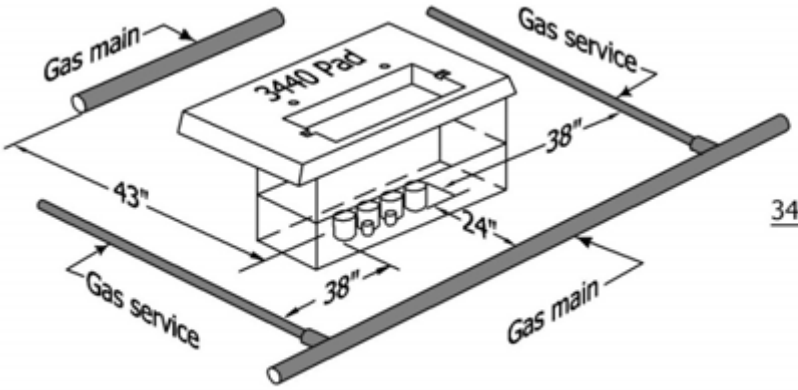

FIGURE 16
3440 Installation - 3311 Sections
12kV 600 Amp
3ø Switch

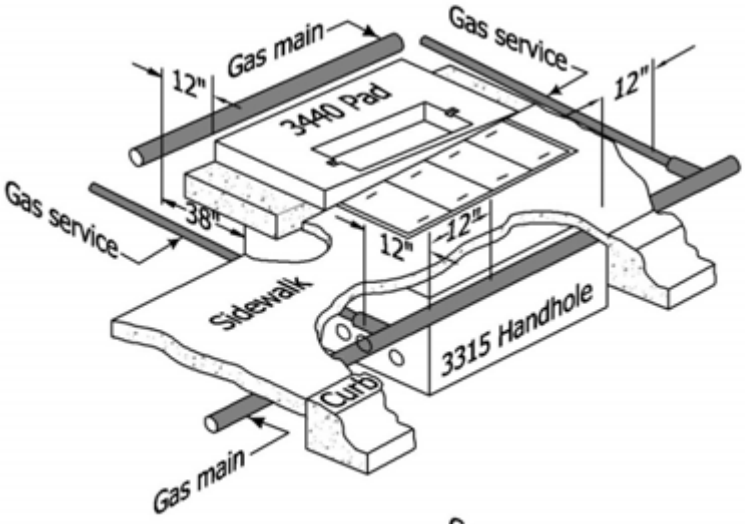

FIGURE 17
3440 Installation - 3315 Handhole
12kV 600 Amp
3ø Switch

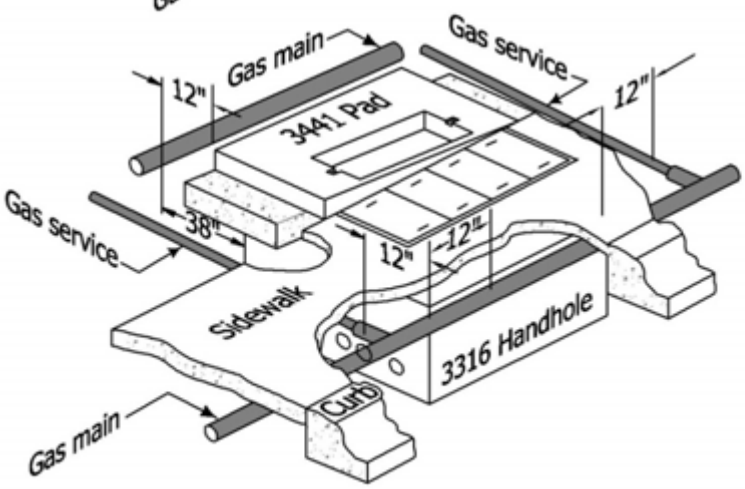

FIGURE 18
3441 Installation - 3316 Handhole
12kV 600 Amp
3ø Switch

Reference GAS D7417.6.

© 1998-2017 San Diego Gas & Electric Company. All rights reserved. Removal of this copyright notice without permission is not permitted under law.

REV	CHANGE	BY	DSGN	APPV	DATE	REV	CHANGE	BY	DSGN	APPV	DATE
A	Editorial Changes	LSM	IPJ	TPM	11/01/17	D					
B						E					
C						F					

X Indicates Latest Revision	Completely Revised	New Page	Information Removed

TABLE OF CONTENTS

Telephone feeder distribution cabinets Type 40 C or D

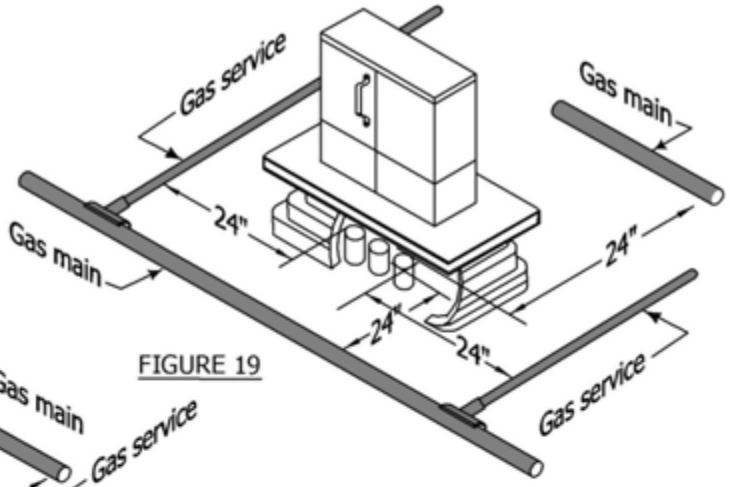

FIGURE 19

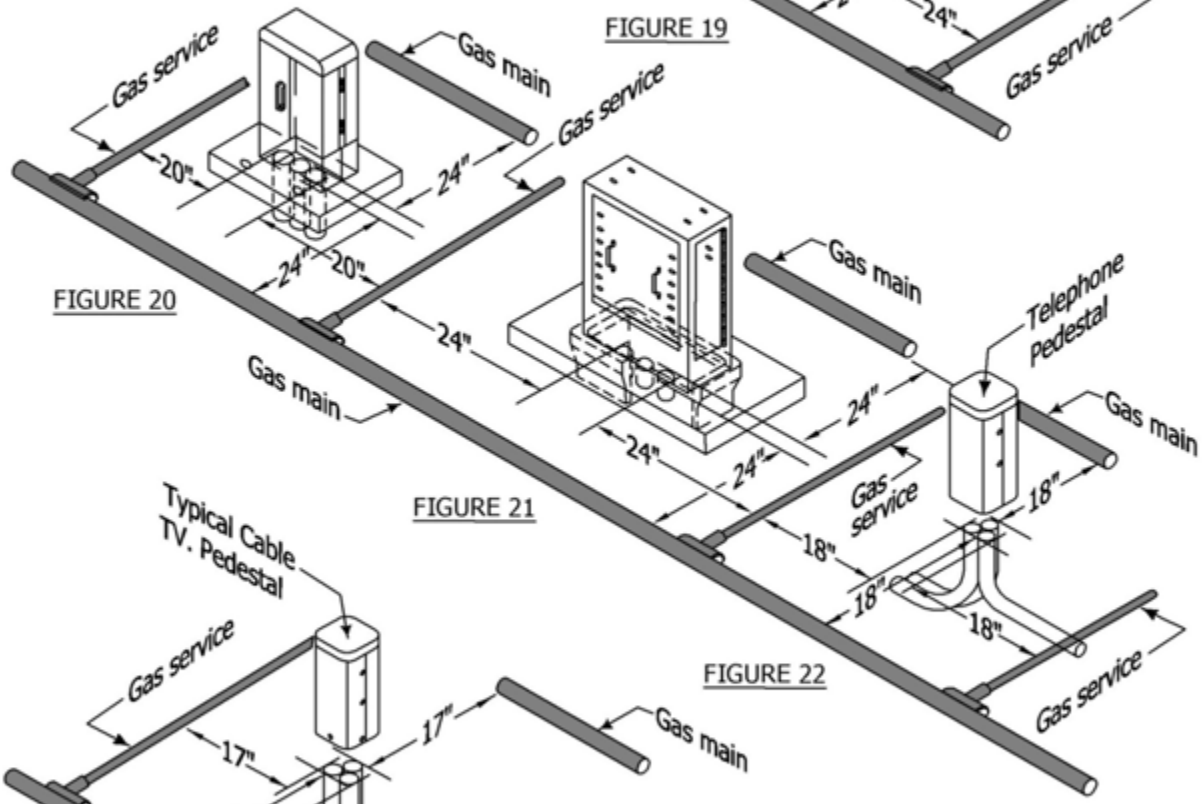

FIGURE 20

FIGURE 21

FIGURE 22

FIGURE 23

Reference GAS D7417.7.

© 1998-2017 San Diego Gas & Electric Company. All rights reserved. Removal of this copyright notice without permission is not permitted under law.

REV	CHANGE	BY	DSGN	APPV	DATE	REV	CHANGE	BY	DSGN	APPV	DATE
A	Editorial Changes	LSM	IPJ	TPM	11/01/17	D					
B						E					
C						F					

X Indicates Latest Revision	Completely Revised	New Page	Information Removed	

SHEET 7 OF 7

SDG&E SERVICE STANDARDS & GUIDE

GAS FACILITIES NEAR UNDERGROUND PADMOUNTED EQUIPMENT OR SUBSTRUCTURES

SG 1015.7

ELECTRICAL NEWSLETTER

ELECTRICAL NEWSLETTER

San Diego Area Chapter
International Code Council

Carlsbad, Chula Vista, Coronado, Del Mar, El Cajon, El Centro, Encinitas, Escondido, Imperial Beach, La Mesa, Lemon Grove, National City, Oceanside, Poway, San Diego City, San Diego County, San Marcos, Santee, Solana Beach, Vista

San Diego Area

Electrical Newsletters

January 2023
Based on the
2022 edition of
the California Electrical Code
(2020 National Electrical Code)

About the San Diego Area Electrical Newsletters

The San Diego Area Electrical Newsletters are developed through a cooperative effort of the San Diego Area Inspection Jurisdictions and are approved by the San Diego Area Chapter of the International Code Council.

The newsletters provide the local jurisdictions a resource for interpretation and enforcement of the 2022 California Electrical Code (CEC) based on the 2020 edition of the National Electrical Code (NEC) in compliance with Article 90.4 that reads in part: "The authority having jurisdiction (AHJ) for enforcement of the *Code* has the responsibility for making interpretations of the rules, for deciding on the approval of equipment and materials, and for granting the special permission contemplated in a number of the rules."

Examples of specific installations that are generally acceptable in the San Diego Area are included. Check with the local inspection jurisdiction before beginning any installation based on these newsletters.

The 2023 Service Standards & Guide manual published by San Diego Gas & Electric Company (Utility) is referenced to provide the Utility's electrical serving requirements as a courtesy to the electrical industry. These references are shown in boxed text.

Additional California code requirements are found in the following:

- California Green Code
- The California Energy Codes

Participating San Diego Area Inspection Jurisdictions

City of Carlsbad
City of Chula Vista
City of Coronado
City of Del Mar
City of El Cajon
City of El Centro
City of Encinitas
City of Escondido
City of Imperial Beach
City of La Mesa
City of Lemon Grove
City of National City
City of Oceanside
City of Poway
City of San Diego
City of San Marcos
City of Santee
City of Solana Beach
City of Vista
County of San Diego

Boxed language refers to the Utility.

San Diego Area Chapter
International Code Council

Table of Contents

Code Reference	Subject	Page #
90.7, 110	Approval of Electrical Equipment	1
110.3(B),110.14(A)&(D)	Torque Requirements	2
110.26	Electrical Equipment Rooms	3
110.26(A)&(E)	Dedicated Equipment Space-Outdoor	4
200.6, 210.5(C), 215.12	Identifying Conductors	5
210.52(E)	Unconditioned Enclosed Patio	6
220	Electrical Service Plan Check Requirements	7
230.2	Number of Services	8
230.70	Service Equipment – Disconnecting Means	12
230.95	Ground-Fault Performance Testing	13
250 Part III	Grounding Electrode System & Grounding Electrode Conductor	15
250.52(A)(3)	Concrete-Encased Electrode (Rebar)	16
250.52(A)(5)	Ground Rods	17
342, 344, 358	Underground Metal Conduit	18
368	Busways	19
408	Switchboards & Panelboards	20
445	Generators	21
450	Transformers	23
490	Examination of Electrical Equipment Exceeding 1,000 Volts	24
625	Electric Vehicle Charging Systems (EVCS)	26
625.48	Electric Vehicle Supply Equipment (EVSE)	27
690	Solar Photovoltaic Systems	28
705.10	Alternate Sources of Power	31
Index		32

Approval of Electrical Equipment

Code Reference: 2022 California Electrical Code Article 90.7, 110

Published: January 2008 Revised: January 2020

The authority having jurisdiction (AHJ) has the responsibility for making interpretations of the requirements of the California Electrical Code. It is the intent of this newsletter to address the locally accepted requirements for the listing and labeling of electrical equipment.

Listing and labeling provides prima facie evidence that the electrical equipment is approvable by the jurisdiction. Equipment shall be listed and labeled by a Nationally Recognized Testing Laboratory (NRTL) that is recognized by the Federal Occupational Safety and Health Administration (OSHA), Department of Labor under 29 CFR 1910.7 for electrical equipment.
https://www.osha.gov/dts/otpca/nrtl/

Equipment shall be installed per the manufacturer's installation instructions. Switchgear shall be installed per NEMA (National Electrical Manufacturer's Association) Standards. The equipment shall be approved by the jurisdiction for the location of the installation.

Electrical equipment installed without the required label is then required to be evaluated and labeled per this newsletter and per NFPA 790 and 791.

The AHJ may request an evaluation by an approved evaluator for equipment that does not have an acceptable testing agency label.

The following procedure is requested to be followed when a field evaluation is to be done:

1. Field evaluator shall notify the AHJ that they have been contracted to examine equipment.

2. Initial letter shall include the name of the tenant/owner, the address of the location of the equipment, the type of equipment, and the standards to which the equipment will be evaluated. The letter should also indicate if a preliminary evaluation was undertaken and the results of that preliminary evaluation.

3. Upon completion of the evaluation, the evaluator shall notify the AHJ in writing of the results of test, provide a copy of the report, and identify that their evaluation approval label has been affixed to the equipment.

It shall be understood that a completed Field Evaluation report and affixed label to any piece of equipment may only be considered approved for that exact location/environment where it was evaluated. Henceforth, if the piece of equipment is moved to another location, then an additional Field Evaluation shall be required.

Torque Requirements

Code Reference: 2022 California Electrical Code Article 110.3 (B) and 110.14 (A) & (D)
Published: October 1987 Revised: January 2020

Standards such as NEMA, ASTM, ANSI, and UL require all terminals and lugs to pass stringent tests as a part of the listing process. The listings for terminals and lugs include specific torquing requirements. All manufacturers are required to identify appropriate torque numeric values for each type of termination as part of their installation instructions. Calibrated torque tools shall be used to achieve the indicated torque. The contractor is responsible to ensure that all terminations are properly torqued.

The local authority having jurisdiction (AHJ) has established the following inspection requirements:

1. The AHJ may require that torquing tools and manufacturer's torquing instructions be on the job site at the time of inspection; or

2. The AHJ may accept a letter from the contractor certifying that all terminations have been torqued in accordance with the manufacturer's instructions; or

3. The AHJ may require that the contractor obtain an approved third-party testing agency to certify the proper torquing of all terminations.

   Notes:
   - When equipment torque labels cannot be read, or the label is missing, it is acceptable to use values found in NFPA 70 Informative Annex I.
   - If terminals have been over-torqued, then damaged equipment must be replaced.

Electrical Equipment Rooms

Code Reference: 2022 California Electrical Code Article 110.26
Published: October 1987 Revised: January 2023

Section 110.26 uses the term "equipment" instead of "switchboards and panelboards". The intent is to include any type of equipment that contains overcurrent, switching, or control devices. The local authority having jurisdiction (AHJ) has made the following interpretations regarding this section:

1. Section 110.26 (C)(2) applies to equipment individually listed and marked with a rating of 1200A or more and over 6 feet wide.

2. Where pull sections are installed, the nameplate rating of the pull section shall determine the rating of the equipment and be included in determining the width of the equipment. Future expansion shall be included in the design of the working space and equipment layout when pull sections are rated 1200A or larger. Consult the Utility for their requirements relating to pull sections.

3. There shall be one entrance to and egress from the required working space not less than 24 inches wide and 6½ feet high at each end of the working space. A single entrance to and egress from the required working space shall be permitted if either a. *unobstructed egress* or b. *extra working space* is provided.

    a. *Unobstructed egress* is defined as an egress path located entirely outside the minimum required working space area, a minimum of 36 inches in width, and is clear of any obstructions, from the equipment to a safe location outside the room or area.

    b. *Extra working space* is where the depth of the working space is twice that required by 110.26 (A)(1). A single entrance is permitted provided it is located so that the distance from the equipment to the nearest edge of the entrance is not less than the minimum clear distance specified in Table 110.26 (A)(1). This is a radial measurement from the equipment. (See drawing below.)

4. For electrical rooms containing equipment rated 800 amperes or more, personnel doors located within 25 feet of the equipment must have a minimum clear width of 32" (See CBC 1010.1,1), shall open out (in the direction of egress) and be equipped with listed panic hardware or listed fire exit hardware.

The Utility requires all doors to an electric meter room to be a minimum of 3'-0" wide or the width of the pull section, whichever is greater, and 6'-6" high. The door shall open in the direction of egress and be equipped with "lever-operated" hardware. Lever-operated hardware is a type that permits the door to be opened from inside the room without the use of hands.

Consult with the Utility for Services rated 800 amps or more.

Note: 5" conduit requires 6' of working clearance in front of the pull section.

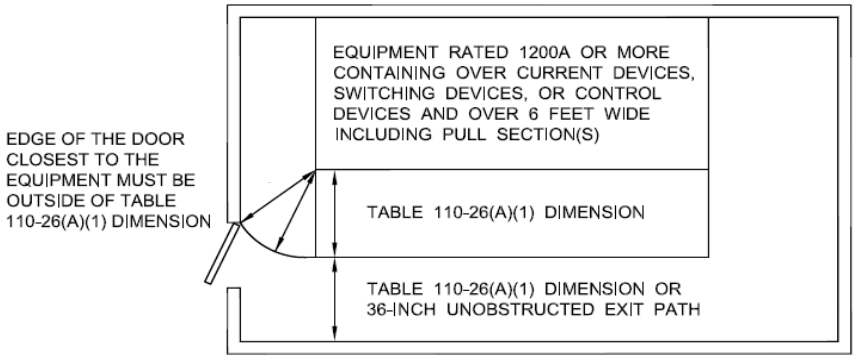

Dedicated Equipment Space – Outdoor

Code Reference: 2022 California Electrical Code Article 110.26 (A) and (E)
Published: August 2005 Revised: January 2023

The intent of this newsletter is to address installations where existing gas meters are located within the dedicated equipment space of electrical service equipment.

Effective January 1, 2017, it is no longer acceptable for the gas meter to be located within the dedicated equipment space or the working space of the electrical service equipment.

> Where an existing gas meter is located below the electrical service equipment, you must consult the local Utility before starting any work to confirm the new installation meets current standards.

Identifying Conductors

Code Reference: 2022 California Electrical Code Article 200.6, 210.5(C), 215.12
Published: January 2008 Revised: January 2023

The objective of this newsletter is to clarify when the identification and posting of the identification means are required for grounded circuit conductors, branch circuit conductors, and feeder conductors when more than one nominal voltage supplies a premise.

For existing buildings:

- When new branch circuit wiring is extended from an existing panelboard, those new circuits shall not be required to comply with Section 210.5 (C).

Unconditioned Enclosed Patio

Code Reference: 2022 California Electrical Code Article 210.52 (E)
Published: April 1985 Revised: January 2023

Enclosed patios are not considered to be habitable rooms and need not meet the outlet spacing requirements of Sections 210.52 (A). If the existing outdoor receptacle required by 210.52(E)(1) is enclosed by new construction, an additional GFCI protected receptacle shall be installed on the exterior wall of the Enclosed Patio. If adding an additional entrance or exit with grade level access, an additional switched lighting outlet shall be installed as per Section 210.70 (A)(2)(b). A suitably located single lighting outlet can serve more than one door.

ALL LIGHTING SYSTEMS MUST COMPLY WITH CALIFORNIA TITLE 24 ENERGY EFFICIENCY REQUIREMENTS.

Electrical Service Plan Check Requirements

Code Reference: 2022 California Electrical Code Article 220
Published: April 1985 Revised: January 2023

The intent of this newsletter is to clarify the general requirements for electrical plans for installations in the San Diego area.

For new, single-family, residential services, an approved plot plan showing the size and location of the s service equipment is required. * When the service is rated over 200 amperes, additional information may be required by the authority having jurisdiction (AHJ).

For Accessory Dwelling Unit (ADU) Electric Metering Requirements Consult the serving Utility.

All commercial/Multifamily services require complete electrical plans. These plans shall include, but not limited to:

- Service Equipment- Ampacity, Voltage, Number of Phases, and location of Service Equipment
- The Short Circuit Current Rating (SCCR) of equipment
- Feeder and Branch Circuit Overcurrent Devices
- Conductor Type and Sizes
- Panel Schedules describing both New and Existing Loads
- Load Calculations
- Fault-Current Calculations (if applicable)
- Conductor Type, Size, and wiring methods to be used
- Grounding and bonding details

Calculations to justify the proposed installation must be provided. Generally, power, lighting and single-line diagrams will be required as well as plans showing the location of all proposed electrical equipment to be installed.

All electrical plans shall be signed as required by the State of California Business and Professions Code. Where applicable, electrical plans shall contain the California Energy Code Compliance document Title 24, Part 6.

Note: These general plan requirements are based on typical installations. An AHJ may find it necessary to require additional plans or calculations at any stage of design or construction.

* Consult with an AHJ for specific requirements based on size of service.
* Consult with Local Utility

Number of Services

Code Reference: 2022 California Electrical Code Article 230.2

Published: December 1981 Revised: January 2023

Some of the multiple services permitted as exceptions to Section 230.2 conflict with other provisions of Section 230, with SDG&E policy, and with established wiring methods in the San Diego area. Such services can present a hazard in certain normal and emergency situations.

The intent of this newsletter is to establish conditions regarding the installation of multiple services that resolve such conflicts and provide for safety in both normal and emergency situations. Contact the authority having jurisdiction (AHJ) for zoning requirements that will determine whether more than one service will be allowed to a premise.

Section 230.2. Number of Services: The basic requirement of 230.2 is that a building or other structure shall be supplied by only one service. However, the use of additional services is permitted by 230.2 (A) through (D). This article describes those conditions where more than one service is permitted. If more than one service is installed, 230.2 (E) requires a permanent plaque or directory be installed at each feeder a disconnect location denoting all other feeders and branch circuits supplying that building or structure and the area served by each.

(B) Special Occupancies. By special permission, additional services shall be permitted for [either of] the following:

(1) Multiple-occupancy buildings where there is no available space for service equipment accessible to all occupants ("Multiple-occupancy" is interpreted to mean "multiple-tenant")

(2) A single building or other structure sufficiently large* to make two or more services necessary

* Structures Sufficiently Large: See SDG&E Service Standards & Guide, page SG 012.1-012.3, for dimensions.

Special permission for (B)(1) will not normally be granted unless the building is sufficiently large enough to qualify for a second service as outlined in (B)(2). For existing buildings, special permission will be considered on a case-by-case basis. Generally, conditions (1) and (2) above will be required as well as a plaque on each sub-panel to identify which service supplies the panel.

If the Utility agrees to provide an additional service, consult the Utility for their requirements.

(C) Capacity Requirements - Additional services shall be permitted under any of the following:

(1) Where the capacity requirements are in excess of 2,000 amperes at a supply voltage of 1,000 volts or less

For multiple services, consult utility and reference SDG&E Service Standards & Guide pages SG 012.1-012.3.

(2) Where the load requirements of a single-phase installation are greater than the serving agency [local utility] normally supplies through one service, or

(3) By special permission.

Note: The disconnect(s) for such separate services shall be grouped.

(D) Different Characteristics - Additional services shall be permitted for different voltages, frequencies, or phases, or for different uses, such as for different rate schedules.

Note: The disconnect(s) for such separate services shall be grouped. A service of a different class is not required to be grouped with another service of a different class serving the building or structure.

SDG&E will not grant a second service unless the phase-to-neutral voltage is different than that of the existing service, regardless of the number of phases, except for capacity requirements as noted in (C) above.

(E) Identification - Where a building or structure is supplied by more than one service, or any combination of branch circuits, feeders, and services, a permanent plaque or directory shall be installed at each service disconnect location denoting all other services, feeders, and branch circuits supplying that building or structure and the area served by each. See Section 225.37

Note 1: The plaque or directory required by Section 230.2(E) shall be manufactured in metal or plastic, suitable for the environment, with engraved or machine-printed lettering or electro-photo-plating in a contrasting color. The plaque shall include a footprint of the entire building, properly oriented, with the area served by each service clearly delineated. The plaques shall be located at the service disconnect and securely fastened by permanent means acceptable to the AHJ.

Note 2: Doors into electrical meter rooms shall be marked with a plainly visible and legible sign stating, "Electric Meter Room", "Electric Room", or " Meter Room". If there are multiple electric meter rooms, the doors must be marked "Electric Meter Room #___ of ___", as appropriate. Reference 2022 California Fire Code, Chapter 6, Section 603.4.1 Labeling.

In addition to the above requirements, when a building has more than one electric meter room, SDG&E requires that a plaque is secured to the exterior door of each electric meter room identifying the suites served by the meters in that room. Reference Service Standards & Guide, pages SG 017.1-017.3

TYPICAL PLAQUE FOR EXISTING BUILDINGS WITH INTERMIXED SERVICES

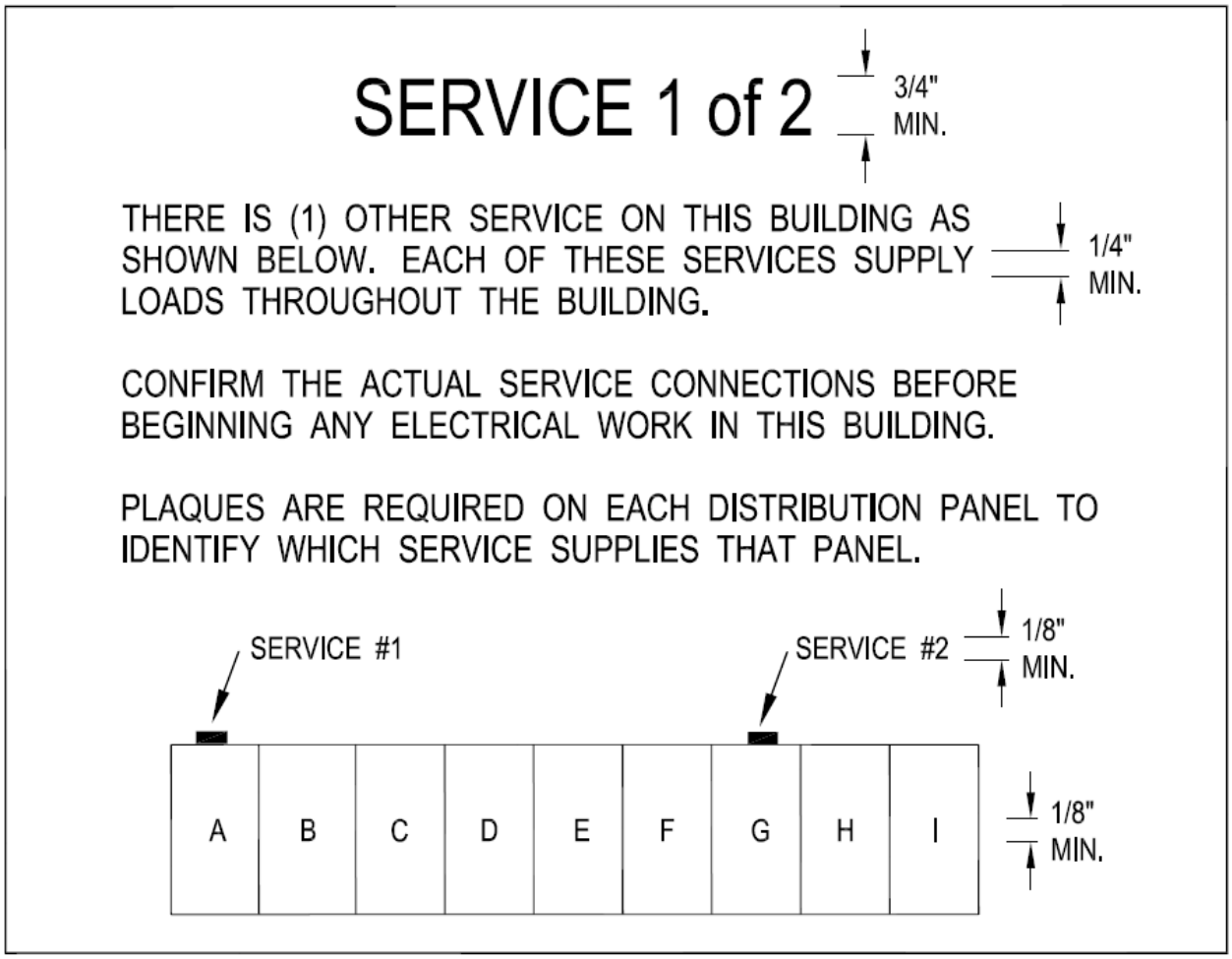

The plaque or directory shall be manufactured in metal or plastic, suitable for the environment, with engraved or machine-printed lettering or electro-photo-plating in a contrasting color. The plaque shall include a properly oriented footprint of the entire building. The plaques shall be located at the service disconnect and securely fastened by permanent means acceptable to the AHJ.

Service Equipment – Disconnecting Means

Code Reference: 2022 California Electrical Code Article 230.70
Published: August 2005 Revised: January 2020

The intent of this newsletter is to provide a guideline for the location of a building's service disconnecting means.

Section 230.70 (A)(1) requires that the service disconnecting means be installed in a readily accessible location either outside of a building or structure or inside nearest the point of entrance of the service conductors.

An uncontrolled length of unfused conductor or bus in other than the Utility vault room or the service equipment room represents a hazard to the structure. Some buildings, due to design restrictions cannot have the service disconnecting means immediately adjacent to the service point.

A maximum of 10 feet of unfused conductor or bus from the service point to the building's service disconnecting means is permissible.

Ground-Fault Performance Testing

Code Reference: 2022 California Electrical Code Article 230.95

Published: April 1989 Revised: January 2023

Section 230.95 requires that ground-fault protection of equipment shall be provided for solidly grounded wye electrical services of more than 150 volts to ground but not exceeding 1,000 volts phase-to-phase for each service disconnect rated 1,000 amperes or more. The grounded conductor for the solidly grounded wye system shall be connected directly to ground . . . without inserting any resistor or impedance device. Subsection (C) requires testing of such system to assure that the equipment performs its intended function. This code section does not define who is to perform these tests or what information is to be included in the written report for the authority having jurisdiction (AHJ). Additionally, the requirement that these tests be performed on the system "when first installed on-site" often results in a test of a system that is incomplete. (See boxed text.)

A ground-fault protective system includes the ground-fault device (main disconnect and fault current sensor) and all wiring supplied by this device. For this reason, performance testing should normally be accomplished after all wiring is installed to ensure that the ground-fault device functions properly.

The following standards are established to assure that performance testing of ground-fault systems is accomplished in a uniform and acceptable manner:

1. Performance testing shall be performed by a third-party testing company acceptable to the AHJ and capable of demonstrating both the knowledge and the equipment necessary for such tests.

2. The ground-fault protective system must be tested after all wiring is installed and before the building is approved for final occupancy. This test must be performed prior to the AHJ authorizing the local utility to energize the service equipment.

Exception: The use of permanent service equipment for temporary power is common in the industry. The standards established by this newsletter are intended to recognize and permit this use. Where a temporary service is allowed for construction or equipment testing, prior to the final approval of the building, it is permissible for the testing of the ground-fault protective system to be accomplished in two separate parts.

Part 1. Testing of the ground-fault protective device must be completed before the service will be energized, along with testing all neutral and ground connections installed at the time of the Part 1 testing. This provides a reasonable level of protection for the service equipment during the period that temporary wiring is in use.

Part 2. All remaining neutral and ground connections not tested in Part 1 shall then be tested after all wiring is installed and before the building is approved for final occupancy. This testing normally requires a Utility outage, but the outage may be waived at the discretion of the testing company performing the test.

Note: Most ground-fault protective device testing requires that the service be de-energized. There are fees for the Utility to disconnect and reconnect the power. This applies to Part 1 and Part 2 if the service is required to be disconnected. Contact the Utility Planner for additional information.

3. A written record of the testing shall be provided, by the contractor, to the AHJ and shall include:

    a. A statement that the testing was performed in accordance to the manufacturer's instructions and in accordance with the procedures of the International Electrical Testing Association (NETA)

    b. A statement that the service grounding connections are correctly installed for a ground-fault system

    c. A statement that all neutral conductors in the distribution system have been tested and found to be ungrounded (Describe the test method used)

    d. A statement that the ground-fault equipment functioned properly when tested

Grounding Electrode System & Grounding Electrode Conductor

Code Reference: 2022 California Electrical Code Article 250 Part III
Published: December 1981 Revised: December 2020

This section has generated many questions regarding the use of metal underground water pipes as grounding electrodes, the type of grounding electrodes acceptable as supplements to a metal underground piping system, and the type of grounding electrode required where there is no underground water piping on the premises.

The intent of this newsletter is to interpret Sections 250.50, 250.52, and 250.53 so that the requirements for grounding electrode systems are related to typical construction methods in a practical and consistent manner.

The intent of Section 250.50 is to ensure that at least one permanent and effective grounding electrode is installed for every building or structure, and that all electrodes are at the same potential with respect to the earth.

The following requirements for the installation of grounding electrodes meet the intent of Section 250.53, are consistent with typical construction methods, and are mandatory in the San Diego area:

1. Any construction that includes new concrete foundations shall be provided with a concrete-encased electrode installed per the requirements of Section 250.52 (A)(3).

   Note: Where a concrete-encased electrode of the type identified in Section 250.52 (A)(3) is not available at final, a grounding electrode consisting of a minimum 20 feet of #2 bare copper conductor buried at a depth of 30" in a trench parallel to and at least 18" away from the foundation of building may be substituted. The conductor forming the grounding electrode must be continuous, unbroken and un-spliced, and be connected to the electrical service. Ground rods are not acceptable substitutes for the required grounding electrodes for new construction. A connector is always required where the grounding electrode conductor enters the service equipment.

2. Other new construction shall be provided with at least one of the grounding electrodes specified in sections 250.52 and installed in compliance with section 250.53. When new or replacement services are installed for existing buildings, existing underground metal water piping systems shall be supplemented by an additional electrode.

3. Grounding electrodes and grounding electrode conductors shall not be installed within wiring compartments with Utility-sealed access doors or covers. When the Utility installs their seal, the compartment is no longer considered accessible for inspection by the authority having jurisdiction (AHJ).

Concrete-Encased Electrode (Rebar)

Code Reference: 2022 California Electrical Code Article 250.52 (A)(3)
Published: May 1980 Revised: December 2020

The NEC makes it clear that underground metal water pipe can no longer be relied upon to assure a permanent and effective ground. To this end, several different grounding electrodes are identified as acceptable alternatives to the water pipe. The two most commonly used are the ground rod and the concrete-encased electrode. The use of ground rods and concrete-encased electrodes has raised questions.

The intent of this newsletter is to identify the minimum requirements for an acceptable concrete-encased electrode constructed of reinforcing steel (rebar), commonly called a "ufer'' ground. These minimum requirements are as follows:

1. The #4 (½") or larger rebar to which the grounding electrode conductor is connected must be a minimum of 20 feet long, unbroken.
2. The total developed length of rebar at the bottom of the foundation must be no less than 20 feet. Where splices are necessary to obtain the required 20 feet of rebar, they must be made so that the 2 bars overlap by no less than 15 inches and are secured by at least 2 steel tie wires.
3. The rebar may only extend out of the slab in a dry location.
4. The rebar must extend out of the slab at least 6 inches and no more than 18 inches and the point of connection of the grounding electrode connector must be accessible.

   Exception to #4: Where the connection of the grounding electrode conductor is encased in concrete and the connector is listed for concrete encasement.

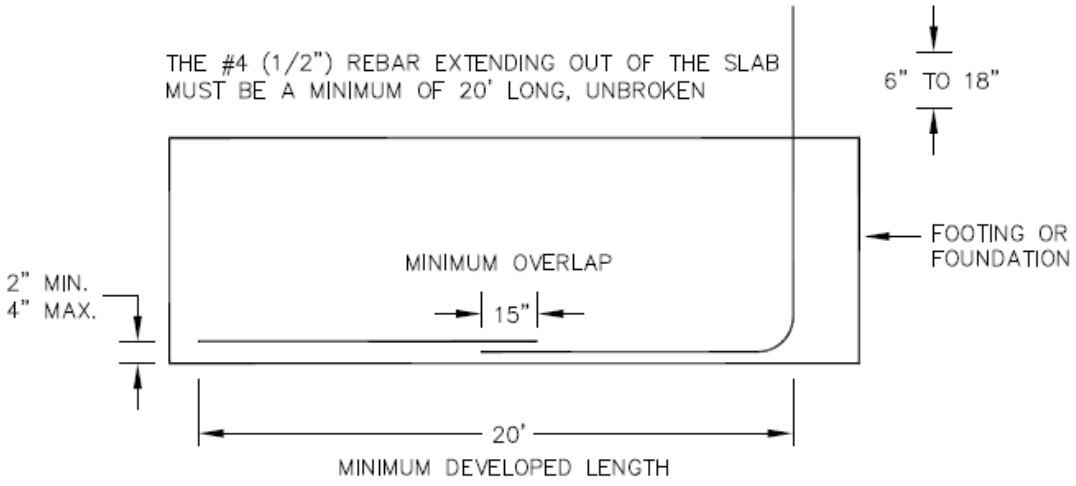

Ground Rods

Code Reference: 2022 California Electrical Code Article 250.52 (A)(5)

Published: April 1985 Revised: December 2023

The following interpretations are intended to alleviate the more common problems and establish guidelines for a ground rod installation that will be generally accepted in the San Diego area:

1. It is acceptable to install one or more driven ground rods so that no more than 3 inches projects above ground level. Connection of the grounding electrode conductor shall be made on this accessible portion of the rod. The portion of the rod with the listing mark and a ground rod clamp listed for this purpose shall be inspected by the authority having jurisdiction (AHJ). Ground rods should be installed in areas where they are not subject to physical damage or shall be provided with protection from such damage.

2. Due to adverse soil conditions in the San Diego area, galvanized ground rod and/or pipe are not acceptable. Only listed stainless steel or non-ferrous rods are acceptable.

3. It shall also be permissible to completely cover the ground rods or ground plates provided the connection to the electrodes is made by listed means and inspected prior to covering.

Underground Metal Conduit

Code Reference: 2022 California Electrical Code Article 342, 344, 358
Published: April 1985 Revised: January 2020

It is the finding of the authorities having jurisdiction (AHJs) in the San Diego area that the soil conditions are not suitable for the direct burial of metallic conduits. Experience has shown that direct buried metallic conduits corrode rapidly.

Therefore, the direct burial of metallic conduit is prohibited in the San Diego area.

Exception 1: Listed Rigid Metal Conduit encased in concrete may be installed underground.

Exception 2: Intermediate Metal Conduit, Rigid Metal Conduit, and Electrical Metallic Tubing with an approved "factory-applied" non-metallic coating may be installed underground according to the manufacturer's listing and installation instructions. The AHJ may approve "field-applied" materials utilizing a listed primer and wrap, or coatings, for short sections or repairs of metallic raceways.

Note: These exceptions do not apply to conduits containing Utility-owned conductors. Consult the Utility for their requirements.

Busways

Code Reference: 2022 California Electrical Code Article 368
Published: August 2005 Revised: January 2023

The intent of this newsletter is to provide information only. The guidelines for the testing and acceptance of busway installations to ensure protection against potential life-safety hazards are included.

368.1 Scope. This article covers service-entrance, feeder, and branch-circuit busways and associated fittings.

368.2 Definition. The definition in this section shall apply within this article and throughout the Code.

Busway. A raceway consisting of a metal enclosure containing factory-mounted, bare or insulated conductors, which are usually copper or aluminum bars, rods, or tubes.

Busway installations are common for customer-owned service entrance installations from the Utility's service point to the service equipment, for unmetered feeder installations, for high-rise multifamily construction with remote metering, and for metered feeder installations to accommodate multiple taps for distribution. Several incidents of transposed phase or neutral conductors have resulted in the Utility closing into a fault condition when energizing a new transformer.

Busways shall be installed to meet the requirements of Article 368 and the manufacturer's installation instructions.

The Utility requires all service entrance and unmetered feeder busways be tested in accordance with the latest edition of the International Electrical Testing Association, Inc. (NETA), Acceptance Testing Specifications for Electrical Power Distribution Equipment and System. An independent testing organization acceptable to the AHJ and the Utility shall perform a continuity test on each busway section to confirm proper phasing and connection after each section is installed. The installer of the system shall provide a written test report to the AHJ and the Utility's Inspector. The AHJ will not release an inspection clearance to the Utility, nor will the Utility energize its transformer and the service until receipt, review, and acceptance of the written test report.

Switchboards & Panelboards

Code Reference: 2022 California Electrical Code Article 408
Published: June 1990 Revised: January 2020

The testing and listing standards for switchboards and panelboards require that the manufacturer identify any equipment intended to be installed in the field. The part or catalog number on a label in the switchboard or panelboard must identify equipment intended for field installation. The manufacturer must also provide any instructions necessary for the proper installation of such equipment. These requirements specifically include terminal connectors.

Most switchboards are designed to be connected to other sections or equipment with splice and through bus. Some switchboards also provide a set of factory-installed terminals for tapping a single circuit ahead of the service main. Very few switchboards are designed for the field installation of terminals on busses in order to make cable connections. Switchboards and panelboards designed for this application will include the required markings and installation instructions at the time they are originally manufactured.

The following procedures are established to ensure that switchboards and panelboards are installed in conformance with the testing and listing standard for such equipment:

1. Plan reviewers will approve plans showing field connection of cable to busses when there is documentation from the original equipment manufacturer (OEM) that the equipment is suitable for the field installation of terminals.

2. All new switchboards and panelboards will be inspected to determine compliance with the listing and manufacturer's instructions provided with the equipment.

3. All installations of new cables in existing switchboards and panelboards will be inspected to determine compliance with the listing and manufacturer's instructions provided with the equipment. In some cases, this will require changes to existing cable connections. Special attention will be given to conductor bending space, the routing of the conductors for heat dissipation in close proximity to the bus, and proper conductor support independent of energized bus.

4. Existing switchboards and panelboards not designed and marked for the field installation of terminals may be modified in the field, when:

    a. A third-party manufacturer certifies compliance with applicable industry standards by providing approved engineered drawings prepared by a PE registered in the State of California and through a field evaluation acceptable to the AHJ with special attention given to conductor bending space, the routing of the conductors for heat dissipation in close proximity to the bus, and proper conductor support independent of energized bus as well as isolation methods to protect against inadvertent contact to energized bus ahead of the main.

Note: The Utility requires submittal of engineered drawings for approval prior to the installation of terminals or bussing for service entrance use. An example is when a field tap is required in an existing terminating enclosure to facilitate the addition of new service and metering equipment. Reference SDG&E Service Standards & Guide page SG 517.1.

Generators

Code Reference: 2022 California Electrical Code Article 445

Published: August 2007 Revised: January 2023

The purpose of this newsletter is to clarify the requirements for permanently installed stationary engine generators such as stand-alone (sole source of power) and back-up generator systems. Also, see Articles 700, 701, and 702 for emergency, legally required, and optional standby systems.

Types of Generator Systems

In general, there are two types of generator systems, "Stand-Alone" and "Back-Up" generators.

"Stand-Alone" – Generator systems provide the primary source of power to the premises wiring system and are not connected to SDG&E's distribution system. There may be additional sources of power, such as solar photovoltaic and batteries, that are interconnected with a "stand-alone" generator system to provide additional reliability.

"Back-Up" – There are two types of back-up generator systems:

1. The "Emergency System" is intended to supply power essential for safety to human life when normal power fails. When required, the generator shall be outside of the building or in a room designed to provide equivalent protection from fire or damage. The room shall be identified "Emergency Generator Room" in 1-inch block letters on a red plaque. Such systems have stringent requirements and use a completely isolated wiring system to ensure service in an emergency.

2. The "Standby System" is intended to protect private business or property and may be integrated into existing wiring. These systems can be turned on manually or automatically when the primary power fails. The standby system is intended only to provide back-up electricity and not intended to permanently replace existing Utility power.

Basic Requirements for Generator Systems:

1. A building permit is required.

    a. Applications for permits must include three copies of a plot plan with a detailed description of the proposed work, the location of the generator, existing structures, utilities, property lines, etc.

    b. All installations will require a single-line drawing showing the size of the generator, location of generator disconnecting means, the overcurrent protection, grounding and wiring methods, type of transfer device, and the connection to the current premises wiring system.

c. The generator shall have adequate capacity and rating for the supply of all equipment intended to be operated at one time. (Equipment may be lighting, motors, heating, receptacles, and any other end use equipment the generator is intended to serve.)

d. The manufacturer's data sheet(s) for the generator and transfer device shall be submitted.

e. The complexity of the job will dictate which disciplines (mechanical, electrical, fire, structural, noise, hazardous materials, zoning, APCD, etc.) need to review and approve the plans. All systems powered by liquid fuel shall be approved by the authority having jurisdiction (AHJ) and all appropriate agencies, i.e. fire departments, County of San Diego, Department of Environmental Health, Hazardous Materials Division, Air Pollution Control District, etc.

2. Permanent stationary engine generators shall be listed or evaluated to comply with UL 2200. Engine generators evaluated for hazardous locations are evaluated to both UL 2200 and NFPA 496.

3. Generator systems shall comply with the property line sound level limits per applicable AHJ. An acoustical analysis may be required prior to final inspection approval.

4. A plaque shall be installed at the electrical service disconnect indicating type and location of the on-site generator power source(s) and its disconnect location. See the sample plaque in Newsletter 705.10.

5. Generator locations must also comply with Article 430.14, Location of Motors.

Note: Portable generators intended for cord and plug connections are not allowed to be hard-wired or cord-connected to a premise wiring system without a code-compliant method of isolating the wiring service from the Utility Service. In addition, portable generators do not qualify as a required stand-alone or back-up system. Electrical permits are not normally issued for portable generators. However, consult with the appropriate AHJ and the Utility for specific requirements.

In compliance with the California Health & Safety Code, the Utility shall be notified in advance of installing "back-up" systems for review and approval of the transfer device and sequence of operations.

Transformers

Code Reference: 2022 California Electrical Code Article 450
Published: December 1981 Revised: January 2023

Means of Disconnect:

Transformers, other than Class 2 or 3, are required to have means of disconnect on the primary side of the transformer. If the means of disconnect is in a remote location, the disconnect shall be lockable in accordance with Article 110.25 and the transformer must be marked with the location of the disconnecting means. The means of identifying the remote disconnect shall be a plaque made of metal or plastic, with engraved or machine-printed letters in a contrasting color to the plaque, which shall clearly identify the location of the disconnect. The plaque shall be attached to the exterior of the transformer or on an adjacent wall with a method acceptable to the authority having jurisdiction (AHJ) per Article 450.14.

Ventilation:

Transformers in enclosed spaces shall have provisions to maintain an ambient temperature that does not exceed the temperature rating of the transformer. Note: Consideration of the conductor insulation temperature rating must be given in areas containing transformers when the ambient temperature exceeds 86 degrees °F (30 degrees °C). Refer to the ampacity correction factors in Tables 310.15 (B)(1) & (2) when needed. Transformer ventilations may be accomplished by natural or mechanical ventilation, by mechanical cooling, or by other means.

1. Mechanical ventilation that provides for air movement of three cubic feet per minute/per kVA of transformer rating shall be acceptable.

2. Mechanical cooling, which can be demonstrated to maintain an ambient temperature below that of the transformer rating, shall be acceptable.

3. Any other means, including combinations of the above methods which can be demonstrated to maintain an ambient temperature below that of the temperature rating of the transformer, shall be acceptable.

Note: For transformer vault rooms, see Article 450 III.

SDG&E requirements for transformer vaults are contained in the SDG&E's Transformer Vault Specification manual.

Examination of Electrical Equipment Exceeding 1,000 Volts

(Page 1 of 2)
Code Reference: 2022 California Electrical Code Article 490
Published: January 2014 Revised: January 2023

Intent: The San Diego area has seen an increase in the number of primary (systems exceeding 1,000 volts) services and distribution systems in all jurisdictions. The 2016 edition of the California Electrical Code includes a number of requirements for the installation, testing, and grounding of medium-voltage equipment and systems exceeding 1,000 volts nominal. The local authority having jurisdiction (AHJ) may have specific requirements regarding these installations. Consult your local AHJ if there are questions.

Code Requirements (Reference only)

1. Wire methods over 1,000 volts (Article 300.31)
2. Conductors rated 2,001-35kV (Article 311)
3. Grounding of AC systems over 1kV (Article 250, Part X)
4. Equipment over 1,000 volts nominal (Article 490)
5. Surge arresters over 1kV (Article 242, Part III)
6. Requirements for installations over 600 volts nominal (Article 110, Part III)
7. Transformers (Article 450)
8. Outside branch circuits and feeders over 1,000 volts (Article 225, Part III)
9. Substation design, documentation, and required diagram (Article 490.48)
10. PV systems between 1,000 and 1,500 volts (Article 690.7)

Plan, Equipment, Design, & Submittal Requirements

1. Plan submittals are required for all work.
2. Equipment submittals shall be accurate.
3. Design submittals are required from a State of California Licensed Electrical Engineer.

Utility Requirements

- Refer to Electrical Utility Service Equipment Requirements Committee (EUSERC) drawings.
- Medium-voltage service and metering equipment – See SDG&E Service Standards & Guide SG 601-609
- Consult Utility for possible additional requirements for testing.

Examination of Electrical Equipment Exceeding 1,000 Volts

Code Reference: 2022 California Electrical Code Article 490
Published: January 2014 Revised: January 2023

Inspection Requirements

1. Approved plans shall be available at the time of the inspection.
2. Manufacturer's installation instructions shall be available at the time of the inspection.
3. Equipment installed shall be both listed and labeled or field evaluated by an acceptable testing agency. See Electrical Newsletter pg.1 "**Approval of Electrical Equipment"** for additional information.
4. Grounding of Equipment shall meet the requirements of Article 250, Part X.
5. Terminations: When required by design specifications, hi-pot testing of cables, and/or partial discharge testing (to IEEE standards) shall be performed by a qualified company who either meets NETA standards or is NETA accredited.

Existing Systems

1. When working on existing systems, it is necessary to verify that requirements of CEC 250.180 are met.
2. Minimum testing of the existing equipment shall be line-voltage meggering to verify acceptable resistance and identify blatant defects.

Electric Vehicle Charging Systems (EVCS)

Code Reference: 2022 California Electrical Code Article 625
Published: January 2017 Revised: January 2023

The intent of this newsletter is to clarify general requirements for the permitting and inspection of plug-in Electric vehicles (PEV). For specific requirements, consult your authority having jurisdiction (AHJ).

Plan Review and Design Criteria

The following items shall or may, depending on the AHJ's requirements, be required to obtain a permit for an EVCS installation:

General:

1. Plans are required to have electrical sections and a site plan. If a commercial grade system is proposed, then typically, a registered professional engineer may be required to design the electrical system.

2. For residential system level two, or less, consult the AHJ for further information and permitting requirements.

3. Zoning and Planning approvals may require consideration for setbacks, height limitations, parking requirements, open space easements, Utility easements, etc. Consult with the local zoning technician for further information.

4. For PEV charging stations provided as public accommodations facilities or within covered multi-family dwelling units, the designer should consult the California Building Codes for minimum access requirements.

The Electrical Section of the submittal shall include:

1. Provide cover sheet with each page identified for content.

2. Each submitted sheet shall have a page number.

3. Submit the appropriate number of plan sets and supporting documents when applying for permits. Verify with the AHJ the number of plan sets required.

4. Plans shall include the specifications, the level of charging, physical location of the existing electrical equipment, method of wiring, and new EVCS. Plans shall also indicate the applicable design code edition.

5. Plans shall include an electrical line diagram showing the number of EVCS with voltage and kilowatt ratings, the size of all electrical panel bussing and the size of the circuit breaker in amperes, and short circuit rating of equipment (including energy management system when used). Include wiring methods, sizing, grounding, and calculations in conformance with Article 625 and other applicable articles of the CEC.

6. Plans shall also include the manufacturer's data sheets for all equipment. All electrical equipment shall be listed for this purpose. All equipment includes, but is not limited to, inverters, controllers, metering, and interconnection system equipment.

Electric Vehicle Supply Equipment (EVSE)

Code Reference: 2022 California Electrical Code Article 625.48
Published: January 2014 Revised: January 2023

The serving Utility currently supports interconnection of an Electric Vehicle (EV) as a source of electrical energy for the purpose of operating in parallel with the Utility's electrical distribution system. California Electrical Code (CEC) Article 625 will apply.

Use of an EV as an optional source of standby electrical power must meet the requirements of CEC Article 702 and Utility review and approval of the proposed transfer switch is required.

Additional related laws in the State of California are as follows:

- The legislature of the State of California has enacted the California Health and Safety Code, Division 104, Part 15, Sections 119075 through 119090, which is intended to prevent electricity generated by permanent or portable electric generator from back feeding into a Utility electrical system.
- The California Code of Regulations, Title 8, Section 2320.9 states:
  - No electrical power source, permanent or temporary, shall be connected to a premises wiring system, or parts of such a system, unless positive means are used to prevent the transmission of electricity beyond the premises wiring system, or beyond any intentionally segregated parts of such a system. You may consult with the Utility for their requirements to qualify and be approved for an EV interconnection with the Utility distribution system.

When planning for your PEV, consult the Utility for advantageous Time of Use rate schedule information specific to EV charging.

Solar Photovoltaic Systems

Code Reference: 2022 California Electrical Code Article 690

Published: August 2005 Revised: January 2023

The intent of this newsletter is to clarify general requirements for permitting and inspection of Solar Photovoltaic systems. For specific requirements, consult your authority having jurisdiction (AHJ).

Other agencies may have requirements in addition to the following building department requirements, and include, but are not limited to:

- California Center for Sustainable Energy (CSE) – State rebates
- California Department of Housing and Community Development (HCD) – State agency for manufactured homes
- County of San Diego Department of Environmental Health (DEH)
- Fire Districts

Plan Review and Design Criteria

The following items shall or may, depending on the AHJ's requirements, be required to obtain a permit for a PV installation:

General:

1. Plans are required to include both electrical and structural design. The plans shall be designed and stamped in accordance with the Business and Professions Code. www.cab.ca.gov
2. For stand-alone PV systems (not interconnected with the Utility's system), consult the AHJ for further information.
3. If the proposed system is for a manufactured home, the State of California must also be contacted. Permit and inspection will be required from the State.
4. If proposed system is ground-mounted and the parcel has a septic system, you must have Department of Environmental Health approval for the location.
5. Zoning and Planning approvals may be required for consideration of setbacks, zoning height limitations, FAA restrictions, environmentally sensitive areas, brush management areas, open space easements, Utility easements, etc.
6. Supply-side connections require pre-approval by the Utility, the AHJ, and must not violate the panelboard manufacturer's listing. (see newsletter on **Approval of Electrical Equipment**)

The Electrical Section shall include:

1. Provide cover sheet with each page identified for content.
2. Each submitted sheet shall have a page number.
3. Submit appropriate number of plan sets and supporting documents when applying for permits. Verify with AHJ the number of plan sets required.
4. Plans shall include the specifications and physical location of the existing electrical equipment and new PV system. Design plans should also indicate the applicable electrical code edition.
5. An electrical single-line diagram showing the number of photovoltaic panels with voltage and kilowatt output, module series fusing, all disconnects, all inverters with input and output ratings, the size of all electrical panel bussing, and the size of the PV circuit breaker in amperes. Include wiring methods, sizing, grounding, and calculations in conformance with Article 690 and other applicable articles of the CEC.
6. Where a PV system includes Energy Storage System (ESS), ESS equipment shall comply with CEC 706 and CFC 1207.
7. Plans shall also include the manufacturer's data sheets for all equipment. All electrical equipment shall be listed for this purpose. All equipment includes but is not limited to inverters, modules, converters, controllers, and interconnection system equipment.
8. Devices used to ground PV Modules in accordance with CEC 690.43 (A) shall be listed and labeled for use with the specific module used and installed per the module manufacture installation instructions.
9. A plaque identifying the location of all customer self-generation equipment, the service point, the DC disconnect(s), and the AC disconnect for Utility Operation, if required, must be installed on the service equipment per the specifications shown on page 31 of this Newsletter.

The Structural Section shall include:

Plan Review Items:

1. All roof-mounted and ground-mounted solar PV arrays will require an approved plot plan with all property, setback, and easement lines properly marked. Additionally, the location of all overhead power lines shall be shown on the plot plan. Consult with the Utility for clearance requirements from power lines. If the proposed system is roof-mounted, the plans must clearly indicate fire fighter access points and pathways as required by California Building Code (CBC) 3111, California Residential Code (CRC) R324, and California Fire Code (CFC) 1205. An elevation plan may be required. Consult with the AHJ for specific requirements.

2. A plan view of the installation of the PV solar panels including racks or other supports, details of the supporting structure, connections to the roof framing members, and the calculated roof and wind-loading values.

3. A registered architect, structural engineer, or civil engineer shall also stamp any plans requiring, but not limited to, soils reports, high-strength concrete footings, shop-fabricated support structures, field-fabricated ground-mounted support structures or field welding.

4. Check with the AHJ regarding specific requirements.

Design Criteria Items:

1. Dimensioned layout of the arrays and footing details for the supporting structure.

2. All arrays must be attached to either an approved racking system or the proposed support structure and attachment methods must be certified by a State of California licensed civil or structural engineer or subject to AHJ structural plan review and approval.

3. If the roof or wind-loading values exceed 5 pounds per square foot (or 7 pounds per square foot depending on the AHJ's requirement), the engineered system's plans and calculations must be stamped by a registered architect, structural engineer, or civil engineer.

Information on the Utility's requirements for interconnection and Net Energy Metering can be found on their website at www.sdge.com/solar. The Utility may require the customer to provide an AC disconnect(s) that is/are capable of being visibly checked in the open position and be lockable. The AC disconnect(s) is/are to be located immediately adjacent to the electric service and meter location. Contact the Utility for exceptions to the location of the AC disconnect(s) location.

PV systems will not be authorized for interconnection until all Utility requirements have been completed which includes the Utility receiving an inspection clearance from the AHJ.

Alternate Sources of Power

Code Reference: 2022 California Electrical Code Article 705.10
Published: August 2005 Revised: January 2023

This is a sample of the plaque or directory required when there is an alternate source of power connected to the premises wiring system. For this plaque example, a Solar photovoltaic System is the alternate source of power.

A single plaque shall properly reflect the location of all alternate power sources, the disconnects, and the utility service point(s). The plaque or directory shall be manufactured in metal or plastic, suitable for the environment, with engraved or machine-printed lettering or electro-photo-plating in a contrasting color. The plaque shall include a properly oriented footprint of the entire building. The plaques shall be located at each source disconnect location and securely fastened by a permanent means acceptable to the AHJ.

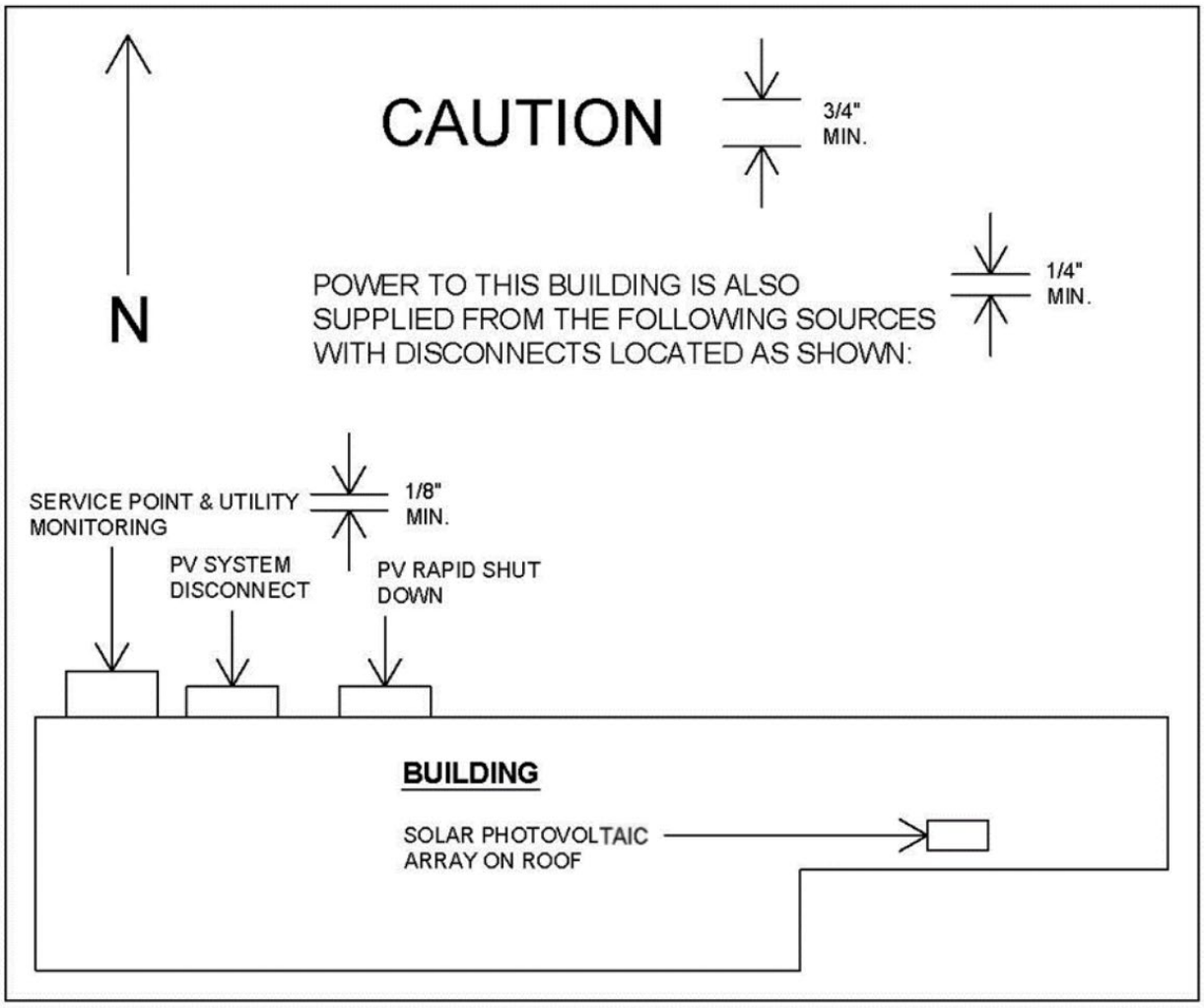

A single plaque shall properly reflect the location of all alternate power sources, the disconnects, and the utility service point(s). The plaque or directory shall be manufactured in metal or plastic, suitable for the environment, with engraved or machine-printed lettering or electro-photo-plating in a contrasting color. The plaque shall include a properly oriented footprint of the entire building. The plaques shall be located at each source disconnect location and securely fastened by a permanent means acceptable to the AHJ.

Index

Subject **Page #**

Approval of Electrical Equipment....1
Busways....19
Concrete-Encased Electrode (Rebar)....16
Electric Vehicle Charging Systems (EVCS)....26
Electric Vehicle Supply Equipment (EVSE)....27
Electrical Equipment Rooms....3
Electrical Service Plan Check Requirements....7
Examination of Electrical Equipment Exceeding 1,000 Volts....24–25
Generators....21–22
Ground Rods....17
Ground-Fault Performance Testing....13–14
Grounding Electrode System & Grounding Electrode Conductor....15
Identifying Conductors....5
Number of Services....8–11
Dedicated Equipment Space-Outdoor....4
Service Equipment – Disconnecting Means....12
Solar Photovoltaic Systems....28–31
Switchboards & Panelboards....20
Torque Requirements....2
Transformers....23
Unconditioned Enclosed Patio....6
Underground Metal Conduit....18