2023
OVERHEAD FIELD MAINTENANCE ONLY

Historical Record: 5/19/2023
External Version



SDGE™

GENERAL INFORMATION	100
PRACTICES	200
POLES, ARMS & HARDWARE	300
DISTRIBUTION POLE TOPS	400
TELECOMMUNICATIONS SCADA	500
SECONDARIES, SERVICES	600
CONDUCTOR DATA & ACCESSORIES	700
SAG	800
GUYING	900
GROUNDING, BONDING	1000
TRANSFORMERS, BOOSTERS	1100
SECTIONALIZING, ARRESTERS	1200
CAPACITORS, REGULATORS	1300
CABLE POLES	1400
LIGHTING	1500
WILDLIFE PROTECTION	1600
SPACER CABLE SYSTEM	1700
ENGINEERED STEEL POLES	1800
MISCELLANEOUS EQUIPMENT	1900
COVERED CONDUCTOR	2000
DISCLAIMER & CONTACTS	
SUMMARY OF CHANGES	
LEGACY OVERHEAD FMO	

ATTENTION:

- The contents held within this book are for field maintenance only. Every effort should be made, when possible, to upgrade to current standards.

- Due to the age of the documentation, this book is not a 100% search-able currently. This may be resolved later.

IF YOU HAVE ANY QUESTIONS REGARDING THE CONTENT OF THESE MANUALS, PLEASE EMAIL CONSTRUCTIONSTANDARDSADMINISTRATORS@SEMPRAUTILITIES.COM OR CONTACT:

MANUAL	CONTACT	EMAIL ADDRESS	PHONE
Electric Distribution Design Manual	Martha Lachmayr	mlachmayr@sdge.com	(858) 654-8245
Overhead Construction Standards	Mike Forchette	mforchette@sdge.com	(619) 244-7495
Service Standards & Guide	Israel Juarez	ijuarez@sdge.com	(858) 636-3941
Electric Vehicle Supply Equipment Standards	Israel Juarez	ijuarez@sdge.com	(858) 636-3941
Underground Construction Standards	Eddie Alcobia	ealcobia@sdge.com	(619) 574-4988
Electric Standard Practices	Joey Kucharyski	jkucharyski@sdge.com	(760) 566-5919
Tool Catalog	Roy Guilao	rguilao@sdge.com	(760) 672-6211

REV. January 20, 2023

MAIN TABLE OF CONTENTS

SUMMARY OF CHANGES

DATE	STANDARD PAGES	FILE NAME
01/25/19	NEW FORMAT RELEASE	OHFMO2019v0125.pdf
02/21/19	1221, 1225, 1226, 1270, 1432, 1441, 1451	OHFMO2019v0221.pdf
03/19/19	1201, 1208, 1401, 1432	OHFMO2019v0319.pdf
04/20/19	223	OHFMO2019v0419.pdf
05/23/19	201, 212, 218, 220, 221	OHFMO2019v0523.pdf
06/13/19	NO UPDATES	OHFMO2019v0613.pdf
07/11/19	1705	OHFMO2019v0711.pdf
07/15/19	530	OHFMO2019v0715.pdf
07/18/19	MOVED OH LEGACY FMO INTO THIS BOOK	OHFMO2019v0718.pdf
08/19/19	301, 388, 392, 1201, 1207, 1212	OHFMO2019v0819.pdf
09/20/19	NO UPDATES	OHFMO2019v0920.pdf
10/25/19	LEGACY STANDARDS: 100, 200, 500, 600, 1100, 1200, 1300, 1400	OHFMO2019v1025.pdf
01/24/20	COVER PAGE	OHFMO2020v0124.pdf
04/24/20	1201,1208-MOVED TO CURRENT STANDARDS, 1401, 1487	OHFMO2020v0424.pdf
05/22/20	INTERNAL SERVER UPGRADE	OHFMO2020v0522.pdf
07/24/20	1501, 1511	OHFMO2020v0724.pdf
08/21/20	301, 363	OHFMO2020v0821.pdf
10/23/20	1501, 1503	OHFMO2020v1023.pdf
01/22/21	COVER PAGE, DISCLAIMER	OHFMO2021v0122.pdf
02/19/21	1101, 1194	OHFMO2021v0219.pdf
04/23/21	301, REMOVED 388	OHFMO2021v0423.pdf
05/21/21	401, 433	OHFMO2021v0521.pdf
08/20/21	1101, 1192	OHFMO2021v0820.pdf
09/24/21	1501, 1509	OHFMO2021v0924.pdf
12/17/21	1230	OHFMO2021v1217.pdf
01/21/22	Cover Page	OHFMO2022v0121.pdf
02/25/22	1201, 1207, 1212, 1215, 1330	OHFMO2022v0225.pdf
03/25/22	301, 390, 1001, 1002	OHFMO2022v0325.pdf
05/20/22	1301, 1316	OHFMO2022v0520.pdf
11/22/22	301, 397, 701, 789, 1101, 1190, 1601, 1660	OHFMO2022v1122.pdf
01/20/23	COVER PAGE, DISCLAIMER	OHFMO2023v0120.pdf
03/24/23	390, 501, 530, 535, 1156	OHFMO2023v0324.pdf
04/21/23	701, 783, 901, 974, 1101, 1170, 1201, 1243, 1301, 1360	OHFMO2023v0421.pdf
05/19/23	1601, 1650, 1651, 1652, 1653	OHFMO2023v0519.pdf

MAIN TABLE OF CONTENTS

ARCHIVED BOOKS AVAILABLE ON THE INTERNAL VERSION

PAGE(S)	SUBJECT

MAIN TABLE OF CONTENTS

No FMO content available at this time.

© 1998 - 2020 San Diego Gas & Electric Company. All rights reserved. Removal of this copyright notice without permission is not permitted under law.

REV	CHANGE	BY	DSGN	APPV	DATE	REV	CHANGE	BY	DSGN	APPV	DATE
C						F					
B						E					
A						D					

PAGE	SUBJECT
201	TABLE OF CONTENTS
203	DISTRIBUTION STATION NUMBERING
204	OVERHEAD DISTRIBUTION SWITCH NUMBERING
212	GFMS SUMMARY OPERATING MAP SYMBOL
218	POLE GUARD RAIL
220	VERTICAL SEPARATION OF CROSSARMS
221	VERTICAL SEPARATION OF DIFFERENT CIRCUITS
223	AERIAL CABLE, VERTICAL CLEARANCE FROM OPEN WIRE CONDUCTORS ON SAME POLES
269	12KV SINGLE CIRCUIT TRANSPORTATION

MAIN TABLE OF CONTENTS

© 1998 - 2019 San Diego Gas & Electric Company. All rights reserved. Removal of this copyright notice without permission is not permitted under law.

REV	CHANGE	BY	DSGN	APPV	DATE	REV	CHANGE	BY	DSGN	APPV	DATE
C						F					
B	EDITORIAL CHANGES	PEI	-	-	04/22/2019	E					
A	ORIGINAL ISSUE	JS	IL	MDJ	07/13/2016	D					

Indicates Latest Revision | Completely Revised | New Page X | Information Removed

SHEET 1 OF 1

SDG&E ELECTRIC OVERHEAD CONSTRUCTION STANDARDS

PRACTICES SECTION
TABLE OF CONTENTS

FMO
OH201.1

FIELD MAINTENANCE ONLY

REVISION HISTORY:

7/13/2016: All versions prior to 2016 are superseded by their current version found inside the Overhead Construction Standard Manual.

TABLE OF CONTENTS

© 1998 - 2016 San Diego Gas & Electric Company. All rights reserved. Removal of this copyright notice without permission is not permitted under law.

REV	CHANGE	BY	DSGN	APPV	DATE	REV	CHANGE	BY	DSGN	APPV	DATE
C						F					
B						E					
A	ORIGINAL ISSUE	JS	IL	MDJ	7/13/2016	D					

X Indicates Latest Revision | Completely Revised | New Page | Information Removed

SHEET 1 OF 1

SDG&E ELECTRIC OVERHEAD STANDARD

DISTRIBUTION STATION NUMBERING

FMO OH 203

I. STATION NUMBERS GIVE A UNIQUE NUMBER TO, AND BRIEFLY DESCRIBE, DISTRIBUTION STATIONS. ALL STATION NUMBERS ARE ASSIGNED BY THE TRANSFORMER CLERK (EXT 1217 OR MICROWAVE 02167).

II. THE STATION NUMBER IS BROKEN UP INTO THREE PARTS: CIRCUIT; NUMBER; AND SUFFIX. [40 – 118 – MRO (CIRCUIT NUMBER SUFFIX)]

CIRCUIT – THE CIRCUIT DESIGNATION DESCRIBES THE VOLTAGE THAT FEEDS THE STATION. IF IT IS ONLY NUMERIC CHARACTERS, THEN THE CIRCUIT ORIGINATING AT THE SUBSTATION IS 12KV. IF IT HAS ALPHABETIC CHARACTERS IN IT, THEN THE CIRCUIT VOLTAGE IS 4 OR 2.4KV. (SEE NOTE F).

EXAMPLES:

40 – CIRCUIT 40 IS 12KV

NO1 – NORTH OTAY ONE IS 4KV

NUMBER – CONTAINS ONLY NUMERIC CHARACTERS. THIS PART IS ARBITRARY.

EXAMPLES:

118 – NUMBER SELECTED BY TRANSFORMER CLERK

908 – NUMBER SELECTED BY TRANSFORMER CLERK

SUFFIX – THE SUFFIX IS DESCRIPTIVE OF THE STATION, (SEE NOTE C) HIERARCHY (ARRANGEMENT IN SERIES) FOR COMBINING SUFFIXES IS:

I. NUMERIC CHARACTERS (1–99) (SEE NOTE D)
II. M, V, B, BU, G, R, L, SW, UP, N
III. RO, RC, SL
IV. Y, X, C
V. S

FOR FIELD MAINTENANCE ONLY

EXAMPLES:

C – CAPACITOR STATION
M – 12KV PRIMARY METERED STATION
MRO – METERED STREET LIGHT STATION
D – 4 OR 2.4KV STATION THAT IS FED FROM A STEPDOWN STATION SERVING ONLY 1 CUSTOMER OR ONLY PRIMARY METERED CUSTOMER(S)
1M – 4 OR 2.4KV PRIMARY METERED STATION FED FROM A STEPDOWN STATION

III. THESE PARTS ARE BROUGHT TOGETHER AS FOLLOWS:

A. WHEN WRITING THE STATION NUMBERS ON OTHER THAN FORMS FOR KEYPUNCH USE, EACH PART OF THE STATION NUMBER IS SEPARATED BY A DASH.

EXAMPLES:

40–118	12KV TRANSFORMER STATION
40–216–C	12KV CAPACITOR STATION
NO1–118	4 OR 2.4KV TRANSFORMER STATION
NO1–216–MRO	4 OR 2.4KV METERED STREET LIGHT STATION
40–908–D	12 TO 4KV OR 12 TO 2.4KV STEPDOWN STATION (INDICATED BY D) (SEE NOTES A, B & F)
40–118–2G	12KV REGULATOR STATION, 2ND POLE OF 3–1Ø REGULATORS ON 3 POLES.

B. THE FOLLOWING FORMS WILL BE USED FOR KEYPUNCHING AND THE STATION NUMBER IS REQUIRED ON THEM:

1. APARTMENT LIST	101–4145A	7. NEW SERVICE INPUT DOCUMENT	124–10152
2. CIS MASTER STATION UPDATE	124–13152	8. STATION FILE CUTOVERS	111–391
3. CUSTOMER NEW SERVICE REQUEST	124–6201	9. TRANSFORMER TAG	120–5240A
4. ELECTRIC CONSTRUCTION ORDER	(NO FILE NUMBER)	10. TRANSFORMER STATION FILE PUNCH FORM	110–591/21A
5. ELECTRIC SERVICE ORDER	107–212L	11. TAG NOTICE TO ELECTRIC TROUBLEMAN	(TEMPORARY FORM)
6. GAS/ELECTRIC SET ORDER	124–610	12. CURRENT STATION/CUSTOMER TIE	(COMPUTER LISTING)

	[X] Indicates Latest Revision	Completely Revised	New Page	Information Removed
ISSUE 1993 DATE 1–1–89 APPD /	SDG&E ELECTRIC STANDARDS DISTRIBUTION STATION NUMBERING			OH 299.001 ~~UG 3199.001~~ SUPERCEDES 203.1 (1–1–93)

TABLE OF CONTENTS

C. THE RULES FOR FILLING IN THE STATION NUMBER ON THESE FORMS ARE AS FOLLOWS:

1. ALL ALPHABETIC CHARACTER O'S ARE TO BE WRITTEN WITH A SLANT MARK; i.e., Ø. THIS IS TO AVOID CONFUSION WITH THE NUMERIC CHARACTER ZERO.

2. INSTRUCTIONS FOR FILLING IN FORMS.

   a. THE CIRCUIT FIELD (COLUMN). SEE TABLE 1 BELOW.
   ALPHABETIC CHARACTERS ARE TO BE LEFT JUSTIFIED AND THE NUMERIC CHARACTERS RIGHT JUSTIFIED (SEE NOTE E). IN MOST CASES, THERE WILL BE BLANK COLUMNS IN THIS FIELD.

   b. THE NUMBER FIELD (COLUMN). SEE TABLE 1 BELOW.
   THE NUMERIC CHARACTERS ARE RIGHT JUSTIFIED AND ZEROS ARE ADDED TO COMPLETE FIELD.

   c. THE SUFFIX FIELD (COLUMN). SEE TABLE 1 BELOW.
   IF STATION NUMBER HAS NO SUFFIX, LEAVE THIS BLANK.
   THE ENTIRE PROPERLY FORMED SUFFIX IS LEFT JUSTIFIED AND ZEROS ARE ADDED TO COMPLETE FIELD.

EXAMPLES OF STATION NUMBERS WRITTEN ON FORMS:

TABLE 1

	CIRCUIT	NUMBER	SUFFIX	
	0040	0118		
	0040	0216	C00	0
*	NØ01	0118		
*	NØ01	0216	MRØ0	*
	0040	0908	D00	0
	0040	0908	3100	

FOR FIELD MAINTENANCE ONLY

NOTES:

Ⓐ REFER TO THE DISTRIBUTION ENGINEER BEFORE ADDING LOAD TO THESE AREAS TO ENSURE THAT THE STEPDOWN STATION IS NOT OVERLOADED.

Ⓑ INDICATES A 2.4 OR 4KV STEPDOWN STATION SERVING ONLY ONE CUSTOMER OR ONLY PRIMARY METERED CUSTOMER(S).

Ⓒ SEE PAGE 299.126 OVERHEAD OR 3199.126 UNDERGROUND – ABBREVIATIONS & CODES, STATION SUFFIX FOR SUFFIX MEANINGS.

Ⓓ NUMERIC CHARACTERS 1 – 9 ARE RESERVED FOR STATIONS WITH ADDITIONAL SUFFIXES.

Ⓔ RIGHT AND LEFT JUSTIFICATION MAY BE A NEW TERM FOR MOST PEOPLE. RIGHT JUSTIFIED MEANS TO START WITH THE RIGHT MOST CHARACTER OF THE GROUP AND PUT IT INTO THE RIGHT MOST COLUMN, WORKING LEFT UNTIL ALL CHARACTERS ARE USED UP AND IN ALL REMAINING BLOCKS AND ZEROS. SIMILARLY FOR LEFT JUSTIFIED, ONLY WORK FROM LEFT TO RIGHT AND ADD ZEROS TO FILL UNUSED BLOCKS.

EXAMPLE: RIGHT JUSTIFY: 198

STEP 1				8	
STEP 2			9	8	
STEP 3		1	9	8	
FINAL STEP 4	0	1	9	8	ADD ZERO IN REMAINING BLOCK(S)

LEFT JUSTIFY ALPHABETIC CHARACTERS, RIGHT JUSTIFY NUMERIC CHARACTERS: NO1

STEP 1		N			
STEP 2	*	NØ			ALPHABETIC CHARACTERS LEFT JUSTIFIED
STEP 3	*	NØ		1	NUMERIC CHARACTER RIGHT JUSTIFIED
FINAL STEP 4		NØ	0	1	ADD ZERO IN REMAINING BLOCK(S)

Ⓕ STEPDOWN STATIONS WILL BE GIVEN NAME EXCEPT FOR THOSE SERVING ONLY ONE CUSTOMER OR ONLY PRIMARY METERED CUSTOMER(S)

* SEE III, C, 1.

TABLE OF CONTENTS

FIELD MAINTENANCE ONLY

REVISION HISTORY:

8/16/2016: All versions prior to 2016 are superseded by their current version found inside the Overhead Construction Standard Manual.

TABLE OF CONTENTS

© 1998 - 2016 San Diego Gas & Electric Company. All rights reserved. Removal of this copyright notice without permission is not permitted under law.

REV	CHANGE	BY	DSGN	APPV	DATE	REV	CHANGE	BY	DSGN	APPV	DATE
C						F					
B						E					
A	ORIGINAL ISSUE	JS	IL	MDJ	8/16/2016	D					

X Indicates Latest Revision | Completely Revised | New Page | Information Removed

SHEET 1 OF 1

SDG&E ELECTRIC OVERHEAD STANDARD

OVERHEAD DISTRIBUTION SWITCH NUMBERING

FMO OH 204

SCOPE: THIS STANDARD EXPLAINS THE METHOD OF OVERHEAD DISTRIBUTION SWITCH NUMBERING.

1. EACH SWITCH IS IDENTIFIED BY A UNIQUE NUMBER THAT INDICATES THE CIRCUIT(S) ON WHICH IT OPERATES.

2. THERE ARE TWO TYPES OF SWITCH NUMBERS: **LINE** AND **TIE**

2.1 **LINE SWITCH NUMBERS** ARE BROKEN UP INTO TWO PARTS:

CIRCUIT AND NUMBER $\frac{\text{375}}{\text{CIRCUIT}} - \frac{\text{40–L}}{\text{NUMBER}}$

CIRCUIT – DESCRIBES THE VOLTAGE AND CIRCUIT NUMBER TO WHICH THE LINE SWITCH IS CONNECTED. IF THE CIRCUIT CONTAINS ONLY NUMERIC CHARACTERS, THEN THE CIRCUIT VOLTAGE IS 12KV. IF IT CONTAINS ALPHABETIC CHARACTERS (e.g. CD10), THEN THE CIRCUIT VOLTAGE IS 4 OR 2.4KV.

NUMBER – CONTAINS ONLY NUMERIC CHARACTERS, OR, NUMERIC CHARACTERS FOLLOWED BY AN "L". THE "L" INDICATES THAT THIS IS A LOADBREAK SWITCH. THE NUMERIC PORTION IS ARBITRARY AND EACH NUMBER SHALL NOT BE ASSIGNED TO MORE THAN ONE SWITCH FOR EACH CIRCUIT.

EXAMPLES:

375–40–L INDICATES A LINE SWITCH ON 12KV CIRCUIT 375 WITH AN ARBITRARY NUMBER 40, AND LOADBREAK CAPABILITY.

GA1–2 INDICATES A LINE SWITCH ON 4KV OR 2.4KV CIRCUIT GA 1 WITH AN ARBITRARY NUMBER 2, AND NO LOADBREAK CAPABILITY.

2.2 **TIE SWITCH NUMBERS** ARE BROKEN UP INTO THREE PARTS:

CIRCUIT; ALPHA NUMERIC; AND CIRCUIT $\frac{\text{375}}{\text{CIRCUIT}} - \frac{\text{T1}}{\text{ALPHA/NUMERIC}} - \frac{\text{376}}{\text{CIRCUIT}}$

CIRCUIT – DESCRIBES THE VOLTAGE AND CIRCUIT NUMBERS THE TIE SWITCH CONNECTS **AS STATED ABOVE.**

ALPHA/NUMERIC – ALWAYS CONTAINS THE ALPHA CHARACTER "T" AND IS FOLLOWED BY A BY A NUMBER (1,2,3, ETC.) WHICH IS CONSECUTIVELY ASSIGNED FOR TIE SWITCHES BETWEEN THE SAME TWO CIRCUITS. EACH ALPHA/NUMERIC IDENTIFICATION SHALL NOT BE ASSIGNED TO MORE THAN ONE TIE SWITCH BETWEEN THE SAME TWO CIRCUITS. TIE SWITCHES WITH THE NUMBER FOLLOWED BY AN "L" HAVE LOADBREAK CAPABILITY.

EXAMPLES:

85–T1–380 INDICATES THE FIRST TIE SWITCH BETWEEN CIRCUITS 85 & 380.

86–T2–87–L INDICATES THE SECOND TIE SWITCH, WITH LOADBREAK CAPABILITY, BETWEEN CIRCUITS 86 & 87.

88–T–89 INDICATES THE ONLY TIE SWITCH INSTALLED BEFORE 4–1–77, BETWEEN CIRCUITS 88 & 89. IF INSTALLED AFTER 4–1–77, THIS TIE SWITCH SHALL BE NUMBERED 88–T1–89.

3. WHERE SWITCHES IN PARALLEL ARE INSTALLED AS LINE OR TIE SWITCHES, EACH SWITCH WILL BE ASSIGNED AN INDIVIDUAL NUMBER AS DESCRIBED IN PARAGRAPH 2.

4. SWITCH NUMBERS WILL NOT BE ASSIGNED TO NORMALLY OPEN, BRIDGED, OR FUSED CUTOUTS, UNLESS THEY ARE USED FOR TIE PURPOSES.

FOR FIELD MAINTENANCE ONLY

© 1998 - 2015 San Diego Gas & Electric Company. All rights reserved. Removal of this copyright notice without permission is not permitted under law.

TABLE OF CONTENTS

OH212 FIELD MAINTENANCE ONLY

ALL VERSIONS LISTED IN FMO ARE SUPERSEDED BY THEIR CURRENT VERSION FOUND INSIDE THE OVERHEAD CONSTRUCTION STANDARD MANUAL.

REVISION HISTORY:

04/22/2019: FORMATTING UPDATE

07/13/2016: MOVED TO FMO.

TABLE OF CONTENTS

© 1998 - 2019 San Diego Gas & Electric Company. All rights reserved. Removal of this copyright notice without permission is not permitted under law.

REV	CHANGE	BY	DSGN	APPV	DATE	REV	CHANGE	BY	DSGN	APPV	DATE
C						F					
B	FORMATTING UPDATE	PEI	-	-	04/22/2019	E					
A	ORIGINAL ISSUE	JS	IL	MDJ	07/13/2016	D					

X Indicates Latest Revision | Completely Revised | New Page | Information Removed

SHEET 1 OF 1

SDG&E ELECTRIC OVERHEAD CONSTRUCTION STANDARDS

GFMS
SUMMARY OPERATING MAP SYMBOL TABLE

FMO OH212

TABLE OF CONTENTS

BOOST/BUCK (OH)

123 342B
100HR
P377016

FUSE BRIDGED (UG)

3 BRGD

PRIMARY METERING STATION (OH)

123-234M
P77675

SWITCH (OH) GANG OPERATED

123 412
P77576

OPEN TO ADJACENT CIRCUIT (UG)

CIRCUIT 251 OPEN

FOR FIELD MAINTENANCE ONLY

INLINE SWITCH AND FUSE

3 80A
241 3
P23769

TIE FUSE

AM1-T1-RO3
P123456

CABLE POLE

P233679

FUSE WITH BY-PASS (OH)

123-45 (OPEN)
3 80A
P67700

PRIMARY METERING STATION (UG) W/CUS OWNED STRUCTURE

123 345M
C12345 CO

SWITCH (OH) GANG OPERATED (SCADA)

SCADA 95
123 17
P67778

PAD MOUNTED SWITCH AND FUSE

3 80A
483 11

FUSE D&W

3 80A D&W
P234673

CABLE POLE (FUSED)

3 150A
P227692

SWITCH ON/OFF (UG)

123-324

GROUNDING BANK (OH)

123-2540B

SERVICE RESTORER WITH BY-PASS (OH)

123-25 (OPEN)
123 24R
P75678

SWITCH HOOK STICK (OH)

123-234
P76455

NEUTRAL

FUSE (OH)

10A
P17723

ELECTRONIC SECTIONALIZER (OH)

3-100A
P5896*

FAULT INDICATOR

100A

CAPACITOR (OH)
CW - FIXED
CW - SWITCHED
CW - SWITCHED, N MANUAL MODE

123 435CW
*200KVAR
P78707

GROUNDING BANK (UG)

123 365GB

REGULATOR BYPASS WITH DISCONNECTS (OH)

123-123G
100A
P44487

FUSE-BRIDGED (O.H.)

3 BRGD
P57064

CUSTOMER GENERATION

CG1C3023

CG1C3023
EF
939 COAST BLVD
250 KW

SIREN (FOR SAN ONOFRE)

DCCS
D6954127

CAPACITOR (UG)
CW SWITCHED
CW SWITCHED, N MANUAL MODE

123-234CW
*200KVAR

REGULATOR (OH) UN BYPASSED

123-123G
100A
P67423

REGULATOR INDUCTION (OH)

123-123G
P87219

OPEN TO ADJACENT CIRCUIT (OH)

CIRCUIT 123 OPEN

PAD MOUNTED SUB

JOHNSON
STEP DOWN
12/4 KV
2000 KVA
HIGH FUSING: 150A
LOW FUSING: NONE
FEED: CIR.552
C104329

POLE MOUNTED SUB

MISSION BEACH
STEP DOWN
12/4 KV
300 KVA
HIGH FUSING: 3-30A
LOW FUSING: NONE
FEED: CIR. 5R
P2321269883

© 1998 - 2019 San Diego Gas & Electric Company. All rights reserved. Removal of this copyright notice without permission is not permitted under law.

REV	CHANGE	BY	DSGN	APPV	DATE	REV	CHANGE	BY	DSGN	APPV	DATE
C						F					
B	FORMATTING UPDATE	PEI	-	-	04/22/2019	E					
A	ORIGINAL ISSUE	-	TR	MF	10/31/2006	D					

X Indicates Latest Revision | Completely Revised | New Page | Information Removed

SHEET
1 OF 9

SDG&E ELECTRIC OVERHEAD AND UNDERGROUND STANDARDS

GFMS
SUMMARY OPERATING MAP SYMBOL TABLE

FMO
OH212.1
UG3112.1

TABLE OF CONTENTS

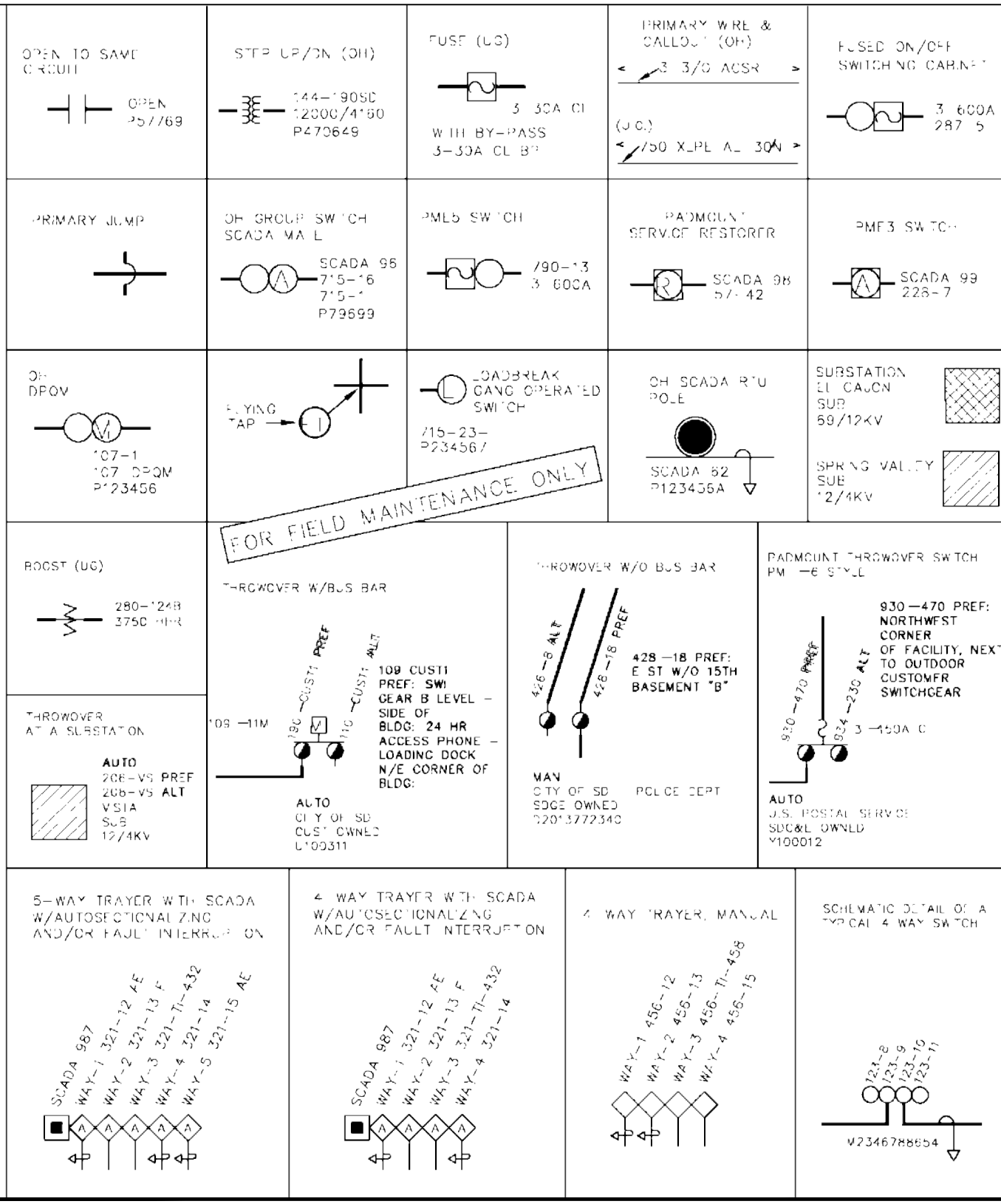

© 1998 - 2019 San Diego Gas & Electric Company. All rights reserved. Removal of this copyright notice without permission is not permitted under law.

REV	CHANGE	BY	DSGN	APPV	DATE	REV	CHANGE	BY	DSGN	APPV	DATE
C						F					
B	FORMATTING UPDATE	PEI	-	-	04/22/2019	E					
A	ORIGINAL ISSUE	-	TR	MF	12/03/2005	D					

X Indicates Latest Revision | Completely Revised | New Page | Information Removed

SHEET 2 OF 9

SDG&E ELECTRIC OVERHEAD AND UNDERGROUND STANDARDS

GFMS
SUMMARY OPERATING MAP SYMBOL TABLE

FMO
OH212.2
UG3112.2

TABLE OF CONTENTS

PME-3

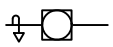

712-19 1000A
D130145

PME-3 WITH SCADA

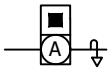

1000A
RTU 178
SCADA 178
435-21 1000A
D131755

PME-10

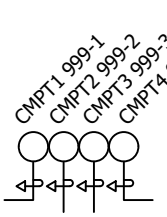

1000A
1000A
1000A
1000A
D123456

PME-11 WITH SCADA
W/AUTOSECTIONALIZING

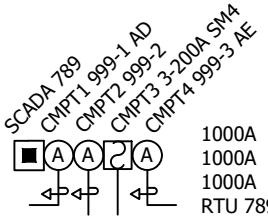

1000A
1000A
1000A
RTU 789
D169065

6-WAY SWITCH W/3 FAULT
INTERUPTERS & SCADA

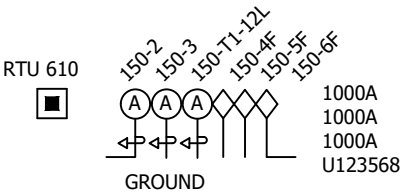

1000A
1000A
1000A
U123568

PME-9

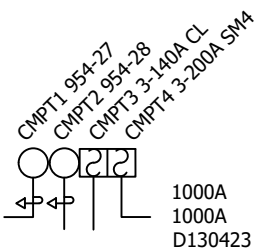

1000A
1000A
D130423

PME-10 WITH SCADA
W/AUTOSECTIONALIZING

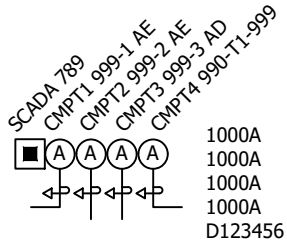

1000A
1000A
1000A
1000A
D123456

3-WAY PADMOUNT SWITCH
W/GROUND

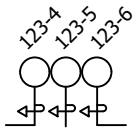

1000A
1000A
1000A
D123477

4-WAY SWITCH W/GROUND

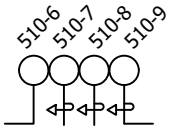

1000A
1000A
1000A
H775837

4-WAY SWITCH W/GROUND SCADA

RTU 780
D659321

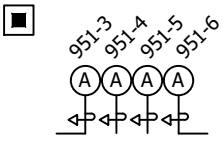

1000A
1000A
1000A
1000A
H785477

PME-9 WITH SCADA
W/AUTOSECTIONALIZING

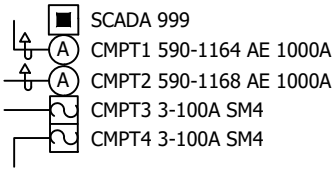

D131370

PME-11

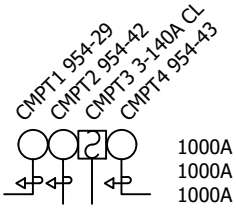

1000A
1000A
1000A
D130489

3-WAY PADMOUNT SWITCH
W/GROUND SCADA

RTU 611
D678901

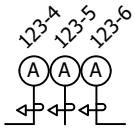

1000A
1000A
1000A
D123477

FOR FIELD MAINTENANCE ONLY

PME SOURCE TRANSFER SCADA

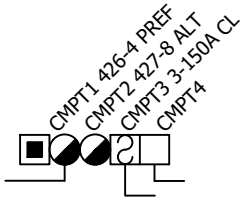

SCADA 56
MAN
SDGE OWNED
D100896

© 1998 - 2019 San Diego Gas & Electric Company. All rights reserved. Removal of this copyright notice without permission is not permitted under law.

REV	CHANGE	BY	DSGN	APPV	DATE	REV	CHANGE	BY	DSGN	APPV	DATE
C						F					
B	FORMATTING UPDATE	PEI	-	-	04/22/2019	E					
A	ORIGINAL ISSUE	-	TR	MF	12/03/2005	D					

X Indicates Latest Revision | Completely Revised | New Page | Information Removed

SDG&E ELECTRIC OVERHEAD AND UNDERGROUND STANDARDS

SHEET
3 OF 9

GFMS
SUMMARY OPERATING MAP SYMBOL TABLE

FMO
OH212.3
UG3112.3

TABLE OF CONTENTS

BOOST STATION
155-76B
3750 HHR
D2791269123

600 AMP EXTENSION SPLICE
M123456
3-ES

CAPACITOR STATION
CW - SWITCHED
CM - SWITCHED, IN MANUAL MODE
124-61CW
900 KVAR
D2617473210

CIRCUIT (CABLE)
30/#2PECN CU 100.

CONNECTORS LD. BREAK ELBOWS
395-76
D2617673212

CABLE TAPS (LD. BREAK ELBOWS)
H2617673212
3314 .3-4

PIGGY BACK ELBOWS
224-73
1-25 HDD
D3127573322
2-PB

"T" CONNECTOR W/200 AMP LBE
H3217573424
3316 3-T
W/200A LB CAPABILITY
H225678
3316

HAND SPLICE
T SPLICE
H321773326
3314 .1-HS
1-TS

STRAIGHT CONNECTOR TRANSITION MODULE
M3217773326
3326 .1-SC
1-TM

"T" CONNECTOR
H3217773326
3314 .3-T

"Y" CONNECTOR
H3217833734
3314 .1-Y

PAD MOUNTED SUB
JOHNSON
STEP-DOWN
12/4 KV
2000 HPP
HIGH FUSING: 1-150A
LOW FUSING: -NONE
FEED: CIR. 552
D104329

OPEN/SAME CIRCUIT
OPEN
44-68
1-500HAL
D3112559335

600A JUNCTION BAR W/GROUNDING POINT
3-TG

PASS THROUGH
H3227233832
3314 .3-PT

MANHOLE
M2468176543
3324

(LIVE FRONT) CONNECTIONS
270-77
1-50 NEP
D3237333832

(LIVE FRONT)
T
D3237433835

PRIMARY METERING STATION (UG)
CUSTOMER OWNED STATION (UG)
D123456 CO
123-345M
M (STRESS CONE)

OPEN/DIFFERENT CIRCUIT
CIR 50 OPEN
H5470873521
3314 3-4

PAD D3407672348

PRIMARY ▲ TERMINALS
SECONDARY △

PRIMARY HANDHOLE
H2735784212
3315

GROUNDING BANK
800-632GB
D2175075201

SDGE OWNED
D346678
123-456M
M (600A TEE)
M (200A LB ELBOW)

STEP DOWNSTATION
125-201 SD
12000/2400/4160Y
D2185271210

STEP UP STATION
521-102SU
12000/2400/4160Y
D1581210217

SUBSTATION
EL CAJON SUB
69/12KV

SUBSTATION
SPRING VALLEY
12/4 KV

SUBSURFACE ENCLOSURE
S2345678690
3399

SUBSURFACE SWITCH ON/OFF
800-13
M3120560124
3322

FUSED ON/OFF SWITCH PAD MOUNTED
200-10
3-80A
D2335479573

HOOKSTICK SWITCH ON A CABLE POLE
H
122-8
P13064

GANG OPERATED SWITCH ON A CABLE POLE
113-10
P323040

FOR FIELD MAINTENANCE ONLY

FUSED ELBOWS
1-18A F.E.
900-75
1-25 NDD
D2918276127
3-30A F.E.
H2617673222
3314 .3-4

CONNECTOR (DEAD FRONT)
155-62
1-75YES
S3217773324
3399

CUSTOMER GENERATION
CG
CG01-310-599

FUSE CABINET
3-80A
D3124476143
WITH BY-PASS
3-30A CL BP
D1234567890

CABLE POLE
1-30A C.L.
P767412

BRIDGED FUSE
1-BRGD
D2454576262
3-BRGD
P10450

REGULATOR STATION BYPASS
715-117G
200A
D1404575271
3324
UNBYPASS
BY1-110G
100A
D2147536087
3322

© 1998 - 2019 San Diego Gas & Electric Company. All rights reserved. Removal of this copyright notice without permission is not permitted under law.

REV	CHANGE	BY	DSGN	APPV	DATE	REV	CHANGE	BY	DSGN	APPV	DATE
C						F					
B	FORMATTING UPDATE	PEI	-	-	04/22/2019	E					
A	ORIGINAL ISSUE	-	MF	JJ	05/22/2007	D					

X Indicates Latest Revision | Completely Revised | New Page | Information Removed

SDG&E ELECTRIC OVERHEAD AND UNDERGROUND STANDARDS

GFMS
OPERATING MAP SYMBOL TABLE

FMO
OH212.4
UG3112.4

TABLE OF CONTENTS

1Ø PAD MOUNTED (DEAD FRONT) RADIAL



159-253
1-75 HDD
D1479273159

1Ø PAD MOUNTED (DEAD FRONT) LOOP

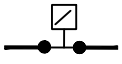

561-173
1-25 NDD
D106009

1Ø PAD MOUNTED (DEAD FRONT) LOOP W/TAP

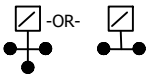

561-173
1-25 NDL
D107077

1Ø PAD MOUNTED (LIVE FRONT)



561-139
1-50 NEP
D5114055518

3Ø PAD MOUNTED (DEAD FRONT) RADIAL



561-407
1-75 HZB
D118892

3Ø PAD MONTED (DEAD FRONT) LOOP

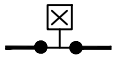

561-410
1-750 HNB
D118893

3Ø PAD MOUNTED (LIVE FRONT)

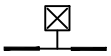

561-233
1-1000 HAP
D5109955539

CLOSED DELTA (DEAD FRONT)

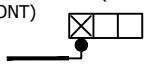

100-55
1-25 HDD
2-75 NDD
D2125576655

OPEN DELTA (LIVE FRONT)

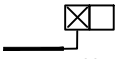

100-54
1-50 HEP
1-75 HEP
D2125576655

1Ø SUBSURFACE

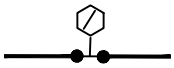

165-65
1-15 WS
S3240064800
3399

3Ø PAD MOUNTED OPEN DELTA (DEAD FRONT)



900-75
2-75 HDL
D3123560390

3Ø TERMINATOR (LIVE FRONT)

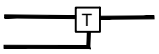

D3108560114

PADMOUNT SERVICE RESTORER

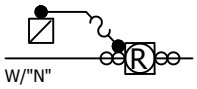

PMSR W/"N" TRANSFORMER

SCADA 98
57-4R
D123456
3-C
3-C

SIREN (FOR SAN ONOFRE)



OC01
D2461767

UG SCADA RTU



RTU 88
D116890

1Ø PAD MOUNTED "YP" TRANSFORMER (LIVE FRONT)

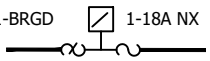

220-66
D3125676082

DEAD FRONT TERMINATOR



D123456
3-4

1Ø TERMINATOR WITH .1-4

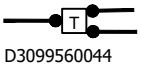

D3099560044

1-4

PME5 SWITCH



790-13
3-150A
D126194

4-WAY SWITCH

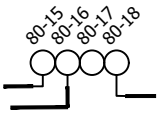

THROWOVER AT A SUBSTATION



VISTA SUB
12/4KV
AUTO
206-VS PREF
208-VS ALT

10 PAD MOUNTED "YP" (LIVE FRONT)

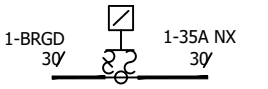

700-357 YØ
D3215457342
2-SC

PME3 SWITCH



SCADA 99
228-7
D135790

5-WAY TRAYER WITH SCADA W/AUTOSECTIONALIZING AND/OR FAULT INTERRUPTION

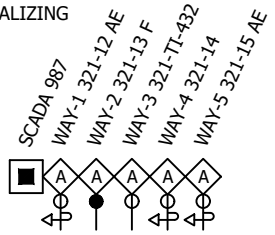

FAULT INDICATOR



VAULT U2743171342

THROWOVER W/O BUS BAR

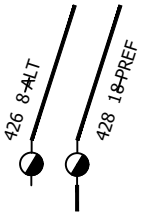

MAN
CITY OF SD -
POLICE DEPT
SDGE OWNED
D2013772340

428 ~~10~~ PREF:
E ST W/O 15TH
BASEMENT "B"

4-WAY TRAYER WITH SCADA W/AUTOSECTIONALIZING AND/OR FAULT INTERRUPTION

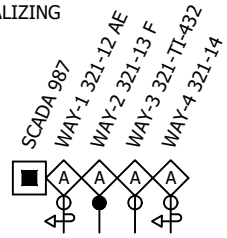

THROWOVER W/BUS BAR

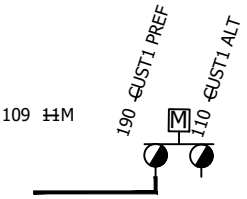

AUTO
CITY OF SD
CUST OWNED
U100311

109 CUST1 PREF: SWI GEAR B LEVEL - SIDE OF BLDG: 24 HR ACCESS PHONE - LOADING DOCK N/E CORNER OF BLDG:

PADMOUNT THROWOVER SWITCH PMH 6 STYLE

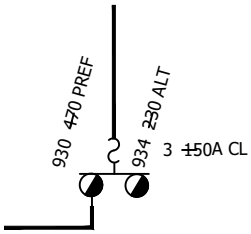

AUTO
U.S. POSTAL SERVICE
SDG&E OWNED
Y100012

930-470 PREF:
NORTHWEST CORNER OF FACILITY, NEXT TO OUTDOOR CUSTOMER SWITCHGEAR

4-WAY TRAYER, MANUAL

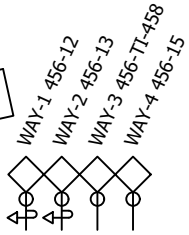

FOR FIELD MAINTENANCE ONLY

© 1998 - 2019 San Diego Gas & Electric Company. All rights reserved. Removal of this copyright notice without permission is not permitted under law.

REV	CHANGE	BY	DSGN	APPV	DATE	REV	CHANGE	BY	DSGN	APPV	DATE
C						F					
B	FORMATTING UPDATE	PEI	-	-	04/22/2019	E					
A	ORIGINAL ISSUE	-	TR	MF	10/31/2006	D					

X Indicates Latest Revision | Completely Revised | New Page | Information Removed

SDG&E ELECTRIC OVERHEAD AND UNDERGROUND STANDARDS

GFMS
OPERATING MAP SYMBOL TABLE

FMO
OH212.5
UG3112.5

TABLE OF CONTENTS

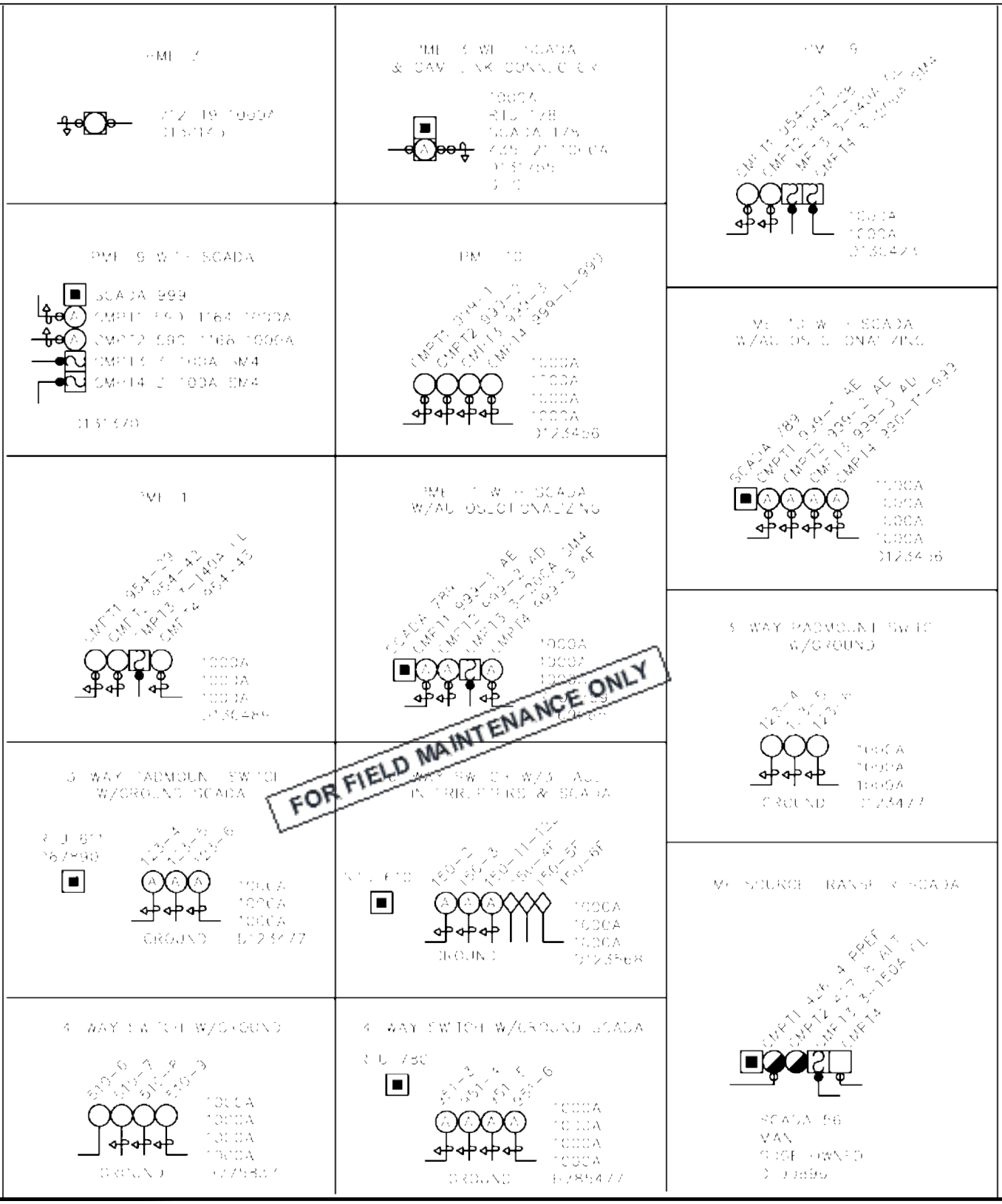

© 1998 - 2019 San Diego Gas & Electric Company. All rights reserved. Removal of this copyright notice without permission is not permitted under law.

REV	CHANGE	BY	DSGN	APPV	DATE	REV	CHANGE	BY	DSGN	APPV	DATE
C						F					
B	FORMATTING UPDATE	PEI	-	-	04/22/2019	E					
A	ORIGINAL ISSUE	-	TR	MF	05/22/2006	D					

X Indicates Latest Revision | Completely Revised | New Page | Information Removed

SHEET 6 OF 9

SDG&E ELECTRIC OVERHEAD AND UNDERGROUND STANDARDS

GFMS
SUMMARY OPERATING MAP SYMBOL TABLE

FMO
OH212.6
UG3112.6

TABLE OF CONTENTS

BOOST STATION (1 PHASE)
242-66B 100HR P76933

BRIDGED FUSE
CIR 242 3- BRGD JP433234

CAPACITOR STATION
CF - FIXED
CW - SWITCHED
CM - SWITCHED, IN MANUAL MODE
242-65 CW/CM 1200 KVAR P234990

BUCK STATION (3 PHASE)
242-543BU 3750 HHT P43440

OH SCADA CABLE
SCADA 45

POLE MOUNTED SUB
MISSION BEACH STEP-DOWN 12/4 KV P2321269883

GROUNDING BANK STATION
242-74GB 3-50 YF P99032

STREET LIGHT TRANSFORMER STATION
242-85RO 1-25R P45433

SUBSTATION 12/4
POWAY SUB 12/4

OVERHEAD STREET LIGHT
P00710

REGULATOR STATION (3 PHASE)
242-227G 100A P124450

CUSTOMER GENERATION STATION
CG01-16-601 242-16M JP321881

POLE
P567332

STUB POLE
P116740S

REGULATOR STATION (PHASE 1)
242-105G 25A JP55609

SWITCH (GANG)
242-43 JP44302

SECONDARY CIRCUIT & POLE LINE
3-#4 B. STRD N

SWITCH (HOOKSTICK)
242-12 P445760

AVIAN PROTECTION PLAN (APP) WILDLIFE SYMBOL
432-10
1-25 HE
P123456

SINGLE PHASE TRANSFORMER STATION
242-65 1-15 HE P44212

SECONDARY CABLE POLE
P990321

TRANSMISSION POLELINE & CIRCUIT
CIRCUIT 903

STEP UP STATION
242-60SU 12000/2400/4160Y P114532

PRIMARY CABLE POLE
P667990

PRIMARY CIRCUIT & POLE LINE
CIR 242 30N / 4-#2 5005 N

STEP DOWN STATION
242-143SD 12000/2400/4160Y P445320

THREE PHASE TRANSFORMER STATION
242-143 3-75HF P554354

PRIMARY METERING STATION
242-60M P993111

SUPERVISORY CABLE

TERMINATION (SECONDARY DEAD ENDS)
JP556753

FOR FIELD MAINTENANCE ONLY

SERVICE RESTORER
242-20R P44358

SUBSTATION 69/12
ASH SUB 69/12

TRANSMISSION DOUBLE POLE
Z557090

TRANSMISSION POLE
Z554354

TRANSMISSION TOWER
Z113454

FUSE (CUTOUT)
CIR 242 3-30A P534143

ELECTRONIC SECTIONALIZER (CUTOUT)
CIR 455 3-100A P19926

SCADA ANTENNA POLE
P123456A

OH SCADA RTU POLE
SCADA 62 P123456A

DPQM
107-2 107-DPQM P123456

LOADBREAK GANG OPERATED SWITCH
58-23-L P234567

FT 58
FLYING TAP

PRIMARY DEAD END (MULTIPLE CIRCUITS SINGLE CIRCUIT OPEN)
CIR 242 OPEN CIR 242 OPEN P435431

PRIMARY DEAD END (MULTIPLE CIRCUITS)
CIR 169 OPEN CIR 242 OPEN P89000

THREE PHASE TRANSFORMER STATION (DBL POLE)
242-241 3-37.5 HGT JP44530

THROWOVER AT A SUBSTATION
AUTO
206-VT PREF
208-VT ALT
VISTA SUB 12/4KV

SCADA MATE OH GROUP SWITCH
SCADA 96 715-16 715-1 P79699

© 1998 - 2019 San Diego Gas & Electric Company. All rights reserved. Removal of this copyright notice without permission is not permitted under law.

REV	CHANGE	BY	DSGN	APPV	DATE	REV	CHANGE	BY	DSGN	APPV	DATE
C						F					
B	FORMATTING UPDATE	PEI	-	-	04/22/2019	E					
A	ORIGINAL ISSUE	-	TR	MF	12/05/2005	D					

X Indicates Latest Revision | Completely Revised | New Page | Information Removed

SDG&E ELECTRIC OVERHEAD AND UNDERGROUND STANDARDS

GFMS
STANDARD FACILITY MAP SYMBOL TABLE

FMO
OH212.7
UG3112.7

TABLE OF CONTENTS

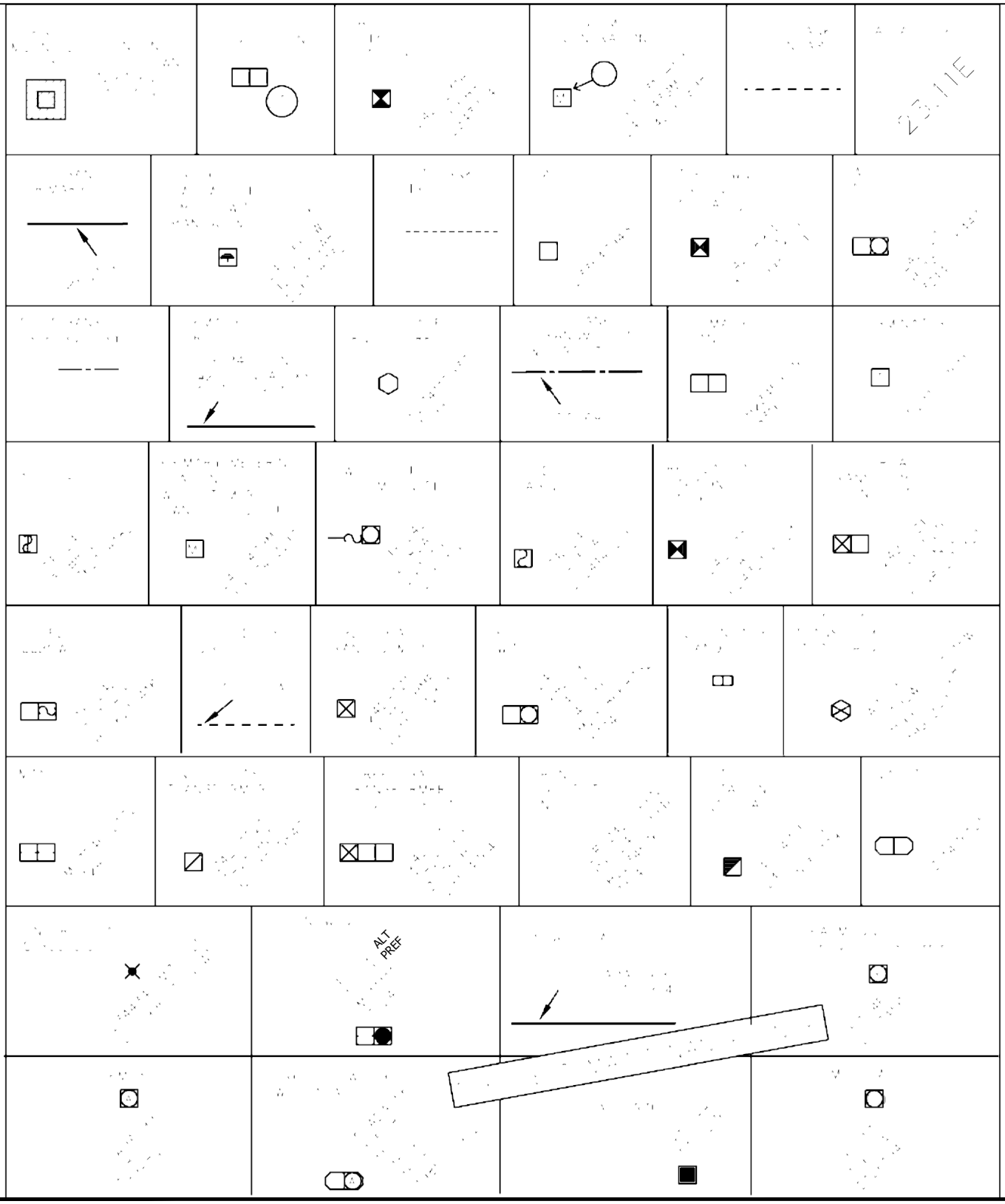

© 1998 - 2019 San Diego Gas & Electric Company. All rights reserved. Removal of this copyright notice without permission is not permitted under law.

REV	CHANGE	BY	DSGN	APPV	DATE	REV	CHANGE	BY	DSGN	APPV	DATE
C						F					
B	FORMATTING UPDATE	PEI	-	-	04/22/2019	E					
A	ORIGINAL ISSUE	-	TR	MF	05/22/2007	D					

X Indicates Latest Revision | Completely Revised | New Page | Information Removed

SDG&E ELECTRIC OVERHEAD AND UNDERGROUND STANDARDS

GFMS
STANDARD FACILITY MAP SYMBOL TABLE

FMO
OH212.8
UG3112.8

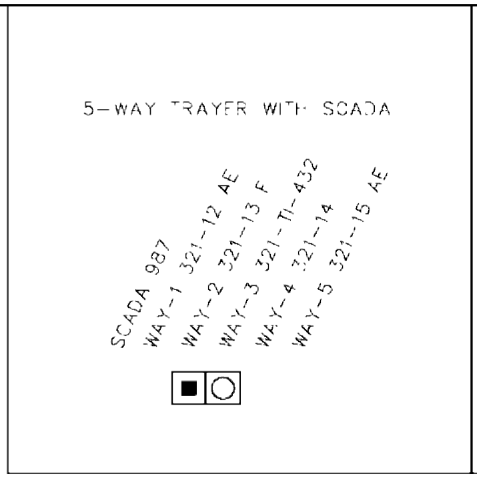



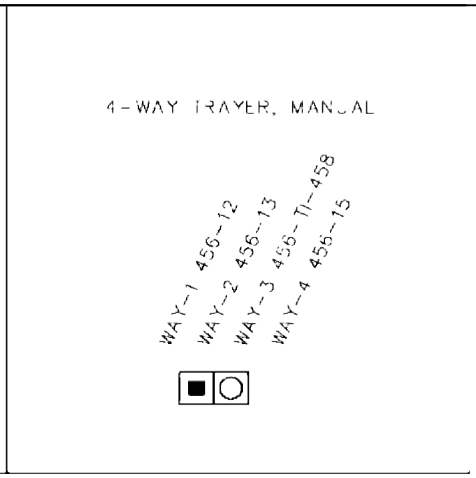

FOR FIELD MAINTENANCE ONLY

TABLE OF CONTENTS

© 1998 - 2019 San Diego Gas & Electric Company. All rights reserved. Removal of this copyright notice without permission is not permitted under law.

REV	CHANGE	BY	DSGN	APPV	DATE	REV	CHANGE	BY	DSGN	APPV	DATE
C						F					
B	FORMATTING UPDATE	PEI	-	-	04/22/2019	E					
A	ORIGINAL ISSUE	-	WT	MC	05/08/2008	D					

X Indicates Latest Revision | Completely Revised | New Page | Information Removed

SDG&E ELECTRIC OVERHEAD AND UNDERGROUND STANDARDS

GFMS
STANDARD FACILITY MAP SYMBOL TABLE

FMO
OH212.9
UG3112.9

OH218 FIELD MAINTENANCE ONLY

ALL VERSIONS LISTED IN FMO ARE SUPERSEDED BY THEIR CURRENT VERSION FOUND INSIDE THE OVERHEAD CONSTRUCTION STANDARD MANUAL.

REVISION HISTORY:

04/22/2019: FORMATTING UPDATE

07/13/2016: MOVED TO FMO.

TABLE OF CONTENTS

© 1998 - 2019 San Diego Gas & Electric Company. All rights reserved. Removal of this copyright notice without permission is not permitted under law.

REV	CHANGE	BY	DSGN	APPV	DATE	REV	CHANGE	BY	DSGN	APPV	DATE
C						F					
B	FORMATTING UPDATE	PEI	-	-	04/22/2019	E					
A	ORIGINAL ISSUE	JS	IL	MDJ	07/13/2016	D					

X Indicates Latest Revision | Completely Revised | New Page | Information Removed

SHEET 1 OF 1

SDG&E ELECTRIC OVERHEAD CONSTRUCTION STANDARDS

POLE GUARD RAIL

FMO OH218

SCOPE: THIS STANDARD SHOWS THE INSTALLATION OF A POLE GUARD RAIL.

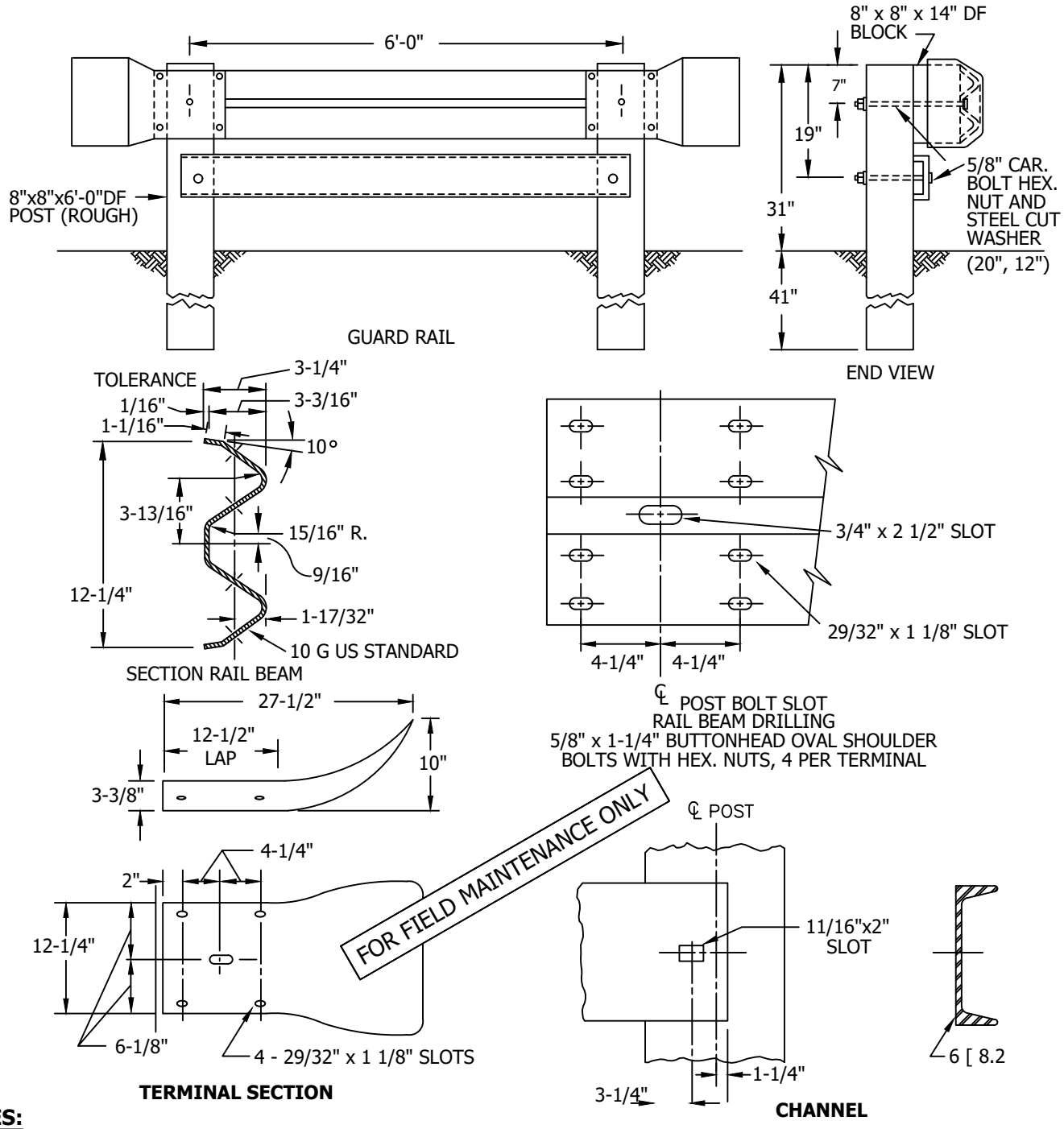

NOTES:

I. POLE GUARD RAILS ARE DESIGNED TO BE INSTALLED IN PUBLIC R/W'S, NOT PRIVATE PROPERTY, MAINLY TO MAKE A POLE MORE VISIBLE. THEY HAVE LITTLE VALUE IN STOPPING A VEHICLE, AND SHOULD HAVE LIMITED USE.

II. THE DISTRIBUTION OR TRANSMISSION ENGINEER SHALL SPECIFY OR APPROVE EACH INSTALLATION.

© 1998 - 2019 San Diego Gas & Electric Company. All rights reserved. Removal of this copyright notice without permission is not permitted under law.

REV	CHANGE	BY	DSGN	APPV	DATE	REV	CHANGE	BY	DSGN	APPV	DATE
C						F					
B	FORMATTING UPDATE	PEI	-	-	04/22/2019	E					
A	NO CHANGES REAFFIRMED	JC	IL	-	07/17/2015	D					

X Indicates Latest Revision | Completely Revised | New Page | Information Removed

SHEET 1 OF 1

SDG&E ELECTRIC OVERHEAD CONSTRUCTION STANDARDS

POLE GUARD RAIL

FMO OH218.1

TABLE OF CONTENTS

OH220 FIELD MAINTENANCE ONLY

ALL VERSIONS LISTED IN FMO ARE SUPERSEDED BY THEIR CURRENT VERSION FOUND INSIDE THE OVERHEAD CONSTRUCTION STANDARD MANUAL.

REVISION HISTORY:

04/22/2019: MOVED TO FMO - VERSION WITH WOOD CROSSARMS

TABLE OF CONTENTS

© 1998 - 2019 San Diego Gas & Electric Company. All rights reserved. Removal of this copyright notice without permission is not permitted under law.

REV	CHANGE	BY	DSGN	APPV	DATE	REV	CHANGE	BY	DSGN	APPV	DATE
C						F					
B						E					
A	ORIGINAL ISSUE	PEI	-	-	04/22/2019	D					

Indicates Latest Revision | Completely Revised X | New Page | Information Removed

SHEET 1 OF 1

SDG&E ELECTRIC OVERHEAD CONSTRUCTION STANDARDS

VERTICAL SEPARATION OF CROSSARMS ON THE SAME POLE

FMO OH220

TABLE OF CONTENTS

LINE ARMS

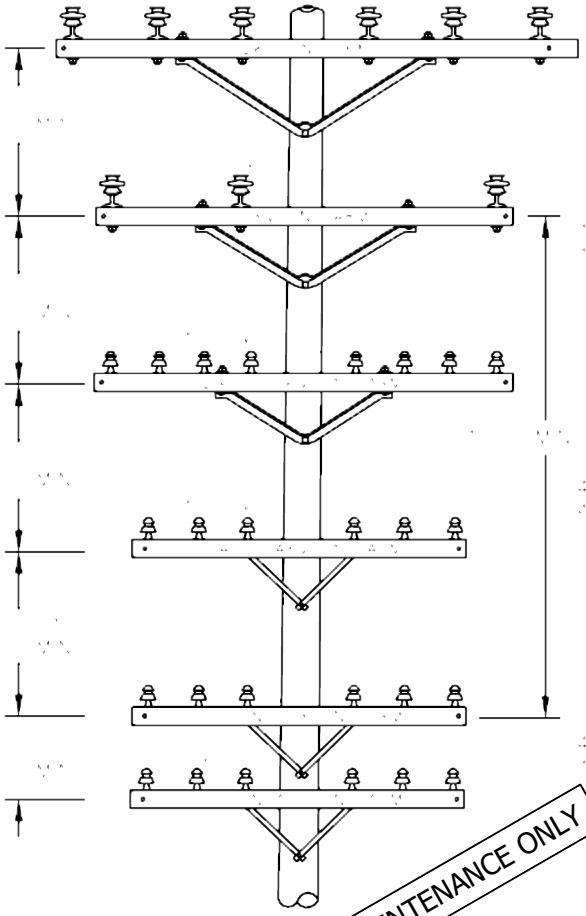

BUCK ARMS

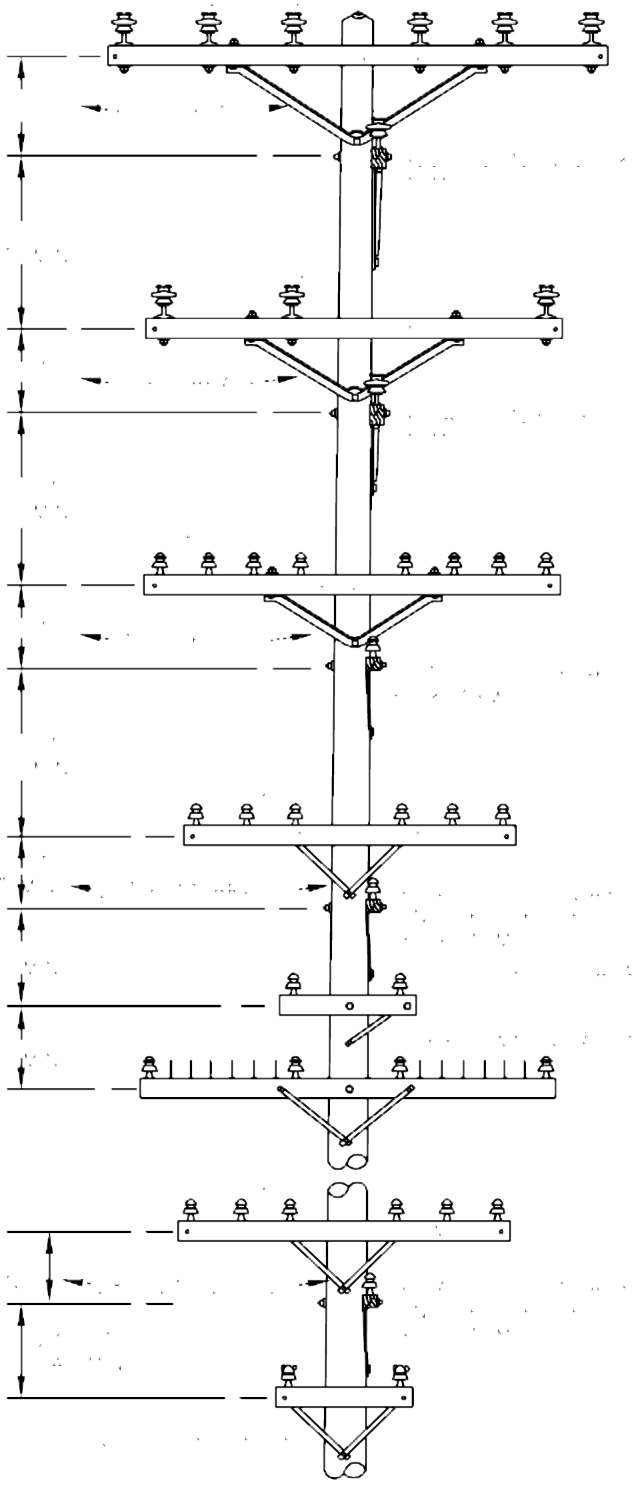

FOR FIELD MAINTENANCE ONLY

NOTES:

A. STANDARD OR MINIMUM CLEARANCES, AS SHOWN, BETWEEN RELATED CONDUCTORS ON LINE AND BUCK ARMS SHALL NOT BE APPLIED CONSECUTIVELY BOTH ABOVE AND BELOW THE SAME CONDUCTORS.

B. MINIMUM CLEARANCES SHOWN ARE THOSE SPECIFIED IN G.O. 95, RULE 38, TABLE 2, CASES 8 TO 14 INCLUSIVE. THESE ARE MINIMUM CONDUCTOR RADIAL SEPARATIONS WHICH MUST BE MAINTAINED AT THE POINT OF CONDUCTOR CROSSINGS.

C. FOR CLIMBING AND WORKING SPACE REQUIREMENTS, SEE OTHER PAGES IN PRACTICES SECTION.

D. FOR VERTICAL SEPARATION REQUIREMENTS ON VERTICAL CONSTRUCTION, SEE OTHER PAGES IN PRACTICES SECTION.

© 1998 - 2019 San Diego Gas & Electric Company. All rights reserved. Removal of this copyright notice without permission is not permitted under law.

REV	CHANGE	BY	DSGN	APPV	DATE	REV	CHANGE	BY	DSGN	APPV	DATE
C						F					
B	MOVED TO FMO	PEI	-	-	04/22/2019	E					
A	ORIGINAL ISSUE	-	IL	ROJ	01/01/1994	D					

X Indicates Latest Revision | Completely Revised | New Page | Information Removed

SHEET 1 OF 1

SDG&E ELECTRIC OVERHEAD CONSTRUCTION STANDARDS

VERTICAL SEPARATION OF CROSSARMS ON THE SAME POLE

FMO OH220.1

OH221 FIELD MAINTENANCE ONLY

ALL VERSIONS LISTED IN FMO ARE SUPERSEDED BY THEIR CURRENT VERSION FOUND INSIDE THE OVERHEAD CONSTRUCTION STANDARD MANUAL.

REVISION HISTORY:

04/22/2019: MOVED TO FMO - VERSION WITH WOOD CROSSARMS

TABLE OF CONTENTS

© 1998 - 2019 San Diego Gas & Electric Company. All rights reserved. Removal of this copyright notice without permission is not permitted under law.

REV	CHANGE	BY	DSGN	APPV	DATE	REV	CHANGE	BY	DSGN	APPV	DATE
C						F					
B						E					
A	ORIGINAL ISSUE	PEI	-	-	04/22/2019	D					

Indicates Latest Revision | Completely Revised X | New Page | Information Removed

SHEET 1 OF 1

SDG&E ELECTRIC OVERHEAD CONSTRUCTION STANDARDS

VERTICAL SEPARATION OF DIFFERENT CIRCUITS ON THE SAME POLE - CROSSARM CONSTRUCTION

FMO OH221

TABLE OF CONTENTS

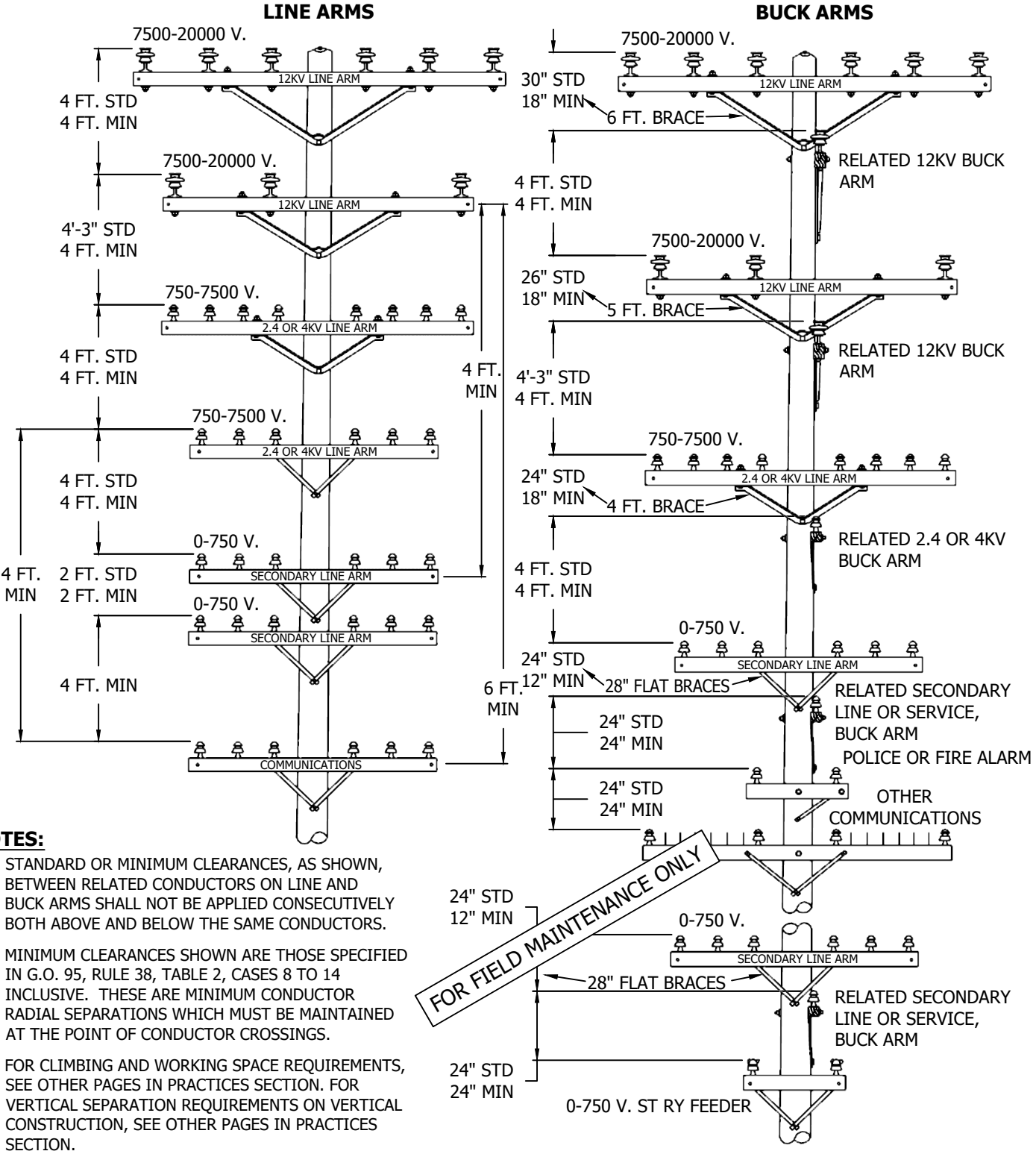

NOTES:

I. STANDARD OR MINIMUM CLEARANCES, AS SHOWN, BETWEEN RELATED CONDUCTORS ON LINE AND BUCK ARMS SHALL NOT BE APPLIED CONSECUTIVELY BOTH ABOVE AND BELOW THE SAME CONDUCTORS.

II. MINIMUM CLEARANCES SHOWN ARE THOSE SPECIFIED IN G.O. 95, RULE 38, TABLE 2, CASES 8 TO 14 INCLUSIVE. THESE ARE MINIMUM CONDUCTOR RADIAL SEPARATIONS WHICH MUST BE MAINTAINED AT THE POINT OF CONDUCTOR CROSSINGS.

III. FOR CLIMBING AND WORKING SPACE REQUIREMENTS, SEE OTHER PAGES IN PRACTICES SECTION. FOR VERTICAL SEPARATION REQUIREMENTS ON VERTICAL CONSTRUCTION, SEE OTHER PAGES IN PRACTICES SECTION.

© 1998 - 2019 San Diego Gas & Electric Company. All rights reserved. Removal of this copyright notice without permission is not permitted under law.

REV	CHANGE	BY	DSGN	APPV	DATE	REV	CHANGE	BY	DSGN	APPV	DATE
C						F					
B	MOVED TO FMO	PEI	-	-	04/22/2019	E					
A	ORIGINAL ISSUE	PEI	MEK	PTA/RDJ	01/01/1994	D					

X Indicates Latest Revision | Completely Revised | New Page | Information Removed

SHEET 1 OF 1

SDG&E ELECTRIC OVERHEAD CONSTRUCTION STANDARDS

VERTICAL SEPARATION OF DIFFERENT CIRCUITS ON THE SAME POLE - CROSSARM CONSTRUCTION

FMO OH221.1

OH223 FIELD MAINTENANCE ONLY

ALL VERSIONS LISTED IN FMO ARE SUPERSEDED BY THEIR CURRENT VERSION FOUND INSIDE THE OVERHEAD CONSTRUCTION STANDARD MANUAL.

REVISION HISTORY:

04/22/2019: A NEWER VERSION MOVED TO FMO

07/13/2016: MOVED TO FMO

TABLE OF CONTENTS

© 1998 - 2019 San Diego Gas & Electric Company. All rights reserved. Removal of this copyright notice without permission is not permitted under law.

REV	CHANGE	BY	DSGN	APPV	DATE	REV	CHANGE	BY	DSGN	APPV	DATE
C						F					
B	EDITIORIAL CHANGES	PEI	-	-	04/22/2019	E					
A	ORIGINAL ISSUE	JS	IL	MDJ	07/13/2016	D					

X Indicates Latest Revision | Completely Revised | New Page | Information Removed

SHEET 1 OF 1

SDG&E ELECTRIC OVERHEAD CONSTRUCTION STANDARDS

AERIAL CABLE, VERTICAL CLEARANCE FROM OPEN WIRE CONDUCTORS ON SAME POLE

FMO OH223

SCOPE: THIS STANDARD SHOWS THE VERTICAL CLEARANCES BETWEEN OPEN WIRE CONDUCTORS AND CABLE AS REQUIRED BY THE G.O. 95. TYPICAL DRILLING AND GAINING DIMENSIONS ARE INCLUDED.

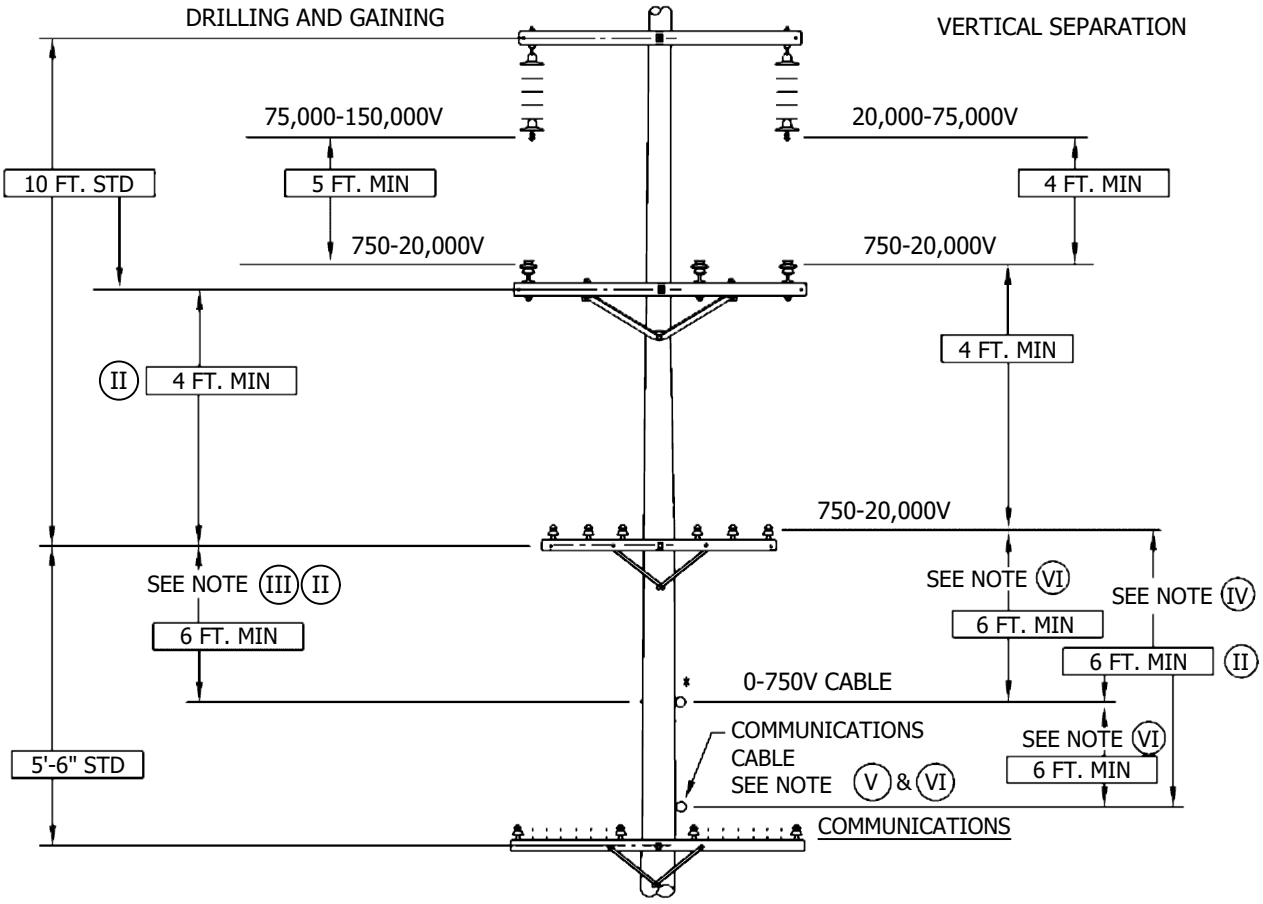

NOTES:

(I) DIFFERENCES DUE TO SAG OF DIFFERENT SIZE CONDUCTORS MUST BE COMPENSATED FOR AT POINTS OF SUPPORT.

(II) THIS CLEARANCE MAY INCREASE TO 7 FT. FOR BUCKET TRUCK ACCESS-SEE DESIGN MANUAL PAGE 5122, A.2.

(III) INSTALLATION OF GUARD ARMS PERMITS A REDUCTION OF 2 FT. (* REPRESENTS GUARD ARM PLACEMENT). (G.O.95, RULE 54.10-C)

(IV) VERTICAL SEPARATION MAY BE REDUCED 2 FT. IF OPEN WIRE IS 0-750V E.

(V) 6 FT MINIMUM CLEARANCE IS REQUIRED TO POWER CONDUCTORS IN EXCESS OF 750V.

(VI) GUARD ARMS MAY BE USED TO REDUCE REQUIRED CLEARANCE BY 2 FT. FOR CABLES OF 0-750V (* REPRESENTS GUARD ARM PLACEMENT). (G.O.95, RULE 54.10-C)

FOR FIELD MAINTENANCE ONLY

© 1998 - 2019 San Diego Gas & Electric Company. All rights reserved. Removal of this copyright notice without permission is not permitted under law.

REV	CHANGE	BY	DSGN	APPV	DATE	REV	CHANGE	BY	DSGN	APPV	DATE
C						F					
B	MOVED TO FMO	PEI	-	-	04/22/2019	E					
A	ORIGINAL ISSUE	-	PTA	MC	03/17/2010	D					

X Indicates Latest Revision | Completely Revised | New Page | Information Removed

SHEET 1 OF 1

SDG&E ELECTRIC OVERHEAD CONSTRUCTION STANDARDS

VERTICAL CLEARANCE FROM OPEN WIRE CONDUCTORS AND CABLE ON SAME POLE

FMO OH223.1

TABLE OF CONTENTS

TABLE OF CONTENTS

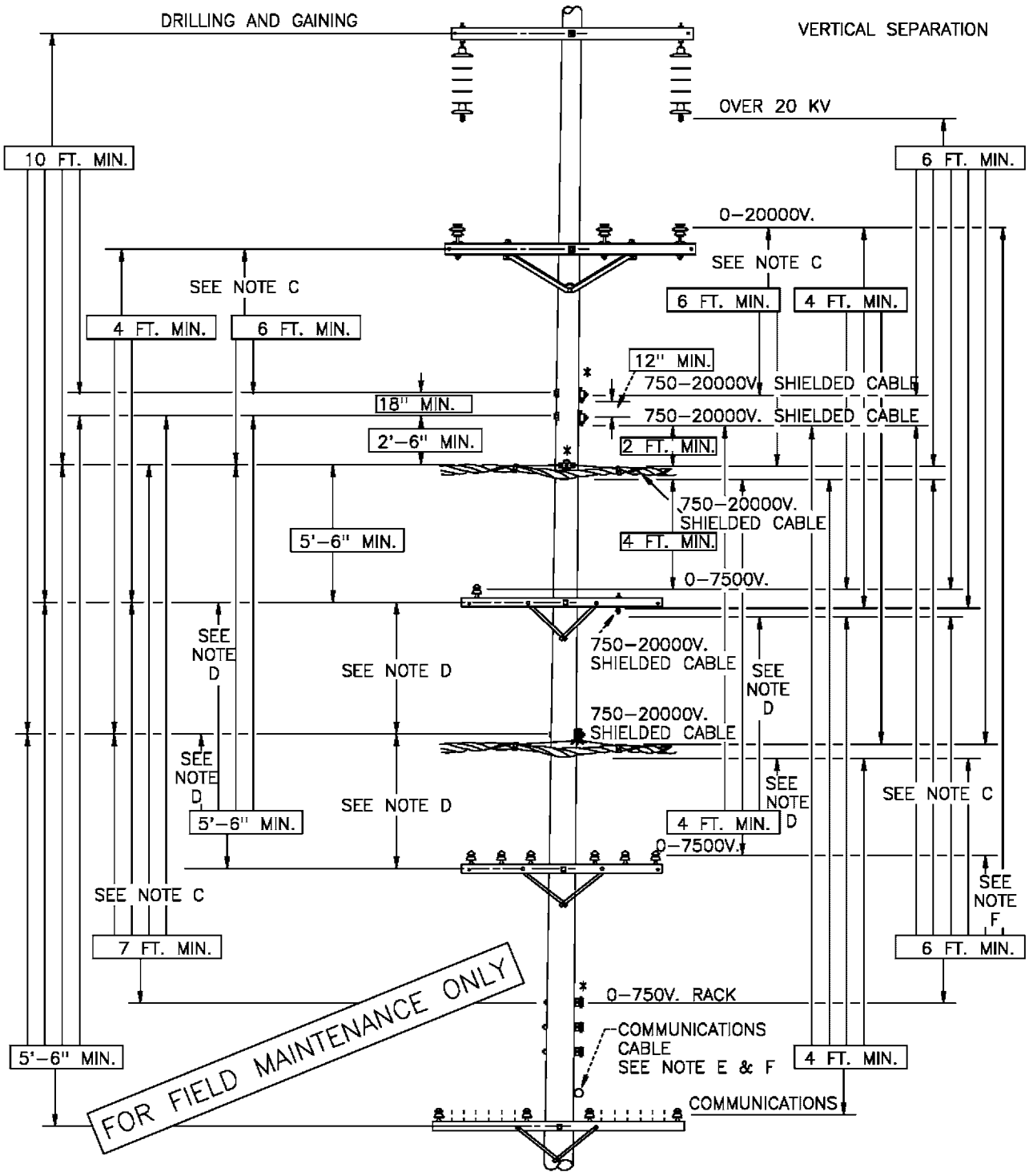

NOTES:

A. DIFFERENCES DUE TO SAG OF DIFFERENT SIZE CONDUCTORS MUST BE COMPENSATED FOR AT POINTS OF SUPPORT.

B. VERTICAL SEPARATION OF UNPROTECTED SUPPLY CONDUCTORS FROM 750–7500V SHIELDED AERIAL CABLE WHICH HAS BEEN BONDED AND EFFECTIVELY GROUNDED AS PER GENERAL ORDER 95, RULE 57.8

(C) INSTALLATION OF GUARD ARMS PERMITS A REDUCTION OF 2 FT. (* REPRESENTS GUARD ARM PLACEMENT). (G.O. 95, RULE 57.4–F)

(D) VERTICAL SEPARATION MAY BE REDUCED 2 FT. IF OPEN WIRE IS 0–750V

(E) 6 FT MINIMUM CLEARANCE IS REQUIRED TO POWER CONDUCTORS.

(F) GUARD ARMS MAY BE USED TO REDUCE REQUIRED CLEARANCE BY 2 FT FOR CONDUCTORS OR CABLES OF 0–750V.

	SDG&E ELECTRIC STANDARDS	299.201
DATE 2–18–74 APPD PEA / ROG	AERIAL CABLE, VERTICAL CLEARANCE FROM OPEN WIRE CONDUCTORS ON SAME POLE	SUPERCEDES 223 (1–1–98)

FIELD MAINTENANCE ONLY

REVISION HISTORY:

7/13/2016: All versions prior to 2016 are superseded by their current version found inside the Overhead Construction Standard Manual.

TABLE OF CONTENTS

© 1998 - 2016 San Diego Gas & Electric Company. All rights reserved. Removal of this copyright notice without permission is not permitted under law.

REV	CHANGE	BY	DSGN	APPV	DATE	REV	CHANGE	BY	DSGN	APPV	DATE
C						F					
B						E					
A	ORIGINAL ISSUE	JS	IL	MDJ	7/13/2016	D					

X Indicates Latest Revision | Completely Revised | New Page | Information Removed

SHEET 1 OF 1

SDG&E ELECTRIC OVERHEAD STANDARD

12KV SINGLE CIRCUIT TRANSPOSITION

FMO OH 269

SCOPE: THIS STANDARD ILLUSTRATES VARIOUS METHODS OF 12KV, SINGLE CIRCUIT TRANSPOSITION.

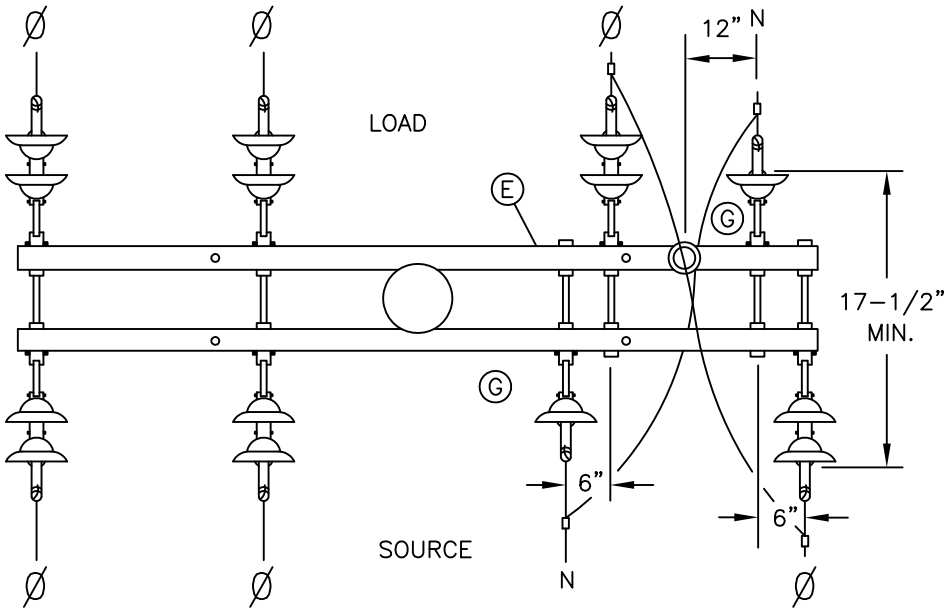

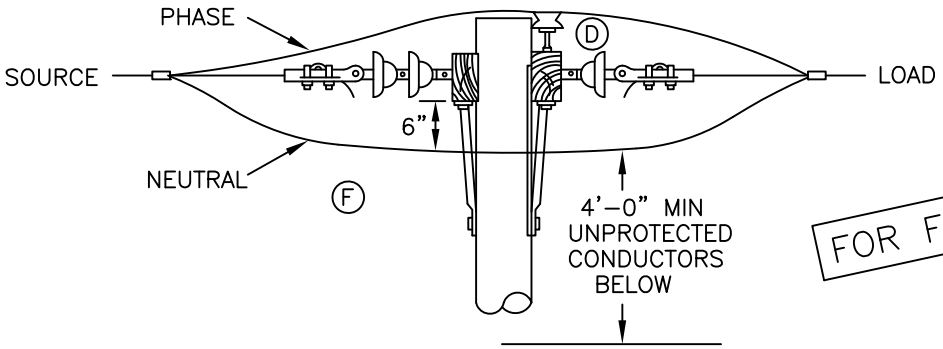

FOR FIELD MAINTENANCE ONLY

SINGLE POLE–NEUTRAL/PHASE WIRE TRANSPOSITION (PREFERRED)

FIGURE 1

Ⓒ

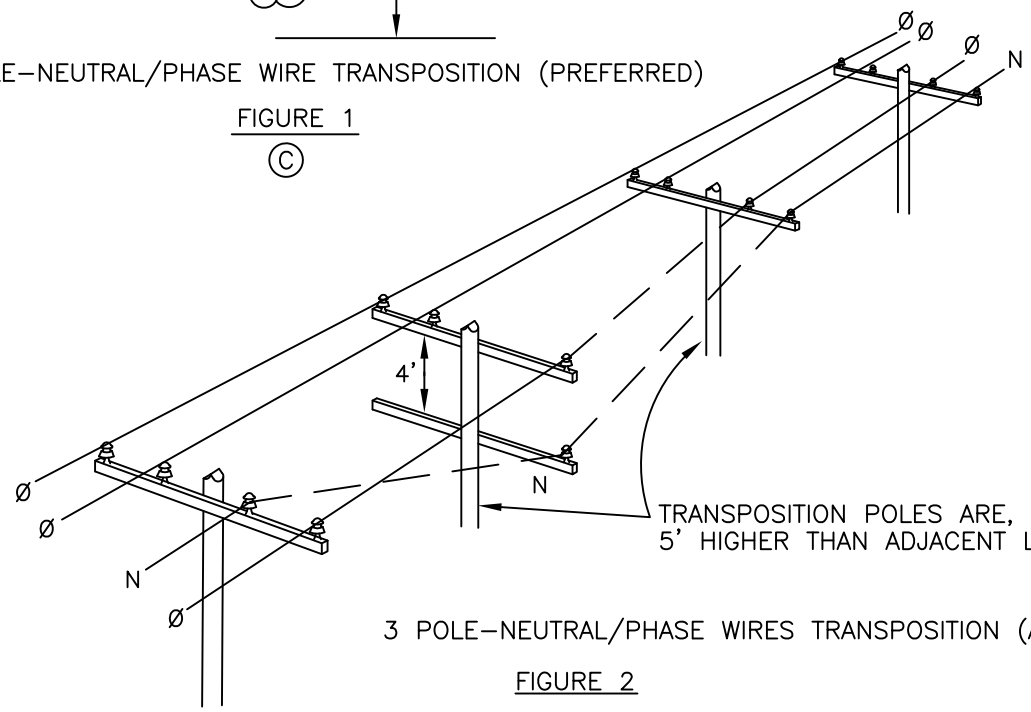

TRANSPOSITION POLES ARE, NORMALLY,
5' HIGHER THAN ADJACENT LINE POLES

3 POLE–NEUTRAL/PHASE WIRES TRANSPOSITION (ALTERNATE)

FIGURE 2

Ⓒ

© 1998 - 2013 San Diego Gas & Electric Company. All rights reserved. Removal of this copyright notice without permission is not permitted under law.

	Indicates Latest Revision	Completely Revised	New Page	Information Removed

REVISION DATE 8–29–2013 APPD TQ / DW	SDG&E ELECTRIC STANDARDS 12KV SINGLE CIRCUIT TRANSPOSITION	269.1

TABLE OF CONTENTS

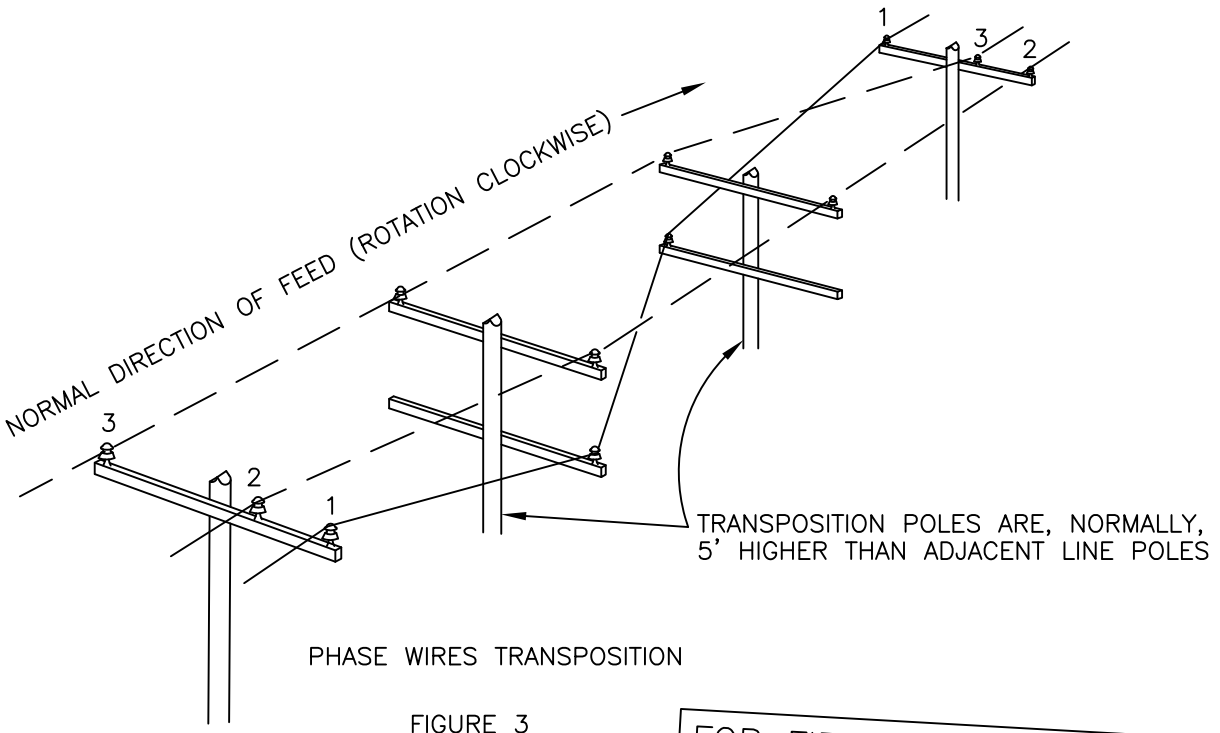

PHASE WIRES TRANSPOSITION

FIGURE 3
(B)

FOR FIELD MAINTENANCE ONLY

INSTALLATION:

A. ALL PROPOSED 12KV LINE EXTENSIONS CREATING PARALLELS WITH EXISTING OPEN WIRE COMMUNICATION LEADS SHALL BE REFERRED TO THE TELEPHONE COMPANY FOR COORDINATION OF TRANSPOSITIONS IN THE SUPPLY AND COMMUNICATION LINES.

(B) BUILDING FOUR WIRE, "PHASE WIRE ONLY" TRANSPOSITION, (FIG. 3), OR ADDING FOURTH WIRE (NEUTRAL) TO EXISTING TRANSPOSITION, REQUIRES NO DEVIATION.

(C) SINGLE POLE–NEUTRAL/PHASE WIRE TRANSPOSITION (FIG. 1) IS PREFFERED OVER THREE POLE NEUTRAL/PHASE WIRE TRANSPOSITION (FIG. 2).

(D) ON SINGLE POLE–NEUTRAL/PHASE WIRE TRANSPOSITION (FIG. 1), ALWAYS JUMPER PHASE WIRE OVER TOP OF ARM AND TIE INTO PIN AND INSULATOR.

(E) SINGLE POLE–NEUTRAL/PHASE WIRE TRANSPOSITION (FIG. 1) REQUIRES CROSSARM MINIMUM OF 10' IN LENGTH. IF TRANSPOSITION IS EXTENSION FROM EXISTING 8' CROSSARMS, CHANGE OUT TO 10' CROSSARMS.

(F) IN SINGLE POLE–NEUTRAL/PHASE WIRE TRANSPOSITION (FIG. 1), INSTALL NEUTRAL JUMPER NO LESS THAN 6" FROM BOTTOM OF CROSSARM.

(G) ON ALL TRANSPOSITIONS, MARK CROSSARM NEUTRAL POSITION WITH "PN" SIGN, EVEN THOUGH SIGN IS NOT REQUIRED BY STANDARD 208.

© 1998 - 2010 San Diego Gas & Electric Company. All rights reserved. Removal of this copyright notice without permission is not permitted under law.

	Indicates Latest Revision		Completely Revised		New Page		Information Removed

269.2	SDG&E ELECTRIC STANDARDS 12KV SINGLE CIRCUIT TRANSPOSITION	REVISION DATE 1-1-93 APPD PSA 1/2009

TABLE OF CONTENTS

MAIN TABLE OF CONTENTS

PAGE	SUBJECT
363	INSTALLATION OF PERMANENT POLE STEPS
390	HARDWARE
392	LINE MATERIALS, BOLT, LAG SCREW
397	CROSSARM MOUNTING BRACKETS

© 1998 - 2022 San Diego Gas & Electric Company. All rights reserved. Removal of this copyright notice without permission is not permitted under law.

REV	CHANGE	DR	BY	DSN	APV	DATE	REV	CHANGE	DR	BY	DSN	APV	DATE
E	EDITORIAL CHANGES	EDM	JAC	JES	CZH	07/01/2020	H	OH397 MOVED TO FMO	EDM	RSL	GLW	KRG	11/09/2022
D	ADDED 388	-	SL	JS	CZH	07/10/2019	G	EDITORIAL CHANGES	EDM	JAC	GLW	FRC	03/01/2022
C	ADDED 392	-	GW	JS	CZH	09/01/2018	F	REMOVED OH388	EDM	GLW	JES	CZH	04/13/2021

OH363 UG4205 FIELD MAINTENANCE ONLY

ALL VERSIONS LISTED IN FMO ARE SUPERSEDED BY THEIR CURRENT VERSION FOUND INSIDE THE OVERHEAD AND UNDERGROUND CONSTRUCTION STANDARD MANUAL.

REVISION HISTORY:

07/1/2020: MOVED TO FMO

TABLE OF CONTENTS

© 1998 - 2020 San Diego Gas & Electric Company. All rights reserved. Removal of this copyright notice without permission is not permitted under law.

REV	CHANGE	DR	BY	DSN	APV	DATE	REV	CHANGE	DR	BY	DSN	APV	DATE
C							F						
B							E						
A	ORIGINAL ISSUE	EDM	JAC	GLW	CZH	7/1/2020	D						

Indicates Latest Revision | Completely Revised | X | New Page | Information Removed

SHEET 1 OF 1

SDG&E ELECTRIC OVERHEAD AND UNDERGROUND FIELD MAINTENANCE ONLY STANDARDS

INSTALLATION OF PERMANENT POLE STEPS

FMO OH363 UG4205

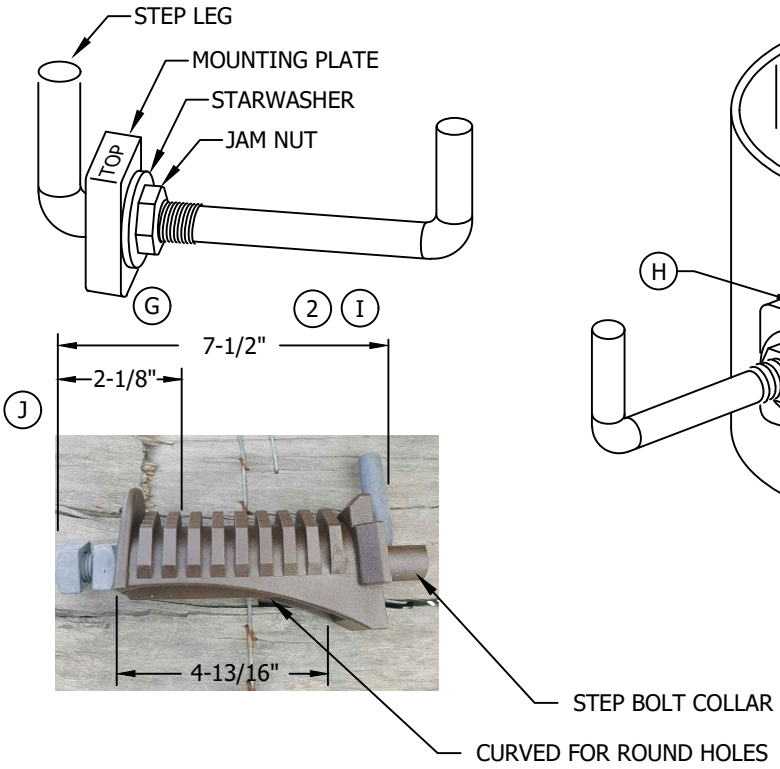

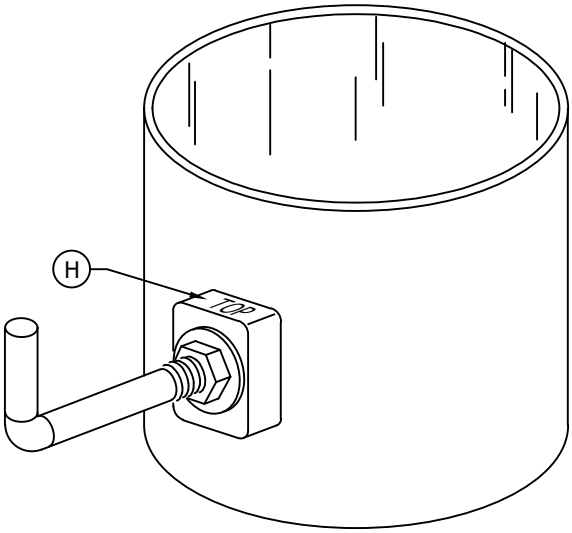

FIELD MAINTENANCE ONLY

TABLE OF CONTENTS

BILL OF MATERIALS:

ITEM	DESCRIPTION	STOCK NUMBER	A.U
1	STEP, POLE, DRIVING TYPE (WOOD)	S692992	STEP
2	STEP, POLE, BOLTED (STEEL OR FIBERGLASS)	S692300	STEP-S
3	STEP, POLE, COMPOSITE, BROWN, (STEEL OR FIBERGLASS)	S692990	STEP-C

INSTALLATION: (Cont'd)

(H) ENSURE THAT STEP MOUNTING PLATE IS POSITIONED WITH THE SIDE STAMPED "TOP" FACING UP.

(I) INSTALL STEP BY INSERTING LEG OF STEP INTO POLE STEP HOLE. SLIDE MOUNTING PLATE OVER SQUARE KEY AT BASE OF STEP UNTIL FLUSH AGAINST POLE. SLIDE STAR WASHER OVER STEP THREADS AND FLUSH AGAINST MOUNTING PLATE. RUN JAM NUT DOWN OVER THREADS BY HAND UNTIL FLUSH AGAINST STAR WASHER AND HAND TIGHTEN. USING WRENCH, SNUG JAM NUT AN ADDITIONAL 1/4 TURN ONLY.

(J) INSTALL COMPOSITE STEP BY REMOVING THE OUTER NUT AND SPIN THE INNER NUT OUT TO THE END OF THE THREADED BOLT. INSERT THE LEG OF STEP INTO THE POLE STEP HOLE. DO NOT BREAK OFF THE STEP BOLT COLLAR. SPIN THE INNER NUT AGAINST THE STEP AND HAND TIGHTEN. USING WRENCH, SNUG JAM NUT AN ADDITIONAL 1/4 TURN ONLY.

NOTE:

II. POLE STEP MOUNTING HOLE DIAMETER 13/16 INCHES TO 1-1/8 INCHES.

© 1998 - 2020 San Diego Gas & Electric Company. All rights reserved. Removal of this copyright notice without permission is not permitted under law.

REV	CHANGE	DR	BY	DSN	APV	DATE	REV	CHANGE	DR	BY	DSN	APV	DATE
C	EDITORIAL CHANGES	-	JS	JS	MDJ	6/26/2017	F						
B	EDITORIAL CHANGES	-	JS	IL	MDJ	6/23/2016	E	MOVED TO FMO	EDM	JAC	GLW	CZH	7/1/2020
A	UPDATED INSTALLATION NOTES	-	JC	-	-	12/16/2014	D	NOTES UPDATE	-	JC	JS	MDJ	1/17/2018

X Indicates Latest Revision | Completely Revised | New Page | Information Removed

SDG&E ELECTRIC OVERHEAD AND UNDERGROUND FIELD MAINTENANCE ONLY STANDARDS

INSTALLATION OF PERMANENT POLE STEPS

SHEET 1 OF 1

FMO
OH363.1
UG4205.1

OH390 FIELD MAINTENANCE ONLY

ALL VERSIONS LISTED IN FMO ARE SUPERSEDED BY THEIR CURRENT VERSION FOUND INSIDE THE OVERHEAD CONSTRUCTION STANDARD MANUAL.

REVISION HISTORY:

02/16/2023: NEWER VERSION OF OH390.12 MOVED TO FMO.

03/01/2022: OH390.12 MOVED TO FMO BECAUSE BARE GROUND WIRE HAS BEEN REPLACED WITH #4 CU SOLID GROUND WIRE, COVERED.

09/28/2016: OH390.2 MOVED TO FMO

TABLE OF CONTENTS

© 1998 - 2023 San Diego Gas & Electric Company. All rights reserved. Removal of this copyright notice without permission is not permitted under law.

REV	CHANGE	DR	BY	DSN	APV	DATE	REV	CHANGE	DR	BY	DSN	APV	DATE
C	OH390.12 MOVED TO FMO	ARC	MRF	GLW	KRG	02/16/2023	F						
B	ADDED OH390.12	EDM	JAC	GLW	FRC	03/01/2022	E						
A	ORGINAL ISSUE	-	JS	JS	MDJ	09/28/2016	D						

SCOPE: THIS STANDARD SHOWS TYPES OF INSULATOR BRACKETS USED IN THE DISTRIBUTION SYSTEM.

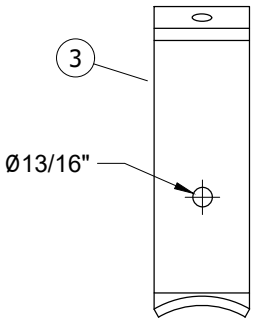

FIGURE 2
FRONT VIEW

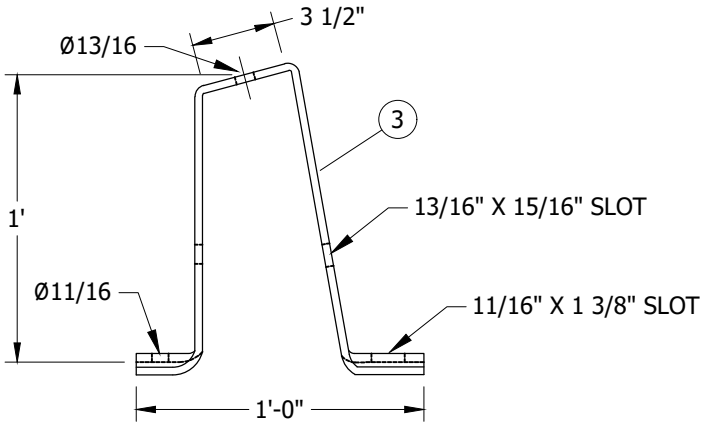

FIGURE 2
SIDE VIEW

INSTALLATION: NONE

BILL OF MATERIALS:

ITEM	DESCRIPTION	FIG	QUANTITY	STANDARD PAGE	STOCK NUMBER	DESIGN UNITS	SAP CU
3	BRACKET, INSULATOR, STANDOFF, HORIZONTAL	2	AS REQ'D	--	S166848	PIB	--

NOTES: NONE

REFERENCE: NONE

FIELD MAINTENANCE ONLY

© 1998 - 2023 San Diego Gas & Electric Company. All rights reserved. Removal of this copyright notice without permission is not permitted under law.

REV	CHANGE	DR	BY	DSN	APV	DATE	REV	CHANGE	DR	BY	DSN	APV	DATE
C	EDITORIAL CHANGES	-	JIK	JES	CZH	10/15/2019	F	MOVED TO FMO	ARC	MRF	GLW	KRG	02/16/2023
B	UPDATED DIMENSION	-	JC	JH	DW	09/20/2014	E	OH390.12 MOVED TO FMO	EDM	JAC	GLW	FRC	03/01/2022
A	REVISION	-	-	-	PEA/VCR	01/01/2000	D	FIGURE UPDATE	EDM	JIK	JES	CZH	10/12/2020

X Indicates Latest Revision | Completely Revised | New Page | Information Removed

SCOPE: THIS STANDARD SHOWS HARDWOOD MOULDING AND STAPLES, USED AS PROTECTIVE COVERING FOR GROUND WIRES UNDER CROSSARMS AND ON POLES.

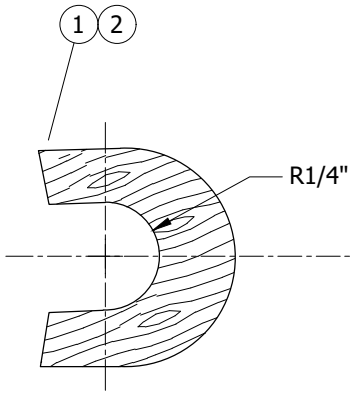

FIGURE 1
HARDWOOD MOULDING

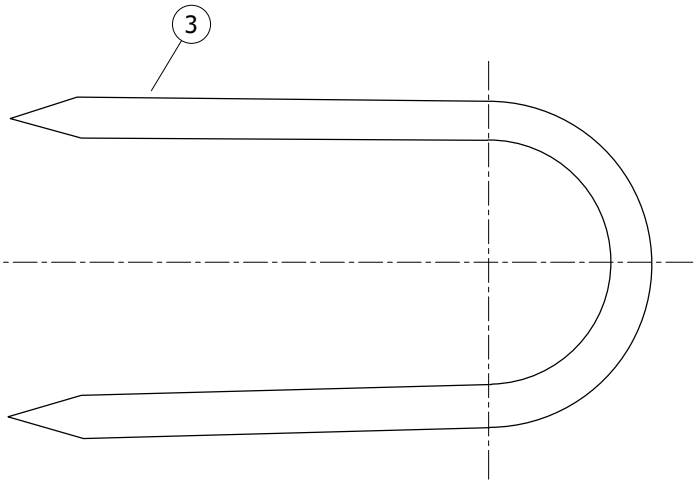

FIGURE 2
GALVANIZED STAPLES

INSTALLATION:

A. STAPLES ARE USED TO ATTACH MOULDING TO POLES AND CROSSARMS.

B. STAPLES ARE TO BE ATTACHED NO MORE THAN 3 FEET APART.

BILL OF MATERIALS:

ITEM	DESCRIPTION	QUANTITY	STANDARD PAGE	STOCK NUMBER	DESIGN UNITS
1	MOULDING, OAK HARDWOOD 1" X 8'-0" (PLAIN)	5	-	S487200	MLDG
2	MOULDING, OAK HARDWOOD 1" X 8'-0" (GRAY)	5	-	S487184	-
3	STAPLES, MOULDING GALVANIZED 3" X 1 1/16" X 1/4"	AS REQ'D	-	S678560	-

NOTES: NONE

REFERENCE: NONE

FIELD MAINTENANCE ONLY

© 1998 - 2022 San Diego Gas & Electric Company. All rights reserved. Removal of this copyright notice without permission is not permitted under law.

REV	CHANGE	DR	BY	DSN	APV	DATE	REV	CHANGE	DR	BY	DSN	APV	DATE
C	EDITORIAL CHANGES	-	JIK	JES	CZH	10/15/2019	F						
B	UPDATED DIMENSION	-	JC	JH	DW	09/20/2014	E	MOVED TO FMO	EDM	JAC	GLW	FRC	03/01/2022
A	REVISION	-	-	-	PEA/VCR	01/01/2000	D	FIGURE UPDATE	EDM	JIK	JES	CZH	10/12/2020

X Indicates Latest Revision | Completely Revised | New Page | Information Removed

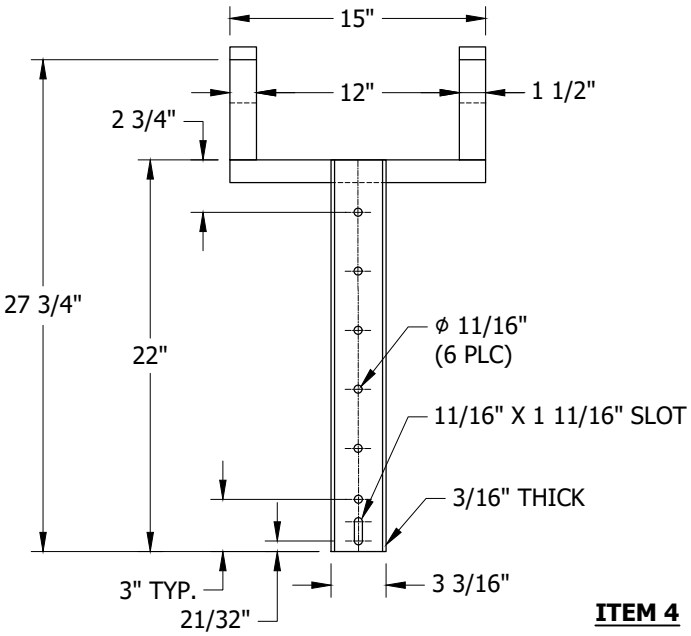

ITEM 4

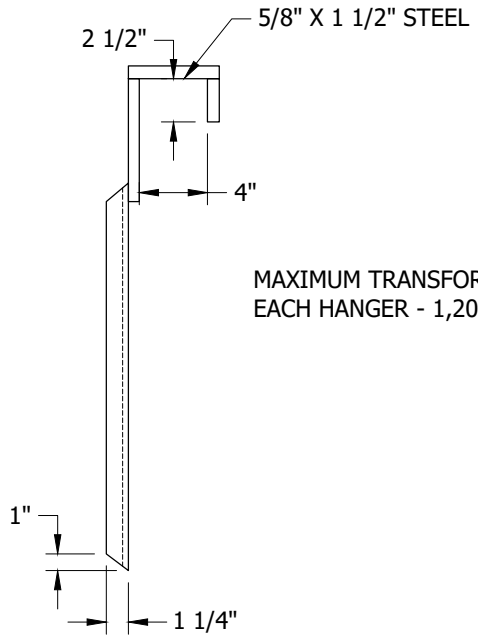

MAXIMUM TRANSFORMER WEIGHT
EACH HANGER - 1,200 LBS

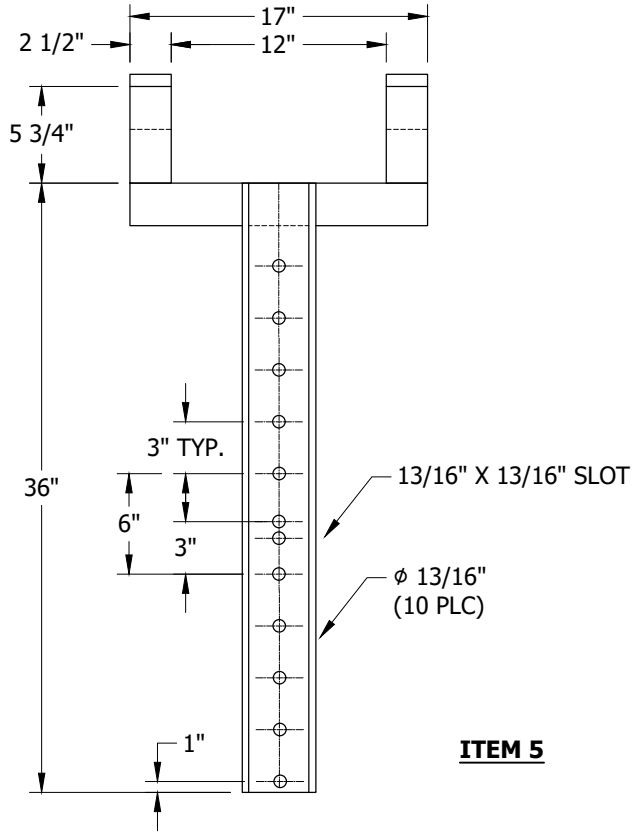

ITEM 5

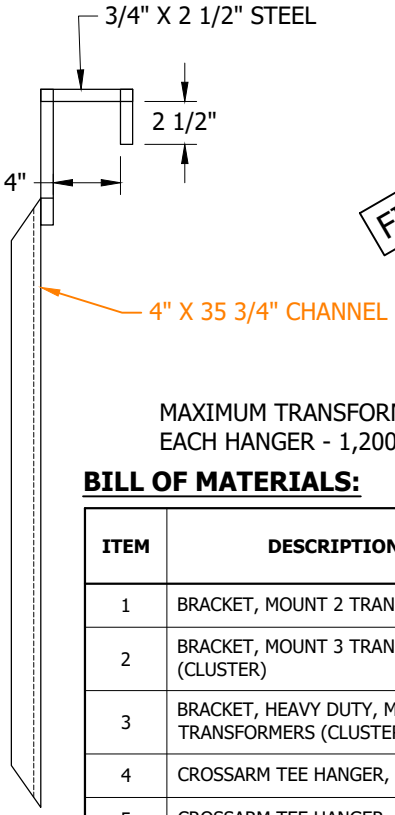

FIELD MAINTENANCE ONLY

MAXIMUM TRANSFORMER WEIGHT
EACH HANGER - 1,200 LBS

BILL OF MATERIALS:

ITEM	DESCRIPTION	STOCK NUMBER	ASSEMBLY UNITS
1	BRACKET, MOUNT 2 TRANSFORMERS	S407976	UMB
2	BRACKET, MOUNT 3 TRANSFORMERS (CLUSTER)	S403008	CMB
3	BRACKET, HEAVY DUTY, MOUNT 3 TRANSFORMERS (CLUSTER)	S402920	CMBHD
4	CROSSARM TEE HANGER, 22"	S402912	T1HANG
5	CROSSARM TEE HANGER, 36"	S402944	T2HANG

TABLE OF CONTENTS

© 1998 - 2021 San Diego Gas & Electric Company. All rights reserved. Removal of this copyright notice without permission is not permitted under law.

REV	CHANGE	DR	BY	DSN	APV	DATE	REV	CHANGE	DR	BY	DSN	APV	DATE
C							F						
B	MOVED TO FMO	-	JS	JS	MDJ	09/28/2016	E						
A	UPDATED DIMENSION	-	JC	JH	DW	09/02/2014	D						

X Indicates Latest Revision | Completely Revised | New Page | Information Removed

SDG&E ELECTRIC OVERHEAD FIELD MAINTENANCE ONLY STANDARDS

TRANSFORMER MOUNTING BRACKETS

FMO OH390.2

FIELD MAINTENANCE ONLY

REVISION HISTORY:

9/1/2018: All versions prior to 2018 are superseded by their current version found inside the Overhead Construction Standard Manual.

© 1998 - 2018 San Diego Gas & Electric Company. All rights reserved. Removal of this copyright notice without permission is not permitted under law.

REV	CHANGE	BY	DSGN	APPV	DATE	REV	CHANGE	BY	DSGN	APPV	DATE
C						F					
B						E					
A	ORIGINAL ISSUE	GW	JS	CZH	9/1/2018	D					

	Indicates Latest Revision		Completely Revised	X	New Page	Information Removed

SHEET
1 OF 1

SDG&E ELECTRIC OVERHEAD CONSTRUCTION STANDARDS

LINE MATERIALS
BOLT, LAG SCREW

FMO
OH 392

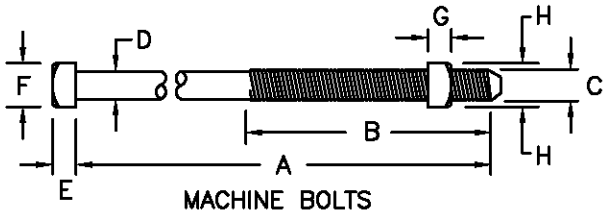

MACHINE BOLTS
ITEMS 1–10

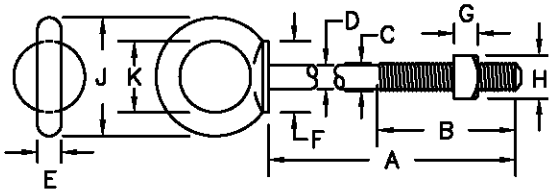

SHOULDER EYE BOLTS
ITEMS 15–18

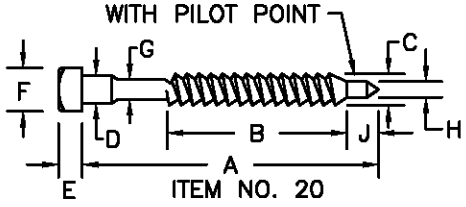

ITEM NO. 20

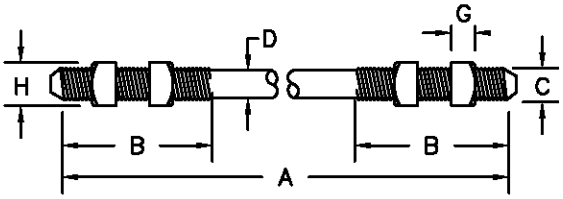

SPACE BOLTS
ITEMS 11–14

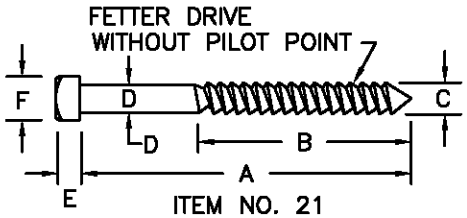

ITEM NO. 21
LAG SCREWS

	ITEM	LENGTH. A	B. MIN	C	D	E	F	G	H	J	K	ULT. STRGTH	STOCK NUMBERS
		BOLTS AND LAG SCREWS (DIMENSIONS IN INCHES)											
MACHINE BOLTS	1	4–1/2	1–1/2	3/8	11/32	9/32	9/16	5/16	5/8	--	--	5000 LBS.	158528, WASHERHEAD
	2	5 TO 8	1–1/2	1/2	29/64	3/8	3/4	3/8	13/16	--	--	10500 LBS.	153024 – 153152
	3	8 TO 10	4										153152–153184 & 152736
	4	5 TO 8	3	5/8	9/16	1/2	15/16	5/8	1–1/16	--	--	15500 LBS.	155488–155584
	5	8 TO 14	4										155584 & 155616, 154816 – 154880
	6	16 TO 36	6										154912, 154944, 155072 – 155200
	7	8 TO 14	4	3/4	11/16	3/4	1–1/8	3/4	1–1/4	--	--	23000 LBS.	154080, 154112, 153408, 153440
		14 TO 30	6										153440, 153472, 153504, 153632 – 153760 & 153824
	8	32 TO 40	6										153856, 153888, 153984
	9	14 TO 18	2–1/2	7/8	13/16	7/8	1–5/16	7/8	1–7/16	--	--	33500 LBS.	155712, 155744, 155776
	10	18 TO 30	4										155776 THRU 155904
SPACE	11	16	7	5/8	9/16	--	--	5/8	1–1/16	--	--	15500 LBS.	156512
	12	18 TO 30	8										156544 THRU 156736
	13	16 TO 30	Ⓑ	5/8	--	--	--	5/8	1–1/16	--	--	15500 LBS	--
				3/4	--	--	--	3/4	1–1/4	--	--	26000 LBS.	--
	14	36 TO 40	Ⓑ	3/4	--	--	--	3/4	1–1/4	--	--	26000 LBS.	156360, 156370
EYE	15	6	4	5/8	5/8	9/16	1–3/4	5/8	1–1/16	2–7/8	1–3/4	12500 LBS.	--
	16	8 TO 20	6										150784, 150816
	17	6	4	3/4	3/4	11/16	1–3/4	3/4	1–1/4	3–1/8	1–3/4	21500 LBS.	--
	18	8 TO 20	6										--
LAG	20	4"	2–1/8	1/2	9/16	5/16	3/4	29/64	7/32	5/8	--	--	621568
	21	5"	4	5/8	9/16	1/2	7/8	--	--	--	--	--	621600

INSTALLATION:

A. ITEMS 1 THRU 21 GALVANIZED PER A.S.T.M. SPECS. A153–53.

Ⓑ COMPLETELY THREADED.

© 1998 - 2005 San Diego Gas & Electric Company. All rights reserved. Removal of this copyright notice without permission is not permitted under law.

Indicates Latest Revision | Completely Revised | New Page | Information Removed

392.1	SDG&E ELECTRIC STANDARDS LINE MATERIALS BOLT, LAG SCREW	REVISION DATE 7–29–83 APPD PSA 1/2009

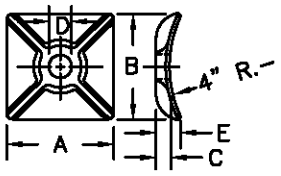

ITEM 30 – 31

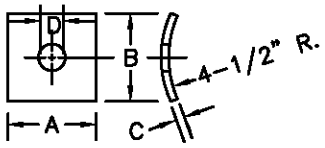

ITEM 32

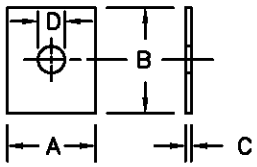

ITEM 35 – 37

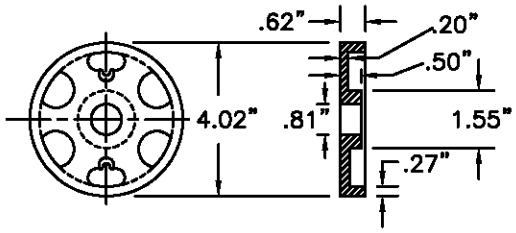

ITEM 52 (C)

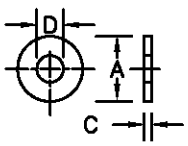

ITEM 41 – 44

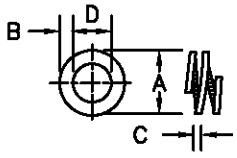

ITEM 47 – 49 (B)

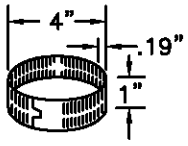

ITEM 53

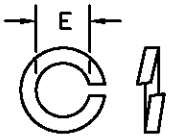

ITEM 54 – 57

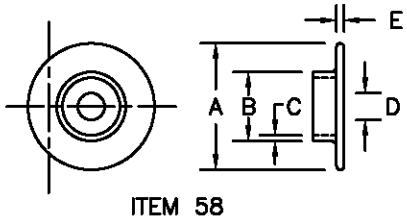

ITEM 58

BILL OF MATERIAL:

SQUARE CURVED WASHERS						STOCK NUMBER	ASSEMBLY UNITS
ITEM NO.	A	B	C	D	E		
30	3"	3"	5/16"	11/16"	5/8"	797792	--
31	4"	4"	7/16"	13/16"	1"	797760	RIBWSH
32	3"	3"	1/4"	13/16"	--	798912	--
SQUARE FLAT WASHERS							
35	3 1/2"	3 1/2"	3/8"	15/16"	--	799136	--
36	3"	3"	1/4"	13/16"	--	799104	SQ-WSH
37	2 1/4"	2 1/4"	3/16"	11/16"	--	799040	5/8SQ
ROUND WASHERS							
41	2"	–	9/64"	13/16"	–	800256	RD-WSH
42	1-3/4"	–	1/8"	11/16"	–	800320	5/8R
43	1-3/8"	–	7/64"	9/16"	–	800192	1/2R
44	1"	–	5/64"	7/16"	–	800288	3/8R

DOUBLE COIL SPRING WASHERS (B)						STOCK NUMBER	ASSEMBLY UNITS
ITEM NO.	A	B	C	D	E		
47	1-1/4"	7/32"	11/64"	13/16"	--	798496	SP-WSH
48	1-1/16	3/16"	9/64"	11/16"	--	798560	5/8S
49	27/32"	5/32"	7/64"	17/32"	--	798464	1/2S
MISCELLANEOUS							
52	SHEAR PLATE NO. 2 (C)					262240	SHRPLT
53	SPLIT RING					599584	SPLT-R
54	SPRING LOCK WASHER				3/8"	796832	--
55	SPRING LOCK WASHER				1/2"	796768	
56	SPRING LOCK WASHER				5/8"	796864	
57	SPRING LOCK WASHER				3/4"	796800	LK-WSH
CENTERING WASHER							
58	2-3/4"	1-7/16"	1/8"	5/8"	3/16"	795520	CTRWSH

INSTALLATION:

A. ITEMS 30 THRU 44 GALVANIZED PER A.S.T.M. SPECS. A153-53.

(B) BACK OFF ONE-QUARTER TURN AFTER WASHER HAS BEEN FULLY COMPRESSED.

(C) THIS ITEM IS NOT EXEMPT.

© 1998 - 2005 San Diego Gas & Electric Company. All rights reserved. Removal of this copyright notice without permission is not permitted under law.

Indicates Latest Revision | Completely Revised | New Page | Information Removed

REVISION
DATE 1-1-94
APPD PA / BOB

SDG&E ELECTRIC STANDARDS

LINE MATERIALS
WASHER

392.2

SCOPE: THIS STANDARD SHOWS TYPICAL INSTALLATION OF BOLT AND WASHER ASSEMBLIES ON CROSSARMS AND POLES.

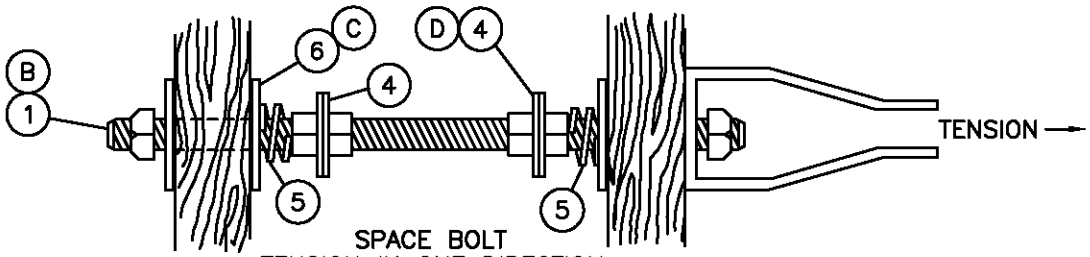

SPACE BOLT
TENSION IN ONE DIRECTION

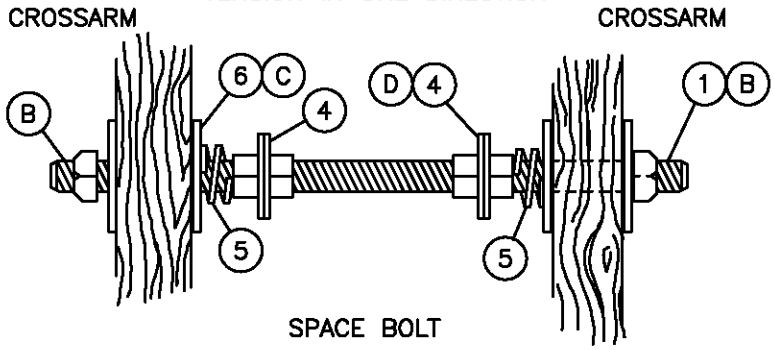

SPACE BOLT
NO TENSION OR TENSION IN EITHER DIRECTION

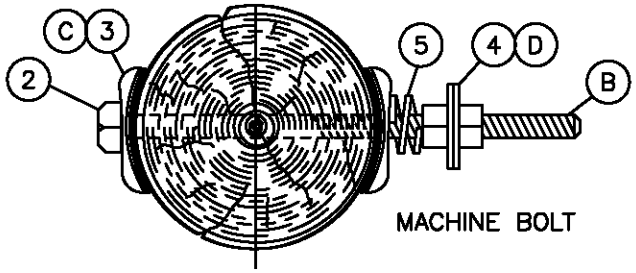

MACHINE BOLT

BILL OF MATERIAL:

ITEM	DESCRIPTION	QUANTITY	CONST STD OR PAGE NO.	STOCK NUMBER
1	BOLT, SPACE, GALV, & 6 NUTS (SIZE AS REQ'D)	1	392.1	–
2	BOLT, MACH, GALV, & 2 NUTS (SIZE AS REQ'D)	1	392.1	–
3	WASHER, SQUARE, CURVED, GALV (SIZE AS REQ'D)	2	392.2	–
4	WASHER, ROUND, GALV (SIZE AS REQ'D)	AS REQ'D	392.2	–
5	WASHER, DOUBLE COIL SPRING, GALV (SIZE AS REQ'D)	AS REQ'D	392.2	–
6	WASHER, SQUARE, FLAT, GALV (SIZE AS REQ'D)	4	392.2	–

INSTALLATION:

A. DOUBLE COIL SPRING LOCK WASHER INSTALLATION.
1. PLACE SQUARE FLAT WASHER AGAINST WOOD.
2. INSTALL DOUBLE COIL WASHER OF PROPER SIZE ON BOLT
3. INSTALL NUT AND TIGHTEN UNTIL COIL IS FULLY COMPRESSED.
4. BACK–OFF NUT APPROXIMATELY 1/4 TURN.

(B) CUT OFF END OF BOLT WHEN IT PROTRUDES MORE THAN 1 INCH BEYOND NUT IN CLIMBING SPACE.

(C) USE FLAT SQUARE WASHERS FOR FLAT SURFACES AND FOR BOLTING TRANSFORMERS TO POLES. USE CURVED SQUARE WASHERS ON CURVED SURFACES WHEN HOLDING GUYS OR CONDUCTORS.

(D) DOUBLE ROUND WASHERS FOR BONDING AND FUTURE BONDING.

© 1998 - 2005 San Diego Gas & Electric Company. All rights reserved. Removal of this copyright notice without permission is not permitted under law.

Indicates Latest Revision	Completely Revised	New Page	Information Removed

392.3	SDG&E ELECTRIC STANDARDS TYPICAL BOLT AND WASHER ASSEMBLY	REVISION DATE 1–1–86 APPD PSA/ 2009

SCOPE: THIS STANDARD SHOWS TYPICAL INSTALLATION OF SPLIT RINGS AND STEEL THRUST PLATE ON DOUBLE CROSSARMS.

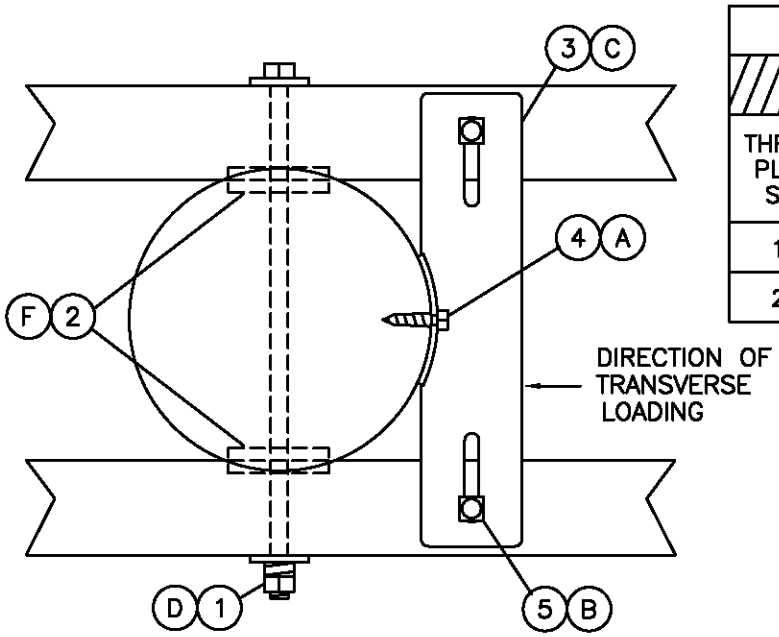

THRUST PLATE APPLICATION				
THRUST PLATE SIZE	DIAMETER OF POLE AT CROSSARM THRU-BOLT (G)			
	STANDARD CROSSARMS		HEAVY CROSSARMS	
	MIN.	MAX.	MIN.	MAX.
18"	7-3/4"	11-3/4"	5-3/4"	9-3/4"
22"	11-3/4"	15-3/4"	9-3/4"	13-3/4"

NOTE: SPLIT RINGS MAY NOT BE REQUIRED. FOR APPLICATION OF THRUST PLATE AND SPLIT RINGS, SEE CONSTRUCTION STANDARD 433.

BILL OF MATERIAL:

ITEM	DESCRIPTION	QUANTITY	CONSTR. STD OR PAGE NO.	STOCK NUMBER	ASSEMBLY UNITS
1	BOLT, MACH, GALV, 3/4" X (LENGTH AS REQ'D), 2 SQUARE AND 1 DOUBLE COIL SPRING WASHER	1	STD 392	–	–
2	SPLIT RING, GALV, 4"	2	–	599584	SPLT-R
3	PLATE, THRUST, GALV, 18" X 4", OR,	1	–	541210	TPLT18
	22" X 5"	1	–	541208	TPLT22
4	SCREW, LAG, GALV, 5/8" X 5"	1	–	621600	–
5	BOLT, MACH, GALV, 3/4" X 9", 1 SQUARE AND 1 DOUBLE COIL SPRING WASHER	2	–	154080	–

INSTALLATION:

(A) BEFORE DRILLING CROSSARMS FOR BOLTING THRUST PLATE TO CROSSARMS, ENSURE THAT THRUST PLATE IS DRIVEN TIGHT AGAINST POLE WITH LAG SCREW.

(B) DRILL THRUST PLATE MOUNTING BOLT HOLES ON CROSSARMS CENTERLINE.

(C) DO NOT BOND STEEL THRUST PLATE OR HARDWARE.

(D) SEE STANDARD 392.3 FOR TYPICAL BOLT AND WASHER ASSEMBLY.

(F) CUT POLE GAIN ON BOTH SIDES WHEN SPLIT RINGS ARE INSTALLED.

(G) ADD 1/2" TO THESE DIMENSIONS IF SPLIT RINGS ARE INSTALLED.

© 1998 - 2005 San Diego Gas & Electric Company. All rights reserved. Removal of this copyright notice without permission is not permitted under law.

Indicates Latest Revision	Completely Revised	New Page	Information Removed

REVISION DATE 1-1-94 APPD PA/RDG	SDG&E ELECTRIC STANDARDS	392.4
	TYPICAL SPLIT RING AND STEEL THRUST PLATE ASSEMBLY	

OH397 FIELD MAINTENANCE ONLY

ALL VERSIONS LISTED IN FMO ARE SUPERSEDED BY THEIR CURRENT VERSION FOUND INSIDE THE OVERHEAD CONSTRUCTION STANDARD MANUAL.

REVISION HISTORY:

11/09/2022: MOVED TO FMO

TABLE OF CONTENTS

© 1998 - 2022 San Diego Gas & Electric Company. All rights reserved. Removal of this copyright notice without permission is not permitted under law.

REV	CHANGE	DR	BY	DSN	APV	DATE	REV	CHANGE	DR	BY	DSN	APV	DATE
C							F						
B							E						
A	ORIGINAL ISSUE	EDM	RSL	GLW	KRG	11/09/2022	D						

	Indicates Latest Revision		Completely Revised	X New Page		Information Removed

SDG&E ELECTRIC OVERHEAD FIELD MAINTENANCE ONLY STANDARDS

CROSARM MOUNTING BRACKETS

SCOPE: THIS STANDARD SHOWS VARIOUS BRACKETS FOR THE CROSSARM MOUNTING OF EQUIPMENT.

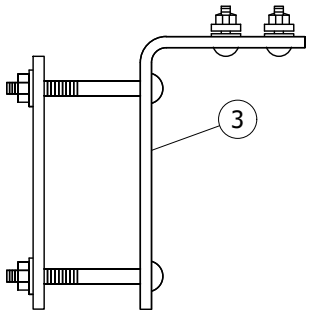

FIGURE 3
CROSSARM TERMINAL (A)
MOUNTING BRACKET

INSTALLATION:

(A) WHEN INSTALLING ON A 6 INCH WIDE CROSSARM, REPLACE BRACKET SUPPLIED CARRIAGE BOLTS WITH 8-INCH CARRIAGE BOLTS.

BILL OF MATERIALS:

ITEM	DESCRIPTION	QUANTITY	STANDARD PAGE	STOCK NUMBER	DESIGN UNITS
3	BRACKET, TERMINAL CROSSARM MOUNTING	-	-	S166060	2/0BKT
4	BOLT, CARRIAGE, 3/8" X 8" W/SQ NUT (A) (I)	-	-	S150144	-

NOTES:

(I) ITEM NOT SHOWN ON FIGURES.

REFERENCE: NONE

FIELD MAINTENANCE ONLY

© 1998 - 2022 San Diego Gas & Electric Company. All rights reserved. Removal of this copyright notice without permission is not permitted under law.

REV	CHANGE	DR	BY	DSN	APV	DATE	REV	CHANGE	DR	BY	DSN	APV	DATE
C	MOVED TO FMO	EDM	RSL	GLW	KRG	11/09/2022	F						
B	TABLE UPDATE	EDM	JIK	JES	CZH	05/11/2020	E						
A	ORIGINAL ISSUE	-	-	-	PTA/MJC	12/08/2010	D						

X Indicates Latest Revision | Completely Revised | New Page | Information Removed

SDG&E ELECTRIC OVERHEAD FIELD MAINTENANCE ONLY STANDARDS

CROSARM MOUNTING BRACKETS

MAIN TABLE OF CONTENTS

PAGE	SUBJECT
413	FIBERGLASS SUPPORT CONSTRUCTION, 12KV AND BELOW
414	POST INSULATOR AND BRACKET CONSTRUCTION, ANGLES 0° TO 5°, 12 AND 12.47KV
415	POST INSULATOR AND BRACKET CONSTRUCTION, ANGLES 5° TO 30°, 12 AND 12.47KV
420	VERTICAL CONSTRUCTION 30° TO 60° ANGLES, 12 AND 12.47KV
421	VERTICAL CONSTRUCTION 60° TO 90° ANGLES, 12 AND 12.47KV
422	POST INSULATOR AND BRACKET CONSTRUCTION, "4 WAY AND 'T' CORNERS", 12 AND 12.47KV
433	LINE ANGLES ON CROSSARMS
434	750 - 7500 VOLT BUCKARM CORNERS
436	PRIMARY, SINGLE-PHASE TRANSFORMER INSTALLATION, EXISTING LINE AND BUCK
438	NEUTRAL INSTALLATION PIN-TYPE OR DEAD-END, 12KV AND BELOW
439	CROSSARM EXTENSION BRACKET
475	WOOD POLE TOP EXTENSIONS FOR LINE ARMS OR SERVICE CLEARANCE ARMS - LIGHT DUTY
476	POLE TOP EXTENSIONS FOR SERVICE CLEARANCE ARMS

© 1998 - 2021 San Diego Gas & Electric Company. All rights reserved. Removal of this copyright notice without permission is not permitted under law.

REV	CHANGE	DR	BY	DSN	APV	DATE	REV	CHANGE	DR	BY	DSN	APV	DATE
C	ADDED 438	-	JS	IL	MDJ	8/11/2016	F	OH433 MOVED TO FMO	EPI	JES	JES	CZH	10/9/2020
B	ADDED 436	-	JS	IL	MDJ	8/11/2016	E	ADDED 475	-	JS	IL	MDJ	8/11/2016
A	ORIGINAL ISSUE	-	JS	IL	MDJ	7/3/2016	D	ADDED 439	-	JS	IL	MDJ	8/11/2016

X Indicates Latest Revision | Completely Revised | New Page | Information Removed

SDG&E ELECTRIC OVERHEAD FIELD MAINTENANCE ONLY STANDARDS

SHEET 1 OF 1

DISTRIBUTION POLE TOPS FMO
TABLE OF CONTENTS

FMO
OH401.1

FIELD MAINTENANCE ONLY

REVISION HISTORY:

7/13/2016: All versions prior to 2016 are superseded by their current version found inside the Overhead Construction Standard Manual.

TABLE OF CONTENTS

© 1998 - 2016 San Diego Gas & Electric Company. All rights reserved. Removal of this copyright notice without permission is not permitted under law.

REV	CHANGE	BY	DSGN	APPV	DATE	REV	CHANGE	BY	DSGN	APPV	DATE
C						F					
B						E					
A	ORIGINAL ISSUE	JS	IL	MDJ	7/13/2016	D					

X Indicates Latest Revision | Completely Revised | New Page | Information Removed

SHEET 1 OF 1

SDG&E ELECTRIC OVERHEAD STANDARD

FIBERGLASS SUPPORT CONSTRUCTION, 12KV AND BELOW

FMO OH 413

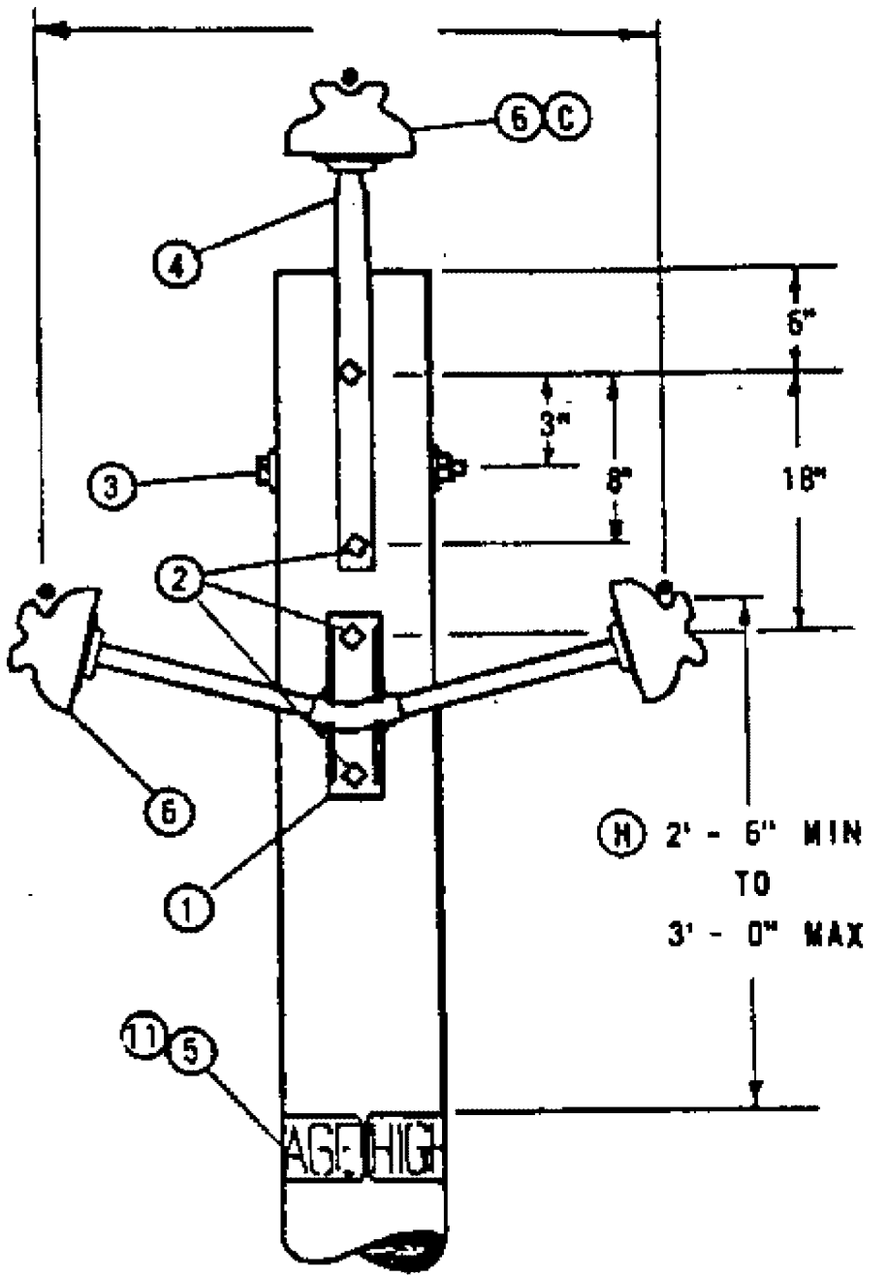

FIGURE 1
WORK ORDER DESIGNATION
"FGS AND PTP"

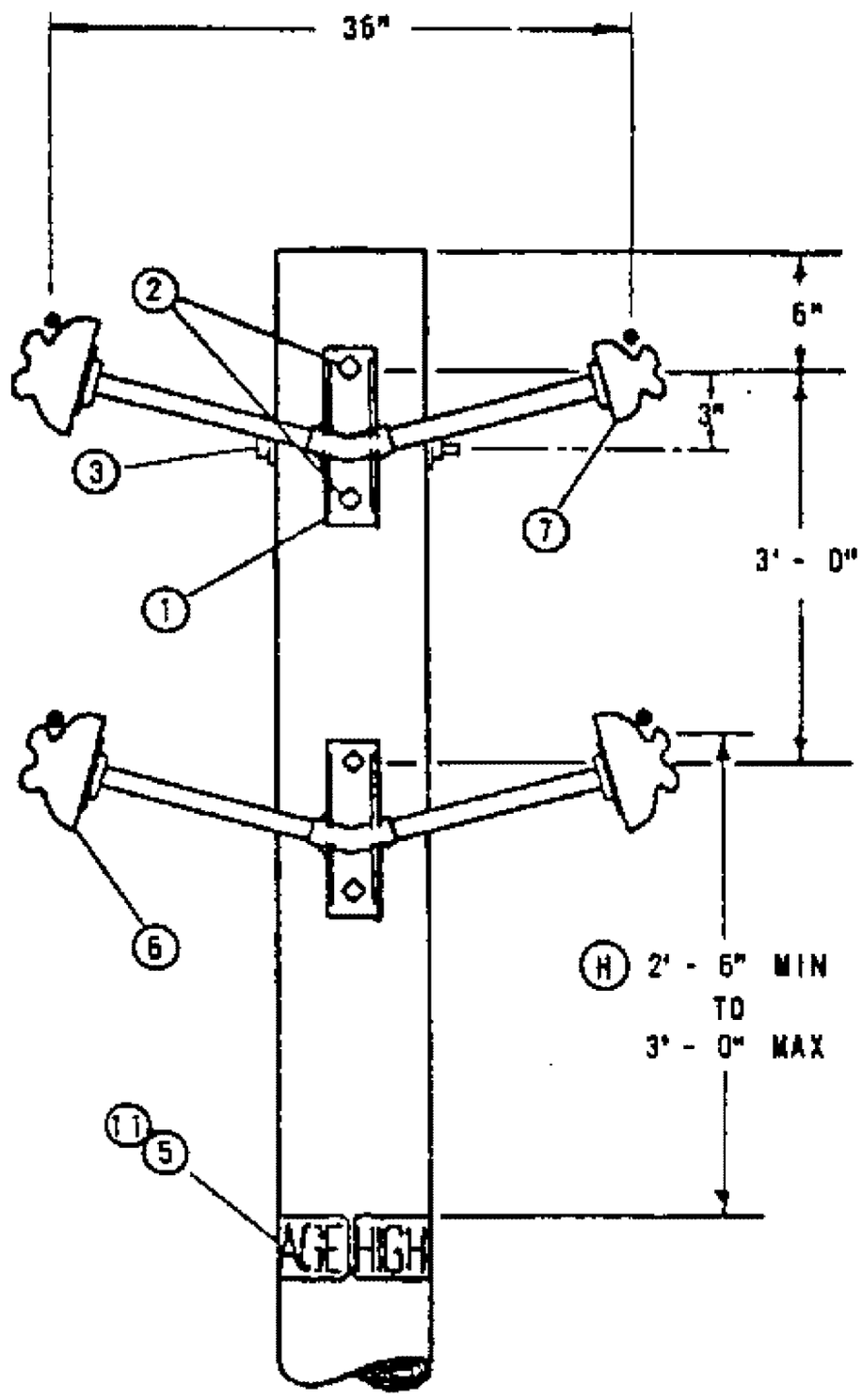

FIGURE 2
WORK ORDER DESIGNATION
"FGS"

NOTES:

A. USE MAXIMUM ANGLE OF DEVIATION OF 2.25°, BASED ON CLIMBING SPACE REQUIREMENTS (G.O. 95, RULE 54.7A2).

B. USE IN CONTAMINATION DISTRICTS 2 AND 3 AS DEFINED ON STANDARDS PAGE 287.

(C) SUBSTITUTE ONE 55-3 FOR ONE 55-5 INSULATOR AND CORRESPONDING PREFORMED TYPE TIE ON NEUTRAL WIRE FOR IDENTIFICATION.

(E) EXEMPT MATERIALS.

(F) ITEM 10 IS PREFERRED OVER ITEMS 8 & 9.

(G) 636 KCM AND 1033.5 KCM CONDUCTORS CANNOT BE USED SINCE NO CLAMP INSULATORS OF THIS TYPE ARE AVAILABLE.

(H) THESE DIMENSIONS ARE IN ACCORDANCE WITH G.O. 95.

I MAXIMUM SPAN LENGTH FOR THIS CONSTRUCTION IS 200'. IF SPAN LENGTH IS GREATER, PLEASE CONTACT SYSTEM STANDARDS.

ITEM PTF	ITEM OCD	DESCRIPTION	QUANTITY FIG. 1 1Ø	QUANTITY FIG. 1 3Ø	QUANTITY FIG. 2 4 WIRE	STOCK NO. OR CONSTR. STDS.
1		BRACKET, 2 PHASE PIN	1	1	2	166912
2		BOLT, MACH 5/8 X ___", 1-2 1/4" FLAT WASH., 1 DBL COIL SPR. WASH. (E)	2	4	4	PGS 139, 140
3		BOLT, MACH 5/8" X ___", 2-2 1/4" FLAT WASH., 1 DBL COIL SPR WASH. (E)	1	1	1	PGS 139, 140
4		PIN, POLE TOP, 24", 1" LEAD THREADS	-	1	-	532480
5		SIGN, HIGH VOLTAGE (E)	2	2	2	647615
	6	INSULATOR, PIN TYPE, CLASS 55-5	2	3	3	429056
	7	INSULATOR, PIN TYPE, CLASS 55-3	(C)	(C)	1	429216
	8	WIRE TIE, (F)	IF REQ'D.			700 SECTION
	9	GUARD, LINE, ALUM CONDUCTOR (F)	IF REQ'D.			700 SECTION
	10	TIE, PREFORMED, ALUMINUM CONDUCTORS, (F)	2	3	4	PG 760
11		NAILS, 1 3/4" GALV (E)	16	16	16	492192

APP'D JLWK
SYS STDS ENGR

SDG&E ELECTRIC STANDARDS

FIBERGLASS SUPPORT CONSTRUCTION, 12KV AND BELOW

499.101
SUPERCEDES
413 (1-1-92)

TABLE OF CONTENTS

FIELD MAINTENANCE ONLY

REVISION HISTORY:

7/13/2016: All versions prior to 2016 are superseded by their current version found inside the Overhead Construction Standard Manual.

TABLE OF CONTENTS

© 1998 - 2016 San Diego Gas & Electric Company. All rights reserved. Removal of this copyright notice without permission is not permitted under law.

REV	CHANGE	BY	DSGN	APPV	DATE	REV	CHANGE	BY	DSGN	APPV	DATE
C						F					
B						E					
A	ORIGINAL ISSUE	JS	IL	MDJ	7/13/2016	D					

X Indicates Latest Revision | Completely Revised | New Page | Information Removed

SHEET 1 OF 1

SDG&E ELECTRIC OVERHEAD STANDARD

POST INSULATOR AND BRACKET CONSTRUCTION, ANGLES 0° TO 5°, 12 AND 12.47KV

FMO OH 414

SCOPE: THIS STANDARD SHOWS DISTRIBUTION CONSTRUCTION OF 12 AND 12.47 KV LINES WITH A LINE ANGLE NOT EXCEEDING 5°, USING ARMLESS VERTICAL CONSTRUCTION.

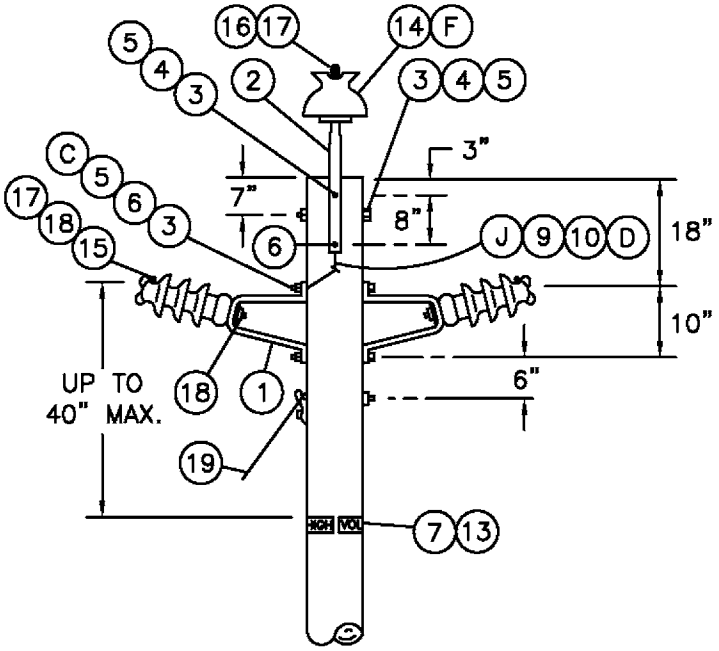

FIGURE 1

POLE TOP POSITION 3 WIRE CIRCUIT,
WORK ORDER DESIGNATION PTP, PIB, & TPI

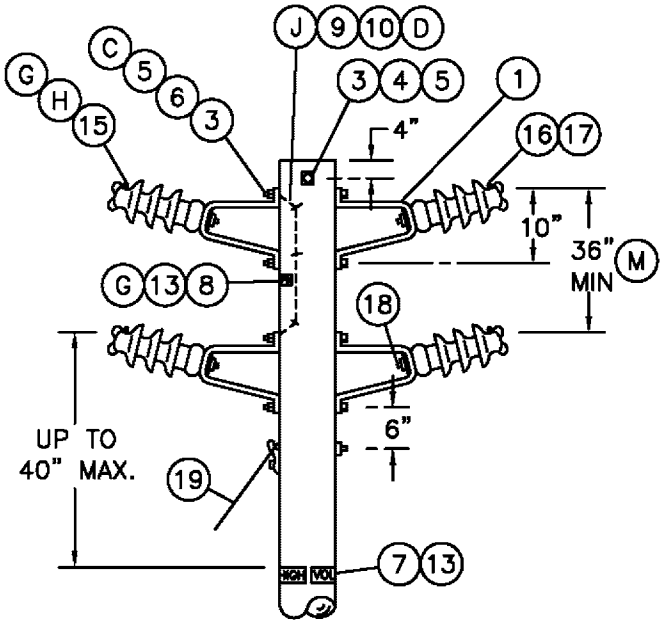

FIGURE 2

POLE TOP POSITION 2, 3, OR 4 WIRE CIRCUIT,
WORK ORDER DESIGNATION PIB & TPI

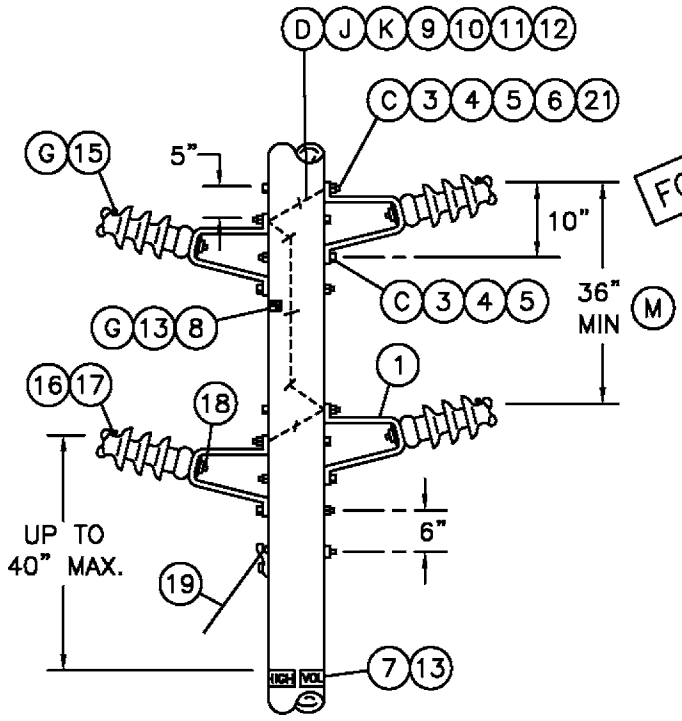

FIGURE 3

BELOW POLE TOP POSITION 2, 3, OR 4 WIRE CIRCUIT
WORK ORDER DESIGNATION PIB & TPI

FOR FIELD MAINTENANCE ONLY

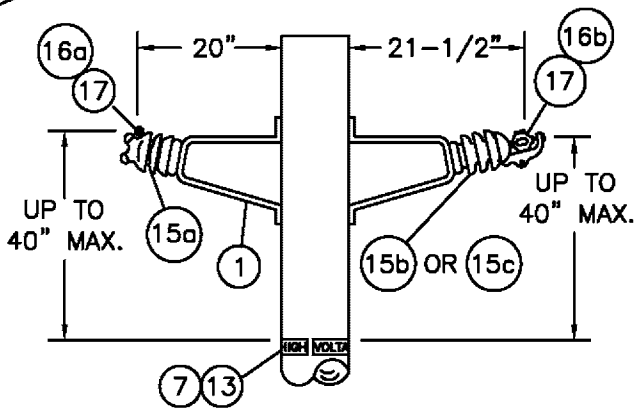

FIGURE 4

HORIZONTAL POST INSULATOR
WORK ORDER DESIGNATION PIB, TPI, & HPI

TABLE OF CONTENTS

DATE 1-1-96 APPD PA/BOG	SDG&E ELECTRIC STANDARDS POST INSULATOR AND BRACKET CONSTRUCTION, ANGLES 0° TO 5°, 12 AND 12.47KV	499.102 SUPERSEDES 414.1 (1-1-96)

INSTALLATION:

A. CLIMBING SPACE MUST BE PROVIDED PER STANDARDS PAGE 252.

B. USE CLAMP TOP LINE POST INSULATORS AND CLAMPS FOR 1033 KCMIL ACSR.

(C) INSTALL DOUBLE COIL SPRING WASHER SO IT CONTACTS BRACKET.

(D) BONDING OF THE BRACKETS IS ONLY REQUIRED WITHIN HEAVY CONTAMINATION AREA, DISTRICT 1 ON PAGE 287. USE BONDING PROVISIONS ON BRACKETS, IF THEY ARE FURNISHED.

(F) SUBSTITUTE A CLASS 55-3 INSULATOR (STOCK NO. 429216) FOR NEUTRAL IDENTIFICATION.

(G) IF A SMALLER LINE POST INSULATOR IS NOT AVAILABLE FOR NEUTRAL AS COMPARED TO THOSE ON THE PHASE POSITION, THE "PN" SIGN SHALL BE USED TO IDENTIFY THE NEUTRAL.

(H) RESISTANCE GLAZE (RG) CLAMP TOP POST INSULATORS (STOCK NO 428952) SHALL BE USED WHEN AVAILABLE ON TRIAL APPLICATIONS ON PHASE CONDUCTORS IN HEAVY CONTAMINATION AREAS AS DEFINED ON PAGE 287 AND ONLY USING FIGURE 2 CONSTRUCTION. CONDUCTOR CLAMPS ARE REQUIRED WITH "RG" INSULATORS. INSTALL A "DO NOT WASH" SIGN ABOVE THE POLE TAGS IN SIGHT OF ON-COMING TRAFFIC.

I. USE FIGURES 2 OR 3 WHERE NEUTRAL MAY BE REQUIRED IN THE FUTURE. CONSULT WITH DISTRICT ENGINEER.

(J) TO PREVENT RADIO INFLUENCE VOLTAGE (R.I.V.), DO NOT LOCATE BOND WIRE STAPLES WITHIN 1" OF BOLTS.

(L) ORDER (ITEM 18) FOR HPI ONLY.

(M) FOR SPAN LENGTHS GREATER THAN 250', THE CONDUCTOR SPACING IS DETERMINED BY THE FORMULA:

$$\text{SPACING} = 3' + \left[\frac{\text{SPAN LENGTH} - 250'}{50}\right]$$

IF SPAN LENGTH IS GREATER THAN 325', PLEASE CONTACT DISTRIBUTION STANDARDS.

N. AN INSULATOR MOUNTED DIRECTLY ON THE SIDE OF A POLE SHALL BE CONSIDERED AS IN A HORIZONTAL POSITION (SEE FIG. 4). AN INSULATOR MOUNTED DIRECTLY AT THE TOP OF THE POLE IN A VERTICAL POSITION SHALL BE CONSIDERED AS IN A VERTICAL POSITION (SEE G.O. 95 RULE 54.11 A).

BILL OF MATERIAL:

FOR FIELD MAINTENANCE ONLY

ITEM	DESCRIPTION	QUANTITY FIG. 1	QUANTITY FIG. 2 2 WIRE	QUANTITY FIG. 2 3 WIRE	QUANTITY FIG. 2 4 WIRE	QUANTITY FIG. 3 2 WIRE	QUANTITY FIG. 3 3 WIRE	QUANTITY FIG. 3 4 WIRE	STOCK NO. OR CONSTR STDS	ASSEMBLY UNITS
1	BRACKET, POST INSULATOR (PIB)	2	2	3	4	2	3	4	166848	PIB
2	PIN, POLE TOP 24", 1" OR 1 3/8" LEAD THREAD AS REQ'D	1	–	–	–	–	–	–	532480	PTP1
3	BOLT, MACH, 5/8" X ___"	5	3	5	5	4	6	8	STD 392	–
4	WASHER, 2 1/4" SQ FLAT	4	2	4	2	4	6	8	STD 392	–
5	WASHER, 5/8" DOUBLE COIL SPRING	5	3	5	5	4	6	8	STD 392	–
6	WASHER, 5/8" ROUND (WHERE BONDING IS REQ'D (D))	4	–	4	4	4	6	8	STD 392	–
7	SIGN, HIGH VOLTAGE	2	2	2	2	2	2	2	647648	HV
8	SIGN, PN (PRIMARY NEUTRAL) IF REQ'D	1	1	1	1	1	1	1	648000	PN
9	WIRE, BARE SOLID ANNEALED COPPER #8 (WHERE BONDING IS REQ'D)	3'	–	6'	6'	2'	6'	8'	812928	BOND8
10	STAPLES, GALV FENCE 1 1/4" (WHERE BONDING IS REQ'D)	2	–	4	4	1	4	5	678528	–
11	MOULDING, 1" HARDWOOD	–	–	–	–	–	2.5	2.5	487200	MLDG
12	STAPLES, MOULDING GALV 3" X 1 1/16" X 1/4"	–	–	–	–	–	2	2	678560	–
13	NAILS, 1 3/4" GALV	AS REQ'D							492192	–
14	INSULATOR, PIN TYPE, CLASS AS REQ'D	1	–	–	–	–	–	–	700 SECTION	–
15	INSULATOR, POST a TIE TOP (TPI)	2	2	3	4	2	3	4	700 SECTION	–
	INSULATOR, POST b HORIZONTAL CLAMP TOP (HPI)									
	INSULATOR, POST c HORIZONTAL CLAMP TOP RG (HPI) (H)	–				–	–	–		
16	TIE a FORMED OR WIRE	3	2	3	4	2	3	4	700 SECTION	–
	TIE b CLAMP, HORIZONTAL POST INSULATOR									
17	GUARD, LINE, ALUMINUM, IF REQ'D	3	2	3	4	2	3	4	PG 759	–
18	STUD, LINE POST, 5/8" X 1 3/4" (L)	2	2	3	4	2	3	4	701728	STUD-S
19	GUY	AS REQ'D							900 SECTION	
20	SIGN, "DO NOT WASH" (H)	IF REQ'D							648024	NOWASH
21	NUT, 5/8" GALV	AS REQ'D							506880	–

TABLE OF CONTENTS

DATE 1-1-98 APPD PSA/CMC	SDG&E ELECTRIC STANDARDS POST INSULATOR AND BRACKET CONSTRUCTION, ANGLES 0° TO 5°, 12 AND 12.47KV	499.103 SUPERSEDES 414.2 (1-1-98)

FIELD MAINTENANCE ONLY

REVISION HISTORY:

7/13/2016: All versions prior to 2016 are superseded by their current version found inside the Overhead Construction Standard Manual.

TABLE OF CONTENTS

© 1998 - 2016 San Diego Gas & Electric Company. All rights reserved. Removal of this copyright notice without permission is not permitted under law.

REV	CHANGE	BY	DSGN	APPV	DATE	REV	CHANGE	BY	DSGN	APPV	DATE
C						F					
B						E					
A	ORIGINAL ISSUE	JS	IL	MDJ	7/13/2016	D					

X Indicates Latest Revision | Completely Revised | New Page | Information Removed

SHEET 1 OF 1

SDG&E ELECTRIC OVERHEAD STANDARD

POST INSULATOR AND BRACKET CONSTRUCTION, ANGLES 5° TO 30°, 12 AND 12.47KV

FMO OH 415

SCOPE: THIS STANDARD SHOWS DISTRIBUTION CONSTRUCTION OF 12 AND 12.47KV LINES WITH A LINE ANGLE GREATER THAN 5°, BUT NOT EXCEEDING 30°, USING ARMLESS VERTICAL CONSTRUCTION.

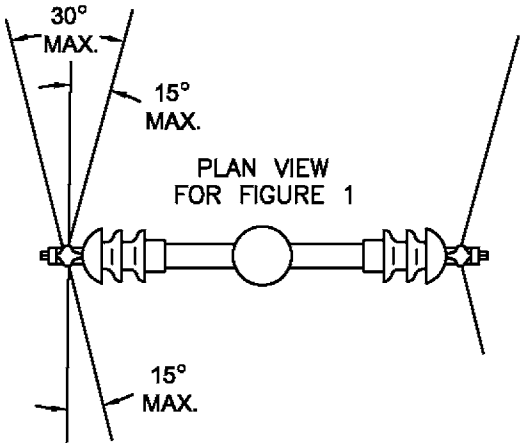

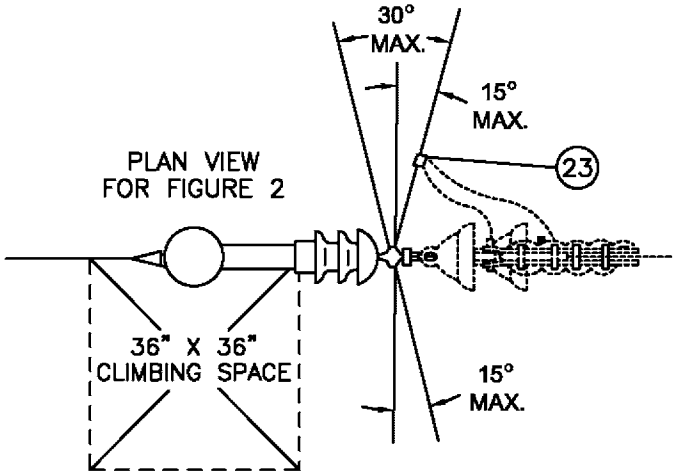

FOR FIELD MAINTENANCE ONLY

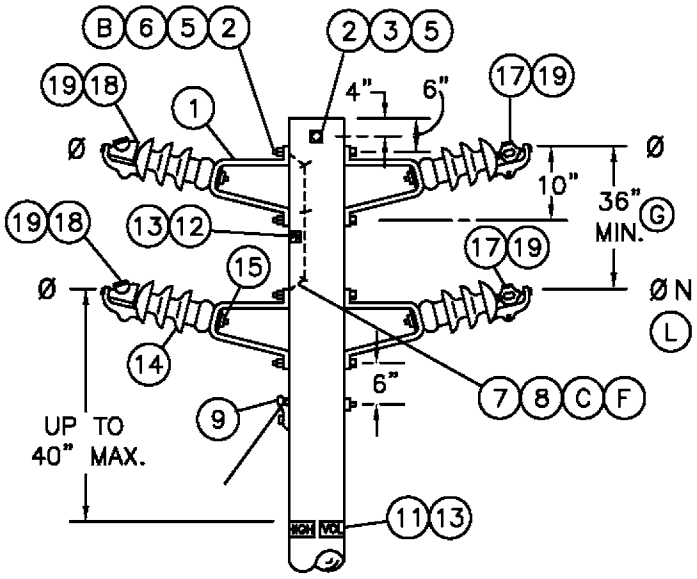

FIGURE 1 (J)

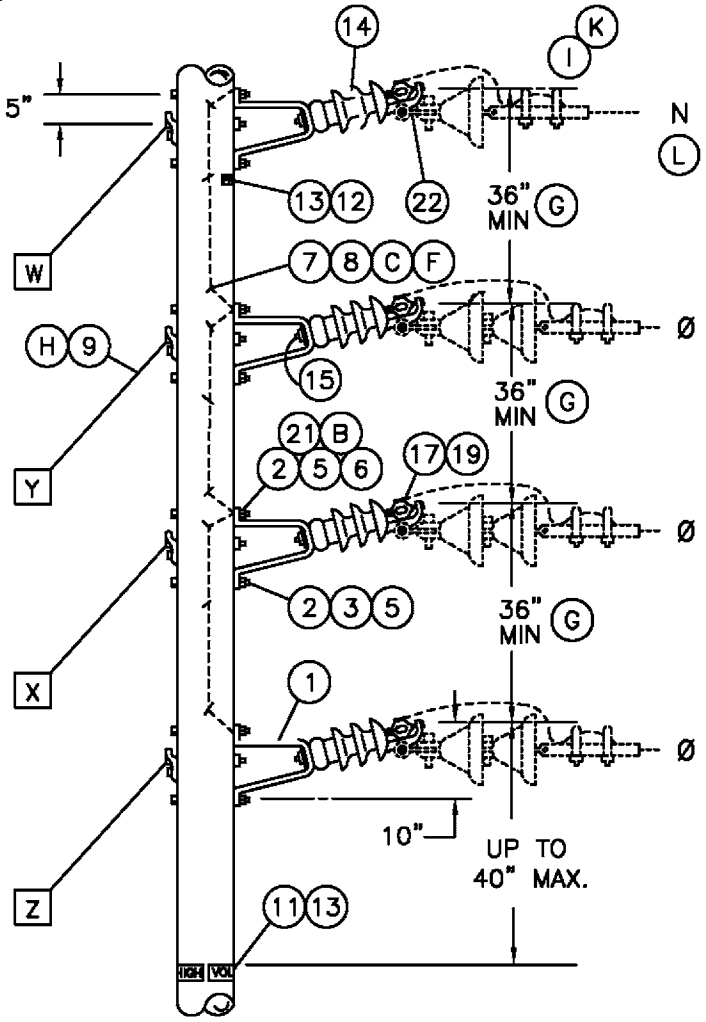

FIGURE 2

2, 3, OR 4 WIRE CIRCUIT,
ANGLES TO 30° BELOW POLE TOP
WORK ORDER DESIGNATION PIB & HPI

TABLE OF CONTENTS

499.104 SUPERSEDES 415.1 (9–13–05)	SDG&E ELECTRIC STANDARDS POST INSULATOR AND BRACKET CONSTRUCTION, ANGLES 5° TO 30°, 12 AND 12.47KV	DATE 9–13–05 APPD PBA / JJ

INSTALLATION:

A. CLIMBING SPACE MUST BE MAINTAINED PER STANDARD 252.

(B) INSTALL DOUBLE COIL SPRING WASHER SO IT CONTACTS BRACKET.

(C) BONDING OF THE BRACKETS IS ONLY REQUIRED WITHIN HEAVY CONTAMINATION AREA, DISTRICT 1, AS SHOWN ON STANDARD 287. USE BONDING PROVISIONS ON BRACKETS, IF THEY ARE FURNISHED.

(D) RESISTANCE GLAZE (RG) CLAMP TOP POST INSULATORS SHALL BE USED ONLY ON FIGURE 1 CONSTRUCTION WHEN AVAILABLE ON TRIAL APPLICATION ON PHASE CONDUCTORS IN HEAVY CONTAMINATION AREA. INSTALL A "DO NOT WASH" SIGN ABOVE THE POLE TAGS IN SIGHT OF ON-COMING TRAFFIC.

(F) TO PREVENT RADIO INFLUENCE VOLTAGE (R.I.V.) DO NOT LOCATE BOND WIRE STAPLES WITHIN 1" OF BOLTS.

(G) FOR SPAN LENGTHS GREATER THAN 250', DETERMINE CONDUCTOR SPACING BY THE FORMULA:

$$\text{SPACING} = 3' + \left[\frac{\text{SPAN LENGTH} - 250'}{50}\right]$$

IF SPAN LENGTH IS GREATER THAN 325', PLEASE CONTACT DISTRIBUTION STANDARDS.

(H) ADD THE GUYS IN ORDER INDICATED (W,X,Y,Z) AS REQUIRED IN THE GUYING SECTION.

(I) WHERE REQUIRED TO ADD A TAP TO THIS CONSTRUCTION, ATTACH DEADEND ASSEMBLY ON PAGE 422.1 AND 422.2 TO HPIs WITH DEADEND CLEVIS. IF PAGE 756 REQUIRES THIS ASSEMBLY TO BE BONDED, CONTACT DISTRIBUTION STANDARDS.

(J) WHERE REQUIRED TO ADD A TAP TO THIS CONSTRUCTION, USE FIG. 2.

(K) PER G.O.-95 RULE 54.4-C4 (b), ONLY TWO CONDUCTORS ARE ALLOWED TO BE DEAD ENDED FOR 4 KV OPERATION.

REFERENCE:

(L) ON ALL NEW CONSTRUCTION AND WHEN ADDING TO EXISTING CONSTRUCTION, NEUTRAL TO BE PLACED IN THE TOP OR BOTTOM PIN POSITIONS PER DESIGN MANUAL PAGE 5124.2.

TABLE OF CONTENTS

BILL OF MATERIAL:

FOR FIELD MAINTENANCE ONLY

ITEM PTF	ITEM OCD	DESCRIPTION	QUANTITY FIGURE 1 2 WIRE	FIGURE 1 3 WIRE	FIGURE 1 4 WIRE	FIGURE 2 2 WIRE	FIGURE 2 3 WIRE	FIGURE 2 4 WIRE	STOCK NO. OR CONSTR STD
1		BRACKET, POST INSULATOR (PIB)	2	3	4	2	3	4	166848
2		BOLT, MACH, 5/8" X __"	2	4	4	4	6	8	STD.139
3		WASHER, 2 1/4" FLAT SQ WASH.	–	2	–	2	2	4	799040
4		WASHER, 3" CURVED SQ WASH.	–	–	–	2	4	4	797792
5		WASHER, 5/8" DBL COIL SPRING	2	4	4	4	6	8	798560
6		WASHER, 5/8" ROUND	–	4	4	4	6	8	800320
7		WIRE, #8 SOLID BARE ANNEALED COPPER	–	5'	5'	2'	8'	8'	812928
8		STAPLES, 1 1/4" FENCE	–	3	3	1	4	5	678528
9		GUY	AS REQ'D						900 SECTION
10									
11		SIGN, HIGH VOLTAGE	2	2	2	2	2	2	647648
12		SIGN, PRIMARY NEUTRAL, (PN)	2 IF REQ'D	2 IF REQ'D	2	2 IF REQ'D	2 IF REQ'D	2	648000
13		NAILS, 1 3/4"	24	24	24	24	24	24	492192
	14	INSULATOR CLAMP TOP POST a HORIZONTAL				2	3	4	700 SECTION
		INSULATOR CLAMP TOP POST b HORIZONTAL RG (D)	2	3	4	–	–	–	
	15	STUD, LINE POST, 5/8" X 1 3/4"	2	3	4	2	3	4	701728
	16								
	17	CLAMP, POST INSULATOR, STANDARD	1	2	2	1	2	2	STD. 773
	18	CLAMP, POST INSULATOR, ANGLE	1	1	2	1	1	2	STD. 773
	19	GUARD, LINE, ALUMINUM, IF REQ'D	2	3	4	2	3	4	STD. 759
20		SIGN "DO NOT WASH" & 8 NAILS (IF REQ'D)(D)	1	1	1	1	1	1	648024/492192
21		NUT, 5/8" GALV	AS REQ'D						506880
	22	CLEVIS, DEADEND (I)	2	3	4	2	3	4	235776
	23	CONNECTOR, WIRE	–	–	–	4	6	8	STD. 783-787

DATE 9-20-05
APPD PBA / JJ

SDG&E ELECTRIC STANDARDS

POST INSULATOR AND BRACKET CONSTRUCTION, ANGLES 5° TO 30°, 12 AND 12.47KV

499.105
SUPERSEDES
415.2 (9-20-05)

FIELD MAINTENANCE ONLY

REVISION HISTORY:

7/13/2016: All versions prior to 2016 are superseded by their current version found inside the Overhead Construction Standard Manual.

TABLE OF CONTENTS

© 1998 - 2016 San Diego Gas & Electric Company. All rights reserved. Removal of this copyright notice without permission is not permitted under law.

REV	CHANGE	BY	DSGN	APPV	DATE	REV	CHANGE	BY	DSGN	APPV	DATE
C						F					
B						E					
A	ORIGINAL ISSUE	JS	IL	MDJ	7/13/2016	D					

X Indicates Latest Revision | Completely Revised | New Page | Information Removed

SHEET 1 OF 1

SDG&E ELECTRIC OVERHEAD STANDARD

VERTICAL CONSTRUCTION 30° TO 60° ANGLES, 12 AND 12.47KV

FMO OH 420

SCOPE: THIS STANDARD SHOWS DISTRIBUTION CONSTRUCTION OF 12 & 12.47 KV LINES WITH A LINE ANGLE GREATER THAN 30°, BUT NOT EXCEEDING 60°, USING ARMLESS VERTICAL CONSTRUCTION.

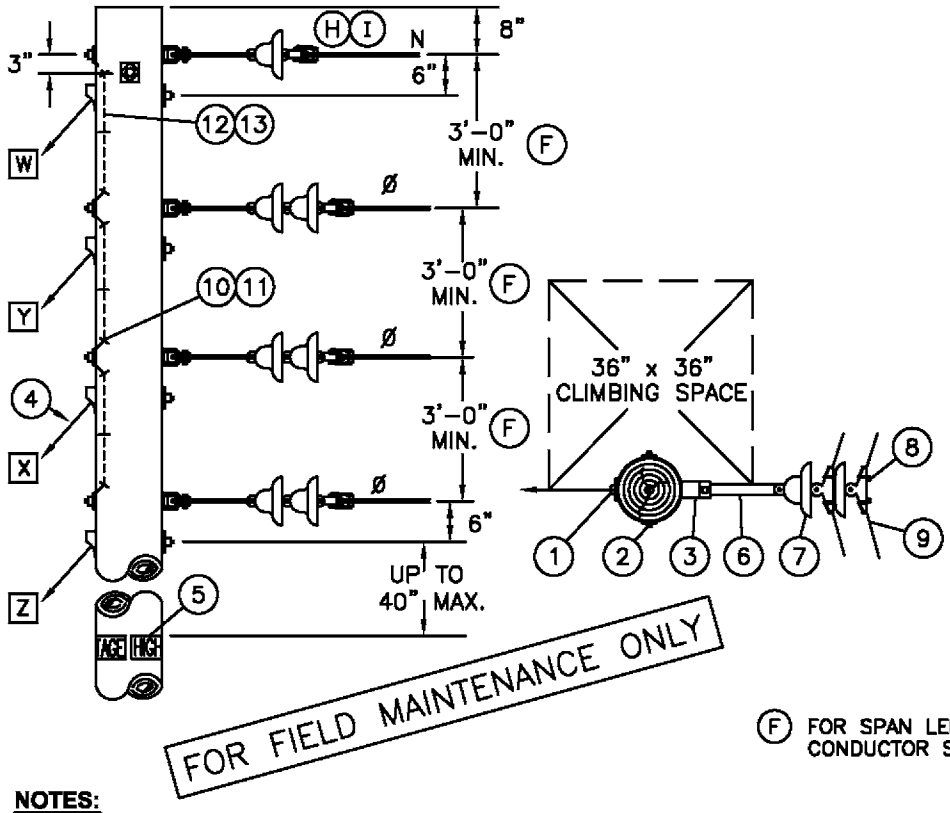

12KV VERTICAL CONSTRUCTION ASSEMBLY – MACRO UNITS			
TYPE	QUANTITY 12KV DE	QUANTITY NDE	MU ID
1/2 Y	1	1	HY1N
1/2 Y	2	–	HY2
1/2 Y	2	1	HY2N
1/2 Y	3	–	HY3
1/2 Y	3	1	HY3N
Y	2	2	Y1N
Y	4	–	Y2
Y	4	2	Y2N
Y	6	–	Y3
Y	6	2	Y3N
Z	1	1	Z1N
Z	2	–	Z2
Z	2	1	Z2N
Z	3	–	Z3
Z	3	1	Z3N

NOTES:

A. MINIMUM VERTICAL PHASE TO PHASE SPACING OF TWO FEET MAY BE USED TO ELIMINATE POLE CHANGEOUTS ON FULL TENSION SPANS 100 FEET AND SHORTER.

B. INSTALL GUYS IN ORDER INDICATED ABOVE (W,X,Y,Z) AS REQUIRED BY THE "GUYING SECTION".

C. USE BONDING INSULATORS OR INSTALL NON STATIC CLIPS (237648) ON UNBONDED SUSPENSION INSULATORS WHEN THE RESULTANT MAXIMUM GUYING TENSION PER PHASE AT THESE ANGLES IS LESS THAN 1500 POUNDS.

D. TO PREVENT RADIO INFLUENCE VOLTAGE (R.I.V.), DO NOT LOCATE STAPLES WITHIN 1" OF BOLTS.

(F) FOR SPAN LENGTHS GREATER THAN 250', DETERMINE CONDUCTOR SPACING BY THE FORMULA: SPACING=3'+ $\left[\frac{\text{SPAN LENGTH}-250'}{50}\right]$

IF SPAN IS GREATER THAN 325', PLEASE CONTACT DISTRIBUTION STANDARDS.

G. THE WORK ORDER DESIGNATION FOR THIS CONSTRUCTION IS "Z–CORNER".

(H) PER G.O. 95 RULE 54.4 – C4 (b), ONLY TWO CONDUCTORS ARE ALLOWED TO BE DEAD ENDED FOR 4 KV OPERATION.

(I) ON ALL NEW CONSTRUCTION AND WHEN ADDING TO EXISTING CONSTRUCTION, NEUTRAL TO BE PLACED IN THE TOP OR BOTTOM PIN POSITIONS PER DESIGN MANUAL PAGE 5124.2.

BILL OF MATERIAL:

ITEM	DESCRIPTION	QUANTITY 1Ø	QUANTITY 3Ø	QUANTITY 3Ø & N	STOCK NO. OR CONSTR STD
1	BOLT, MACH, GALV 5/8" X ___", 1–3" SQ CURV WASH., 1 DBL COIL WASHER, 2–5/8" RD WASH. & 1 NUT	2	3	4	STD.392
2	BOLT, MACH, GALV 5/8" X ___", 2–2 1/4" SQ WASH., 1 DBL COIL WASH., 2–5/8" RD WASH.	1	1	1	STD.392
3	CLEVIS, DEADEND 5/8" BOLT STEEL (OPEN TYPE)	2	3	4	235618
4	GUY	AS REQ'D			900 SECTION
5	SIGN, HIGH VOLTAGE & 9 NAILS	2	2	2	647648, 492192
6	LINK, EXTENSION, 12KV, 1/2" X 2" X 12"	2	3	4	466240
7	INSULATOR, SUSPENSION	4	6	7	PG 750
8	CLAMP, SUSPENSION	2	3	4	STD. 776
9	GUARD, LINE, ALUMINUM	2	3	4	STD. 759
10	WIRE, BOND, BARE SOLID ANNEALED, COPPER, #8	4'	6'	8'	812928
11	STAPLE, FENCE	3	6	9	678528
12	MOULDING, HARDWOOD, 1" (OTHER THAN TOP CIRCUIT ON POLE)	3'–6"	5'–6"	7'–6"	487200
13	STAPLES, MOULDING, GALV, 3" X 1 1/16" X 1/4" (OTHER THAN TOP CIRCUIT ON POLE)	2	4	6	678560

499.201 SUPERSEDES 420 (9–12–05)	SDG&E ELECTRIC STANDARDS	DATE 9–12–05
	VERTICAL CONSTRUCTION 30° TO 60° ANGLES, 12 AND 12.47KV	APPD PSA / JJ

TABLE OF CONTENTS

FIELD MAINTENANCE ONLY

REVISION HISTORY:

7/13/2016: All versions prior to 2016 are superseded by their current version found inside the Overhead Construction Standard Manual.

TABLE OF CONTENTS

© 1998 - 2016 San Diego Gas & Electric Company. All rights reserved. Removal of this copyright notice without permission is not permitted under law.

REV	CHANGE	BY	DSGN	APPV	DATE	REV	CHANGE	BY	DSGN	APPV	DATE
C						F					
B						E					
A	ORIGINAL ISSUE	JS	IL	MDJ	7/13/2016	D					

X Indicates Latest Revision | Completely Revised | New Page | Information Removed

SHEET 1 OF 1

SDG&E ELECTRIC OVERHEAD STANDARD

VERTICAL CONSTRUCTION 60° TO 90° ANGLES, 12 AND 12.47KV

FMO OH 421

SCOPE: THIS STANDARD SHOWS DISTRIBUTION CONSTRUCTION OF 12 & 12.47 KV LINES WITH A LINE ANGLE GREATER THAN 60°, BUT NOT EXCEEDING 90°, USING ARMLESS VERTICAL CONSTRUCTION.

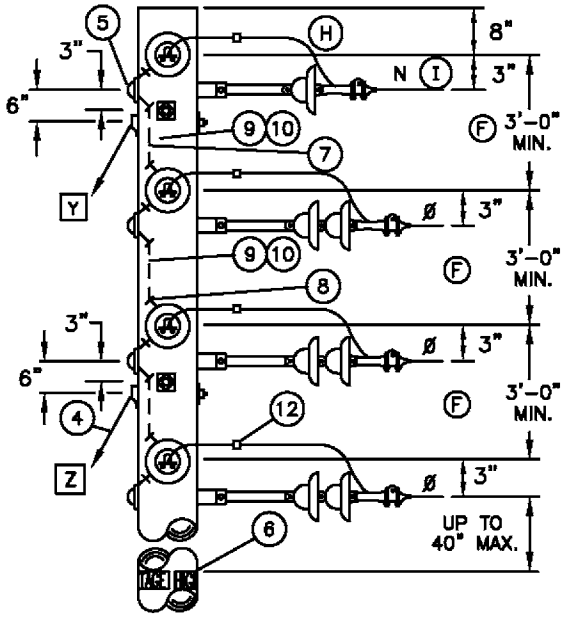

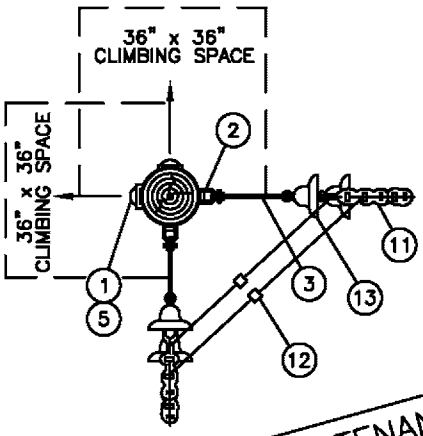

FOR FIELD MAINTENANCE ONLY

INSTALLATION:

A. MINIMUM VERTICAL PHASE TO PHASE SPACING OF TWO FEET MAY BE USED TO ELIMINATE POLE CHANGEOUTS ON FULL TENSION SPANS 100 FEET AND SHORTER.

B. INSTALL GUYS IN ORDER INDICATED ABOVE (Y,Z) AS REQUIRED BY THE "GUYING SECTION" AND IN COMPLIANCE WITH G.O. 95 RULE 54.7A4.

C. USE BONDED INSULATORS WHEN THE MAXIMUM GUYING TENSION IS LESS THAN 1000 POUNDS PER CONDUCTOR.

D. TO PREVENT RADIO INFLUENCE VOLTAGE (R.I.V.), DO NOT LOCATE STAPLES WITHIN 1" OF BOLT.

(F) FOR SPAN LENGTHS GREATER THAN 250', DETERMINE CONDUCTOR SPACING BY THE FORMULA: SPACING=3'+ $\frac{\text{SPAN LENGTH}-250'}{50}$ IF SPAN LENGTH IS GREATER THAN 325', PLEASE CONTACT DISTRIBUTION STANDARDS.

G. THE WORK ORDER DESIGNATION FOR THIS CONSTRUCTION IS "Y-CORNER".

(H) PER G.O. 95 RULE 54.4-C4 (b), ONLY TWO CONDUCTORS ARE ALLOWED TO BE DEAD ENDED FOR 4 KV OPERATION.

REFERENCE:

(I) ON ALL NEW CONSTRUCTION AND WHEN ADDING TO EXISTING CONSTRUCTION, NEUTRAL TO BE PLACED IN THE TOP OR BOTTOM PIN POSITIONS PER DESIGN MANUAL PAGE 5124.2.

BILL OF MATERIAL:

ITEM	DESCRIPTION	QUANTITY			STOCK NUMBER OR CONSTR. STD.
		1Ø	3Ø	3Ø & N	
1	BOLT, MACH, GALV 5/8" X ___", 1-3" SQ CURV WASH., 1 DBL COIL WASHER, 2-5/8"RD WASH. & 1 NUT	4	6	8	STD 392
2	CLEVIS, DEADEND 5/8" BOLT STEEL (OPEN TYPE)	4	6	8	235618
3	LINK, EXTENSION, 12KV, 1/2" X 2" X 12"	4	6	8	466240
4	GUY	AS REQ'D			900 SECTION
5	COVER, BOLT, PLASTIC, & 6-10 D NAILS	4	6	8	285696, 492192
6	SIGN, HIGH VOLTAGE & 9-10 D NAILS	2	2	2	647648, 492192
7	WIRE, BOND, BARE SOLID ANNEALED, COPPER, #8	4'	7'	8'	812928
8	STAPLES, FENCE, GALV, 1 1/4"	4	7	10	678528
9	MOULDING, HARDWOOD, 1" (OTHER THAN TOP CIRCUIT ON POLE)	2'-6"	4'-6"	6'-6"	487200
10	STAPLES, MOULDING, GALV, 3" X 1 1/16" X 1/4" (OTHER THAN TOP CIRCUIT ON POLE)	2	4	6	678560
11	CLAMP, DEADEND	4	6	8	STDS 741, 743
12	CONNECTOR	2	3	4	700 SECTION
13	INSULATOR, SUSPENSION	8	12	14	PG. 750.4

DATE 9-20-05 APPD PBA / JJ	SDG&E ELECTRIC STANDARDS VERTICAL CONSTRUCTION 60° TO 90° ANGLES, 12 AND 12.47KV	499.202 SUPERSEDES 421 (9-20-05)

TABLE OF CONTENTS

FIELD MAINTENANCE ONLY

REVISION HISTORY:

7/13/2016: All versions prior to 2016 are superseded by their current version found inside the Overhead Construction Standard Manual.

TABLE OF CONTENTS

© 1998 - 2016 San Diego Gas & Electric Company. All rights reserved. Removal of this copyright notice without permission is not permitted under law.

REV	CHANGE	BY	DSGN	APPV	DATE	REV	CHANGE	BY	DSGN	APPV	DATE
C						F					
B						E					
A	ORIGINAL ISSUE	JS	IL	MDJ	7/13/2016	D					

X Indicates Latest Revision | Completely Revised | New Page | Information Removed

SHEET 1 OF 1

SDG&E ELECTRIC OVERHEAD STANDARD

POST INSULATOR AND BRACKET CONSTRUCTION,
"4 WAY AND 'T' CORNERS", 12 AND 12.47KV

FMO
OH 422

SCOPE: THIS STANDARD SHOWS DISTRIBUTION CONSTRUCTION OF 12 & 12.47KV LINES OF THE "4 WAY AND 'T' CORNERS" USING ARMLESS VERTICAL CONSTRUCTION.

FOR FIELD MAINTENANCE ONLY

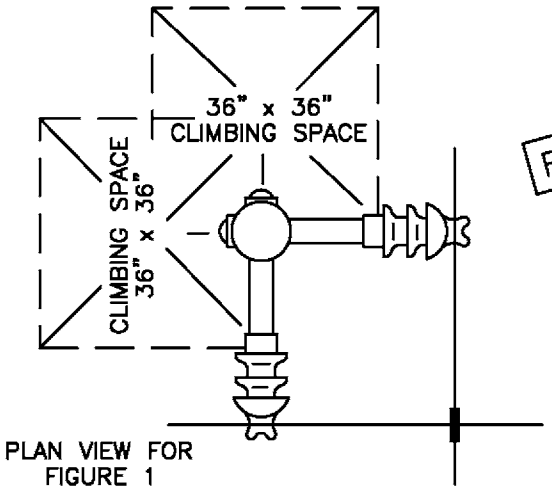

PLAN VIEW FOR FIGURE 1

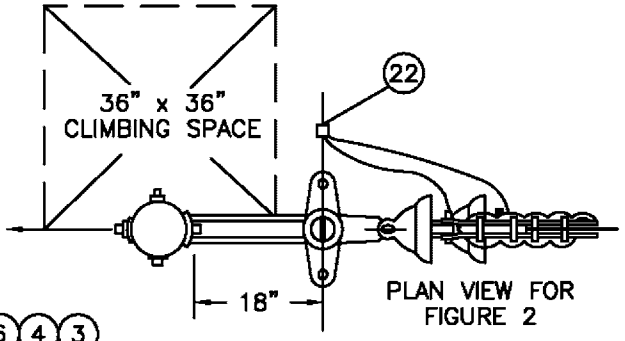

PLAN VIEW FOR FIGURE 2

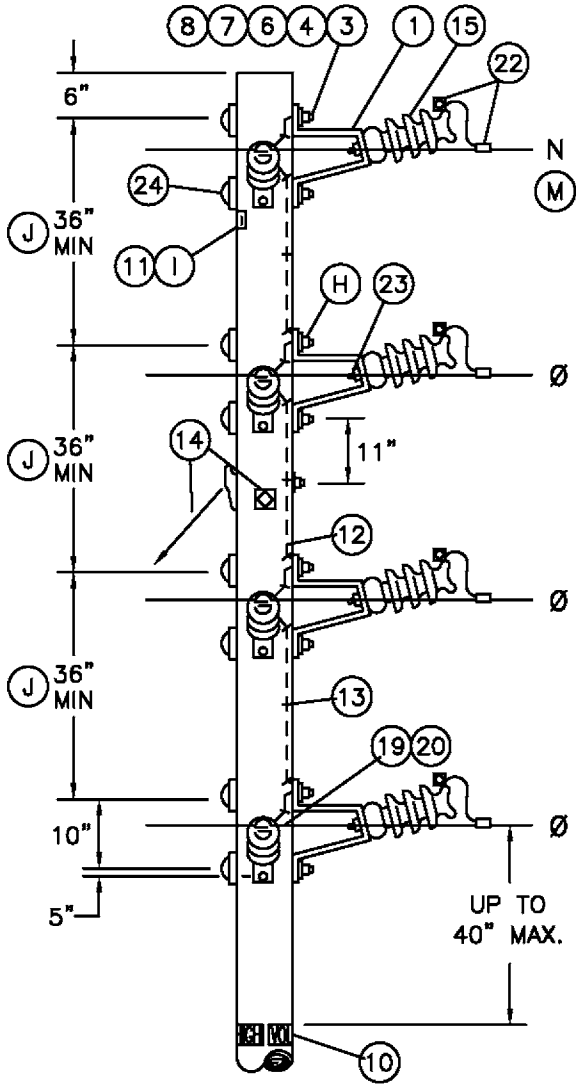

FIGURE 1
4 WAY CORNER

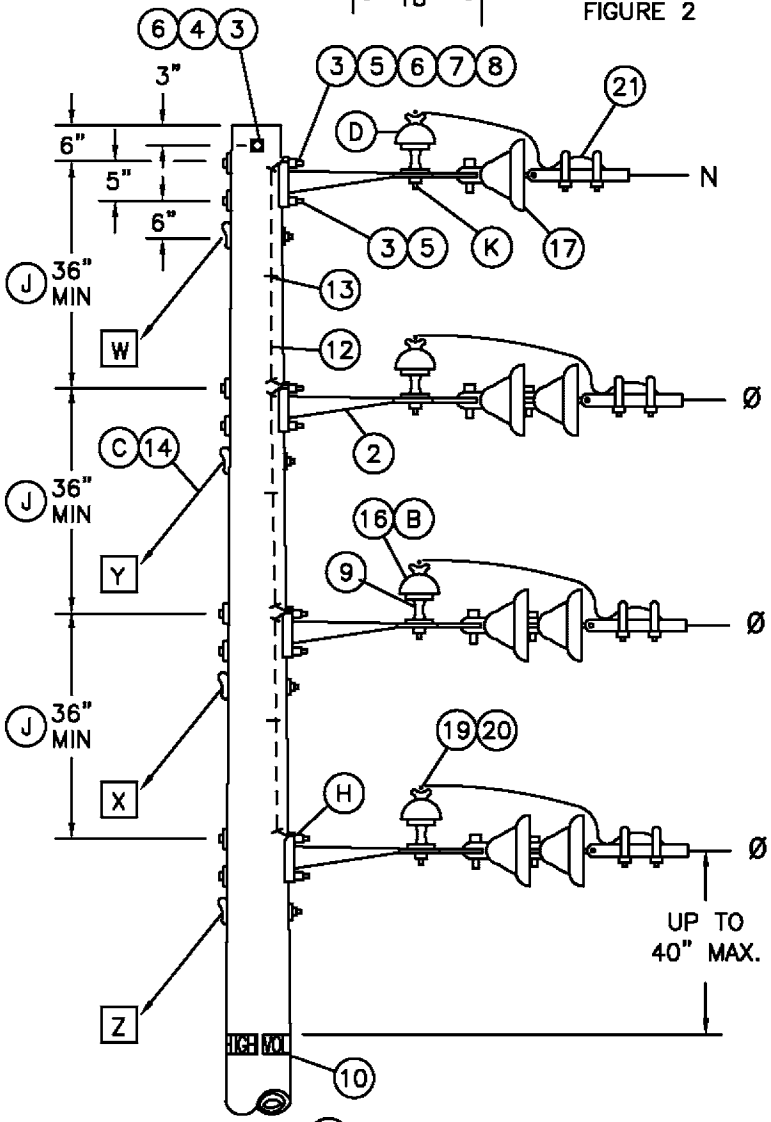

FIGURE 2 (L)
THROUGH CIRCUIT WITH SIDE TAP
"T" CORNER

TABLE OF CONTENTS

499.203 SUPERSEDES 422.1 (9-13-05)	SDG&E ELECTRIC STANDARDS POST INSULATOR AND BRACKET CONSTRUCTION, "4 WAY AND 'T' CORNERS", 12 AND 12.47KV	DATE 9-13-05 APPD PSA / JJ

INSTALLATION:

A. TO PREVENT RADIO INFLUENCE VOLTAGE (R.I.V.) DO NOT LOCATE BOND WIRE STAPLES WITHIN 1" OF BOLTS.

(B) USE CLAMP TOP LINE POST INSULATORS AND CLAMPS FOR 1033 KCMIL ACSR.

(C) ADD THE GUYS IN ORDER INDICATED (W,X,Y,Z) AS REQUIRED IN THE GUYING SECTION.

(D) SUBSTITUTE A CLASS 55-3 INSULATOR (STOCK NO. 429216) FOR NEUTRAL IDENTIFICATION.

F. BONDING IS REQUIRED WITHIN HEAVY CONTAMINATION AREA, DISTRICT 1 ON STD. 287. USE BONDING PROVISIONS ON BRACKETS, IF THEY ARE FURNISHED.

(H) INSTALL DOUBLE COIL SPRING WASHER SO IT CONTACTS BRACKET.

(I) IF A SMALLER LINE POST INSULATOR IS NOT AVAILABLE FOR NEUTRAL AS COMPARED TO THOSE IN THE PHASE POSITIONS, THE "PN" SIGN SHALL BE USED TO IDENTIFY THE NEUTRAL.

(J) FOR SPAN LENGTHS GREATER THAN 250', DETERMINE CONDUCTOR SPACING BY THE FORMULA:

$$\text{SPACING} = 3' + \left[\frac{\text{SPAN LENGTH} - 250'}{50}\right]$$

IF SPAN LENGTH IS GREATER THAN 325', PLEASE CONTACT DISTRIBUTION STANDARDS.

FOR FIELD MAINTENANCE ONLY

(K) IF BONDING IS REQUIRED, ATTACH BOND WIRE TO INSULATOR PIN WITH ADDITIONAL NUT.

L TO BE USED FOR NEW CONSTRUCTION ONLY, FOR SIDE TAPS FROM EXISTING CONSTRUCTION, USE PGS. 415.1 & 415.2.

REFERENCE:

(M) ON ALL NEW CONSTRUCTION AND WHEN ADDING TO EXISTING CONSTRUCTION, NEUTRAL TO BE PLACED IN THE TOP OR BOTTOM PIN POSITIONS PER DESIGN MANUAL PAGE 5124.2.

12KV VERTICAL CONSTRUCTION ASSEMBLY – TYPE YT MACRO UNITS			
QUANTITY			MU ID
12KV DE	NDE	P & I	
1	1	2/55-5	YT1N
2	–	2/55-5	YT2
2	1	2/55-5 1/55-3	YT2N
3	–	3/55-5	YT3
3	1	3/55-5 1/55-3	YT3N

BILL OF MATERIAL:

ITEM	DESCRIPTION	FIGURE 1				FIGURE 2				STOCK NO. OR CONSTR STD	ASSEMBLY UNITS
		NEUTRAL WIRE	Ø WIRES			NEUTRAL WIRE	Ø WIRES				
			1	2	3		1	2	3		
1	BRACKET, POST INSULATOR (PIB)	2	2	4	6	–	–	–	–	166848	PIB
2	BRACKET, 4 HOLE MOUNTING	–	–	–	–	1	1	2	3	166240	4H-BKT
3	BOLT, 5/8" X __", GALV MACH	4	4	8	12	2	3	5	7	STD392	–
4	WASHER, 2 1/2" SQ FLAT	4	4	8	12	–	2	2	2	STD392	–
5	WASHER, 3" SQ CURVED	–	–	–	–	2	2	4	6	STD392	–
6	WASHER, 5/8" DBL COIL SPRING	4	4	8	12	1	2	3	4	798560	–
7	WASHER, 5/8" ROUND (F)	4	4	8	12	2	2	4	6	800320	–
8	NUT, 5/8" (F)	2	2	4	6	2	2	4	6	506880	–
9	PIN, SHORT SHANK INSULATOR,1" OR 1 3/8" LEAD THREADS (B)	–	–	–	–	1	1	2	3	532426/532434	PSS1
10	SIGN, HIGH VOLTAGE AND 9-10D NAILS	–	2	2	2	–	2	2	2	647648/492192	HV
11	SIGN, PRIMARY NEUTRAL (PN) AND 4-10D NAILS (I)	2	–	–	–	–	–	–	–	648000/492192	PN
12	WIRE, BARE SOLID ANNEALED #8 COPPER,	5'	2'	6'	10'	4'	–	4'	8'	812928	BOND8
13	STAPLES, FENCE 1 1/4"	4	1	5	9	3	–	3	6	678528	–
14	GUY (C)	–	IF REQ'D			AS REQ'D				900 SECTION	–
15	INSULATOR, POST a TIE TOP; b HORIZONTAL CLAMP TOP	2	2	4	6	–	–	–	–	700 SECTION	–
16	INSULATOR, PIN TYPE, CLASS AS REQ'D (B)	–	–	–	–	1	1	2	3	700 SECTION	–
17	INSULATOR, SUSPENSION CLEVIS	–	–	–	–	1	2	4	6	STD750, 756	–
18											
19	GUARD, ALUMINUM IF REQ'D	2	2	4	6	1	1	2	3	STD759	–
20	TIE a FORMED OR WIRE; b CLAMP,HORIZONTAL POST INSULATOR (B)	2	2	4	6	1	1	2	3	700 SECTION	–
21	CLAMP, DEAD END	–	–	–	–	1	1	2	3	STD 741-743	–
22	CONNECTOR, WIRE	2	2	4	6	1	1	2	3	STD783-787	–
23	STUD, LINE POST, 5/8" X 1 3/4"	2	2	4	6	–	–	–	–	701728	STUD-S
24	BOLT, COVER PLASTIC & 6-1 3/4" NAILS	4	4	8	12	–	–	–	–	285696/42919	BCS

TABLE OF CONTENTS

DATE 9-20-05 APPD PSA / JJ	SDG&E ELECTRIC STANDARDS POST INSULATOR AND BRACKET CONSTRUCTION, "4 WAY AND 'T' CORNERS", 12 AND 12.47KV	499.204 SUPERSEDES 422.2 (9-20-05)

OH433 FIELD MAINTENANCE ONLY

ALL VERSIONS LISTED IN FMO ARE SUPERSEDED BY THEIR CURRENT VERSION FOUND INSIDE THE OVERHEAD AND UNDERGROUND CONSTRUCTION STANDARD MANUAL.

REVISION HISTORY:

10/09/2021: MOVED TO FMO

TABLE OF CONTENTS

© 1998 - 2021 San Diego Gas & Electric Company. All rights reserved. Removal of this copyright notice without permission is not permitted under law.

REV	CHANGE	DR	BY	DSN	APV	DATE	REV	CHANGE	DR	BY	DSN	APV	DATE
C							F						
B							E						
A	ORIGINAL ISSUE	EPI	JES	JES	CZH	10/9/2020	D						

SCOPE: THIS STANDARD SHOWS THE LIMITING ANGLES IN LINES WHERE STANDARD 1", 1-3/8" AND ANGLE PINS ARE USED. TABLES ARE FOR SINGLE ARM AND DOUBLE ARMS.

FIELD MAINTENANCE ONLY

ALUMINIM:

ALUMINUM: MAXIMUM PERMISSIBLE LINE ANGLE ON PINS (A)(B)(C)(D)

CONDUCTOR SIZE	STRANDING AL/ST (AW/AL)	DESIGN ALLOWABLE MAX. TENSION LBS	ANGLE OF DEVIATION (NEAREST 5°) (RS<250 FT)						CONTROLLING LOADING DISTRICT (INCL 85 MPH)
			SINGLE ARM			DOUBLE ARM			
			1" PIN	1-3/8" PIN	ANGLE PIN	1" PIN	1-3/8" PIN	ANGLE PIN	
#2 ACSR/AW	6/1 SPARROW	850	15°	40°	55°	40°	60°	60°	GO 95 LIGHT
1/0 ACSR/AW	6/1 RAVEN	1240	10°	25°	35°	25°	60°	60°	GO 95 LIGHT
3/0 ACSR/AW	6/1 PIGEON	1850	5°	15°	20°	15°	40°	55°	GO 95 LIGHT
4/0 ACSR/AW	6/1 PENGUIN	2400	USE 1-3/8" PIN	10°	15°	10°	30°	40°	GO 95 LIGHT
336.4 ACSR/AW	26/7 LINNET	3000	USE 1-3/8" PIN	10°	10°	10°	25°	30°	GO 95 LIGHT
			USE 1-3/8" PIN	10°	15°	10°	25°	30°	GO 95 HEAVY
397.5 ACSR/AW	26/7 IBIS	3000	USE 1-3/8" PIN	5°	10°	5°	20°	30°	GO 95 LIGHT
			USE 1-3/8" PIN	5°	10°	10°	25°	30°	GO 95 HEAVY
636 ACSR/AW	24/7 ROOK	3000	USE ANGLE PIN	5°	10°	5°	20°	25°	GO 95 LIGHT
			USE 1-3/8" PIN	10°	10°	10°	25°	30°	GO 95 HEAVY
1033.5 ACSR/AW	45/7 ORTOLAN	3000	USE ANGLE PIN	USE ANGLE PIN	5°	USE 1-3/8" PIN	15°	20°	GO 95 LIGHT
			USE ANGLE PIN	5°	10°	5°	25°	30°	GO 95 HEAVY
#2 AWAC 5/2	5 AW / 2 AL	1800	5°	15°	20°	15°	45°	55°	GO 95 HEAVY
		1200	10°	30°	40°	30°	60°	60°	GO 95 LIGHT
#2 AWAC 3/4	3 AW / 4 AL	3000	USE 1-3/8" PIN	10°	10°	10°	25°	30°	GO 95 HEAVY
			5°	10°	15°	10°	25°	35°	GO 95 LIGHT
1/0 AWAC 4/3	4 AW / 3 AL	3000	USE 1-3/8" PIN	10°	15°	10°	25°	35°	GO 95 HEAVY
			USE 1-3/8" PIN	10°	15°	10°	25°	35°	GO 95 LIGHT

ALUMINUM: MAXIMUM PERMISSIBLE LINE ANGLE ON PINS (A)(B)(C)(D)

CONDUCTOR SIZE	STRANDING AL/ST (AW/AL)	DESIGN ALLOWABLE MAX. TENSION LBS	ANGLE OF DEVIATION (NEAREST 5°) (250 FT < RS < 500 FT)						CONTROLLING LOADING DISTRICT (INCL 85 MPH)
			SINGLE ARM			DOUBLE ARM			
			1" PIN	1-3/8" PIN	ANGLE PIN	1" PIN	1-3/8" PIN	ANGLE PIN	
#2 ACSR/AW	6/1 SPARROW	850	5°	25°	35°	25°	60°	60°	GO 95 LIGHT
1/0 ACSR/AW	6/1 RAVEN	1240	USE 1-3/8" PIN	15°	250°	15°	45°	60°	GO 95 LIGHT
3/0 ACSR/AW	6/1 PIGEON	1850	USE 1-3/8" PIN	10°	15°	10°	30°	40°	GO 95 LIGHT
4/0 ACSR/AW	6/1 PENGUIN	2400	USE 1-3/8" PIN	5°	10°	5°	20°	30°	GO 95 LIGHT
336.4 ACSR/AW	26/7 LINNET	3000	USE ANGLE PIN	USE ANGLE PIN	5°	USE 1-3/8" PIN	15°	20°	GO 95 LIGHT
			USE 1-3/8" PIN	5°	10°	5°	20°	30°	GO 95 HEAVY
397.5 ACSR/AW	26/7 IBIS	3000	USE ANGLE PIN	USE ANGLE PIN	5°	USE 1-3/8" PIN	10°	20°	GO 95 LIGHT
			USE ANGLE PIN	USE ANGLE PIN	5°	USE 1-3/8" PIN	20°	30°	GO 95 HEAVY
636 ACSR/AW	24/7 ROOK	3000	USE DBL ARM	USE DBL ARM	USE DBL ARM	USE 1-3/8" PIN	10°	15°	GO 95 LIGHT
			USE ANGLE PIN	USE ANGLE PIN	5°	USE 1-3/8" PIN	15°	25°	GO 95 HEAVY
1033.5 ACSR/AW	45/7 ORTOLAN	3000	USE DBL ARM	USE DBL ARM	USE DBL ARM	USE 1-3/8" PIN	5°	10°	GO 95 LIGHT
			USE DBL ARM	USE DBL ARM	USE DBL ARM	USE 1-3/8" PIN	10°	20°	GO 95 HEAVY
#2 AWAC 5/2	5 AW / 2 AL	1800	USE 1-3/8" PIN	10°	15°	10°	35°	50°	GO 95 HEAVY
		1200	5°	20°	25°	20°	50°	60°	GO 95 LIGHT
#2 AWAC 3/4	3 AW / 4 AL	3000	USE 1-3/8" PIN	5°	5°	2°	20°	25°	GO 95 HEAVY
			USE 1-3/8" PIN	5°	10°	5°	20°	30°	GO 95 LIGHT
1/0 AWAC 4/3	4 AW / 3 AL	3000	USE 1-3/8" PIN	5°	10°	5°	20°	30°	GO 95 HEAVY
			USE 1-3/8" PIN	5°	10°	5°	20°	25°	GO 95 LIGHT

TABLE OF CONTENTS

© 1998 - 2021 San Diego Gas & Electric Company. All rights reserved. Removal of this copyright notice without permission is not permitted under law.

REV	CHANGE	DR	BY	DSN	APV	DATE	REV	CHANGE	DR	BY	DSN	APV	DATE
C	EDITORIAL CHANGES	-	JS	JS	CZH	8/1/2018	F						
B	EDITORIAL CHANGES	-	GW	JS	MDJ	6/25/2017	E						
A	ORIGINAL ISSUE	-	GW	JS	MDJ	10/25/2016	D	MOVED TO FMO	EPI	JES	JES	CZH	10/9/2020

X Indicates Latest Revision | Completely Revised | New Page | Information Removed

SDG&E ELECTRIC OVERHEAD FIELD MAINTENANCE ONLY STANDARDS

LINE ANGLES ON CROSSARMS, 0-20KV LINES

COPPER:

MAXIMUM PERMISSIBLE LINE ANGLE ON PINS														
WIRE SIZE AWG OR KCMIL	ANGLE OF DEVIATION													
	HARD DRAWN COPPER							MEDIUM HARD DRAWN (W.P.)						
	ALLOWABLE WIRE TENSION LBS	SINGLE ARM			DOUBLE ARM			ALLOWABLE WIRE TENSION LBS	SINGLE ARM			DOUBLE ARM		
		STD PIN		ANGLE PIN	STD PIN		ANGLE PIN		STD PIN		ANGLE PIN	STD PIN		ANGLE PIN
		1"	1-3/8"		1"	1-3/8"			1"	1-3/8"		1"	1-3/8"	
6	482	20°	60°	60°	45°	60°	60°	419	18°	60°	60°	44°	60°	60°
4	752	12°	42°	60°	29°	60°	60°	658	11°	40°	60°	28°	60°	60°
2	1196	6°	24°	47°	16°	54°	60°	1000	6°	24°	47°	17°	54°	60°
1/0	1900	3°	15°	29°	10°	33°	60°	1580	3°	15°	29°	10°	33°	60°
4/0	2424	2°	11°	24°	7°	25°	49°	2120	1°	9°	23°	6°	23°	48°

MAXIMUM PERMISSIBLE TRANSVERSE CROSSARM LOADING (WOOD ARMS ON WOOD POLES) (LBS).			
THRU BOLT SIZE	BOLT ONLY (E)	BOLT AND THRUST PLATE	BOLT, SPLIT RINGS AND THRUST PLATE
5/8"	1,700	-	-
3/4"	2,400	8,500	12,000

INSTALLATION:

(A) ANGLES INDICATED ARE BASED ON ALLOWABLE SHEAR LOAD ON PINS.

(B) USE STANDARD DEADENDS WHEN PERMISSIBLE ANGLE IS EXCEEDED IN THE ABOVE TABLES. LINE AND BUCK CONSTRUCTION IS REQUIRED FOR ALL LINE ANGLES IN EXCESS OF 60 DEGREES. MUST BE INSTALLED TO BISECT THE ANGLE.

(C) LINE AND BUCK CONSTRUCTION IS REQUIRED FOR ALL LINE ANGLES GREATER THAN 60 DEGREES.

(D) ALL ANGLES NOTED IN THE TABLES ABOVE ARE BASED ON SDG&E'S MAXIMUM DESIGN TENSIONS AND LIMITED TO PIN STRENGTHS. IF THE MAXIMUM DESIGN TENSIONS ARE REDUCED BELOW SDG&E'S LIMITS THAN THE LINE ANGLES CAN BE INCREASED UP TO THE ALLOWABLE LIMIT OF THE PINS BEING USED.

(E) FOR SINGLE CROSSARMS, USE 1/2 OF THE VALUES.

REFERENCE:

a. FOR WOOD POLE INSTALLATIONS, SEE STANDARD 392 FOR THRU BOLT, STEEL THRUST PLATE AND SPLIT RING ASSEMBLY DETAIL.

b. REFER TO OH 800 FOR LOADING DISTRICT APPLICATION LIMITS PER CONDUCTOR SIZE.

c. REFER TO OH 379 FOR FIBERGLASS CROSSARM ALLOWABLE LOADS.

d. REFER TO OH 396 FOR PIN STRENGTHS.

e. REFER TO SDG&E DRAWING 12100 FOR KNOWN LOCAL WIND CONDITIONS (SDG&E)

f. REFER TO GO 95 APPENDIX C FOR TENSION LIMITATIONS IN LIGHT AND HEAVY DISTRICTS.

g. REFER TO OH 392 FOR THRU BOLT, STEEL THRUST PLATE AND SPLIT RING ASSEMBLY DETAIL.

FIELD MAINTENANCE ONLY

TABLE OF CONTENTS

©1998 - 2021 San Diego Gas & Electric Company. All rights reserved. Removal of this copyright notice without permission is not permitted under law.

REV	CHANGE	DR	BY	DSN	APV	DATE	REV	CHANGE	DR	BY	DSN	APV	DATE
C	EDITORIAL CHANGES	-	JS	JS	CZH	8/1/2018	F						
B	EDITORIAL CHANGES	-	GW	JS	MDJ	6/25/2017	E						
A	ORIGINAL ISSUE	-	GW	JS	MDJ	10/25/2016	D	MOVED TO FMO	EPI	JES	JES	CZH	10/9/2020

X Indicates Latest Revision | Completely Revised | New Page | Information Removed

SDG&E ELECTRIC OVERHEAD FIELD MAINTENANCE ONLY STANDARDS

LINE ANGLES ON CROSSARMS, 0-20KV LINES

FMO OH433.2

FIELD MAINTENANCE ONLY

REVISION HISTORY:

7/13/2016: All versions prior to 2016 are superseded by their current version found inside the Overhead Construction Standard Manual.

TABLE OF CONTENTS

© 1998 - 2016 San Diego Gas & Electric Company. All rights reserved. Removal of this copyright notice without permission is not permitted under law.

REV	CHANGE	BY	DSGN	APPV	DATE	REV	CHANGE	BY	DSGN	APPV	DATE
C						F					
B						E					
A	ORIGINAL ISSUE	JS	IL	MDJ	7/13/2016	D					

X Indicates Latest Revision | Completely Revised | New Page | Information Removed

SHEET 1 OF 1

SDG&E ELECTRIC OVERHEAD STANDARD

750 - 7500 VOLT BUCKARM CORNERS

FMO OH 434

TABLE OF CONTENTS

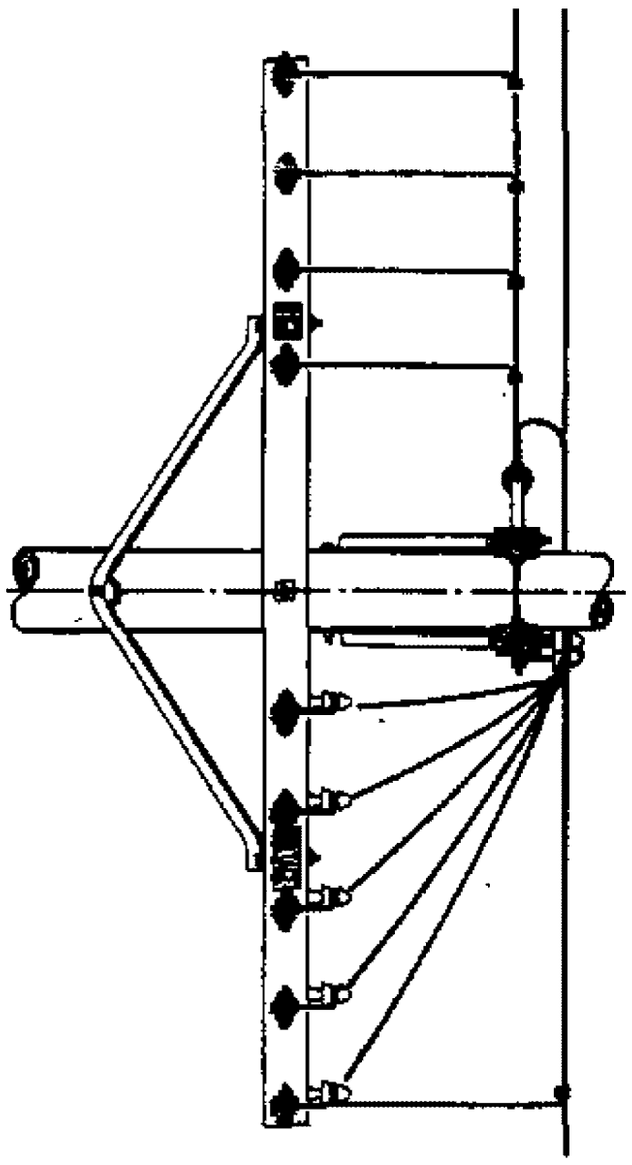

FIGURE 1

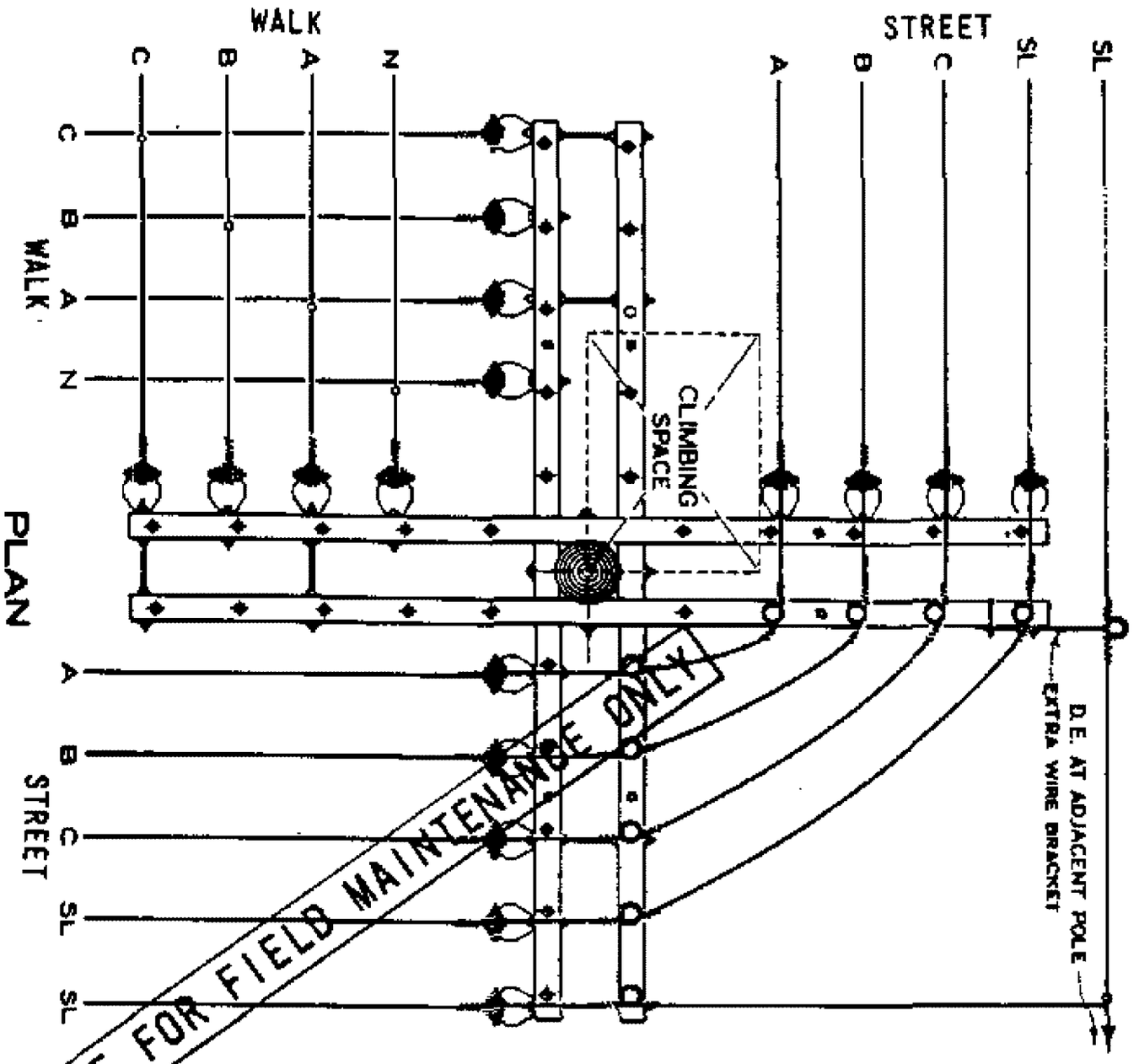

THIS PAGE FOR FIELD MAINTENANCE ONLY

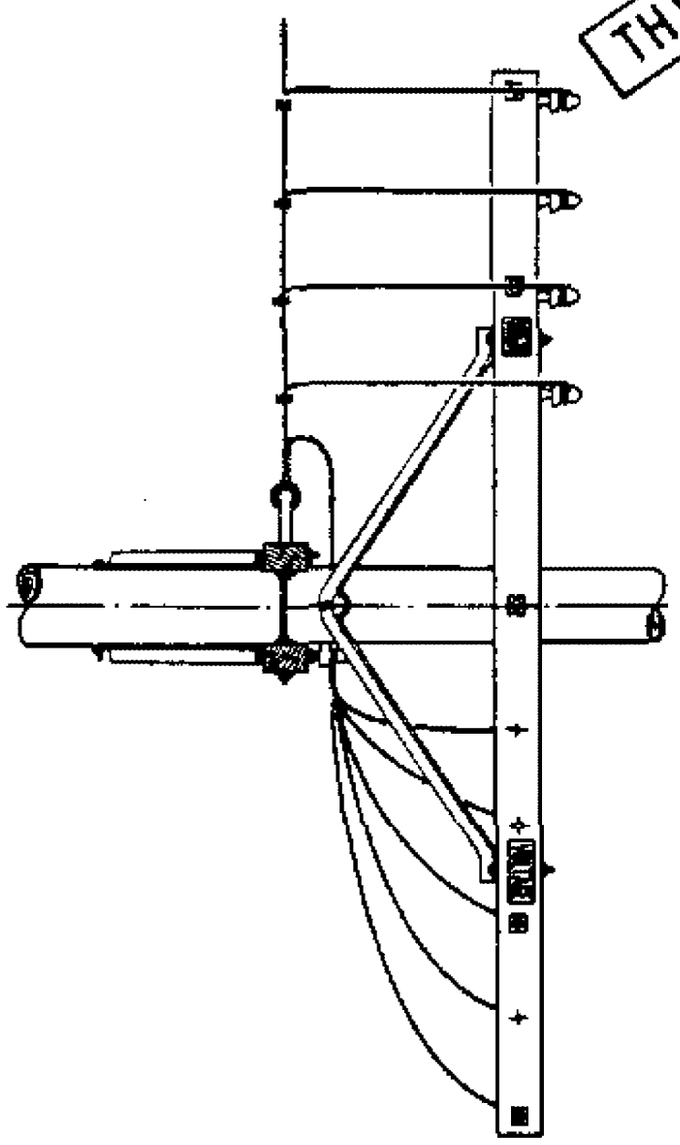

FIGURE 2

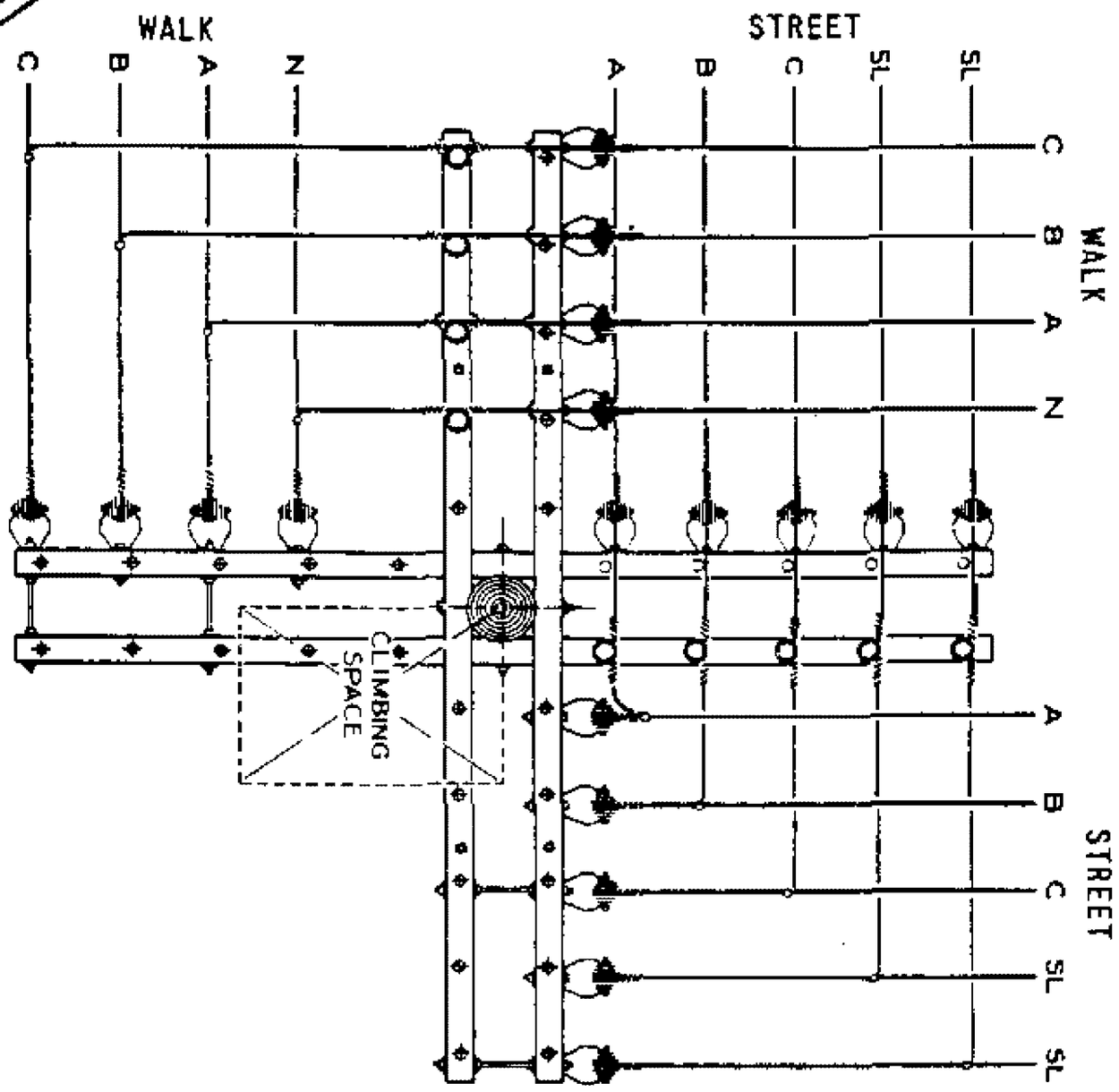

APPD SYS STDS ENGR	SDG&E ELECTRIC STANDARDS 750 - 7500 VOLT BUCKARM CORNERS	499.301 SUPERSEDES 434 (6-4-82)

FIELD MAINTENANCE ONLY

REVISION HISTORY:

5/23/16: SDG&E is no longer hanging transformers on a line and buck pole framing. However, this standard needs to be retained in FMO in event that there are no other options available.

TABLE OF CONTENTS

© 1998 - 2016 San Diego Gas & Electric Company. All rights reserved. Removal of this copyright notice without permission is not permitted under law.

REV	CHANGE	BY	DSGN	APPV	DATE	REV	CHANGE	B□	□S□N	APP□	□ATE
C						F					
B						E					
A	COMPLIANCE CHANGE	MM	IL	MDJ	5/23/16	D					

Indicates Latest Revision | Completely Revised | New Page | Information Removed

SDG&E ELECTRIC OVERHEAD STANDARD

PRIMARY, SINGLE-PHASE TRANSFORMER INSTALLATION
EXISTING LINE AND BUCK

SHEET
1 OF 1

FMO
OH 436

SCOPE: THIS STANDARD TO INSTALL A SINGLE PHASE STATION ON AN EXISTING LINE AND BUCK POLE IS TO BE USED ONLY WHEN NECESSARY TO AVOID THE SETTING OF AN ADDITIONAL POLE. **NOTE:** THREE–PHASE INSTALLATIONS REQUIRE A DEVIATION REQUEST.

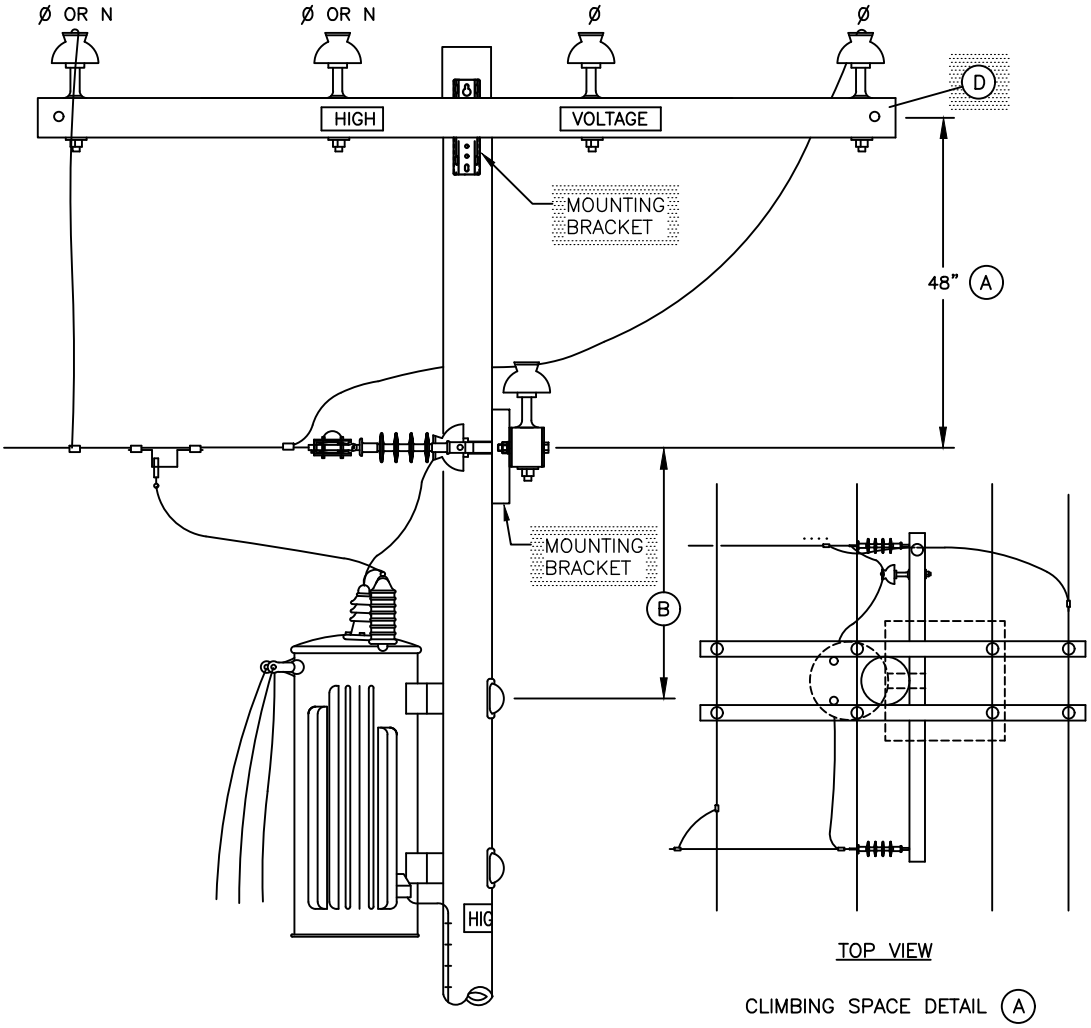

INSTALLATION:

(A) WHILE IT IS DESIRABLE TO MAINTAIN A MINIMUM OF 48" BETWEEN THE LINE ARM AND BUCK ARM TO MAINTAIN A ONE HALF POLE OF CLIMBING SPACE THROUGH THE BUCK ARM LEVEL AND UP TO THE LINE ARM LEVEL, LESS THAN 48" AND A QUADRANT CLIMBING SPACE IS ALLOWED. (SEE O.H. STANDARD 251).

(B) FOR TRANSFORMER THRU–BOLT DRILLING DIMENSION, SEE APPROPRIATE CONSTRUCTION STANDARD.

C. SECTIONALIZING FUSES *AND* A STATION ARE **NOT** ALLOWED ON THE SAME POLE. A DEVIATION REQUEST WILL NOT BE APPROVED FOR THIS CONSTRUCTION.

(D) FIBERGLASS CROSSARMS, SEE STANDARD 379.

© 1998 - 2016 San Diego Gas & Electric Company. All rights reserved. Removal of this copyright notice without permission is not permitted under law.

REV	CHANGE	BY	DSGN	APPV	DATE	REV	CHANGE	B□	□S□N	APP□	□ATE
C						F					
B						E					
A	CONTENT UPDATED			JS/DW	6/11/2013	D					

	Indicates Latest Revision		Completely Revised		New Page	X	Information Removed

SHEET 1 OF 1	SDG&E ELECTRIC OVERHEAD STANDARD PRIMARY, SINGLE-PHASE TRANSFORMER INSTALLATION EXISTING LINE AND BUCK	FMO OH 436

TABLE OF CONTENTS

FIELD MAINTENANCE ONLY

REVISION HISTORY:

5/23/16: Distribution Design Manual 5124 has been rewritten, and has rendered this Overhead Standard obsolete. Also changed scope to include all primary distribution instead of 12KV only.

TABLE OF CONTENTS

© 1998 - 2016 San Diego Gas & Electric Company. All rights reserved. Removal of this copyright notice without permission is not permitted under law.

REV	CHANGE	BY	DSGN	APPV	DATE	REV	CHANGE	B□	□S□N	APP□	□ATE
C						F					
B						E					
A	COMPLIANCE CHANGE	MM	IL	MDJ	5/23/16	D					

Indicates Latest Revision | Completely Revised | New Page | Information Removed

SHEET 1 OF 1

SDG&E ELECTRIC OVERHEAD STANDARD

NEUTRAL INSTALLATION PIN-TYPE OR DEAD-END, 12KV AND BELOW

FMO OH 438

SCOPE: THIS STANDARD SHOWS THE METHOD OF PRIMARY DISTRIBUTION AND BELOW NEUTRAL INSTALLATION.

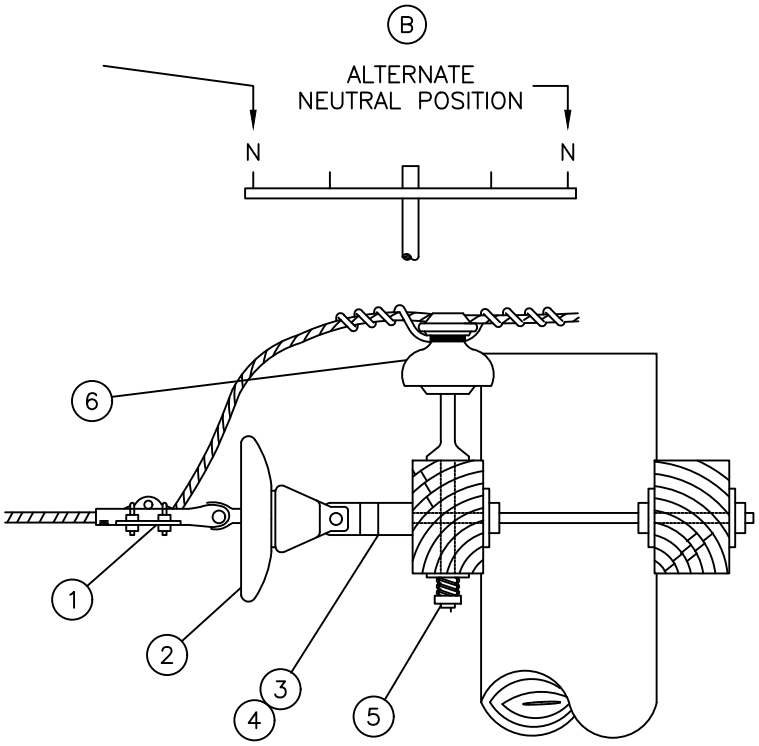

BILL OF MATERIAL:

ITEM	DESCRIPTION	QUANTITY	STOCK NO OR CONSTR STD	ASSEMBLY UNITS
1	CLAMP, STRAIGHT LINE	1	STD 741,743	–
2	INSULATOR, 9", NEMA CLASS 52–2 OR EQUAL	1	431648	52–2
3	CLEVIS, DEAD END, CLOSED TYPE, 5/8" MOUNTING	1	235712	–
	3/4" MOUNTING		235620	DE–C/C
4	CLEVIS, DEAD END, OPEN TYPE, 5/8" MOUNTING	1	235618	–
	3/4" MOUNTING		235616	DE–O/C
5	PIN, 1"	1	532704	PS1
6	INSULATOR, WHITE, NEMA CLASS 55–3 OR EQUAL	1	429216	55–3/I

INSTALLATION:

A. NEUTRAL SIZE WILL NOT NECESSARILY BE ONE WIRE SIZE SMALLER THAN THE PHASE WIRES.

REFERENCE:

(B) ON ALL NEW CONSTRUCTION AND WHEN ADDING TO EXISTING CONSTRUCTION, NEUTRAL TO BE INSTALLED IN OUTSIDE PIN POSITION PER DESIGN MANUAL PAGE 5124.2.

© 1998 - 2010 San Diego Gas & Electric Company. All rights reserved. Removal of this copyright notice without permission is not permitted under law.

Indicates Latest Revision | Completely Revised | New Page | Information Removed

REVISION
DATE 9–12–05
APPD PA / JJ

SDG&E ELECTRIC STANDARDS

NEUTRAL INSTALLATION PIN–TYPE
OR DEAD–END, 12KV AND BELOW

FMO
OH 438

TABLE OF CONTENTS

FIELD MAINTENANCE ONLY

REVISION HISTORY:

5/23/16: Crossarm Extension Brackets are no longer allowed as an option for adding additional conductors on an arm.

TABLE OF CONTENTS

© 1998 - 2016 San Diego Gas & Electric Company. All rights reserved. Removal of this copyright notice without permission is not permitted under law.

REV	CHANGE	BY	DSGN	APPV	DATE	REV	CHANGE	B□	□S□N	APP□	□ATE
C						F					
B						E					
A	COMPLIANCE CHANGE	MM	IL	MDJ	5/23/16	D					

Indicates Latest Revision | Completely Revised | New Page | Information Removed

SDG&E ELECTRIC OVERHEAD STANDARD

CROSSARM EXTENSION BRACKET

SHEET 1 OF 1

FMO OH 439

TABLE OF CONTENTS

Ⓒ FIGURE 1

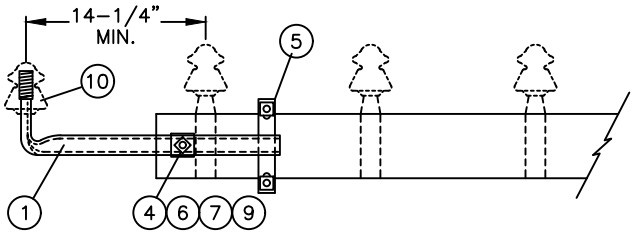

Ⓓ FIGURE 2

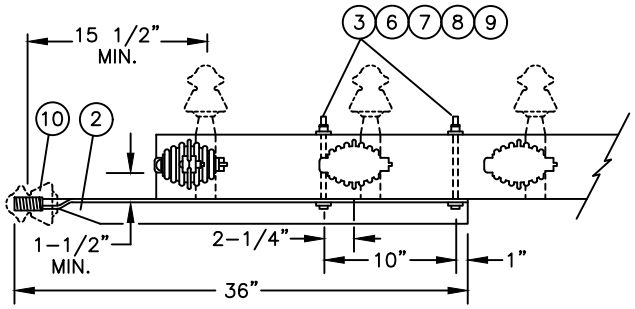

NOTES:

A. TO AVOID CROSSARM REPLACEMENT, CROSSARM EXTENSIONS SHOULD BE USED WHENEVER PRACTICAL TO SUPPORT EXTENSION OF A SINGLE SERIES CIRCUIT CONDUCTOR OR 0–7500 VOLT LINE CONDUCTOR ON EXISTING CROSSARMS WHERE PIN POSITIONS ARE FILLED OR WHERE CLIMBING SPACE MUST BE MAINTAINED.

B. CONDUCTOR SIZE IS LIMITED TO #4 COPPER OR #2 5005 ALUMINUM.

Ⓒ USE CONSTRUCTION SHOWN IN FIGURE 1, WHERE LINE CONDUCTORS ON EXISTING ARMS ARE ON PINS.

Ⓓ USE CONSTRUCTION SHOWN IN FIGURE 2, TO PROVIDE 1 1/2" HARDWARE CLEARANCE WHERE LINE CONDUCTORS ON EXISTING ARMS ARE DEAD ENDED.

E. DO NOT USE CROSSARM EXTENSION CONSTRUCTION IN GRADE "A" OR "B" CROSSINGS OVER MAJOR OR MINOR RAILWAYS.

BILL OF MATERIAL:

ITEM	DESCRIPTION		QUANTITY FIG.1	QUANTITY FIG.2	STOCK NO. OR CONSTR STD	ASSEMBLY UNITS
1	BRACKET, CROSSARM EXTENSION		1	–	166048	XAEXT
2	PIN, POLETOP 36" WITH 1" LEAD THREADS		–	1	531648 OR 232512	PTP
3	BOLT, MACH 5/8" X 8"		–	2	155584	–
4	BOLT, MACH 5/8" X 5"		1	–	155488	–
5	BOLT, U	FOR 3–1/2" X 4–1/2" CROSSARM	1	–	158368	–
		FOR 3–3/4" X 5–3/4" CROSSARM	1	–	158400	–
6	WASHER, 5/8" ROUND		1	2	800320	–
7	WASHER, 2 1/4" SQUARE		1	2	799040	–
8	WASHER, 5/8" DBL COIL SPRING		–	2	798560	–
9	NUT, 5/8"		1	2	506880	–
10	INSULATOR, PIN TYPE		1	1	429184	–

© 1998 - 2016 San Diego Gas & Electric Company. All rights reserved. Removal of this copyright notice without permission is not permitted under law.

REV	CHANGE	BY	DSGN	APPV	DATE	REV	CHANGE	B□	□S□N	APP□	□ATE
C						F					
B						E					
A	ORIGINAL ISSUE			PA/RJ	1/1/1994	D					

Indicates Latest Revision | Completely Revised X | New Page | Information Removed

SHEET 1 OF 1

SDG&E ELECTRIC OVERHEAD STANDARD

CROSSARM EXTENSION BRACKET

FMO OH 439

FIELD MAINTENANCE ONLY

REVISION HISTORY:

5/23/16: Wood Pole Top Extensions are no longer allowed as an option for adding an additional conductors on an arm.

TABLE OF CONTENTS

© 1998 - 2016 San Diego Gas & Electric Company. All rights reserved. Removal of this copyright notice without permission is not permitted under law.

REV	CHANGE	BY	DSGN	APPV	DATE	REV	CHANGE	B□	□S□N	APP□	□ATE
C						F					
B						E					
A	COMPLIANCE CHANGE	MM	IL	MDJ	5/23/16	D					

Indicates Latest Revision | Completely Revised | New Page | Information Removed

SDG&E ELECTRIC OVERHEAD STANDARD

WOOD POLE TOP EXTENSIONS FOR LINE ARMS OR SERVICE CLEARANCE ARMS-LIGHT DUTY

SHEET 1 OF 1

FMO OH 475

SCOPE: THIS STANDARD SHOWS POLE TOP EXTENSION FOR LINE ARMS OR SERVICE CLEARANCE ARMS AND IS USED ON EXISTING POLES WHEN ADDITIONAL HEIGHT IS REQUIRED IN LIGHT AND MEDIUM LOADING DISTRICTS TO SAVE THE COST OF REPLACING A POLE WHEN FIELD CONDITIONS PERMIT.

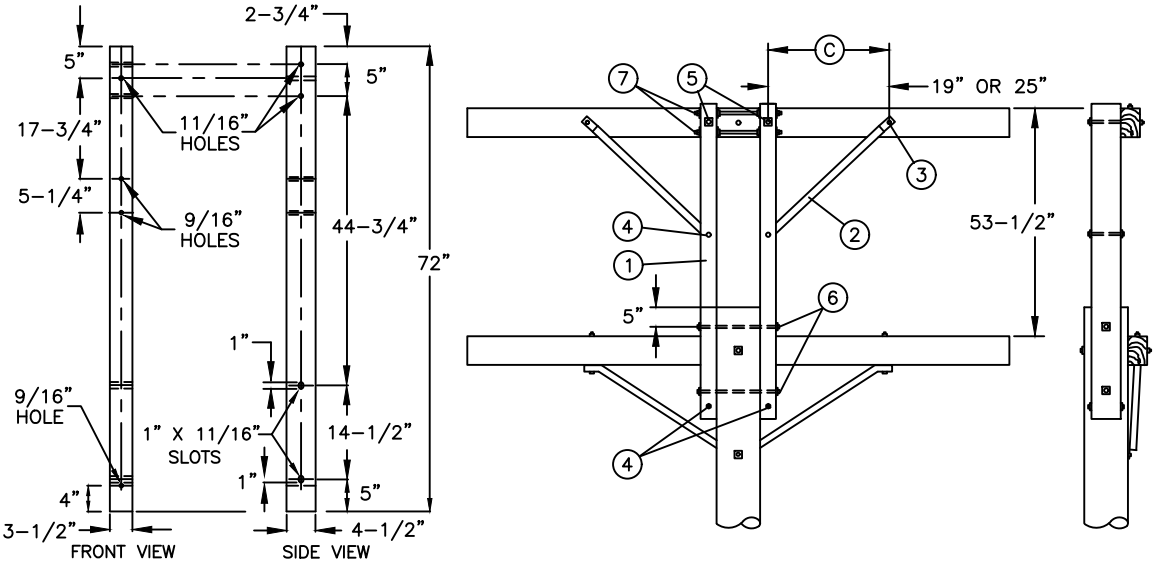

TYPE OF CONDUCTORS	Ⓑ MAXIMUM LINE ANGLE OF DEVIATION ALLOWED FOR 4 CONDUCTORS AVERAGE SPAN (FT)									
	100		200		300		400		500	
LOADING DISTRICT	LIGHT	MEDIUM	LIGHT	MEDIUM	LIGHT	MEDIUM	LIGHT	MEDIUM	LIGHT	MEDIUM
#6 COPPER	20°	16°	18°	10°	17°	5°	15°	0°	13°	0°
#4 COPPER	12°	10°	11°	6°	10°	2°	8°	0°	7°	0°
#2 COPPER	7°	6°	6°	3°	5°	1°	4°	0°	3°	0°
1/0 COPPER	4°	3°	4°	2°	3°	0°	2°	0°	1°	0°
#2 ACSR	11°	8°	9°	5°	8°	1°	6°	0°	5°	0°
#1/0 ACSR	7°	5°	6°	2°	4°	0°	3°	0°	2°	0°
#3/0 ACSR	4°	3°	3°	1°	2°	0°	1°	0°	0°	0°
#336.4 26/7 ACSR	2°	1°	1°	0°	0°	0°	0°	0°	0°	0°
636 ACSR Ⓕ	2°	1°	1°	0°	0°	0°	0°	0°	0°	0°
#2 5/2 AWAC	4°	3°	3°	1°	2°	0°	1°	0°	0°	0°

EXAMPLE ANGLE OF DEVIATION

PROBLEM: DETERMINE AVERAGE SPAN LENGTH AND LINE ANGLE OF DEVIATION ON POLE "A" FOR 4 # 6 BARE COPPER WIRE

ASSUME: LIGHT LOADING DISTRICT
SPAN "BA" = 180 FEET AND SPAN "AC" = 230 FEET

SOLUTION: AVERAGE SPAN ON POLE "A" IS $\frac{180 \text{ FT} + 230 \text{ FT}}{2} = 205$ FEET

AND THE LINE ANGLE OF DEVIATION $\alpha = 20°$ (USING AN ANGLE FINDER)



CONCLUSION: FOR AN AVERAGE SPAN LENGTH OF 200 FT. (SEE TABLE) THE MAXIMUM LINE ANGLE OF DEVIATION IS 18°, THEREFORE, THE GIVEN ANGLE OF 20° IS TOO LARGE, AND THIS CONSTRUCTION CAN NOT BE USED. HOWEVER, 3 #6 CU. WIRE WITH A LINE ANGLE DEVIATION OF 23.994° (18° X 1.333) IS ALLOWED.

© 1998 - 2016 San Diego Gas & Electric Company. All rights reserved. Removal of this copyright notice without permission is not permitted under law.

REV	CHANGE	BY	DSGN	APPV	DATE	REV	CHANGE	BY	DSGN	APPV	DATE
C						F					
B						E					
A	ORIGINAL ISSUE			PA/VR	3/1/2002	D					

Indicates Latest Revision | Completely Revised | New Page | Information Removed

SDG&E ELECTRIC OVERHEAD STANDARD

WOOD POLE TOP EXTENSIONS FOR LINE ARMS OR SERVICE CLEARANCE ARMS-LIGHT DUTY

SHEET 1 OF 2

FMO
OH 475.1

TABLE OF CONTENTS

BILL OF MATERIAL:

ITEM	DESCRIPTION	QUANTITY	CONSTRUCTION STANDARD	STOCK NUMBER	ASSEMBLY UNITS
1	DOUGLAS FIR EXTENSION STRUTS, TWO PER SET, 3 1/2" X 4 1/2" X 72" S4S	1	–	336320	WPTX
2	FLAT CROSSARM BRACE, 28" FOR 8 FT. ARM,	2	–	164192	28FLAT
	36" FOR 10 FT. ARM	2	–	164224	36FLAT
3	MACHINE BOLT, GALV, 3/8" X 4 1/2", AND 1 ROUND WASHER	2	STD 392	–	–
4	MACHINE BOLT, GALV, 1/2 X 5", AND 2 ROUND WASHERS	2	STD 392	–	–
5	MACHINE BOLT, GALV, 5/8" X 9", AND 2 SQ WASHERS	2	STD 392	–	–
6	MACHINE BOLT, GALV, 5/8" X 18", AND 2 SQ WASHERS	2	STD 392	–	–
7	SPACE BOLT, GALV, 5/8" X 18", AND 4 SQ WASHERS	2	STD 392	–	–

INSTALLATION:

A. NO DEAD–END CONSTRUCTION OR GUY ATTACHMENTS ARE PERMITTED ON THIS LIGHT DUTY WOOD POLE TOP EXTENSION.

(B) FOR MAXIMUM ALLOWABLE LINE ANGLE OF DEVIATION FOR 2 CONDUCTORS, MULTIPLY TABLE BY 2, AND FOR 3 CONDUCTORS MULTIPLY TABLE BY 1.333.

(C) 19" FOR 28" BRACES OR 25" FOR 36" BRACES.

D. TO BE USED IN LIGHT AND MEDIUM LOADING DISTRICTS ONLY.

(F) 636 ACSR IS NOT TO BE STRUNG ON THIS LIGHT DUTY WOOD POLE TOP EXTENSION. IT IS PERMISSIBLE TO RAISE 636 ACSR WITH THIS LIGHT DUTY WOOD POLE TOP EXTENSION WITH THE APPROVAL OF CONSTRUCTION.

REFERENCE:

G. INCREASING POLE LENGTH BY USE OF A POLE TOP EXTENSION INCREASES THE BENDING MOMENT AT THE GROUND LINE. POLE MUST HAVE ADEQUATE USABLE STRENGTH TO WITHSTAND THE INCREASED BENDING MOMENT IMPOSED BY THE POLE TOP EXTENSION (SEE STANDARD 344 – 354).

H. DO NOT USE IN GRADE 'A' CROSSING – G.O. 95 RULE 49.1.

I. TRANSFORMERS, CAPACITORS AND REGULATORS SHALL NOT BE SUPPORTED ON THIS LIGHT DUTY POLE TOP EXTENSION BECAUSE IT DOES NOT MEET G.O. 95 REQUIREMENTS. SEE RULE 58.1A.

© 1998 - 2016 San Diego Gas & Electric Company. All rights reserved. Removal of this copyright notice without permission is not permitted under law.

REV	CHANGE	BY	DSGN	APPV	DATE	REV	CHANGE	B□	□S□N	APP□	□ATE
C						F					
B						E					
A	ORIGINAL ISSUE			PA/CAR	1/1/1998	D					

Indicates Latest Revision | Completely Revised | New Page | Information Removed

SHEET 2 OF 2

SDG&E ELECTRIC OVERHEAD STANDARD

WOOD POLE TOP EXTENSIONS FOR LINE ARMS OR SERVICE CLEARANCE ARMS-LIGHT DUTY

FMO
OH 475.2

TABLE OF CONTENTS

FIELD MAINTENANCE ONLY

REVISION HISTORY:

7/13/2016: All versions prior to 2016 are superseded by their current version found inside the Overhead Construction Standard Manual.

TABLE OF CONTENTS

© 1998 - 2016 San Diego Gas & Electric Company. All rights reserved. Removal of this copyright notice without permission is not permitted under law.

REV	CHANGE	BY	DSGN	APPV	DATE	REV	CHANGE	BY	DSGN	APPV	DATE
C						F					
B						E					
A	ORIGINAL ISSUE	JS	IL	MDJ	7/13/2016	D					

X Indicates Latest Revision | Completely Revised | New Page | Information Removed

SHEET
1 OF 1

SDG&E ELECTRIC OVERHEAD STANDARD

POLE TOP EXTENSIONS
FOR SERVICE CLEARANCE ARMS

FMO
OH 476

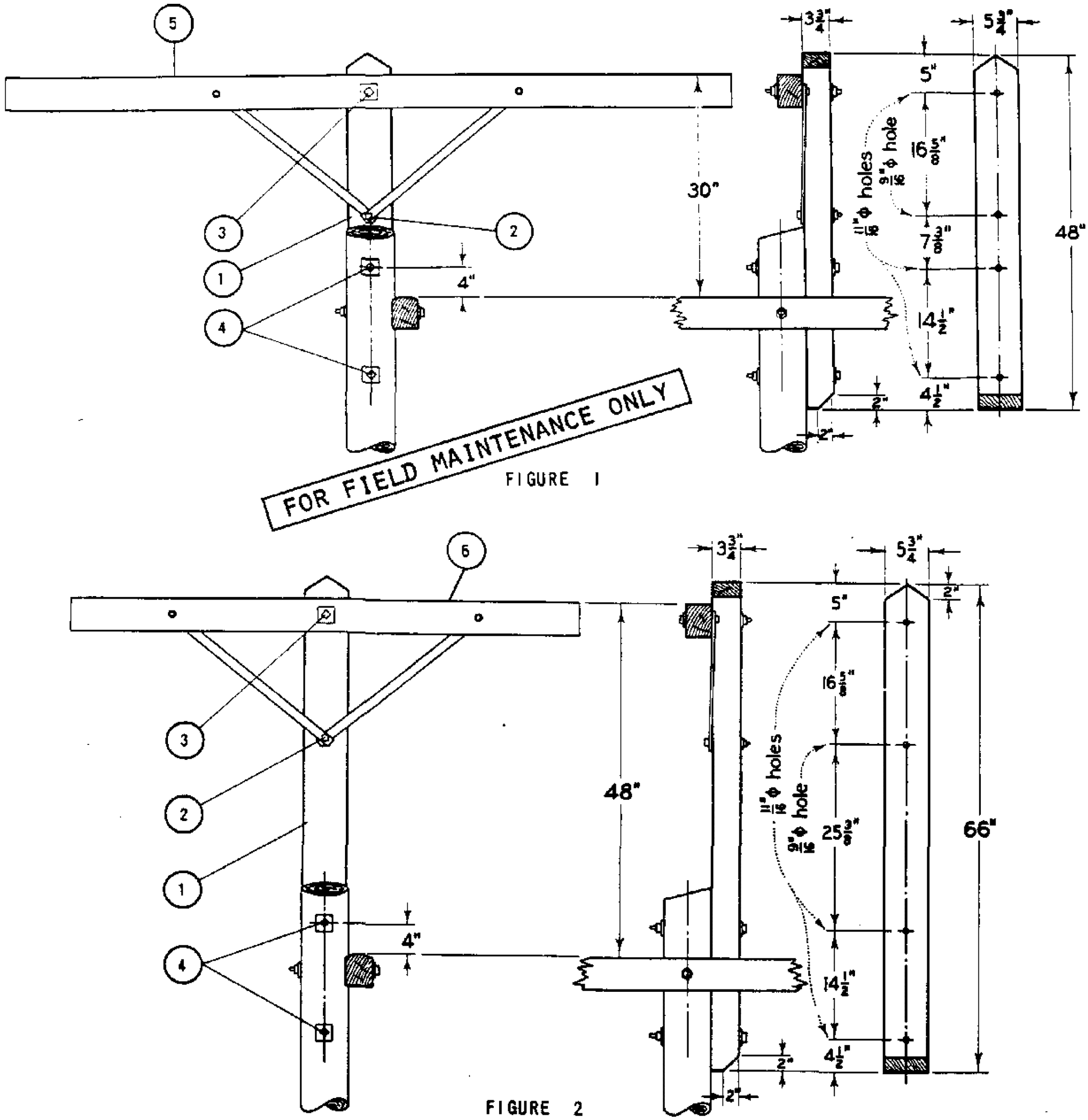

FIGURE 1

FIGURE 2

INSTALLATION :

A. DO NOT FLATTEN SURFACE OF POLE TO RECEIVE EXTENSION. HOWEVER, SHARP HUMPS OR KNOTS SHOULD BE REMOVED.

(E) EXEMPT MATERIAL.

BILL OF MATERIAL :

ITEM		DESCRIPTION		QUANTITY	STOCK NO. OR CONSTR STD
PT	1	EXTENSION, 3 3/4" X 5 3/4" DOUGLAS FIR POLE TOP, 48" OR 66" LONG		1	336288, 336352
	2	BOLT, MACHINE 1/2" X 5" GALV, 1 RD WASHER	(E)	1	STD 139, 140
	3	BOLT, MACHINE 5/8" X 10" GALV, 2 SQ WASHERS	(E)	1	STD 139, 140
	4	BOLT, MACHINE 5/8" X 16" GALV, 2 SQ WASHERS	(E)	2	STD 139, 140
F	5	CROSSARM, 3 1/2" X 4 1/2" X 8' - 0"		1	SECTION 300
	6	CROSSARM, 3 1/2" X 4 1/2" X 5' - 7"		1	SECTION 300

499.701
SUPERSEDES
476 (9-17-82)

SDG&E ELECTRIC STANDARDS

POLE TOP EXTENSIONS FOR SERVICE CLEARANCE ARMS

DATE 9-17-82
APPD

PAGE	SUBJECT
530	OVERHEAD SCADA SWITCH, 12KV, UPRIGHT MOUNTING CONFIGURATION
535	OVERHEAD SCADA SWITCH, 12KV, HORIZONTAL LOADBREAK TYPE, SINGLE CIRCUIT, MOTOR OPERATED
540	SCADA LOAD MONITOR

MAIN TABLE OF CONTENTS

THIS SECTION HAS BEEN REMOVED FROM THE EXTERNAL VERSION. DUE TO CONFIDENTIAL INFORMATION.

© 1998 - 2023 San Diego Gas & Electric Company. All rights reserved. Removal of this copyright notice without permission is not permitted under law.

REV	CHANGE	DR	BY	DSN	APV	DATE	REV	CHANGE	DR	BY	DSN	APV	DATE
C							F						
B	FORMATTING	GLC	JIK	-	-	02/28/2023	E						
A	ORIGINAL ISSUE	-	JS	IL	MDJ	07/13/2016	D						

PAGES	SUBJECT
604	OVERHEAD IN-LINE POWER REGULATOR TRANSFORMER UNIVERSAL TRANSFORMER BRACKET
616	SECONDARY RACK CONSTRUCTION
618	MID - SPAN SERVICES FROM VERTICAL RACK SECONDARY
629	SECONDARY RACKS
631	SERVICE INSULATOR BRACKETS, SINGLE
632	HEAVY DUTY SERVICE INSULATOR BRACKET
635.4	MINI WEDGE CONNECTOR
642	SERVICE DROP ATTACHMENTS TO CONDUIT RISERS
652	CUSTOMER OWNED - 1 & 2 BOX TV AMPLIFIER & 120V, METER INSTALLATION

MAIN TABLE OF CONTENTS

© 1998 - 2018 San Diego Gas & Electric Company. All rights reserved. Removal of this copyright notice without permission is not permitted under law.

REV	CHANGE	BY	DSGN	APPV	DATE	REV	CHANGE	BY	DSGN	APPV	DATE
C						F					
B	ADDED 604 & 635.4	JS	JS	CZH	9/4/2018	E					
A	ORIGINAL ISSUE	JS	IL	MDJ	7/13/2016	D					

X Indicates Latest Revision | Completely Revised | New Page | Information Removed

SDG&E ELECTRIC OVERHEAD CONSTRUCTION STANDARD

SHEET 1 OF 1

SECONDARIES, SERVICES FMO
TABLE OF CONTENTS

FMO
OH601

FIELD MAINTENANCE ONLY

9/4/2018: All versions prior to 2018 are superseded by their current version found inside the Overhead Construction Standard Manual.

TABLE OF CONTENTS

© 1998 - 2018 San Diego Gas & Electric Company. All rights reserved. Removal of this copyright notice without permission is not permitted under law.

REV	CHANGE	BY	DSGN	APPV	DATE	REV	CHANGE	BY	DSGN	APPV	DATE
C						F					
B						E					
A	ORIGINAL ISSUE	JS	JS	CZH	9/4/2018	D					

X Indicates Latest Revision | Completely Revised | New Page | Information Removed

SDG&E ELECTRIC OVERHEAD CONSTRUCTION STANDARD

CONNECTORS, MINI WEDGES

FMO OH604

SCOPE: THIS STANDARD SHOWS THE VARIOUS MINI WEDGE CONNECTORS THAT ARE TO BE USED TO CONNECT DIFFERENT TYPES AND SIZES OF JUMPER AND LINE WIRE FOR SECONDARY AND SERVICE CONDUCTORS FOR THE OVERHEAD.

SDG&E			4/0	2/0	1/0, 1	#2	#4	#6	#8
STANDARD TRIPLEX FULL ACSR, AAAC OR AAC NEAUTRAL FULL AAC HOT WIRES			4/0 ACSR,AAAC AAC,CU STR	2/0 ACSR,AAAC AAC,CU STR 3/0 AAC CMPT	1/0 #1 ACSR,AAAC AAC,CU STR	#2 ACSR,AAAC AAC,CU STR	#4 ACSR,AAAC AAC,CU STR CMPT AAC,CU #2 SOL	#6 ACSR,AAAC AAC,CU STR CMPT AAC,CU SOL #2 SOL	#8 AAC,CU STR & SOL #6 AL/CU SOL
#8	#8 AAC/CU STR & SOL #6 AL/CU SOL	STOCK #	S269494	S269460	S269448	S269484	S269476	S269470	S269466
#6	#6 ACSR, AAAC #6 AAC, CU STR #6 CMPT AAC,CU #6 SOL, #4 SOL	STOCK #	S269492	S269458	S269446	S269482	S269474	S269468	-
#4	#4 ACSR, AAAC #4 AAC, CU STR #4 CMPT AAC,CU #2 SOL	STOCK #	S269490	S269456	S269444	S269480	S269472	-	-
#2	#2 ACSR, AAAC #2 AAC, CU STR	STOCK #	S269488	S269454	S269442	S269478	-	-	-
1/0, 1	1/0 ACSR, AAAC 1/0 AAC,CU STR #1 ACSR	STOCK #	S269464	S269452	S269486	-	-	-	-
2/0	2/0 ACSR, AAAC 2/0 AAC,CU STR 3/0 AAC CMPT	STOCK #	S269462	S269450	-	-	-	-	-

TABLE OF CONTENTS

© 1998 - 2017 San Diego Gas & Electric Company. All rights reserved. Removal of this copyright notice without permission is not permitted under law.

REV	CHANGE	BY	DSGN	APPV	DATE	REV	CHANGE	BY	DSGN	APPV	DATE
C						F					
B						E					
A	ORIGINAL ISSUE	GW	JS	MDJ	7/25/2017	D					

Indicates Latest Revision | Completely Revised X | New Page | Information Removed

SHEET 1 OF 1

SDG&E ELECTRIC OVERHEAD CONSTRUCTION STANDARD

CONNECTORS, MINI WEDGES

OH 604

FIELD MAINTENANCE ONLY

REVISION HISTORY:

7/13/2016: All versions prior to 2016 are superseded by their current version found inside the Overhead Construction Standard Manual.

TABLE OF CONTENTS

© 1998 - 2016 San Diego Gas & Electric Company. All rights reserved. Removal of this copyright notice without permission is not permitted under law.

REV	CHANGE	BY	DSGN	APPV	DATE	REV	CHANGE	BY	DSGN	APPV	DATE
C						F					
B						E					
A	ORIGINAL ISSUE	JS	IL	MDJ	7/13/2016	D					

X Indicates Latest Revision | Completely Revised | New Page | Information Removed

SHEET 1 OF 1

SDG&E ELECTRIC OVERHEAD STANDARD

SECONDARY RACK CONSTRUCTION

FMO OH 616

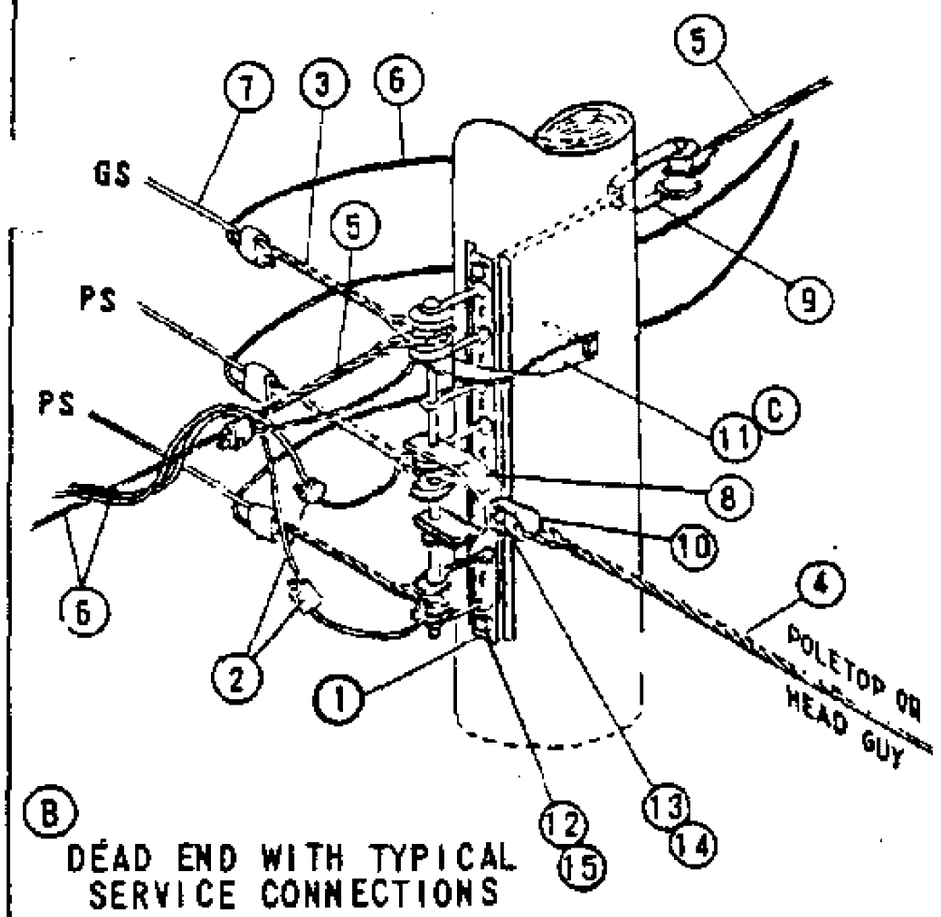

(B) DEAD END WITH TYPICAL SERVICE CONNECTIONS

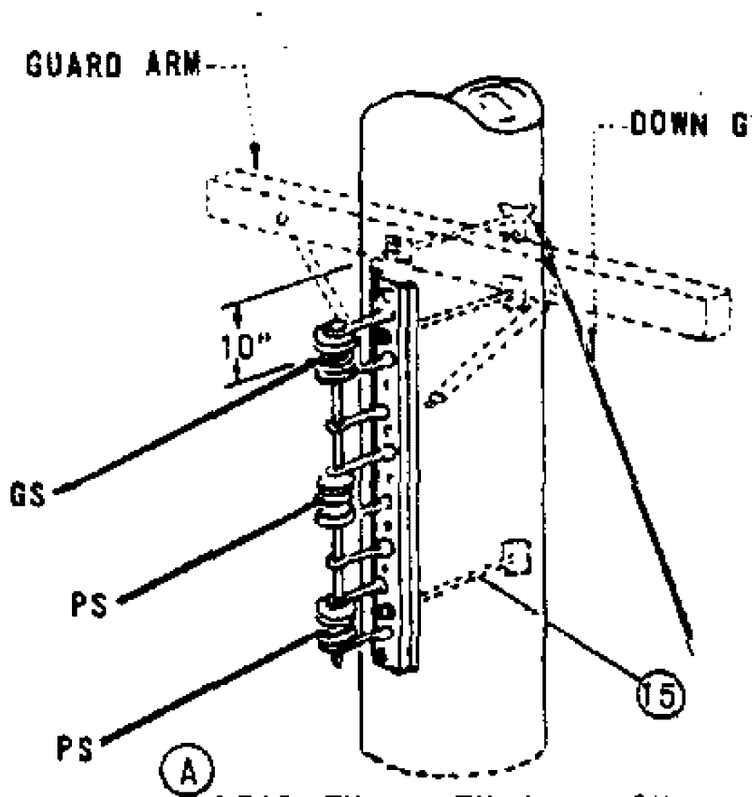

(A) DEAD END WITH DOWN GUY

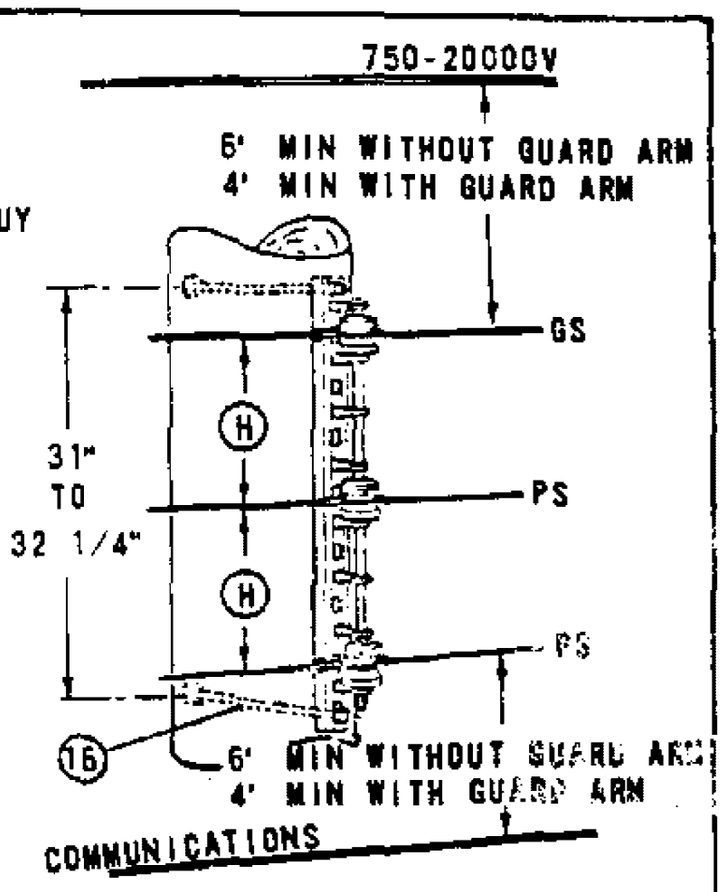

TANGENT OR ANGLE

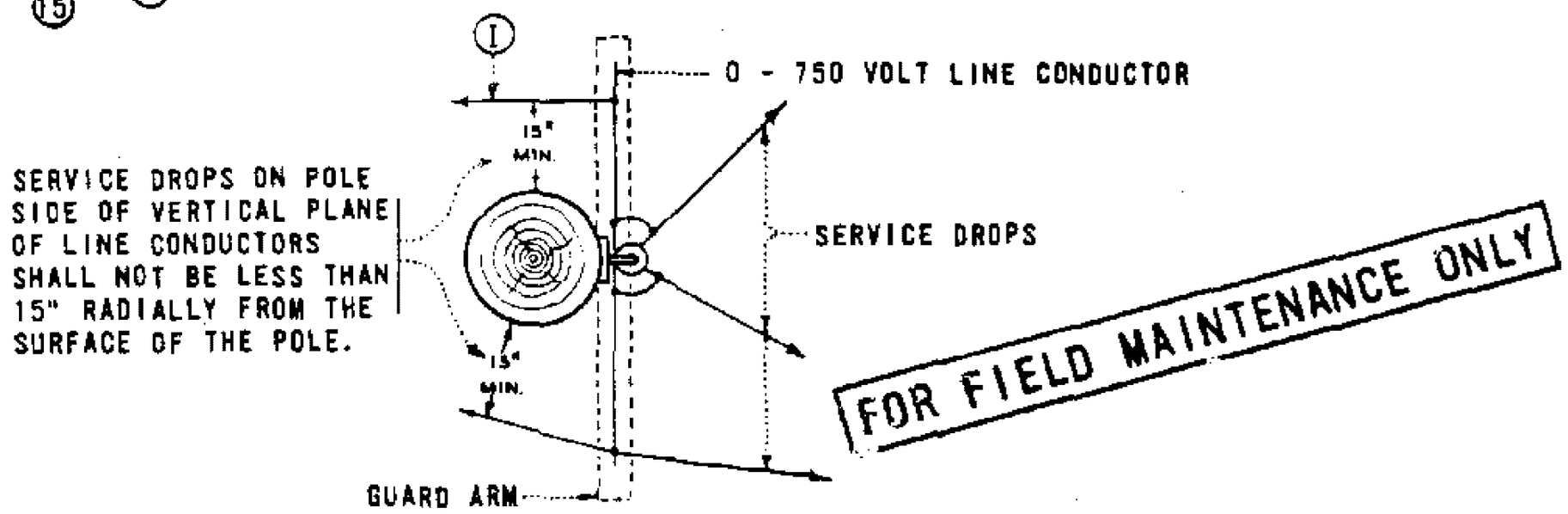

FOR FIELD MAINTENANCE ONLY

TABLE OF CONTENTS

NOTES:

(A) DEAD END WITH DOWN GUY IS PREFERRED CONSTRUCTION WHERE THERE IS NO FUTURE EXTENSION OF SECONDARY.

(B) DEAD END WITH POLETOP OR HEAD GUY IS PREFERRED CONSTRUCTION WHERE FUTURE EXTENSION OF SECONDARY IS EXPECTED.

(C) USE DEAD ENDING STRAPS BEHIND EACH CONDUCTOR WHERE RACK GUY CANNOT BE USED, SEE PAGE 629.

D. TO OBTAIN RADIAL CLEARANCE BETWEEN SUPPLY CONDUCTORS, OVERHEAD GUYS, AND CLIMBING SPACE USE EXTENSION BRACKET. SEE PAGE 629.

E. SEE PAGE 255 FOR CLIMBING SPACE REQUIREMENTS.

F. GUARD ARMS ARE REQUIRED WHEN REDUCING CLEARANCE FROM THE NORMAL 6 FT MINIMUM TO A 4 FT MINIMUM BETWEEN THE SECONDARY CABLE AND THE CONDUCTORS ABOVE.

G. WHEN USING GUARD ARMS, ADDITIONAL CLEVISES CANNOT BE ADDED TO THE POLE. REPLACE WITH MID-SPAN SERVICES SEE PAGE 618.

(H) MINIMUM VERTICAL SEPARATION FOR SPAN LENGTHS 200 FT OR LESS SHALL BE 8 IN. 200 FT THROUGH 330 FT MINIMUM SEPARATION SHALL BE 12 IN.

(I) WHEN USING GUARD ARMS, SERVICE DROPS ARE NOT PERMITTED TO PASS ABOVE OR BELOW THE GUARD ARM ON THE POLE SIDE OF THE RACK SECONDARY.

ITEM PTF	ITEM OCD	DESCRIPTION	QUANTITY	STOCK NO. OR CONSTR STD
	1	RACK, 3 OR 4 WIRE SECONDARY	1	PG 629
	2	CONNECTORS	AS REQ'D	PGS 783, 787
	3	GRIPS, DEAD END FOR COATED SEC CONDUCTORS	AS REQ'D	PGS 745, 747
	4	GRIPS, GUY	AS REQ'D	PGS 745, 747
	5	GRIPS, TRIPLEX NEUTRALS SERVICE	AS REQ'D	PGS 745, 747
	6	WIRE, TRIPLEX SERVICE	AS REQ'D	PGS 711, 715, 716
	7	WIRE, W.P. SECONDARY	AS REQ'D	PGS 711, 715, 716
		CLEVIS, 4KV DEAD END	1	235520
	9	CLEVIS, SECONDARY DEAD END	1	235488
10		EYELET, THIMBLE	1	338176
	11	STRAP, DEAD ENDING, CURVED	AS REQ'D	PG 629
	12	BOLT, MCH, 5/8" X LENGTH AS REQ'D	2	PG 139
	13	BOLT, MACH, 5/8" X 2"	1	155040
	14	WASHER 5/8" LOCK SPRING	1	796864
	15	WASHER, 3" SQ CURVED	AS REQ'D	797792
	16	WASHER, 2 1/4" SQ FLAT	AS REQ'D	799040

DATE 6-4-82
APPD

SDG&E ELECTRIC STANDARDS

SECONDARY RACK CONSTRUCTION

699.101
SUPERSEDES
616 (6-4-82)

FIELD MAINTENANCE ONLY

REVISION HISTORY:

7/13/2016: All versions prior to 2016 are superseded by their current version found inside the Overhead Construction Standard Manual.

TABLE OF CONTENTS

© 1998 - 2016 San Diego Gas & Electric Company. All rights reserved. Removal of this copyright notice without permission is not permitted under law.

REV	CHANGE	BY	DSGN	APPV	DATE	REV	CHANGE	BY	DSGN	APPV	DATE
C						F					
B						E					
A	ORIGINAL ISSUE	JS	IL	MDJ	7/13/2016	D					

X Indicates Latest Revision | Completely Revised | New Page | Information Removed

SHEET 1 OF 1

SDG&E ELECTRIC OVERHEAD STANDARD

MID - SPAN SERVICES FROM VERTICAL RACK SECONDARY

FMO OH 618

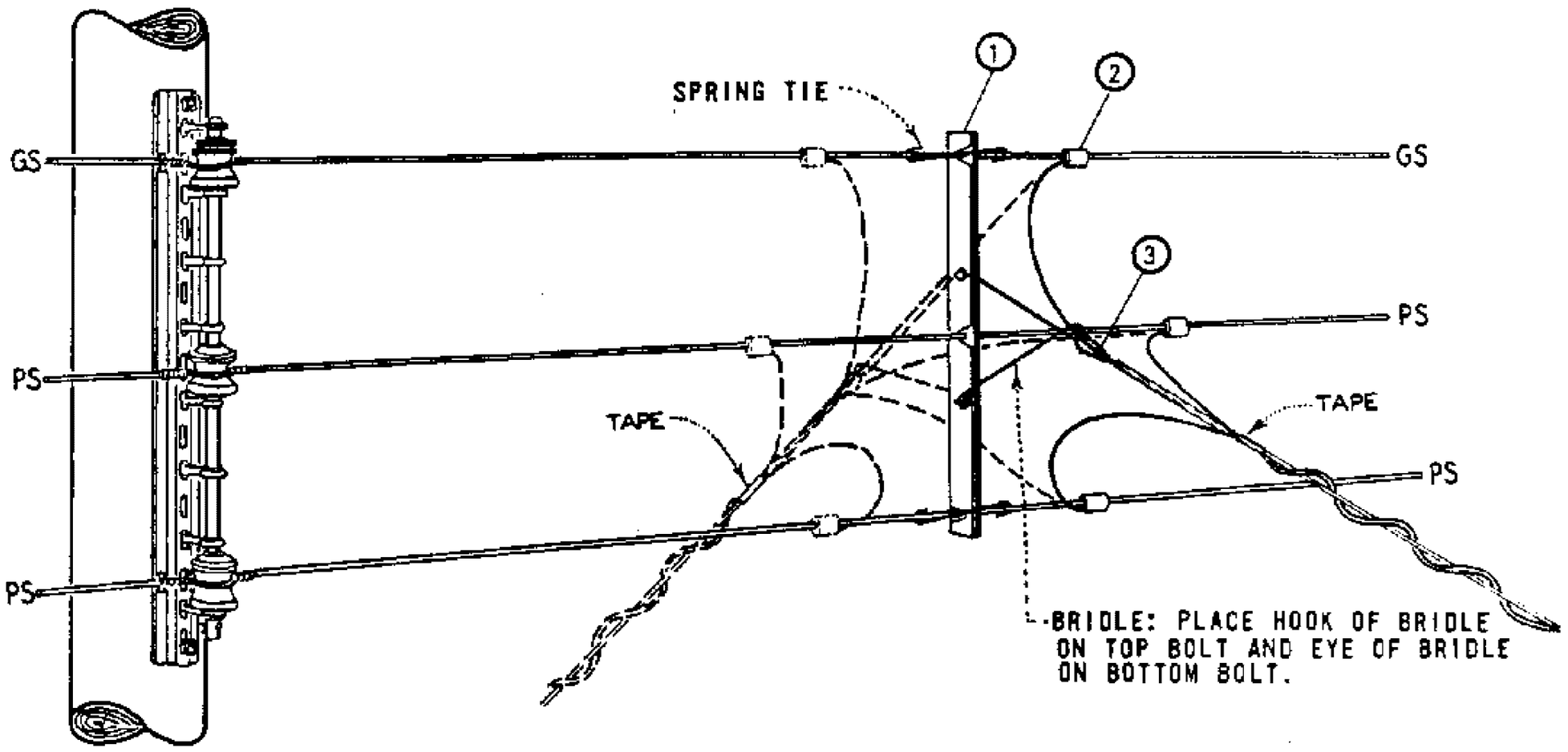

FOR FIELD MAINTENANCE ONLY

TABLE OF CONTENTS

SECONDARY CONDUCTOR SPREADER

NO. WIRES	SPACING (IN)	WIRE SLOT (IN)						MATERIAL THICKNESS (IN)	MANUFACTURER			
		TOP		MIDDLE		BOTTOM						
		DIA.	MAX. WIRE SIZE	DIA.	MAX. WIRE SIZE	DIA.	MAX. WIRE SIZE		NAME	CATALOG NUMBER	NAME	CATALOG NUMBER
3	12	1/2	.500	19/32	.594	19/32	.594	1/4	A.T. FLOWER	AF332-93	JOSLYN	32312

NOTES.

A. FOR USE ON SERVICE DROPS 100 FEET OR LESS IN LENGTH.

B. WHERE TWO TO FOUR TRIPLEX SERVICE DROPS ARE INSTALLED ON ONE SECONDARY CONDUCTOR SPREADER, CONNECT RESPECTIVE SERVICE CONDUCTORS TO LINE CONDUCTOR WITH ONE COMPRESSION CONNECTOR AS PERMITTED BY STOCKED CONNECTOR SIZES.

C. SEE OTHER PAGES IN 'SECONDARIES, SERVICES' SECTION FOR RACK CONSTRUCTION DETAILS.

ITEM	DESCRIPTION	QUANTITY	STOCK NO. OR CONSTR. STD.
1	SECONDARY CONDUCTOR SPREADER, COMPLETE WITH 1-SPREADER, BRIDLES AND SPRING TIES	1	670592
2	CONNECTOR, COMPRESSION	AS REQ'D	PGS 783, 7
3	GRIPS, SERVICE	AS REQ'D	PGS 746, 747

699.102
SUPERSEDES
618 (3-25-83)

SDG&E ELECTRIC STANDARDS

MID-SPAN SERVICES FROM VERTICAL RACK SECONDARY

DATE 4-5-83
APPD JWF/424

FIELD MAINTENANCE ONLY

REVISION HISTORY:

7/13/2016: All versions prior to 2016 are superseded by their current version found inside the Overhead Construction Standard Manual.

TABLE OF CONTENTS

© 1998 - 2016 San Diego Gas & Electric Company. All rights reserved. Removal of this copyright notice without permission is not permitted under law.

REV	CHANGE	BY	DSGN	APPV	DATE	REV	CHANGE	BY	DSGN	APPV	DATE
C						F					
B						E					
A	ORIGINAL ISSUE	JS	IL	MDJ	7/13/2016	D					

X Indicates Latest Revision | Completely Revised | New Page | Information Removed

SHEET 1 OF 1

SDG&E ELECTRIC OVERHEAD STANDARD

SECONDARY RACKS

FMO OH 629

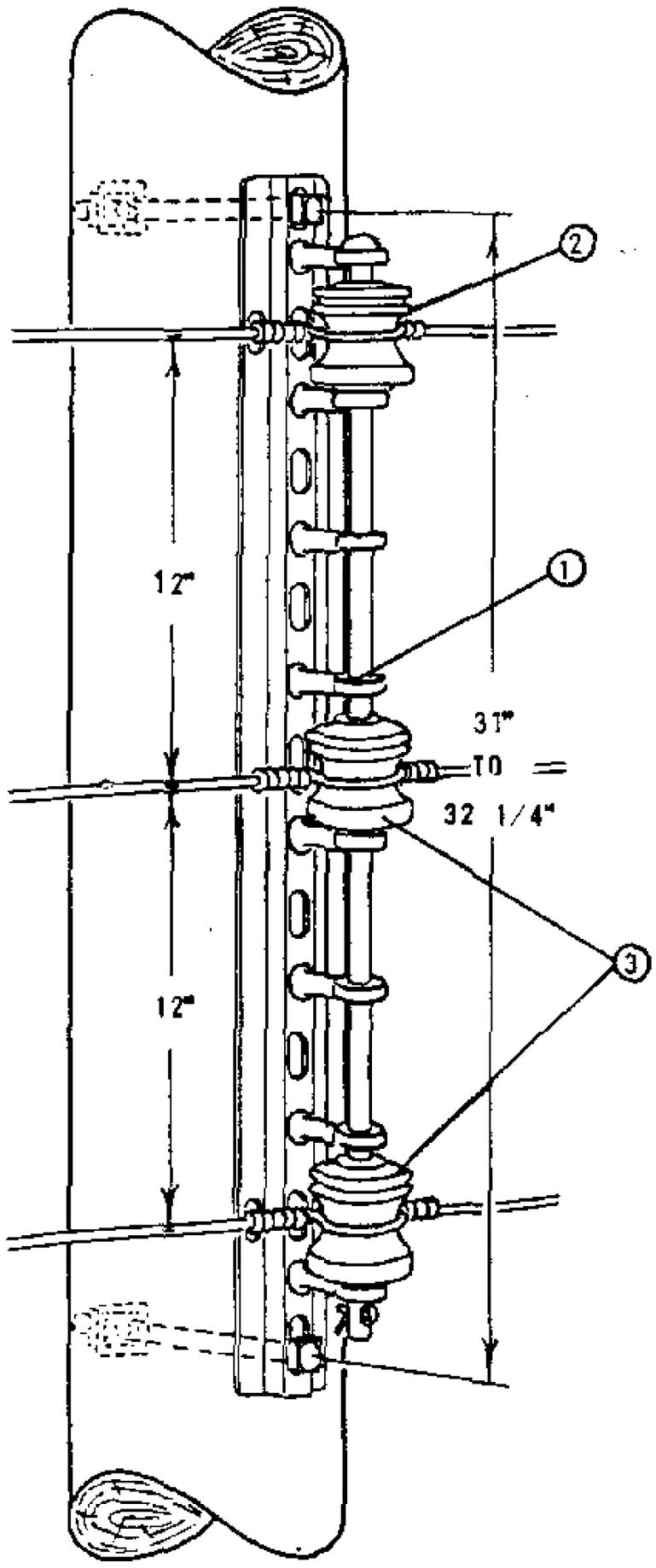

TANGENT OR ANGLE

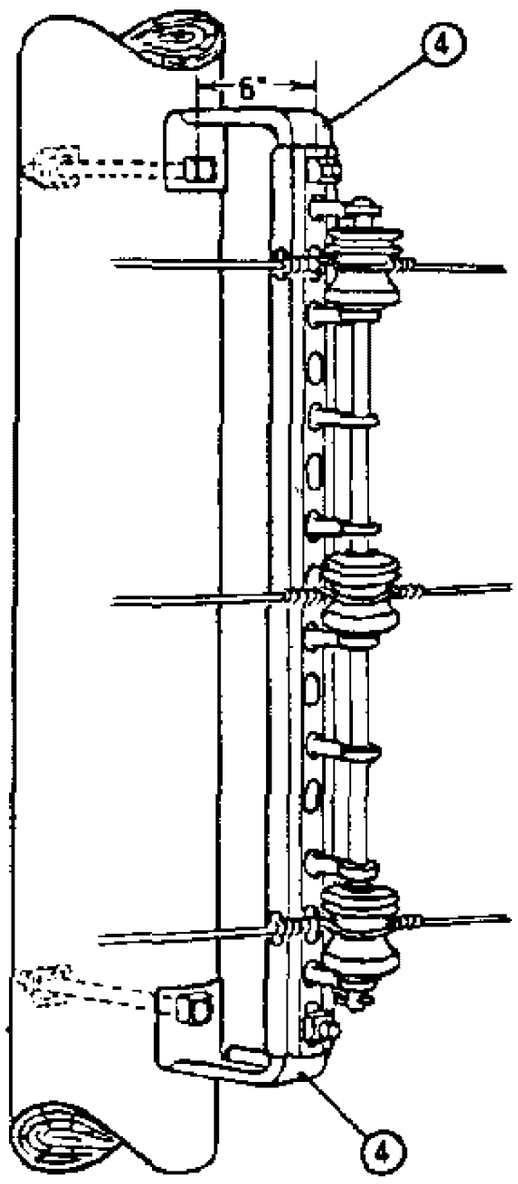

TANGENT OR ANGLE
EXTENSION BRACKET
(A)

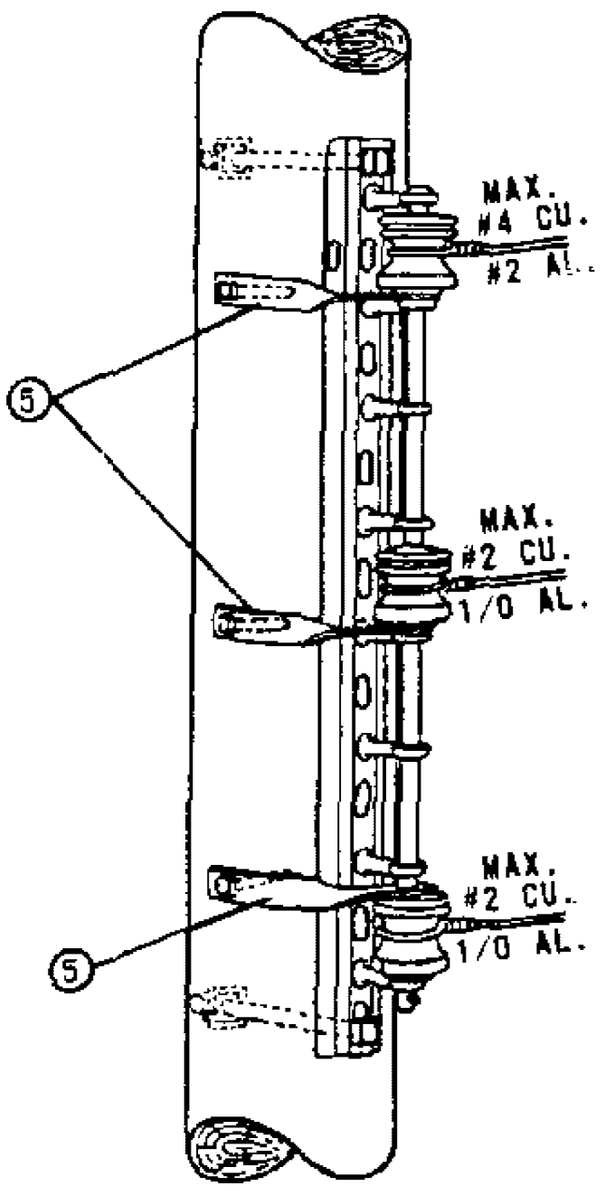

DEAD END ON
SIDE OF POLE
(B)

FOR FIELD MAINTENANCE ONLY

NOTES:

(A) USED TO OBTAIN RADIAL CLEARANCE BETWEEN SUPPLY CONDUCTORS AND OVERHEAD GUYS, ALSO TO OBTAIN CLIMBING SPACE.

(B) TO BE USED FOR TANGENT, ANGLE, OR CORNER CONSTRUCTION WHERE SECONDARY MAY BE EXTENDED AND WHERE RACK GUY CANNOT BE USED.

ITEM	DESCRIPTION	CATALOG NUMBER							STOCK NUMBER
		CHANCE	HUBBARD	JOSLYN	KORTICK	McGRW ED	OLIVER		
1	SECONDARY RACK	-	1478	-	K-6748	-	8348		564864
2	SPOOL INSULATOR, (WHITE)	256W	455W	-	-	-	-		430816
3	SPOOL INSULATOR, (BROWN)	-	-	-	-	-	-		430656
4	EXTENSION BRACKET	-	3355	J-2355	K-4830	-	-		166016
5	DEAD ENDING STRAP, CURVED, 1/4" X 1 1/4"	-	1000	J-3120	K-4833	OR4MI	-		696832

DATE 6-4-82
APPD

SDG&E ELECTRIC STANDARDS

SECONDARY RACKS

699.201
SUPERSEDES
629 (6-4-82)

TABLE OF CONTENTS

FIELD MAINTENANCE ONLY

REVISION HISTORY:

7/13/2016: All versions prior to 2016 are superseded by their current version found inside the Overhead Construction Standard Manual.

TABLE OF CONTENTS

© 1998 - 2016 San Diego Gas & Electric Company. All rights reserved. Removal of this copyright notice without permission is not permitted under law.

REV	CHANGE	BY	DSGN	APPV	DATE	REV	CHANGE	BY	DSGN	APPV	DATE
C						F					
B						E					
A	ORIGINAL ISSUE	JS	IL	MDJ	7/13/2016	D					

X Indicates Latest Revision | Completely Revised | New Page | Information Removed

SHEET 1 OF 1

SDG&E ELECTRIC OVERHEAD STANDARD

SERVICE INSULATOR BRACKETS, SINGLE

FMO OH 631

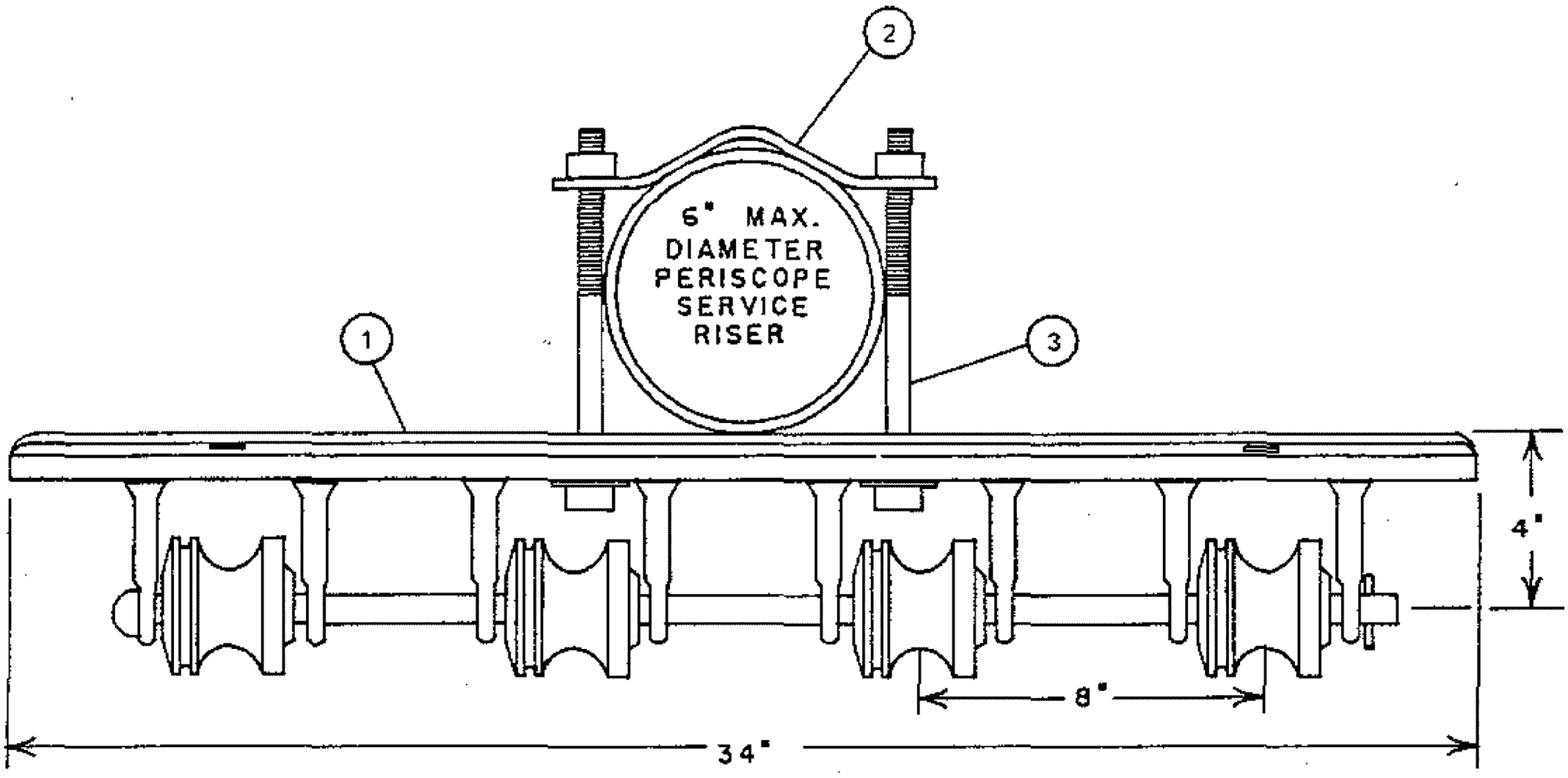

FOUR SPOOL SERVICE INSULATOR BRACKET-ITEMS 1,2,3

FOR FIELD MAINTENANCE ONLY

TABLE OF CONTENTS

ITEM	DESCRIPTION	CATALOG NUMBER	QUANTITY	STOCK NO. OR CONST. STD.
1	RACK, FOUR SPOOL SERVICE INSULATOR	HUBBARD 1478 KORTICK K-6748 OLIVER 8348	1	564864
2	STRAP, CURVED BACK	-	1	698016
3	BOLT, MACH., GALV., 1/2" X [LENGTH AS REQ'D.]	-	2	PG. 139

DATE 9-17-82
APPD

SDG&E ELECTRIC STANDARDS

SERVICE INSULATOR BRACKETS, SINGLE

699.301
SUPERSEDES
631 (9-17-82)

FIELD MAINTENANCE ONLY

REVISION HISTORY:

7/13/2016: All versions prior to 2016 are superseded by their current version found inside the Overhead Construction Standard Manual.

TABLE OF CONTENTS

© 1998 - 2016 San Diego Gas & Electric Company. All rights reserved. Removal of this copyright notice without permission is not permitted under law.

REV	CHANGE	BY	DSGN	APPV	DATE	REV	CHANGE	BY	DSGN	APPV	DATE
C						F					
B						E					
A	ORIGINAL ISSUE	JS	IL	MDJ	7/13/2016	D					

X Indicates Latest Revision | Completely Revised | New Page | Information Removed

SHEET 1 OF 1

SDG&E ELECTRIC OVERHEAD STANDARD

HEAVY DUTY SERVICE INSULATOR BRACKET

FMO OH 632

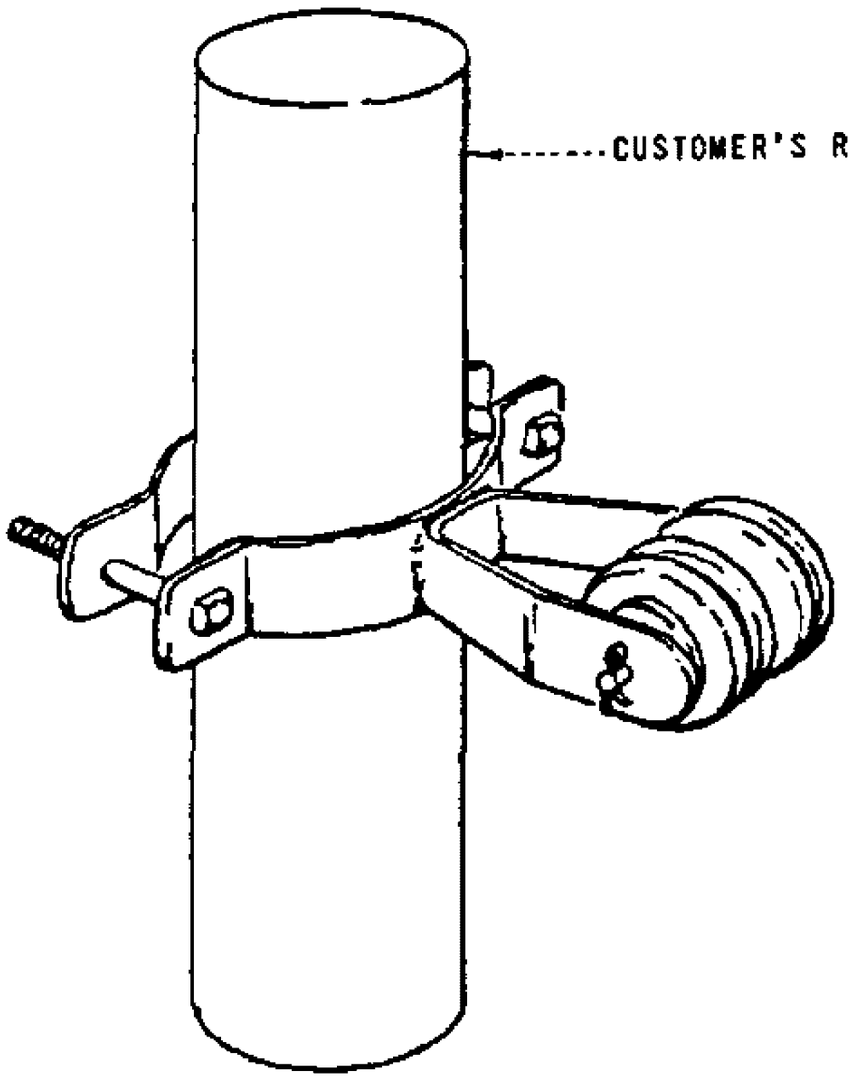

BRACKET ASSEMBLED

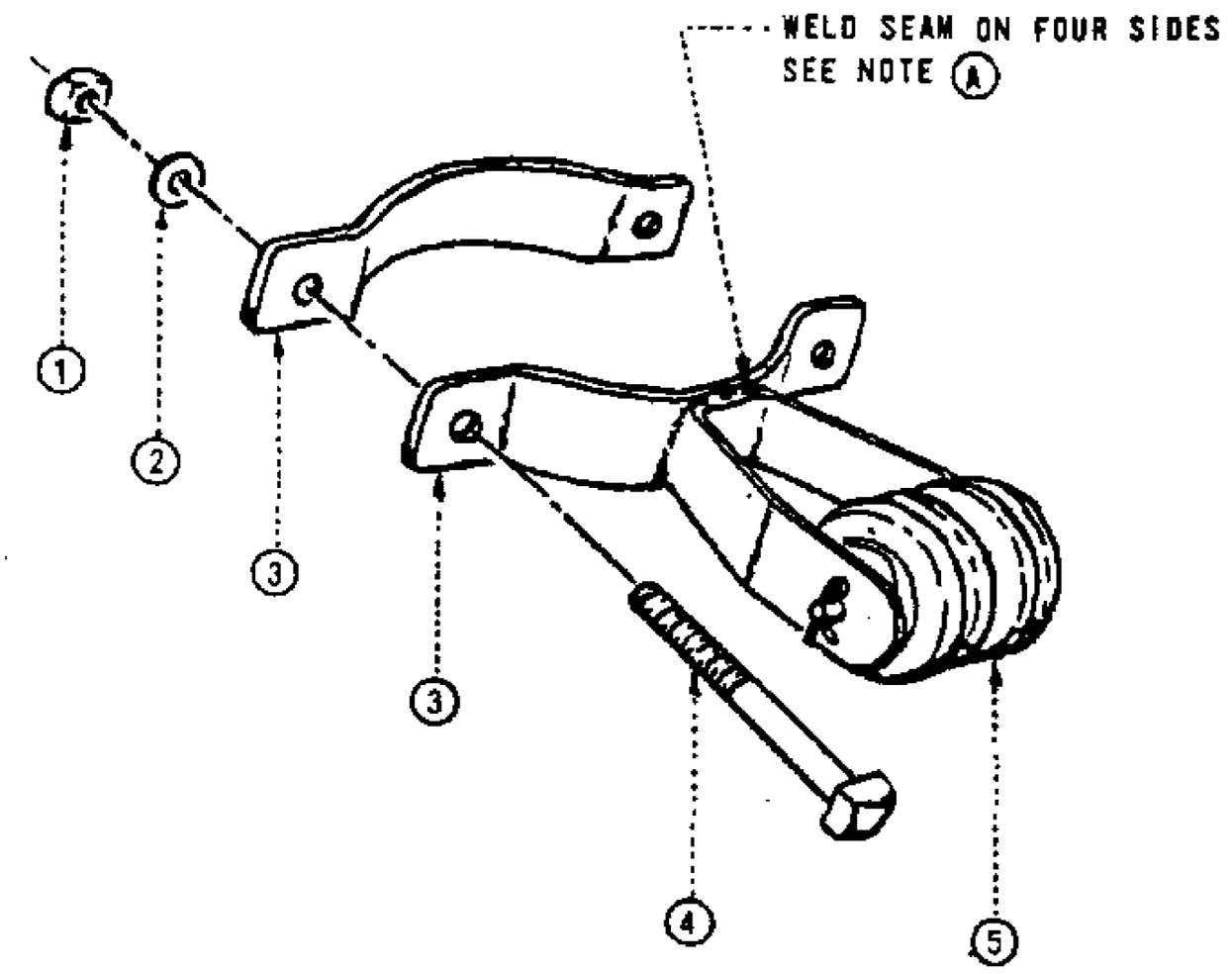

BRACKET EXPLODED

TABLE OF CONTENTS

FOR FIELD MAINTENANCE ONLY

NOTES:

(A) ITEM TO BE GALVALLOY ZINC AT WELDED JOINT OR HOT DIP GALVANIZED AFTER FABRICATION.

(B) ASSEMBLY WILL ACCOMODATE CUSTOMER'S RISER FROM 3" MINIMUM TO 6" MAXIMUM.

ITEM	DESCRIPTION	QUANTITY	STOCK NO. OR CONSTR STDS
1	NUT, GALV., 1/2" X 13 COURSE THREAD	2	504736
2	WASHER, FLAT, GALV., 1/2" DIAMETER	2	800192
3	STRAP, BACK, CURVED, GALV.	2	698016
4	BOLT, MACH., GALV., 1/2" X (LENGTH AS REQ'D)	2	PG. 139
5	4KV DEADEND ASSEMBLY	1	166128

699.302
SUPERSEDES
632 (9-17-82)

SOG&E ELECTRIC STANDARDS

HEAVY DUTY SERVICE INSULATOR BRACKET

DATE 9-17-82
APPD

FIELD MAINTENANCE ONLY

9/4/2018: All versions prior to 2018 are superseded by their current version found inside the Overhead Construction Standard Manual.

TABLE OF CONTENTS

© 1998 - 2018 San Diego Gas & Electric Company. All rights reserved. Removal of this copyright notice without permission is not permitted under law.

REV	CHANGE	BY	DSGN	APPV	DATE	REV	CHANGE	BY	DSGN	APPV	DATE
C						F					
B						E					
A	ORIGINAL ISSUE	JS	JS	CZH	9/4/2018	D					

TABLE OF CONTENTS

SCOPE: THIS STANDARD SHOWS THE VARIOUS MINI WEDGE CONNECTORS THAT ARE TO BE USED TO CONNECT DIFFERENT TYPES AND SIZES OF JUMPER AND LINE WIRE FOR SECONDARY AND SERVICE CONDUCTORS FOR THE OVERHEAD.

SDG&E FULL ACSR,AAAC OR AAC NEUTRAL FULL AAC HOT WIRES STANDARD TRIPLEX		4/0 ACSR,AAAC AAC,CU STR	2/0 ACSR,AAAC AAC,CU STR 3/0 AAC CMPT	1/0 #1 ACSR,AAAC AAC,CU STR	#2 ACSR,AAAC AAC,CU STR	#4 ACSR,AAAC AAC,CU STR CMPT AAC,CU #2 SOL	#6 ACSR,AAAC AAC,CU STR CMPT AAC,CU SOL #4 SOL	#8 AAC,CU STR & SOL #6 AL/CU SOL
#8 AAC/CU STR & SOL #6 AL/CU SOL	AU	MW4/08	MW2/08	MW1/08	MW28	MW48	MW68	MW88
	STOCK #	S269494	S269460	S269448	S269484	S269476	S269470	S269466
#6 ACSR,AAAC #6 AAC,CU STR #6 CMPT AAC,CU #6 SOL,#4 SOL	AU	MW4/06	MW2/06	MW1/06	MW26	MW46	MW66	
	STOCK #	S269492	S269458	S269446	S269482	S269474	S269468	
#4 ACSR,AAAC #4 AAC,CU STR #4 CMPT AAC,CU #2 SOL	AU	MW4/04	MW2/04	MW1/04	MW24	MW44		
	STOCK #	S269490	S269456	S269444	S269480	S269472		
#2 ACSR,AAAC #2 AAC,CU STR	AU	MW4/02	MW2/02	MW1/02	MW22			
	STOCK #	S269488	S269454	S269442	S269478			
1/0 ACSR,AAAC 1/0 AAC,CU STR #1 ACSR	AU	MW4010	MW2010	MW1/0				
	STOCK #	S269464	S269452	S269486				
2/0 ACSR,AAAC 2/0 AAC,CU STR 3/0 AAC CMPT	AU	MW4020	MW2020					
	STOCK #	S269462	S269450					

© 1998 - 2014 San Diego Gas & Electric Company. All rights reserved. Removal of this copyright notice without permission is not permitted under law.

Indicates Latest Revision | Completely Revised | X New Page | Information Removed

REVISION
DATE 1-16-2014
APPD TQ/DW

SDG&E ELECTRIC STANDARDS

MINI WEDGE CONNECTOR

635.4

FIELD MAINTENANCE ONLY

REVISION HISTORY:

7/13/2016: All versions prior to 2016 are superseded by their current version found inside the Overhead Construction Standard Manual.

TABLE OF CONTENTS

© 1998 - 2016 San Diego Gas & Electric Company. All rights reserved. Removal of this copyright notice without permission is not permitted under law.

REV	CHANGE	BY	DSGN	APPV	DATE	REV	CHANGE	BY	DSGN	APPV	DATE
C						F					
B						E					
A	ORIGINAL ISSUE	JS	IL	MDJ	7/13/2016	D					

X Indicates Latest Revision | Completely Revised | New Page | Information Removed

SHEET 1 OF 1

SDG&E ELECTRIC OVERHEAD STANDARD

SERVICE DROP ATTACHMENTS CONDUIT RISERS

FMO OH 642

TABLE OF CONTENTS

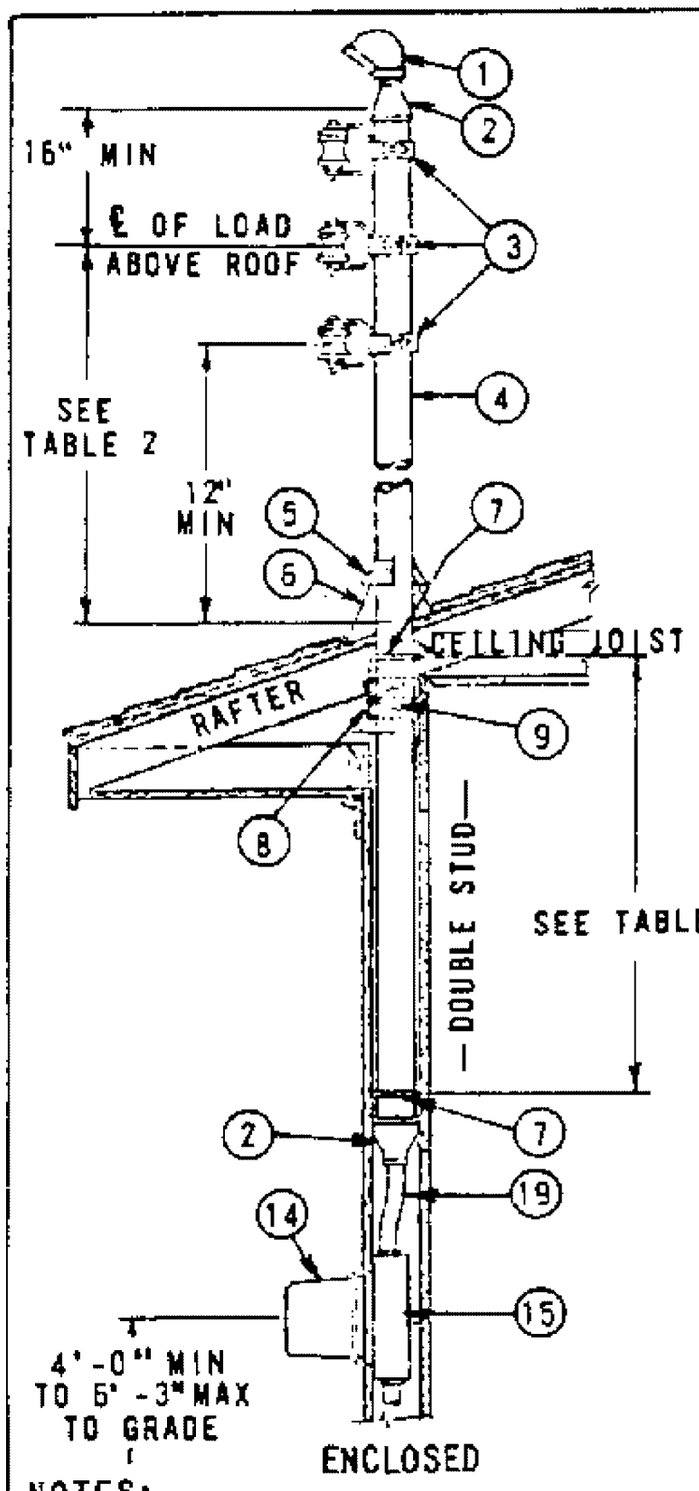

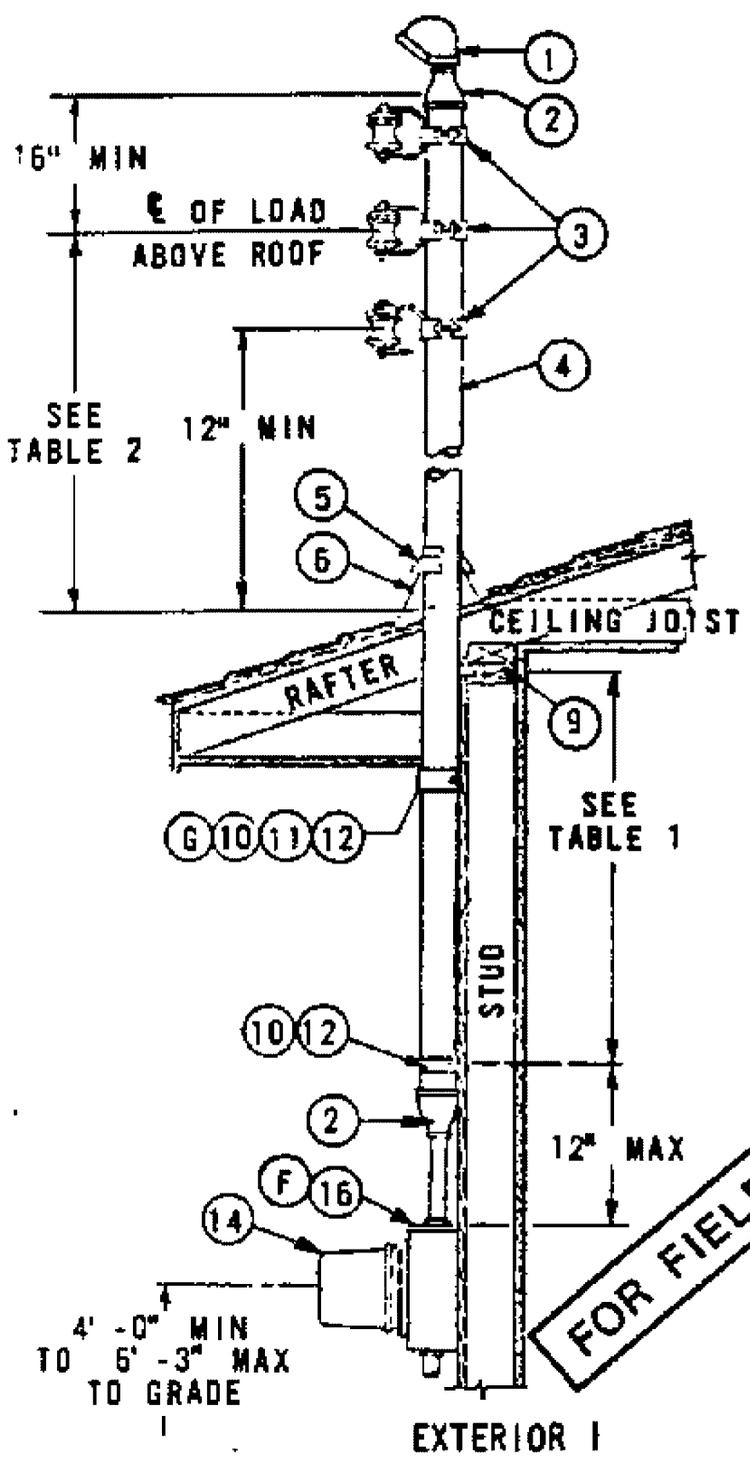

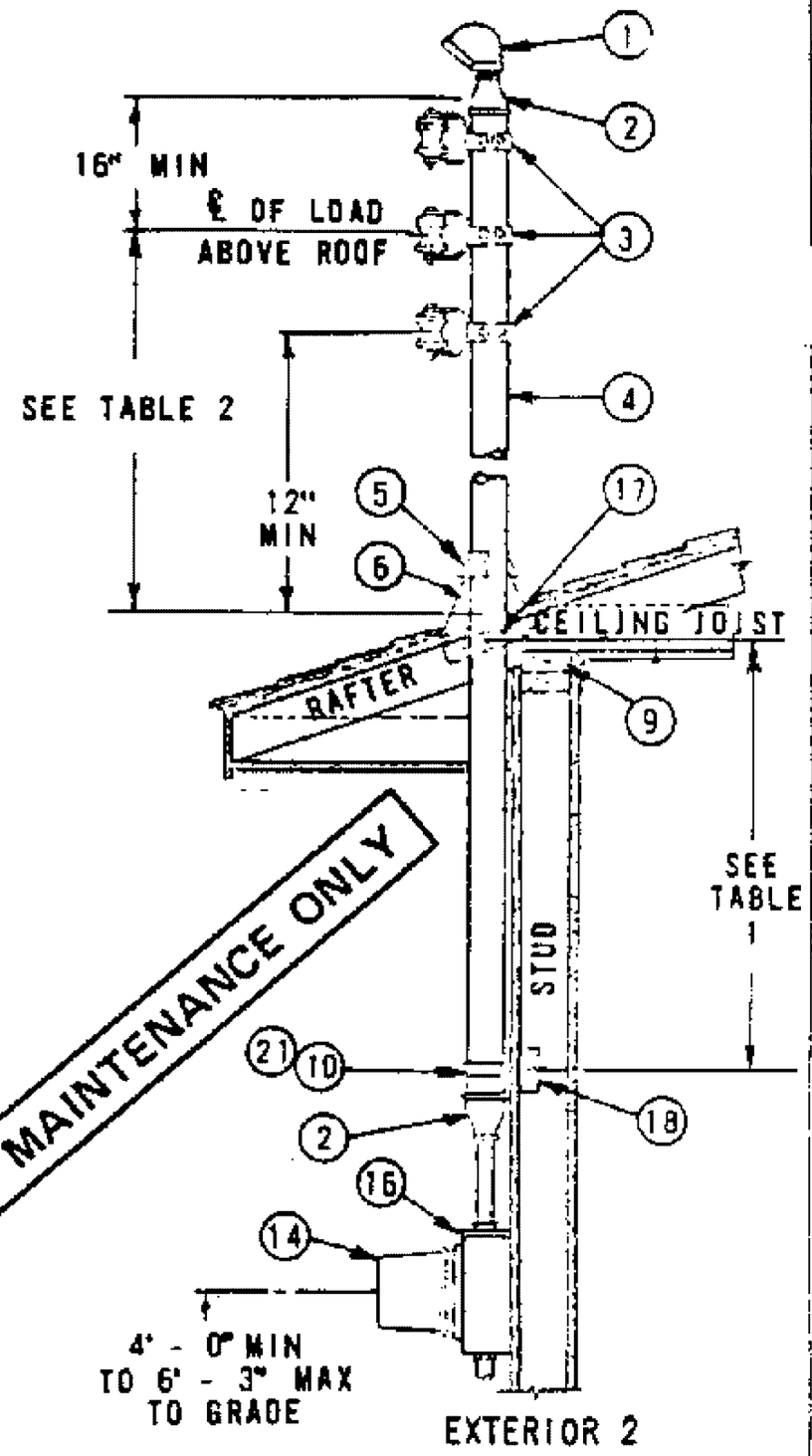

FOR FIELD MAINTENANCE ONLY

NOTES:

A. SDG&E WILL NOT BE RESPONSIBLE FOR ANY DAMAGE TO THE BUILDING CAUSED BY RAIN OR STRUCTURAL FAILURE.

B. THESE METHODS ARE SUGGESTED TO OBTAIN THE REQUIRED GROUND AND ROOF CLEARANCES AS REQUIRED BY THE AUTHORITIES HAVING JURISDICTION. WHEN THIS METHOD IS USED IT WILL BE ACCEPTABLE TO SDG&E PROVIDED THE DIMENSIONS AND CONSTRUCTION DETAILS ARE COMPLIED WITH.

C. THE DIMENSIONS SHOWN ARE BASED ON A "SLACK SPAN" SERVICE DROP LENGTH OF NOT MORE THAN 100 FEET. FOR SERVICE LENGTH GREATER THAN 100 FEET, SEE STANDARD 644.

D. NO COUPLINGS WILL BE PERMITTED BETWEEN THE TOP OF THE RISER AND THE LOWEST POINT OF SUPPORT FOR CONDUIT SIZES 1 1/4" TO 2" INCLUSIVE. IF A COUPLING IS NECESSARY IN THE 2 1/2" SIZE CONDUIT TO SECURE THE MAXIMUM HEIGHT, THE COUPLING SHALL BE INSTALLED AT THE UPPER END NEAR THE SERVICE CAP.

E. THESE CONDUIT RISERS SHALL BE USED FOR ATTACHMENT OF #2 OR LARGER SERVICE DROPS.

(F) METER SOCKET BOX MUST HAVE MINIMUM WIDTH OF 14".

(G) WHEN ROOF CONSTRUCTION HAS NO SOFFIT, MOVE STRAP UP AND LAG INTO PLATE 9. HEAVY DUTY ONE HOLE PIPE STRAP IS ACCEPTABLE IF USED WITH 1/4" X 3 1/2" LAG SCREW INTO WALL STUD.

ITEM	DESCRIPTION	QUANTITY		
		ENCLOSED	EXTERIOR 1	EXTERIOR 2
1	CAP, SERVICE	1	1	1
2	REDUCER, PIPE, GALV IRON, IF REQ'D	1	1	1
3	INSULATOR AND CLAMPS, FURNISHED & INSTALLED BY SDG&E	3	3	3
4	CONDUIT, GALV RIGID IRON, OR INTERMEDIATE METAL CONDUIT	1	1	1
5	COLLAR, METAL OR NEOPRENE RAINSHED	1	1	1
6	FLASHING	1	1	1
7	BOLT, "U", 3/8"	2	-	-
8	STRAPS ON PLATES	AS REQ'D	-	-
9	PLATES	-	-	-
10	STRAP, PIPE, HEAVY DUTY, TWO HOLE (G)	-	2	-
11	SCREW, LAG, 1/4" X 3 1/2"	-	2	-
12	BOLT, TOGGLE, 1/4"	-	2	-
13				
14	METER	1	1	1
15	BOX, METER SOCKET, FLUSH TYPE	1	-	-
16	BOX, METER SOCKET, SURFACE MOUNTED TYPE	-	1	1
17	BLOCKING, 2" X 4", BETWEEN RAFTERS (SOLIDLY INSTALLED)	-	-	AS REQ'D
18	BLOCKING, 2" X 4", BETWEEN STUDS	-	-	AS REQ'D
19	NIPPLE, CONDUIT, OFFSET	1	-	-
20				
21	SCREW, LAG, 1/4" X 3"	-	-	AS REQ'D

TABLE 1

MIN. DISTANCE BETWEEN SUPPORTS SHOWN	
CONDUIT SIZE	DISTANCE
1 1/4"	12"
1 1/2"	15"
2"	22"
2 1/2"	30"

TABLE 2

MAX DISTANCE OF ℄ OF LOAD ABOVE ROOF	
CONDUIT SIZE	DISTANCE
1 1/4"	30"
1 1/2"	40"
2"	5'-0"
2 1/2"	8'-0"

699.202
SUPERCEDES
642 (1-1-90)

SDG&E ELECTRIC STANDARDS

SERVICE DROP ATTACHMENTS TO CONDUIT RISERS

DATE 1-1-90
APPD

FIELD MAINTENANCE ONLY

REVISION HISTORY:

7/13/2016: All versions prior to 2016 are superseded by their current version found inside the Overhead Construction Standard Manual.

TABLE OF CONTENTS

© 1998 - 2016 San Diego Gas & Electric Company. All rights reserved. Removal of this copyright notice without permission is not permitted under law.

REV	CHANGE	BY	DSGN	APPV	DATE	REV	CHANGE	BY	DSGN	APPV	DATE
C						F					
B						E					
A	ORIGINAL ISSUE	JS	IL	MDJ	7/13/2016	D					

X Indicates Latest Revision | Completely Revised | New Page | Information Removed

SHEET
1 OF 1

SDG&E ELECTRIC OVERHEAD STANDARD

CUSTOMER OWNED - 1 & 2 BOX TV AMPLIFIER
& 120V, METER INSTALLATION

FMO
OH 652

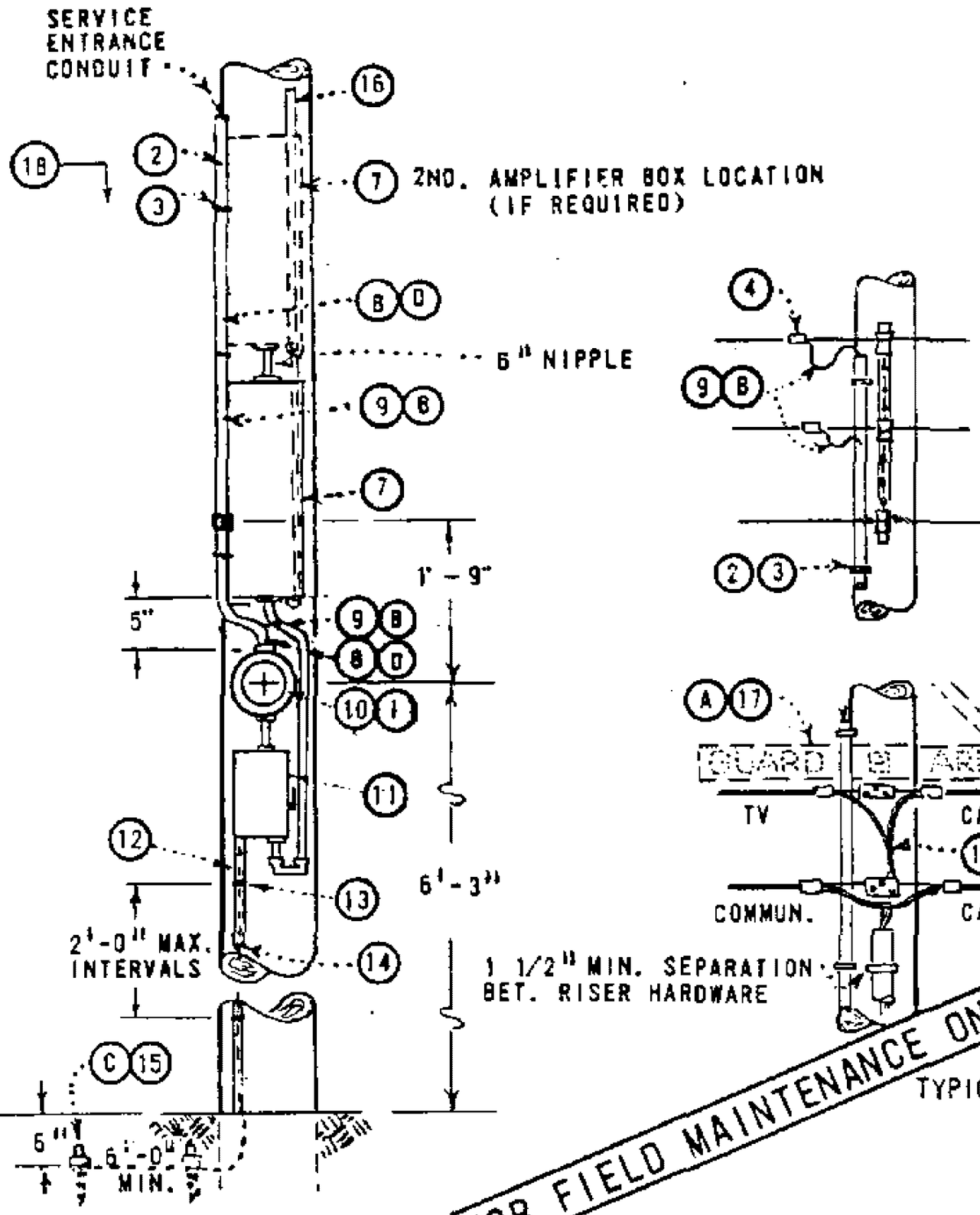

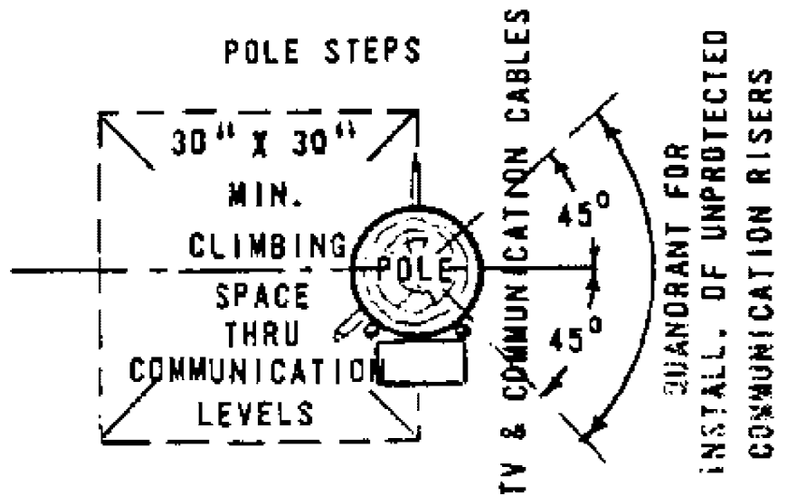

PLAN OF CLIMBING SPACE

TYPICAL RISER TERMINATION



NOTES:

(A) SEPARATION BETWEEN SECONDARY LINE AND TV CABLE MAY BE REDUCED TO NOT LESS THAN 4'-0" WHERE A GUARD ARM HAS BEEN INSTALLED IMMEDIATELY ABOVE TV CABLE.

(B) CUSTOMER'S SERVICE ENTRANCE CONDUCTORS SHALL RUN CONTINUOUSLY WITHOUT SPLICES FROM METER SOCKET TERMINALS TO OVERHEAD SECONDARY LINE AND SHALL BE OF A LENGTH SUFFICIENT TO FORM LOOPS AT TOP OF THE RISER.

(C) USE TWO GROUND RODS WHERE AN IMPEDANCE OF LESS THAN 25 OHMS CANNOT BE OBTAINED WITH ONE GROUND ROD.

(D) IF PVC CONDUIT IS USED, ALL EQUIPMENT MOUNTED ON POLE BELOW 8' LEVEL TO BE EFFECTIVELY GROUNDED AND CONDUIT GROUND OMITTED.

E. THE EQUIPMENT ON LOADSIDE OF THE METER IS SUBJECT TO APPROVAL BY THE LOCAL INSPECTION AUTHORITIES.

F. ATTACH ONE SET OF LEADS FROM METER TO EXO SWITCH ONLY. LOWER AMPLIFIER MAY BE USED AS A JUNCTION BOX WHEN SECOND AMPLIFIER BOX IS REQUIRED.

G. THIS INSTALLATION SHALL BE LIMITED TO UTILITY POLES WHICH CONTAIN NO OTHER VERTICAL RUNS.

MATERIAL FURNISHED AND INSTALLED BY SDG&E

ITEM	DESCRIPTION	QUANTITY	STOCK NO./ STD. PAGE
1	METER	1	481840
2	CONDUIT 3/4" DIAM., PVC, TYPE II, SCH. 80 (E)	AS REQ'D.	251520
3	STRAPS, PIPE, GALV., 3/4", 2-10d. NAILS (E)	AS REQ'D.	697888
4	CONNECTORS, WIRE (SIZE AS REQ'D.)	2	783 OR 786
5	COUPLING, PLASTIC, (SIZE AS REQ'D)	1	

MATERIAL FURNISHED AND INSTALLED BY CUSTOMER

		DESCRIPTION
	7	TV AMPLIFIER EQUIPMENT(1 OR 2 BOX INSTALLATION)
(D)	8	G.I. RIGID OR PVC CONDUIT SCH. 80, WITH FITTINGS (TO 8'-0" LEVEL)
(B)	9	WIRE, 600V, #12, TYPE THW, (SERVICE CONDUCTORS)
	10	APPROVED METER SOCKET
	11	EXO SWITCH, COMPLETE WITH PROTECTION
	12	HARDWOOD MOULDING, 1"
	13	PIPE STRAPS, GALV., 1" & 2-10d. NAILS, GALV.
	14	WIRE, BARE STRANDED COPPER, #6
(C)	15	GROUND ROD AND CLAMP, 5/8" X 8'-0"
	16	CO-AXIAL TV CABLES
(A)	17	GUARD ARM, 3" X 4 1/4" X 4'-0" (IF REQ'D.) WITH BRACE
	18	POLE STEPS (AS REQ'D) PAGE 363

DATE 8-31-81
APPD

SAN DIEGO GAS & ELECTRIC CO OVERHEAD STANDARDS

CUSTOMER OWNED - 1 & 2 BOX TV AMPLIFIER & 120V. METER INSTALLATION

699.500
SUPERSEDES
652 (8-31-81)

TABLE OF CONTENTS

PAGE	SUBJECT
715	COPPER AND COPPERWELD WIRE TABLE
717	COPPER TREE WIRE
720	AUTOMATIC SLEEVES FOR COPPER AND COPPERWELD CONDUCTORS
741	12KV ALUMINUM STRAIGHT STRAIN CLAMP FOR ACSR & 5005 ALUMINUM ALLOY CONDUCTORS
744	GALVANIZED DEAD END STRAIN CLAMPS FOR COPPER CONDUCTORS
756	PORCELAIN SUSPENSION INSULATOR BONDING
776	ANGLE SUSPENSION CLAMPS
783	WEDGE CONNECTORS, GELPACTS
785	ALUMINUM PARALLEL GROOVE CLAMPS
789	VIBRATION DAMPERS

MAIN TABLE OF CONTENTS

© 1998 - 2023 San Diego Gas & Electric Company. All rights reserved. Removal of this copyright notice without permission is not permitted under law.

REV	CHANGE	DR	BY	DSN	APV	DATE	REV	CHANGE	DR	BY	DSN	APV	DATE
C	OH783 MOVED TO FMO	EDM	MRF	MRF	KRG	04/06/2023	F						
B	OH789 MOVED TO FMO	EDM	MRF	GLW	KRG	11/09/2022	E						
A	ORIGINAL ISSUE	-	JS	IL	MDJ	07/13/2016	D						

FIELD MAINTENANCE ONLY

REVISION HISTORY:

7/13/2016: All versions prior to 2016 are superseded by their current version found inside the Overhead Construction Standard Manual.

TABLE OF CONTENTS

© 1998 - 2016 San Diego Gas & Electric Company. All rights reserved. Removal of this copyright notice without permission is not permitted under law.

REV	CHANGE	BY	DSGN	APPV	DATE	REV	CHANGE	BY	DSGN	APPV	DATE
C						F					
B						E					
A	ORIGINAL ISSUE	JS	IL	MDJ	7/13/2016	D					

X Indicates Latest Revision | Completely Revised | New Page | Information Removed

SHEET 1 OF 1

SDG&E ELECTRIC OVERHEAD STANDARD

COPPER AND COPPERWELD WIRE TABLE

FMO OH 715

TABLE OF CONTENTS

COPPER WIRE (FOR FIELD MAINTENANCE ONLY)

SIZE OF WIRE	AWG	6	1	–	–
	CIRC MILS (CU EQUIV)	26250	83690	250K	400K
STOCK NUMBER		S813536	S812352	S813696	S812416
NUMBER OF STRANDS		3	7	19	19
DIAMETER (INCHES)		.201	.328	.574	.726
WEIGHT (LBS/1000 FT)		82.5	258.4	771.9	1235
ULTIMATE TENSILE STRENGTH (LBS)		1204	3154	9366	13850
AMPACITY (AMPERES) AT 75° C		130	270	540	730
RESISTANCE AT 75° C OHMS/1000 FT		.49	.15	.052	.033

FOR FIELD MAINTENANCE ONLY

COPPERWELD WIRE (FOR FIELD MAINTENANCE ONLY)

SIZE OF WIRE	AWG	6	4			–	–	–
	CIRC MILS (CU EQUIV)	26250	47140			47124	92667	370100
STOCK NUMBER		S813120	S813088	S813152	S813216	S813280	S813312	S813184
CW. CONDUCTOR TYPE NO.		6A	4A	4D	4N	3/8 (7 #8)	9/16 (7 #5)	.810E
NUMBER OF STRANDS CW/CU		1/2	1/2	2/1	5/2	40% 7-HS	40% 7-HS	7/12
DIAMETER (INCHES)		.230	.290	.348	.328	.385	.546	.810
WEIGHT (LBS/1000 FT)		101.6	161.5	225.5	240.0	323.9	649.4	1484
ULTIMATE TENSILE STRENGTH (LBS)		2585	3938	7340	8460	10460	18510	34290
AMPACITY (AMPERES) AT 75° C		140	180	190	180	200	305	660
RESISTANCE AT 75° C OHMS/1000 FT		.50	.32	.32	.32	.28	.14	.035

© 1998 - 2011 San Diego Gas & Electric Company. All rights reserved. Removal of this copyright notice without permission is not permitted under law.

799.101 SUPERSEDES 715 (5-6-83)	SDG&E ELECTRIC STANDARDS	DATE 3-23-2011 APPD PJA/MJC
	COPPER AND COPPERWELD WIRE TABLE	

FIELD MAINTENANCE ONLY

REVISION HISTORY:

7/13/2016: All versions prior to 2016 are superseded by their current version found inside the Overhead Construction Standard Manual.

TABLE OF CONTENTS

© 1998 - 2016 San Diego Gas & Electric Company. All rights reserved. Removal of this copyright notice without permission is not permitted under law.

REV	CHANGE	BY	DSGN	APPV	DATE	REV	CHANGE	BY	DSGN	APPV	DATE
C						F					
B						E					
A	ORIGINAL ISSUE	JS	IL	MDJ	7/13/2016	D					

X Indicates Latest Revision | Completely Revised | New Page | Information Removed

SHEET 1 OF 1

SDG&E ELECTRIC OVERHEAD STANDARD

COPPER TREE WIRE

FMO OH 717

SIZE OF WIRE						
	A.W.G.	4	2	1/0	3/0	4/0
	CIRCULAR MILS.	41740	66370	105500	167800	211600
STOCK NUMBER		815456	815520	815488	815552	–
NUMBER OF STRANDS		3	7	7	7	7
CONDUCTOR AREA SQUARE INCHES		.0328	.0521	.0829	.1318	.1662
NOMINAL O.D. INCHES		.566	.604	.680	.766	.839
APPROX. WEIGHT LBS. PER M FT.		215	300	440	650	800
ULTIMATE TENSILE STRENGTH – LBS.		1564	2517	3953	6204	7772
CAPACITY AMPERES AT 75° C		125	166	222	294	343
RESISTANCE AT 75° C OHMS M FEET		.32	.20	.12	.079	.062
ASSEMBLY UNITS		TR4	TR2	TR1/0	TR3/0	–

FOR FIELD MAINTENANCE ONLY

TABLE OF CONTENTS

DATE 1–1–96 APPD PA / RDG	SDG&E ELECTRIC STANDARDS COPPER TREE WIRE	799.102 SUPERSEDES 717 (1–1–96)

FIELD MAINTENANCE ONLY

REVISION HISTORY:

7/13/2016: All versions prior to 2016 are superseded by their current version found inside the Overhead Construction Standard Manual.

TABLE OF CONTENTS

© 1998 - 2016 San Diego Gas & Electric Company. All rights reserved. Removal of this copyright notice without permission is not permitted under law.

REV	CHANGE	BY	DSGN	APPV	DATE	REV	CHANGE	BY	DSGN	APPV	DATE
C						F					
B						E					
A	ORIGINAL ISSUE	JS	IL	MDJ	7/13/2016	D					

X Indicates Latest Revision | Completely Revised | New Page | Information Removed

SHEET
1 OF 1

SDG&E ELECTRIC OVERHEAD STANDARD

AUTOMATIC SLEEVES FOR
COPPER AND COPPERWELD CONDUCTORS

FMO
OH 720

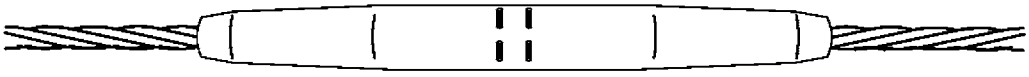

AUTOMATIC COPPER SLEEVE

NOTES:

- SLEEVES SHALL NOT BE INSTALLED IN GRADE A CROSSING SPANS OR IN TRANSMISSION CONSTRUCTION.
- AUTOMATIC SLEEVES DEPEND ON LINE TENSION FOR THEIR OPERATION. THEY SHALL NOT BE USED IN TAPS, JUMPERS, OR REDUCED TENSION.

AUTOMATIC SLEEVES FOR COPPER CONDUCTORS		
WIRE		STOCK NUMBER
SIZE	STRAND	
6	SOLID	S653318
6	3	S653320
4	SOLID	S653320

AUTOMATIC SLEEVES FOR COPPERWELD CONDUCTORS		
WIRE		STOCK NUMBER
SIZE	STRAND	
8A	1/2	S653320
6A	1/2	S653342

FOR FIELD MAINTENANCE ONLY

© 1998 - 2014 San Diego Gas & Electric Company. All rights reserved. Removal of this copyright notice without permission is not permitted under law.

DATE 9–16–2014 APPD IL / DW	SDG&E ELECTRIC STANDARDS AUTOMATIC SLEEVES FOR COPPER AND COPPERWELD CONDUCTORS	799.103 SUPERSEDES 720.8 (2–11–2014)

TABLE OF CONTENTS

FIELD MAINTENANCE ONLY

REVISION HISTORY:

7/13/2016: All versions prior to 2016 are superseded by their current version found inside the Overhead Construction Standard Manual.

TABLE OF CONTENTS

© 1998 - 2016 San Diego Gas & Electric Company. All rights reserved. Removal of this copyright notice without permission is not permitted under law.

REV	CHANGE	BY	DSGN	APPV	DATE	REV	CHANGE	BY	DSGN	APPV	DATE
C						F					
B						E					
A	ORIGINAL ISSUE	JS	IL	MDJ	7/13/2016	D					

X Indicates Latest Revision | Completely Revised | New Page | Information Removed

SHEET
1 OF 1

SDG&E ELECTRIC OVERHEAD STANDARD

12KV ALUMINUM STRAIGHT STRAIN CLAMP
FOR ACSR & 5005 ALUMINUM ALLOY CONDUCTORS

FMO
OH 741

SCOPE: THIS STANDARD SHOWS STRAIGHT STRAIN CLAMPS USED TO ATTACH ACSR AND 5005 ALUMINUM ALLOY CONDUCTORS TO DEAD END INSULATORS.

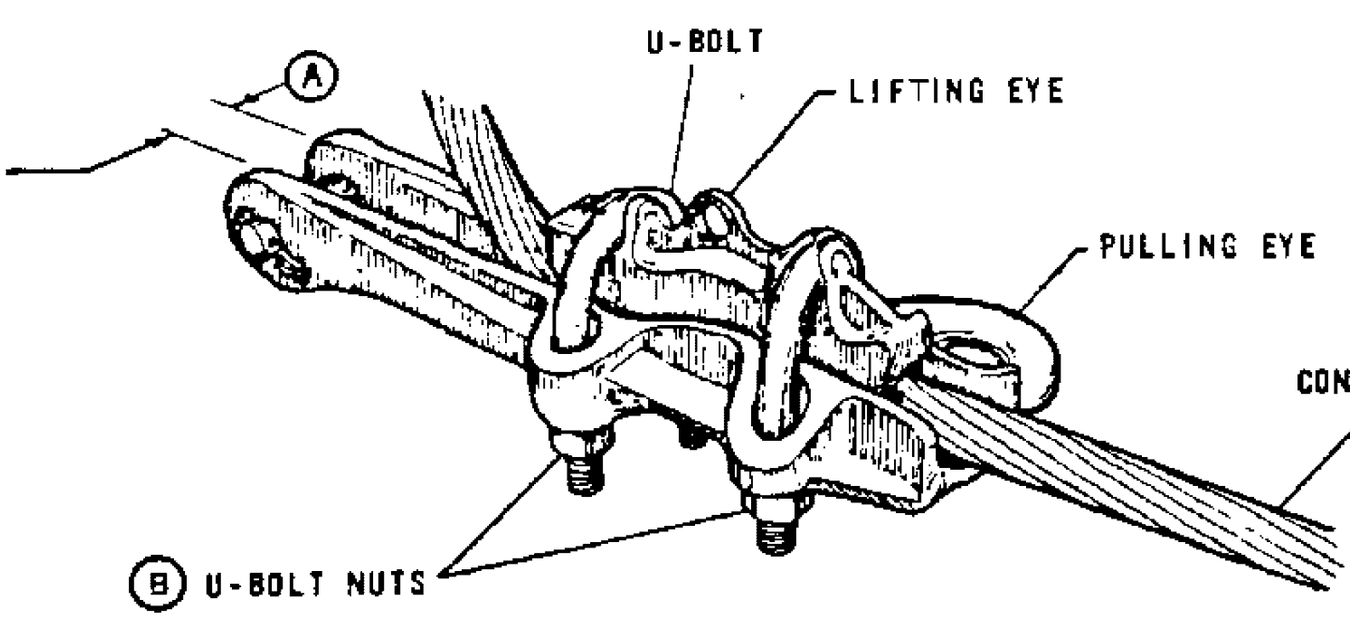

FIG. 1

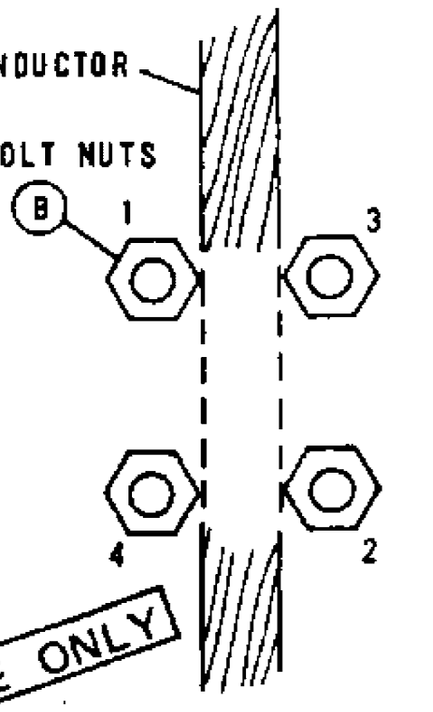

TORQUING SEQUENCE
FIG. 2

FOR FIELD MAINTENANCE ONLY

NOTES:

- DO NOT USE STRAIGHT STRAIN CLAMP ON AWAC CONDUCTORS.
- THIS CLAMP MAY BE USED IN ALL LOADING DISTRICTS.

BILL OF MATERIAL:

WIRE SIZE								CLAMP RANGE (INCHES)		CLAMP DATA		MFG	CATALOG NUMBER	STOCK NO OR CONSTR STD
ACSR OR 5005 (AWG)			ACSR				5005							
2 6/1	1/0 6/1	3/0 6/1	336.4 KCMIL 18/1	336.4 KCMIL 26/7	636 KCMIL 24/7	1033.5 KCMIL 45/7	394.5 KCMIL 19	MIN	MAX	TORQUE (FT-LBS)	CLEVIS WIDTH (A)			
X	X	X	-	-	-	-	-	.184	.563	35	5/8	ALCOA	E221.2	230432 (E)
X	X	X	X	X	-	-	X	.316	.814	40	13/16		E222.3	230512
-	-	-	X	X	X	-	X	.522	1.153	40	3/4		E223.4	- (C)
-	-	-	-	-	-	X	-	1.022	1.454	40	3/4		225	- (C)
X	X	-	-	-	-	-	-	.19	.47	25	11/16	BETHEA	ASD-2-N	230432 (E)
-	-	X	X	X	-	-	X	.46	.75	45	3/4		ASD-37-N	230464 (E)
X	X	-	-	-	-	-	-	.191	.447	20	3/4	FARGO	GD-971A	230432 (E)
X	X	X	X	-	-	-	X	.25	.724	45	3/4		GD-972A	230512
X	-	-	-	-	-	-	-	.15	.37	50	11/16	OHIO BRASS	87650	- (C)
X	X	X	-	-	-	-	-	.30	.60	50	3/4		91560	- (C)
-	-	X	X	X	-	-	X	.46	.88	50	7/8		91570	230464 (E)
-	-	-	-	-	X	X	-	.86	1.30	40	1-1/16	ANDERSON	ADE-130-N	230496

INSTALLATION:

(A) SEE CLAMP DATA COLUMN FOR CLEVIS WIDTH.
(B) HAND TIGHTEN U-BOLT NUTS AND THEN TORQUE BOLTS AS SHOWN IN FIG. 2 TO THE VALUES IN CLAMP DATA COLUMN.
(C) SPECIAL ORDER.
(E) EXEMPT MATERIAL

799,402 SUPERCEDES 741 (1986)	SDG&E ELECTRIC STANDARDS 12KV ALUMINUM STRAIGHT STRAIN CLAMP FOR ACSR & 5005 ALUMINUM ALLOY CONDUCTORS	DATE 1-1-86 APPD AK/RDS

TABLE OF CONTENTS

FIELD MAINTENANCE ONLY

REVISION HISTORY:

7/13/2016: All versions prior to 2016 are superseded by their current version found inside the Overhead Construction Standard Manual.

TABLE OF CONTENTS

© 1998 - 2016 San Diego Gas & Electric Company. All rights reserved. Removal of this copyright notice without permission is not permitted under law.

REV	CHANGE	BY	DSGN	APPV	DATE	REV	CHANGE	BY	DSGN	APPV	DATE
C						F					
B						E					
A	ORIGINAL ISSUE	JS	IL	MDJ	7/13/2016	D					

X Indicates Latest Revision | Completely Revised | New Page | Information Removed

SHEET 1 OF 1

SDG&E ELECTRIC OVERHEAD STANDARD

GALVANIZED DEAD END STRAIN CLAMPS FOR COPPER CONDUCTORS

FMO OH 744

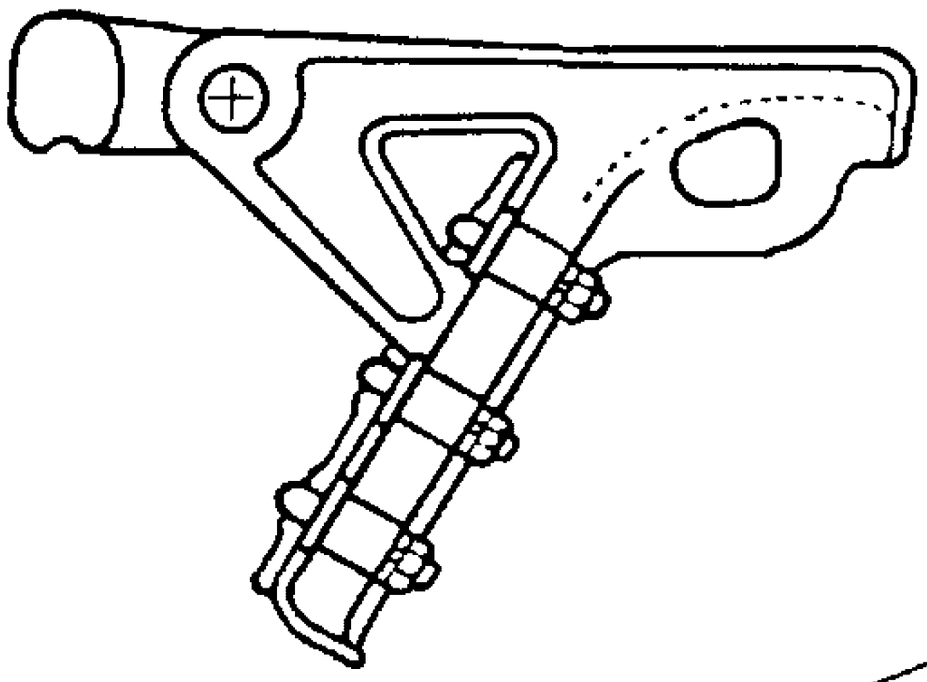

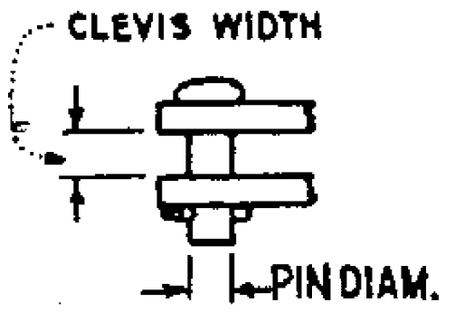

THIS PAGE FOR FIELD MAINTENANCE ONLY

RECOMMENDED U-BOLT NUT TORQUE

1/2" = 50 FT. LBS.

9/16"= 67 FT. LBS.

5/8" = 83 FT. LBS.

NOTES:

A. REFER TO PAGE 777 FOR CLAMP CONNECTORS.

B. HAND TIGHTEN U BOLT NUTS AND THEN ALTERNATELY APPLY WRENCH UNTIL DESIRED TORQUE IS ACHIEVED.

(C) NO LONGER PURCHASED, BUT WILL BE SALVAGED.

(D) ITEM 231488 IS BRONZE

COPPER WIRE SIZE AND DIAMETER (INCHES)									CLAMP RANGE		CONNECTION	CLEVIS WIDTH	PIN DIAM.	STOCK NO OR CONST STD
4 .254	2 .320	1/0 .368	4/0 .527	250MCM .574	400MCM .726	500MCM .813	750MCM .997	1000MCM 1.151	MIN.	MAX.				
X	X	X	X	-	-	-	-	-	.20	.55	SOCKET	11/16"	5/8"	231264
-	-	X	X	X	-	-	-	-	.30	.68	SOCKET	13/16"	5/8"	231328
-	-	-	X	X	X	-	-	-	.48	.84	SOCKET	7/8"	5/8"	231392 (C)
-	-	-	X	X	X	X	-	-	.50	.96	SOCKET	1"	5/8"	231456 (C)
-	-	-	-	-	X	X	X	X	.71	1.30	SOCKET	1 7/16"	3/4"	231488 (D)
-	X	X	X	X	-	-	-	-	.30	.68	NONE	13/16"	5/8"	231136
	-	-	X	X	X	X	-	-	.48	.84	NONE	7/8"	5/8"	231200 (C)

DATE 1-1-88

APPD RBL/DRH

SDG&E ELECTRIC STANDARDS

GALVANIZED DEAD END STRAIN CLAMPS FOR COPPER CONDUCTORS

799.401

SUPERSEDES 744 (8-31-81)

TABLE OF CONTENTS

FIELD MAINTENANCE ONLY

REVISION HISTORY:

7/13/2016: All versions prior to 2016 are superseded by their current version found inside the Overhead Construction Standard Manual.

TABLE OF CONTENTS

© 1998 - 2016 San Diego Gas & Electric Company. All rights reserved. Removal of this copyright notice without permission is not permitted under law.

REV	CHANGE	BY	DSGN	APPV	DATE	REV	CHANGE	BY	DSGN	APPV	DATE
C						F					
B						E					
A	ORIGINAL ISSUE	JS	IL	MDJ	7/13/2016	D					

X Indicates Latest Revision | Completely Revised | New Page | Information Removed

SHEET 1 OF 1

SDG&E ELECTRIC OVERHEAD STANDARD

PORCELAIN SUSPENSION INSULATOR BONDING

FMO OH 756

TABLE OF CONTENTS

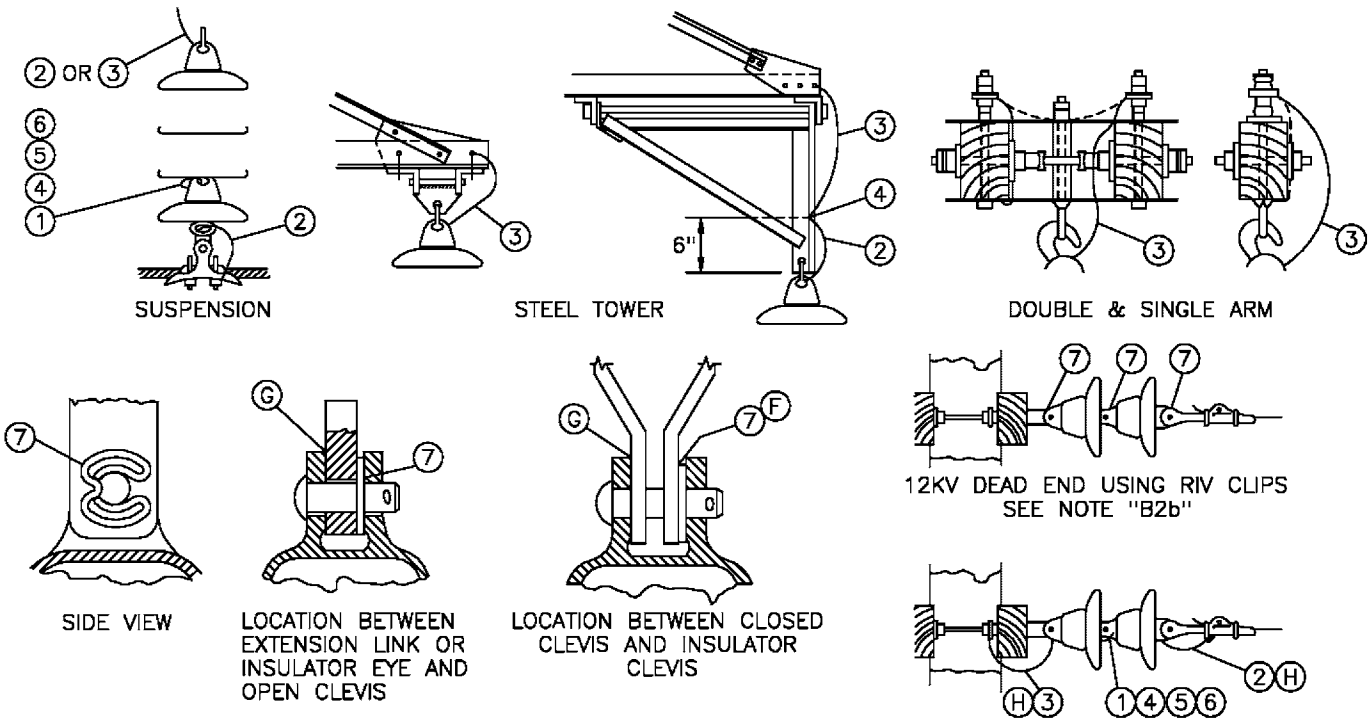

SUSPENSION

STEEL TOWER

DOUBLE & SINGLE ARM

SIDE VIEW

LOCATION BETWEEN EXTENSION LINK OR INSULATOR EYE AND OPEN CLEVIS

LOCATION BETWEEN CLOSED CLEVIS AND INSULATOR CLEVIS

12KV DEAD END USING RIV CLIPS SEE NOTE "B2b"

RIV CLIP INFORMATION – SEE NOTE "B2b"

12KV DEAD END USING BOND WIRES SEE NOTE "B1 AND B2a"

NOTES:

A. USE BONDED INSULATORS ON 138 AND 69KV WHERE: 1) MAXIMUM GUYING TENSION PER CONDUCTOR IS BELOW 1000 POUNDS, OR 2) THROUGH RESIDENTIAL, COMMERCIAL, AND INDUSTRIAL AREAS. ALSO, WHERE FUTURE DEVELOPMENT OF SIMILAR AREAS ADJACENT TO TRANSMISSION LINES ARE ANTICIPATED.

(B) USE THE FOLLOWING TO DETERMINE WHEN TO USE BONDED OR UNBONDED INSULATORS, AND WHEN RIV CLIPS ARE TO BE ADDED TO UNBONDED INSULATORS ON 12KV AND 12.47KV SYSTEMS IN CONTAMINATION DISTRICTS DESCRIBED ON PAGE 287.

1) SLACK SPANS (SPANS INSTALLED AT MORE THAN NORMAL SAG): IN ALL CONTAMINATION DISTRICTS: USE BONDED INSULATORS.

2) FULL TENSION INSTALLATIONS WHERE MAXIMUM GUYING TENSION PER CONDUCTOR IS 1000 POUNDS OR LESS:
   a) CONTAMINATION DISTRICT 1, USE BONDED INSULATORS.
   b) CONTAMINATION DISTRICTS 2 AND 3, USE UNBONDED INSULATORS WITH RIV CLIPS

3) FULL TENSION INSTALLATIONS WHERE MAXIMUM GUYING TENSION PER CONDUCTOR IS OVER 1000 POUNDS: ALL CONTAMINATION DISTRICTS: USE UNBONDED INSULATORS.

C. INSULATORS BONDED PER SDG&E SPECIFICATION 138 INCLUDE ITEMS 1 THROUGH 6 LISTED BELOW.

D. SEE STANDARDS PAGE 750.4 FOR SUSPENSION INSULATOR INFORMATION.

(F) INSTALL RIV CLIP BETWEEN CLEVIS AND INSULATOR CAP AS SHOWN.

(G) ADD SECOND RIV CLIP IF ONLY ONE CLIP DOES NOT MAKE TIGHT CONNECTION BETWEEN HARDWARE. NEVER USE MORE THAN 2 RIV CLIPS AT ONE CONNECTION, OR, ON ONE PIN.

(H) ATTACH BOND WIRES LEAVING SHORT LOOPS AS SHOWN. CUT OFF EXCESS BOND WIRE.

FOR FIELD MAINTENANCE ONLY

BILL OF MATERIAL:

ITEM	DESCRIPTION	QUANTITY	STOCK NO. OR CONSTR STDS	ASSEMBLY UNITS
1	WIRE ROPE, 3" STAINLESS STEEL, MACWYTE, 1/16" OD, 7x7 PREFORMED, AIFI TYPE 304	AS REQ'D	606720	12BOND
2	WIRE ROPE, 12" STAINLESS STEEL, MACWYTE, 1/16" OD, 7x7 PREFORMED, AIFI TYPE 304	AS REQ'D		
3	WIRE ROPE, 24" STAINLESS STEEL, MACWYTE, 1/16" OD, 7x7 PREFORMED, AIFI TYPE 304	AS REQ'D		
4	SCREW, 8–32, STAINLESS STEEL, PHILLIPS HEAD	AS REQ'D	622464	–
5	TERMINAL, AMP 322334, #8 STUD, STAINLESS STEEL OR NICKEL	AS REQ'D	732064	–
6	LOCKWASHER, EXTERNAL TOOTH, #8 STUD, STAINLESS STEEL	AS REQ'D	796352	–
7	CLIP, INSULATOR NON STATIC (RIV)	AS REQ'D	237648	RIVCLP

DATE 1–1–94 APPD PEA / RDG	SDG&E ELECTRIC STANDARDS PORCELAIN SUSPENSION INSULATOR BONDING	799.501 SUPERSEDES 756 (1–1–98)

FIELD MAINTENANCE ONLY

REVISION HISTORY:

7/13/2016: All versions prior to 2016 are superseded by their current version found inside the Overhead Construction Standard Manual.

TABLE OF CONTENTS

© 1998 - 2016 San Diego Gas & Electric Company. All rights reserved. Removal of this copyright notice without permission is not permitted under law.

REV	CHANGE	BY	DSGN	APPV	DATE	REV	CHANGE	BY	DSGN	APPV	DATE
C						F					
B						E					
A	ORIGINAL ISSUE	JS	IL	MDJ	7/13/2016	D					

X Indicates Latest Revision | Completely Revised | New Page | Information Removed

SHEET 1 OF 1

SDG&E ELECTRIC OVERHEAD STANDARD

ANGLE SUSPENSION CLAMPS

FMO OH 776

SCOPE: THIS PAGE SHOWS THE DIMENSIONS AND ULTIMATE VERTICAL LOADING STRENGTH OF THE ANGLE SUSPENSION CLAMP. THE CLAMP IS TO BE USED IN CONJUNCTION WITH THE CLEVIS OR SOCKET EYE CONNECTORS FOR SUPPORTING CONDUCTORS ON VERTICAL CONSTRUCTION. MAXIMUM ANGLE FOR CONSTRUCTION USING THIS CLAMP IS 30° .

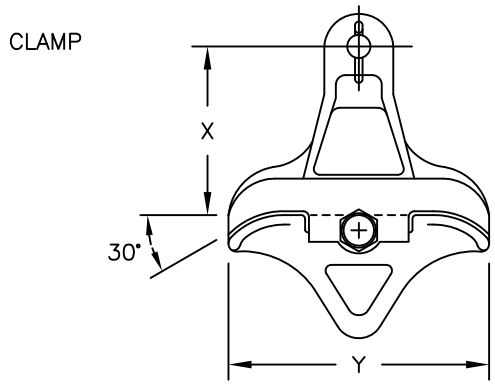

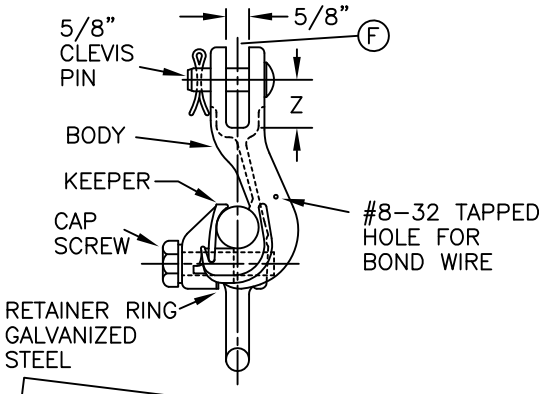

FOR FIELD MAINTENANCE ONLY

INSTALLATION:

(A) LINE GUARDS ARE TO BE USED WITH CLAMPS.

B. BONDING IS REQUIRED IN CONTAMINATION DISTRICT 1. (SEE STANDARD 287)

REFERENCE:

C. TABLE 1 IS TO BE USED TO DETERMINE PHYSICAL DIMENSIONS AND STRENGTHS OF SUSPENSION CLAMPS.

D. TABLE 2 SHOWS THE PROPER SIZING OF SUSPENSION CLAMPS FOR CONDUCTORS.

(F) SEE STANDARD 777 FOR USE OF CLEVIS AND SOCKET EYES.

TABLE 1

MANUFACTURER		CLAMP RANGE DIA. (INCHES)		DIMENSIONS (INCHES)			ULTIMATE STRENGTH VERT.LOAD	MATERIAL	STOCK NUMBER
CAT.NO.	NAME	MIN.	MAX.	X	Y	Z			
1301	LINDSEY	.160	.430	3–7/16	5–1/2	1–1/2	18,000	DUCTILE IRON	226662
1305	LINDSEY	.300	.650	4–1/4	6–1/2	1–1/2	18,000	DUCTILE IRON	226664
1308	LINDSEY	.50	.70	4–1/4	7	1–1/4	12,000	ALUM.	232004
1312	LINDSEY	.68	1.00	4–1/4	6–7/8	1	12,000	ALUM.	232008
1316	LINDSEY	1.00	1.313	5–3/8	6–7/8	1–1/4	12,000	ALUM.	232012
1320	LINDSEY	1.24	1.500	5–5/8	7	1–1/4	15,000	ALUM.	226660

TABLE 2

COPPER												COPPERWELD						STOCK NUMBER	ASSEMBLY UNITS
6	4	3 SOL.	2	1	1/0	2/0	3/0	4/0	250 KCM			8A	6	4					
X	X	X	X	X	X	X						X	X	X				226662	SCACS
							X	X	X									226664	SCACL

AWAC (A)			ACSR (A)									5005 (A)						STOCK NUMBER	ASSEMBLY UNITS
2	1/0		4	2	1/0	3/0	4/0	336 18/1	336 26/7	397	636	4	2	1/0	3/0	394.5			
X	X		X	X	X							X	X	X				232004	SC4 SC1/0
						X	X	X							X			232008	–
									X	X						X		232012	SC397
											X							226660	SC636

© 1998 - 2010 San Diego Gas & Electric Company. All rights reserved. Removal of this copyright notice without permission is not permitted under law.

Indicates Latest Revision | Completely Revised | New Page | Information Removed

	SDG&E ELECTRIC STANDARDS	REVISION
776	ANGLE SUSPENSION CLAMPS	DATE 1–1–94 APPD PA 1/99

TABLE OF CONTENTS

OH783 FIELD MAINTENANCE ONLY

ALL VERSIONS LISTED IN FMO ARE SUPERSEDED BY THEIR CURRENT VERSION FOUND INSIDE THE OVERHEAD CONSTRUCTION STANDARD MANUAL.

REVISION HISTORY:

04/06/2023: MOVED TO FMO

TABLE OF CONTENTS

© 1998 - 2023 San Diego Gas & Electric Company. All rights reserved. Removal of this copyright notice without permission is not permitted under law.

REV	CHANGE	DR	BY	DSN	APV	DATE	REV	CHANGE	DR	BY	DSN	APV	DATE
C							F						
B							E						
A	ORIGINAL ISSUE	EDM	MRF	MRF	KRG	04/06/2023	D						

X Indicates Latest Revision | Completely Revised | New Page | Information Removed

SDG&E ELECTRIC OVERHEAD FIELD MAINTENANCE ONLY STANDARDS

WEDGE CONNECTORS
GELPACT COVERS

SCOPE: THIS STANDARD SHOWS THE GELPACT APPLICATION TABLE.

ATTENTION:

* ALL WEDGE TAPS IN CONTAMINATION DISTRICT 1 WILL HAVE A GELPACT INSTALLED.

** ALL WEDGE TAPS WHERE AN ALUMINUM AND COPPER CONDUCTOR ARE CONNECTED WITHIN A WEDGE WILL HAVE A GELPACT.

*** A GELPACT WILL BE INSTALLED WHEN CONDUCTOR AND WEDGE METALS ARE MIXED.

a. EXAMPLE: COPPER CONDUCTOR IN AN ALUMINUM OR BI-METAL WEDGE.

b. EXAMPLE: ALUMINUM CONDUCTOR IN A BRONZE OR COPPER WEDGE.

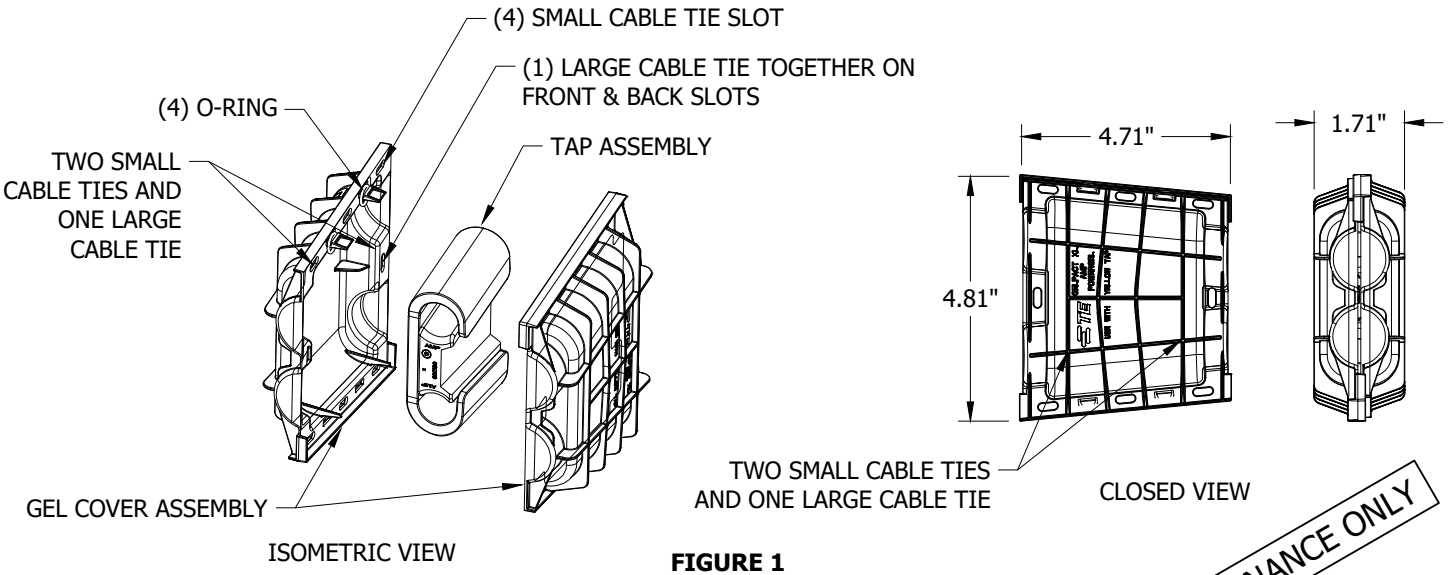

FIGURE 1
GELPACT

FIELD MAINTENANCE ONLY

INSTALLATION:

A. GELPACT INSTALLATION:

1. REMOVE O-RINGS BEFORE ASSEMBLING COVERS AT SNAP FIT.
2. SMALL CABLE TIES MUST BE INDIVIDUALLY ASSEMBLED ON TO EACH INDICATED SLOT OF ASSEMBLED COVERS.
3. LARGE CABLE TIE MUST BE WRAPPED AND TIGHTENED AROUND THE ASSEMBLED COVERS THROUGH FRONT AND BACK SLOTS AS INDICATED.
4. RUBBER GLOVE INSTALLATION ONLY. NOT LIVE LINE TOOL APPLICABLE.

TABLE 1

GELPACT APPLICATION TABLE								
WIRE TYPE		CLAMP RANGE (IN)		CLAMP DATA			STOCK NUMBER	DESIGN UNITS
		MIN.	MAX.	CLEVIS WIDTH (IN)	PIN DIA. (IN)	TORQUE (FT-LBS)		
1033.5 MCM	45/7	.20	.57	3/4	5/8	40	S286934 (X)	--
636 MCM	24/7						S286936 (X)	
397.5 MCM	26/7	.46	.94	1 1/16			S286940 (X)	
336.4 MCM	26/7							
336.4 MCM	18/1							
4/0	6/1	.71	1.318	1 7/16	3/4	60	S286942 (X)	

© 1998 - 2023 San Diego Gas & Electric Company. All rights reserved. Removal of this copyright notice without permission is not permitted under law.

REV	CHANGE	DR	BY	DSN	APV	DATE	REV	CHANGE	DR	BY	DSN	APV	DATE
C	SCOPE UPDATE	-	GW	JS	CZH	02/21/2019	F	MOVED TO FMO	EDM	MRF	MRF	KRG	04/06/2023
B	TABLE UPDATE	-	GW	JS	MDH	09/28/2017	E	TABLE UPDATE	EDM	JIK	JES	CZH	02/08/2021
A	COMPLETELY REVISED	-	GW	JS	MDJ	05/17/2017	D	REFERENCE UPDATE	-	MRF	JES	CZH	02/27/2020

TABLE OF CONTENTS

TABLE 1 (CONT'D)

GELPACT APPLICATION TABLE								
WIRE TYPE		CLAMP RANGE (IN)		CLAMP DATA			STOCK NUMBER	DESIGN UNITS
		MIN.	MAX.	CLEVIS WIDTH (IN)	PIN DIA. (IN)	TORQUE (FT-LBS)		
3/0	6/1	.71	1.318	1 7/16	3/4	60	S286942 (X)	--
1/0	6/1	.30	.75	15/16	5/8	40	S286938 (X)	
		.71	1.318	1 7/16	3/4	60	S286942 (X)	
#6	SOL	.30	.75	15/16	5/8	40	S286938 (X)	
		.71	1.318	1 7/16	3/4	60	S286942 (X)	
#2	3/4	.30	.75	15/16	5/8	40	S286938 (X)	
		.71	1.318	1 7/16	3/4	60	S286942 (X)	
#2	5/2	.30	.75	15/16	5/8	40	S286938 (X)	
		.71	1.318	1 7/16	3/4	60	S286942 (X)	

BILL OF MATERIALS: NONE

NOTES:

I. INSTALLATION OF GELPACTS REQUIRED FOR ALL NEW CONSTRUCTION OR REBUILDS ADHERING TO THE ATTENTION SECTION.

II. GELPACTS ARE NOT HOTSTICK INSTALLABLE.

III. IF WEDGE TAP IS NOT BUCKET TRUCK ACCESSIBLE, GELPACT NOT REQUIRED.

(X) THIS ITEM IS EXEMPT.

REFERENCE: NONE

TABLE OF CONTENTS

FIELD MAINTENANCE ONLY

© 1998 - 2023 San Diego Gas & Electric Company. All rights reserved. Removal of this copyright notice without permission is not permitted under law.

REV	CHANGE	DR	BY	DSN	APV	DATE	REV	CHANGE	DR	BY	DSN	APV	DATE
C	SCOPE UPDATE	-	GW	JS	CZH	02/21/2019	F	MOVED TO FMO	EDM	MRF	MRF	KRG	04/06/2023
B	TABLE UPDATE	-	GW	JS	MDH	09/28/2017	E	TABLE UPDATE	EDM	JIK	JES	CZH	02/08/2021
A	COMPLETELY REVISED	-	GW	JS	MDJ	05/17/2017	D	REFERENCE UPDATE	-	MRF	JES	CZH	02/27/2020

FIELD MAINTENANCE ONLY

REVISION HISTORY:

7/13/2016: All versions prior to 2016 are superseded by their current version found inside the Overhead Construction Standard Manual.

TABLE OF CONTENTS

© 1998 - 2016 San Diego Gas & Electric Company. All rights reserved. Removal of this copyright notice without permission is not permitted under law.

REV	CHANGE	BY	DSGN	APPV	DATE	REV	CHANGE	BY	DSGN	APPV	DATE
C						F					
B						E					
A	ORIGINAL ISSUE	JS	IL	MDJ	7/13/2016	D					

X Indicates Latest Revision | Completely Revised | New Page | Information Removed

SHEET 1 OF 1

SDG&E ELECTRIC OVERHEAD STANDARD

ALUMINUM PARALLEL GROOVE CLAMPS

FMO OH 785

NOTES: (A) TO CHOOSE THE PROPER GROOVE CLAMP, LOCATE THE TWO WIRE SIZES ON THE CHART, DRAW A HORIZONTAL LINE FROM THE LARGER CONDUCTOR SIZE AND A VERTICAL LINE FROM THE SMALLER SO THAT THEY INTERSECT. THE AREA CONTAINING THE INTERSECTION INDICATES THE CORRECT STOCK NUMBER.

EXAMPLE: FOR CONDUCTOR SIZES 3/0 ACSR AND #2 ACSR, THE CORRECT GROOVE CLAMP STOCK NUMBER IS 277968.

B. THE ADJACENT TABLE CAN BE USED TO DETERMINE THE SPECIFIC MANUFACTURER'S CATALOG NUMBER FOUND UNDER A STOCK NUMBER.

C. BE SURE TO CLEAN CONDUCTOR WHICH WILL BE UNDER CLAMP, CLEAN CONDUCTOR GROOVES OF CLAMP IF NECESSARY, AND FILL THE GROOVES WITH INHIBITOR (247200) BEFORE INSTALLING THE CLAMP.

D. FOR USE WHEN MAKING AL. TO AL. AND AL. TO CU. PERMANENT CONNECTIONS AND WHERE CONNECTIONS MAY BE OPENED OCCASIONALLY FOR OPERATING CONVENIENCE.

F. WHEN MAKING AL. TO CU. CONNECTIONS, LOCATE THE CU. AT THE SAME LEVEL OR BELOW THE AL. CONDUCTOR.

CONDUCTOR DIA. IN.	AWG OR KCM	DESCRIPTION
.162	6	SOLID
.184	6	7 STR.
.198	6	ACSR 6/1
.198	6	5005 7W
.199	8A	CUWLD 3 STR.
.202	6	3 STR.
.204	4	SOLID
.229	3	SOLID
.230	6A	CUWLD 3 STR.
.232	4	7 STR.
.250	4	ACSR 6/1
.250	4	5005 7W
.254	4	3 STR.
.258	2	SOLID
.276	6D	CUWLD 3 STR.
.289	1	SOLID
.290	4A	CUWLD 3 STR.
.292	2	7 STR.
.316	2	ACSR 6/1
.316	2	5005 7W
.320	2	3 STR.
.324	1/0	SOLID
.325	2	ACSR 7/1
.328	4N	CUWLD 7 STR.
.330	2	AWAC 5/2
.338	1/0	7 STR. COMP.
.348	4D	CUWLD 3 STR.
.360	1	3 STR.
.368	1/0	7 STR.
.373	1/0	19 STR.
.386	2	AWAC 3/4
.398	1/0	ACSR 6/1
.398	1/0	5005 7W
.409	3/0	SOLID
.414	2/0	7 STR.
.426	3/0	7 STR. COMP.
.447	1/0	AWAC 4/3
.460	4/0	SOLID
.464	3/0	7 STR.
.470	3/0	19 STR.
.502	3/0	ACSR 6/1
.502	3/0	5005 7W
.522	4/0	7 STR.
.528	4/0	19 STR.
.533	4/0	37 STR.
.563	4/0	ACSR 6/1
.575	250	19-37 STR.
.629	300	19-37 STR.
.666	336	19 STR.
.680	350	19-37 STR.
.684	336	ACSR 18/1
.721	336	ACSR 26/7
.721	394	5005 19W
.727	400	19-37 STR.
.743	397	ACSR 18/1
.783	397	ACSR 26/7
.811	500	19 STR.
.977	636	ACSR 24/7
.998	750	37-61 STR.
1.152	1000	61-91 STR.

EXAMPLE (A)

227936

ASSEMBLY UNITS
PG6C
PG4C
PG2A
PG2C
PG1/0A
PG1/0C

227968

ASSEMBLY UNITS
PG3/0A
PG4/0C

NO CONNECTOR AVAILABLE

228000

ASSEMBLY UNITS
PG336
PG394
PG400

228032

ASSEMBLY UNITS
PG500–

228064 (G)

ASSEMBLY UNITS STK No. 228064
PG397
PG500
PG636
PG750
PG1000

STOCK NUMBER	BOLTS NO.	BOLTS SIZE IN.	BOLTS TORQUE LB.-FT	ALCOA CATALOG NUMBER
227936	1	3/8	13	396.6
227968	2	1/2	25	482.1
228000	3	1/2	25	482.2
228032	2	5/8	40	483.2
228064	3	5/8	40	483.3

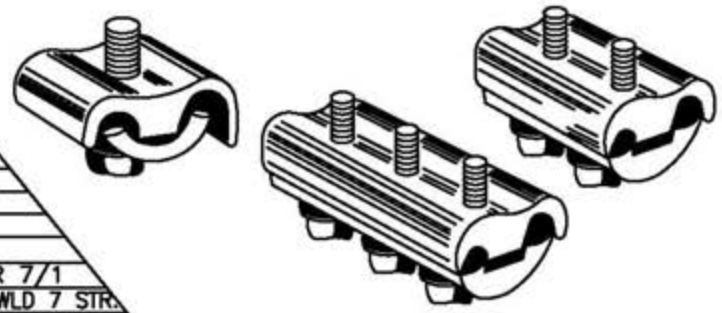

TABLE OF CONTENTS

© 1998 - 2005 San Diego Gas & Electric Company. All rights reserved. Removal of this copyright notice without permission is not permitted under law.

Indicates Latest Revision | Completely Revised | New Page | Information Removed

REVISION
DATE 1-1-94
APPD PA 1/20/94

SDG&E ELECTRIC STANDARDS

ALUMINUM PARALLEL GROOVE CLAMPS

799.801
SUPERSEDES
785 (1-20-06)

OH789 FIELD MAINTENANCE ONLY

ALL VERSIONS LISTED IN FMO ARE SUPERSEDED BY THEIR CURRENT VERSION FOUND INSIDE THE OVERHEAD AND UNDERGROUND CONSTRUCTION STANDARD MANUAL.

REVISION HISTORY:

11/09/2022: MOVED TO FMO

TABLE OF CONTENTS

© 1998 - 2022 San Diego Gas & Electric Company. All rights reserved. Removal of this copyright notice without permission is not permitted under law.

REV	CHANGE	DR	BY	DSN	APV	DATE	REV	CHANGE	DR	BY	DSN	APV	DATE
D							G						
C							F						
B	ORIGINAL ISSUE	EDM	MRF	GLW	KRG	11/09/2022	E						

	Indicates Latest Revision		Completely Revised	X New Page		Information Removed

SDG&E ELECTRIC OVERHEAD FIELD MAINTENANCE ONLY STANDARDS

VIBRATION DAMPERS FOR
BARE COPPER CONDUCTOR
SPIRAL

FMO
OH789

TABLE 1 (SEE FIGURES 4 AND 5 IN OH789)

SPIRAL DAMPERS FOR COPPER												
COPPER CONDUCTOR						DAMPER WEIGHT (LBS)	SPAN LENGTH (FT)	QUANTITY OF DAMPERS REQUIRED PER SPAN			STOCK NUMBER	DESIGN UNITS
5005		ACSR/AW		AWAC				STANDARD APPLICATION	STANDARD APPLICATION WITH FINAL TENSIONS ≥ 20% OF RBS/UTS OR CROSSING SPAN APPLICATION (A)(I)	CROSSING SPAN APPLICATION WITH FINAL TENSIONS ≥ 20% OF RBS/UTS (A)		
SIZE	STRAND	SIZE	STRAND	SIZE	STRAND							
--	--	--	--	2	3	0.62	101-800	2	4	6	S300452 (X)	DMP2
							800-1,600	4	6	10		
--	--	--	--	1/0	7	0.68	101-800	2	4	6	S300454	DMP2A
							800-1,600	4	6	10		
--	--	--	--	2/0	7		101-800	2	4	6		
							800-1,600	4	6	10		
--	--	--	--	4/0	7	0.72	101-800	2	4	6	S300456	DMP3/0
							800-1,600	4	6	10		

TABLE OF CONTENTS

FIELD MAINTENANCE ONLY

© 1998 - 2022 San Diego Gas & Electric Company. All rights reserved. Removal of this copyright notice without permission is not permitted under law.

REV	CHANGE	DR	BY	DSN	APV	DATE	REV	CHANGE	DR	BY	DSN	APV	DATE
D	DRAWING UPDATE	EDM	EJA	JES	CZH	08/07/2020	G	MOVED COPPER TABLE TO FMO	EDM	MRF	GLW	KRG	11/09/2022
C	DRAWING UPDATE	PEI	-	-	-	03/18/2019	F	TABLE UPDATE	EDM	JIK	JES	CZH	02/08/2021
B	REVISION	-	-	-	PIA/RDJ	01/01/1994	E	EDITORIAL CHANGES	GLC	JAC	GLW	CZH	11/09/2020

PAGES	SUBJECT
801	TABLE OF CONTENTS
815	MAXIMUM SAFE SPAN LENGTHS IN FEET, PRIMARY AND SECONDARY CROSSARMS, LIGHT LOADING
816	MAXIMUM SAFE SPAN LENGTHS IN FEET, PRIMARY AND SECONDARY CROSSARMS, MEDIUM LOADING
817	MAXIMUM SAFE SPAN LENGTHS IN FEET, 12KV CROSSARMS, LIGHT LOADING
818	MAXIMUM SAFE SPAN LENGTHS IN FEET, 12KV CROSSARMS, LIGHT LOADING
819	HORIZONTAL CONDUCTOR SPACING GENERAL INFORMATION
820	SLACK SPAN CONSTRUCTION SINGLE/DOUBLE CROSSARMS

MAIN TABLE OF CONTENTS

© 1998 - 2018 San Diego Gas & Electric Company. All rights reserved. Removal of this copyright notice without permission is not permitted under law.

REV	CHANGE	BY	DSGN	APPV	DATE	REV	CHANGE	BY	DSGN	APPV	DATE
C						F					
B	ADDED 815-820	JS	JS	CZH	9/4/2018	E					
A	ORIGINAL ISSUE	JS	JS	MDJ	9/29/2016	D					

X Indicates Latest Revision | Completely Revised | New Page | Information Removed

SDG&E ELECTRIC OVERHEAD CONSTRUCTION STANDARD

SHEET 1 OF 1

SAG FMO
TABLE OF CONTENTS

FMO OH801

FIELD MAINTENANCE ONLY

9/4/2018: All versions prior to 2018 are superseded by their current version found inside the Overhead Construction Standard Manual.

TABLE OF CONTENTS

© 1998 - 2018 San Diego Gas & Electric Company. All rights reserved. Removal of this copyright notice without permission is not permitted under law.

REV	CHANGE	BY	DSGN	APPV	DATE	REV	CHANGE	BY	DSGN	APPV	DATE
C						F					
B						E					
A	ORIGINAL ISSUE	JS	JS	CZH	9/4/2018	D					

X Indicates Latest Revision | Completely Revised | New Page | Information Removed

SDG&E ELECTRIC OVERHEAD CONSTRUCTION STANDARD

SHEET 1 OF 1

TABLE OF CONTENTS

FMO OH801

SAG AND TENSION TABLES

CLICK ON BUTTON

Conductor Type	Sag and Tension Tables	Design Stringing Tables	Max.Hor. Tension, lbs	Ruling Span, ft	G.O.95 Light	G.O.95 Heavy	G.O.95 Extra Heavy	NESC 250C Extreme Wind
#2 ACSR Sparrow	●	●	850 lbs.	100 ft. to 500 ft.	✓			✓
1/0 ACSR Raven	●	●	1240 lbs.	100 ft. to 500 ft.	✓			✓
3/0 ACSR Pigeon	●	●	1850 lbs.	100 ft. to 500 ft.	✓			✓
4/0 ACSR Penguin	●	●	1000 lbs. to 2400 lbs.	100 ft. to 500 ft.	✓			✓
#2 AWAC 5/2	●	●	1600 lbs.	100 ft. to 500 ft.		✓	✓	✓
#2 AWAC ¾	●	●	1000 lbs.to 3500 lbs.	100 ft. to 500 ft.		✓	✓	✓
336.4 ACSR	●	●	1000 lbs. to 3000 lbs.	100 ft. to 500 ft.	✓	✓	✓	✓
397 ACSR IBIS	●	●	1000 lbs. to 3000 lbs.	100 ft. to 500 ft.	✓	✓	✓	✓
636 ACSR Rook	●	●	1000 lbs. to 3000 lbs.	100 ft. to 500 ft.	✓	✓	✓	✓
1033 ACSR Ortolan	●	●	1000 lbs. to 3000 lbs.	100 ft. to 500 ft.	✓			✓

OBSOLETE

TABLE OF CONTENTS

PAGE	SUBJECT
801	TABLE OF CONTENTS
815	MAXIMUM SAFE SPAN LENGTHS IN FEET, PRIMARY AND SECONDARY CROSSARMS, LIGHT LOADING
816	MAXIMUM SAFE SPAN LENGTHS IN FEET, PRIMARY AND SECONDARY CROSSARMS, MEDIUM LOADING
817	MAXIMUM SAFE SPAN LENGTHS IN FEET, 12KV CROSSARMS, LIGHT LOADING
818	MAXIMUM SAFE SPAN LENGTHS IN FEET, 12KV CROSSARMS, MEDIUM LOADING
819	HORIZONTAL CONDUCTOR SPACING
820	SLACK SPAN CONSTRUCTION, SINGLE/DOUBLE CROSSARMS

© 1998 - 2014 San Diego Gas & Electric Company. All rights reserved. Removal of this copyright notice without permission is not permitted under law.

PAGE	SUBJECT
801	TABLE OF CONTENTS
805	SAG AND TENSION TABLES

TABLE OF CONTENTS

OBSOLETE

© 1998 - 2016 San Diego Gas & Electric Company. All rights reserved. Removal of this copyright notice without permission is not permitted under law.

REV	CHANGE	BY	DSGN	APPV	DATE	REV	CHANGE	BY	DSGN	APPV	DATE
C						F					
B	ADDED 805	GW	JS	MDJ	10/2/2017	E					
A	EDITORIAL CHANGES	GW	JS	MDJ	10/2/2017	D					

FIELD MAINTENANCE ONLY

9/4/2018: All versions prior to 2018 are superseded by their current version found inside the Overhead Construction Standard Manual.

TABLE OF CONTENTS

© 1998 - 2018 San Diego Gas & Electric Company. All rights reserved. Removal of this copyright notice without permission is not permitted under law.

REV	CHANGE	BY	DSGN	APPV	DATE	REV	CHANGE	BY	DSGN	APPV	DATE
C						F					
B						E					
A	ORIGINAL ISSUE	JS	JS	CZH	9/4/2018	D					

X Indicates Latest Revision | Completely Revised | New Page | Information Removed

SDG&E ELECTRIC OVERHEAD CONSTRUCTION STANDARD

SHEET 1 OF 1

MAXIMUM SAFE SPAN LENGTHS IN FEET,
PRIMARY AND SECONDARY CROSSARMS, LIGHT LOADING

FMO
OH815

PRIMARY AND SECONDARY CROSSARMS,
SINGLE AND DOUBLE MAXIMUM
SAFE SPAN LENGTHS IN FEET,
VERTICAL LOADING

AS LIMITED BY

SAG/PIN SPACING RATIOS 123
CROSSARM STRENGTH (123)

LIGHT LOADING

		WIRE TYPE	BARE STRANDED HARD DRAWN COPPER							COPPERWELD			D.B. WEATHERPROOF M.H.D. COPPER					
		WIRE SIZE	#6	#4	#2	#1	1/0	2/0	4/0	#6A	#4A	7/16 EHS 30%	#6	#4	#2	1/0	2/0	4/0
		WT WIRE LBS/1000FT	82.5	127.6	202.9	258.4	326.8	410.9	653.3	101.6	161.5	408.4	103.0	153.5	246.0	388.0	482.9	745.0
		K FACTOR	2.7	3.3	3.5	3.6	3.7	4.3	6.0	3.3	3.4	7.2	2.8	3.0	3.3	3.4	3.7	6.8
		SAG TABLE NO.	L-312	L-311	L-321	L-313	L-324	L-326	L-356	L-445	L-444	L-449	L-316	L-317	L-320	L-323	L-478	L-477
6 PIN 8 FT PG 111 IT. 2	PIN SPACING 88"	SINGLE ARM	680	790	850	890	(806)	(638)	(402)	1040	1100	(642)	540	620	680	(677)	(544)	(353)
		DOUBLE ARM					940	(1276)	(804)			(1284)				720	780	(706)
	29" 30" 29"	SINGLE ARM	360	440	450	490	500	(475)	(301)	590	620	(477)	300	340	370	380	(405)	(262)
		DOUBLE ARM						540	(596)			(954)					430	(524)
	PIN SPACING 14-1/2" 30"	SINGLE ARM	250	290	300	310	330	(314)	(197)	420	430	(316)	220	230	250	270	(268)	(173)
		DOUBLE ARM						350	(394)			(632)					280	(346)
6 PIN 10 FT PG 112 IT. 1	112"	SINGLE ARM	760	890	960	1010	1080	(1064)	(669)	1160	1240	(1070)	610	700	770	820	880	(587)
		DOUBLE ARM						1160	(1338)			(2140)						(1174)
	35" 42" 35"	SINGLE ARM	400	490	510	540	570	610	(485)	650	680	(776)	340	380	420	430	480	(426)
		DOUBLE ARM							590			1020						550
	PIN SPACING 17-1/2" 42"	SINGLE ARM	280	330	340	360	370	400	(323)	460	470	(517)	230	260	280	290	320	(283)
		DOUBLE ARM							400			720						370
8 PIN 10 FT PG 111 IT. 3	112"	SINGLE ARM	760	890	970	1010	1080	(1064)	(669)	1160	1210	(1070)	610	700	770	820	880	(587)
		DOUBLE ARM						1160	(1338)			(2140)						(1174)
	41" 30" 41"	SINGLE ARM	370	440	460	490	520	560	(527)	600	620	(842)	310	350	380	400	440	(462)
		DOUBLE ARM							550			950						500
	PIN SPACING 13-5/8" 30"	SINGLE ARM	230	280	290	300	320	350	(262)	400	420	(419)	200	230	240	250	270	(230)
		DOUBLE ARM							350			(838)						320
8 PIN 13 FT PG 112 IT. 2	147"	SINGLE ARM	870	1030	1110	(1103)	(875)	(694)	(436)	1330	1420	(698)	700	800	890	(735)	(591)	(383)
		DOUBLE ARM				1170	1240	(1388)	(872)			(1396)				950	(1182)	(766)
	52-1/2" 42" 52-1/2"	SINGLE ARM	450	540	560	600	630	(538)	(338)	710	750	(541)	370	420	460	490	(459)	(297)
		DOUBLE ARM						670	(676)			(1082)					530	(594)
	PIN SPACING 17-1/2" 42"	SINGLE ARM	280	330	340	360	(338)	(268)	(168)	460	470	(269)	330	260	280	(284)	(228)	(148)
		DOUBLE ARM					370	(536)	(336)			290				290	320	(296)
10 PIN 12 FT PG 111 IT. 4	136"	SINGLE ARM	840	1000	1060	1130	(991)	(789)	(496)	1280	1370	(793)	680	770	850	(835)	(672)	(435)
		DOUBLE ARM					1190	(1578)	(992)			(1586)				910	960	(870)
	PIN SPACING 26-1/2" 30"	SINGLE ARM	350	410	430	460	480	(428)	(269)	560	590	(431)	290	330	350	380	(365)	(236)
		DOUBLE ARM						510	(538)			(862)					400	(472)
	PIN SPACING 13-1/4" 30"	SINGLE ARM	230	280	280	300	320	(256)	(161)	400	410	(257)	200	220	240	250	(218)	(141)
		DOUBLE ARM						340	(322)			(514)					260	(282)

OBSOLETE

TABLE OF CONTENTS

© 1998 - 2016 San Diego Gas & Electric Company. All rights reserved. Removal of this copyright notice without permission is not permitted under law.

REV	CHANGE	BY	DSGN	APPV	DATE	REV	CHANGE	BY	DSGN	APPV	DATE
C						F					
B						E					
A	ORIGINAL ISSUE	PEI				D					

[X] Indicates Latest Revision	[ ] Completely Revised	[ ] New Page	[ ] Information Removed		

SDG&E ELECTRIC STANDARDS

SHEET 1 OF 1

MAXIMUM SAFE SPAN LENGTHS IN FEET,
PRIMARY AND SECONDARY CROSSARMS, LIGHT LOADING

815

FIELD MAINTENANCE ONLY

9/4/2018: All versions prior to 2018 are superseded by their current version found inside the Overhead Construction Standard Manual.

TABLE OF CONTENTS

© 1998 - 2018 San Diego Gas & Electric Company. All rights reserved. Removal of this copyright notice without permission is not permitted under law.

REV	CHANGE	BY	DSGN	APPV	DATE	REV	CHANGE	BY	DSGN	APPV	DATE
C						F					
B						E					
A	ORIGINAL ISSUE	JS	JS	CZH	9/4/2018	D					

X Indicates Latest Revision | Completely Revised | New Page | Information Removed

SDG&E ELECTRIC OVERHEAD CONSTRUCTION STANDARD

SHEET 1 OF 1

MAXIMUM SAFE SPAN LENGTHS IN FEET,
PRIMARY AND SECONDARY CROSSARMS, MEDIUM LOADING

FMO
OH816

PRIMARY AND SECONDARY CROSSARMS,

SINGLE AND DOUBLE MAXIMUM SAFE SPAN LENGTHS IN FEET VERTICAL LOADING

AS LIMITED BY

SAG/PIN SPACING RATIOS 132
CROSSARM STRENGTH (123)

MEDIUM LOADING

		WIRE TYPE	BARE STRANDED HARD DRAWN COPPER							COPPERWELD			D.B. WEATHER PROOF M.H.D. COPPER					
		WIRE SIZE	#6	#4	#2	#1	1/0	2/0	4/0	#6A	#4A	7/16 EHS 30%	#6	#4	#2	1/0	2/0	4/0
		WT WIRE LBS/1000FT	222.8	284.3	380.2	438.2	527.3	617.4	895.0	250.9	329.0	620.8	270.9	336.1	452.8	635.6	733.9	1035.8
		K FACTOR	2.5	2.7	3.0	3.3	3.4	3.4	4.1	2.6	2.9	–	2.4	2.6	2.9	3.2	4.0	4.1
		SAG TABLE NO.	L–331	L–333	L–337	L–335	L–341	L–343	L–363	L–435	L–443	L–452	L–332	L–334	L–339	L–342	L–345	L–382
6 PIN 8 FT PG 111 IT. 2	PIN SPACING 88"	SINGLE ARM	340	430	550	600	(506)	(424)	(293)	580	680	–	310	380	460	(412)	(357)	(253)
		DOUBLE ARM					650	610	(586)							500	(714)	(506)
	29" 30" 29"	SINGLE ARM	200	250	310	340	360	(316)	(218)	350	400	–	180	220	260	280	(266)	(188)
		DOUBLE ARM						340	(436)								310	(376)
	PIN SPACING 14–1/2" 30"	SINGLE ARM	140	170	220	230	250	(209)	(144)	260	300	–	130	150	180	190	(176)	(125)
		DOUBLE ARM						230	(288)								210	(250)
6 PIN 10 FT PG 112 IT. 1	112"	SINGLE ARM	380	480	620	680	740	690	(488)	640	760	–	350	430	520	570	(595)	(422)
		DOUBLE ARM							(976)								630	(844)
	35" 42" 35"	SINGLE ARM	220	270	340	370	400	370	(354)	380	440	–	200	240	280	310	340	(306)
		DOUBLE ARM							430									390
	PIN SPACING 17–1/2" 42"	SINGLE ARM	150	190	240	250	280	260	(236)	280	330	–	140	170	200	220	230	(204)
		DOUBLE ARM							300									270
8 PIN 10 FT PG 111 IT. 3	112"	SINGLE ARM	380	480	620	680	740	690	(488)	640	760	–	350	430	520	(688)	(595)	(422)
		DOUBLE ARM							(976)							570	630	(844)
	41" 30" 41"	SINGLE ARM	210	250	320	340	370	340	(384)	350	410	–	185	220	260	290	320	(332)
		DOUBLE ARM							400									370
	PIN SPACING 13–5/8" 30"	SINGLE ARM	130	170	210	220	240	220	(191)	250	300	–	120	150	170	190	200	(165)
		DOUBLE ARM							260									230
8 PIN 13 FT PG 112 IT. 2	147"	SINGLE ARM	430	550	710	770	(550)	(462)	(318)	730	(865)	–	400	490	590	(448)	(388)	(275)
		DOUBLE ARM					(825)	(924)	(636)		870					650	(776)	(550)
	52–1/2" 42" 52–1/2"	SINGLE ARM	250	300	380	410	(427)	(358)	(247)	410	480	–	220	270	310	350	(301)	(213)
		DOUBLE ARM					440	420	(494)								380	(426)
	PIN SPACING 17–1/2" 42"	SINGLE ARM	150	190	240	250	(212)	(178)	(123)	280	330	–	140	170	200	(173)	(150)	(106)
		DOUBLE ARM					280	260	(246)							220	(300)	(212)
10 PIN 12 FT PG 111 IT. 4	136"	SINGLE ARM	410	530	680	740	(625)	(525)	(362)	700	834	–	390	470	570	(510)	(441)	(313)
		DOUBLE ARM					810	760	(724)							620	(882)	(626)
	PIN SPACING 26–1/2" 30"	SINGLE ARM	210	240	300	320	(340)	(285)	(197)	340	390	–	170	210	250	270	(240)	(170)
		DOUBLE ARM					350	320	(394)								290	(340)
	PIN SPACING 13–1/4" 30"	SINGLE ARM	130	170	210	220	(203)	(170)	(117)	240	290	–	120	150	170	(165)	(143)	(101)
		DOUBLE ARM					230	220	(234)							190	200	(202)

OBSOLETE

TABLE OF CONTENTS

© 1998 - 2010 San Diego Gas & Electric Company. All rights reserved. Removal of this copyright notice without permission is not permitted under law.

Indicates Latest Revision | Completely Revised | New Page | Information Removed

SDG&E ELECTRIC STANDARDS

816

MAXIMUM SAFE SPAN LENGTHS IN FEET,
PRIMARY AND SECONDARY CROSSARMS, MEDIUM LOADING

REVISION
DATE 1–1–91
APPD PSA / DSJ

FIELD MAINTENANCE ONLY

9/4/2018: All versions prior to 2018 are superseded by their current version found inside the Overhead Construction Standard Manual.

TABLE OF CONTENTS

© 1998 - 2018 San Diego Gas & Electric Company. All rights reserved. Removal of this copyright notice without permission is not permitted under law.

REV	CHANGE	BY	DSGN	APPV	DATE	REV	CHANGE	BY	DSGN	APPV	DATE
C						F					
B						E					
A	ORIGINAL ISSUE	JS	JS	CZH	9/4/2018	D					

X Indicates Latest Revision | Completely Revised | New Page | Information Removed

SDG&E ELECTRIC OVERHEAD CONSTRUCTION STANDARD

SHEET 1 OF 1

MAXIMUM SAFE SPAN LENGTHS IN FEET,
12KV CROSSARMS, LIGHT LOADING

FMO
OH817

12KV CROSSARMS SINGLE AND DOUBLE MAXIMUM SAFE SPAN LENGTHS IN FEET VERTICAL LOADING

AS LIMITED BY

SAG/PIN SPACING RATIOS 123
CROSSARM STRENGTH (123)

LIGHT LOADING

THIS PAGE FOR FIELD MAINTENANCE ONLY

				WIRE TYPE	COPPER								COPPERWELD		
				WIRE SIZE	#6	#4	#2	#1	1/0	2/0	4/0	250 KCM	#6A	#4A	7/16 EHS 30%
				WT WIRE LBS/1000	82.5	127.6	202.9	258.4	325.8	410.9	653.3	771.9	101.6	161.5	408.4
				K FACTOR	2.7	3.3	3.5	3.6	3.7	4.3	6.0	6.3	3.3	3.4	7.2
				SAG CURVE NUMBER	L-312	L-311	L-321	L-313	L-324	L-326	L-356	L-436	L-445	L-444	L-449
4 PIN RURAL FMO		88"	4 1/2"X3 1/4" STD. LT. ARM	SINGLE	670	790	850	890	(777)	(616)	(388)	(328)	1030	1100	(620)
				DOUBLE					950	(1232)	(776)	(656)			(1240)
4 PIN 10 FT FMO	HEAVY 5 3/4"X 5 3/4"	110"	STD. LT. ARM	SINGLE	760	890	950	1010	1070	1150	(672)	(568)	1150	1230	(1074)
				DOUBLE							1080	(1136)			1830
			STD. HVY. ARM	SINGLE								(1017)			
				DOUBLE								(2034)			
	LIGHT 5 3/4"X 3 3/4"	18" 37"	STD. LT. ARM	SINGLE	420	500	520	560	590	630	(502)	(425)	670	700	(807)
				DOUBLE							610	(850)			970
			STD. HVY. ARM	SINGLE								(763)			
				DOUBLE								900			
		55" 55"	STD. LT. ARM	SINGLE	520	620	650	690	730	790	760	(586)	820	870	(1074)
				DOUBLE								1150			1290
			STD. HVY. ARM	SINGLE											
				DOUBLE											
12 FT 6 PIN FMO	HEAVY 5 3/4"X 5 3/4"	134"	STD. LT. ARM	SINGLE	830	980	1060	1120	(990)	(785)	(494)	(418)	1270	1360	(790)
				DOUBLE					1190	1270	(988)	(836)			(1580)
			STD. HVY. ARM	SINGLE							(929)	(786)			(1486)
				DOUBLE							1190	(1572)			2020
	LIGHT 5 3/4"X 3 3/4"	18" 49"	STD. LT. ARM	SINGLE	490	590	610	650	680	(614)	(386)	(327)	770	810	(617)
				DOUBLE						740	710	(654)			(1210)
			STD. HVY. ARM	SINGLE								(617)			(1166)
				DOUBLE								(1234)			1210
		67" 67"	STD. LT. ARM	SINGLE	580	690	730	770	820	(785)	(494)	(418)	900	960	(790)
				DOUBLE						880	840	(836)			1440
			STD. HVY. ARM	SINGLE								(786)			
				DOUBLE								(1572)			
		24-1/2" SPACING 18"	STD. LT. ARM	SINGLE	330	400	410	440	450	(401)	(252)	(213)	543	560	(403)
				DOUBLE						490	490	(426)			(806)
			STD. HVY. ARM	SINGLE								(407)			(769)
				DOUBLE								(814)			840
6 PIN 15 FT FMO	HEAVY 5 3/4"X 5 3/4"	168"	STD. HVY. ARM	SINGLE	930	1110	1190	1260	1340	(1074)	(676)	(572)	1420	1520	(1081)
				DOUBLE						1420	(1352)	(1144)			(2162)
		18" 66"	STD. HVY. ARM Spcl. Drilling	SINGLE	580	680	730	770	800	870	(554)	(469)	890	950	(886)
				DOUBLE							(1108)	(938)			(1772)
		84" 84"	STD. HVY. ARM	SINGLE	660	770	830	870	920	990	(676)	(572)	1010	1070	(1081)
				DOUBLE							921	(1144)			1590
		18" 33" 33"	STD. HVY. ARM Spcl. Drilling	SINGLE	390	470	490	530	550	580	(364)	(308)	630	660	(583)
				DOUBLE							(728)	(616)			(1166)
		36" 24" 24"	STD. HVY. ARM	SINGLE	330	390	410	440	450	480	(325)	(259)	540	560	(490)
				DOUBLE							490	(518)			(980)

OBSOLETE

TABLE OF CONTENTS

© 1998 - 2010 San Diego Gas & Electric Company. All rights reserved. Removal of this copyright notice without permission is not permitted under law.

Indicates Latest Revision | Completely Revised | New Page | Information Removed

REVISION

DATE 1-1-91

APPD PSA / DSG

SDG&E ELECTRIC STANDARDS

MAXIMUM SAFE SPAN LENGTHS IN FEET,
12KV CROSSARMS, LIGHT LOADING

817

FIELD MAINTENANCE ONLY

9/4/2018: All versions prior to 2018 are superseded by their current version found inside the Overhead Construction Standard Manual.

TABLE OF CONTENTS

© 1998 - 2018 San Diego Gas & Electric Company. All rights reserved. Removal of this copyright notice without permission is not permitted under law.

REV	CHANGE	BY	DSGN	APPV	DATE	REV	CHANGE	BY	DSGN	APPV	DATE
C						F					
B						E					
A	ORIGINAL ISSUE	JS	JS	CZH	9/4/2018	D					

X Indicates Latest Revision | Completely Revised | New Page | Information Removed

SDG&E ELECTRIC OVERHEAD CONSTRUCTION STANDARD

SHEET 1 OF 1

MAXIMUM SAFE SPAN LENGTHS IN FEET,
12KV CROSSARMS, MEDIUM LOADING

FMO
OH818

12KV CROSSARMS SINGLE AND DOUBLE MAXIMUM SAFE SPAN LENGTHS IN FEET VERTICAL LOADING

AS LIMITED BY

SAG/PIN SPACING RATIOS 123
CROSSARM STRENGTH (123)

MEDIUM LOADING

THIS PAGE FOR FIELD MAINTENANCE ONLY

				WIRE TYPE	COPPER								COPPERWELD		
				WIRE SIZE	#6	#4	#2	#1	1/0	2/0	4/0	250 KCM	#6A	#4A	7/16 EHS 30%
				WT WIRE LBS/1000FT	222.8	284.3	380.2	438.2	518.0	617.4	895.0	1028.2	250.9	329.4	620.8
				K FACTOR	2.5	2.7	3.0	3.3	3.4	3.4	4.1		2.6	2.9	
				SAG CURVE NUMBER	L–331	L–333	L–337	L–335	L–341	L–344	L–363		L–435	L–443	
4 PIN RURAL FMO	88"	4 1/2"X3 1/4" STD. LT. ARM	SINGLE		340	430	550	(578)	(489)	(410)	(283)	(246)	580	680	(408)
			DOUBLE					600	650	(820)	(566)	(492)			(816)
4 PIN 10 FT FMO HEAVY 5 3/4"X 5 3/4"	110"	STD. LT. ARM	SINGLE		380	480	610	670	730	(711)	(490)	(427)	640	760	(707)
			DOUBLE							790	780	(854)			(1414)
		STD. HVY. ARM	SINGLE									(763)			–
			DOUBLE									–			–
	18" 37"	STD. LT. ARM	SINGLE		230	280	350	380	420	460	(367)	(319)	390	450	–
			DOUBLE								440	–			–
		STD. HVY. ARM	SINGLE									(573)			–
			DOUBLE									–			–
LIGHT 5 3/4"X 3 3/4"	55" 55"	STD. LT. ARM	SINGLE		280	340	430	470	510	560	(490)	(427)	460	540	–
			DOUBLE								550	–			–
		STD. HVY. ARM	SINGLE									–			–
			DOUBLE									(763)			–
6 PIN 12 FT FMO HEAVY 5 3/4"X 5 3/4"	134"	STD. LT. ARM	SINGLE		410	530	680	740	(623)	(522)	(360)	(314)	700	830	(519)
			DOUBLE						810	880	(720)	(628)			(1038)
		STD. HVY. ARM	SINGLE								(678)	(591)			–
			DOUBLE								860	–			–
	18" 49"	STD. LT. ARM	SINGLE		270	320	410	440	480	(408)	(282)	(245)	440	510	(406)
			DOUBLE							530	520	(490)			–
		STD. HVY. ARM	SINGLE									(463)			–
			DOUBLE									–			–
LIGHT 5 3/4"X 3 3/4"	67" 67"	STD. LT. ARM	SINGLE		310	370	480	522	560	(522)	(360)	(314)	510	590	–
			DOUBLE							620	610	(628)			–
		STD. HVY. ARM	SINGLE									(591)			–
			DOUBLE									–			–
	24–1/2" SPACING 18"	STD. LT. ARM	SINGLE		190	330	290	310	(318)	(267)	(184)	(160)	330	380	(265)
			DOUBLE						330	370	(360)	(320)			–
		STD. HVY. ARM	SINGLE								(351)	(306)			–
			DOUBLE								360	–			–
6 PIN 15 FT FMO HEAVY 5 3/4"X 5 3/4"	168"	STD. HVY. ARM	SINGLE		450	590	750	820	(852)	(715)	(493)	(429)	770	920	–
			DOUBLE						900	970	(610)	(859)			–
	18" 66"	STD. HVY. ARM Spcl. Drilling	SINGLE		305	370	480	520	560	(586)	(404)	(352)	510	590	(583)
			DOUBLE							620	610	(704)			–
	84" 84"	STD. HVY. ARM	SINGLE		340	420	540	590	640	690	(493)	(429)	560	660	–
			DOUBLE								690	–			–
	18" 33" 33"	STD. HVY. ARM Spcl. Drilling	SINGLE		220	260	340	360	390	(385)	(266)	(231)	370	430	–
			DOUBLE							430	(532)	(462)			–
	36" 24" 24"	STD. HVY. ARM	SINGLE		190	220	290	300	330	(324)	(223)	(194)	320	370	(322)
			DOUBLE							370	(446)	(388)			–

OBSOLETE

TABLE OF CONTENTS

© 1998 - 2010 San Diego Gas & Electric Company. All rights reserved. Removal of this copyright notice without permission is not permitted under law.

Indicates Latest Revision | Completely Revised | New Page | Information Removed

SDG&E ELECTRIC STANDARDS

818

MAXIMUM SAFE SPAN LENGTHS IN FEET, 12KV CROSSARMS, MEDIUM LOADING

REVISION

DATE 1–1–91

APPD PA / BDJ

FIELD MAINTENANCE ONLY

9/4/2018: All versions prior to 2018 are superseded by their current version found inside the Overhead Construction Standard Manual.

TABLE OF CONTENTS

© 1998 - 2018 San Diego Gas & Electric Company. All rights reserved. Removal of this copyright notice without permission is not permitted under law.

REV	CHANGE	BY	DSGN	APPV	DATE	REV	CHANGE	BY	DSGN	APPV	DATE
C						F					
B						E					
A	ORIGINAL ISSUE	JS	JS	CZH	9/4/2018	D					

X Indicates Latest Revision | Completely Revised | New Page | Information Removed

SHEET 1 OF 1

SDG&E ELECTRIC OVERHEAD CONSTRUCTION STANDARD

HORIZONTAL CONDUCTOR SPACING
GENERAL INFORMATION

FMO
OH819

SCOPE: THIS STANDARD DESCRIBES HOW TO DETERMINE HORIZONTAL CONDUCTOR SPACING FOR ALUMINUM AND COPPER CONDUCTORS.

THE FOLLOWING PROCEDURES ARE REQUIRED TO DETERMINE HORIZONTAL CONDUCTOR SPACING:

STEP 1: DETERMINE THE CONDUCTOR SIZE AND TYPE TO BE INSTALLED (SEE SECTION 700).

STEP 2: DETERMINE THE RULING SPAN, LOADING DISTRICT AND DESIGN TENSION.

STEP 3: USING APPROVED SOFTWARE, ACQUIRE THE RULING SPAN SAG AT 212° F.

STEP 4: DETERMINE SAG IN LONGEST SPAN.

$$\text{LONG SPAN SAG} = (\text{RULING SPAN SAG}) * \left(\frac{\text{LONGEST SPAN}}{\text{RULING SPAN}}\right)^2$$

STEP 5: DETERMINE THE REQUIRED HORIZONTAL SPACING USING THE FOLLOWING FORMULA:

$$\textit{PIN SPACING} = 3.6 + 8 * \sqrt{\textit{LONG SPAN SAG}}$$

STEP 6: SELECT THE CROSSARM FROM STANDARD SECTION 300 WHICH WILL PROVIDE EQUAL OR GREATER CONDUCTOR SPACING THAN DETERMINED IN STEP 5.

NOTE: PROVIDE MINIMUM PIN SPACING AS CALCULATED ON WORK ORDER.

STEP 7: DETERMINE IF THE CROSSARM SELECTED IS STRONG ENOUGH TO SUPPORT THE CONDUCTORS (SEE STANDARD SECTION 300).

OBSOLETE
DRAFT

EXAMPLE: (SEE FIGURE 1)

PROBLEM: DETERMINE THE REQUIRED HORIZONTAL CONDUCTOR SPACING AT A POLE (D) WITH THE LONGEST ADJACENT SPAN (400').

ASSUMPTIONS: LIGHT LOADING DISTRICT
WIRE TO BE STRUNG = 4 CONDUCTORS, #336.4 ACSR (LINNET) @ 3,000 LB DESIGN TENSION SPAN LENGTHS ARE 300', 250', 350', AND 400'

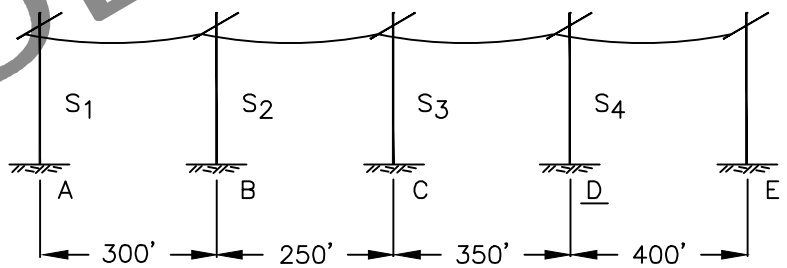

FIGURE 1

© 1998 - 2010 San Diego Gas & Electric Company. All rights reserved. Removal of this copyright notice without permission is not permitted under law.

	Indicates Latest Revision	Completely Revised	New Page	Information Removed

REVISION	SDG&E ELECTRIC STANDARDS	
DATE 6-10-10 APPD WT / MC	HORIZONTAL CONDUCTOR SPACING GENERAL INFORMATION	819.1

TABLE OF CONTENTS

SOLUTION: 1)

CALCULATE THE RULING SPAN USING THE FORMULA

$$RS = \sqrt{\frac{S_1^3 + S_2^3 + S_3^3 + S_4^3 --- S_N^3}{S_1 + S_2 + S_3 + S_4 --- S_N}}$$

$$\text{WHERE RS} = \sqrt{\frac{300^3 + 250^3 + 350^3 + 400^3}{300 + 250 + 350 + 400}} = 339$$

USE THE 300' RULING SPAN "FINAL SAG" TABLE.

USING THE SAG AND TENSION STANDARD ACQUIRE THE RULING SPAN SAG ON THE LINE AT 167° F.

RULING SPAN SAG = 5.41

2) DETERMINE SAG IN THE LONGEST SPAN USING THE FORMULA

$$LONGSPANSAG = RULINGSPANSAG * \left(\frac{LONGESTSPAN}{RULINGSPAN}\right)^2$$

$$Feet = 5.41 * \left(\frac{400}{339}\right)^2 = 7.53'$$

3) DETERMINE THE REQUIRED HORIZONTAL SPACING USING THE FOLLOWING FORMULA:

$$PINSPACING = 3.6 + 8 * \sqrt{LONGSPANSAG}$$

$$PIN\ SPACING = 3.6 + 8 * \sqrt{7.53}$$

$$PIN\ SPACING = 25.6"$$

OBSOLETE

TABLE OF CONTENTS

© 1998 - 2010 San Diego Gas & Electric Company. All rights reserved. Removal of this copyright notice without permission is not permitted under law.

FIELD MAINTENANCE ONLY

9/4/2018: All versions prior to 2018 are superseded by their current version found inside the Overhead Construction Standard Manual.

TABLE OF CONTENTS

© 1998 - 2018 San Diego Gas & Electric Company. All rights reserved. Removal of this copyright notice without permission is not permitted under law.

REV	CHANGE	BY	DSGN	APPV	DATE	REV	CHANGE	BY	DSGN	APPV	DATE
C						F					
B						E					
A	ORIGINAL ISSUE	JS	JS	CZH	9/4/2018	D					

X	Indicates Latest Revision		Completely Revised		New Page		Information Removed	

SDG&E ELECTRIC OVERHEAD CONSTRUCTION STANDARD

SHEET
1 OF 1

SLACK SPAN CONSTRUCTION
SINGLE/DOUBLE CROSSARMS

FMO
OH820

SCOPE: THIS STANDARD DESCRIBES THE METHOD IN DETERMINING MAXIMUM SPAN UP TO 120 FEET, NUMBER OF CROSSARMS AND CLASS OF POLE IN "SLACK SPAN" CONSTRUCTION, ALLOWED IN LIGHT LOADING DISTRICTS ONLY.

STEP 1: DETERMINE THE FOLLOWING DESIGN CONSTRAINTS:
A. DETERMINE WHICH CONDUCTOR IS TO BE USED

COPPER	TABLE
#6 BARE STRANDED	1
#4 BARE STRANDED	2
#2 BARE STRANDED	3
#1/0 BARE STRANDED	4

ALUMINUM	TABLE
#2 ACSR 6/1	5
#3/0 ACSR 6/1	6

B. DETERMINE NUMBER OF CONDUCTORS TO BE INSTALLED IN THE STUDY SPAN.

C. DETERMINE MINIMUM GROUND CLEARANCE REQUIRED FOR VOLTAGE – PER G.O. 95, RULE 37.

D. DETERMINE LOADING ZONE.

STEP 2: OBTAIN A PROFILE OF THE STUDY SPAN AND DRAW A LINE PARALLEL TO THE GROUND LINE AT THE MINIMUM CLEARANCE ELEVATION (SEE DRAWING ON PAGE 820.2).

STEP 3: DETERMINE AVAILABILITY OF POLES AND SELECT A TRIAL POLE HEIGHT AND A TRIAL SPAN LENGTH BETWEEN 50 FEET AND MAXIMUM 120 FEET.

STEP 4: PLOT SELECTED POLE HEIGHT ON PROFILE OF STUDY SPAN AND LOCATE THE CONDUCTOR ATTACHMENT POINTS. DRAW A STRAIGHT LINE BETWEEN THE ATTACHMENT POINTS ON THE TWO POLES AND MEASURE THE MINIMUM VERTICAL DISTANCE TO THE NEAREST HALF–FOOT BETWEEN THE MINIMUM CLEARANCE LINE FROM STEP 2 AND THE CONDUCTOR ATTACHMENT LINE. THIS DISTANCE IS THE MAXIMUM ALLOWABLE SAG FOR THE SPAN.

STEP 5: ON THE SINGLE CONDUCTOR MAXIMUM TENSION TABLE FOR THE SELECTED CONDUCTOR AND LOADING CONDITION FROM STEP 1, READ ACROSS FROM THE SPAN LENGTH, AS SELECTED IN STEP 3, TO THE COLUMN FROM MAXIMUM SAG AS CALCULATED IN STEP 4. THE VALUE SHOWN IS THE MAXIMUM SINGLE CONDUCTOR TENSION THAT WILL OCCUR IN THE STUDY SPAN.

NOTE:
- IF MAXIMUM TENSION EXCEEDS 300 LBS. PER CONDUCTOR (NON–BOLD TENSIONS ON TABLES), OR, MAXIMUM TENSION EXCEEDS THE LONGITUDINAL LOADING PER PIN POSITION ON A SINGLE CROSSARM, DOUBLE CROSSARMS WITH DOUBLE STEEL PINS AND INSULATORS WILL BE USED. GRADES A AND B CONSTRUCTION DO NOT REQUIRE DOUBLE CROSSARMS, (G.O. 95 49.2C2, 49.3C2). TO CALCULATE SINGLE CROSSARM LOADING (REFER TO STD. 383.2), DIVIDE THE LONGITUDINAL LOADING FOR DOUBLE CROSSARMS BY 2 AND AGAIN BY 1.3 (G.O. 95 APP. F–8).
- INSURE THAT MINIMUM HORIZONTAL CONDUCTOR SPACING IS ACHIEVED, PER OH STD. 819.

STEP 6: MULTIPLY THE MAXIMUM SINGLE CONDUCTOR TENSION AS DETERMINED IN STEP 5 BY THE NUMBER OF CONDUCTORS TO BE INSTALLED IN THE STUDY SPAN. THIS VALUE BECOMES THE MAXIMUM TENSION ON POLE FOR THE STUDY SPAN.

STEP 7: ON TABLE 7 (MAXIMUM ALLOWABLE TENSION ON POLES) READ DOWN THE COLUMN UNDER THE SELECTED POLE HEIGHT (FROM STEP 3) UNTIL A TENSION VALUE GREATER THAN OR EQUAL TO THE MAXIMUM TENSION VALUE DETERMINED IN STEP 6 IS ENCOUNTERED. THEN, READ TO THE LEFT TO DETERMINE THE CLASS OF POLE REQUIRED FOR THE HEIGHT SELECTED.

STEP 8: IF LOADS OR TENSIONS EXCEED THE CAPACITIES OF THE POLES OR ARE BEYOND THE LIMITS OF THE TABLES, RETURN TO STEP 3, ADJUST SPAN LENGTH OR POLE HEIGHT AND RECALCULATE TO DETERMINE POLE CLASS.

OBSOLETE

TABLE OF CONTENTS

© 1998 - 2010 San Diego Gas & Electric Company. All rights reserved. Removal of this copyright notice without permission is not permitted under law.

	Indicates Latest Revision	Completely Revised	New Page	Information Removed

REVISION	SDG&E ELECTRIC STANDARDS	
DATE 12–17–09 APPD BV / MC	SLACK SPAN CONSTRUCTION SINGLE/DOUBLE CROSSARMS	820.1

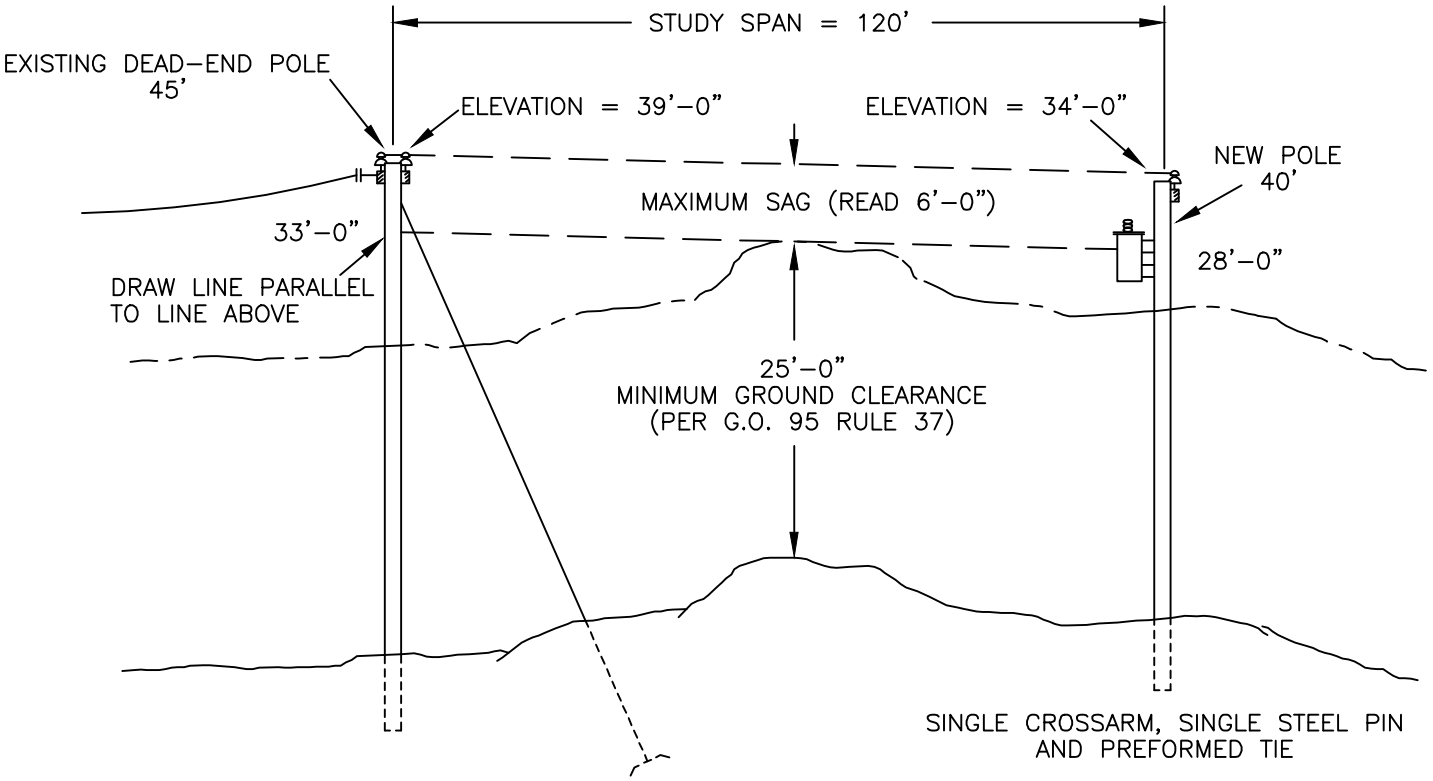

EXAMPLE:

PROBLEM: DETERMINE CLASS AND HEIGHT OF POLE WHICH WILL SUPPORT MAXIMUM ALLOWABLE "SLACK SPAN".

ASSUME:
- LIGHT LOADING DISTRICT
- WIRE TO BE STRUNG = 3 CONDUCTORS, #2 ACSR
- VOLTAGE = 12KV
- NEW POLE HEIGHT = 40 FT
- STUDY SPAN = 120 FT. (SEE DRAWING)

SOLUTION:

1) ASSURE THAT MINIMUM GROUND CLEARANCE IS MET (PER G.O. 95, RULE 37, TABLE 1).

2) DETERMINE MAXIMUM ALLOWABLE SAG FROM DRAWING (READ = 6' – 0"), THEN SELECT ACTUAL SAG TO BE USED, LESS THAN OR EQUAL TO MAXIMUM ALLOWABLE SAG (E.G. 3' – 0").

3) SEE TABLE 5 FOR #2 ACSR, LIGHT LOADING, FIND 120 FT SPAN AND READ ACROSS TO 3' – 0" SAG COLUMN. READ MAXIMUM TENSION IS 184 LBS.

4) TOTAL TENSION IS 184 X 3 CONDUCTORS = 552 LBS.

5) SEE TABLE 7, FIND 40' POLE HEIGHT AND READ DOWN. FIND TENSION 752 LBS, WHICH IS GREATER THAN 552 LBS. READING TO THE LEFT SHOWS A CLASS 3 POLE.

CONCLUSION: **A 40 FT., CLASS 3 POLE, A SINGLE CROSSARM, SINGLE STEEL PIN AND PREFORMED OR PREFABRICATED TIE MEET THE REQUIREMENTS FOR A "SLACK SPAN" OF 120 FT. WITH A SAG OF 3' - 0" FOR 3 CONDUCTORS, #2 ACSR.**

OBSOLETE

© 1998 - 2010 San Diego Gas & Electric Company. All rights reserved. Removal of this copyright notice without permission is not permitted under law.

TABLE OF CONTENTS

TABLE 1

#6 COPPER – 3 STRAND
SINGLE CONDUCTOR MAXIMUM TENSION TABLE
LIGHT LOADING CONDITIONS---25° INITIAL WITH NO ICE (A)(G)
NOTE: FOR BOLD TENSIONS USE SINGLE CROSSARM CONSTRUCTION.

SPAN (FEET)	SAG AT 130° F -- FINAL									
	1' – 0"	1' – 6"	2' – 0"	2' – 6"	3' – 0"	3' – 6"	4' – 0"	4' – 6"	5' – 0"	5' – 6"
60	**188**	**88**	**56**	–	–	–	–	–	–	–
70	**252**	**130**	**81**	**59**	**50**	–	–	–	–	–
80	310	**182**	**113**	**80**	**63**	**52**	–	–	–	–
90	354	**233**	**149**	**107**	**82**	**68**	**58**	**51**	–	–
100	398	**281**	**193**	**137**	**106**	**86**	**73**	**63**	**56**	**51**
110	434	327	**236**	**171**	**132**	**107**	**90**	**78**	**69**	**62**
120	473	367	**277**	**208**	**161**	**130**	**109**	**94**	**83**	**74**

TABLE 2

#4 COPPER – 3 STRAND
SINGLE CONDUCTOR MAXIMUM TENSION TABLE
LIGHT LOADING CONDITIONS---25° INITIAL WITH NO ICE (B)(G)
NOTE: FOR BOLD TENSIONS USE SINGLE CROSSARM CONSTRUCTION.

SPAN (FEET)	SAG AT 130° F -- FINAL									
	1' – 0"	1' – 6"	2' – 0"	2' – 6"	3' – 0"	3' – 6"	4' – 0"	4' – 6"	5' – 0"	5' – 6"
60	**273**	**111**	**71**	**53**	–	–	–	–	–	–
70	376	**175**	**103**	**75**	**60**	**50**	–	–	–	–
80	464	**251**	**147**	**103**	**81**	**67**	**57**	**50**	–	–
90	534	333	**201**	**137**	**105**	**86**	**74**	**64**	**57**	**52**
100	598	412	**263**	**179**	**135**	**109**	**93**	**80**	**71**	**64**
110	659	482	330	**228**	**171**	**137**	**114**	**99**	**87**	**78**
120	719	546	397	**283**	**212**	**168**	**140**	**120**	**105**	**94**

OBSOLETE

TABLE OF CONTENTS

© 1998 - 2010 San Diego Gas & Electric Company. All rights reserved. Removal of this copyright notice without permission is not permitted under law.

	Indicates Latest Revision		Completely Revised		New Page	X	Information Removed

REVISION	SDG&E ELECTRIC STANDARDS	
DATE 6-17-09 APPD PJA / MC	SLACK SPAN CONSTRUCTION SINGLE/DOUBLE CROSSARMS	820.3

TABLE 3

#2 COPPER – 3 STRAND
SINGLE CONDUCTOR MAXIMUM TENSION TABLE
LIGHT LOADING CONDITIONS---25° INITIAL WITH NO ICE (C)(G)
NOTE: FOR BOLD TENSIONS USE SINGLE CROSSARM CONSTRUCTION.

SPAN (FEET)	SAG AT 130° F -- FINAL									
	1' – 0"	1' – 6"	2' – 0"	2' – 6"	3' – 0"	3' – 6"	4' – 0"	4' – 6"	5' – 0"	5' – 6"
60	400	**152**	–	–	–	–	–	–	–	–
70	575	**243**	**138**	**100**	–	–	–	–	–	–
80	717	362	**196**	**137**	**107**	–	–	–	–	–
90	830	489	**276**	**184**	**140**	**115**	**100**	–	–	–
100	932	622	370	**244**	**181**	**146**	**123**	**107**	–	–
110	1029	731	472	316	**231**	**182**	**152**	**131**	**116**	**104**
120	–	829	581	399	**287**	**226**	**186**	**159**	**140**	**125**

TABLE 4

1/0 COPPER – 7 STRAND
SINGLE CONDUCTOR MAXIMUM TENSION TABLE
LIGHT LOADING CONDITIONS---25° INITIAL WITH NO ICE (D)(G)
NOTE: FOR BOLD TENSIONS USE SINGLE CROSSARM CONSTRUCTION.

SPAN (FEET)	SAG AT 130° F -- FINAL									
	1' – 6"	2' – 0"	2' – 6"	3' – 0"	3' – 6"	4' – 0"	4' – 6"	5' – 0"	5' – 6"	6' – 0"
60	**198**	**121**	–	–	–	–	–	–	–	–
70	323	**179**	**128**	**101**	–	–	–	–	–	–
80	530	**260**	**177**	**137**	**113**	**100**	–	–	–	–
90	746	378	**240**	**181**	**147**	**125**	**109**	**100**	–	–
100	956	528	321	**235**	**188**	**158**	**136**	**121**	**109**	**100**
110	1152	699	428	301	**236**	**196**	**166**	**148**	**133**	**120**
120	–	879	556	385	**293**	**241**	**205**	**180**	**160**	**145**

OBSOLETE

TABLE OF CONTENTS

© 1998 - 2010 San Diego Gas & Electric Company. All rights reserved. Removal of this copyright notice without permission is not permitted under law.

	Indicates Latest Revision		Completely Revised		New Page	X	Information Removed

820.4	SDG&E ELECTRIC STANDARDS SLACK SPAN CONSTRUCTION SINGLE/DOUBLE CROSSARMS	REVISION DATE 6-17-09 APPD PA / MC

TABLE 5

#2 ACSR/AW 6/1 – SPARROW
SINGLE CONDUCTOR MAXIMUM TENSION TABLE
LIGHT LOADING CONDITIONS---25° INITIAL WITH NO ICE (F)
NOTE: FOR BOLD TENSIONS USE SINGLE CROSSARM CONSTRUCTION.

SPAN (FEET)	SAG AT 130° F -- FINAL									
	0' – 6"	1' – 0"	1' – 6"	2' – 0"	2' – 6"	3' – 0"	3' – 6"	4' – 0"	4' – 6"	5' – 0"
60	580	**226**	–	–	–	–	–	–	–	–
70	665	348	**144**	–	–	–	–	–	–	–
80	756	449	**221**	**123**	–	–	–	–	–	–
90	850	537	306	**173**	**117**	–	–	–	–	–
100	–	618	397	**232**	**155**	**116**	–	–	–	–
110	–	695	475	300	**199**	**147**	**117**	–	–	–
120	–	771	546	377	**251**	**184**	**145**	**120**	**103**	–

TABLE 6

3/0 ACSR/AW 6/1 – PIGEON
SINGLE CONDUCTOR MAXIMUM TENSION TABLE
LIGHT LOADING CONDITIONS---25° INITIAL WITH NO ICE (D)(G)
NOTE: FOR BOLD TENSIONS USE SINGLE CROSSARM CONSTRUCTION.

SPAN (FEET)	SAG AT 130° F -- FINAL									
	1' – 0"	1' – 6"	2' – 0"	2' – 6"	3' – 0"	3' – 6"	4' – 0"	4' – 6"	5' – 0"	5' – 6"
60	493	**169**	**107**	–	–	–	–	–	–	–
70	825	**271**	**157**	**114**	–	–	–	–	–	–
80	1091	452	**223**	**156**	**122**	**101**	–	–	–	–
90	–	675	326	**209**	**160**	**131**	**112**	**100**	–	–
100	–	923	461	**283**	**207**	**167**	**141**	**122**	**109**	**100**
110	–	1130	632	376	**267**	**209**	**175**	**151**	**133**	**119**
120	–	–	837	494	339	**261**	**213**	**183**	**161**	**144**

OBSOLETE

TABLE OF CONTENTS

© 1998 - 2010 San Diego Gas & Electric Company. All rights reserved. Removal of this copyright notice without permission is not permitted under law.

	Indicates Latest Revision		Completely Revised		New Page	X	Information Removed

REVISION DATE 6-17-09 APPD PA / MC	SDG&E ELECTRIC STANDARDS SLACK SPAN CONSTRUCTION SINGLE/DOUBLE CROSSARMS	820.5

TABLE 7

MAXIMUM ALLOWABLE TENSION ON POLES (LBS)							
POLE CLASS	WOOD POLE HEIGHT						
	35'	40'	45'	50'	55'	60'	65'
5	455	472	453	453	440	425	425
3	751	752	714	703	703	700	688
1	1142	1123	1111	1103	1081	1070	1063

NOTE: ALL TENSION CALCULATIONS INCLUDE A SAFETY FACTOR OF 4.0 AND A 500 LB TRANSFORMER INSTALLED ON THE STUDY POLE.

TABLE OF CONTENTS

OBSOLETE

INSTALLATION:

(A) DO NOT USE A CONDUCTOR TENSION LESS THAN 50 LBS OR GREATER THAN 480 LBS.

(B) DO NOT USE A CONDUCTOR TENSION LESS THAN 50 LBS OR GREATER THAN 750 LBS.

(C) DO NOT USE A CONDUCTOR TENSION LESS THAN 100 LBS OR GREATER THAN 1100 LBS.

(D) DO NOT USE A CONDUCTOR TENSION LESS THAN 100 LBS OR GREATER THAN 1150 LBS.

(F) DO NOT USE A CONDUCTOR TENSION LESS THAN 100 LBS OR GREATER THAN 850 LBS.

(G) USE TENSIONS IN BOLD AREA OF TABLES FOR SINGLE CROSSARM DEADEND CONSTRUCTION.

© 1998 - 2010 San Diego Gas & Electric Company. All rights reserved. Removal of this copyright notice without permission is not permitted under law.

MAIN TABLE OF CONTENTS

PAGE	SUBJECT
962	ALUMOWELD GUY SPLICES
965	COPPER & COPPERWELD GUY GRIPS
967-968	POWER INSTALLED SCREW ANCHORS
974	STEEL GUY POLE

© 1998 - 2023 San Diego Gas & Electric Company. All rights reserved. Removal of this copyright notice without permission is not permitted under law.

REV	CHANGE	DR	BY	DSN	APV	DATE	REV	CHANGE	DR	BY	DSN	APV	DATE
C	ADDED 974	GLC	RSL	JAS	KRG	04/06/2023	F						
B	ADDED 967-968	-	JK	JS	MDJ	05/01/2018	E						
A	ORIGINAL ISSUE	-	JS	IL	MDJ	07/13/2016	D						

X Indicates Latest Revision | Completely Revised | New Page | Information Removed

SDG&E ELECTRIC OVERHEAD FIELD MAINTENANCE ONLY STANDARDS

GUYING
FMO TABLE OF CONTENTS

FIELD MAINTENANCE ONLY

REVISION HISTORY:

7/13/2016: All versions prior to 2016 are superseded by their current version found inside the Overhead Construction Standard Manual.

TABLE OF CONTENTS

© 1998 - 2016 San Diego Gas & Electric Company. All rights reserved. Removal of this copyright notice without permission is not permitted under law.

REV	CHANGE	BY	DSGN	APPV	DATE	REV	CHANGE	BY	DSGN	APPV	DATE
C						F					
B						E					
A	ORIGINAL ISSUE	JS	IL	MDJ	7/13/2016	D					

X Indicates Latest Revision | Completely Revised | New Page | Information Removed

SHEET 1 OF 1

SDG&E ELECTRIC OVERHEAD STANDARD

GUY HARDWARE

FMO OH 962

TABLE OF CONTENTS

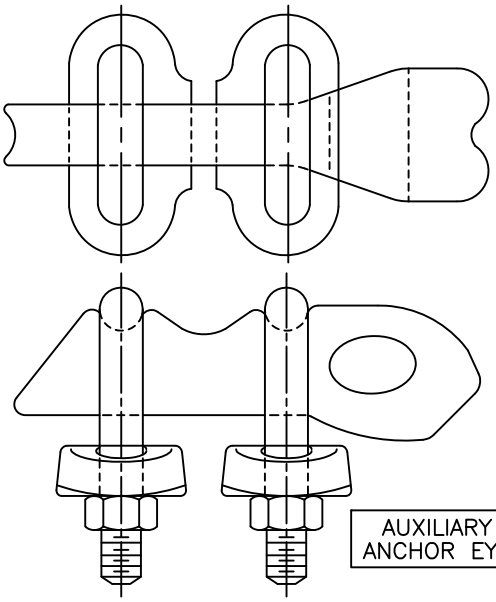

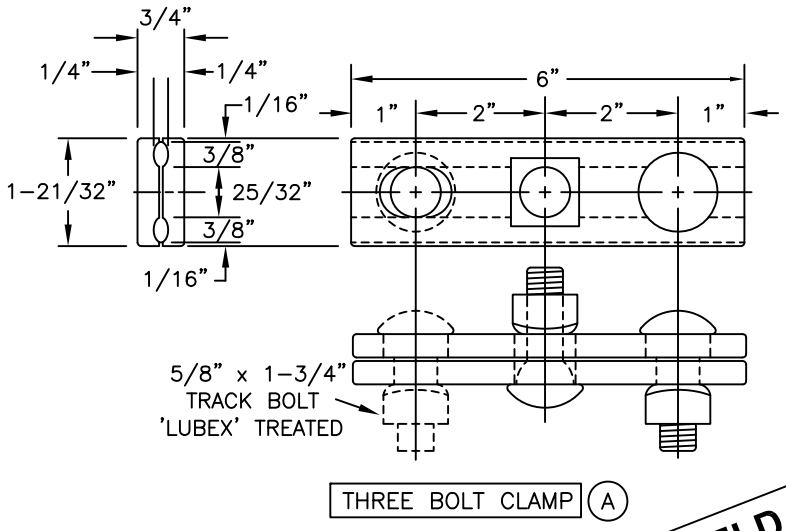

THREE BOLT CLAMP (A)

FOR FIELD MAINTENANCE ONLY

INSTALLATION:

(A) NO LONGER PURCHASED. USE FACTORY GUY GRIP WHEN PRACTICAL. SALVAGE THREE BOLT CLAMP AND USE ONLY WHEN A GUY GRIP CANNOT BE USED.

DESCRIPTION	MOUNTING BOLT SIZE	STOCK NUMBER	ASSEMBLY UNITS
CLAMP, THREE BOLT	–	227296	–
EYE, AUX ANCHOR	–	337536	AUXEYE
THIMBLE, 1/2", OPEN	–	736600	OPTHMB

© 1998 - 2010 San Diego Gas & Electric Company. All rights reserved. Removal of this copyright notice without permission is not permitted under law.

FIELD MAINTENANCE ONLY

REVISION HISTORY:

7/13/2016: All versions prior to 2016 are superseded by their current version found inside the Overhead Construction Standard Manual.

TABLE OF CONTENTS

© 1998 - 2016 San Diego Gas & Electric Company. All rights reserved. Removal of this copyright notice without permission is not permitted under law.

REV	CHANGE	BY	DSGN	APPV	DATE	REV	CHANGE	BY	DSGN	APPV	DATE
C						F					
B						E					
A	ORIGINAL ISSUE	JS	IL	MDJ	7/13/2016	D					

X Indicates Latest Revision | Completely Revised | New Page | Information Removed

SHEET 1 OF 1

SDG&E ELECTRIC OVERHEAD STANDARD

COPPER & COPPERWELD GUY GRIPS

FMO OH 965

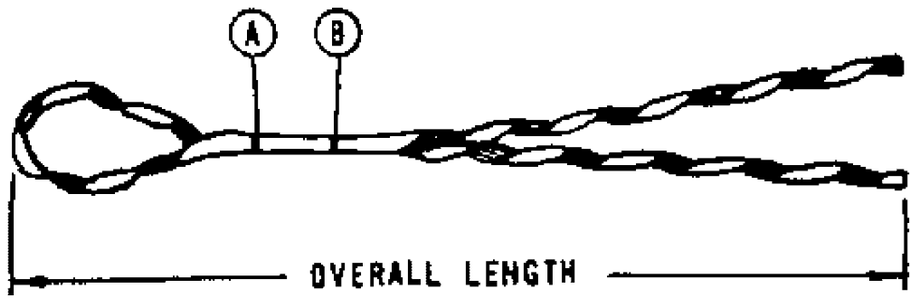

COPPERWELD (M SERIES)

4M	3 WIRE	.209"	WHITE	CDE-8106	18	—	—	(E) 393056
6M	7 WIRE	.237"	YELLOW	CDE-3103	21	—	—	(E) 393088
10M	7 WIRE	.303"	RED	CDE-3109	25	—	—	(E) 392992
16M	7 WIRE	.386"	WHITE	CDE-3115	31	—	—	(E) 393024
COPPERWELD - COPPER & COPPERWELD								
#8C	1CW/2CU	.179"	RED	CDE-8102	17	—	—	(E) 393120
#6A	1CW/2CU	.230"	YELLOW	CDE-3103	21	—	—	(E) 393088
#6C	1CW/2CU	.225"	YELLOW	CDE-3103	21	—	—	(E) 393088
#4A	1CW/2CU	.290"	RED	CDE-3109	25	—	—	(E) 392992
#2F	1CW/6CU	.308"	RED	CDE-3109	25	—	—	(E) 392992
—	—	—	—	—	—	—	—	—

FOR FIELD MAINTENANCE ONLY

TABLE OF CONTENTS

INSTALLATION:

(A) COLORED MARK INDICATES CROSSOVER POINT FOR SMALL INSULATORS OR THIMBLEYES.

(B) COLORED MARK INDICATES CROSSOVER POINT FOR LARGE INSULATORS.

(E) EXEMPT MATERIAL

DATE 9-17-82
APPD

SDG&E ELECTRIC STANDARDS

COPPER & COPPERWELD GUY GRIPS

999.602
SUPERSEDES
965 (9-17-82)

FIELD MAINTENANCE ONLY

REVISION HISTORY

5/1/2018: All versions prior to 2018 are superseded by their current version found inside the Overhead Construction Standard Manual

TABLE OF CONTENTS

© 1998 - 2018 San Diego Gas & Electric Company. All rights reserved. Removal of this copyright notice without permission is not permitted under law.

REV	CHANGE	BY	DSGN	APPV	DATE	REV	CHANGE	BY	DSGN	APPV	DATE
C						F					
B						E					
A	ORIGINAL ISSUE	JK	JS	MDJ	5/1/2018	D					

X	Indicates Latest Revision		Completely Revised		New Page		Information Removed

SDG&E ELECTRIC OVERHEAD CONSTRCUTION STANDARD

SHEET 1 OF 1

POWER INSTALLED SCREW ANCHORS

FMO OH 967-968

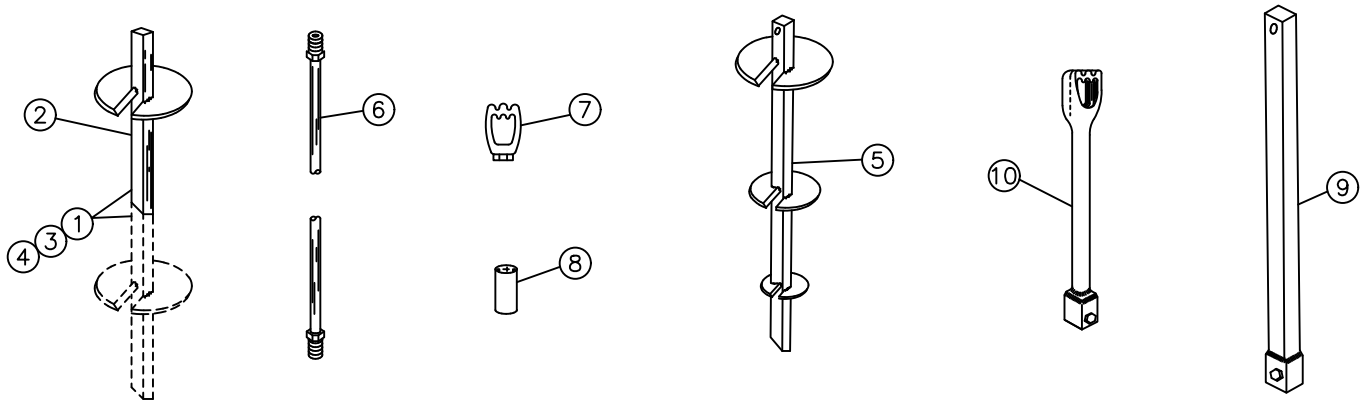

POWER INSTALLED SCREW ANCHORS (PISA)							
ITEM	DESCRIPTION	TYPE OF SOIL	HOLDING POWER RANGE (G) (C)	MANUFACTURER	CATALOG NUMBER	STOCK NUMBER	ASSEMBLY UNITS
1	TWO 4 INCH HELIXES (B)	EXTREMELY HARD GROUND ONLY, DECOMPOSED GRANITE, CALECHI (AREAS NOW UTILIZING BACKHOE)	12,500 – 18,000 LBS	A. B. CHANCE	V102–1428	108262	SA2–4
2	ONE 8 INCH HELIX	SAND, FILL, LOOSE SOIL WET CLAYS, SILT	1,000 – 3,500 LBS	A. B. CHANCE	E102–1223	108248	SA1–8
		MEDIUM FIRM, COMPACT GRAVEL, CLAYPAN, ROCK AND GRAVEL AND ALL MEDIUM SOILS.	5,000 – 10,000 LBS				
		HARD GROUND, DENSE CLAY, LAMINATED ROCK, SLATE, SCHIST, SANDSTONE, ROCK AND GRAVEL COMBINATION, ALL ROCK AND HARD GROUND SOILS	11,000 – 18,000 LBS (D)				
		EXTREMELY HARD GROUND, DECOMPOSED GRANITE, CALECHI, ETC. (IF CAN BE INSTALLED)	18,000 LBS (D)				
3	TWO 8 INCH HELIXES	SAND, FILL, LOOSE SOIL, WET CLAYS, SILT	4,000 – 7,500 LBS	A. B. CHANCE	E102–1219	108250	SA2–8
		MEDIUM FIRM, COMPACT GRAVEL, CLAYPAN, ROCK AND GRAVEL AND ALL MEDIUM SOILS	10,000 – 15,000 LBS				
		HARD GROUND, DENSE CLAY, LAMINATED ROCK, SLATE, SCHIST, SANDSTONE ROCK AND CLAY COMBINATION AND ALL ROCK AND HARD GROUND SOILS. (IF CAN BE INSTALLED)	18,000 LBS (D)				
4	TWO 10 INCH HELIXES	SAND, FILL, LOOSE SOIL, WET CLAY, SILT	7,500 – 12,500 LBS	A. B. CHANCE	E102–0823	108272	SA2–10
		MEDIUM FIRM (IF CAN BE INSTALLED)	18,000 LBS (D)				
5	(F) TRIPLE 10 INCH 10" X 11 5/6" X 13 1/2"	SAND, MEDIUM TO SOFT SOIL	6000 – 35,000 LBS.	A. B. CHANCE	012642 EJN	108296	SA3–10

POWER INSTALLED SCREW ANCHOR RODS AND ACCESSORIES					
ITEM	DESCRIPTION	MANUFACTURER	CATALOG NUMBER	STOCK NUMBER	ASSEMBLY UNITS
6	1" BY 3–1/2' ROD EXTENSION	A. B. CHANCE	12338 P	601776	EXT3–
	1" BY 7' ROD EXTENSION	A. B. CHANCE	12334 P	601792	EXT7–
7	1" TRIPLEYE EYE NUT	A. B. CHANCE	12585	504016	–
		DIXIE ELEC	D–6567		
		JOSLYN	J–6375		
		KORTICK	K3127		
8	1" ROD COUPLING	A. B. CHANCE	12247 P	279272	RODCPL
9	1–1/2" X 5' ROD EXTENSION WITH COUPLING	A. B. CHANCE	12656	639284	SA5EXT
10	TRIPLEYE STUD WITH SQ. COUPLING	A. B. CHANCE	C 1020025	701550	SA3EYE

INSTALLATION:

A. PISA ANCHORS ARE NOT TO BE INSTALLED IN CORROSIVE AREAS AS DEFINED ON STD 929. SEE STD. 969 FOR HOLDING POWERS OF PROTECTED CROSSPLATE ANCHORS.

(B) UNDER NO CIRCUMSTANCES SHOULD THIS ANCHOR BE USED IN ANY SOILS OTHER THAN EXTREMELY HARD GROUND AS NOTED.

(C) HOLDING POWER RANGES ARE GIVEN AS A GUIDE FOR SELECTING THE REQUIRED ANCHOR. THESE VALUES ARE ESTIMATES. FOR ACTUAL DETERMINATION OF HOLDING POWER, SEE STANDARD 968.

(D) MAXIMUM RATING OF 1" ANCHOR ROD IS 18,000 LBS.

(F) THIS ANCHOR REQUIRES A 1–1/2" ROD, M&S 639284.

(G) A FACTOR OF SAFETY OF TWO HAS BEEN USED.

© 1998 - 2010 San Diego Gas & Electric Company. All rights reserved. Removal of this copyright notice without permission is not permitted under law.

TABLE OF CONTENTS

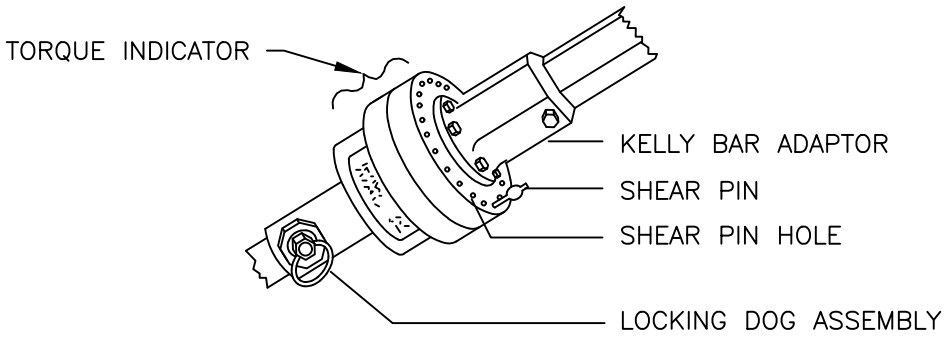

TORQUE INDICATOR ASSEMBLY

ANCHOR HOLDING POWER (POUNDS)(F)					
NUMBER OF SHEAR PINS	TWO 4 INCH HELIXES 7000 FT–LBS MAX TORQUE	ONE 8 INCH HELIX 7000 FT–LBS MAX TORQUE	TWO 8 INCH HELIXES 7000 FT–LBS MAX TORQUE	TWO 10 INCH HELIXES 5000 FT–LBS MAX TORQUE	TRIPLE HELIX 10"–11 5/16"–13 1/2" 6500 FT–LBS MAX TORQUE
1	(C)	(C)	(C)	(C)	(C)
2	(C)	(C)	(C)	(C)	(C)
3	(C)	(C)	8,500	9,500	7,000
4	(C)	7,000	9,500	10,500	10,000
5	(C)	8,500	10,500	11,500	12,500
6	(C)	9,000	12,000	13,000	15,000
7	(C)	10,500	14,000	15,000	17,500
8	(C)	13,500	15,000	17,000	18,000
9	(C)	15,000	17,000	18,000 (D)	20,500
10	18,000 (D)	16,500	18,000 (D)	18,000 (D)	24,000
11	18,000 (D)	17,500	18,000 (D)	(G)	27,000
12	18,000 (D)	18,000 (D)	18,000 (D)	(G)	30,500
13	18,000 (D)	18,000 (D)	18,000 (D)	(G)	34,500
14	18,000 (D)	18,000 (D)	18,000 (D)	(G)	(G)

NOTES:

A. USE ONLY SHEAR PINS (STOCK NUMBER 532152) IN TORQUE INDICATOR. EACH SHEAR PIN CAN WITHSTAND 500 FT.LBS. OF TORQUE.

B. LOAD TORQUE INDICATOR WITH MAXIMUM NUMBER OF SHEAR PINS WHILE DRIVING ANCHOR (THAT IS 14 PINS FOR A 7,000 FT–LB ANCHOR. 13 PINS FOR A 6,500 FT–LB ANCHOR, OR 10 PINS FOR A 5,000 FT–LB ANCHOR). WHEN INDICATOR IS APPROXIMATELY TWO FEET ABOVE GROUND, LEAVE REQUIRED NUMBER OF PINS IN TORQUE INDICATOR AND CONTINUE TO DRIVE ANCHOR. IF PINS SHEAR, THEN YOU HAVE THE HOLDING POWER INDICATED BY THE ABOVE TABLE. IF PINS DO NOT SHEAR, ADD AN EXTENSION, REPLACE THE SHEAR PINS JUST REMOVED, AND CONTINUE DRIVING. DISCARD ANY USED PINS THAT WERE NOT SHEARED DURING INSTALLATION.

(C) ANCHOR IS NOT CONSIDERED A GOOD INSTALLATION.

(D) LIMITED BY 1" ROD WHICH HAS A MAXIMUM RATING OF 18,000 LBS.

(F) A FACTOR OF SAFETY OF TWO HAS BEEN USED ON ALL HOLDING POWER VALUES. MAXIMUM TORQUE VALUES ARE RATINGS FROM MANUFACTURER.

(G) THIS ANCHOR IS NOT TO BE INSTALLED WITH THIS MANY SHEAR PINS.

© 1998 - 2010 San Diego Gas & Electric Company. All rights reserved. Removal of this copyright notice without permission is not permitted under law.

Indicates Latest Revision	Completely Revised	New Page	Information Removed

	SDG&E ELECTRIC STANDARDS	REVISION
968.1	INSTALLATION INSTRUCTIONS FOR POWER INSTALLED SCREW ANCHORS	DATE 6–1–79 APPD PA/209

TABLE OF CONTENTS

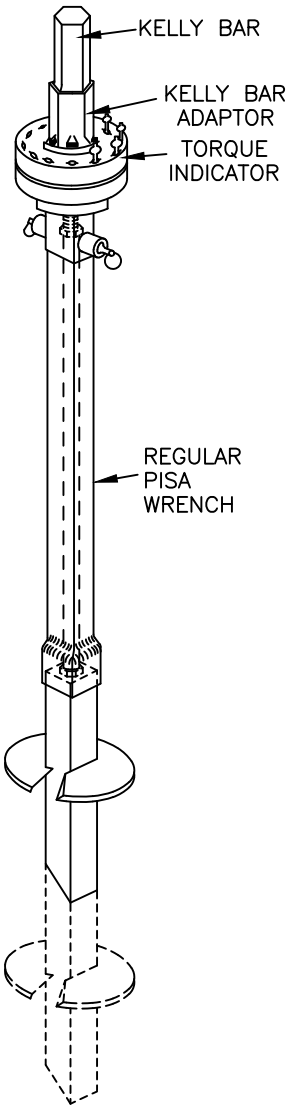

REGULAR PISA
ASSEMBLY INSTALLATION

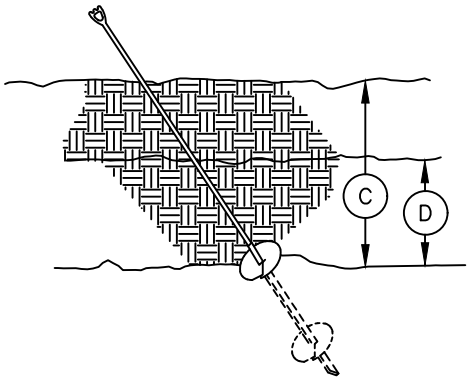

INSTALLED PISA ANCHOR

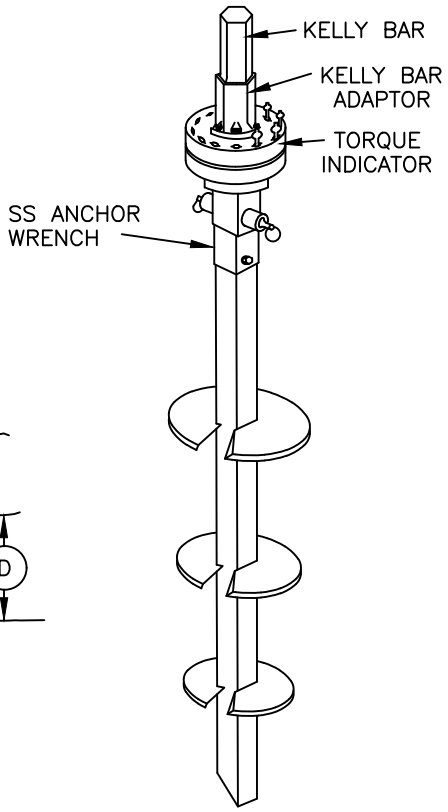

SS ANCHOR
ASSEMBLY INSTALLATION

NOTE:

A. SINGLE AND DOUBLE HELIX ANCHORS ARE INSTALLED WITH A WRENCH. INSTALLATION TORQUE IS TRANSMITTED DIRECTLY TO THE ANCHOR HUB. NO TORQUE IS TRANSFERRED BY THE ROD. NO MORE THAN 14 FEET OF WRENCH IS TO BE USED DUE TO THE EXCESSIVE FORCE REQUIRED TO REMOVE A WRENCH LONGER THAN 14 FEET. THE TRIPLE HELIX ANCHOR REQUIRES A SHORT WRENCH WHICH DOES NOT ENTER THE GROUND. ANCHOR EXTENSIONS MAY BE ADDED UNTIL THE DESIRED TORQUE IS REACHED. THE TRIPLE HELIX ANCHOR ROD WILL WRAP AS IT IS BEING INSTALLED. THIS IS NORMAL FOR THIS ANCHOR. THE ROD MAY WRAP 1 TO 1 1/2 TIMES FOR EVERY FIVE FEET OF LENGTH.

B. IN EXTREMELY HARD GROUND, TRY TO INSTALL ONE 8 INCH HELIX–TYPE ANCHOR FIRST. IF THE ONE 8 INCH HELIX–TYPE ANCHOR CANNOT BE INSTALLED. TRY A TWO 4 INCH HELIX–TYPE ANCHOR.

(C) THE UPPER HELIX OF A POWER INSTALLED, SCREW ANCHOR MUST BE BELOW GROUND AT LEAST 5 FEET.

(D) THE UPPER HELIX MUST BE COVERED BY AT LEAST TWO FEET OF GOOD ANCHORING SOIL. SOIL WHICH HAS BEEN DISTURBED BY A PREVIOUS ANCHOR INSTALLATION ATTEMPT IS NOT GOOD ANCHORING SOIL.

© 1998 - 2005 San Diego Gas & Electric Company. All rights reserved. Removal of this copyright notice without permission is not permitted under law.

	Indicates Latest Revision		Completely Revised		New Page		Information Removed

REVISION	SDG&E ELECTRIC STANDARDS	
DATE 5–12–78 APPD PJA / RDJ	INSTALLATION INSTRUCTIONS FOR POWER INSTALLED SCREW ANCHORS	968.2

TABLE OF CONTENTS

OH974 FIELD MAINTENANCE ONLY

ALL VERSIONS LISTED IN FMO ARE SUPERSEDED BY THEIR CURRENT VERSION FOUND INSIDE THE OVERHEAD CONSTRUCTION STANDARDS MANUAL.

REVISION HISTORY:

04/06/2023: MOVED TO FMO

TABLE OF CONTENTS

© 1998 - 2023 San Diego Gas & Electric Company. All rights reserved. Removal of this copyright notice without permission is not permitted under law.

REV	CHANGE	DR	BY	DSN	APV	DATE	REV	CHANGE	DR	BY	DSN	APV	DATE
C							F						
B							E						
A	ORIGINAL ISSUE	GLC	RSL	JAS	KRG	04/06/2023	D						

Indicates Latest Revision | Completely Revised [X] | New Page | Information Removed

SCOPE: THIS STANDARD SHOWS A STEEL GUY POLE, DESIGNED FOR A MAXIMUM GUYING TENSION OF 5700 POUNDS, TO BE USED WHEN GUYING HEAVY LOADS. BY DEVIATION ONLY, CONTACT EDE.

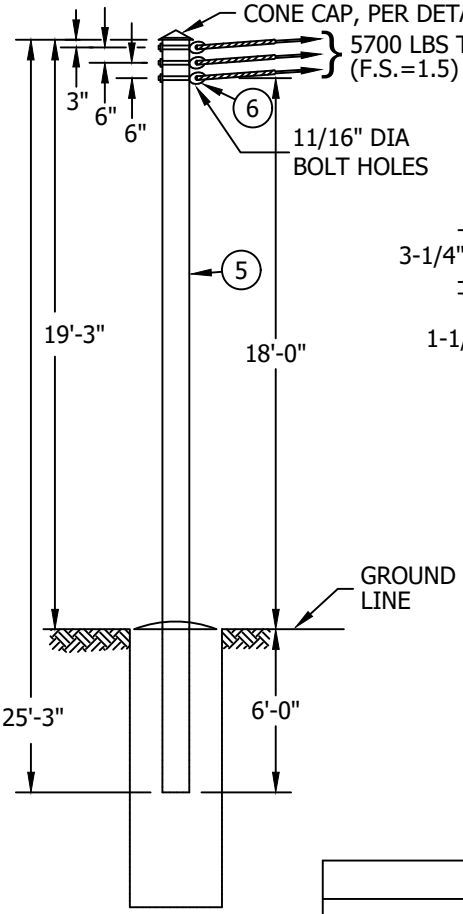

STEEL GUY POLE

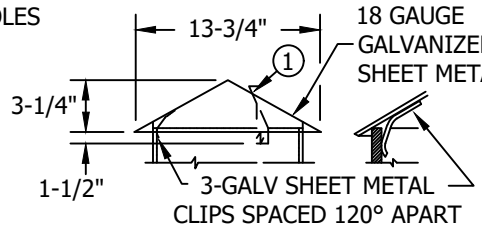

CONE CAP FOR GUY POLE

TABLE 1	
SOIL TYPE	**ASSEMBLY UNITS**
HARD	SS-HRD
MEDIUM	SS-MED
SOFT	SS-SFT

TABLE 2		
SOIL TYPE (a)	**L (IN FEET)**	**CONCRETE ITEM 2 (CU YDS)**
HARD	8	2.3
MEDIUM	11	3.1
SOFT	16	4.4

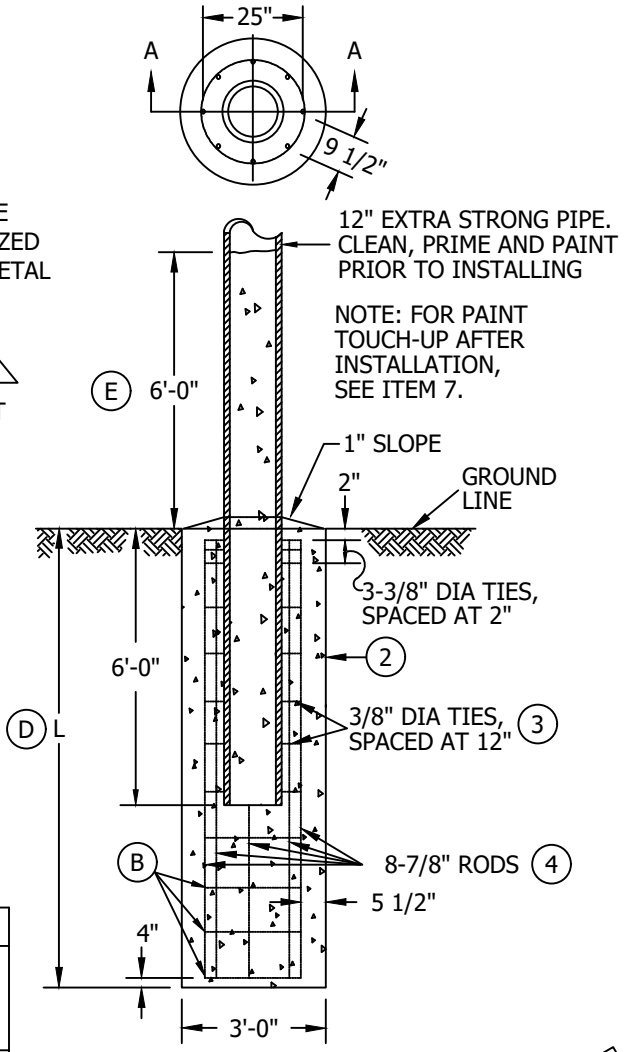

SECTION A-A
CONCRETE DETAIL

FIELD MAINTENANCE ONLY

INSTALLATION:

(A) CONCRETE IS TO HAVE A MINIMUM 28 DAY COMPRESSION STRENGTH OF 3000 PSI.

(B) REINFORCING RODS ARE TO BE TIED, NOT WELDED.

(C) TIME REQUIRED BEFORE POLE IS SELF SUPPORTING MAY BE CUT IN HALF BY USING HIGH EARLY STRENGTH CONCRETE WITH CHLORIDE-FREE ACCELERATING ADMIXTURE.

(D) REBAR CAGE DIAMETER IS 25" AND LENGTH IS 'L' LESS 6"

(E) AFTER POLE HOLE IS FILLED WITH CONCRETE TO GROUNDLINE, BACKFILL STEEL STUB TO A LEVEL 6'-0" ABOVE GROUNDLINE FROM TOP OF PIPE.

© 1998 - 2023 San Diego Gas & Electric Company. All rights reserved. Removal of this copyright notice without permission is not permitted under law.

REV	CHANGE	DR	BY	DSN	APV	DATE	REV	CHANGE	DR	BY	DSN	APV	DATE
C	MOVED TO FMO	GLC	RSL	JAS	KRG	04/06/2023	F						
B	DRAWING UPDATE	PEI	PEI	-	-	02/18/2019	E						
A	ORIGINAL ISSUE	-	-	PTA	MC	06/18/2007	D						

X Indicates Latest Revision | Completely Revised | New Page | Information Removed

SDG&E ELECTRIC OVERHEAD FIELD MAINTENANCE ONLY STANDARDS

STEEL GUY POLE

FMO OH974.1

TABLE OF CONTENTS

BILL OF MATERIALS:

ITEM	DESCRIPTION	QUANTITY	CONSTR. STD OR PAGE NO.	STOCK NUMBER	ASSEMBLY UNIT
1	CONE CAP, PER DETAIL	1	-	S552416	SEE TABLE 1
2	CONCRETE (3000 LBS) (A)(C)	SEE TABLE 2	-	-	
3	RODS, REINFORCED, 3/8" DIAMETER X 7' - 6" (c)	VARIES	-	S552416	
4	RODS, REINFORCED, 7/8" DIAMETER X (L MINUS 6") (c)	8	-	S552416	
5	PIPE, EXTRA STRONG, 12" DIAMETER (b)	25'-3"	-	S552416	
6	GUY EYELET, 5/8"	3	962	S338176	DELINK
7	PAINT, GRAY, SPRAY, FOR TOUCH UP	AS REQ'D	-	S514150	FG78

NOTES: NONE

REFERENCE:

(a) IF SOIL TYPE IS IN QUESTION, CONTACT CIVIL/STRUCTURAL ENGINEERING.

(b) SEE ASTM A53 GRADE B, TYPE E OR S FOR 12" DIAMETER PIPE SPECIFICATIONS.

(c) SEE ASTM A615 FOR GRADE 60 REBAR SPECIFICATIONS.

d. STEEL GUY POLES OF THIS TYPE INSTALLED PRIOR TO 1975 WERE DESIGNED FOR 5000 LBS MAXIMUM GUYING TENSION.

TABLE OF CONTENTS

FIELD MAINTENANCE ONLY

© 1998 - 2023 San Diego Gas & Electric Company. All rights reserved. Removal of this copyright notice without permission is not permitted under law.

REV	CHANGE	DR	BY	DSN	APV	DATE	REV	CHANGE	DR	BY	DSN	APV	DATE
C	MOVED TO FMO	GLC	RSL	JAS	KRG	04/06/2023	F						
B	DRAWING UPDATE	PEI	PEI	-	-	02/18/2019	E						
A	ORIGINAL ISSUE	-	-	PTA	MC	06/18/2007	D						

MAIN TABLE OF CONTENTS

PAGE	SUBJECT
1002	GROUNDING GENERAL INFORMATION

© 1998 - 2022 San Diego Gas & Electric Company. All rights reserved. Removal of this copyright notice without permission is not permitted under law.

REV	CHANGE	DR	BY	DSN	APV	DATE	REV	CHANGE	DR	BY	DSN	APV	DATE
C							F						
B							E						
A	ORIGINAL ISSUE	EDM	MRF	GLW	FRC	03/01/2022	D						

Indicates Latest Revision | Completely Revised | X | New Page | Information Removed

SDG&E ELEVTRIC OVERHEAD FIELD MAINTENANCE ONLY STANDARDS

GROUNDING & BONDING
TABLE OF CONTENTS

OH1002 FIELD MAINTENANCE ONLY

ALL VERSIONS LISTED IN FMO ARE SUPERSEDED BY THEIR CURRENT VERSION FOUND INSIDE THE OVERHEAD CONSTRUCTION STANDARD MANUAL.

REVISION HISTORY:

03/01/2022: MOVED TO FMO

TABLE OF CONTENTS

© 1998 - 2022 San Diego Gas & Electric Company. All rights reserved. Removal of this copyright notice without permission is not permitted under law.

REV	CHANGE	DR	BY	DSN	APV	DATE	REV	CHANGE	DR	BY	DSN	APV	DATE
C							F						
B							E						
A	ORIGINAL ISSUE	EDM	MRF	GLW	FRC	03/01/2022	D						

NOTES (CONT'D):

V. WHAT SHOULD BE GROUNDED:
WHERE POLE GROUNDS OR GROUNDED CONDUCTORS ARE AVAILABLE, CONNECTIONS SHALL BE MADE TO THE FOLLOWING CONDUCTORS, APPARATUS OR COMPONENT PARTS OF THE OVERHEAD DISTRIBUTION SYSTEM.

c. **SWITCHES:**
BASES OF GANG-OPERATED SWITCHES SHALL BE GROUNDED, WITH THE EXCEPTION OF SWITCHES MOUNTED ON A FIBERGLASS CROSSARM.

e. **TRIPLE TERMINATOR BRACKET:**
INTERCONNECT TRIPLE TERMINATOR BRACKET, SURGE ARRESTOR GROUND, UNDERGROUND CABLE CONCENTRIC NEUTRAL, AND OVERHEAD NEUTRAL AS SHOWN IN OVERHEAD CONSTRUCTION STANDARDS SECTION 1400.

TABLE OF CONTENTS

FIELD MAINTENANCE ONLY

© 1998 - 2022 San Diego Gas & Electric Company. All rights reserved. Removal of this copyright notice without permission is not permitted under law.

REV	CHANGE	DR	BY	DSN	APV	DATE	REV	CHANGE	DR	BY	DSN	APV	DATE
C	EDITORIAL CHANGES	-	GW	JS	MDJ	04/01/2018	F	MOVED TO FMO	EDM	MRF	GLW	FRC	03/01/2022
B	UPDATE DRAWING & NOTES	-	GW	GW	MDJ	06/16/2016	E	EDITORIAL CHANGES	EDM	JAC	JES	CZH	03/09/2020
A	EDITORIAL CHANGES	-	JC	IL	JS	02/19/2015	D	EDITORIAL CHANGES	-	GW	JS	CZH	09/01/2018

MAIN TABLE OF CONTENTS

PAGES	SUBJECT
1121	TRANSFORMER PREFIXES, POLE-MOUNTED, SINGLE PHASE
1128	2.4 OR 4KV SINGLE PHASE TYPE "W" TRANSFORMER INSTALLATION 100KVA MAXIMUM, ARMLESS TANGENT CONST
1129	2.4 OR 4KV, SINGLE PHASE TYPE "W" TRANSFORMER INSTALLATION 100KVA MAXIMUM, ARMLESS DEAD END CONST
1131	2.4 OR 4KV, SINGLE PHASE, TYPE "WE" TRANSFORMER INSTALLATION, 25KVA MAX., SECONDARY RACK CONSTRUCTION
1132	2.4 OR 4KV, SINGLE PHASE, TYPE "WE" TRANSFORMER INSTALLATION, 25KVA MAX., SECONDARY LINE ARM CONSTRUCTION
1133	2.4 OR 4KV, SINGLE PHASE TYPE "W" TRANSFORMER INSTALLATION 100KVA MAXIMUM, C.O. ARM, SECONDARY RACK CONSTRUCTION
1135	2.4 OR 4KV, SINGLE PHASE TYPE "W" TRANSFORMER INSTALLATION, 100KVA MAXIMUM LINE ARM MOUNTED C.O., SECONDARY RACK CONSTRUCTION
1136	2.4 OR 4KV, SINGLE PHASE TYPE "W" TRANSFORMER INSTALLATION, 100KVA MAXIMUM LINE ARM MOUNTED C.O., SECONDARY LINE ARM CONSTRUCTION
1138	2.4KV OR 4KV, SINGLE PHASE PARALLELED TRANSFORMER INSTALLATION
1141	7.2 OR 12KV SINGLE PHASE YE, YJ, HE, OR HJ TRANSFORMER INSTALLATION 100KVA MAXIMUM ARMLESS TANGENT CONSTRUCTION
1142	7.2 OR 12KV SINGLE PHASE YE, YJ, HE, OR HJ TRANSFORMER INSTALLATION 100KVA MAXIMUM ARMLESS DEAD END CONSTRUCTION
1145	7.2 OR 12KV SINGLE PHASE YE, YJ, HE OR HJ TRANSFORMER INSTALLATION, SECONDARY RACK CONSTRUCTION
1147	12KV, SINGLE PHASE TYPE "H" TRANSFORMER INSTALLATION, C.O. ARM, SECONDARY RACK CONSTRUCTION
1149	12KV SINGLE PHASE TYPE "H" TRANSFORMER INSTALLATION 100KVA MAX, LINE ARM MOUNTED CO'S, SECONDARY RACK CONSTRUCTION
1150	12KV SINGLE PHASE TYPE "H" TRANSFORMER INSTALLATION, 100KVA MAX, LINE ARM MOUNTED CO'S, SECONDARY LINE ARM CONSTRUCTION
1154	4KV OPEN WYE OR 2.4KV OPEN DELTA TYPE "W" TRANSFORMER INSTALLATION 2-50KVA MAX., ARMLESS TANGENT CONSTRUCTION
1156	4KV OPEN WYE TYPE "W" TRANSFORMER INSTALLATION, SECONDARY LINE ARM CONSTRUCTION

© 1998 - 2023 San Diego Gas & Electric Company. All rights reserved. Removal of this copyright notice without permission is not permitted under law.

REV	CHANGE	DR	BY	DSN	APV	DATE	REV	CHANGE	DR	BY	DSN	APV	DATE
C	OH1194 MOVED TO FMO	GLC	VMV	FRC	CZH	02/08/2021	F	OH1170 MOVED TO FMO	EDM	MRF	MRF	KRG	04/06/2023
B	ADDED 1121	--	PS	JS	MDJ	01/25/2017	E	OH1190 MOVED TO FMO	EDM	MRF	GLW	KRG	10/21/2022
A	ORIGINAL ISSUE	--	JS	IL	MDJ	07/13/2016	D	OH1192 MOVED TO FMO	EDM	MRF	GLW	CZH	07/27/2021

X Indicates Latest Revision | Completely Revised | New Page | Information Removed

SDG&E ELECTRIC OVERHEAD FIELD MAINTENANCE ONLY STANDARDS

TRANSFORMER, BOOSTER FMO
TABLE OF CONTENTS

MAIN TABLE OF CONTENTS

PAGES	SUBJECT
1161	12KV OPEN DELTA TYPE "HE" OR "HJ" TRANSFORMER INSTALLATION, 2-50KVA MAX., ARMLESS TANGENT CONSTRUCTION
1162	12KV OPEN DELTA TYPE "HE" OR "HJ" TRANSFORMER INSTALLATION 2-50KVA MAX., ARMLESS DEADEND CONSTRUCTION
1167	12KV, OPEN DELTA TYPE "HE" OR "HJ" TRANSFORMER INSTALLATION, 2-50KVA MAX., SECONDARY ARM CONSTRUCTION
1170	4KV, THREE-PHASE INSTALLATION, SINGLE-PHASE TRANSFORMERS
1172	4KV, THREE PHASE, TYPE "WE" OR "WJ" TRANSFORMER INSTALLATION, 3-25KVA MAX., SECONDARY LINE ARM CONSTRUCTION
1174	7.2 AND 12KV THREE-PHASE TRANSFORMER CLUSTER MOUNT INSTALLATION-ALLEY ARM CONSTRUCTION
1181	12KV, THREE PHASE, TYPE "H" OR "HF" TRANSFORMER INSTALLATION, THREE 75KVA MAXIMUM, SECONDARY LINE ARM CONSTRUCTION
1184	12KV, THREE PHASE, TYPE "HE" OR "HJ" TRANSFORMER INSTALLATION, THREE 75KVA MAXIMUM, SECONDARY LINE ARM CONSTRUCTION
1190	VOLTAGE BOOSTING TRANSFORMER STATION, 12-12.47KV, THREE-PHASE INSTALLATION
1192	VOLTAGE BOOSTING TRANSFORMER STATION CABLE POLE USING NON-PORCELAIN TERMINALS, 12-12.47KV THREE-PHASE INSTALLATION
1194	12KV GROUNDING BANK INSTALLATION

© 1998 - 2023 San Diego Gas & Electric Company. All rights reserved. Removal of this copyright notice without permission is not permitted under law.

REV	CHANGE	DR	BY	DSN	APV	DATE	REV	CHANGE	DR	BY	DSN	APV	DATE
C	OH1194 MOVED TO FMO	GLC	VMV	FRC	CZH	02/08/2021	F	OH1170 MOVED TO FMO	EDM	MRF	MRF	KRG	04/06/2023
B	ADDED 1121	--	PS	JS	MDJ	01/25/2017	E	OH1190 MOVED TO FMO	EDM	MRF	GLW	KRG	10/21/2022
A	ORIGINAL ISSUE	--	JS	IL	MDJ	07/13/2016	D	OH1192 MOVED TO FMO	EDM	MRF	GLW	CZH	07/27/2021

X Indicates Latest Revision | Completely Revised | New Page | Information Removed

SDG&E ELECTRIC OVERHEAD FIELD MAINTENANCE ONLY STANDARDS

TRANSFORMER, BOOSTER FMO
TABLE OF CONTENTS

FMO
OH1101.2

FIELD MAINTENANCE ONLY

REVISION HISTORY:

1/25/2017: All versions prior to 2016 are superseded by their current version found inside the Overhead Construction Standard Manual.

TABLE OF CONTENTS

© 1998 - 2016 San Diego Gas & Electric Company. All rights reserved. Removal of this copyright notice without permission is not permitted under law.

REV	CHANGE	BY	DSGN	APPV	DATE	REV	CHANGE	BY	DSGN	APPV	DATE
C						F					
B						E					
A	ORIGINAL ISSUE	PS	JS	MDJ	1/25/2017	D					

X Indicates Latest Revision | Completely Revised | New Page | Information Removed

SDG&E ELECTRIC OVERHEAD CONSTRUCTION STANDARD

TRANSFORMER PREFIXES, POLE-MOUNTED
SINGLE PHASE

FMO
OH 1121

NOTES:

TRANSFORMERS LISTED IN THIS STANDARD ARE FOR EITHER NEW INSTALLATIONS OR FIELD REPLACEMENTS FOR EXISTING UNITS. TRANSFORMERS LISTED IN STANDARDS BEGINNING WITH 1199.201 ARE CLASSIFIED INTO TWO CATEGORIES:

1) THOSE THAT ARE FIELD REPLACEMENT FOR EXISTING UNITS (NOT TO BE USED FOR NEW INSTALLATIONS) AND,

2) THOSE THAT ARE NO LONGER PURCHASED (INDICATED BY A FOOTNOTE).

TRANSFORMER PREFIXES, POLEMOUNTED, SINGLE PHASE:

PREFIX	VOLTAGE		DESCRIPTION AND APPLICATION	KVA	(D)(F) TAPS	STOCK NUMBER	ASSEMBLY UNITS
	PRIMARY	SECONDARY					
X	480	120/240	1Ø SECONDARY	1.5	–	S757712 (G)	X1.5
W	2400/4160Y	120/240	1Ø SECONDARY (K) 3Ø SECONDARY	10	–	S754880	W10
				15	–	S755008	W15
				50	–	S755472	W50
				75	–	S755584	W75
WJ	2400/4160Y	120/240	INTERNALLY FUSED, SECONDARY BREAKER, & LIGHTNING ARRESTERS 1Ø SECONDARY	10	–	S756832	WJ10
				15	–	S756864	WJ15
WF	2400/4160Y	240/480	1Ø SECONDARY (K) 3Ø SECONDARY	10	(B)	S755872	WF10T
				15	(B)	S756000	WF15T
				75	(B)	S756352	WF75T
Y	7200/12470Y	120/240	1Ø SECONDARY (K) 3Ø SECONDARY	10	–	S757946	Y10
				15	–	S757952	Y15
				75	–	S757970	Y75

TABLE OF CONTENTS

© 1998 - 2016 San Diego Gas & Electric Company. All rights reserved. Removal of this copyright notice without permission is not permitted under law.

REV	CHANGE	BY	DSGN	APPV	DATE	REV	CHANGE	BY	DSGN	APPV	DATE
C						F					
B						E					
A	INFORMATION MOVED TO FMO	PS				D					

TRANSFORMER PREFIXES, POLEMOUNTED, SINGLE-PHASE: (CONT'D)

PREFIX	VOLTAGE		DESCRIPTION AND APPLICATION	KVA	(D)(F) TAPS	STOCK NUMBER	ASSEMBLY UNITS
	PRIMARY	SECONDARY					
YJ	7200/12470Y	120/240	INTERNALLY FUSED, SECONDARY BREAKER & LIGHTNING ARRESTERS 1Ø SECONDARY	10	–	757994	YJ10
				15	–	757998	YJ15
				75	–	758010	YJ75
YF	7200/12470Y	240/480	1Ø SECONDARY 3Ø SECONDARY (K)	10	–	757929 (G)	YF10
				15	–	757927 (G)	YF15
				25	–	757930	YF25
				50	–	757928	YF50
H	12000	120/240	1Ø SECONDARY 3Ø SECONDARY (K)	10	–	750464	H10
				15	–	750624	H15
				25	–	750816	H25
				50	–	751104	H50
				75	–	751232	H75
				100	–	750528	H100
				167	–	750688	H167
HE	12000	120/240	INTERNALLY FUSED, SECONDARY BREAKER 1Ø SECONDARY	10	–	751904	HE10
				10	(B)	751920 (G)	HE10T
				15	–	752032	HE15
				25	–	752096	HE25
				50	–	752352	HE50
				75	–	752416	HE75
HJ	12000	120/240	INTERNALLY FUSED, SECONDARY BREAKER & LIGHTNING ARRESTERS 1Ø SECONDARY	10	–	753280	HJ10
				10	(B)	753296 (G)	HJ10T
				15	–	753344	HJ15
				25	–	753440	HJ25
				100		753320	HJ100
HF	12000	240/480	SINGLE PHASE TRANSFORMER 1Ø SECONDARY 3Ø SECONDARY (K)	15	–	752688	HF15T
				15		752704	HF15
				25	–	752752	HF25
				50	–	752896	HF50
				100	–	752656	HF100
				167	–	752720	HF167

TABLE OF CONTENTS

© 1998 - 2016 San Diego Gas & Electric Company. All rights reserved. Removal of this copyright notice without permission is not permitted under law.

REV	CHANGE	BY	DSGN	APPV	DATE	REV	CHANGE	BY	DSGN	APPV	DATE
C						F					
B						E					
A	INFORMATION MOVED TO FMO	PS				D					

FIELD MAINTENANCE ONLY

REVISION HISTORY:

7/13/2016: All versions prior to 2016 are superseded by their current version found inside the Overhead Construction Standard Manual.

TABLE OF CONTENTS

© 1998 - 2016 San Diego Gas & Electric Company. All rights reserved. Removal of this copyright notice without permission is not permitted under law.

REV	CHANGE	BY	DSGN	APPV	DATE	REV	CHANGE	BY	DSGN	APPV	DATE
C						F					
B						E					
A	ORIGINAL ISSUE	JS	IL	MDJ	7/13/2016	D					

X Indicates Latest Revision | Completely Revised | New Page | Information Removed

SHEET 1 OF 1

SDG&E ELECTRIC OVERHEAD STANDARD

2.4 OR 4KV SINGLE PHASE TYPE "W" TRANSFORMER INSTALLATION
100 KVA MAXIMUM, ARMLESS TANGENT CONST

FMO OH 1128

SCOPE: THIS STANDARD SHOWS THE INSTALLATION METHOD OF A TYPE 'W' TRANSFORMER, ON ARMLESS TANGENT CONSTRUCTION.

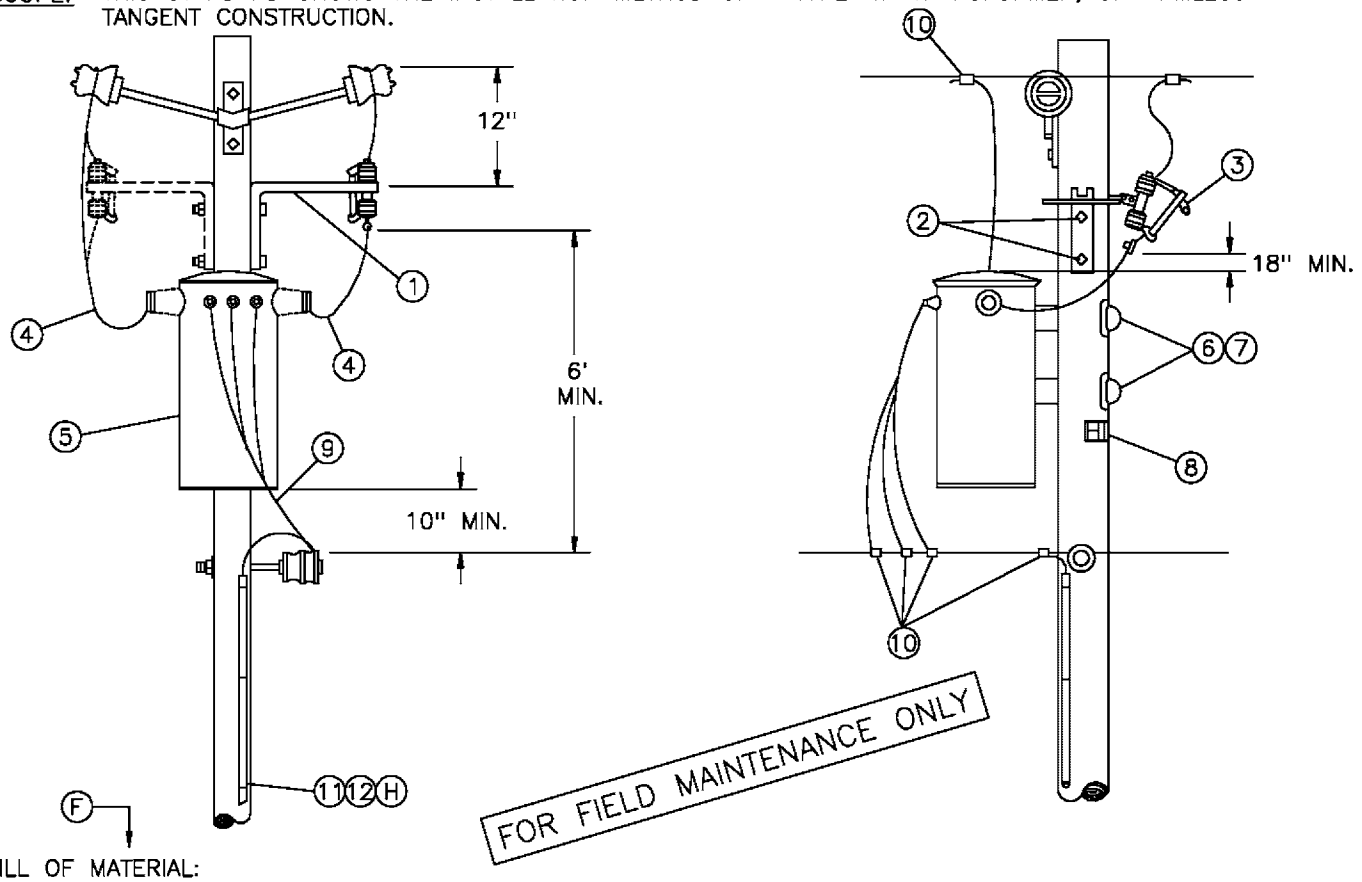

BILL OF MATERIAL:

ITEM	DESCRIPTION	QUANTITY		STOCK NO OR CONSTR STANDARD
		2.4KV	4KV	
1	BRACKET, CUTOUT MOUNTING	2	1	166448
2	BOLT, MACH, GALV, 5/8" X (LENGTH AS REQ'D) & 1 SQ CURVED WASHER	2	2	STD 392
3	CUTOUT, 12KV	2	1	STD 1212
4	WIRE, 5KV INSULATED, XLP, #6 STRANDED COPPER	8'	10'	194304
5	TRANSFORMER, SINGLE PHASE, TYPE W	1	1	STD 1121
6	BOLT, MACH, GALV, 5/8" OR 3/4" X (LENGTH AS REQ'D), 1 SQ CURV & 1 DBL COIL SPRING WASHER	2	2	STD 392
7	COVER, BOLT, PLASTIC & 6 – 10D NAILS, GALV	2 –	2 –	285696 491392
8	SIGN, HIGH VOLTAGE & 9 ROOFING NAILS, GALV	1 –	1 –	647648 492224
9	WIRE, W.P. (SIZE GOVERNED BY TRANSFORMER CAPACITY)	21'	21'	STD 1125
10	CONNECTORS, WIRE COMPRESSION, CU OR AL, AS REQ'D	AS REQ'D		783–787
11	WIRE, BARE STRANDED, COPPER, #6	42'	42'	813536
12	UNIT GROUND, COMPLETE	1	1	603136

REFERENCE:

(F) POLE STEPPING – SEE STANDARD 363.

G. FOR LIGHTNING ARRESTER REQUIREMENTS – SEE STANDARD 1247.

(H) GROUNDING METHODS – SEE STANDARD 1002.

I. FOR POLE TOP MATERIAL – SEE DISTRIBUTION POLE TOPS (SECTION 400).

	SDG&E ELECTRIC STANDARDS	
DATE 1–1–86 APPD /	2.4 OR 4KV SINGLE PHASE TYPE "W" TRANSFORMER INSTALLATION 100 KVA MAXIMUM, ARMLESS TANGENT CONST	1199.208 SUPERSEDES 1128 (1–1–93)

TABLE OF CONTENTS

FIELD MAINTENANCE ONLY

REVISION HISTORY:

7/13/2016: All versions prior to 2016 are superseded by their current version found inside the Overhead Construction Standard Manual.

TABLE OF CONTENTS

© 1998 - 2016 San Diego Gas & Electric Company. All rights reserved. Removal of this copyright notice without permission is not permitted under law.

REV	CHANGE	BY	DSGN	APPV	DATE	REV	CHANGE	BY	DSGN	APPV	DATE
C						F					
B						E					
A	ORIGINAL ISSUE	JS	IL	MDJ	7/13/2016	D					

X Indicates Latest Revision | Completely Revised | New Page | Information Removed

SHEET 1 OF 1

SDG&E ELECTRIC OVERHEAD STANDARD

2.4 OR 4KV, SINGLE PHASE TYPE "W" TRANSFORMER INSTALLATION
100KVA MAXIMUM, ARMLESS DEAD END CONST

FMO
OH 1129

SCOPE: THIS STANDARD SHOWS THE INSTALLATION METHOD OF A TYPE 'W' TRANSFORMER, ON ARMLESS DEADEND CONSTRUCTION.

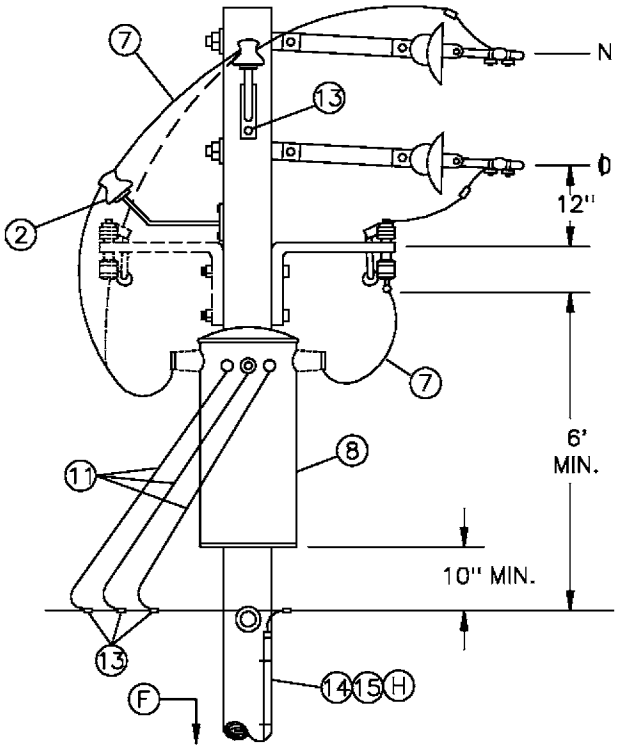

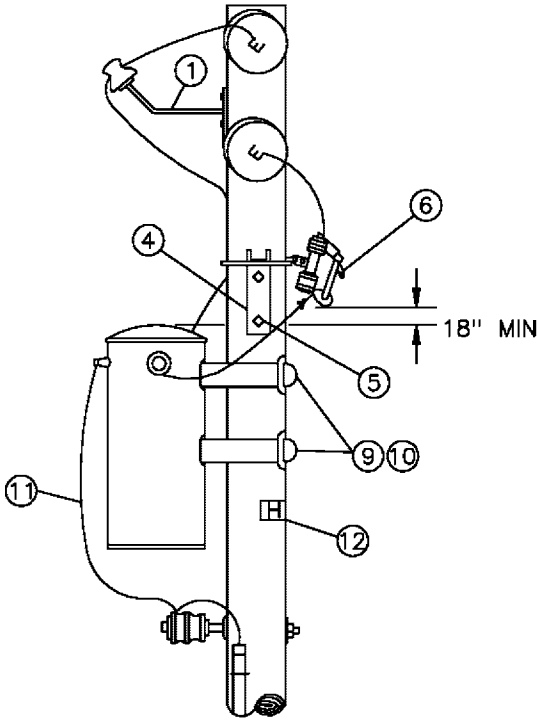

ITEM	DESCRIPTION	QUANTITY		STOCK NO OR CONSTR STANDARD
		2.4KV	4KV	
1	BRACKET, INSULATOR, 1" LEAD THREAD	2	2	166134
2	INSULATOR, CLASS AS REQUIRED	1	2	STD 750
3	SCREW, LAG, GALV. 1/2" X 4"	2	2	621568
4	BRACKET, CUTOUT MOUNTING	2	1	166448
5	BOLT, MACH, GALV, 5/8" X (LENGTH AS REQ'D) & 1 SQ CURVED WASHER	2	2	STD 392
6	CUTOUT, 12KV	2	1	STD 1212
7	WIRE, 5KV INSULATED, XLP, #6 STRANDED COPPER	10'	12'	194304
8	TRANSFORMER, SINGLE PHASE, TYPE W	1	1	STD 1211
9	BOLT, MACH, GALV, 5/8" OR 3/4" X (LENGTH AS REQ'D), 1 SQ CURVED & 1 DBL COIL SPRING WASHER	2	2	STD 392
10	COVER, BOLT, PLASTIC & 6 – 10D NAILS, GALV	2 –	2 –	285696 491392
11	WIRE, W.P. (SIZE GOVERNED BY TRANSFORMER CAPACITY)	21'	21'	STD 1125
12	SIGN, HIGH VOLTAGE & 9 ROOFING NAILS, GALV	1 –	1 –	647648 492224
13	CONNECTORS, WIRE COMPRESSION, CU OR AL, AS REQ'D	AS REQ'D		783–787
14	WIRE, BARE STRANDED, COPPER, #6	42'	42'	813536
15	UNIT GROUND, COMPLETE	1	1	603136

REFERENCE:

(F) POLE STEPPING – SEE STANDARD 363.

G. FOR LIGHTNING ARRESTER REQUIREMENTS – SEE STANDARD 1247.

(H) GROUNDING METHODS – SEE STANDARD 1002.

I. FOR POLE TOP MATERIAL – SEE DISTRIBUTION POLE TOPS (SECTION 400).

	SDG&E ELECTRIC STANDARDS	
DATE 1–1–86 APPD /	2.4 OR 4KV, SINGLE PHASE TYPE "W" TRANSFORMER INSTALLATION 100KVA MAXIMUM, ARMLESS DEAD END CONST	1199.209 SUPERSEDES 1129 (1–1–93)

TABLE OF CONTENTS

FIELD MAINTENANCE ONLY

REVISION HISTORY:

7/13/2016: All versions prior to 2016 are superseded by their current version found inside the Overhead Construction Standard Manual.

TABLE OF CONTENTS

© 1998 - 2016 San Diego Gas & Electric Company. All rights reserved. Removal of this copyright notice without permission is not permitted under law.

REV	CHANGE	BY	DSGN	APPV	DATE	REV	CHANGE	BY	DSGN	APPV	DATE
C						F					
B						E					
A	ORIGINAL ISSUE	JS	IL	MDJ	7/13/2016	D					

X Indicates Latest Revision | Completely Revised | New Page | Information Removed

SHEET
1 OF 1

SDG&E ELECTRIC OVERHEAD STANDARD

2.4 OR 4KV, SINGLE PHASE, TYPE "WE" TRANSFORMER
INSTALLATION, 25 KVA MAX, SECONDARY RACK CONSTRUCTION

FMO
OH 1131

SCOPE: THIS STANDARD SHOWS THE INSTALLATION METHOD OF A TYPE 'WE' TRANSFORMER, ON SECONDARY RACK CONSTRUCTION.

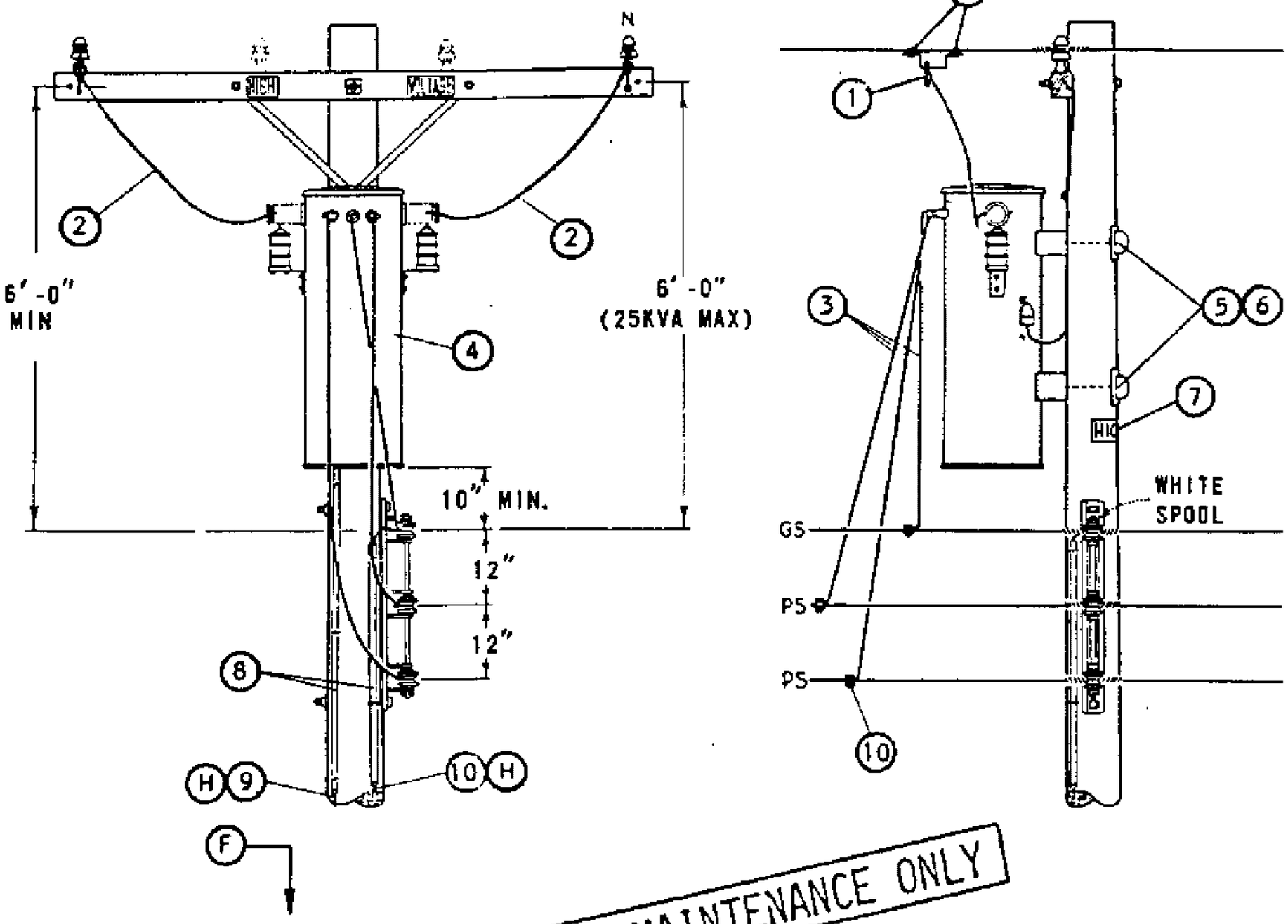

FOR FIELD MAINTENANCE ONLY

BILL OF MATERIAL:

ITEM	DESCRIPTION	QUANTITY	STOCK NO OR CONSTR STANDARD
1	CLAMP, HOTLINE & STIRRUP (E)	2	STD 788
2	WIRE, 5KV INSULATED, XLP, #6 STRANDED COPPER	12'	194304
3	WIRE, W.P., COPPER (SIZE GOVERNED BY TRANSFORMER CAPACITY)	21'	STD 1125
4	TRANSFORMER, SINGLE PHASE (TYPE 'WE' OR 'WJ')	1	STD 1121
5	BOLT, MACH, GALV, 5/8" OR 3/4" X (LENGTH AS REQ'D), 1 SQ CURVED & 1 DBL COIL SPRING WASHER (E)	2	STD 392
6	COVER, BOLT, PLASTIC & (E) 6 - 10D NAILS, GALV (E)	2 -	285696 491392
7	SIGN, HIGH VOLTAGE & (E) 9 ROOFING NAILS, GALV (E)	1 -	647648 492224
8	UNIT GROUND, COMPLETE (A)	2	603136
9	WIRE, #4 BARE STRANDED COPPER (A)	42'	813760
10	WIRE, #6 BARE STRANDED COPPER	42'	813536
11	CONNECTORS, WIRE COMPRESSION, CU OR AL, AS REQ'D (E)	AS REQ'D	783-787

INSTALLATION:

(A) OMIT LIGHTNING ARRESTER GROUND ON TYPE 'WE' TRANSFORMER INSTALLATION.

(E) EXEMPT MATERIAL.

REFERENCE:

(F) POLE STEPPING - SEE STANDARD 363.

G. WHEN LIGHTNING ARRESTERS ARE REQUIRED PER STANDARD 1247, USE TYPE 'WJ' TRANSFORMER.

(H) GROUNDING METHODS - SEE STANDARD 1002.

DATE 1-1-86
APPD AK/RAS

SDG&E ELECTRIC STANDARDS

2.4 OR 4KV, SINGLE PHASE, TYPE "WE" TRANSFORMER INSTALLATION, 25 KVA MAX, SECONDARY RACK CONSTRUCTION

1199.302
SUPERSEDES
1131 (1-1-93)

TABLE OF CONTENTS

FIELD MAINTENANCE ONLY

REVISION HISTORY:

7/13/2016: All versions prior to 2016 are superseded by their current version found inside the Overhead Construction Standard Manual.

TABLE OF CONTENTS

© 1998 - 2016 San Diego Gas & Electric Company. All rights reserved. Removal of this copyright notice without permission is not permitted under law.

REV	CHANGE	BY	DSGN	APPV	DATE	REV	CHANGE	BY	DSGN	APPV	DATE
C						F					
B						E					
A	ORIGINAL ISSUE	JS	IL	MDJ	7/13/2016	D					

X Indicates Latest Revision | Completely Revised | New Page | Information Removed

SHEET
1 OF 1

SDG&E ELECTRIC OVERHEAD STANDARD

2.4 OR 4KV, SINGLE PHASE, TYPE "WE" TRANSFORMER
INSTALLATION, 25 KVA MAX, SECONDARY LINE ARM CONSTRUCTION

FMO
OH 1132

SCOPE: THIS STANDARD SHOWS THE INSTALLATION METHOD OF A TYPE 'WE' TRANSFORMER, ON SECONDARY LINE ARM CONSTRUCTION.

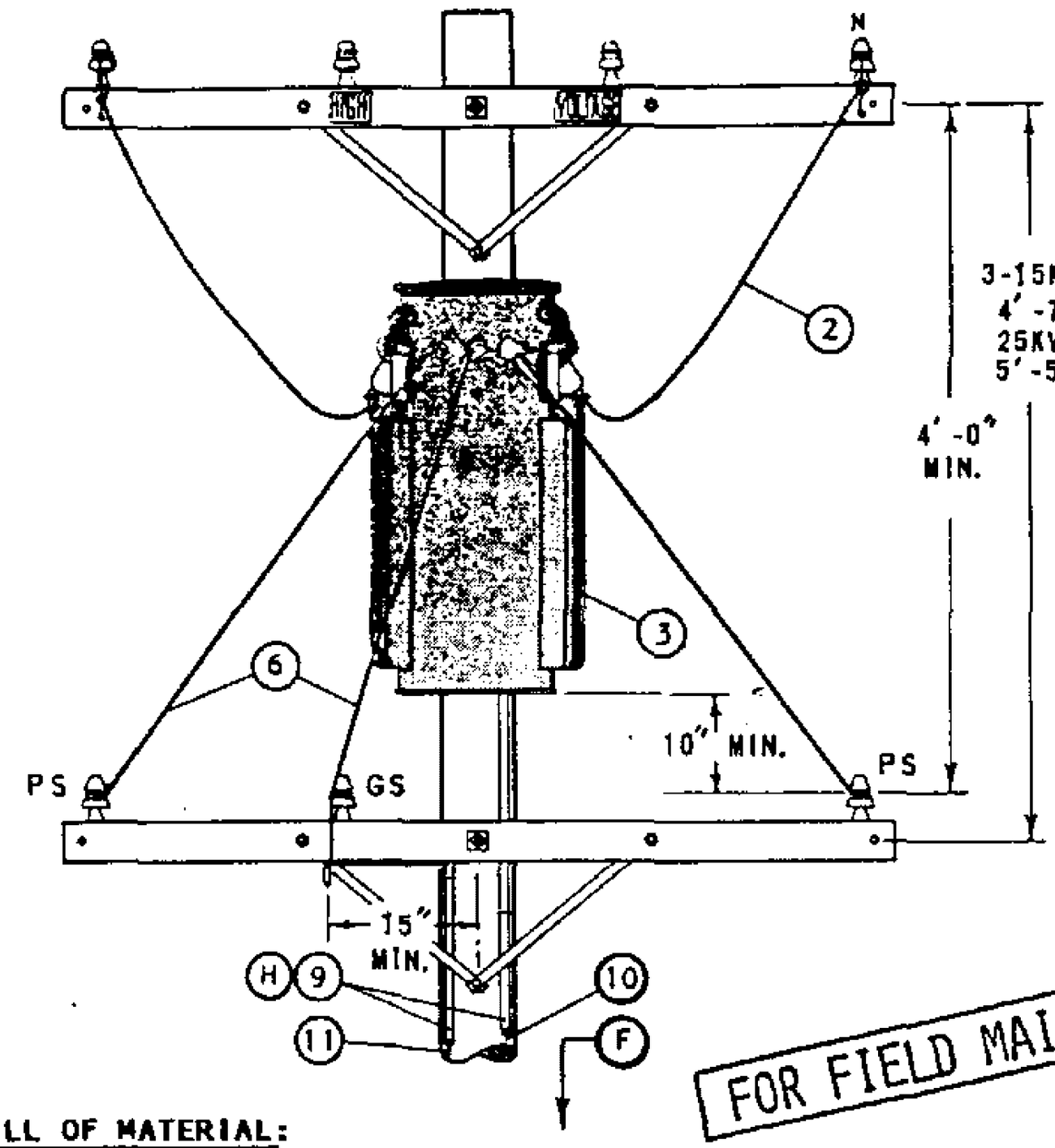

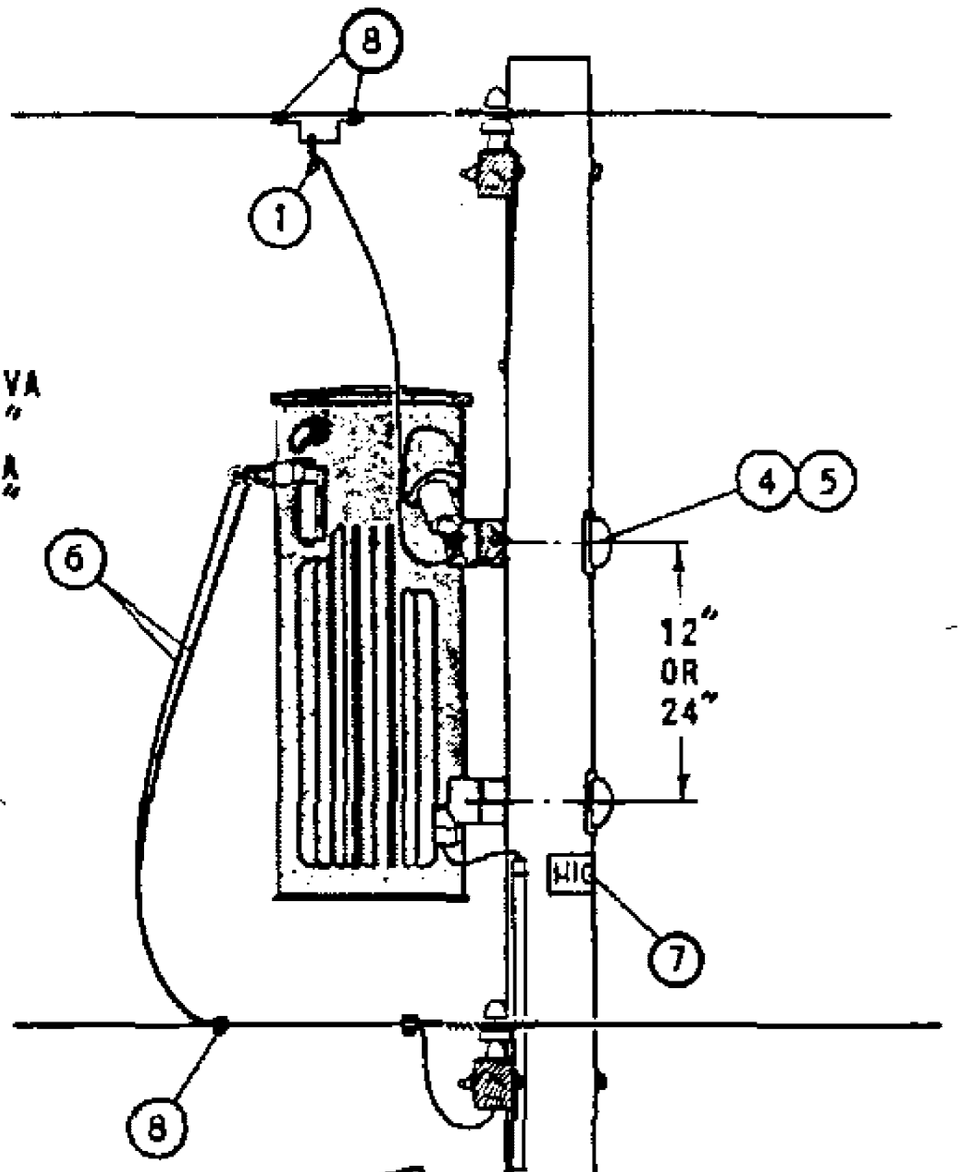

FOR FIELD MAINTENANCE ONLY

TABLE OF CONTENTS

BILL OF MATERIAL:

ITEM	DESCRIPTION	QUANTITY	STOCK NO OR CONSTR STANDARD
1	CLAMP, HOTLINE & STIRRUP (E)	2	STD 788
2	WIRE, 5KV INSULATED, XLP, #6 STRANDED COPPER	12'	194304
3	TRANSFORMER, SINGLE PHASE (TYPE 'WE' OR 'WJ')	1	STD 1121
4	BOLT, MACH, GALV, 5/8" OR 3/4" X (LENGTH AS REQ'D), 1 SQ CURVED & 1 DBL COIL SPRING WASHER (E)	2	STD 392
5	COVER, BOLT, PLASTIC & (E) 6 - 10D NAILS, GALV (E)	2 -	285696 491392
6	WIRE, W.P., COPPER (SIZE GOVERNED BY TRANSFORMER CAPACITY)	21'	STD 1125
7	SIGN, HIGH VOLTAGE & (E) 9 ROOFING NAILS, GALV (E)	1 -	647648 492224
8	CONNECTORS, WIRE COMPRESSION, CU OR AL, AS REQ'D (E)	AS REQ'D	783-787
9	UNIT GROUND, COMPLETE (A)	2	603136
10	WIRE, #4 BARE STRANDED COPPER (A)	41'	813760
11	WIRE, #6 BARE STRANDED COPPER	42'	813536

INSTALLATION:

(A) OMIT LIGHTNING ARRESTER GROUND ON TYPE 'WE' TRANSFORMER INSTALLATION.

(E) EXEMPT MATERIAL.

REFERENCE:

(F) POLE STEPPING - SEE STANDARD 363.

G. WHEN LIGHTNING ARRESTERS ARE REQUIRED, PER STANDARD 1247, USE TYPE 'WJ' TRANSFORMER.

(H) GROUNDING METHODS - SEE STANDARD 1002.

1199.303 SUPERSEDES 1132 (1-1-93)	SDG&E ELECTRIC STANDARDS 2.4 OR 4KV, SINGLE PHASE, TYPE "WE" TRANSFORMER INSTALLATION, 25 KVA MAX, SECONDARY LINE ARM CONSTRUCTION	DATE 1-1-86 APPD AK/RSB

FIELD MAINTENANCE ONLY

REVISION HISTORY:

7/13/2016: All versions prior to 2016 are superseded by their current version found inside the Overhead Construction Standard Manual.

TABLE OF CONTENTS

© 1998 - 2016 San Diego Gas & Electric Company. All rights reserved. Removal of this copyright notice without permission is not permitted under law.

REV	CHANGE	BY	DSGN	APPV	DATE	REV	CHANGE	BY	DSGN	APPV	DATE
C						F					
B						E					
A	ORIGINAL ISSUE	JS	IL	MDJ	7/13/2016	D					

X Indicates Latest Revision | Completely Revised | New Page | Information Removed

SHEET
1 OF 1

SDG&E ELECTRIC OVERHEAD STANDARD

2.4 OR 4KV, SINGLE PHASE, TYPE "WE" TRANSFORMER
INSTALLATION, 25 KVA MAX, SECONDARY LINE ARM CONSTRUCTION

FMO
OH 1133

SCOPE: THIS STANDARD SHOWS THE INSTALLATION METHOD OF A TYPE 'W' TRANSFORMER, ON SECONDARY RACK CONSTRUCTION.

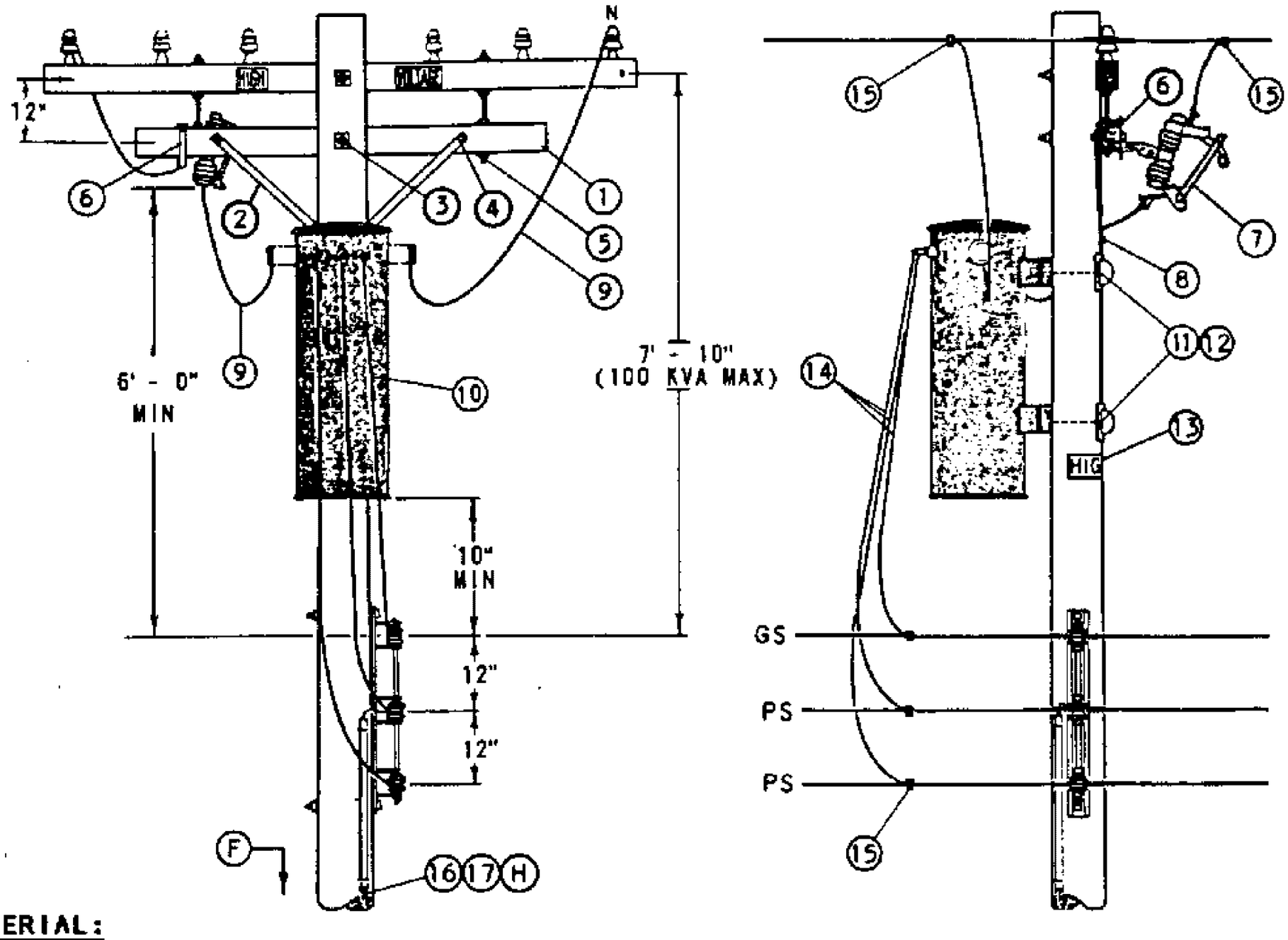

BILL OF MATERIAL:

ITEM	DESCRIPTION		QUANTITY	STOCK NO OR CONSTR STANDARD
1	CROSSARM, 3 1/2" X 4 1/2" X 6' - 0"		1	294112
2	BRACE, FLAT, CROSSARM, 28"	(E)	1	164192
3	BOLT, MACH, GALV, 5/8" X (LENGTH AS REQ'D), 2 SQ & 1 DBL COIL SPRING WASHER	(E)	1	STD 392
4	BOLT, MACH, GALV, 3/8" X 4 1/2", 1 RD & 1 SPRING LOCK WASHER	(E)	2	STD 392
5	BOLT, SPACE, GALV, 5/8" X 20", 4 SQ & 2 DBL COIL SPR WASHERS	(E)	2	STD 392
6	BRACKET, CUTOUT/ARRESTER, FOR CROSSARM MOUNTING	(E)	1	166070
7	CUTOUT, 12KV	(A)	1	STD 1212
8	BOLT, MACH, GALV, 1/2" X (LENGTH AS REQ'D), 1 SQ & 1 DBL COIL SPRING WASHER	(E)	1	STD 392
9	WIRE, 5KV INSULATED, XLP, #6 STRANDED COPPER		12'	194304
10	TRANSFORMER, SINGLE PHASE, TYPE 'W'		1	STD 1121
11	BOLT, MACH, GALV, 5/8" X (LENGTH AS REQ'D), 1 SQ CURVED & 1 DBL COIL SPRING WASHER	(E)	2	STD 392
12	COVER, BOLT, PLASTIC & 6 - 10D NAILS, GALV	(E) (E)	2 -	285696 491392
13	SIGN, HIGH VOLTAGE & 9 ROOFING NAILS, GALV	(E) (E)	1 -	647648 492224
14	WIRE, W.P., COPPER (SIZE GOVERNED BY TRANSFORMER CAPACITY)		21'	STD 1125
15	CONNECTORS, WIRE COMPRESSION, CU OR AL, AS REQ'D	(E)	AS REQ'D	783-787
16	WIRE, BARE STRANDED COPPER, #6		42'	813536
17	UNIT GROUND, COMPLETE		1	603136

FOR FIELD MAINTENANCE ONLY

INSTALLATION:

(A) 2.4KV SINGLE PHASE INSTALLATIONS REQUIRE TWO CUTOUTS.

(E) EXEMPT MATERIAL.

REFERENCE:

(F) POLE STEPPING - SEE STANDARD 363.

G. FOR LIGHTNING ARRESTER REQUIREMENTS - SEE STANDARD 1247.

(H) GROUNDING METHODS - SEE STANDARD 1002.

DATE 1-1-86
APPD AK/RDS

SDG&E ELECTRIC STANDARDS

2.4 OR 4KV, SINGLE PHASE TYPE "W" TRANSFORMER INSTALLATION, 100 KVA MAXIMUM, C.O. ARM, SECONDARY RACK CONSTRUCTION

1199.304
SUPERSEDES
1133 (1-1-93)

TABLE OF CONTENTS

FIELD MAINTENANCE ONLY

REVISION HISTORY:

7/13/2016: All versions prior to 2016 are superseded by their current version found inside the Overhead Construction Standard Manual.

TABLE OF CONTENTS

© 1998 - 2016 San Diego Gas & Electric Company. All rights reserved. Removal of this copyright notice without permission is not permitted under law.

REV	CHANGE	BY	DSGN	APPV	DATE	REV	CHANGE	BY	DSGN	APPV	DATE
C						F					
B						E					
A	ORIGINAL ISSUE	JS	IL	MDJ	7/13/2016	D					

X Indicates Latest Revision | Completely Revised | New Page | Information Removed

SHEET 1 OF 1

SDG&E ELECTRIC OVERHEAD STANDARD

2.4 OR 4KV, SINGLE PHASE, TYPE "W" TRANSFORMER INSTALLATION, 100 KVA MAXIMUM LINE ARM MOUNTED C.O., SECONDARY RACK CONSTRUCTION

FMO OH 1135

SCOPE: THIS STANDARD SHOWS THE INSTALLATION METHOD OF A TYPE 'W' TRANSFORMER, ON SECONDARY RACK CONSTRUCTION WITH CUTOUT ON LINE ARM.

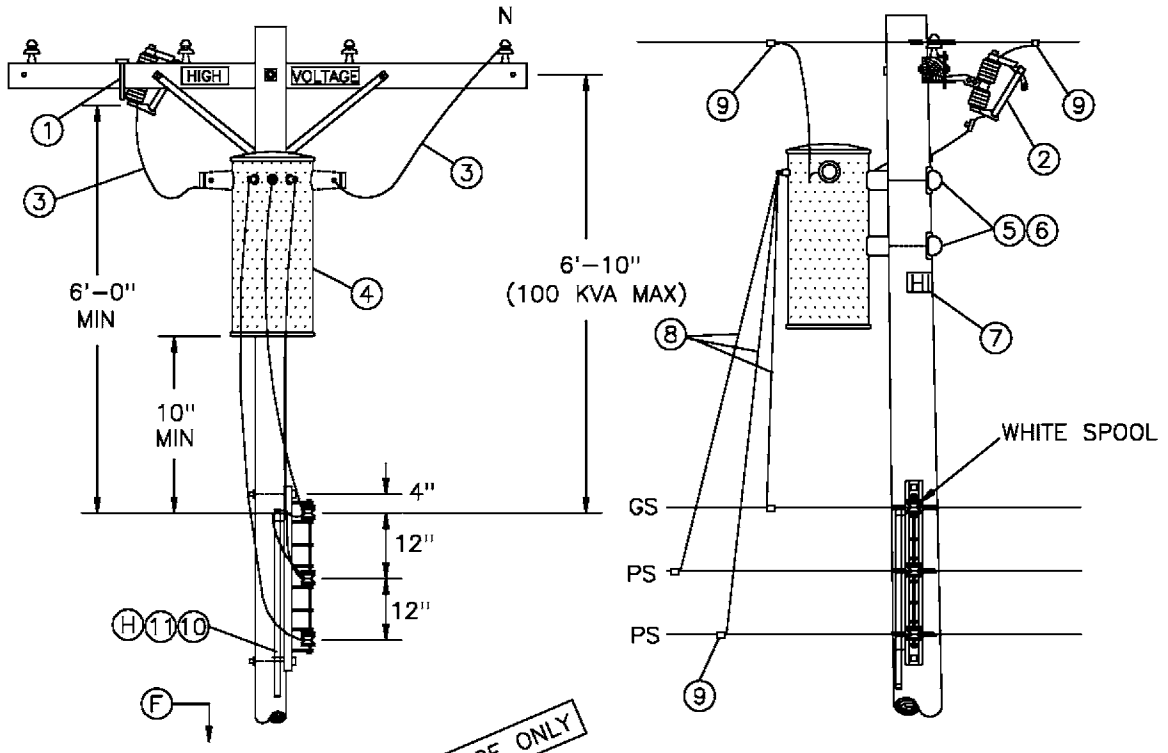

BILL OF MATERIAL:

FOR FIELD MAINTENANCE ONLY

ITEM	DESCRIPTION	QUANTITY	STOCK NO OR CONSTR STANDARD
1	BRACKET, CUTOUT/ARRESTER, FOR CROSSARM MOUNTING	1	166070
2	CUTOUT, 12KV (A)	1	STD 1212
3	WIRE, 5KV INSULATED, XLP, #6 STRANDED COPPER	12'	194304
4	TRANSFORMER, SINGLE PHASE, TYPE 'W'	1	STD 1121
5	BOLT, MACH, GALV, 5/8" X (LENGTH AS REQ'D), 1 SQ CURVED & 1 DBL COIL SPRING WASHER	2	STD 392
6	COVER, BOLT, PLASTIC & 6 – 10D NAILS, GALV	2 –	285696 491392
7	SIGN, HIGH VOLTAGE & 9 ROOFING NAILS, GALV	1 –	647648 492224
8	WIRE, W.P., COPPER (SIZE GOVERNED BY TRANSFORMER CAPACITY)	21'	STD 1125
9	CONNECTORS, WIRE COMPRESSION, CU OR A, AS REQ'D	AS REQ'D	783–787
10	WIRE, BARE STRANDED COPPER, #6	42'	813536
11	UNIT GROUND, COMPLETE	1	603136

INSTALLATION:

(A) 2.4KV SINGLE PHASE INSTALLATIONS REQUIRE TWO CUTOUTS.

REFERENCE:

(F) POLE STEPPING – SEE STANDARD 363.

G. FOR LIGHTNING ARRESTER REQUIREMENTS – SEE STANDARD 1247.

(H) GROUNDING METHODS – SEE STANDARD 1002.

1199.305 SUPERSEDES 1135 (1–1–93)	SDG&E ELECTRIC STANDARDS 2.4 OR 4KV, SINGLE PHASE TYPE "W" TRANSFORMER INSTALLATION, 100 KVA MAXIMUM LINE ARM MOUNTED C.O., SECONDARY RACK CONSTRUCION	DATE 1–1–86 APPD /

TABLE OF CONTENTS

FIELD MAINTENANCE ONLY

REVISION HISTORY:

7/13/2016: All versions prior to 2016 are superseded by their current version found inside the Overhead Construction Standard Manual.

TABLE OF CONTENTS

© 1998 - 2016 San Diego Gas & Electric Company. All rights reserved. Removal of this copyright notice without permission is not permitted under law.

REV	CHANGE	BY	DSGN	APPV	DATE	REV	CHANGE	BY	DSGN	APPV	DATE
C						F					
B						E					
A	ORIGINAL ISSUE	JS	IL	MDJ	7/13/2016	D					

X Indicates Latest Revision | Completely Revised | New Page | Information Removed

SHEET 1 OF 1

SDG&E ELECTRIC OVERHEAD STANDARD

2.4 OR 4KV, SINGLE PHASE, TYPE "W" TRANSFORMER INSTALLATION, 100 KVA MAXIMUM LINE ARM MOUNTED C.O., SECONDARY LINE ARM CONSTRUCTION

FMO OH 1136

SCOPE: THIS STANDARD SHOWS THE INSTALLATION METHOD OF A TYPE 'W' TRANSFORMER, WITH SECONDARY LINE ARM CONSTRUCTION AND CUTOUT MOUNTED ON LINE ARM.

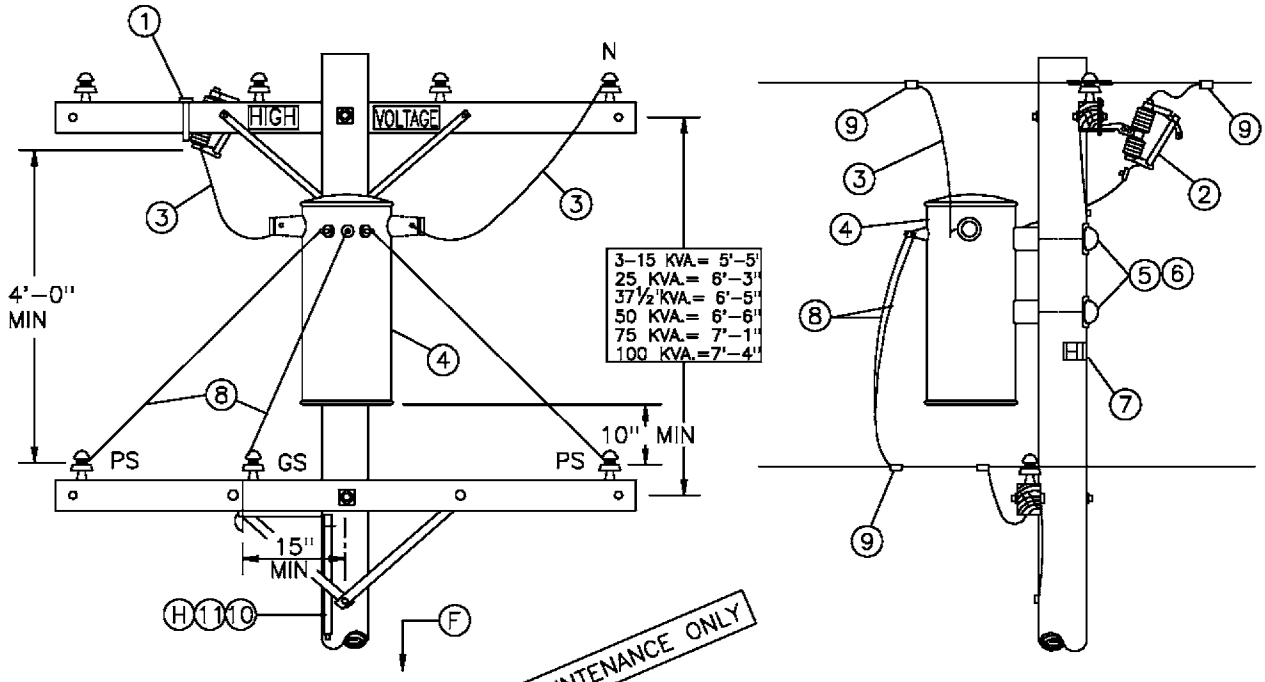

BILL OF MATERIAL:

FOR FIELD MAINTENANCE ONLY

ITEM	DESCRIPTION	QUANTITY	STOCK NO OR CONSTR STANDARD
1	BRACKET, CUTOUT/ARRESTER, FOR CROSSARM MOUNTING	1	166070
2	CUTOUT, 12KV (A)	1	STD 1212
3	WIRE, 5KV INSULATED, XLP, #6 STRANDED COPPER	12'	194304
4	TRANSFORMER, SINGLE PHASE, TYPE 'W'	1	STD 1121
5	BOLT, MACH, GALV, 5/8" X (LENGTH AS REQ'D), 1 SQ CURVED & 1 DBL COIL SPRING WASHER	2	STD 392
6	COVER, BOLT, PLASTIC & 6 – 10D NAILS, GALV	2 –	285696 491392
7	SIGN, HIGH VOLTAGE & 9 ROOFING NAILS, GALV	1 –	647648 492224
8	WIRE, W.P., COPPER (SIZE GOVERNED BY TRANSFORMER CAPACITY)	21'	STD 1125
9	CONNECTORS, WIRE COMPRESSION, CU OR AL, AS REQ'D	AS REQ'D	783–787
10	WIRE, BARE STRANDED COPPER, #6	42'	813536
11	UNIT GROUND, COMPLETE	1	603136

INSTALLATION:

(A) 2.4KV SINGLE PHASE INSTALLATIONS REQUIRE TWO CUTOUTS.

REFERENCE:

(F) POLE STEPPING – SEE STANDARD 363.

G. FOR LIGHTNING ARRESTER REQUIREMENTS – SEE STANDARD 1247.

(H) GROUNDING METHODS – SEE STANDARD 1002.

DATE 1–1–86 APPD /	SDG&E ELECTRIC STANDARDS 2.4 OR 4KV, SINGLE PHASE TYPE "W" TRANSFORMER INSTALLATION, 100 KVA MAXIMUM LINE ARM MOUNTED C.O., SECONDARY LINE ARM CONSTRUCTION	1199.306 SUPERSEDES 1136 (1–1–93)

TABLE OF CONTENTS

FIELD MAINTENANCE ONLY

REVISION HISTORY:

7/13/2016: All versions prior to 2016 are superseded by their current version found inside the Overhead Construction Standard Manual.

TABLE OF CONTENTS

© 1998 - 2016 San Diego Gas & Electric Company. All rights reserved. Removal of this copyright notice without permission is not permitted under law.

REV	CHANGE	BY	DSGN	APPV	DATE	REV	CHANGE	BY	DSGN	APPV	DATE
C						F					
B						E					
A	ORIGINAL ISSUE	JS	IL	MDJ	7/13/2016	D					

X Indicates Latest Revision | Completely Revised | New Page | Information Removed

SHEET
1 OF 1

SDG&E ELECTRIC OVERHEAD STANDARD

2.4 OR 4KV, SINGLE PHASE PARALLELED
TRANSFORMER INSTALLATION

FMO
OH 1138

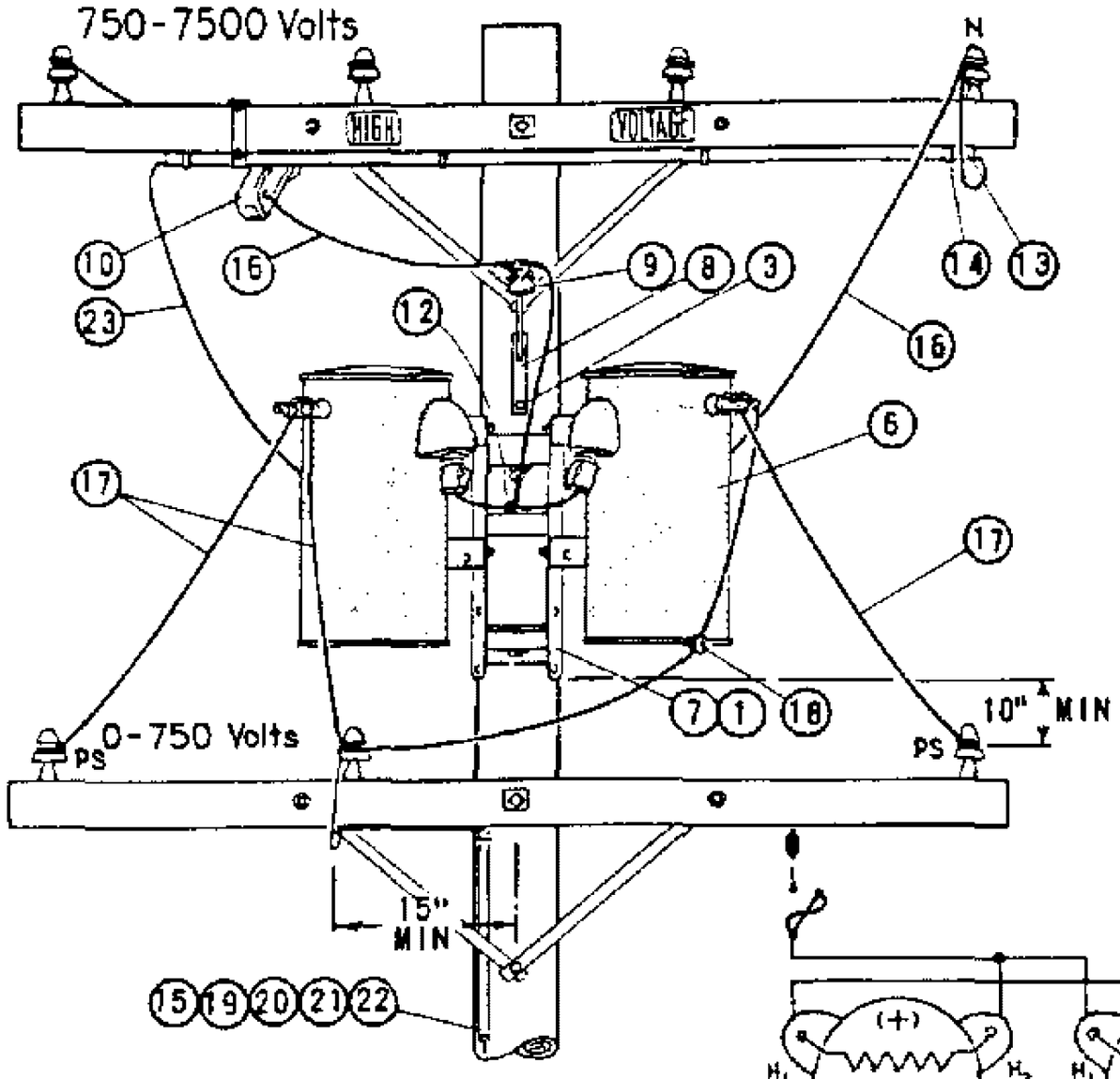

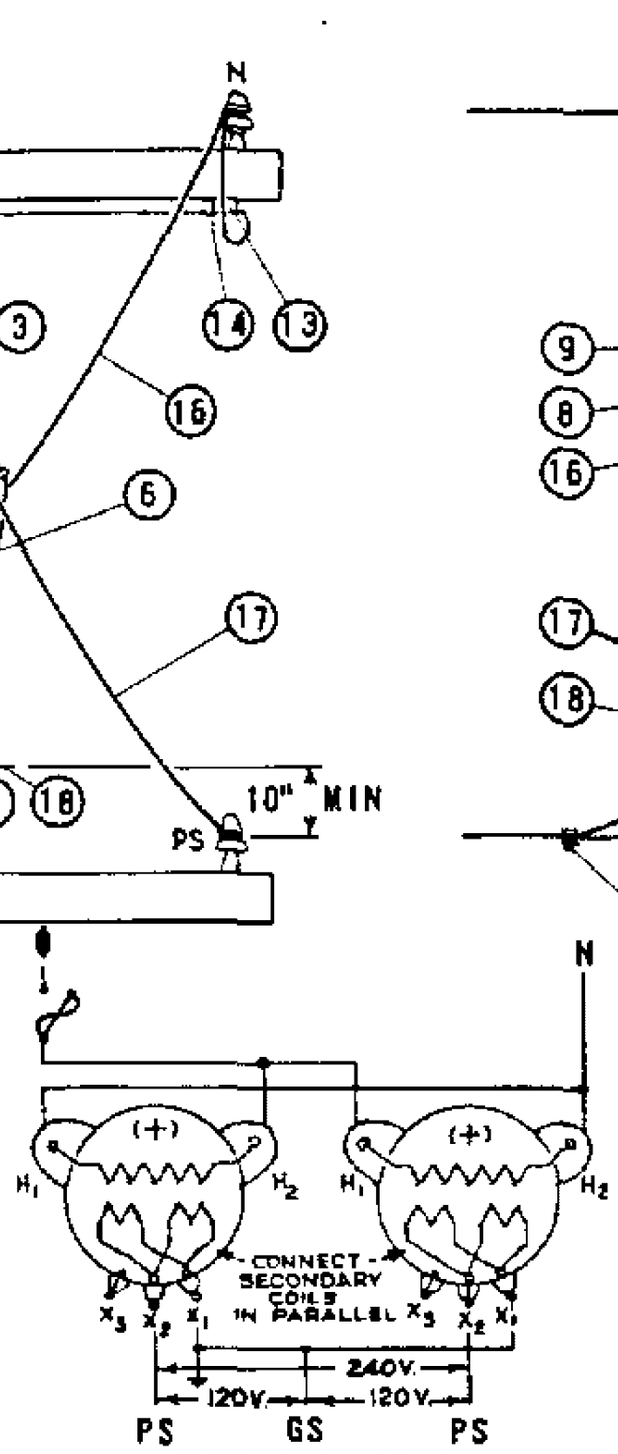

WIRING DIAGRAM

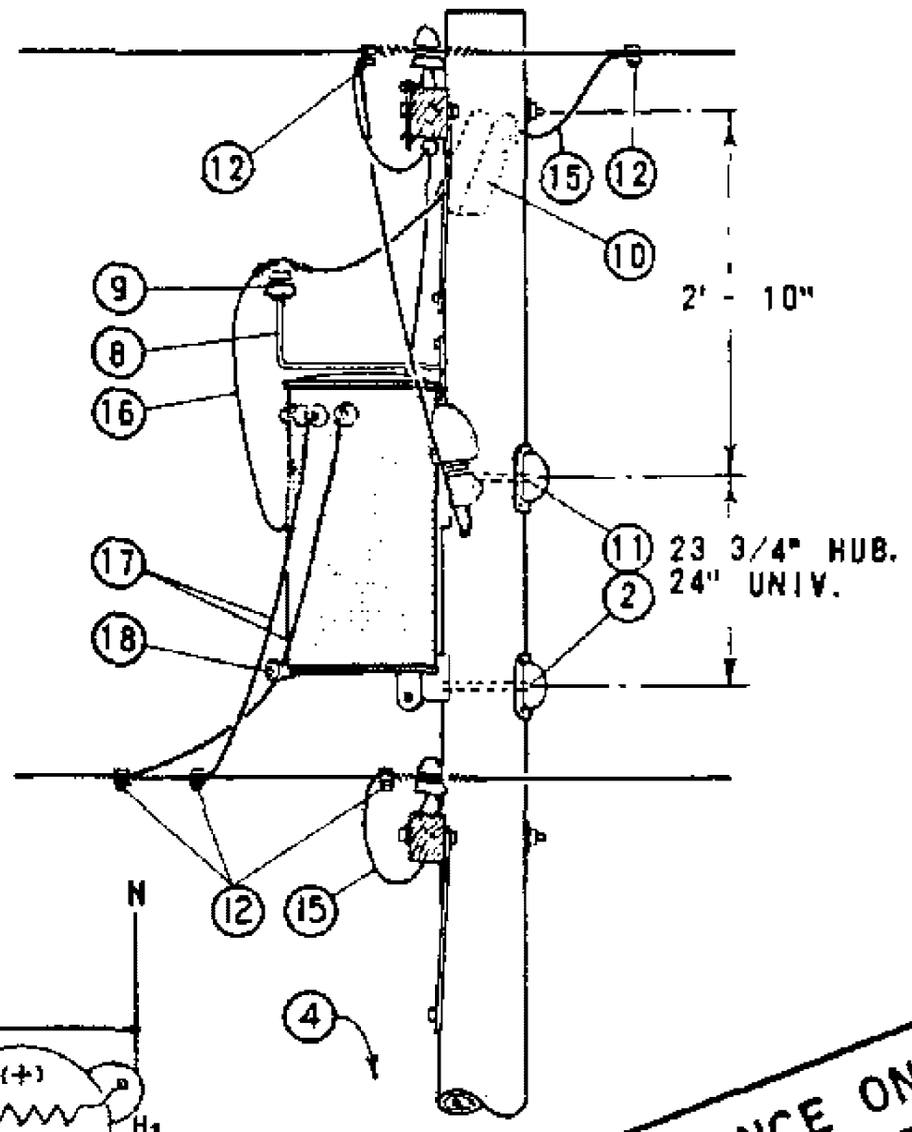

FOR FIELD MAINTENANCE ONLY

NOTES:

(A) LIMITED TO TWO 15 KVA TRANSFORMERS.

(B) USE TWO GROUND RODS SPACED A MINIMUM OF 6 FEET APART FOR EACH GROUND UNIT.

(C) PHASE TO PHASE CONNECTIONS ON 2.4 KV DELTA AND 4 KV WYE SYSTEMS REQUIRE TWO CUTOUTS.

D. FUSE FOR COMBINED KVA OF PARALLELED TRANSFORMERS.

(E) EXEMPT MATERIALS.

(F) UNIT GROUND COMPLETE ORDER 603120 WITH GRAY MOULDING, 603136 WITH PLAIN MOULDING.

ITEM PTF	ITEM LTI	DESCRIPTION	QUANTITY	STOCK NO. OR CONSTR STDS
1		BOLT, MACH GALV, 5/8" (E) OR 3/4" X 2", 2 WASH & 1 NUT.	4	PGS 139, 140
2		BOLT, MACH GALV, 3/4" X 10", 1 SQ CURV WASH. & 1 NUT.	2	PGS 139, 140
3		SCREW, LAG GALV, 1/2" X 4" (E)	2	621568
4		STEP, POLE (E)	16	692992
5				
	6	TRANSFORMER, SINGLE PHASE TYPE W OR OY (A)	2	PGS 1121.01-1121.12
	7	BRACKET, TRANSFORMER MTG	1	402976
	8	BRACKET, INSULATOR, 1" OR 1 3/8" THREAD, AS REQ'D	1	166144 / 166176
	9	INSULATOR, 12KV	1	700 SECTION
	10	CUTOUT, 5KV (C)	2	PG 1211
	11	COVER, THRU BOLT & 6-10D NAILS GALV	2	285696, 491392
	12	CONNECTOR, WIRE, AS REQ'D	7	PGS 783-787
	13	CONDUIT, PLASTIC PVC, 3/4" SCHEDULE 40, TYPE II (E)	5'	251328
	14	STRAP, PIPE 3/4" & 2-6D NAILS, GALV (E)	3	697888, 491552
	15	WIRE, BARE STRANDED COPPER, #6	48'	813536
	16	WIRE, #4 SOLID WP COPPER	8'	814112
	17	WIRE, WP COPPER, SIZE GOVERNED BY TRANSFORMER CAPACITY	24'	PG 1125
	18	BRACKET, INSULATOR	1	167520
	19	ROD & CLAMP, GROUND (B) (F)	2	603072, 230016 (E)
	20	MOULDING, HARDWOOD 1" (F)	27'	487200
	21	STAPLES, MOULDING, GALV 3" X 1 1/16" X 1/4" (F) (E)	18	678560
	22	STAPLES, FENCE, GALV 1 1/4" (F) (E)	16	678528
	23	WIRE, 5KV INSULATED, XLP, #6 STRANDED COPPER	16'	194304

1199.301 SUPERSEDES 1138 (1-1-86)	SDG&E ELECTRIC STANDARDS 2.4KV OR 4KV, SINGLE PHASE PARALLELED TRANSFORMER INSTALLATION	DATE 1-1-86 APPD AK

TABLE OF CONTENTS

FIELD MAINTENANCE ONLY

REVISION HISTORY:

7/13/2016: All versions prior to 2016 are superseded by their current version found inside the Overhead Construction Standard Manual.

TABLE OF CONTENTS

© 1998 - 2016 San Diego Gas & Electric Company. All rights reserved. Removal of this copyright notice without permission is not permitted under law.

REV	CHANGE	BY	DSGN	APPV	DATE	REV	CHANGE	BY	DSGN	APPV	DATE
C						F					
B						E					
A	ORIGINAL ISSUE	JS	IL	MDJ	7/13/2016	D					

X Indicates Latest Revision | Completely Revised | New Page | Information Removed

SHEET 1 OF 1

SDG&E ELECTRIC OVERHEAD STANDARD

7.2 OR 12KV SINGLE PHASE YE, YJ, HE, OR HJ TRANSFORMER INSTALLATION 100 KVA MAXIMUM ARMLESS TANGENT CONSTRUCTION

FMO OH 1141

SCOPE: THIS STANDARD SHOWS THE INSTALLATION METHOD OF A SINGLE PHASE TRANSFORMER, ON ARMLESS TANGENT CONSTRUCTION.

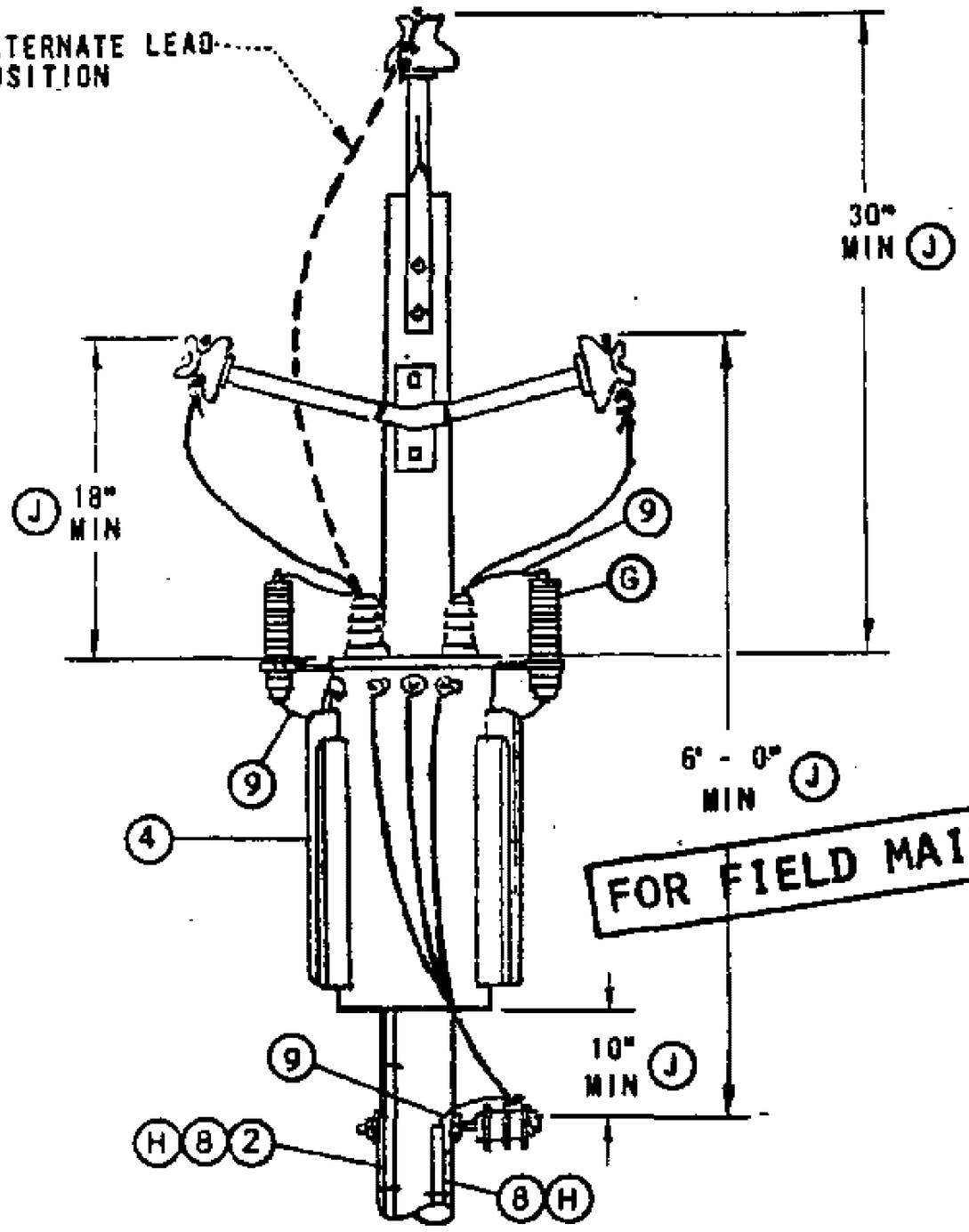

FOR FIELD MAINTENANCE ONLY

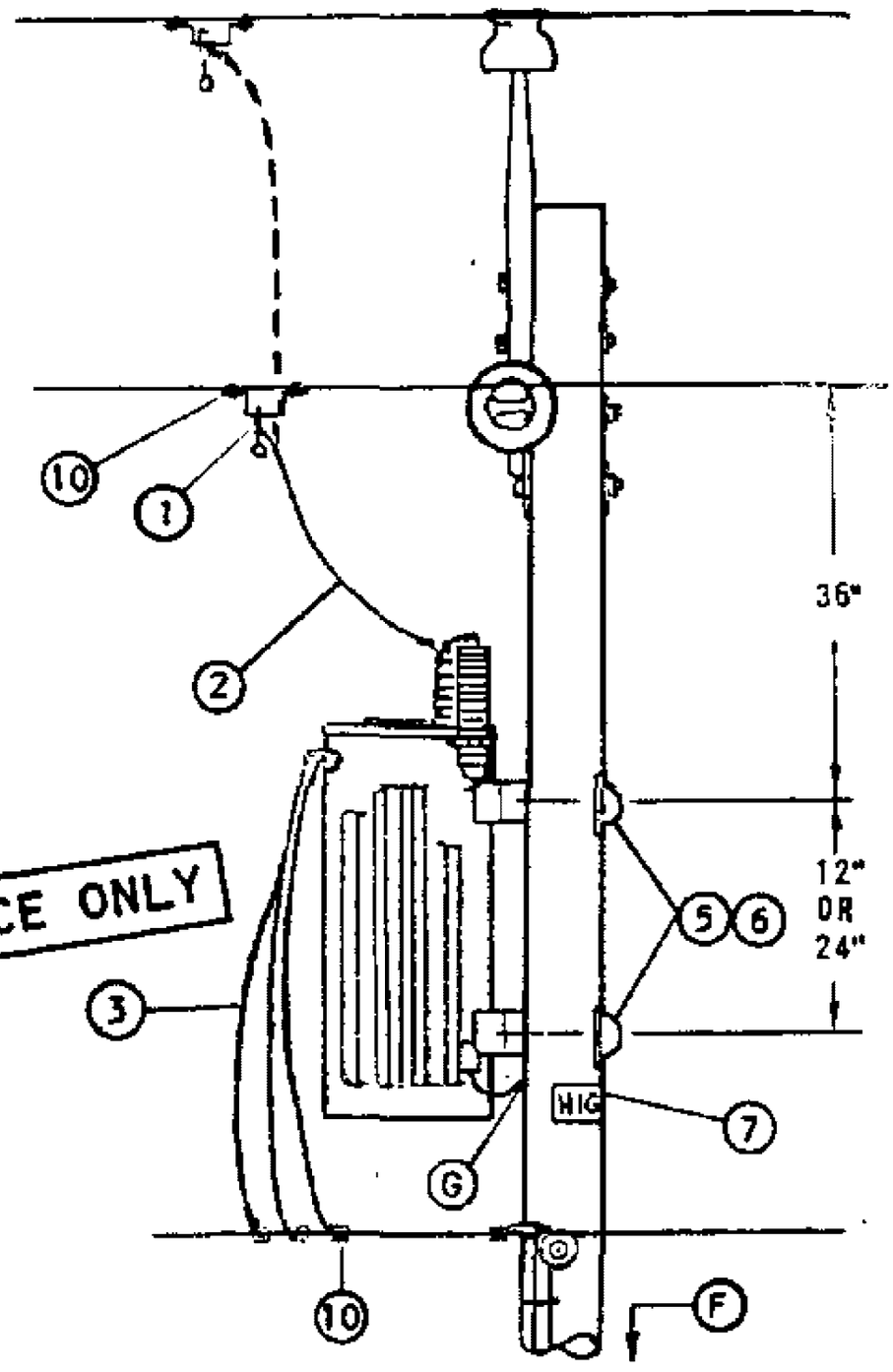

BILL OF MATERIAL:

ITEM	DESCRIPTION	QUANTITY HE, YE	QUANTITY HJ, YJ	STOCK NO OR CONSTR STANDARD
1	CLAMP, HOTLINE & STIRRUP (E)	2	2	STD 788
2	WIRE, #4, BARE STRANDED COPPER	7'	55'	813760
3	WIRE, W.P., COPPER (SIZE GOVERNED BY TRANSFORMER CAPACITY)	21'	21'	STD 1125
4	TRANSFORMER, SINGLE PHASE (TYPE 'HE', 'HJ', 'YE' OR 'YJ')	1	1	STD 1121
5	BOLT, MACH, GALV, 5/8" OR 3/4" X (LENGTH AS REQ'D), 1 SQ CURVED & 1 DBL COIL SPRING WASHER (E)	2	2	STD 392
6	COVER, BOLT, PLASTIC & (E) 6 - 10D NAILS, GALV (E)	2 -	2 -	285696 491392
7	SIGN, HIGH VOLTAGE & (E) 8 ROOFING NAILS, GALV (E)	1 -	1 -	647648 492224
8	UNIT GROUND, COMPLETE (H)	1	2	603136
9	WIRE, #6 BARE STRANDED COPPER	42'	50'	813536
10	CONNECTORS, WIRE COMPRESSION, CU OR AL, AS REQ'D (E)	AS REQ'D		783-787

INSTALLATION:

A. WHEN INSTALLING A NEW STATION ON THE 7.2/12.47KV SYSTEM IN MEOD, IF NO PRIMARY NEUTRAL GROUND EXISTS ON THE POLE, INCLUDE THE NECESSARY MATERIALS TO INSTALL THE REQUIRED PRIMARY NEUTRAL GROUND. CONNECT TO TRANSFORMER TANK GAP GROUND.

(E) EXEMPT MATERIAL.

REFERENCE:

(F) POLE STEPPING - SEE STANDARD 363.

(G) WHEN LIGHTNING ARRESTERS ARE REQUIRED PER STANDARD 1247, USE TYPE 'HJ' OR 'YJ' TRANSFORMERS, AND GROUND TANK GAP.

(H) GROUNDING METHODS - SEE STANDARD 1002.

I. FOR POLE TOP MATERIAL - SEE DISTRIBUTION POLE TOPS (SECTION 400). FGS AND PTP ARE SHOWN FOR ILLUSTRATIVE PURPOSES ONLY.

(J) G.O. 95 MINIMUM REQUIREMENTS.

K. FOR AERIAL CABLE CONSTRUCTION - SEE SECTION 600.

DATE 1-1-86
APPD AK/RDS

SDG&E ELECTRIC STANDARDS

7.2 OR 12KV SINGLE PHASE YE, YJ, HE, OR HJ TRANSFORMER INSTALLATION 100 KVA MAXIUM ARMLESS TANGENT CONSTRUCTION

1199.401
SUPERSEDES
1141 (1-1-86)

TABLE OF CONTENTS

FIELD MAINTENANCE ONLY

REVISION HISTORY:

7/13/2016: All versions prior to 2016 are superseded by their current version found inside the Overhead Construction Standard Manual.

TABLE OF CONTENTS

© 1998 - 2016 San Diego Gas & Electric Company. All rights reserved. Removal of this copyright notice without permission is not permitted under law.

REV	CHANGE	BY	DSGN	APPV	DATE	REV	CHANGE	BY	DSGN	APPV	DATE
C						F					
B						E					
A	ORIGINAL ISSUE	JS	IL	MDJ	7/13/2016	D					

X Indicates Latest Revision | Completely Revised | New Page | Information Removed

SHEET
1 OF 1

SDG&E ELECTRIC OVERHEAD STANDARD

7.2 OR 12KV SINGLE PHASE YE, YJ, HE, OR HJ TRANSFORMER
INSTALLATION 100 KVA MAXIMUM ARMLESS DEAD END CONSTRUCTION

FMO
OH 1142

SCOPE: THIS STANDARD SHOWS THE INSTALLATION METHOD OF A SINGLE PHASE TRANSFORMER, ON ARMLESS DEADEND CONSTRUCTION.

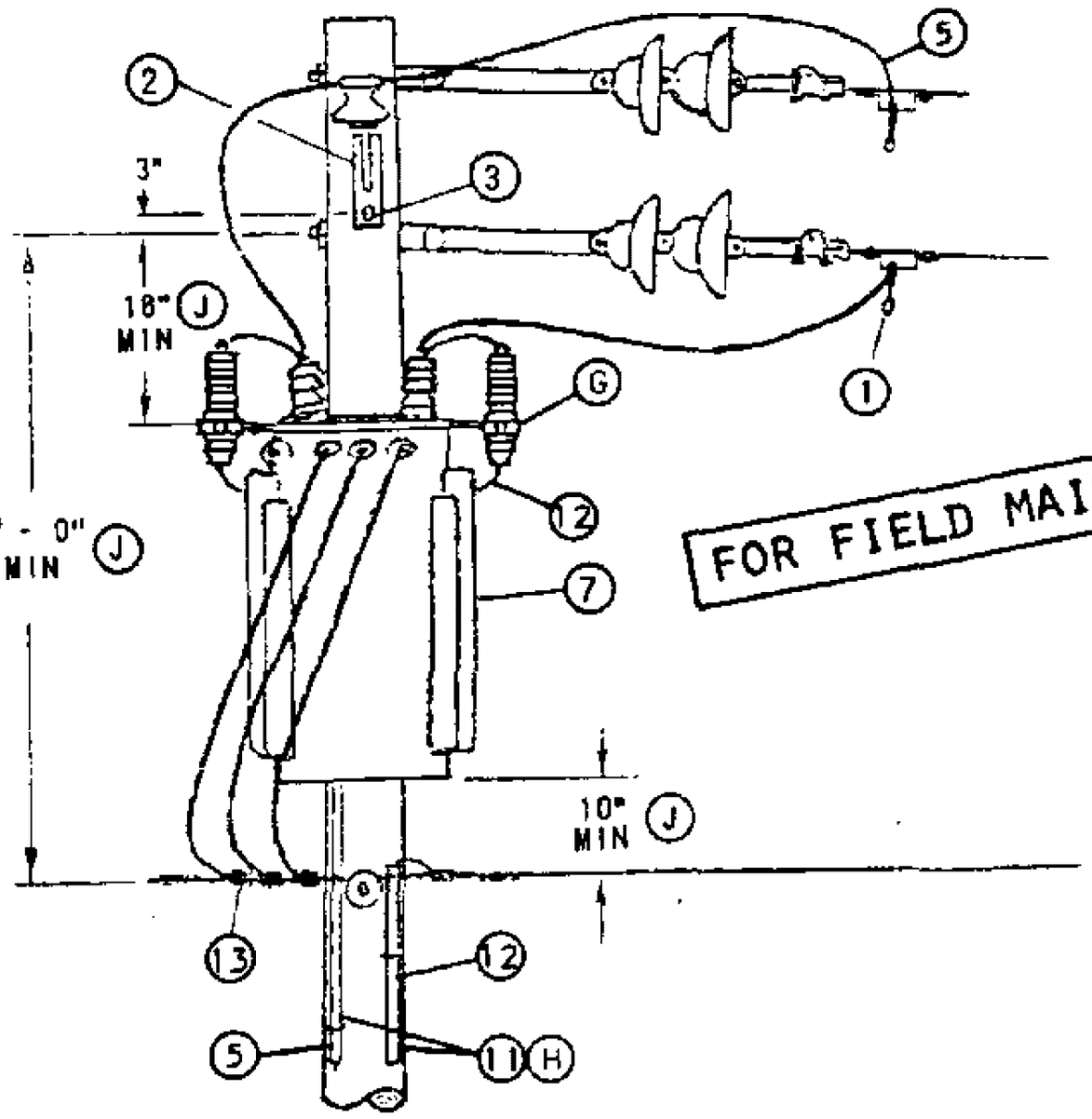

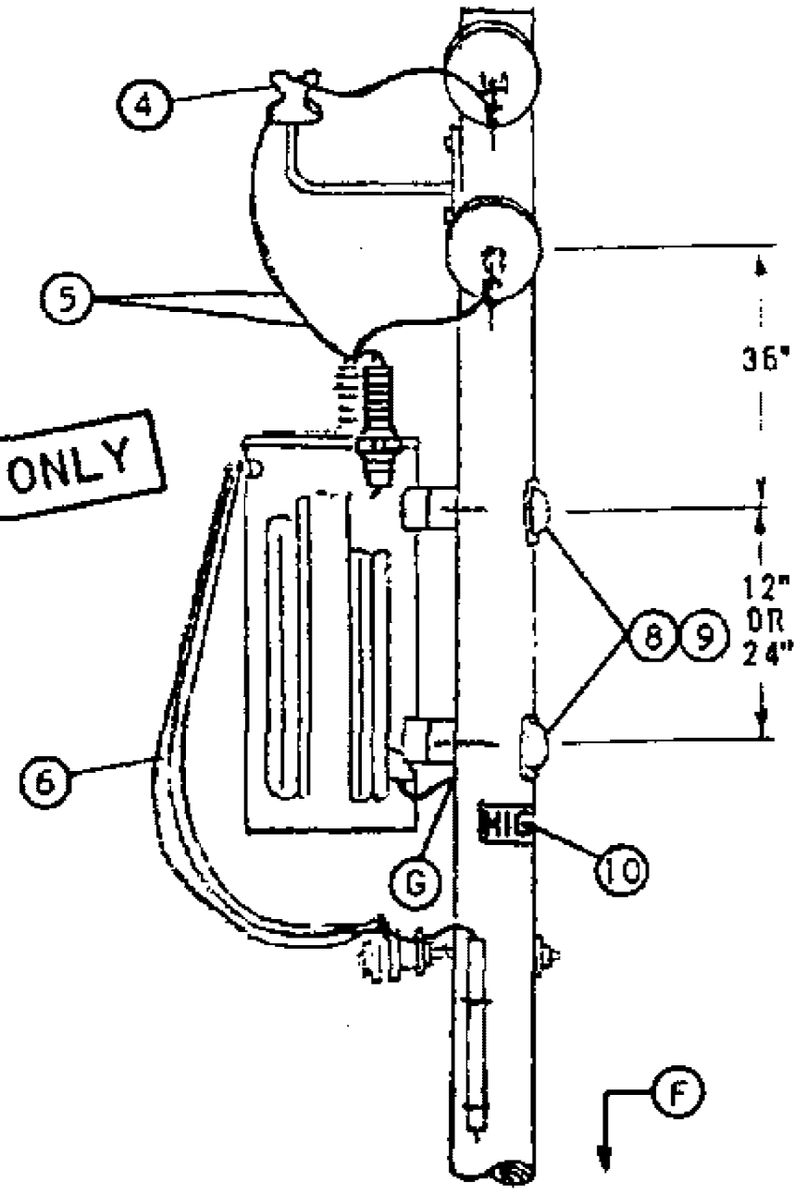

BILL OF MATERIAL:

ITEM	DESCRIPTION	QUANTITY HE, YE	QUANTITY HJ, YJ	STOCK NO OR CONSTR STANDARD
1	CLAMP, HOTLINE & STIRRUP (E)	2	2	STD 788
2	BRACKET, INSULATOR, 1", LEAD THREAD	1	1	166144
3	SCREW, LAG, GALV, 1/2" X 4" (E)	2	2	621568
4	INSULATOR, 12KV, CLASS 55-5	1	1	429056
5	WIRE, #4, BARE STRANDED COPPER	12'	55'	813760
6	WIRE, W.P., COPPER (SIZE GOVERNED BY TRANSFORMER CAPACITY)	21'	21'	STD 1125
7	TRANSFORMER, SINGLE PHASE (TYPE 'HE', 'HJ', 'YE' OR 'YJ')	1	1	STD 1121
8	BOLT, MACH, GALV, 5/8" OR 3/4" X (LENGTH AS REQ'D), 1 SQ CURVED & 1 DBL COIL SPRING WASHER (E)	2	2	STD 392
9	COVER, BOLT, PLASTIC & (E) 6 - 10D NAILS, GALV (E)	2 -	2 -	285696 491392
10	SIGN, HIGH VOLTAGE & (E) 8 ROOFING NAILS, GALV (E)	1 -	1 -	647648 492224
11	UNIT GROUND, COMPLETE (H)	1	2	603136
12	WIRE, #6 BARE STRANDED COPPER	42'	50'	813536
13	CONNECTORS, WIRE COMPRESSION, CU OR AL, AS REQ'D (E)	AS REQ'D		783-787

INSTALLATION:

A. WHEN INSTALLING A NEW STATION ON THE 7.2/12.47KV SYSTEM IN MEOD, AND IF NO PRIMARY NEUTRAL GROUND EXIST ON THE POLE, INCLUDE THE NECESSARY MATERIALS TO INSTALL THE REQUIRED PRIMARY NEUTRAL GROUND. CONNECT TO TRANSFORMER TANK GAP GROUND.

B. FOR USE ONLY WHERE FUTURE EXTENSION IS UNLIKELY, SUCH AS CUL-DE-SACS.

(E) EXEMPT MATERIAL.

REFERENCE:

(F) POLE STEPPING - SEE STANDARD 363.

(G) WHEN LIGHTNING ARRESTERS ARE REQUIRED PER STANDARD 1247, USE TYPE 'HJ' OR 'YJ' TRANSFORMERS, AND GROUND TANK GAP.

(H) GROUNDING METHODS - SEE STANDARD 1002.

I. FOR POLE TOP MATERIAL - SEE DISTRIBUTION POLE TOPS (SECTION 400).

(J) G.O. 95 MINIMUM REQUIREMENTS.

K. FOR AERIAL CABLE CONSTRUCTION - SEE SECTION 600.

TABLE OF CONTENTS

1199.402 SUPERSEDES 1142 (1-1-86)	SDG&E ELECTRIC STANDARDS 7.2 OR 12KV SINGLE PHASE YE, YJ, HE, OR HJ TRANSFORMER INSTALLATION 100 KVA MAXIMUM ARMLESS DEAD END CONSTRUCTION	ISSUE 1993 DATE 1-1-86 APPD AK/[illegible]

FIELD MAINTENANCE ONLY

REVISION HISTORY:

7/13/2016: All versions prior to 2016 are superseded by their current version found inside the Overhead Construction Standard Manual.

TABLE OF CONTENTS

© 1998 - 2016 San Diego Gas & Electric Company. All rights reserved. Removal of this copyright notice without permission is not permitted under law.

REV	CHANGE	BY	DSGN	APPV	DATE	REV	CHANGE	BY	DSGN	APPV	DATE
C						F					
B						E					
A	ORIGINAL ISSUE	JS	IL	MDJ	7/13/2016	D					

X Indicates Latest Revision | Completely Revised | New Page | Information Removed

SHEET 1 OF 1

SDG&E ELECTRIC OVERHEAD STANDARD

7.2 OR 12KV SINGLE PHASE YE, YJ, HE, OR HJ TRANSFORMER INSTALLATION, SECONDARY RACK CONSTRUCTION

FMO OH 1145

SCOPE: THIS STANDARD SHOWS THE INSTALLATION METHOD OF A SINGLE PHASE TRANSFORMER, WITH SECONDARY RACK CONSTRUCTION.

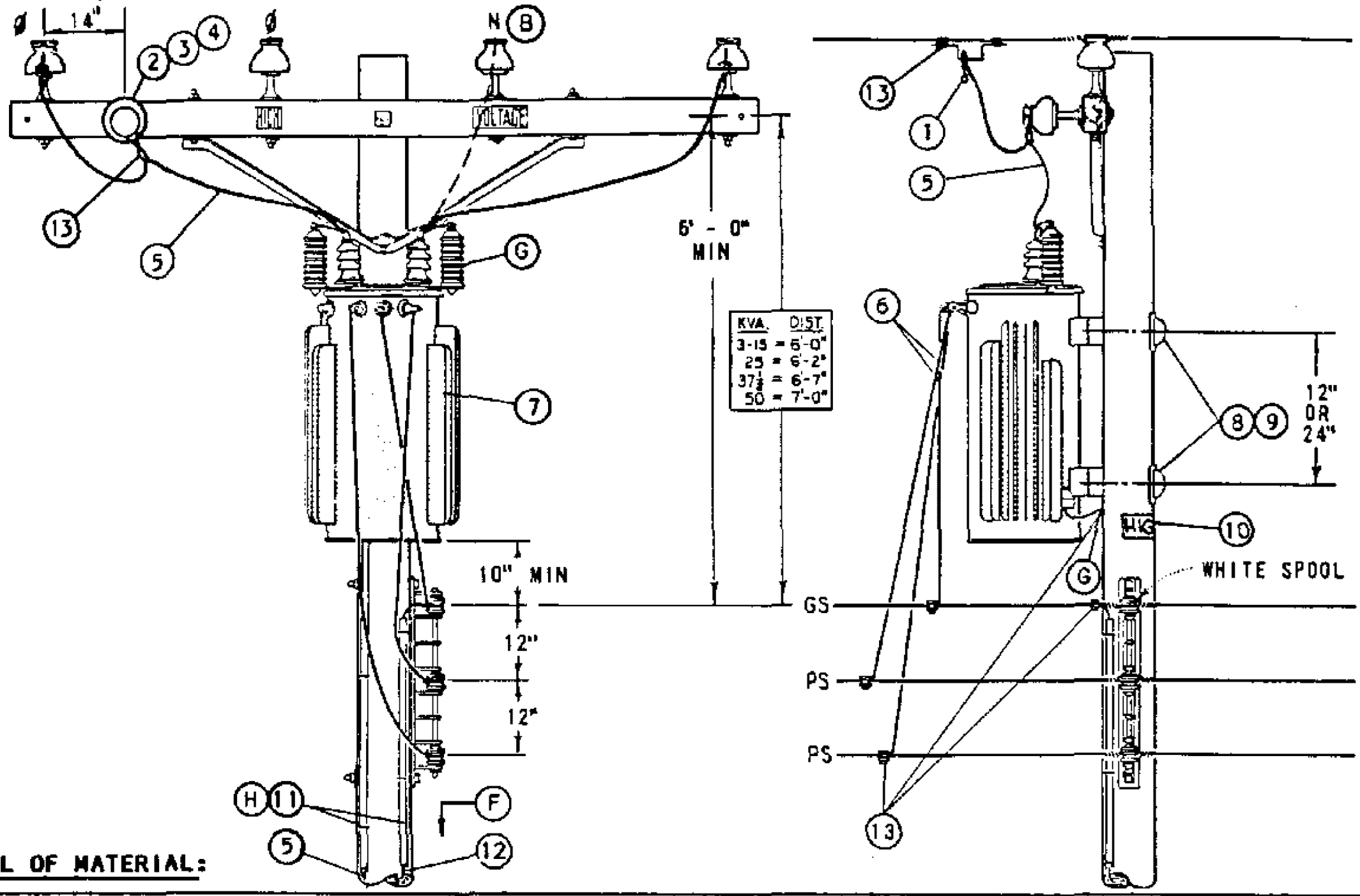

BILL OF MATERIAL:

ITEM	DESCRIPTION	QUANTITY HE, YE	QUANTITY HJ, YJ	STOCK NO OR CONSTR STANDARD
1	CLAMP, HOTLINE & STIRRUP (E)	2	2	STD 788
2	BOLT, MACH, GALV, 5/8" X (LENGTH AS REQ'D), 2 SQ WASHERS & 1 DBL COIL SPRING WASHER (E)	1	1	STD 392
3	PIN, TRANSFORMER LEAD ADAPTER 1" OR (E)	1	1	529248
	1 3/8" (E)	1	1	529216
4	INSULATOR, 12KV, 1" OR 1 3/8" PIN	1	1	STD 750
5	WIRE, #4, BARE STRANDED COPPER	14'	55'	813760
6	WIRE, W.P., COPPER (SIZE GOVERNED BY TRANSFORMER CAPACITY)	21'	21'	STD 1125
7	TRANSFORMER, SINGLE PHASE (TYPE HE, HJ, OR YJ, YE)	1	1	STD 1121
8	BOLT, MACH, GALV, 5/8" OR 3/4" X (LENGTH AS REQ'D), 1 SQ CURVED & 1 DBL COIL SPRING WASHER (E)	2	2	STD 392
9	COVER, BOLT, PLASTIC & (E)	2	2	285696
	6 - 10D NAILS, GALV (E)	-	-	491392
10	SIGN, HIGH VOLTAGE & (E)	1	1	647648
	9 ROOFING NAILS, GALV (E)	-	-	492224
11	UNIT GROUND, COMPLETE (H)	1	2	603136
12	WIRE, #6 BARE STRANDED COPPER	42'	50'	813536
13	CONNECTORS, WIRE COMPRESSION, CU OR AL, AS REQ'D (E)	AS REQ'D		783-787

FOR FIELD MAINTENANCE ONLY

INSTALLATION:

A. WHEN INSTALLING A NEW STATION ON THE 7.2/12.47KV SYSTEM IN MEOD IF NO PRIMARY NEUTRAL GROUND EXISTS ON THE POLE, INCLUDE THE NECESSARY MATERIALS TO INSTALL THE REQUIRED PRIMARY NEUTRAL GROUND. CONNECT TO TRANSFORMER TANK GAP GROUND.

(B) YE & YJ TRANSFORMERS ARE TO BE CONNECTED PHASE TO NEUTRAL.

(E) EXEMPT MATERIAL.

REFERENCE:

(F) POLE STEPPING - SEE STANDARD 363.

(G) WHEN LIGHTNING ARRESTERS ARE REQUIRED PER STANDARD 1247, USE 'HJ' OR 'YJ' TYPE TRANSFORMER WITH TANK GAP GROUND.

(H) GROUNDING METHODS - SEE STANDARD 1002.

SDG&E ELECTRIC STANDARDS

DATE 1-1-86
APPD AK/RBB

7.2 OR 12KV SINGLE Ø YE, YJ, HE OR HJ TRANSFORMER INSTALLATION, SECONDARY RACK CONSTRUCTION

1199.403
SUPERSEDES
1145 (1-1-93)

TABLE OF CONTENTS

FIELD MAINTENANCE ONLY

REVISION HISTORY:

7/13/2016: All versions prior to 2016 are superseded by their current version found inside the Overhead Construction Standard Manual.

TABLE OF CONTENTS

© 1998 - 2016 San Diego Gas & Electric Company. All rights reserved. Removal of this copyright notice without permission is not permitted under law.

REV	CHANGE	BY	DSGN	APPV	DATE	REV	CHANGE	BY	DSGN	APPV	DATE
C						F					
B						E					
A	ORIGINAL ISSUE	JS	IL	MDJ	7/13/2016	D					

X Indicates Latest Revision | Completely Revised | New Page | Information Removed

SHEET
1 OF 1

SDG&E ELECTRIC OVERHEAD STANDARD

12KV, SINGLE PHASE TYPE "H" TRANSFORMER INSTALLATION,
C.O. ARM, SECONDARY RACK CONSTRUCTION

FMO
OH 1147

SCOPE: THIS STANDARD SHOWS THE INSTALLATION METHOD OF A TYPE 'H' TRANSFORMER, WITH CUTOUT ARM AND SECONDARY RACK CONSTRUCTION.

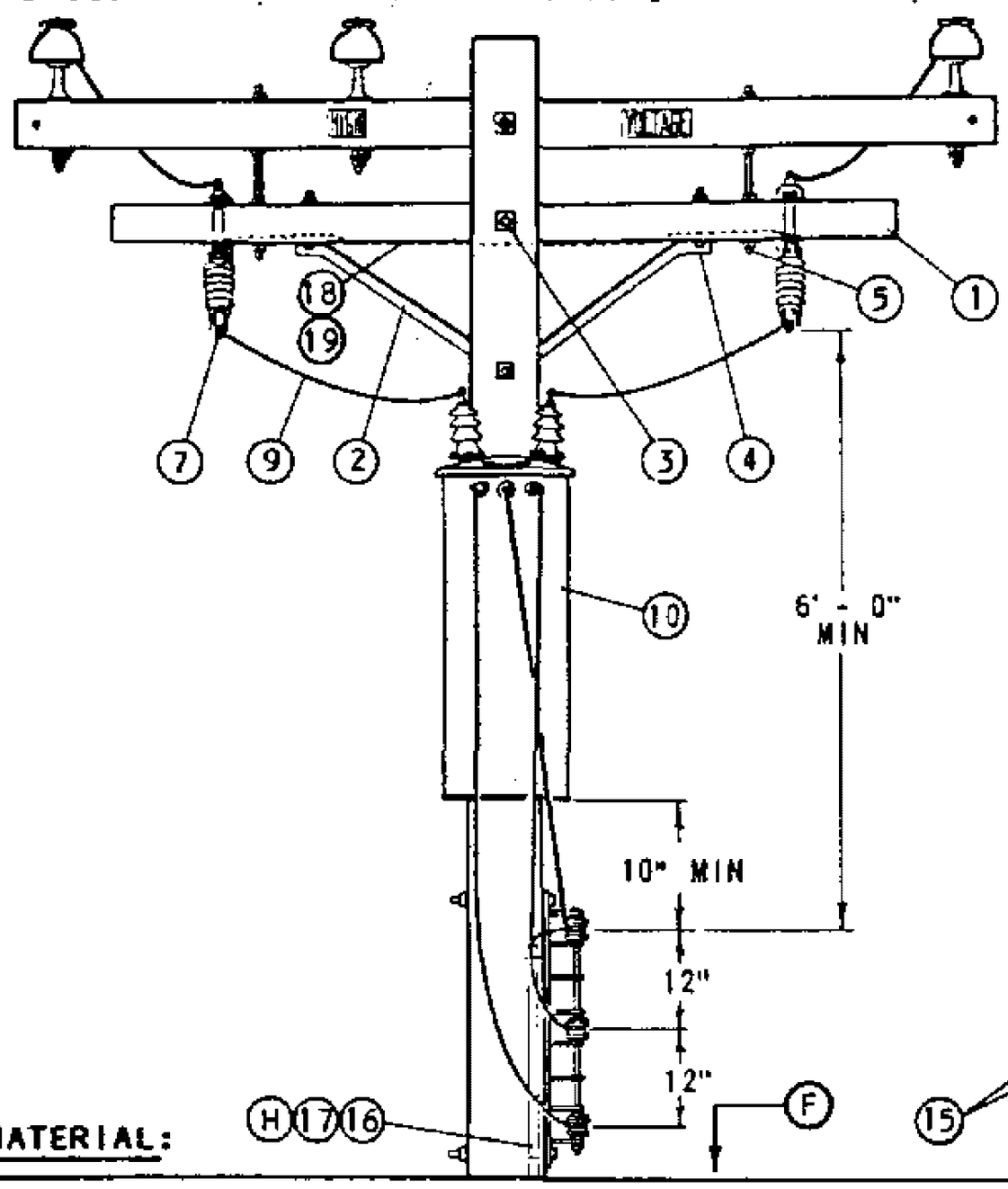

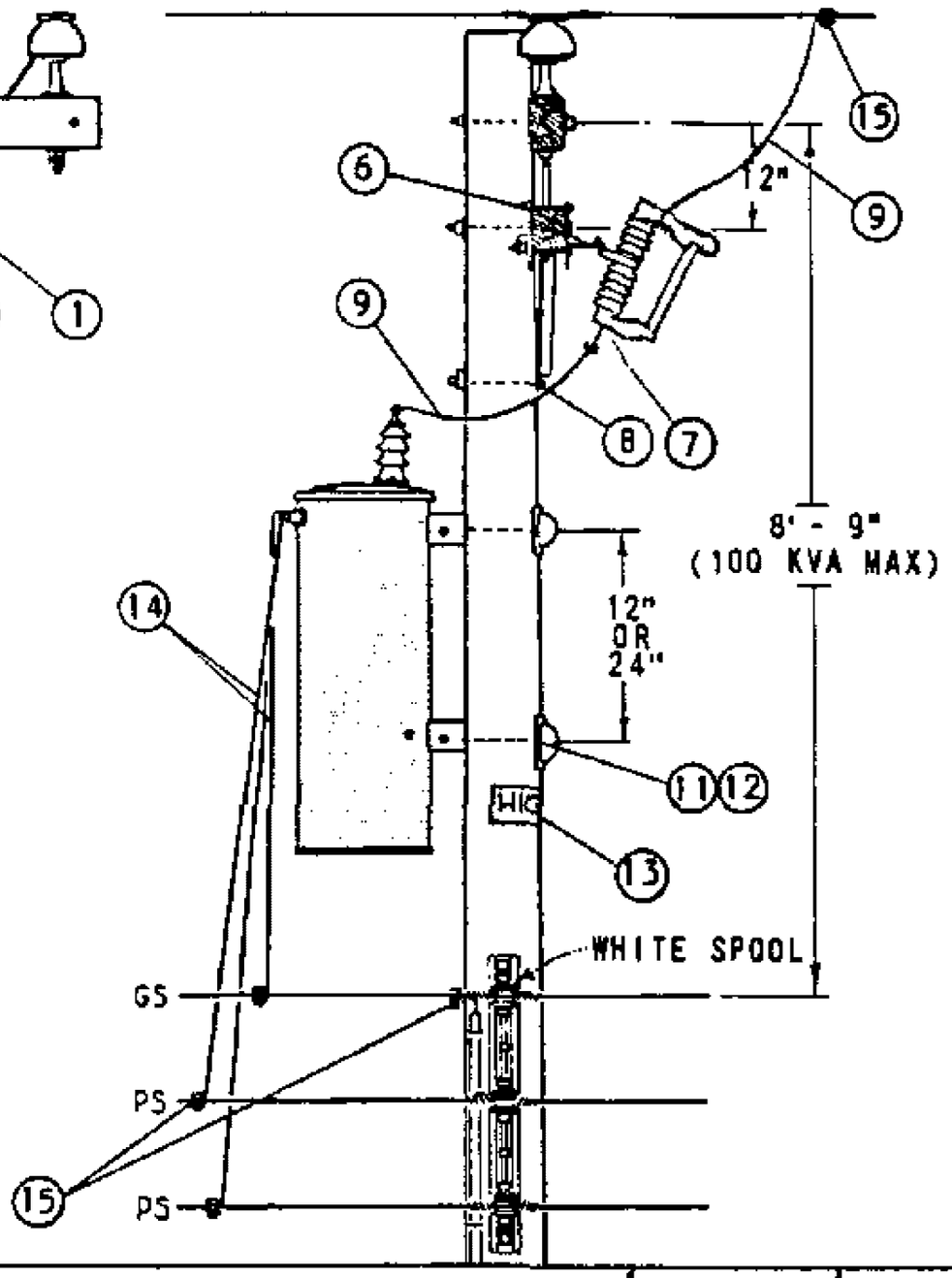

BILL OF MATERIAL:

ITEM	DESCRIPTION		QUANTITY	STOCK NO. OR CONSTR STANDARD
1	CROSSARM, 3 1/2" X 4 1/2" X 8' - 0"		1	293680
2	BRACE, ANGLE, CROSSARM, 4' - 0"		1	164032
3	BOLT, MACH, GALV, 5/8" X (LENGTH AS REQ'D), 2 SQ & 1 DBL COIL SPRING WASHER	(E)	1	STD 392
4	BOLT, MACH, GALV, 1/2" X 7", 1 RD & 1 SPRING LOCK WASHER	(E)	2	STD 392
5	BOLT, SPACE, GALV, 5/8" X 20", 4 SQ & 2 DBL COIL SPR WASHERS	(E)	2	STD 392
6	BRACKET, CUTOUT/ARRESTER, FOR CROSSARM MOUNTING	(E)	2	166070
7	CUTOUT, 12KV		2	STD 1212
8	BOLT, MACH, GALV, 5/8" X (LENGTH AS REQ'D), 1 SQ & 1 DBL COIL SPRING WASHER	(E)	1	STD 392
9	WIRE, #4 BARE STRANDED COPPER		14'	813760
10	TRANSFORMER, SINGLE PHASE, TYPE 'H'		1	STD 1121
11	BOLT, MACH, GALV, 5/8" OR 3/4" X (LENGTH AS REQ'D), 1 SQ CURVED & 1 DBL COIL SPRING WASHER	(E)	2	STD 392
12	COVER, BOLT, PLASTIC &	(E)	2	285696
	6 - 10D NAILS, GALV	(E)	-	491392
13	SIGN, HIGH VOLTAGE &	(E)	1	647648
	9 ROOFING NAILS, GALV	(E)	-	492224
14	WIRE, W.P., COPPER (SIZE GOVERNED BY TRANSFORMER CAPACITY)		21'	STD 1125
15	CONNECTORS, WIRE COMPRESSION, CU OR AL, AS REQ'D	(E)	AS REQ'D	783-787
16	WIRE, #6 BARE STRANDED COPPER		40'	813536
17	UNIT GROUND, COMPLETE	(H)	1	603136
18	WIRE, #8 BARE SOLID ANNEALED COPPER	(I)	8'	812928
19	STAPLES, FENCE, GALV, 1 1/4"	(I) (E)	AS REQ'D	678528

FOR FIELD MAINTENANCE ONLY

INSTALLATION:

(E) EXEMPT MATERIAL.

REFERENCE:

(F) POLE STEPPING - SEE STANDARD 363.

(G) FOR LIGHTNING ARRESTER REQUIREMENTS - SEE STANDARD 1247.

(H) GROUNDING METHODS - SEE STANDARD 1002.

(I) BOND ALL CUTOUTS IN HEAVY CONTAMINATION DISTRICT AS IDENTIFIED ON STANDARDS PAGE 287. IF BONDING IS REQUIRED, ORDER ADDITIONAL ITEMS 18 & 19.

TABLE OF CONTENTS

1199.404
SUPERSEDES
1147 (1-1-93)

SDG&E ELECTRIC STANDARDS

12KV, SINGLE PHASE TYPE "H" TRANSFORMER INSTALLATION, C.O. ARM, SECONDARY RACK CONSTRUCTION

DATE 1-1-86
APPD AK/RBF

FIELD MAINTENANCE ONLY

REVISION HISTORY:

7/13/2016: All versions prior to 2016 are superseded by their current version found inside the Overhead Construction Standard Manual.

TABLE OF CONTENTS

© 1998 - 2016 San Diego Gas & Electric Company. All rights reserved. Removal of this copyright notice without permission is not permitted under law.

REV	CHANGE	BY	DSGN	APPV	DATE	REV	CHANGE	BY	DSGN	APPV	DATE
C						F					
B						E					
A	ORIGINAL ISSUE	JS	IL	MDJ	7/13/2016	D					

X Indicates Latest Revision | Completely Revised | New Page | Information Removed

SHEET 1 OF 1

SDG&E ELECTRIC OVERHEAD STANDARD

12KV SINGLE PHASE TYPE "H" TRANSFORMER INSTALLATION 100 KVA MAX, LINE ARM MOUNTED CO'S, SECONDARY RACK CONSTRUCTION

FMO OH 1149

SCOPE: THIS STANDARD SHOWS THE INSTALLATION METHOD OF A TYPE 'H' TRANSFORMER, WITH THE CUTOUTS MOUNTED ON THE LINE ARM AND SECONDARY RACK CONSTRUCTION.

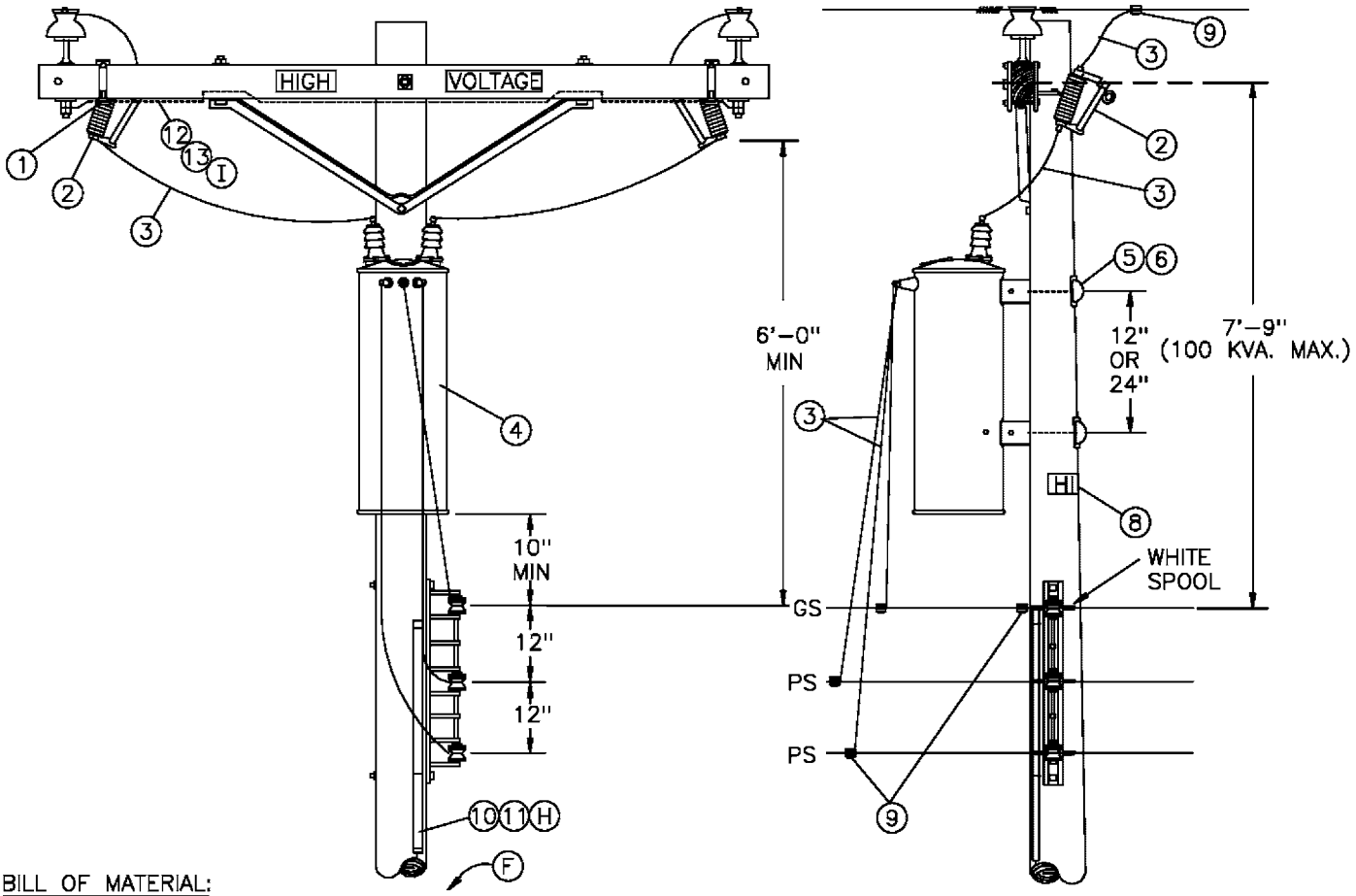

BILL OF MATERIAL:

ITEM	DESCRIPTION	QUANTITY	STOCK NO. OR CONSTR STANDARD
1	BRACKET, CUTOUT/ARRESTER, FOR CROSSARM MOUNTING	2	166070
2	CUTOUT, 12KV	2	STD 1212
3	WIRE, #4 BARE STRANDED COPPER	14'	813760
4	TRANSFORMER, SINGLE PHASE, TYPE 'H'	1	STD 1121
5	BOLT, MACH, GALV, 5/8" OR 3/4" X (LENGTH AS REQ'D), 1 SQ CURVED & 1 DBL COIL SPRING WASHER	2	STD 392
6	COVER, BOLT, PLASTIC & 6 – 10D NAILS, GALV	2 –	285696 491392
7	WIRE, W.P., COPPER (SIZE GOVERNED BY TRANSFORMER CAPACITY)	21'	STD 1125
8 1	SIGN, HIGH VOLTAGE & 8 ROOFING NAILS, GALV	1 –	647648 492224
9	CONNECTORS, WIRE COMPRESSION, CU OR AL, AS REQ'D	AS REQ'D	783–787
10	WIRE, #6 BARE STRANDED COPPER	40'	813536
11	UNIT GROUND, COMPLETE (H)	1	603136
12	WIRE, #8 BARE SOLID ANNEALED COPPER (I)	10'	812928
13	STAPLES, FENCE, GALV, 1 1/4" (I)	AS REQ'D	678528

FOR FIELD MAINTENANCE ONLY

REFERENCE:

(F) POLE STEPPING – SEE STANDARD 363.
G. FOR LIGHTNING ARRESTER REQUIREMENTS – SEE STANDARD 1247.
(H) GROUNDING METHODS – SEE STANDARD 1002.
BOND ALL CUTOUTS IN HEAVY CONTAMINATION DISTRICT AS IDENTIFIED ON STANDARDS PAGE 827.
(I) IF BONDING IS REQUIRED, ORDER ADDITIONAL ITEMS 12 & 13.

DATE 1–1–86 APPD /	SDG&E ELECTRIC STANDARDS 12KV SINGLE PHASE TYPE "H" TRANSFORMER INSTALLATION 100KVA MAX, LINE ARM MOUNTED CO'S, SECONDARY RACK CONSTRUCTION	1199.405 SUPERSEDES 1149 (1–1–93)

TABLE OF CONTENTS

FIELD MAINTENANCE ONLY

REVISION HISTORY:

7/13/2016: All versions prior to 2016 are superseded by their current version found inside the Overhead Construction Standard Manual.

TABLE OF CONTENTS

© 1998 - 2016 San Diego Gas & Electric Company. All rights reserved. Removal of this copyright notice without permission is not permitted under law.

REV	CHANGE	BY	DSGN	APPV	DATE	REV	CHANGE	BY	DSGN	APPV	DATE
C						F					
B						E					
A	ORIGINAL ISSUE	JS	IL	MDJ	7/13/2016	D					

X Indicates Latest Revision | Completely Revised | New Page | Information Removed

SHEET 1 OF 1

SDG&E ELECTRIC OVERHEAD STANDARD

12KV SINGLE PHASE TYPE "H" TRANSFORMER INSTALLATION, 100 KVA MAX, LINE ARM MOUNTED CO'S, SECONDARY LINE ARM CONSTRUCTION

FMO OH 1150

SCOPE: THIS STANDARD SHOWS THE INSTALLATION METHOD OF A TYPE 'H' TRANSFORMER, WITH THE CUTOUTS MOUNTED ON THE LINE ARM AND SECONDARY CROSSARM CONSTRUCTION.

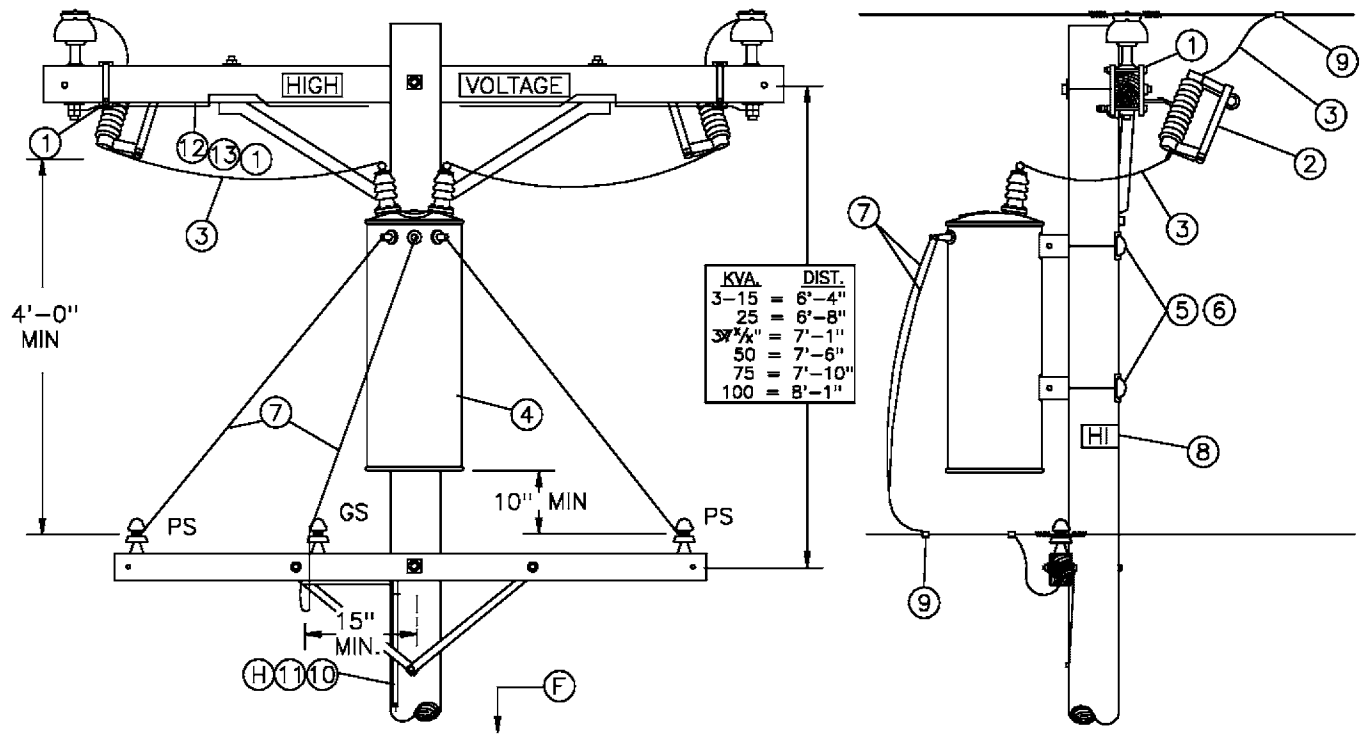

BILL OF MATERIAL:

ITEM	DESCRIPTION	QUANTITY	STOCK NO. OR CONTR STANDARD
1	BRACKET, CUTOUT/ARRESTER, FOR CROSSARM MOUNTING	2	166070
2	CUTOUT, 12KV	2	STD 1212
3	WIRE, #4 BARE STRANDED COPPER	14'	813536
4	TRANSFORMER, SINGLE PHASE, TYPE 'H'	1	STD 1121
5	BOLT, MACH, GALV, 5/8" OR 3/4" X (LENGTH AS REQ'D), 1 SQ CURVED & 1 DBL COIL SPRING WASHER	2	STD 392
6	COVER, BOLT, PLASTIC & 6 – 10D NAILS, GALV	2 –	285696 491392
7	WIRE, W.P., COPPER (SIZE GOVERNED BY TRANSFORMER CAPACITY)	21'	STD 1125
8	SIGN, HIGH VOLTAGE & 8 ROOFING NAILS, GALV	1 –	647648 492224
9	CONNECTORS, WIRE COMPRESSION, CU OR AL, AS REQ'D	AS REQ'D	783-787
10	WIRE, #6 BARE STRANDED COPPER	40'	813536
11	UNIT GROUND, COMPLETE (H)	1	603136
12	WIRE, #8 BARE SOLID ANNEALED COPPER (I)	10'	812928
13	STAPLES, FENCE, GALV, 1 1/4" (I)	AS REQ'D	678528

FOR FIELD MAINTENANCE ONLY

REFERENCE:

(F) POLE STEPPING – SEE STANDARD 363.

G. FOR LIGHTNING ARRESTER REQUIREMENTS – SEE STANDARD 1247.

(H) GROUNDING METHODS – SEE STANDARD 1002.

(I) BOND ALL CUTOUTS IN HEAVY CONTAMINATION DISTRICT AS IDENTIFIED ON STANDARDS PAGE 287. IF BONDING IS REQUIRED, ORDER ADDITIONAL ITEMS 12 & 13.

DATE 1-1-86 APPD /	SDG&E ELECTRIC STANDARDS 12KV SINGLE PHASE TYPE "H" TRANSFORMER INSTALLATION, 100 KVA MAX, LINE ARM MOUNTED CO'S, SECONDARY LINE ARM CONSTRUCTION	1199.503 SUPERSEDES 1150 (1-1-93)

TABLE OF CONTENTS

FIELD MAINTENANCE ONLY

REVISION HISTORY:

7/13/2016: All versions prior to 2016 are superseded by their current version found inside the Overhead Construction Standard Manual.

TABLE OF CONTENTS

© 1998 - 2016 San Diego Gas & Electric Company. All rights reserved. Removal of this copyright notice without permission is not permitted under law.

REV	CHANGE	BY	DSGN	APPV	DATE	REV	CHANGE	BY	DSGN	APPV	DATE
C						F					
B						E					
A	ORIGINAL ISSUE	JS	IL	MDJ	7/13/2016	D					

X Indicates Latest Revision | Completely Revised | New Page | Information Removed

SHEET
1 OF 1

SDG&E ELECTRIC OVERHEAD STANDARD

4KV OPEN WYE OR 2.4KV OPEN DELTA TYPE "W" TRANSFORMER
INSTALLATION 2-50KVA MAX., ARMLESS TANGENT CONSTRUCTION

FMO
OH 1154

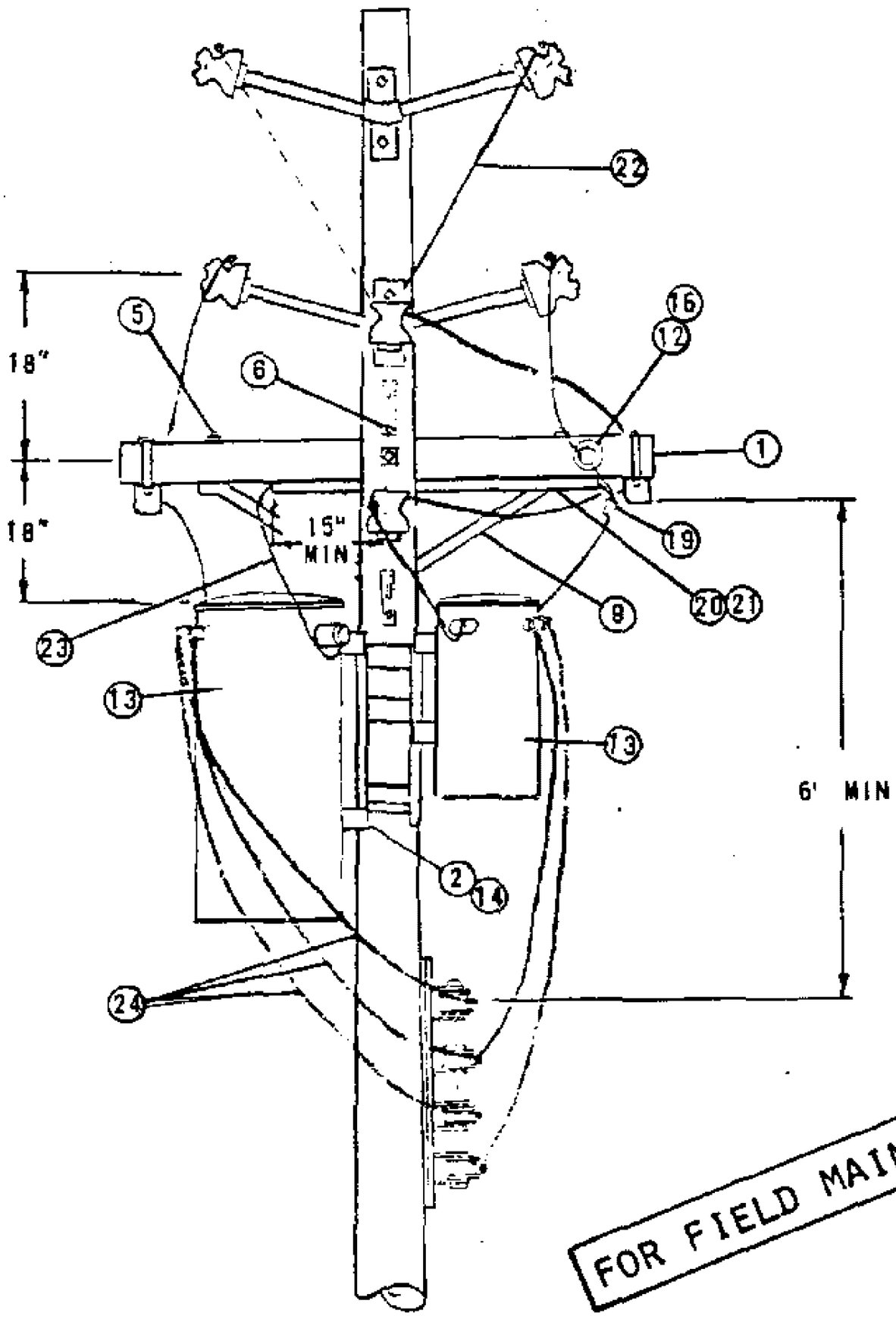

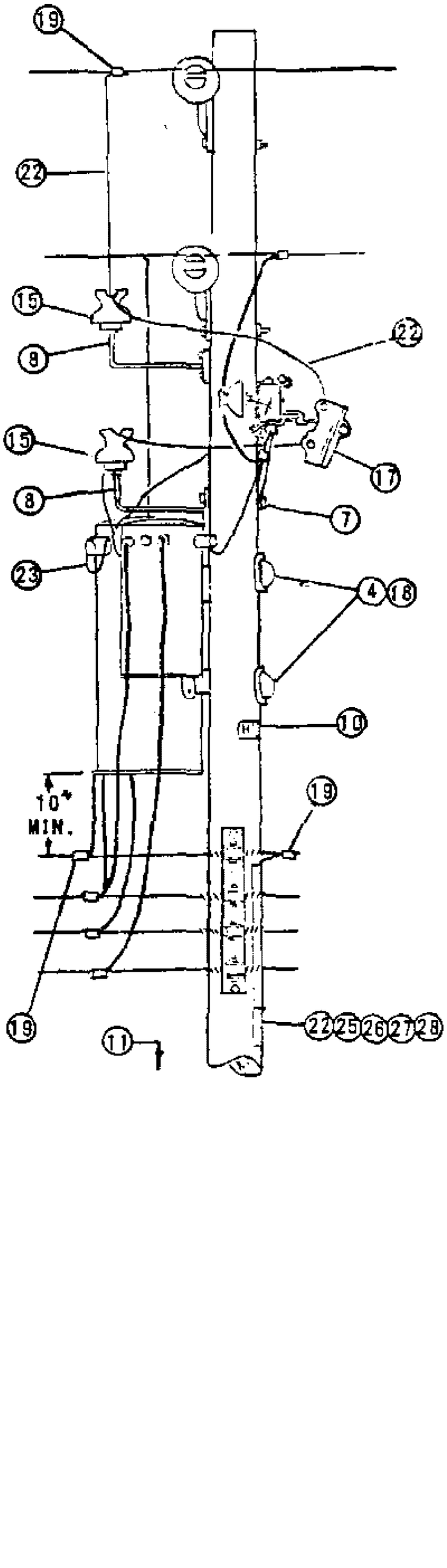

FOR FIELD MAINTENANCE ONLY

TABLE OF CONTENTS

DATE 1-1-86 APPD AE/KDB	SDG&E ELECTRIC STANDARDS 4KV OPEN WYE OR 2.4KV OPEN DELTA TYPE "W" TRANSFORMER INSTALLATION 2-50KVA MAX., ARMLESS TANGENT CONSTRUCTION	1199.501 SUPERSEDES 1154.1 (1-1-86)

NOTES:

(A) LIMITED TO TWO 50KVA MAXIMUM TRANSFORMER BECAUSE OF ENCROACHMENT INTO CLIMBING SPACE.
(B) USE TWO GROUND RODS SPACED A MINIMUM OF 6 FEET APART FOR EACH GROUND UNIT.
(C) 2.4KV 3ϕ OPEN DELTA INSTALLATIONS REQUIRE THREE CUTOUTS. FOR CONNECTIONS SEE PAGES 1117 AND 1118.
D. DO NOT USE OPEN DELTA OR OPEN WYE CONSTRUCTION WHERE SIZE OF A SINGLE 3ϕ MOTOR IS 15 HP OR LARGER.
(E) EXEMPT MATERIAL.
F. SEE DISTRIBUTION POLE TOPS SECTION FOR POLE TOP MATERIAL.
(G) UNIT GROUND COMPLETE ORDER 603120 WITH GRAY MOULDING, 603136 WITH PLAIN MOULDING.
H. SEE ARRESTER SECTION FOR ARRESTER REQUIREMENTS.

ITEM PTF	ITEM LTI	DESCRIPTION	QUANTITY	STOCK NO. OR CONSTR STD.
1		CROSSARM, 3 1/2"X 4 1/2"X 6'-0"	1	PG
2		BOLT, MACH., GALV., 5/8" (E) OR 3/4"X 2", 1 LOCK SPR WASH.	4	PGS 139, 140
3		BOLT, MACH., GALV., 5/8"X___", 2 SQ WASH. 1 DBL. COIL SPR. WASH. (E)	1	PGS 139, 140
4		BOLT, MACH., GALV., 3/4"X___", 1 SQ. CURV. WASH. WASH & 1 DBL COIL SPR. WASH.	2	PGS 139, 140
5		BOLT, MACH., GALV., 1/2"X 6", 1 RD WASH., 1 DBL.COIL SPR.WASH. (E)	2	153088
6		SCREW, LAG. GALV., 1/2"X 4" (E)	4	621568
7		SCREW, LAG. GALV., 5/8"X 5" (E)	1	621600
8		BRACKET, INSULATOR, 1"	2	166144
9		BRACE, CROSSARM, ANGLE 4'-0"	1	164032
10		SIGN, HIGH VOLTAGE & 8 ROOFING NAILS, GALV. (E)	1	647648, 492224
11		STEPS, POLE (E)	16	692992
	12	BOLT, MACH. 5/8" X 5" (E)	1	155488
	13	TRANSFORMER, SINGLE PHASE	2	PGS 1121.1-1121.12
	14	BRACKET, TRANSFORMER MOUNTING	1	402976
	15	INSULATOR (E)	2	429024, 429216
	16	PIN ADAPTER, 1 INCH THREAD	1	529248
	17	CUTOUT, 5KV (C)	2	PG 1211
	18	COVER, PLASTIC THRU BOLT & 2-20D NAILS, GALV. (E)	2	285696, 491392
	19	CONNECTORS, WIRE COMPRESSION	9	PGS 783-787
	20	CONDUIT, PVC, 3/4", SCHEDULE 40, TYPE 11 (E)	4'-0"	251328
	21	STRAPS, PIPE, 3/4", 2-6D NAILS, GALV. (E)	3	697888
	22	WIRE, BARE STRANDED COPPER #6	41'	813536
	23	WIRE, INSULATED, XLP, STRANDED COPPER, 5KV, #6	30'	194304
	24	WIRE, W.P., COPPER, (SIZE GOVERNED BY TRANSFORMER CAPACITY)	30'	PG 1125
	25	ROD, GROUND & CLAMP (B) (G)	2	603072, 230016 (E)
	26	MOULDING, HARDWOOD, 1" (G)	27'	487200
	27	STAPLES, MOULDING, GALV., 3"X 1 1/16"x 1/4" (G) (E)	18	678560
	28	STAPLES, FENCE, GALV., 1 1/4" (G) (E)	20	678528
	29			

FOR FIELD MAINTENANCE ONLY

TABLE OF CONTENTS

1199.502
SUPERSEDES
1154.2 (1-1-86)

SDG&E ELECTRIC STANDARDS

4KV OPEN WYE OR 2.4KV OPEN DELTA TYPE "W" TRANSFORMER INSTALLATION 2-50KVA MAX., ARMLESS TANGENT CONSTRUCTION

DATE 1-1-86
APPD AK/RDS

OH1156 FIELD MAINTENANCE ONLY

ALL VERSIONS LISTED IN FMO ARE SUPERSEDED BY THEIR CURRENT VERSION FOUND INSIDE THE OVERHEAD CONSTRUCTION STANDARD MANUAL.

REVISION HISTORY:

02/16/2023: A NEWER VERSION MOVED TO FMO

07/13/2016: MOVED TO FMO

TABLE OF CONTENTS

© 1998 - 2023 San Diego Gas & Electric Company. All rights reserved. Removal of this copyright notice without permission is not permitted under law.

REV	CHANGE	DR	BY	DSN	APV	DATE	REV	CHANGE	DR	BY	DSN	APV	DATE
C							F						
B	EDITORIAL CHANGES	ARC	MRF	GWL	KRG	02/16/2023	E						
A	ORIGINAL ISSUE	-	JS	IL	MDJ	07/13/2016	D						

SHEET 1 OF 1	X Indicates Latest Revision ☐ Completely Revised ☐ New Page ☐ Information Removed SDG&E ELECTRIC OVERHEAD FIELD MAINTENANCE ONLY STANDARDS OPEN WYE OR OPEN DELTA INSTALLATIONS	FMO OH1156

SCOPE: THIS STANDARD SHOWS THE INSTALLATION METHOD OF A 4KV OPEN WYE WITH TYPE 'W' TRANSFORMERS, CUTOUT ARM AND SECONDARY LINE ARM CONSTRUCTION.

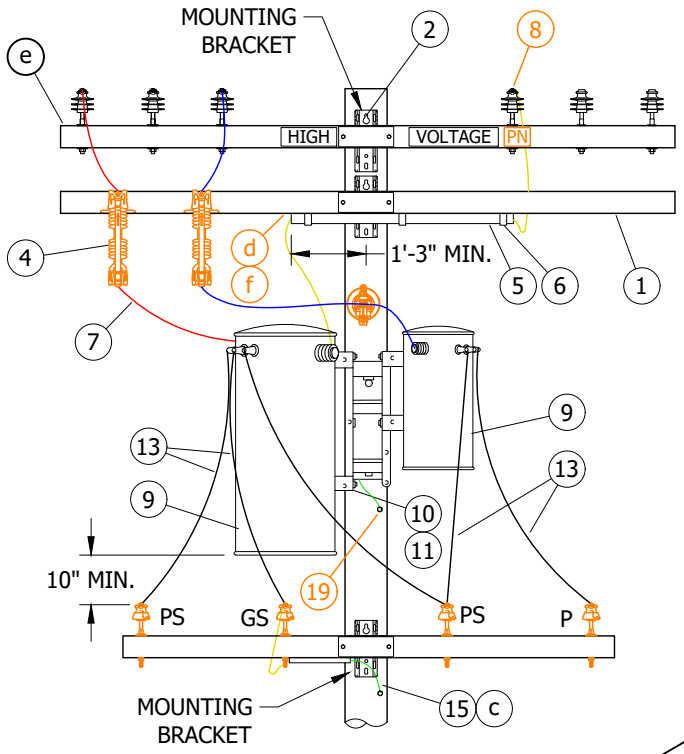

FIGURE 1
FRONT VIEW

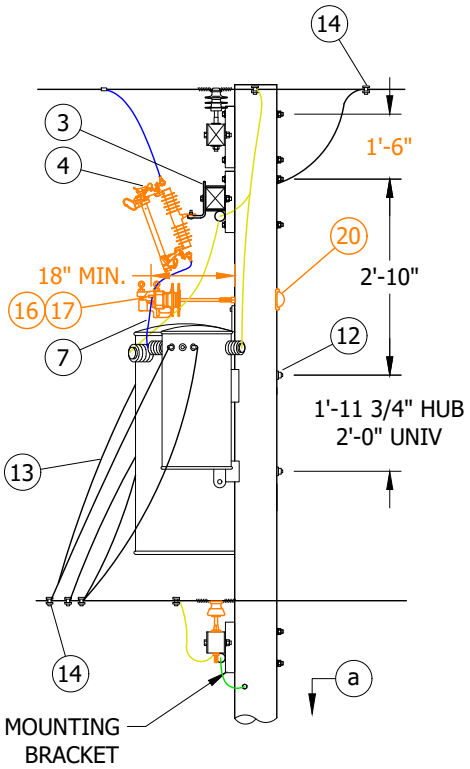

FIGURE 1
SIDE VIEW

FIELD MAINTENANCE ONLY

INSTALLATION:

(A) LIMITED TO 50 KVA MAXIMUM TRANSFORMER BECAUSE OF ENCROACHMENT INTO CLIMBING SPACE.

(B) 2.4KV THREE-PHASE OPEN DELTA INSTALLATIONS REQUIRE THREE CUTOUTS. FOR CONNECTIONS, SEE PAGE 1117.

C. DO NOT USE OPEN DELTA OR OPEN WYE CONSTRUCTION WHERE SIZE OF A SINGLE THREE-PHASE MOTOR IS 15 HP OR LARGER.

D. SECTIONALIZING FUSES AND A STATION ARE **NOT** ALLOWED ON THE SAME POLE. A DEVIATION REQUEST WILL NOT BE APPROVED FOR THIS CONSTRUCTION.

BILL OF MATERIALS:

ITEM	DESCRIPTION	QUANTITY	STANDARD PAGE	STOCK NUMBER	DESIGN UNITS
1	CROSSARM, 3 3/4" X 5 3/4" X 10'-0"	2	379	S294378	4TF
2	BOLT, MACH, GALV, 5/8" X (LENGTH AS REQ'D), 2 SQ. & 1 DBL COIL SPRING WASHER	4	390	--	--
3	BRACKET, CUTOUT/ARRESTER, CROSSARM MOUNTING	2	397	S165452 (X)	COBKT
4	CUTOUT, 12KV (B)	2	1212	--	--

©1998 - 2023 San Diego Gas & Electric Company. All rights reserved. Removal of this copyright notice without permission is not permitted under law.

REV	CHANGE	DR	BY	DSN	APV	DATE	REV	CHANGE	DR	BY	DSN	APV	DATE
C	TABLE UPDATE	-	JAC	JES	CZH	11/12/2019	F						
B	EDITORIAL CHANGES	-	JS	JS	CZH	10/01/2018	E						
A	ORIGINAL ISSUE	-	-	JS	DW	06/12/2013	D	UPDATED AND MOVED TO FMO	ARC	MRF	GLW	KRG	02/16/2023

X Indicates Latest Revision | Completely Revised | New Page | Information Removed

SDG&E ELECTRIC OVERHEAD FIELD MAINTENANCE ONLY STANDARDS

4KV, OPEN WYE TYPE "W" TRANSFORMER
INSTALLATION, CUTOUT ARM, SECONDARY LINE ARM CONSTRUCTION

FMO OH1156.1

TABLE OF CONTENTS

BILL OF MATERIALS (CONT'D):

ITEM	DESCRIPTION			QUANTITY	STANDARD PAGE	STOCK NUMBER	DESIGN UNITS
5	CONDUIT, PVC, 3/4" X 4'-0", SCH 40, TYPE 2			1	--	S251328	--
6	STRAP, CONDUIT, 3/4", GALV (I)			3	--	S697888	--
7	WIRE, HENDRIX, TAP			25'-0"	711	--	--
8	INSULATOR, 12KV NEUTRAL			1	750	S429216	--
9	TRANSFORMER, SINGLE-PHASE, TYPE W (A)			1	1121	--	--
10	BRACKET, TRANSFORMER MOUNTING			1	--	S402976	--
11	BOLT, MACH, GALV, 5/8" OR 3/4" X 2", 2 RD & 1 LOCK WASHER			4	390	--	--
12	BOLT, MACH, GALV, 3/4" X (LENGTH AS REQ'D), 1 SQ CURV & 1 DBL COIL SPRING WASHER			2	390	--	--
13	WIRE, THW (SIZE GOVERNED BY TRANSFORMER CAPACITY)			35'-0"	1125	--	--
14	CONNECTORS, WIRE COMPRESSION, CU OR AL, AS REQ'D			AS REQ'D	783, 785	--	--
15	GROUNDING, #4 GROUND WIRE, RODS AND CONNECTORS		STEEL POLE	1	1002	--	GNDPSP
			WOOD/FG POLE				GNDPVC
16	INSULATOR, VISE-TOP			1	750	--	--
17	BRACKET, INSULATOR, STANDOFF	30"	1" THREAD	1	390	S166144	KBKT30
		28"	1 3/8" THREAD			S166176	KBKT28
18	SCREW (I)			AS REQ'D	--	S618086 (X)	--
19	BLIND NUT, 1/2"			AS REQ'D	--	S503460 (X)	--
20	COVER, BOLT			1	390	S285696	--

NOTES:

(I) NOT SHOWN ON FIGURES.

(X) THIS ITEM IS EXEMPT.

REFERENCE:

(a) FOR POLE STEPPING, SEE OH363.

b. FOR LIGHTNING ARRESTER REQUIREMENTS, SEE OH1247.

(c) FOR GROUNDING METHODS, SEE OH1002.

(d) SEE OH287: CONTAMINATION DISTRICTS.

(e) FOR FIBERGLASS CROSSARMS, SEE OH379.

(f) FOR BONDING, SEE OH1003.

FIELD MAINTENANCE ONLY

© 1998 - 2023 San Diego Gas & Electric Company. All rights reserved. Removal of this copyright notice without permission is not permitted under law.

REV	CHANGE	DR	BY	DSN	APV	DATE	REV	CHANGE	DR	BY	DSN	APV	DATE
C	TABLE UPDATE	-	JAC	JES	CZH	11/12/2019	F						
B	EDITORIAL CHANGES	-	JS	JS	CZH	10/01/2018	E						
A	ORIGINAL ISSUE	-	-	JS	DW	06/12/2013	D	UPDATED AND MOVED TO FMO	ARC	MRF	GLW	KRG	02/16/2023

X Indicates Latest Revision | Completely Revised | New Page | Information Removed

SDG&E ELECTRIC OVERHEAD FIELD MAINTENANCE ONLY STANDARDS

4KV, OPEN WYE TYPE "W" TRANSFORMER
INSTALLATION, CUTOUT ARM, SECONDARY LINE ARM CONSTRUCTION

TABLE OF CONTENTS

SCOPE: THIS STANDARD SHOWS THE INSTALLATION METHOD OF A 12KV, THREE-PHASE, OPEN DELTA TYPE "H" OR "HF" TRANSFORMER.

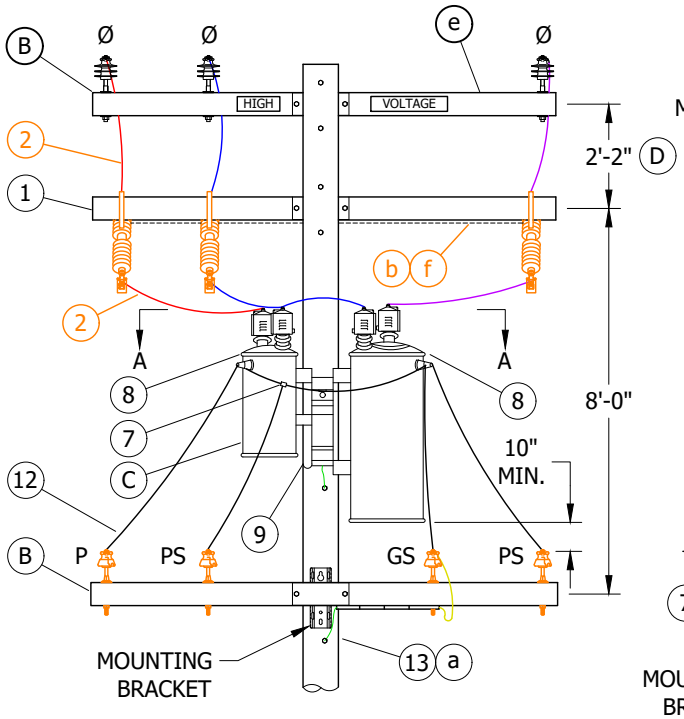

FIGURE 1
FRONT VIEW

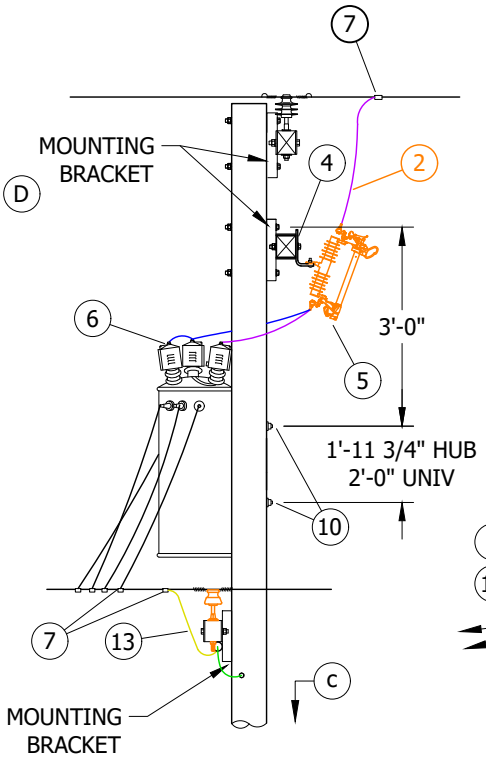

FIGURE 1
SIDE VIEW

TABLE 1

MACRO UNITS	
KVA	**OVERHEAD MACRO UNITS**
25	25H120
50	50H120
75	75H120

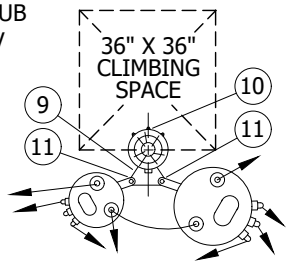

FIGURE 1
VIEW A-A

FIELD MAINTENANCE ONLY

TABLE OF CONTENTS

INSTALLATION:

(A) LIMITED TO TWO 50 KVA MAXIMUM TRANSFORMERS BECAUSE OF ENCROACHMENT ON CLIMBING SPACE. 75KVA TRANSFORMERS MAY BE USED IF THEY HAVE SMALL CASES.

(B) PRIMARY AND SECONDARY CONSTRUCTION SHOWN ARE TYPICAL, AND THEIR MATERIALS ARE NOT INCLUDED. MAY BE INSTALLED WITH ARMLESS PRIMARY OR CABLE SECONDARY.

(C) POWER TRANSFORMER TO BE HUNG ON SAME SIDE OF POLE AS 2-PHASE WIRES TO PREVENT PHASING PROBLEMS WHEN CLOSING DELTA.

(D) IF ADDITIONAL SPACE IS REQUIRED BELOW THE CUTOUT ARM, THE SEPARATION BETWEEN THE LINE ARM AND CUTOUT ARM MAY BE REDUCED TO 12-INCH WITH THE USE OF A SPACE BOLT, SECTIONALIZING FUSES AND A STATION ARE **NOT** ALLOWED ON THE SAME POLE. A DEVIATION REQUEST WILL NOT BE APPROVED FOR THIS CONSTRUCTION.

E. OPEN DELTA INSTALLATIONS ARE NOT TO BE USED IF SERVICE TO ANY THREE-PHASE MOTOR LARGER THAN 10 HP IS REQUIRED. GENERALLY, OPEN DELTA INSTALLATIONS SHOULD NOT BE USED TO SERVE SUBMERSIBLE PUMPS OF ANY SIZE. SEE DESIGN MANUAL PAGE 5413.4.

© 1998 - 2023 San Diego Gas & Electric Company. All rights reserved. Removal of this copyright notice without permission is not permitted under law.

REV	CHANGE	DR	BY	DSN	APV	DATE	REV	CHANGE	DR	BY	DSN	APV	DATE
C	TABLE UPDATE	-	JAC	JES	CZH	11/12/2019	F						
B	EDITORIAL CHANGES	-	JS	JS	CZH	10/01/2018	E						
A	ORIGINAL ISSUE	-	-	JS	DW	06/12/2013	D	UPDATED AND MOVED TO FMO	ARC	MRF	GLW	KRG	02/16/2023

X Indicates Latest Revision | Completely Revised | New Page | Information Removed

SDG&E ELECTRIC OVERHEAD FIELD MAINTENANCE ONLY STANDARDS

12KV, THREE-PHASE, OPEN DELTA TYPE "H" OR "HF" TRANSFORMER INSTALLATION

FMO OH1156.3

BILL OF MATERIALS:

ITEM	DESCRIPTION		QUANTITY	STANDARD PAGE	STOCK NUMBER	DESIGN UNITS
1	CROSSARM, FIBERGLASS, 3 3/4" X 5 3/4" X 10'-0"		2	379	S294378	4TF
2	WIRE, MEDIUM HARD-DRAWN COPPER, POLYETHYLENE COVERED, #4/7 STRAND		AS REQ'D	711	S815044	POLY4J
3	BOLT, MACH, GALV, 5/8" X (LENGTH AS REQ'D), 2 SQ & 1 DBL COIL SPRING WASHER (I)		1	390	--	--
4	BRACKET, CUTOUT/ARRESTER, CROSSARM MOUNTING		3	397	S165452 (X)	COBKT
5	CUTOUT, 12KV		3	1240	--	--
6	BUSHING COVER, TRANSFORMER		4	--	S289188 (X)	BSHCOV
7	CONNECTOR, WIRE, COMPRESSION, CU OR AL, AS REQ'D		AS REQ'D	783, 785	--	--
8	TRANSFORMER, SINGLE-PHASE, TYPE H OR HF (A)		2	1121	--	--
9	BRACKET, TRANSFORMER MOUNTING		1	--	S402976	--
10	BOLT, MACH, GALV, 3/4" X (LENGTH AS REQ'D) 1 SQ CURV WASHER & 1 DBL COIL SPR WASH		2	390	--	--
11	BOLT, MACH, GALV, 5/8" OR 3/4" X 2", 1 RD WASHER & 1 DBL COIL SPRING WASH		4	390	--	--
12	WIRE, THW COPPER, (SIZE DETERMINED BY TRANSFORMER CAPACITY)		28'-0"	1125	--	--
13	GROUNDING, #4 PVC GROUND WIRE, RODS AND CONNECTORS	STEEL POLE	1	1002	--	GNDPSP
		WOOD/FG POLE				GNDPVC

NOTES:

(I) NOT SHOWN ON FIGURES.

(X) THIS ITEM IS EXEMPT.

REFERENCE:

(a) FOR GROUNDING METHODS, SEE OH1002.

(b) SEE OH287: CONTAMINATION DISTRICTS.

(c) FOR POLE STEPPING, SEE OH363.

d. FOR LIGHTNING ARRESTER REQUIREMENTS, SEE OH1247.

(e) SEE OH379: FIBERGLASS CROSSARMS.

(f) FOR BONDING, SEE OH1003.

TABLE OF CONTENTS

FIELD MAINTENANCE ONLY

© 1998 - 2023 San Diego Gas & Electric Company. All rights reserved. Removal of this copyright notice without permission is not permitted under law.

REV	CHANGE	DR	BY	DSN	APV	DATE	REV	CHANGE	DR	BY	DSN	APV	DATE
C	TABLE UPDATE	-	JAC	JES	CZH	11/12/2019	F						
B	EDITORIAL CHANGES	-	JS	JS	CZH	10/01/2018	E						
A	ORIGINAL ISSUE	-	-	JS	DW	06/12/2013	D	UPDATED AND MOVED TO FMO	ARC	MRF	GLW	KRG	02/16/2023

X Indicates Latest Revision | Completely Revised | New Page | Information Removed

SDG&E ELECTRIC OVERHEAD FIELD MAINTENANCE ONLY STANDARDS

12KV, THREE-PHASE, OPEN DELTA TYPE "H" OR "HF" TRANSFORMER INSTALLATION

SCOPE: THIS STANDARD SHOWS THE INSTALLATION METHOD OF A 7.2KV, THREE-PHASE, OPEN WYE TYPE "Y" OR "YF" TRANSFORMERS FOR 120/240V OR 240/480V OPEN DELTA SECONDARIES.

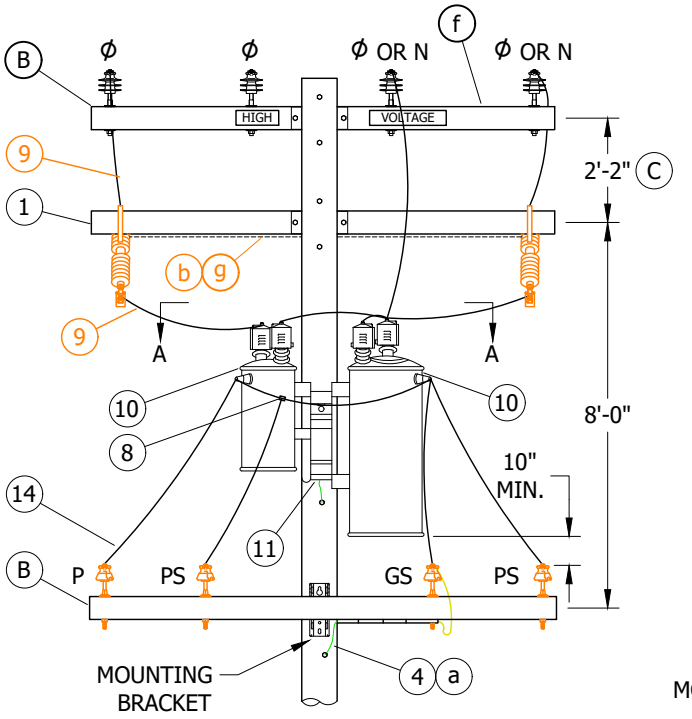

FIGURE 1
FRONT VIEW

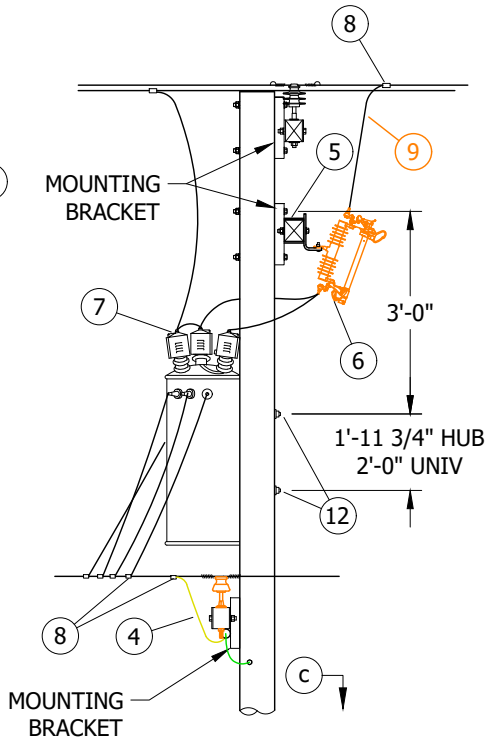

FIGURE 1
SIDE VIEW

TABLE 1

MACRO UNITS	
KVA	OVERHEAD MACRO UNITS
25	25Y120

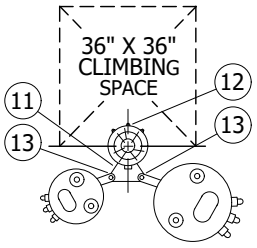

FIGURE 1
VIEW A-A

FIELD MAINTENANCE ONLY

INSTALLATION:

(A) LIMITED TO TWO TRANSFORMERS OF 50 KVA MAXIMUM CAPACITY BECAUSE OF ENCROACHMENT ON CLIMBING SPACE. 75KVA TRANSFORMERS MAY BE USED IF THEY DO NOT ENCROACH IN CLIMBING SPACE.

(B) PRIMARY AND SECONDARY CONSTRUCTION SHOWN ARE TYPICAL, AND THEIR MATERIALS ARE NOT INCLUDED. MAY BE INSTALLED WITH ARMLESS PRIMARY OR CABLE SECONDARY.

(C) IF ADDITIONAL SPACE IS REQUIRED BELOW THE CUTOUT ARM, THE SEPARATION BETWEEN THE LINE ARM AND CUTOUT ARM MAY BE REDUCED TO 12 INCHES WITH THE USE OF A SPACE BOLT. SECTIONALIZING FUSES AND A STATION ARE **NOT** ALLOWED ON THE SAME POLE. A DEVIATION REQUEST WILL NOT BE APPROVED FOR THIS CONSTRUCTION.

D. INSTALLATION FURTHER THAN FIVE MILES FROM SUBSTATION REQUIRES ELECTRIC DISTRIBUTION STANDARDS APPROVAL (SEE DM6212).

© 1998 - 2023 San Diego Gas & Electric Company. All rights reserved. Removal of this copyright notice without permission is not permitted under law.

REV	CHANGE	DR	BY	DSN	APV	DATE	REV	CHANGE	DR	BY	DSN	APV	DATE
C	TABLE UPDATE	-	JAC	JES	CZH	11/12/2019	F						
B	EDITORIAL CHANGES	-	JS	JS	CZH	10/01/2018	E						
A	ORIGINAL ISSUE	-	-	JS	DW	06/12/2013	D	UPDATED AND MOVED TO FMO	ARC	MRF	GLW	KRG	02/16/2023

X Indicates Latest Revision | Completely Revised | New Page | Information Removed

TABLE OF CONTENTS

BILL OF MATERIALS:

ITEM	DESCRIPTION	QUANTITY	STANDARD PAGE	STOCK NUMBER	DESIGN UNITS
1	CROSSARM, FIBERGLASS, 3 3/4" X 5 3/4" X 10'-0"	1	379	S294378	4TF
2	BLIND NUT, 1/2" (I)	AS REQ'D	1002	S503460 (X)	--
3	SCREWS (I)	AS REQ'D	--	S618086 (X)	--
4	GROUNDING, #4 PVC GROUND WIRE, RODS AND CONNECTORS — STEEL POLE	1	1002	--	GNDPSP
	GROUNDING, #4 PVC GROUND WIRE, RODS AND CONNECTORS — WOOD/FG POLE				GNDPVC
5	BRACKET, CUTOUT/ARRESTER, CROSSARM MOUNTING	2	397	S165452 (X)	COBKT
6	CUTOUT, 12KV	2	1240	--	--
7	BUSHING COVER, TRANSFORMER	4	--	S289188 (X)	BSHCOV
8	CONNECTOR, WIRE, COMPRESSION, CU OR AL, AS REQ'D	AS REQ'D	783, 785	--	--
9	WIRE, MEDIUM HARD-DRAWN COPPER, POLYETHYLENE COVERED, #4/7 STRAND (II)	12'-0"	711	S815044	POLY4J
10	TRANSFORMER, SINGLE-PHASE, TYPE "Y" OR "YF" (A)	2	1121	--	--
11	BRACKET, TRANSFORMER MOUNTING	1	--	S402976	--
12	BOLT, MACH, GALV, 3/4" X (LENGTH AS REQ'D) 1 SQ CURV WASHER & 1 DBL COIL SPR WASH	2	390	--	--
13	BOLT, MACH, GALV, 5/8" OR 3/4" X 2", 1 RD WASHER & 1 DBL COIL SPRING WASH	4	390	--	--
14	WIRE, THW COPPER, (SIZE DETERMINED BY TRANSFORMER CAPACITY)	28'-0"	1125	--	--
15	STAPLES, FENCE, GALV., 1 1/4" (II)	AS REQ'D	--	--	--

NOTES:

(I) NOT SHOWN ON FIGURES.
(II) IF BONDING IS REQUIRED, ORDER ADDITIONAL ITEMS.
(X) THIS ITEM IS EXEMPT.

REFERENCE:

(a) FOR GROUNDING METHODS, SEE OH1002.
(b) SEE OH287: CONTAMINATION DISTRICTS.
(c) FOR POLE STEPPING, SEE OH363.
d. FOR LIGHTNING ARRESTER REQUIREMENTS, SEE OH1247.
e. FOR TRANSFORMER CONNECTION DIAGRAMS, SEE OH1116.
(f) SEE OH379: FIBERGLASS CROSSARMS.
(g) FOR BONDING, SEE OH1003.

FIELD MAINTENANCE ONLY

TABLE OF CONTENTS

© 1998 - 2023 San Diego Gas & Electric Company. All rights reserved. Removal of this copyright notice without permission is not permitted under law.

REV	CHANGE	DR	BY	DSN	APV	DATE	REV	CHANGE	DR	BY	DSN	APV	DATE
C	TABLE UPDATE	-	JAC	JES	CZH	11/12/2019	F						
B	EDITORIAL CHANGES	-	JS	JS	CZH	10/01/2018	E						
A	ORIGINAL ISSUE	-	-	JS	DW	06/12/2013	D	UPDATED AND MOVED TO FMO	ARC	MRF	GLW	KRG	02/16/2023

X Indicates Latest Revision | Completely Revised | New Page | Information Removed

SDG&E ELECTRIC OVERHEAD FIELD MAINTENANCE ONLY STANDARDS

7.2KV, THREE-PHASE, OPEN WYE TYPE "Y" OR "YF" TRANSFORMER INSTALLATION

SCOPE: THIS STANDARD SHOWS THE INSTALLATION METHOD OF A 4KV OPEN WYE WITH TYPE 'W' TRANSFORMERS, AND SECONDARY LINE ARM CONSTRUCTION.

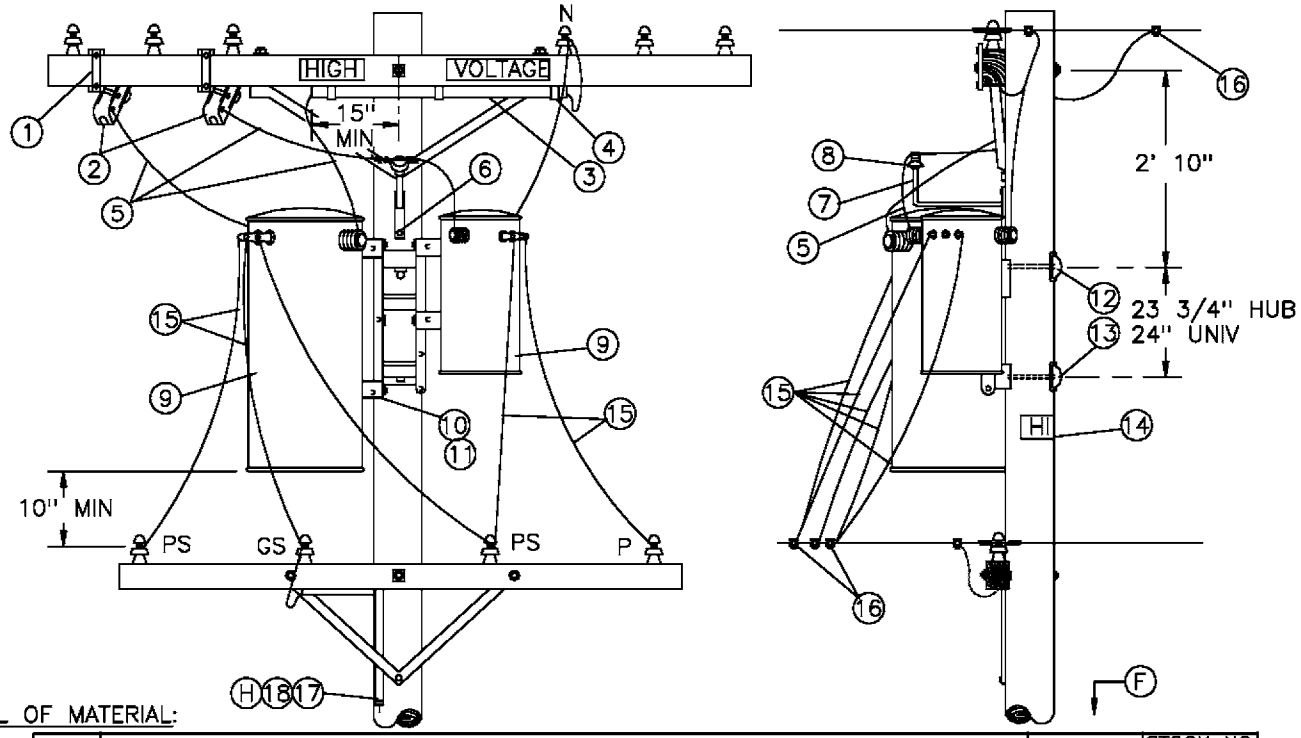

BILL OF MATERIAL:

ITEM	DESCRIPTION	QUANTITY	STOCK NO OR CONSTR STANDARD
1	BRACKET, CUTOUT/ARRESTER, FOR CROSSARM MOUNTING	2	166070
2	CUTOUT, 12KV (B)	2	STD 1212
3	CONDUIT, PVC, 3/4" X 4', SCHED 40, TYPE 2	1	251328
4	STRAP, CONDUIT, 3/4", GALV & 2 – 6D NAILS, GALV	3 –	697888 491552
5	WIRE, 5KV INSULATED, XLP, #6 STRANDED COPPER	25'	194304
6	SCREW, LAG, 1/2" X 4"	2	621568
7	BRACKET, INSULATOR, 1" LEAD THREAD	1	166134
8	INSULATOR, 12KV NEUTRAL	1	429216
9	TRANSFORMER, SINGLE PHASE, TYPE W (A)	1	STD 1121
10	BRACKET, TRANSFORMER MOUNTING	1	402976
11	BOLT, MACH, GALV, 5/8" OR 3/4" X 2", 2 RD & 1 LOCK WASHER	4	STD 392
12	BOLT, MACH, GALV, 3/4" X (LENGTH AS REQ'D), 1 SQ CURV & 1 DBL COIL SPRING WASHER	2	STD 392
13	COVER, VOLT, PLASTIC & 6 – 10D NAILS, GALV	2 –	285696 491392
14	SIGN, HIGH VOLTAGE & 8 ROOFING NAILS, GALV	1 –	647648 492224
15	WIRE, W.P. (SIZE GOVERNED BY TRANSFORMER CAPACITY)	35'	STD 1125
16	CONNECTORS, WIRE COMPRESSION, CU OR AL, AS REQ'D	AS REQ'D	783–787
17	WIRE, BARE STRANDED, COPPER, #6	40'	813536
18	UNIT GROUND, COMPLETE (H)	1	603136

FOR FIELD MAINTENANCE ONLY

INSTALLATION:

(A) LIMITED TO 50 KVA MAXIMUM TRANSFORMER BECAUSE OF ENCROACHMENT INTO CLIMBING SPACE.
(B) 2.4KV 3Ø OPEN DELTA INSTALLATIONS REQUIRE THREE CUTOUTS. FOR CONNECTIONS SEE PAGE 1117.
C. DO NOT USE OPEN DELTA OR OPEN WYE CONSTRUCTION WHERE SIZE OF A SINGLE 3Ø MOTOR IS 15 HP OR LARGER.

REFERENCE:

(F) POLE–STEPPING – SEE STANDARD 363.
G. FOR LIGHTNING ARRESTER REQUIREMENTS – SEE STANDARD 1247.
(H) GROUNDING METHODS – SEE STANDARD 1002.
I. BOND ALL CUTOUTS IN HEAVY CONTAMINATION DISTRICTS AS IDENTIFIED ON STANDARD 287.

TABLE OF CONTENTS

1199.504 SUPERSEDES 1156 (1–1–93)	SDG&E ELECTRIC STANDARDS 4KV OPEN WYE TYPE "W" TRANSFORMER INSTALLATION, SECONDARY LINE ARM CONSTRUCTION	DATE 1–1–86 APPD /

FIELD MAINTENANCE ONLY

REVISION HISTORY:

7/13/2016: All versions prior to 2016 are superseded by their current version found inside the Overhead Construction Standard Manual.

TABLE OF CONTENTS

© 1998 - 2016 San Diego Gas & Electric Company. All rights reserved. Removal of this copyright notice without permission is not permitted under law.

REV	CHANGE	BY	DSGN	APPV	DATE	REV	CHANGE	BY	DSGN	APPV	DATE
C						F					
B						E					
A	ORIGINAL ISSUE	JS	IL	MDJ	7/13/2016	D					

X Indicates Latest Revision | Completely Revised | New Page | Information Removed

SHEET
1 OF 1

SDG&E ELECTRIC OVERHEAD STANDARD

12KV OPEN DELTA TYPE "HE" OR "HJ" TRANSFORMER
INSTALLATION, 2-50KVA MAX., ARMLESS TANGENT CONSTRUCTION

FMO
OH 1161

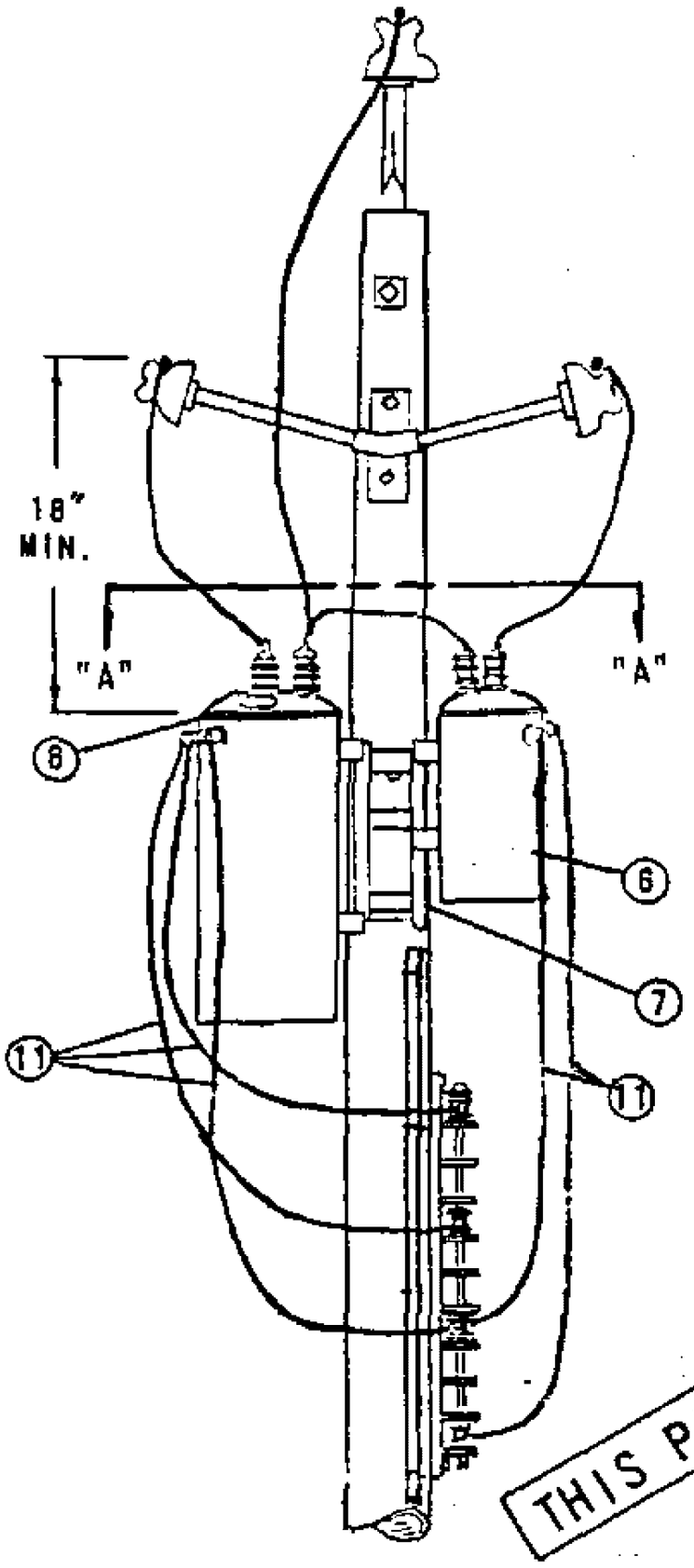

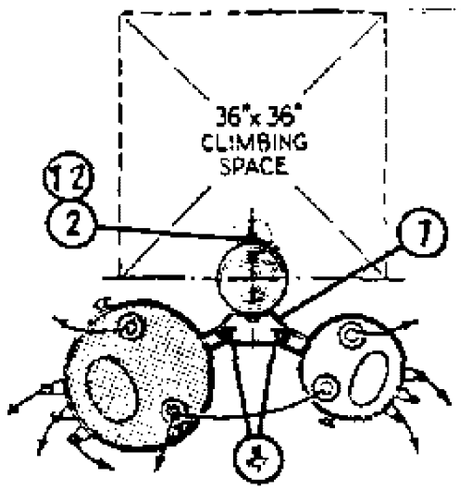

SECTION "A" - "A"

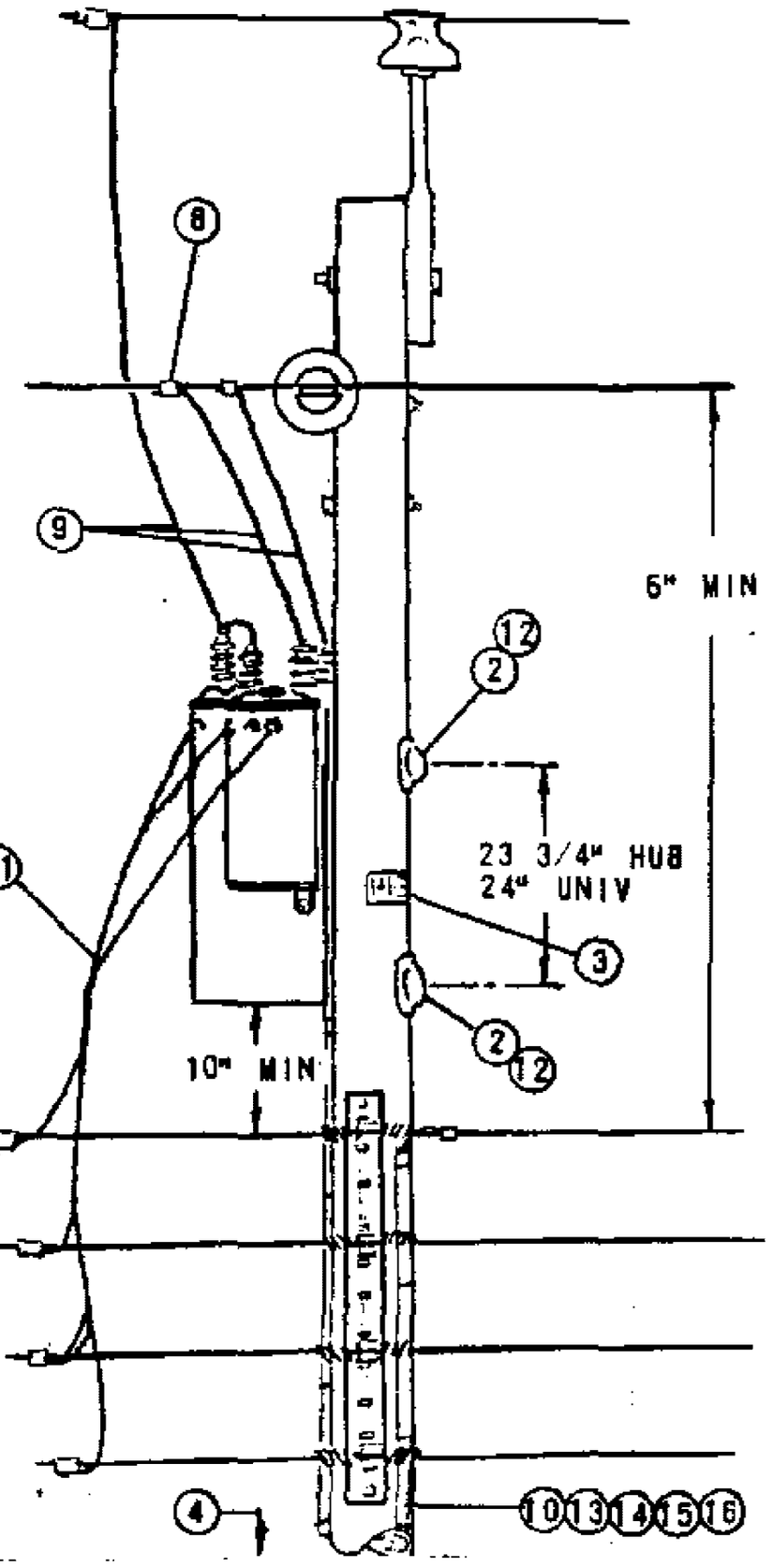

THIS PAGE FIELD MAINTENANCE ONLY

TABLE OF CONTENTS

NOTES:

(A) UNIT GROUND COMPLETE ORDER 603120 WITH GRAY MOULDING, 603136 WITH PLAIN MOULDING.

(B) USE TWO ROD GROUND.

C. SEE DISTRIBUTION POLE TOP SECTION FOR POLE TOP MATERIAL.

D. LIMITED TO TWO 50KVA MAXIMUM TRANSFORMER BECAUSE OF ENCROACHMENT INTO CLIMBING SPACE.

(E) EXEMPT MATERIAL.

F. WHEN ARRESTERS ARE REQUIRED PER STANDARDS PAGE 1247, USE TYPE "HJ" TRANSFORMERS.

ITEM PTF	ITEM LTI	DESCRIPTION		QUANTITY HE	QUANTITY HJ	STOCK NO. OR CONSTR. STD.
		BOLT, MACH., GALV., 5/8" (E) OR 3/4" X 2", 1 SQ. CURV WASH., 1 LOCK SPR WASH.		4	4	PGS 139, 140
2		BOLT, MACH., GALV., 3/4"X___" 1 SQ. CURV. WASH, 1 DBL COIL SPR WASH.		2	2	PGS 139,140
3		SIGN, HIGH VOLTAGE & 8 ROOFING NAILS, GALV	(E)	1	1	647648, 492192
4		STEPS, POLE	(E)	16	16	592992
5						
	6	TRANSFORMER, SELF PROTECTED TYPE, SINGLE PHASE (HE or HJ)		2	2	PGS 1121.01-1121.12
	7	BRACKET, TRANSFORMER MOUNTING		1	1	402976
	8	CONNECTORS, WIRE, COMPRESSION		10	11	PGS 783 - 787
	9	WIRE, BARE STRANDED, COPPER, #6		70'	70'	813536
	10	WIRE, BARE STRANDED, COPPER, #2		—	40'	813664
	11	WIRE, W.P. COPPER, (SIZE GOVERNED BY TRANSFORMER CAPACITY)		30'	30'	PG 1125
	12	COVER, PVC THRU BOLT & 6-100, NAILS, GALV.	(E)	2	2	285696, 491392
	13	ROD, GROUND & CLAMP (B)	(A)	2	4	603072, 230016 (E)
	14	MOULDING, HARDWOOD, 1"	(A)	27'	57'	487200
	15	STAPLES, MOULDING, GALV., 3"X 1 1/16"X 1/4"	(A) (E)	20	38	678560
	16	STAPLES, FENCE, GALV., 1 1/4"	(A) (E)	25	50	678528
	17					

DATE 1-1-86
APPD AE/RDS

SDG&E ELECTRIC STANDARDS

12KV OPEN DELTA TYPE "HE" OR "HJ" TRANSFORMER INSTALLATION, 2-50KVA MAX., ARMLESS TANGENT CONSTRUCTION

1199.601
SUPERSEDES
1161 (1-1-86)

FIELD MAINTENANCE ONLY

REVISION HISTORY:

7/13/2016: All versions prior to 2016 are superseded by their current version found inside the Overhead Construction Standard Manual.

TABLE OF CONTENTS

© 1998 - 2016 San Diego Gas & Electric Company. All rights reserved. Removal of this copyright notice without permission is not permitted under law.

REV	CHANGE	BY	DSGN	APPV	DATE	REV	CHANGE	BY	DSGN	APPV	DATE
C						F					
B						E					
A	ORIGINAL ISSUE	JS	IL	MDJ	7/13/2016	D					

X Indicates Latest Revision | Completely Revised | New Page | Information Removed

SHEET 1 OF 1

SDG&E ELECTRIC OVERHEAD STANDARD

12KV OPEN DELTA TYPE "HE" OR "HJ" TRANSFORMER INSTALLATION
2-50KVA MAX., ARMLESS DEAD END CONSTRUCTION

FMO
OH 1162

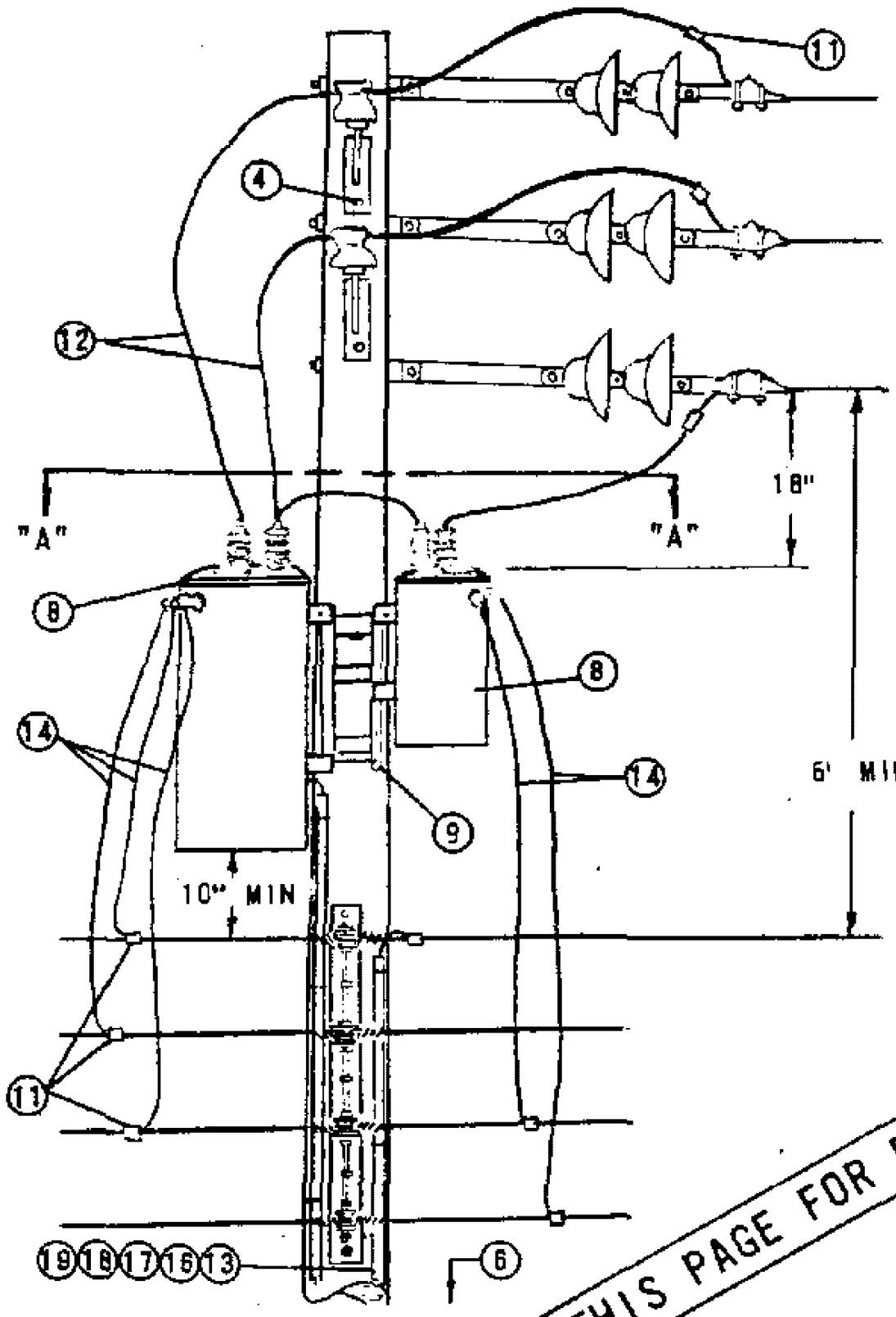

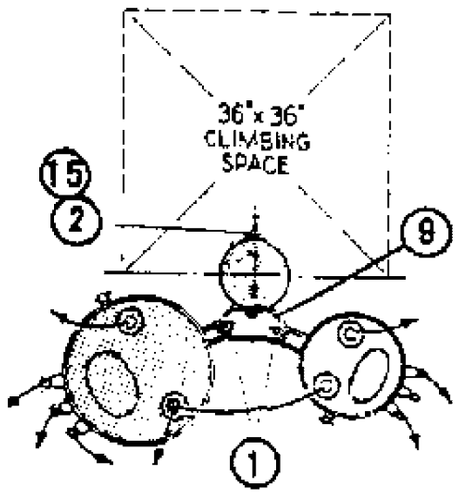

SECTION "A" - "A"

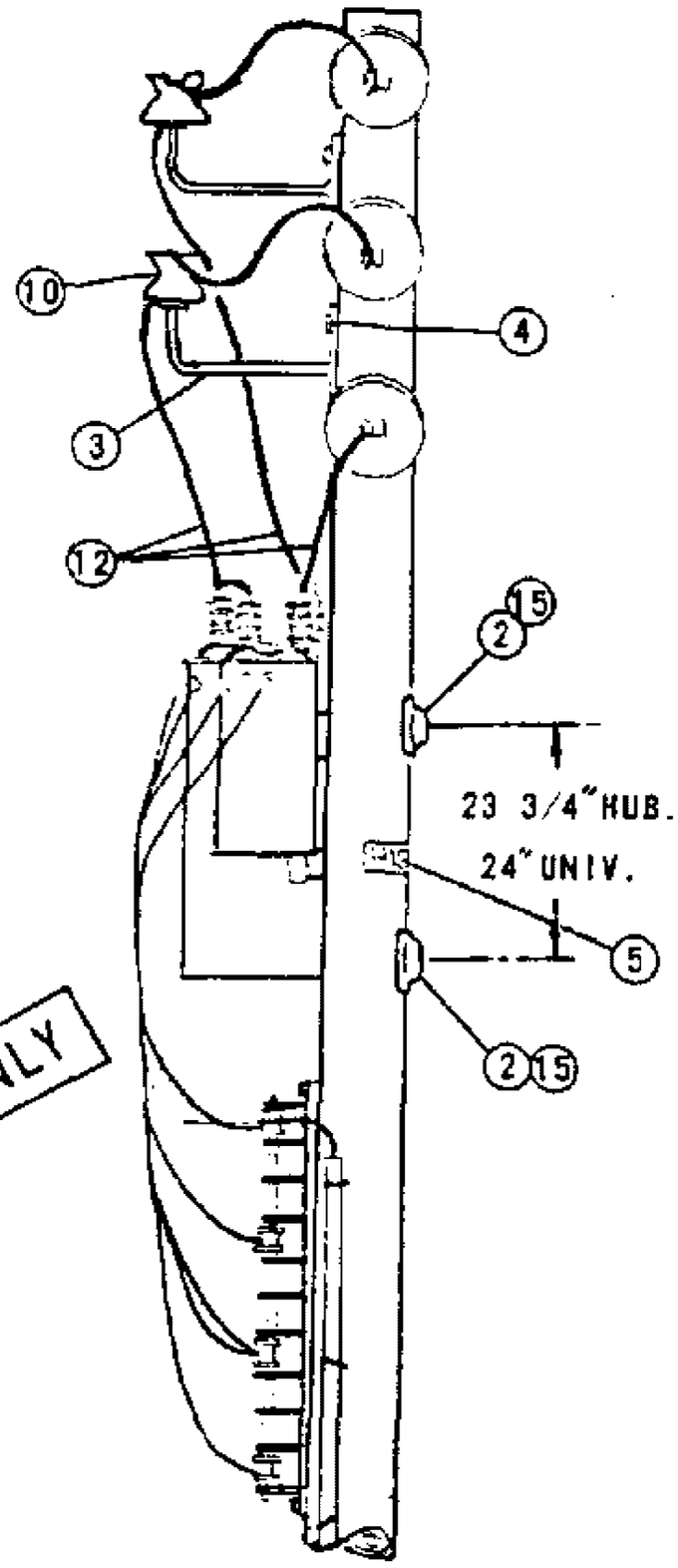

THIS PAGE FOR FIELD MAINTENANCE ONLY

NOTES:

(A) UNIT GROUND COMPLETE ORDER 603120 WITH GRAY MOULDING, 603136 WITH PLAIN MOULDING.
(B) USE TWO ROD GROUND.
C. SEE DISTRIBUTION POLE TOP SECTION FOR POLE TOP MATERIAL.
D. LIMITED TO TWO 50KVA MAXIMUM TRANSFORMER BECAUSE OF ENCROACHMENT INTO CLIMBING SPACE.
(E) EXEMPT MATERIAL.
F. WHEN ARRESTERS ARE REQUIRED PER STANDARDS PAGE 1247, USE TYPE 'HJ' TRANSFORMERS.

ITEM PTF	ITEM LTI	DESCRIPTION			QUANTITY HE	QUANTITY HJ	STOCK NO. OR CONSTR STD
1		BOLT, MACH., GALV., 5/8" (E) OR 3/4"X 2", 1 SQ. CURV WASH., 1 LOCK SPR WASH.			4	4	PGS 139, 140
2		BOLT, MACH., GALV., 3/4"X__" 1 SQ. CURV WASH., 1 DBL. COIL SPR. WASH.			2	2	PGS 139, 140
3		BRACKET, INSULATOR, 1" OR 1 3/8" LEAD THREAD			2	2	166144-166176
4		SCREW, LAG, GALV., 1/2"X 4"		(E)	4	4	621568
5		SIGN, HIGH VOLTAGE, & 6 ROOFING NAILS, GALV.		(E)	1	1	647648, 492192
6		STEPS, POLE		(E)	16	16	692992
7							
	8	TRANSFORMER, SELF PROTECTED TYPE, SINGLE PHASE, (HE or HJ)			2	2	PGS 1121.01-1121.12
	9	BRACKET, TRANSFORMER MOUNTING			1	1	402976
	10	INSULATOR, 12KV, (CLASS 55-5 OR 56-1)			2	2	PG 750
	11	CONNECTORS, WIRE COMPRESSION			9	9	PGS 783-787
	12	WIRE, BARE STRANDED, COPPER #6			70'	70'	813536
	13	WIRE, BARE STRANDED, COPPER #2			—	40'	813664
	14	WIRE, W.P. COPPER (SIZE GOVERNED BY TRANSFORMER CAPACITY)			30'	30'	PG 1125
	15	COVER, PVC THRU BOLT & 6-10D NAILS, GALV.			2	2	285696, 451392
	16	ROD, GROUND & CLAMP (B)	(A)		2	4	603072, 230016 (E)
	17	MOULDING, HARDWOOD, 1"	(A)		27'	57'	487200
	18	STAPLES, MOULDING GALV., 3"X 1 1/16"X 1/4"	(A)	(E)	20	38	678560
	19	STAPLES, FENCE, GALV., 1 1/4"	(A)	(E)	25	50	678528

1199.602
SUPERSEDES
1162 (1-1-86)

SDG&E ELECTRIC STANDARDS

12KV OPEN DELTA TYPE "HE" OR "HJ" TRANSFORMER INSTALLATION
2-50KVA MAX., ARMLESS DEAD END CONSTRUCTION

DATE 1-1-86
APPD AK/RPS

TABLE OF CONTENTS

FIELD MAINTENANCE ONLY

REVISION HISTORY:

7/13/2016: All versions prior to 2016 are superseded by their current version found inside the Overhead Construction Standard Manual.

TABLE OF CONTENTS

© 1998 - 2016 San Diego Gas & Electric Company. All rights reserved. Removal of this copyright notice without permission is not permitted under law.

REV	CHANGE	BY	DSGN	APPV	DATE	REV	CHANGE	BY	DSGN	APPV	DATE
C						F					
B						E					
A	ORIGINAL ISSUE	JS	IL	MDJ	7/13/2016	D					

X Indicates Latest Revision | Completely Revised | New Page | Information Removed

SHEET
1 OF 1

SDG&E ELECTRIC OVERHEAD STANDARD

12KV OPEN DELTA TYPE "HE" OR "HJ" TRANSFORMER INSTALLATION
2-50KVA MAX., SECONDARY ARM CONSTRUCTION

FMO
OH 1167

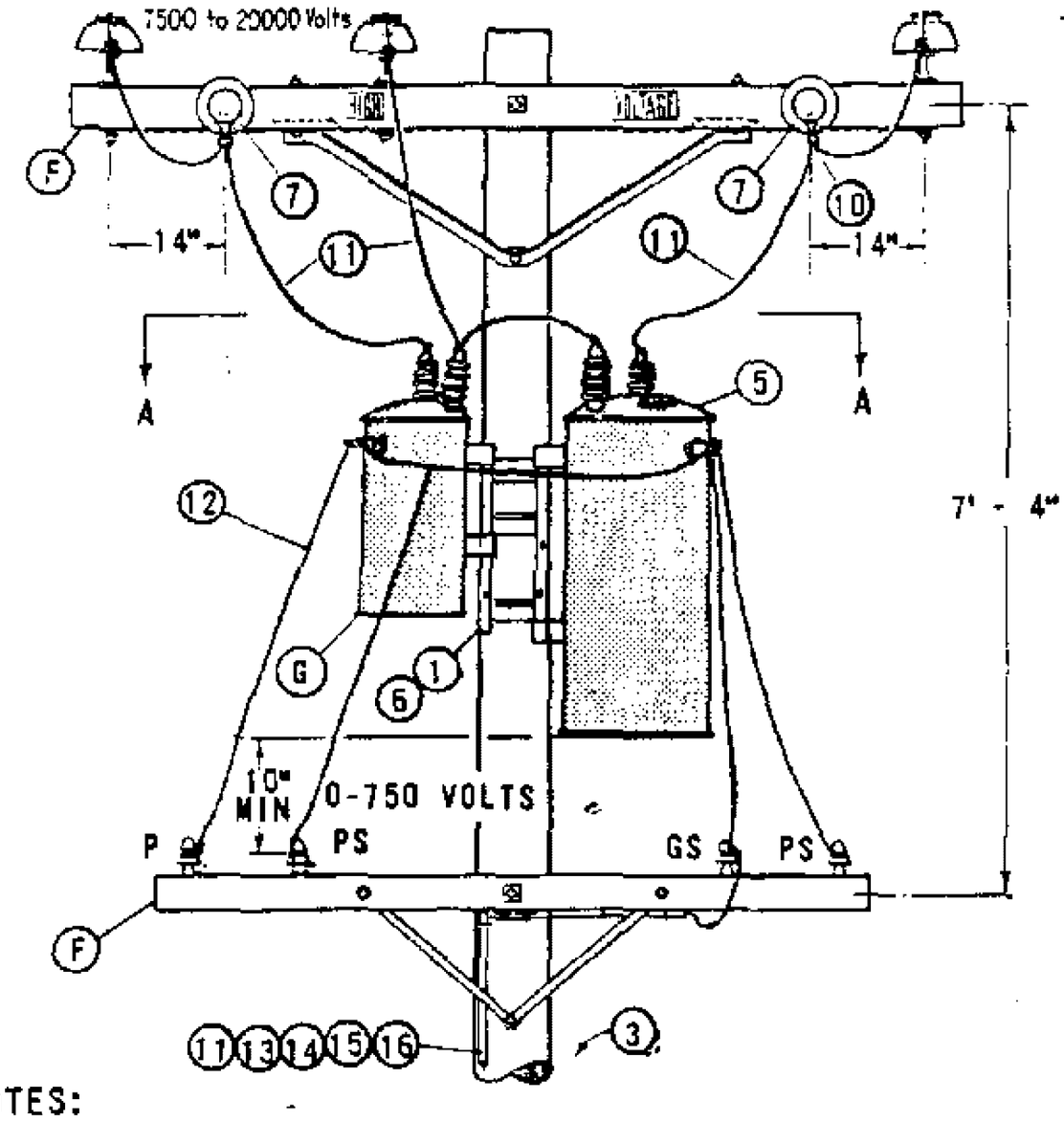

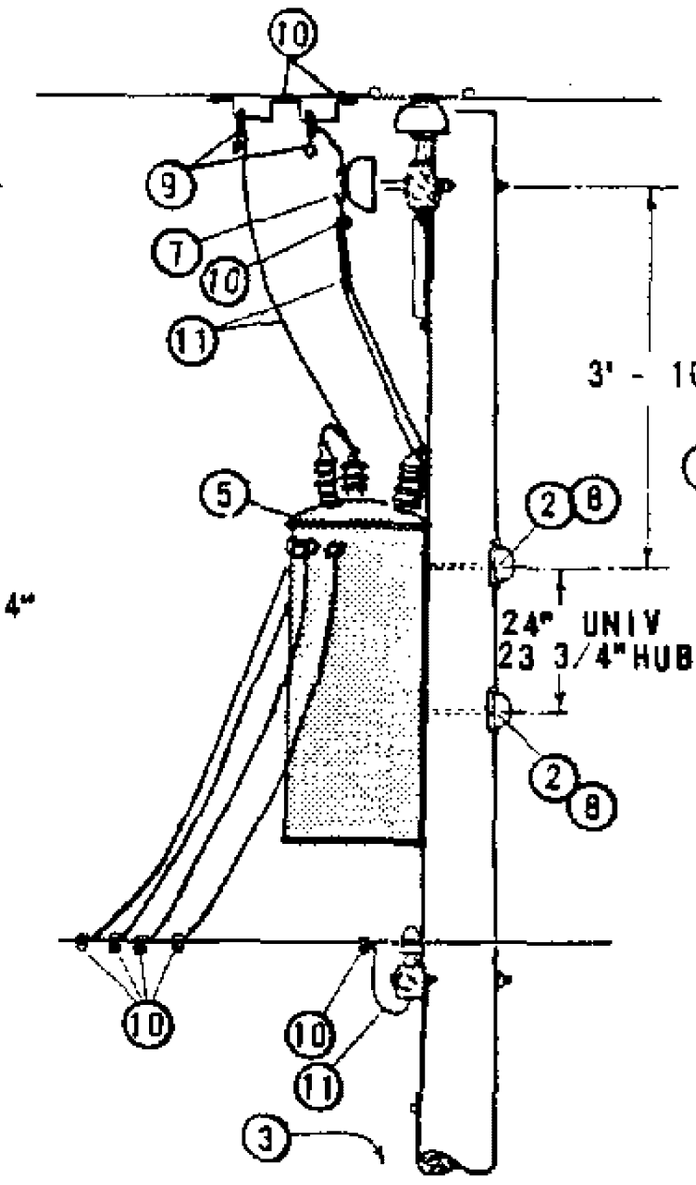

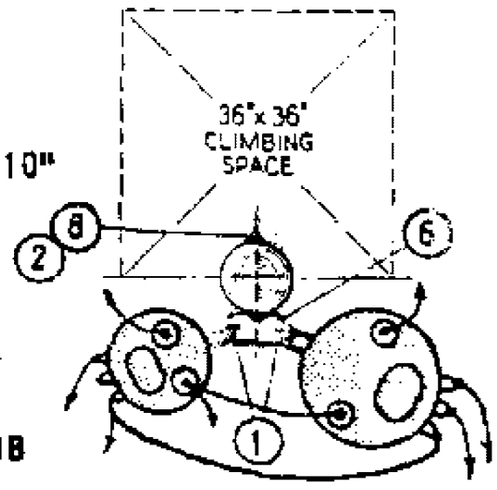

PLAN AT A - A

NOTES:

A. USE PAGE 1165 FOR NEW CONSTRUCTION. THIS CONSTRUCTION MAY BE USED TO ELIMINATE POLE CHANGEOUTS ON EXISTING POLES WITH THE PRIMARY ALREADY ON ARMS.

(B) LIMITED TO TWO 50 KVA MAXIMUM TRANSFORMERS BECAUSE OF ENCROACHMENT ON CLIMBING SPACE. 75 KVA TRANSFORMERS MAY BE USED IF THEY HAVE SMALL CASES.

(C) USE TWO GROUND RODS SPACED NOT LESS THAN 6 FEET APART.

(D) UNIT GROUND COMPLETE ORDER 603120 WITH GRAY MOULDING, 603136 WITH PLAIN MOULDING.

(E) EXEMPT MATERIAL.

(F) PRIMARY AND SECONDARY CONSTRUCTION SHOWN ARE TYPICAL, AND THEIR MATERIALS ARE NOT INCLUDED. MAY BE INSTALLED WITH ARMLESS PRIMARY, RACK SECONDARY, ETC.

(G) POWER TRANSFORMER TO BE HUNG ON THE SAME SIDE OF POLE AS 2 PHASE WIRES TO PREVENT PHASING PROBLEMS WHEN CLOSING DELTA.

ITEM PTF	ITEM LTI	DESCRIPTION	QUANTITY	STOCK NO OR CONSTR STDS
1		BOLT, MACH GALV, 5/8" (E) OR 3/4" X 2", 1 RD WASH. & 1 NUT, 1 DBL COIL SPR WASH.	4	PGS 139, 140
2		BOLT, MACH GALV, 3/4" X 10", 1" SQ CURVE WASH., 1 NUT & 1 DBL COIL SPR WASH.	2	PGS 139, 140
3		STEP, POLE (E)	19	592992
4				
	5	TRANSFORMER, SELF PROTECTED TYPE, SINGLE PHASE (HE, HJ) (B)	2	PGS 1121.01-1121.12
	6	BRACKET, TRANSFORMER MTG	1	402976
	7	INSULATOR & PIN, 12KV	2	700 SECTION
	8	COVER, PVC THRU BOLT & 6-10D NAILS, GALV (E)	2	285696, 491392
	9	CLAMP, HOT LINE (E) & STIRRUP	3	PG 788
	10	CONNECTORS, WIRE, COPPER, AS REQ'D	13	PGS 783-787
	11	WIRE, STRANDED #6 COPPER	70'	813536
	12	WIRE, WP COPPER (SIZE GOVERNED BY TRANSFORMER CAPACITY)	30'	PG 1125
	13	ROD & CLAMP, GROUND (D) (C)	2	603072, 230016(E)
	14	MOULDING, HARDWOOD 1" (D)	30'	487200
	15	STAPLES, MOULDING GALV, 3" X 1 1/16" X 1/4" (D) (E)	20	678560
	16	STAPLES, FENCE GALV, 1 1/4" (D) (E)	25	678528

FOR FIELD MAINTENANCE ONLY

DATE 1-1-86 APPD AE/BSS	SDG&E ELECTRIC STANDARDS 12KV, OPEN DELTA TYPE "HE" OR "HJ" TRANSFORMER INSTALLATION, 2-50 KVA MAX, SECONDARY ARM CONSTRUCTION	1199.603 SUPERSEDES 1167 (1-1-86)

TABLE OF CONTENTS

OH1170 FIELD MAINTENANCE ONLY

ALL VERSIONS LISTED IN FMO ARE SUPERSEDED BY THEIR CURRENT VERSION FOUND INSIDE THE OVERHEAD CONSTRUCTION STANDARD MANUAL.

REVISION HISTORY:

04/06/2023: MOVED TO FMO

TABLE OF CONTENTS

© 1998 - 2023 San Diego Gas & Electric Company. All rights reserved. Removal of this copyright notice without permission is not permitted under law.

REV	CHANGE	DR	BY	DSN	APV	DATE	REV	CHANGE	DR	BY	DSN	APV	DATE
C							F						
B							E						
A	ORIGINAL ISSUE	EDM	MRF	MRF	KRG	04/06/2023	D						

Indicates Latest Revision | Completely Revised [X] | New Page | Information Removed

SHEET 1 OF 1

SDG&E ELECTRIC OVERHEAD FIELD MAINTENANCE ONLY STANDARDS

4KV, THREE-PHASE, TYPE "W" OR "WF" TRANSFORMER INSTALLATION
THREE 25KVA MAXIMUM, SECONDARY CABLE CONSTRUCTION

FMO
OH1170

SCOPE: THIS STANDARD SHOWS THE INSTALLATION METHOD OF A THREE-PHASE, 4KV, TYPE 'W' OR "WF" TRANSFORMER, WITH SECONDARY CROSSARM CONSTRUCTION.

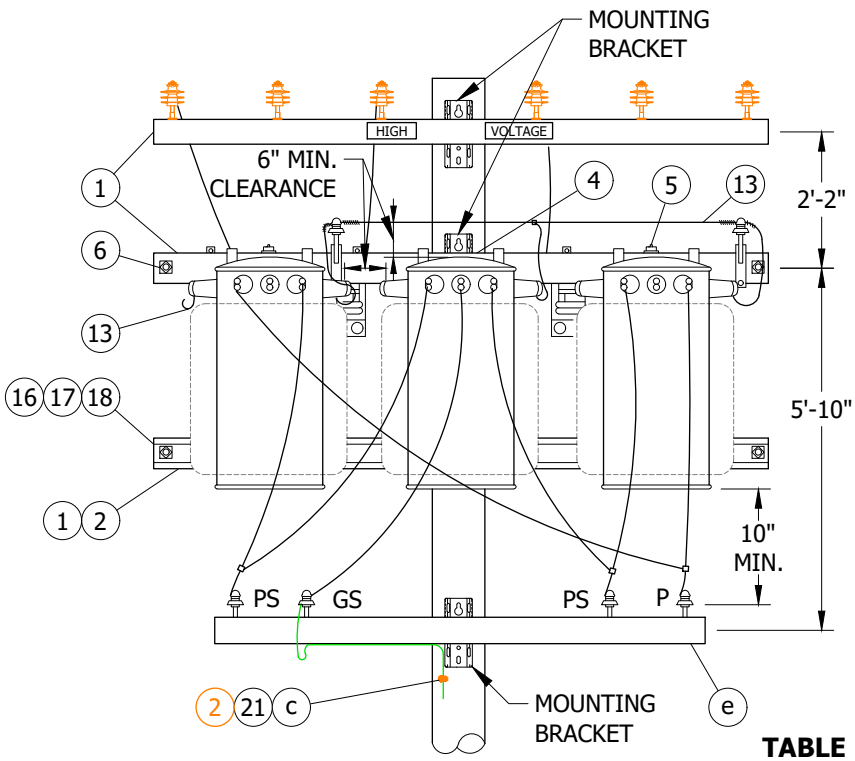

FIGURE 1
FRONT VIEW

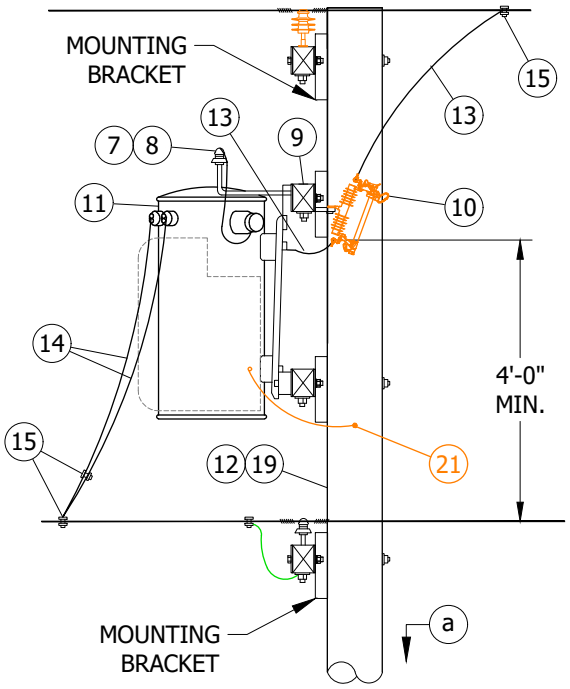

FIGURE 1
SIDE VIEW

TABLE 1

KVA	DESIGN UNITS
25	25WF-P
25	25W120
25	25W208
25	25W240
50	50WF-P
50	50WHVY
50	50W120
50	50W208
75	75WF-P
75	75WHVY
75	75W208

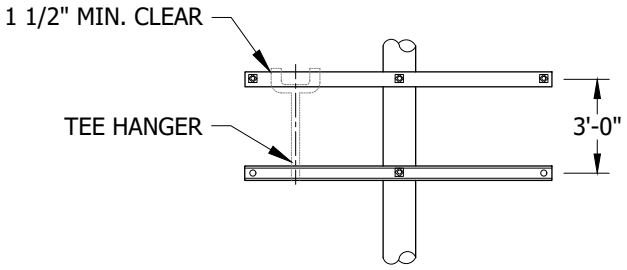

DETAIL 1
FRAMING FOR 3 - 37.5KVA TO
3 - 75KVA INSTALLATIONS

FIELD MAINTENANCE ONLY

INSTALLATION:

(A) LIMITED TO TRANSFORMER WEIGHING 1,200 POUNDS OR LESS EACH.

(B) SPACING OF TRANSFORMERS TO BE AS CLOSE AS PRACTICABLE BUT NOT TO EXCEED 39 1/2" CENTER TO CENTER.

C. SECTIONALIZING FUSES AND A STATION ARE **NOT** ALLOWED ON THE SAME POLE. A DEVIATION REQUEST WILL NOT BE APPROVED FOR THIS CONSTRUCTION.

© 1998 - 2023 San Diego Gas & Electric Company. All rights reserved. Removal of this copyright notice without permission is not permitted under law.

REV	CHANGE	DR	BY	DSN	APV	DATE	REV	CHANGE	DR	BY	DSN	APV	DATE
C	MOVED TO FMO	EDM	MRF	MRF	KRG	04/06/2023	F						
B	EDITORIAL CHANGES	-	JS	JS	CZH	10/01/2018	E						
A	ORIGINAL ISSUE	-	-	JS	DW	06/13/2013	D						

X Indicates Latest Revision | Completely Revised | New Page | Information Removed

SDG&E ELECTRIC OVERHEAD FIELD MAINTENANCE ONLY STANDARDS

4KV, THREE-PHASE, TYPE "W" OR "WF" TRANSFORMER INSTALLATION
THREE 25KVA MAXIMUM, SECONDARY CABLE CONSTRUCTION

FMO
OH1170.3

TABLE OF CONTENTS

BILL OF MATERIALS:

ITEM	DESCRIPTION		QUANTITY 5 TO 25KVA	QUANTITY 37.5 TO 75KVA	STANDARD PAGE	STOCK NUMBER	DESIGN UNITS
1	CROSSARM, FIBERGLASS, 3 3/4" X 5 3/4" X 10'-0"		3	4	-	S294378	4TF
2	BLIND NUT, 1/2"		AS REQ'D		-	S503460 (X)	-
3	SCREW (I)		2	-	-	S618086 (X)	-
4	BOLT, MACH, GALV, (LENGTH AS REQ'D), 2 SQ & 1 DBL COIL SPRING WASHER	5/8"	2	-	390	-	-
		3/4"	-	2	390	-	
5	BOLT, MACH, GALV, 1/2" X 7", 1 RD & 1 DBL COIL SPRING WASHER		4	8	390	-	-
6	BOLT, SPACE, GALV, 5/8" X (LENGTH AS REQ'D) & 4 SQ & 2 DBL COIL SPRING WASHERS		2	4	390	-	-
7	BRACKET, INSULATOR		2	2	-	S166134	-
8	INSULATOR, 12KV, CLASS 55-3		2	2	-	S429216	-
9	BRACKET, CUTOUT/ARRESTER, FOR CROSSARM MOUNTING		3	3	-	S166070	-
10	CUTOUT, 12KV		3	3	1212	-	-
11	TRANSFORMER, SINGLE PHASE, TYPE W (A)(B)		3	3	1121	-	-
12	BOLT, MACH, GALV, 5/8" X (LENGTH AS REQ'D) & 1 DBL COIL SPR WASH		1	2	390	-	-
13	WIRE, 5KV, INSULATED, XLP, #6 STRANDED COPPER		36'-0"	36'-0"	-	S194304	-
14	WIRE, THW COPPER, SIZE GOVERNED BY TRANSFORMER CAPACITY		50'-0"	50'-0"	1125	-	-
15	CONNECTORS, WIRE COMPRESSION, CU OR AL, AS REQ'D		AS REQ'D		783-785	-	-
16	COVER STRIP, 1 5/8" X 3 5/8" X 8'-0" (2X4S4S)		1	-	-	S699328	-
17	COVER STRIP, 1 5/8" X 3 5/8" X 10'-0" (2X4S4S)		-	1	-	S699360	-
18	BOLT, MACH, GALV, 3/8" X 6", 2 RD & 1 SPRING WASHER		2	-	390	-	-
19	BOLT, MACH, GALV, 5/8" X (LENGTH AS REQ'D), 1 SQ & 1 DBL COIL SPR WASH		1	-	-	S621568	-
20	BOLT, MACH, GALV, 5/8" X 5", 1 RD & 1 DBL COIL SPRING WASHER (I)		-	4	390	-	-
21	WIRE, GROUND, #4 CU SOLID, PVC COVERED	STEEL	1	1	1002	-	GNDPSP
		WOOD				-	GNDPVC

TABLE OF CONTENTS

NOTES:

(I) NOT SHOWN ON FIGURES

(X) THIS ITEM IS EXEMPT.

REFERENCE:

(a) SEE OH363 FOR POLE STEPPING.

b. SEE OH1247 FOR LIGHTNING ARRESTER REQUIREMENTS.

(c) SEE OH1002 FOR GROUNDING METHODS.

d. SEE OH1111 FOR TRANSFORMER CONNECTION DIAGRAMS. CONNECTION SHOWN FOR ILLUSTRATIVE PURPOSES ONLY.

(e) SEE OH379 FOR FIBERGLASS CROSSARMS.

FIELD MAINTENANCE ONLY

© 1998 - 2023 San Diego Gas & Electric Company. All rights reserved. Removal of this copyright notice without permission is not permitted under law.

REV	CHANGE	DR	BY	DSN	APV	DATE	REV	CHANGE	DR	BY	DSN	APV	DATE
C	MOVED TO FMO	EDM	MRF	MRF	KRG	04/06/2023	F						
B	EDITORIAL CHANGES	-	JS	JS	CZH	10/01/2018	E						
A	ORIGINAL ISSUE	-	-	JS	DW	06/13/2013	D						

SCOPE: THIS STANDARD SHOWS THE INSTALLATION METHOD OF A THREE-PHASE, 4KV TYPE 'W' OR 'WF' TRANSFORMERS WITH ALLEY ARM CONSTRUCTION.

ATTENTION:

* THIS CONSTRUCTION CAN NOT BE USED ON UNDER BUILD.

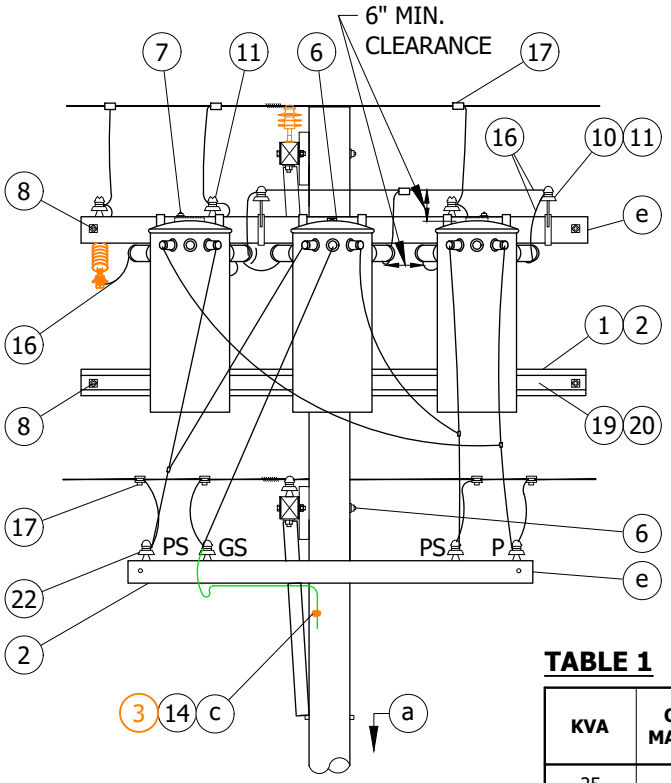

FIGURE 1
FRONT VIEW

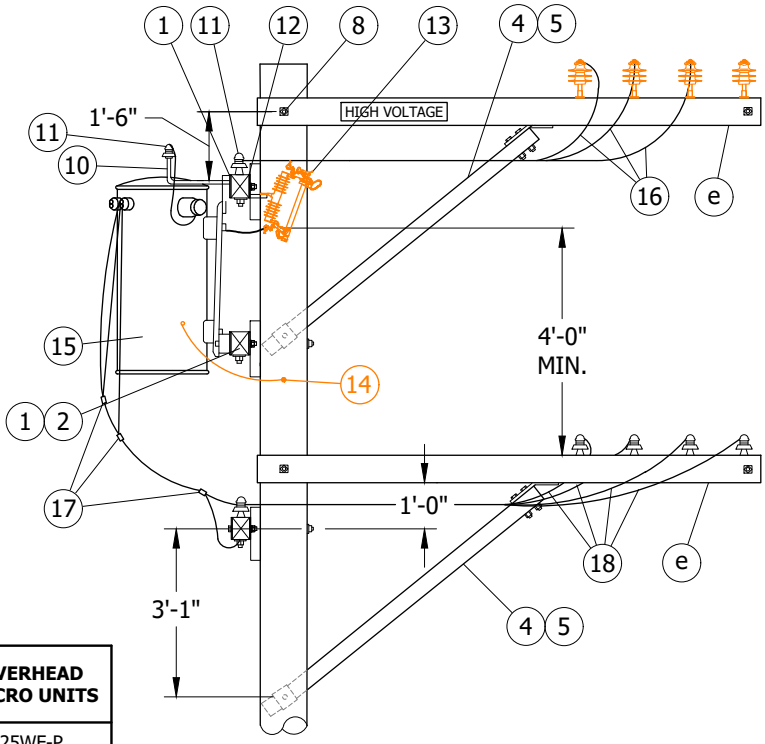

FIGURE 1
SIDE VIEW

TABLE 1

KVA	OVERHEAD MACRO UNITS
25	25WF-P
25	25W120
25	25W208
25	25W240
50	50WF-P
50	50WHVY
50	50W120
50	50W208
75	75WF-P
75	75WHVY
75	75W208

FIELD MAINTENANCE ONLY

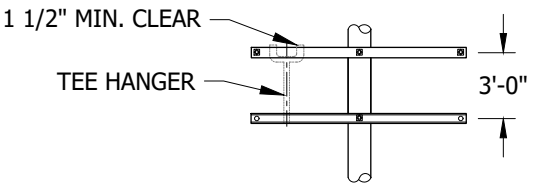

DETAIL 1
FRAMING FOR 3 - 37.5KVA TO
3 - 75KVA INSTALLATIONS

INSTALLATION:

A. LIMITED TO TRANSFORMERS WEIGHING 1,200 POUNDS OR LESS EACH.

B. SPACING OF TRANSFORMERS TO BE AS CLOSE AS PRACTICABLE BUT NOT TO EXCEED 39 1/2" CENTER TO CENTER.

C. SECTIONALIZING FUSES AND A STATION ARE **NOT** ALLOWED ON THE SAME POLE. A DEVIATION REQUEST WILL NOT BE APPROVED FOR THIS CONSTRUCTION.

© 1998 - 2023 San Diego Gas & Electric Company. All rights reserved. Removal of this copyright notice without permission is not permitted under law.

REV	CHANGE	DR	BY	DSN	APV	DATE	REV	CHANGE	DR	BY	DSN	APV	DATE
C	MOVED TO FMO	EDM	MRF	MRF	KRG	04/06/2023	F						
B	EDITORIAL CHANGES	-	JS	JS	CZH	10/01/2018	E						
A	ORIGINAL ISSUE	-	-	JS	DW	06/13/2013	D						

X Indicates Latest Revision | Completely Revised | New Page | Information Removed

SDG&E ELECTRIC OVERHEAD FIELD MAINTENANCE ONLY STANDARDS

4KV, THREE-PHASE, TYPE "W" OR "WF" TRANSFORMER INSTALLATION
THREE 25KVA MAXIMUM, SECONDARY CABLE CONSTRUCTION

FMO
OH1170.5

TABLE OF CONTENTS

BILL OF MATERIALS:

ITEM	DESCRIPTION	QUANTITY 5 TO 25KVA	QUANTITY 37.5 TO 75KVA	STANDARD PAGE	STOCK NUMBER	DESIGN UNITS
1	CROSSARM, FIBERGLASS, 3 3/4" X 5 3/4" X 10'-0"	2	4	-	S294378	4TF
2	CROSSARM, 3 1/2" X 4 1/2" X 8'-0"	2	1	-	S293680	-
3	BLIND NUT, 1/2"	AS REQ'D		-	S503460 (X)	-
4	SCREW	-	4	-	S618086 (X)	-
5	BRACE, VERTICAL, 36"	-	2	-	S164256	-
6	BOLT, MACH, GALV, 5/8" X (LENGTH AS REQ'D), 2 SQ WASHERS & 1 DBL COIL SPRING WASHER	3	1	390	-	-
	BOLT, MACH, GALV, 3/4" X (LENGTH AS REQ'D), 2 SQ WASHERS & 1 DBL COIL SPRING WASHER	-	2	390	-	-
7	BOLT, MACH, GALV, 1/2" X 7", 1 RD & 1 DBL COIL SPR WASHER	4	8	390	-	-
8	BOLT, SPACE, GALV, 5/8" X (LENGTH AS REQ'D), 4 SQ & 2 DBL COIL SPRING WASHERS	2	4	390	-	-
9	BOLT, MACH, GALV, 5/8" X 5", 1 RD & 1 DBL COIL SPR WASHER (I)	-	4	390	-	-
10	BRACKET, INSULATOR	2	2	-	S166134	-
11	INSULATOR, 55-2	5	5	-	S429024	-
12	BRACKET, CUTOUT/ARRESTER, FOR CROSSARM MOUNTING	3	3	-	S166070	-
13	CUTOUT, 12KV	3	3	1212	-	-
14	GROUNDING, #4 PVC GROUND WIRE, RODS & CONNECTORS — STEEL	1	1	1002	-	GNDPSP
	GROUNDING, #4 PVC GROUND WIRE, RODS & CONNECTORS — WOOD					GNDPVC
15	TRANSFORMER, SINGLE PHASE, TYPE W OR WF	3	3	1121	-	-
16	WIRE, 5KV, INSULATED, XLP, #6 STRANDED COPPER	50'-0"	50'-0"	-	S194304	-
17	CONNECTORS, WIRE COMPRESSION, CU OR AL, AS REQ'D	AS REQ'D		783-785	-	-
18	WIRE, THW COPPER, SIZE GOVERNED BY TRANSFORMER CAPACITY	80'-0"	80'-0"	1125	-	-
19	COVER STRIP, 1 5/8" X 3 5/8" X 8'-0" (2X4S4S)	1	-	-	S699328	-
20	COVER STRIP, 1 5/8" X 3 5/8" X 10'-0" (2X4S4S)	-	1	-	S699360	-
21	BOLT, MACH, GALV, 3/8" X 6", 1 RD & 1 SPRING WASHER (I)	2	2	390	-	-
22	INSULATOR	4	4	-	S428960	-
23	BOLT, MACH, GALV, 5/8" X (LENGTH AS REQ'D) 1 RD & 1 DBL SPR WASHER (I)	2	1	-	S621568	-

TABLE OF CONTENTS

NOTES:

(I) NOT SHOWN ON FIGURES

(X) THIS ITEM IS EXEMPT.

REFERENCE:

(a) SEE OH363 FOR POLE STEPPING.

b. SEE OH1247 FOR LIGHTNING ARRESTER REQUIREMENTS.

(c) SEE OH1002 FOR GROUNDING METHODS.

d. SEE OH1111 FOR TRANSFORMER CONNECTION DIAGRAMS. CONNECTION SHOWN FOR ILLUSTRATIVE PURPOSES ONLY.

(e) SEE OH379 FOR FIBERGLASS CROSSARMS.

FIELD MAINTENANCE ONLY

© 1998 - 2023 San Diego Gas & Electric Company. All rights reserved. Removal of this copyright notice without permission is not permitted under law.

REV	CHANGE	DR	BY	DSN	APV	DATE	REV	CHANGE	DR	BY	DSN	APV	DATE
C	MOVED TO FMO	EDM	MRF	MRF	KRG	04/06/2023	F						
B	EDITORIAL CHANGES	-	JS	JS	CZH	10/01/2018	E						
A	ORIGINAL ISSUE	-	-	JS	DW	06/13/2013	D						

FIELD MAINTENANCE ONLY

REVISION HISTORY:

7/13/2016: All versions prior to 2016 are superseded by their current version found inside the Overhead Construction Standard Manual.

TABLE OF CONTENTS

© 1998 - 2016 San Diego Gas & Electric Company. All rights reserved. Removal of this copyright notice without permission is not permitted under law.

REV	CHANGE	BY	DSGN	APPV	DATE	REV	CHANGE	BY	DSGN	APPV	DATE
C						F					
B						E					
A	ORIGINAL ISSUE	JS	IL	MDJ	7/13/2016	D					

X Indicates Latest Revision | Completely Revised | New Page | Information Removed

SHEET 1 OF 1

SDG&E ELECTRIC OVERHEAD STANDARD

4KV, THREE PHASE, TYPE "WE" OR "WJ" TRANSFORMER INSTALLATION, 3-25 KVA MAX SECONDARY LINE ARM CONSTRUCTION

FMO OH 1172

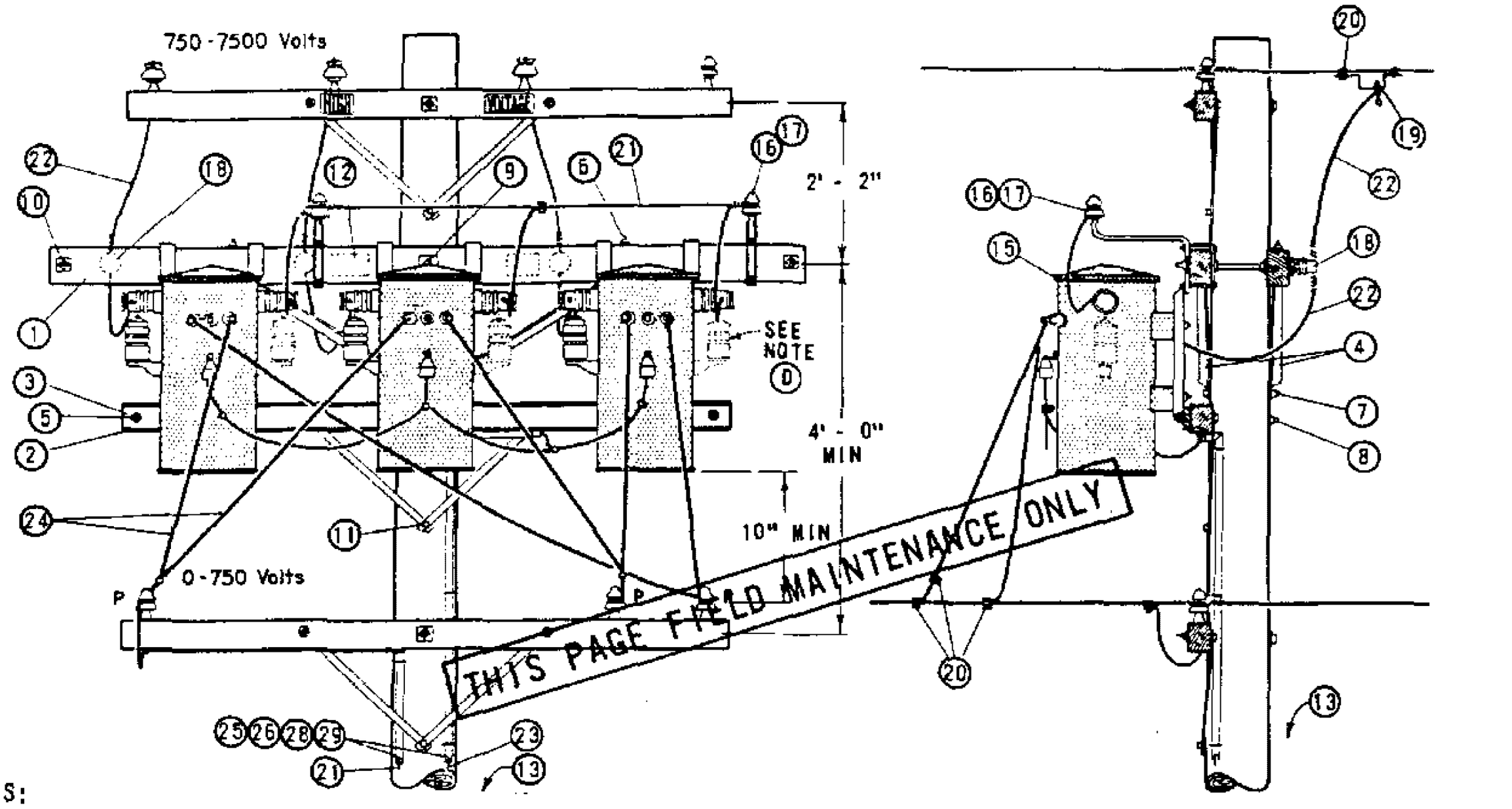

NOTES:

(A) UNIT GROUND COMPLETE ORDER 603120 WITH GRAY MOULDING, 603136 WITH PLAIN MOULDING.

B. SEE DISTRIBUTION POLE TOP SECTION FOR POLE TOP MATERIALS.

(C) USE TWO ROD GROUND

(D) REMOVE RIGHT HAND LIGHTNING ARRESTERS BEFORE INSTALLING TRANSFORMERS.

(E) EXEMPT MATERIAL.

F. WHEN ARRESTERS ARE REQUIRED PER STANDARDS PAGE 1247, USE TYPE "WJ" TRANSFORMERS.

G. SEE STANDARDS PAGE 1118 FOR TRANSFORMER CONNECTION DIAGRAMS. CONNECTION SHOWN IS FOR ILLUSTRATIVE PURPOSES ONLY.

ITEM PTF	ITEM LTI	DESCRIPTION	QUANTITY	STOCK NO. OR CONSTR STD
1		CROSSARM, 3 1/4" X 5 3/4" X 10' - 0"	2	PG 111 IT. 2
2		CROSSARM, KICK 3 3/4" X 5 3/4" X 8' - 0"	1	PG 116 IT. 1
3		COVER STRIP, 1 5/8" X 4 1/2" X 8' - 0" (2X4 S4S)	1	699328
4		BRACE, ANGLE CROSSARM	2	164128
5		BOLT, MACH GALV 3/8" X 6", 2 RD WASH. & 1 NUT (E)	2	PGS 139, 140
6		BOLT, MACH GALV 1/2" X 7", 1 RD WASH. & 1 NUT (E)	4	PGS 139, 140
7		BOLT, MACH GALV 5/8" X 10" (E)	1	PGS 139, 140
8		BOLT, MACH GALV 5/8" X 14", 2 SQ WASH. & 1 NUT (E)	1	PGS 139, 140
9		BOLT, MACH GALV 5/8" X 18", 2 - 3 SQ WASH & 1 NUT (E)	1	PGS 139, 140
10		BOLT, SPACE GALV 5/8" X 20", 4 WASH. & 4 NUTS (E)	2	PGS 139, 140
11		SCREW, LAG GALV 1/2" X 4" (E)	1	621568
12		SIGN, HIGH VOLTAGE & 8 ROOFING NAILS, GALV (E)	1	647648, 492224
13		STEPS, POLE (E)	16	692992
14				
	15	TRANSFORMER, SINGLE PHASE TYPE WE OR WJ, #1 TEE HANGER	3	PGS 1121.01-1121.12
	16	BRACKET, INSULATOR, 1"	2	166208
	17	INSULATOR, 5KV	2	428960
	18	HOLDER, WIRE	3	413792
	19	CLAMP, HOT LINE (E) & STIRRUP	3	PG 788
	20	CONNECTOR, WIRE, AS REQ'D	12	PGS 783-787
	21	WIRE, #6 BARE STRANDED COPPER	60'	813536
	22	CABLE, 5KV, 1/C #6 STRANDED COPPER	34'	194304
	23	WIRE #2 BARE STRANDED COPPER, TANK GROUND	50'	813664
	24	WIRE, W.P. COPPER, SIZE GOVERNED BY TRANSFORMER CAPACITY	45'	PG 1125
	25	ROD & CLAMP, GROUND (A) (C)	4	603072, 230016 (E)
	26	MOULDING, HARDWOOD, 1" (A)	64'	487200
	27			
	28	STAPLES, 3" X 1 1/16" X 1/4" MOULDING, GALV (A) (E)	40	678560
	29	STAPLES, 1 1/4" FENCE, GALV (A) (E)	36	678528

1199,701 SUPERSEDES 1172 (1-1-86)	SAN DIEGO GAS & ELECTRIC CO OVERHEAD STANDARDS 4KV, THREE PHASE, TYPE "WE" OR "WJ" TRANSFORMER INSTALLATION, 3-25 KVA MAX SECONDARY LINE ARM CONSTRUCTION	DATE 1-1-86 APPD AK/BSS

TABLE OF CONTENTS

FIELD MAINTENANCE ONLY

REVISION HISTORY:

7/13/2016: All versions prior to 2016 are superseded by their current version found inside the Overhead Construction Standard Manual.

TABLE OF CONTENTS

© 1998 - 2016 San Diego Gas & Electric Company. All rights reserved. Removal of this copyright notice without permission is not permitted under law.

REV	CHANGE	BY	DSGN	APPV	DATE	REV	CHANGE	BY	DSGN	APPV	DATE
C						F					
B						E					
A	ORIGINAL ISSUE	JS	IL	MDJ	7/13/2016	D					

X Indicates Latest Revision | Completely Revised | New Page | Information Removed

SHEET
1 OF 1

SDG&E ELECTRIC OVERHEAD STANDARD

7.2 AND 12KV THREE-PHASE TRANSFORMER
CLUSTER MOUNT INSTALLATION-ALLEY ARM CONSTRUCTION

FMO
OH 1174

SCOPE: THIS STANDARD SHOWS THE INSTALLATION OF 7.2 AND 12KV, 3Ø TRANSFORMERS, ALLEY ARM CONSTRUCTION, WITH CLUSTER MOUNTING BRACKET AND SECONDARY RACK CONSTRUCTION.

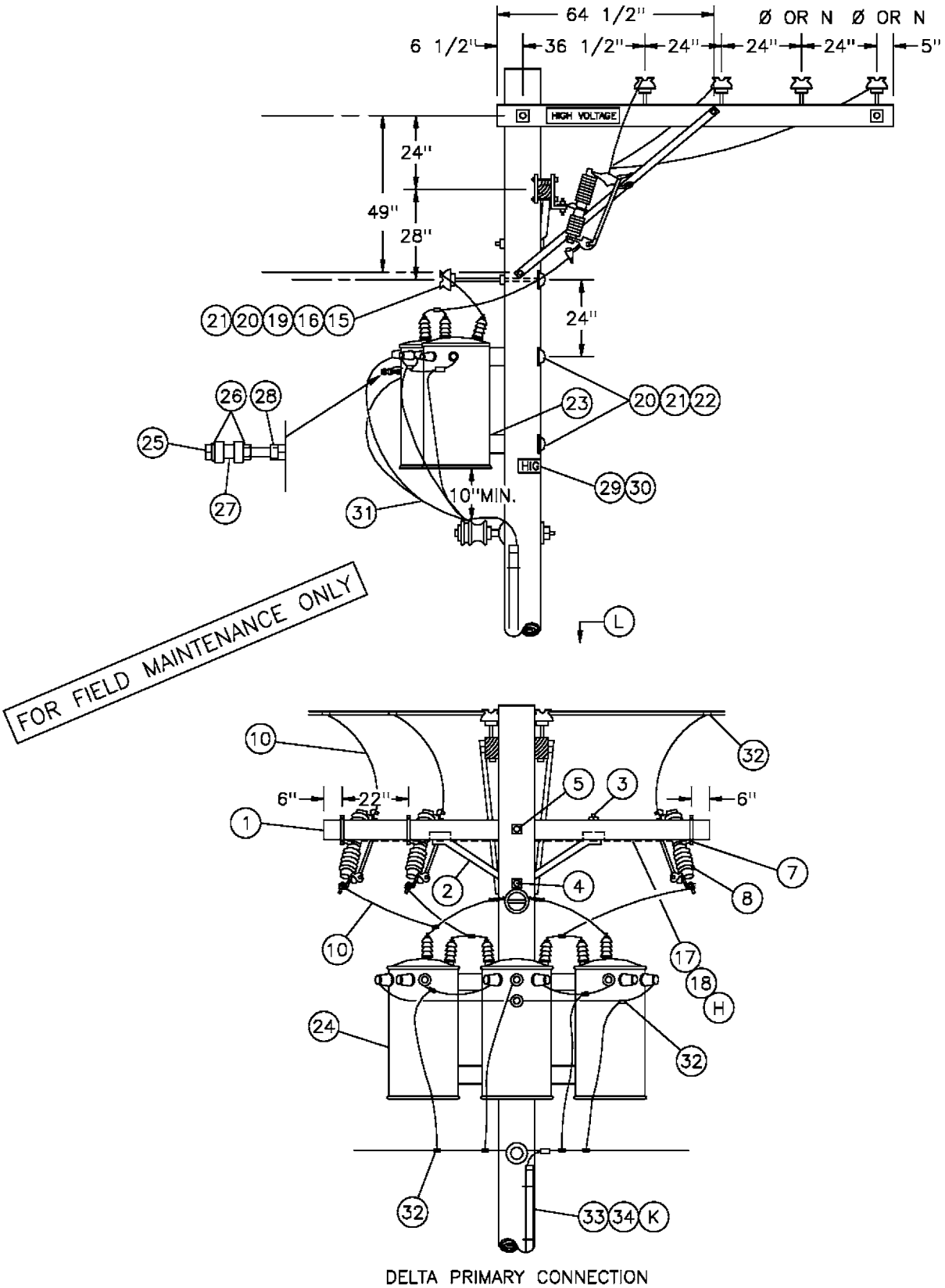

DELTA PRIMARY CONNECTION

DATE 1-1-89 APPD PSA / DTE	SDG&E ELECTRIC STANDARDS 7.2 AND 12KV THREE-PHASE TRANSFORMER CLUSTER MOUNT INSTALLATION-ALLEY ARM CONSTRUCTION	1199.704 SUPERSEDES 1174.1 (1-1-93)

TABLE OF CONTENTS

TABLE OF CONTENTS

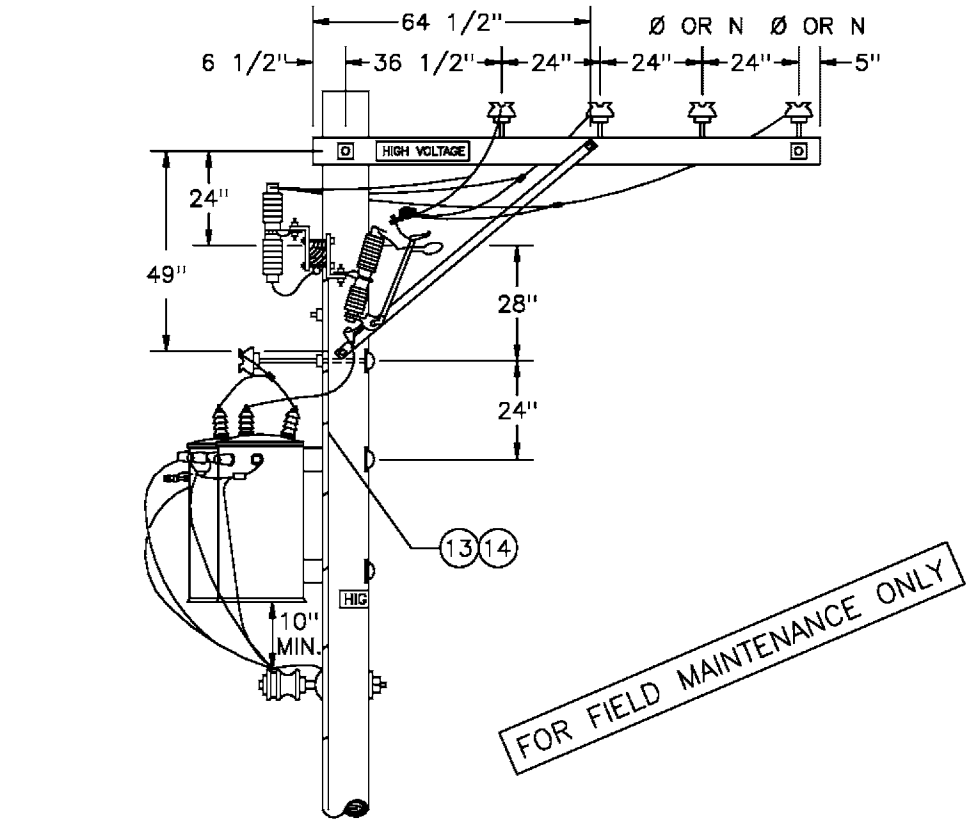

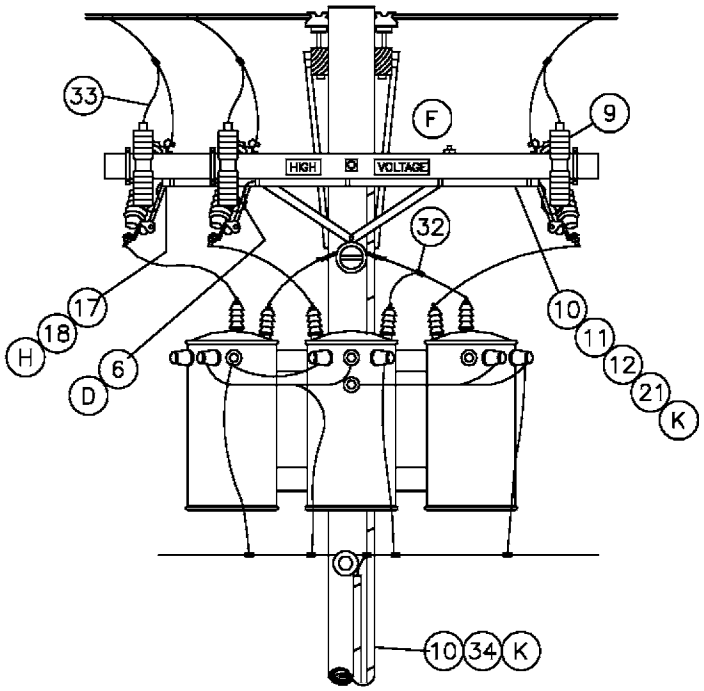

WYE PRIMARY CONNECTION
WITH LIGHTNING ARRESTERS (J)

DATE 1-1-91 APPD PA/BG	SDG&E ELECTRIC STANDARDS 7.2 AND 12KV THREE-PHASE TRANSFORMER CLUSTER MOUNT INSTALLATION-ALLEY ARM CONSTRUCTION	1199.705 SUPERSEDES 1174.2 (1-1-93)

BILL OF MATERIAL:

ITEM	DESCRIPTION	QUANTITY		STOCK NUMBER OR CONSTR STANDARD
		STATION WITH (J) ARRESTERS	STATION WITHOUT ARRESTERS	
1	CROSSARM, 3 3/4" X 5 3/4" X 10' – 0"	1	1	294128
2	BRACE, ANGLE, CROSSARM, 4'	1	1	164032
3	BOLT, MACH, GALV, 1/2" X 7", 1 RD & 1 DBL COIL SPRING WASHER (E)	2	2	STD. 392
4	BOLT, MACH, GALV, 5/8" X (LENGTH AS REQ'D), 1 SQUARE & 1 DOUBLE COIL SPRING WASHER (E)	1	1	STD. 392
5	BOLT, MACH, GALV, 5/8" X (LENGTH AS REQ'D), 2 SQUARE & 1 DOUBLE COIL SPRING WASHER (E)	1	1	STD. 392
6	BRACKET, DOUBLE, CUTOUT/ARRESTER, FOR CROSSARM MOUNTING (E)	3	–	165442
7	BRACKET, CUTOUT/ARRESTER, FOR CROSSARM MOUNTING (E)	–	3	166070
8	CUTOUT, 12KV, WITH LOADBUSTER HOOK	3	3	STD. 1212
9	ARRESTER, LIGHTNING	3	–	113248
10	WIRE, #4 BARE STRANDED COPPER FT / LB	100 / 13	40 / 5	813760
11	CONDUIT, PVC, TYPE 2, SCHEDULE 40, 1" X 10' (E)	1	–	251200
12	STRAPS, PIPE, GALV, 1" (E)	AS REQ'D	–	697792
13				
14				
15	INSULATOR, PIN TYPE, CLASS AS REQ'D	1	1	STD. 750
16	WIRE, TIE (E)	1	1	815232
17	WIRE, #8 BARE SOLID ANNEALED COPPER (G) FT / LB	15 / 1	15 / 1	812928
18	STAPLES, 1 1/4", FENCE, GALV (G)(E)	AS REQ'D	AS REQ'D	678528
19	BRACKET, INSULATOR, 1" OR 1 3/8" THREAD (AS REQ'D)	1 / 1	1 / 1	166144 / 166176
20	COVER, BOLT, PLASTIC (E)	3	3	285696
21	NAILS, GALV, 1 3/4" ROOFING (E)	AS REQ'D	AS REQ'D	492192
22	BOLT, MACH, GALV, 3/4" X (LENGTH AS REQ'D), 1 SQUARE CURVED & 1 DOUBLE COIL SPRING WASHER (E)	2	2	STD. 392
23	BRACKET, TRANSFORMER CLUSTER MOUNTING	1	1	403008
24	TRANSFORMER, SINGLE PHASE, TYPE 'Y', 'YF', 'H' OR 'HF'	3	3	STD. 1121
25	BOLT, MACH, GALV, 1/2" X 5" (E)	1	1	153024
26	WASHER, GALV, 1/2", ROUND (E)	2	2	800192
27	INSULATOR, SECONDARY, SPOOL, PORCELAIN (E)	1	1	430752
28	NUT, GALV, 1/2" (E)	1	1	504736
29	SIGN, HIGH VOLTAGE (E)	3	1	647648
30	NAILS, GALV, 7/8" ROOFING (E)	27	9	492224

FOR FIELD MAINTENANCE ONLY

TABLE OF CONTENTS

1199.706 SUPERSEDES 1174.3 (1-1-93)	SDG&E ELECTRIC STANDARDS 7.2 AND 12KV THREE-PHASE TRANSFORMER CLUSTER MOUNT INSTALLATION-ALLEY ARM CONSTRUCTION	DATE 1-1-91 APPD PA / BDG

BILL OF MATERIAL: (CONT'D)

ITEM	DESCRIPTION		QUANTITY		STOCK NUMBER OR CONSTR STANDARD
			STATION WITH (J) ARRESTERS	STATION WITHOUT ARRESTERS	
31	WIRE, THW COPPER, SIZED PER TRANSFORMER CAPACITY		35'	35'	STD 1125
32	CONNECTOR, WIRE, COMPRESSION, CU OR AL AS REQ'D (E)		AS REQ'D	AS REQ'D	783–786
33	WIRE, #6, 3 STRAND, BARE COPPER	FT	55	40	813536
		LB	4	3	
34	UNIT, GROUND, COMPLETE (K)		2	1	603136
35	CONDUIT, PVC, TYPE 2, SCHEDULE 40, 1/2" (E)		10'	–	251168
36	STRAPS, PIPE, GALV. 1/2" AND 1–3/4" ROOFING NAILS (E)		AS REQ'D	–	697728

INSTALLATION:

A. USE THIS CONSTRUCTION FOR TRANSFORMERS RATED 12KV AND BELOW WHICH HAVE HIGH VOLTAGE BUSHINGS MOUNTED ON TOP OF COVER.

B. LIMITED TO TRANSFORMERS 100 KVA AND SMALLER, EACH WEIGHING 1200 POUNDS OR LESS.

C. WHEN PRACTICAL, BOLT TRANSFORMERS TO BRACKET ON THE GROUND AND INSTALL THEM AS A PREWIRED ASSEMBLY.

(D) DRILL THROUGH CROSSARM 1" UP FROM LOWER EDGE SO THAT LOWER CROSSARM MOUNTING BRACKET BOLT DOES NOT INTERFERE WITH PVC CONDUIT.

(E) EXEMPT MATERIAL.

(F) INSTALL LA/CO CROSSARM ON SAME SIDE OF POLE AS TRANSFORMERS.

(H) BOND ALL CUTOUTS IN HEAVY CONTAMINATION DISTRICT, AS IDENTIFIED ON STANDARD 287. IN AREAS WHERE BONDING IS REQUIRED, TO AVOID BONDWIRE AND LIGHTNING ARRESTER GROUNDWIRE ON THE ON THE SAME CROSSARM, USE TWO CROSSARMS; ONE FOR CUTOUTS AND ONE FOR LIGHTNING ARRESTERS

REFERENCE:

I. PRIMARY AND SECONDARY CONNECTIONS ARE SHOWN FOR ILLUSTRATIVE PURPOSES. SEE STANDARD 1118–1119 FOR SPECIFIC CONNECTION DIAGRAMS.

(J) LIGHTNING ARRESTER APPLICATION, SEE STANDARD 1247.

(K) GROUNDING METHOD AND APPLICATION, SEE STANDARD 1002.

(L) POLE STEPPING, SEE STANDARD 363.

FOR FIELD MAINTENANCE ONLY

TABLE OF CONTENTS

DATE 1–1–91 APPD PBA / DTE	SDG&E ELECTRIC STANDARDS 7.2 AND 12KV THREE PHASE TRANSFORMER CLUSTER MOUNT INSTALLATION–ALLEY ARM CONSTRUCTION	1199.707 SUPERSEDES 1174.4 (1–1–93)

SCOPE: THIS STANDARD SHOWS THE INSTALLATION OF 7.2 AND 12KV, 3Ø TRANSFORMERS, ALLEY ARM CONSTRUCTION, WITH CLUSTER MOUNTING BRACKET AND SECONDARY RACK CONSTRUCTION.

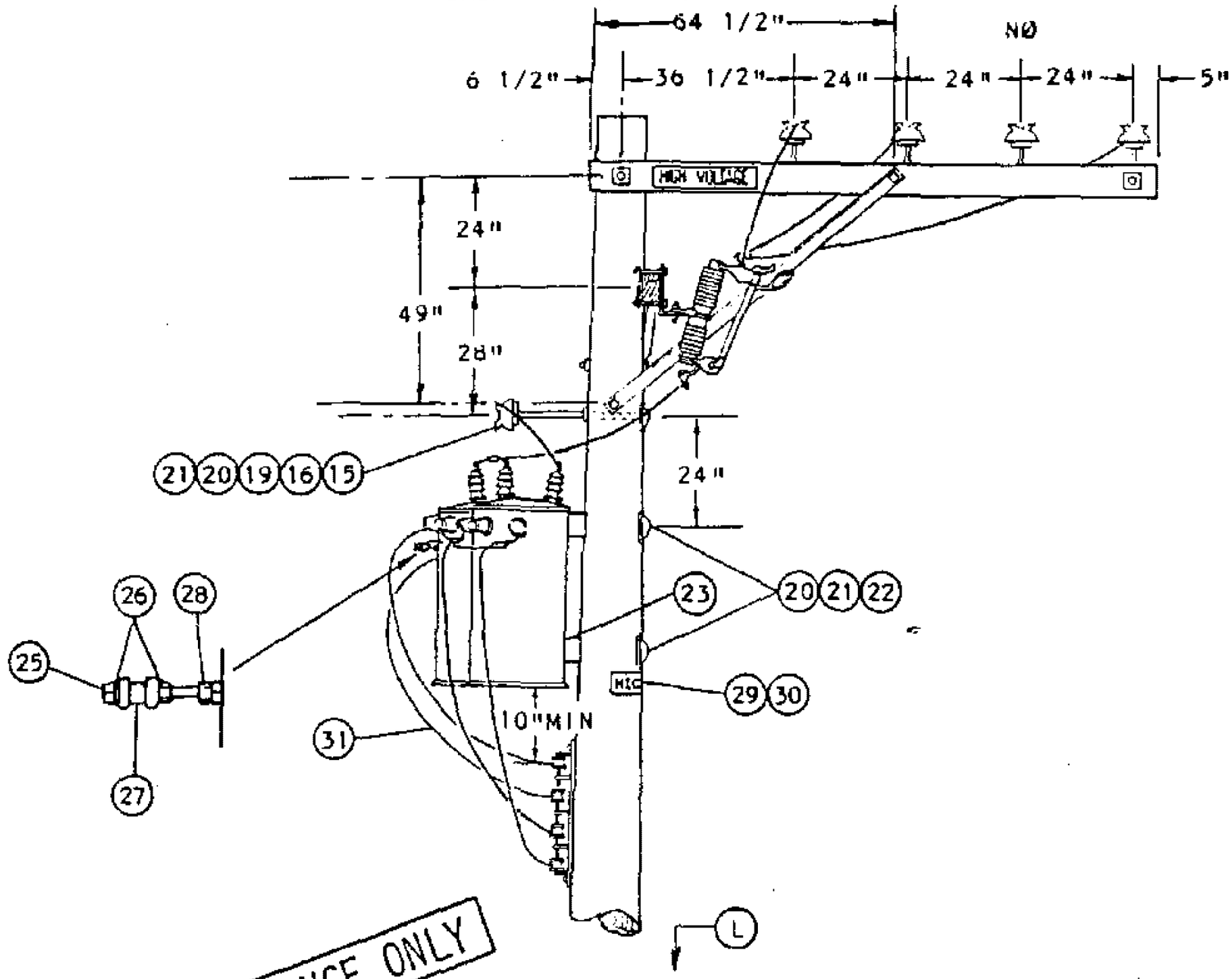

FOR FIELD MAINTENANCE ONLY

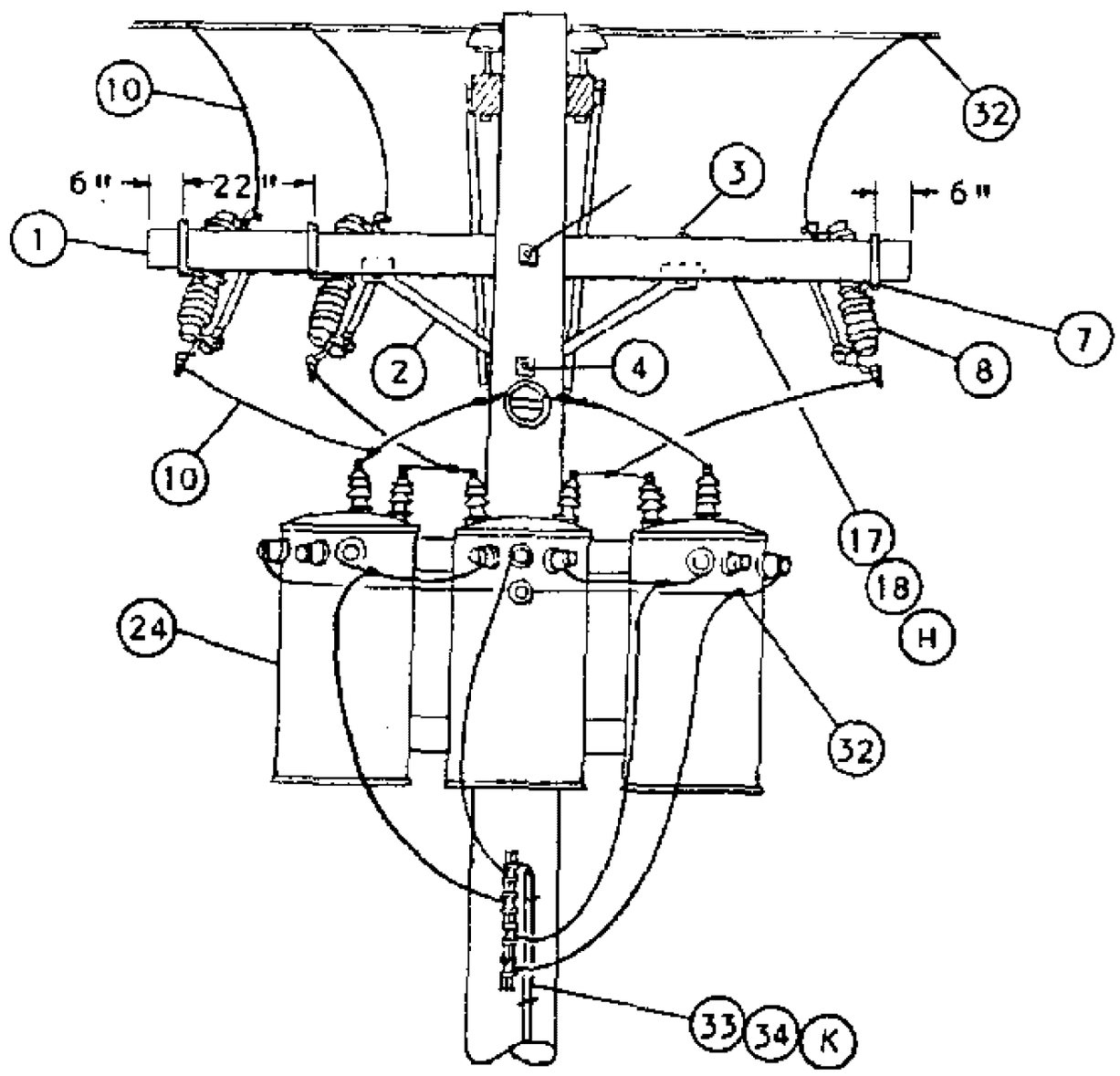

DELTA PRIMARY CONNECTION

TABLE OF CONTENTS

DATE 1-1-89 APPD PLA / DTE	SDG&E ELECTRIC STANDARDS 7.2 AND 12KV THREE PHASE TRANSFORMER CLUSTER MOUNT INSTALLATION-ALLEY ARM CONSTRUCTION	1199.8C3 SUPERSEDES 1174.1 (1-1-93)

TABLE OF CONTENTS

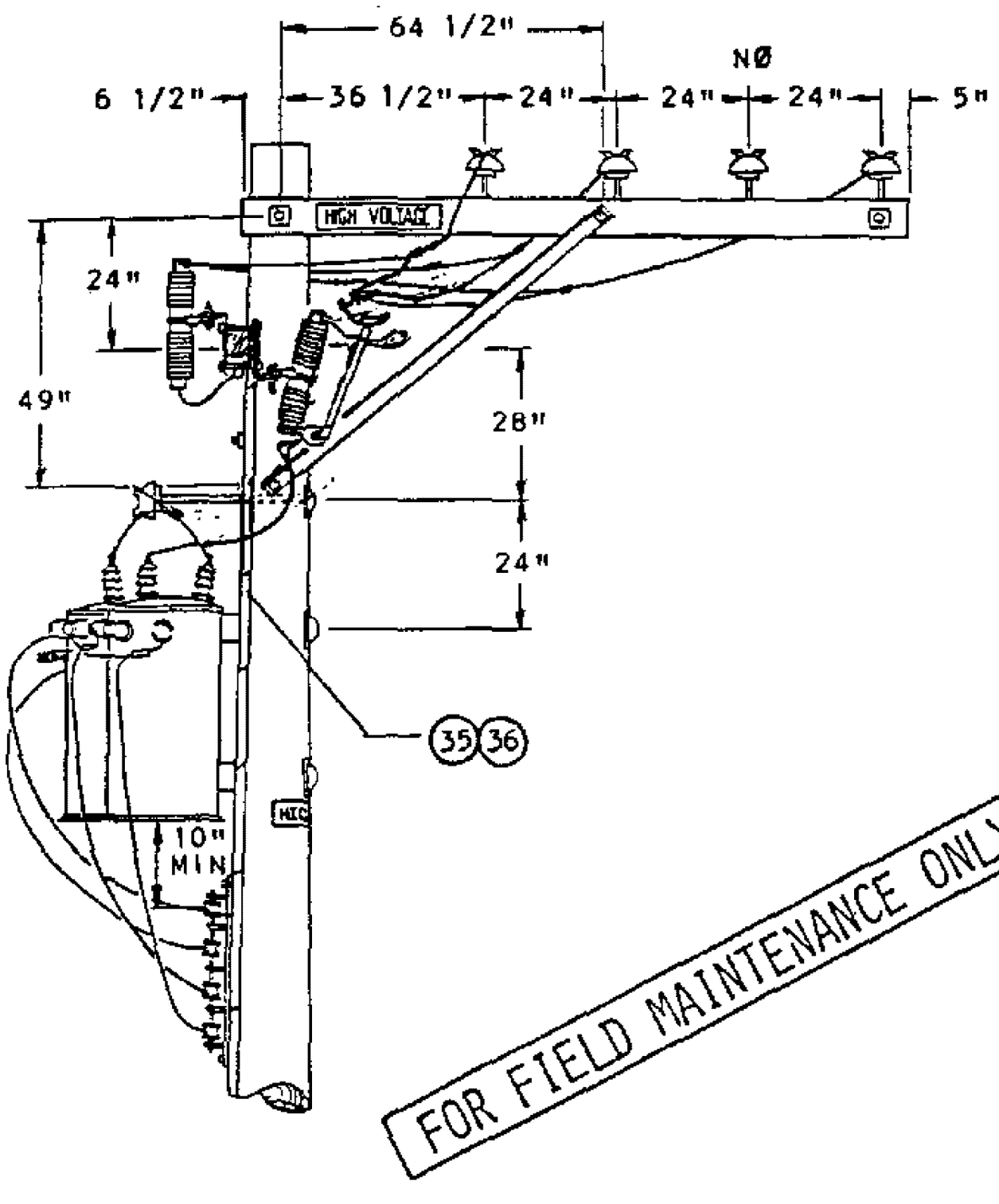

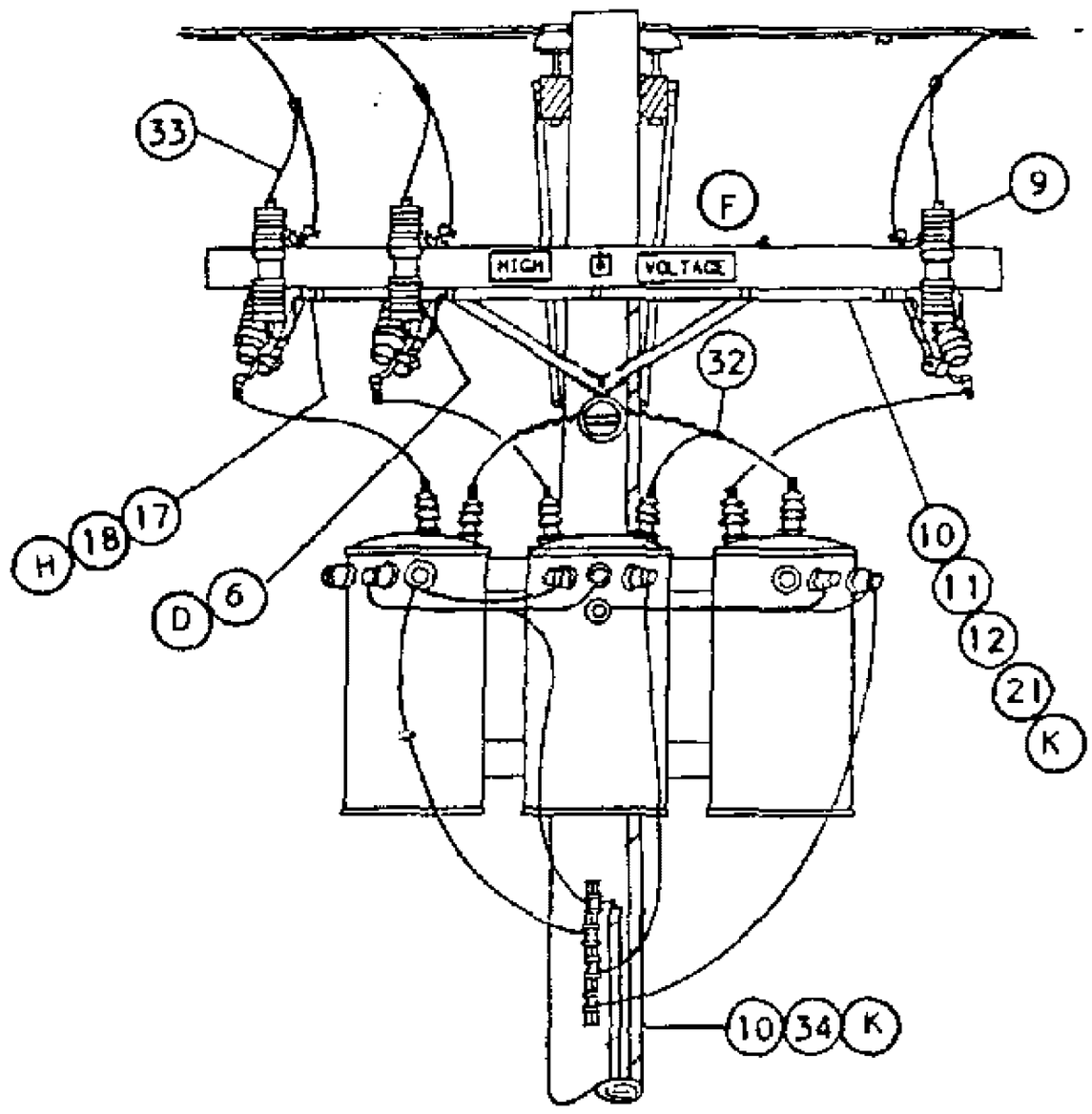

WYE PRIMARY CONNECTION
WITH LIGHTNING ARRESTERS (J)

1199.804 SUPERSEDES 1174.2 (1-1-93)	SDG&E ELECTRIC STANDARDS 7.2 AND 12KV THREE PHASE TRANSFORMER CLUSTER MOUNT INSTALLATION-ALLEY ARM CONSTRUCTION	DATE 1-1-91 APPD

BILL OF MATERIAL:

ITEM	DESCRIPTION	QUANTITY: STATION (J) WITH ARRESTERS	QUANTITY: STATION WITHOUT ARRESTERS	STOCK NUMBER OR CONSTR STANDARD
1	CROSSARM, 3 3/4" X 5 3/4" X 10' - 0"	1	1	294128
2	BRACE, ANGLE, CROSSARM, 4'	1	1	164032
3	BOLT, MACH, GALV, 1/2" X 7", 1 RD & 1 DBL COIL SPRING WASHER (E)	2	2	STD. 392
4	BOLT, MACH, GALV, 5/8" X (LENGTH AS REQ'D), 1 SQUARE & 1 DOUBLE COIL SPRING WASHER (E)	1	1	STD. 392
5	BOLT, MACH, GALV, 5/8" X (LENGTH AS REQ'D), 2 SQUARE & 1 DOUBLE COIL SPRING WASHER (E)	1	1	STD. 392
6	BRACKET, DOUBLE, CUTOUT/ARRESTER, FOR CROSSARM MOUNTING (E)	3	-	165442
7	BRACKET, CUTOUT/ARRESTER, FOR CROSSARM MOUNTING (E)	-	3	166070
8	CUTOUT, 12KV, WITH LOADBUSTER HOOK	3	3	STD. 1212
9	ARRESTER, LIGHTNING	3	-	113248
10	WIRE, #4 BARE STRANDED COPPER FT / LB	100 / 13	40 / 5	813760
11	CONDUIT, PVC, TYPE 2, SCHEDULE 40, 1" X 10' (E)	1	-	251200
12	STRAPS, PIPE, GALV, " (E)	AS REQ'D	-	697792
13				
14				
15	INSULATOR, PIN TYPE, CLASS AS REQ'D	1	1	STD. 750
16	WIRE, TIE (E)	1	1	815232
17	WIRE, #8 BARE SOLID ANNEALED COPPER (G) FT / LB	15 / 1	15 / 1	812928
18	STAPLES, 1 1/4", FENCE, GALV (G) (E)	AS REQ'D	AS REQ'D	678528
19	BRACKET, INSULATOR, 1" OR 1 3/8" THREAD (AS REQ'D)	1 / 1	1 / 1	166144 / 166176
20	COVER, BOLT, PLASTIC (E)	3	3	285696
21	NAILS, GALV, 1 3/4" ROOFING (E)	AS REQ'D	AS REQ'D	492192
22	BOLT, MACH, GALV, 3/4" X (LENGTH AS REQ'D), 1 SQUARE CURVED & 1 DOUBLE COIL SPRING WASHER (E)	2	2	STD. 392
23	BRACKET, TRANSFORMER CLUSTER MOUNTING	1	1	403008
24	TRANSFORMER, SINGLE PHASE, TYPE 'Y', 'YF', 'H' OR 'HF'	3	3	STD 1121
25	BOLT, MACH, GALV, 1/2" X 5" (E)	1	1	153024
26	WASHER, GALV, 1/2", ROUND (E)	2	2	800192
27	INSULATOR, SECONDARY, SPOOL, PORCELAIN (E)	1	1	430752
28	NUT, GALV, 1/2" (E)	1	1	504736
29	SIGN, HIGH VOLTAGE (E)	3	1	647648
30	NAILS, GALV, 7/8" ROOFING (E)	27	9	492224

FOR FIELD MAINTENANCE ONLY

TABLE OF CONTENTS

DATE 1-1-91
APPD PLA/ESS

SDG&E ELECTRIC STANDARDS

7.2 AND 12KV THREE PHASE TRANSFORMER CLUSTER MOUNT INSTALLATION-ALLEY ARM CONSTRUCTION

1199.805
SUPERSEDES
1174.3 (1-1-93)

BILL OF MATERIAL: (CONT'D)

ITEM	DESCRIPTION	QUANTITY		STOCK NUMBER OR CONSTR STANDAR
		STATION (J) WITH ARRESTERS	STATION WITHOUT ARRESTERS	
31	WIRE, W.P. COPPER, SIZED PER TRANSFORMER CAPACITY	35'	35'	STD 1125
32	CONNECTOR, WIRE, COMPRESSION, CU OR AL AS REQ'D (E)	AS REQ'D	AS REQ'D	783-786
33	WIRE, #6, 3 STRAND, BARE COPPER FT / LB	55 / 4	40 / 3	813536
34	UNIT, GROUND, COMPLETE (K)	2	1	603136
35	CONDUIT, PVC, TYPE 2, SCHEDULE 40, 1/2" (E)	10'	—	251168
36	STRAPS, PIPE, GALV. 1/2" AND 1 3/4" ROOFING NAILS (E)	AS REQ'D.	—	697728

INSTALLATION:

A. USE THIS CONSTRUCTION FOR TRANSFORMERS RATED 12KV AND BELOW WHICH HAVE HIGH VOLTAGE BUSHINGS MOUNTED ON TOP OF COVER.

B. LIMITED TO TRANSFORMERS 100 KVA AND SMALLER, EACH WEIGHING 1200 POUNDS OR LESS.

C. WHEN PRACTICAL, BOLT TRANSFORMERS TO BRACKET ON THE GROUND AND INSTALL THEM AS A PREWIRED ASSEMBLY.

(D) DRILL THROUGH CROSSARM 1" UP FROM LOWER EDGE SO THAT LOWER CROSSARM MOUNTING BRACKET BOLT DOES NOT INTERFERE WITH PVC CONDUIT.

(E) EXEMPT MATERIAL.

(F) INSTALL LA/CO CROSSARM ON SAME SIDE OF POLE AS TRANSFORMERS.

(H) BOND ALL CUTOUTS IN HEAVY CONTAMINATION DISTRICT, AS IDENTIFIED ON STANDARD 287. IN AREAS WHERE BONDING IS REQUIRED, TO AVOID BONDWIRE AND LIGHTNING ARRESTER GROUNDWIRE ON THE SAME CROSSARM, USE TWO CROSSARMS; ONE FOR CUTOUTS AND ONE FOR LIGHTNING ARRESTERS.

REFERENCE:

I. PRIMARY AND SECONDARY CONNECTIONS ARE SHOWN FOR ILLUSTRATIVE PURPOSES. SEE STANDARD 1118-1119 FOR SPECIFIC CONNECTION DIAGRAMS.

(J) LIGHTNING ARRESTER APPLICATION, SEE STANDARD 1247.

(K) GROUNDING METHOD AND APPLICATION, SEE STANDARD 1002.

(L) POLE STEPPING, SEE STANDARD 363.

FOR FIELD MAINTENANCE ONLY

TABLE OF CONTENTS

1199.806 SUPERSEDES 1174.4 (1-1-93)	SDG&E ELECTRIC STANDARDS 7.2 AND 12KV THREE PHASE TRANSFORMER CLUSTER MOUNT INSTALLATION-ALLEY ARM CONSTRUCTION	DATE 1-1-89 APPD

FIELD MAINTENANCE ONLY

REVISION HISTORY:

7/13/2016: All versions prior to 2016 are superseded by their current version found inside the Overhead Construction Standard Manual.

TABLE OF CONTENTS

© 1998 - 2016 San Diego Gas & Electric Company. All rights reserved. Removal of this copyright notice without permission is not permitted under law.

REV	CHANGE	BY	DSGN	APPV	DATE	REV	CHANGE	BY	DSGN	APPV	DATE
C						F					
B						E					
A	ORIGINAL ISSUE	JS	IL	MDJ	7/13/2016	D					

X Indicates Latest Revision | Completely Revised | New Page | Information Removed

SHEET 1 OF 1

SDG&E ELECTRIC OVERHEAD STANDARD

12KV, THREE PHASE, TYPE "H" OR "HF" TRANSFORMER INSTALLATION, THREE 75 KVA MAXIMUM, SECONDARY LINE ARM CONSTRUCTION

FMO OH 1181

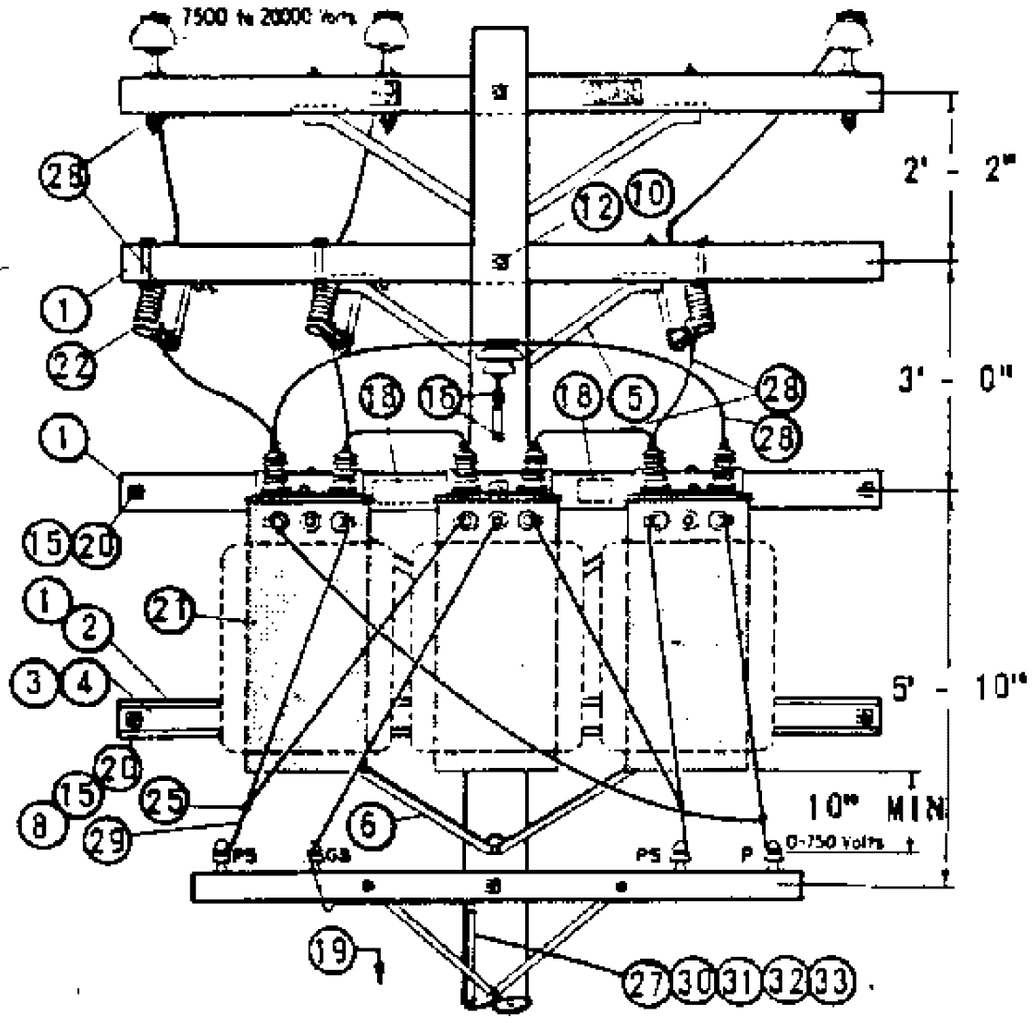

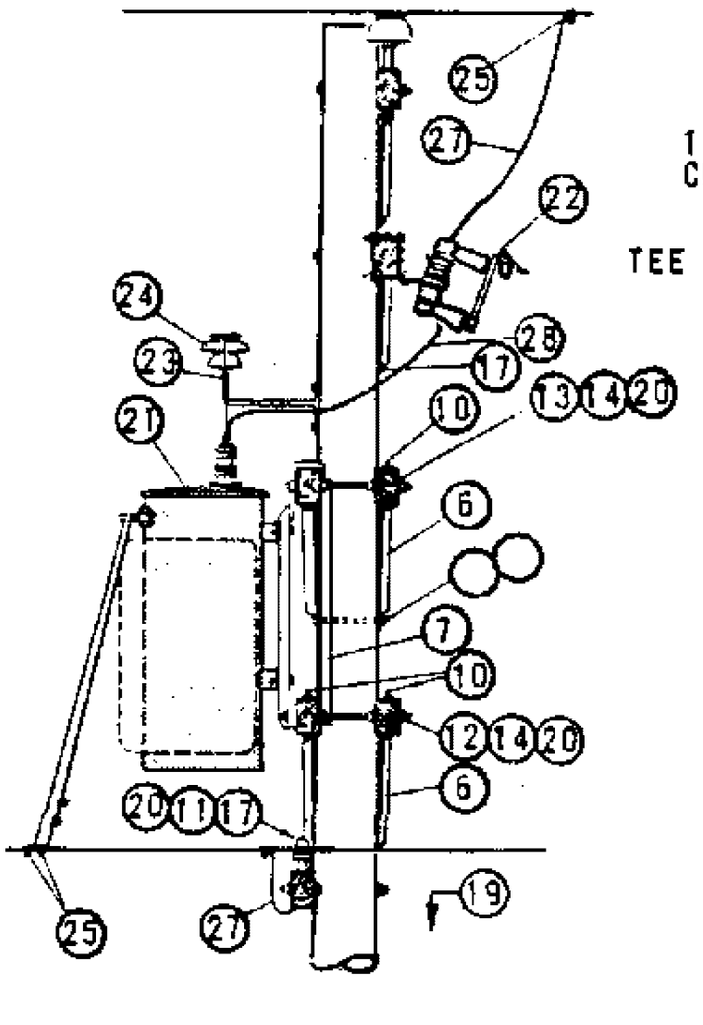

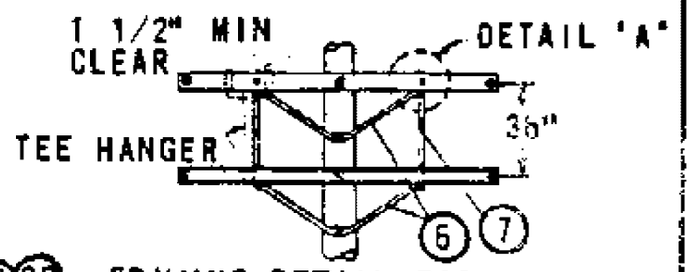

FRAMING DETAIL FOR 3 - 37.5 TO 3 - 75 KVA INSTALLATIONS

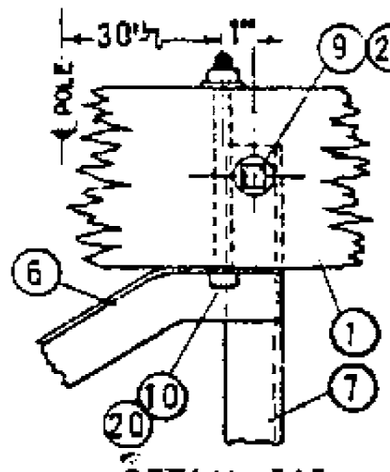

DETAIL "A"

NOTES:

(A) UNIT GROUND COMPLETE ORDER 603120 WITH GRAY MOULDING, 603135 WITH PLAIN MOULDING.

B. SEE ARRESTER SECTION FOR ARRESTER REQUIREMENTS.

(C) USE TWO ROD GROUND.

D. BOND ALL CUTOUTS IN HEAVY CONTAMINATION DISTRICTS AS IDENTIFIED ON STANDARDS PAGE 287.

(E) EXEMPT MATERIAL

F. USE EXTRA HEAVY CLASS ONE POLES WITH 10" MINIMUM TOP DIAMETER ON NEW CONSTRUCTION FOR 3 - 37.5 TO 3 - 75 KVA TRANSFORMER INSTALLATIONS.

G. LIMITED TO TRANSFORMERS WEIGHING 1200# OR LESS.

H. SPACING OF TRANSFORMERS TO BE AS CLOSE AS PRACTICABLE BUT NOT TO EXCEED 33.5" CENTER TO CENTER.

I. SEE STANDARDS PAGE 1119 FOR SPECIFIC TRANSFORMER CONNECTIONS. 240V, 4 WIRE DELTA IS SHOWN FOR ILLUSTRATIVE PURPOSES ONLY.

TABLE OF CONTENTS

ITEM	MLT	DESCRIPTION	QUANTITY 5 TO 25 KVA	QUANTITY 37.5 TO 75 KVA	STOCK NO. OR CONSTR STD
1		CROSSARM, 3 3/4" X 5 3/4" X 10' - 0"	3	5	PG. 119 IT. 2
2		CROSSARM, 3 3/4" X 5 3/4" X 8' - 0"	1	0	PG. 116 IT. 1
3		COVER STRIP, 1 5/8" X 3 5/8" X 8' - 0" (2X4S4S)	1	0	699328
4		COVER STRIP, 1 5/8" X 3 5/8" X 10' - 0" (2X4S4S)	0	1	699360
5		BRACE, ANGLE CROSSARM, GALV, 4' - 0"	1	1	164032
6		BRACE, ANGLE CROSSARM, GALV, 5' - 0"	2	4	164128
7		BRACE, VERTICAL 36"	0	2	164256
8		BOLT, MACH GALV, 3/8" X 6", 2 RD WASH & 1 NUT (E)	2	0	PGS 139, 140
9		BOLT, MACH GALV, 5/8" X 5", 1 RD WASH. & 1 NUT (E)	0	4	PGS 139, 140
10		BOLT, MACH GALV, 1/2" X 8", 1 RD WASH & 1 NUT (E)	6	10	PGS 139, 140
11		BOLT, MACH GALV, 5/8" X __", 1 NUT (E)	1	2	PGS 139, 140
12		BOLT, MACH GALV, 5/8" X 14", 2 SQ WASH & 1 NUT (E)	2	1	PGS 139, 140
13		BOLT, MACH GALV, 5/8" X 20", 2 - 3" SQ WASH & 1 NUT (E)	1	0	PGS 139, 140
14		BOLT, MACH GALV, 3/4" X 20", 2 - 3" SQ WASH & 1 NUT	0	2	PGS 139, 140
15		BOLT, SPACE GALV, 5/8" X __", 4 SQ WASH, & 4 NUTS (E)	2	4	PGS 139, 140
16		SCREW, LAG GALV, 1/2" X 4" (E)	3	2	621568
17		SCREW, LAG GALV, 5/8" X 5" (E)	1	1	621600
18		SIGN, HIGH VOLTAGE & 8 ROOFING NAILS, GALV (E)	1	1	647648, 492224
19		STEP, POLE (E)	19	19	692992
20		WASHER, DOUBLE COIL SPRING, FOR ITEMS 8 THRU 15	AS REQ'D		PG 140
	21	TRANSFORMER, SINGLE PHASE, TYPE H OR HF	3	3	PGS 1121.01-1121.12
	22	CUTOUT, 12KV	3	3	PGS 1212, 1213
	23	BRACKET, INSULATOR	1	1	166176
	24	INSULATOR, 12KV	1	1	429152
	25	CONNECTOR, WIRE	11	11	PGS 783-787
	26	WIRE, BARE SOLID ANNEALED COPPER #8	AS REQ'D		812928
	27	WIRE, BARE STRANDED COPPER #6	70'	70'	813536
	28	WIRE, SOLID W.P. COPPER #4	10'	10'	813536
	29	WIRE, W.P. COPPER, SIZE GOVERNED BY TRANSFORMER CAPACITY	60'	60'	PG 1125
	30	ROD & CLAMP (A) (C)	2	2	603072, 230016 (E)
	31	MOULDING, HARDWOOD 1" (A)	27'	27'	487200
	2	STAPLES, MOULDING GALV, 3" X 1 1/16" X 1/4" (A) (E)	18	18	678560
	33	STAPLES, FENCE GALV, 1 1/4" (A) (E)	17	17	678528

FOR FIELD MAINTENANCE ONLY

DATE 1-1-86
APPD AK/RDS

SAN DIEGO GAS & ELECTRIC CO OVERHEAD STANDARDS

12KV, THREE PHASE, TYPE "H" OR "HF" TRANSFORMER INSTALLATION, THREE 75 KVA MAXIMUM, SECONDARY LINE ARM CONSTRUCTION

1199.801
SUPERSEDES
1181 (1-1-86)

FIELD MAINTENANCE ONLY

REVISION HISTORY:

7/13/2016: All versions prior to 2016 are superseded by their current version found inside the Overhead Construction Standard Manual.

TABLE OF CONTENTS

© 1998 - 2016 San Diego Gas & Electric Company. All rights reserved. Removal of this copyright notice without permission is not permitted under law.

REV	CHANGE	BY	DSGN	APPV	DATE	REV	CHANGE	BY	DSGN	APPV	DATE
C						F					
B						E					
A	ORIGINAL ISSUE	JS	IL	MDJ	7/13/2016	D					

X Indicates Latest Revision | Completely Revised | New Page | Information Removed

SHEET 1 OF 1

SDG&E ELECTRIC OVERHEAD STANDARD

12KV, THREE PHASE, TYPE "HE" OR "HJ" TRANSFORMER INSTALLATION, THREE 75 KVA MAXIMUM, SECONDARY LINE ARM CONSTRUCTION

FMO OH 1184

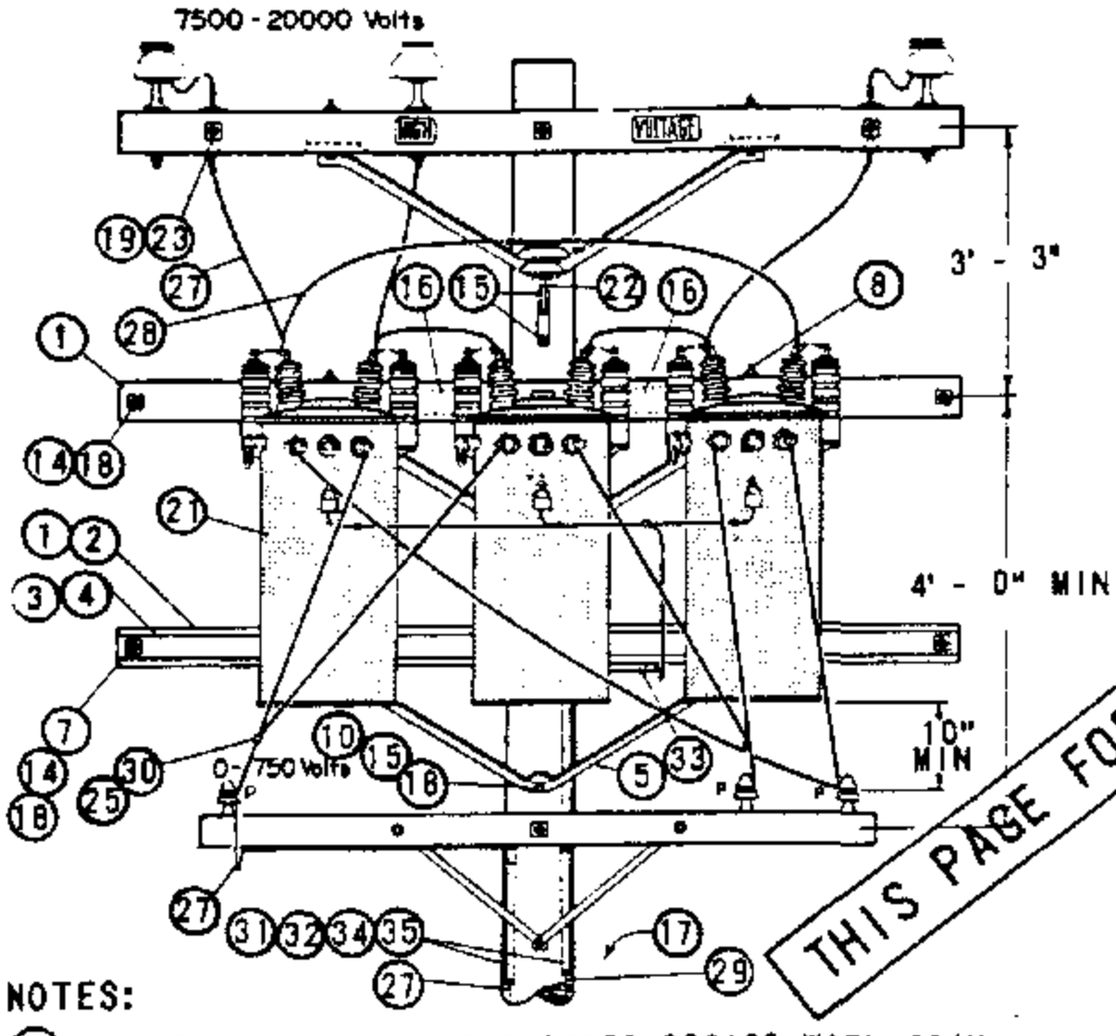

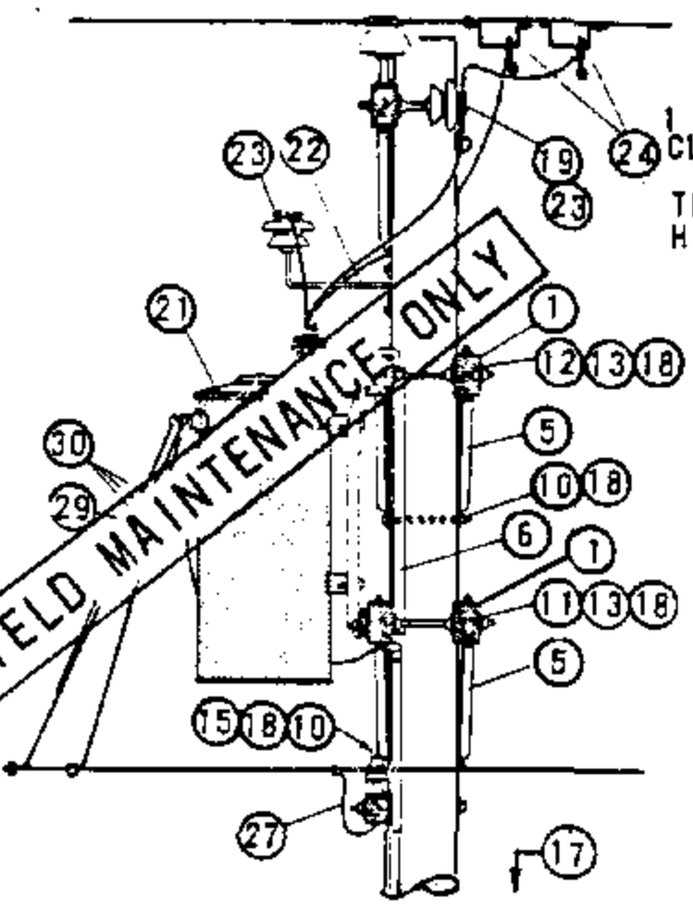

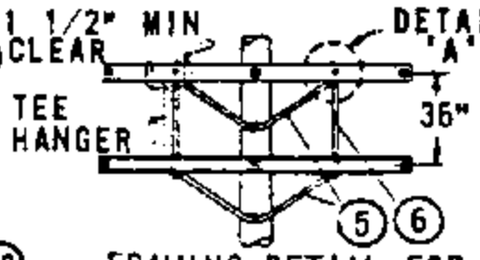

FRAMING DETAIL FOR 3 - 37.5 TO 3 - 75 KVA INSTALLATIONS

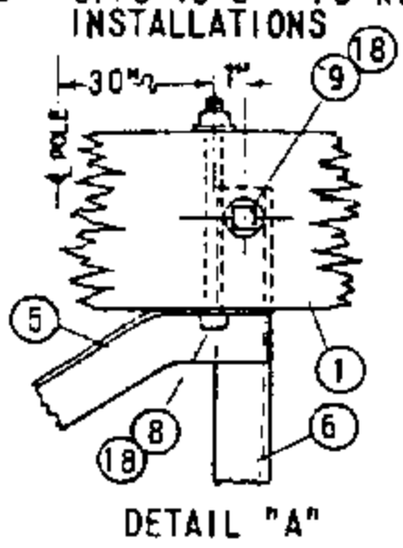

DETAIL "A"

NOTES:

(A) UNIT GROUND COMPLETE ORDER 603120 WITH GRAY MOULDING, 603136 WITH PLAIN MOULDING.

(B) USE TWO ROD GROUND.

C. THIS PAGE FOR FIELD MAINTENANCE ONLY. USE TYPE 'H' TRANSFORMERS ON NEW INSTALLATIONS.

D. USE EXTRA HEAVY CLASS ONE POLES WITH 10" MINIMUM TOP DIAMETER ON NEW CONSTRUCTION FOR 3 - 37.5 TO 3 - 75 KVA TRANSFORMER INSTALLATIONS.

(E) EXEMPT MATERIALS

F. LIMITED TO TRANSFORMERS WEIGHING 1200# OR LESS.

G. SPACING OF TRANSFORMERS TO BE AS CLOSE AS PRACTICABLE BUT NOT TO EXCEED 33.5" CENTER TO CENTER.

H. SEE DISTRIBUTION POLE TOPS SECTION FOR POLE TOP MATERIALS.

I. OMIT LIGHTNING ARRESTER TANK GAP GROUNDING MATERIAL WHERE INSTALLING TRANSFORMERS NOT EQUIPPED WITH ARRESTERS.

ITEM PTF	ITEM LTI	DESCRIPTION	QUANTITY 5 TO 25 KVA	QUANTITY 37.5 TO 75 KVA	STOCK NO. OR CONSTR STD
1		CROSSARMS, 3 3/4" X 5 3/4" X 10' - 0"	2	4	PG 119 LT 2
2		CROSSARMS, 3 1/2" X 4 1/2" X 8' - 0"	1	0	PG 111 LT 2
3		COVER STRIP, 1 5/8" X 3 5/8" X 8' - 0" (2X4S4S)	1	0	699328
4		COVER STRIP, 1 5/8" X 3 5/8" X 10' - 0" (2X4S4S)	0	1	699360
5		BRACE, ANGLE CROSSARM 5' - 0"	2	4	164128
6		BRACE, VERTICAL 36"	0	2	164256
7		BOLT, MACH GALV, 3/8" X 6", 2 RD WASH. (E)	2	0	PGS 139, 140
8		BOLT, MACH GALV, 1/2" X 8", 1 RD WASH (E)	4	8	PGS 139, 140
9		BOLT, MACH GALV, 5/8" X 5", 1 RD WASH. (E)	0	4	PGS 139, 140
10		BOLT, MACH GALV, 5/8" X __", (E)	1	2	PGS 139, 140
11		BOLT, MACH GALV, 5/8" X 14", 2 SQ WASH. (E)	1	0	PGS 139, 140
12		BOLT, MACH GALV, 5/8" X 20", 2 - 3" SQ WASH. (E)	1	0	PGS 139, 140
13		BOLT, MACH GALV, 3/4" X 20", 2 - 3" SQ WASH.	0	2	PGS 139, 140
14		BOLT, SPACE GALV, 5/8" X __", 4 SQ WASH (E)	2	4	PGS 139, 140
15		SCREW, LAG GALV, 1/2" X 4" (E)	3	2	621568
16		SIGN, HIGH VOLTAGE & 8 ROOFING NAILS, GALV (E)	1	1	647648, 492224
17		STEP, POLE (E)	19	19	692992
18		WASHER, DOUBLE COIL SPRING FOR ITEMS 7 THRU 14	AS REQ'D		PG 140
19		PIN, INSULATOR 12KV, SIZE PER ITEM 23, 1 /1 3/8"	2	2	531072/532448
20					
	21	TRANSFORMER, SINGLE PHASE, TYPE HE OR HJ	3	3	PGS 1121.01-1121.12
	22	BRACKET, INSULATOR, SIZE PER ITEM 23	1	1	PG 152
	23	INSULATOR, 12KV, CLASS AS REQ'D	3	3	PG 750
	24	CLAMP, HOT LINE (E) AND STIRRUP	7	7	PG 788
	25	CONNECTOR, WIRE	7	7	PGS 783-787
	26				
	27	WIRE, BARE STRANDED COPPER #6	76'	76'	813536
	28	WIRE, BARE STRANDED COPPER #4	8'	8'	813760
	29	WIRE, BARE STRANDED COPPER #2	50'	50'	813664
	30	WIRE, W.P. COPPER, SIZE GOVERENED BY TRANSFORMER CAPACITY	60'	60'	PG 1125
	31	ROD AND CLAMP, GROUND (A) (B)	4	4	603072, 230016 (E)
	32	MOULDING, HARDWOOD 1" (A)	64'	64'	487200
	33				
	34	STAPLES, MOULDING GALV 1 1/4" X 3 1/16" X 1/4" (A) (E)	40	40	678560
	35	STAPLES, FENCE GALV 1 1/4" (A) (E)	36	36	678528

1199.802 SUPERSEDES 1184 (1-1-86)	SAN DIEGO GAS & ELECTRIC CO OVERHEAD STANDARDS 12KV, THREE PHASE, TYPE "HE" OR "HJ" TRANSFORMER INSTALLATION, THREE 75 KVA MAXIMUM, SECONDARY LINE ARM CONSTRUCTION	DATE 1-1-86 APPD AE/RDS

TABLE OF CONTENTS

OH1190 FIELD MAINTENANCE ONLY

ALL VERSIONS LISTED IN FMO ARE SUPERSEDED BY THEIR CURRENT VERSION FOUND INSIDE THE OVERHEAD CONSTRUCTION STANDARD MANUAL.

REVISION HISTORY:

10/21/2022: MOVED TO FMO

TABLE OF CONTENTS

© 1998 - 2022 San Diego Gas & Electric Company. All rights reserved. Removal of this copyright notice without permission is not permitted under law.

REV	CHANGE	DR	BY	DSN	APV	DATE	REV	CHANGE	DR	BY	DSN	APV	DATE
C							F						
B							E						
A	ORIGINAL ISSUE	EDM	MRF	GLW	KRG	10/21/2022	D						

Indicates Latest Revision | Completely Revised [X] | New Page | Information Removed

SHEET 1 OF 1

SDG&E ELECTRIC OVERHEAD FIELD MAINTENANCE ONLY STANDARDS

VOLTAGE BOOSTING TRANSFORMER STATION
12 - 12.47 KV - THREE-PHASE INSTALLATION

FMO OH1190

SCOPE: THIS STANDARD SHOWS THE INSTALLATION METHOD OF A THREE-PHASE VOLTAGE BOOSTING TRANSFORMER.

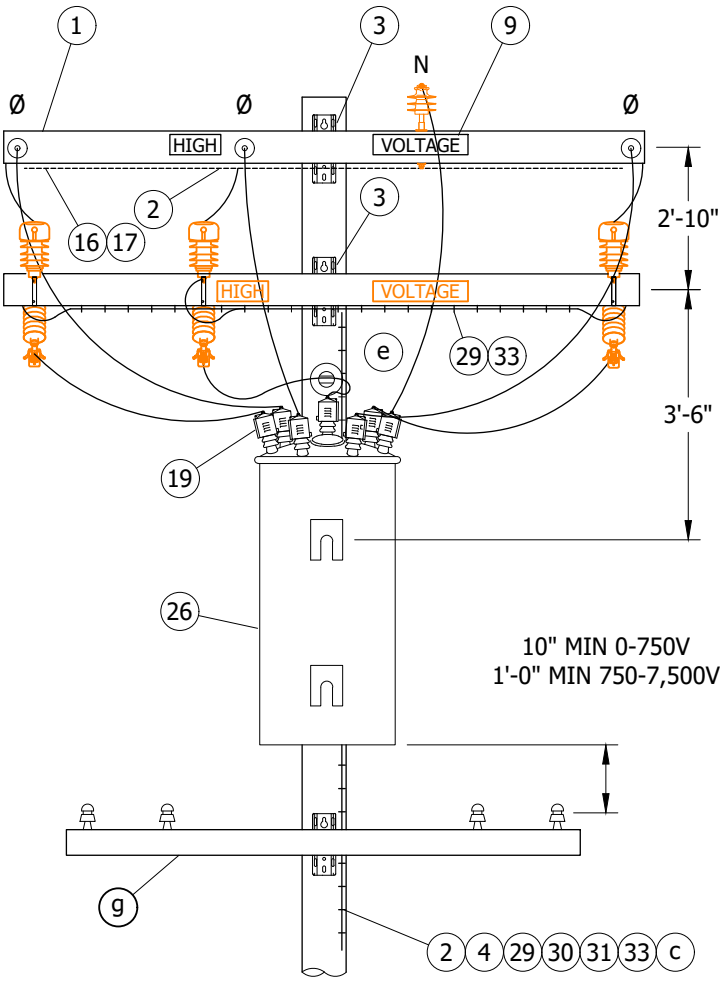

FIGURE 1
FRONT VIEW

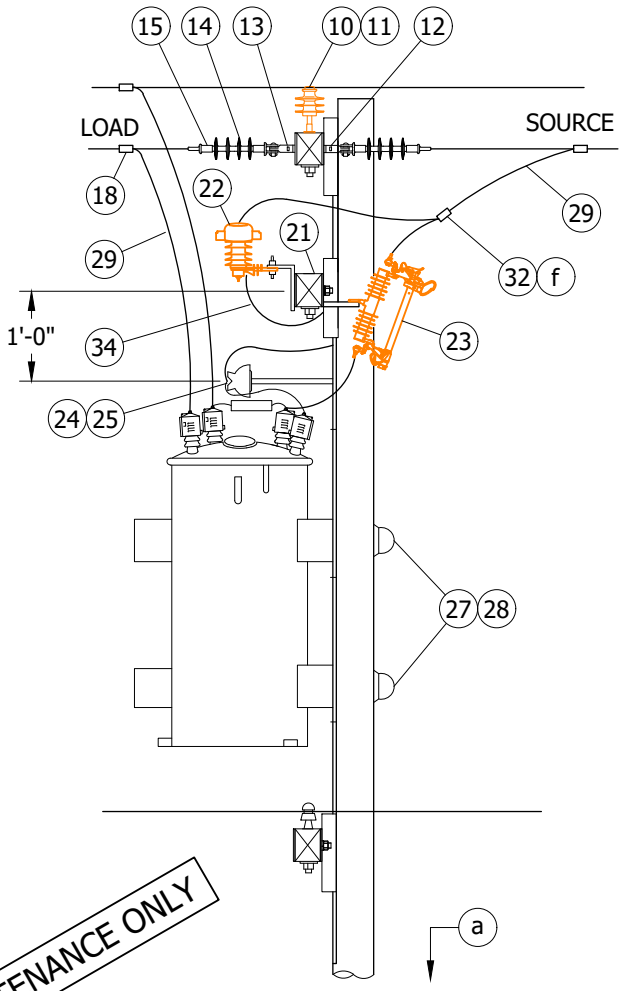

FIGURE 1
SIDE VIEW

FIELD MAINTENANCE ONLY

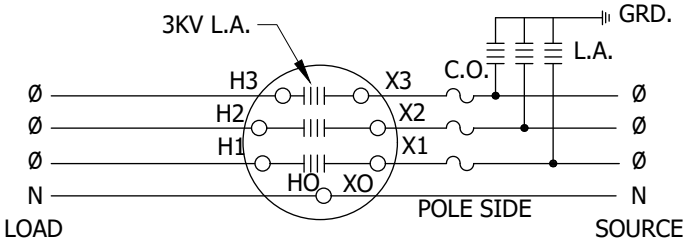

FIGURE 2
BOOSTING CONNECTION DIAGRAM

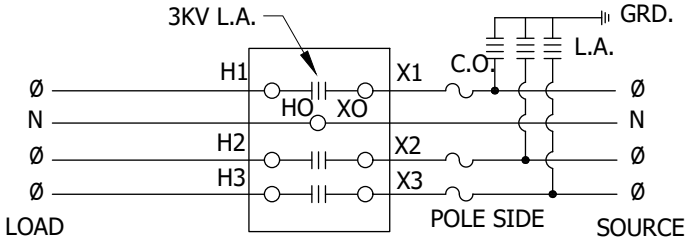

FIGURE 3
MCGRAW EDISON WITH ONE SET
OF MOUNTING BRACKETS

© 1998 - 2022 San Diego Gas & Electric Company. All rights reserved. Removal of this copyright notice without permission is not permitted under law.

REV	CHANGE	DR	BY	DSN	APV	DATE	REV	CHANGE	DR	BY	DSN	APV	DATE
C	TABLE UPDATE	EDM	ACE	GLW	CZH	10/09/2020	F						
B	EDITORIAL CHANGES	-	JS	JS	CZH	10/01/2018	E						
A	ORIGINAL ISSUE	-	-	JS	DW	06/17/2013	D	MOVED TO FMO	EDM	MRF	GLW	KRG	10/21/2022

X Indicates Latest Revision | Completely Revised | New Page | Information Removed

SDG&E ELECTRIC OVERHEAD FIELD MAINTENANCE ONLY STANDARDS

SHEET 1 OF 3

VOLTAGE BOOSTING TRANSFORMER STATION
12 - 12.47 KV - THREE-PHASE INSTALLATION

FMO
OH1190.1

TABLE OF CONTENTS

INSTALLATION:

A. SPECIAL FUSING TO BE SPECIFIED BY DISTRICT ENGINEER.

B. TRANSFORMER IN ILLUSTRATION IS SHOWN IN THE BOOSTING POSITION. MOUNT TRANSFORMER BY HANGER BRACKETS ON 'H' BUSHING SIDE OF UNIT TO CHANGE TO BUCKING INSTALLATION. MOUNTING MCGRAW EDISON TRANSFORMER WITH HANGER BRACKETS ON ONE SIDE REQUIRES INTERNAL CHANGE FROM BOOSTING TO BUCKING CONNECTION.

BILL OF MATERIALS:

ITEM	DESCRIPTION	QUANTITY	STANDARD PAGE	STOCK NUMBER	DESIGN UNITS
1	CROSSARM, 3 3/4" X 5 3/4" X 10'-0"	3	-	S294128	-
2	BRACE, ANGLE, CROSSARM, 5'-0"	2	-	S164128	-
3	BOLT, MACH, GALV, 5/8" X (LENGTH AS REQ'D), 2 SQUARE & 1 DOUBLE COIL SPRING WASHER	2	392	-	-
4	BOLT, MACH, GALV, 1/2" X 7", 1 RD & 1 DBL COIL SPR WASHER	4	392	-	-
5	BOLT, MACH, GALV, 5/8" X (LENGTH AS REQ'D) AND 1 DOUBLE COIL SPRING WASHER	1	392	-	-
6	BRACE, FLAT, GALV, 36"	2	-	S164224	-
7	BOLT, MACH, GALV, 3/8" X 5", 1 ROUND & 1 SPRING WASHER	2	392	-	-
8	BOLT, MACH, GALV, 1/2" X 5", 1 RD & 1 DBL COIL SPR WASHER	2	392	-	-
9	SIGN, HIGH VOLTAGE	2	-	S647648	-
	9 ROOFING NAILS, GALV	-	-	S492224	-
10	PIN, INSULATOR, STRAIGHT, 12KV, 1"	2	-	S532706 (X)	-
11	INSULATOR, LINE, 12KV NEUTRAL	2	-	S429216	-
12	BOLT, SPACE, GALV, 5/8" X (LENGTH AS REQ'D), 2 SQUARE, 2 ROUND & 2 DBL COIL SPRING WASHERS	3	392	-	-
13	CLEVIS, DEADEND, 5/8" BOLT STEEL	6	-	S235712	-
14	INSULATOR, SUSPENSION, 12KV, CLEVIS	12	750	-	-
15	CLAMP, STRAIGHT LINE, D.E.	6	741	-	-
16	WIRE, #8 BARE SOLID ANNEALED COPPER	10'	-	S812928	-
17	STAPLES, FENCE, GALV, 1 1/4"	AS REQ'D	-	S678528	-
18	CONNECTOR, WIRE, COMPRESSION, CU OR AL, (SIZE AS REQ'D)	AS REQ'D	783-786	-	-
19	BUSHING COVER, TRANSFORMER	7	-	S298188	BSHCOV
21	BRACKET, CUTOUT/ARRESTER, CROSSARM MOUNTING	6	-	S166070	-
22	ARRESTER, LIGHTNING, 12KV W/48" COVERED LEAD WIRE	3	-	S113256	10KVTA
23	CUTOUT, 12KV, WITH LOADBUSTER HOOKS, ALUMAFORM	3	-	S298020	-
24	BRACKET, INSULATOR, 1"	1	-	S166144	-
	1 3/8" LEAD THREAD	1	-	S166176	-
25	INSULATOR, 12KV, (CLASS AS REQ'D)	1	750	-	-
26	AUTOTRANSFORMER, TYPE 'HHT', 3 PHASE, 12 - 12.47KV, (COMPLETE WITH 3 - 3KV LIGHTNING ARRESTERS)	1	1121	-	-
27	BOLT, MACH, GALV, 3/4" X (LENGTH AS REQ'D), 1 SQUARE CURVED & 1 DBL COIL SPRING WASHER	2	392	-	-
28	COVER, BOLT, PLASTIC	3	-	S285696	-
	6 - 10D NAILS, GALV	-	-	S491392	-

FIELD MAINTENANCE ONLY

TABLE OF CONTENTS

© 1998 - 2022 San Diego Gas & Electric Company. All rights reserved. Removal of this copyright notice without permission is not permitted under law.

REV	CHANGE	DR	BY	DSN	APV	DATE	REV	CHANGE	DR	BY	DSN	APV	DATE
C	TABLE UPDATE	EDM	ACE	GLW	CZH	10/09/2020	F						
B	EDITORIAL CHANGES	-	JS	JS	CZH	10/01/2018	E						
A	ORIGINAL ISSUE	-	-	JS	DW	06/17/2013	D	MOVED TO FMO	EDM	MRF	GLW	KRG	10/21/2022

X Indicates Latest Revision | Completely Revised | New Page | Information Removed

SDG&E ELECTRIC OVERHEAD FIELD MAINTENANCE ONLY STANDARDS

VOLTAGE BOOSTING TRANSFORMER STATION
12 - 12.47 KV - THREE-PHASE INSTALLATION

BILL OF MATERIALS (CONT'D):

ITEM	DESCRIPTION	QUANTITY	STANDARD PAGE	STOCK NUMBER	DESIGN UNITS
29	#4 CU SOLID GROUND WIRE, PVC COVERED	110'-0"	-	S812490	GNDPVC
30	GROUND ROD, 5/8" X 8'-0", COPPERWELD	1	-	S603074 (X)	
31	COPPER BONDED GROUND CONNECTOR	1	-	S259010	-
32	HOT LINE CLAMP	3	-	S227680	-
33	GALVANIZED STAPLES FOR PVC COVERED GROUND WIRE	AS REQ'D	-	S678564 (X)	-
34	FLEXIBLE ARRESTER GROUND STRAP	AS REQ'D	-	S698754	-

NOTES:

(X) THIS ITEM IS EXEMPT.

REFERENCE:

(a) POLE STEPPING, SEE OH363.

b. FOR LIGHTNING ARRESTER REQUIREMENTS, SEE OH1247.

(c) GROUNDING METHODS, SEE OH1002.

d. BOND ALL CUTOUTS IN HEAVY CONTAMINATION DISTRICTS AS IDENTIFIED ON OH287.

(e) SECTIONALIZING CUTOUT INSTALLATION MAY VARY WITH POSITION OF NEUTRAL CONDUCTOR, SEE OH1240.

(f) FOR HOT LINE CLAMP CONNECTIONS, SEE OH788.

(g) FIBERGLASS CROSSARMS, SEE OH379.

TABLE OF CONTENTS

FIELD MAINTENANCE ONLY

© 1998 - 2022 San Diego Gas & Electric Company. All rights reserved. Removal of this copyright notice without permission is not permitted under law.

REV	CHANGE	DR	BY	DSN	APV	DATE	REV	CHANGE	DR	BY	DSN	APV	DATE
C	TABLE UPDATE	EDM	ACE	GLW	CZH	10/09/2020	F						
B	EDITORIAL CHANGES	-	JS	JS	CZH	10/01/2018	E						
A	ORIGINAL ISSUE	-	-	JS	DW	06/17/2013	D	MOVED TO FMO	EDM	MRF	GLW	KRG	10/21/2022

OH1192 UG4230 FIELD MAINTENANCE ONLY

ALL VERSIONS LISTED IN FMO ARE SUPERSEDED BY THEIR CURRENT VERSION FOUND INSIDE THE OVERHEAD AND UNDERGROUND CONSTRUCTION STANDARD MANUALS.

REVISION HISTORY:

07/27/2021: MOVED TO FMO

TABLE OF CONTENTS

© 1998 - 2021 San Diego Gas & Electric Company. All rights reserved. Removal of this copyright notice without permission is not permitted under law.

REV	CHANGE	DR	BY	DSN	APV	DATE	REV	CHANGE	DR	BY	DSN	APV	DATE
C							F						
B							E						
A	ORIGINAL ISSUE	EDM	JIK	JES	CZH	07/27/2021	D						

X Indicates Latest Revision | Completely Revised | New Page | Information Removed

SDG&E ELECTRIC OVERHEAD AND UNDERGROUND FIELD MAINTENANCE ONLY STANDARDS

VOLTAGE BOOSTING TRANSFORMER STATION CABLE POLE
USING NON-PORCELAIN TERMINALS,
12-12.47KV THREE-PHASE INSTALLATION

FMO
OH1192
UG4230

SCOPE: THIS STANDARD SHOWS THE METHOD OF INSTALLING A 12-12.47KV VOLTAGE BOOSTING TRANSFORMER STATION ON A CABLE POLE USING NON-PORCELAIN TERMINALS.

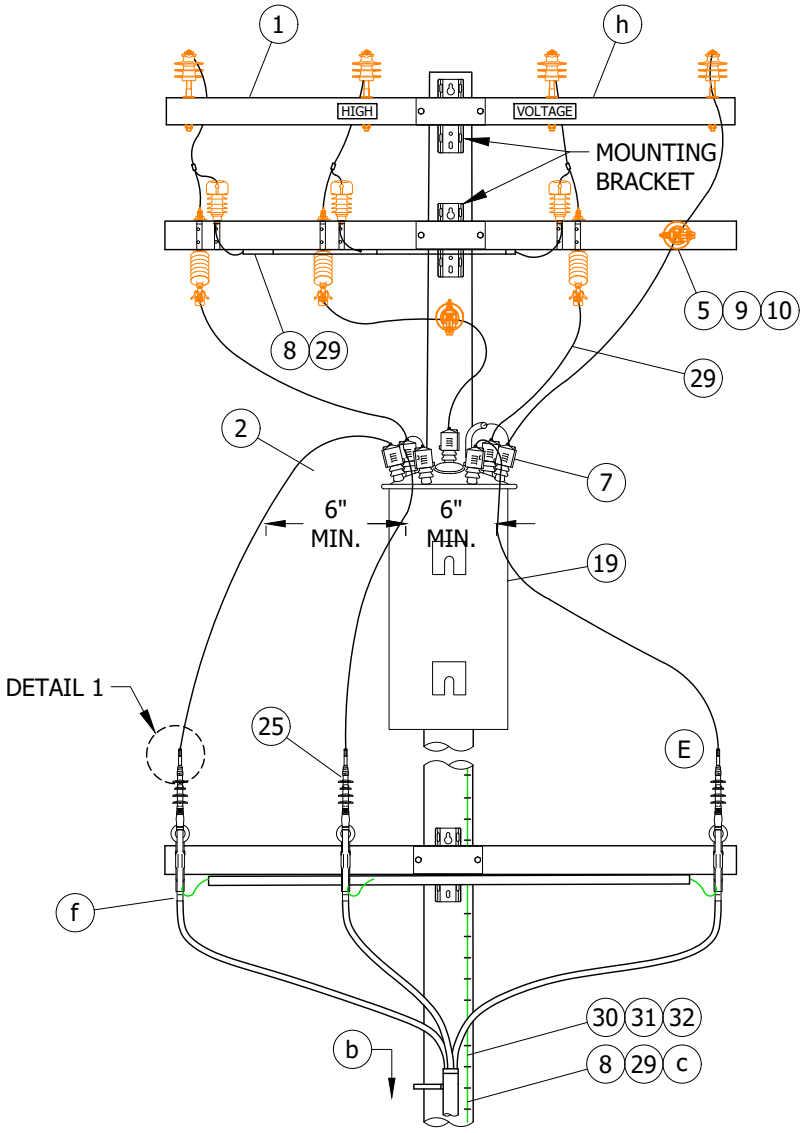

FIGURE 1
FRONT VIEW C

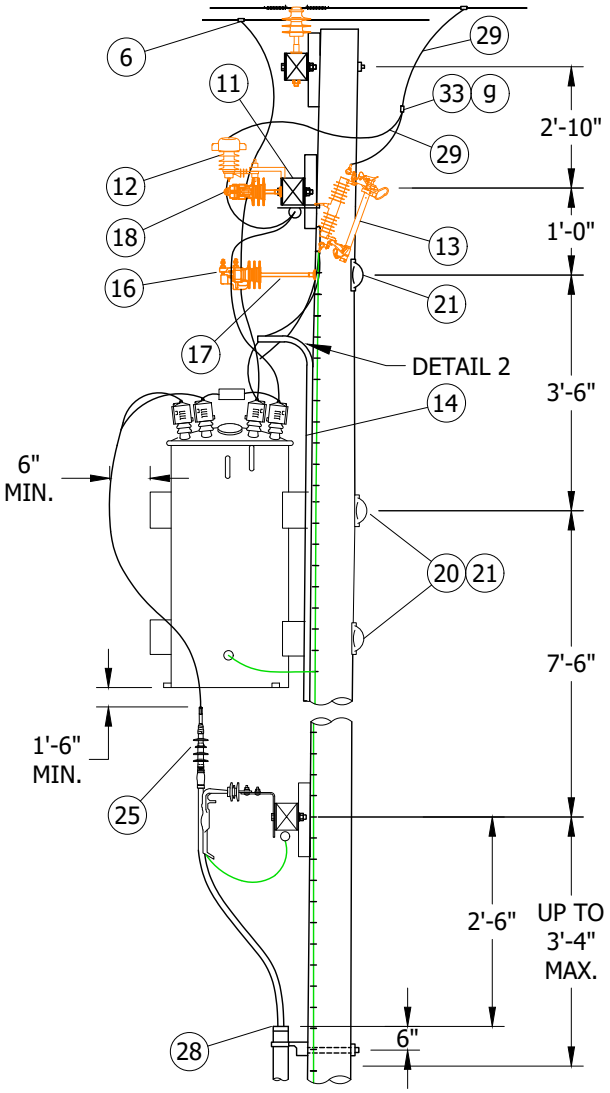

FIGURE 1
SIDE VIEW C

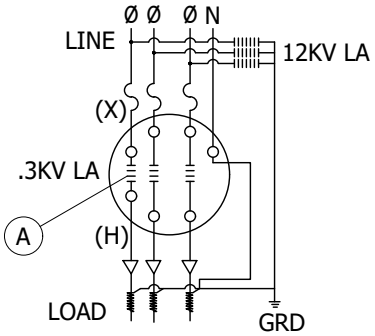

FIGURE 2

FIELD MAINTENANCE ONLY

TABLE OF CONTENTS

© 1998 - 2021 San Diego Gas & Electric Company. All rights reserved. Removal of this copyright notice without permission is not permitted under law.

REV	CHANGE	DR	BY	DSN	APV	DATE	REV	CHANGE	DR	BY	DSN	APV	DATE
C	MOVED TO FMO	EDM	JIK	JES	CZH	07/27/2021	F						
B	EDITORIAL CHANGES	-	JS	JS	CZH	10/01/2018	E						
A	ORIGINAL ISSUE	-	-	TQ	DW	07/10/2013	D						

X Indicates Latest Revision | Completely Revised | New Page | Information Removed

SDG&E ELECTRIC OVERHEAD AND UNDERGROUND FIELD MAINTENANCE ONLY STANDARDS

VOLTAGE BOOSTING TRANSFORMER STATION CABLE POLE USING NON-PORCELAIN TERMINALS, 12-12.47KV THREE-PHASE INSTALLATION

FMO
OH1192.1
UG4230.1

CAUTION:

* CONTINUITY OF NEUTRAL FROM OVERHEAD THROUGH BOOSTER TO UNDERGROUND SYSTEM MUST BE UNINTERRUPTED WHILE BOOSTER IS IN SERVICE.

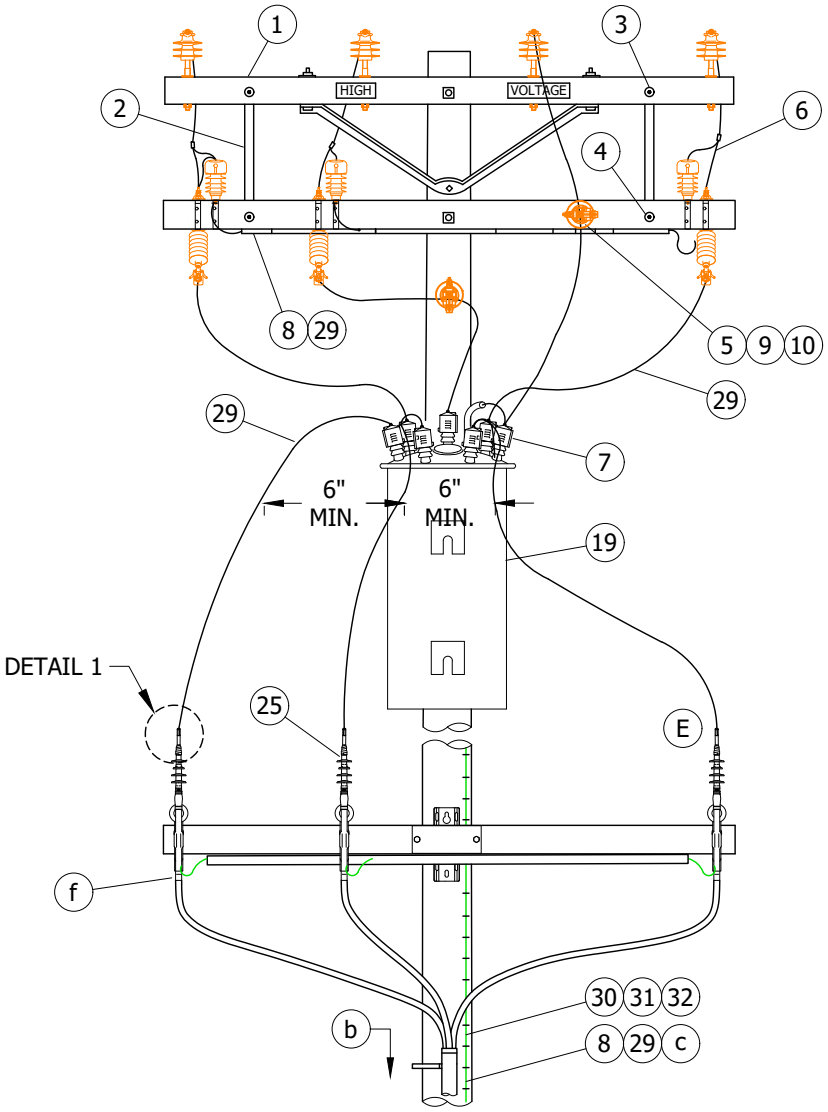

FIGURE 3 (D)
FRONT VIEW

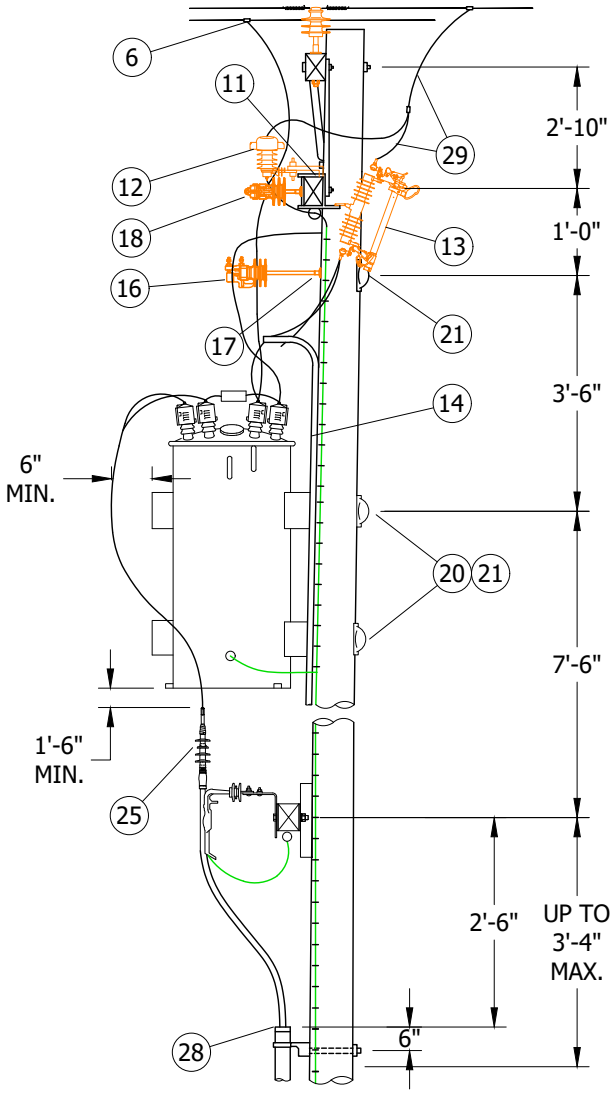

FIGURE 3 (D)
SIDE VIEW

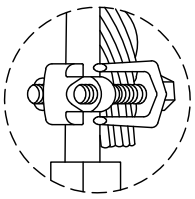

DETAIL 1

FIELD MAINTENANCE ONLY

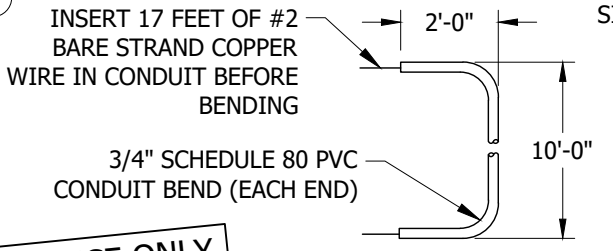

DETAIL 2 (D)
CONDUIT BEND ASSEMBLY

© 1998 - 2021 San Diego Gas & Electric Company. All rights reserved. Removal of this copyright notice without permission is not permitted under law.

REV	CHANGE	DR	BY	DSN	APV	DATE	REV	CHANGE	DR	BY	DSN	APV	DATE
C	MOVED TO FMO	EDM	JIK	JES	CZH	07/27/2021	F						
B	EDITORIAL CHANGES	-	JS	JS	CZH	10/01/2018	E						
A	ORIGINAL ISSUE	-	-	TQ	DW	07/10/2013	D						

X Indicates Latest Revision | Completely Revised | New Page | Information Removed

SDG&E ELECTRIC OVERHEAD AND UNDERGROUND FIELD MAINTENANCE ONLY STANDARDS

VOLTAGE BOOSTING TRANSFORMER STATION CABLE POLE
USING NON-PORCELAIN TERMINALS,
12-12.47KV THREE-PHASE INSTALLATION

FMO
OH1192.2
UG4230.2

TABLE OF CONTENTS

INSTALLATION:

(A) THE 3KV LIGHTNING ARRESTERS SHOWN ON THE HHT COME AS PART OF THE TRANSFORMER. IF THEY ARE NOT VISIBLE, CHECK THE NAME PLATE TO SEE IF THEY ARE INTERNALLY INSTALLED.

(B) CONNECT ONE STRAND OF CONCENTRIC NEUTRAL TO TERMINAL MOUNTING BOLT WITH DOUBLE NUT.

(C) USE FIGURE 1 FOR ALL **NEW** CONSTRUCTION AND WHEN ADDING TO EXISTING CONSTRUCTION WITH NEUTRAL ON OUTSIDE PIN POSITION.

(D) USE FIGURE 3 ON EXISTING CONSTRUCTION WITH NEUTRAL ON INSIDE PIN POSITION.

(E) INSTALL TERMINATION PER MANUFACTURERS INSTRUCTIONS.

FIELD MAINTENANCE ONLY

BILL OF MATERIALS:

ITEM	DESCRIPTION	QUANTITY	STANDARD PAGE	STOCK NUMBER	DESIGN UNITS
1	CROSSARM, 3 3/4" X 5 3/4" X 10'-0"	1	-	S294128	-
2	BRACE, FLAT, GALV., 3'-0"	2	-	S164224	-
3	BOLT, MACH., GALV., 3/8" X 5", 1 ROUND & 1 SPRING WASHER	2	390	-	-
4	BOLT, MACH., GALV., 1/2" X 5", 1 RD & 1 DBL COIL SPRING WASHER	2	390	-	-
5	BOLT, MACH, GALV., 5/8" X (LENGTH AS REQ'D), 2 SQUARE & 1 DOUBLE COIL SPRING WASHER	2	390	-	-
6	CONNECTOR, WIRE, COMPRESSION, CU OR AL, (SIZE AS REQ'D)	AS REQ'D	784-785	-	-
7	BUSHING COVER, TRANSFORMER	7	-	S289188 (X)	-
8	GALVANIZED STAPLES FOR PVC COVERED GROUND WIRE	AS REQ'D	-	S678564 (X)	-
9	PIN, TRANSFORMER LEAD ADAPTER, 1"	1	-	S529248	-
10	INSULATOR, 12KV, NEUTRAL	1	-	S429216	-
11	BRACKET, CUTOUT/ARRESTER, CROSSARM MOUNTING	6	-	S166070	1
12	ARRESTER, LIGHTNING, 12KV W/ 48 #6 COVERED LEAD WIRE	3	-	S113256	LA12
13	CUTOUT, 12KV, WITH LOADBUSTER HOOKS, ALUMIFORM	3	-	S298020	-
14	CONDUIT, PVC, SCHEDULE 80, 3/4"	24	-	S251520	-
15	STRAPS, PIPE, GALV., 3/4" & 2 - 6D NAILS, GALV. (I)	AS REQ'D	-	S697888	-
		-	-	S491552	-
16	INSULATOR, 12KV (CLASS AS REQ'D)	1	750	-	-
17	BRACKET, INSULATOR, 1" OR 1 3/8" LEAD THREAD	1	-	S166176	-
		1	-	S166176	-
18	FLEXIBLE ARRESTER GROUND STRAP	AS REQ'D	-	S698754	-
19	AUTOTRANSFORMER, TYPE 'HHT', 3-PHASE, 12-12.47KV, (COMPLETE WITH 3 - 3KV LIGHTNING ARRESTERS)	1	-	-	-
		1	1121	-	-
20	BOLT, MACH, GALV., 3/4" X (LENGTH AS REQ'D), 1 SQUARE CURVED RIBBED & 1 DOUBLE COIL SPRING WASHER	-	-	-	-
		2	390	-	-
21	COVER, BOLT, PLASTIC & 6-10D NAILS, GALV.	4	-	S285696	-
		-	-	S491456	-
22	BOLT, MACH, GALV., 5/8" X (LENGTH AS REQ'D); 1 SQUARE CURVED RIB & 1 DBL COIL SPRING WASHER	-	-	-	-
		1	390	-	-
23	BRACKET, POTHEAD UPSWEEP WITH PVC LINER	1	-	S166856	-
24	XARM, LENGTH AS REQ'D	1	-	-	-
25	TERMINALS, UNDERGROUND CABLE	1	4111	-	-

TABLE OF CONTENTS

© 1998 - 2021 San Diego Gas & Electric Company. All rights reserved. Removal of this copyright notice without permission is not permitted under law.

REV	CHANGE	DR	BY	DSN	APV	DATE	REV	CHANGE	DR	BY	DSN	APV	DATE
C	MOVED TO FMO	EDM	JIK	JES	CZH	07/27/2021	F						
B	EDITORIAL CHANGES	-	JS	JS	CZH	10/01/2018	E						
A	ORIGINAL ISSUE	-	-	TQ	DW	07/10/2013	D						

X Indicates Latest Revision | Completely Revised | New Page | Information Removed

SDG&E ELECTRIC OVERHEAD AND UNDERGROUND FIELD MAINTENANCE ONLY STANDARDS

VOLTAGE BOOSTING TRANSFORMER STATION CABLE POLE
USING NON-PORCELAIN TERMINALS,
12-12.47KV THREE-PHASE INSTALLATION

FMO
OH1192.3
UG4230.3

BILL OF MATERIALS (CONT'D):

ITEM	DESCRIPTION		QUANTITY	STANDARD PAGE	STOCK NUMBER	DESIGN UNITS
26	SCREW, LAG, GALV., 5/8" X 5"		3	-	S621602 (X)	-
27	CONDUIT, PLASTIC, PVC, 2"		2	-	S251296	-
28	CABLE RISER PROTECTION		1'-0"	1404/4204	-	-
29	GROUNDING, #4 PVC GROUND WIRE, RODS & CONNECTORS	STEEL POLE	1	1002	-	GNDPSP
		WOOD POLE			-	GNDPVC
30	BRACKET, LADDER ARM		AS REQ'D	-	S167186	-
31	NUT, CLAMPING CHANNEL, W/SPRING, 1/2"		AS REQ'D	-	S503488 (X)	-
32	CHANNEL, DOUBLE GALV., 2'-0"		AS REQ'D	-	S216702	-
33	CLAMP, HOT LINE		3	-	S227680	-

TABLE 1

CABLE SIZE	UG MACRO UNITS			
	WITH LADDER ARMS		WITHOUT LADDER ARMS	
	PORCELAIN	NON-PORCELAIN	PORCELAIN	NON-PORCELAIN
3C #2/0 AL	CP2/0L	NP2/0L	CP#2/0	NP-2/0
3C-3-#2 AL	CP3#2L	NP3#2L	CP-3#2	NP-3#2

NOTES:

(I) NOT SHOWN ON FIGURES.

(X) THIS ITEM IS EXEMPT.

REFERENCE:

a. BOND ALL CUTOUTS IN HEAVY CONTAMINATION DISTRICTS AS IDENTIFIED ON OH287.

(b) SEE OH363UG4205 FOR POLE STEPPING.

(c) SEE OH1002 FOR GROUNDING METHODS.

d. SEE OH1200UG4300 FOR FUSING.

e. SEE OH1247 FOR LIGHTNING ARRESTER REQUIREMENTS.

(f) SEE UG4207 FOR NON-PORCELAIN TERMINAL MOUNTING BRACKET INSTRUCTIONS AND MATERIALS.

(g) SEE OH788 FOR HOT LINE CLAMP CONNECTION.

(h) SEE OH379 FOR FIBERGLASS CROSSARMS.

FIELD MAINTENANCE ONLY

TABLE OF CONTENTS

© 1998 - 2021 San Diego Gas & Electric Company. All rights reserved. Removal of this copyright notice without permission is not permitted under law.

REV	CHANGE	DR	BY	DSN	APV	DATE	REV	CHANGE	DR	BY	DSN	APV	DATE
C	MOVED TO FMO	EDM	JIK	JES	CZH	07/27/2021	F						
B	EDITORIAL CHANGES	-	JS	JS	CZH	10/01/2018	E						
A	ORIGINAL ISSUE	-	-	TQ	DW	07/10/2013	D						

X Indicates Latest Revision | Completely Revised | New Page | Information Removed

SDG&E ELECTRIC OVERHEAD AND UNDERGROUND FIELD MAINTENANCE ONLY STANDARDS

VOLTAGE BOOSTING TRANSFORMER STATION CABLE POLE
USING NON-PORCELAIN TERMINALS,
12-12.47KV THREE-PHASE INSTALLATION

FMO
OH1192.4
UG4230.4

OH1194 FIELD MAINTENANCE ONLY

ALL VERSIONS LISTED IN FMO ARE SUPERSEDED BY THEIR CURRENT VERSION FOUND INSIDE THE OVERHEAD CONSTRUCTION STANDARD MANUAL.

REVISION HISTORY:

02/08/2021: MOVED TO FMO

TABLE OF CONTENTS

© 1998 - 2021 San Diego Gas & Electric Company. All rights reserved. Removal of this copyright notice without permission is not permitted under law.

REV	CHANGE	DR	BY	DSN	APV	DATE	REV	CHANGE	DR	BY	DSN	APV	DATE
C							F						
B							E						
A	ORIGINAL ISSUE	GLC	VMV	FRC	CZH	02/08/2021	D						

SCOPE: THIS STANDARD SHOWS THE INSTALLATION OF A 12KV GROUNDING BANK WITH CLUSTER MOUNTING BRACKET.

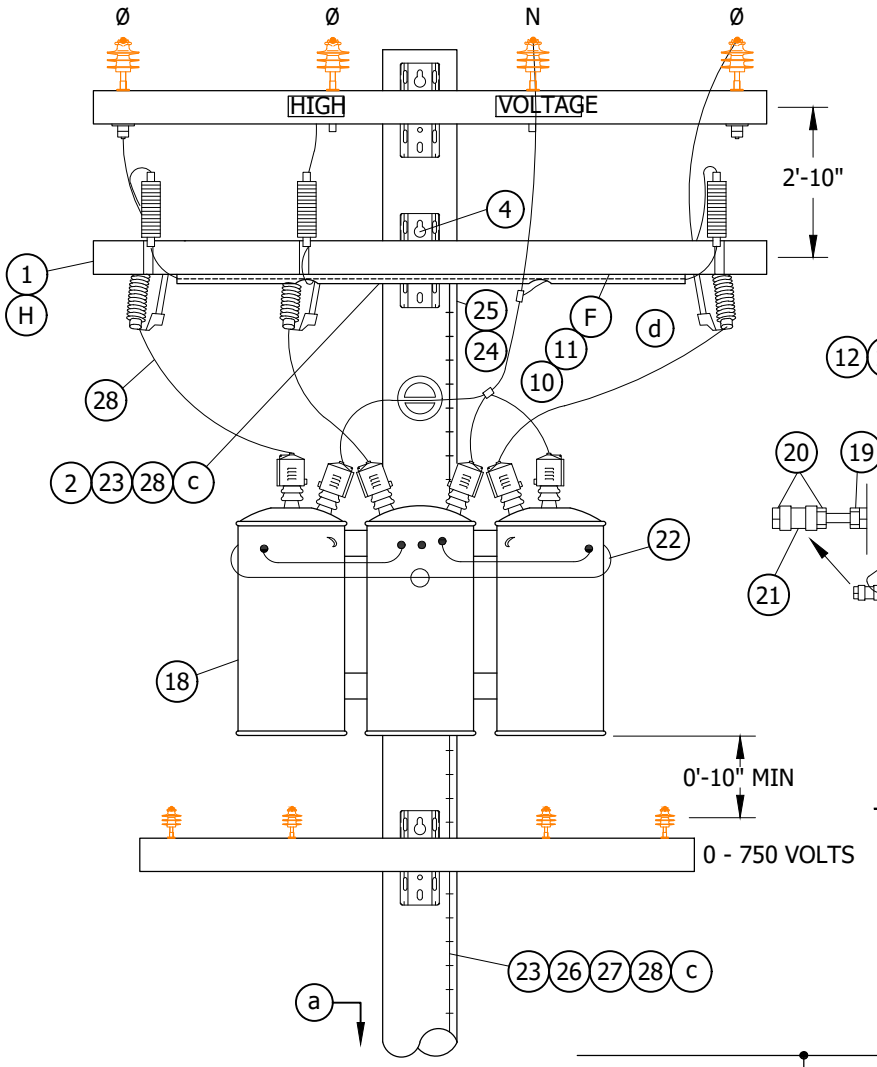

FIGURE 1
FRONT VIEW

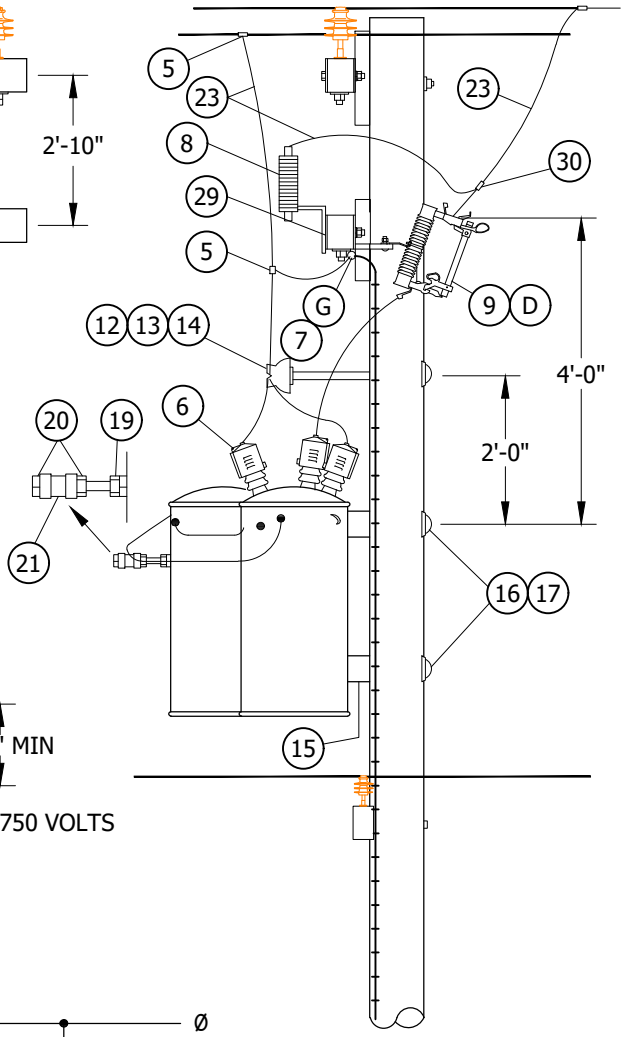

FIGURE 1
SIDE VIEW

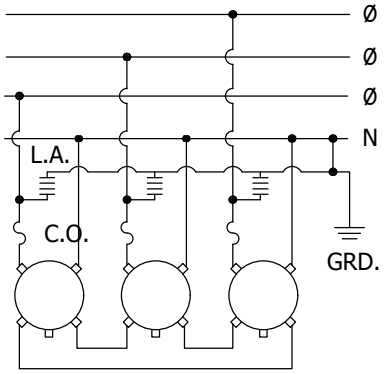

FIGURE 2
SCHEMATIC WIRING DIAGRAM

FIELD MAINTENANCE ONLY

TABLE OF CONTENTS

© 1998 - 2021 San Diego Gas & Electric Company. All rights reserved. Removal of this copyright notice without permission is not permitted under law.

REV	CHANGE	DR	BY	DSN	APV	DATE	REV	CHANGE	DR	BY	DSN	APV	DATE
C	EDITORIAL CHANGES	-	JS	JS	CZH	10/1/2018	F						
B	EDITORIAL CHANGES	-	GW	JS	CZH	6/1/2018	E	MOVED TO FMO	GLC	VMV	FRC	CZH	02/08/2021
A	REVISION	-	-	-	TQ/DW	3/20/2014	D	TABLE UPDATE	-	JAC	JES	CZH	11/12/2019

Indicates Latest Revision | Completely Revised | New Page X | Information Removed

SDG&E ELECTRIC OVERHEAD FIELD MAINTENANCE ONLY STANDARDS

12KV GROUNDING BANK INSTALLATION

FMO OH1194.1

INSTALLATION:

A. USE CLASS ONE POLE ON NEW CONSTRUCTION.

B. CONSTRUCT USING 3-50 OR 3-75 KVA TRANSFORMERS WEIGHING 1200 LBS OR LESS A PIECE.

C. WHEN PRACTICAL, BOLT TRANSFORMERS TO BRACKET ON THE GROUND AND INSTALL THEM AS A PREWIRED ASSEMBLY.

(D) FUSE ALL INSTALLATIONS AT 15 AMP.

E. DO NOT GROUND SECONDARY.

(F) BOND CUTOUTS IN HEAVY CONTAMINATION DISTRICTS AS SHOWN ON STANDARD 287. IN AREAS WHERE BONDING IS REQUIRED, TO AVOID BONDWIRE AND LIGHTNING ARRESTER GROUNDWIRE ON THE SAME CROSSARM, USE TWO CROSSARMS; ONE FOR CUTOUTS AND ONE FOR LIGHTNING ARRESTERS.

(G) DRILL THROUGH CROSSARM 1" UP FROM LOWER EDGE SO THAT LOWER CROSSARM MOUNTING BRACKET BOLT DOES NOT INTERFERE WITH PVC CONDUIT.

(H) WHEN LA/CO CROSSARM AND TRANSFORMERS CANNOT BE INSTALLED ON THE SAME SIDE OF THE POLE AS AN EXISTING LINEARM, DELETE ITEMS 2, 3, & 4. INSTEAD, FIELD DRILL LA/CO CROSSARM FOR 2-36" FLAT BRACES. SECURE BRACES TO POLE WITH A LAG SCREW. (SEE STD. 380.1, ITEM 1 FOR DRILLING MEASUREMENTS).

BILL OF MATERIALS:

ITEM	DESCRIPTION		QUANTITY	STANDARD PAGE	STOCK NUMBER	DESIGN UNITS
1	FIBERGLASS CROSSARM, 3 3/4" X 5 3/4" X 10' - 0" (F)		1		S294378	4TF
2	BLIND NUT, 1/2"		AS REQ'D		S503460 (X)	-
3	SCREW		2		S618086 (X)	-
4	BOLT, MACH, GALV, 5/8" (LENGTH AS REQ'D), 2 SQUARE & 1 DOUBLE COIL SPRING WASHER		5	390	STD 392	-
5	CONNECTOR, WIRE, COMPRESSION, CU OR AL, (SIZE AS REQ'D)		AS REQ'D	783-786	STD 783-786	-
6	BUSHING COVER, TRANSFORMER		6		S289188 (X)	BSHCOV
7	BRACKET, DOUBLE CUTOUT/ARRESTER, FOR CROSSARM MOUNTING.		3		S165446 (X)	-
8	ARRESTER, LIGHTNING, 12KV W/48" COVERED LEAD WIRE		3		S113256	10KVTA
9	CUTOUT, 12KV, WITH LOADBUSTER HOOKS		3	1212	STD 1212	-
10	WIRE, #8, BARE SOLID ANNEALED COPPER (F)	FT	15		S812928	-
		LB	1			
11	STAPLES, FENCE, GALV, 1 1/4" (F)		AS REQ'D		S678528	-
12	BRACKET, INSULATOR, 1"		1		S166144	-
13	INSULATOR, 12KV, NEUTRAL		1		S429216	-
14	WIRE, TIE, CU, 6 SOL.		1		S815232	-

FIELD MAINTENANCE ONLY

TABLE OF CONTENTS

© 1998 - 2021 San Diego Gas & Electric Company. All rights reserved. Removal of this copyright notice without permission is not permitted under law.

REV	CHANGE	DR	BY	DSN	APV	DATE	REV	CHANGE	DR	BY	DSN	APV	DATE
C	EDITORIAL CHANGES	-	JS	JS	CZH	10/1/2018	F						
B	EDITORIAL CHANGES	-	GW	JS	CZH	6/1/2018	E	MOVED TO FMO	GLC	VMV	FRC	CZH	02/08/2021
A	REVISION	-	-	-	TQ/DW	3/20/2014	D	TABLE UPDATE	-	JAC	JES	CZH	11/12/2019

BILL OF MATERIALS (CONT'D):

ITEM	DESCRIPTION		QUANTITY	STANDARD PAGE	STOCK NUMBER	DESIGN UNITS
15	BRACKET, TRANSFORMER CLUSTER MOUNTING		1		S403008	-
16	BOLT, MACH, GALV, 3/4" X (LENGTH AS REQ'D) 1 SQUARE CURVED WASHER & 1 DBL COIL SPRING WASHER		2	390		-
17	COVER, BOLT, PLASTIC & 1 3/4" ROOFING NAILS, GALV.		2		S285696	-
			8		S492192	-
18	TRANSFORMER, SINGLE PHASE, TYPE 'YF' OR 'HF'		3	1121		-
19	NUT, GALV, 1/2"		1		S504736	-
20	WASHER, GALV, 1/2", ROUND		2		S800192	-
21	INSULATOR, SECONDARY, SPOOL, PORCELAIN		1		S430752	-
22	WIRE, W.P. COPPER	3 - 50 KVA - 1/0	15'		S812576	-
		3 - 75 KVA - 4/0	15'		S812640	-
23	#4 CU SOLID GROUND WIRE, PVC COVERED		100'		S812490	GNDPVC
24	CONDUIT, PVC, TYPE 2, SCHEDULE 40, 1/2"		10'		S251168	-
25	STRAPS, PIPE, GALV. 1/2" AND 2 - 1 3/4" ROOFING NAILS		AS REQ'D		S697728	-
26	GROUND ROD, 5/8" X 8' - COPPERWELD		1		S603074 (X)	GNDPVC
27	COPPER BONDED GROUND CONNECTOR		1		S259010	-
28	GALVANIZED STAPLES FOR PVC COVERED GROUND WIRE		AS REQ'D		S678564 (X)	-
29	FLEXIBLE ARRESTER GROUND STRAP		AS REQ'D		S698754	-
30	HOT LINE CLAMP		3		S227680	-

NOTES:

(X) THIS ITEM IS EXEMPT.

REFERENCE:

(a) POLE STEPPING - SEE STANDARD 363.

b. FOR LIGHTNING ARRESTER REQUIREMENTS - SEE STANDARD 1247.

(c) GROUNDING METHOD AND APPLICATION, SEE STANDARD 1002.

(d) SECTIONALIZING CUTOUT INSTALLATION MAY VARY WITH POSITION OF NEUTRAL CONDUCTOR - SEE STANDARD 1240.

TABLE OF CONTENTS

FIELD MAINTENANCE ONLY

© 1998 - 2021 San Diego Gas & Electric Company. All rights reserved. Removal of this copyright notice without permission is not permitted under law.

REV	CHANGE	DR	BY	DSN	APV	DATE	REV	CHANGE	DR	BY	DSN	APV	DATE
C	EDITORIAL CHANGES	-	JS	JS	CZH	10/1/2018	F						
B	EDITORIAL CHANGES	-	GW	JS	CZH	6/1/2018	E	MOVED TO FMO	GLC	VMV	FRC	CZH	02/08/2021
A	REVISION	-	-	-	TQ/DW	3/20/2014	D	TABLE UPDATE	-	JAC	JES	CZH	11/12/2019

PAGE	SUBJECT
1206	PRIMARY CURRENT-LIMITING FUSE INSTALLATION
1207	FUSES USED IN OVERHEAD CONSTRUCTION
1212	4KV AND 12KV CUTOUT ASSEMBLY AND FUSE INSTALLATION
1213	6.9, 7.2 & 12KV FAULT TAMER INSTALLATION
1215	ELECTRONIC SECTIONALIZER
1220	IN-LINE DISCONNECT SWITCHES WEDGE TAP CONNECTED-12K AND BELOW
1221	POLE TOP SWITCH INSTALLATION 4KV DISCONNECT SWITCH. HOOK STICK OPERATED
1225	LINE TENSION DISCONNECT SWITCH HOOK STICK OPERATED
1226	LINE TENSION DISCONNECT SWITCH HOOK STICK OPERATED ARMLESS
1228	POLE TOP SWITCH 12KV VERTICAL BREAK TYPE SINGLE CIRCUIT HORIZONTAL CONFIGURATION
1229	POLE TOP SWITCH 12KV VERTICAL BREAK TYPE SINGLE CIRCUIT HORIZONTAL CONFIGURATION - DOUBLE DEADEND
1230	POLE TOP SWITCH INSTALLATION 12KV SINGLE CIRCUIT HORIZONTAL CONFIGURATION
1231	HOLE TOP SWITCH INSTALLATION 12KV SINGLE CIRCUIT VERTICAL CONFIGURATION
1236	POLE TOP SWITCH INSTALLATION 12KV SINGLE CIRCUIT TRIANGULAR CONFIGURATION
1240	POLE TOP SWITCH INSTALLATION 4KV WESTINGHOUSE OIL SWITCH, TYPE F011
1243	CROSSARM MOUNTED PARALLEL FUSE AND SOLID BLADE CUTOUT INSTALLATION
1270	SERVICE RESTORER WITH CUTOUT DISCONNECT
1271	SERVICE RESTORER WITH HOOK STICK SWITCH DISCONNECT

MAIN TABLE OF CONTENTS

© 1998 - 2023 San Diego Gas & Electric Company. All rights reserved. Removal of this copyright notice without permission is not permitted under law.

REV	CHANGE	DR	BY	DSN	APV	DATE	REV	CHANGE	DR	BY	DSN	APV	DATE
D	EDITORIAL CHANGES	-	JCE	JES	CZH	04/21/2019	G	OH1243 MOVED TO FMO	EDM	MRF	MRF	KRG	04/06/2023
C	ADDED 1208	-	JC	JS	CZH	03/18/2019	F	1215 MOVED TO FMO	GLC	RSL	JES	CZH	12/12/2021
B	ADDED 1213	-	SL	JS	MDJ	09/19/2017	E	REMOVED 1208 FROM FMO	-	RSL	JES	CZH	03/09/2020

X Indicates Latest Revision | Completely Revised | New Page | Information Removed

SDG&E ELECTRIC OVERHEAD FIELD MAINTENANCE ONLY STANDARDS

SECTIONALIZING, ARRESTOR FMO
TABLE OF CONTENTS

FIELD MAINTENANCE ONLY

REVISION HISTORY:

7/13/2016: All versions prior to 2016 are superseded by their current version found inside the Overhead Construction Standard Manual.

TABLE OF CONTENTS

© 1998 - 2016 San Diego Gas & Electric Company. All rights reserved. Removal of this copyright notice without permission is not permitted under law.

REV	CHANGE	BY	DSGN	APPV	DATE	REV	CHANGE	BY	DSGN	APPV	DATE
C						F					
B						E					
A	ORIGINAL ISSUE	JS	IL	MDJ	7/13/2016	D					

X Indicates Latest Revision | Completely Revised | New Page | Information Removed

SHEET
1 OF 1

SDG&E ELECTRIC OVERHEAD STANDARD

OVERHEAD 12KV CURRENT-LIMITING FUSE INSTALLATION

FMO
OH 1206

Back-up current-limiting fuses, such as the Chance K-Mate fuse, shall be permanently installed only at the direction of the Protection Engineer in conjunction with expulsion fuses. Current-limiting fuses have the ability to limit high values of fault current so it remains within the interrupting capability of some cutouts. Back-up type current-limiting fuses are used in series with expulsion fuses in order to clear both low and high values of fault current. The back-up current-limiting fuse insures clearing of high current and the expulsion fuse, low current faults.

If a small amount of fault current passes through the two fuses (expulsion fuse in the cutout and current-limiting fuse), only the expulsion fuse will operate and the fuse tube will drop out as normal. At higher fault currents, both fuses will operate, but only the expulsion fused cutout will give the visual indication that it has operated. If the expulsion fuse has operated, always check the current-limiting fuse. To do this, remove the current-limiting fuse, and check for continuity.

The recommended method of installing these current-limiting fuses (Stock No. 365634) is to insert the stud end into the transformer cover mounted high voltage bushing terminal and connect the transformer riser in the eye bolt connector furnished with the current-limiting fuse, as shown below.

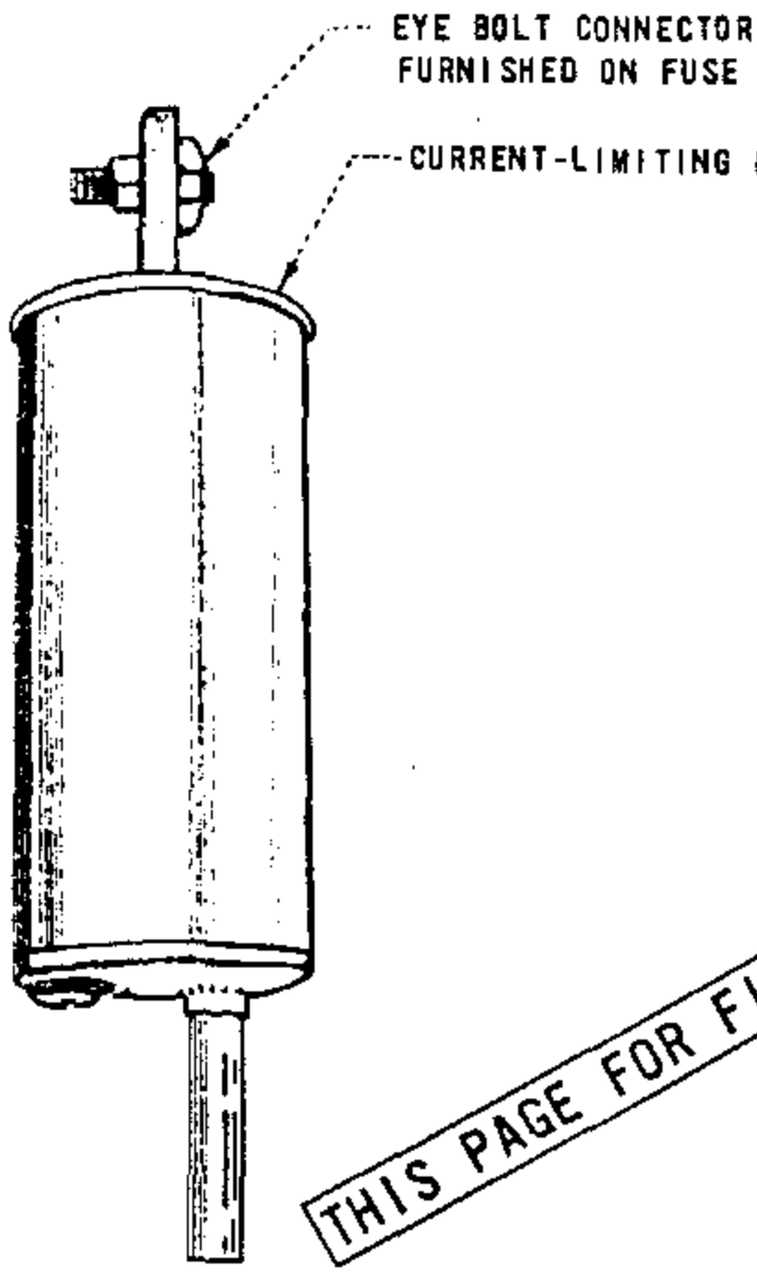

FUSE DETAIL

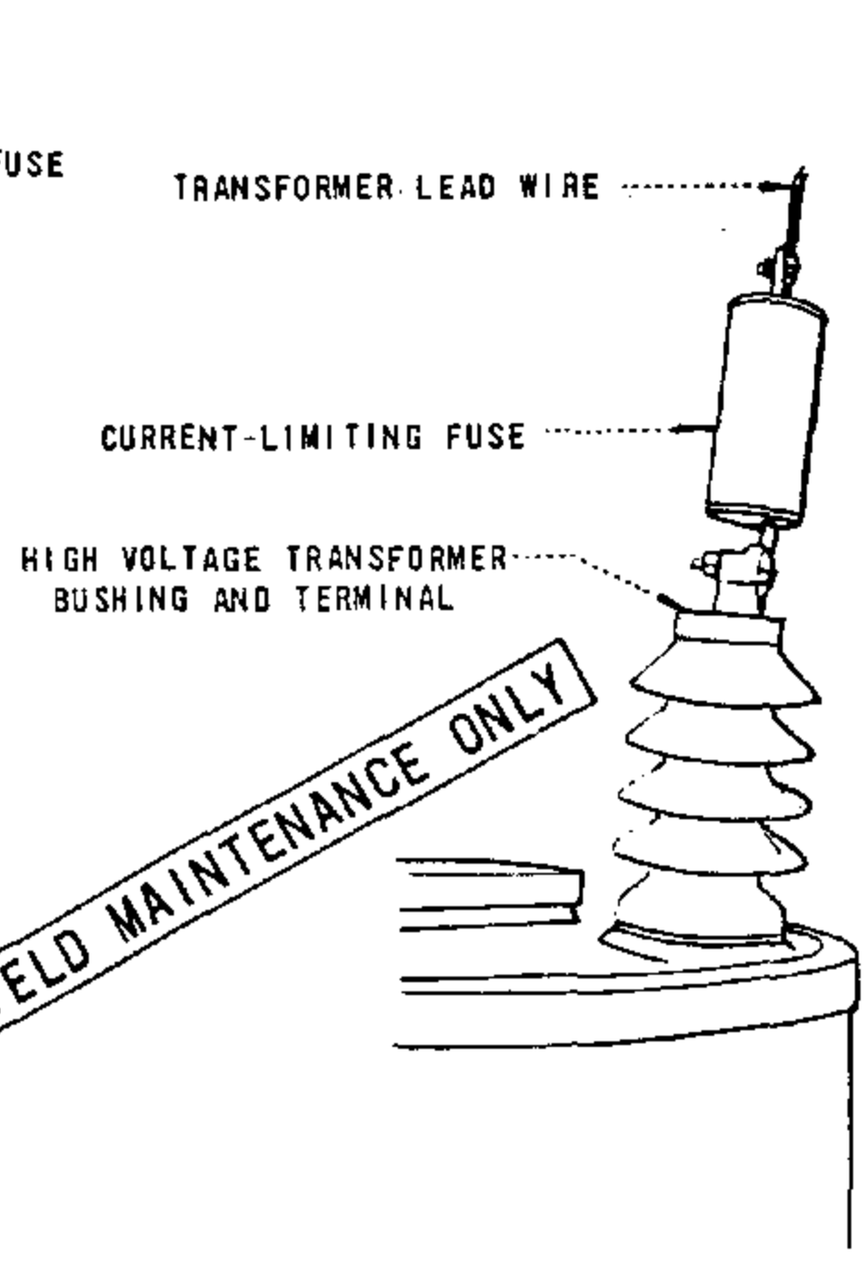

METHOD OF MOUNTING

THIS PAGE FOR FIELD MAINTENANCE ONLY

TABLE OF CONTENTS

DATE 4-5-83 APPD JMT/DCH	SDG&E ELECTRIC STANDARDS OVERHEAD 12KV CURRENT-LIMITING FUSE INSTALLATION	1299.001 SUPERSEDES 1206.1 (3-25-83)

OH1207 UG4307 FIELD MAINTENANCE ONLY

ALL VERSIONS LISTED IN FMO ARE SUPERSEDED BY THEIR CURRENT VERSION FOUND INSIDE THE OVERHEAD AND UNDERGROUND CONSTRUCTION STANDARD MANUAL.

REVISION HISTORY:

12/12/2021: NUMBER CHANGE FROM UG4308 TO UG4307.

04/21/2020: MOVED TO FMO

TABLE OF CONTENTS

© 1998 - 2021 San Diego Gas & Electric Company. All rights reserved. Removal of this copyright notice without permission is not permitted under law.

REV	CHANGE	DR	BY	DSN	APV	DATE	REV	CHANGE	DR	BY	DSN	APV	DATE
C							F						
B	EDITORIAL CHANGES	GLC	RSL	JES	CZH	12/12/2021	E						
A	ORIGINAL ISSUE	-	JCE	JS	CZH	04/21/2019	D						

TABLE 6

FAULT TAMER FUSE LIMITERS TCC 123-8			
SIZE (AMPS)	**TYPE**	**STOCK NUMBER**	**ASSEMBLY UNIT**
5	FAULT TAMER	S365810	FT5
10	FAULT TAMER	S365811	FT10
15	FAULT TAMER	S365812	FT15
20	FAULT TAMER	S365813	FT20
N/A	FAULT TAMER BACK-UP LIMITER	S365822	FTBL

TABLE OF CONTENTS

NOTES:

I. THESE FUSES ARE CAL-FIRE EXEMPT. THEY WILL BE USED IN TIER 2 & TIER 3 AREAS.

FIELD MAINTENANCE ONLY

© 1998 - 2021 San Diego Gas & Electric Company. All rights reserved. Removal of this copyright notice without permission is not permitted under law.

REV	CHANGE	DR	BY	DSN	APV	DATE	REV	CHANGE	DR	BY	DSN	APV	DATE
C	MOVED TO FMO	-	JCE	JES	CZH	04/21/2019	F						
B	EDITORIAL CHANGES	-	KN	JS	MDJ	07/25/2017	E						
A	UPDATED MATERIALS	-	DS	JS	MDJ	01/25/2017	D	EDITORIAL CHANGES	GLC	RSL	JES	CZH	12/12/2021

OH1212 UG4305 FIELD MAINTENANCE ONLY

ALL VERSIONS LISTED IN FMO ARE SUPERSEDED BY THEIR CURRENT VERSION FOUND INSIDE THE OVERHEAD AND UNDERGROUND CONSTRUCTION STANDARD MANUAL.

REVISION HISTORY:

12/12/2021: NUMBER CHANGE FROM UG4306 TO UG4305

04/21/2019: MOVED TO FMO

TABLE OF CONTENTS

© 1998 - 2021 San Diego Gas & Electric Company. All rights reserved. Removal of this copyright notice without permission is not permitted under law.

REV	CHANGE	DR	BY	DSN	APV	DATE	REV	CHANGE	DR	BY	DSN	APV	DATE
C							F						
B	EDITORIAL CHANGES	GLC	RSL	JES	CZH	12/12/2021	E						
A	ORIGINAL ISSUE	-	JCE	JS	CZH	04/21/2019	D						

X Indicates Latest Revision | Completely Revised | New Page | Information Removed

SDG&E ELECTRIC OVERHEAD AND UNDERGROUND FIELD MAINTENANCE ONLY STANDARDS

4KV, 12KV CUTOUT ASSEMBLY AND FUSE INSTALLATION

FMO
OH1212
UG4305

SCOPE: THIS STANDARD SHOWS THE FAULT TAMER FUSE TUBE AND BACK-UP LIMITER, AND IT'S APPLICATION.

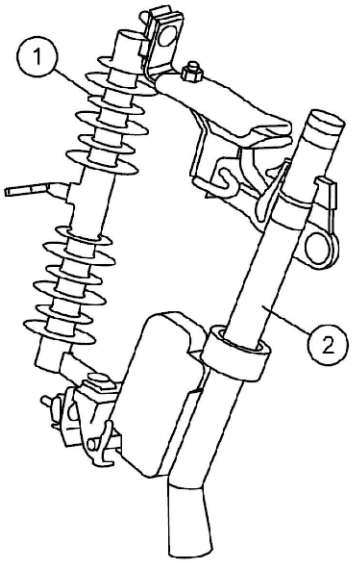

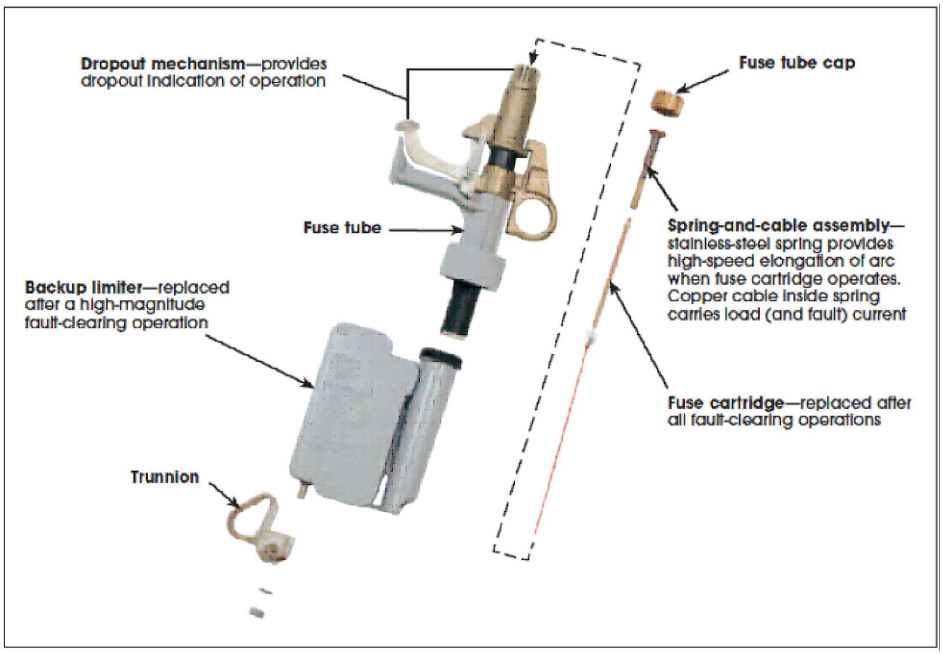

BILL OF MATERIALS:

ITEM	CURRENT RANGE	DESCRIPTION	STOCK NUMBER	ASSEMBLY UNITS UG	ASSEMBLY UNITS OH
1	0 - 300A	INTERCHANGEABLE CUTOUT BODY, WITHOUT FUSEHOLDER (III)	S298020	--	NPCO
2	FUSE 5 THRU 20A	FAULT TAMER, INCLUDES FUSE TUBE & BACK-UP LIMITER (I)	S365820	--	FTAMER

NOTES:

(I) SEE TABLE 1 FOR FUSES.

II. CUTOUTS SHALL BE BONDED IF INSTALLED IN CONTAMINATION DISTRICT 1 AS SHOWN IN OH STANDARD 287.

(III) CROSS ARM MOUNTING BRACKET ARE INCLUDED WITH THE MATERIALS SUPPLIED BY THE OH ASSEMBLY UNITS (USED ON "DESIGN BY LOCATION" JOBS). BRACKETS MUST BE ORDERED SEPARATELY ON MANUALLY PREPARED FIELD MEMO JOBS.

- DOUBLE CUTOUT & ARRESTER MOUNTING BRACKET, USE S165442.
- CUTOUT OR ARRESTER MOUNTING BRACKET, USE S166070.

IV. USE ON 6.9KV - 12KV ONLY.

REFERENCE:

e. SEE ELECTRIC STANDARD PRACTICE 321 S&C FAULT TAMER® FUSE LIMITER.

f. SEE S&C FAULT TAMER INSTALLATION INSTRUCTIONS 451-500.

FIELD MAINTENANCE ONLY

TABLE OF CONTENTS

© 1998 - 2021 San Diego Gas & Electric Company. All rights reserved. Removal of this copyright notice without permission is not permitted under law.

REV	CHANGE	DR	BY	DSN	APV	DATE	REV	CHANGE	DR	BY	DSN	APV	DATE
C	EDITORIAL CHANGES	GLC	RSL	JES	CZH	12/12/2021	F						
B	MOVED TO FMO	-	JCE	JES	CZH	04/21/2019	E						
A	ORIGINAL ISSUE	-	GW	JS	MDJ	04/01/2018	D						

X Indicates Latest Revision | Completely Revised | New Page | Information Removed

SDG&E ELECTRIC OVERHEAD AND UNDERGROUND FIELD MAINTENANCE ONLY STANDARDS

4KV, 12KV CUTOUT ASSEMBLY AND FUSE INSTALLATION

FMO
OH1212.1
UG4305.1

FIELD MAINTENANCE ONLY

REVISION HISTORY:

9/19/2017: All versions prior to 2017 are superseded by their current version found inside the Overhead Construction Standard Manual.

TABLE OF CONTENTS

© 1998 - 2016 San Diego Gas & Electric Company. All rights reserved. Removal of this copyright notice without permission is not permitted under law.

REV	CHANGE	BY	DSGN	APPV	DATE	REV	CHANGE	BY	DSGN	APPV	DATE
C						F					
B						E					
A	ORIGINAL ISSUE	SL	JS	MDJ	9/19/2017	D					

Indicates Latest Revision | Completely Revised X | New Page | Information Removed

SHEET
1 OF 1

SDG&E ELECTRIC OVERHEAD STANDARD

6.9, 7.2 & 12KV FAULT TAMER INSTALLATION

FMO
OH 1213

SCOPE: THIS STANDARD SHOWS THE FAULT TAMER FUSE TUBE AND BACK–UP LIMITER, AND IT'S APPLICATION.

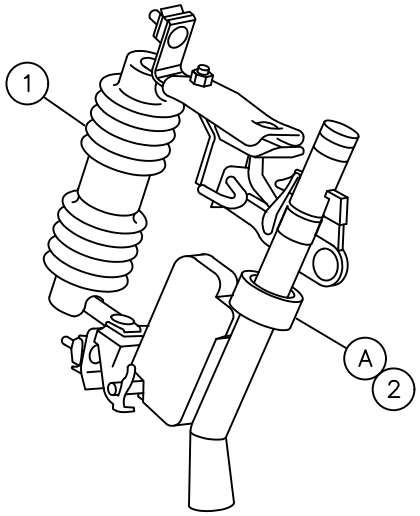

BILL OF MATERIAL:

ITEM	CURRENT RANGE	DESCRIPTION		STOCK NUMBER	ASSEMBLY UNITS UG	ASSEMBLY UNITS OH
1	0 – 300A	INTERCHANGEABLE CUTOUT BODY, WITHOUT FUSEHOLDER	HIGH LEAKAGE, CONTAMINATION DISTRICTS 1 ONLY (C)	S297956	–	X–CO
			STANDARD LEAKAGE, CONTAMINATION DISTRICTS 2 AND 3 (C)	S297960	–	CO–X
2	FUSE 5A THRU 20A	FAULT TAMER, INCLUDES FUSE TUBE & BACK–UP LIMITER (A)		S365820	–	FTAMER

TABLE OF CONTENTS

TABLE 1 FAULT TAMER FUSE LIMITERS

SIZE (AMPS)	TYPE	MANUFACTURER	CATALOG NUMBER	STOCK NUMBER	ASSEMBLY UNITS
5	FAULT TAMER	S&C ELECTRIC	527005	S365810	FT5
10	FAULT TAMER	S&C ELECTRIC	527010	S365811	FT10
15	FAULT TAMER	S&C ELECTRIC	527015	S365812	FT15
20	FAULT TAMER	S&C ELECTRIC	527020	S365813	FT20
N/A	FAULT TAMER BACK–UP LIMITER	S&C ELECTRIC	98218	S365822	FTBL

INSTALLATION:

(A) SEE TABLE 1 FOR FUSES.

B. CUTOUTS SHALL BE BONDED IF INSTALLED IN CONTAMINATION DISTRICT 1 AS SHOWN ON STANDARD 287.

(C) CROSSARM MOUNTING BRACKETS ARE INCLUDED WITH THE MATERIALS SUPPLIED BY THE OH ASSEMBLY UNITS (USED ON "DESIGN BY LOCATION" JOBS). BRACKETS MUST BE ORDERED SEPARATELY ON MANUALLY PREPARED FIELD MEMO JOBS.

- DOUBLE CUTOUT & ARRESTER MOUNTING BRACKET, USE S165442
- CUTOUT OR ARRESTER MOUNTING BRACKET, USE S166070

REFERENCE:

D. SEE ELECTRIC STANDARD PRACTICE 321 S & C FAULT TAMER® FUSE LIMITER.

E. SEE S&C FAULT TAMER INSTALLATION INSTRUCTIONS 451–500.

© 1998 - 2013 San Diego Gas & Electric Company. All rights reserved. Removal of this copyright notice without permission is not permitted under law.

	Indicates Latest Revision		Completely Revised		New Page		Information Removed

REVISION DATE 8–15–2013 APPD TQ / DW	SDG&E ELECTRIC STANDARDS	OH 1213
	6.9, 7.2 & 12KV FAULT TAMER INSTALLATION	

OH1215 UG4308 FIELD MAINTENANCE ONLY

ALL VERSIONS LISTED IN FMO ARE SUPERSEDED BY THEIR CURRENT VERSION FOUND INSIDE THE OVERHEAD AND UNDERGROUND CONSTRUCTION STANDARD MANUAL.

REVISION HISTORY:

12/12/2021: MOVED TO FMO

TABLE OF CONTENTS

© 1998 - 2021 San Diego Gas & Electric Company. All rights reserved. Removal of this copyright notice without permission is not permitted under law.

REV	CHANGE	DR	BY	DSN	APV	DATE	REV	CHANGE	DR	BY	DSN	APV	DATE
C							F						
B							E						
A	ORIGINAL ISSUE	GLC	RSL	JES	CZH	12/12/2021	D						

	Indicates Latest Revision	Completely Revised	X New Page	Information Removed

SHEET 1 OF 1

SDG&E ELECTRIC OVERHEAD AND UNDERGROUND FIELD MAINTENANCE ONLY STANDARDS

ELECTRONIC SECTIONALIZER

FMO OH1215 UG4308

SCOPE: THIS STANDARD SHOWS VARIOUS ELECTRONIC SECTIONALIZERS AND THEIR GENERAL APPLICATION.

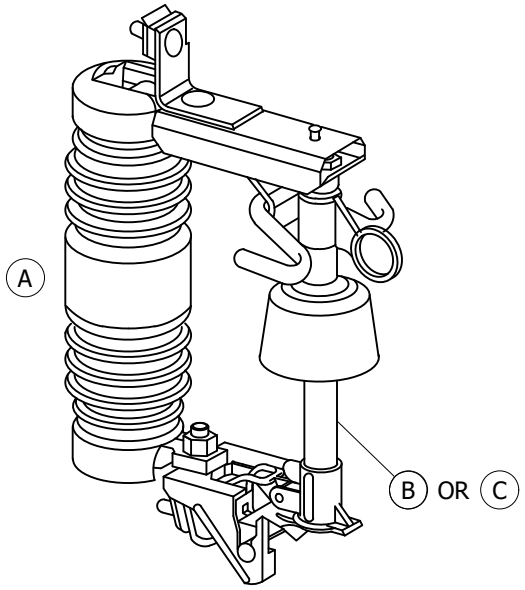

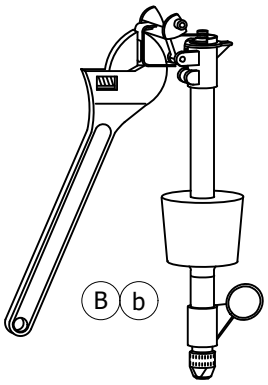

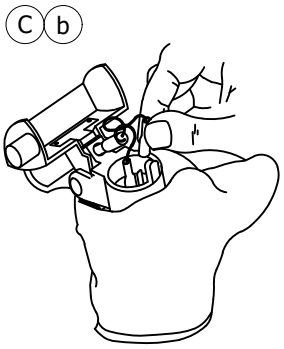

INSTALLATION:

(A) THE ELECTRONIC SECTIONALIZERS ONLY FIT THE INTERCHANGEABLE CUTOUTS, EITHER STANDARD LEAKAGE OR HIGH LEAKAGE - SEE STANDARD 1212/4306.

(B) THE RESETTABLE ELECTRONIC SECTIONALIZER IS THE ONLY TYPE CURRENTLY BEING PURCHASED. SEE TABLE 1 FOR DETAILS.

(C) THE NON-RESETTABLE ELECTRONIC SECTIONALIZER IS NO LONGER PURCHASED. A REPLACEMENT ACTUATOR IS AVAILABLE FOR MAINTENANCE OF THOSE SECTIONALIZERS IN THE FIELD - SEE TABLE 2. IF A NON-RESETTABLE ELECTRONIC SECTIONALIZER BECOMES DAMAGED OR IS NO LONGER USABLE, IT SHOULD BE REPLACED WITH A RESETTABLE TYPE.

TABLE OF CONTENTS

TABLE 1 RESETTABLE ELECTRONIC SECTIONALIZER (B)(a)

SIZE (AMPS)	COUNTS	MANUFACTURER	CATALOG NUMBER	STOCK NUMBER	ASSEMBLY UNITS OVERHEAD	ASSEMBLY UNITS UNDERGROUND
100	2	A.B. CHANCE	C740-272T	S634100	ES100	100ES
140	2	A.B. CHANCE	C740-282T	S634102	ES140	140ES
200	2	A.B. CHANCE	C740-292T	S634104	ES200	200ES

TABLE 2 NON-RESETTABLE ELECTRONIC SECTIONALIZER (REPLACEMENT ACTUATOR (C)(a)

SIZE (AMPS)	MANUFACTURER	CATALOG NUMBER	STOCK NUMBER
100 - 200	A.B. CHANCE	C700-1729	S101522

NOTES: NONE

REFERENCE:

(a) FOR APPLICATION OF ELECTRONIC SECTIONALIZERS - SEE DESIGN MANUAL PAGE 6205.3.

(b) FOR OPERATIONAL INFORMATION - SEE ELECTRIC STANDARD PRACTICE 318.

FIELD MAINTENANCE ONLY

© 1998 - 2021 San Diego Gas & Electric Company. All rights reserved. Removal of this copyright notice without permission is not permitted under law.

REV	CHANGE	DR	BY	DSN	APV	DATE	REV	CHANGE	DR	BY	DSN	APV	DATE
C	MOVED TO FMO	GLC	RSL	JES	CZH	12/12/2021	F						
B	DRAWING UPDATE	-	PEI	-	-	02/18/2019	E						
A	ORIGINAL ISSUE	-	-	PTA	MC	10/08/2010	D						

FIELD MAINTENANCE ONLY

REVISION HISTORY:

7/13/2016: All versions prior to 2016 are superseded by their current version found inside the Overhead Construction Standard Manual.

TABLE OF CONTENTS

© 1998 - 2016 San Diego Gas & Electric Company. All rights reserved. Removal of this copyright notice without permission is not permitted under law.

REV	CHANGE	BY	DSGN	APPV	DATE	REV	CHANGE	BY	DSGN	APPV	DATE
C						F					
B						E					
A	ORIGINAL ISSUE	JS	IL	MDJ	7/13/2016	D					

X Indicates Latest Revision | Completely Revised | New Page | Information Removed

SHEET
1 OF 1

SDG&E ELECTRIC OVERHEAD STANDARD

IN-LINE DISCONNECT SWITCHES
WEDGE TAP CONNECTED-12K AND BELOW

FMO
OH 1220

TABLE OF CONTENTS

SCOPE: THIS STANDARD SHOWS THE INSTALLATION OF PRIMARY IN-LINE HOOKSTICK DISCONNECTS, WEDGE TAP CONNECTED. THIS IS A PREFERRED METHOD FOR EXISTING PIN AND INSULATOR CONSTRUCTION. THESE SWITCHES CAN BE INSTALLED ON 336 AND 636 ACSR CONDUCTOR ONLY.

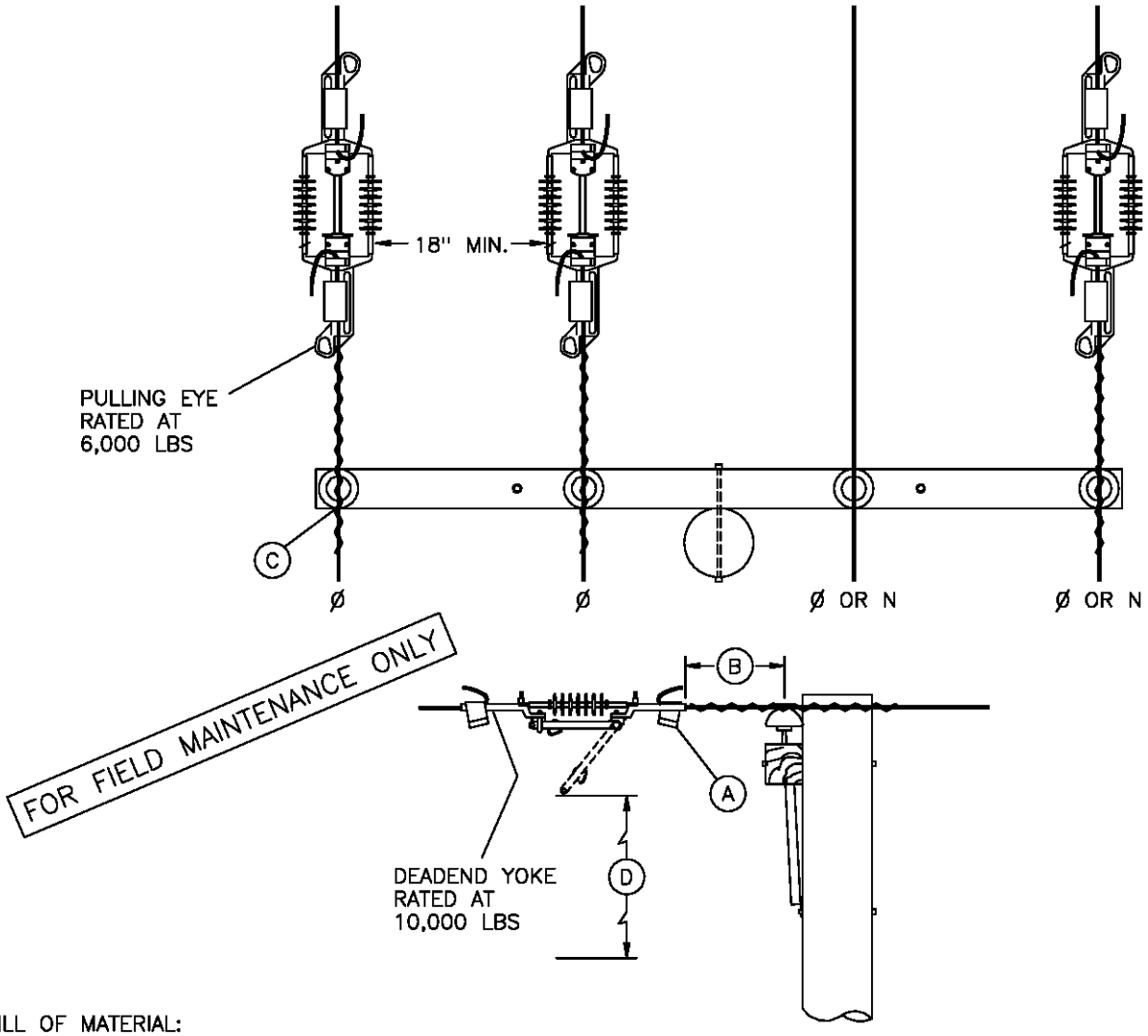

BILL OF MATERIAL:

ITEM	DESCRIPTION		QUANTITY	STOCK NUMBER	ASSEMBLY UNITS
1	SWITCH, DISCONNECT, IN-LINE, 900A INCLUDING 2 WEDGE TYPE TAP CONNECTORS	336.4 ACSR	3	707010	ILD336
		636 ACSR	3	707012	ILD636
2	TAP CONNECTORS, WEDGE TYPE, (REPLACEMENT) (A)	336.4 ACSR	AS REQ'D	265940	–
		636 ACSR		265942	–

INSTALLATION:

(A) WHEN INSTALLING SWITCH, USE ONLY WEDGE TYPE DEADEND TAP CONNECTORS SUPPLIED WITH SWITCH, OR EQUIVALENT REPLACEMENT ITEM. **DO NOT REUSE DEADEND TAP CONNECTORS.** IF REINSTALLING SWITCH, USE NEW DEADEND TAP CONNECTORS.

(B) WHEN INSTALLING, POSITION SWITCH ON CONDUCTOR 18 INCHES FROM INSULATOR PIN TO SWITCH PULLING EYE, OR, 18 INCHES FROM DEADEND CLAMP PULLING EYE TO SWITCH PULLING EYE.

(C) IF TIE WIRE EXISTING, REPLACE WITH PREFORMED TIE. DO NOT REPLACE EXISTING CLAMP TOP INSULATOR.

(D) 4'-0" MIN. CLEARANCE TO NEAREST CONDUCTOR BELOW WHEN SWITCH IS OPEN. WHERE CONSTRUCTION IS REQUIRED BELOW SWITCH, IT SHALL NOT INTERFERE WITH OPERATION OF ANY SWITCH FROM THE POLE.

DATE 1-1-98 APPD PSA/CMK	SDG&E ELECTRIC STANDARDS IN-LINE DISCONNECT SWITCHES WEDGE TAP CONNECTED-12K AND BELOW	1299.207 SUPERSEDES 1220 (4-30-99)

FIELD MAINTENANCE ONLY

REVISION HISTORY:

7/13/2016: All versions prior to 2016 are superceded by their current version found inside the Overhead Construction Standard Manual.

2/20/2019: Install S706680 in place of old style Disconnect Switch.

TABLE OF CONTENTS

© 1998 - 2019 San Diego Gas & Electric Company. All rights reserved. Removal of this copyright notice without permission is not permitted under law.

REV	CHANGE	BY	DSGN	APPV	DATE	REV	CHANGE	BY	DSGN	APPV	DATE
C						F					
B	EDITORIAL CHANGES	GLW	JES	CZH	2/20/2019	E					
A	ORIGINAL ISSUE	JS	IL	MDJ	7/13/2016	D					

X Indicates Latest Revision | Completely Revised | New Page | Information Removed

SHEET 1 OF 1

SDG&E ELECTRIC OVERHEAD CONSTRUCTION STANDARDS

POLE TOP SWITCH INSTALLATION 4KV DISCONNECT SWITCH, HOOK STICK OPERATED

FMO OH 1221

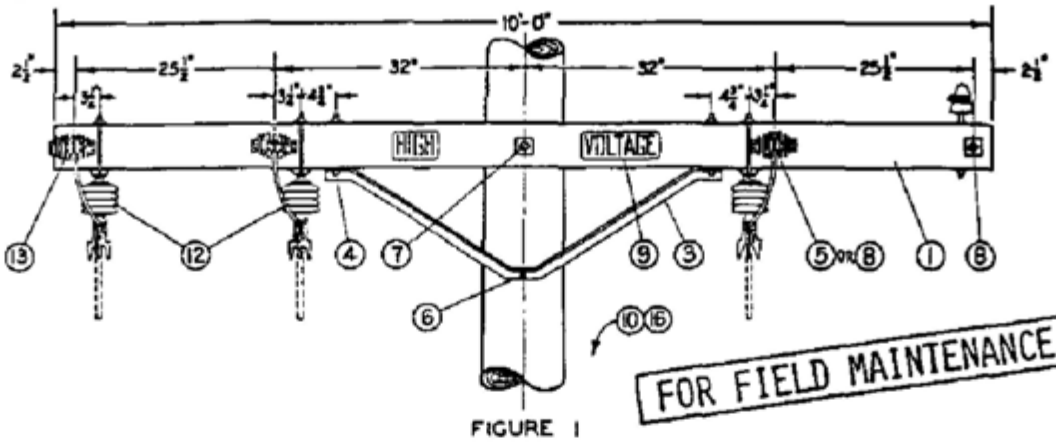

FIGURE 1
SPREAD CONSTRUCTION

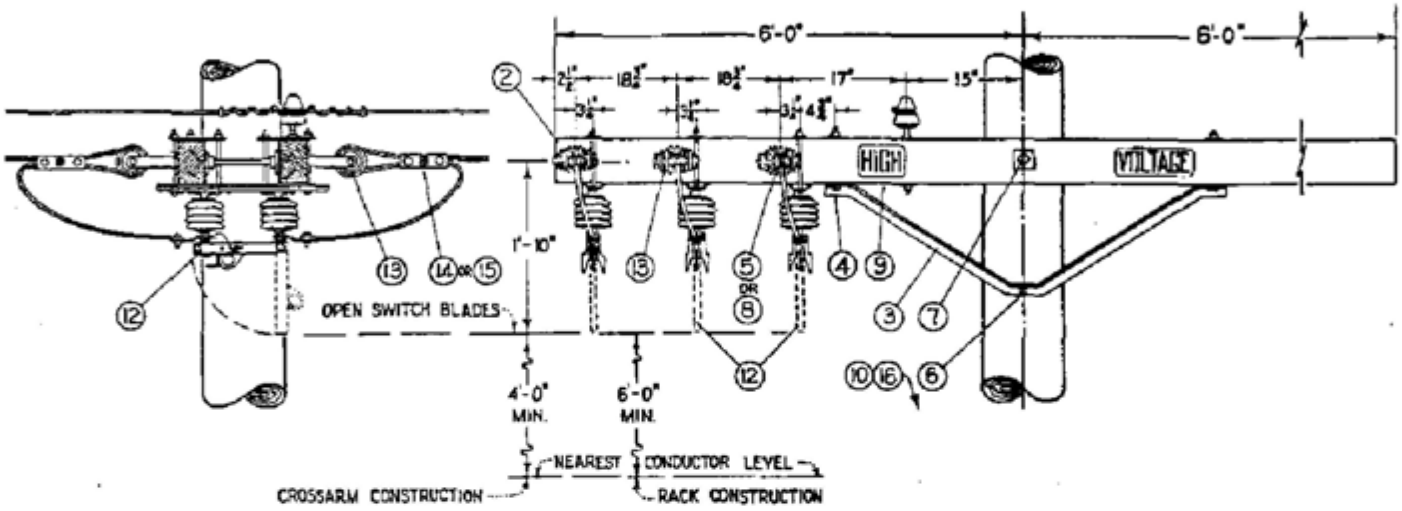

FIGURE 2
TWIN CIRCUIT CONSTRUCTION

NOTE:

A. FOR ARM-END CONSTRUCTION, REDRILL CROSSARMS IN FIELD AS SPECIFIED BY FIGURE 2

	ITEM	DESCRIPTION	QUANTITY FIGURE 1 #4 or SMALLER	QUANTITY FIGURE 1 #1 or LARGER	QUANTITY FIGURE 2 #4 or SMALLER	QUANTITY FIGURE 2 #1 or LARGER	STOCK NO. OR CONSTR. STDS.
P T & F	1	Crossarm, 3 3/4" X 5 3/4" X 10'-0"	2	2	-	-	PG 119 IT 2
	2	Crossarm, 3 3/4" X 5 3/4" X 12'-0"	-	-	2	2	PG 119 IT 4
	3	Angle Crossarm Brace, 4'-0"	2	2	2	2	164032
	4	Mach. Bolt, Galv., 1/2" X 7", 1-rd. wash. & 1-nut	4	4	4	4	PGS 139, 140
	5	Mach. Bolt, Galv., 5/8" X 5", 1-sq. wash. & 1-nut	4	-	4	-	PGS 139, 140
	6	Mach. Bolt, Galv., 5/8" X 10", 1-nut	1	1	1	1	PGS 139, 140
	7	Mach. Bolt, Galv., 5/8" X 18", 2-sq. wash. & 1-nut	1	1	1	1	PGS 139, 140
	8	Space Bolt, Galv., 5/8" X 20", 4-sq. wash & 4-nuts	2	4	2	4	PGS 139, 140
	9	High Voltage Sign & 8-Roofing Nails, Galv.	2	2	2	2	647776, 492192
	10	Pole Steps	17	17	17	17	592992
	11						
D C & D	12	Disconnect Switch, 14.4 KV, 600 A, S.P.S.T., with Hanger Straps and Bolts	3	3	3	3	707008
	13	Insulator, D. E.	6	6	6	6	235520
	14	Wire Connector, Split Bolt	12	-	12	-	PGS 783, 786
	15	Wire Connector, 3-Bolt Clamp	-	6	-	6	227296
	16	Switch Tag	2	2	2	2	—

1299.204 SUPERSEDES 1221 (1-1-67)	SDG&E ELECTRIC STANDARDS POLE TOP SWITCH INSTALLATION 4KV DISCONNECT SWITCH, HOOK STICK OPERATED	DATE 1-1-87 APPD AK/RDS

TABLE OF CONTENTS

FIELD MAINTENANCE ONLY

REVISION HISTORY:

7/13/2016: All versions prior to 2016 are superceded by their current version found inside the Overhead Construction Standard Manual.

2/20/2019: Install S706680 in place of old style Disconnect Switch.

TABLE OF CONTENTS

© 1998 - 2019 San Diego Gas & Electric Company. All rights reserved. Removal of this copyright notice without permission is not permitted under law.

REV	CHANGE	BY	DSGN	APPV	DATE	REV	CHANGE	BY	DSGN	APPV	DATE
C						F					
B	EDITORIAL CHANGES	GLW	JES	CZH	2/20/2019	E					
A	ORIGINAL ISSUE	JS	IL	MDJ	7/13/2016	D					

X Indicates Latest Revision | Completely Revised | New Page | Information Removed

SHEET 1 OF 1

SDG&E ELECTRIC OVERHEAD CONSTRUCTION STANDARDS

LINE TENSION DISCONNECT SWITCH HOOK STICK OPERATED

FMO OH 1225

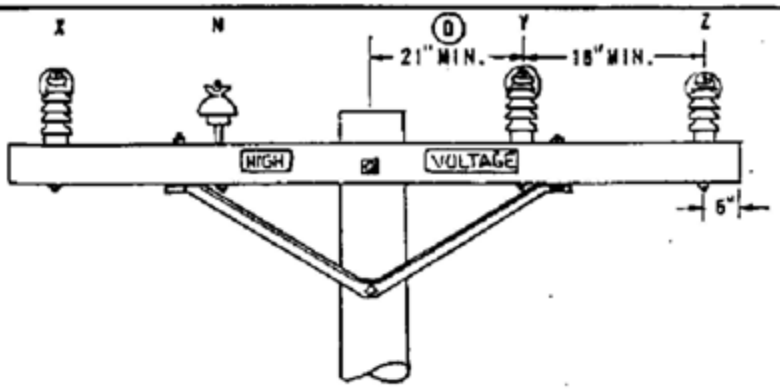

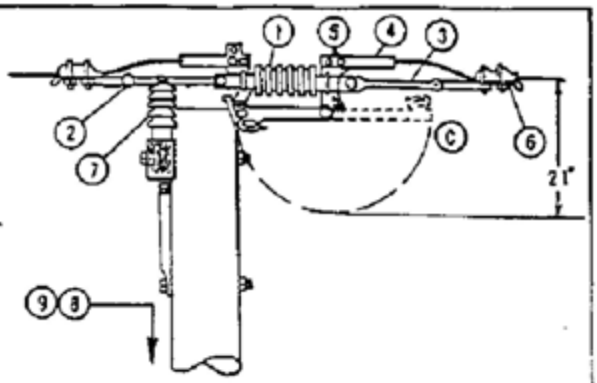

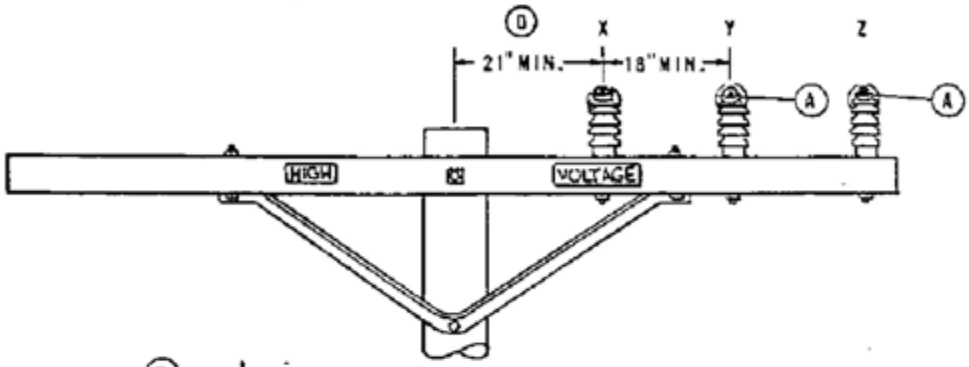

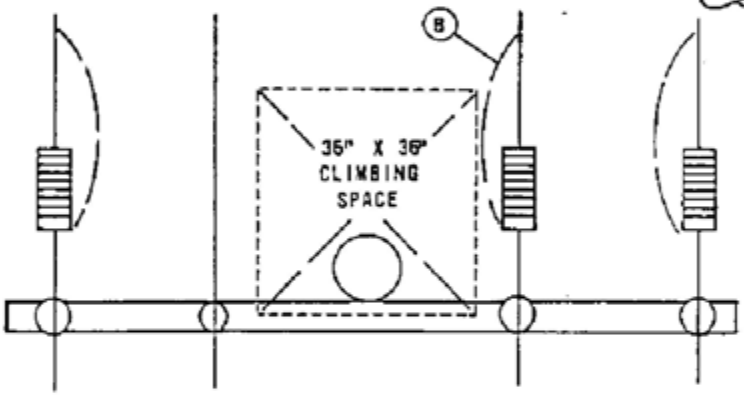

FOR FIELD MAINTENANCE ONLY

NOTES:

(A) ROTATE DISCONNECTS TOWARD THE POLE USING ADJUSTABLE TRUNNION LINKS TO PERMIT EASE OF OPERATION.

(B) KEEP THIS DISCONNECT VERTICAL TO KEEP IT OUT OF THE CLIMBING SPACE.

(C) LOCK AS SHOWN WHEN LEFT IN THE OPEN POSITION.

(D) G.O. 95 MINIMUM SPACING REQUIREMENT. THIS DIMENSION WILL ALLOW A 35" CLIMBING SPACE ON THE SAME SIDE OF THE POLE AS THE SWITCHES.

(E) EXEMPT MATERIAL.

F. INSTALL ONLY IN FULL TENSION SPANS OF 3/0 ACSR, 3/0 SOOS, 1/0 COPPER, OR LARGER CONDUCTOR.

(G) SEE 400 SECTION FOR POLE TOP MATERIALS.

H. BOND INSULATOR STUDS IN CONTAMINATION DISTRICT 1.

ITEM PTF	ITEM OCD	DESCRIPTION		QUANTITY	STOCK NO. OR CONSTR. STD.
	1	SWITCH, LINE TENSION DISCONNECT, 15KV, 600 AMPS		3	707014
	2	LINK, ADJUSTABLE TRUNNION, 12"		3	465550
	3	LINK, EXTENSION, GALV., 1/2"X 1-3/4"X 12"		3	466272
	4	TERMINAL, ALUMINUM COMPRESSION, 2-HOLE		6	700 SECTION
	5	BOLT, MACH, STAINLESS STEEL, ASSEMBLY, 1/2" X 1 1/2"	(E)	12	148672
	6	CLAMPS, DEAD-END		6	700 SECTION
	7	INSULATOR, VERTICAL POST CLAMP TYPE (ITEM 2 CONTAINS CLAMP)		3	700 SECTION
8		STEPS, POLE	(E)	AS REQ'D.	692992
9		TAG, SWITCH NUMBER	(E)	2	300 SECTION
	10	STUD 7 1/2"		3	701760
	11	WASHER, 5/8" DOUBLE COIL SPRING	(E)	3	798560
	12	WASHER, 2 1/4" X 2 1/4", FLAT	(E)	3	799040

SOG&E ELECTRIC STANDARDS

DATE 2-3-78
APPD JAF

LINE TENSION DISCONNECT SWITCH HOOK STICK OPERATED

1299.205
SUPERSEDES
1225 (1-1-92)

TABLE OF CONTENTS

FIELD MAINTENANCE ONLY

REVISION HISTORY:

7/13/2016: All versions prior to 2016 are superceded by their current version found inside the Overhead Construction Standard Manual.

2/20/2019: Install S706672 in place of old style Disconnect Switch.

TABLE OF CONTENTS

© 1998 - 2019 San Diego Gas & Electric Company. All rights reserved. Removal of this copyright notice without permission is not permitted under law.

REV	CHANGE	BY	DSGN	APPV	DATE	REV	CHANGE	BY	DSGN	APPV	DATE
C						F					
B	EDITORIAL CHANGES	GLW	JES	CZH	2/20/2019	E					
A	ORIGINAL ISSUE	JS	IL	MDJ	7/13/2016	D					

X Indicates Latest Revision | Completely Revised | New Page | Information Removed

SHEET 1 OF 1

SDG&E ELECTRIC OVERHEAD CONSTRUCTION STANDARDS

LINE TENSION DISCONNECT SWITCH HOOK OPERATED ARMLESS

FMO OH 1226

TABLE OF CONTENTS

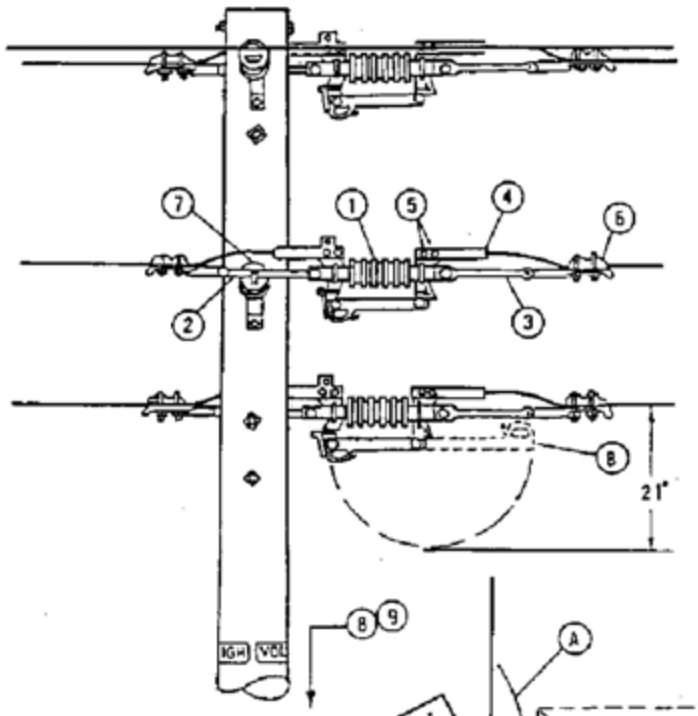

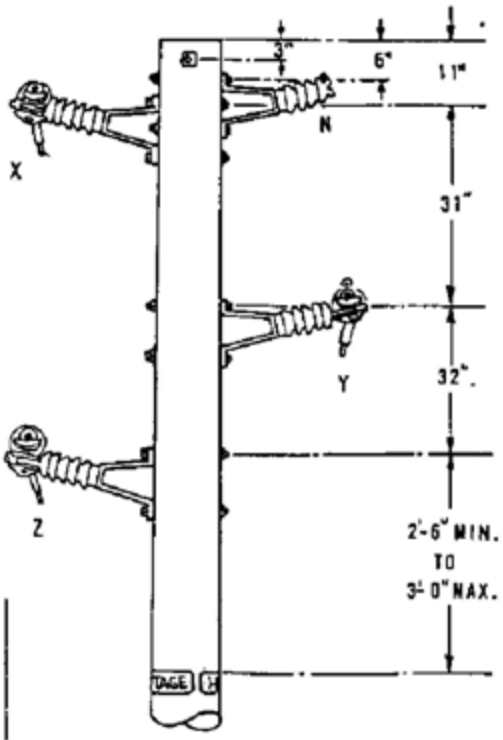

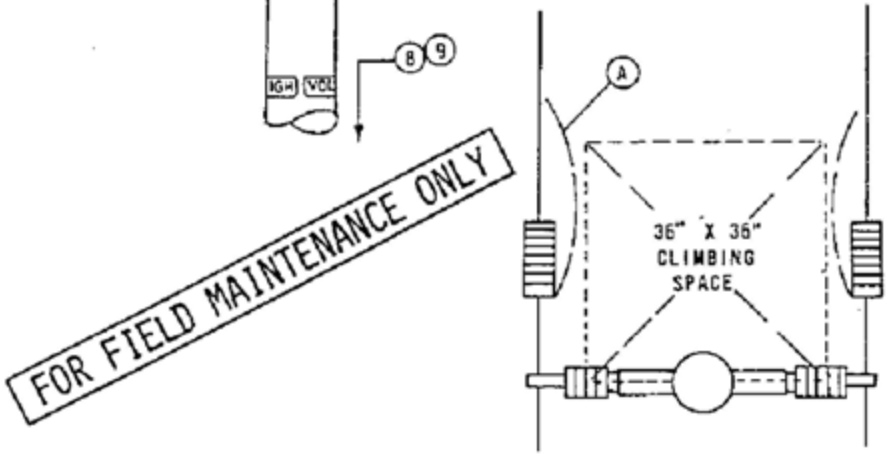

NOTES:

(A) ROTATE DISCONNECTS AS SHOWN USING ADJUSTABLE TRUNNION LINK FOR EASE OF OPERATION, KEEPING BLADE OUT OF CLIMBING SPACE.

(B) LOCK AS SHOWN WHEN LEFT IN THE OPEN POSITION.

C. INSTALL ONLY IN FULL TENSION SPANS OF 3/0 ACSR, 3/0 5005, 1/0 COPPER OR LARGER CONDUCTOR.

D. SEE 400 SECTION FOR POLE TOP MATERIALS, SPAN LIMITATIONS AND OTHER REQUIREMENTS.

(E) EXEMPT MATERIAL.

F. BOND INSULATOR BRACKETS IN CONTAMINATION DISTRICT 1.

ITEM PTF	ITEM OCD	DESCRIPTION		QUANTITY	STOCK NO. OR CONSTR. STD.
	1	SWITCH, LINE TENSION DISCONNECT, 15KV, 600 AMPS		3	707014
	2	LINK, ADJUSTABLE, TRUNNION, 12"		3	465550
	3	LINK, EXTENSION, GALV., 1/2"X 1 3/4"X 12"		3	456272
	4	TERMINAL, ALUMINUM COMPRESSION, 2-HOLE		6	700 SECTION
	5	BOLT, MACH, STAINLESS STEEL, ASSEMBLY, 1/2" X 1 1/2"	(E)	12	148672
	6	CLAMPS, DEAD END		6	700 SECTION
	7	INSULATOR, HORIZONTAL POST CLAMP TYPE (ITEM 2 CONTAINS CLAMP)		3	700 SECTION
8		STEPS, POLE	(E)	AS REQ'D.	692992
9		TAG, SWITCH NUMBER	(E)	2	300 SECTION

1299.206 SUPERSEDES 1226 (1-1-92)	SDG&E ELECTRIC STANDARDS LINE TENSION DISCONNECT SWITCH HOOK OPERATED ARMLESS	DATE 2-3-78 APPD TAF

FIELD MAINTENANCE ONLY

REVISION HISTORY:

7/13/2016: All versions prior to 2016 are superseded by their current version found inside the Overhead Construction Standard Manual.

TABLE OF CONTENTS

© 1998 - 2016 San Diego Gas & Electric Company. All rights reserved. Removal of this copyright notice without permission is not permitted under law.

REV	CHANGE	BY	DSGN	APPV	DATE	REV	CHANGE	BY	DSGN	APPV	DATE
C						F					
B						E					
A	ORIGINAL ISSUE	JS	IL	MDJ	7/13/2016	D					

X Indicates Latest Revision | Completely Revised | New Page | Information Removed

SHEET
1 OF 1

SDG&E ELECTRIC OVERHEAD STANDARD

POLE TOP SWITCH 12KV VERTICAL BREAK TYPE SINGLE CIRCUIT
HORIZONTAL CONFIGURATION

FMO
OH 1228

SCOPE: THIS STANDARD SHOWS A GANG OPERATED POLE TOP SWITCH FOR CIRCUIT TIES OR SECTIONALIZING PURPOSES AND IS TO BE USED FOR TANGENT AND DEAD-END CONFIGURATIONS.

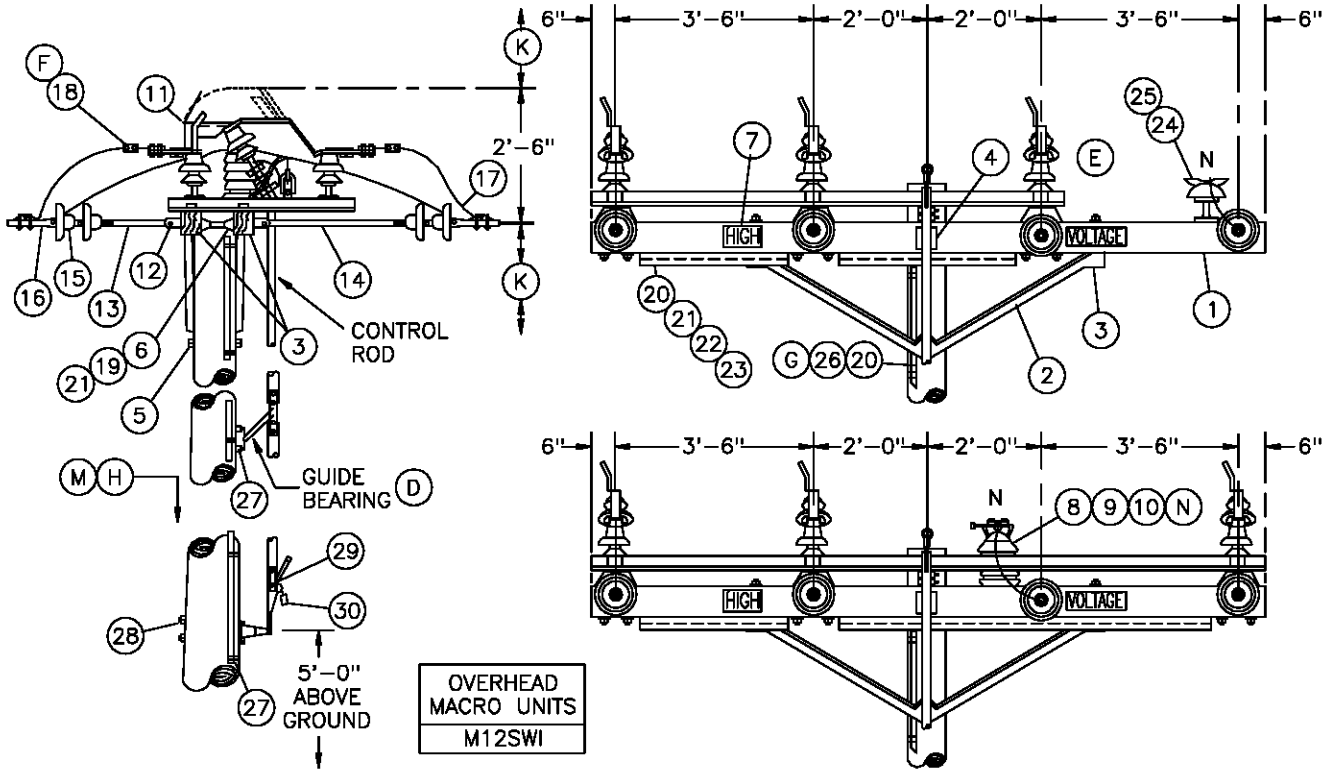

BILL OF MATERIAL:

FOR FIELD MAINTENANCE ONLY

ITEM	DESCRIPTION	QUANTITY	STOCK NO. OR CONSTR STANDARD	ASSEMBLY UNITS
1	CROSSARM, 3 3/4" x 5 3/4" x 12'-0"	2	294160	6-
2	BRACE, ANGLE, 6'-0"	2	164160	6HUB
3	BOLT, MACH, GALV, 1/2" X 7", 1 ROUND AND 1 DOUBLE COIL SPRING WASHER	16	STD 392	-
4	BOLT, MACH, GALV, 5/8" x (LENGTH AS REQ'D), 2 SQUARE AND 1 DOUBLE COIL SPRING WASHER	1	STD 392	-
5	BOLT, MACH, GALV, 5/8" x (LENGTH AS REQ'D) AND 1 DOUBLE COIL SPRING WASHER	1	STD 392	-
6	BOLT, SPACE, GALV, 5/8" (LENGTH AS REQ'D), 2 SQUARE, 2 ROUND, 2 DOUBLE COIL SPRING WASHERS AND 1 NUT (C)	4	STD 392	-
7	SIGN, HIGH VOLTAGE, AND	2	647648	HV
	9 ROOFING NAILS, GALV	18	492224	-
8	STUD, 5/8" x 7 1/2" AND 1 DOUBLE COIL SPRING WASHER (C)	1	701760	STUD-W
		1	798560	-
9	INSULATOR, VERTICAL POST (C)	1	428608	VPI
10	CLAMP, POST INSULATOR (L)(C)	1	STD 773	-
11	SWITCH T.P.S.T. 600 AMP, INCLUDING 31' OF CONTROL ROD	1	709254	MEMCO
	ADDITIONAL INTERMEDIATE 10'-6" CONTROL ROD WITH GUIDE BEARING AND END FITTINGS	AS REQ'D	604432	FC-ROD
	REPLACEMENT UPPER CONTROL ROD WITH END FITTINGS	AS REQ'D	604434	-
	REPLACEMENT LOWER CONTROL ROD WITH END FITTINGS	AS REQ'D	604436	-
12	CLEVIS, DEAD END, 5/8" BOLT STEEL (OPEN TYPE) (C)	8	235618	-

TABLE OF CONTENTS

TABLE OF CONTENTS

BILL OF MATERIAL: (CON'T)

ITEM	DESCRIPTION	QUANTITY	STOCK NO. OR CONSTR STANDARD	ASSEMBLY UNITS
13	LINK, EXTENSION, GALV, 1/2" X 2" X 12" (C)	4	466240	DEEXT
14	STRAP, EXTENSION, GALV, 1/2" X 1 1/2" x 28" (C)	4	696864	–
15	INSULATOR, SUSPENSION (C)	14	STD 750	–
16	CLAMP, STRAIGHT LINE, D.E. (C)	8	741–743	–
17	CONNECTOR, WIRE COMPRESSION (SIZE AS REQ'D)	AS REQ'D	783–786	–
18	TERMINAL, COMPRESSION LUG (F)	6	794–795	–
19	WIRE, #8 BARE SOLID ANNEALED COPPER	15'	812928	BOND8
20	WIRE, BARE STRANDED, #4	65'	813760	BS4
21	STAPLE, FENCE, GALV, 1 1/4"	AS REQ'D	678528	–
22	MOULDING, OAK HARDWOOD, 1"	10'	487200	MLDG
23	STRAPS, GALV, 3/4" AND 2–1 3/4" ROOFING NAILS	AS REQ'D	697888	–
24	PIN, INSULATOR, STRAIGHT, 12KV, 1"	1	532704	PS1
25	INSULATOR, LINE, 12KV, NEUTRAL	1	429216	55–3/I
26	GROUND UNIT, COMPLETE	1	603136	GND4
27	SCREW, LAG, GALV, 1/2" X 4"	2	621568	–
28	BOLT, MACH, GALV, 5/8" X (LENGTH AS REQ'D), 1 SQUARE AND 1 DOUBLE COIL SPRING WASHER	2	STD 392	–
29	TAG, SWITCH NUMBER	2	STD 204	–
30	PADLOCK, SCHLAGE ELECTRIC SERIES	1	514848	–

FOR FIELD MAINTENANCE ONLY

INSTALLATION:

A. CONTROL ROD AND SWITCH HANDLE ARE NOT ALLOWED IN THE CLIMBING SPACE (G.O. 95, 54.7–A4).

B. ATTACH GROUND WIRE TO SWITCH MOUNTING BOLTS BY USING AN ADDITIONAL ROUND WASHER.

(C) REDUCE QUANTITIES AS REQUIRED WHEN NOT USING NEUTRAL.

(D) GUIDE BEARING PIVOTS THROUGH 90°. IN THE OPENED AND CLOSED POSITIONS THE GUIDE BEARING MAKES A 45° ANGLE WITH THE POLE.

(E) CUT OFF EXCESS INTERPHASE SHAFT.

(F) WHEN ATTACHING 1/0 AND 4/0 COPPER CONDUCTORS TO A POLE TOP SWITCH, USE A BRONZE CABLE TAP LUG, STOCK NUMBER 471296. IF EXCESSIVE VIBRATION OR WHIPPING COULD OCCUR, USE TWO LUGS IN SERIES.

REFERENCES:

(G) GROUNDING METHODS – SEE STANDARD 1002.

(H) POLE STEPPING – SEE STANDARD 363.

I. SEE STANDARD 1443 FOR SINGLE DEADEND CONFIGURATION.

J. SEE DESIGN MANUAL PAGE 6111 – FEEDER CIRCUIT SECTIONALIZING AND PROTECTION.

(K) SEE SECTION 200 FOR MINIMUN VERTICAL SEPARATION.

(L) SEE STANDARD 759 FOR USE OF LINE GUARD.

(M) REFLECTOR STRIPS ARE REQUIRED ON ALL SECTIONALIZING/TIELINE SWITCHES AND SERVICE RESTORER POLES. (SEE STD. 208.3 ITEM 12).

(N) NEUTRALS SHALL BE SOLIDLY TIED TOGETHER AT ALL SWITCHES REGARDLESS WHETHER THEY ARE NORMALLY OPEN OR CLOSED. THIS INCLUDES TIE SWITCHES TO CIRCUITS EMANATING FROM DIFFERENT SUBSTATIONS. (SEE DESIGN MANUAL STANDARD PAGE 6221.2, D.3).

DATE 1–1–93 APPD PA 1/2009	SDG&E ELECTRIC STANDARDS POLE TOP SWITCH 12KV VERTICAL BREAK TYPE SINGLE CIRCUIT HORIZONTAL CONFIGURATION	1299.209 SUPERSEDES 1228.2 (8–1–00)

INSTALLATIONS:

A. CONTROL ROD AND SWITCH HANDLE ARE NOT ALLOWED IN THE CLIMBING SPACE. (G.O. 95 54.7-A4)

B. ATTACH GROUND WIRE TO SWITCH MOUNTING BOLTS BY USING AN ADDITIONAL ROUND WASHER.

(C) REDUCE QUANTITIES AS REQUIRED WHEN NOT USING NEUTRAL.

(D) POSITION OF BELL CRANK ASSEMBLY WITH SWITCH IN OPEN POSITION.

(E) EXEMPT MATERIAL.

(F) POSITION OF BELL CRANK ASSEMBLY WITH SWITCH IN CLOSED POSITION.

(G) GUIDE BEARING PIVOTS THROUGH 90°. IN THE OPENED AND CLOSED POSITIONS THE GUIDE BEARING MAKES A 45° ANGLE WITH THE POLE.

(H) POLES ARE TO BE STEPPED PER STANDARD 363.

(I) USE TWO GROUND RODS SPACED A MINIMUM OF 6' APART PER G.O. 95 RULE 21.1.

REFERENCES:

J. SEE STANDARD 1443 FOR SINGLE DEADEND CONFIGURATION.

K. SEE STANDARD 1205 TO DETERMINE WHEN TO USE GANG OR HOOKSTICK SWITCHES.

L. SEE DESIGN MANUAL PAGE 5621 - CRITERIA AND GENERAL PRACTICES FOR SECTIONALIZING.

(M) SEE SECTIONS 200 AND 500 FOR MINIMUM VERTICAL SEPARATION.

(N) SEE STANDARD 759 FOR USE OF LINE GUARD.

FOR FIELD MAINTENANCE ONLY

TABLE OF CONTENTS

ITEM		DESCRIPTION	QUANTITY		STOCK NO. OR CONSTR. STDS.
	1	CROSSARM, 3 3/4" X 5 3/4" X 12'-0"		2	300 SECTION
	2	BRACE, ANGLE, 6'-0"		-	164160
	3	BRACE, 4' SPECIAL		4	163808
	4	BOLT, MACH, GALV, 1/2" X 7", 1-RD WASH, & 1-DBL COIL WASH (E)		-	100 SECTION
	5	BOLT, MACH, GALV, 5/8" X__", & 1-DBL COIL WASH (E)		1	100 SECTION
	6	BOLT, MACH, GALV, 5/8" X__", 2-SQ WASH & 1-DBL COIL WASH (E)		1	100 SECTION
	7	BOLT, SPACE, GALV, 5/8" X__", 4-SQ WASH & 2- DBL COIL WASH (C) (E)		2	100 SECTION
	8	BOLT, MACH, GALV, 5/8" X__", 1-SQ WASH & 1-DBL COIL WASH (E)		16	100 SECTION
P	9	BOLT, MACH, GALV, 5/8" X 5", 1-RD WASH & 1-DBL COIL WASH (E)		4	100 SECTION
T	10	SCREW, LAG, GALV, 1/2" X 4" (E)		2	621568
F	11	SIGN, HIGH VOLTAGE AND NAILS, 9 ROOFING, GALV (E)		2	647648, 492224
	12	STEPS, POLE (H) (E)		16	692992
	13	PIN, INSULATOR, STRAIGHT, 12KV, 1" & 1-DBL COIL WASH (C)		2	532704, 798560 (E)
	14	STUD, 7 1/2" & 1-DBL COIL WASH (C)		-	701760, 798560 (E)
	15				
	16	CLEVIS, DEAD END, 5/8" BOLT STEEL (OPEN TYPE) (C) (E)		-	235618
	17	LINK, EXTENSION GALV, 1/2" X 2" X 12" (C)		-	466240
	18	STRAP, EXTENSION GALV, 1/2" X 1 1/2" X 28" (C)		-	696864
	19	GROUND UNIT (GRAY OR PLAIN)		1	603120, 603136
	20	MOULDING, HARDWOOD 1" (GRAY OR PLAIN)		24'	487184, 487200
	21	STAPLE, FENCE, GALV, 1 1/4" (E)		30	678528
	22	WIRE, BARE STRANDED, #6		5 LBS	813536
	23	TERMINAL, COMPRESSION LUG		6	700 SECTION
	24	PADLOCK		1	514848
	25	INSULATOR, LINE, 12KV NEUTRAL (C) (E)		2	429216
O	26	TAG, SWITCH NUMBER		2	300 SECTION
C	27	CLAMP, STRAIGHT LINE, O.E. (C)		6	700 SECTION
O	28	CLAMP, POST INSULATOR (N) (C)		-	700 SECTION
	29	INSULATOR, VERTICAL POST (C)		-	428608
	30	INSULATOR, SUSPENSION (C)		-	700 SECTION
	31	SWITCH, T.P.S.T., 600 AMP		1	709246
	32	SWITCH, T.P.S.T., 600 AMP		-	709250
	33	STAPLES, MOULDING, GALV, 3" X 1 1/16" X 1/4" (E)		AS REQD	678560
	34	CONNECTOR, WIRE COMPRESSION (SIZE AS REQ'D) (C)		-	700 SECTION

SOG&E ELECTRIC STANDARDS

DATE 1-1-87
APPD AK/RD

POLE TOP SWITCH 12KV VERTICAL BREAK TYPE SINGLE CIRCUIT HORIZONTAL CONFIGURATION

1299.203
SUPERSEDES
1228.3 (1-1-87)

FIELD MAINTENANCE ONLY

REVISION HISTORY:

7/13/2016: All versions prior to 2016 are superseded by their current version found inside the Overhead Construction Standard Manual.

TABLE OF CONTENTS

© 1998 - 2016 San Diego Gas & Electric Company. All rights reserved. Removal of this copyright notice without permission is not permitted under law.

REV	CHANGE	BY	DSGN	APPV	DATE	REV	CHANGE	BY	DSGN	APPV	DATE
C						F					
B						E					
A	ORIGINAL ISSUE	JS	IL	MDJ	7/13/2016	D					

X Indicates Latest Revision | Completely Revised | New Page | Information Removed

SHEET
1 OF 1

SDG&E ELECTRIC OVERHEAD STANDARD

POLE TOP SWITCH 12KV VERTICAL BREAK TYPE SINGLE CIRCUIT
HORIZONTAL CONFIGURATION - DOUBLE DEAD END

FMO
OH 1229

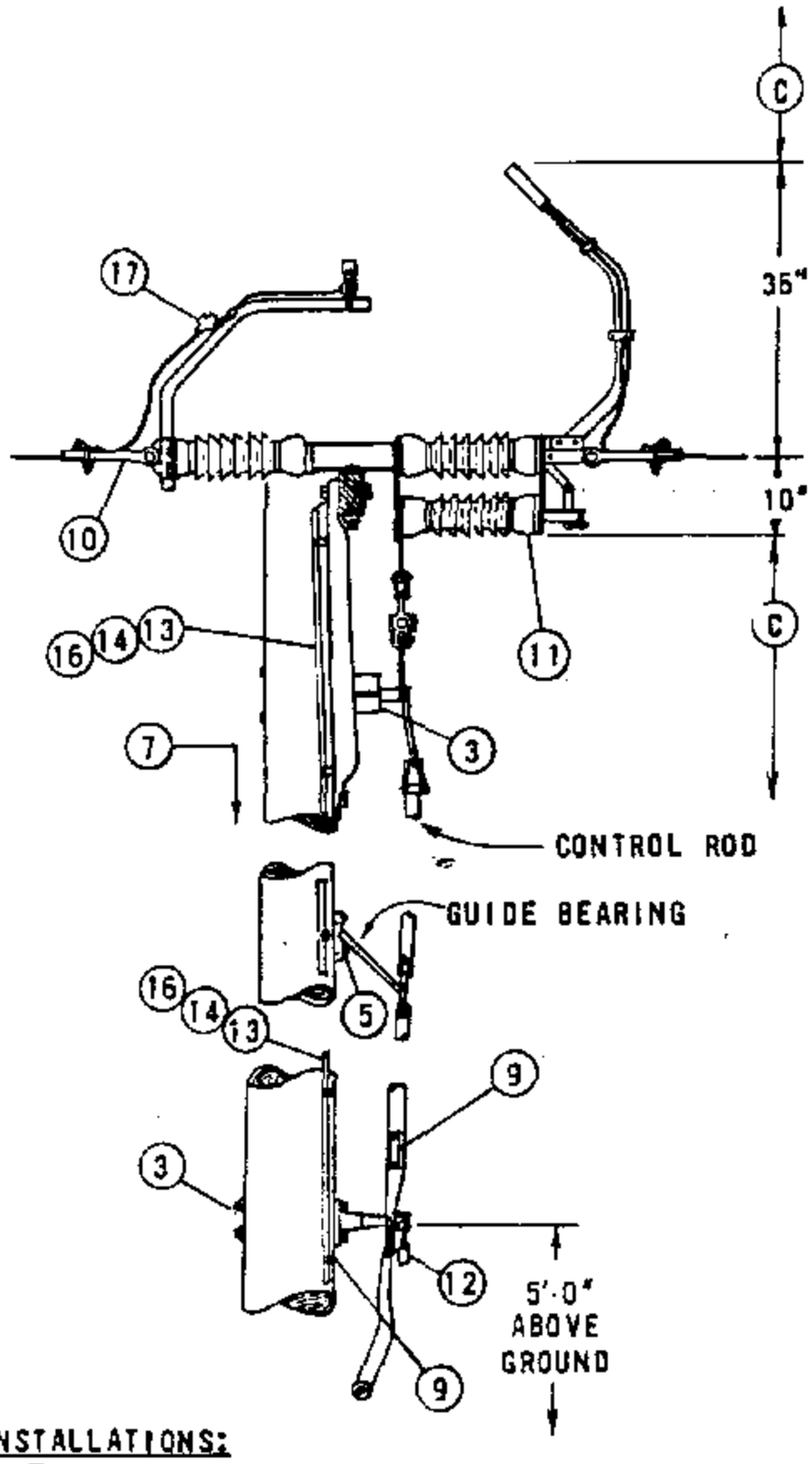

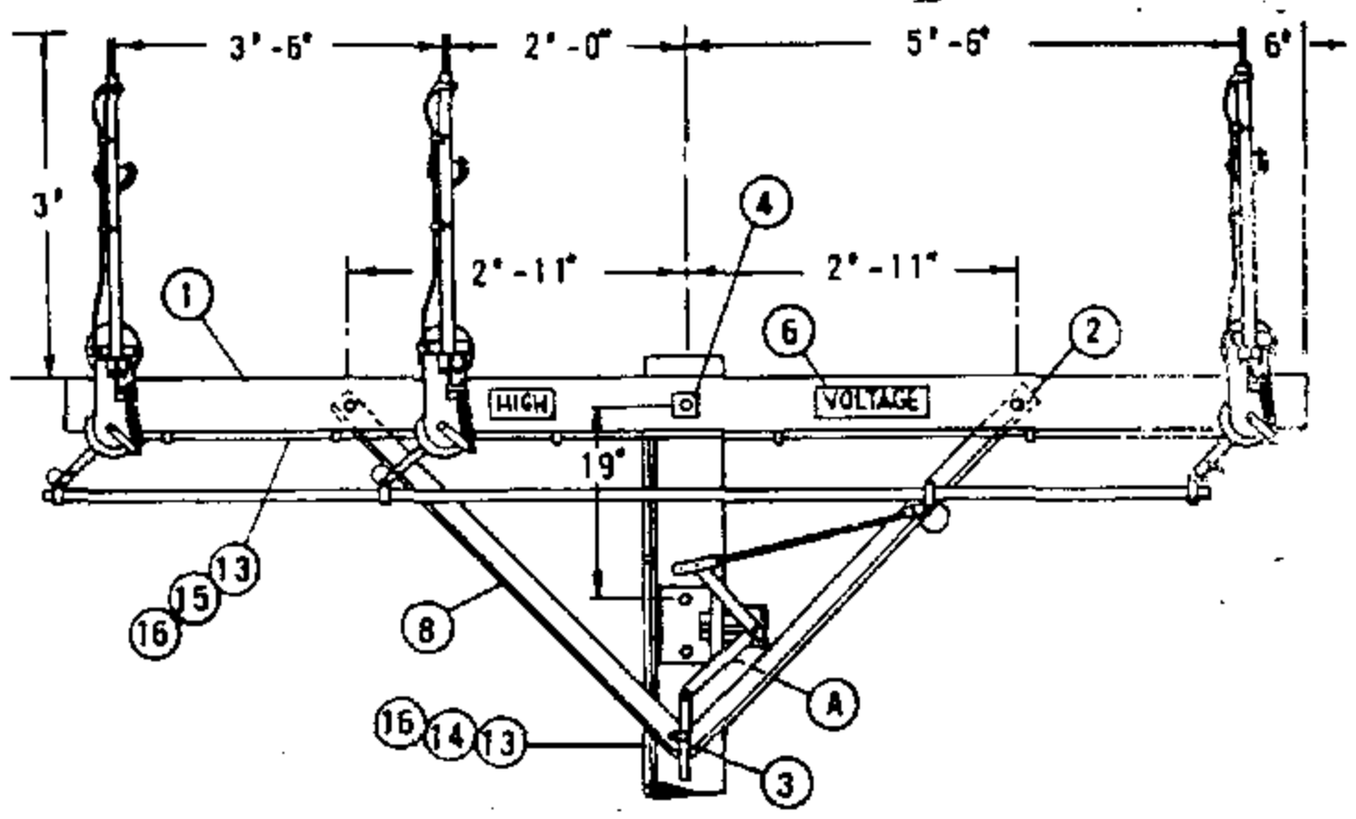

THIS PAGE FOR FIELD MAINTENANCE ONLY

INSTALLATIONS:

(A) POSITION OF BELL CRANK ASSEMBLY WITH SWITCH IN OPEN POSITION.

(E) EXEMPT MATERIAL

REFERENCES:

B. SEE PAGE 1230 TO DETERMINE WHEN THIS SWITCH SHALL BE USED.

(C) SEE SECTIONS 200 AND 500 FOR MINIMUM VERTICAL SEPARATION.

	ITEM	DESCRIPTION		QUANTITY	STOCK NO. OR CONST. STDS.
	1	CROSSARM, 3 3/4" X 5 3/4" X 12'-0"		1	300 SECTION
	2	BOLT, MACH, GALV, 5/8" X 5", 1-RD WASH, & 1-DBL COIL WASH	(E)	2	100 SECTION
	3	BOLT, MACH, GALV, 5/8" X ___", 1-DBL COIL WASH & 1-SQ WASH	(E)	5	100 SECTION
	4	BOLT, MACH, GALV, 5/8" X ___", 2-SQ WASH, & 1-DBL COIL WASH	(E)	1	100 SECTION
P	5	SCREW, LAG, GALV, 1/2" X 4"	(E)	2	621568
	6	SIGN, HIGH VOLTAGE AND NAILS, 9 ROOFING, GALV	(E)	2	647648, 492224
T	7	STEPS, POLE	(E)	16	692992
F	8	BRACE, 4' SPECIAL		2	163808
	9	TAG, SWITCH NUMBER	(E)	2	300 SECTION
	10	CLAMP, STRAIGHT LINE, D.E.		6	700 SECTION
	11	SWITCH, T.P.S.T., 600 AMP		1	709248
	12	PADLOCK		1	514848
O	13	WIRE, BARE STRANDED, #6		55'	813536
	14	GROUND UNIT, (GRAY OR PLAIN)		1	603120, 603136
C	15	MOULDING, HARDWOOD 1"(GRAY OR PLAIN)		24'	487184, 487200
O	16	STAPLE, FENCE, GALV, 1 1/4"	(E)	30	678528
	17	TERMINAL, COMPRESSION LUG		6	700 SECTION

SDG&E ELECTRIC STANDARDS

DATE 6-4-82
APPD JRH

POLE TOP SWITCH 12KV VERTICAL BREAK TYPE SINGLE CIRCUIT
HORIZONTAL CONFIGURATION - DOUBLE DEAD END

1299.201
SUPERSEDES
1229 (6-4-82)

TABLE OF CONTENTS

OH1230 FIELD MAINTENANCE ONLY

ALL VERSIONS LISTED IN FMO ARE SUPERSEDED BY THEIR CURRENT VERSION FOUND INSIDE THE OVERHEAD CONSTRUCTION STANDARD MANUAL.

REVISION HISTORY:

12/06/2021: A NEWER VERSION MOVED TO FMO

07/13/2016: MOVED TO FMO

TABLE OF CONTENTS

© 1998 - 2021 San Diego Gas & Electric Company. All rights reserved. Removal of this copyright notice without permission is not permitted under law.

REV	CHANGE	DR	BY	DSN	APV	DATE	REV	CHANGE	DR	BY	DSN	APV	DATE
C							F						
B	EDITORIAL CHANGES	EDM	RSL	JES	CZH	12/06/2021	E						
A	ORIGINAL ISSUE	-	JS	IL	MDJ	7/13/2016	D						

X Indicates Latest Revision | Completely Revised | New Page | Information Removed

SHEET 1 OF 1

SDG&E ELECTRIC OVERHEAD FIELD MAINTENANCE ONLY STANDARDS

POLE TOP SWITCH INSTALLATION 12KV SINGLE CIRCUIT HORIZONTAL CONFIGURATION

FMO OH1230

SCOPE: THIS STANDARD SHOWS A HORIZONTAL BREAK GANG OPERATED POLE TOP SWITCH FOR CIRCUIT TIES OR SECTIONALIZING PURPOSES. THIS INSTALLATION IS PREFERRED OVER STANDARD 1228.

ATTENTION: SWITCH AND CONTROL ROD MAY BE INSTALLED ON EITHER SIDE OF POLE. IF INSTALLATION IS LIMITED TO ONE SIDE OF POLE ONLY, AND SWITCH DOES NOT MATCH EXISTING PHASE POSITIONS, SEE FIGURE 2 SWITCH.

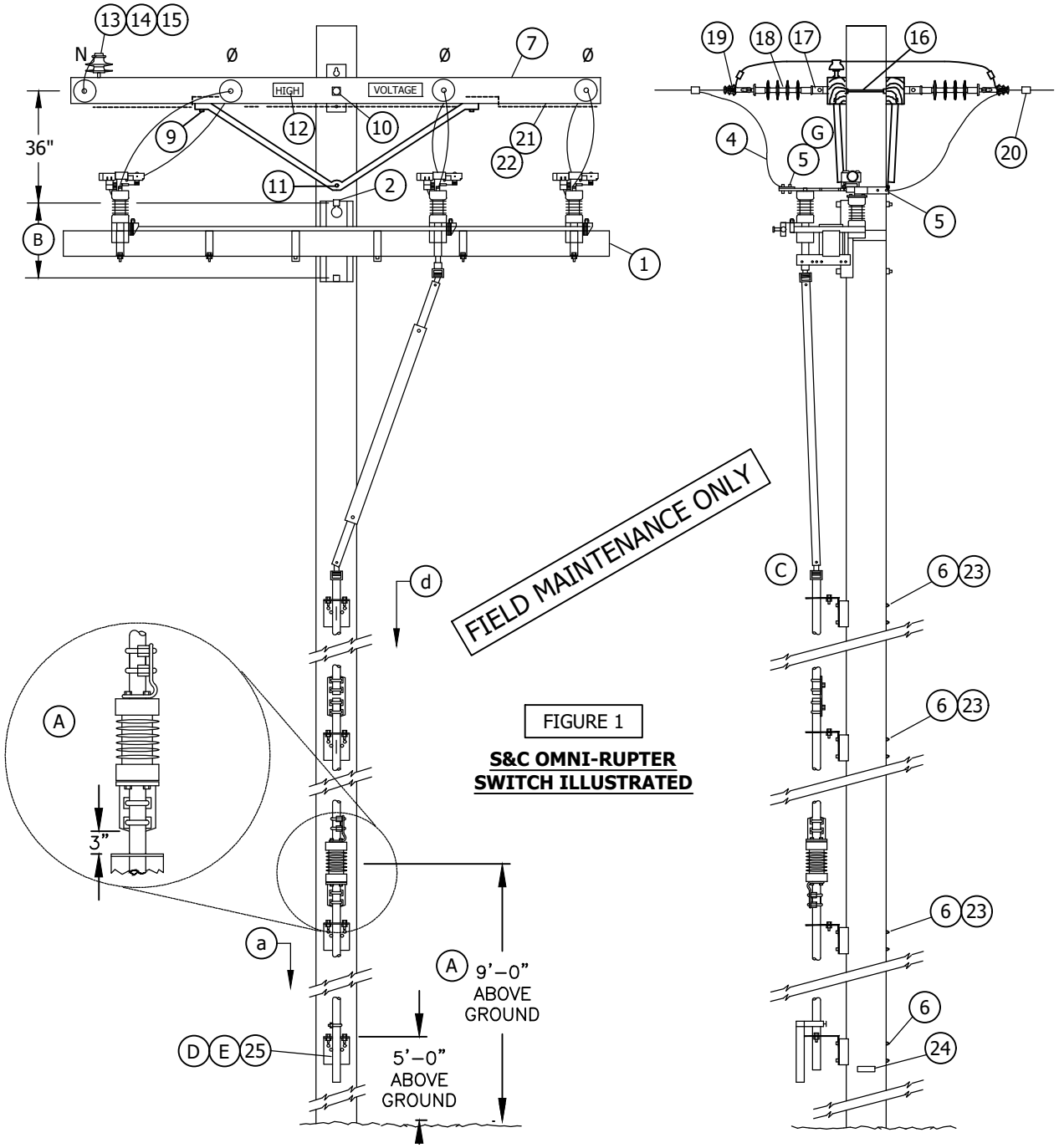

FIGURE 1

S&C OMNI-RUPTER SWITCH ILLUSTRATED

TABLE OF CONTENTS

© 1998 - 2021 San Diego Gas & Electric Company. All rights reserved. Removal of this copyright notice without permission is not permitted under law.

REV	CHANGE	DR	BY	DSN	APV	DATE	REV	CHANGE	DR	BY	DSN	APV	DATE
C	INFORMATION REMOVED	-	SL	JES	CZH	04/13/2020	F						
B	DRAWING UPDATE	PEI	-	-	-	04/22/2019	E						
A	ORIGINAL ISSUE	-	-	PTA	CAK	01/01/2000	D	MOVED TO FMO	EDM	RSL	JES	CZH	12/06/2021

X Indicates Latest Revision | Completely Revised | New Page | Information Removed

SDG&E ELECTRIC OVERHEAD FIELD MAINTENANCE ONLY STANDARDS

POLE TOP SWITCH 12KV
HORIZONTAL LOADBREAK TYPE SINGLE CIRCUIT
HORIZONTAL CONFIGURATION

FMO OH1230.1

TABLE OF CONTENTS

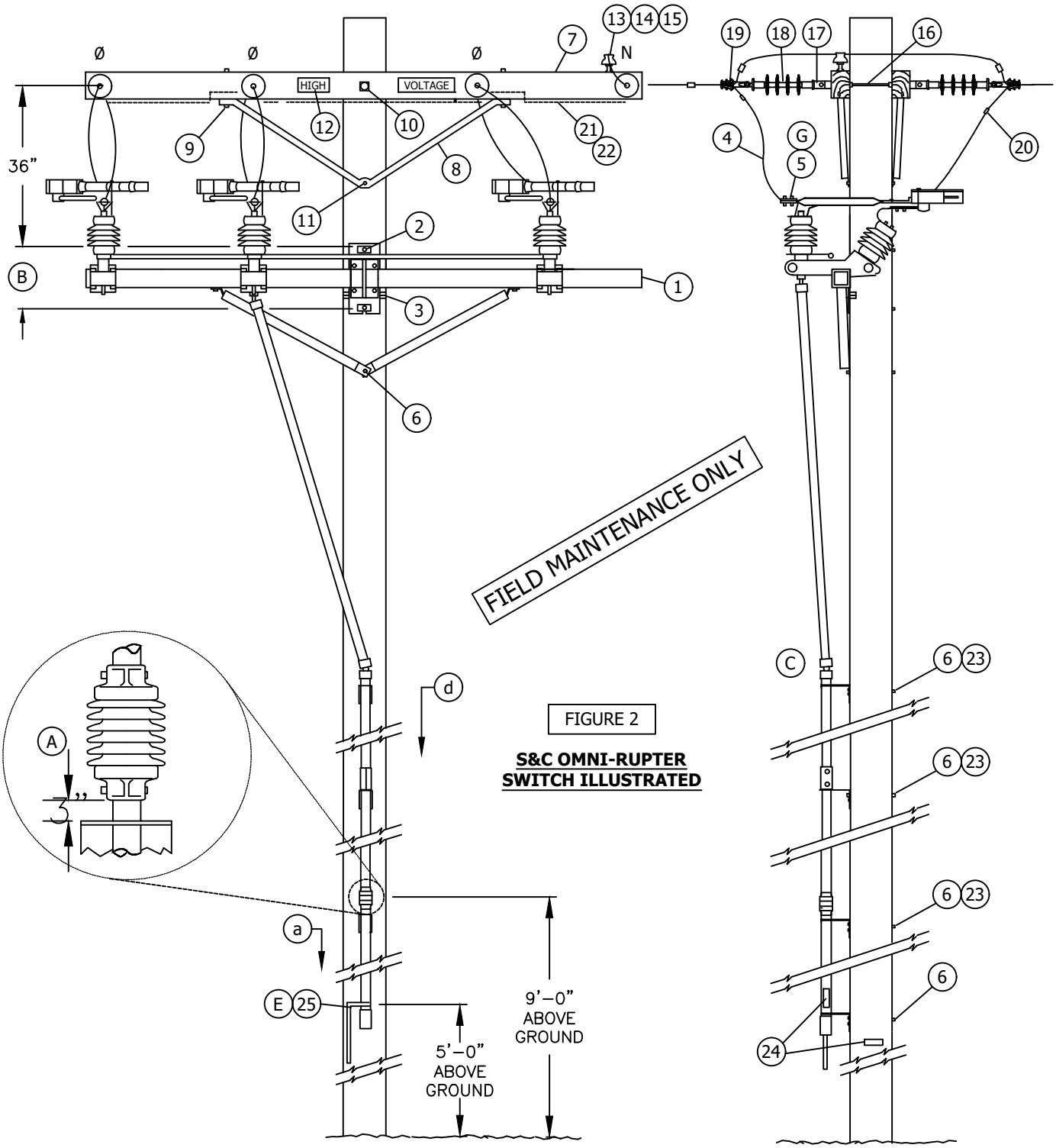

FIGURE 2

S&C OMNI-RUPTER SWITCH ILLUSTRATED

© 1998 - 2021 San Diego Gas & Electric Company. All rights reserved. Removal of this copyright notice without permission is not permitted under law.

REV	CHANGE	DR	BY	DSN	APV	DATE	REV	CHANGE	DR	BY	DSN	APV	DATE
C	INFORMATION REMOVED	-	SL	JES	CZH	04/13/2020	F						
B	DRAWING UPDATE	PEI	-	-	-	04/22/2019	E						
A	ORIGINAL ISSUE	-	-	PTA	CAK	01/01/2000	D	MOVED TO FMO	EDM	RSL	JES	CZH	12/06/2021

X Indicates Latest Revision | Completely Revised | New Page | Information Removed

SDG&E ELECTRIC OVERHEAD FIELD MAINTENANCE ONLY STANDARDS

POLE TOP SWITCH 12KV
HORIZONTAL LOADBREAK TYPE SINGLE CIRCUIT
HORIZONTAL CONFIGURATION

FMO OH1230.2

INSTALLATION:

(A) INSTALL CONTROL PIPE INSULATOR THREE INCHES ABOVE GUIDE BEARING AND A MINIMUM OF 9'-0" ABOVE GROUND.

(B) USE THE FOLLOWING THROUGH-BOLT DRILLING DIMENSIONS: A.B. CHANCE = 13-1/4", S&C = 14"

(C) SWITCHES ARE FURNISHED WITH 40 FEET OF OPERATING CONTROL ROD. THE TOP SECTION OF THE CONTROL ROD IS MADE OF FIBER GLASS, THE LOWER SECTIONS ARE MADE OF GALVANIZED PIPE.

(D) DO NOT GROUND SWITCH CONTROL MECHANISM.

(E) THE SWITCH IS SHIPPED FACTORY ADJUSTED. HOWEVER, THE SWITCH HANDLE LOCK SEGMENTS WILL REQUIRE ADJUSTMENT. REFER TO INSTALLATION INSTRUCTIONS PROVIDED WITH SWITCH.

ATTENTION: SUBSTANIAL PRESSURE MUST BE APPLIED TO THE SWITCH HANDLE IN THE CLOSING DIRECTION TO PLACE "WIND-UP" TENSION IN THE CONTROL ROD BEFORE DROPPING HANDLE INTO CLOSED - POSITION SLOT.

(F) REDUCE QUANTITIES AS REQUIRED WHEN NOT USING NEUTRAL.

(G) WHEN ATTACHING 1/O AND 4/O COPPER CONDUCTORS TO A POLE TOP SWITCH, USE A BRONZE CABLE TAP LUG, STOCK NUMBER 471296. IF EXCESSIVE VIBRATION OR WHIPPING COULD OCCUR, USE TWO LUGS IN SERIES. NOTE: THE PROPER TORQUE VALUE FOR THIS CONNECTOR IS 40 FT-LBS.

BILL OF MATERIALS :

ITEM	DESCRIPTION			QUANTITY	CONST STD OR PAGE NO	STOCK NUMBER	ASSEMBLY UNITS
1	SWITCH, GANG-OPERATED, 15KV, 600 AMP, WITH INTERRUPTERS, INCLUDING 40' OF CONTROL ROD	FIG. 1	S&C	1	-	709252	GANG-S
		FIG. 2	CHANCE	1	-	709258	GANG-C
	ADDITIONAL 10'-6" CONTROL ROD WITH GUIDE BEARING AND COUPLING		S&C	AS REQ'D	-	602934	S-ROD
			CHANCE	AS REQ'D	-	604428	C-ROD
	LOAD INTERRUPTER-A.B. CHANCE SWITCH ONLY IF RETRO-FITTING REQUIRED		TYPE S	3	-	433796	LDBRKS
2	BOLT, MACH, GALV, 3/4" X (LENGTH AS REQ'D), 1 SQUARE AND 1 DOUBLE COIL SPRING WASHER			2	392	-	-
3	SCREW, LAG, GALV, 1/2" X 4"			2	-	621568	
4	WIRE, COVERED JUMPER CU OR AL (SIZE AS REQ'D)			33'	718	-	
5	TERMINAL, COMPRESSION LUG (G)			6	711-715		-
6	BOLT, MACH, GALV, 5/8" X (LENGTH AS REQ'D), 1 SQUARE AND 1 DOUBLE COIL SPRING WASHER			AS REQ'D	392	-	-
7	CROSSARM, 3 3/4" X 5 3/4" X 10'-0"			2		294128	4-
8	BRACE, ANGLE, 5'-0"			2	-	164128	5HUB
9	BOLT, MACH, GALV, 1/2" X 7", 1 ROUND AND 1 DOUBLE COIL SPRING WASHER			4	392	-	-
10	BOLT, MACH, GALV, 5/8" X (LENGTH AS REQ'D) 2 SQUARE AND 1 DOUBLE COIL SPRING WASHER			1	392	-	-
11	BOLT, MACH, GALV, 5/8" X (LENGTH AS REQ'D) AND 1 DOUBLE COIL SPRING WASHER			1	392	-	-
12	SIGN, HIGH VOLTAGE, AND 9 ROOFING NAILS, GALV			2	-	647648	HV
				-	-	49224	-

FIELD MAINTENANCE ONLY

TABLE OF CONTENTS

© 1998 - 2021 San Diego Gas & Electric Company. All rights reserved. Removal of this copyright notice without permission is not permitted under law.

REV	CHANGE	DR	BY	DSN	APV	DATE	REV	CHANGE	DR	BY	DSN	APV	DATE
C	INFORMATION REMOVED	-	SL	JES	CZH	04/13/2020	F						
B	DRAWING UPDATE	PEI	-	-	-	04/22/2019	E						
A	ORIGINAL ISSUE	-	-	PTA	CAK	01/01/2000	D	MOVED TO FMO	EDM	RSL	JES	CZH	12/06/2021

X Indicates Latest Revision | Completely Revised | New Page | Information Removed

SDG&E ELECTRIC OVERHEAD FIELD MAINTENANCE ONLY STANDARDS

POLE TOP SWITCH 12KV
HORIZONTAL LOADBREAK TYPE SINGLE CIRCUIT
HORIZONTAL CONFIGURATION

FMO OH1230.3

BILL OF MATERIALS (CONT'D):

ITEM	DESCRIPTION	QUANTITY	CONST STD OR PAGE NO	STOCK NUMBER	ASSEMBLY UNITS
13	PIN, INSULATOR, STRAIGHT, 12KV, 1" (F)	2	-	532704	PS1
14	INSULATOR, 12KV NETURAL (F)	2	-	429216	55-3/I
15	WIRE, TIE (DOUBLE) (F)	1	760-764	-	-
16	BOLT, SPACE, GALV, 5/8" X (LENGTH AS REQ'D), 3 SQUARE, 2 ROUND, 2 DOUBLE COIL SPRING WASHERS AND 1 NUT (F)	4	392	-	-
17	CLEVIS, DEAD END, 5/8" BOLT STEEL (CLOSED TYPE) (F)	8	-	236620	-
18	INSULATOR, SUSPENSION, 12KV, CLEVIS (F)	8	750	431650	-
19	CLAMP, STRAIGHT LINE, D.E. (F)	8	741-743	-	-
20	CONNECTOR, WIRE, COMPRESSION (SIZE AS REQ'D)	AS REQ'D	783-786	-	-
21	WIRE, #8 BARE SOLID ANNEALED COPPER	12'	-	812928	BOND8
22	STAPLE, FENCE, GALV, 1 1/4"	AS REQ'D	-	678528	-
23	SCREW, LAG, GALV, 5/8" X 5"	2	-	621600	-
24	TAG, SWITCH NUMBER	2	204	-	-
25	PADLOCK, SCHLAGE ELECTRIC SERIES	1	-	514848	-

OVERHEAD MACRO UNITS	
FIG. 1	S12SWI
FIG. 2	C12SWI

NOTES: NONE

REFERENCE:

(a) POLE STEPPING - SEE STANDARD 363.

b. SEE DESIGN MANUAL PAGE 6111 - FEEDER CIRCUIT SECTIONALIZING AND PROTECTION.

c. SWITCH OPERATING RODS MAY EXTEND ONE-HALF THEIR DIAMETER INTO THE CLIMBING SPACE (G.0. 95, 54.7-A3).

(d) REFLECTOR STRIPS ARE REQUIRED ON ALL SECTIONALIZING/TIELINE SWITCHES AND SERVICE RESTORER POLES. (SEE STD. 208.3 ITEM 12)

e. NEUTRALS SHALL BE SOLIDLY TIED TOGETHER AT ALL SWITCHES REGARDLESS WHETHER THEY ARE NORMALLY OPEN OR CLOSED. THIS INCLUDES TIE SWITCHES TO CIRCUITS EMANATING FROM DIFFERENT SUBSTATIONS. (SEE DESIGN MANUAL STANDARD PAGE 6221.2, D.3).

FIELD MAINTENANCE ONLY

TABLE OF CONTENTS

© 1998 - 2021 San Diego Gas & Electric Company. All rights reserved. Removal of this copyright notice without permission is not permitted under law.

REV	CHANGE	DR	BY	DSN	APV	DATE	REV	CHANGE	DR	BY	DSN	APV	DATE
C	INFORMATION REMOVED	-	SL	JES	CZH	04/13/2020	F						
B	DRAWING UPDATE	PEI	-	-	-	04/22/2019	E						
A	ORIGINAL ISSUE	-	-	PTA	CAK	01/01/2000	D	MOVED TO FMO	EDM	RSL	JES	CZH	12/06/2021

X Indicates Latest Revision | Completely Revised | New Page | Information Removed

SDG&E ELECTRIC OVERHEAD FIELD MAINTENANCE ONLY STANDARDS

POLE TOP SWITCH 12KV
HORIZONTAL LOADBREAK TYPE SINGLE CIRCUIT
HORIZONTAL CONFIGURATION

SCOPE: THIS STANDARD SHOWS A HORIZONTAL BREAK GANG OPERATED POLE TOP SWITCH FOR CIRCUIT TIES OR SECTIONALIZING PURPOSES. THIS INSTALLATION IS PREFERRED OVER STANDARD 1228.

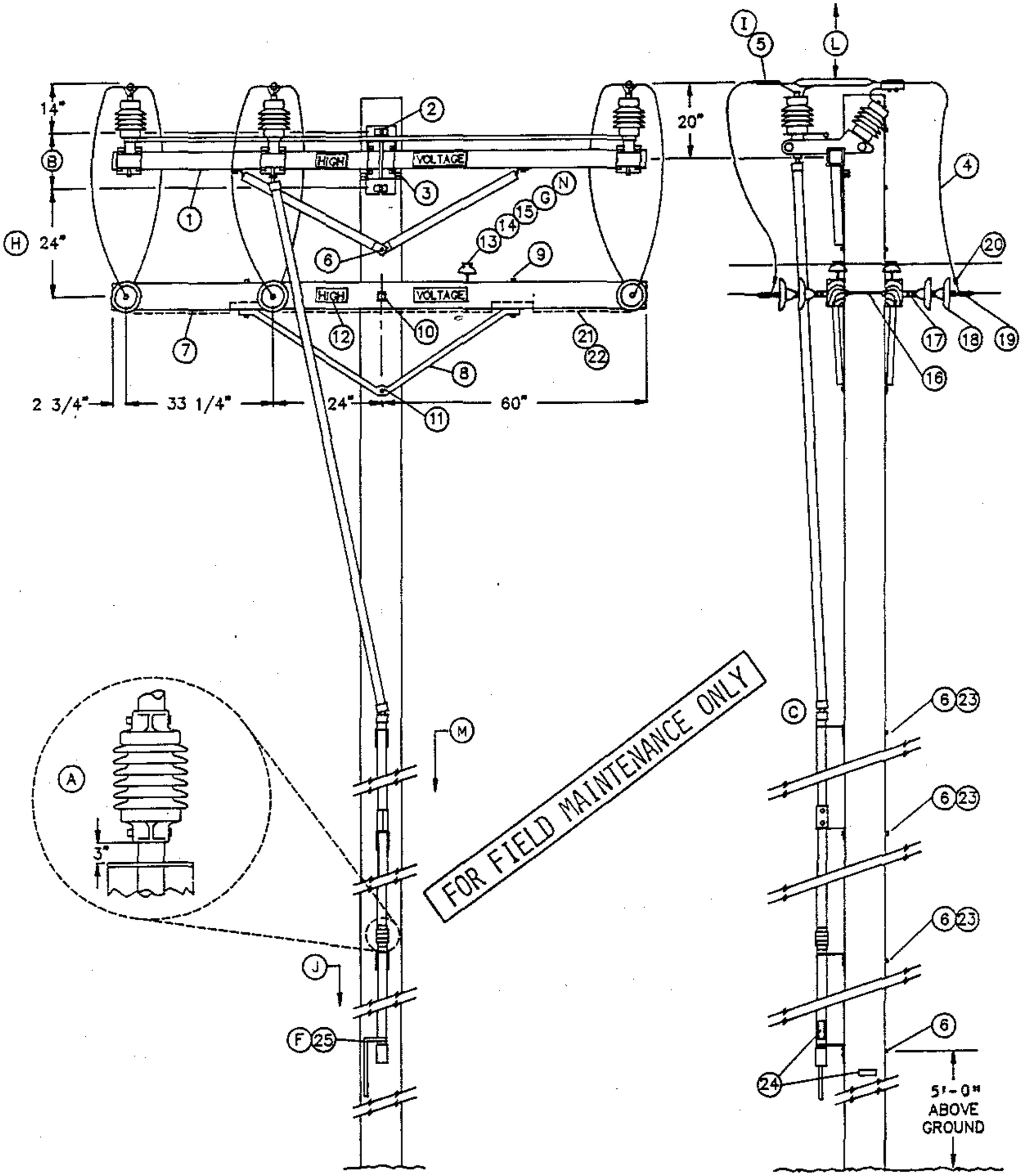

TABLE OF CONTENTS

DATE 1-1-93 APPD PA/BOG	SDG&E ELECTRIC STANDARDS POLE TOP SWITCH 12KV HORIZONTAL BREAK TYPE SINGLE CIRCUIT HORIZONTAL CONFIGURATION	1299.307 SUPERSEDES 1230.1 (1-1-92)

BILL OF MATERIAL:

ITEM	DESCRIPTION	QUANTITY	CONSTR. STD	STOCK NUMBER
1	SWITCH, T.P.S.T., 600 AMP, INCLUDING 40' OF CONTROL ROD (C)	1	-	709250
	ADDITIONAL 10'-6" CONTROL ROD WITH GUIDE BEARING AND COUPLING	AS REQ'D	-	604428
2	BOLT, MACH, GALV, 3/4" X (LENGTH AS REQ'D), 1 SQUARE AND 1 DOUBLE COIL SPRING WASHER (E)	2	392	-
3	SCREW, LAG, GALV, 1/2" X 4" (E)	2	-	621568
4	WIRE, BARE STRANDED CU OR AL (SIZE AS REQ'D)	33'	711-715	-
5	TERMINAL, COMPRESSION LUG (I) (E)	6	794-795	-
6	BOLT, MACH, GALV, 5/8" X (LENGTH AS REQ'D), 1 SQUARE AND 1 DOUBLE COIL SPRING WASHER (E)	5	392	-
7	CROSSARM, 3 3/4" X 5 3/4" X 10' - 0"	2	-	294128
8	BRACE, ANGLE, 5' - 0"	2	-	164128
9	BOLT, MACH, GALV, 1/2" X 7", 1 ROUND AND 1 DOUBLE COIL SPRING WASHER (E)	4	392	-
10	BOLT, MACH, GALV, 5/8" X (LENGTH AS REQ'D), 2 SQUARE AND 1 DOUBLE COIL SPRING WASHER (E)	1	392	-
11	BOLT, MACH, GALV, 5/8" X (LENGTH AS REQ'D) AND 1 DOUBLE COIL SPRING WASHER (E)	1	392	-
12	SIGN, HIGH VOLTAGE, AND (E) 9 ROOFING NAILS, GALV (E)	2 -	- -	647648 492224
13	PIN, INSULATOR, STRAIGHT, 12KV, 1" (G) (E)	2	-	532704
14	INSULATOR, 12KV NEUTRAL (G)	2	-	429216
15	WIRE, TIE (DOUBLE) (G) (E)	1	760-764	-
16	BOLT, SPACE, GALV, 5/8" X (LENGTH AS REQ'D), 2 SQUARE, 2 ROUND, 2 DOUBLE COIL SPRING WASHERS AND 1 NUT (E)	3	392	-
17	CLEVIS, DEAD END, 5/8" BOLT STEEL (CLOSED TYPE) (E)	6	-	235712
18	INSULATOR, SUSPENSION, 12KV, CLEVIS	12	750	-
19	CLAMP, STRAIGHT LINE, D.E.	6	741-743	-
20	CONNECTOR, WIRE COMPRESSION (SIZE AS REQ'D) (E)	AS REQ'D	783-786	-
21	WIRE, #8 BARE SOLID ANNEALED COPPER	12'	-	812928
22	STAPLE, FENCE, GALV, 1 1/4" (E)	AS REQ'D	-	678528
23	SCREW, LAG, GALV, 5/8" X 5" (E)	2	-	621600
24	TAG, SWITCH NUMBER	2	204	-
25	PADLOCK , MEDECO	1	-	514862

TABLE OF CONTENTS

FOR FIELD MAINTENANCE ONLY

1299.308 SUPERSEDES 230.2 (1-1-92)	SDG&E ELECTRIC STANDARDS POLE TOP SWITCH 12KV HORIZONTAL BREAK TYPE SINGLE CIRCUIT HORIZONTAL CONFIGURATION	DATE 11-1-93 APPD

INSTALLATION:

Ⓐ INSTALL CONTROL PIPE INSULATOR THREE INCHES ABOVE THE NEXT GUIDE BEARING UP FROM THE SWITCH HANDLE.

Ⓑ USE THE FOLLOWING THROUGH–BOLT DRILLING DIMENSIONS: A.B. CHANCE = 13–1/4", S&C = 14".

Ⓒ SWITCHES ARE FURNISHED WITH 40 FEET OF OPERATING CONTROL ROD. THE TOP SECTION OF THE CONTROL ROD IS MADE OF FIBER GLASS, THE LOWER SECTIONS ARE MADE OF GALVANIZED PIPE.

D. SWITCH CONTROL MECHANISM DOES NOT REQUIRE GROUNDING.

Ⓔ EXEMPT MATERIAL.

Ⓕ THE SWITCH IS SHIPPED FACTORY ADJUSTED. HOWEVER, THE SWITCH HANDLE LOCK SEGMENTS WILL REQUIRE ADJUSTMENT. REFER TO INSTALLATION INSTRUCTIONS PROVIDED WITH SWITCH.

Ⓖ REDUCE QUANTITIES AS REQUIRED WHEN NOT USING NEUTRAL.

Ⓗ SWITCH MAY BE INSTALLED BELOW LINEARM. DRILL SWITCH ARM UPPER MOUNTING BOLT HOLE 36" BELOW LINE ARM THRU BOLT (SEE STANDARD 1444).

Ⓘ WHEN ATTACHING 1/0 AND 4/0 COPPER CONDUCTORS TO A POLE TOP SWITCH, USE A BRONZE CABLE TAP LUG, STOCK NUMBER 471296. IF EXCESSIVE VIBRATION OR WHIPPING COULD OCCUR, USE TWO LUGS IN SERIES.

TABLE OF CONTENTS

REFERENCES:

Ⓙ POLE STEPPING – SEE STANDARD 363.

K. SEE DESIGN MANUAL PAGE 6111 – FEEDER CIRCUIT SECTIONALIZING AND PROTECTION.

Ⓛ SEE SECTION 200 FOR MINIMUM VERTICAL SEPARATION.

Ⓜ REFLECTOR STRIPS ARE REQUIRED ON ALL SECTIONALIZING/TIELINE SWITCHES AND SERVICE RESTORER POLES. (SEE STD. 208.3 ITEM 12)

Ⓝ NEUTRALS SHALL BE SOLIDLY TIED TOGETHER AT ALL SWITCHES REGARDLESS WHETHER THEY ARE NORMALLY OPEN OR CLOSED. THIS INCLUDES TIE SWITCHES TO CIRCUITS EMANATING FROM DIFFERENT SUBSTATIONS. (SEE DESIGN MANUAL STANDARD PAGE 6221.2, D.3).

O. CONTROL PIPE AND SWITCH HANDLE ARE NOT ALLOWED IN THE CLIMBING SPACE (G.O. 95, 54.7–A4).

FOR FIELD MAINTENANCE ONLY

DATE 1–1–93 APPD P.A./2009	SDG&E ELECTRIC STANDARDS POLE TOP SWITCH 12KV HORIZONTAL BREAK TYPE SINGLE CIRCUIT HORIZONTAL CONFIGURATION	1299.309 SUPERSEDES 1230.3 (1–1–92)

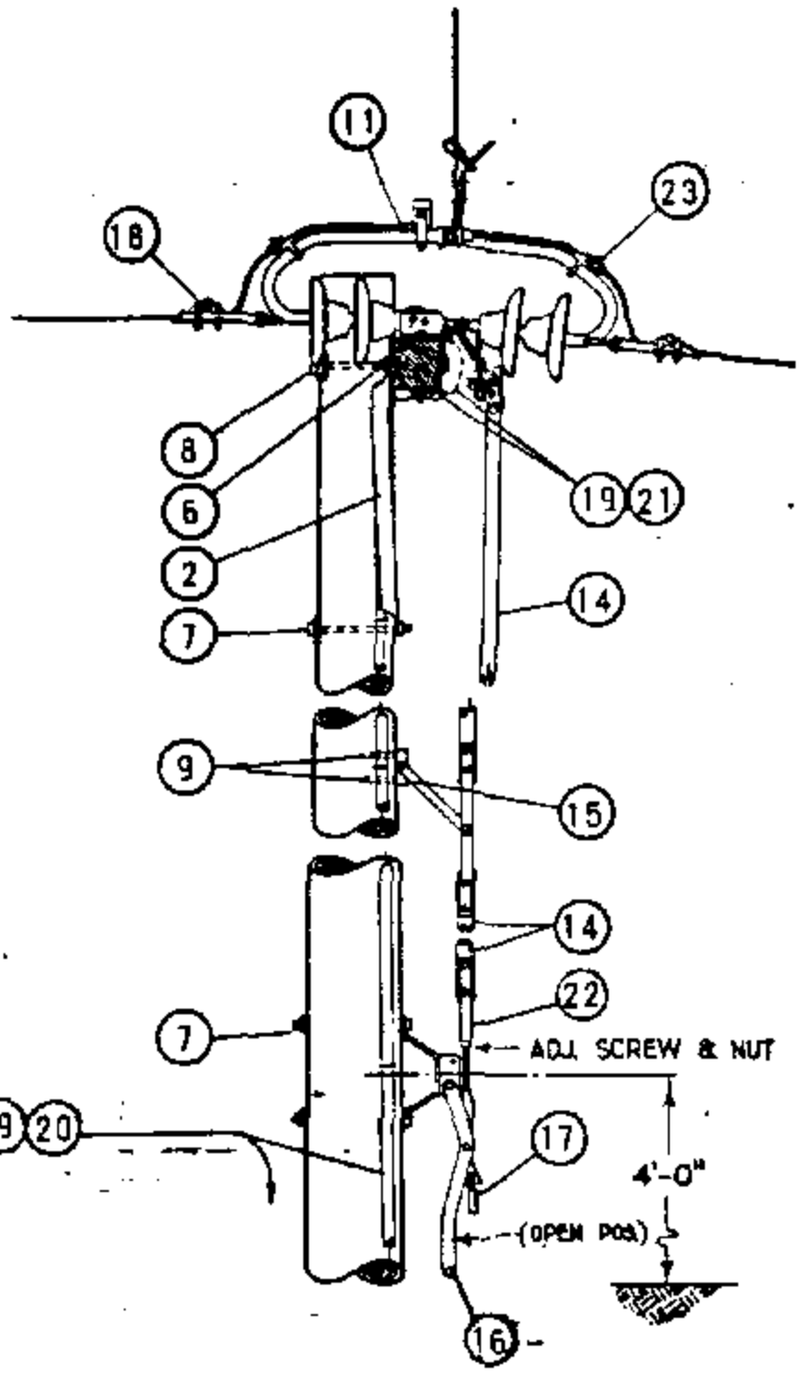

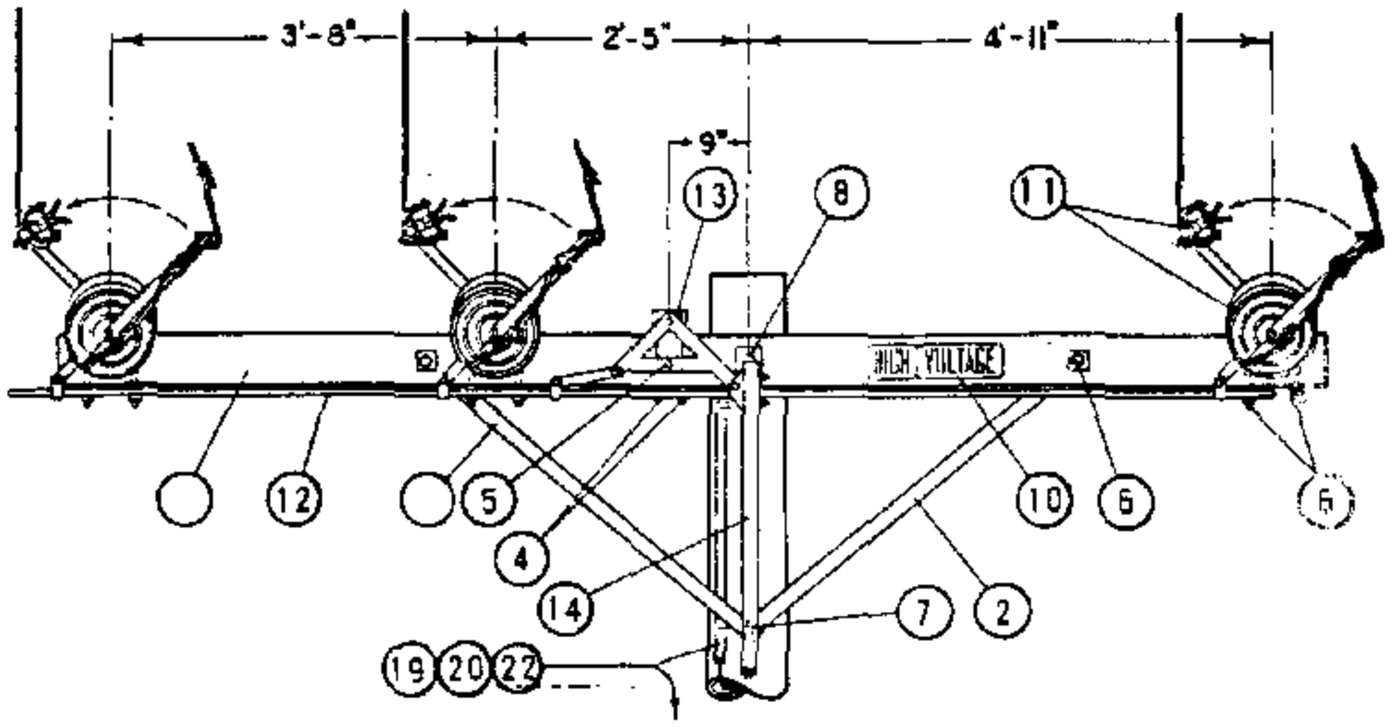

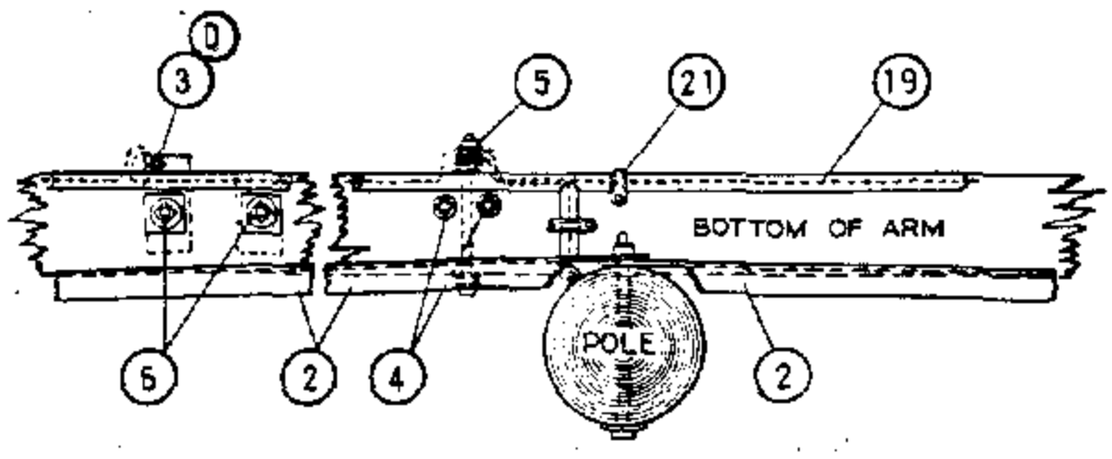

GROUNDING DETAIL

FOR FIELD MAINTENANCE ONLY

NOTES:

A. MAXIMUM VERTICAL ANGLE SHALL NOT EXCEED 7° FOR ANY CONDUCTOR SIZE.

B. WHERE THE VERTICAL ANGLE EXCEEDS 7° OR THE HORIZONTAL ANGLE EXCEEDS THE VALUE SHOWN IN THE TABLE BELOW, USE SWITCH CONSTRUCTION PG. 1229.

Ⓒ IF THE MAXIMUM DESIGN TENSION IS GREATER THAN 3000 LBS, THE ANGLE CAN BE CALCULATED BY:
THE SINE OF THE ANGLE $= \frac{200}{\text{TENSION}}$. THE ANGLE THEN CAN BE DETERMINED FROM TRIGONOMETRIC FUNCTION TABLES.

Ⓓ ITEM 3 IS A BOLT USED TO GROUND THE SWITCH MOUNTING HARDWARE.

MAXIMUM ALLOWABLE LINE ANGLE FOR SWITCHES

CONDUCTOR SIZE AWG OR KCM	COPPER				COPPERWELD COPPER		5005				ACSR						
	4	2	1/0	4/0	4A	4N	2	1/0	3/0	394.5	2 6/1	1/0 6/1	3/0 6/1	336.4 18/1	336.4 26/7	636 24/7	1033 45/7
LINE ANGLE DEGREES	15	9	6	5	7	3	16	11	8	4	13	9	6	5	4	4	4
MAXIMUM DESIGN TENSION LBS/CONDUCTOR	752	1218	1900	2424	1575	3384	717	1050	1480	2898	845	1300	1860	2450	Ⓒ 3000	Ⓒ 3000	Ⓒ 3000

DATE 1-1-87
APPD AL/BDS

SDG&E ELECTRIC STANDARDS

POLE TOP SWITCH INSTALLATION 12KV SINGLE CIRCUIT
HORIZONTAL CONFIGURATION

1299.301
SUPERSEDES
1230.1 (1-1-87)

TABLE OF CONTENTS

METHOD OF ADJUSTING SWITCH

A. FIRST CLOSE SWITCH AND TIGHTEN SWITCH UNIT CRANK CLAMPS TO INTERPHASE CONNECTING PIPE (12)

B. THEN OPEN SWITCH UNTIL SWITCH UNIT CRANK CLAMPS ARE PERPENDICULAR TO ARM.

C. WITH SHORT ARM BELL CRANK (13) ALSO PERPENDICULAR TO ARM, TIGHTEN BELL CRANK CLAMP.

D. WHILE CRANKS ARE PERPENDICULAR TO ARM, CONNECT WOODEN CONTROL ROD (14) TO LONG LEG OF BELL CRANK, CLAMP GUIDES (15) AND CONTOL HANDLE (16) SHOULD BE PERPENDICULAR TO POLE AND HOLD DOWN HOLES (9) DRILLED WHILE IN THIS POSITION

(E) EXEMPT MATERIAL

F. LUBRICATE MOVING PARTS WITH A THIN LAYER OF #89 MEDIUM SILICONE GREASE OR EQUIVALENT.

G. GIVE SWITCH A FEW TRAIL OPERATIONS AND MAKE ADJUSTMENTS ON ADJUSTING SCREW AS NECESSARY.

H. 400 AMP SWITCHES MAY BE USED WITH 336.4 KCMIL AND SMALLER CONDUCTORS. 600 AMP SWITCHES SHALL BE USED ON 636 KCMIL CONDUCTOR AND 1200 AMP SWITCHES SHALL BE USED ON 1033.5 KCMIL CONDUCTOR.

FOR FIELD MAINTENANCE ONLY

ITEM		DESCRIPTION		QUAN.	STOCK NO. OR CONSTR. STD.
P	1	CROSSARM, 5 3/4" X 5 3/4" X 12'-0"		1	294016
	2	BRACE, ALLEY ARM, 4'-0"		2	163808
T	3	BOLT, MACH., GALV., 1/2" X 1 1/2", 2-RD., 1-LOCK WASH. & 1-NUT	(E)	3	100 SECTION
	4	BOLT, MACH., GALV., 1/2" X 8", 1-RD., 1-DBL. COIL SPR. WASH & 1-NUT	(E)	2	100 SECTION
	5	BOLT, MACH., GALV., 1/2" X 8", 3-RD., 1-DBL. COIL SPR. WASH. & 2-NUTS	(E)	1	100 SECTION
&	6	BOLT, MACH., GALV., 5/8" X 8", 1-2 1/4" SQ., 1-DBL. COIL SPR. WASH. & 1-NUT	(E)	8	100 SECTION
	7	BOLT, MACH., GALV., 5/8" X (LENGTH AS REQ'D), 1-DBL. COIL SPR. WASH. & 1-NUT	(E)	3	100 SECTION
	8	BOLT, MACH., GALV., 3/4" X 16", 1-3" SQ., 1-FLAT, 1-CURV., 1-DBL. COIL SPR. WASH & 1-NUT		1	100 SECTION
F	9	SCREW, LAG, GALV., 1/2" X 4"	(E)	4	621568
	10	SIGN, HIGH VOLTAGE, 8-ROOFING NAILS, GALV.	(E)	2	647648, 492192
	11	POLE TOP SWITCH, 15KV, T.P.S.T., HORIZONTALLY MOUNTED, RIGID DISC. INSULATORS ARCING HORNS & INCLUDING ITEMS #13 THRU #17.		1	709168 400A 709184 600A 709280 1200A
	12	PIPE, INTERPHASE CONNECTING, GALV., 1/2" X 11'-6" OR WOOD 1 3/4" X 1 3/4" X 11'-6"		1	-
O	13	BELL CRANK ASSEMBLY		1	290624
	14	ROD, CONTROL, 1 3/4" X 1 3/4" X 10'-0", LAMINATED WOOD		4	602938
C	15	GUIDE BEARING, INTERMEDIATE		3	398688
	16	OPERATING LEVER ASSEMBLY COMPLETE WITH ADJUSTING SCREW & NUT		1	-
&	17	PADLOCK, ELECTRIC FF		1	514848
	18	CLAMP, STRAIGHT LINE O.E.		6	700 SECTION
O	19	WIRE, BARE STRANDED COPPER, #6 BONDING & GROUNDING WIRE		60'	813536
	20	GROUND UNIT (GRAY OR PLAIN)		1	603120, 603136
	21	PIPE STRAP, 3/4" & 2-8D NAILS, GALV.	(E)	9	697888, 491584
	22	TAGS, SWITCH NUMBER	(E)	2	720704
	23	CONNECTOR, COPPER TO ALUMINUM #1/0-336.4 MCM ACSR OR 5005, WHERE REQ'D.		6	700 SECTION

TABLE OF CONTENTS

1299.302
SUPERSEDES
1230.2 (1-1-87)

SDG&E ELECTRIC STANDARDS

POLE TOP SWITCH INSTALLATION
12KV SINGLE CIRCUIT HORIZONTAL CONFIGURATION

DATE 1-1-87
APPD AK / [illegible]

SCOPE: THIS STANDARD SHOWS A HORIZONTAL BREAK GANG OPERATED POLE TOP SWITCH FOR CIRCUIT TIES OR SECTIONALIZING PURPOSES. THIS INSTALLATION IS PREFERRED OVER STANDARD 1228.

NOTE: SWITCH AND CONTROL ROD MAY BE INSTALLED ON EITHER SIDE OF POLE. IF INSTALLATION IS LIMITED TO ONE SIDE OF POLE ONLY, AND SWITCH DOES NOT MATCH EXISTING PHASE POSITIONS, SEE FIGURE 2 SWITCH.

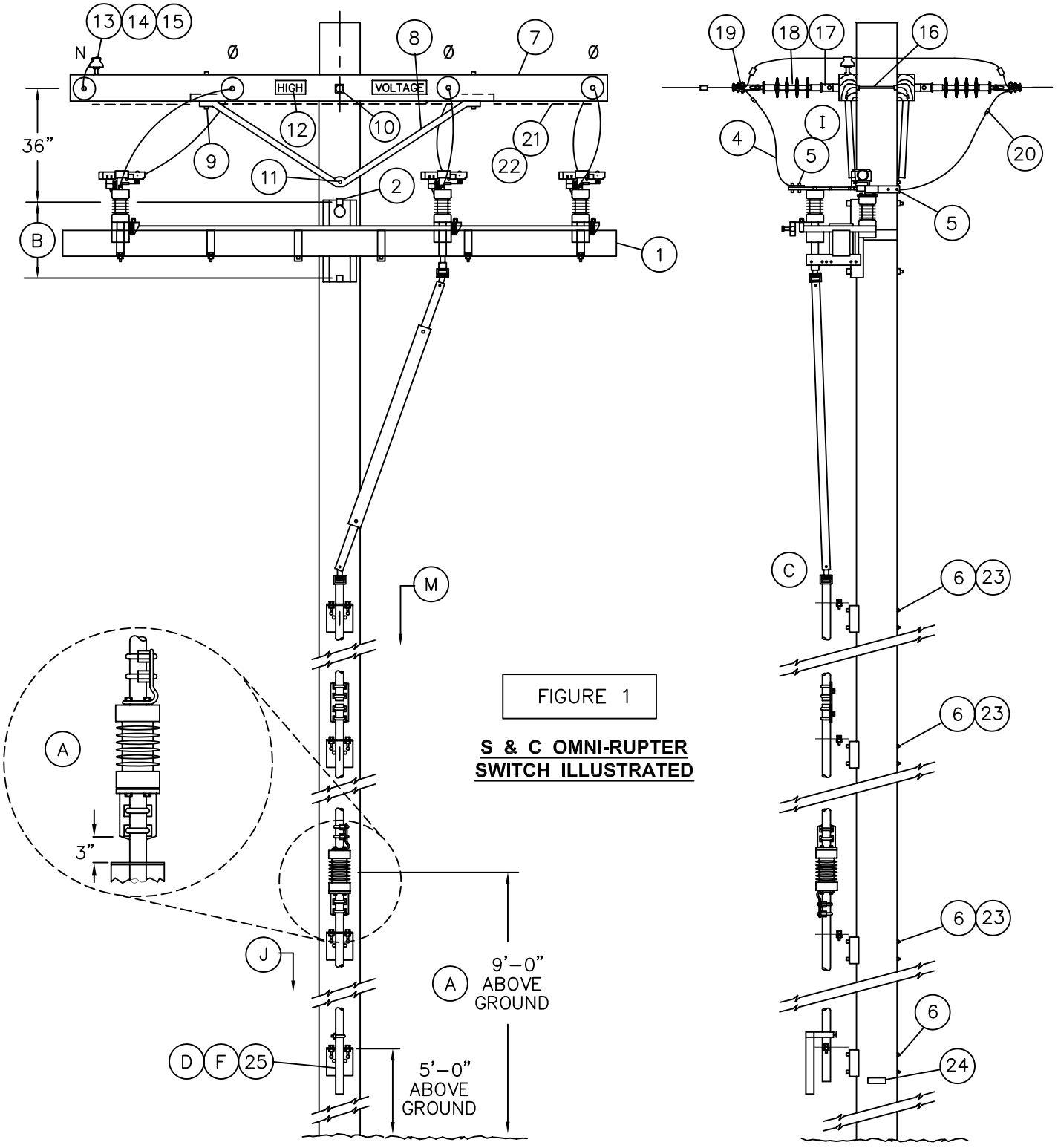

FIGURE 1

S & C OMNI-RUPTER SWITCH ILLUSTRATED

© 1998 - 2005 San Diego Gas & Electric Company. All rights reserved. Removal of this copyright notice without permission is not permitted under law.

	Indicates Latest Revision	Completely Revised	New Page	Information Removed

1230.1	SDG&E ELECTRIC STANDARDS POLE TOP SWITCH 12KV HORIZONTAL LOADBREAK TYPE SINGLE CIRCUIT HORIZONTAL CONFIGURATION	REVISION DATE 1–1–2000 APPD PSA / CMK

TABLE OF CONTENTS

TABLE OF CONTENTS

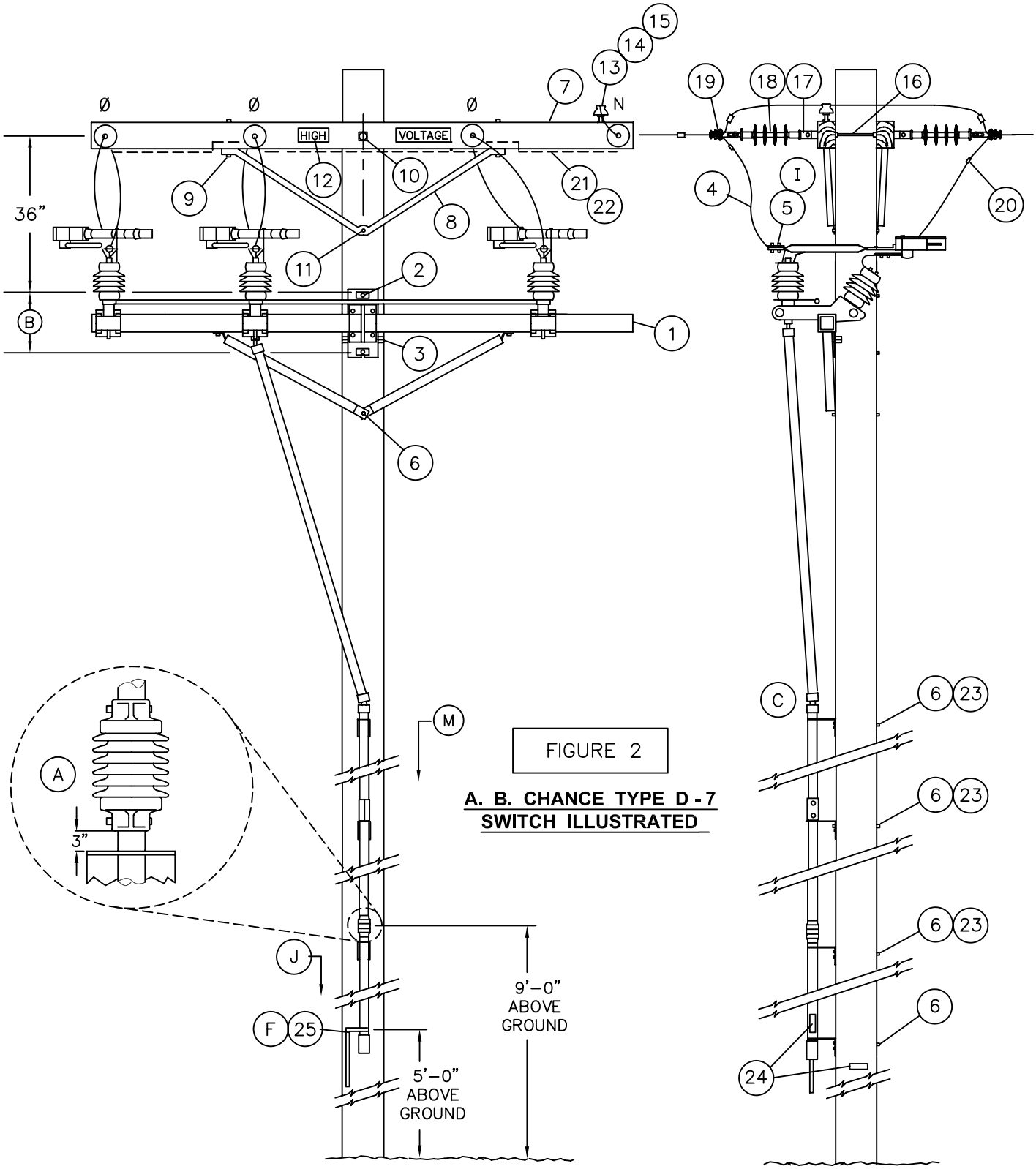

FIGURE 2

A. B. CHANCE TYPE D - 7 SWITCH ILLUSTRATED

© 1998 - 2005 San Diego Gas & Electric Company. All rights reserved. Removal of this copyright notice without permission is not permitted under law.

	Indicates Latest Revision	Completely Revised	New Page	Information Removed

REVISION	SDG&E ELECTRIC STANDARDS	
DATE 1–1–2000 APPD PEA / CMK	POLE TOP SWITCH 12KV HORIZONTAL LOADBREAK TYPE SINGLE CIRCUIT HORIZONTAL CONFIGURATION	1230.2

BILL OF MATERIAL:

ITEM	DESCRIPTION			QUANTITY	CONST STD OR PAGE NO	STOCK NUMBER	ASSEMBLY UNITS
1	SWITCH, GANG–OPERATED, 15KV, 600 AMP, WITH INTERRUPTERS, INCLUDING 40' OF CONTROL ROD	FIG. 1	S&C	1	–	709252	GANG–S
		FIG. 2	CHANCE	1	–	709258	GANG–C
	ADDITIONAL 10'–6" CONTROL ROD WITH GUIDE BEARING AND COUPLING		S&C	AS REQ'D	–	602934	S–ROD
			CHANCE	AS REQ'D	–	604428	C–ROD
	LOAD INTERRUPTER–A.B. CHANCE SWITCH ONLY IF RETRO–FITTING REQUIRED		TYPE D	3	–	433794	LDBRKD
			TYPE S	3	–	433796	LDBRKS
2	BOLT, MACH, GALV, 3/4" X (LENGTH AS REQ'D), 1 SQUARE AND 1 DOUBLE COIL SPRING WASHER			2	392	–	–
3	SCREW, LAG, GALV, 1/2" X 4"			2	–	621568	–
4	WIRE, BARE STRANDED CU OR AL (SIZE AS REQ'D)			33'	711–715	–	–
5	TERMINAL, COMPRESSION LUG (I)			6	794–795	–	–
6	BOLT, MACH, GALV, 5/8" X (LENGTH AS REQ'D), 1 SQUARE AND 1 DOUBLE COIL SPRING WASHER			AS REQ'D	392	–	–
7	CROSSARM, 3 3/4" X 5 3/4" X 10' – 0"			2	–	294128	4–
8	BRACE, ANGLE, 5' – 0"			2	–	164128	5HUB
9	BOLT, MACH, GALV, 1/2" X 7", 1 ROUND AND 1 DOUBLE COIL SPRING WASHER			4	392	–	–
10	BOLT, MACH, GALV, 5/8" X (LENGTH AS REQ'D), 2 SQUARE AND 1 DOUBLE COIL SPRING WASHER			1	392	–	–
11	BOLT, MACH, GALV, 5/8" X (LENGTH AS REQ'D) AND 1 DOUBLE COIL SPRING WASHER			1	392	–	–
12	SIGN, HIGH VOLTAGE, AND 9 ROOFING NAILS, GALV			2	–	647648	HV
				–	–	492224	–
13	PIN, INSULATOR, STRAIGHT, 12KV, 1" (G)			2	–	532704	PS1
14	INSULATOR, 12KV NEUTRAL (G)			2	–	429216	55–3/I
15	WIRE, TIE (DOUBLE) (G)			1	760–764	–	–
16	BOLT, SPACE, GALV, 5/8" X (LENGTH AS REQ'D), 3 SQUARE, 2 ROUND, 2 DOUBLE COIL SPRING WASHERS AND 1 NUT (G)			4	392	–	–
17	CLEVIS, DEAD END, 5/8" BOLT STEEL (CLOSED TYPE) (G)			8	–	235712	–
18	INSULATOR, SUSPENSION, 12KV, CLEVIS (G)			8	750	431650	–
19	CLAMP, STRAIGHT LINE, D.E. (G)			8	741–743	–	–
20	CONNECTOR, WIRE COMPRESSION (SIZE AS REQ'D)			AS REQ'D	783–786	–	–
21	WIRE, #8 BARE SOLID ANNEALED COPPER			12'	–	812928	BOND8
22	STAPLE, FENCE, GALV, 1 1/4"			AS REQ'D	–	678528	–
23	SCREW, LAG, GALV, 5/8" X 5"			2	–	621600	–
24	TAG, SWITCH NUMBER			2	204	–	–
25	PADLOCK, SCHLAGE ELECTRIC SERIES			1	–	514848	–

OVERHEAD MACRO UNITS	
FIG. 1	S12SWI
FIG. 2	C12SWI

© 1998 - 2005 San Diego Gas & Electric Company. All rights reserved. Removal of this copyright notice without permission is not permitted under law.

Indicates Latest Revision | Completely Revised | New Page | Information Removed

	SDG&E ELECTRIC STANDARDS	REVISION
1230.3	POLE TOP SWITCH 12KV HORIZONTAL BREAK TYPE SINGLE CIRCUIT HORIZONTAL CONFIGURATION	DATE 1–1–2000 APPD PEA / CMK

TABLE OF CONTENTS

INSTALLATION:

(A) INSTALL CONTROL PIPE INSULATOR THREE INCHES ABOVE GUIDE BEARING AND A MINIMUM OF 9'–0" ABOVE GROUND.

(B) USE THE FOLLOWING THROUGH–BOLT DRILLING DIMENSIONS: A.B. CHANCE = 13–1/4", S&C = 14".

(C) SWITCHES ARE FURNISHED WITH 40 FEET OF OPERATING CONTROL ROD. THE TOP SECTION OF THE CONTROL ROD IS MADE OF FIBER GLASS, THE LOWER SECTIONS ARE MADE OF GALVANIZED PIPE.

(D) DO NOT GROUND SWITCH CONTROL MECHANISM.

(F) THE SWITCH IS SHIPPED FACTORY ADJUSTED. HOWEVER, THE SWITCH HANDLE LOCK SEGMENTS WILL REQUIRE ADJUSTMENT. REFER TO INSTALLATION INSTRUCTIONS PROVIDED WITH SWITCH. **NOTE: SUBSTANTIAL PRESSURE MUST BE APPLIED TO THE SWITCH HANDLE IN THE CLOSING DIRECTION TO PLACE "WIND - UP" TENSION IN THE CONTROL ROD BEFORE DROPPING HANDLE INTO CLOSED - POSITION SLOT.**

(G) REDUCE QUANTITIES AS REQUIRED WHEN NOT USING NEUTRAL.

(I) WHEN ATTACHING 1/O AND 4/O COPPER CONDUCTORS TO A POLE TOP SWITCH, USE A BRONZE CABLE TAP LUG, STOCK NUMBER 471296. IF EXCESSIVE VIBRATION OR WHIPPING COULD OCCUR, USE TWO LUGS IN SERIES.

REFERENCE:

(J) POLE STEPPING – SEE STANDARD 363.

K. SEE DESIGN MANUAL PAGE 6111 – FEEDER CIRCUIT SECTIONALIZING AND PROTECTION.

L. SWITCH OPERATING RODS MAY EXTEND ONE–HALF THEIR DIAMETER INTO THE CLIMBING SPACE (G.O. 95, 54.7–A3).

(M) REFLECTOR STRIPS ARE REQUIRED ON ALL SECTIONALIZING/TIELINE SWITCHES AND SERVICE RESTORER POLES. (SEE STD. 208.3 ITEM 12)

(N) NEUTRALS SHALL BE SOLIDLY TIED TOGETHER AT ALL SWITCHES REGARDLESS WHETHER THEY ARE NORMALLY OPEN OR CLOSED. THIS INCLUDES TIE SWITCHES TO CIRCUITS EMANATING FROM DIFFERENT SUBSTATIONS. (SEE DESIGN MANUAL STANDARD PAGE 6221.2, D.3).

TABLE OF CONTENTS

© 1998 - 2005 San Diego Gas & Electric Company. All rights reserved. Removal of this copyright notice without permission is not permitted under law.

	Indicates Latest Revision		Completely Revised		New Page		Information Removed

REVISION DATE 1–1–2000 APPD PSA / CAK	SDG&E ELECTRIC STANDARDS POLE TOP SWITCH 12KV HORIZONTAL BREAK TYPE SINGLE CIRCUIT HORIZONTAL CONFIGURATION	1230.4

FIELD MAINTENANCE ONLY

REVISION HISTORY:

7/13/2016: All versions prior to 2016 are superseded by their current version found inside the Overhead Construction Standard Manual.

TABLE OF CONTENTS

© 1998 - 2016 San Diego Gas & Electric Company. All rights reserved. Removal of this copyright notice without permission is not permitted under law.

REV	CHANGE	BY	DSGN	APPV	DATE	REV	CHANGE	BY	DSGN	APPV	DATE
C						F					
B						E					
A	ORIGINAL ISSUE	JS	IL	MDJ	7/13/2016	D					

X Indicates Latest Revision | Completely Revised | New Page | Information Removed

SHEET
1 OF 1

SDG&E ELECTRIC OVERHEAD STANDARD

POLE TOP SWITCH INSTALLATION 12KV SINGLE CIRCUIT
VERTICAL CONFIGURATION

FMO
OH 1231

TABLE OF CONTENTS

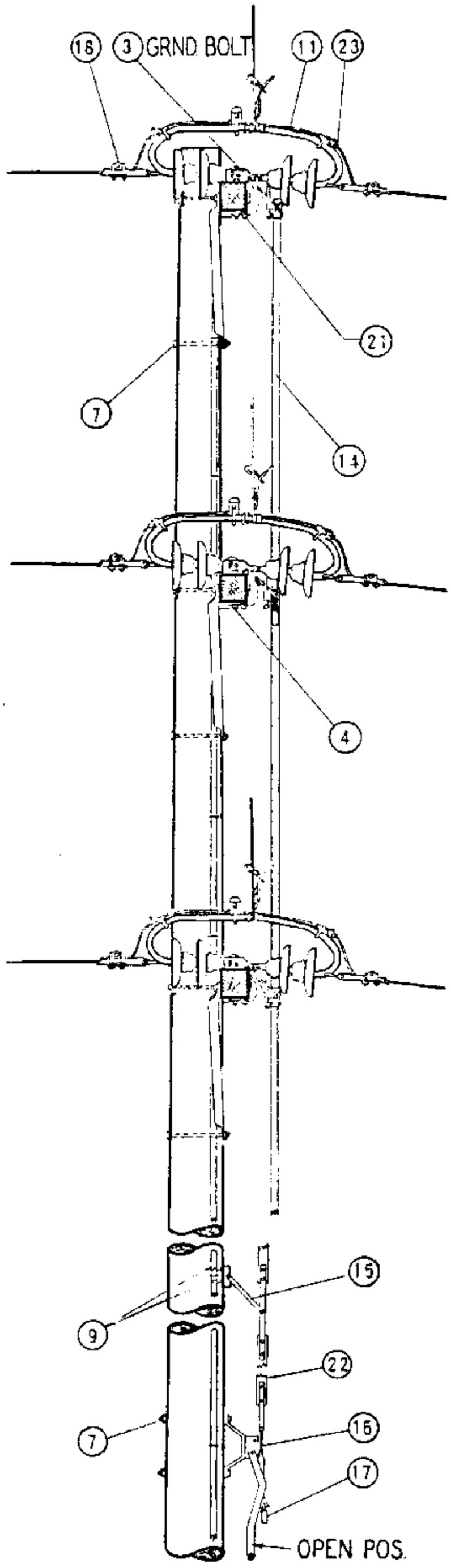

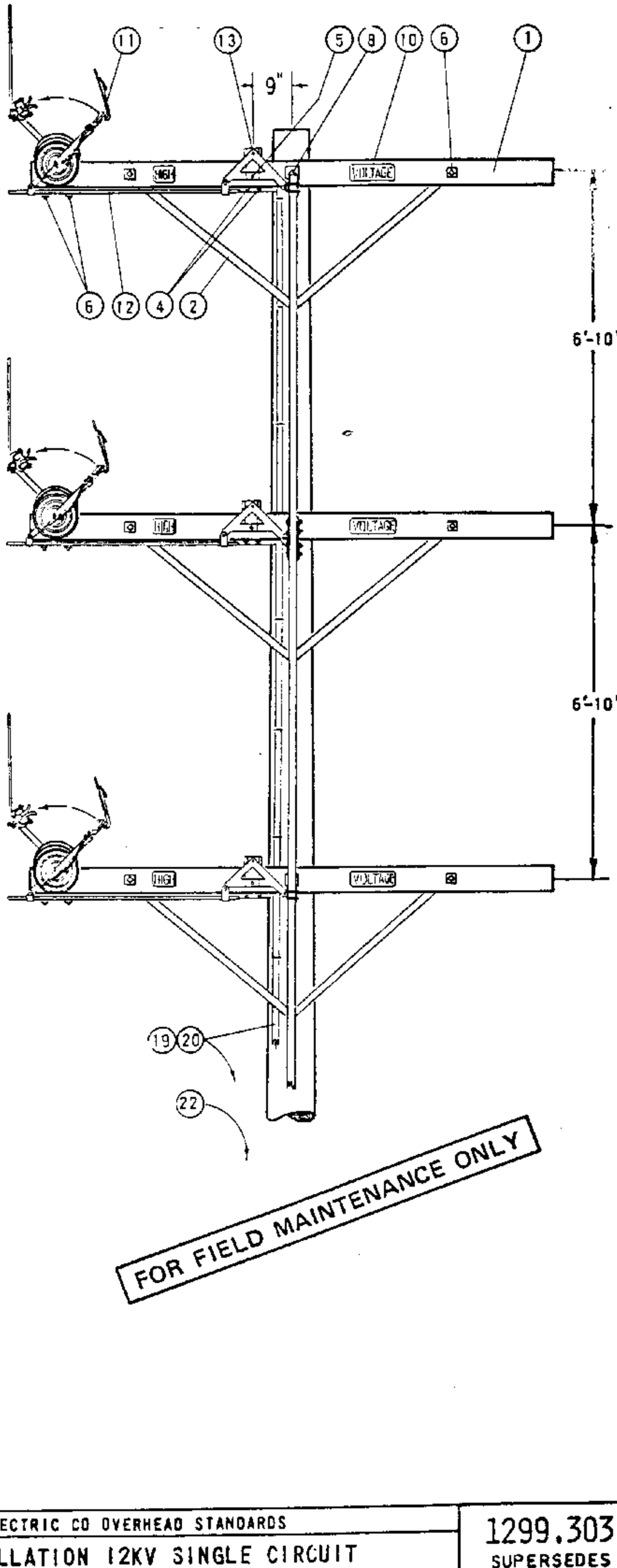

DATE 1-1-87 APD AK/RS	SAN DIEGO GAS & ELECTRIC CO OVERHEAD STANDARDS POLE TOP SWITCH INSTALLATION 12KV SINGLE CIRCUIT VERTICAL CONFIGURATION	1299.303 SUPERSEDES 1231.1 (1-1-87)

FOR FIELD MAINTENANCE ONLY

NOTES:
A. FOR METHOD OF ADJUSTING SWITCH, SEE PAGE 1230.
(E) EXEMPT MATERIAL.

ITEM		DESCRIPTION		QUAN.	STOCK NO. OR CONSTR. STD.
P T B F	1	CROSSARM, 5 3/4" X 5 3/4" X 10'-0"		3	294016
	2	BRACE, ALLEY ARM, 4'-0"		6	163808
	3	BOLT, MACH., GALV., 1/2" X 1 1/2", 2-RD., 1-LOCK WASH. & 1-NUT	(E)	3	100 SECTION
	4	BOLT, MACH., GALV., 1/2" X 8", 1-RD., 1-DBL. COIL SPR. WASH & 1-NUT	(E)	6	100 SECTION
	5	BOLT, MACH., GALV., 1/2" X 8", 3-RD., 1-DBL. COIL SPR. WASH. & 1-NUT	(E)	3	100 SECTION
	6	BOLT, MACH., GALV., 5/8" X 8", 1-2 1/4" SQ., 1-DBL. COIL SPR. WASH. & 1-NUT	(E)	12	100 SECTION
	7	BOLT, MACH., GALV., 5/8" X (LENGTH AS REQ'D), 1-DBL. COIL SPR. WASH. & 1-NUT	(E)	5	100 SECTION
	8	BOLT, MACH., GALV., 3/4" X 16", 1-3" SQ., 1-FLAT, 1-CURV., 1-DBL. COIL SPR. WASH & 1-NUT		3	100 SECTION
	9	SCREW, LAG, GALV., 1/2" X 4"	(E)	6	621568
	10	SIGN, HIGH VOLTAGE, 8-ROOFING NAILS, GALV.	(E)	6	647648, 492192
O C B D	11	POLE TOP SWITCH, 15KV, T.P.S.T., VERTICALLY MOUNTED, RIGID DISC. INSULATORS ARCING HORNS & INCLUDING ITEMS #13 THRU #17.		1	709168 400A 709184 600A
	12	PIPE, INTERPHASE CONNECTING, GALV., 1/2" X 4'-6"		3	-
	13	BELL CRANK ASSEMBLY		3	290624
	14	ROD, CONTROL, 1 3/4" X 1 3/4" X 10'-0", LAMINATED WOOD		6	602938
	15	GUIDE BEARING, INTERMEDIATE		4	398688
	16	OPERATING LEVER ASSEMBLY COMPLETE WITH ADJUSTING SCREW & NUT		1	-
	17	PADLOCK, ELECTRIC FF		1	514848
	18	CLAMP, STRAIGHT LINE D.E.		6	700 SECTION
	19	WIRE, BARE STRANDED COPPER, #6		70'	813536
	20	GROUND UNIT (GRAY OR PLAIN)		1	603120, 603136
	21	PIPE STRAP, 3/4" & 2-8D NAILS, GALV.	(E)	9	697888, 491584
	22	TAGS, SWITCH NUMBER	(E)	2	720704
	23	CONNECTOR, COPPER TO ALUMINUM #1/0-336.4 MCM ACSR OR 5005, WHERE REQ'D.		6	700 SECTION

1299.304
SUPERSEDES
1231.2 (1-1-87)

SDGBE ELECTRIC STANDARDS

POLE TOP SWITCH INSTALLATION
12KV SINGLE CIRCUIT VERTICAL CONFIGURATION

DATE 1-1-87
APPD AK 1/89

TABLE OF CONTENTS

FIELD MAINTENANCE ONLY

REVISION HISTORY:

7/13/2016: All versions prior to 2016 are superseded by their current version found inside the Overhead Construction Standard Manual.

TABLE OF CONTENTS

© 1998 - 2016 San Diego Gas & Electric Company. All rights reserved. Removal of this copyright notice without permission is not permitted under law.

REV	CHANGE	BY	DSGN	APPV	DATE	REV	CHANGE	BY	DSGN	APPV	DATE
C						F					
B						E					
A	ORIGINAL ISSUE	JS	IL	MDJ	7/13/2016	D					

X Indicates Latest Revision | Completely Revised | New Page | Information Removed

SHEET
1 OF 1

SDG&E ELECTRIC OVERHEAD STANDARD

POLE TOP SWITCH INSTALLATION 69KV
SINGLE CIRCUIT TRIANGULAR CONFIGURATION

FMO
OH 1236

TABLE OF CONTENTS

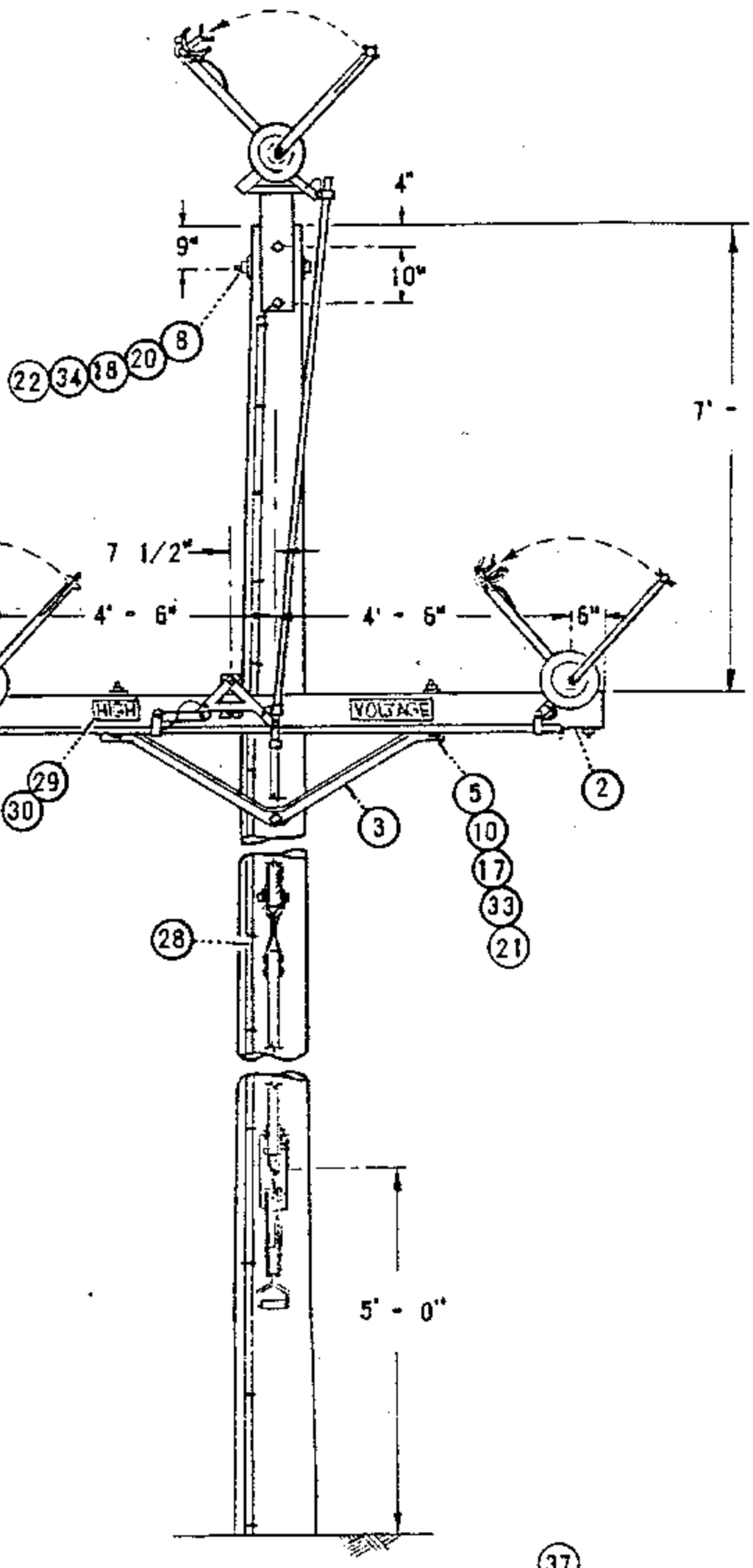

BOTTOM OF ARM
GROUNDING DETAIL

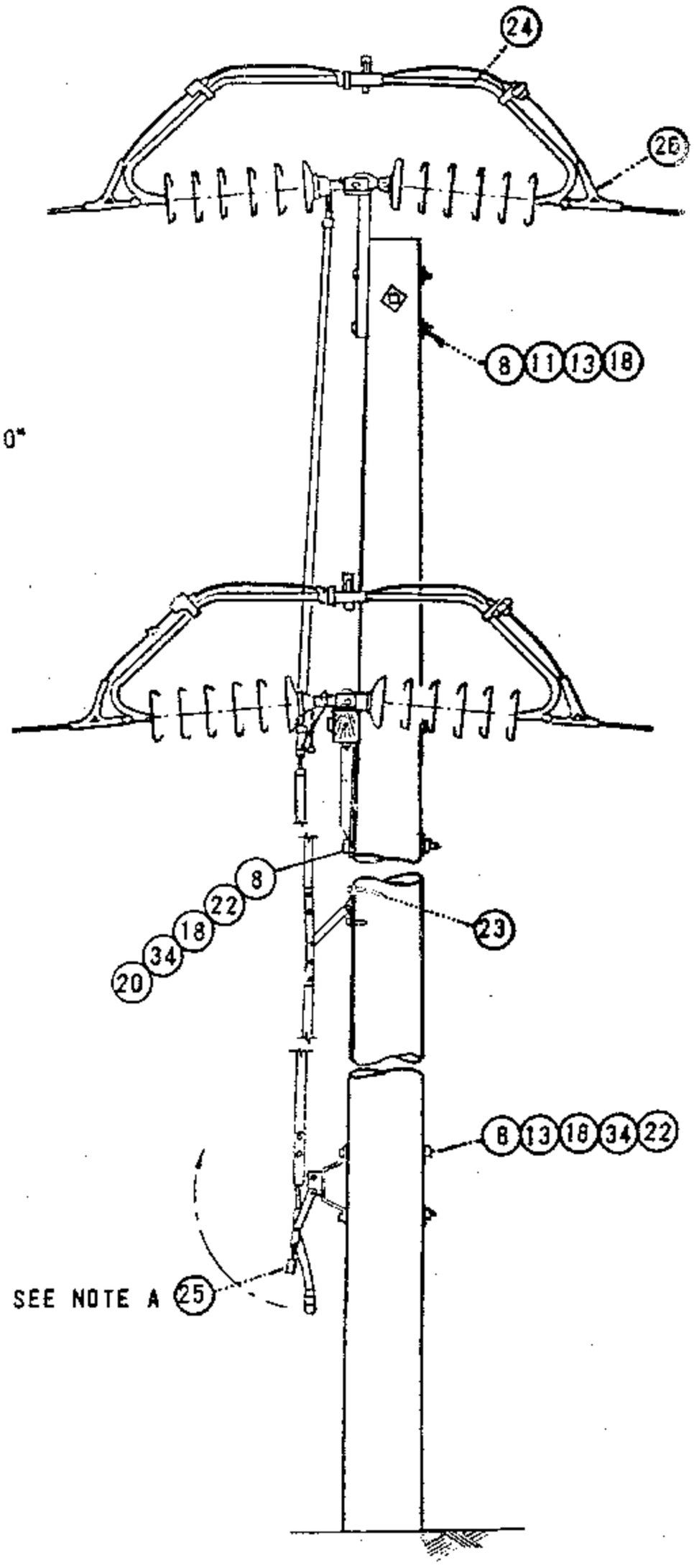

FOR FIELD MAINTENANCE ONLY

DATE 1-1-87 APPD AK/DSS	SAN DIEGO GAS & ELECTRIC CO OVERHEAD STANDARDS POLE TOP SWITCH INSTALLATION 69KV SINGLE CIRCUIT TRIANGULAR CONFIGURATION	1299.305 SUPERSEDES 1236.1 (1-1-87)

FOR FIELD MAINTENANCE ONLY

NOTES:

A. SWITCH HANDLE SHOWN IN OPEN POSITION.

B. REFER TO PAGE 1230 FOR METHOD OF ADJUSTING SWITCH AND FOR DETERMINING MAXIMUM LINE ANGLE PERMITTED FOR SWITCH.

C. THE 600 AMP SWITCH MAY BE USED ON SINGLE CIRCUIT 636 KCMIL AND SMALLER CONDUCTORS.

(E) EXEMPT MATERIAL.

ITEM PTF	ITEM TOC	MATERIAL		QUANTITY	STOCK NO OR CONSTR STD.
1		POLE, CLASS AND HEIGHT (AS REQ'D)		1	300 SECTION
2		CROSSARM, 5 3/4" X 5 3/4" X 10' - 0" (CELLON OR GRAY)		1	294144 OR 294304
3		BRACE, CROSSARM 5' - 0" ANGLE STEEL		1	164128
4		BOLT, MACH. 1/2" X 1 1/2"	(E)	3	152608
5		BOLT, MACH. 1/2" X 8"	(E)	5	153152
6					
7		BOLT, MACH. 5/8" X 8"	(E)	4	155584
8		BOLT, MACH. 5/8" X (LENGTH AS REQ'D)	(E)	6	100 SECTION
9		BOLT, MACH 3/4" X (LENGTH AS REQ'D)		1	100 SECTION
10		WASHER, 1/2" ROUND	(E)	11	800192
11		WASHER, 5/8" ROUND	(E)	2	800320
12		WASHER, 1/2" LOCK	(E)	3	796768
13		WASHER, 3" SQUARE CURVED RIB	(E)	5	797792
14		WASHER, 4" SQUARE CURVED RIB		1	797760
15					
16		WASHER, 2 1/4" SQUARE FLAT	(E)	7	799040
17		WASHER, SPRING DOUBLE COIL 1/2"	(E)	5	798464
18		WASHER, SPRING DOUBLE COIL 5/8"	(E)	12	798560
19		WASHER, SPRING DOUBLE COIL 3/4"		1	798496
20		WASHER, 3" SQUARE CURVED		2	798912
21		NUT, 1/2"	(E)	8	504736
22		NUT 5/8"	(E)	12	506880
23		SCREW, LAG 1/2" X 4"	(E)	2	621568
	24	POLE TOP SWITCH, 69KV, 600 AMP		1	709088
	25	PAD LOCK, ELECTRIC FF		1	514848
	26	CLAMPS, STRAIN		6	700 SECTION
27		WIRE, BARE STRANDED COPPER, #6		60'	813536
28		ROD, GROUND UNIT (GRAY OR PLAIN)		1	603120, 603136
29		SIGN, HIGH VOLTAGE	(E)	2	647648
30		NAILS, ROOFING 8 GALV.	(E)	28	492192
31		CONDUIT, SCH. 40, 1/2"	(E)	9'	251168
32		STRAP, 1/2" PIPE	(E)	5	697728
33		LOCKNUT, M-F 1/2"	(E)	5	504544
34		LOCKNUT, M-F 5/8"	(E)	10	504608
35		LOCKNUT, M-F 3/4"		1	504576
36		WASHER, 3" SQUARE FLAT		1	799104
37		NUT, 3/4		1	100 SECTION
38		TAGS, SWITCH NUMBER		2	720704

TABLE OF CONTENTS

1299.306
SUPERSEDES
1236.2 (1-1-87)

SDG&E ELECTRIC STANDARDS

POLE TOP SWITCH INSTALLATION 69KV
SINGLE CIRCUIT TRIANGULAR CONFIGURATION

DATE 1-1-87
APPD AK RDS

FIELD MAINTENANCE ONLY

REVISION HISTORY:

7/13/2016: All versions prior to 2016 are superseded by their current version found inside the Overhead Construction Standard Manual.

TABLE OF CONTENTS

© 1998 - 2016 San Diego Gas & Electric Company. All rights reserved. Removal of this copyright notice without permission is not permitted under law.

REV	CHANGE	BY	DSGN	APPV	DATE	REV	CHANGE	BY	DSGN	APPV	DATE
C						F					
B						E					
A	ORIGINAL ISSUE	JS	IL	MDJ	7/13/2016	D					

X Indicates Latest Revision | Completely Revised | New Page | Information Removed

SHEET
1 OF 1

SDG&E ELECTRIC OVERHEAD STANDARD

POLE TOP SWITCH INSTALLATION
4KV WESTINGHOUSE OIL SWITCH, TYPE F011

FMO
OH 1240

THIS PAGE FOR FIELD MAINTENANCE ONLY

TABLE OF CONTENTS

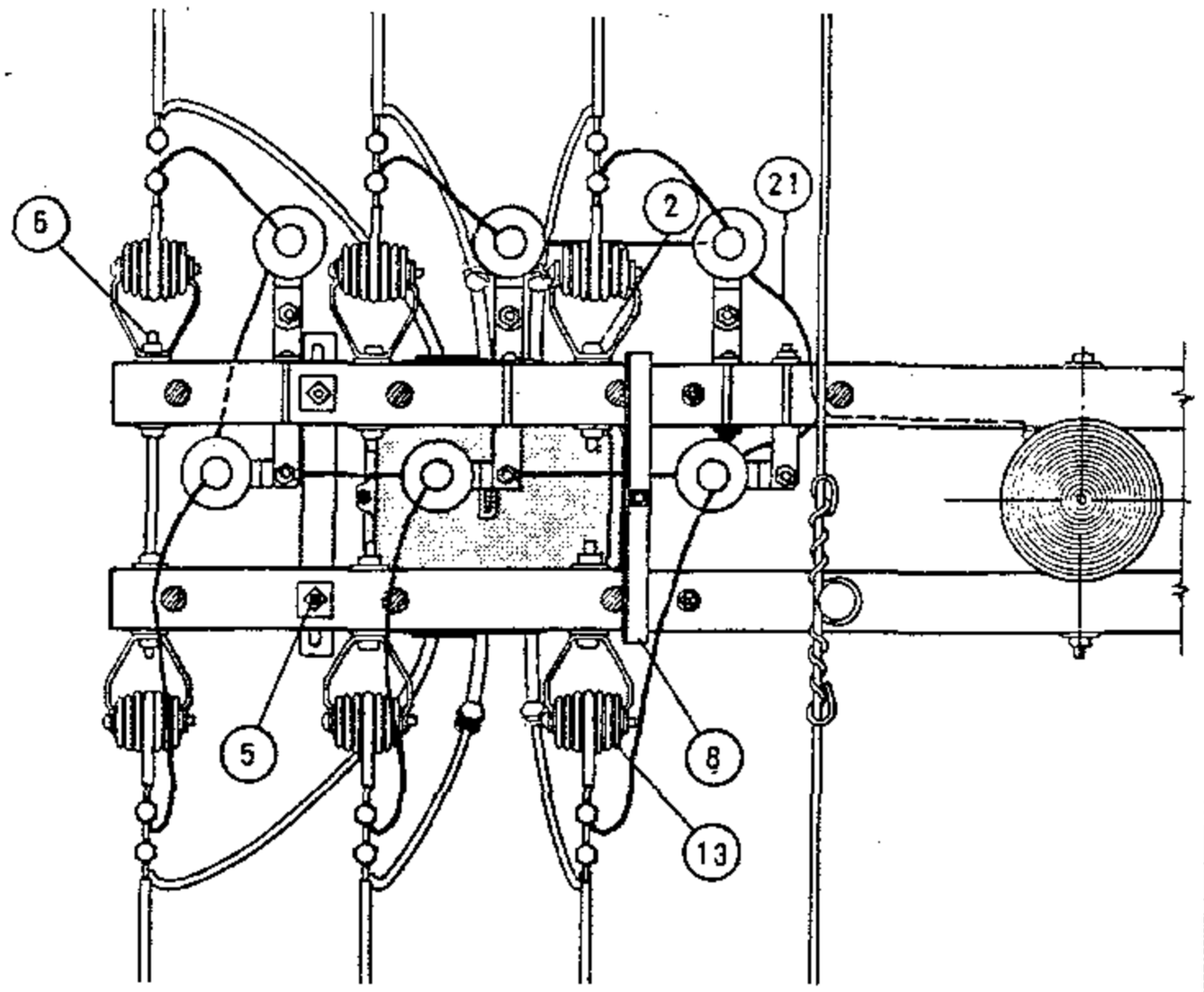

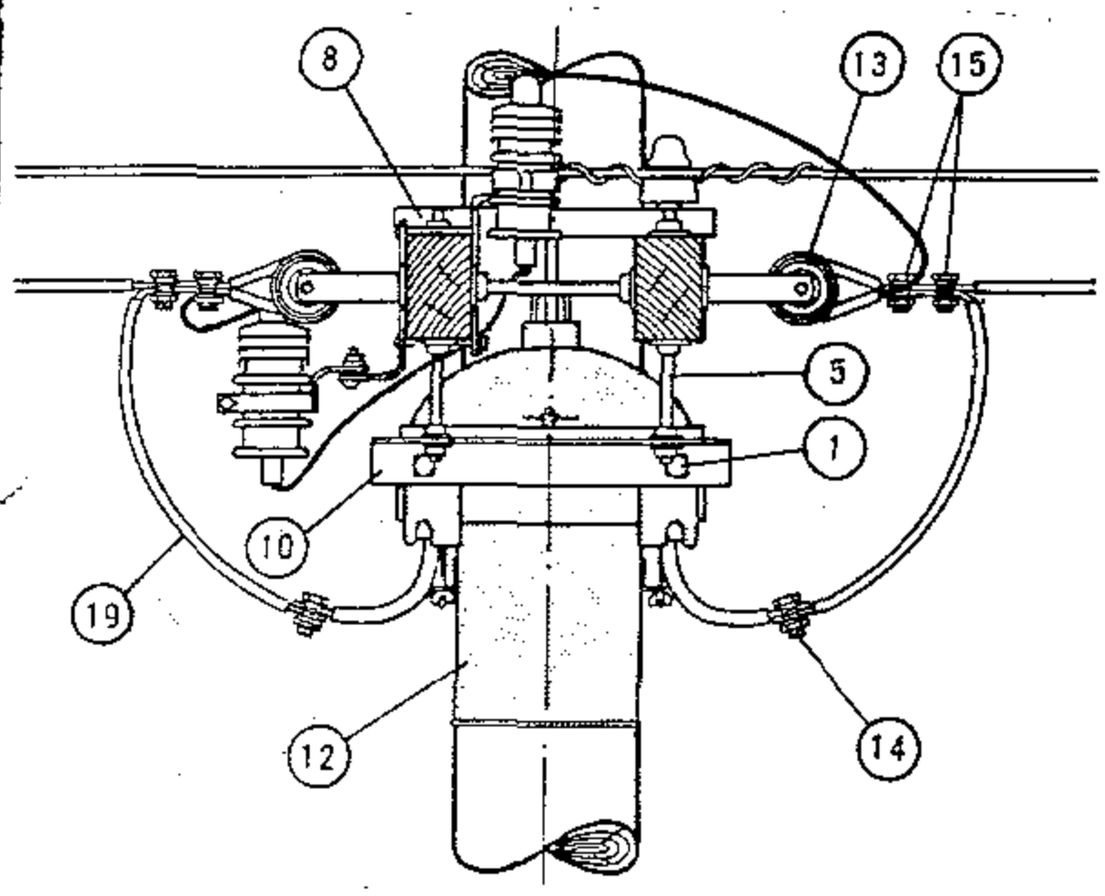

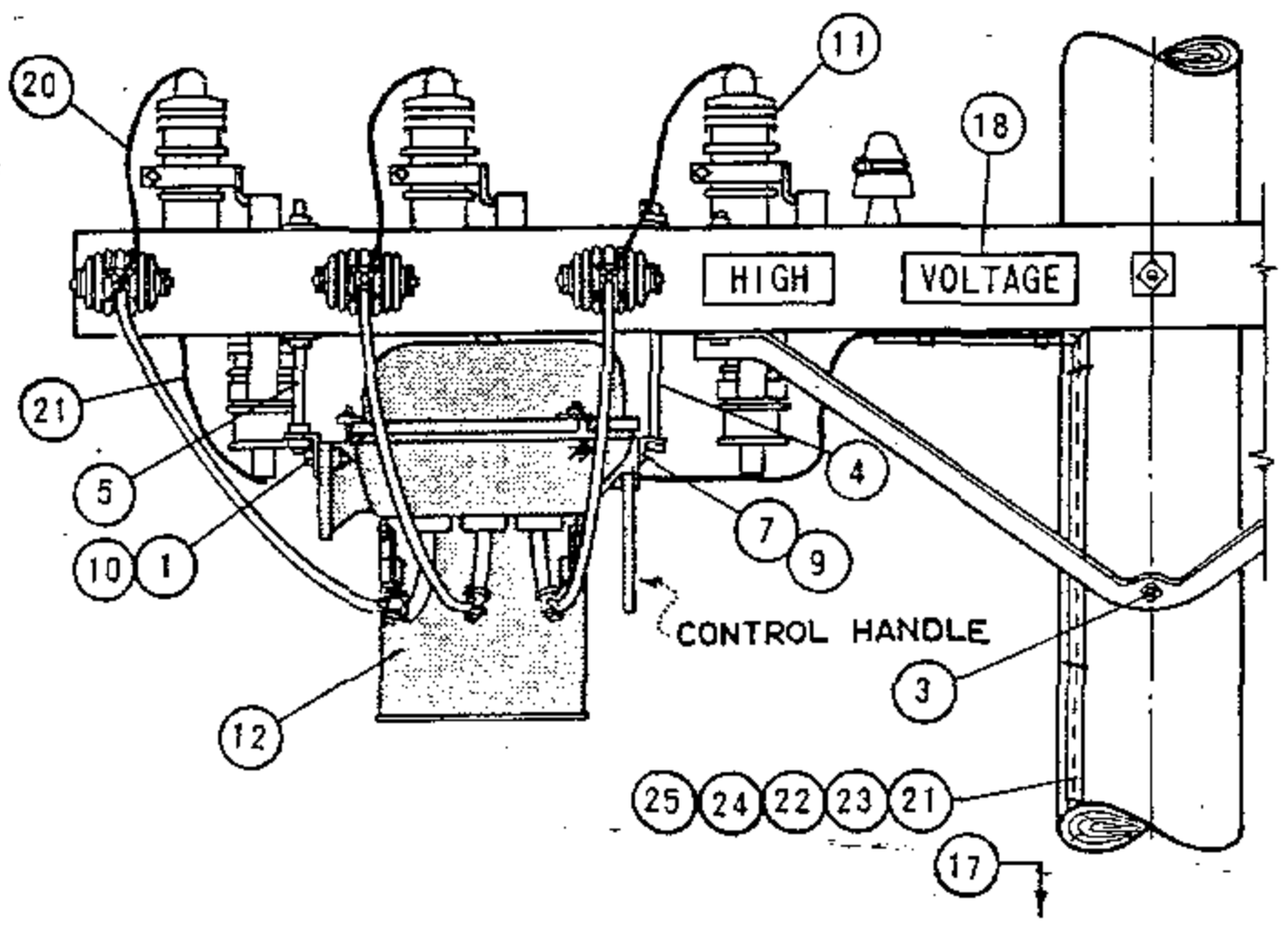

A. BETWEEN SWITCH CASE AND ARRESTER, 1 1/2 INCH CLEARANCE MUST BE MAINTAINED. USE LONGER BOLTS FOR SWITCH SUPPORTS IF REQUIRED.

(E) EXEMPT MATERIAL

ITEM	DESCRIPTION	QUANTITY #6 #4 OR	QUANTITY #2 UP	STOCK NO. OR CONSTR STD
1	MACH BOLT, GALV, 5/8" X 2" 1 RD WASHER & 1 NUT (E)	2	2	PGS 139, 140
2	MACH BOLT, GALV, 5/8" X 5" 1-2 1/2" SQ WASHER & 1 NUT (E)	4	0	PGS 139, 140
3	MACH BOLT, GALV, 5/8" X 10" TO 16", 1 NUT (E)	1	1	PGS 139, 140
4	MACH BOLT, GALV, 5/8" X 14", 1 NUT (E)	1	1	PGS 139, 140
5	SPACE BOLT, GALV, 5/8" X 16", 2 RD & 2 SQ WASH & 2 NUTS (E)	2	2	PGS 139, 140
6	SPACE BOLT, GALV, 5/8" X 16" TO 24", 4 SQ WASHER & 4 NUTS (E)	2	2	PGS 139, 140
7	CAP SCREW, GALV, 3/8" X 3/4"	2	2	619328
8	MOUNTING BRACKET, OIL SWITCH	1	1	166464
9	MOUNTING BRACKET, OIL SWITCH	1	1	166464
9	MOUNTING BRACKET, OIL SWITCH	1	1	166464
11	ARRESTER, 3 KV	6	6	PG 1247
12	POLETOP SWITCH, WEST. TYPE FO 11, 5KV, 400 A	1	1	171584
13	INSULATOR, 4KV D.E. WITH CLEVIS (E)	6	6	430848
14	WIRE CONNECTOR, SPLIT BOLT, SIZE AS REQUIRED (E)	19	7	PG 783
15	WIRE CLAMP OR D.E.	0	6	PGS 743, 787
16				
17	POLE STEPS (E)	17	17	592992
18	SIGN, HIGH VOLTAGE & ROOFING NAILS (E)	2	2	647648, 492224
19	WIRE SAME SIZE AS LINE	15'	15'	PGS 711 716
20	WIRE, BARE COPPER #6	12	12	813536
21	WIRE, BARE COPPER #2	AS REQ'D		813664
22	MOULDING, 1" HARDWOOD	AS REQ'D		487200
23	STAPLES, FENCE GALV 1 1/4" (E)	AS REQ'D		678528
24	STAPLES, 3" GALV (E)	AS REQ'D		678560
25	ROD, GROUND & CLAMP	2	2	603072, 230015 (E)

DATE 6-4-82
APPD JRH

SDG&E ELECTRIC STANDARDS

POLE TOP SWITCH INSTALLATION
4 KV WESTINGHOUSE OIL SWITCH, TYPE FO11

1299.401
SUPERSEDES
1240 (6-4-82)

OH1243 FIELD MAINTENANCE ONLY

ALL VERSIONS LISTED IN FMO ARE SUPERSEDED BY THEIR CURRENT VERSION FOUND INSIDE THE OVERHEAD CONSTRUCTION STANDARD MANUAL.

REVISION HISTORY:

04/06/2023: MOVED TO FMO

TABLE OF CONTENTS

© 1998 - 2023 San Diego Gas & Electric Company. All rights reserved. Removal of this copyright notice without permission is not permitted under law.

REV	CHANGE	DR	BY	DSN	APV	DATE	REV	CHANGE	DR	BY	DSN	APV	DATE
C							F						
B							E						
A	ORIGINAL ISSUE	EDM	MRF	MRF	KRG	04/06/2023	D						

X Indicates Latest Revision | Completely Revised | New Page | Information Removed

SDG&E ELECTRIC OVERHEAD FIELD MAINTENANCE ONLY STANDARDS

CROSSARM MOUNTED PARALLEL FUSED AND SOILD BLADE CUTOUTS

SCOPE: THIS STANDARD SHOWS THE INSTALLATION METHOD FOR A FUSED AND SOLID BLADE CUTOUT IN PARALLEL TO BE USED WITH #3/0 ACSR OR #1/0 COPPER AND SMALLER CONDUCTORS.

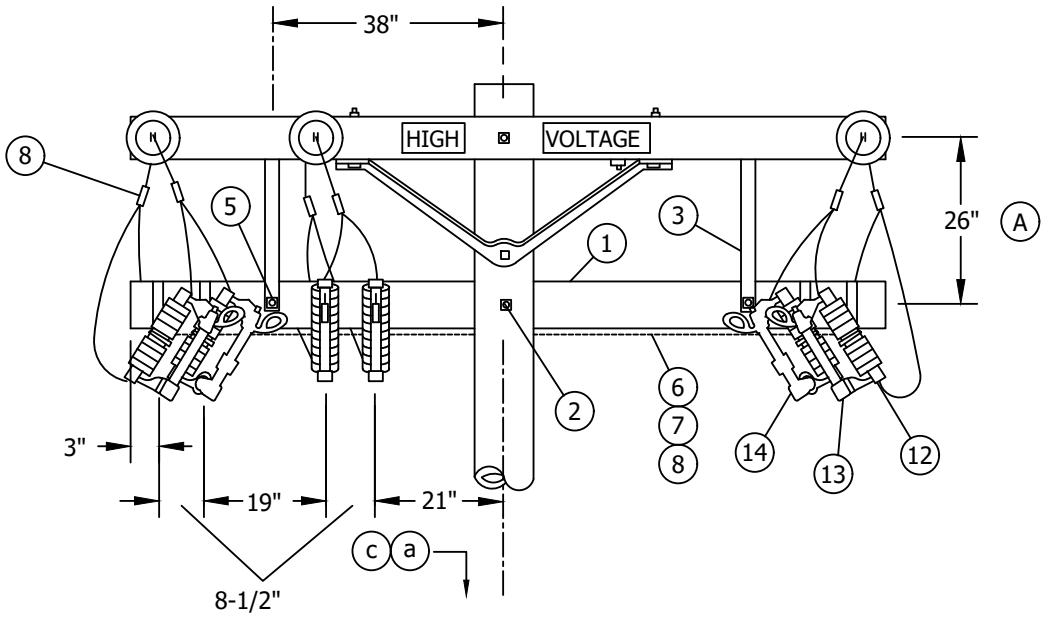

OVERHEAD MACRO UNITS
6C0-XA

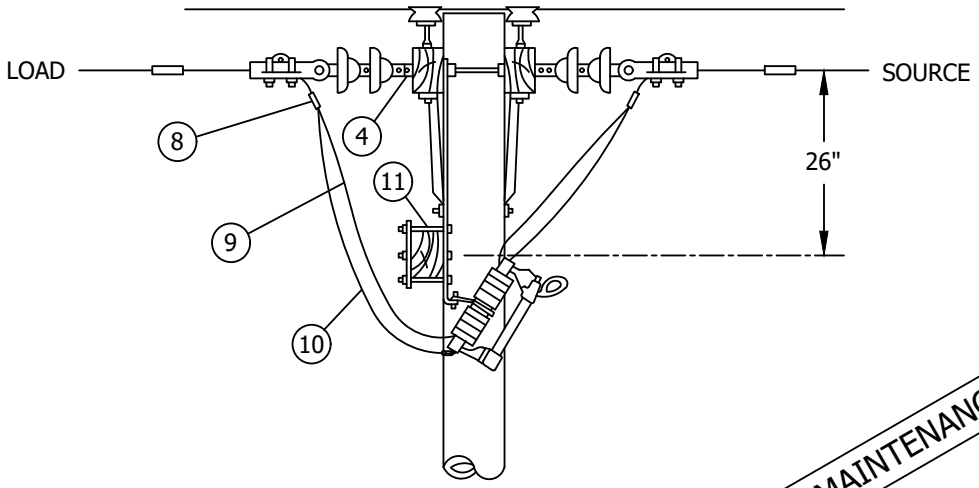

FIELD MAINTENANCE ONLY

TABLE OF CONTENTS

© 1998 - 2023 San Diego Gas & Electric Company. All rights reserved. Removal of this copyright notice without permission is not permitted under law.

REV	CHANGE	DR	BY	DSN	APV	DATE	REV	CHANGE	DR	BY	DSN	APV	DATE
C	MOVED TO FMO	EDM	MRF	MRF	KRG	04/06/2023	F						
B	DRAWING UPDATE	PEI	-	-	-	02/18/2019	E						
A	ORIGINAL ISSUE	-	-	PTA	RDJ	01/01/1993	D						

INSTALLATION:

(A) IF ADDITIONAL SPACE IS REQUIRED BELOW THE CUTOUT ARM, THE SEPARATION BETWEEN THE LINE ARM AND CUTOUT ARM MAY BE REDUCED TO 12" WITH THE USE OF SPACE BOLTS.

B. SECTIONALIZING FUSES AND A STATION ARE NOT ALLOWED ON THE SAME POLE. A DEVIATION REQUEST WILL NOT BE APPROVED FOR THE THIS CONSTRUCTION.

BILL OF MATERIALS:

ITEM	DESCRIPTION	QUANTITY	CONST STD OR PAGE NO	STOCK NUMBER
1	FIBERGLASS CROSSARM, 3 3/4" X 5 3/4" X 10'-0"	1	-	S294128
2	BOLT, MACH, GALV, 5/8" X (LENGTH AS REQ'D), 2 SQUARE & 1 DOUBLE COIL SPRING WASHERS	1	392	-
3	-	-	-	
4	BOLT, MACH, GALV, 3/8" X 4 1/2", 1 ROUND AND 1 SPRING WASHER	2	392	-
5	BOLT, MACH, GALV, 1/2"X 5", 1 ROUND & 1 DOUBLE COIL SPRING WASHER	2	392	-
6	WIRE, BARE SOLID ANNEALED COPPER, #8	12'	-	S812928
7	STAPLES, FENCE, GALV, 1 1/4"	AS REQ'D	-	S678528
8	CONNECTOR, WIRE, COMPRESSION (SIZE AS REQ'D)	AS REQ'D	783-787	-
9	WIRE, JUMPER, BARE STRANDED CU, #1/0 (TO SOLID BLADE CUTOUT)	24'	-	S813568
10	WIRE, JUMPER, BARE STRANDED CU, #6 OR #2 (TO FUSED CUTOUT)	18'	-	S813536
		18'	-	S813664
11	BRACKET, CUTOUT/ARRESTER, FOR CROSSARM MOUNTING	6	-	S166070
12	CUTOUT BODY, 12KV, AND FUSE HOLDER (100A OR 200A)	3	1212	-
13	FUSE	3	1207	-
14	CUTOUT BODY, 12KV, WITH SOLID BLADE, 300A	3	1212	-

TABLE OF CONTENTS

NOTES:

I. DURING NORMAL OPERATION, SOLID BLADES MUST BE REMOVED FROM CUTOUTS AND SECURELY ATTACHED TO POLE.

REFERENCE:

(a) POLE STEPPING - SEE STANDARD 363.

b. BOND CUTOUTS IN HEAVY CONTAMINATION DISTRICTS AS IDENTIFIED ON STANDARD 287.

(c) REFLECTOR STRIPS ARE REQUIRED ON ALL SECTIONALIZING/TIELINE SWITCHES AND SERVICE. RESTORER POLES. (SEE STD. 208.3 ITEM 12)

d. FIBERGLASS CROSSARM - SEE STANDARD 379

FIELD MAINTENANCE ONLY

© 1998 - 2023 San Diego Gas & Electric Company. All rights reserved. Removal of this copyright notice without permission is not permitted under law.

REV	CHANGE	DR	BY	DSN	APV	DATE	REV	CHANGE	DR	BY	DSN	APV	DATE
C	MOVED TO FMO	EDM	MRF	MRF	KRG	04/06/2023	F						
B	DRAWING UPDATE	PEI	-	-	-	02/18/2019	E						
A	ORIGINAL ISSUE	-	-	PTA	RDJ	01/01/1993	D						

X Indicates Latest Revision | Completely Revised | New Page | Information Removed

SDG&E ELECTRIC OVERHEAD FIELD MAINTENANCE ONLY STANDARDS

CROSSARM MOUNTED PARALLEL FUSED AND SOILD BLADE CUTOUTS

FMO OH1243.2

FIELD MAINTENANCE ONLY

REVISION HISTORY:

7/13/2016: All versions prior to 2016 are superceded by their current version found inside the Overhead Construction Standard Manual.

2/20/2019: Install S706670 in place of old style Cut Out.

TABLE OF CONTENTS

© 1998 - 2019 San Diego Gas & Electric Company. All rights reserved. Removal of this copyright notice without permission is not permitted under law.

REV	CHANGE	BY	DSGN	APPV	DATE	REV	CHANGE	BY	DSGN	APPV	DATE
C						F					
B	EDITORIAL CHANGES	GLW	JES	CZH	2/20/2019	E					
A	ORIGINAL ISSUE	JS	IL	MDJ	7/13/2016	D					

X Indicates Latest Revision | Completely Revised | New Page | Information Removed

SHEET 1 OF 1

SDG&E ELECTRIC OVERHEAD CONSTRUCTION STANDARDS

SERVICE RESTORER WITH CUTOUT DISCONNECT

FMO OH 1270

SCOPE: THIS STANDARD SHOWS THE INSTALLATION METHOD OF A DISTRIBUTION SERVICE RESTORER WHICH MAY BE USED WITH #3/0 ACSR OR #1/0 COPPER AND SMALLER CONDUCTORS.

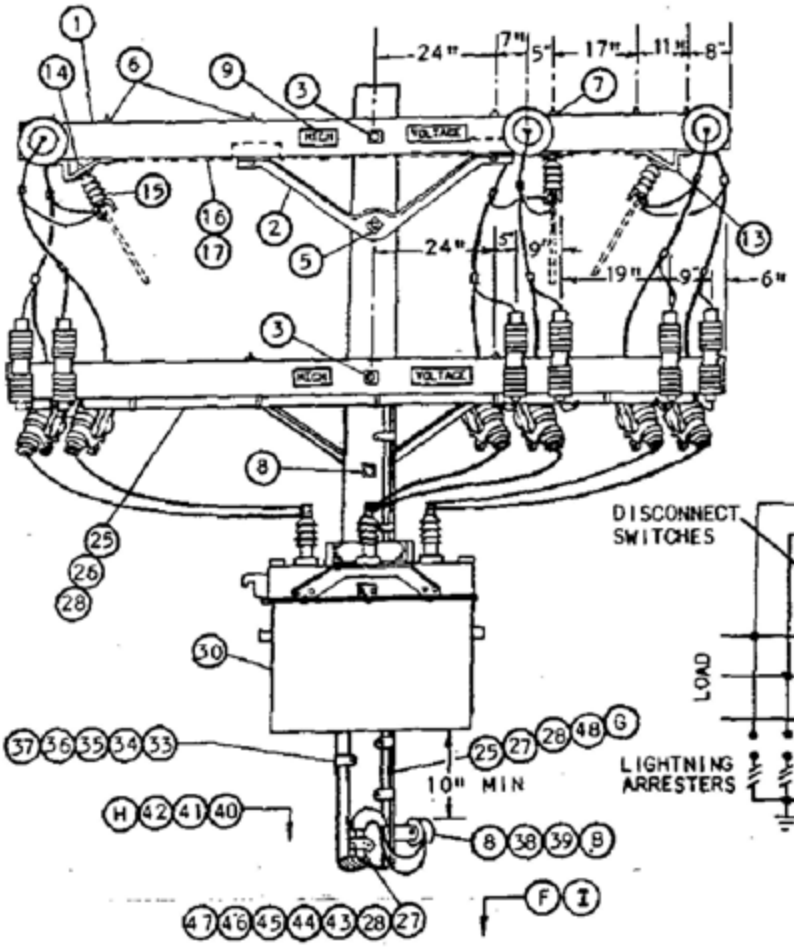

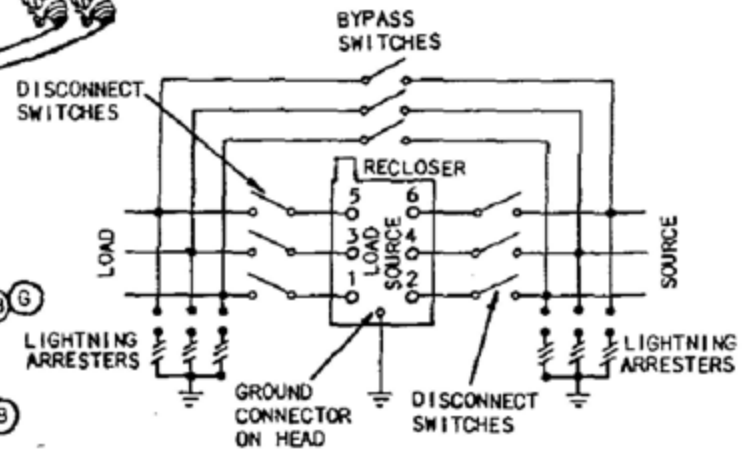

SCHEMATIC DIAGRAM

FOR FIELD MAINTENANCE ONLY

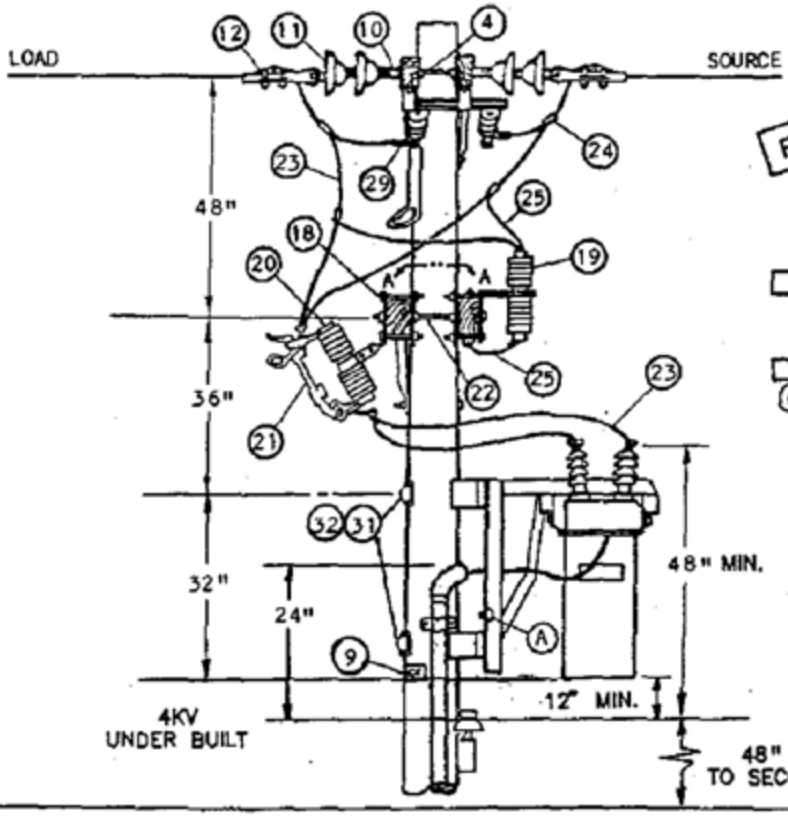

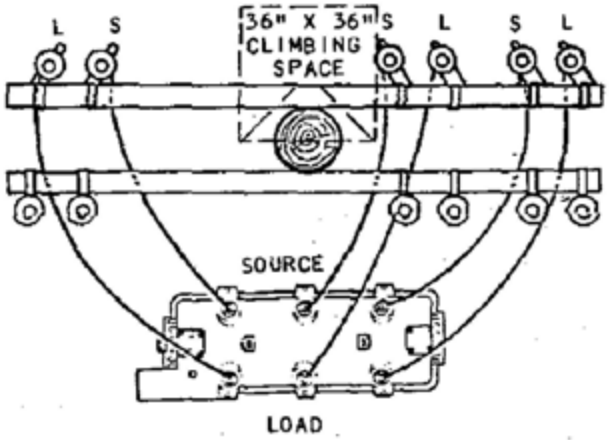

SECTION VIEW A-A

1299.701 SUPERSEDES 1270.1 (1-1-90)	SDG&E ELECTRIC STANDARDS SERVICE RESTORER WITH CUTOUT DISCONNECT	DATE 1-1-90 APPD PHA / DTC

TABLE OF CONTENTS

BILL OF MATERIAL:

ITEM	DESCRIPTION	QUANTITY	CONST STD OR PAGE NO	STOCK NUMBER
1	CROSSARM, 3 3/4" X 5 3/4" X 12' - 0"	4	-	294160
2	BRACE, 4', ANGLE, GALV	3	-	164032
3	BOLT, MACH, GALV, 5/8" X (LENGTH AS REQ'D), 2 SQUARE AND 1 DOUBLE COIL SPRING WASHERS (E)	2	392	-
4	BOLT, SPACE, GALV, 5/8" X (LENGTH AS REQ'D), 2 ROUND, 2 SQUARE, 2 DOUBLE COIL SPRING WASHERS AND 1 NUT (E)	3	392	-
5	BOLT, MACH, GALV, 5/8" X (LENGTH AS REQ'D) AND 1 DOUBLE COIL SPRING WASHER (E)	1	392	-
6	BOLT, MACH, GALV, 1/2" X 7", 1 ROUND AND 1 DOUBLE COIL SPRING WASHER (E)	14	392	-
7	BOLT, MACH, GALV, 1/2" X 8", 1 ROUND AND 1 DOUBLE COIL SPRING WASHER (E)	2	392	-
8	BOLT, MACH, GALV, 5/8" X (LENGTH AS REQ'D), 1 SQUARE AND 1 DOUBLE COIL SPRING WASHER (E)	2	392	-
9	SIGN, HIGH VOLTAGE & (E) 9 ROOFING NAILS, GALV (E)	5 -	- -	647648 492224
10	CLEVIS, DEAD-END, 5/8", BOLT STEEL (CLOSED TYPE)	6	-	235712
11	INSULATOR, SUSPENSION, 12KV, CLEVIS	12	-	431616
12	CLAMP, STRAIGHT LINE, D.E.	6	741-743	-
13	BRACKET, DISCONNECT, ANGLE MOUNTING	4	-	166542
14	BOLT, MACH, GALV, 3/8" X 2", 2 ROUND & 1 LOCK WASHER (E)	4	392	-
15	SWITCH, DISCONNECT, 14.4KV, 600A	3	-	707008
16	WIRE, BARE SOLID ANNEALED COPPER, #8	30'	-	812928
17	STAPLES, FENCE, GALV, 1 1/4" (E)	AS REQ'D	-	678528
18	BRACKET, CUTOUT/ARRESTER, FOR CROSSARM MOUNTING (E)	12	-	166070
19	ARRESTER, LIGHTNING, 12KV	6	-	113248
20	CUTOUT BODY, 12KV	6	1212	297956
21	SOLID BLADE, 300A, 12KV CUTOUT	6	1212	138850
22	BOLT, SPACE, GALV, 5/8" X (LENGTH AS REQ'D), 2 ROUND, 4 SQUARE, 2 DOUBLE COIL SPRING WASHERS AND 1 NUT (E)	2	392	-
23	WIRE, BARE STRANDED COPPER, 1/0	75'	-	813568
24	CONNECTOR, WIRE, COMPRESSION (SIZE AS REQ'D) (E)	AS REQ'D	783-787	-
25	WIRE, BARE STRANDED COPPER, #4	105'	-	813760
26	CONDUIT, PVC, TYPE 2, SCHEDULE 40, 1" X 10', AND (E) STRAPS, PIPE, GALV, 1" AND 2-1 3/4" ROOFING NAILS (E)	1 AS REQ'D	- -	251200 697792
27	CONDUIT, PVC, TYPE 2, SCHEDULE 80, 3/4" X 10' (E)	3	-	251520
28	STRAPS, PIPE, GALV, 3/4" AND (E) 2 - 6D NAILS, GALV (E)	AS REQ'D AS REQ'D	- -	697888 491552
29	TERMINAL, COMPRESSION, CU OR AL (SIZE AS REQ'D) (E)	6	794/795	-
30	RECLOSER, MCGRAW-EDISON, 560A, TYPE WE (INCLUDING BRACKET) (C)	1	-	572110

FOR FIELD MAINTENANCE ONLY

TABLE OF CONTENTS

SDG&E ELECTRIC STANDARDS

DATE 1-1-90
APPD PA/DTG

SERVICE RESTORER WITH CUTOUT DISCONNECT

1299.702
SUPERSEDES
1270.2 (1-1-90)

BILL OF MATERIAL:

ITEM	DESCRIPTION	QUANTITY	CONST STD OR PAGE NO	STOCK NUMBER
31	BOLT, MACH, GALV, 3/4" X (LENGTH AS REQ'D), 1 SQUARE CURVE RIBBED AND 1 DOUBLE COIL SPRING WASHER (E)	2	392	-
32	COVER, BOLT, PLASTIC AND (E) 6 10-D NAILS, GALV (E)	2 -	- -	285696 491392
33	CONTROL CABLE FOR McGRAW-EDISON RECLOSER (H)	1	-	192010
34	CONDUIT, PVC, SCHEDULE 40, 2" X 10' (E)	2	-	251296
35	ELBOW, PVC, SCHEDULE 40, 2" (E)	2	-	321792
36	ELBOW, PVC, SCHEDULE 40, 2", 12" RADIUS (E)	1	-	321816
37	STRAP, PIPE, GALV, 2" AND (E) 2 - 10D NAILS, GALV, (E)	AS REQ'D AS REQ'D	- -	697856 491392
38	BRACKET, SERVICE INSULATOR	1	-	166128
39	WIRE, COPPER #8, 600 VOLT, DUPLEX (B)	AS REQ'D	-	196432
40	CONTROLLER, RECLOSER, McGRAW-EDISON (H)	1	-	273928
41	SCREW, LAG, GALV, 1/2" X 4" (E)	2	-	621568
42	PADLOCK, CORBIN #27 (FF KEY) (E)	1	-	514848
43	COVER, PVC, DRIP LOOP, 3/4" (E)	1	-	287248
44	COUPLING, PVC, 3/4" (E)	2	-	280416
45	TERMINAL, ADAPTOR, PVC, 3/4"	1	-	102754
46	ELBOW, 90 , PULLING, PVC, 3/4" (E)	2	-	-
47	NIPPLE, PIPE SCREW, GALV, 3/4" X 1"	1	-	-
48	UNIT, GROUND, COMPLETE	1	-	603136

INSTALLATION:

(A) CONNECT RECLOSER RACK GROUND LEAD TO LIGHTNING ARRESTER GROUND.

(B) RECLOSER CONTROL REQUIRES 120 VOLT SUPPLY, PREFERABLY COMING FROM THE SOURCE SIDE.

(C) THE 400A, TYPE RXE RECLOSER (S/N 572100) IS NO LONGER PURCHASED.

(E) EXEMPT MATERIAL.

FOR FIELD MAINTENANCE ONLY

REFERENCE:

(F) POLE STEPPING – SEE STANDARD 363.

(G) GROUNDING METHODS – SEE STANDARD 1002. (INSTALL GROUND MOULDING IN SUCH A MANNER AS NOT TO INTERFERE WITH A LADDER WHEN PLACED AGAINST THE POLE).

(H) CONTROL INSTALLATION TO BE DONE BY SUBSTATION CONSTRUCTION AND MAINTENANCE AND IS TO BE INSTALLED A MINIMUM OF 13'-6" ABOVE GROUND LEVEL.

(I) REFLECTOR STRIPS ARE REQUIRED ON ALL SECTIONALIZING/TIELINE SWITCHES AND SERVICE RESTORER POLES. (SEE STD. 208.3 ITEM 12)

TABLE OF CONTENTS

1299.703 SUPERSEDES 1270.3 (1-1-90)	SDG&E ELECTRIC STANDARDS SERVICE RESTORER WITH CUTOUT DISCONNECT	DATE 1-1-90 APPD PJA/DTS

FIELD MAINTENANCE ONLY

REVISION HISTORY:

7/13/2016: All versions prior to 2016 are superseded by their current version found inside the Overhead Construction Standard Manual.

TABLE OF CONTENTS

© 1998 - 2016 San Diego Gas & Electric Company. All rights reserved. Removal of this copyright notice without permission is not permitted under law.

REV	CHANGE	BY	DSGN	APPV	DATE	REV	CHANGE	BY	DSGN	APPV	DATE
C						F					
B						E					
A	ORIGINAL ISSUE	JS	IL	MDJ	7/13/2016	D					

X Indicates Latest Revision | Completely Revised | New Page | Information Removed

SHEET
1 OF 1

SDG&E ELECTRIC OVERHEAD STANDARD

SERVICE RESTORER
WITH HOOK STICK SWITCH DISCONNECT

FMO
OH 1271

SCOPE: THIS STANDARD SHOWS THE INSTALLATION METHOD OF A DISTRIBUTION SERVICE RESTORER TO BE USED WITH ALL CONDUCTOR SIZES.

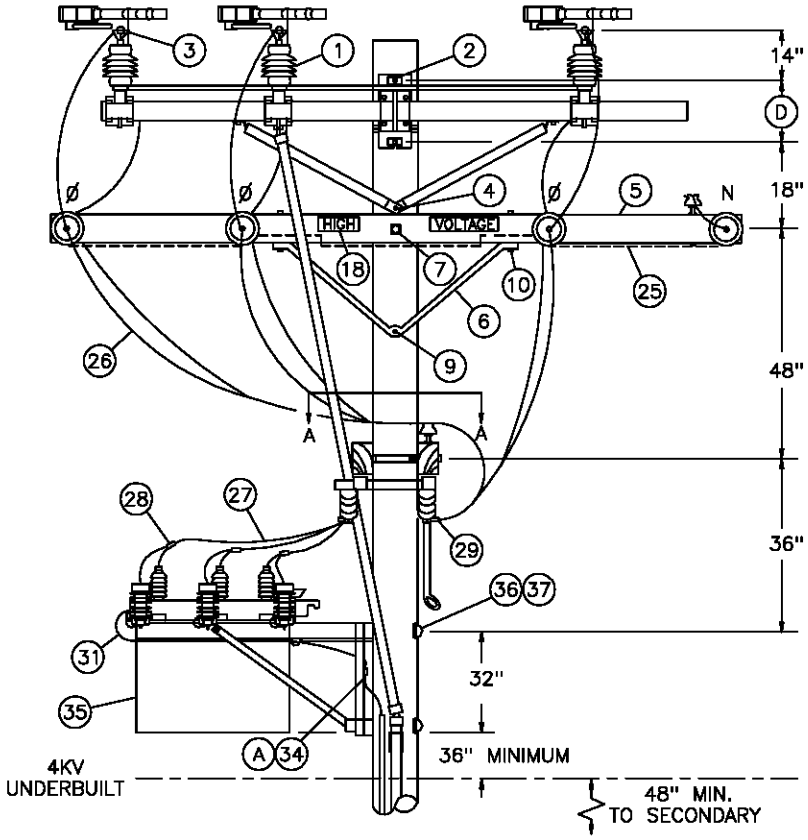

FOR FIELD MAINTENANCE ONLY

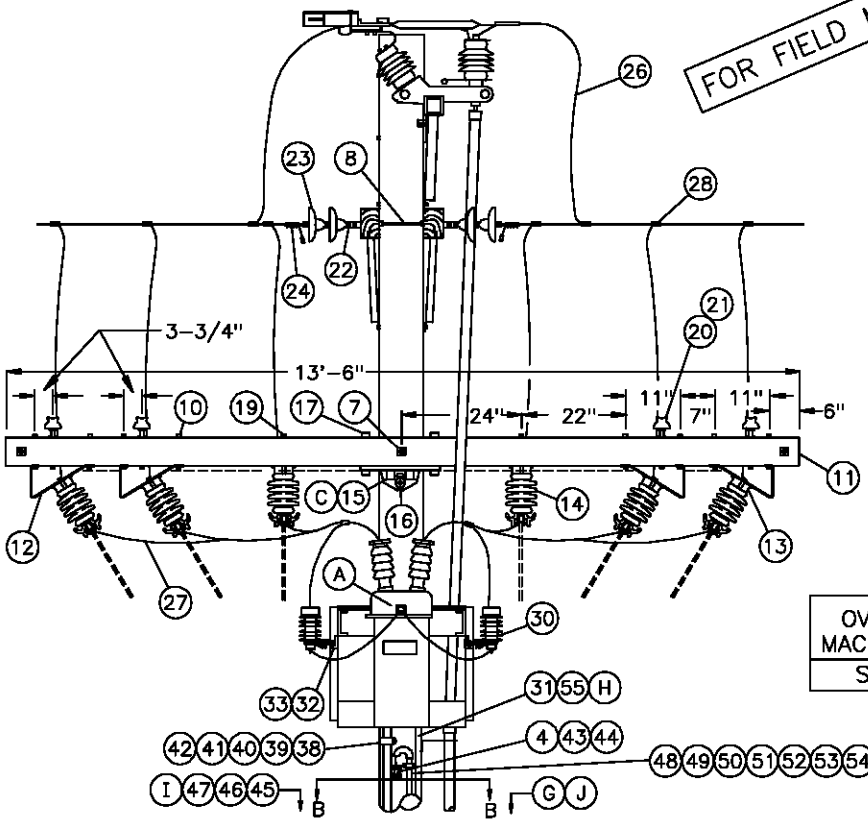

OVERHEAD MACRO UNITS
SR560S

1299.707 SUPERSEDES 1271.1 (1-1-98)	SDG&E ELECTRIC STANDARDS SERVICE RESTORER-BUCK POSITION HOOKSTICK SWITCH DISCONNECT LOADBREAK GANG SWITCH BY-PASS	DATE 1-1-98 APPD PSA / CMK

TABLE OF CONTENTS

TABLE OF CONTENTS

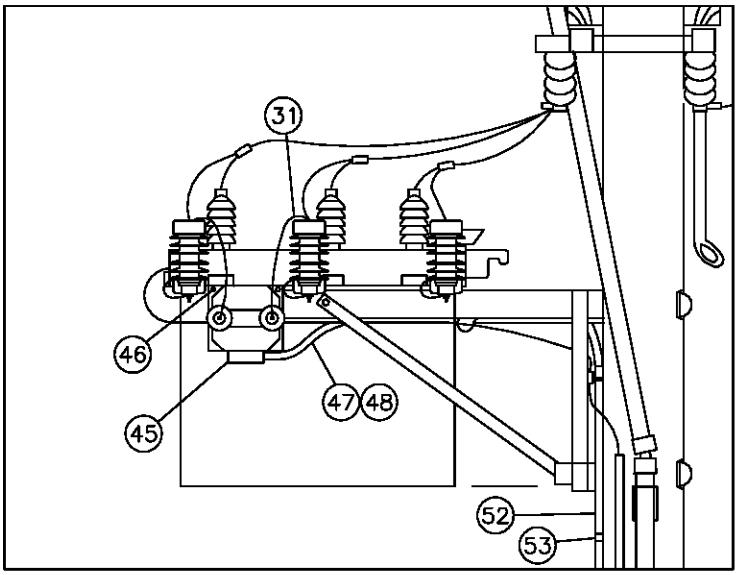

OVERHEAD MACRO UNIT
SRSEC

POTENTIAL TRANSFORMER–SECONDARY POWER SOURCE (B)

STREET SIDE (PREFERRED)

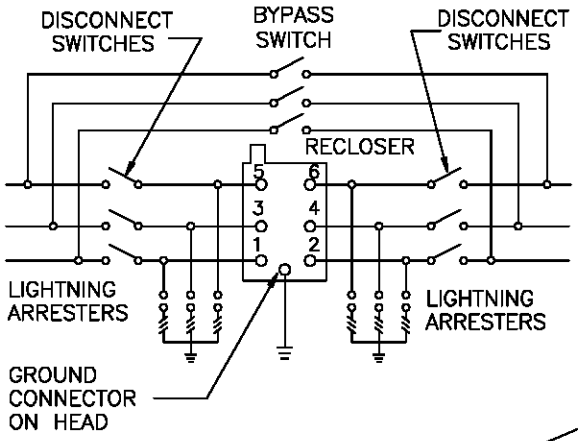

SCHEMATIC DIAGRAM

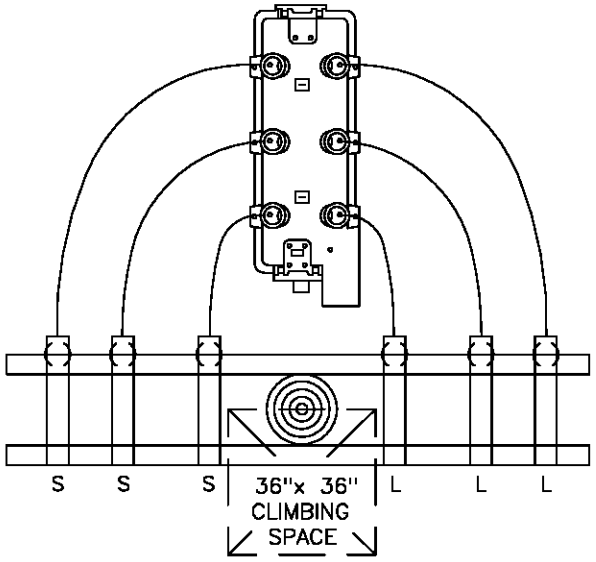

SECTION VIEW A–A

FOR FIELD MAINTENANCE ONLY

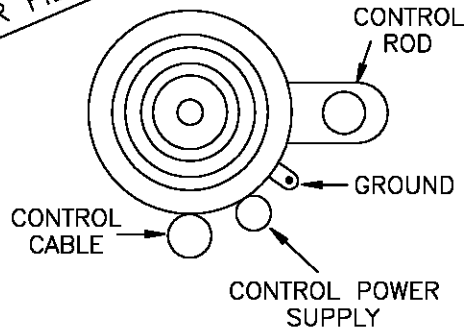

SECTION VIEW B–B

DATE 1–1–98 APPD PSA / CMK	SDG&E ELECTRIC STANDARDS BUCK POSITION SERVICE RESTORER HOOKSTICK SWITCH DISCONNECT LOADBREAK GANG SWITCH BY–PASS	1299.708 SUPERSEDES 1271.2 (1–1–98)

BILL OF MATERIAL:

ITEM	DESCRIPTION	QUANTITY	CONST STANDARD OR PAGE NO.	STOCK NUMBER	ASSEMBLY UNITS
1	SWITCH, GANG–OPERATED, 15KV, 600AMP,WITH DUOGAP INTERRUPTERS, INCLUDING 40' OF CONTROL ROD	1	–	709250	CHANCE
2	BOLT, MACH, GALV, 3/4" X (LENGTH AS REQ'D), 1 SQUARE & 1 DOUBLE COIL SPRING WASHER	2	392	–	–
3	LUG, EYEBOLT TERMINAL, BRONZE	12	–	471296	–
4	BOLT, MACH, GALV, 5/8" X (LENGTH AS REQ'D), 1 SQUARE & 1 DOUBLE COIL SPRING WASHERS	2	392	–	–
5	CROSSARM, 3 3/4" X 5 3/4" X 12' – 0"	2	–	294160	6–
6	BRACE, ANGLE, CROSSARM, 4' – 0"	2	392	164032	4HUB
7	BOLT, MACH, GALV, 5/8" X (LENGTH AS REQ'D), 2 SQUARE & 1 DOUBLE COIL SPRING WASHERS	2	392	–	–
8	BOLT, SPACE, GALV, 5/8" X (LENGTH AS REQ'D) 2 SQUARE, 2 ROUND & 2 DOUBLE COIL SPRING WASHERS	6	392	–	–
9	BOLT, MACH, GALV, 5/8" X (LENGTH AS REQ'D) & 1 DOUBLE COIL SPRING WASHERS	1	392	–	–
10	BOLT, MACH, GALV, 1/2" X 7", 1 ROUND & 1 DOUBLE COIL SPRING WASHERS	20	392	–	–
11	CROSSARM 3–3/4" X 5–3/4" X 13'–6"	2	–	294368	13SWI–
12	BRACKET, DISCONNECT, ANGLE MOUNTING	8	–	166542	ABRKT
13	BOLT, MACH, GALV, 3/8" X 2", 2 ROUND & 1 LOCK WASHER	8	392	–	–
14	SWITCH, DISCONNECT, 14.4KV, 600A	6	–	707008	D600
15	GAIN, CROSSARM, BRACELESS Ⓒ	1	–	369598	BCGAIN
16	BOLT, MACH, GALV, 5/8" X (LENGTH AS REQ'D) 1 SQUARE, 1 ROUND & 1 DOUBLE COIL SPRING WASHER	1	392	–	–
17	BOLT, MACH, GALV, 5/8" X 7", 1 ROUND & 1 DOUBLE COIL SPRING WASHER	2	392	–	–
18	SIGN, HIGH VOLTAGE & 9 ROOFING NAILS, GALV	2	–	647648	HV
		AS REQ'D	–	492224	–
19	BOLT, MACH, 1/2" X 9", 1 ROUND AND 1 DOUBLE COIL SPRING WASHER	4	392	–	–
20	PIN, INSULATOR, STRAIGHT, 12KV 1" OR 1–3/8" THREAD	5	396	–	–
21	INSULATOR, LINE, 12KV	5	750	–	–
22	CLEVIS, DEAD–END, 5/8", BOLT STEEL (CLOSED TYPE)	8	–	235712	–
23	INSULATOR, SUSPENSION, 12KV, CLEVIS	14	–	431616	6DE
24	CLAMP, STRAIGHT LINE, D.E.	8	739–743	–	–
25	WIRE, #8, BARE SOLID ANNEALED COPPER, AND	30' 1.5#	–	812928	BOND8
	STAPLES, FENCE, GALV, 1 1/4"	AS REQ'D	–	678528	–
26	WIRE, BARE STRANDED CU OR AL (SIZE AS REQ'D)	90'	711–715	–	–
27	WIRE, BARE STRANDED COPPER, (SIZE AS REQ'D WITH MINIMUM SIZE EQUAL TO LINE CONDUCTOR AMPACITY, OR GREATER)	25'	715	–	–
28	CONNECTOR, WIRE, COMPRESSION (SIZE AS REQ'D)	AS REQ'D	783–787	–	–
29	TERMINAL, COMPRESSION, CU OR AL (SIZE AS REQ'D)	12	794–795	–	–
30	ARRESTER, LIGHTNING, 12KV	6	–	113248	LA12
31	WIRE, #4, BARE STRANDED COPPER	100' 13#	–	813760	Ⓔ

FOR FIELD MAINTENANCE ONLY

TABLE OF CONTENTS

1299.709 SUPERSEDES 1271.3 (1–1–98)	SDG&E ELECTRIC STANDARDS BUCK POSITION SERVICE RESTORER HOOKSTICK SWITCH DISCONNECT LOADBREAK GANG SWITCH BY–PASS	DATE 1–1–98 APPD PSA / CMC

BILL OF MATERIAL:

ITEM	DESCRIPTION	QUANTITY	CONST STD OR PAGE NO	STOCK NUMBER	ASSEMBLY UNITS
32	Z–BRACKET, GALV, 1–5/8"	6	–	703168	–
33	BOLT, MACH, GALV, 1/2" X 2", 1 ROUND & 1 LOCK WASHER	12	392	–	–
34	CONNECTOR, SPLIT BOLT, #2	2	–	269536	–
35	RECLOSER, MCGRAW–EDISON, 560A, TYPE WE (INCLUDING BRACKET)	1	–	572110	SR560
36	BOLT, MACH, GALV, 3/4" X (LENGTH AS REQ'D), 1 SQUARE CURVED RIBBED & 1 DOUBLE COIL SPRING WASHER	2	392	–	–
37	COVER, BOLT, PLASTIC & 6 – 10D NAILS, GALV	2	–	285696	–
		AS REQ'D	–	491392	–
38	CONTROL CABLE, FOR MCGRAW–EDISON RECLOSER, 35' (I)	1	–	192010	(E)
39	CONDUIT, PVC, SCHED 40, 2" X 10' (I)	2	–	251296	(E)
40	ELBOW, PVC, SCHED 40, 2", 12" RADIUS (I)	1	–	321816	(E)
41	ELBOW, PVC, SCHED 40, 2" (I)	2	–	–	–
42	STRAPS, PIPE, GALV, 2" & 2 – 10 D NAILS, GALV (I)	AS REQ'D	–	697856	–
		AS REQ'D	–	491392	–
43	BRACKET, SERVICE INSULATOR	1	–	166128	–
44	WIRE, COPPER, #8, 600 VOLT, DUPLEX (B)	AS REQ'D	–	196432	DX8C
45	POTENTIAL TRANSFORMER, 12000/120 VOLTS (B)	1	–	762722	SRPT
46	BOLT, MACH, GALV, 3/8" X 1–1/2", AND 1 LOCK WASHER (B)	2	–	154144	–
47	CONDUIT, 3/4", FLEXABLE STEEL (B)	6'	–	250112	–
48	WIRE, THHN, #12, WHITE (B)	40'	–	808704	THW12W
	WIRE, THHN, #12, BLACK (B)	40'	–	808096	THW12
49	CONTROLLER, RECLOSER, COOPER, MODEL KME5 (I)	1	–	273930	C/RSTR
50	SCREW, LAG, GALV, 1/2" X 4"	2	–	621568	–
51	PADLOCK, SCHLAGE ELECTRIC SERIES	1	–	514848	(E)
52	CONDUIT, PVC, TYPE 2, SCHEDULE 80, 3/4" X 10'	3	–	251520	(E)
53	STRAPS, PIPE, GALV, 3/4" & 2 – 6D NAILS, GALV	AS REQ'D	–	697888	–
		AS REQ'D	–	491552	–
54	COVER, PVC, DRIPLOOP, 3/4"	1	–	287248	(E)
55	COUPLING, PVC, 3/4"	2	–	280416	(E)
56	TERMINAL, ADAPTOR, PVC, 3/4"	1	–	102754	(E)
57	ELBOW, 90°, PULLING, PVC, 3/4"	2	–	–	–
58	NIPPLE, PIPE SCREW, GALV, 3/4" X 1"	1	–	–	–
59	UNIT, GROUND, COMPLETE	1	–	603136	(E)

FOR FIELD MAINTENANCE ONLY

TABLE OF CONTENTS

DATE 1–1–2000 APPD PSA/VCL	SDG&E ELECTRIC STANDARDS BUCK POSITION SERVICE RESTORER HOOKSTICK SWITCH DISCONNECT LOADBREAK GANG SWITCH BY–PASS	1299.710 SUPERSEDES 1271.4 (1–1–2000)

INSTALLATION:

Ⓐ CONNECT GROUND LEAD TO RECLOSER MOUNTING FRAME. CONNECT LIGHTNING ARRESTER GROUND LEADS AND GROUND CONNECTOR ON HEAD TO RECLOSER MOUNTING FRAME.

Ⓑ RECLOSER CONTROL REQUIRES 120 VOLT SUPPLY, PREFERABLY COMING FROM THE SOURCE SIDE. IF IMPRACTICAL, POWER MAY ORIGINATE FROM THE LOAD SIDE.

NOTE: IF SECONDARY POWER SOURCE NOT AVAILABLE, OR WOULD BE DIFFICULT TO INSTALL, POWER MAY BE SUPPLIED BY MOUNTING POTENTIAL TRANSFORMER ON SERVICE RESTORER FRAME.

Ⓒ DO NOT CUT GAINS IN THE POLE WHEN INSTALLING THE HORIZONTALLY MOUNTED SECTIONALIZING SWITCH ARMS. THE GAIN HARDWARE USED HERE MAKE CUT GAINS UNNECESSARY.

Ⓓ USE THE FOLLOWING THRU-BOLT DRILLING DIMENSIONS: A.B. CHANCE=13-1/4", S&C=14".

Ⓔ THESE MATERIAL ITEMS INCLUDED WITH CONTROLLER ASSEMBLY UNIT "C/RSTR".

REFERENCE:

F. DETERMINE MIMIMUM POLE CLASS DUE TO SERVICE RESTORER MOUNTED IN THE BUCK POSITION-SEE STANDARD 347.

Ⓖ POLE STEPPING - SEE STANDARD 363.

Ⓗ GROUNDING METHODS - SEE STANDARD 1002.

Ⓘ CONTROL INSTALLATION TO BE DONE BY SUBSTATION CONSTRUCTION AND MAINTENANCE, AND, IS TO BE INSTALLED 14'-0" FROM GROUND LEVEL TO BOTTOM OF CONTROLLER WHEN LOCATED ON STREET SIDE OF POLE. CONTROLLER LOCATED ON PROPERTY SIDE OF POLE WILL BE MOUNTED NO MORE THAN 9' FROM GROUND LEVEL TO BOTTOM OF CONTROLLER. STANDARD CONTROL CABLE LENGTH IS 35'. HOWEVER, LONGER CABLE LENGTHS ARE AVAILABLE IF REQUIRED. INSTALLER WILL SUPPLY CONDUIT ITEMS 39 THROUGH 42.

Ⓙ REFLECTOR STRIPS ARE REQUIRED ON ALL SECTIONALIZING/TIELINE SWITCHES AND SERVICE RESTORER POLES. (SEE STD. 208.3 ITEM 12)

K. POLE TOP SWITCH INSTALLATION-SEE STANDARD 1230.

FOR FIELD MAINTENANCE ONLY

TABLE OF CONTENTS

1299.711 SUPERSEDES 1271.5 (1-1-98)	SDG&E ELECTRIC STANDARDS BUCK POSITION SERVICE RESTORER HOOKSTICK SWITCH DISCONNECT LOADBREAK GANG SWITCH BY-PASS	DATE 1-1-98 APPD PSA / CMK

SCOPE: THIS STANDARD SHOWS THE INSTALLATION METHOD OF A DISTRIBUTION SERVICE RESTORER TO BE USED WITH ALL CONDUCTOR SIZES

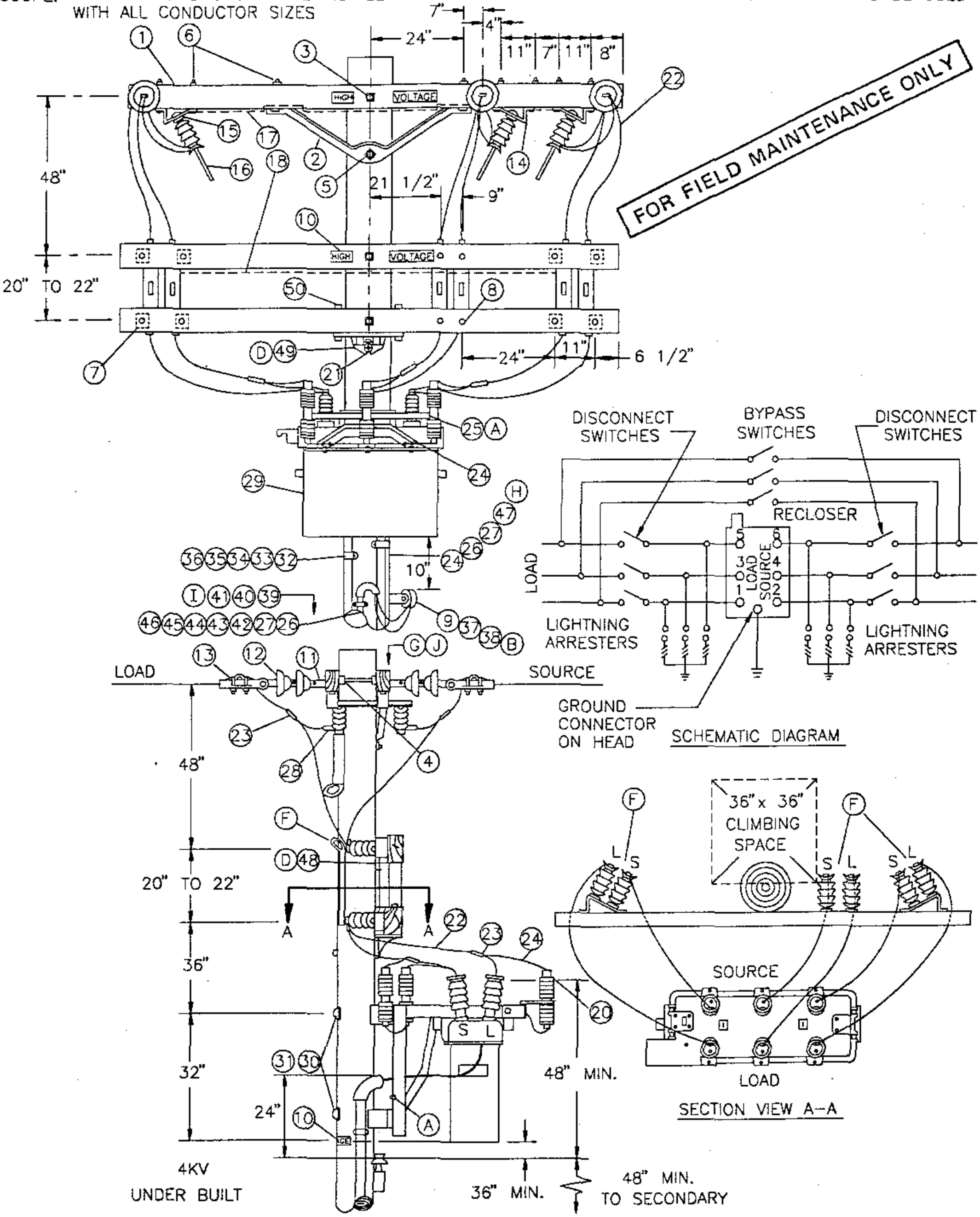

TABLE OF CONTENTS

DATE 1-1-93 APPD PMA/BDG	SDG&E ELECTRIC STANDARDS SERVICE RESTORER WITH HOOK STICK SWITCH DISCONNECT	1299.704 SUPERSEDES 1271.1 (1-1-94)

BILL OF MATERIAL:

ITEM	DESCRIPTION	QUANTITY	CONST STANDARD OR PAGE NO.	STOCK NUMBER
1	CROSSARM, 3 3/4" X 5 3/4" X 12' – 0"	5	–	294160
2	BRACE, ANGLE, CROSSARM, 4' – 0"	2	–	164032
3	BOLT, MACH, GALV, 5/8" X (LENGTH AS REQ'D), 2 SQUARE & 1 DOUBLE COIL SPRING WASHERS	3	392	–
4	BOLT, SPACE, GALV, 5/8" X (LENGTH AS REQ'D) 2 SQUARE, 2 ROUND & 2 DOUBLE COIL SPRING WASHERS	3	392	–
5	BOLT, MACH, GALV, 5/8" X (LENGTH AS REQ'D) & 1 DOUBLE COIL SPRING WASHERS	1	392	–
6	BOLT, MACH, GALV, 1/2" X 7", 1 ROUND & 1 DOUBLE COIL SPRING WASHERS	16	392	–
7	BOLT, MACH, GALV, 1/2" X 5", 1 ROUND & 1 DOUBLE COIL SPRING WASHERS	8	392	–
8	BOLT, MACH, GALV, 3/8" X 6", 1 ROUND & 1 DOUBLE COIL SPRING WASHERS	4	392	–
9	BOLT, MACH, GALV, 5/8" X (LENGTH AS REQ'D), 1 SQUARE & 1 DOUBLE COIL SPRING WASHERS	1	392	–
10	SIGN, HIGH VOLTAGE &	5	–	647648
	9 ROOFING NAILS, GALV	AS REQ'D	–	492224
11	CLEVIS, DEAD–END, 5/8", BOLT STEEL (CLOSED TYPE)	6	–	235712
12	INSULATOR, SUSPENSION, 12KV, CLEVIS	12	–	431616
13	CLAMP, STRAIGHT LINE, D.E.	6	741–743	–
14	BRACKET, DISCONNECT, ANGLE MOUNTING	10	–	166542
15	BOLT, MACH, GALV, 3/8" X 2", 2 ROUND & 1 LOCK WASHER	14	392	–
16	SWITCH, DISCONNECT, 14.4KV, 600A	9	–	707008
17	WIRE, #8, BARE SOLID ANNEALED COPPER	30'	–	812928
18	STAPLES, FENCE, GALV, 1 1/4"	AS REQ'D	–	678528
19				
20	ARRESTER, LIGHTNING, 12KV	6	–	113248
21	BOLT, MACH, GALV, 5/8" X (LENGTH AS REQ'D) 1 SQUARE, 1 ROUND & 1 DOUBLE COIL SPRING WASHER	1	392	–
22	WIRE, BARE STRANDED COPPER, (SIZE AS REQ'D WITH MINIMUM SIZE EQUAL TO LINE CONDUCTOR AMPACITY, OR GREATER) Ⓒ	75'	715	–
23	CONNECTOR, WIRE, COMPRESSION (SIZE AS REQ'D)	AS REQ'D	783–787	–
24	WIRE, #4, BARE STRANDED COPPER	100'	–	813760
25	CONNECTOR, SPLIT BOLT, #2	2	–	269536
26	CONDUIT, PVC, TYPE 2, SCHEDULE 80, 3/4" X 10'	3	–	251520
27	STRAPS, PIPE, GALV, 3/4" &	AS REQ'D	–	697888
	2 – 6D NAILS, GALV	AS REQ'D	–	491552
28	TERMINAL, COMPRESSION, CU OR AL (SIZE AS REQ'D)	6	794/795	–
29	RECLOSER, MCGRAW–EDISON, 560A, TYPE WE (INCLUDING BRACKET) Ⓒ	1	–	572110

FOR FIELD MAINTENANCE ONLY

TABLE OF CONTENTS

1299.705 SUPERSEDES 1271.2 (1–1–94)	SDG&E ELECTRIC STANDARDS SERVICE RESTORER WITH HOOK STICK SWITCH DISCONNECT	DATE 1–1–90 APPD

BILL OF MATERIAL:

ITEM	DESCRIPTION	QUANTITY	CONST STD OR PAGE NO	STOCK NUMBER
30	BOLT, MACH, GALV, 3/4" X (LENGTH AS REQ'D), 1 SQUARE CURVED RIBBED & 1 DOUBLE COIL SPRING WASHER	2	392	–
31	COVER, BOLT, PLASTIC &	2	–	285696
	6 – 10D NAILS, GALV	AS REQ'D	–	491392
32	CONTROL CABLE, FOR MCGRAW–EDISON RECLOSER (I)	1	–	192010
33	CONDUIT, PVC, SCHED 40, 2" X 10' (I)	2	–	251296
34	ELBOW, PVC, SCHED 40, 2", 12" RADIUS (I)	1	–	321816
35	ELBOW, PVC, SCHED 40, 2" (I)	2	–	–
36	STRAPS, PIPE, GALV, 2" & (I)	AS REQ'D	–	697856
	2 – 10 D NAILS, GALV	AS REQ'D	–	491392
37	BRACKET, SERVICE INSULATOR	1	–	166128
38	WIRE, COPPER, #8, 600 VOLT, DUPLEX (B)	AS REQ'D	–	196432
39	CONTROLLER, RECLOSER, MCGRAW–EDISON (I)	1	–	273928
40	SCREW, LAG, GALV, 1/2" X 4"	2	–	621568
41	PADLOCK, CORBIN #27 (FF KEY)	1	–	514848
42	COVER, PVC, DRIPLOOP, 3/4"	1	–	287248
43	COUPLING, PVC, 3/4"	2	–	280416
44	TERMINAL, ADAPTOR, PVC, 3/4"	1	–	102754
45	ELBOW, 90°, PULLING, PVC, 3/4"	2	–	–
46	NIPPLE, PIPE SCREW, GALV, 3/4" X 1"	1	–	–
47	UNIT, GROUND, COMPLETE	1	–	603136
48	GAIN, CROSSARM (D)	1	–	369596
49	GAIN, CROSSARM, BRACELESS (D)	1	–	369598
50	BOLT, MACH, GALV, 5/8" X 7" 1 ROUND & 1 DOUBLE COIL SPRING WASHER	2	392	–

FOR FIELD MAINTENANCE ONLY

TABLE OF CONTENTS

INSTALLATION:

(A) CONNECT GROUND LEAD TO RECLOSER MOUNTING FRAME. CONNECT LIGHTNING ARRESTER GROUND LEADS TO LIGHTNING ARRESTER MOUNTING BRACKETS. CONNECT GROUND CONNECTOR ON HEAD TO RECLOSER MOUNTING FRAME.

(B) RECLOSER CONTROL REQUIRES 120 VOLT SUPPLY, PREFERABLY COMING FROM THE SOURCE SIDE.

(C) THE 400A, TYPE RXE RECLOSER (S/N 572100) IS NO LONGER PURCHASED.

(D) DO NOT CUT GAINS IN THE POLE WHEN INSTALLING THE VERTICALLY MOUNTED SECTIONALIZING SWITCH ARMS. THE GAIN HARDWARE USED HERE MAKE CUT GAINS UNNECESSARY.

(F) IT IS NECESSARY TO CUT OFF INSIDE LOAD BREAK EARS ON EACH PAIR OF VERTICALLY MOUNTED DISCONNECT SWITCHES TO PREVENT PHYSICAL CONTACT.

REFERENCE:

(G) POLE STEPPING – SEE STANDARD 363.

(H) GROUNDING METHODS – SEE STANDARD 1002.

(I) CONTROL INSTALLATION TO BE DONE BY SUBSTATION CONSTRUCTION AND MAINTENANCE AND IS TO BE INSTALLED A MINIMUM OF 13'–6" ABOVE GROUND LEVEL. INSTALLER WILL SUPPLY CONDUIT ITEMS 33 THRU 36.

(J) REFLECTOR STRIPS ARE REQUIRED ON ALL SECTIONALIZING/TIELINE SWITCHES AND SERVICE RESTORER POLES. (SEE STD. 208.3 ITEM 12)

	SDG&E ELECTRIC STANDARDS	
DATE 1–1–93 APPD	SERVICE RESTORER WITH HOOK STICK SWITCH DISCONNECT	1299.706 SUPERSEDES 1271.3 (1–1–94)

MAIN TABLE OF CONTENTS

PAGE	SUBJECT
1302	CAPACITOR MARKING INSTRUCTIONS DECALS AND TAGS
1311	CAPACITOR INFORMATION
1312	VOLTAGE REGULATOR INFORMATION
1314	CAPACITOR CONNECTION 4KV WYE
1315	CAPACITOR INSTALLATION 4KV-WYE-150 KVAR MAXIMUM
1316	SECONDARY CAPACITOR, CAPACITOR INSTALLATION 4KV-WYE-300 KVAR MAXIMUM
1317	CAPACITOR INSTALLATION 4KV-WYE-450 KVAR MAXIMUM
1318	FIXED CAPACITOR INSTALLATION, 4.16KV DELTA UNDERGROUND RACK
1319	SWITCHED CAPACITOR INSTALLATION 4.16KV DELTA - 2 OIL SWITCHES
1321	SWITCHED CAPACITOR INSTALLATION 4.16KV WYE - 3 OIL SWITCHES
1322	CAPACITOR INSTALLATIONS, 12KV-WYE-900 KVAR MAX
1323	FIXED CAPACITOR INSTALLATION, 4KV WYE GROUNDED RACK
1324	12 & 12.47KV SWITCHED CAPACITOR INSTALLATION 3 OIL SWITCHES IN LINE
1325	12 & 12.47KV SWITCHED CAPACITOR INSTALLATION 2 OIL SWITCHES IN CAPACITOR NEUTRAL
1326	SWITCHED CAPACITORS - CURRENT SENSOR 12 & 12.47KV
1330	CAPACITOR CONTROL MATERIAL AND INSTALLATION VOLTAGE WITH TIME BIAS (TYPE 'TB')
1348	STEP-VOLTAGE REGULATOR STATION, OPEN DELTA, 12KV
1349	STEP-VOLTAGE REGULATOR STATION, CLOSED DELTA, 12KV, TWO POLES
1350	STEP-VOLTAGE REGULATOR STATION, CLOSED DELTA, 12KV, TWO POLES
1360	4KV/12KV SINGLE PHASE PRIMARY METERING STATION

© 1998 - 2023 San Diego Gas & Electric Company. All rights reserved. Removal of this copyright notice without permission is not permitted under law.

REV	CHANGE	DR	BY	DSN	APV	DATE	REV	CHANGE	DR	BY	DSN	APV	DATE
C	UPDATES TO 1312	-	JS	JS	MDJ	01/25/2017	F						
B	ADDED 1312	-	KR	JS	MDJ	12/02/2016	E	OH1360 MOVED TO FMO	GLC	RSL	JAS	KRG	03/10/2023
A	ORIGINAL ISSUE	-	JS	IL	MDJ	07/13/2016	D	EDITORIAL CHANGES	EDM	JIK	JES	KRG	04/08/2022

X Indicates Latest Revision | Completely Revised | New Page | Information Removed

SDG&E ELECTRIC OVERHEAD FIELD MAINTENANCE ONLY STANDARDS

SHEET 1 OF 1

CAPACITORS, REGULATORS FMO
TABLE OF CONTENTS

FMO
OH1301.1

FIELD MAINTENANCE ONLY

REVISION HISTORY:

7/13/2016: All versions prior to 2016 are superseded by their current version found inside the Overhead Construction Standard Manual.

TABLE OF CONTENTS

© 1998 - 2016 San Diego Gas & Electric Company. All rights reserved. Removal of this copyright notice without permission is not permitted under law.

REV	CHANGE	BY	DSGN	APPV	DATE	REV	CHANGE	BY	DSGN	APPV	DATE
C						F					
B						E					
A	ORIGINAL ISSUE	JS	IL	MDJ	7/13/2016	D					

X Indicates Latest Revision | Completely Revised | New Page | Information Removed

SHEET
1 OF 1

SDG&E ELECTRIC OVERHEAD STANDARD

CAPACITOR MARKING INSTRUCTIONS
DECALS AND TAGS

FMO
OH 1302

SCOPE: THIS STANDARD DESCRIBES CAPACITOR MARKING AND HANDLING PROCEDURES.

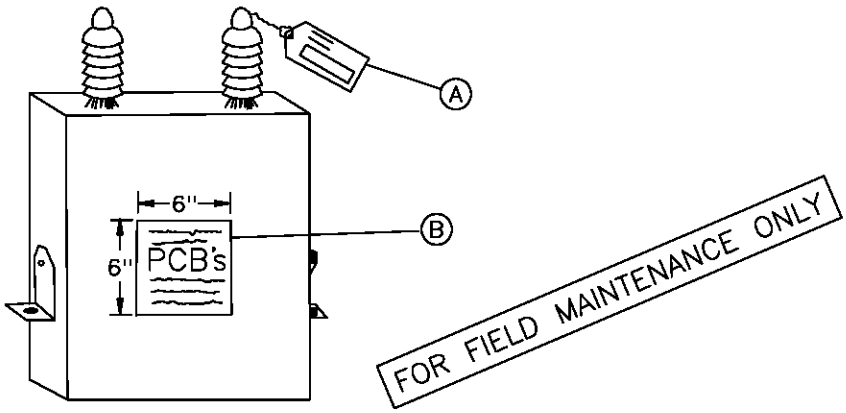

(A) CAPACITOR TAGS

THIS IDENTIFICATION TAG (SDG&E FORM 120-7240, STK. NO. 043450) IS USED FOR TRACKING THE CAPACITOR DURING REMOVAL/RETIREMENT AND INSTALLATION. IT SHALL BE USED ON ALL CAPACITORS, PCB UNITS AND NON-PCB UNITS.

EACH CAPACITOR UNIT IN STOCK WILL BE AFFIXED WITH A CAPACITOR IDENTIFICATION TAG BEFORE IT IS REMOVED FROM STOCK. THIS TAG IS TO BE COMPLETED BY THE FIELD PERSONNEL WHO EITHER REMOVES OR INSTALLS A CAPACITOR UNIT. ONE SIDE OF THIS TAG IS USED FOR REMOVAL AND THE OTHER FOR INSTALLATION.

1. INSTALLATION

   THE DISTRICT STOCKKEEPER SHALL COMPLETE AS MUCH OF THE CAPACITOR TAG(S) AS POSSIBLE ON THE INSTALLATION SIDE OF THE TAG AND ATTACH TO THE SPECIFIC UNIT. WHEN THE INSTALLATION IS COMPLETED, THE CREW FOREMAN SHALL REMOVE THE TAG AND COMPLETE THE REQUESTED INFORMATION.

2. REPLACEMENT

   WHEN A CAPACITOR UNIT IS REPLACING ONE THAT IS BEING REMOVED, THE FOREMAN SHALL FILL OUT BOTH SIDES OF THE TAG.

   IF REMOVAL AND REPLACEMENT IS NOT COMPLETED WITHIN TWO CONSECUTIVE WORKDAYS, TWO FORMS ARE TO BE COMPLETED, ONE FOR A REMOVAL, AND ANOTHER FOR INSTALLATION.

   IF REPLACEMENT IS DUE TO FAILURE OF ONE OR MORE UNITS, AN EQUIPMENT FAILURE REPORT IS REQUIRED.

3. REMOVAL

   WHEN A CAPACITOR UNIT IS REMOVED, THE CREW FOREMAN SHALL COMPLETE THE REMOVAL PORTION ONLY. IF TAGS ARE NOT STORED ON THE TRUCKS, THE DISPATCHER SHALL PROVIDE THE CREW WITH SUFFICENT TAGS FOR EACH CAPACITOR UNIT TO BE REMOVED.

TABLE OF CONTENTS

4. RETIREMENT

WHEN A CAPACITOR UNIT IS RETIRED, THE RETIRED PORTION OF THE CAPACITOR TAG MUST BE FILLED OUT BY THE PERSONNEL RETIRING THE UNIT.

5. DISPOSITION

IT SHALL BE THE DISPATCHER'S RESPONSIBILITY TO SEE THAT THE COMPLETED TAGS ARE SENT TO THE DISTRICT'S RECORDS SECTION, ATTENTION OF THE ENGINEERING CLERK, WITHIN ONE WORKING DAY AFTER THE CAPACITOR UNITS HAVE BEEN INSTALLED OR REMOVED.

Ⓑ DECAL

THIS DECAL (STOCK NO. 301880) IS TO BE PLACED ON ALL CAPACITOR UNITS WHICH CONTAIN PCB'S.

FIELD PERSONNEL AND STOCKKEEPERS SHOULD MAKE EVERY EFFORT TO INSURE THAT ALL PCB UNITS HAVE A DECAL, AND THAT ALL WORN, WEATHERED DECALS BE REPLACED WITH NEW DECALS. THE DECAL IS BLACK PRINT ON EITHER YELLOW OR WHITE BACKGROUND.

1. MARKING

EVERY CAPACITOR IN SERVICE OR IN STORAGE, WHICH USES AN INSULATING FLUID CONTAINING PCB'S, SHALL BE LABELED WITH THE DECAL (STOCK NO. 301880).

EVERY PCB CAPACITOR WHICH IS REMOVED FROM SERVICE AND DOES NOT HAVE THE DECAL (STOCK NO. 301880) SHALL HAVE THE DECAL PUT ON IT AT THE TIME IT IS REMOVED FROM SERVICE. THIS SHALL BE DONE BY THE WORK CREW THAT REMOVES THE UNIT. IF A PCB UNIT ARRIVES AT A STOREYARD WITH NO PCB DECAL, THE STOCKKEEPER SHALL PUT A DECAL ON.

NOTE: ALL CAPACITOR UNITS PURCHASED BEFORE 1977 USED AN INSULATING FLUID WHICH CONTAINED PCB'S. THE UNITS WITH THE PCB FLUIDS CAN BE IDENTIFIED BY THE WORDS "NON-FLAMMABLE LIQUID" ON NAMEPLATE OR BY THE MANUFACTURER'S TRADE NAMES WHICH ARE:

G.E. – PYRANOL
WESTINGHOUSE – INERTEEN
MCGRAW-EDISON – ELEMEX
CORNEL DUBILIER OR FEDERAL PACIFIC – DYKANOL
SANGAMO – DIACHLOR
ALLIS CHALMERS – CHLOREXTOL

FOR FIELD MAINTENANCE ONLY

ALL OF THE CAPACITOR UNITS RECEIVED THAT DO NOT CONTAIN PCB INSULATING FLUIDS HAVE THE WORDS "CONTAINS A NON-PCB INSULATING FLUID" ON THE NAMEPLATE OR ON A BLUE TANK DECAL.

2. HANDLING CAPACITORS CONTAINING POLYCHLORINATED BIPHENYLS (PCB)

CAPACITORS CONTAINING PCB SHALL BE HANDLED AS SPECIFIED IN THE PCB HANDLING AND PERSONAL SAFETY PROCEDURES. (SEE CONSTRUCTION MANAGEMENT STANDARD PRACTICE 107).

3. RETIRING RUPTURED OR DAMAGED UNITS

WHENEVER TRANSPORTATION OR KEARNY MAINTENANCE RETIRES A CAPACITOR AND DISPOSES OF IT, SPECIFIC DATA (I.E. SERIAL NUMBER, PCB OR NON-PCB, MANUFACTURER, SIZE, ETC.) MUST BE RECORDED ON THE CAPACITOR TAG AND SENT TO THE DISTRICT'S RECORDS SECTION, ATTENTION OF THE ENGINEERING CLERK.

TABLE OF CONTENTS

C. PRECAUTIONARY MEASURES – DAMAGED CAPACITOR UNITS

DAMAGED CAPACITOR UNITS WITH BULGED CASES MAY HAVE EXCESSIVE PRESSURE INSIDE. THE UNITS MAY RUPTURE WHEN HANDLED OR BUMPED. SINCE THE INSULATING LIQUID IN THE UNITS IS TOXIC, CARE SHALL BE EXERCISED WHEN WORKING WITH BULGED OR OTHERWISE DAMAGED UNITS. UNITS WITH BULGED OR DAMAGED CASES SHALL NOT BE RE–ENERGIZED.

D. CAPACITOR NAMEPLATES

THE CAPACITOR NAMEPLATE AND UNIT SHALL REMAIN INTACT. UNDER NO CIRCUMSTANCES SHALL THE NAMEPLATE BE REMOVED FROM THE CAPACITOR UNIT.

F. SERIES STREET LIGHTING TRANSFORMERS

THE TROUBLEMAN AND/OR CREW SHALL CHECK THE NAMEPLATE OF ANY RUPTURED 2400 VOLT, CONSTANT CURRENT STREET LIGHTING TRANSFORMER TO DETERMINE IF IT CONTAINS AN INTERNAL CAPACITOR. IF NO CAPACITOR IS SHOWN ON THE NAMEPLATE, THE TRANSFORMER IS TO BE TREATED AS ANY OTHER TRANSFORMER ON THE SYSTEM, NO SPECIAL HANDLING OR DISPOSAL IS REQUIRED. IF IT DOES, IT SHALL BE TREATED AS ANY PCB CONTAINING DEVICE UNTIL IT REACHES KEARNY MAINTENANCE. (SEE CONSTRUCTION MANAGEMENT STANDARD PRACTICE 107).

KEARNY SHALL REMOVE THE INTERNAL CAPACITOR IMMEDIATELY AND CHECK TO SEE IF IT HAS LEAKED. IF IT HAS NOT LEAKED, THE CAPACITOR SHALL BE DISPOSED OF IN ACCORDANCE WITH THE EPA REGULATIONS. THE TRANSFORMER MAY THEN RE–ENTER THE SYSTEM AS AN RO UNIT OR BE SCRAPPED.

IF PCB CONTAMINATION OF THE TRANSFORMER OIL IS SUSPECTED, KEARNY MAINTENANCE SHALL HAVE THE BEST LAB VERIFY THE LEVEL OF CONTAMINATION. IF IT IS 500PPM OR GREATER, THE OIL AND THE TRANSFORMER SHALL BE DISPOSED OF ACCORDING TO EPA REGULATIONS.

TABLE OF CONTENTS

FOR FIELD MAINTENANCE ONLY

FIELD MAINTENANCE ONLY

REVISION HISTORY:

7/13/2016: All versions prior to 2016 are superseded by their current version found inside the Overhead Construction Standard Manual.

TABLE OF CONTENTS

© 1998 - 2016 San Diego Gas & Electric Company. All rights reserved. Removal of this copyright notice without permission is not permitted under law.

REV	CHANGE	BY	DSGN	APPV	DATE	REV	CHANGE	BY	DSGN	APPV	DATE
C						F					
B						E					
A	ORIGINAL ISSUE	JS	IL	MDJ	7/13/2016	D					

X Indicates Latest Revision | Completely Revised | New Page | Information Removed

SHEET 1 OF 1

SDG&E ELECTRIC OVERHEAD STANDARD

CAPACITOR INFORMATION

FMO OH 1311

SCOPE: THIS STANDARD LISTS THE INFORMATION NEEDED TO DETERMINE PROPER CAPACITOR APPLICATIONS.

PREFIX	PHASE	VOLTAGE	DESCRIPTION		KVAR	STOCK NUMBER	ASSEMBLY UNITS
C	1	2400/4160Y	CAPACITOR UNITS		100	Ⓐ 207330	–
CT	3	2400/4160Y	FIXED CAPACITOR RACK CONSISTING OF 3 100KVAR 1Ø UNITS, 4 WIRE CONNECTED WYE.		300	564772	CT3F
			SWITCHED CAPACITOR RACK CONSISTING OF 3–100KVAR 1Ø UNITS AND 3 OIL SWITCHES WITH 2.4KV POTENTIAL TRANSFORMER.		300	564773	CT3S
CTD	3	4160 △	SWITCHED CAPACITOR RACK CONSISTING OF 3–200 KVAR, 7200V UNITS DELTA CONNECTED AND A POTENTIAL TRANSFORMER RATED AT 2400–120V FOR USE ON 4KV SYSTEM.	2 – OIL SWITCHES	Ⓑ 200	564758	CTD2S
			FIXED CAPACITOR RACK CONSISTING OF 3–200 KVAR, 7200V UNITS DELTA CONNECTED FOR USE ON 4KV SYSTEM.		Ⓑ 200	564759	CTD2F
YC	1	7200/12470Y	CAPACITOR UNITS		150	Ⓐ 207344	YC150
HC	3	7200/12470Y	CAPACITOR UNITS		300	Ⓐ 207336	–
HCT	3	2400/4160Y	FIXED CAPACITOR RACK CONSISTING OF 3–400 KVAR, 7200V UNITS WYE CONNECTED FOR USE ON 4KV SYSTEM.		130	564776	HCT1F
	3	7200/12470Y	SWITCHED CAPACITOR RACK CONSISTING OF 6–150KVAR 1Ø UNITS WITH 7.2KV POTENTIAL TRANSFORMER	3 – OIL SWITCHES	900	Ⓐ564706	–
			SWITCHED CAPACITOR RACK CONSISTING OF 6–150KVAR 1Ø UNITS WITH 12KV POTENTIAL TRANSFORMER	2 – OIL SWITCHES	900	Ⓐ564708	–
			SWITCHED CAPACITOR RACK CONSISTING OF 6–150KVAR 1Ø UNITS WITH 12KV POTENTIAL TRANSFORMER	3 – OIL SWITCHES	900	Ⓐ564704	–
			FIXED CAPACITOR RACK CONSISTING OF 6–150 KVAR 1Ø UNITS		900	Ⓐ564680	900F
			SWITCHED CAPACITOR RACK CONSISTING OF 9–150KVAR 1Ø UNITS WITH 7.2KV POTENTIAL TRANSFORMER	3 – OIL SWITCHES	1350	Ⓐ564754	–
			SWITCHED CAPACITOR RACK CONSISTING OF 9–150KVAR 1Ø UNITS WITH 12KV POTENTIAL TRANSFORMER	2 – OIL SWITCHES	1350	Ⓐ564756	–
				3 – OIL SWITCHES	1350	Ⓐ564752	–
			FIXED CAPACITOR RACK CONSISTING OF 9–150KVAR 1Ø UNITS		1350	Ⓐ564744	1350F

FOR FIELD MAINTENANCE ONLY

INSTALLATION:

Ⓐ NO LONGER PURCHASED.

Ⓑ THE KVAR RATING OF 7200 VOLT CAPACITORS IS REDUCED BY A FACTOR OF THREE WHEN WIRED IN DELTA AND CONNECTED TO THE 4160 VOLT SYSTEM.

TABLE OF CONTENTS

SCOPE: THIS STANDARD LISTS THE INFORMATION NEEDED TO DETERMINE PROPER CAPACITOR APPLICATIONS.

PREFIX	PHASE	VOLTAGE	DESCRIPTION	KVAR	STOCK NUMBER	ASSEMBLY UNITS
YC	1	7200/12470Y	CAPACITOR UNITS	200	207350	YC200
				400	207348	–
HCT	3	2400/4160Y	FIXED CAPACITOR RACK CONSISTING OF 3–400 KVAR, 7200V UNITS WYE CONNECTED FOR USE ON 4KV SYSTEM.	130	564776	HCT1F
	3	2400/4160Y	FIXED CAPACITOR RACK CONSISTING OF 3–200 KVAR, 7200V UNITS WYE CONNECTED FOR USE ON 4KV SYSTEM.	65	564759	HCT6F
	3	7200/12470Y	SWITCHED CAPACITOR RACK CONSISTING OF 3–200 KVAR SINGLE–PHASE UNITS WITH 12KV POTENTIAL TRANSFORMER	600	564761	600S
	3	7200/12470Y	FIXED CAPACITOR RACK CONSISTING OF 3–200 KVAR SINGLE–PHASE UNITS.	600	564763	600F
	3	7200/12470Y	SWITCHED CAPACITOR RACK CONSISTING OF 3–400KVAR SINGLE–PHASE UNITS WITH 12KV POTENTIAL TRANSFORMER — 2 – OIL SWITCHES	1200	564770	1200S
			FIXED CAPACITOR RACK CONSISTING OF 3–400 KVAR SINGLE–PHASE UNITS	1200	564764	1200F

TABLE OF CONTENTS

FOR FIELD MAINTENANCE ONLY

FIELD MAINTENANCE ONLY

REVISION HISTORY:

1/25/2017: All versions prior to 2016 are superseded by their current version found inside the Overhead Construction Standard Manual.

TABLE OF CONTENTS

© 1998 - 2016 San Diego Gas & Electric Company. All rights reserved. Removal of this copyright notice without permission is not permitted under law.

REV	CHANGE	BY	DSGN	APPV	DATE	REV	CHANGE	BY	DSGN	APPV	DATE
C						F					
B						E					
A	ORIGINAL ISSUE	JS	JS	MDJ	1/25/2017	D					

SCOPE: THIS STANDARD SHOWS THE PREFIXES, PURCHASING STATUS, STOCK NUMBERS, AND BUCK OR BOOST CAPABILITIES OF VOLTAGE REGULATORS.

VOLTAGE REGULATORS

PREFIX	PHASE	VOLTAGE	DESCRIPTION	KVA	AMPS	STOCK NUMBER	ASSEMBLY UNITS
G	1	2400/4160Y	FEEDER VOLTAGE REGULATOR	24	–	(A) S581248	–
				36	150	(A) S581312	–
				37.5	150	(A) S581344	–
				48	–	(A) S581375	–
				72	300	(A) S581440	–
GT	3	4160/2400	FEEDER VOLTAGE REGULATOR	34.6	90	(A) S581856	–
				36	90	(A) S581888	–
				72	60	(A) S581920	–
				100	250	(A) S581728	–
				108	250	(A) S581760	–
				125	300	(A) S581792	–
				144	–	(A) S581824	–
				375	900	(A) S581904	–
GH	1	12,000	FEEDER VOLTAGE REGULATOR	72	100	(A) (B) S581488	–
				60	50	(A) (D) S581504	–
GHT	3	12,000	FEEDER VOLTAGE REGULATOR	50	40	(A) S581632	–
				160	130	(A) S581536	–
				239	200	(A) S581568	–
				312	260	(A) S581600	–
				600	500	(A) S581664	–
				750	625	(A) S581696	–
GU	1	120/240	UNIREG, SEC. VOLTAGE REG.	–	–	(A) –	–
GY	1	7200/12,470Y	FEEDER VOLTAGE REGULATOR	19	25	(D) (A) –	–
				57.2	75	(D) S581936	GY57
GR	1	7200/12,470Y	FEEDER VOLTAGE REGULATOR REVERSIBLE FEED	72	100	(D) (A) S581714	GR100A
GS	1	7200/12,470Y	FEEDER VOLTAGE REGULATOR	72	100	(D) S581715	GS100A
GC	1	12,000	FEEDER VOLTAGE REGULATOR REVERSIBLE FEED	120	100	(D) (A) S581476	GC100A
				240	200	(D) (A) S581478	GC200A

INSTALLATION:

(A) NO LONGER PURCHASED.

(B) 4 – 1 1/2% STEPS BELOW OR ABOVE NEUTRAL.

(D) 16 – 5/8% STEPS BELOW AND ABOVE NEUTRAL.

© 1998 - 2010 San Diego Gas & Electric Company. All rights reserved. Removal of this copyright notice without permission is not permitted under law.

TABLE OF CONTENTS

FIELD MAINTENANCE ONLY

REVISION HISTORY:

7/13/2016: All versions prior to 2016 are superseded by their current version found inside the Overhead Construction Standard Manual.

TABLE OF CONTENTS

© 1998 - 2016 San Diego Gas & Electric Company. All rights reserved. Removal of this copyright notice without permission is not permitted under law.

REV	CHANGE	BY	DSGN	APPV	DATE	REV	CHANGE	BY	DSGN	APPV	DATE
C						F					
B						E					
A	ORIGINAL ISSUE	JS	IL	MDJ	7/13/2016	D					

X Indicates Latest Revision | Completely Revised | New Page | Information Removed

SHEET 1 OF 1

SDG&E ELECTRIC OVERHEAD STANDARD

CAPACITOR CONNECTION 4KV WYE

FMO OH 1314

TABLE OF CONTENTS

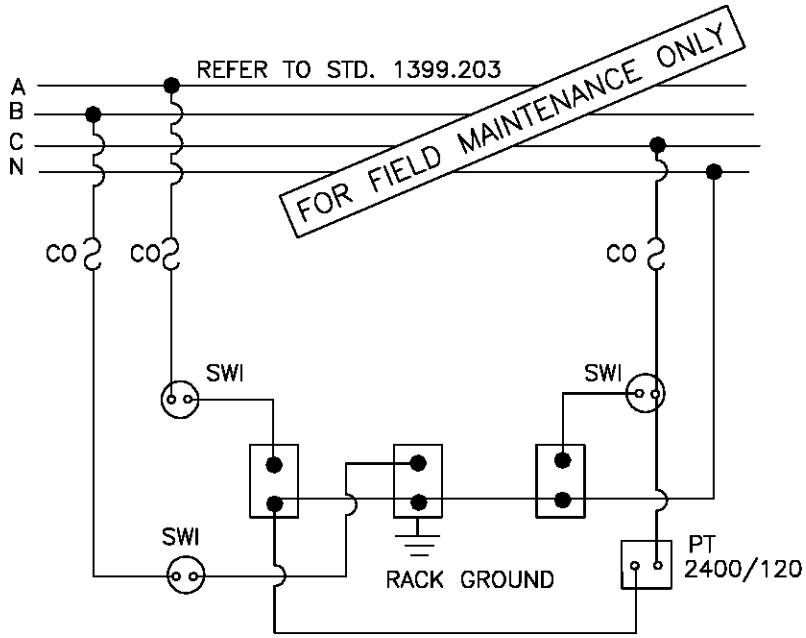

DIAGRAM OF 4KV WYE CONNECTED
SWITCHED 300KVAR (3–100KVAR UNITS)

NOTE:

– DO NOT GROUND THE CAPACITOR NEUTRAL BUS. IT IS ALREADY GROUNDED THROUGH THE 4KV NEUTRAL SYSTEM.

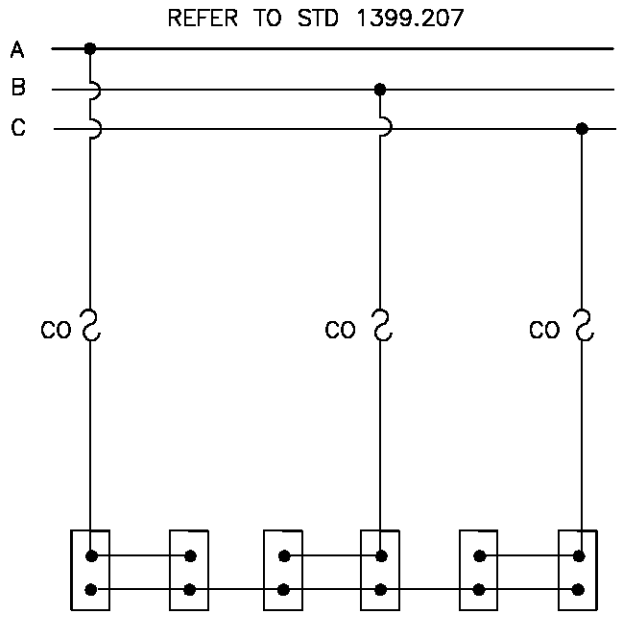

SCHEMATIC DIAGRAM

600 KVAR (6–100 KVAR UNITS)
300 KVAR (6–50 KVAR UNITS)
150 KVAR (6–25 KVAR UNITS)

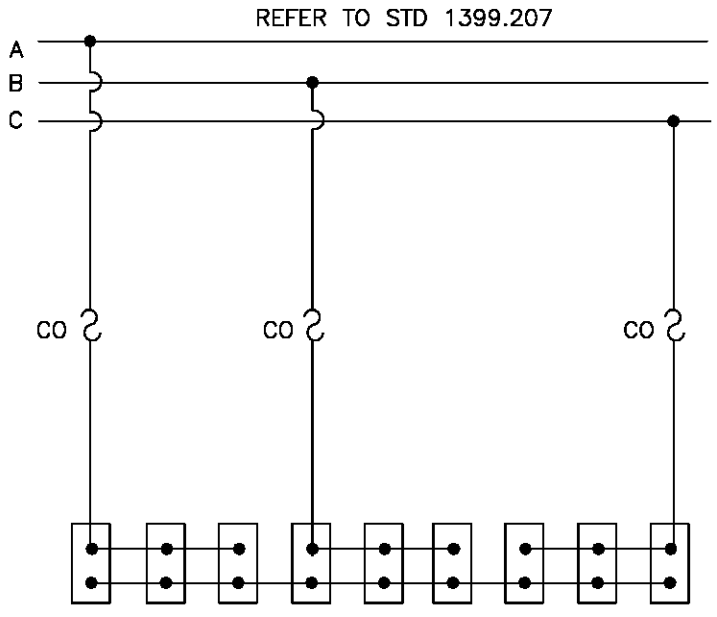

SCHEMATIC DIAGRAM

900 KVAR (9–100 KVAR UNITS)
450 KVAR (9–50 KVAR UNITS)
225 KVAR (9–25 KVAR UNITS)

DATE 12–1–98 APPD PA 12/98	SDG&E ELECTRIC STANDARDS CAPACITOR CONNECTION 4KV WYE	1399.104 SUPERSEDES 1314.3 (12–1–98)

REFER TO STD 1399.207

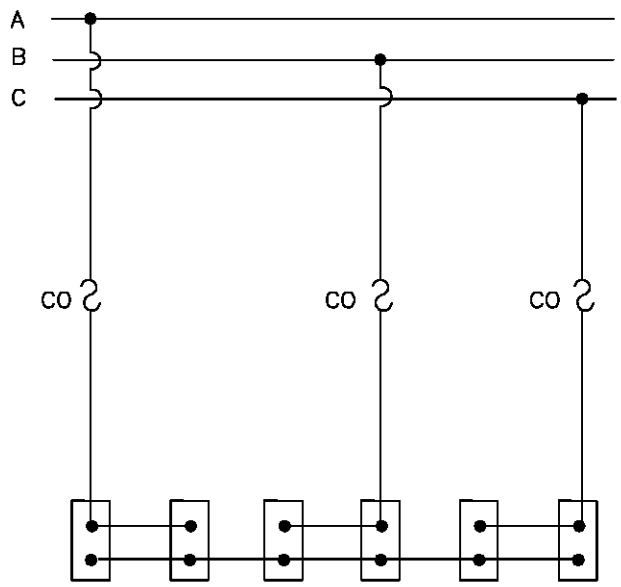

SCHEMATIC DIAGRAM

600 KVAR (6–100 KVAR UNITS)
300 KVAR (6–50 KVAR UNITS)
150 KVAR (6–25 KVAR UNITS)

FOR FIELD MAINTENANCE ONLY

TABLE OF CONTENTS

REFER TO STD 1399.207

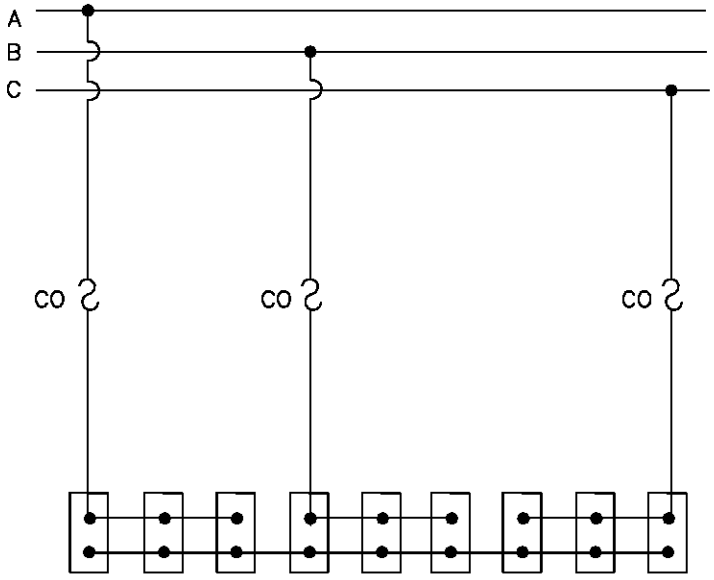

SCHEMATIC DIAGRAM

900 KVAR (9–100 KVAR UNITS)
450 KVAR (9–50 KVAR UNITS)
225 KVAR (9–25 KVAR UNITS)

NOTE:

–SEE STD. 1309 FOR CAPACITOR FUSING.

1399.105 SUPERSEDES 1314.4 (12–1–98)	SDG&E ELECTRIC STANDARDS CAPACITOR CONNECTION 12KV–WYE (FIXED)	DATE 12–1–98 APPD PSA/BSG

TABLE OF CONTENTS

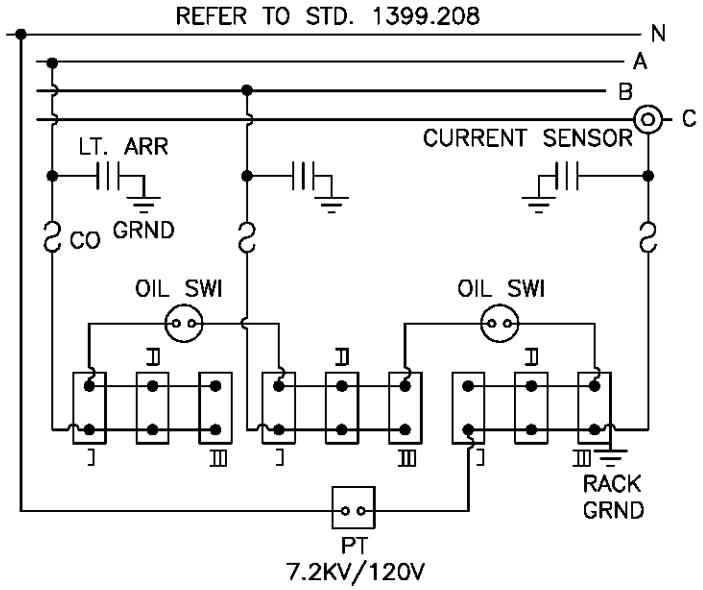

SCHEMATIC DIAGRAM

1350 KVAR (9–150 KVAR UNITS) I, II, III
1200 KVAR (6–200 KVAR UNITS) I & III
900 KVAR (6–150 KVAR UNITS) I & III
600 KVAR (3–200 KVAR UNITS) II

FOR FIELD MAINTENANCE ONLY

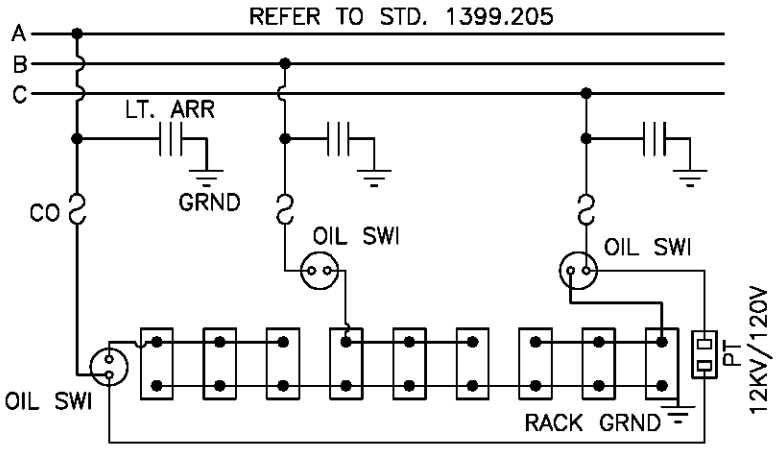

SCHEMATIC DIAGRAM
1350 KVAR (9–150 KVAR UNITS)
WITH 3 OIL SWITCHES

NOTE:

–SEE STD. 1309 FOR CAPACITOR FUSING.

DATE 12–1–98 APPD PA / RDG	SDG&E ELECTRIC STANDARDS CAPACITOR CONNECTION 12 & 12.47KV–WYE (SWITCHED)	1399.106 SUPERSEDES 1314.5 (12–1–98)

FIELD MAINTENANCE ONLY

REVISION HISTORY:

7/13/2016: All versions prior to 2016 are superseded by their current version found inside the Overhead Construction Standard Manual.

TABLE OF CONTENTS

© 1998 - 2016 San Diego Gas & Electric Company. All rights reserved. Removal of this copyright notice without permission is not permitted under law.

REV	CHANGE	BY	DSGN	APPV	DATE	REV	CHANGE	BY	DSGN	APPV	DATE
C						F					
B						E					
A	ORIGINAL ISSUE	JS	IL	MDJ	7/13/2016	D					

X Indicates Latest Revision | Completely Revised | New Page | Information Removed

SHEET 1 OF 1

SDG&E ELECTRIC OVERHEAD STANDARD

CAPACITOR INSTALLATION 4KV-WYE-150 KVAR MAXIMUM

FMO OH 1315

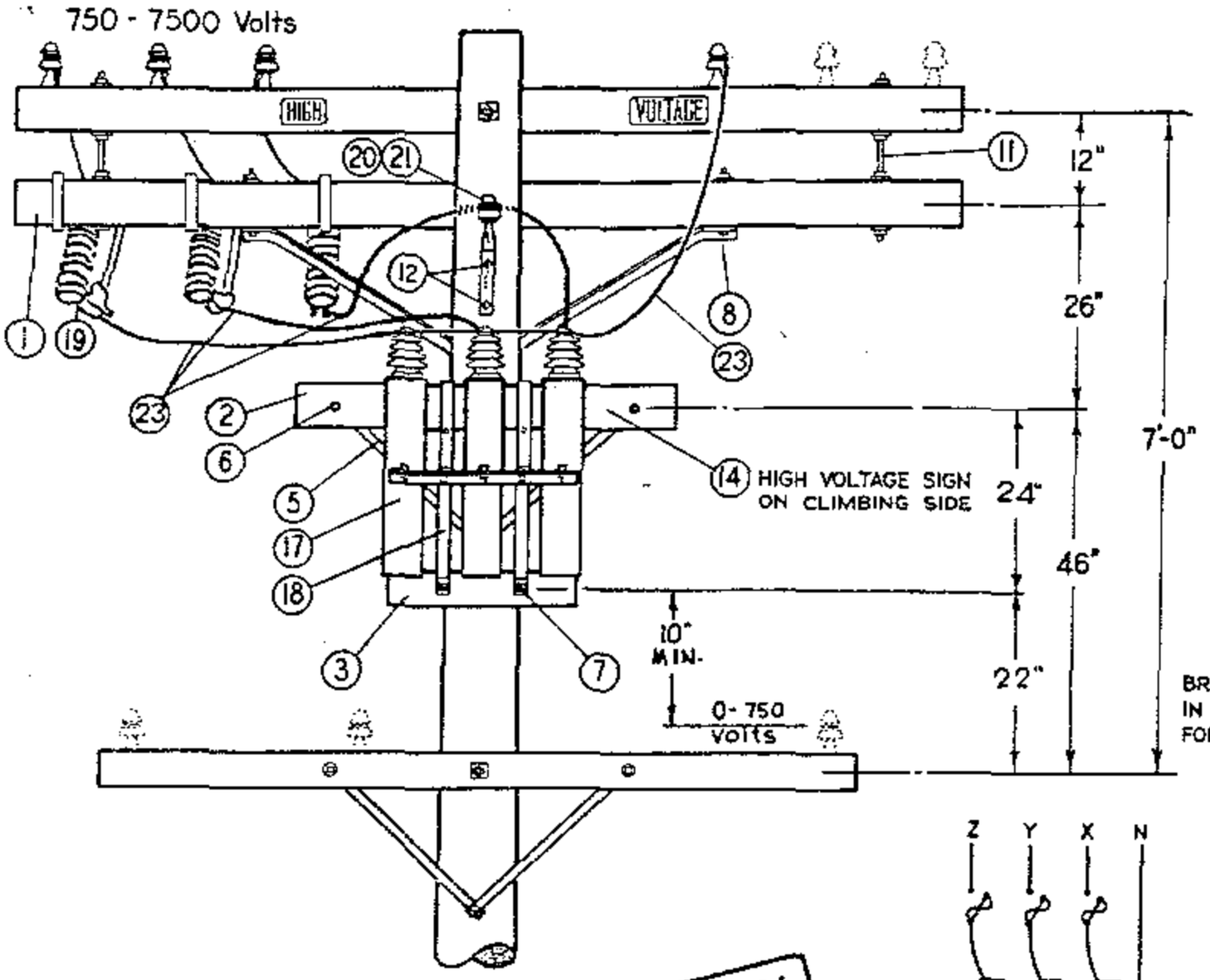

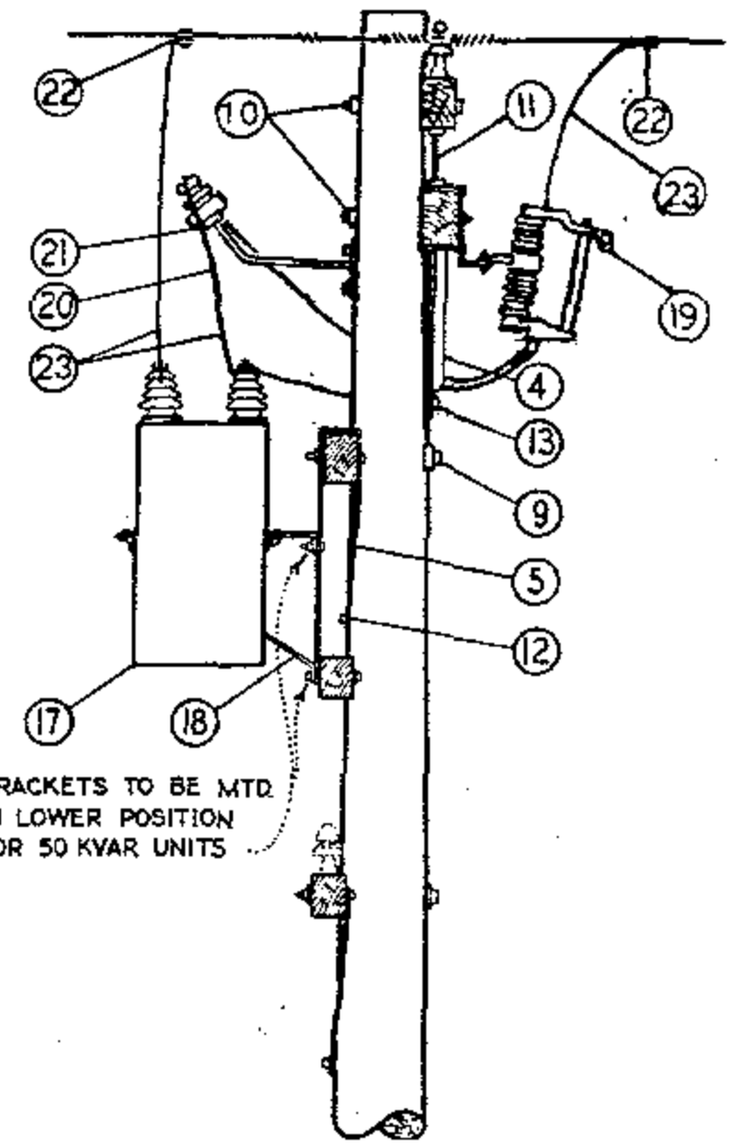

FOR FIELD MAINTENANCE ONLY

DIAGRAM OF 4 KV. WYE CONNECTIONS
150 KVAR (3-50 KVAR UNITS)
75 KVAR (3-25 KVAR UNITS)
45 KVAR (3-15 KVAR UNITS)

INSTALLATION:

A. CAPACITOR RACK TO BE MOUNTED ON OPPOSITE SIDE OF LINE AND CUTOUT ARMS.
(B) NO LONGER PURCHASED.
C. FOR POLE STEPPING REFER TO STD. 363.
(E) EXEMPT MATERIAL.

ITEM	DESCRIPTION	QUANTITY	STOCK NO. OR CONSTR. STD.
1	CROSSARM, 3 3/4" X 5 3/4" X 10' - 0"	1	PG 380.01 IT. 2
2	CROSSARM, 3 3/4" X 5 3/4" X 4' - 0"	1	PG 380.05 IT. 3
3	CROSSARM, 3 1/2" X 4 1/2" X 2' - 0"	1	PG 380.05 IT. 1
4	BRACE, ANGLE CROSSARM, 5' - 0"	1	164128
5	BRACE, FLAT CROSSARM, 28"	2	164192
6	BOLT, MACH., GALV., 3/8" X 4 1/2", 1 RD. WASH. & 1 NUT	2	STD 139, 140 (E)
7	BOLT, MACH., GALV., 1/2" X 5", 1 RD. WASH. & 1 NUT	2	STD 139, 140 (E)
8	BOLT, MACH., GALV., 1/2" X 7", 1 RD. WASH. & 1 NUT	2	STD 139, 140 (E)
9	BOLT, MACH., GALV., 5/8" X (AS REQ'D) 3 SQ. WASH, 1 FLAT, 1 CURV & 1 NUT	1	STD 139, 140 (E)
10	BOLT, MACH., GALV., 5/8" X (AS REQ'D) 2-2 1/4" SQ WASH & 1 NUT	2	STD 139, 140 (E)
11	BOLT, SPACE, GALV., 5/8" X 22", 4 SQ. WASH. & 4 NUTS	2	STD 139, 140 (E)
12	LAG SCREW, GALV., 1/2" X 4"	3	621568 (E)
13	LAG SCREW, GALV., 5/8" X 5"	1	621600 (E)
14	SIGN, HIGH VOLTAGE & 8 ROOFING NAILS	1	647648-492224 (E)
15			
16			
17	CAPACITOR UNIT (2.4KV, 50 KVAR ILLUSTRATED) (B)	3	207200
18	RACK, CAPACITOR	1	402624
19	CUTOUT, 12KV, 100A, HEAVY DUTY, WITH LOADBUSTER HOOKS	3	297688
20	BRACKET, INSULATOR 1" LEAD THREAD	1	166134
21	INSULATOR, PIN TYPE, CLASS AS REQUIRED	1	PG 750.3
22	CONNECTOR, COMPRESSION	4	PGS 786, 783 (E)
23	WIRE, BARE STRANDED, #6	30'	813536

SDG&E ELECTRIC STANDARDS

1399.101
SUPERSEDES
1315 (1-1-87)

CAPACITOR INSTALLATION 4KV-WYE-150 KVAR MAXIMUM

DATE 1-1-87
APPD AK/RDS

TABLE OF CONTENTS

750 - 7500 Volts

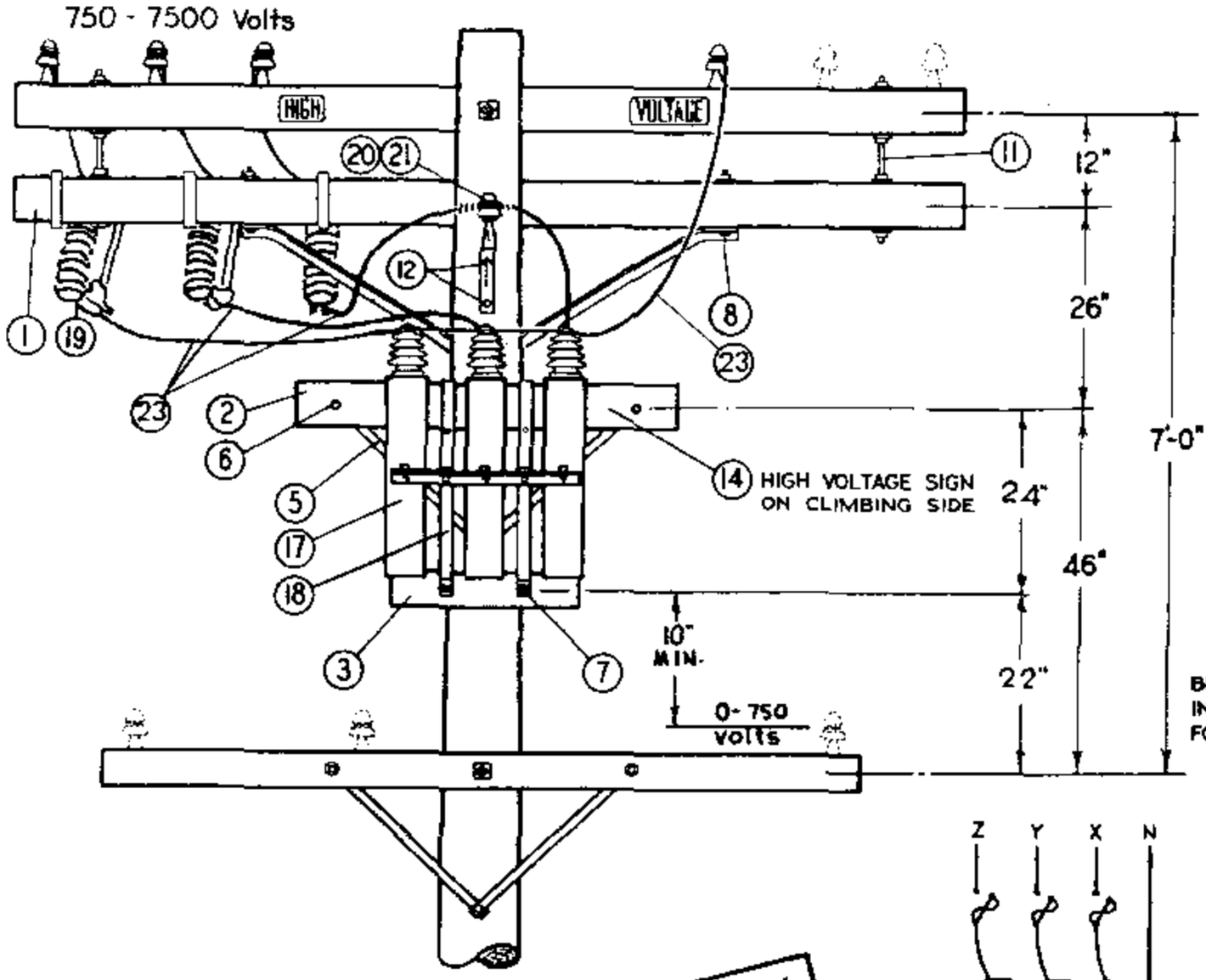

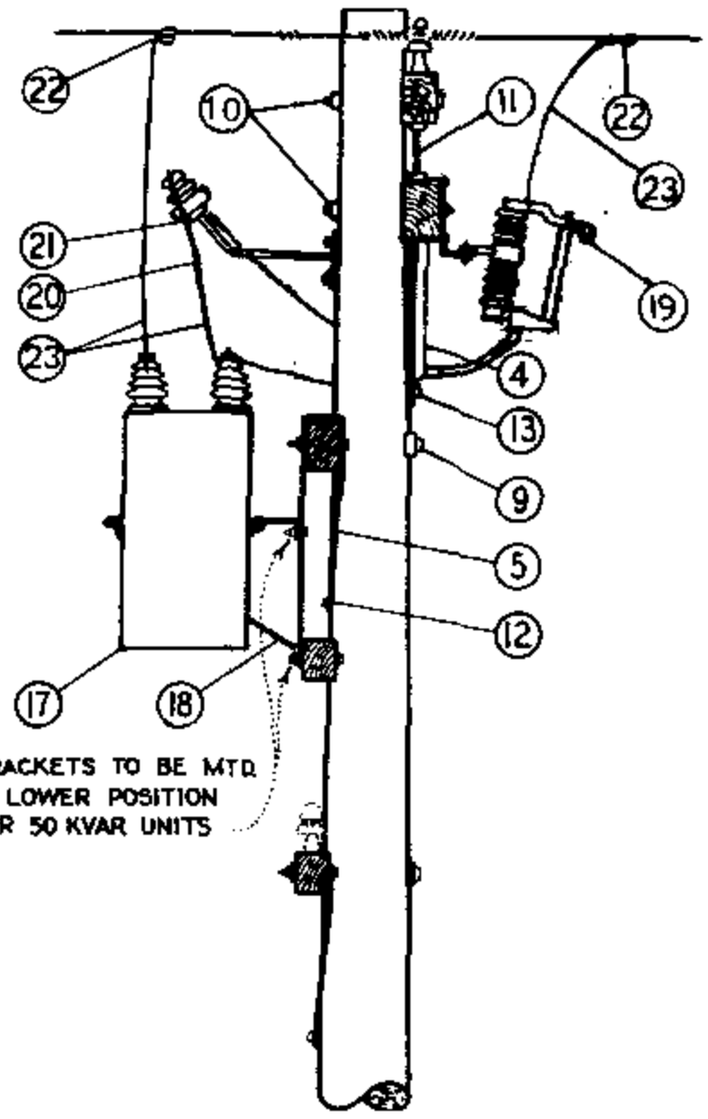

FOR FIELD MAINTENANCE ONLY

DIAGRAM OF 4 KV. WYE CONNECTIONS
150 KVAR (3-50 KVAR UNITS)
75 KVAR (3-25 KVAR UNITS)
45 KVAR (3-15 KVAR UNITS)

INSTALLATION:

A. CAPACITOR RACK TO BE MOUNTED ON OPPOSITE SIDE OF LINE AND CUTOUT ARMS.
(B) NO LONGER PURCHASED.
C. FOR POLE STEPPING REFER TO STD. 363.
(E) EXEMPT MATERIAL.

ITEM	DESCRIPTION	QUANTITY	STOCK NO. OR CONSTR. STD.
1	CROSSARM, 3 3/4" X 5 3/4" X 10' - 0"	1	PG 380.01 IT. 2
2	CROSSARM, 3 3/4" X 5 3/4" X 4' - 0"	1	PG 380.05 IT. 3
3	CROSSARM, 3 1/2" X 4 1/2" X 2' - 0"	1	PG 380.05 IT. 1
4	BRACE, ANGLE CROSSARM, 5' - 0"	1	164128
5	BRACE, FLAT CROSSARM, 26"	2	164192
6	BOLT, MACH., GALV., 3/8" X 4 1/2", 1 RD. WASH. & 1 NUT	2	STD 139, 140 (E)
7	BOLT, MACH., GALV., 1/2" X 5", 1 RD. WASH. & 1 NUT	2	STD 139, 140 (E)
8	BOLT, MACH., GALV., 1/2" X 7", 1 RD. WASH. & 1 NUT	2	STD 139, 140 (E)
9	BOLT, MACH., GALV., 5/8" X (AS REQ'D) 3 SQ. WASH, 1 FLAT, 1 CURV & 1 NUT	1	STD 139, 140 (E)
10	BOLT, MACH., GALV., 5/8" X (AS REQ'D) 2-2 1/4" SQ WASH & 1 NUT	2	STD 139, 140 (E)
11	BOLT, SPACE, GALV., 5/8" X 22", 4 SQ. WASH. & 4 NUTS	2	STD 139, 140 (E)
12	LAG SCREW, GALV., 1/2" X 4"	3	621568 (E)
13	LAG SCREW, GALV., 5/8" X 5"	1	621600 (E)
14	SIGN, HIGH VOLTAGE & 8 ROOFING NAILS	1	647648-492224 (E)
15			
16			
17	CAPACITOR UNIT (2.4KV, 50 KVAR ILLUSTRATED) (B)	3	207200
18	RACK, CAPACITOR	1	402624
19	CUTOUT, 12KV, 100A, HEAVY DUTY, WITH LOADBUSTER HOOKS	3	297888
20	BRACKET, INSULATOR 1" LEAD THREAD	1	166134
21	INSULATOR, PIN TYPE, CLASS AS REQUIRED	1	PG 750.3
22	CONNECTOR, COMPRESSION	4	PGS 786, 783 (E)
23	WIRE, BARE STRANDED, #6	30'	813536

399.107
SUPERSEDES
15 (1-1-87)

SDG&E ELECTRIC STANDARDS

CAPACITOR INSTALLATION 4KV-WYE-150 KVAR MAXIMUM

DATE 1-1-87
APPD AK/RDS

TABLE OF CONTENTS

OH1316 FIELD MAINTENANCE ONLY

ALL VERSIONS LISTED IN FMO ARE SUPERSEDED BY THEIR CURRENT VERSION FOUND INSIDE THE OVERHEAD CONSTRUCTION STANDARD MANUAL.

REVISION HISTORY:

04/08/2022: SECONDARY CAPACITOR MOVED TO FMO

07/13/2016: MOVED TO FMO

TABLE OF CONTENTS

© 1998 - 2022 San Diego Gas & Electric Company. All rights reserved. Removal of this copyright notice without permission is not permitted under law.

REV	CHANGE	DR	BY	DSN	APV	DATE	REV	CHANGE	DR	BY	DSN	APV	DATE
C							F						
B	EDITORIAL CHANGES	EDM	JIK	JES	KRG	04/08/2022	E						
A	ORIGINAL ISSUE	-	JS	IL	MDJ	07/13/2016	D						

X Indicates Latest Revision | Completely Revised | New Page | Information Removed

SHEET 1 OF 1

SDG&E ELECTRIC OVERHEAD FIELD MAINTENANCE ONLY STANDARDS

SECONDARY CAPACITOR
CAPACITOR INSTALLATION 4KV-WYE-300 KVAR MAXIMUM

FMO OH1316

SCOPE: THIS STANDARD SHOWS THE INSTALLATION OF A SINGLE-PHASE, 240 VOLT, SECONDARY CAPACITOR FOR BOOSTING SECONDARY VOLTAGE AS A PRACTICAL ALTERNATIVE TO STRINGING ADDITIONAL PRIMARY AND SETTING AN ADDITIONAL TRANSFORMER.

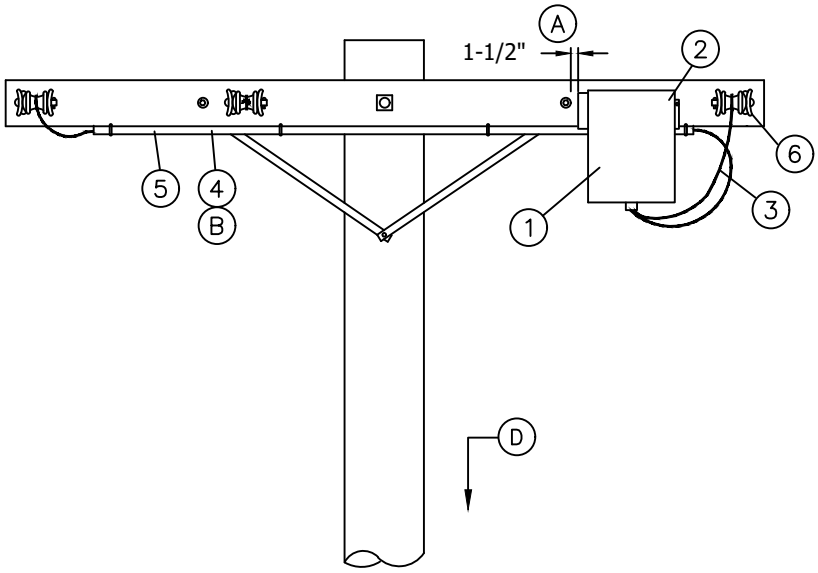

INSTALLATION:

(A) MOUNT CAPACITOR ON CROSSARM, OUTSIDE OF STRAP BRACE WITH 1-1/2" HARDWARE CLEARANCE.

(B) USE EXISTING UNDERARM MOUNTED CONDUIT IF POSSIBLE, OR, INSTALL MINIMUM OF 1" CONDUIT.

C. INSTALL CAPACITOR ON SOURCE SIDE OF LOAD.

(D) ATTACH TO BASE OF POLE A TAG WHICH READS **"240V SEC CAP"**.

FIELD MAINTENANCE ONLY

BILL OF MATERIALS:

ITEM	DESCRIPTION		QUANTITY	STOCK NUMBER
1	CAPACITOR, SINGLE-PHASE, 240 VOLT, CROSSARM MOUNTED	10 KVAR	1	S207160
		OR		
		20 KVAR	1	S207162
2	BOLT, CARRIAGE, GALV, ⅜" x 6", 2 ROUND & 1 LOCK WASHER		2	S150080
3	WIRE, #4 CU W.P.		14'	S812480
4	CONDUIT, PVC, TYPE 2, SCHEDULE 40	(B)	6'	-
5	STRAP, PIPE, GALV, (SIZE AS REQ'D) AND 2-6D NAILS, GALV		AS REQ'D	S491552
6	CONNECTOR, WIRE, COMPRESSOR (SIZE AS REQ'D)		AS REQ'D	S783-787

NOTES:

I. THIS CAPACITOR TO BE CROSSARM MOUNTED WITH OPEN WIRE OR AERIAL CABLE SECONDARY. DO NOT POLE MOUNT. STANDARD PRACTICE 317 SHOULD BE REVIEWED PRIOR TO INSTALLATION.

REFERENCE: NONE

© 1998 - 2022 San Diego Gas & Electric Company. All rights reserved. Removal of this copyright notice without permission is not permitted under law.

REV	CHANGE	DR	BY	DSN	APV	DATE	REV	CHANGE	DR	BY	DSN	APV	DATE
C	MOVED TO FMO	EDM	JIK	JES	KRG	04/08/2022	F						
B	DRAWING UPDATE	PEI	-	-	-	02/18/2019	E						
A	ORIGINAL ISSUE	-	-	PTA	RDG	12/15/1996	D						

X Indicates Latest Revision | Completely Revised | New Page | Information Removed

SDG&E ELECTRIC OVERHEAD FIELD MAINTENANCE ONLY STANDARDS

SINGLE-PHASE, 240V, SECONDARY CAPACITOR

SHEET 1 OF 1

FMO OH1316.1

TABLE OF CONTENTS

750 - 7500 Volts

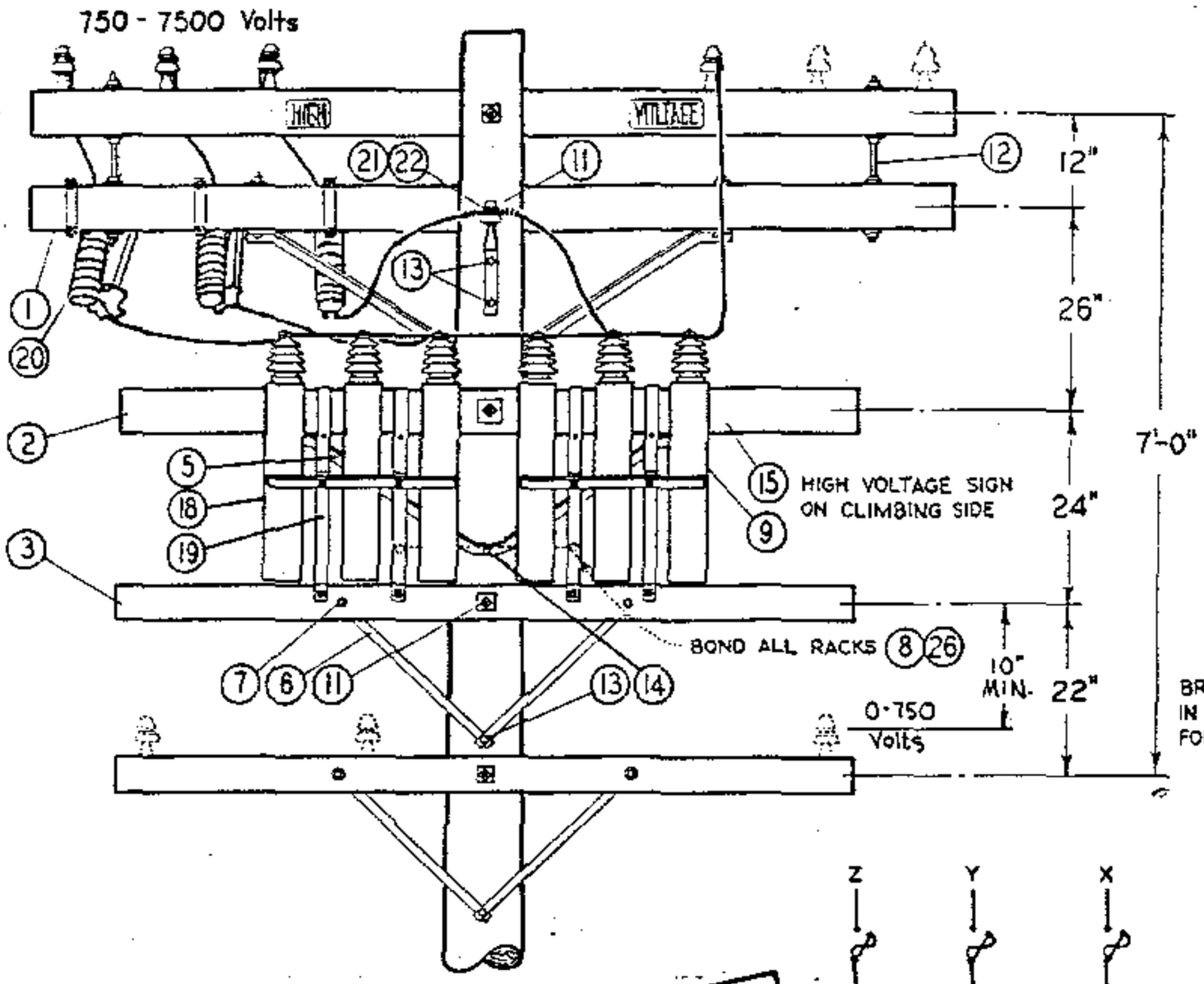

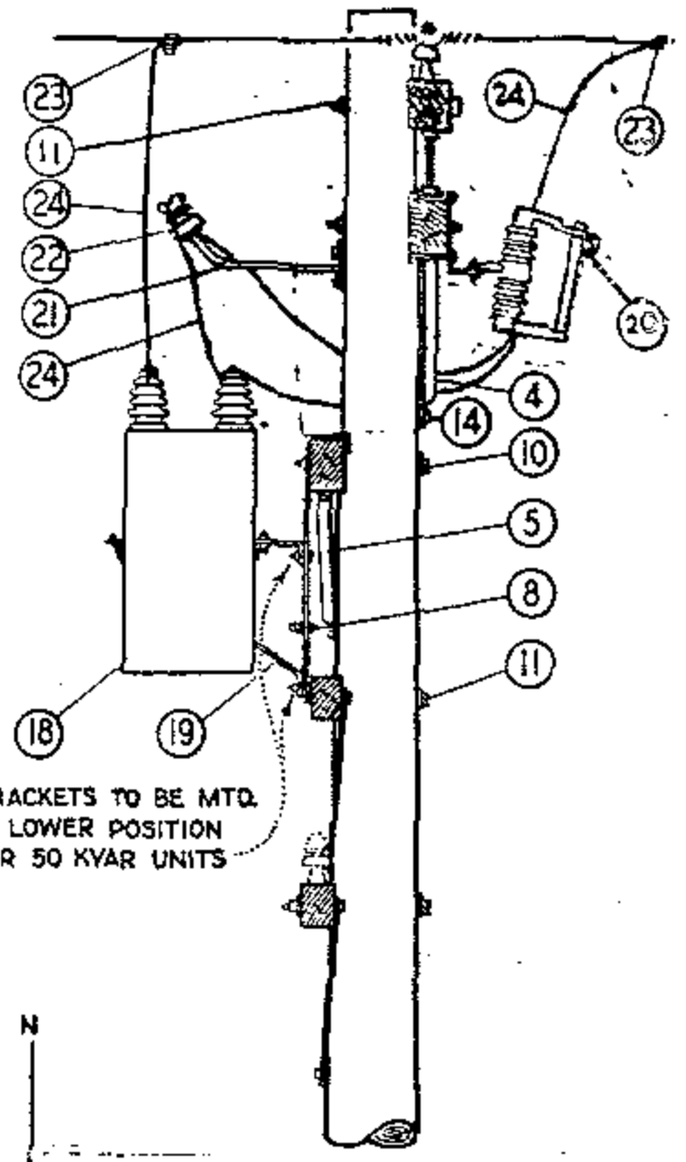

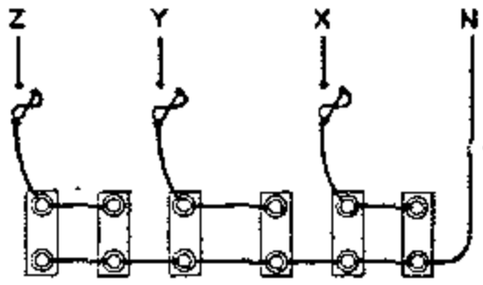

DIAGRAM OF 4 KV. WYE CONNECTIONS
300 KVAR (6-50 KVAR UNITS)
150 KVAR (6-25 KVAR UNITS)
90 KVAR (6-15 KVAR UNITS)

FOR FIELD MAINTENANCE ONLY

INSTALLATION:

A. CAPACITOR RACKS TO BE MOUNTED ON OPPOSITE SIDE OF LINE AND CUTOUT ARMS.
(B) NO LONGER PURCHASED.
C. FOR POLE STEPPING REFER TO STD. 363.
(E) EXEMPT MATERIAL.

	ITEM	DESCRIPTION	QUANTITY	STOCK NO. OR CONSTR. STD.
P T & F	1	CROSSARM, 3 3/4" X 5 3/4" X 10'-0"	1	PG. 380.01
	2	CROSSARM, 3 3/4" X 5 3/4" X 8'-0"	1	PG. 380.05
	3	CROSSARM, 3 1/2 X 4 1/2 X 8 - 0	1	PG. 380.05
	4	BRACE, ANGLE CROSSARM, 5' - 0"	1	164128
	5	BRACE, ANGLE CROSSARM, 4' - 0"	1	164032
	6	BRACE, FLAT CROSSARM, 28"	2	164192
	7	BOLT, MACH., GALV., 3/8" X 4 1/2", 1 RD. WASH. & 1 NUT	2	STD 139, 140(E)
	8	BOLT, MACH., GALV., 1/2" X 1 1/2", 2 RD. WASH. & 1 NUT	2	STD 139, 140(E)
	9	BOLT, MACH., GALV., 1/2" X 7", 1 RD. WASH. & 1 NUT	4	STD 139, 140(E)
	10	BOLT; MACH., GALV., 5/8" X (AS REQ'D) 3 SQ. WASH., 1 FLAT, 1 CURV. & 1 NUT	1	STD 139, 140(E)
	11	BOLT, MACH., GALV., 5/8" X (AS REQ'D) 2-2 1/4 SQ. WASH. & 1 NUT	2	STD 139, 140(E)
	12	BOLT, SPACE, GALV., 5/8" X 22", 4 SQ. WASH. & 4 NUTS	2	STD 139, 140(E)
	13	LAG SCREW, GALV., 1/2" X 4"	3	621568 (E)
	14	LAG SCREW, GALV., 5/8" X 5"	2	621600 (E)
	15	SIGN, HIGH VOLTAGE & ROOFING NAILS	1	647648-492224(E)
	16			
	17			
L T I	18	CAPACITOR UNIT (2.4KV, 50 KVAR ILLUSTRATED) (B)	6	207200
	19	RACK, CAPACITOR (B)	2	402620
	20	CUTOUT, 12KV 100A, HEAVY DUTY, WITH LOADBUSTER HOOKS	3	297868
	21	BRACKET, INSULATOR 1" LEAD THREAD	1	166134
	22	INSULATOR, PIN TYPE, CLASS AS REQUIRED	1	PG. 750.3
	23	CONNECTOR, COMPRESSION	4	STD 786, 783(E)
	24	WIRE, #6 BARE STRANDED COPPER	30'	813536
	25			
	26	WIRE, BARE SOLID ANNEALED COPPER #8	2'-6"	812928
	27			

DATE 1-1-87
APPD AK/RDS

SDG&E ELECTRIC STANDARDS

CAPACITOR INSTALLATION 4KV - WYE - 300 KVAR MAXIMUM

1399.102
SUPERSEDES
1316 (1-1-87)

TABLE OF CONTENTS

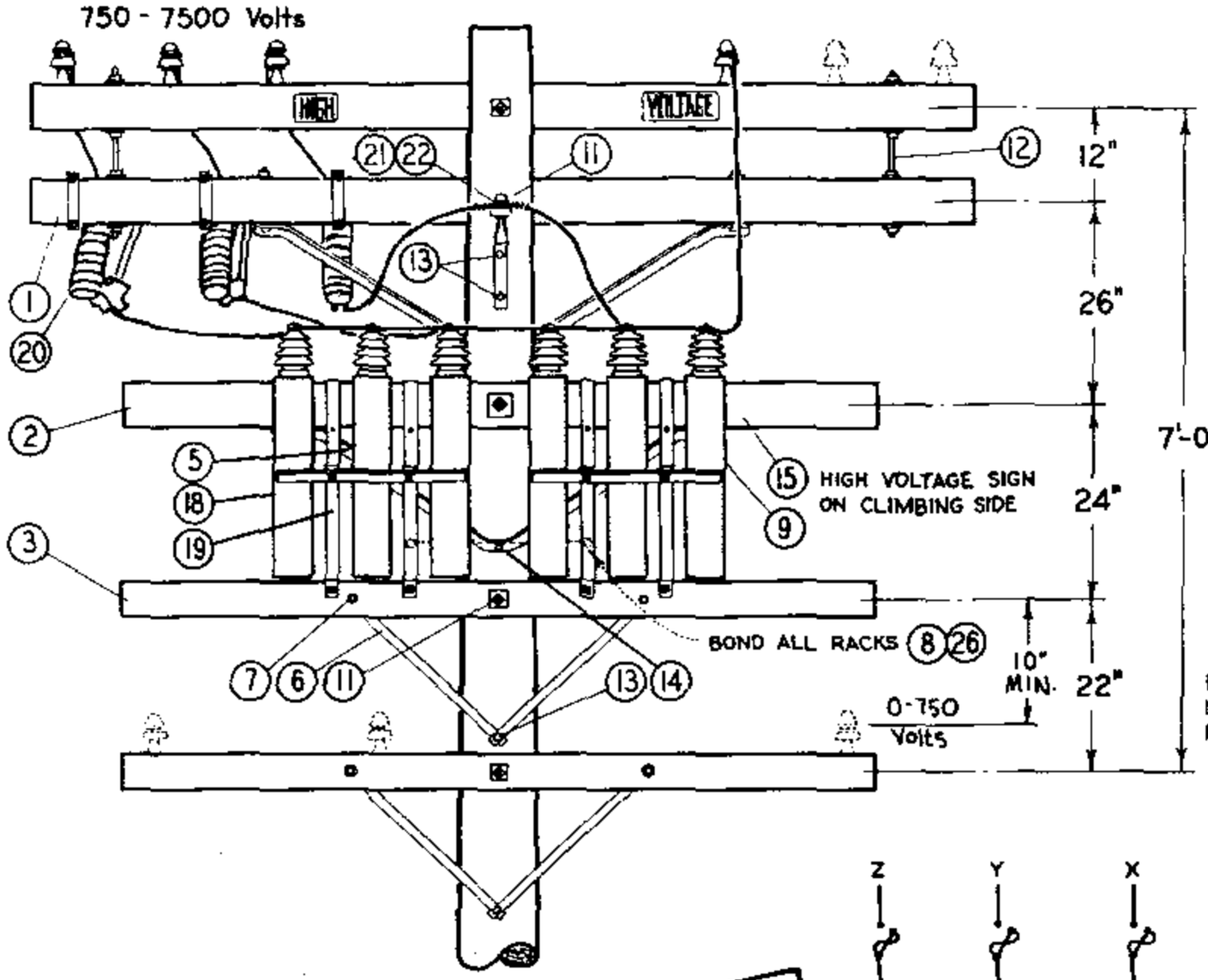

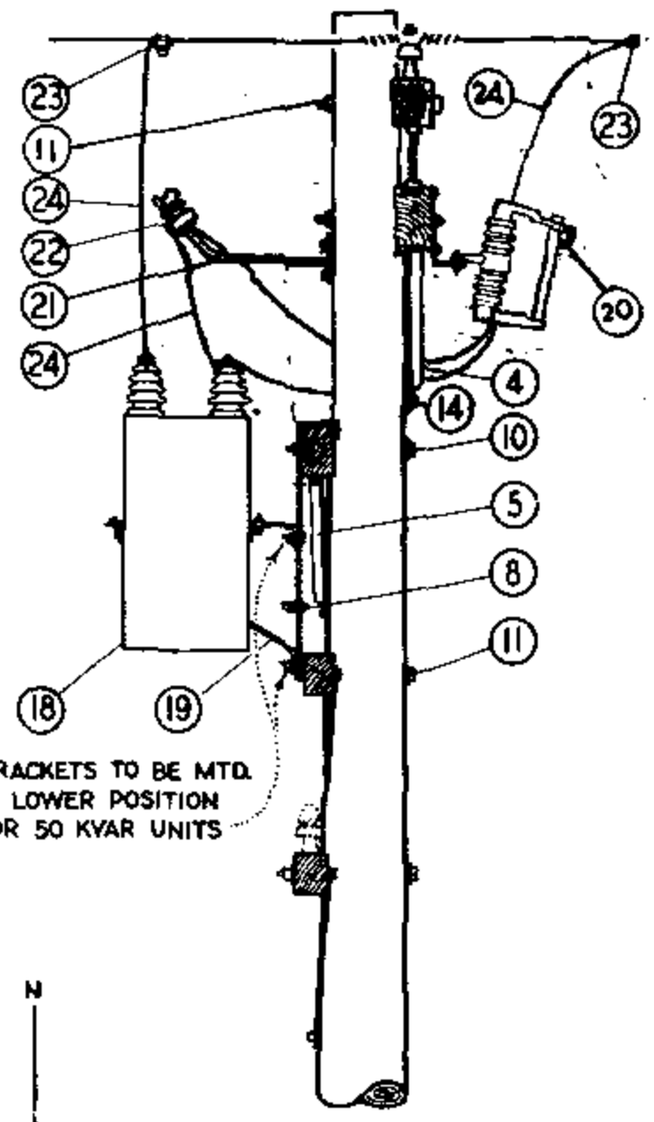

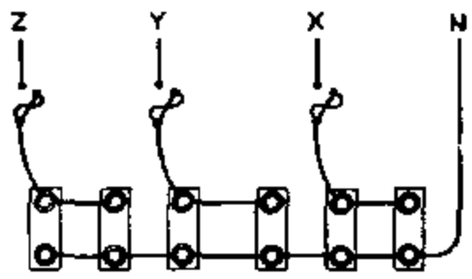

DIAGRAM OF 4 KV. WYE CONNECTIONS
300 KVAR (6-50 KVAR UNITS)
150 KVAR (6-25 KVAR UNITS)
90 KVAR (6-15 KVAR UNITS)

INSTALLATION:

A. CAPACITOR RACKS TO BE MOUNTED ON OPPOSITE SIDE OF LINE AND CUTOUT ARMS.
(B) NO LONGER PURCHASED.
C. FOR POLE STEPPING REFER TO STD. 363.
(E) EXEMPT MATERIAL.

	ITEM	DESCRIPTION	QUANTITY	STOCK NO. OR CONSTR. STD.
P T & F	1	CROSSARM, 3 3/4" X 5 3/4" X 10' -0"	1	PG. 380.01
	2	CROSSARM, 3 3/4" X 5 3/4" X 8' - 0"	1	PG. 380.05
	3	CROSSARM, 3 1/2 X 4 1/2 X 8 - 0	1	PG. 380.05
	4	BRACE, ANGLE CROSSARM, 5' - 0"	1	164128
	5	BRACE, ANGLE CROSSARM, 4' - 0"	1	164032
	6	BRACE, FLAT CROSSARM, 28"	2	164192
	7	BOLT, MACH., GALV., 3/8" X 4 1/2", 1 RD. WASH. & 1 NUT	2	STD 139, 140(E)
	8	BOLT, MACH., GALV., 1/2" X 1 1/2", 2 RD. WASH. & 1 NUT	2	STD 139, 140(E)
	9	BOLT, MACH., GALV., 1/2" X 7", 1 RD. WASH. & 1 NUT	4	STD 139, 140(E)
	10	BOLT, MACH., GALV., 5/8" X (AS REQ'D) 3 SQ. WASH., 1 FLAT, 1 CURV. & 1 NUT	1	STD 139, 140(E)
	11	BOLT, MACH., GALV., 5/8" X (AS REQ'D) 2-2 1/4 SQ. WASH. & 1 NUT	2	STD 139, 140(E)
	12	BOLT, SPACE, GALV., 5/8" X 22", 4 SQ. WASH. & 4 NUTS	2	STD 139, 140(E)
	13	LAG SCREW, GALV., 1/2" X 4"	3	621568 (E)
	14	LAG SCREW, GALV., 5/8" X 5"	2	621600 (E)
	15	SIGN, HIGH VOLTAGE & ROOFING NAILS	1	647648-492224(E)
	16			
	17			
L T I	18	CAPACITOR UNIT (2.4KV, 50 KVAR ILLUSTRATED) (B)	6	207200
	19	RACK, CAPACITOR (B)	2	402620
	20	CUTOUT, 12KV 100A, HEAVY DUTY, WITH LOADBUSTER HOOKS	3	297888
	21	BRACKET, INSULATOR 1" LEAD THREAD	1	166134
	22	INSULATOR, PIN TYPE, CLASS AS REQUIRED	1	PG. 750.3
	23	CONNECTOR, COMPRESSION	4	STD 786, 783(E)
	24	WIRE, #6 BARE STRANDED COPPER	30'	813536
	25			
	26	WIRE, BARE SOLID ANNEALED COPPER #8	2'-6"	812928
	27			

DATE 1-1-87
APPD AK/RDS

SDG&E ELECTRIC STANDARDS

CAPACITOR INSTALLATION 4KV - WYE - 300 KVAR MAXIMUM

1399.108
SUPERSEDES
1316 (1-1-87)

TABLE OF CONTENTS

FIELD MAINTENANCE ONLY

REVISION HISTORY:

7/13/2016: All versions prior to 2016 are superseded by their current version found inside the Overhead Construction Standard Manual.

TABLE OF CONTENTS

© 1998 - 2016 San Diego Gas & Electric Company. All rights reserved. Removal of this copyright notice without permission is not permitted under law.

REV	CHANGE	BY	DSGN	APPV	DATE	REV	CHANGE	BY	DSGN	APPV	DATE
C						F					
B						E					
A	ORIGINAL ISSUE	JS	IL	MDJ	7/13/2016	D					

X Indicates Latest Revision | Completely Revised | New Page | Information Removed

SHEET 1 OF 1

SDG&E ELECTRIC OVERHEAD STANDARD

CAPACITOR INSTALLATION 4KV-WYE-450 KVAR MAXIMUM

FMO OH 1317

TABLE OF CONTENTS

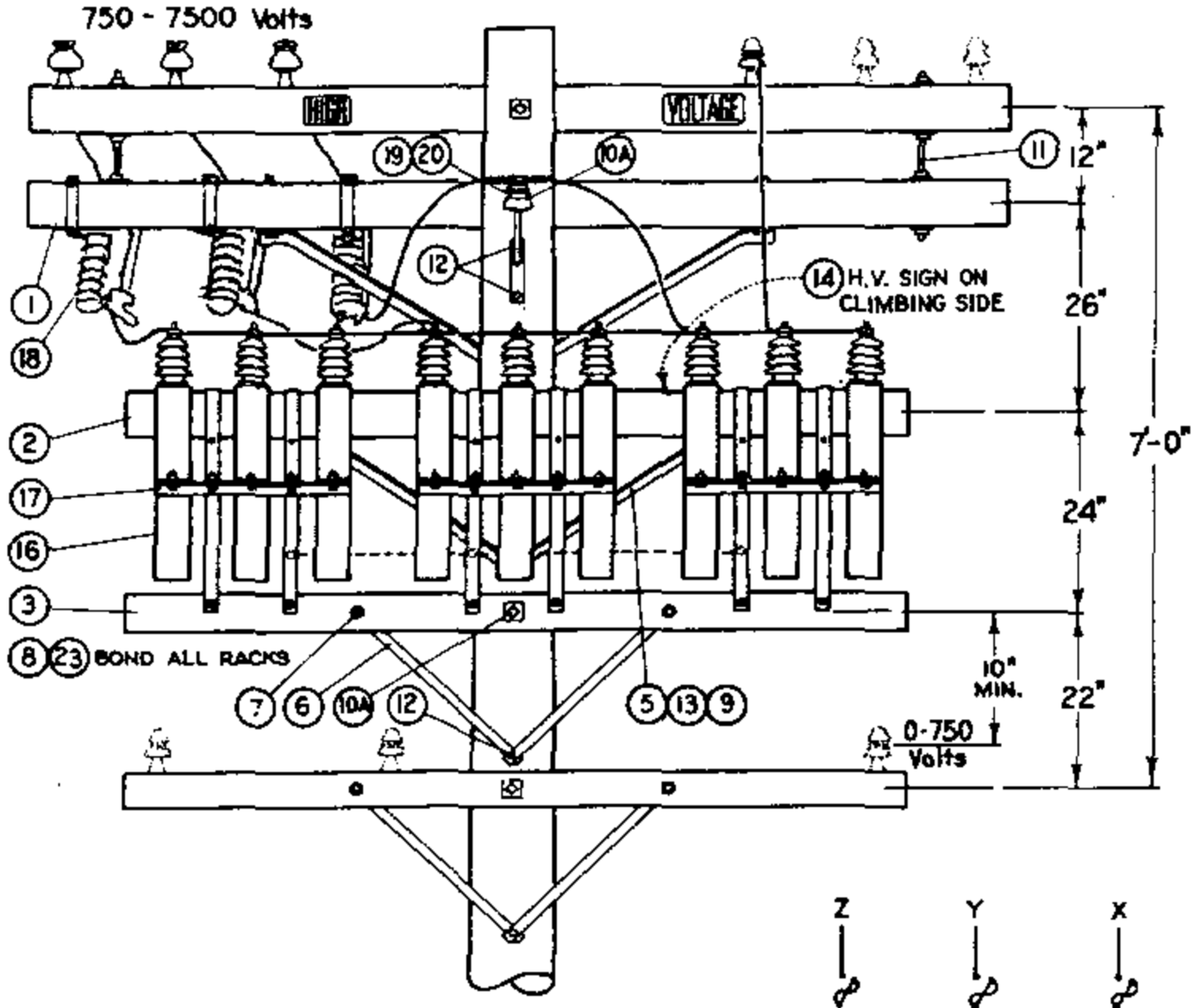

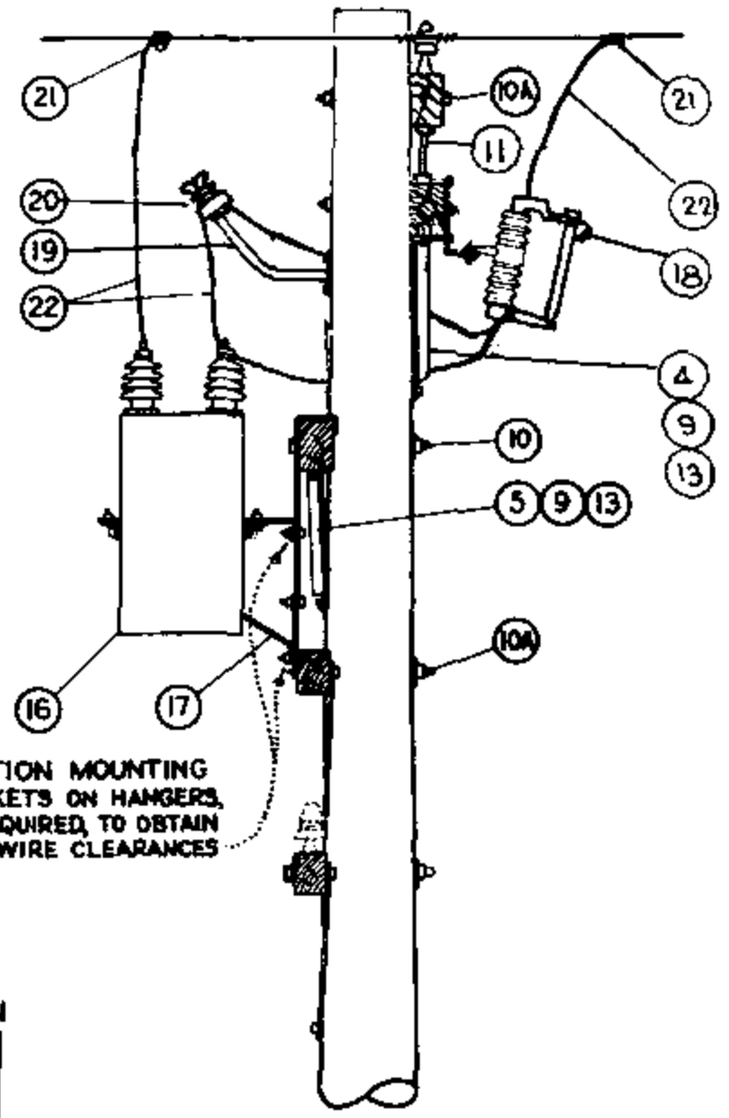

FOR FIELD MAINTENANCE ONLY

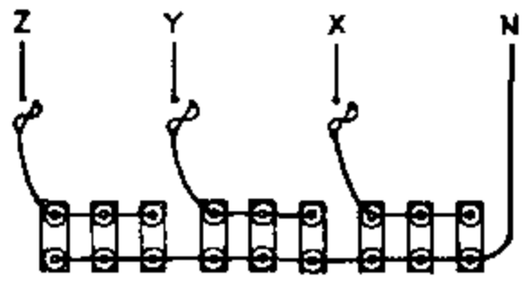

DIAGRAM OF 4 KV. WYE CONNECTIONS
450 KVAR (9-50 KVAR UNITS)
225 KVAR (9-25 KVAR UNITS)
135 KVAR (9-15 KVAR UNITS)

STALLATION:

A. CAPACITOR RACKS TO BE MOUNTED ON OPPOSITE SIDE OF LINE AND CUTOUT ARMS.
(B) NO LONGER PURCHASED.
C. FOR POLE STEPPING REFER TO STD. 363.
(E) EXEMPT MATERIAL.

ITEM	DESCRIPTION	QUANTITY	STOCK NO. OR CONSTR. STD.
1	CROSSARM, 3 3/4" X 5 3/4" X 10' - 0"	1	380.01
2	CROSSARM, 3 3/4" X 5 3/4" X 8' - 0"	1	380.05
3	CROSSARM, 3 1/2" X 4 1/2" X 8' - 0"	1	380.05
4	BRACE, ANGLE CROSSARM, 5' - 0"	1	164128
5	BRACE, ANGLE CROSSARM, 4' - 0"	1	164032
6	BRACE, FLAT CROSSARM, 28"	2	164192
7	BOLT, MACH., GALV., 3/8" X 4 1/2", 1 RD. WASH. & 1 NUT	2	STD 139, 140(E)
8	BOLT, MACH., GALV., 1/2" X 1 1/2", 2 RD. WASH. & 1 NUT	3	STD 139, 140(E)
9	BOLT, MACH., GALV., 1/2" X 7", 1 RD. WASH. & 1 NUT	4	STD 139, 140(E)
10	BOLT, MACH., GALV., 5/8" X (AS REQ'D) 3" SQ. WASH., 1 FLAT, 1 CURV., & 1 NUT	1	STD 139, 140(E)
10A	BOLT, MACH., GALV., 5/8" X (AS REQ'D) 2-2 1/4" SQ. WASH. & 1 NUT	2	STD 139, 140(E)
11	BOLT, SPACE, GALV., 5/8" X 22", 4 SQ. WASH. & 4 NUTS	2	STD 139, 140(E)
12	LAG SCREW, GALV. 1/2" X 4"	3	621568 (E)
13	LAG SCREW, GALV. 5/8" X 5"	2	621600 (E)
14	SIGN, HIGH VOLTAGE, & ROOFING NAILS (E)	1	647648-492224
15			
16	CAPACITOR UNIT, 2.4KV, (50 KVAR UNITS ILLUSTRATED) (8)	9	207200
17	RACK, CAPACITOR	3	402624
18	CUTOUT 12KV, 100A, HEAVY DUTY, WITH LOADBUSTER HOOKS	3	297888
19	BRACKET, INSULATOR 1" LEAD THREAD	1	166134
20	INSULATOR, PIN TYPE, CLASS AS REQUIRED	1	750.3
21	CONNECTOR, COMPRESSION	4	PGS 786, 783(E)
22	WIRE, #6 BARE STRANDED COPPER	30'	813536
23	WIRE, BARE SOLID ANNEALED COPPER #8	6'	812928
24			
25			
26			

1399.109
SUPERSEDES 317 (1-1-87)

SDG&E ELECTRIC STANDARDS

CAPACITOR INSTALLATION 4KV - WYE - 450 KVAR MAXIMUM

DATE 1-1-87
APPD AK / RDG

FIELD MAINTENANCE ONLY

REVISION HISTORY:

7/13/2016: All versions prior to 2016 are superseded by their current version found inside the Overhead Construction Standard Manual.

TABLE OF CONTENTS

© 1998 - 2016 San Diego Gas & Electric Company. All rights reserved. Removal of this copyright notice without permission is not permitted under law.

REV	CHANGE	BY	DSGN	APPV	DATE	REV	CHANGE	BY	DSGN	APPV	DATE
C						F					
B						E					
A	ORIGINAL ISSUE	JS	IL	MDJ	7/13/2016	D					

X Indicates Latest Revision | Completely Revised | New Page | Information Removed

SHEET
1 OF 1

SDG&E ELECTRIC OVERHEAD STANDARD

FIXED CAPACITOR INSTALLATION, 4.16KV DELTA
UNGROUNDED RACK

FMO
OH 1318

SCOPE: THIS STANDARD SHOWS THE INSTALLATION METHOD OF A 4.16KV DELTA FIXED CAPACITOR.

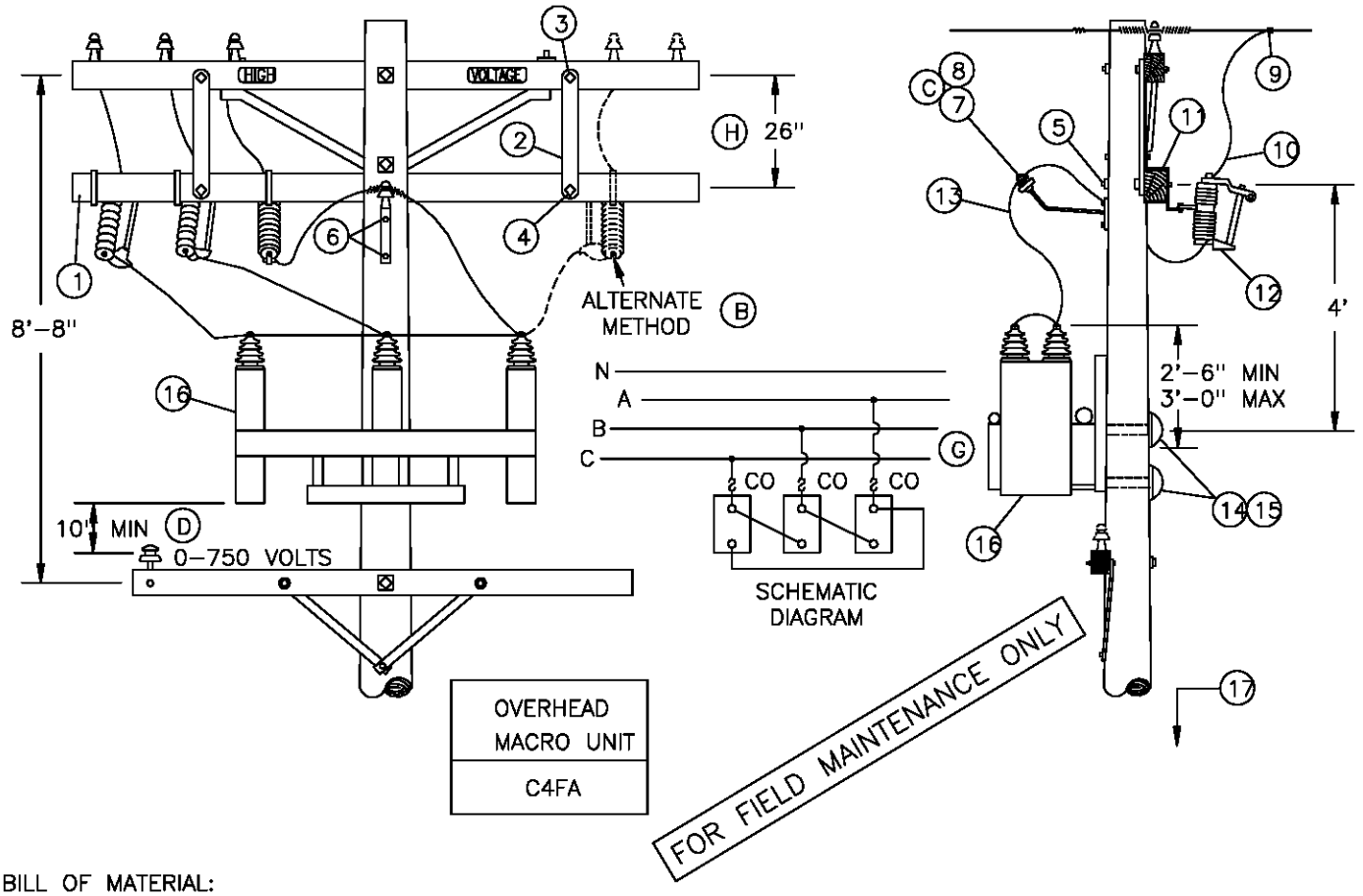

BILL OF MATERIAL:

ITEM	DESCRIPTION	QUANTITY	CONST STD OR PAGE NO	STOCK NUMBER
1	CROSSARM 3 3/4" X 5 3/4" X 10' - 0"	1	-	294128
2	BRACE, FLAT, CROSSARM, 28"	2	-	164192
3	BOLT, MACH, GALV, 1/2" X 5", 1 ROUND AND 1 DOUBLE COIL SPRING WASHER	2	392	-
4	BOLT, MACH, GALV, 3/8" X 4 1/2", 1 RD & 1 SPRING WASHER	2	392	-
5	BOLT, MACH, GALV, 5/8" X (LENGTH AS REQ'D), 2 SQUARE FLAT AND 1 DOUBLE COIL SPRING WASHER	1	392	-
6	LAG SCREW, GALV, 1/2" X 4" (C)	2	-	621568
7	BRACKET, INSULATOR, 1" LEAD THREAD (C)	1	-	166134
8	INSULATOR, PIN TYPE, CLASS AS REQUIRED (C)	1	750	-
9	CONNECTOR, COMPRESSION, CU OR AL (SIZE AS REQ'D)	AS REQ'D	783, 786	-
10	WIRE, BARE STRANDED, #6, COPPER	9'	-	813536
11	BRACKET, CUTOUT/ARRESTER, FOR CROSSARM MOUNTING	3	-	166070
12	CUTOUT, 12KV, 100A, HVY DUTY, WITH LOADBUSTER HOOK	3	-	297888
13	WIRE, BARE STRANDED, #4 COPPER	12'	-	813760
14	BOLT, MACH, GALV, 3/4" X (LENGTH AS REQ'D), 1 SQUARE CURVED AND 1 DOUBLE COIL SPRING WASHER	2	392	-
15	COVER, THRU BOLT, PLASTIC &	2	-	285696
	6-10D NAILS, GALV	-	-	491392
16	RACK, CAPACITOR (4.16KV, 200 KVAR) (G)	1	-	564759
17	TAG, STATION NUMBER	1	200 SECT	-

DATE 12-1-98 APPD PA/BSG	SDG&E ELECTRIC STANDARDS FIXED CAPACITOR INSTALLATION, 4.16KV DELTA UNGROUNDED RACK	1399.110 SUPERSEDES 1318.1 (12-1-98)

TABLE OF CONTENTS

INSTALLATION:

A. CAPACITOR RACKS TO BE MOUNTED ON OPPOSITE SIDE OF LINE AND CUTOUT ARMS.

(B) INSTALL ONE CUTOUT AS SHOWN ON THE ALTERNATE METHOD IF THE 4KV CONDUCTORS ARE SPREAD OUT.

(C) OMIT ITEMS 6, 7, & 8 IF ALTERNATE METHOD (B) IS USED.

(D) FROM BOTTOM OF THE CAPACITOR RACK OR THE CASE, WHICHEVER IS LOWER.

F. CAPACITOR MUST BE INSTALLED ON POLES ACCESSIBLE BY BUCKET TRUCK.

(G) THE KVAR RATING OF 7200 VOLT CAPACITORS IS REDUCED BY A FACTOR OF THREE WHEN WIRED IN DELTA AND CONNECTED TO THE 4160 VOLT SYSTEM.

(H) IF ADDITIONAL SPACE IS REQUIRED BELOW THE CUTOUT ARM, THE SEPARATION BETWEEN THE LINE ARM AND CUTOUT ARM MAY BE REDUCED TO 12" WITH THE USE OF SPACE BOLTS.

FOR FIELD MAINTENANCE ONLY

TABLE OF CONTENTS

1399.111 SUPERSEDES 1318.2 (12-1-98)	SDG&E ELECTRIC STANDARDS FIXED CAPACITOR INSTALLATION, 4.16KV DELTA UNGROUNDED RACK	DATE 12-1-98 APPD PSA/CMK

FIELD MAINTENANCE ONLY

REVISION HISTORY:

7/13/2016: All versions prior to 2016 are superseded by their current version found inside the Overhead Construction Standard Manual.

TABLE OF CONTENTS

© 1998 - 2016 San Diego Gas & Electric Company. All rights reserved. Removal of this copyright notice without permission is not permitted under law.

REV	CHANGE	BY	DSGN	APPV	DATE	REV	CHANGE	BY	DSGN	APPV	DATE
C						F					
B						E					
A	ORIGINAL ISSUE	JS	IL	MDJ	7/13/2016	D					

X Indicates Latest Revision | Completely Revised | New Page | Information Removed

SHEET
1 OF 1

SDG&E ELECTRIC OVERHEAD STANDARD

SWITCHED CAPACITOR INSTALLATION
4.16 KV DELTA - 2 OIL SWITCHES

FMO
OH 1319

TABLE OF CONTENTS

SCOPE: THIS STANDARD SHOWS THE INSTALLATION METHOD OF A 4.16KV DELTA SWITCHED CAPACITOR.

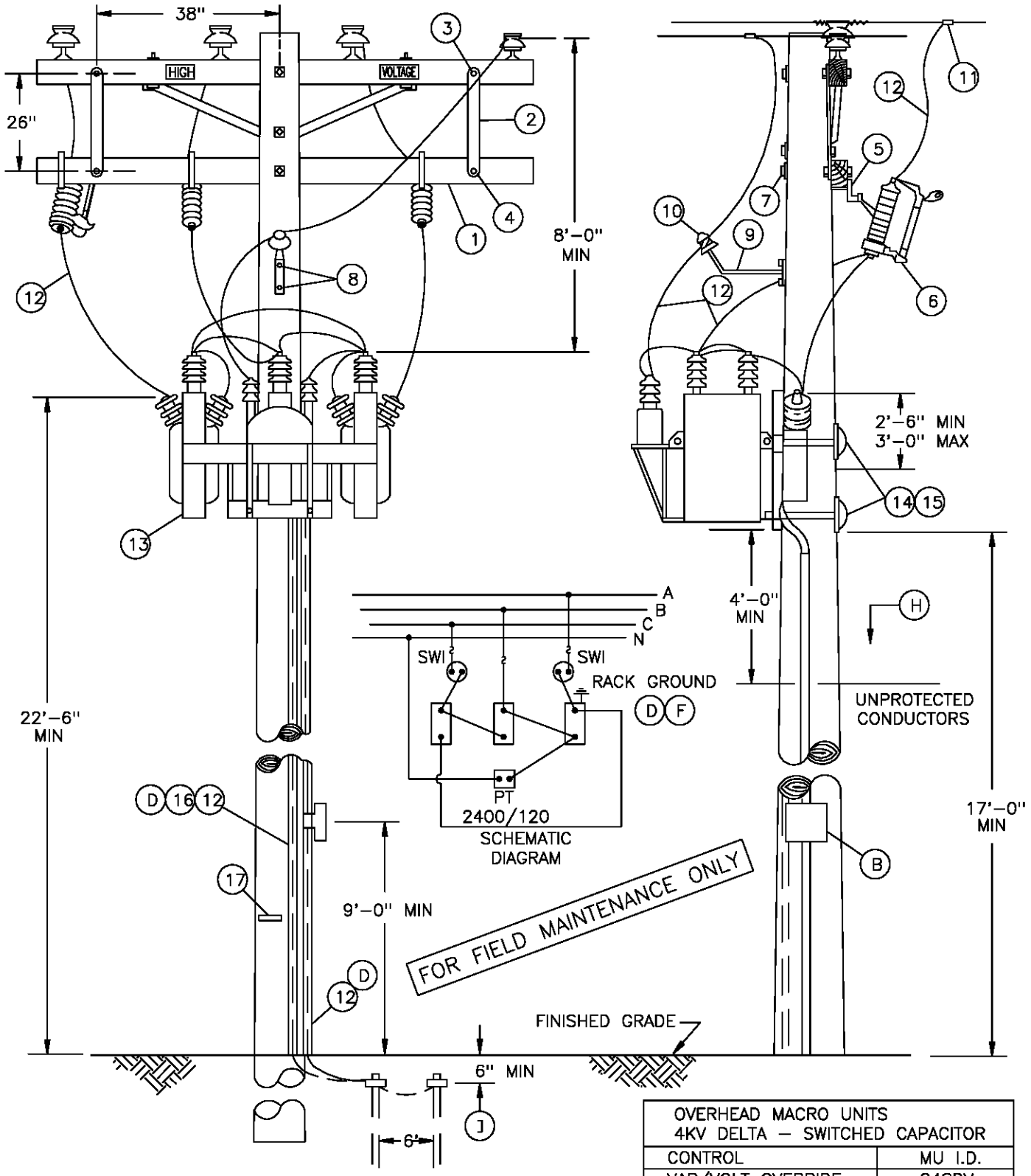

OVERHEAD MACRO UNITS 4KV DELTA – SWITCHED CAPACITOR	
CONTROL	MU I.D.
VAR/VOLT OVERRIDE	C4SDV
VOLT W/TIME BIAS	C4STD

NOTES:

– CLASS OF POLE TO BE DETERMINED PER STANDARD 344–354.

DATE 12–1–98 APPD PSA/CMK	SDG&E ELECTRIC STANDARDS SWITCHED CAPACITOR INSTALLATION 4.16 KV DELTA – 2 OIL SWITCHES	1399.112 SUPERSEDES 1319.1 (12–1–98)

BILL OF MATERIAL:

ITEM	DESCRIPTION	QUANTITY	CONST STD OR PAGE NO	STOCK NUMBER
1	CROSSARM, 3 3/4" X 5 3/4" X 10' – 0"	1	--	249128
2	BRACE, FLAT, CROSSARM, 28"	2	--	164192
3	BOLT, MACH, GALV, 3/8" X 4 1/2", 1 SPR WASH & 1 RD WASH	2	392	--
4	BOLT, MACH, GALV, 1/2 X 5", 1 RD WASH, 1 DBL COIL WASH	2	392	--
5	BRACKET, CUTOUT/ARRESTER, FOR CROSSARM MOUNTING	3	--	166070
6	CUTOUT, 12KV, 100A, HEAVY DUTY, WITH LOADBUSTER HOOKS	3	1212	--
7	BOLT, MACH, GALV, 5/8" X (LENGTH AS REQ'D) 2 SQ WASH & 1 DBL COIL WASH	1	392	--
8	LAG SCREW, GALV, 1/2" X 4"	2	--	621568
9	BRACKET, INSULATOR, 1" LEAD THREAD	1	--	166134
10	INSULATOR, PIN TYPE, CLASS AS REQUIRED	1	750	--
11	CONNECTOR, WIRE, COMPRESSION, CU OR AL, AS REQ'D	AS REQ'D	783–786	--
12	WIRE, BARE STRANDED, #4, COPPER	100'	--	813760
13	RACK, SWITCHED CAPACITOR, COMPLETE WITH SWITCHES AND POTENTIAL TRANSFORMER, (4.16KV, 200KVAR) (F)	1	--	564758
14	BOLT, MACH, GALV, 3/4" X (LENGTH AS REQ'D), 1 SQ CURVE RIB WASH & 1 DBL COIL SPR WASH	2	392	--
15	COVER, BOLT, PLASTIC & 6 – 1 3/4" NAILS, GALV	2	--	285696
		--	--	492192
16	UNIT GROUND, COMPLETE	1	--	603136
17	TAG, STATION NUMBER	1	200 SECT.	--

FOR FIELD MAINTENANCE ONLY

TABLE OF CONTENTS

INSTALLATION:

A. CAPACITOR RACKS TO BE MOUNTED ON OPPOSITE SIDE OF LINE AND CUTOUT ARMS.

(B) SHOWN FOR ILLUSTRATIVE PURPOSES ONLY. SEE STANDARD 1330 FOR CONTROL INSTALLATION AND MATERIAL.

C. CAUTION: OPEN OIL SWITCHES BEFORE OPENING CUTOUTS.

(D) CONNECT CAPACITOR RACK GROUND LEAD TO GROUND ROD. A SECOND GROUND WIRE IS REQUIRED FOR THE CONTROL PANEL TO BE CONNECTED ON THE SAME GROUND ROD. COIL LOOSE END OF CONTROL PANEL GROUND WIRE AND STAPLE TO POLE (TO BE WORKED BY SERVICE CREW).

(F) THE KVAR RATING OF 7200 VOLT CAPACITORS IS REDUCED BY A FACTOR OF THREE WHEN WIRED IN DELTA AND CONNECTED TO THE 4160 VOLT SYSTEM.

G. CAPACITOR MUST BE INSTALLED ON POLES ACCESSIBLE BY BUCKET TRUCK.

REFERENCE:

(H) POLE STEPPING – SEE STANDARD 363.

(I) GROUNDING METHODS – SEE STANDARD 1002.

J. PVC CONDUIT IS NOT PERMITTED IN THE CLIMBING SPACE – G.O. 95 RULE 22.2 (C).

1399.113 SUPERSEDES 319.2 (12–1–98)	SDG&E ELECTRIC STANDARDS SWITCHED CAPACITOR INSTALLATION 4.16 KV DELTA – OIL SWITCHES	DATE 12–1–98 APPD PSA / CMK

FIELD MAINTENANCE ONLY

REVISION HISTORY:

7/13/2016: All versions prior to 2016 are superseded by their current version found inside the Overhead Construction Standard Manual.

TABLE OF CONTENTS

© 1998 - 2016 San Diego Gas & Electric Company. All rights reserved. Removal of this copyright notice without permission is not permitted under law.

REV	CHANGE	BY	DSGN	APPV	DATE	REV	CHANGE	BY	DSGN	APPV	DATE
C						F					
B						E					
A	ORIGINAL ISSUE	JS	IL	MDJ	7/13/2016	D					

X Indicates Latest Revision | Completely Revised | New Page | Information Removed

SHEET
1 OF 1

SDG&E ELECTRIC OVERHEAD STANDARD

SWITCHED CAPACITOR INSTALLATION
4.16 KV WYE - 3 OIL SWITCHES

FMO
OH 1321

BILL OF MATERIAL:

ITEM	DESCRIPTION	QUANTITY	CONST STD OR PAGE NO	STOCK NUMBER
1	CROSSARM, 3 3/4" X 5 3/4" X 10' – 0"	1	–	294128
2	BRACE, FLAT, CROSSARM, 28"	2	–	164192
3	BOLT, MACH, GALV, 3/8" X 4 1/2", 1 SPR & 1 RD WASHER	2	392	–
4	BOLT, MACH, GALV, 1/2" X 5", 1 ROUND & 1 DOUBLE COIL SPRING WASHER	2	392	–
5	BOLT, MACH, GALV, 5/8" X (LENGTH AS REQ'D) 2 SQUARE & 1 DOUBLE COIL SPRING WASHER	1	392	–
6	CONNECTOR, WIRE, COMPRESSION, CU OR AL, AS REQ'D	AS REQ'D	783, 786	–
7	WIRE, #4, BARE STRANDED COPPER	95'	–	813760
8	BRACKET, CUTOUT/ARRESTER, FOR CROSSARM MOUNTING	3	–	166070
9	CUTOUT, 12KV, 100A, HEAVY DUTY, WITH LOADBUSTER HOOKS	3	1212	–
10	INSULATOR, PIN TYPE, CLASS AS REQUIRED	1	–	429216
11	BRACKET, INSULATOR, 1" LEAD THREAD	1	–	166134
12	LAG SCREW, GALV, 1/2" X 4"	2	–	621568
13	RACK, SWITCHED CAPACITOR, COMPLETE WITH SWITCHES AND POTENTIAL TRANSFORMER, (4.16KV, 300KVAR)	1	–	564773
14	BOLT, MACH, GALV, 3/4" X (LENGTH AS REQ'D), 1 SQUARE CURVE RIBBED & 1 DOUBLE COIL SPRING WASHER	2	392	–
15	COVER, BOLT, PLASTIC & 6 – 1 3/4" NAILS, GALV	2	–	285696
		–	–	492192
16	UNIT GROUND, COMPLETE	1	–	603136
17	TAG, STATION NUMBER	1	338	–

FOR FIELD MAINTENANCE ONLY

OVERHEAD MACRO UNITS 4KV WYE – SWITCHED CAPACITOR	
CONTROL	MU I.D.
VAR/VOLT OVERRIDE	C4S3DV
VOLT W/TIME BIAS	C4S3TD

INSTALLATION:

A. CAPACITOR RACKS TO BE MOUNTED ON OPPOSITE SIDE OF LINE AND CUTOUT ARMS.

B. CAUTION: OPEN OIL SWITCHES BEFORE OPENING CUTOUTS.

Ⓒ CONNECT CAPACITOR RACK GROUND LEAD TO GROUND ROD. A SECOND GROUND WIRE IS REQUIRED FOR THE CONTROL PANEL TO BE CONNECTED ON THE SAME GROUND ROD. COIL LOOSE END OF CONTROL PANEL GROUND WIRE AND STAPLE TO POLE (TO BE WORKED BY SERVICE CREW).

REFERENCE:

Ⓕ SHOWN FOR ILLUSTRATIVE PURPOSES ONLY. SEE STANDARD 1330 FOR CONTROL INSTALLATION AND MATERIAL.

Ⓖ POLE STEPPING, SEE STANDARD 363.

Ⓗ GROUNDING METHOD, SEE STANDARD 1002.

I. PVC CONDUIT IS NOT PERMITTED IN THE CLIMBING SPACE – G.O. 95 RULE 22.2 (C).

J. CAPACITOR MUST BE INSTALLED ON POLES ACCESSIBLE BY BUCKET TRUCK. SEE DESIGN STANDARDS PAGE 5811.5.

TABLE OF CONTENTS

1399.204 SUPERSEDES 321.2 (12-1-98)	SDG&E ELECTRIC STANDARDS SWITCHED CAPACITOR INSTALLATION 4.16 KV WYE – 3 OIL SWITCHES	DATE 12-1-98 APPD PSA/CMC

FIELD MAINTENANCE ONLY

REVISION HISTORY:

7/13/2016: All versions prior to 2016 are superseded by their current version found inside the Overhead Construction Standard Manual.

TABLE OF CONTENTS

© 1998 - 2016 San Diego Gas & Electric Company. All rights reserved. Removal of this copyright notice without permission is not permitted under law.

REV	CHANGE	BY	DSGN	APPV	DATE	REV	CHANGE	BY	DSGN	APPV	DATE
C						F					
B						E					
A	ORIGINAL ISSUE	JS	IL	MDJ	7/13/2016	D					

X Indicates Latest Revision | Completely Revised | New Page | Information Removed

SHEET 1 OF 1

SDG&E ELECTRIC OVERHEAD STANDARD

CAPACITOR INSTALLATIONS, 12KV-WYE-900 KVAR MAX

FMO OH 1322

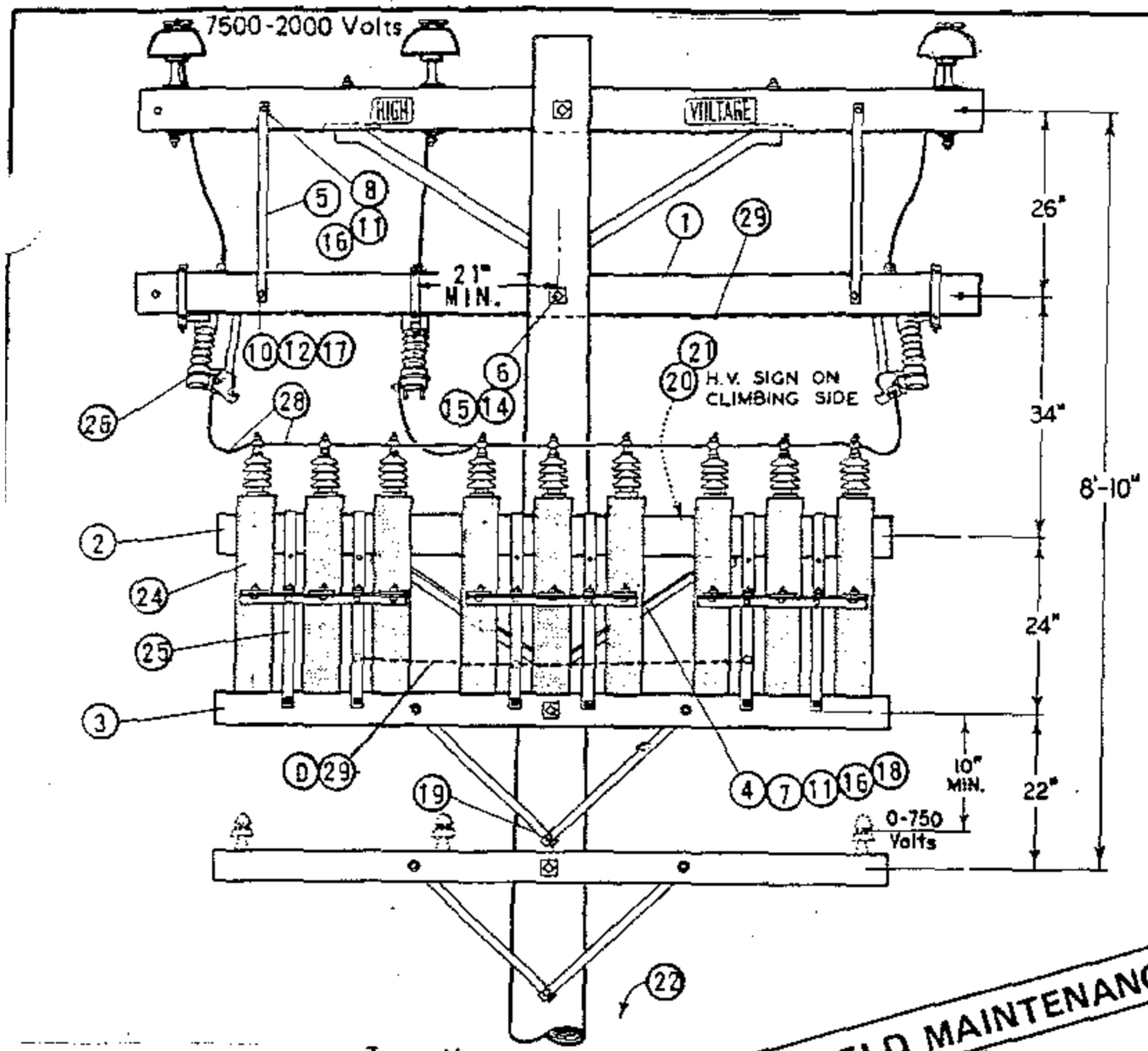

DIAGRAM OF 12KV WYE CONNECTIONS

600 KVAR (6-100 KVAR UNITS)
300 KVAR (6-50 KVAR UNITS)
150 KVAR (6-25 KVAR UNITS)

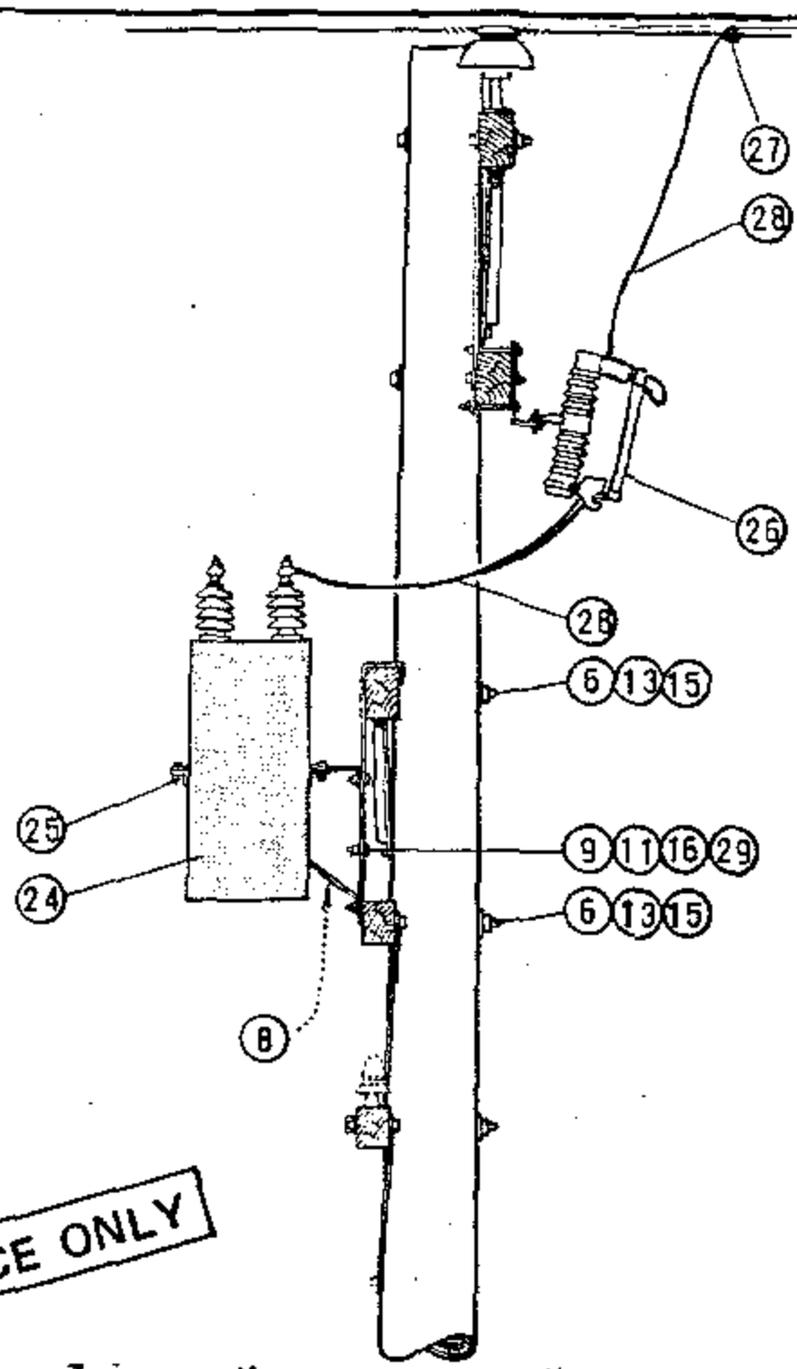

DIAGRAM OF 12KV WYE CONNECTIONS

900 KVAR (9-100 KVAR UNITS)
450 KVAR (9-50 KVAR UNITS)
225 KVAR (9-25 KVAR UNITS)

FOR FIELD MAINTENANCE ONLY

INSTALLATION:

(A) QUANTITY BASED ON 45' POLE.
(B) BRACKETS TO BE MOUNTED IN LOWER POSITION FOR 50 AND 100 KVAR UNITS.
C. BOND ALL 12KV HARDWARE WITHIN 3 MILES OF COAST.
(D) BOND ALL RACKS AS SHOWN IN ILLUSTRATION.
(E) EXEMPT MATERIAL.
(F) NO LONGER PURCHASED.
G. SEE PAGE 1323 FOR MATERIAL NEEDED FOR LIGHTING ARRESTERS ON 900 KVAR INSTALLATIONS.

ITEM	DESCRIPTION	QUANTITY UNITS 6	QUANTITY UNITS 9	STOCK NO. OR CONSTR. STD.
1	CROSSARM, 3 3/4" X 5 3/4" X 10' - 0"	1	1	380.01
2	CROSSARM, 3 3/4" X 5 3/4" X 8' - 0"	1	1	380.05
3	CROSSARM, 3 1/2" X 4 1/2" X 8' - 0"	1	1	380.05
4	BRACE, ANGLE CROSSARM, 4' - 0"	1	1	164032
5	BRACE, FLAT CROSSARM, 28"	2	2	164192
6	BOLT, MACH. GALV. 5/8" X (LENGTH AS REQ'D) & 1 NUT	3	3	139 (E)
7	BOLT, MACH. 1/2" X 7" & 1 NUT	2	2	153120 (E)
8	BOLT, MACH. GALV. 1/2" X 5" & 1 NUT	2	2	153024 (E)
9	BOLT, MACH. GALV. 1/2" X 1 1/2" & 1 NUT	2	3	152608 (E)
10	BOLT, MACH. GALV. 3/8" X 5" & 1 NUT	2	2	154368 (E)
11	WASHER, 1/2" ROUND	10	8	800192 (E)
12	WASHER, 3/8" ROUND	2	2	800288 (E)
13	WASHER, 3" SQ. CURVED	4	4	798912 (E)
14	WASHER, 2 1/4" SQ. FLAT	2	2	799040 (E)
15	WASHER, 5/8" SPRING DBL COIL	3	3	798560 (E)
16	WASHER, 1/2" SPRING DBL COIL	6	6	798464 (E)
17	WASHER, 3/8" SPRING DBL COIL	2	2	798528 (E)
18	SCREW, LAG GALV. 5/8" X 5"	1	1	621600 (E)
19	SCREW, LAG GALV. 1/2" X 4"	1	1	621568 (E)
20	SIGN, HIGH VOLTAGE	1	1	647648 (E)
21	NAILS, ROOFING #8 GALV.	8	8	492224 (E)
22	STEPS, POLE (A)	16	16	692992 (E)
23				
24	CAPACITOR, UNIT 7.2KV (100 KVAR UNITS ILLUSTRATED) (F)	6	9	207232
25	RACK, CAPACITOR	2	3	402656
26	CUTOUT, 12KV, 100A HEAVY DUTY WITH LOADBUSTER HOOKS	3	3	297888
27	CONNECTORS, COMPRESSION	3	3	786, 783 (E)
28	WIRE, #6 BARE STRANDED COPPER	33'	35'	813536
29	WIRE, #8 BARE SOLID ANNEALED COPPER	13'	15'	812928
30				

PT&F

LTI

DATE 11-5-82
PPD JWT/RCH

SDG&E ELECTRIC STANDARDS

CAPACITOR INSTALLATIONS, 12KV - WYE - 900 KVAR MAX.

1399.203
SUPERSEDES
1322 (11-5-82)

TABLE OF CONTENTS

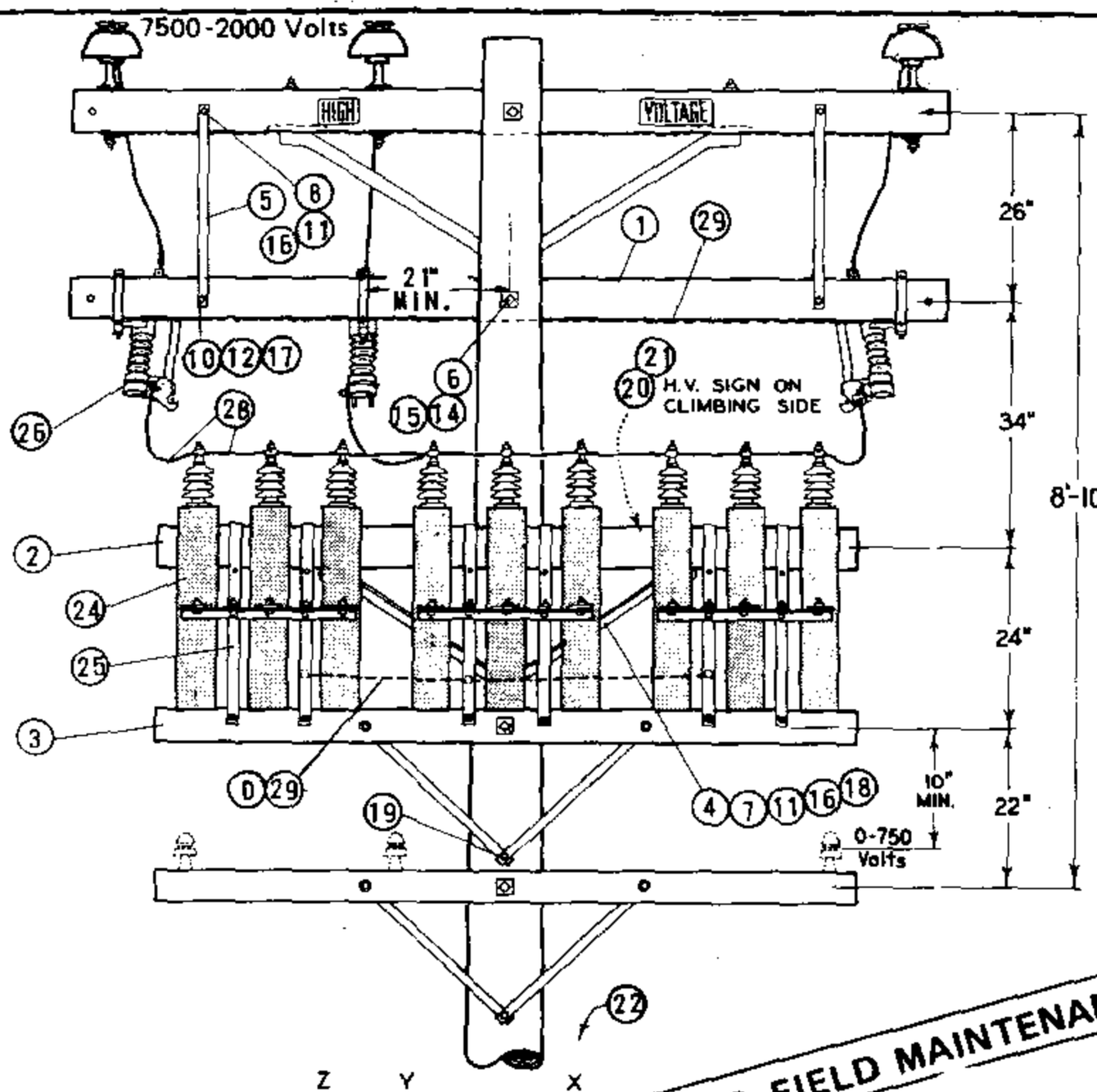

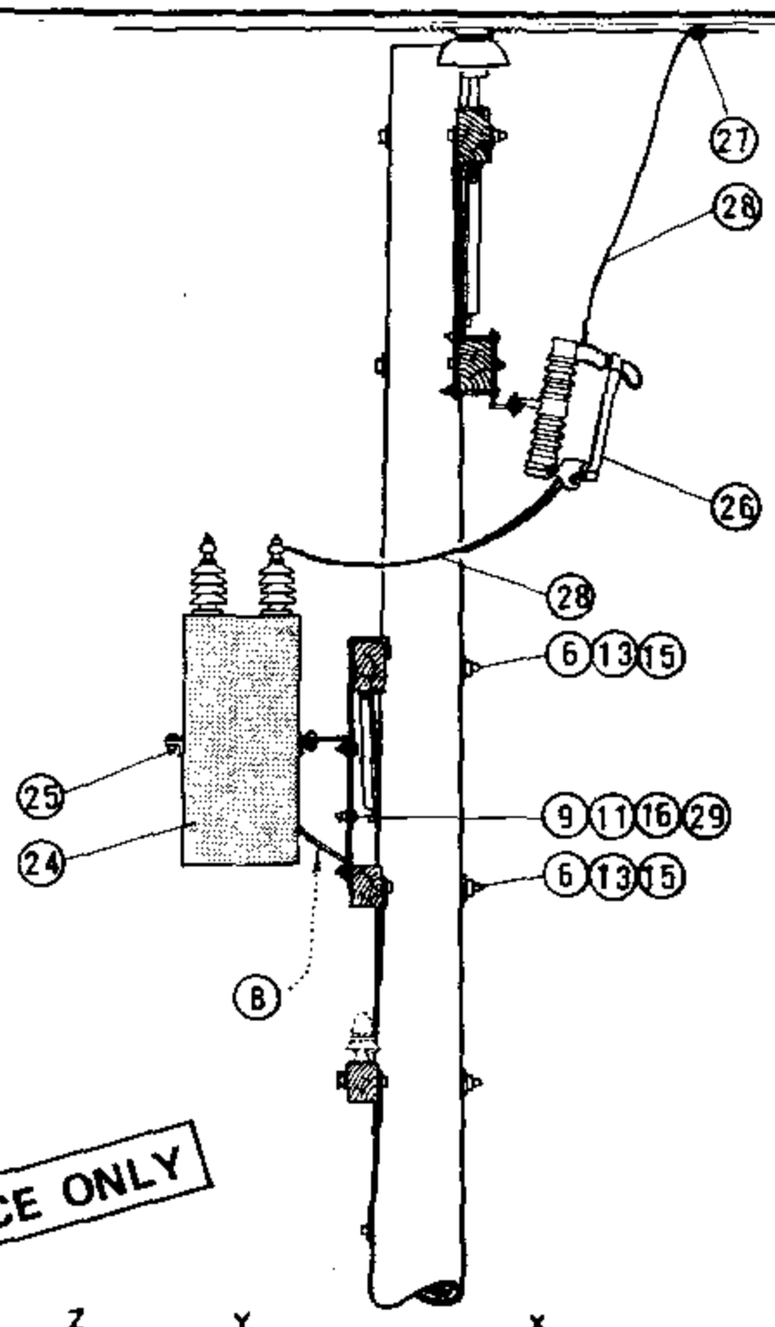

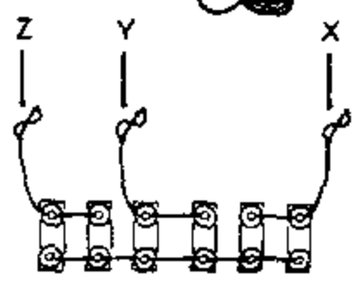

DIAGRAM OF 12KV WYE CONNECTIONS

600 KVAR (6-100 KVAR UNITS)
300 KVAR (6-50 KVAR UNITS)
150 KVAR (6-25 KVAR UNITS)

FOR FIELD MAINTENANCE ONLY

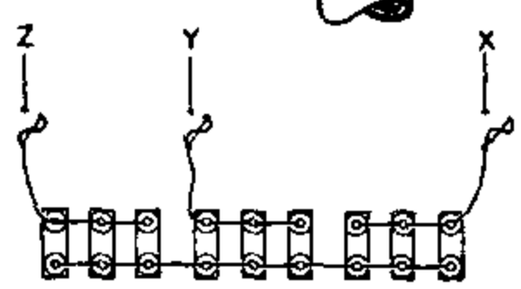

DIAGRAM OF 12KV WYE CONNECTIONS

900 KVAR (9-100 KVAR UNITS)
450 KVAR (9-50 KVAR UNITS)
225 KVAR (9-25 KVAR UNITS)

INSTALLATION:

(A) QUANTITY BASED ON 45' POLE.
(B) BRACKETS TO BE MOUNTED IN LOWER POSITION FOR 50 AND 100 KVAR UNITS.
C. BOND ALL 12KV HARDWARE WITHIN 3 MILES OF COAST.
(D) BOND ALL RACKS AS SHOWN IN ILLUSTRATION.
(E) EXEMPT MATERIAL.
(F) NO LONGER PURCHASED.
G. SEE PAGE 1323 FOR MATERIAL NEEDED FOR LIGHTING ARRESTERS ON 900 KVAR INSTALLATIONS.

ITEM		DESCRIPTION	QUANTITY UNITS 6	QUANTITY UNITS 9	STOCK NO. OR CONSTR. STD.
P T & F	1	CROSSARM, 3 3/4" X 5 3/4" X 10' - 0"	1	1	380.01
	2	CROSSARM, 3 3/4" X 5 3/4" X 8' - 0"	1	1	380.05
	3	CROSSARM, 3 1/2" X 4 1/2" X 8' - 0"	1	1	380.05
	4	BRACE, ANGLE CROSSARM, 4' - 0"	1	1	164032
	5	BRACE, FLAT CROSSARM, 28"	2	2	164192
	6	BOLT, MACH. GALV. 5/8" X (LENGTH AS REQ'D) & 1 NUT	3	3	139 (E)
	7	BOLT, MACH. 1/2" X 7" & 1 NUT	2	2	153120 (E)
	8	BOLT, MACH. GALV. 1/2" X 5" & 1 NUT	2	2	153024 (E)
	9	BOLT, MACH. GALV. 1/2" X 1 1/2" & 1 NUT	2	3	152608 (E)
	10	BOLT, MACH. GALV. 3/8" X 5" & 1 NUT	2	2	154368 (E)
	11	WASHER, 1/2" ROUND	10	8	800192 (E)
	12	WASHER, 3/8" ROUND	2	2	800288 (E)
	13	WASHER, 3" SQ. CURVED	4	4	798912 (E)
	14	WASHER, 2 1/4" SQ. FLAT	2	2	799040 (E)
	15	WASHER, 5/8" SPRING DBL COIL	3	3	798560 (E)
P T & F	16	WASHER, 1/2" SPRING DBL COIL	6	6	798464 (E)
	17	WASHER, 3/8" SPRING DBL COIL	2	2	798528 (E)
	18	SCREW, LAG GALV. 5/8" X 5"	1	1	621600 (E)
	19	SCREW, LAG GALV. 1/2" X 4"	1	1	621568 (E)
	20	SIGN, HIGH VOLTAGE	1	1	647648 (E)
	21	NAILS, ROOFING #8 GALV.	8	8	492224 (E)
	22	STEPS, POLE (A)	16	16	692992 (E)
	23				
L T I	24	CAPACITOR, UNIT 7.2KV (100 KVAR UNITS ILLUSTRATED) (F)	6	9	207232
	25	RACK, CAPACITOR	2	3	402656
	26	CUTOUT, 12KV, 100A HEAVY DUTY WITH LOADBUSTER HOOKS	3	3	297888
	27	CONNECTORS, COMPRESSION	3	3	786, 783 (E)
	28	WIRE, #6 BARE STRANDED COPPER	33'	35'	813536
	29	WIRE, #8 BARE SOLID ANNEALED COPPER	13'	15'	812928
	30				

DATE 11-5-82
APPD JHT/RCH

SDG&E ELECTRIC STANDARDS

CAPACITOR INSTALLATIONS, 12KV - WYE - 900 KVAR MAX.

1399.207
SUPERSEDES 1322 (11-5-82)

TABLE OF CONTENTS

FIELD MAINTENANCE ONLY

REVISION HISTORY:

7/13/2016: All versions prior to 2016 are superseded by their current version found inside the Overhead Construction Standard Manual.

TABLE OF CONTENTS

© 1998 - 2016 San Diego Gas & Electric Company. All rights reserved. Removal of this copyright notice without permission is not permitted under law.

REV	CHANGE	BY	DSGN	APPV	DATE	REV	CHANGE	BY	DSGN	APPV	DATE
C						F					
B						E					
A	ORIGINAL ISSUE	JS	IL	MDJ	7/13/2016	D					

X Indicates Latest Revision | Completely Revised | New Page | Information Removed

SHEET
1 OF 1

SDG&E ELECTRIC OVERHEAD STANDARD

FIXED CAPACITOR INSTALLATION, 4KV WYE

FMO
OH 1323

SCOPE: THIS STANDARD SHOWS THE PREFERRED METHOD OF CONSTRUCTION FOR A FIXED CAPACITOR WHEN A NEW POLE IS REQUIRED.

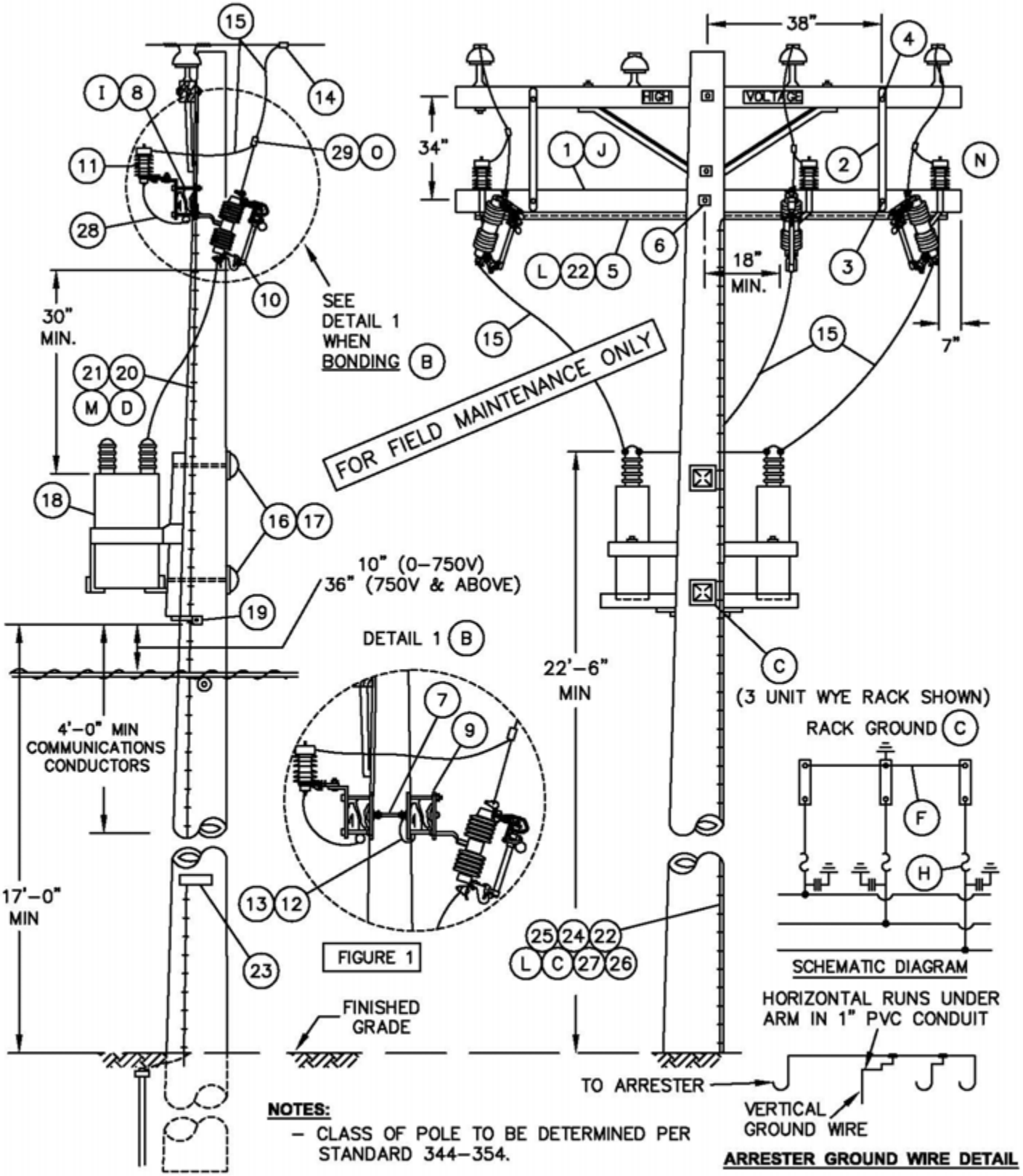

NOTES:

– CLASS OF POLE TO BE DETERMINED PER STANDARD 344–354.

© 1998 - 2005 San Diego Gas & Electric Company. All rights reserved. Removal of this copyright notice without permission is not permitted under law.

1399.504 4299.507 SUPERSEDES 1323.1 (10–15–05)	SDG&E ELECTRIC STANDARDS FIXED CAPACITOR INSTALLATION, 4KV WYE GROUNDED RACK	DATE 10–15–05 APPD PBA / JJ

TABLE OF CONTENTS

SCOPE: THIS STANDARD SHOWS AN ALTERNATE METHOD OF INSTALLING A FIXED CAPACITOR ON AN EXISTING POLE OF PROPER CLASS BUT WITH INSUFFICIENT HEIGHT TO PERMIT THE CONSTRUCTION AS SHOWN ON PAGE 1323.1 FIGURE 1.

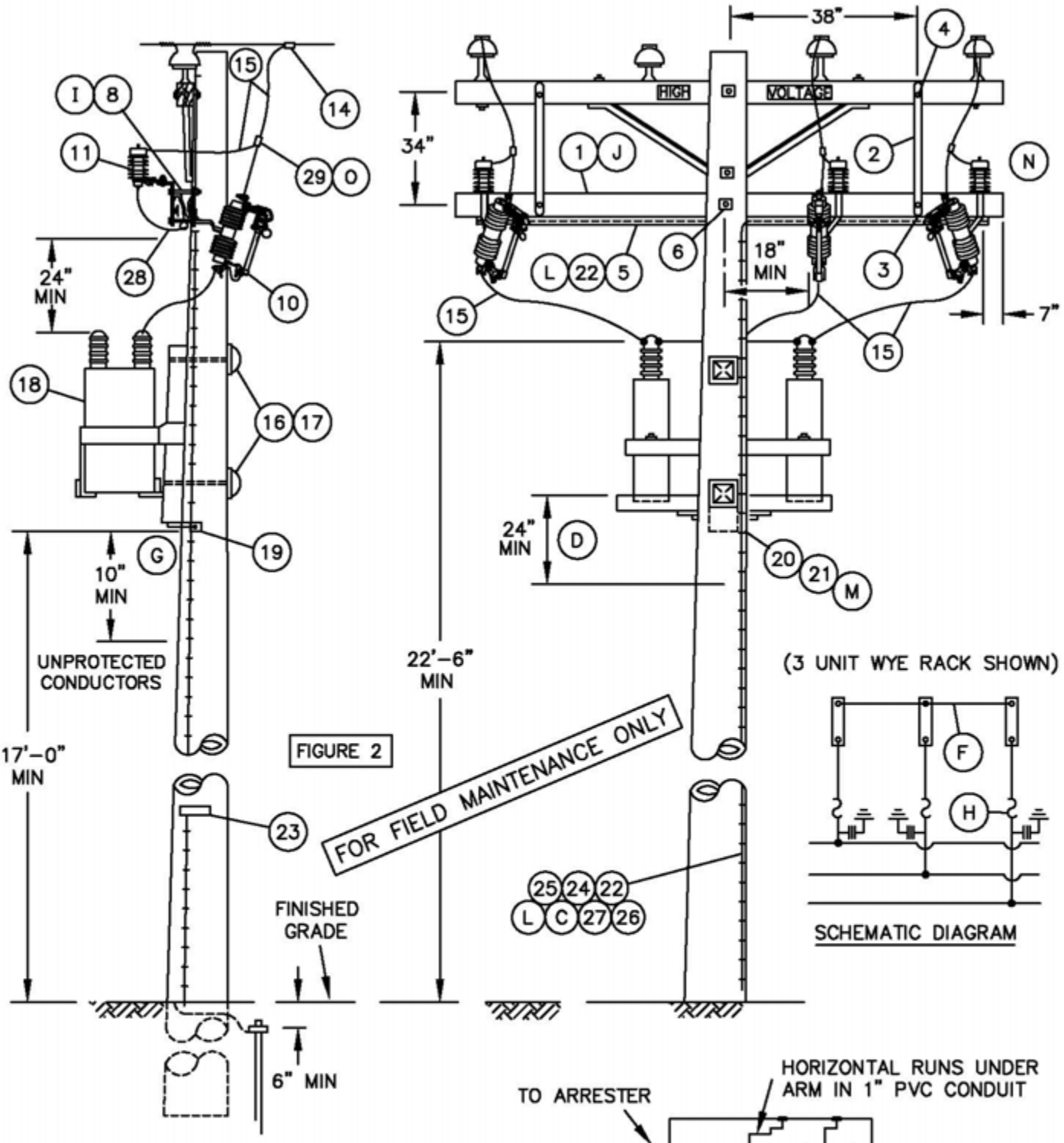

NOTES:

– CLASS OF POLE TO BE DETERMINED PER STANDARD 344–354.

©1998 - 2005 San Diego Gas & Electric Company. All rights reserved. Removal of this copyright notice without permission is not permitted under law.

DATE 10–3–2012 APPD TQ/MJC	SDG&E ELECTRIC STANDARDS FIXED CAPACITOR INSTALLATION, 4KV WYE UNGROUNDED RACK –– ALTERNATE	1399.505 4299.508 SUPERSEDES 1323.2 (10–15–05)

TABLE OF CONTENTS

BILL OF MATERIAL:

ITEM	DESCRIPTION	QUANTITY (B) UNBONDED	QUANTITY (B) BONDED	STOCK NO. OR CONSTR STANDARD	ASSEMBLY UNIT
1	CROSSARM, 3 3/4" X 5 3/4" X 10' – 0" (B)	1	2	294128	–
2	BRACE, FLAT, CROSSARM, 36" (J)	2	2	164224	–
3	BOLT, MACH, GALV, 3/8" X 4 1/2", 1 ROUND & 1 LOCK WASHER (J)	2	2	STD 392	–
4	BOLT, MACH, GALV, 1/2" X 5", 1 ROUND & 1 DBL COIL SPR WASH (J)	2	2	STD 392	–
5	CONDUIT, PVC, TYPE 2, SCHEDULE 40, 1" AND	10'	10'	251200	–
	STRAPS, PIPE, GALV. 1" WITH 1 3/4" ROOFING NAILS	AS REQ'D		697792	–
6	BOLT, MACH, GALV, 5/8" X (LENGTH AS REQ'D), 2 SQUARE & 1 DBL COIL SPRING WASHER	1	1	STD 392	–
7	BOLT, SPACE, GALV, 5/8" X (LENGTH AS REQ'D), 2 ROUND 4 SQUARE, 2 DOUBLE COIL SPRING WASHERS & 2 NUTS	–	2	STD 392	–
8	BRACKET, DOUBLE CUTOUT/ARRESTER, FOR CROSSARM MOUNTING.	3	–	165442	–
9	BRACKET, ARRESTER OR CUTOUT	–	6	166070	–
10	CUTOUT, 12KV, 100A, WITH LOADBUSTER HOOKS	3	3	STD 1212	–
11	ARRESTER, LIGHTNING (SEE STD. 1247 FOR 4KV APPLICATION) 4 KV	3	3	113216	–
	OR 12 KV	3	3	113248	–
12	WIRE, #8 BARE SOLID ANNEALED COPPER (B) FT	–	15	812928	–
	LB	–	1		
13	STAPLES, WIRE, GALV, 1 1/4" (B)	AS REQ'D		678528	–
14	CONNECTOR, WIRE COMPRESSION, CU OR AL (SIZE AS REQ'D)	AS REQ'D		783–786	–
15	WIRE, #4 BARE STRANDED COPPER FT	100		813760	–
	LB	13			
16	BOLT, MACH, GALV, 3/4" X (LENGTH AS REQ'D), 1 SQ CURV RIBBED & 1 DBL COIL SPRING WASHER	2	2	STD 392	–
17	COVER, BOLT PLASTIC &	2	2	285696	–
	6 – 1 3/4" NAILS, GALV	–	–	492192	–
18	CAPACITOR RACK – COMPLETE WITH CAPACITORS 4KV 65 KVAR (3 ● 200 KVAR)	1	1	564759	–
	4KV 130 KVAR (3 ● 400 KVAR)	1	1	564776	–
	12KV 600 KVAR (3 ● 200 KVAR)	1	1	564763	–
	12KV 1200 KVAR (3 ● 400 KVAR)	1	1	564764	–
19	SCREW, LAG, GALV, 4"	2	2	621568	–
20	CONDUIT, PVC, TYPE 2, SCHEDULE 40, 1/2" (D)	10'	10'	251168	–
21	STRAPS, PIPE, GALV, 1/2", AND	AS REQ'D		697728	–
	2– 1 3/4" ROOFING NAILS, GALV.	–	–	492192	–
22	#4 CU SOLID GROUND WIRE, PVC COVERED	50'	50'	812490	GNDPVC
23	TAG, STATION NUMBER	1	1	200 SECT.	–
24	GROUND ROD, 5/8" X 8', COPPERWELD	1	1	603072	GNDPVC
25	COPPER BONDED GROUND CONNECTOR	1	1	259010	–
26	GROUND ENHANCING POWER SOLUTION (GEM)	AS REQ'D		424390	–
27	GALVANIZED STAPLES FOR PVC COVERED GROUND WIRE	AS REQ'D		678562	–
28	FLEXIBLE ARRESTER GROUND STRAP	AS REQ'D		698754	–
29	HOT LINE CLAMP	3	3	227680	–

FOR FIELD MAINTENANCE ONLY

© 1998 - 2005 San Diego Gas & Electric Company. All rights reserved. Removal of this copyright notice without permission is not permitted under law.

Indicates Latest Revision | Completely Revised | New Page | Information Removed

1399.506
4299.509
SUPERSEDES
1323.3 (10–15–05)

SDG&E ELECTRIC STANDARDS

FIXED CAPACITOR INSTALLATION, 4KV WYE

DATE 10–15–05
APPD PBA / JJ

TABLE OF CONTENTS

OVERHEAD MACRO UNITS 12KV/4KV CAPACITOR STATIONS		
FIXED – GROUNDED (FIG. 1)		
KV	KVAR	MU I.D.
12	600	C6FP
12	1200	C12FP
FIXED–UNGROUNDED (FIG. 2)		
4	65	C4FA
4	130	C4F3P
12	600	C6FA
12	1200	C12FA

FOR FIELD MAINTENANCE ONLY

INSTALLATION:

A. CAPACITORS MUST BE INSTALLED ON POLES ACCESSIBLE BY BUCKET TRUCK.

(B) BOND CUTOUTS IN HEAVY CONTAMINATION DISTRICTS AS SHOWN ON STANDARD 287. IN AREAS WHERE BONDING IS REQUIRED, TO AVOID BONDWIRE AND LIGHTNING ARRESTER GROUNDWIRE ON THE SAME CROSSARM, USE TWO CROSSARMS; ONE FOR CUTOUTS AND ONE FOR LIGHTNING ARRESTERS.

(C) CONNECT CAPACITOR RACK GROUND LEAD TO LIGHTNING ARRESTER GROUND (FIGURE 1 ONLY).

(D) RUN 1/2" SCHEDULE 40 PVC CONDUIT WITH LIGHTNING ARRESTER GROUND FROM LIGHTNING ARRESTER ARM TO A MINIMUM OF 2 FEET BELOW CAPACITOR RACK, THEN CONTINUE DOWN THE POLE USING PVC COVERED GROUND WIRE.

(F) DO NOT TIE CAPACITOR BANK NEUTRAL TO 12KV CIRCUIT NEUTRAL. IT IS TO REMAIN FLOATING.

(G) TEN INCHES FROM 0–750V CONDUCTORS BELOW, 12 INCHES FOR CONDUCTORS OF 750–7500V, 18 INCHES FOR CONDUCTORS OF 7500–22,500V PER G.O. 95 RULE 58.1–D.

(H) FUSE STATION ACCORDING TO CAPACITOR FUSING TABLE, STANDARD 1309.

(I) DRILL THROUGH CROSSARM 1" UP FROM LOWER EDGE SO THAT LOWER CROSSARM MOUNTING BRACKET BOLT DOES NOT INTERFERE WITH PVC CONDUIT.

(J) WHEN LA/CO CROSSARM AND CAPACITORS CANNOT BE INSTALLED ON THE SAME SIDE OF THE POLE AS AN EXISTING LINEARM, DELETE ITEMS 2, 3, & 4. INSTEAD, FIELD DRILL LA/CO CROSSARM FOR 2–36" FLATBRACES. SECURE BRACES TO POLE WITH A LAG SCREW. (SEE STD. 380.1, ITEM 1

REFERENCE:

(L) FOR GROUNDING REQUIREMENTS AND APPLICATION – SEE STANDARD 1002.

(M) PVC CONDUIT IS NOT PERMITTED IN THE CLIMBING SPACE PER G. O. 95, RULE 22.2B.

(N) SECTIONALIZING CUTOUT INSTALLATION MAY VARY WITH POSITION OF NEUTRAL CONDUCTOR – SEE STANDARD 1240.

(O) FOR HOT LINE CLAMP CONNECTION, SEE STANDARD 788.

© 1998 - 2005 San Diego Gas & Electric Company. All rights reserved. Removal of this copyright notice without permission is not permitted under law.

TABLE OF CONTENTS

FIELD MAINTENANCE ONLY

REVISION HISTORY:

7/13/2016: All versions prior to 2016 are superseded by their current version found inside the Overhead Construction Standard Manual.

TABLE OF CONTENTS

© 1998 - 2016 San Diego Gas & Electric Company. All rights reserved. Removal of this copyright notice without permission is not permitted under law.

REV	CHANGE	BY	DSGN	APPV	DATE	REV	CHANGE	BY	DSGN	APPV	DATE
C						F					
B						E					
A	ORIGINAL ISSUE	JS	IL	MDJ	7/13/2016	D					

X Indicates Latest Revision | Completely Revised | New Page | Information Removed

SHEET
1 OF 1

SDG&E ELECTRIC OVERHEAD STANDARD

12 & 12.47 KV SWITCHED CAPACITOR INSTALLATION
3 OIL SWITCHES IN LINE

FMO
OH 1324

APPLICATION: THIS CONSTRUCTION SHALL BE USED FOR ALL VOLTAGE, TIME, OR TIME-VOLTAGE SWITCHED CAPACITORS WITH THREE OIL SWITCHES.

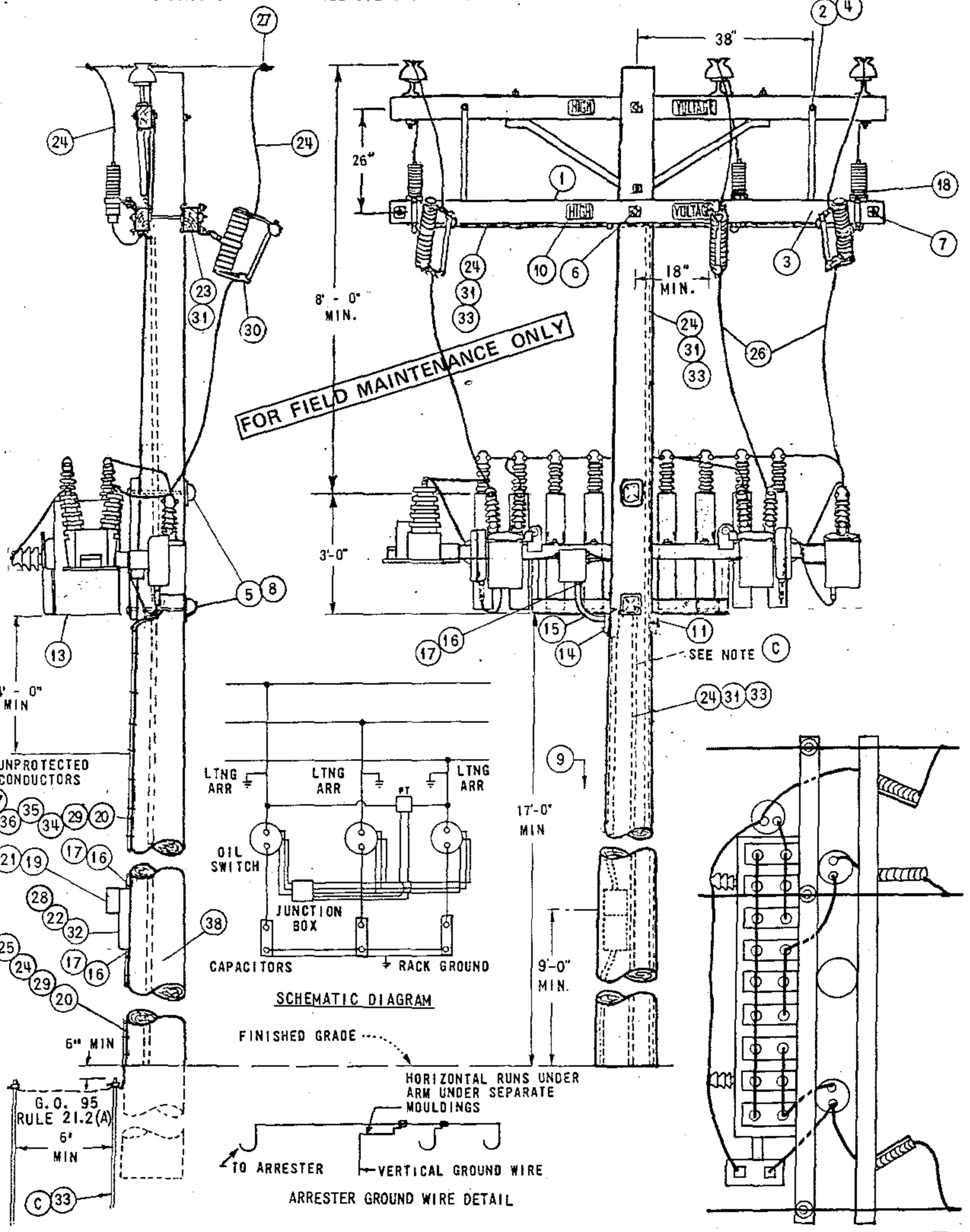

TABLE OF CONTENTS

DATE 9-17-82 APPD JAT	SDG&E ELECTRIC STANDARDS 12 & 12.47 KV SWITCHED CAPACITOR INSTALLATION 3 OIL SWITCHES IN LINE	1399.201 SUPERSEDES 1324.1 (9-17-82)

NOTES:

A. CAUTION: OPEN OIL SWITCHES BEFORE OPENING CUTOUTS.
B. BOND CUTOUTS IN HEAVY CONTAMINATION DISTRICTS. AS IDENTIFIED ON STANDARDS PAGE 287.
(C) ONE GROUND IS REQUIRED FOR THE CAPACITOR RACK, ONE IS REQUIRED FOR THE ARRESTERS, AND A THIRD FOR THE CONTROL PANEL. THESE GROUNDS ARE NOT TO BE INTERCONNECTED.
D. DO NOT TIE CAPACITOR BANK NEUTRAL TO 12KV CIRCUIT NEUTRAL. IT IS TO REMAIN FLOATING.
(E) EXEMPT MATERIALS.
(F) TO BE INSTALLED BY KEARNY ELECTRIC MAINTENANCE.
G. INSTALL CONTROL ON SAME SIDE OF POLE AS CAPACITOR RACK.
H. RACKS THAT CONTAIN PT'S WITH METAL TANKS TO BE INSULATED FROM RACK BY KEARNY MAINTENANCE BEFORE REINSTALLATION.
(I) THE POTENTIAL TRANSFORMERS FOR THIS INSTALLATION ARE CONNECTED PHASE-TO-PHASE. FOR POTENTIAL TRANSFORMERS CONNECTED PHASE-TO-NEUTRAL, SEE PAGE 1326.
J. PVC CONDUIT IS NOT PERMITTED IN THE CLIMBING SPACE. G.O. 95 RULE 22.2(C).
K. CAPACITORS MUST BE INSTALLED ON POLES ACCESSIBLE BY BUCKET TRUCK.

	ITEM		DESCRIPTION		QUANTITY	STOCK NO. OR CONSTR. STD.
P T & F	1		CROSSARM, 3 3/4" X 5 3/4" X 10' - 0"		2	300 SECTION
	2		BRACE, FLAT CROSSARM 28"		2	164192
	3		BOLT, MACHINE, GALV., 3/8" X 4 1/2", & 1 SPRING LOCK WASH.	(E)	2	PGS 139, 140
	4		BOLT, MACHINE, GALV., 1/2" X 5", 1 RD. WASH, 1 DBL. COIL SPR. WASH	(E)	2	PGS 139, 140
	5		BOLT, MACHINE, GALV., 3/4" X___, 1 SQ CURV RIB WASH, 1 DBL COIL SPR WASH		2	PGS 139, 140
	6		BOLT, MACHINE, GALV, 5/8" X___, 2 SQ WASH, 1 DBL COIL SPR WASH	(E)	1	PGS 139, 140
	7		BOLT, SPACE, GALV., 5/8" X___, 4 SQ WASH, 2 DBL COIL SPR WASH, 2 RD WASH.	(E)	2	PGS 139,140
	8		COVER, BOLT, PLASTIC, 10 D NAILS, GALV	(E)	2	285696
	9		STEPS, POLE	(E)	16	692992
	10		SIGN, HIGH VOLTAGE & NAILS, GALV.	(E)	4	647648, 492224
	11		SCREW, LAG, GALV, 4"	(E)	2	621568
	12					
	13		SWITCHED CAPACITOR RACK, COMPLETE WITH CAPACITORS, SWITCHES & POTENTIAL TRANSFORMER	900 KVAR (6 @ 150 KVAR)	1	564704
				1350 KVAR (9 @ 150 KVAR)	1	564752
	14		ACCESS FITTING BODY TYPE LB PVC 3/4"	(F) (E)	1	146384
	15		ELBOW, STANDARD RADIUS PVC 3/4"	(F)	1	322166
	16		REDUCER COUPLING PVC 3/4"TO 1"	(F)	3	573410
	17		TERMINAL ADAPTOR PVC 1"	(F)	3	102756
	18		ARRESTERS, LIGHTNING, 12KV		3	113248
	19		CONTROL, CAPACITOR (SELECT TYPE AS REQ'D)	a TIME SWITCH (F)	1	706160
				b TIME SWITCH W/VOLTAGE OVERRIDE (F)	1	706176
				c VOLTAGE (F)	1	273984
L T I	20		CONDUIT, PVC, SCHEDULE 40, 3/4"	(F) (E)	40'	251328
	21		PADLOCK, MASTER 7		1	514912
	22		BRACKETS, CONTROL MOUNTING	(F)	2	SHOP MADE
	23		WIRE, #8 SOL, ANNEALED BARE COPPER		10' (1/2#)	812928
	24		WIRE, BARE STRANDED COPPER, #6		110'	813536
	25		ROD & CLAMP, GROUND		2	603072, 230016 (E)
	26		WIRE, #4 COPPER, WP		20'	812480
	27		CONNECTORS, WIRE, COMPRESSION, COPPER OR ALUMINUM AS REQ'D	(E)	6	PGS 786, 783
	28		SCREW, 1/4" X 2" LAG	(F)	4	621888
	29		STRAPS, PIPE GALV, 3/4", 6D NAILS, GALV.	(F) (E)	AS REQ'D	697888
	30		CUTOUTS 12KV 100A WITH LOADBUSTER HOOKS		3	1200 SECTION
	31		STAPLES, WIRE GALV, 1 1/4"	(E)	AS REQ'D	678528
	32		BOX, METER SOCKET SAFETY, 5 TERMINAL, 100 AMP	(F)	1	161856
	33		UNIT GROUND COMPLETE (WITH PLAIN MLDG, WITH GRAY MLDG)		2	603136, 603120
	34		WIRE, THW #12 WHITE	(F)	30'	808704
	35		WIRE, THW #12 BLACK	(F)	30'	808096
	36		WIRE, THW #12 RED	(F)	30'	808576
	37		WIRE, THW #12 BLUE	(F)	30'	808416
	38		TAG, STATION NUMBER		1	300 SECTION

FOR FIELD MAINTENANCE ONLY

TABLE OF CONTENTS

1399.202 SUPERSEDES 1324.2 (9-17-82)	SDG&E ELECTRIC STANDARDS 12 & 12.47 KV SWITCHED CAPACITOR INSTALLATION 3 OIL SWITCHES IN LINE	DATE 9-17-82 APPD JHT.

APPLICATION: THIS CONSTRUCTION SHALL BE USED FOR ALL VOLTAGE, TIME, OR TIME-VOLTAGE SWITCHED CAPACITORS WITH THREE OIL SWITCHES.

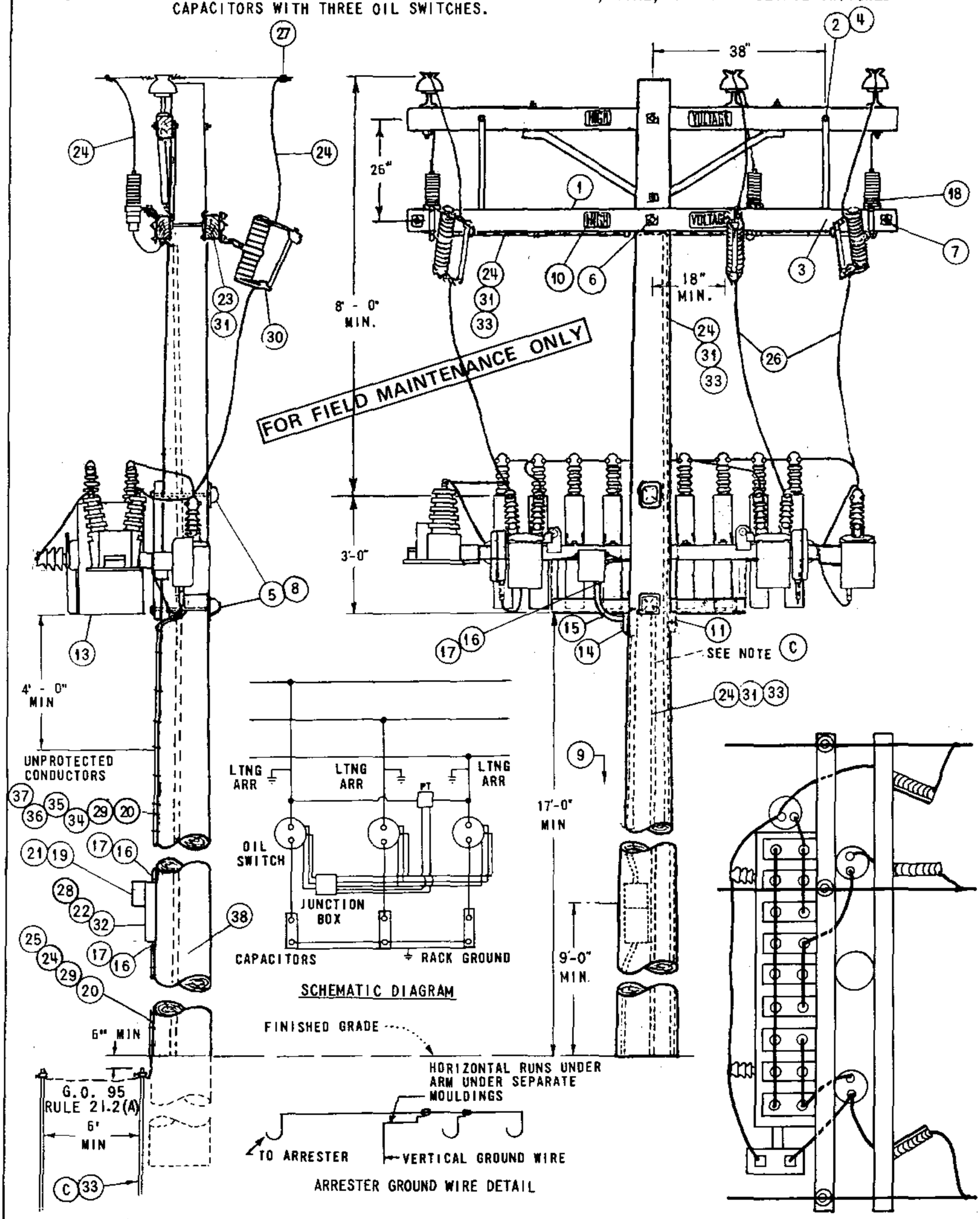

TABLE OF CONTENTS

DATE 9-17-82 APPD JNT	SDG&E ELECTRIC STANDARDS 12 & 12.47 KV SWITCHED CAPACITOR INSTALLATION 3 OIL SWITCHES IN LINE	1399.205 SUPERSEDES 1324.1 (9-17-82)

NOTES:

A. CAUTION: OPEN OIL SWITCHES BEFORE OPENING CUTOUTS.
B. BOND CUTOUTS IN HEAVY CONTAMINATION DISTRICTS. AS IDENTIFIED ON STANDARDS PAGE 287.
(C) ONE GROUND IS REQUIRED FOR THE CAPACITOR RACK, ONE IS REQUIRED FOR THE ARRESTERS, AND A THIRD FOR THE CONTROL PANEL. THESE GROUNDS ARE NOT TO BE INTERCONNECTED.
D. DO NOT TIE CAPACITOR BANK NEUTRAL TO 12KV CIRCUIT NEUTRAL. IT IS TO REMAIN FLOATING.
(E) EXEMPT MATERIALS.
(F) TO BE INSTALLED BY KEARNY ELECTRIC MAINTENANCE.
G. INSTALL CONTROL ON SAME SIDE OF POLE AS CAPACITOR RACK.
H. RACKS THAT CONTAIN PT'S WITH METAL TANKS TO BE INSULATED FROM RACK BY KEARNY MAINTENANCE BEFORE REINSTALLATION.
(I) THE POTENTIAL TRANSFORMERS FOR THIS INSTALLATION ARE CONNECTED PHASE-TO-PHASE. FOR POTENTIAL TRANSFORMERS CONNECTED PHASE-TO-NEUTRAL. SEE PAGE 1326.
J. PVC CONDUIT IS NOT PERMITTED IN THE CLIMBING SPACE. G.O. 95 RULE 22.2(C).
K. CAPACITORS MUST BE INSTALLED ON POLES ACCESSIBLE BY BUCKET TRUCK.

ITEM	DESCRIPTION			QUANTITY	STOCK NO. OR CONSTR. STD.
1	CROSSARM, 3 3/4" X 5 3/4" X 10' - 0"			2	300 SECTION
2	BRACE, FLAT CROSSARM 28"			2	164192
3	BOLT, MACHINE, GALV., 3/8" X 4 1/2" & 1 SPRING LOCK WASH.		(E)	2	PGS 139, 140
4	BOLT, MACHINE, GALV., 1/2" X 5", 1 RD. WASH, 1 DBL. COIL SPR. WASH		(E)	2	PGS 139, 140
5	BOLT, MACHINE, GALV., 3/4" X___, 1 SQ CURV RIB WASH, 1 DBL COIL SPR WASH			2	PGS 139, 140
6	BOLT, MACHINE, GALV, 5/8" X___, 2 SQ WASH, 1 DBL COIL SPR WASH		(E)	1	PGS 139, 140
7	BOLT, SPACE, GALV., 5/8" X___, 4 SQ WASH, 2 DBL COIL SPR WASH, 2 RD WASH.		(E)	2	PGS 139,140
8	COVER, BOLT, PLASTIC, 10 D NAILS, GALV		(E)	2	285696
9	STEPS, POLE		(E)	16	692992
10	SIGN, HIGH VOLTAGE & NAILS, GALV.		(E)	4	647648, 492224
11	SCREW, LAG, GALV, 4"		(E)	2	621568
12					
13	SWITCHED CAPACITOR RACK, COMPLETE WITH CAPACITORS, SWITCHES & POTENTIAL TRANSFORMER	900 KVAR (6 @ 150 KVAR)		1	564704
		1350 KVAR (9 @ 150 KVAR)		1	564752
14	ACCESS FITTING BODY TYPE LB PVC 3/4"		(F) (E)	1	146384
15	ELBOW, STANDARD RADIUS PVC 3/4"		(F)	1	322166
16	REDUCER COUPLING PVC 3/4"TO 1"		(F)	3	573410
17	TERMINAL ADAPTOR PVC 1"		(F)	3	102756
18	ARRESTERS, LIGHTNING, 12KV			3	113248
19	CONTROL, CAPACITOR (SELECT TYPE AS REQ'D)	a TIME SWITCH	(F)	1	706160
		b TIME SWITCH W/VOLTAGE OVERRIDE	(F)	1	706176
		c VOLTAGE	(F)	1	273984
20	CONDUIT, PVC, SCHEDULE 40, 3/4"		(F) (E)	40'	251328
21	PADLOCK, MASTER 7			1	514912
22	BRACKETS, CONTROL MOUNTING		(F)	2	SHOP MADE
23	WIRE, #8 SOL, ANNEALED BARE COPPER			10' (1/2#)	812928
24	WIRE, BARE STRANDED COPPER, #6			110'	813536
25	ROD & CLAMP, GROUND			2	603072, 230016 (E)
26	WIRE, #4 COPPER, WP			20'	812480
27	CONNECTORS, WIRE, COMPRESSION, COPPER OR ALUMINUM AS REQ'D		(E)	6	PGS 786, 783
28	SCREW, 1/4" X 2" LAG		(F)	4	621888
29	STRAPS, PIPE GALV, 3/4", 6D NAILS, GALV.		(F) (E)	AS REQ'D	697888
30	CUTOUTS 12KV 100A WITH LOADBUSTER HOOKS			3	1200 SECTION
31	STAPLES, WIRE GALV, 1 1/4"		(E)	AS REQ'D	678528
32	BOX, METER SOCKET SAFETY, 5 TERMINAL, 100 AMP		(F)	1	161856
33	UNIT GROUND COMPLETE (WITH PLAIN MLDG, WITH GRAY MLDG)			2	603136, 603120
34	WIRE, THW #12 WHITE		(F)	30'	808704
35	WIRE, THW #12 BLACK		(F)	30'	808096
36	WIRE, THW #12 RED		(F)	30'	808576
37	WIRE, THW #12 BLUE		(F)	30'	808416
38	TAG, STATION NUMBER			1	300 SECTION

FOR FIELD MAINTENANCE ONLY

TABLE OF CONTENTS

399.206
SUPERSEDES
24.2 (9-17-82)

SDG&E ELECTRIC STANDARDS

12 & 12.47 KV SWITCHED CAPACITOR INSTALLATION
3 OIL SWITCHES IN LINE

DATE 9-17-82
APPD

FIELD MAINTENANCE ONLY

REVISION HISTORY:

7/13/2016: All versions prior to 2016 are superseded by their current version found inside the Overhead Construction Standard Manual.

TABLE OF CONTENTS

© 1998 - 2016 San Diego Gas & Electric Company. All rights reserved. Removal of this copyright notice without permission is not permitted under law.

REV	CHANGE	BY	DSGN	APPV	DATE	REV	CHANGE	BY	DSGN	APPV	DATE
C						F					
B						E					
A	ORIGINAL ISSUE	JS	IL	MDJ	7/13/2016	D					

X Indicates Latest Revision | Completely Revised | New Page | Information Removed

SHEET
1 OF 1

SDG&E ELECTRIC OVERHEAD STANDARD

12 & 12.47KV SWITCHED CAPACITOR INSTALLATION
2 OIL SWITCHES IN CAPACITOR NEUTRAL

FMO
OH 1325

SCOPE: THIS CONSTRUCTION SHALL BE USED FOR ALL 12KV CAPACITOR STATIONS WITH TWO OIL SWITCHES.

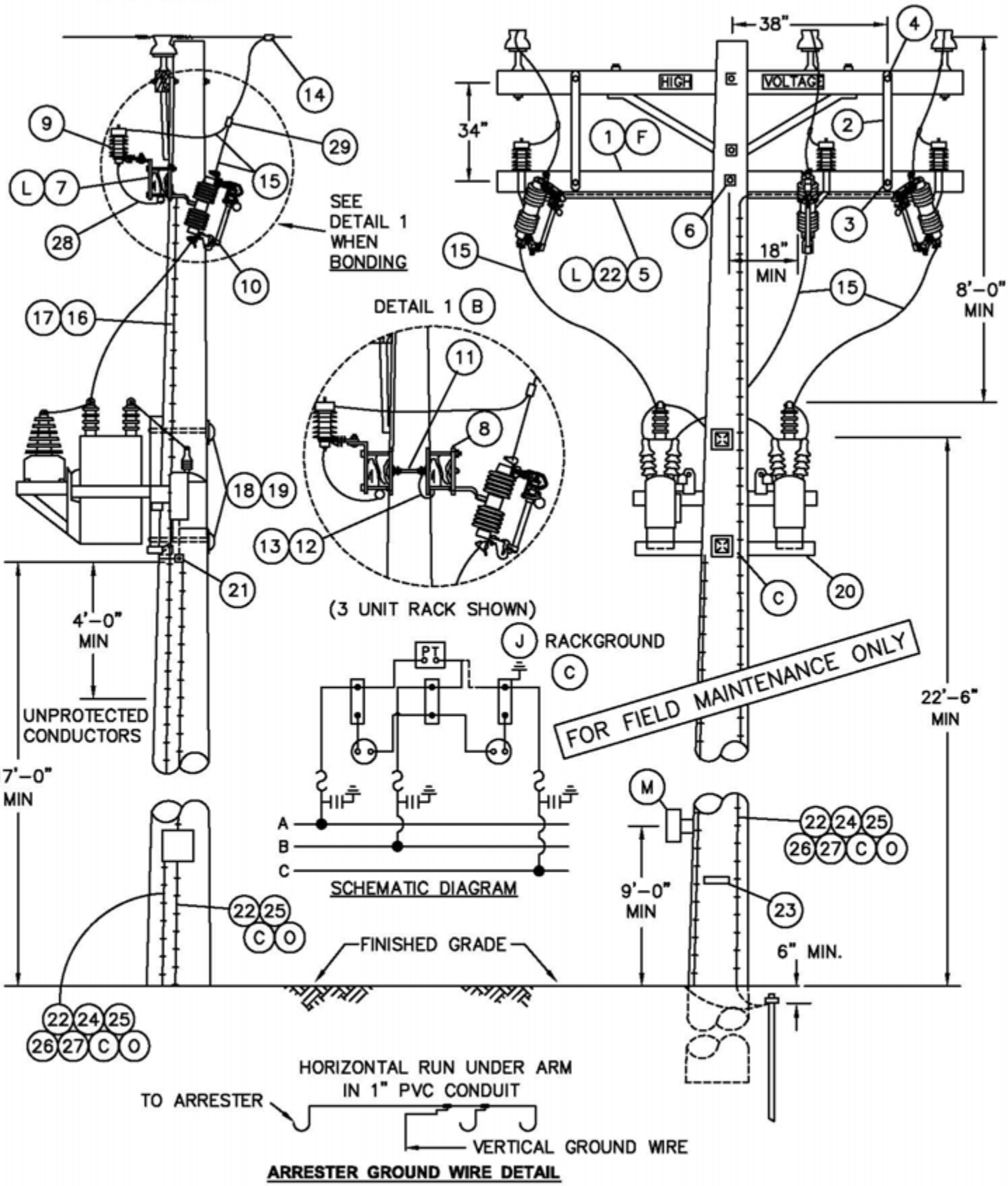

ARRESTER GROUND WIRE DETAIL

© 1998 - 2005 San Diego Gas & Electric Company. All rights reserved. Removal of this copyright notice without permission is not permitted under law.

1399.508 SUPERSEDES 1325.1 (10-15-05)	SDG&E ELECTRIC STANDARDS 12 & 12.47KV SWITCHED CAPACITOR INSTALLATION 2 OIL SWITCHES IN CAPACITOR NEUTRAL	DATE 10-15-05 APPD PA / JJ

TABLE OF CONTENTS

NOTE:

– CLASS OF POLE TO BE DETERMINED PER STANDARD 344–354.

BILL OF MATERIAL:

FOR FIELD MAINTENANCE ONLY

ITEM	DESCRIPTION		QUANTITY (B) UNBONDED	QUANTITY (B) BONDED	STOCK NO. OR CONSTR STANDARD	ASSEMBLY UNIT
1	CROSSARM, 3 3/4" X 5 3/4" X 10' – 0" (B)		1	2	294128	–
2	BRACE, FLAT, CROSSARM, 36" (F)		2	2	164224	–
3	BOLT, MACH, GALV, 3/8" X 4 1/2", 1 ROUND & 1 LOCK WASHER (F)		2	2	STD 392	–
4	BOLT, MACH, GALV, 1/2" X 5", 1 ROUND & 1 DBL COIL SPR WASH (F)		2	2	STD 392	–
5	CONDUIT, PVC, TYPE 2, SCHEDULE 40, 1" AND		10'	10'	251200	–
	STRAPS PIPE, GALV, 1" WITH 2– 1 3/4" ROOFING NAILS.		AS REQ'D		697792	–
6	BOLT, MACH, GALV, 5/8" X (LENGTH AS REQ'D), 2 SQUARE & 1 DBL COIL SPRING WASHER		1	1	STD 392	–
7	BRACKET, DOUBLE CUTOUT/ARRESTER, FOR CROSSARM MOUNTING.		3	–	165442	–
8	BRACKET, ARRESTER, OR CUTOUT		–	6	166070	–
9	ARRESTER, LIGHTNING, 12KV		3	3	113248	–
10	CUTOUT, 12KV, 100A, WITH LOADBUSTER HOOKS		3	3	STD 1212	–
11	BOLT, SPACE, GALV, 5/8" X (LENGTH AS REQ'D), 2 ROUND, 4 SQUARE, 2 DOUBLE COIL SPRING WASHERS & 2 NUTS		–	2	STD 392	–
12	WIRE, #8 BARE SOLID ANNEALED COPPER (B)	FT	–	15	812928	–
		LB	–	1		
13	STAPLES, WIRE, GALV, 1 1/4" (B)		AS REQ'D		678528	–
14	CONNECTOR, WIRE COMPRESSION, CU OR AL (SIZE AS REQ'D)		AS REQ'D		783–786	–
15	WIRE, #4 BARE STRANDED COPPER	FT	110	110	813760	–
		LB	14	14		
16	CONDUIT, PVC, TYPE 2, SCHEDULE 40, 1/2"		10'	10'	251168	–
17	STRAPS, PIPE, GALV, 1/2" WITH 2– 1 3/4" ROOFING NAILS.		AS REQ'D		697728	–
18	BOLT, MACH, GALV, 3/4" X (LENGTH AS REQ'D), 1 SQ CURV RIBBED & 1 DBL COIL SPRING WASHER		2	2	STD 392	–
19	COVER, BOLT PLASTIC & 6– 1 3/4" NAILS, GALV, ROOFING.		2	2	285696	–
			–	–	492192	–
20	SWITCHED CAPACITOR RACK, COMPLETE WITH CAPACITORS, SWITCHES AND POTENTIAL TRANSFORMER	600 KVAR (3 @ 200 KVAR)	1	1	564761	–
		1200 KVAR (3 @ 400 KVAR)	1	1	564770	–
21	SCREW, LAG, GALV, 4"		2	2	621568	–
22	#4 CU SOLID GROUND WIRE, PVC COVERED		50'	50'	812490	GNDPVC
23	TAG, STATION NUMBER		1	1	STD. 208	–
24	GROUND ROD, 5/8" X 8', COPPERWELD		1	1	603072	GNDPVC
25	COPPER BONDED GROUND CONNECTOR		1	1	259010	–
26	GROUND ENHANCING POWER SOLUTION (GEM)		AS REQ'D		424390	–
27	GALVANIZED STAPLES FOR PVC COVERED GROUND WIRE		AS REQ'D		678562	–
28	FLEXIBLE ARRESTER GROUND STRAP		AS REQ'D		698754	–
29	HOT LINE CLAMP		3	3	227680	–

© 1998 - 2005 San Diego Gas & Electric Company. All rights reserved. Removal of this copyright notice without permission is not permitted under law.

DATE 10–15–05 APPD PBA / JJ	SDG&E ELECTRIC STANDARDS 12 & 12.47KV SWITCHED CAPACITOR INSTALLATION 2 OIL SWITCHES IN CAPACITOR NEUTRAL	1399.509 SUPERSEDES 1325.2 (10–15–05)

TABLE OF CONTENTS

OVERHEAD MACRO UNITS 12KV – SWITCHED NEUTRAL CAPACITOR		
KVAR	CONTROL	MU I.D.
600	VOLT/TIME, DIGITAL, PROGRAMMABLE	C6SCT
1200	VOLT/TIME, DIGITAL, PROGRAMMABLE	C12SCT

FOR FIELD MAINTENANCE ONLY

INSTALLATION:

(A) CAUTION: OPEN OIL SWITCHES BEFORE OPENING CUTOUTS.

(B) BOND CUTOUTS IN HEAVY CONTAMINATION DISTRICTS AS SHOWN ON STANDARD 287. IN AREAS WHERE BONDING IS REQUIRED, TO AVOID BONDWIRE AND LIGHTNING ARRESTER GROUNDWIRE ON THE SAME CROSSARM, USE TWO CROSSARMS; ONE FOR CUTOUTS AND ONE FOR LIGHTNING ARRESTERS.

(C) CONNECT CAPACITOR RACK GROUND LEAD TO LIGHTNING ARRESTER GROUND. A SECOND GROUND WIRE IS REQUIRED FOR THE CONTROL PANEL TO BE CONNECTED ON THE SAME GROUND ROD. COIL LOOSE END OF THE CONTROL PANEL GROUND WIRE AND STAPLE TO POLE (TO BE WORKED BY SERVICE CREW).

D. DO NOT TIE CAPACITOR BANK NEUTRAL TO 12KV CIRCUIT NEUTRAL. IT IS TO REMAIN FLOATING.

(F) WHEN LA/CO CROSSARM AND CAPACITORS CANNOT BE INSTALLED ON THE SAME SIDE OF THE POLE AS AN EXISTING LINEARM, DELETE ITEMS 2, 3, & 4. INSTEAD, FIELD DRILL LA/CO CROSSARM FOR 2–36" FLAT BRACES, SECURE BRACES TO POLE WITH A LAG SCREW. (SEE STD. 380.1, ITEM 1 FOR DRILLING MEASUREMENTS).

G. RACKS THAT CONTAIN POTENTIAL TRANSFORMERS (PT'S) WITH METAL TANKS ARE TO BE INSULATED FROM RACK BEFORE REINSTALLATION.

H. CAPACITORS MUST BE INSTALLED ON POLES ACCESSIBLE BY BUCKET TRUCK.

(J) PT CAN BE CONNECTED TO CENTER PHASE OR OUTSIDE PHASE DEPENDING ON FIELD CONDITION.

K. THE PT FOR THIS INSTALLATION IS CONNECTED PHASE–TO–PHASE.

(L) DRILL THROUGH CROSSARM 1" UP FROM LOWER EDGE SO THAT LOWER CROSSARM MOUNTING BRACKET BOLT DOES NOT INTERFERE WITH PVC CONDUIT.

REFERENCE:

(M) SHOWN FOR ILLUSTRATIVE PURPOSES ONLY. SEE STANDARD 1330 FOR CONTROL INSTALLATION AND MATERIAL.

(N) PVC CONDUIT IS NOT PERMITTED IN THE CLIMBING SPACE PER G.O. 95 RULE 22.2C.

(O) FOR GROUNDING REQUIREMENTS AND APPLICATION, SEE STANDARD 1002.

©1998 - 2005 San Diego Gas & Electric Company. All rights reserved. Removal of this copyright notice without permission is not permitted under law.

TABLE OF CONTENTS

DATE 1–1–2000 APPD PSA / VCK	SDG&E ELECTRIC STANDARDS 12 & 12.47KV SWITCHED CAPACITOR INSTALLATION 2 OIL SWITCHES IN CAPACITOR NEUTRAL	1399.510 SUPERSEDES 1325.3 (10–15–05)

FIELD MAINTENANCE ONLY

REVISION HISTORY:

7/13/2016: All versions prior to 2016 are superseded by their current version found inside the Overhead Construction Standard Manual.

TABLE OF CONTENTS

© 1998 - 2016 San Diego Gas & Electric Company. All rights reserved. Removal of this copyright notice without permission is not permitted under law.

REV	CHANGE	BY	DSGN	APPV	DATE	REV	CHANGE	BY	DSGN	APPV	DATE
C						F					
B						E					
A	ORIGINAL ISSUE	JS	IL	MDJ	7/13/2016	D					

X Indicates Latest Revision | Completely Revised | New Page | Information Removed

SHEET 1 OF 1

SDG&E ELECTRIC OVERHEAD STANDARD

SWITCHED CAPACITORS - CURRENT SENSOR
12 & 12.47KV

FMO
OH 1326

SCOPE: THIS CONSTRUCTION SHALL BE USED FOR ALL SWITCHED CAPACITOR BANKS REQUIRING A CURRENT SENSOR.

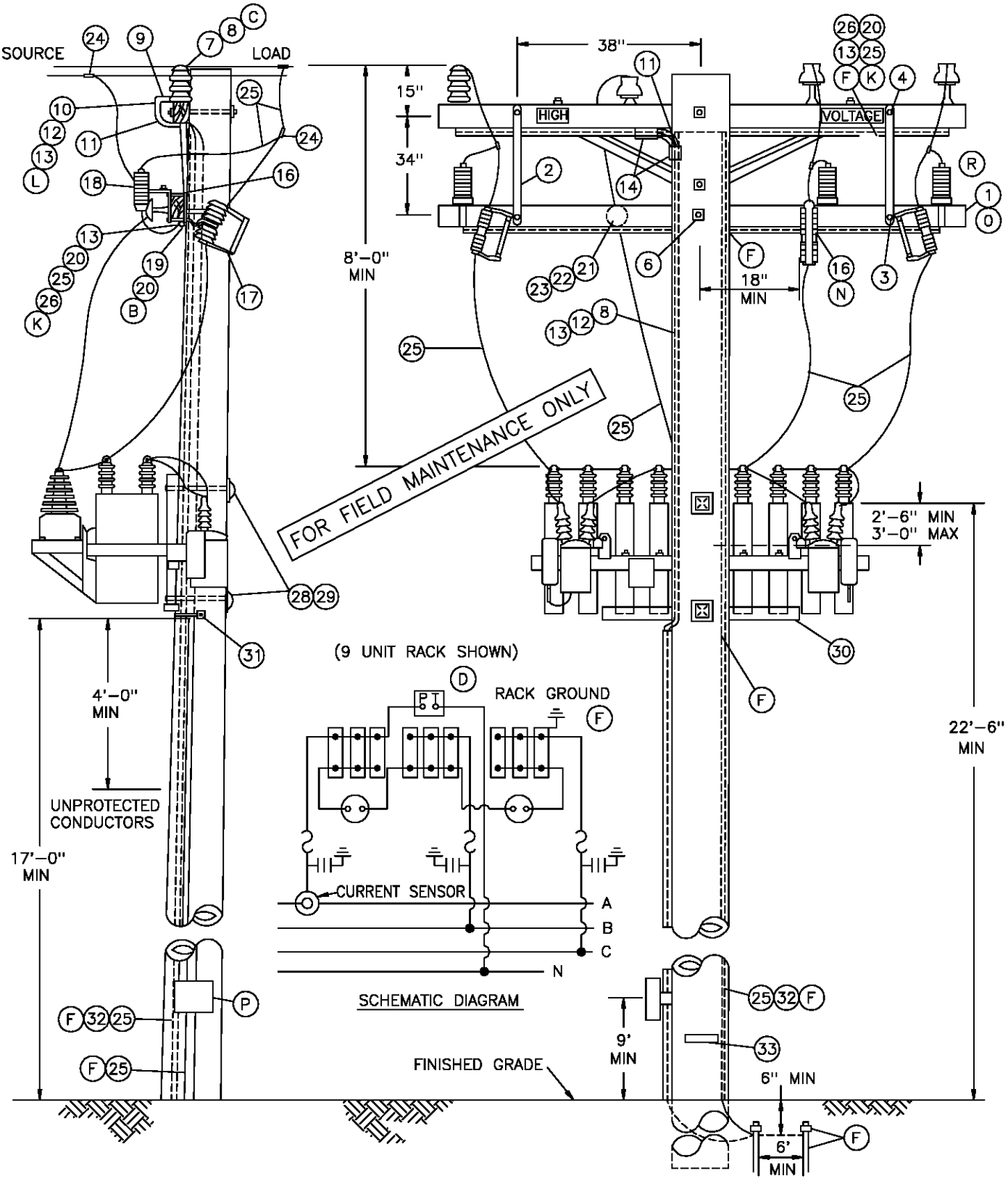

TABLE OF CONTENTS

1399.208 SUPERSEDES 326.1 (12–1–98)	SDG&E ELECTRIC STANDARDS SWITCHED CAPACITORS – CURRENT SENSOR 12 & 12.47KV	DATE 12–1–98 APPD PSA / CMK

NOTES:

- SENSOR PRODUCES ONE VOLT FOR EACH 60 AMPERES OF LINE CURRENT. OPEN CIRCUIT VOLTAGE IS NOT SIGNIFICANTLY HIGH.
- CLASS OF POLE IS TO BE DETERMINED PER STANDARD 344–354.

BILL OF MATERIAL:

ITEM	DESCRIPTION		QUANTITY	STOCK NO. OR CONSTR STANDARD
1	CROSSARM, 3 3/4" X 5 3/4' X 10' – 0" (B)		1	294128
2	BRACE, FLAT, CROSSARM, 28" (O)		2	164192
3	BOLT, MACH, GALV, 3/8" X 4 1/2", 1 ROUND & 1 LOCK WASHER (O)		2	STD 392
4	BOLT, MACH, GALV, 1/2" X 5", 1 ROUND & 1 DBL COIL SPR WASH (O)		2	STD 392
5				
6	BOLT, MACH, GALV, 5/8" X (LENGTH AS REQ'D), 2 SQUARE & 1 DBL COIL SPRING WASHER		1	STD 392
7	STUD, INSULATOR		1	701760
8	SENSOR, CURRENT, COMPLETE WITH WHITE, GREEN AND BLACK INSULATED CONTROL WIRE		1	635820
9	TERMINAL ADAPTOR, PVC, 3/4"		1	102754
10	SLIP ELBOW, 90 PVC, 3/4"		2	322174
11	ELBOW, STANDARD RADIUS, PVC, 3/4"		2	322166
12	CONDUIT, PVC, TYPE 2, SCHED 40, 3/4"		15'	251328
13	STRAPS, PIPE, GALV, 3/4" & 2 – 1 3/4" ROOFING NAILS, GALV.		AS REQ'D	697888
			–	492192
14	COUPLING, PVC, 3/4"		2	280416
15				
16	BRACKET, DOUBLE CUTOUT/ARRESTER, FOR CROSSARM MOUNTING.		3	165442
17	CUTOUT, 12KV, 100A, WITH LOADBUSTER HOOKS		3	STD 1212
18	ARRESTER, LIGHTNING, 12KV		3	113248
19	WIRE, #8 BARE SOLID ANNEALED COPPER (B)		15' OR 1 LB	812928
20	STAPLES, WIRE, GALV, 1 1/4" (B)		AS REQ'D	678528
21	BOLT, MACH, GALV, 5/8" X (LENGTH AS REQ'D) 2 SQUARE AND 1 DOUBLE COIL SPRING WASHER		1	STD 392
22	PIN, TRANSFORMER ADAPTOR, 1" LEAD THREAD		1	529248
23	INSULATOR, LINE, 12KV NEUTRAL		1	429216
24	CONNECTOR, WIRE COMPRESSION, CU OR AL (SIZE AS REQ'D)		AS REQ'D	783–786
25	WIRE, #4 BARE STRANDED COPPER		130' OR 17 LBS	813760
26	MOULDING, OAK HARDWOOD, 1" X 8'		2	487200
27				
28	BOLT, MACH, GALV, 3/4" X (LENGTH AS REQ'D), 1 SQ CURV RIBBED & 1 DBL COIL SPRING WASHER		2	STD 392
29	COVER, BOLT PLASTIC & 6 – 1 3/4" NAILS, GALV		2	285696
			–	492192
30	CAPACITOR RACK – COMPLETE WITH CAPACITORS	600 KVAR (3 @ 200 KVAR)	1	564761
		900 KVAR (6 @ 150 KVAR) (J)	1	564706
		1200 KVAR (3 @ 400 KVAR) (M)	1	564770
		1350 KVAR (9 @ 150 KVAR) (J)	1	564754
31	SCREW, LAG, GALV, 4"		2	621568
32	UNIT GROUND, COMPLETE		1	603136
33	TAG, STATION NUMBER		1	200 SECT.

FOR FIELD MAINTENANCE ONLY

TABLE OF CONTENTS

DATE 12–1–98 APPD PEA / CMK	SDG&E ELECTRIC STANDARDS SWITCHED CAPACITORS – CURRENT SENSOR 12 & 12.47KV	1399.209 SUPERSEDES 1326.2 (12–1–98)

OVERHEAD MACRO UNITS 12KV SWITCHED CAPACITOR W/CURRENT SENSOR		
KVAR	CONTROL	MU I.D.
600	VAR/VOLT OVERRIDE	C6CV
600	VOLT W/TIME BIAS	C6CTB
900	VAR/VOLT OVERRIDE	C9CV
900	VOLT W/TIME BIAS	C9CTB
1200	VAR/VOLT OVERRIDE	C12CV
1200	VOLT W/TIME BIAS	C12CTB
1350	VAR/VOLT OVERRIDE	C13CV
1350	VOLT W/TIME BIAS	C13CTB

INSTALLATION:

A. CAUTION: OPEN OIL SWITCHES BEFORE OPENING CUTOUTS.

Ⓑ BOND CUTOUTS IN HEAVY CONTAMINATION DISTRICTS AS SHOWN ON STANDARD 287. IN AREAS WHERE BONDING IS REQUIRED, TO AVOID BONDWIRE AND LIGHTNING ARRESTER GROUNDWIRE ON THE SAME CROSSARM, USE TWO CROSSARMS; ONE FOR CUTOUTS AND ONE FOR LIGHTNING ARRESTER.

Ⓒ THE CONTROL IS POLARITY SENSITIVE. WIRE AS SHOWN, ALWAYS FACE NIPPLE OF CURRENT SENSOR TOWARD LOAD, AND INSTALL CUTOUTS ON THE SOURCE SIDE.

Ⓓ THE H1 TERMINAL OF THE POTENTIAL TRANSFORMER MUST BE CONNECTED TO THE SAME PHASE AS THE CURRENT SENSOR.

Ⓕ CONNECT CAPACITOR RACK GROUND LEAD, CURRENT SENSOR BASE AND ALL INSULATOR PINS GROUND LEAD TO LIGHTNING ARRESTER GROUND. A SECOND GROUND WIRE IS REQUIRED FOR THE CONTROL PANEL TO BE CONNECTED ON THE SAME GROUND ROD. COIL LOOSE END OF CONTROL PANEL GROUND WIRE AND STAPLE TO POLE (TO BE WORKED BY SERVICE CREW).

G. DO NOT TIE CAPACITOR BANK NEUTRAL TO 12KV CIRCUIT NEUTRAL. IT IS TO REMAIN FLOATING.

H. RACKS THAT CONTAIN POTENTIAL TRANSFORMERS WITH METAL TANKS ARE TO BE INSULATED FROM RACK BEFORE REINSTALLATION.

I. CAPACITORS MUST BE INSTALLED ON POLES ACCESSIBLE BY BUCKET TRUCKS.

Ⓙ NO LONGER PURCHASED.

FOR FIELD MAINTENANCE ONLY

Ⓚ PVC CONDUIT 3/4" SCHEDULE 40 MAY BE USED IN PLACE OF HARDWOOD MOULDING.

Ⓛ REMOVE STEEL NIPPLE FROM CURRENT SENSOR BASE.

Ⓜ ON VAR CONTROL BANKS, REPLACE 12,000 – 120 POTENTIAL TRANSFORMER (STOCK #762708) WITH 7200–120 POTENTIAL TRANSFORMER (STOCK #762734).

Ⓝ DRILL THROUGH CROSSARM 1" UP FROM LOWER EDGE SO THAT LOWER CROSSARM MOUNTING BRACKET BOLT DOES NOT INTERFERE WITH PVC CONDUIT.

Ⓞ WHEN LA/CO CROSSARM AND CAPACITORS CANNOT BE INSTALLED ON THE SAME SIDE OF THE POLE AS AN EXISTING LINEARM, DELETE ITEMS 2, 3, & 4. INSTEAD, FIELD DRILL LA/CO CROSSARM FOR 2 – 36" FLAT BRACES. SECURE BRACES TO POLE WITH A LAG SCREW. (SEE STD. 380.1, ITEM 1 FOR DRILLING MEASUREMENTS).

REFERENCE:

Ⓟ SHOWN FOR ILLUSTRATIVE PURPOSES ONLY. SEE STANDARD 1330 FOR CONTROL INSTALLATION AND MATERIAL.

Ⓠ PVC CONDUIT IS NOT PERMITTED IN THE CLIMBING SPACE, G.O. 95 RULE 22.2(C).

Ⓡ SECTIONALIZING CUTOUT INSTALLATION MAY VARY WITH POSITION OF NEUTRAL CONDUCTOR – SEE STANDARD 1240.

TABLE OF CONTENTS

1399.210 SUPERSEDES 1326.3 (12–1–98)	SDG&E ELECTRIC STANDARDS SWITCHED CAPACITORS – CURRENT SENSOR 12 & 12.47KV	DATE 12–1–98 APPD PLA/BSG

OH1330 FIELD MAINTENANCE ONLY

ALL VERSIONS LISTED IN FMO ARE SUPERSEDED BY THEIR CURRENT VERSION FOUND INSIDE THE OVERHEAD CONSTRUCTION STANDARD MANUAL.

REVISION HISTORY:

7/13/2016: MOVED TO FMO

01/24/2022: MISSING VERSION ADDED

TABLE OF CONTENTS

© 1998 - 2022 San Diego Gas & Electric Company. All rights reserved. Removal of this copyright notice without permission is not permitted under law.

REV	CHANGE	DR	BY	DSN	APV	DATE	REV	CHANGE	DR	BY	DSN	APV	DATE
C							F						
B	EDITORIAL CHANGES	EDM	JA	JES	FRC	01/24/2022	E						
A	ORIGINAL ISSUE	-	JS	IL	MDJ	7/13/2016	D						

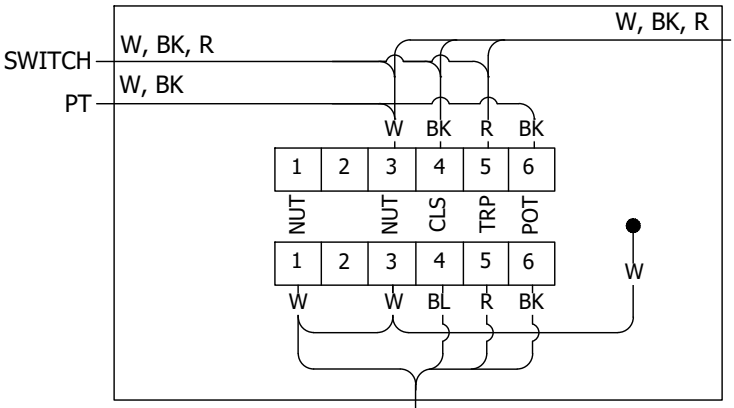

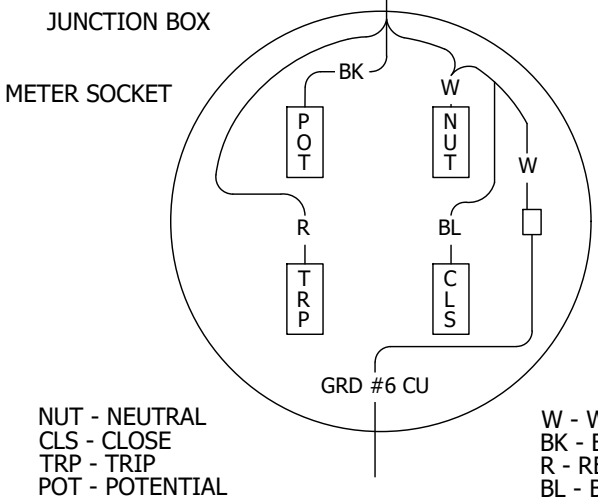

NUT - NEUTRAL
CLS - CLOSE
TRP - TRIP
POT - POTENTIAL

W - WHITE
BK - BLACK
R - RED
BL - BLUE

CAPACITOR CONTROL WIRING
VOLTAGE W/TIME BIAS

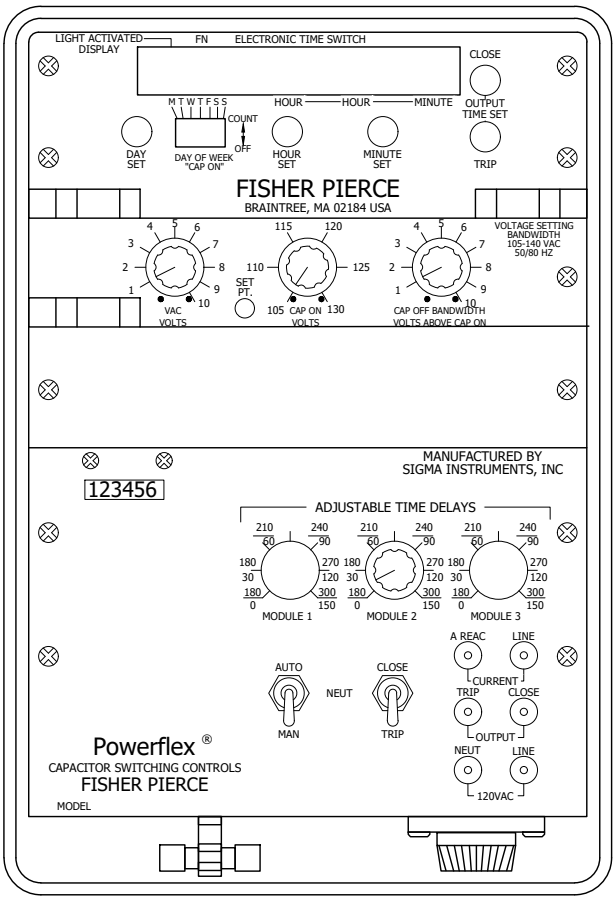

CONTROL PANEL
FISHER PIERCE (MODEL 2416)

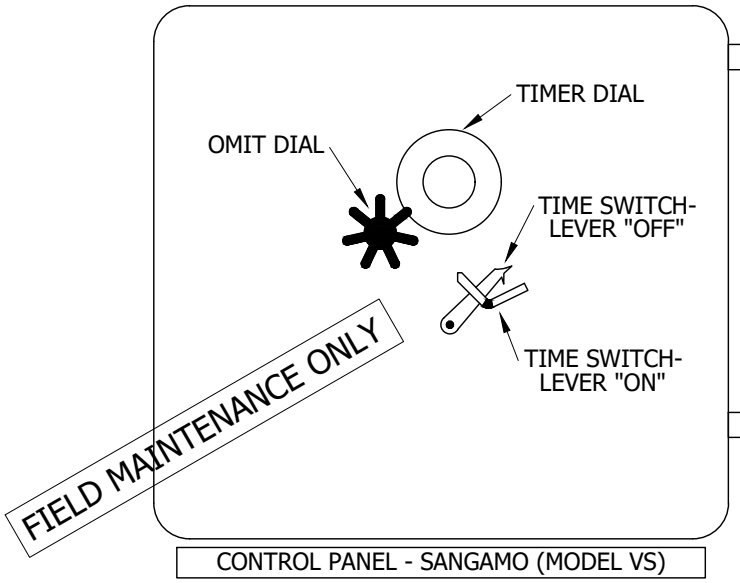

CONTROL PANEL - SANGAMO (MODEL VS)

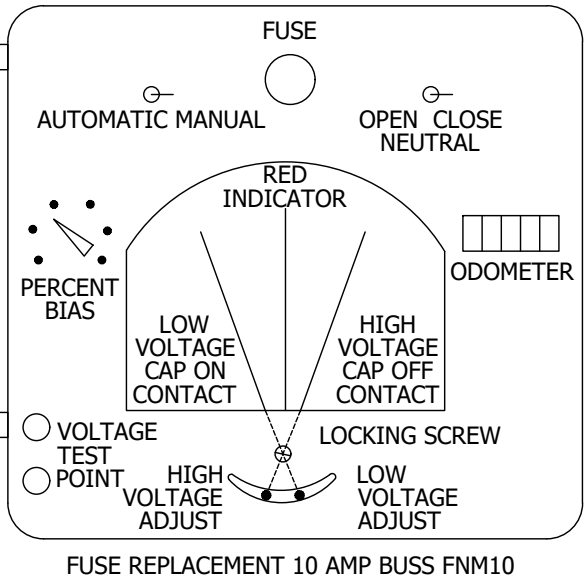

FUSE REPLACEMENT 10 AMP BUSS FNM10

© 1998 - 2016 San Diego Gas & Electric Company. All rights reserved. Removal of this copyright notice without permission is not permitted under law.

REV	CHANGE	DR	BY	DSN	APV	DATE	REV	CHANGE	DR	BY	DSN	APV	DATE
C	REVISION	-	-	-	PEA/VCR	01/28/2002	F						
B	REVISION	-	-	-	PEA/VCR	01/01/2000	E	MOVED TO FMO	-	JS	IL	MDJ	07/13/2016
A	REVISION	-	-	-	PEA/RDJ	01/01/2000	D	REVISION	-	-	-	PEA/BV	04/03/2009

X Indicates Latest Revision | Completely Revised | New Page | Information Removed

SDG&E ELECTRIC OVERHEAD FIELD MAINTENANCE ONLY STANDARDS

CAPACITOR CONTROL MATERIAL AND INSTALLATION
VOLTAGE WITH TIME BIAS (TYPE 'TB')

TABLE OF CONTENTS

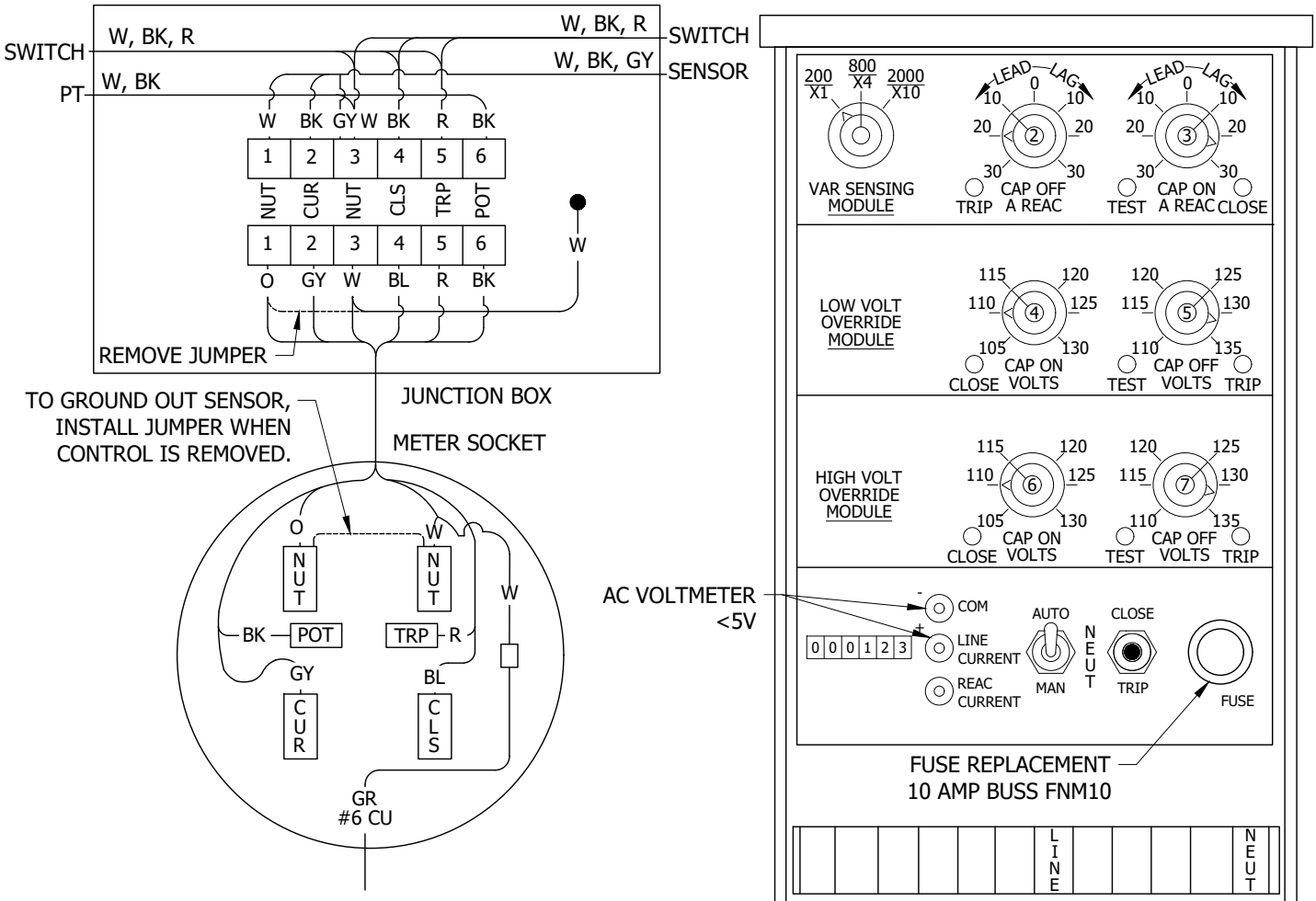

TABLE OF CONTENTS

CONTROL WIRE LEGEND

NUT - NEUTRAL
CUR - CURRENT SENSOR POTENTIAL
CLS - CLOSE
TRP - TRIP
POT - POTENTIAL

W - WHITE
BK - BLACK
GY - GREEN
R - RED
O - ORANGE
BL - BLUE

CAPACITOR CONTROL WIRING
VAR W/VOLTAGE OVERRIDE

CONTROL PANEL
FISHER PIERCE (MODEL 4604)

FIELD MAINTENANCE ONLY

© 1998 - 2016 San Diego Gas & Electric Company. All rights reserved. Removal of this copyright notice without permission is not permitted under law.

REV	CHANGE	DR	BY	DSN	APV	DATE	REV	CHANGE	DR	BY	DSN	APV	DATE
C	REVISION	-	-	-	PEA/VCR	01/28/2002	F						
B	REVISION	-	-	-	PEA/VCR	01/01/2000	E	MOVED TO FMO	-	JS	IL	MDJ	07/13/2016
A	REVISION	-	-	-	PEA/RDJ	01/01/2000	D	REVISION	-	-	-	PEA/BV	04/03/2009

X Indicates Latest Revision | Completely Revised | New Page | Information Removed

SDG&E ELECTRIC OVERHEAD FIELD MAINTENANCE ONLY STANDARDS

CAPACITOR CONTROL MATERIAL AND INSTALLATION
TYPE 'VAR'

SCOPE: THIS STANDARD SHOWS TYPES OF CONTROLS, MATERIAL AND INSTALLATION OF A CAPACITOR CONTROL UNIT. THIS IS TO BE USED ON ALL SWITCHED CAPACITOR STATIONS.

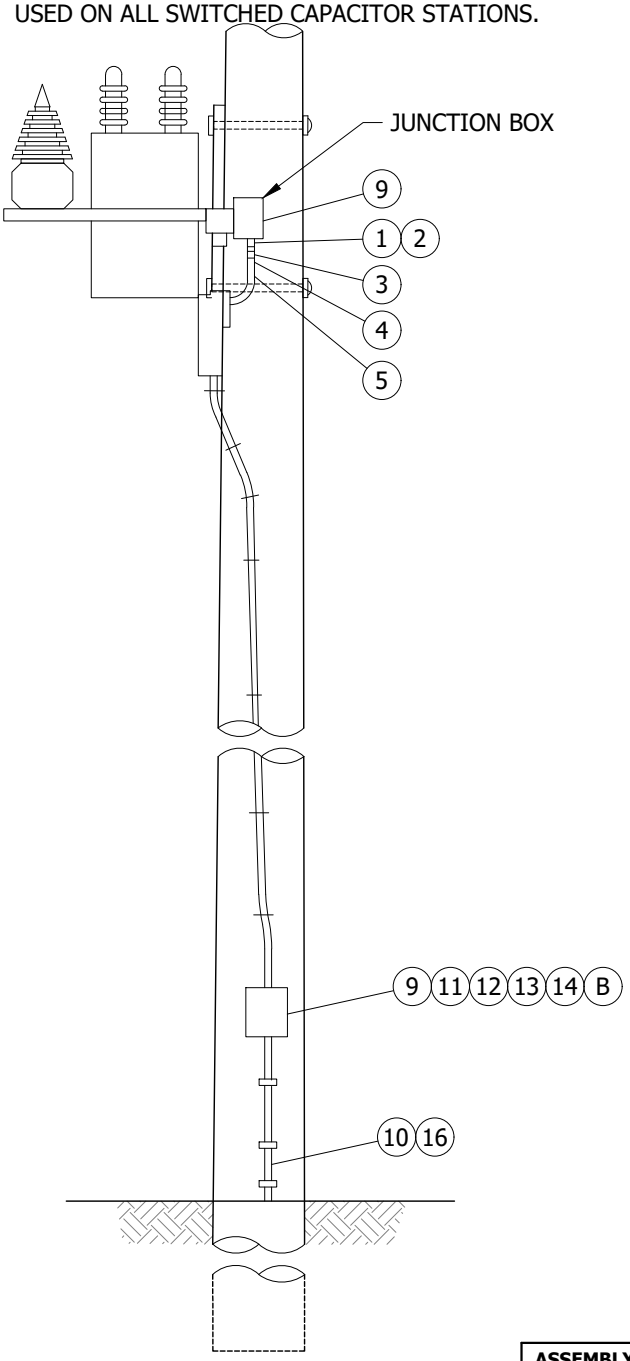

SIDE VIEW

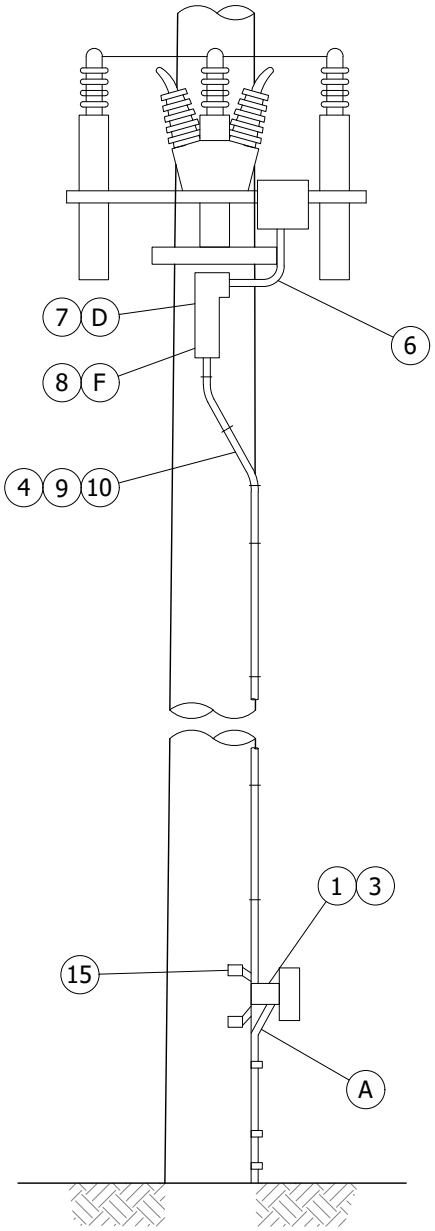

FRONT VIEW

ASSEMBLY UNITS	DESCRIPTION
C/CTIM	CONTROL-DIGITAL, PROGRAMMABLE

FIELD MAINTENANCE ONLY

NOTES:

- SEE PAGE 1330.4 FOR BILL OF MATERIAL.
- MATERIALS ORDERED ARE BASED ON 50' POLE.

TABLE OF CONTENTS

© 1998 - 2016 San Diego Gas & Electric Company. All rights reserved. Removal of this copyright notice without permission is not permitted under law.

REV	CHANGE	DR	BY	DSN	APV	DATE	REV	CHANGE	DR	BY	DSN	APV	DATE
C	REVISION	-	-	-	PEA/VCR	01/28/2002	F						
B	REVISION	-	-	-	PEA/VCR	01/01/2000	E	MOVED TO FMO	-	JS	IL	MDJ	07/13/2016
A	REVISION	-	-	-	PEA/RDJ	01/01/2000	D	REVISION	-	-	-	PEA/BV	04/03/2009

TABLE OF CONTENTS

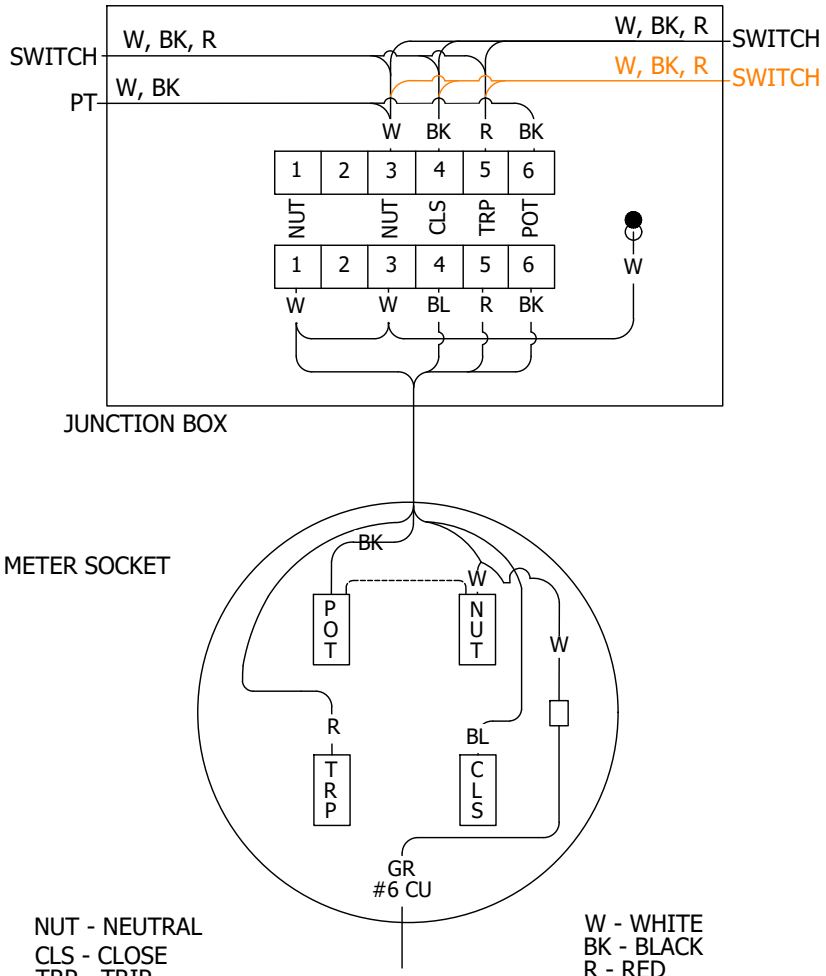

CAPACITOR CONTROL WIRING

CONTROL PANEL
(FACING METER SOCKET)

FIELD MAINTENANCE ONLY

© 1998 - 2016 San Diego Gas & Electric Company. All rights reserved. Removal of this copyright notice without permission is not permitted under law.

REV	CHANGE	DR	BY	DSN	APV	DATE	REV	CHANGE	DR	BY	DSN	APV	DATE
C	REVISION	-	-	-	PEA/VCR	01/28/2002	F						
B	REVISION	-	-	-	PEA/VCR	01/01/2000	E	MOVED TO FMO	-	JS	IL	MDJ	07/13/2016
A	REVISION	-	-	-	PEA/RDJ	01/01/2000	D	REVISION	-	-	-	PEA/BV	04/03/2009

X Indicates Latest Revision | Completely Revised | New Page | Information Removed

SDG&E ELECTRIC OVERHEAD FIELD MAINTENANCE ONLY STANDARDS

CAPACITOR CONTROL MATERIAL AND INSTALLATION
VOLTAGE WITH TIME BIAS (TYPE 'TB')

BILL OF MATERIALS: (FOR CONTROL PORTION OF SWITCHED CAPACITOR JOBS)

ITEM	DESCRIPTION	QUANTITY	STOCK NUMBER
1	TERMINAL ADAPTER, PVC 1"	2	102756
2	LOCKNUT, GALV. 1"	1	468896
3	REDUCER, PVC, 1" X 3/4"	2	573410
4	CONDUIT, PVC, 3/4" SCHEDULE 40	25'	251328
5	COUPLING, PVC 3/4"	1	280416
6	ELBOW, 90°, PVC, 3/4"	1	322166
7	ACCESS FITTING BODY TYPE "T" PVC 3/4" (D)	1	147792
8	ACCESS FITTING BODY TYPE "LB" PVC 3/4" (F)	1	146384
9	WIRE TW #12 WHITE	30'	808704
	WIRE TW #12 BLACK	30'	808096
	WIRE TW #12 BLUE	30'	808416
	WIRE TW #12 RED	30'	808576
10	STRAPS, PIPE, GALV, 3/4", 6D NAILS, GALV	AS REQ'D	697888/490656
11	METER SOCKET	1	161898
12	RING, STAINLESS STEEL, METER SEALING	1	599034
13A	DIGITAL, PROGRAMMABLE CONTROL (C)	1	706176
13B	FISHER PIERCE 2416 CONTROL REPLACEMENT BATTERY KIT (G)(H)	--	126800
14	PADLOCK, MASTER 7	1	514912
15	SCREW, LAG, 1/4" X 2"	4	621888
16	CONDUIT, PVC, 3/4" SCHEDULE 80	9	251520

TABLE OF CONTENTS

INSTALLATION:

(A) ATTACH GROUND WIRE (ALREADY PROVIDED) TO GROUND TERMINAL OF METER SOCKET.

(B) INSTALL CONTROL 90° FROM FRONT SIDE OF CAPACITOR RACK.

(C) CONTROLS TO BE CONFIGURED/PROGRAMED PER THE DISTRIBUTION CAPACITOR INSTRUCTION, SETTING AND SURVEY INFORMATION MANUALS.

(D) FOR USE WHEN CURRENT SENSOR IS REQUIRED.

(E) NEW INSTALLATIONS MUST BE AUTHORIZED BY PLANNING ENGINEER.

(F) FOR USE WITHOUT CURRENT SENSOR.

(G) REPLACEMENT KIT INCLUDES: ONE 6 VOLT RECHARGEABLE LEAD ACID BATTERY, 2-30 INCH WIRES WITH CONNECTORS ON BOTH ENDS, DOUBLE SIDED ADHESIVE TAPE.

(H) IF BATTERY IS INSTALLED ON CIRCUIT BOARD BEHIND CONTROL PANEL, INSTALL NEW BATTERY ON RIGHT HAND SIDE OF CONTROL DOOR. DO NOT ATTEMPT TO REMOVE OLD BATTERY FROM CIRCUIT BOARD BECAUSE BOARD MAY BE DAMAGED.

REFERENCE:

I. SEE STANDARD 1325 FOR A TWO OIL SWITCH INSTALLATION WITH CONTROL UNIT.

J. SEE FMO STANDARD 1399.208 FOR A SWITCH CAPACITOR USING CURRENT SENSOR AND CONTROL UNIT.

K. SEE STANDARD PRACTICE 302 FOR PROPER OPERATION OF CAPACITOR STATION AND CONTROL TESTING.

L. PVC CONDUIT IS NOT PERMITTED IN THE CLIMBING SPACE PER G.O. 95 RULE 22.2 (C).

FIELD MAINTENANCE ONLY

© 1998 - 2016 San Diego Gas & Electric Company. All rights reserved. Removal of this copyright notice without permission is not permitted under law.

REV	CHANGE	DR	BY	DSN	APV	DATE	REV	CHANGE	DR	BY	DSN	APV	DATE
C	REVISION	-	-	-	PEA/VCR	01/28/2002	F						
B	REVISION	-	-	-	PEA/VCR	01/01/2000	E	MOVED TO FMO	-	JS	IL	MDJ	07/13/2016
A	REVISION	-	-	-	PEA/RDJ	01/01/2000	D	REVISION	-	-	-	PEA/BV	04/03/2009

SCOPE: THIS STANDARD SHOWS TYPES OF CONTROLS, MATERIAL AND INSTALLATION OF A CAPACITOR CONTROL UNIT. THIS IS TO BE USED ON ALL SWITCHED CAPACITOR STATIONS.

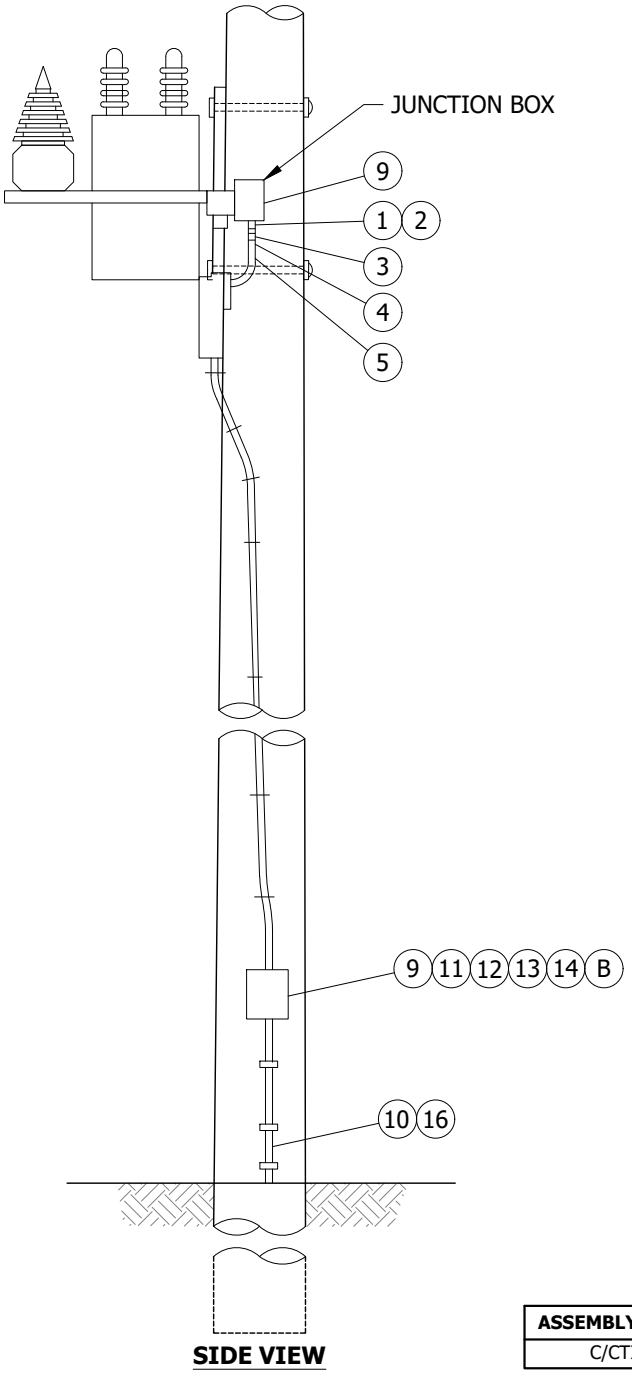

SIDE VIEW

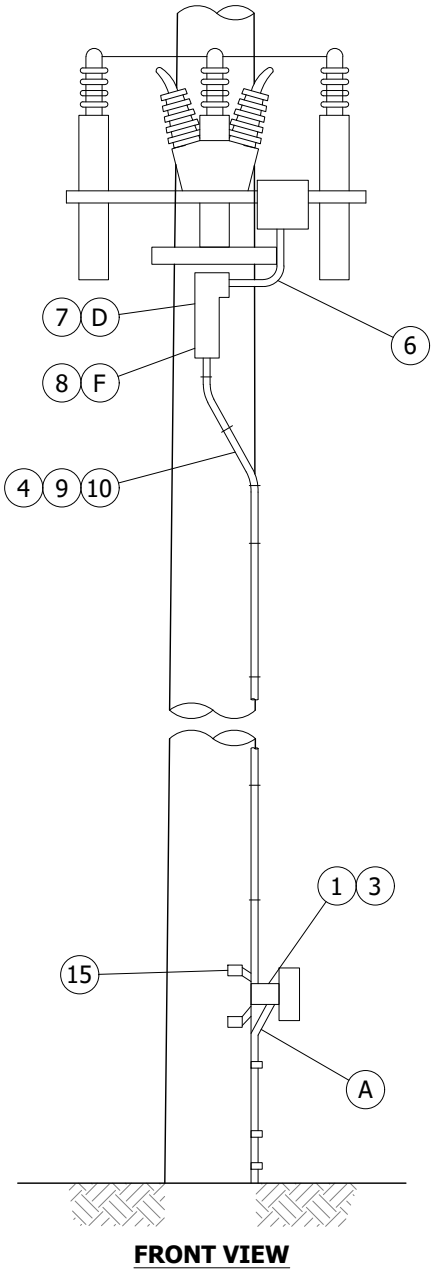

FRONT VIEW

ASSEMBLY UNITS	DESCRIPTION
C/CTIM	CONTROL-DIGITAL, PROGRAMMABLE

FIELD MAINTENANCE ONLY

NOTES:

- SEE PAGE 1330.4 FOR BILL OF MATERIAL.
- MATERIALS ORDERED ARE BASED ON 50' POLE.

TABLE OF CONTENTS

© 1998 - 2022 San Diego Gas & Electric Company. All rights reserved. Removal of this copyright notice without permission is not permitted under law.

REV	CHANGE	DR	BY	DSN	APV	DATE	REV	CHANGE	DR	BY	DSN	APV	DATE
C	REVISION	-	-	-	PEA/VCR	01/28/2002	F						
B	REVISION	-	-	-	PEA/VCR	01/01/2000	E	MISSING VERSION ADDED TO FMO	EDM	JA	JES	FRC	01/24/2022
A	REVISION	-	-	-	PEA/CAK	01/01/2000	D	REVISION	-	-	-	PEA/JC	12/05/2005

X Indicates Latest Revision | Completely Revised | New Page | Information Removed

SDG&E ELECTRIC OVERHEAD FIELD MAINTENANCE ONLY STANDARDS

CAPACITOR CONTROL MATERIAL AND INSTALLATION

TABLE OF CONTENTS

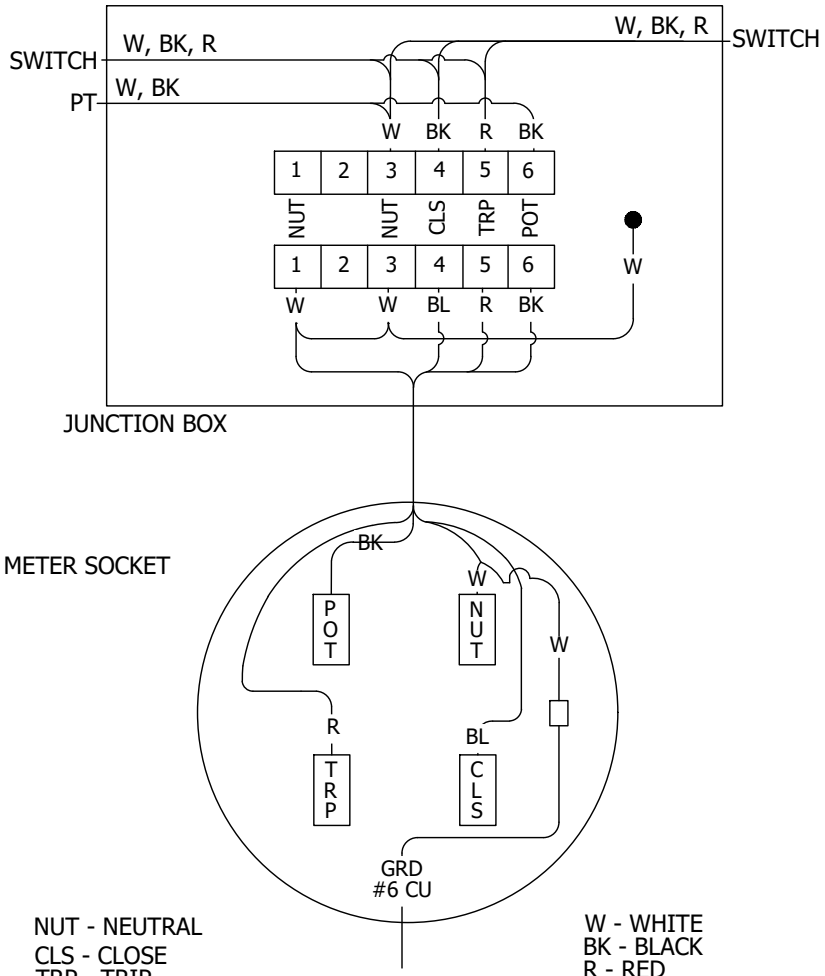

CAPACITOR CONTROL WIRING

CONTROL PANEL
(FACING METER SOCKET)

FIELD MAINTENANCE ONLY

© 1998 - 2022 San Diego Gas & Electric Company. All rights reserved. Removal of this copyright notice without permission is not permitted under law.

REV	CHANGE	DR	BY	DSN	APV	DATE	REV	CHANGE	DR	BY	DSN	APV	DATE
C	REVISION	-	-	-	PEA/VCR	01/28/2002	F						
B	REVISION	-	-	-	PEA/VCR	01/01/2000	E	MISSING VERSION ADDED TO FMO	EDM	JA	JES	FRC	01/24/2022
A	REVISION	-	-	-	PEA/CAK	01/01/2000	D	REVISION	-	-	-	PEA/JC	12/05/2005

X Indicates Latest Revision | Completely Revised | New Page | Information Removed

SDG&E ELECTRIC OVERHEAD FIELD MAINTENANCE ONLY STANDARDS

CAPACITOR CONTROL MATERIAL AND INSTALLATION
VOLTAGE WITH TIME BIAS (TYPE 'TB')

FMO
OH1330.2

BILL OF MATERIALS: (FOR CONTROL PORTION OF SWITCHED CAPACITOR JOBS)

ITEM	DESCRIPTION	QUANTITY	STOCK NUMBER
1	TERMINAL ADAPTER, PVC 1"	2	102756
2	LOCKNUT, GALV. 1"	1	468896
3	REDUCER, PVC, 1" X 3/4"	2	573410
4	CONDUIT, PVC, 3/4" SCHEDULE 40	25'	251328
5	COUPLING, PVC 3/4"	1	280416
6	ELBOW, 90°, PVC, 3/4"	1	322166
7	ACCESS FITTING BODY TYPE "T" PVC 3/4" (D)	1	147792
8	ACCESS FITTING BODY TYPE "LB" PVC 3/4" (F)	1	146384
9	WIRE TW #12 WHITE	30'	808704
	WIRE TW #12 BLACK	30'	808096
	WIRE TW #12 BLUE	30'	808416
	WIRE TW #12 RED	30'	808576
10	STRAPS, PIPE, GALV, 3/4", 6D NAILS, GALV	AS REQ'D	697888/490656
11	METER SOCKET	1	161898
12	RING, STAINLESS STEEL, METER SEALING	1	599034
13A	DIGITAL, PROGRAMMABLE CONTROL (C)	1	706176
13B	FISHER PIERCE 2416 CONTROL REPLACEMENT BATTERY KIT (G)(H)	--	126800
14	PADLOCK, MASTER 7	1	514912
15	SCREW, LAG, 1/4" X 2"	4	621888
16	CONDUIT, PVC, 3/4" SCHEDULE 80	9	251520

TABLE OF CONTENTS

INSTALLATION:

(A) ATTACH GROUND WIRE (ALREADY PROVIDED) TO GROUND TERMINAL OF METER SOCKET.

(B) INSTALL CONTROL 90° FROM FRONT SIDE OF CAPACITOR RACK.

(C) CONTROLS TO BE CONFIGURED/PROGRAMED PER THE DISTRIBUTION CAPACITOR INSTRUCTION, SETTING AND SURVEY INFORMATION MANUALS.

(D) FOR USE WHEN CURRENT SENSOR IS REQUIRED.

(E) NEW INSTALLATIONS MUST BE AUTHORIZED BY PLANNING ENGINEER.

(F) FOR USE WITHOUT CURRENT SENSOR.

(G) REPLACEMENT KIT INCLUDES: ONE 6 VOLT RECHARGEABLE LEAD ACID BATTERY, 2-30 INCH WIRES WITH CONNECTORS ON BOTH ENDS, DOUBLE SIDED ADHESIVE TAPE.

(H) IF BATTERY IS INSTALLED ON CIRCUIT BOARD BEHIND CONTROL PANEL, INSTALL NEW BATTERY ON RIGHT HAND SIDE OF CONTROL DOOR. DO NOT ATTEMPT TO REMOVE OLD BATTERY FROM CIRCUIT BOARD BECAUSE BOARD MAY BE DAMAGED.

REFERENCE:

I. SEE STANDARD 1325 FOR A TWO OIL SWITCH INSTALLATION WITH CONTROL UNIT.

J. SEE FMO STANDARD 1399.208 FOR A SWITCH CAPACITOR USING CURRENT SENSOR AND CONTROL UNIT.

K. SEE STANDARD PRACTICE 302 FOR PROPER OPERATION OF CAPACITOR STATION AND CONTROL TESTING.

L. PVC CONDUIT IS NOT PERMITTED IN THE CLIMBING SPACE PER G.O. 95 RULE 22.2 (C).

FIELD MAINTENANCE ONLY

© 1998 - 2022 San Diego Gas & Electric Company. All rights reserved. Removal of this copyright notice without permission is not permitted under law.

REV	CHANGE	DR	BY	DSN	APV	DATE	REV	CHANGE	DR	BY	DSN	APV	DATE
C	REVISION	-	-	-	PEA/VCR	01/28/2002	F						
B	REVISION	-	-	-	PEA/VCR	01/01/2000	E	MISSING VERSION ADDED TO FMO	EDM	JA	JES	FRC	01/24/2022
A	REVISION	-	-	-	PEA/CAK	01/01/2000	D	REVISION	-	-	-	PEA/JC	12/05/2005

BILL OF MATERIALS: (FOR CONTROL PORTION OF SWITCHED CAPACITOR JOBS)

ITEM	DESCRIPTION	QUANTITY	STOCK NUMBER
1	TERMINAL ADAPTER, PVC 1"	2	102756
2	LOCKNUT, GALV. 1"	1	468896
3	REDUCER, PVC, 1" X 3/4"	2	573410
4	CONDUIT, PVC, 3/4" SCHEDULE 40	25'	251328
5	COUPLING, PVC 3/4"	1	280416
6	ELBOW, 90°, PVC, 3/4"	1	322166
7	ACCESS FITTING BODY TYPE "T" PVC 3/4" (D)	1	147792
8	ACCESS FITTING BODY TYPE "LB" PVC 3/4" (F)	1	146384
9	WIRE TW #12 WHITE	30'	808704
	WIRE TW #12 BLACK	30'	808096
	WIRE TW #12 BLUE	30'	808416
	WIRE TW #12 RED	30'	808576
10	STRAPS, PIPE, GALV, 3/4", 6D NAILS, GALV	AS REQ'D	697888/490656
11	METER SOCKET	1	161898
12	RING, STAINLESS STEEL, METER SEALING	1	599034
13A	THE CONTROL WILL BE ONE OF THE FOLLOWING: VOLTAGE W/TIME BIAS	1	706176
	VAR W/ VOLTAGE OVERRIDE	1	273400 (E)
13B	FISHER PIERCE CONTROL REPLACEMENT BATTERY KIT (G)(H)	--	126800
14	PADLOCK, MASTER 7	1	514912
15	SCREW, LAG, 1/4" X 2"	4	621888
16	CONDUIT, PVC, 3/4" SCHEDULE 80	9	251520

INSTALLATION:

(A) ATTACH GROUND WIRE (ALREADY PROVIDED) TO GROUND TERMINAL OF METER SOCKET.

B. INSTALL CONTROL 90° FROM FRONT SIDE OF CAPACITOR RACK.

C. PVC CONDUIT IS NOT PERMITTED IN THE CLIMBING SPACE PER G.O. 95 RULE 22.2 (C).

(D) FOR USE WHEN CURRENT SENSOR IS REQUIRED.

(E) NEW INSTALLATIONS MUST BE AUTHORIZED BY PLANNING ENGINEER.

(F) FOR USE WITHOUT CURRENT SENSOR.

FIELD MAINTENANCE ONLY

(G) REPLACEMENT KIT INCLUDES: ONE 6 VOLT RECHARGEABLE LEAD ACID BATTERY, 2-30 INCH WIRES WITH CONNECTORS ON BOTH ENDS, DOUBLE SIDED ADHESIVE TAPE.

(H) IF BATTERY IS INSTALLED ON CIRCUIT BOARD BEHIND CONTROL PANEL, INSTALL NEW BATTERY ON RIGHT HAND SIDE OF CONTROL DOOR. DO NOT ATTEMPT TO REMOVE OLD BATTERY FROM CIRCUIT BOARD BECAUSE BOARD MAY BE DAMAGED.

REFERENCE:

I. SEE STANDARD 1325 FOR A TWO OIL SWITCH INSTALLATION WITH CONTROL UNIT.

J. SEE STANDARD 1326 FOR A SWITCH CAPACITOR USING CURRENT SENSOR AND CONTROL UNIT.

K. SEE ELECTRIC STANDARD PRACTICE 302 FOR PROPER OPERATION OF CAPACITOR STATION AND CONTROL TESTING.

(C) 1998 - 2022 San Diego Gas & Electric Company. All rights reserved. Removal of this copyright notice without permission is not permitted under law.

REV	CHANGE	DR	BY	DSN	APV	DATE	REV	CHANGE	DR	BY	DSN	APV	DATE
C	REVISION	-	-	-	PEA/VCR	01/28/2002	F						
B	REVISION	-	-	-	PEA/VCR	01/01/2000	E	MISSING VERSION ADDED TO FMO	EDM	JA	JES	FRC	01/24/2022
A	REVISION	-	-	-	PEA/CAK	01/01/2000	D	REVISION	-	-	-	PEA/JC	12/05/2005

X Indicates Latest Revision | Completely Revised | New Page | Information Removed

TABLE OF CONTENTS

FIELD MAINTENANCE ONLY

REVISION HISTORY:

7/13/2016: All versions prior to 2016 are superseded by their current version found inside the Overhead Construction Standard Manual.

TABLE OF CONTENTS

© 1998 - 2016 San Diego Gas & Electric Company. All rights reserved. Removal of this copyright notice without permission is not permitted under law.

REV	CHANGE	BY	DSGN	APPV	DATE	REV	CHANGE	BY	DSGN	APPV	DATE
C						F					
B						E					
A	ORIGINAL ISSUE	JS	IL	MDJ	7/13/2016	D					

X Indicates Latest Revision | Completely Revised | New Page | Information Removed

SHEET 1 OF 1

SDG&E ELECTRIC OVERHEAD STANDARD

STEP-VOLTAGE REGULATOR STATION, OPEN DELTA, 12KV

FMO OH 1348

TABLE OF CONTENTS

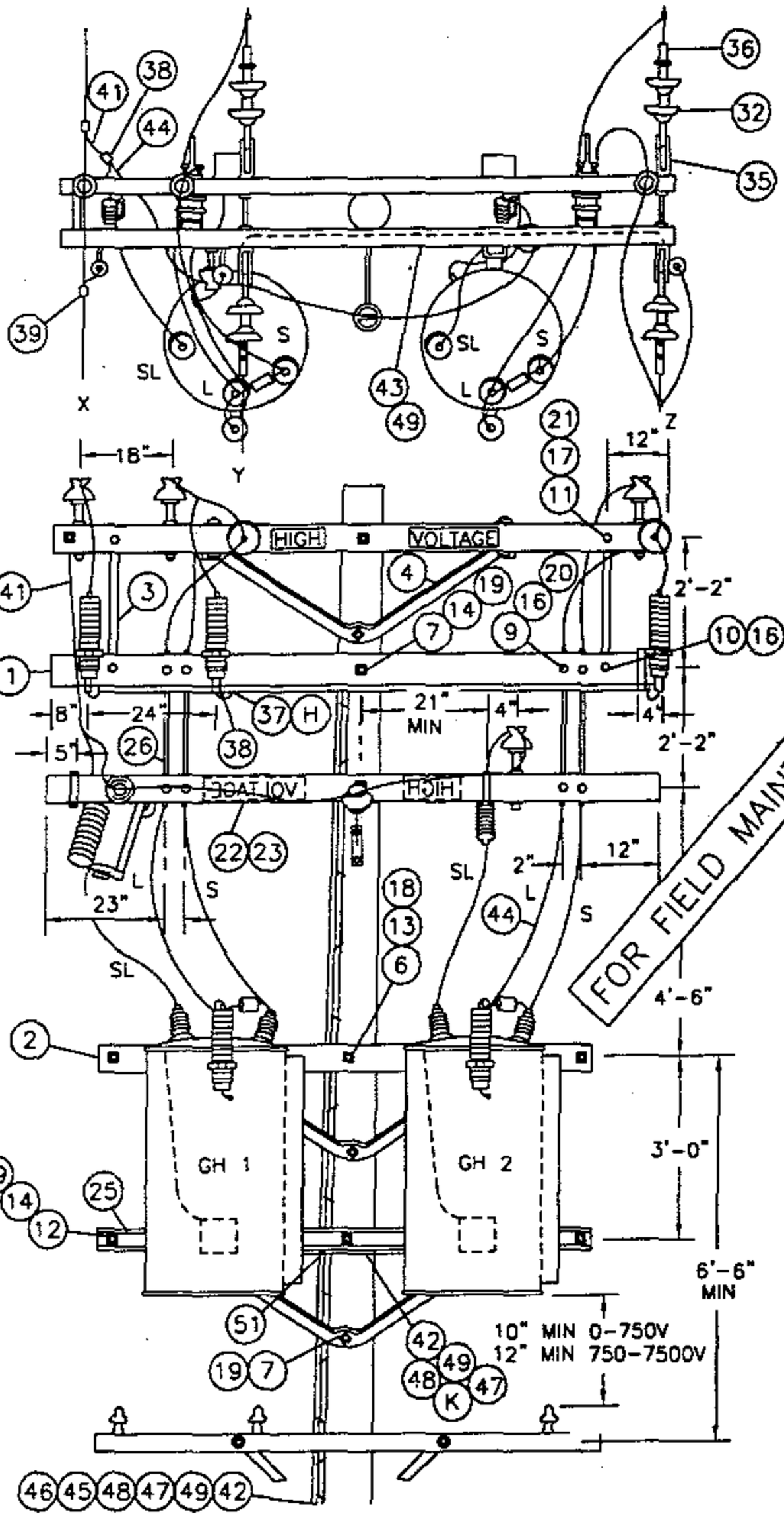

SCHEMATIC DIAGRAM OF A 12KV OPEN DELTA REGULATOR STATION

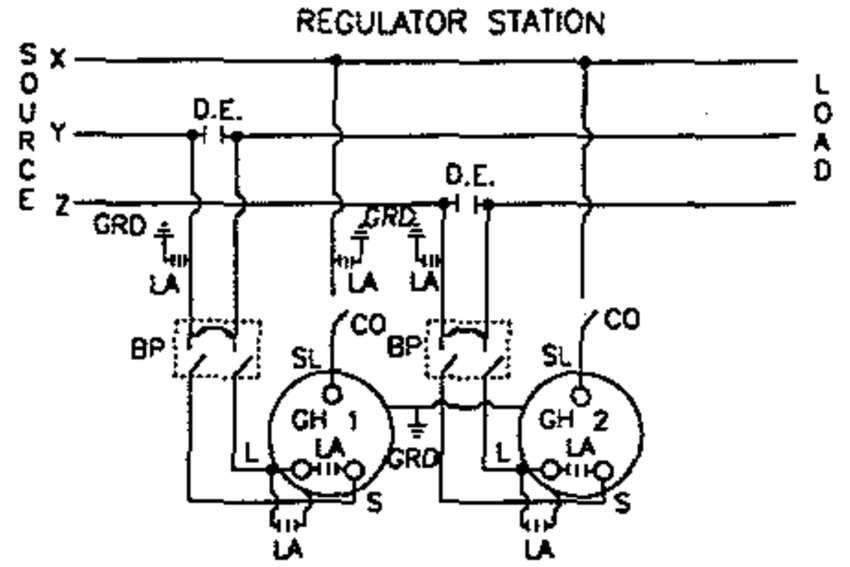

FOR FIELD MAINTENANCE ONLY

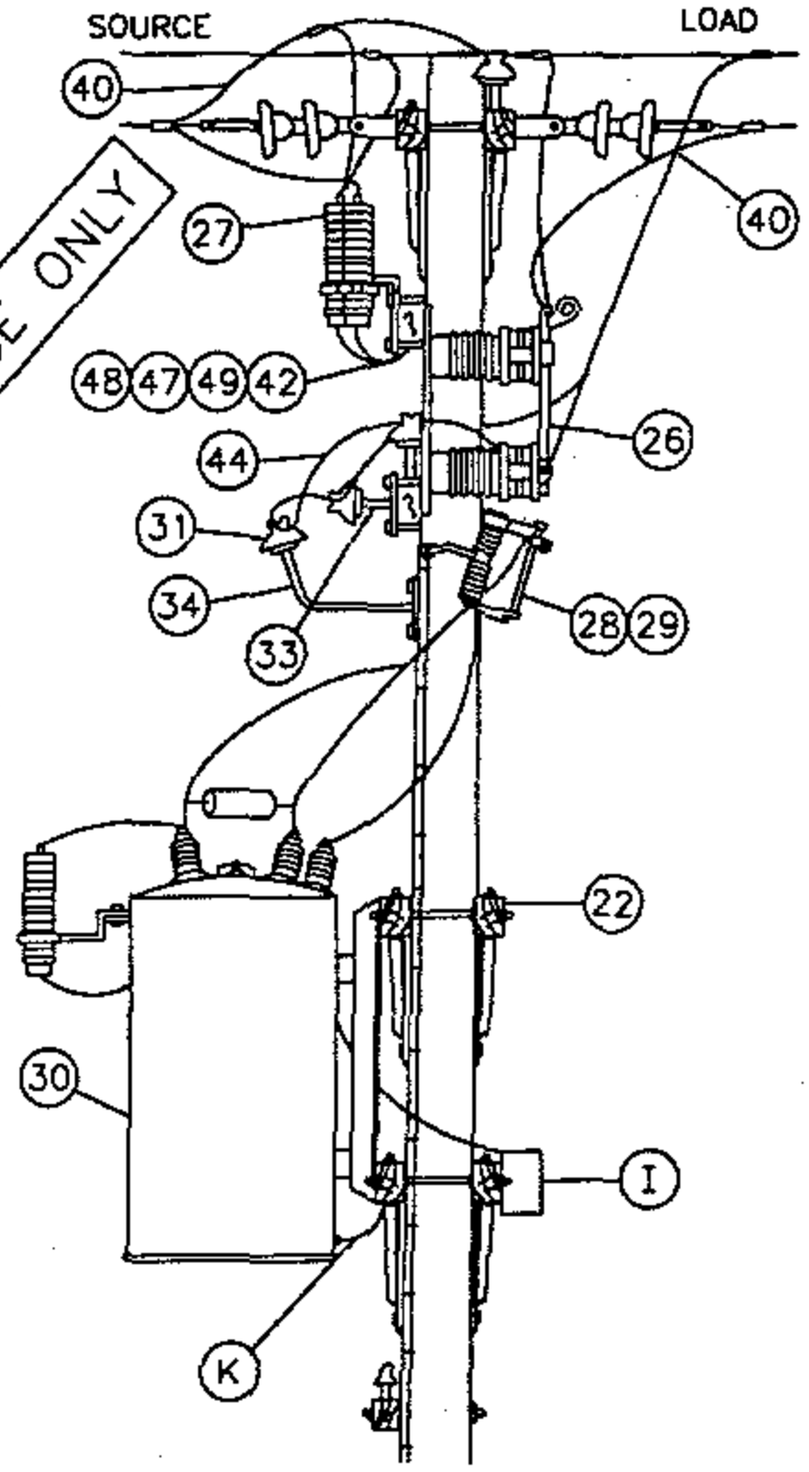

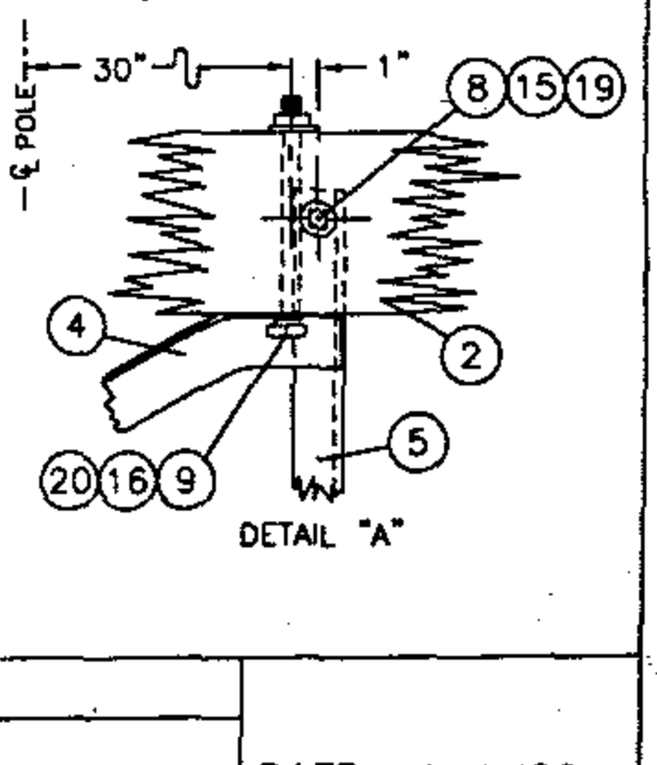

DETAIL "A"

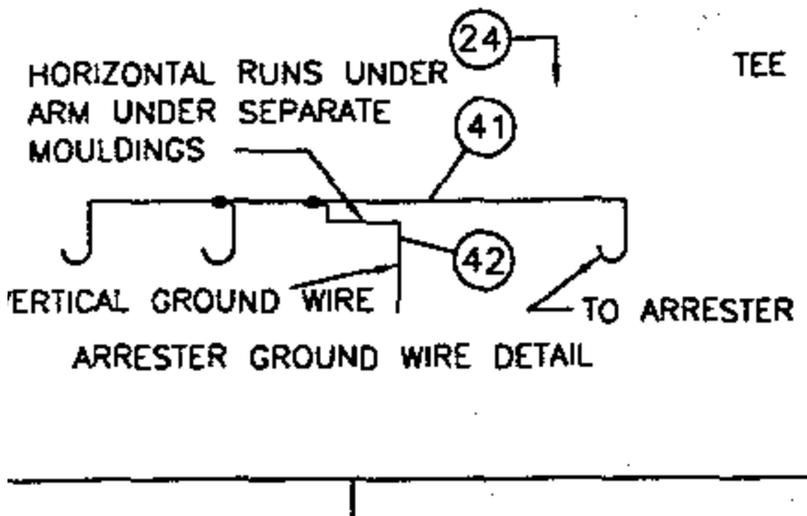

ARRESTER GROUND WIRE DETAIL

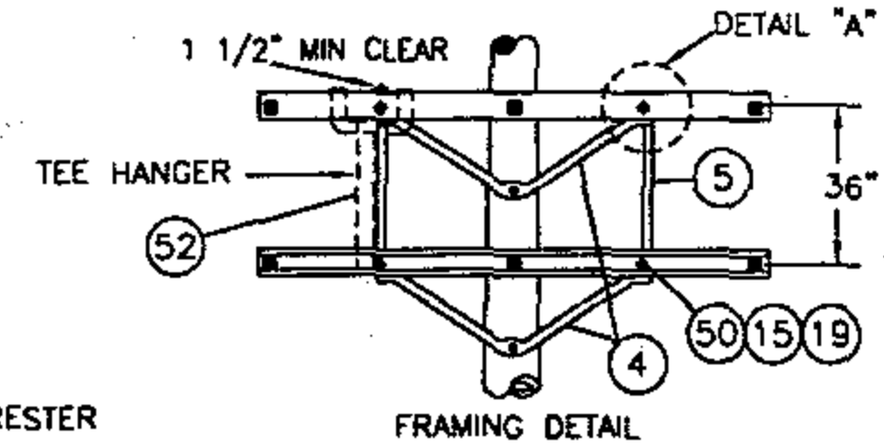

FRAMING DETAIL
FOR 2-12KV STEP VOLTAGE REGULATORS

1399.401 SUPERSEDES 348.1 1-1-96	SDG&E ELECTRIC STANDARDS STEP-VOLTAGE REGULATOR STATION, OPEN DELTA, 12KV	DATE 1-1-96 APPD PA 1/25/96

NOTES:

A. CAUTION: WHEN CONNECTING A STATION, REGULATORS MUST BE ON NEUTRAL. CLOSE CUTOUT TO SL BUSHING BEFORE CLOSING BYPASS DISCONNECT ON THAT POLE. WHEN DISCONNECTING A STATION, PUT REGULATORS ON NEUTRAL, AND OPEN BYPASS DISCONNECT BEFORE OPENING CUTOUT TO SL BUSHING. THIS AVOIDS A SERIOUS OVERLOAD CONDITION.

B. ON NEW CONSTRUCTION, USE AN EXTRA HEAVY CLASS ONE POLE WITH 10" MIN TOP DIA.

(C) USE TWO GROUND RODS FOR THE ARRESTERS AND TANKS. ALL GROUND RODS SHOULD BE SPACED A MINIMUM OF SIX FEET APART.

(D) UNIT GROUND COMPLETE, ORDER 603136.

F. BOND ALL CUTOUTS IN HEAVY CONTAMINATION DISTRICT AS IDENTIFIED ON STANDARDS PAGE 287.

G. BOND DEAD-END HARDWARE

(H) INTERCONNECT ARRESTER GROUND LEAD DISCONNECTS WITH #6 BARE COPPER AND GROUND IT WITH #2 BARE COPPER NEAR CENTER ARRESTER.

(I) CONTROLS WILL BE MOUNTED BY KEARNY MAINTENANCE.

J. INSTALL DOUBLE COIL SPRING WASHER ON END OF BOLT WHICH ATTACHES TO LARGEST METALLIC OBJECT, SUCH AS A BRACKET OR BRACE.

(K) REGULATOR TANKS SHALL BE PERMANENTLY GROUNDED.

ITEM			DESCRIPTION	QUANTITY	STOCK NO. OR CONSTR STD
PTF	LTI	OCD			
1			CROSSARM 3 3/4" X 5 3/4" X 10' - 0"	3	380
2			CROSSARM 3 3/4" X 5 3/4" X 8' - 0"	4	380
3			BRACE, FLAT CROSSARM 28"	2	164192
4			BRACE, ANGLE CROSSARM 5' - 0"	5	164128
5			BRACE, VERTICAL 36"	2	164256
6			BOLT, MACH 3/4" X __"	2	100 SECTION
7			BOLT, MACH 5/8" X __"	4	100 SECTION
8			BOLT, MACH 5/8" X 5"	2	155488
9			BOLT, MACH 1/2" X 7"	16	153120
10			BOLT, MACH 1/2" X 5"	2	153024
11			BOLT, MACH 3/8" X 5"	2	154368
12			BOLT, SPACE 5/8" X __"	7	100 SECTION
13			WASHER, 3" SQ FLAT	4	799104
14			WASHER, 2 1/4" SQ FLAT	28	799040
15			WASHER, 5/8" ROUND	4	800320
16			WASHER, 1/2" ROUND	20	800192
17			WASHER, 3/8" ROUND	2	800288
18			WASHER, 3/4" SPRING DBL COIL	2	798496
19			WASHER, 5/8" SPRING DBL COIL	21	798560
20			WASHER, 1/2" SPRING DBL COIL	20	798464
21			WASHER, 3/8" SPRING DBL COIL	2	798528
22			SIGN, HIGH VOLTAGE	2	647648
23			NAILS, ROOFING #8 GALV	16	492224
24			STEPS, POLE	19	692992
25			STRIP, COVER 1 1/8" X 3 5/8" X 8' - 0" (2X4S4S)	1	699328
	26		SWITCH BYPASS	2	706944
	27		ARRESTER, LIGHTNING (12KV)	3	113248
	28		CUTOUT, 12KV 100 AMP WITH LOAD BUSTER HOOKS	2	1200 SECTION
	29		BLADE, DISCONNECT CUTOUT	2	1200 SECTION
	30		REGULATOR, STEP VOLTAGE 1Ø, COMPLETE WITH HANGERS	2	1300 SECTION
	31		INSULATOR, PIN TYPE (CLASS AS REQ'D)	3	700 SECTION
		32	INSULATOR, SUSPENSION	8	700 SECTION
33			PIN, INSULATOR (AS REQUIRED BY ITEM 31)	2	532___
34			BRACKET, INSULATOR (AS REQUIRED BY ITEM 31)	1	100 SECTION
		35	CLEVIS, DEAD END CLOSED	4	235712
		36	CLAMPS, DEAD END	4	700 SECTION
	37		CONNECTOR, COMPRESSION (#2 TO #6)	2	257792
	38		CONNECTOR, COMPRESSION (#6 TO #6)	2	257952
	39		CONNECTORS, WIRE	6	700 SECTION
	40		WIRE, BARE STRANDED COPPER #4	(2.5#) 20'	813760
	41		WIRE, BARE STRANDED COPPER #6	(2.5#) 30'	813536
	42		WIRE, BARE STRANDED COPPER #2	(9.2#) 45'	813664
	43		WIRE, #8 ANNEALED SOLID COPPER	(.75#) 15'	812928
	44		WIRE, #4 SOLID WP COPPER	(5.0#) 36'	812480
	45		ROD, GROUND (C)(D)	2	603072
	46		CLAMP, GROUND ROD (D)	2	230016
	47		MOULDING, HARDWOOD #1 (D)	50'	487200
	48		STAPLES, GALV 3" X 1 1/16" X 1/4" (D)	35	678560
	49		STAPLES, FENCE GALV 1 1/4" (D)	30	678528
50			BOLT, MACH 5/8" X 7"	2	155552
51			CONNECTOR, COMPRESSION (#2 TO #2)	1	257760
	52		HANGER, TRANSFORMER T-2	2	402944

FOR FIELD MAINTENANCE ONLY

TABLE OF CONTENTS

DATE 1-1-96 APPD PLA/BDG	SDG&E ELECTRIC STANDARDS STEP VOLTAGE REGULATOR STATION, OPEN DELTA, 12KV	1399.402 SUPERSEDES 1348.2 1-1-96

FIELD MAINTENANCE ONLY

REVISION HISTORY:

7/13/2016: All versions prior to 2016 are superseded by their current version found inside the Overhead Construction Standard Manual.

TABLE OF CONTENTS

© 1998 - 2016 San Diego Gas & Electric Company. All rights reserved. Removal of this copyright notice without permission is not permitted under law.

REV	CHANGE	BY	DSGN	APPV	DATE	REV	CHANGE	BY	DSGN	APPV	DATE
C						F					
B						E					
A	ORIGINAL ISSUE	JS	IL	MDJ	7/13/2016	D					

X Indicates Latest Revision | Completely Revised | New Page | Information Removed

SHEET 1 OF 1

SDG&E ELECTRIC OVERHEAD STANDARD

STEP-VOLTAGE REGULATOR STATION, CLOSED DELTA, 12KV, TWO POLES

FMO OH 1349

TABLE OF CONTENTS

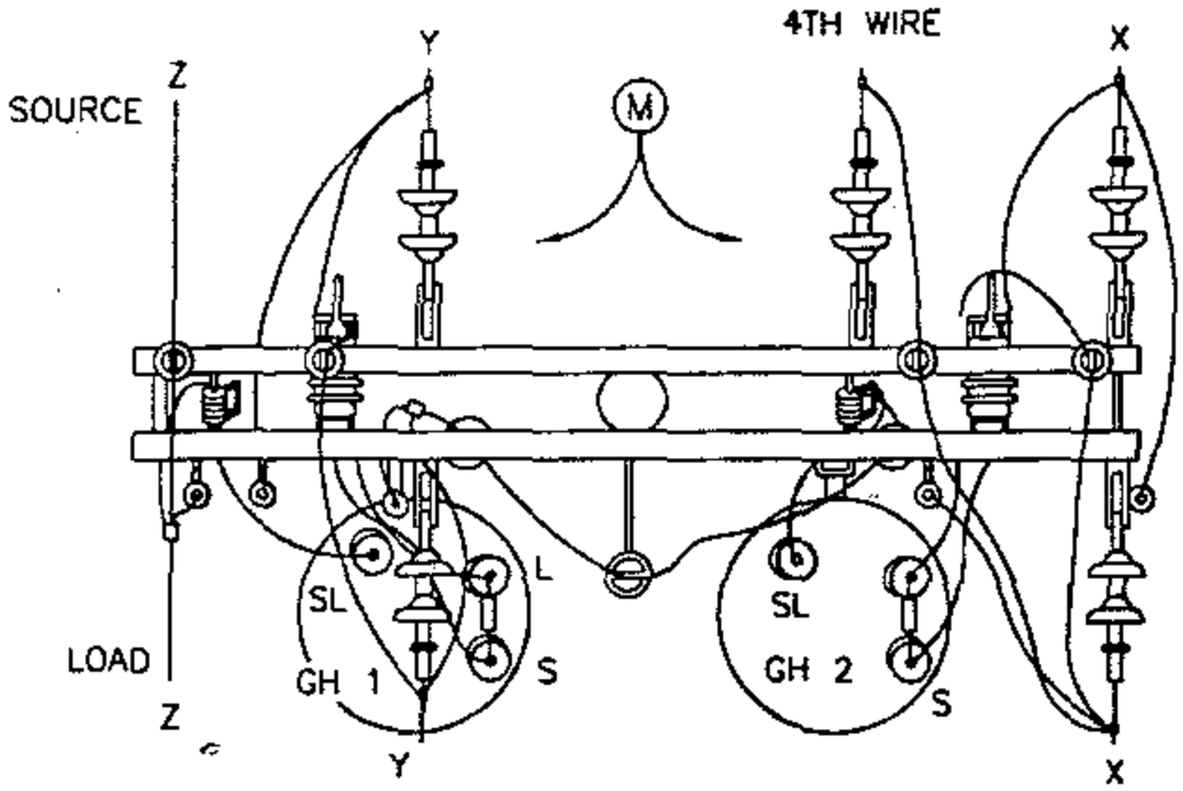

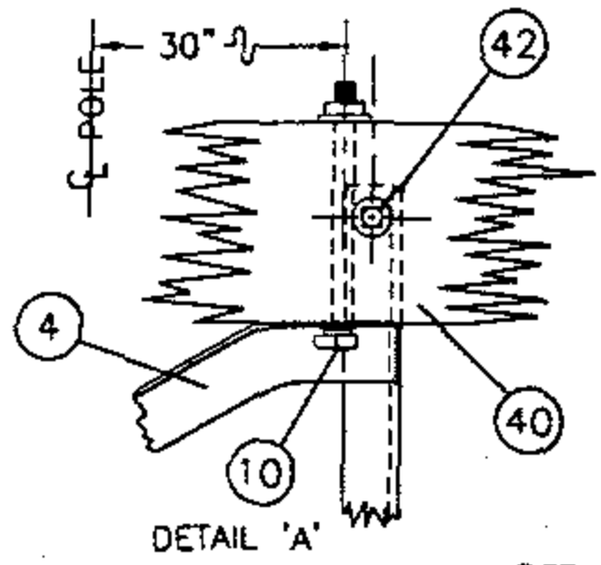

DETAIL 'A'

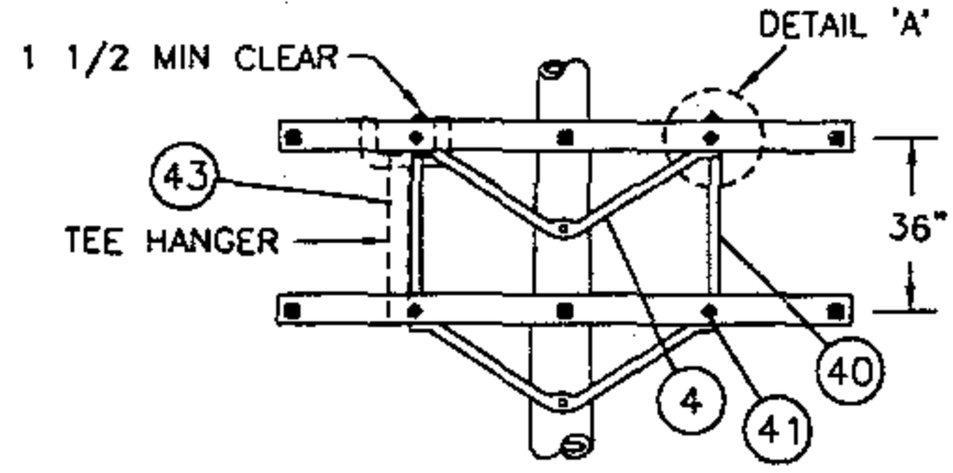

FRAMING DETAIL
FOR 2-12KV STEP-VOLTAGE REGULATORS

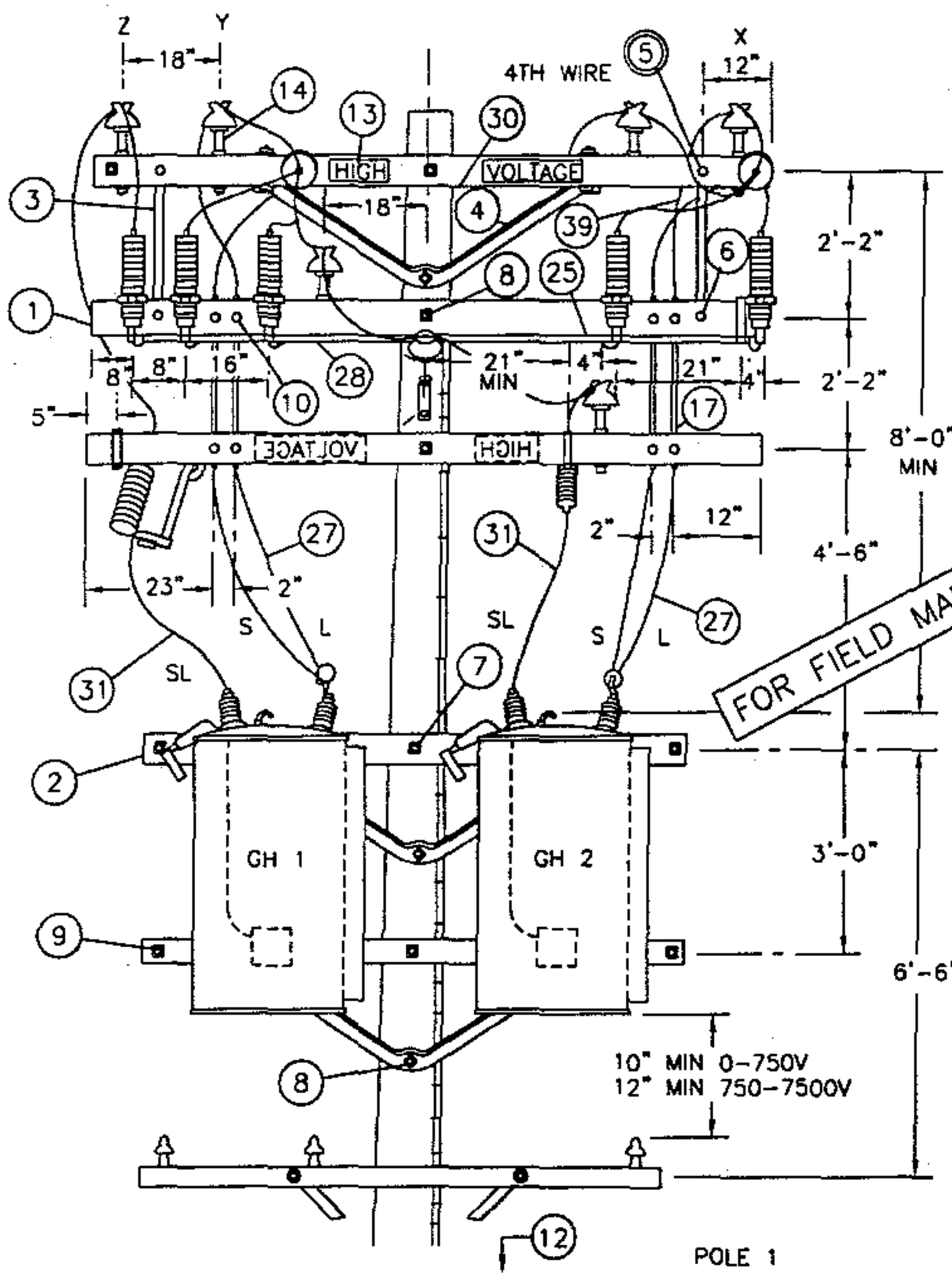

POLE 1

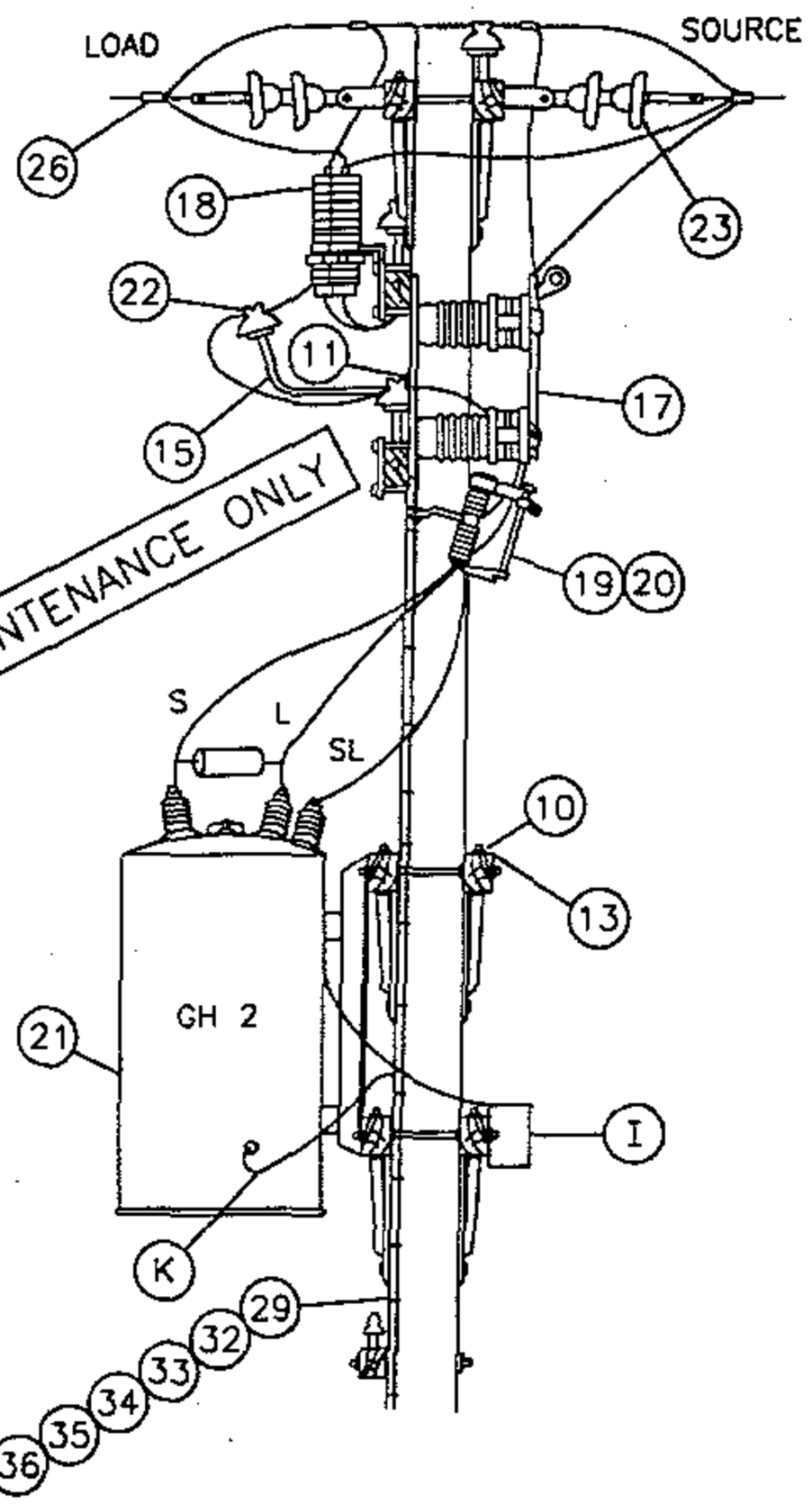

DATE 1-1-96 APPD PA/BSG	SDG&E ELECTRIC STANDARDS STEP-VOLTAGE REGULATOR STATION, CLOSED DELTA, 12KV, TWO POLES	1399.403 SUPERSEDES 1349.1 1-1-96

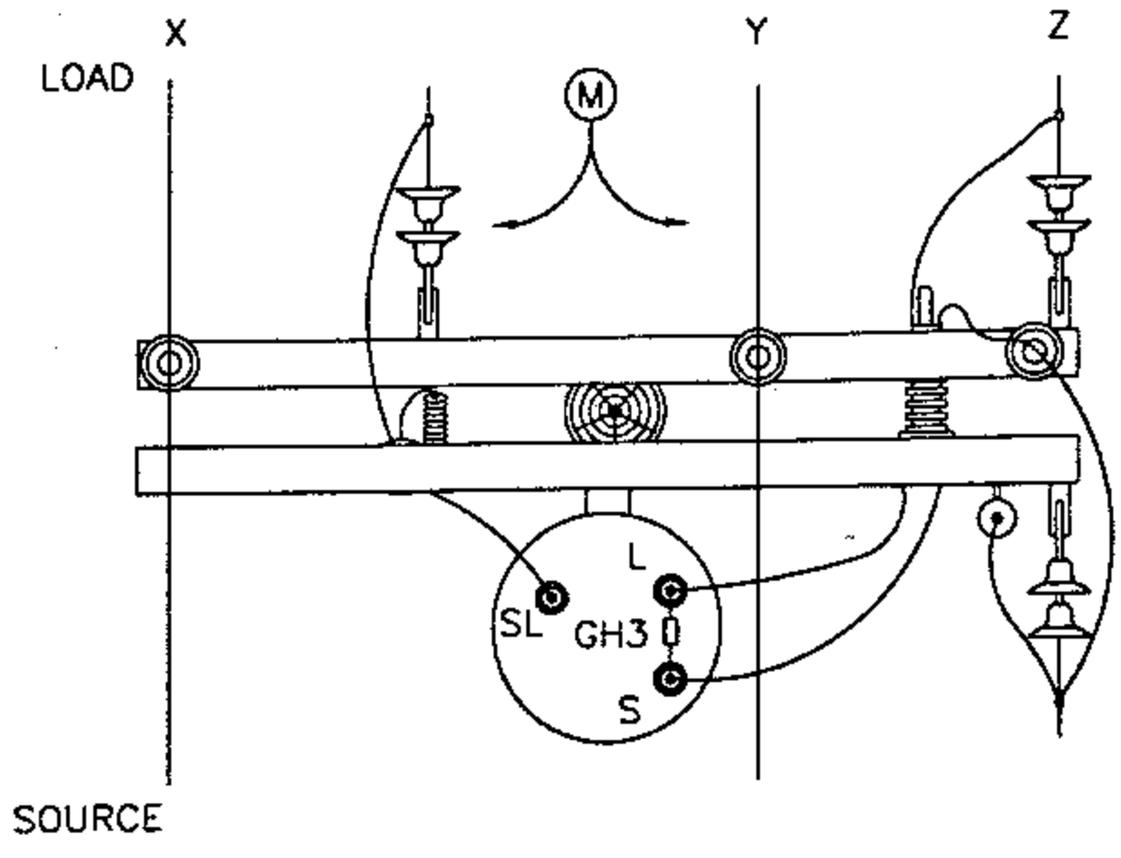

SCHEMATIC DIAGRAM OF A 12KV CLOSED DELTA REGULATOR STATION

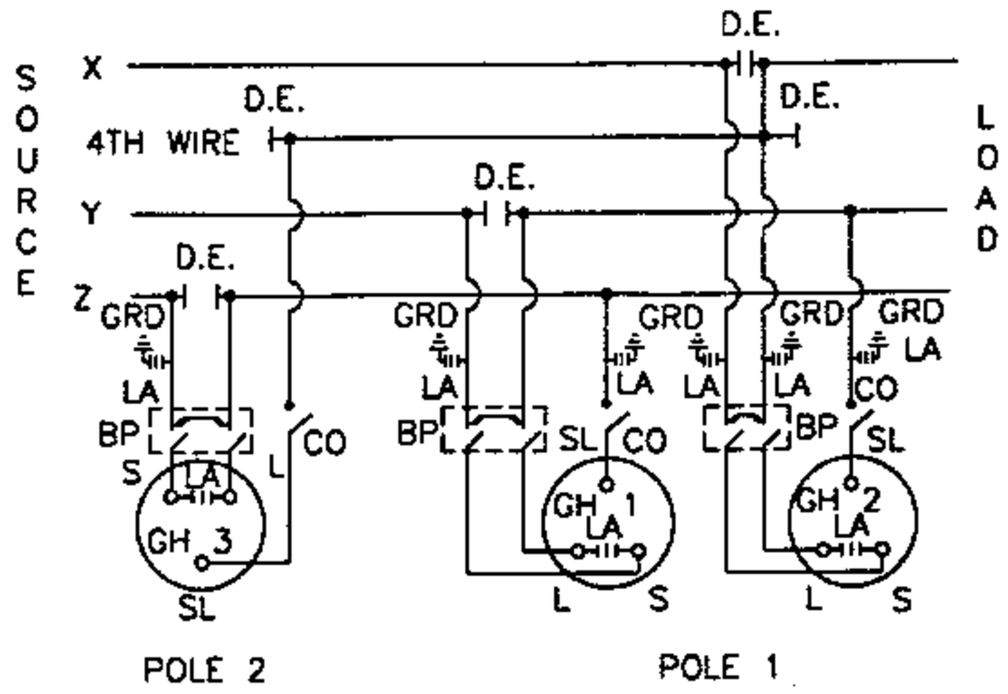

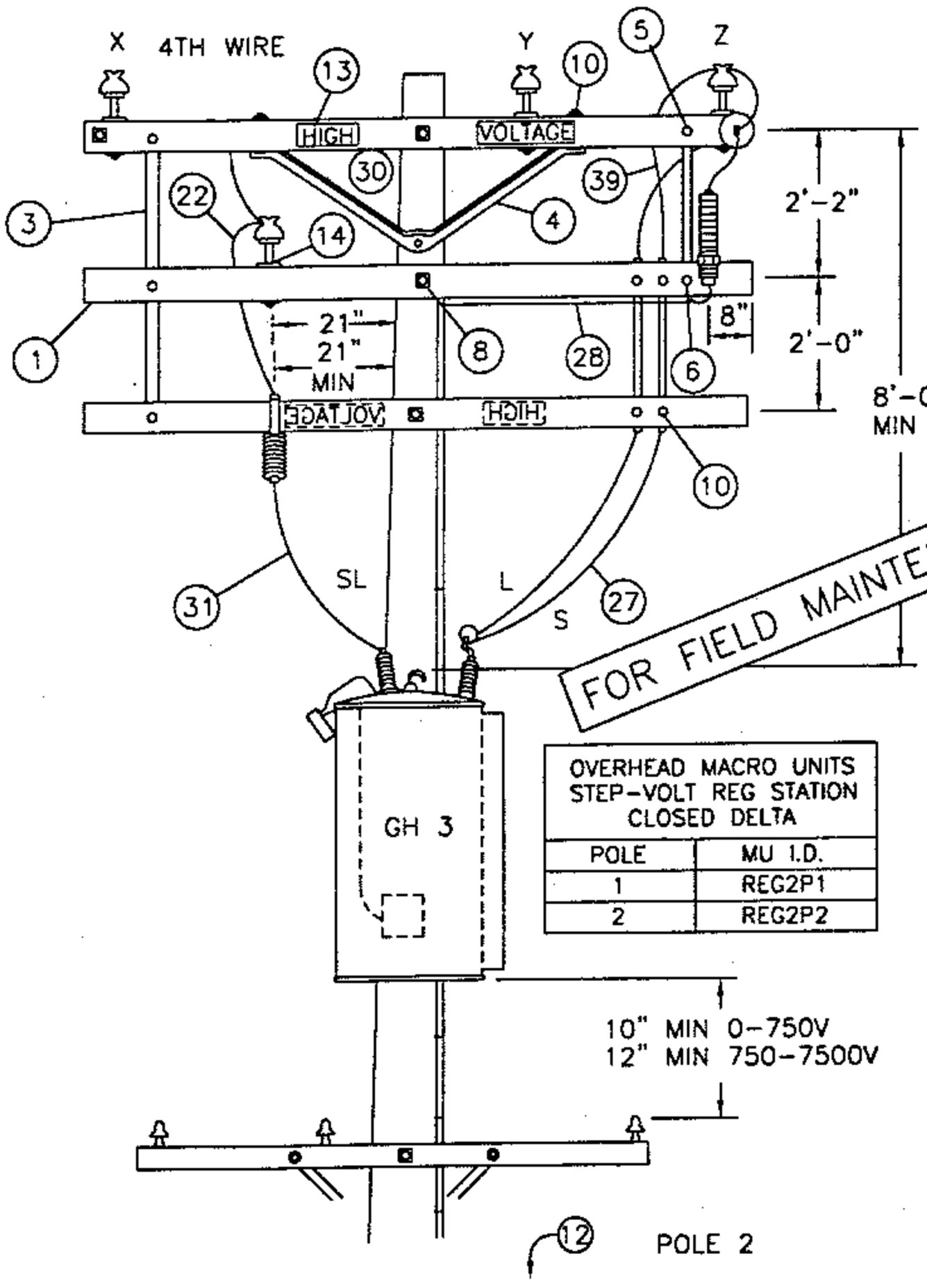

OVERHEAD MACRO UNITS STEP-VOLT REG STATION CLOSED DELTA	
POLE	MU I.D.
1	REG2P1
2	REG2P2

FOR FIELD MAINTENANCE ONLY

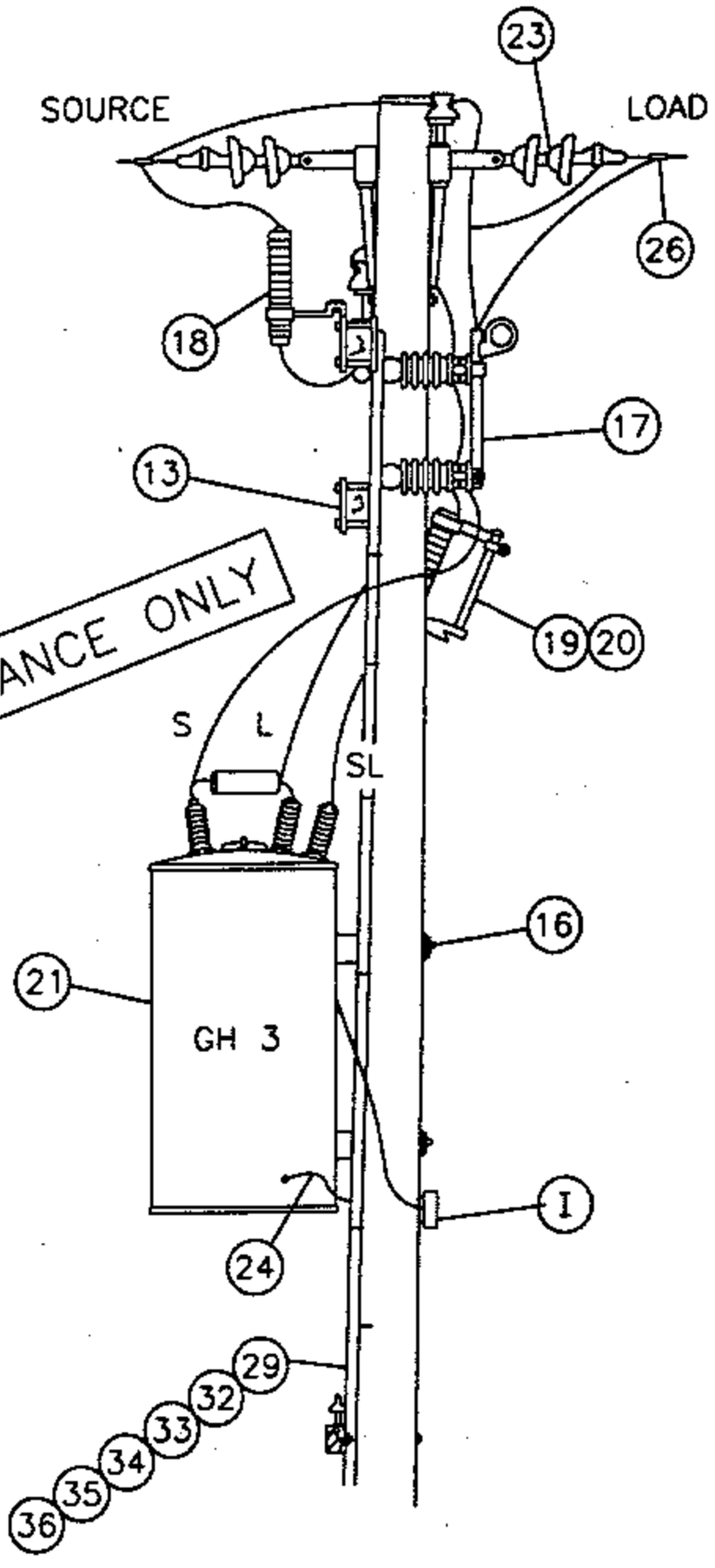

1399.404 SUPERSEDES 1349.2 1-1-96	SDG&E ELECTRIC STANDARDS STEP-VOLTAGE REGULATOR STATION, CLOSED DELTA, 12KV, TWO POLES	DATE 1-1-96 APPD PBA /BSG

TABLE OF CONTENTS

NOTES:

A. CAUTION: WHEN CONNECTING A STATION, REGULATORS MUST BE ON NEUTRAL. CLOSE CUTOUT TO SL BUSHING BEFORE CLOSING BYPASS DISCONNECT ON THAT POLE. WHEN DISCONNECTING A STATION, PUT REGULATORS ON NEUTRAL, AND OPEN BYPASS DISCONNECT BEFORE OPENING CUTOUT TO SL BUSHING. THIS AVOIDS A SERIOUS OVERVOLTAGE CONDITION.

B. USE EXTRA HEAVY CLASS ONE POLE WITH 10" MIN TOP DIA FOR POLE #1, AND A CLASS ONE FOR POLE #2.

(C) USE TWO GROUND RODS FOR THE ARRESTERS AND TANKS. ALL GROUND RODS SHOULD BE SPACED A MINIMUM OF SIX FEET APART.

(D) UNIT GROUND COMPLETE, ORDER 603136.

F. BOND ALL CUTOUTS IN HEAVY CONTAMINATION DISTRICT AS IDENTIFIED ON STANDARDS PAGE 287.

G. BOND DEAD-END HARDWARE.

(H) INTERCONNECT ARRESTER GROUND LEAD DISCONNECTS WITH #6 BARE COPPER AND GROUND IT WITH #2 BARE COPPER NEAR CENTER ARRESTER.

(I) CONTROLS WILL BE MOUNTED BY KEARNY MAINTENANCE.

J. INSTALL DOUBLE COIL SPRING WASHER ON END OF BOLT WHICH ATTACHES TO LARGEST METALLIC OBJECT, SUCH AS A BRACKET OR BRACE.

(K) REGULATOR TANKS SHALL BE PERMANENTLY GROUNDED.

(M) THIS CONSTRUCTION TO BE USED WHEN CENTER PHASE WIRE IS TO THE RIGHT OF THE POLE WHEN LOOKING TOWARD THE LOAD.

ITEM	DESCRIPTION	QUANTITY		STOCK NO. OR
		POLE 1	POLE 2	CONSTR. STD.
1	CROSSARM, 3 3/4" X 5 3/4" X 10' - 0"	3	3	380
2	CROSSARM, 3 3/4" X 5 3/4" X 8' - 0"	4	–	380
3	BRACE, FLAT CROSSARM 28"	2	3	164192
4	BRACE, ANGLE CROSSARM 5'-0"	5	1	164128
5	BOLT, MACHINE, 3/8" X 5", 1 RD. WASH., 1 DBL. COIL SPR. WASH.	2	2	392
6	BOLT, MACHINE, 1/2" X 5", 1 RD. WASH., 1 DBL. COIL SPR. WASH	2	3	392
7	BOLT, MACHINE, 3/4" X --, 1 SQ. CURV. WASH., 1 DBL. COIL SPR. WASH.	2	–	392
8	BOLT, MACHINE, 5/8" X --, 2 FLAT WASH., 1 DBL. COIL SPR. WASH.	4	2	392
9	BOLT, SPACE, 5/8" X --, 4 WASH & 4 NUTS, 2 DBL. COIL SPR. WASH.	7	3	392
10	BOLT, MACHINE, 1/2" X 7", 1 RD. WASH., 1 DBL. COIL SPR. WASH.	18	6	392
11	SCREW, LAG, 5/8" X 5"	2	–	621600
12	STEPS, POLE	19	19	692992
13	SIGN, HIGH VOLTAGE & NAILS, GALV.	3	3	647648, 492224
14	PIN, INSULATOR (AS REQUIRED BY ITEM 22)	3	1	532---
15	BRACKET, INSULATOR (AS REQUIRED BY ITEM 22)	1	–	1661--
16	COVER, BOLT, PLASTIC	–	2	285696
17	SWITCH, BYPASS	2	1	706944
18	ARRESTER, LIGHTNING (12KV)	5	1	113248
19	CUTOUT, 12KV 100 AMP WITH LOAD BUSTER HOOKS	2	1	297888
20	BLADE, DISCONNECT CUTOUT	2	1	1200 SECTION
21	REGULATOR, STEP VOLTAGE 1Ø	2	1	1300 SECTION
22	INSULATOR, PIN TYPE (CLASS AS REQUIRED)	3	1	700 SECTION
23	INSULATOR, SUSPENSION	10	6	700 SECTION
24	CONNECTOR, COMPRESSION (#2 TO #6)	1	2	257792
25	CONNECTOR, COMPRESSION (#6 TO #6)	3	–	257952
26	CONNECTORS, WIRE	9	4	700 SECTION
27	WIRE, 2/0 WP COPPER	(12.4#) 24'	(6.2#) 12'	808944
28	WIRE, BARE STRANDED COPPER #6	(1.8#) 24'	(1.8#) 22'	813536
29	WIRE, BARE STRANDED COPPER #2	(9.2#) 45'	(9.8#) 45'	813664
30	WIRE, #8 ANNEALED SOLID COPPER	(.25#) 5'	(.25#) 5'	812928
31	WIRE, #4 SOLID WP COPPER	(1.8#) 10'	(.75#) 4'	812480
32	ROD, GROUND (C)(D)	2	2	603072
33	CLAMP, GROUND ROD (D)	2	2	230016
34	MOULDING, HARDWOOD 1" (D)	45'	48'	487200
35	STAPLES, GALV. 3" X 1 1/16" X 1/4" (D)	32	35	678560
36	STAPLES, FENCE GALV. 1 1/4" (D)	28	30	678528
37	CLEVIS, DEAD END CLOSED	5	3	235712
38	CLAMPS, DEAD END	5	3	700 SECTION
39	WIRE, BARE STRANDED COPPER #1/0	(3.3#) 10'	(3.3#) 10'	813568
40	BRACE, VERTICAL, 36"	2	–	164256
41	BOLT, MACHINE, 5/8" X 7", 1 RD. WASH., 1 DBL. COIL SPR. WASH.	2	–	100 SECTION
42	BOLT, MACHINE, 5/8" X 5", 1 RD. WASH., 1 DBL. COIL SPR. WASH.	2	–	100 SECTION
43	HANGER, TRANSFORMER T-2	2	–	402944

FOR FIELD MAINTENANCE ONLY

TABLE OF CONTENTS

DATE 1-1-96
APPD PA/BDG

SDG&E ELECTRIC STANDARDS

STEP-VOLTAGE REGULATOR STATION, CLOSED DELTA 12KV TWO POLES

1399.405
SUPERSEDES
1349.3 1-1-96

FIELD MAINTENANCE ONLY

REVISION HISTORY:

7/13/2016: All versions prior to 2016 are superseded by their current version found inside the Overhead Construction Standard Manual.

TABLE OF CONTENTS

© 1998 - 2016 San Diego Gas & Electric Company. All rights reserved. Removal of this copyright notice without permission is not permitted under law.

REV	CHANGE	BY	DSGN	APPV	DATE	REV	CHANGE	BY	DSGN	APPV	DATE
C						F					
B						E					
A	ORIGINAL ISSUE	JS	IL	MDJ	7/13/2016	D					

X Indicates Latest Revision | Completely Revised | New Page | Information Removed

SHEET 1 OF 1

SDG&E ELECTRIC OVERHEAD STANDARD

STEP-VOLTAGE REGULATOR STATION, CLOSED DELTA, 12KV, TWO POLES

FMO OH 1350

TABLE OF CONTENTS

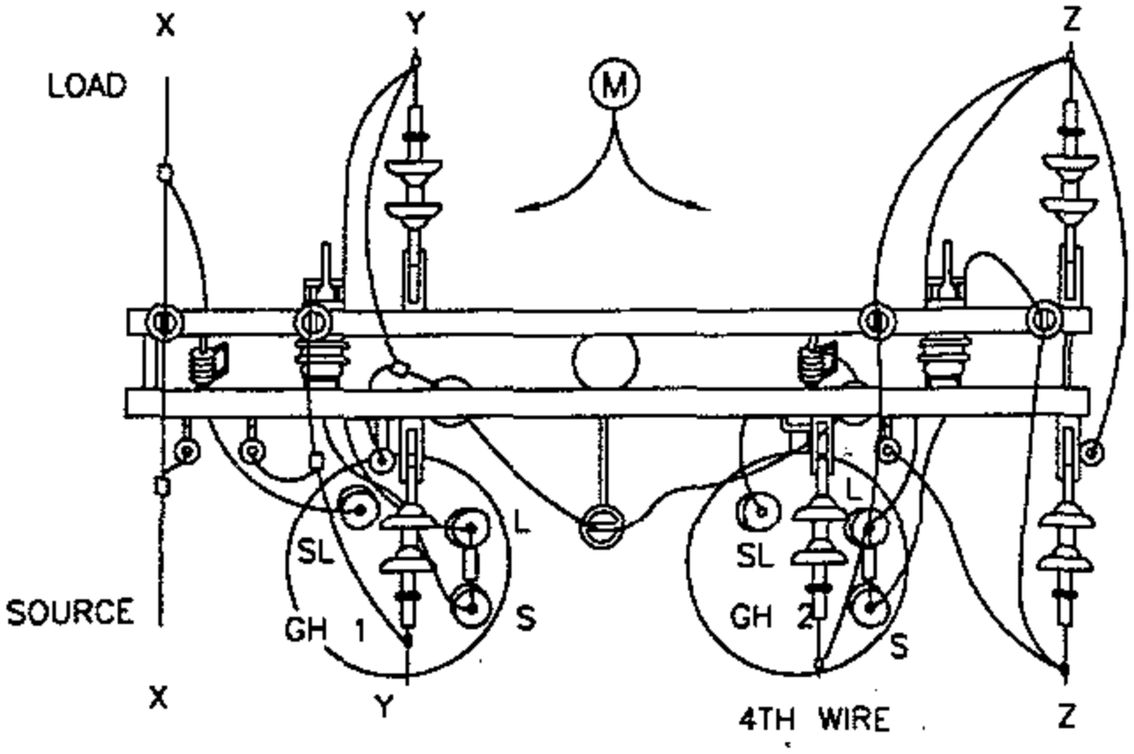

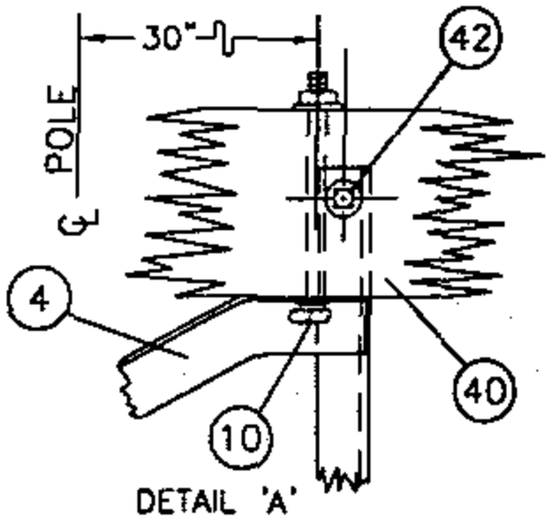

DETAIL 'A'

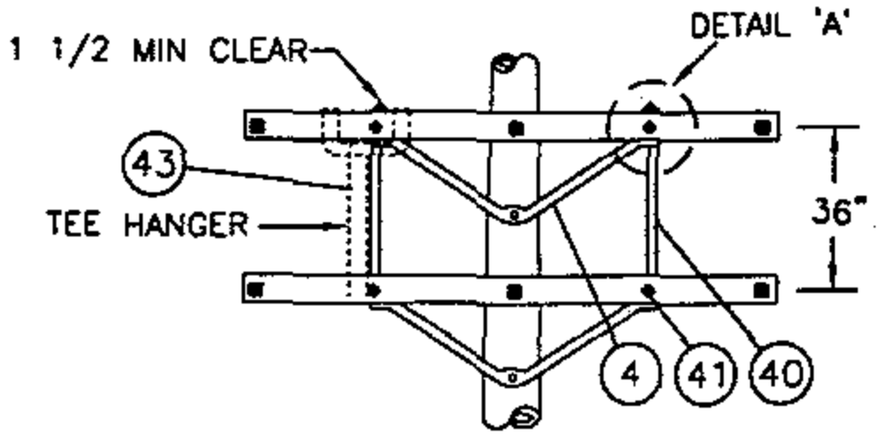

FRAMING DETAIL
FOR 2-12KV STEP-VOLTAGE REGULATORS

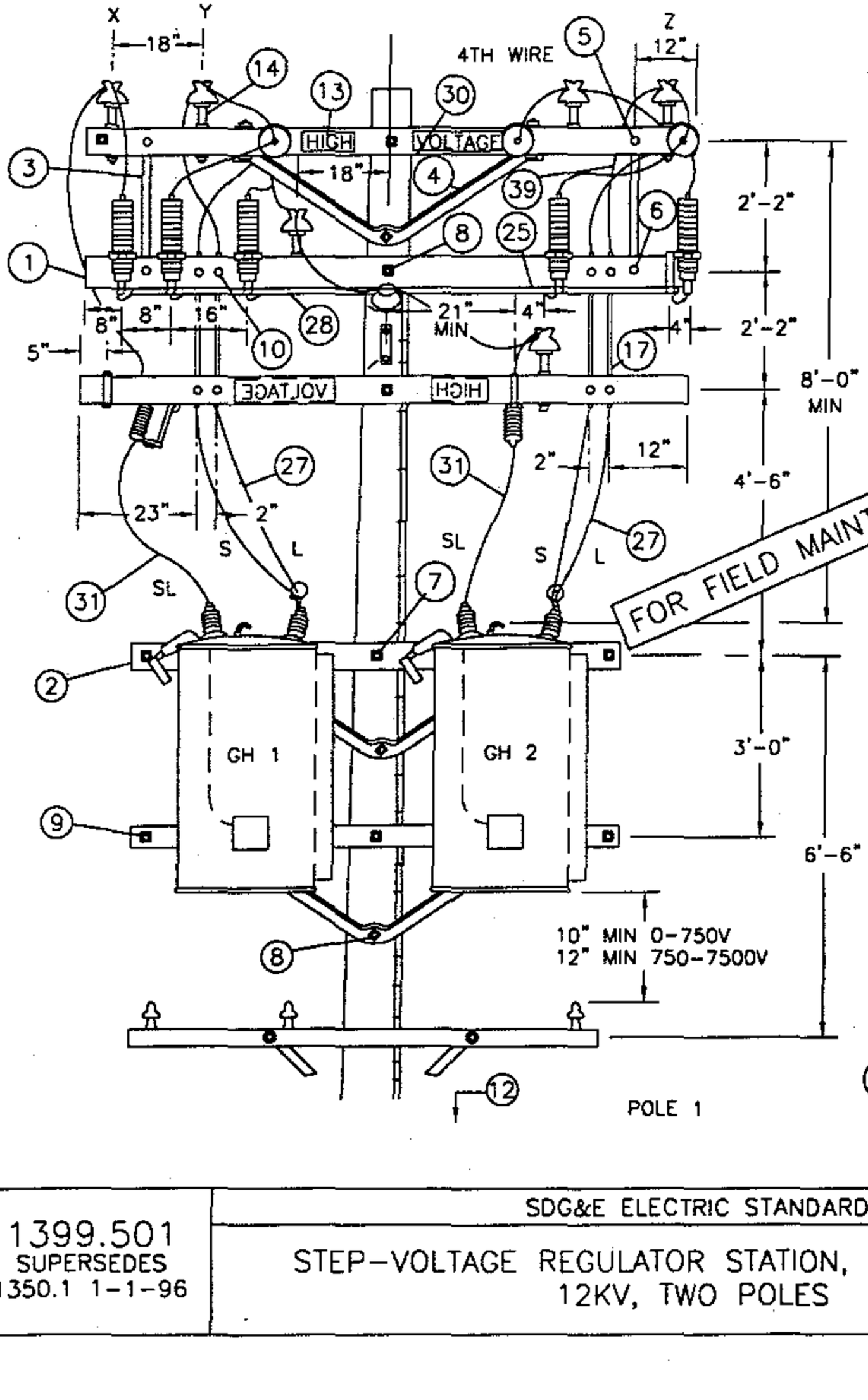

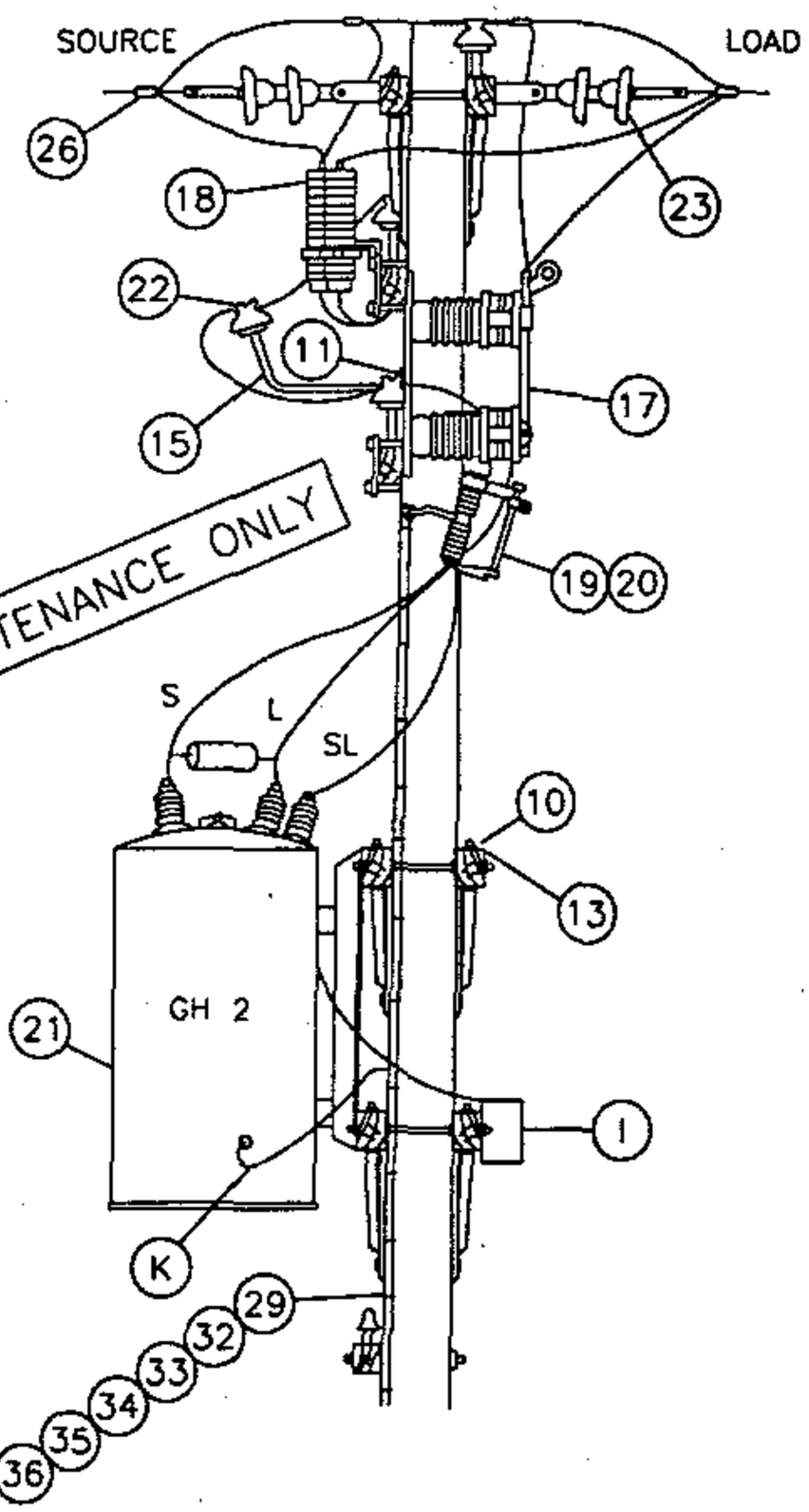

FOR FIELD MAINTENANCE ONLY

1399.501 SUPERSEDES 1350.1 1-1-96	SDG&E ELECTRIC STANDARDS STEP-VOLTAGE REGULATOR STATION, CLOSED DELTA 12KV, TWO POLES	DATE 1-1-96 APPD PA 1/09

TABLE OF CONTENTS

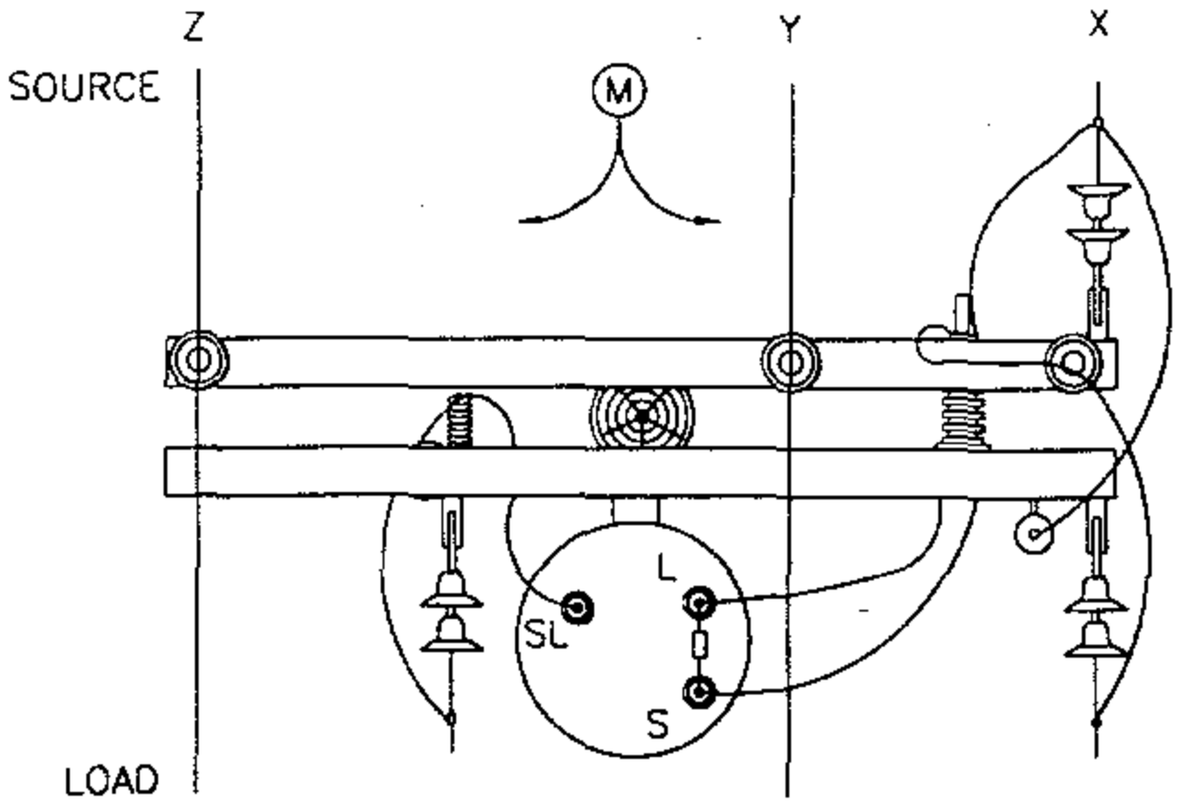

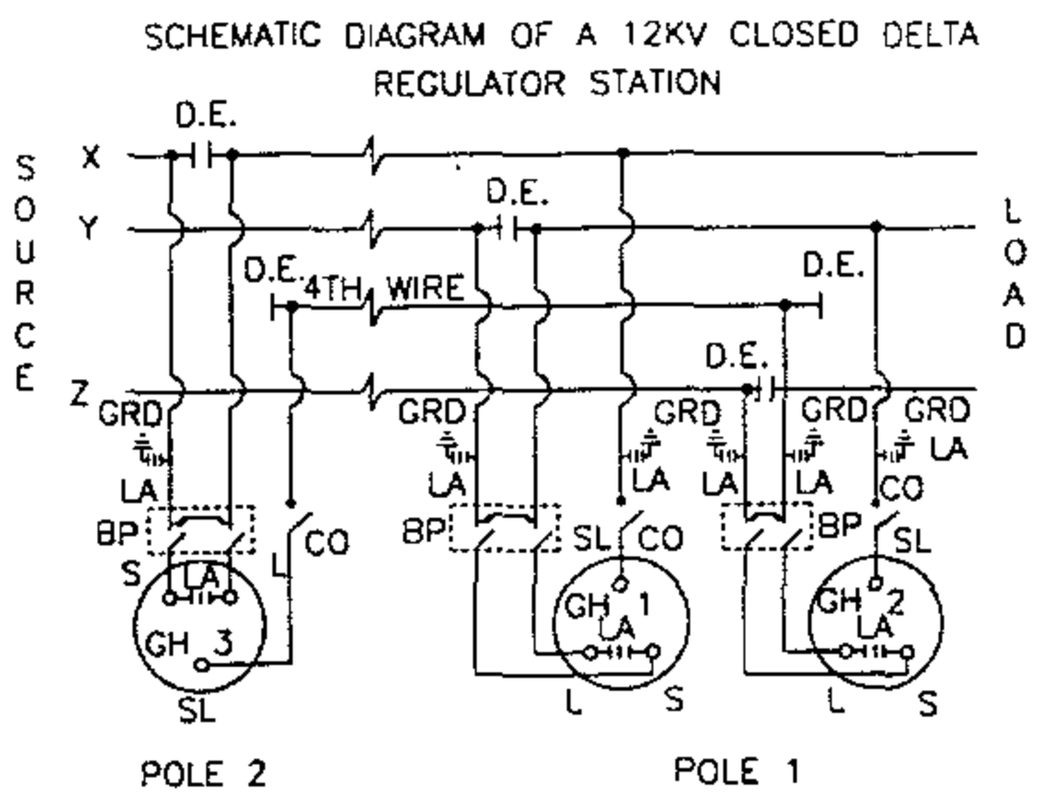

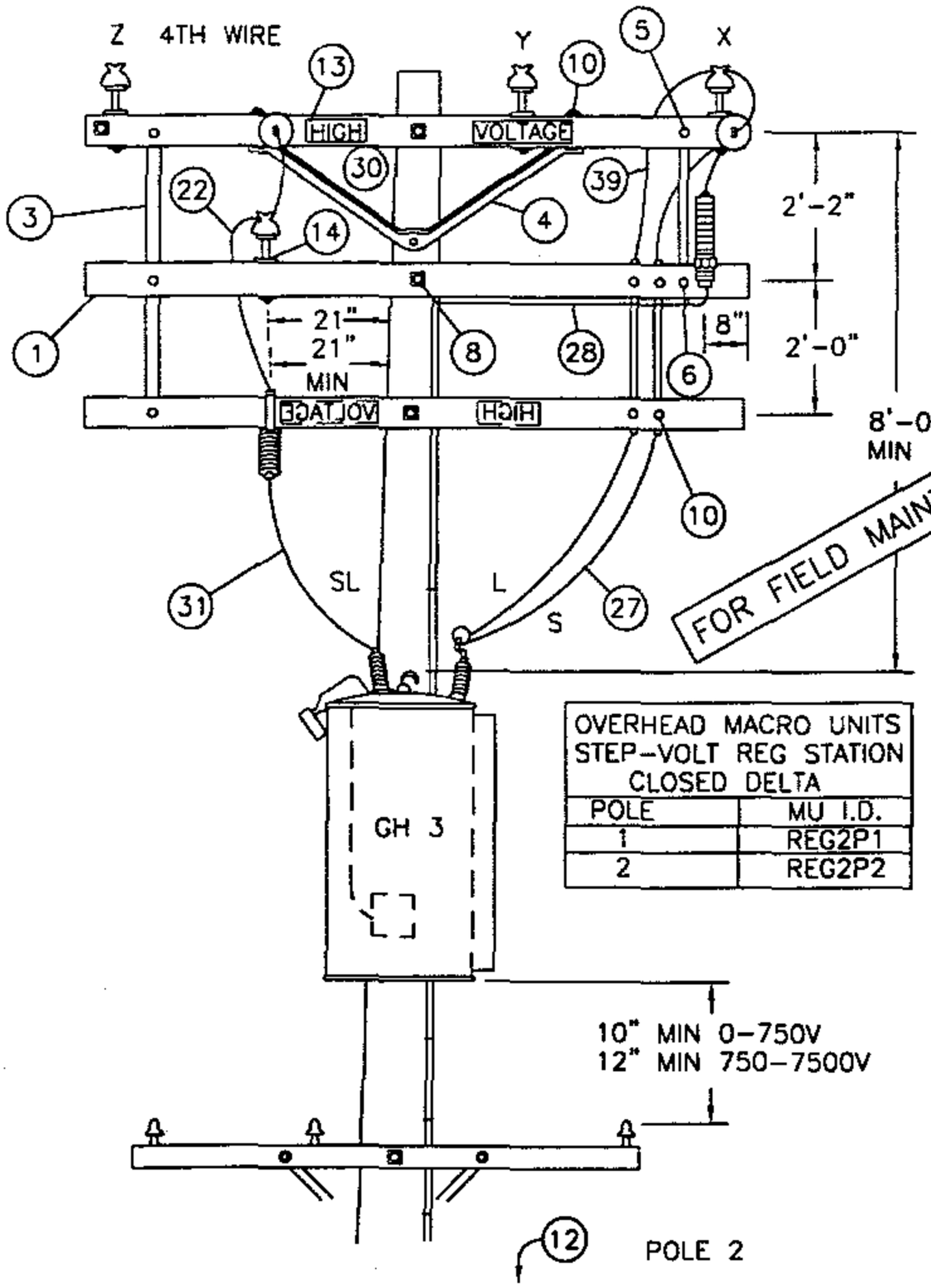

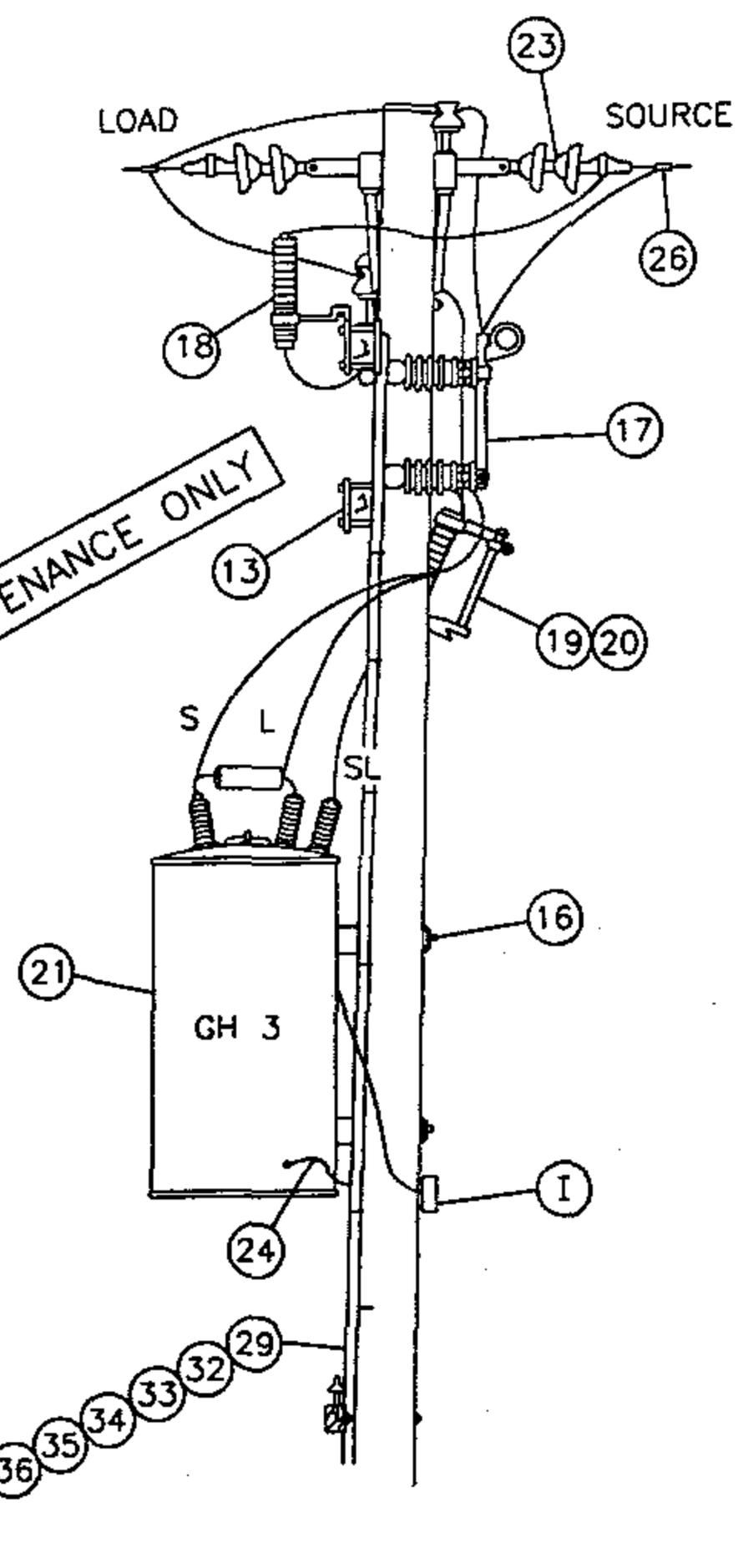

FOR FIELD MAINTENANCE CLEARANCE ONLY

OVERHEAD MACRO UNITS STEP-VOLT REG STATION CLOSED DELTA	
POLE	MU I.D.
1	REG2P1
2	REG2P2

DATE 1-1-96 APPD PA / BSG	SDG&E ELECTRIC STANDARDS STEP-VOLTAGE REGULATOR STATION, CLOSED DELTA, 12KV, TWO POLES	1399.502 SUPERSEDES 1350.2 1-1-96

NOTES:

A. CAUTION: WHEN CONNECTING A STATION, REGULATORS MUST BE ON NEUTRAL. CLOSE CUTOUT TO SL BUSHING BEFORE CLOSING BYPASS DISCONNECT ON THAT POLE. WHEN DISCONNECTING A STATION, PUT REGULATORS ON NEUTRAL, AND OPEN BYPASS DISCONNECT BEFORE OPENING CUTOUT TO SL BUSHING. THIS AVOIDS A SERIOUS OVERVOLTAGE CONDITION.

B. USE EXTRA HEAVY CLASS ONE POLE WITH 10" MIN TOP DIA FOR POLE #1, AND A CLASS ONE FOR POLE #2.

(C) USE TWO GROUND RODS FOR THE ARRESTERS AND TANKS. ALL GROUND RODS SHOULD BE SPACED A MINIMUM OF SIX FEET APART.

(D) UNIT GROUND COMPLETE, ORDER 603136.

F. BOND ALL CUTOUTS IN HEAVY CONTAMINATION DISTRICT AS IDENTIFIED ON STANDARDS PAGE 287.

G. BOND DEAD-END HARDWARE.

(H) INTERCONNECT ARRESTER GROUND LEAD DISCONNECTS WITH #6 BARE COPPER AND GROUND IT WITH #2 BARE COPPER NEAR CENTER ARRESTER.

(I) CONTROLS WILL BE MOUNTED BY KEARNY MAINTENANCE.

J. INSTALL DOUBLE COIL SPRING WASHER ON END OF BOLT WHICH ATTACHES TO LARGEST METALLIC OBJECT, SUCH AS A BRACKET OR BRACE.

(K) REGULATOR TANKS SHALL BE PERMANENTLY GROUNDED.

(M) THIS CONSTRUCTION TO BE USED WHEN CENTER PHASE WIRE IS TO THE LEFT OF THE POLE WHEN LOOKING TOWARD THE LOAD.

ITEM	DESCRIPTION	QUANTITY		STOCK NO. OR CONSTR. STD
		POLE 1	POLE 2	
1	CROSSARM 3 3/4" X 5 3/4" X 10' - 0"	3	3	380
2	CROSSARM, 3 3/4" X 5 3/4" X 8'-0"	4	–	380
3	BRACE, FLAT CROSSARM 28"	2	3	164192
4	BRACE, ANGLE CROSSARM 5'-0"	5	1	164128
5	BOLT, MACHINE, 3/8" X 5", 1 RD. WASH., 1 DBL. COIL SPR. WASH.	2	2	392
6	BOLT, MACHINE, 1/2" X 5", 1 RD. WASH., 1 DBL. COIL SPR. WASH.	2	3	392
7	BOLT, MACHINE, 3/4" X --, 1 SQ. CURV. WASH., 1 DBL. COIL SPR. WASH.	2	–	392
8	BOLT, MACHINE, 5/8" X --, 2 FLAT WASH., 1 DBL. COIL SPR. WASH.	4	2	392
9	BOLT, SPACE, 5/8" X --, 4 WASH. & 4 NUTS, 2 DBL. COIL SPR. WASH.	7	3	392
10	BOLT, MACHINE, 1/2" X 7", 1 RD. WASH., 1 DBL. COIL SPR. WASH.	18	6	392
11	SCREW, LAG, 5/8" X 5"	2	–	621600
12	STEPS, POLE	19	19	692992
13	SIGN, HIGH VOLTAGE & 8 NAILS, GALV.	3	3	647648, 492224
14	PIN, INSULATOR (AS REQUIRED BY ITEM 22)	3	1	532---
15	BRACKET, INSULATOR (AS REQUIRED BY ITEM 22)	1	–	1661--
16	COVER, BOLT, PLASTIC	–	2	285696
17	SWITCH, BYPASS	2	1	706944
18	ARRESTER, LIGHTNING (12KV)	5	1	113248
19	CUTOUT, 12KV 100 AMP WITH LOAD BUSTER HOOKS	2	1	297888
20	BLADE, DISCONNECT CUTOUT	2	1	1200 SECTION
21	REGULATOR, STEP VOLTAGE 1Ø	2	1	1300 SECTION
22	INSULATOR, PIN TYPE (CLASS AS REQUIRED)	3	1	700 SECTION
23	INSULATOR, SUSPENSION	10	6	700 SECTION
24	CONNECTOR, COMPRESSION (#2 TO #6)	1	2	257792
25	CONNECTOR, COMPRESSION (#6 TO #6)	3	–	257952
26	CONNECTORS, WIRE	9	4	700 SECTION
27	WIRE, 2/0 WP COPPER	(12.4#) 24'	(6.2#) 12'	808944
28	WIRE, BARE STRANDED COPPER #6	(1.8#) 24'	(1.8#) 22'	813536
29	WIRE, BARE STRANDED COPPER #2	(9.2#) 45'	(9.8#) 45'	813664
30	WIRE, #8 ANNEALED SOLID COPPER	(.25#) 5'	(.25#) 5'	812928
31	WIRE, #4 SOLID WP COPPER	(1.8#) 10'	(.75#) 4'	812480
32	ROD, GROUND	2	2	603072
33	CLAMP, GROUND ROD (C)(D)	2	2	230016
34	MOULDING, HARDWOOD 1" (D)	45'	48'	487200
35	STAPLES, GALV. 3" X 1 1/16" X 1/4" (D)	32	35	678560
36	STAPLES, FENCE GALV. 1 1/4" (D)	28	30	678528
37	CLEVIS, DEAD END CLOSED (D)	5	3	235712
38	CLAMPS, DEAD END	5	3	700 SECTION
39	WIRE, BARE STRANDED COPPER #1/0	(3.3#) 10'	(3.3#) 10'	813568
40	BRACE, VERTICAL, 36"	2	–	164256
41	BOLT, MACHINE, 5/8" X 7", 1 RD. WASH., 1 DBL. COIL SPR. WASH.	2	–	392
42	BOLT, MACHINE, 5/8" X 5", 1 RD. WASH., 1 DBL. COIL SPR. WASH	2	–	392
43	HANGER, TRANSFORMER T-2	2	–	402944

FOR FIELD MAINTENANCE ONLY

TABLE OF CONTENTS

1399.503
SUPERSEDES
350.3 1-1-96

SDG&E ELECTRIC STANDARDS

STEP-VOLTAGE REGULATOR STATION, CLOSED DELTA 12KV TWO POLES

DATE 1-1-96
APPD PA 1/1/96

OH1360 FIELD MAINTENANCE ONLY

ALL VERSIONS LISTED IN FMO ARE SUPERSEDED BY THEIR CURRENT VERSION FOUND INSIDE THE OVERHEAD CONSTRUCTION STANDARDS MANUAL.

REVISION HISTORY:

03/10/2023: MOVED TO FMO

TABLE OF CONTENTS

© 1998 - 2023 San Diego Gas & Electric Company. All rights reserved. Removal of this copyright notice without permission is not permitted under law.

REV	CHANGE	DR	BY	DSN	APV	DATE	REV	CHANGE	DR	BY	DSN	APV	DATE
C							F						
B							E						
A	ORIGINAL ISSUE	GLC	RSL	JAS	KRG	03/10/2023	D						

X	Indicates Latest Revision		Completely Revised	X New Page		Information Removed

SDG&E ELECTRIC OVERHEAD FIELD MAINTENANCE ONLY STANDARDS

4KV/12KV SINGLE PHASE
PRIMARY METERING STATION

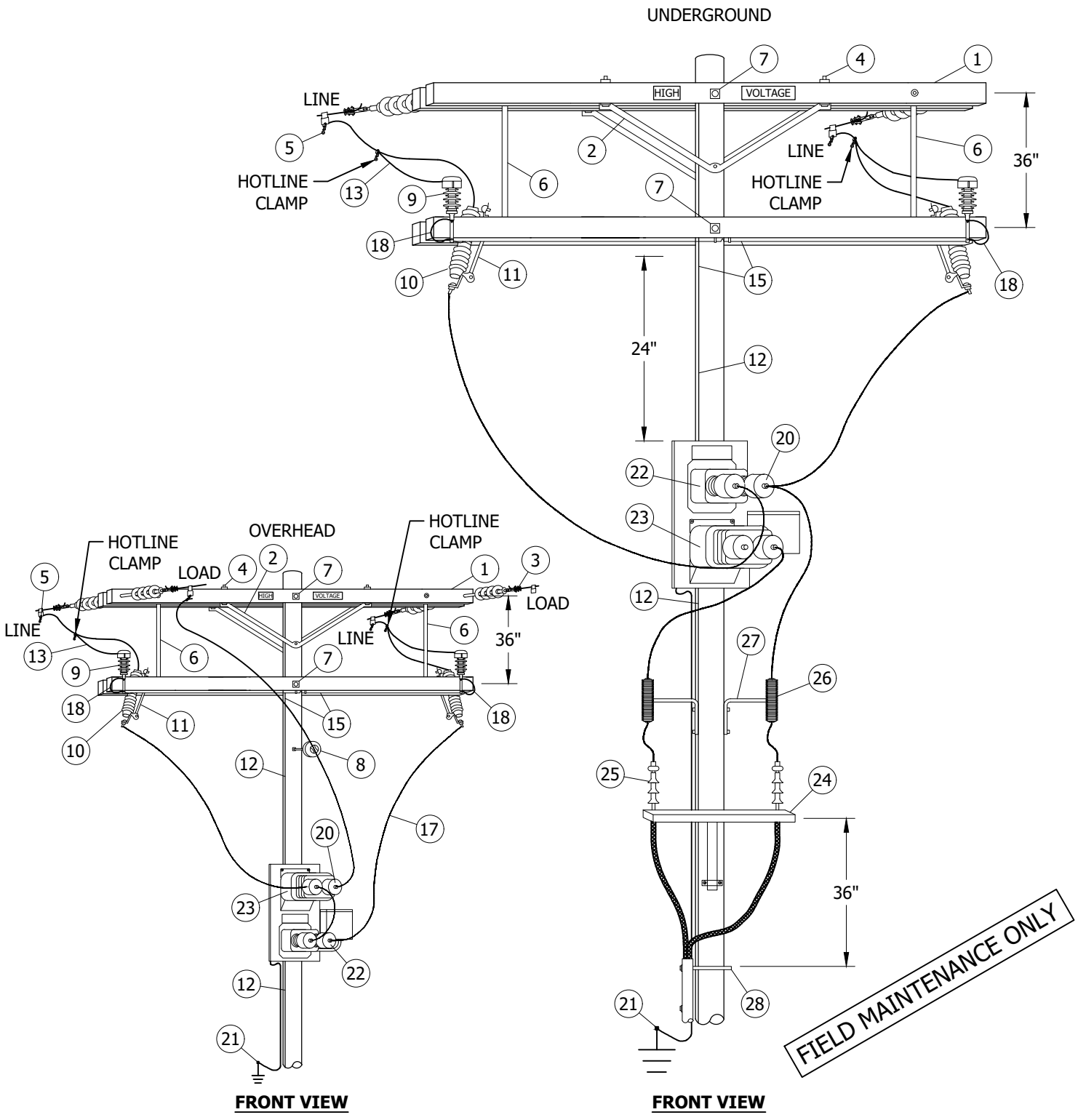

TABLE OF CONTENTS

© 1998 - 2023 San Diego Gas & Electric Company. All rights reserved. Removal of this copyright notice without permission is not permitted under law.

REV	CHANGE	DR	BY	DSN	APV	DATE	REV	CHANGE	DR	BY	DSN	APV	DATE
C							F						
B	MOVED TO FMO	GLC	RSL	JAS	KRG	03/10/2023	E						
A	REVISION	-	-	PIA	MC	05/21/2009	D						

X Indicates Latest Revision | Completely Revised | New Page | Information Removed

SDG&E ELECTRIC OVERHEAD FIELD MAINTENANCE ONLY STANDARDS

SHEET 1 OF 2

4KV/12KV SINGLE PHASE
PRIMARY METERING STATION

FMO
OH1360.1

INSTALLATION:

(A) FOR SIZE REQUIREMENTS, CONTACT SERVICE STANDARDS (858) 654-8212.

BILL OF MATERIALS:

ITEM	DESCRIPTION	QUANTITY	STANDARD PAGE	STOCK NUMBER
1	4, 12KV, 10' ARM	3	--	294128
2	5' HUB BRACE	2	--	164128
3	DEADENDS 7 DESHOES D.E. CLEVIS	4	739	--
4	LINE ARM HARDWARE	--	739	--
5	HOT LINE STIRUP & CLAMPS/SQUEEZE ON CONNECTORS	6	788	--
6	36" STRAP BRACE & BOLTS	2 EACH	--	164192
7	SPACE BOLTS 5/8" X 26" SQUARE WASHERS & NUTS	2	OH392.1	--
8	STAND OFF PIN 30"	1	--	166144
9	C/O LTARR BRKT	2	--	166070
10	12KV LTNG ARR	2	1247	113248
11	12KV C/O & FUSE HOLDER	2	1212.1	--
12	#4 PVC COVERED GROUND WIRE	--	--	251200
13	4/3 IBS CU	40'	--	251764
14	GROUND WIRE STAPLES	--	--	678562
15	3/4" PVC & STRAPS	10'	--	--
16	PLASTIC TIE WIRE	1	--	--
17	JUMPER COVER	20'	--	S289636
18	L/A GRND STRAPS	2	--	698754
19	L/A CAPS	2	--	289630
20	BUSHING COVERS	4	--	558888
21	GROUND RODS/CLAMP	4	1002.2	--
22	4KV OR 12KV POTENTIAL TRANSFORMER (A)	1	--	--
23	4KV OR 12KV CURRENT TRANSFORMER (A)	1	--	--
24	BRACKET, GALV, TERMINAL UP SWEEP WITH PVC LINER	1	--	166856
25	TERMINAL AND UNDERGROUND CABLE	1	4111	--
26	CUTOUT FOR CURRENT LIMITING FUSE	--	1212	297952
27	CUTOUT BRACKET MOUNTING	1	--	166448
28	CALLED OUT ON RIGHT FRONT VIEW FIGURE??	??	??	??

TABLE OF CONTENTS

FIELD MAINTENANCE ONLY

© 1998 - 2023 San Diego Gas & Electric Company. All rights reserved. Removal of this copyright notice without permission is not permitted under law.

REV	CHANGE	DR	BY	DSN	APV	DATE	REV	CHANGE	DR	BY	DSN	APV	DATE
C							F						
B	MOVED TO FMO	GLC	RSL	JAS	KRG	03/10/2023	E						
A	REVISION	-	-	PIA	MC	05/21/2009	D						

X Indicates Latest Revision | Completely Revised | New Page | Information Removed

SDG&E ELECTRIC OVERHEAD FIELD MAINTENANCE ONLY STANDARDS

4KV/12KV SINGLE PHASE
PRIMARY METERING STATION

FMO
OH1360.2

PAGES	SUBJECT
1402	JOINT CABLE POLE RISERS USING WOODEN LADDER ARMS
1407	CABLE POLE TERMINAL MOUNTING INFORMATION (PORCELAIN TERMINATIONS) (FOR CONTAMINATION DISTRICT 1)
1415	0-750V CUSTOMER OWNED UNDERGROUND SERVICE FROM AN OVERHEAD LINE, ONE DUCT
1417	0-750V CUSTOMER OWNED UNDERGROUND SERVICE FROM AN OVERHEAD LINE, TWO DUCTS
1418	0-750V CUSTOMER OWNED UNDERGROUND SERVICE FROM AN OVERHEAD LINE, THREE AND FOUR DUCTS
1428	CROSSARM MOUNTED TERMINALS 4KV 4 WIRE WYE
1429	12.47KV AND BELOW 3ϕ CABLE POLE 1/C PER ϕ, UPSWEEP BRACKET CONSTRUCTION
1432	12.47KV AND BELOW CABLE POLE, UPSWEEP BRACKET, THREE-PHASE 1/C PER PHASE, LINE ARM MOUNTED DISCONNECTS, NON-PORCELAIN TERMINALS
1437	BRACKET MOUNTED TERMINALS, 12KV 3 WIRE ARMLESS TANGENT CONSTRUCTION
1438	BRACKET MOUNTED TERMINALS, 12KV 3 WIRE ARMLESS DEADEND CONSTRUCTION
1439	CROSSARM CABLE POLE, 3ϕ, 1/C PER PHASE DEADEND CONSTRUCTION, 12.47KV AND BELOW
1441	12.47KV AND BELOW DEADEND CABLE POLE ARM, 3ϕ, 1/C PER ϕ, HOOKSTICK SWITCHED
1443	12.47KV AND BELOW DEADEND CABLE POLE THREE-PHASE, 1/CPER PHASE, GANG OPERATED SWITCHED, NON-PORCELAIN TERMINALS
1445	12.47KV DEADEND CABLE POLE THREE-PHASE WITH NEUTRAL, HORIZONTAL SCADA-MATE SWITCH
1451	12.47KV AND BELOW DEADEND CABLE POLE, 6 OR 7 OH CONDUCTORS, 1 OR 2 TERMINALS PER CONDUCTOR, HOOKSTICK SWITCHED
1481	POLETOP METERING, 2.4KV SINGLE PHASE
1482	POLETOP METERING, 2.4KV OPEN DELTA
1483	POLETOP METERING, 4KV SINGLE-PHASE
1484	POLETOP METERING INSTALLATION, 4KV, 3 PHASE, 3 WIRE UG & OH SERVICES
1485	POLETOP METERING INSTALLATION, 4KV, 3 PHASE, 4 WIRE UG & OH SERVICES
1486	POLETOP METERING INSTALLATION, 12KV, 3 PHASE, 3 WIRE UG & OH SERVICES
1487	REVISED CT & PT POLETOP METERING INSTALLATION, 12KV, OH & UG SERVICES
1489	METERING RACK, CUSTOMER OWNED, CONSTRUCTION DETAILS
1490	4KV METERING INSTALLATION ON RACK, FOR 3 WIRE AND 4 WIRE, 30 SERVICES

MAIN TABLE OF CONTENTS

© 1998 - 2020 San Diego Gas & Electric Company. All rights reserved. Removal of this copyright notice without permission is not permitted under law.

REV	CHANGE	BY	DSGN	APPV	DATE	REV	CHANGE	BY	DSGN	APPV	DATE
C						F					
B	EDITORIAL CHANGES	RSL	JES	CZH	04/13/2020	E					
A	ORIGINAL ISSUE	JS	IL	MDJ	07/25/2016	D					

X Indicates Latest Revision | Completely Revised | New Page | Information Removed

SDG&E ELECTRIC OVERHEAD FIELD MAINTENANCE ONLY STANDARDS

CABLE POLES FMO TABLE OF CONTENTS

FMO OH1401.1

FIELD MAINTENANCE ONLY

REVISION HISTORY:

7/13/2016: All versions prior to 2016 are superseded by their current version found inside the Overhead Construction Standard Manual.

TABLE OF CONTENTS

© 1998 - 2016 San Diego Gas & Electric Company. All rights reserved. Removal of this copyright notice without permission is not permitted under law.

REV	CHANGE	BY	DSGN	APPV	DATE	REV	CHANGE	BY	DSGN	APPV	DATE
C						F					
B						E					
A	ORIGINAL ISSUE	JS	IL	MDJ	7/13/2016	D					

X Indicates Latest Revision | Completely Revised | New Page | Information Removed

SHEET 1 OF 1

SDG&E ELECTRIC OVERHEAD STANDARD

JOINT CABLE POLE RISERS USING WOODEN LADDER ARMS

FMO OH 1402

SCOPE: THIS STANDARD: 1) SHOWS THE STANDARD CABLE POLE RISER POSITIONS FOR SDG&E, TELCO, AND CATV COMPANIES. IT IS FOR RISER PLACEMENT ONLY (SEE SECTION 1400/4200 FOR SPECIFIC CONSTRUCTION DETAILS).

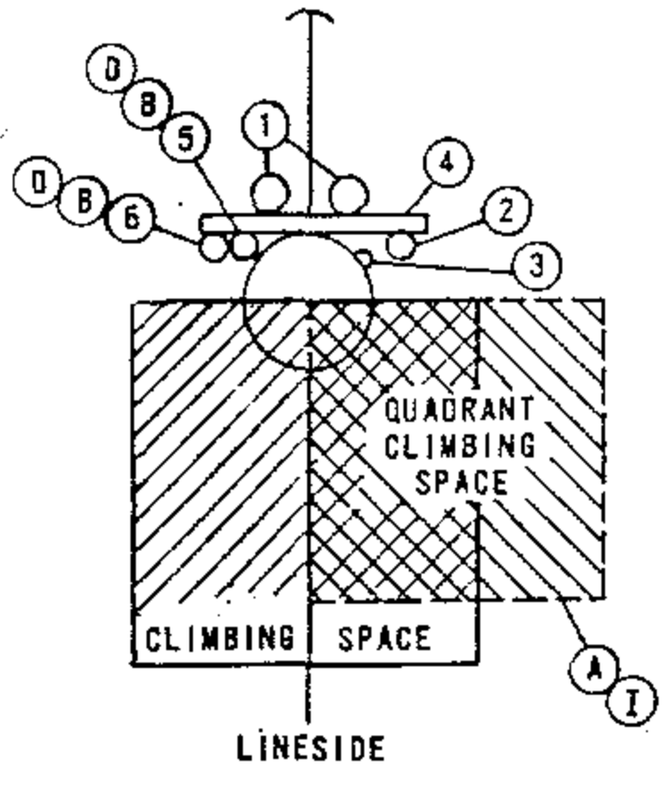

FIGURE 1

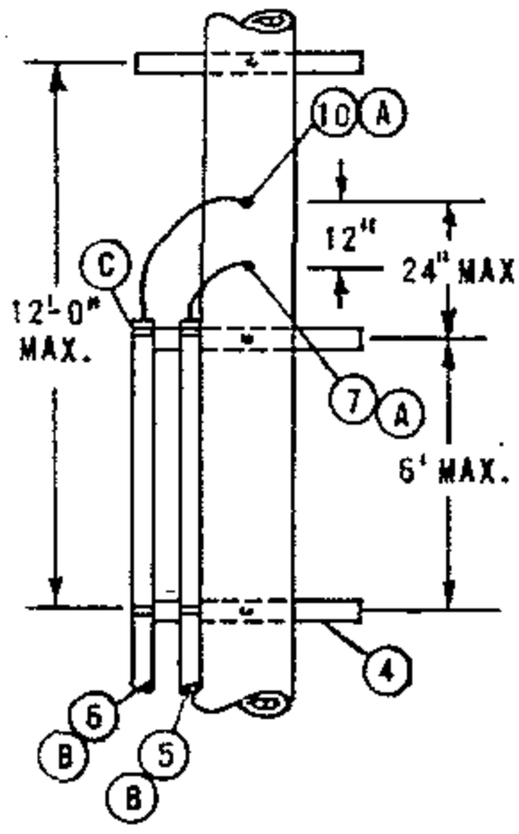

FIGURE 2

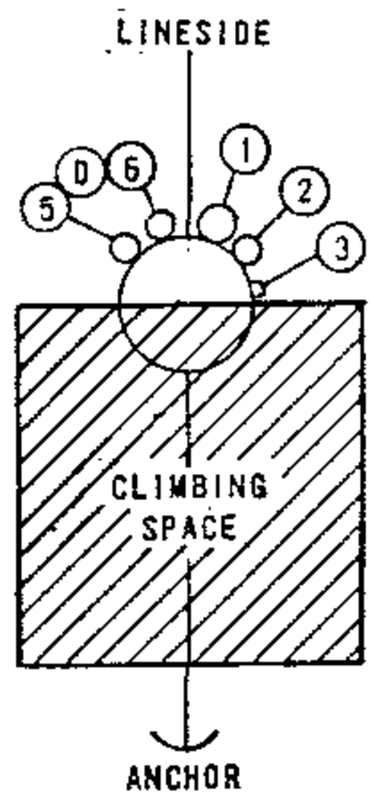

FIGURE 3

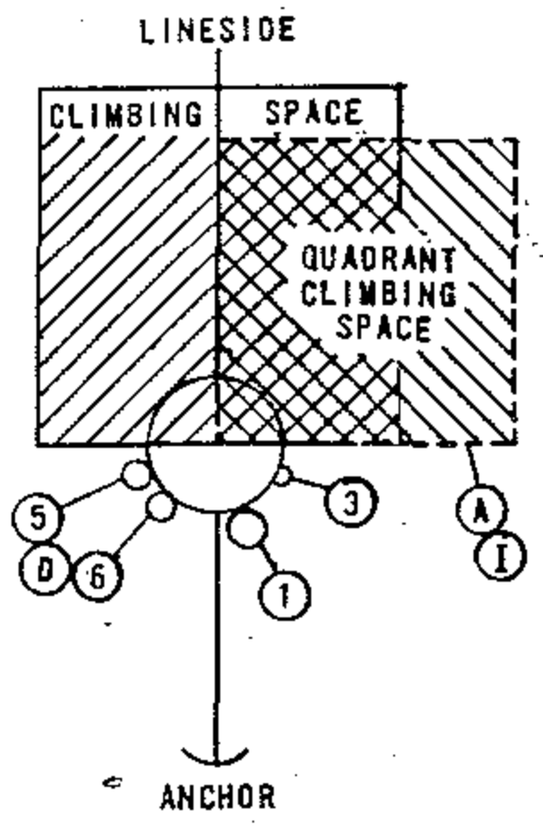

FIGURE 4

DEAD END CONSTRUCTION

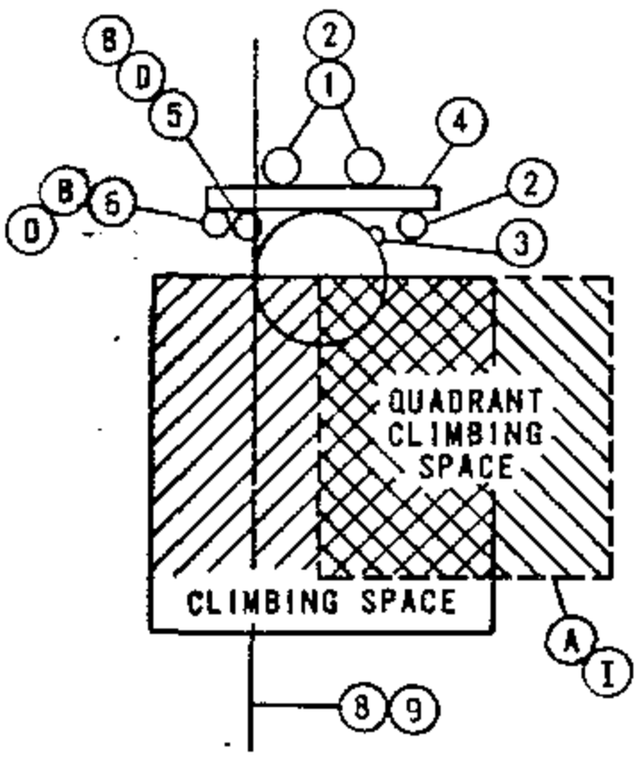

FIGURE 5

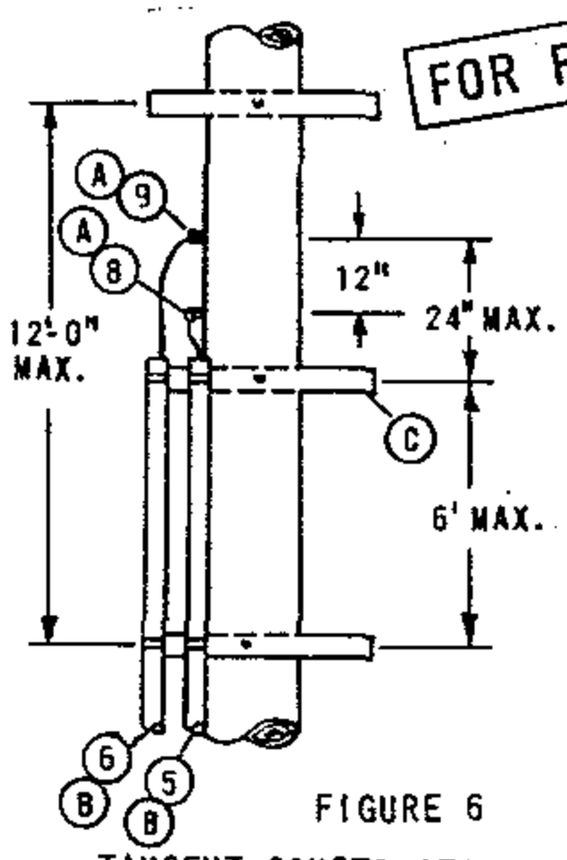

FIGURE 6

FOR FIELD MAINTENANCE ONLY

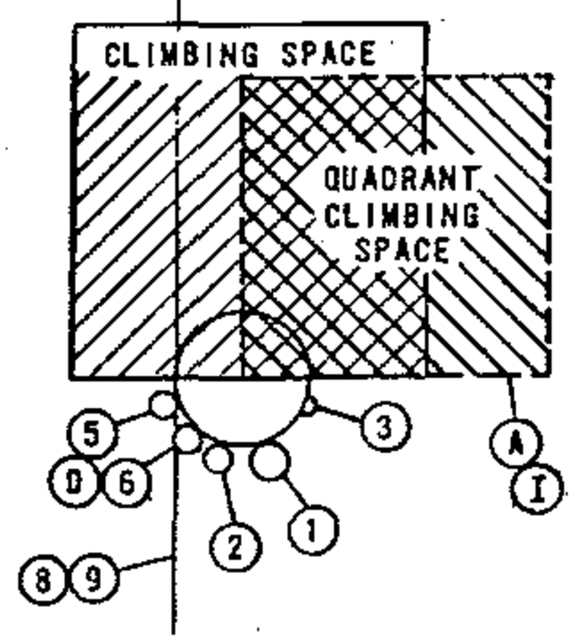

FIGURE 7

TANGENT CONSTRUCTION

INSTALLATION:

(A) QUADRANT CLIMBING SPACE PROVIDED THROUGH CATV AND TELCO AERIAL ATTACHMENT LEVELS ONLY:

(B) C.A.T.V. AND TELCO TO ATTACH CONDUIT TO BACK SIDE OF RISER LADDER ARMS.

(C) C.A.T.V. OR TELCO TO PLACE RISER LADDER ARM TO HOLD TOP OF OWN CONDUIT.

(D) C.A.T.V. AND TELCO TO ALWAYS BE IN SAME QUADRANT.

F. CONDUIT RISER AT BASE OF POLE NOT TO INFRINGE ON CURB OR SIDEWALK POSITIONS.

REFERENCES:

G. PVC RISERS ARE NOT PERMITTED WITHIN THE CLIMBING SPACE PER G.O. 95 RULE 22.2C.

H. G.O. 95 RULE 91.3-A1C REQUIRES POLE STEPS ON ALL JOINTLY USED CABLE POLES (SEE STANDARD 363).

I. SEE SECTION 200 FOR ALLOWABLE G.O. 95 CLIMBING SPACE OBSTRUCTIONS.

J. NO CATV OR TELCO JUMPERS ALLOWED IN QUADRANT CLIMBING SPACE PER G.O. 95 RULE 84.7.

ITEM	DESCRIPTION	ITEM	DESCRIPTION
1	SDG&E PRIMARY RISER	6	C.A.T.V. RISER POSITION
2	SDG&E SECONDARY RISER	7	TELCO DEAD END ATTACHMENT
3	SDG&E ELECTRIC GROUND	8	TELCO TANGENT (THRU) POSITION
4	RISER LADDER ARM	9	C.A.T.V. TANGENT (THRU) POSITION
5	TELCO RISER POSITION	10	C.A.T.V. DEAD END ATTACHMENT

DATE 11-16-81
APPD JEY

SDG&E ELECTRIC STANDARDS

JOINT CABLE POLE RISERS USING WOODEN LADDER ARMS

OH 1499.001
~~UG 4299.001~~
SUPERSEDES
1402.1 (11-16-81)

TABLE OF CONTENTS

FIELD MAINTENANCE ONLY

REVISION HISTORY:

7/13/2016: All versions prior to 2016 are superseded by their current version found inside the Overhead Construction Standard Manual.

TABLE OF CONTENTS

© 1998 - 2016 San Diego Gas & Electric Company. All rights reserved. Removal of this copyright notice without permission is not permitted under law.

REV	CHANGE	BY	DSGN	APPV	DATE	REV	CHANGE	BY	DSGN	APPV	DATE
C						F					
B						E					
A	ORIGINAL ISSUE	JS	IL	MDJ	7/13/2016	D					

X Indicates Latest Revision | Completely Revised | New Page | Information Removed

SHEET
1 OF 1

SDG&E ELECTRIC OVERHEAD STANDARD

CABLE POLE TERMINAL MOUNTING INFORMATION
(PORCELAIN TERMINATIONS)
(FOR CONTAMINATION DISTRICT 1)

FMO
OH 1407

SCOPE: THIS STANDARD SHOWS VARIOUS METHODS OF CABLE TERMINATION BRACKETS USED TO CONNECT UNDERGROUND CABLES TO OVERHEAD CONDUCTORS.

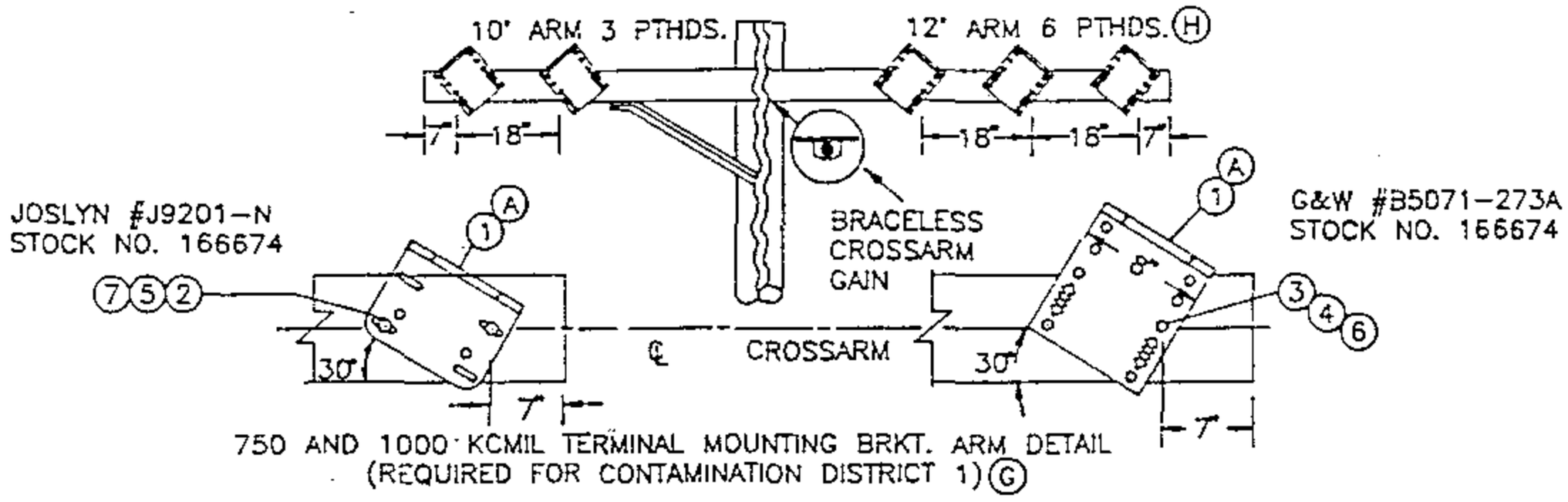

750 AND 1000 KCMIL TERMINAL MOUNTING BRKT. ARM DETAIL
(REQUIRED FOR CONTAMINATION DISTRICT 1) (G)

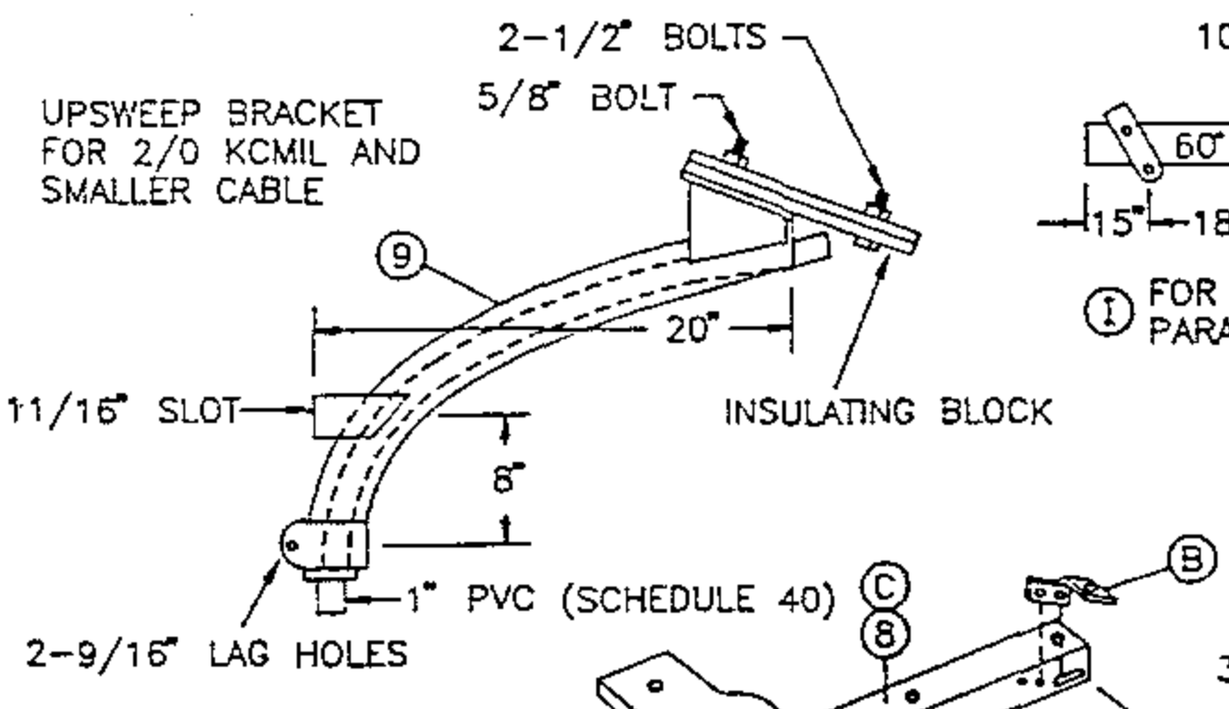

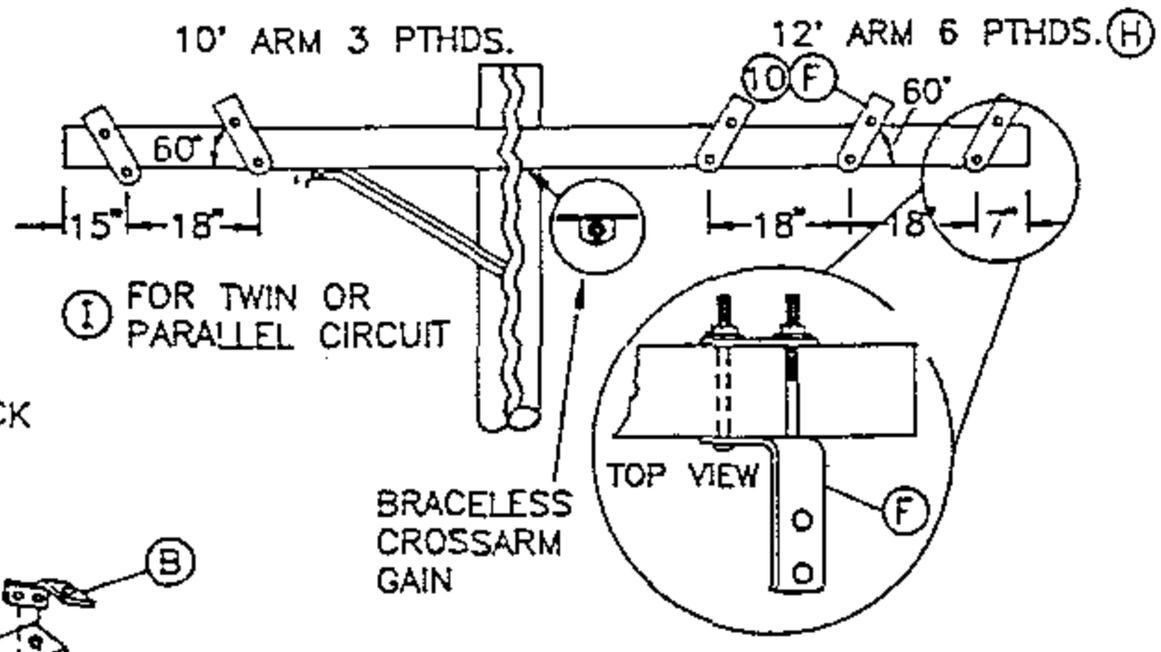

350 KCMIL TERMINAL MOUNTING BRKT. ARM DETAIL
(REQUIRED FOR CONTAMINATION DISTRICT 1)

FOR FIELD MAINTENANCE ONLY

BILL OF MATERIAL:

ITEM	DESCRIPTION	QUANTITY	STOCK NO. OR CONSTR STD	ASSEMBLY UNITS
1	BRACKET, POTHEAD MOUNTING	3 OR 6	166674	P-X-BK
2	BOLT, MACHINE, GALV. 1/2" x 5" (E)	2	153024	-
3	BOLT, MACHINE, GALV. 3/8" x 5" (E)	2	154368	-
4	WASHER, 3/8" ROUND (E)	4	800288	-
5	WASHER, 1/2" ROUND (E)	4	800192	-
6	WASHER, 3/8" DBL COIL (E)	2	798528	-
7	WASHER, 1/2" DBL COIL (E)	2	798464	-
8	BRACKET TRIPLE TERMINAL (C)	1	166676	(OVERHEAD) TTB
9	BRACKET GALV. TERMINAL UPSWEEP	1	166856	(OVERHEAD) USB
10	BRACKET, CROSSARM TERMINAL	3 OR 6	166060	-

INSTALLATION:

(A) HOLES IN ARM FOR POTHEAD MOUNTING BRACKETS ARE DRILLED BY OVERHEAD CREWS.
(B) THREE OF THESE BRACKETS ARE SUPPLIED WITH THE TRIPLE TERMINAL BRACKET (ITEM 8).
(C) THIS CONSTRUCTION TO BE USED ONLY FOR CABLE SIZES 2/0 AND BELOW.
(E) EXEMPT MATERIAL.
(F) TURN TOP OF BRACKET OUTWARD TO OBTAIN APPROX. 60° ANGLE.

REFERENCE:

(G) FOR CONSTRUCTION IN CONTAMINATION DISTRICTS 2 AND 3, SEE STANDARD 1407.2/4207.2.
(H) SEE STANDARD 1407.2/4207.2 FOR TERMINAL AND LIGHTNING ARRESTER DETAIL.
(I) SEE STANDARD 1442.1/4242.1 FOR 3-350 KCMIL POTHEADS ON A 10 FOOT CROSSARM.

TABLE OF CONTENTS

H 1499.010 ~~G 4299.010~~ SUPERCEDES 1407.1 (1-1-93)	SDG&E ELECTRIC STANDARDS CABLE POLE TERMINAL MOUNTING INFORMATION (PORCELAIN TERMINATIONS) (FOR CONTAMINATION DISTRICT 1)	DATE 1-1-93 APPD JLB/RDA

12' ARM 6 PTHS AND 6 ARRESTORS

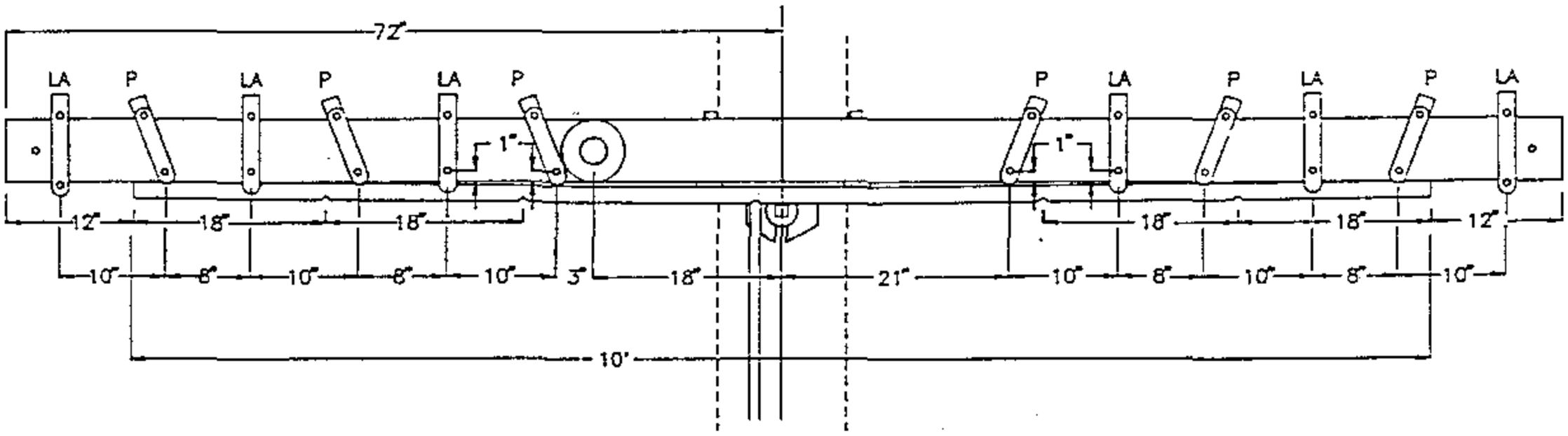

350 KCMIL TERMINAL AND LIGHTNING ARRESTER BRACKETS MOUNTING DETAIL

P=POTHEAD BRACKET

LA=LIGHTNING ARRESTER BRACKET

FOR FIELD MAINTENANCE ONLY

TABLE OF CONTENTS

12' ARM 6 PTHS AND 6 ARRESTORS

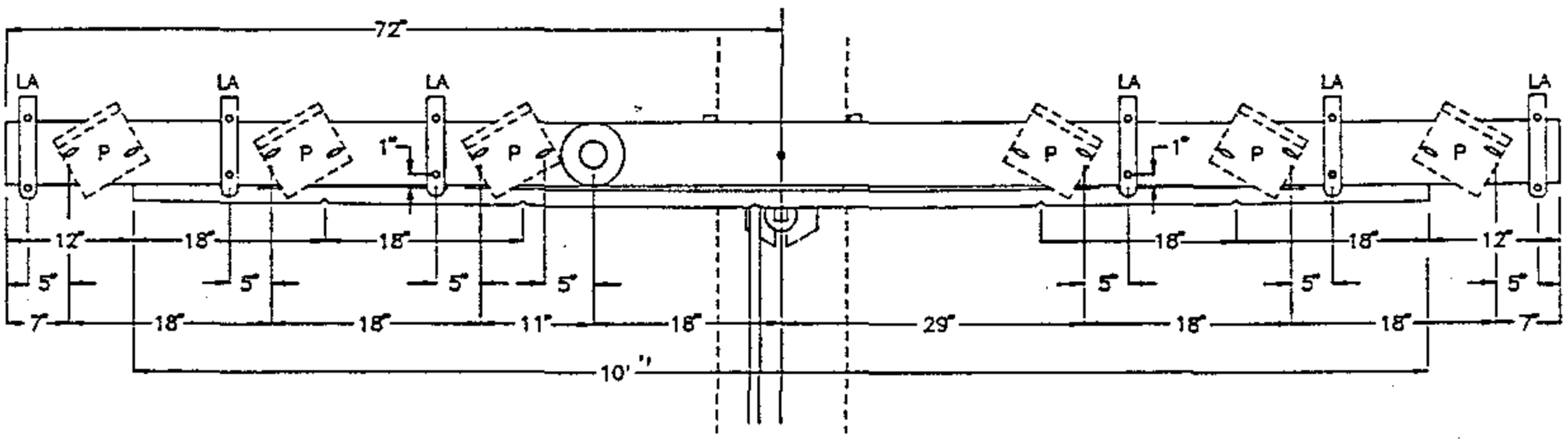

750 AND 1000 KCMIL TERMINAL AND LIGHTNING ARRESTER BRACKETS MOUNTING DETAIL

DATE 1-1-93 APPD JLB/RDJ	SDG&E ELECTRIC STANDARDS CABLE POLE TERMINAL MOUNTING INFORMATION (PORCELAIN TERMINATIONS) (FOR CONTAMINATION DISTRICT 1)	OH 1499.011 ~~UG 4299.011~~ SUPERCEDES 1407.2 (1-1-93)

SCOPE: THIS STANDARD SHOWS VARIOUS METHODS OF INSTALLING CABLE TERMINATING MOUNTING BRACKETS FOR NON–PORCELAIN TERMINALS.

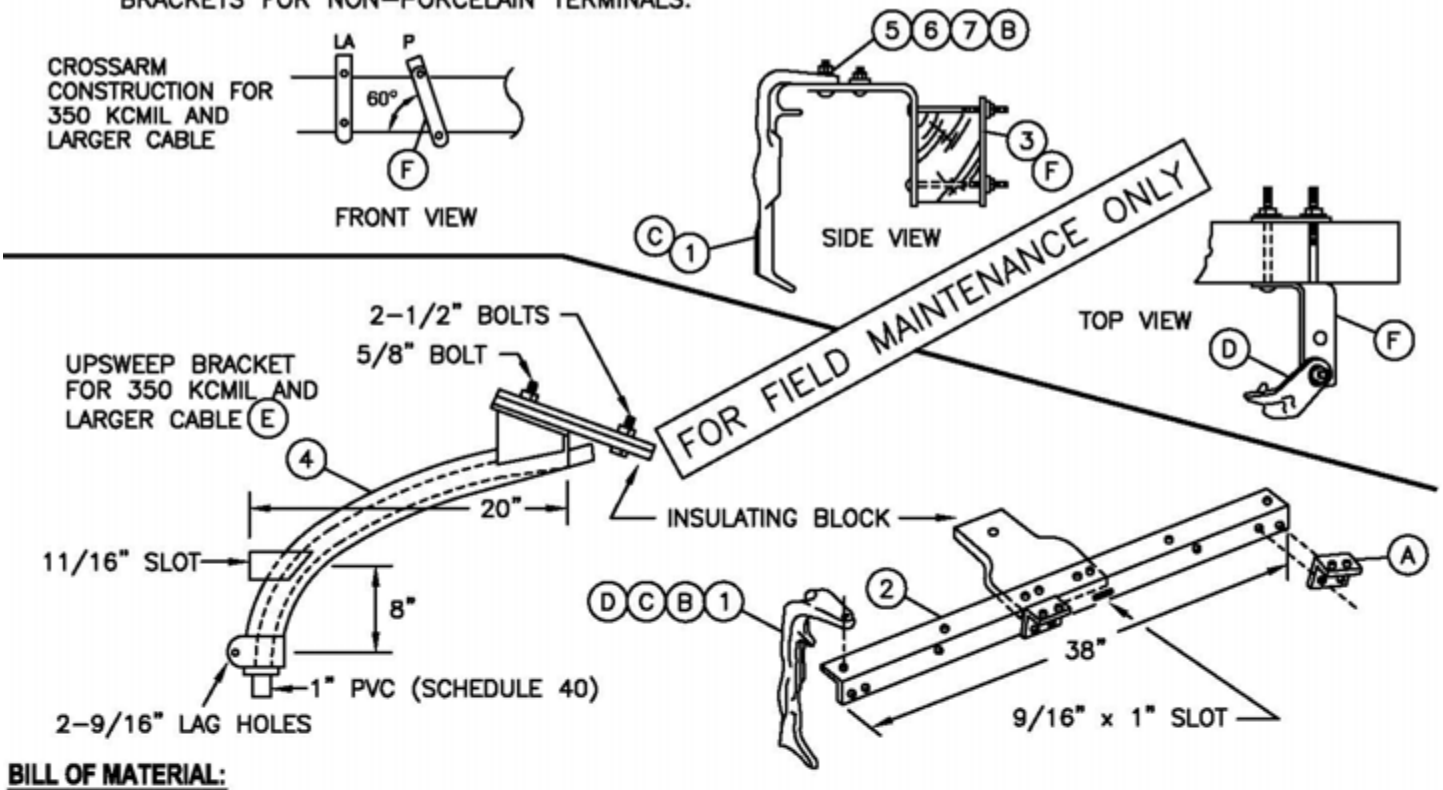

BILL OF MATERIAL:

ITEM	DESCRIPTION	QUANTITY	CONST STD OR PAGE NO	STOCK NUMBER	ASSEMBLY UNITS
1	BRACKET, MOUNTING CS 820	3 OR 6	4111	166064	NP–BKT
2	BRACKET, TRIPLE TERMINAL (E)	1	–	166676	(OVERHEAD) TTB
3	BRACKET, CROSSARM TERMINAL	3 OR 6	–	166060	(OVERHEAD) 2/0BKT
4	BRACKET, TERMINAL UPSWEEP, GALV (E)	1	–	166856	(OVERHEAD) USB
5	BOLT, MACHINE, GALV 1/2" x 2"	3 OR 6	392.1	152832	
6	WASHER, ROUND 1/2"	3 OR 6	392.2	800192	
7	WASHER, SPRING LOCK 1/2"	3 OR 6	392.2	796768	

NOTES:

– PORCELAIN TERMINALS (POTHEADS) ARE REQUIRED IN SUBSTATIONS (ALL DISTRICTS). SEE NOTE (I).

INSTALLATION:

(A) THREE BRACKETS ARE SUPPLIED WITH THE TRIPLE TERMINAL BRACKET.

(B) CS 820 MOUNTING BRACKETS SHALL BE BOLTED TO THE TOP OF THE TRIPLE TERMINAL BRACKET OR CROSSARM TERMINAL BRACKET.

(C) FOLLOW MANUFACTURES INSTRUCTIONS FOR SECURING CABLE TO MOUNTING BRACKET.

(D) MOUNTING BRACKET CS 820 TO BE POSITIONED TO CONFIRM WITH THE LAY OF THE CABLE.

(E) THESE ITEMS FIELD MAINTENANCE ONLY.

(F) TURN TOP OF BRACKET OUTWARD TO OBTAIN APPROX 60 ANGLE.

REFERENCE:

H. SEE STD. 4111 FOR OUTDOOR CABLE TERMINALS, FOR POLYETHYLENE CABLES.

(I) SEE STD. PG. 1499.010/4299.010 FOR PORCELAIN MOUNTING BRACKETS.

© 1998 - 2010 San Diego Gas & Electric Company. All rights reserved. Removal of this copyright notice without permission is not permitted under law.

OH 1499.012 UG 4299.012 SUPERSEDES 1407 (1–1–94)	SDG&E ELECTRIC STANDARDS CABLE POLE TERMINAL MOUNTING INFORMATION (NON–PORCELAIN TERMINALS)	DATE 1–1–94 APPD JLG/RDS

TABLE OF CONTENTS

FIELD MAINTENANCE ONLY

REVISION HISTORY:

7/13/2016: All versions prior to 2016 are superseded by their current version found inside the Overhead Construction Standard Manual.

TABLE OF CONTENTS

© 1998 - 2016 San Diego Gas & Electric Company. All rights reserved. Removal of this copyright notice without permission is not permitted under law.

REV	CHANGE	BY	DSGN	APPV	DATE	REV	CHANGE	BY	DSGN	APPV	DATE
C						F					
B						E					
A	ORIGINAL ISSUE	JS	IL	MDJ	7/13/2016	D					

X Indicates Latest Revision | Completely Revised | New Page | Information Removed

SHEET
1 OF 1

SDG&E ELECTRIC OVERHEAD STANDARD

0-750V CUSTOMER OWNED UNDERGROUND SERVICE
FROM AN OVERHEAD LINE, ONE DUCT

FMO
OH 1415

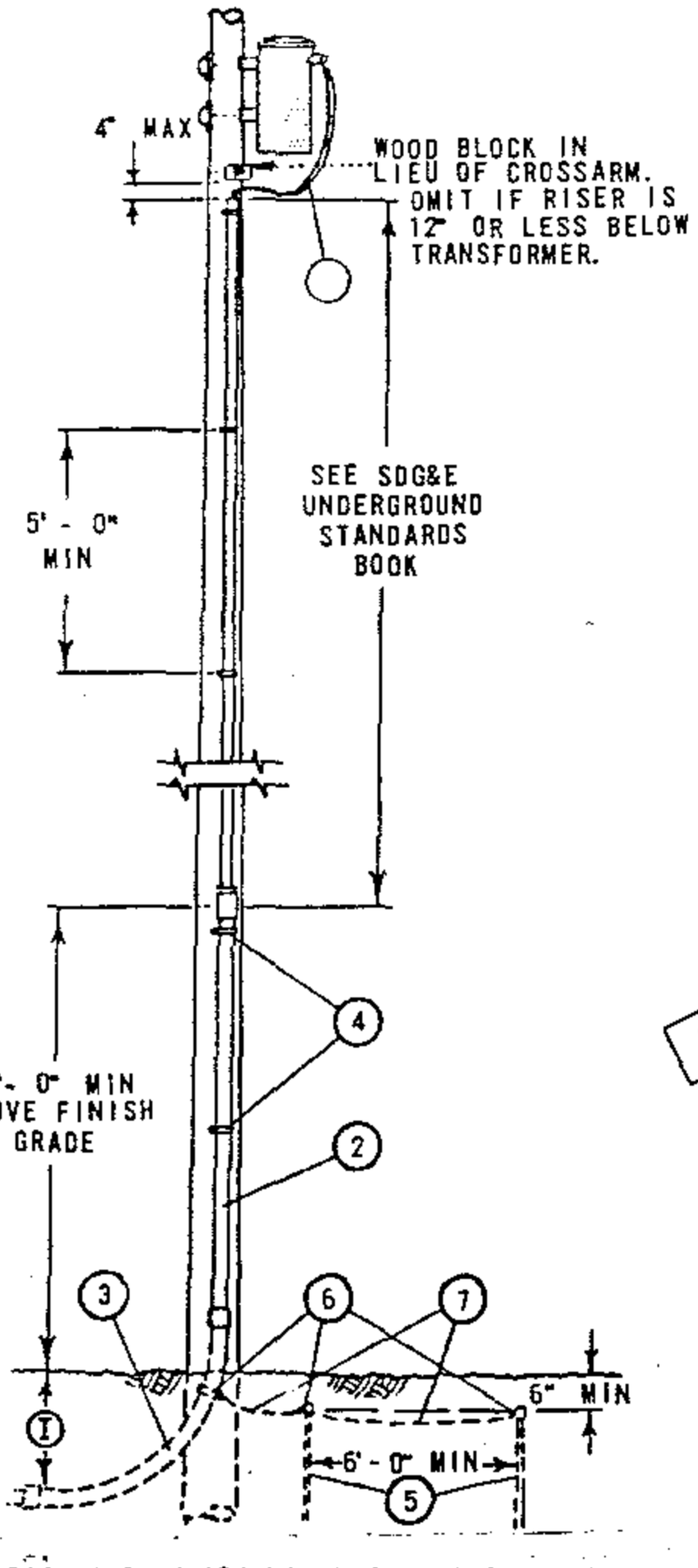

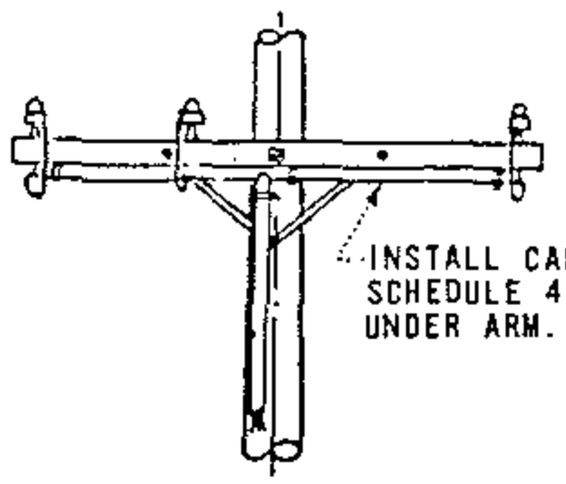

CROSSARM CONSTRUCTION

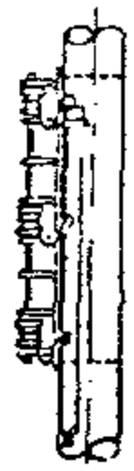

RACK CONSTRUCTION

FOR FIELD MAINTENANCE ONLY

NOTES:

(A) SEE PAGE 7404 /4204 FOR RISER CONSTRUCTION.

(B) CUSTOMER'S SERVICE ENTRANCE CONDUCTORS SHALL RUN CONTINUOUSLY WITHOUT SPLICES FROM SERVICE EQUIPMENT TO SECONDARY OR TRANSFORMER TERMINALS AND SHALL BE OF A LENGTH SUFFICIENT TO FORM DRIP LOOPS AT THE TOP OF THE RISER. CONTRACTOR SHALL IDENTIFY SERVICE ENTRANCE CONDUCTORS WITH CODING OR TAGGING FOR PURPOSE OF PARALLELING PHASES AND NEUTRALS. MAXIMUM SIZE OF EACH CONDUCTOR, SINGLE OR PARALLELED RUNS, SHALL NOT EXCEED 500 KCM.

(C) WHEN ITEMS 2 AND 3 ARE SCHEDULE 80 PVC OMIT ITEMS 5, 6, AND 7.(SEE SDG&E UNDERGROUND STANDARDS BOOK)

(D) OMIT ITEMS 5, 6, AND 7 WHERE CUSTOMER'S UNDERGROUND CONDUIT RUN IS AN APPROVED METALLIC CONDUIT.

(F) OMIT ITEM 5, AND 7 WHERE #6 BARE COPPER BONDING WIRE IS INSTALLED BETWEEN ITEMS 3 AND CUSTOMER'S SERVICE ENTRANCE EQUIPMENT.

(G) USE TWO ROD GROUND SPACED A MINIMUM OF 6 FEET APART.

H. APPROVED METALLIC CONDUIT OR #6 BARE COPPER BONDING WIRE SHALL BE GROUNDED AT THE SERVICE ENTRANCE IN ACCORDANCE WITH REQUIREMENTS OF THE LOCAL INSPECTION AUTHORITY.

(I) 18" MIN DEPTH ON PRIVATE AND PUBLIC PROPERTY OTHER THAN STREETS AND ALLEYS. 24" MIN DEPTH ACROSS STREETS AND ALLEYS. 24" MIN TO BE MAINTAINED CONTINUOUSLY WHERE DUCTS TRAVERSE BOTH STREETS (AND ALLEYS) AND PRIVATE PROPERTY. 24" MIN DEPTH FOR NON-METALLIC CONDUITS.

MATERIAL FURNISHED AND INSTALLED BY CUSTOMER

ITEM	DESCRIPTION (A)	
1	CUSTOMER'S SERVICE ENTRANCE CONDUCTORS	(B)
2	CONDUIT, GALV. IRON RIGID RISER	(C)
3	CONDUIT, GALV IRON BEND, 90°, 36" RADIUS	(C)
4	STRAP, PIPE GALV, 2-10D GALV NAILS	
5	RODS, 5/8" X 8' - 0" COPPERCLAD STEEL GROUND	(D) (F) (G)
6	CLAMPS, APPROVED TYPE GROUNDING	(D)
7	WIRE, #6 BARE STRANDED COPPER	(D) (F)

OH 1499.101
~~UG 4299.101~~
SUPERSEDES
1415 (11-16-81)

SDG&E ELECTRIC STANDARDS

0-750V CUSTOMER OWNED UNDERGROUND SERVICE FROM AN OVERHEAD LINE, ONE DUCT

DATE 11-16-81
APPD JEY

TABLE OF CONTENTS

FIELD MAINTENANCE ONLY

REVISION HISTORY:

7/13/2016: All versions prior to 2016 are superseded by their current version found inside the Overhead Construction Standard Manual.

TABLE OF CONTENTS

© 1998 - 2016 San Diego Gas & Electric Company. All rights reserved. Removal of this copyright notice without permission is not permitted under law.

REV	CHANGE	BY	DSGN	APPV	DATE	REV	CHANGE	BY	DSGN	APPV	DATE
C						F					
B						E					
A	ORIGINAL ISSUE	JS	IL	MDJ	7/13/2016	D					

X Indicates Latest Revision | Completely Revised | New Page | Information Removed

SHEET
1 OF 1

SDG&E ELECTRIC OVERHEAD STANDARD

0-750V CUSTOMER OWNED UNDERGROUND SERVICE
FROM AN OVERHEAD LINE, TWO DUCTS

FMO
OH 1417

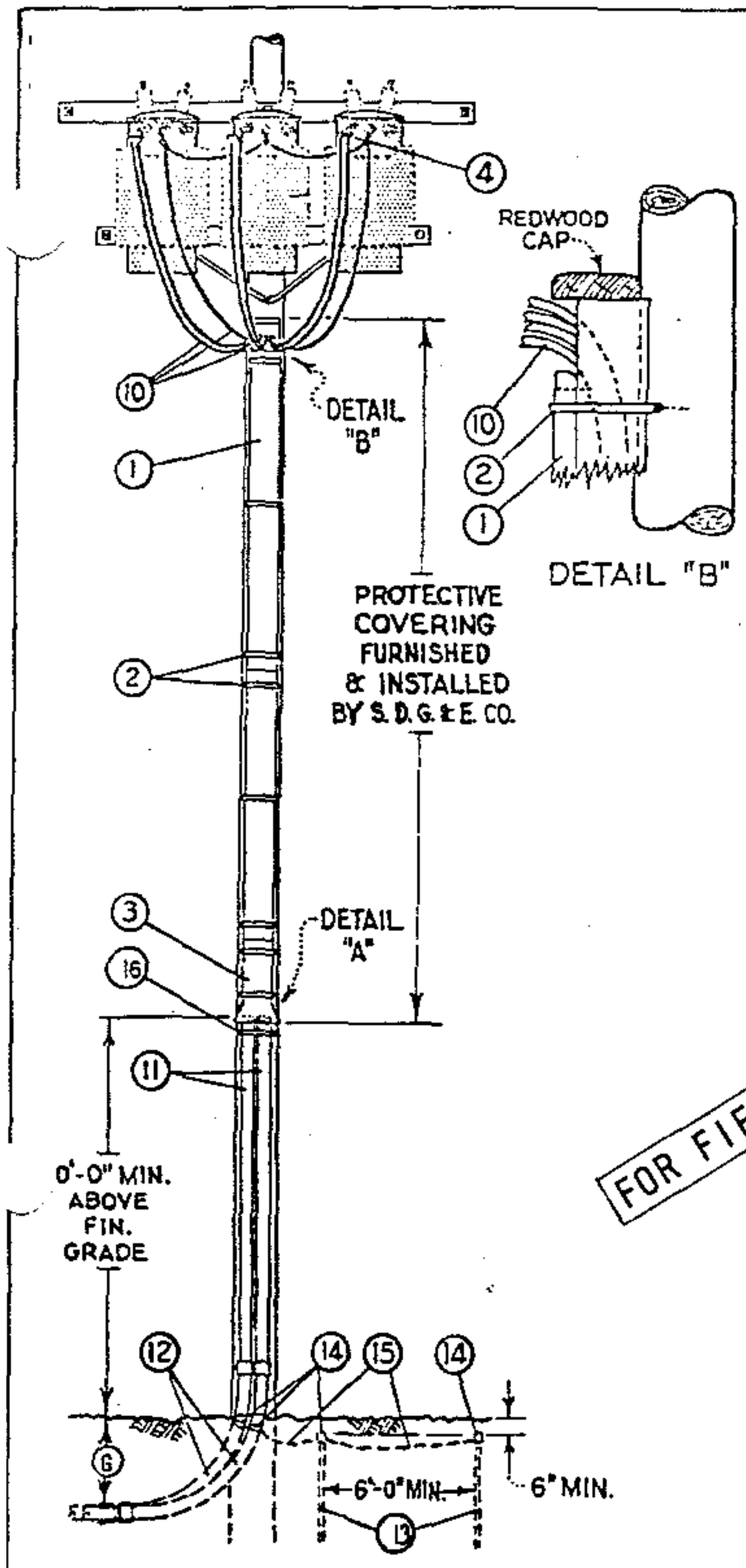

MATERIAL FURNISHED AND INSTALLED BY SDG&E			
ITEM	DESCRIPTION	QUANT.	STOCK NO. OR CONSTR STD
1	REDWOOD BOX MOULDING, SIZE AS REQUIRED	16'	PG 143
2	MOULDING STRAPS, SIZE AS REQ'D	6	PG 143
3	REDWOOD MOULDING BASE FOR 5¼"X6⅜", INSIDE DIMENSIONS, RDWD. BOX MOULDING	AS REQ'D	PG 143
4	MULTIPLE TAP CONNECTORS, 2 LUG	AS REQ'D	PG 793
7	BOX NAILS, GALV., 10D	½#	491392
8	BOX NAILS, GALV., 16D	½#	491424

QUANTITIES SHOWN ARE BASED ON A 45' POLE AND TRANSFORMER SECONDARIES CONNECTED 120-208Y. WYE.

MATERIAL FURNISHED AND INSTALLED BY CUSTOMER (A)		
10	CUSTOMER'S SERVICE ENTRANCE CONDUCTORS (B)	SEE SDG&E UNDERGROUND STANDARD BOOK
11	G.I. RIGID CONDUIT RISERS	
12	G.I. RIGID CONDUIT BENDS, 90°, 36" RADIUS	
13	5/8"DIAM. X 8'-0" COPPERCLAD STEEL GRND. RODS (C)(D)(E)	
14	APPROVED TYPE GROUNDING CLAMPS (C)	
15	#6 BARE STRANDED COPPER GROUND WIRE (C)(D)	
16	HEAVY PLUMBERS TAPE, HOT-DIP GALVANIZED	

FOR FIELD MAINTENANCE ONLY

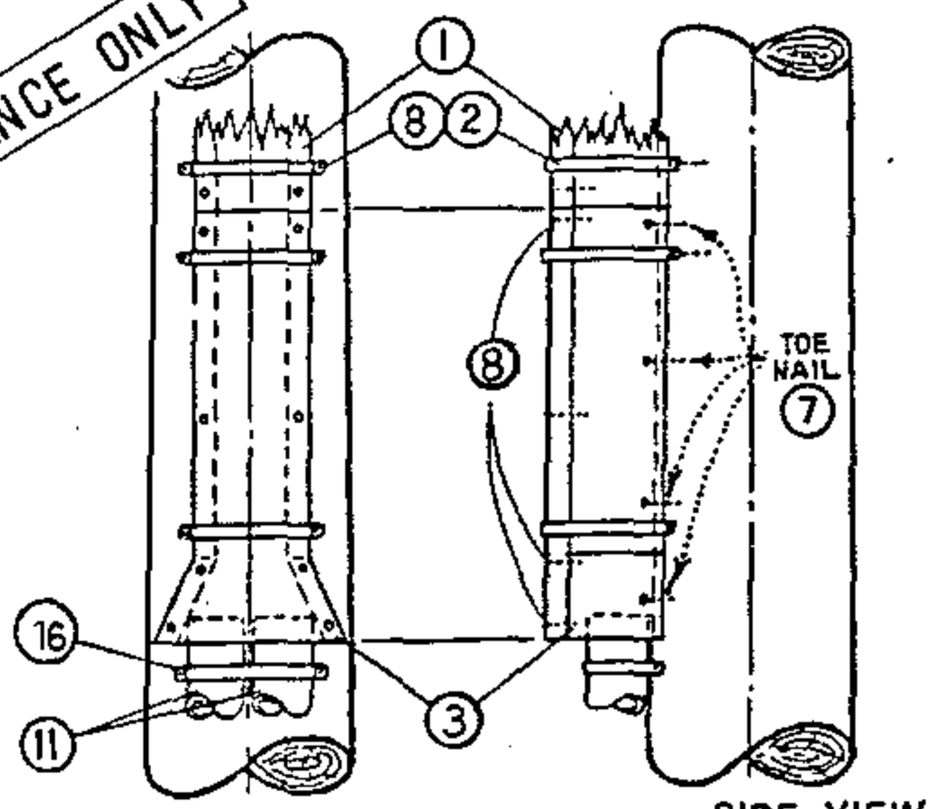

DETAIL "A"

REQUIRED FOR 2-3½" OR 4" DIAM. G.I. RISERS

NOTES:

(A) SEE SDG&E UNDERGROUND STANDARDS BOOK FOR CABLE CONDUIT SIZING INFORMATION.

(B) CUSTOMER'S SERVICE ENTRANCE CONDUCTORS SHALL RUN CONTINUOUSLY WITHOUT SPLICES FROM SERVICE EQUIPMENT TO TRANSFORMER TERMINALS AND SHALL BE OF A LENGTH SUFFICIENT TO FORM DRIP LOOPS AT THE TOP OF THE RISER. CONTRACTOR SHALL IDENTIFY SERVICE ENTRANCE CONDUCTORS WITH CODING OR TAGGING FOR PURPOSE OF PARALLELING PHASES AND NEUTRALS. MAXIMUM SIZE OF EACH CONDUCTOR, SINGLE OR PARELLELED RUNS, SHALL NOT EXCEED 500 KCM

(C) OMIT ITEMS 13, 14, AND 15 WHERE CUSTOMER'S UNDERGROUND CONDUIT RUN IS AN APPROVED METALLIC CONDUIT.

(D) OMIT ITEM NUMBERS 13 AND 15 WHERE #6 BARE COPPER BONDING WIRE IS INSTALLED BETWEEN ITEM 12 AND CUSTOMER'S SERVICE ENTRANCE EQUIPMENT.

(E) USE TWO ROD GROUND.

F. APPROVED METALLIC CONDUIT OR #6 BARE COPPER BONDING WIRE SHALL BE GROUNDED AT THE SERVICE ENTRANCE IN ACCORDANCE WITH REQUIREMENTS OF THE LOCAL INSPECTION AUTHORITY.

(G) 18" MIN DEPTH ON PRIVATE AND PUBLIC PROPERTY OTHER THAN STREETS AND ALLEYS. 24" MIN DEPTH ACROSS STREETS AND ALLEYS. 24" MIN TO BE MAINTAINED CONTINUOUSLY WHERE DUCTS TRAVERSE BOTH STREETS (AND ALLEYS) AND PRIVATE PROPERTY. 24" MIN DEPTH FOR NON-METALLIC CONDUITS.

DATE 11-16-81
APPD JEY

SDG&E ELECTRIC STANDARDS

0-750V CUSTOMER OWNED UNDERGROUND SERVICE FROM AN OVERHEAD LINE, TWO DUCTS

1499.102
SUPERSEDES
1417 (11-16-81)

TABLE OF CONTENTS

FIELD MAINTENANCE ONLY

REVISION HISTORY:

7/13/2016: All versions prior to 2016 are superseded by their current version found inside the Overhead Construction Standard Manual.

TABLE OF CONTENTS

© 1998 - 2016 San Diego Gas & Electric Company. All rights reserved. Removal of this copyright notice without permission is not permitted under law.

REV	CHANGE	BY	DSGN	APPV	DATE	REV	CHANGE	BY	DSGN	APPV	DATE
C						F					
B						E					
A	ORIGINAL ISSUE	JS	IL	MDJ	7/13/2016	D					

X Indicates Latest Revision | Completely Revised | New Page | Information Removed

SHEET
1 OF 1

SDG&E ELECTRIC OVERHEAD STANDARD

0-750V CUSTOMER OWNED UNDERGROUND SERVICE
FROM AN OVERHEAD LINE, THREE AND FOUR DUCTS

FMO
OH 1418

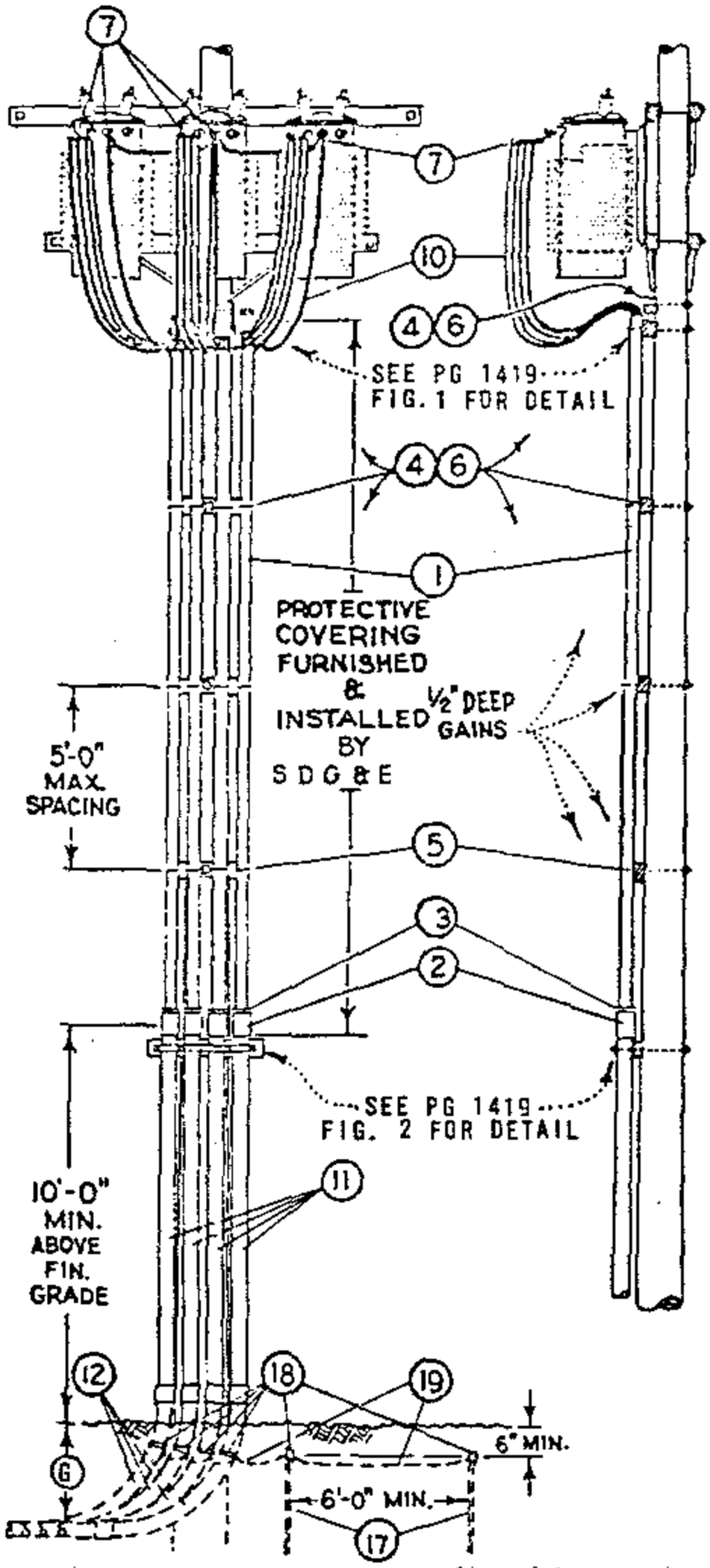

MATERIAL FURNISHED AND INSTALLED BY SDG&E					
ITEM	DESCRIPTION	QUANTITY NO. OF RISERS 3	QUANTITY NO. OF RISERS 4	STOCK NO. OR CONSTR STD 3"	STOCK NO. OR CONSTR STD 4"
⊙1	3" OR 4" DIAM. PLASTIC CONDUIT, PVC TYPE II, SCHEDULE 40, 20' LENGTHS	60'	80'	251552	251584
⊹2	COUPLINGS, PLASTIC, SIZE AS REQUIRED	3	4	280448	280480
⊙3	BUSHINGS, PLASTIC, 4"OR 3½"X3" DIAM. FOR REDUCING CUSTOMER'S CONDUIT RISERS, WHERE REQUIRED	3	4	3 1/2" X 3" 181024, 4" X 3" - 181056	
4	RISER SUPPORT BLOCKS, 3½"x4½"x2'-0"	5	5	PG 1419 IT. 4	
5	"J" BOLT, 1 SQ WASHER	12	16	PGS 139, 140	
6	MACH. BOLT, GALV., ⅝"x16"-20", 2 SQ. WASHERS & 1 NUT	5	5	PGS 139, 140	
7	MULTIPLE TAP CONNECTORS, SPECIFY NUMBER OF LUGS	6	6	PG 793	

⊙ QUANTITIES SHOWN ARE BASED ON A 45' POLE AND TRANSFORMER SECONDARIES CONNECTED 120/208 V WYE.

⊹ UNTHREADED FOR SLIP FIT OVER RIGID CONDUIT RISER.

MATERIAL FURNISHED AND INSTALLED BY CUSTOMER		
ITEM	DESCRIPTION (A)	STOCK NO.
10	CUSTOMER'S SERVICE ENTRANCE CONDUCTORS (B)	SEE SDG&E UNDERGROUND STANDARD BOOK
11	G.I. RIGID CONDUIT RISERS	
12	G. I. RIGID CONDUIT BENDS, 90°, 36" RADIUS	
13	SPACER BLOCK	
14	STRAP, GALV	
15	FOUR ½"X 9" MACH. BOLTS, GALV., 1 RD. WASHER	
16	ONE ⅝"X 20" MACH. BOLT, GALV., 2-2" SQ. WASHERS	
17	⅝"X 8'-0" COPPERCLAD STEEL GROUND RODS (C) (D) (E)	
18	APPROVED TYPE GROUNDING CLAMPS (C)	
19	#6 BARE STRANDED COPPER GROUND WIRE (C) (D)	

FOR FIELD MAINTENANCE ONLY

NOTES:

(A) SEE UNDERGROUND STANDARDS BOOK FOR CABLE CONDUIT SIZING INFORMATION.

(B) CUSTORMER'S SERVICE ENTRANCE CONDUCTORS SHALL RUN CONTINUOUSLY WITHOUT SPLICES FROM SERVICE EQUIPMENT TO TRANSFORMER TERMINALS AND SHALL BE OF A LENGTH SUFFICIENT TO FORM DRIP LOOPS AT THE TOP OF THE RISER. CONTRACTOR SHALL IDENTIFY SERVICE ENTRANCE CONDUCTORS WITH CODING OR TAGGING FOR PURPOSE OF PARALLELING PHASES AND NEUTRALS. MAXIMUM SIZE OF EACH CONDUCTOR, SINGLE OR PARALLELED RUNS, SHALL NOT EXCEED 500 KCM.

(C) OMIT ITEM 17, 18, AND 19 WHERE CUSTOMER'S UNDERGROUND CONDUIT RUN IS AN APPROVED METALLIC CONDUIT.

(D) OMIT ITEM 17, AND 19 WHERE #6 BARE COPPER BONDING WIRE IS INSTALLED BETWEEN ITEM 12 AND CUSTOMER'S SERVICE ENTRANCE IN ACCORDANCE WITH REQUIREMENTS OF THE LOCAL INSPECTION AUTHORITY.

(E) USE TWO ROD GROUND.

F. APPROVED METALLIC CONDUIT OR #6 BARE COPPER BONDING WIRE SHALL BE GROUNDED AT THE SERVICE ENTRANCE IN ACCORDANCE WITH REQUIREMENTS OF THE LOCAL INSPECTION AUTHORITY.

(G) 18" MIN DEPTH ON PRIVATE AND PUBLIC PROPERTY OTHER THAN STREETS OR ALLEYS. 24" MIN DEPTH ACROSS STREETS AND ALLEYS. 24" MIN TO BE MAINTAINED CONTINUOUSLY WHERE DUCTS TRAVERSE BOTH STREETS (AND ALLEYS) AND PRIVATE PROPERTY. 24" MIN DEPTH FOR NON-METALLIC CONDUITS.

TABLE OF CONTENTS

1499.103 SUPERSEDES 418 (11-16-81)	SDG&E ELECTRIC STANDARDS 0-750V CUSTOMER OWNED UNDERGROUND SERVICE FROM AN OVERHEAD LINE, THREE AND FOUR DUCTS	DATE 11-16-81 APPD JED

FIELD MAINTENANCE ONLY

REVISION HISTORY:

7/13/2016: All versions prior to 2016 are superseded by their current version found inside the Overhead Construction Standard Manual.

TABLE OF CONTENTS

© 1998 - 2016 San Diego Gas & Electric Company. All rights reserved. Removal of this copyright notice without permission is not permitted under law.

REV	CHANGE	BY	DSGN	APPV	DATE	REV	CHANGE	BY	DSGN	APPV	DATE
C						F					
B						E					
A	ORIGINAL ISSUE	JS	IL	MDJ	7/13/2016	D					

X Indicates Latest Revision | Completely Revised | New Page | Information Removed

SHEET 1 OF 1

SDG&E ELECTRIC OVERHEAD STANDARD

CROSSARM MOUNTED TERMINALS 4KV 4 WIRE WYE

FMO OH 1428

TABLE OF CONTENTS

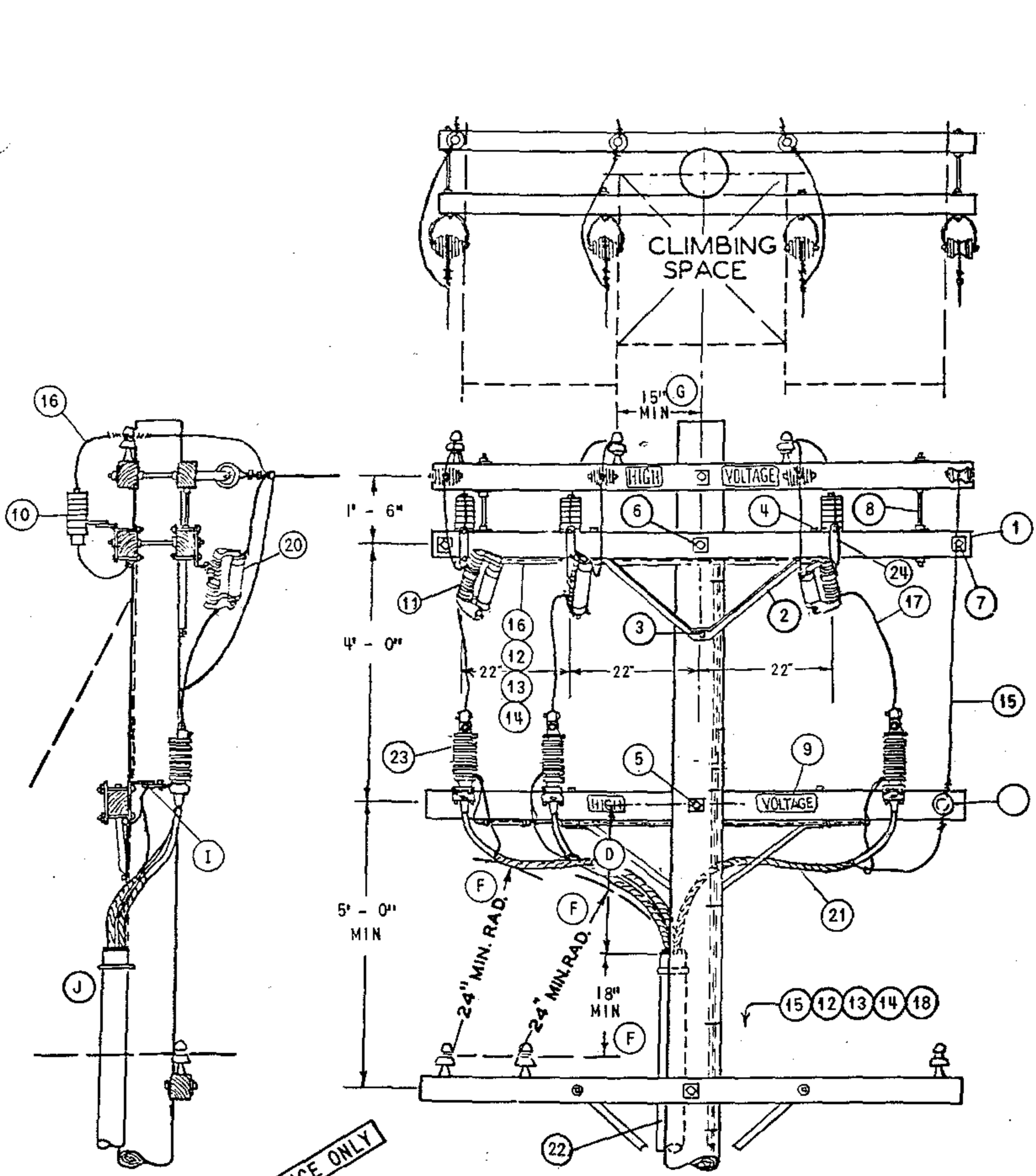

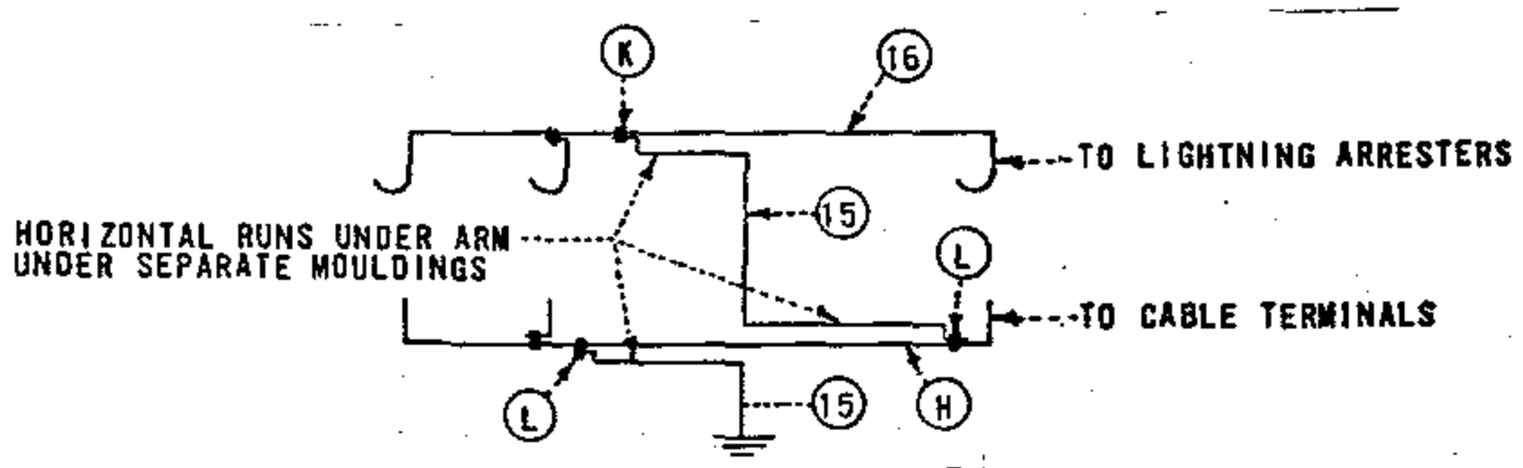

GROUND WIRE DETAIL (B)

DATE 8-27-82 APPD DRH	SDG&E ELECTRIC STANDARDS CROSSARM MOUNTED TERMINALS 4KV 4 WIRE WYE	OH 1499.201 ~~UG 4299.201~~ SUPERSEDES 1428.1 (11-16-81)

NOTES:

(A) UNIT GROUND COMPLETE ORDER 603120 WITH GRAY MOULDING, 603136 WITH PLAIN MOULDING

(B) INTERCONNECT ARRESTER GROUND LEAD DISCONNECTS WITH #6 BARE COPPER AND GROUND IT WITH #2 BARE COPPER NEAR CENTER ARRESTER.

(C) USE TWO GROUND RODS SPACED A MINIMUM OF 6' APART.

(D) 3 FOOT MINIMUM DIMENSION, 4 FOOT DIMENSION PREFERRED FOR 750 KCM AND LARGER 15KV CABLE.

(E) EXEMPT MATERIAL.

(F) G.O. 95 MINIMUM DIMENSION.

(G) G.O. 95 MINIMUM DIMENSION FOR 4KV. USE 18" MIN IF BUILT WITH 15KV CABLE.

(H) USE #2 BARE STRANDED COPPER OR LARGER AS REQUIRED.

(J) CONNECT NEUTRAL, TERMINAL AND SHIELDED CABLE GROUNDS TO LIGHTNING ARRESTER GROUND.

(J) INSTALL RISER ON FACE OF POLE OPPOSITE CLIMBING SPACE AND IN A POSITION NEAREST THE END OF ARM ON WHICH THE TWO 4KV PHASES ARE LOCATED.

(K) CONNECT #2 BARE STRANDED COPPER CONDUCTOR TO #6 BARE STRANDED COPPER CONDUCTOR AT POINT NEAR CENTER LIGHTNING ARRESTER.

(L) CONNECT #2 BARE STRANDED COPPER CONDUCTOR TO REQUIRED CONDUCTOR AT POINT NEAR CENTER TERMINAL AND END TERMINAL.

FOR FIELD MAINTENANCE ONLY

TABLE OF CONTENTS

	ITEM	DESCRIPTION	QUANTITY	STOCK NO. OR CONSTR STDS
PTF	1	CROSSARM, 3 3/4" X 5 3/4" X 10' - 0"	3	300 SECTION
	2	BRACE, ANGLE CROSSARM 4' - 0"	2	164032
	3	SCREW, LAG GALV, 5/8" X 5" (E)	2	621600
	4	BOLT, MACH GALV, 1/2" X 7", 1 RD WASH. & 1 DBL COIL WASH. (E)	4	PGS 139, 140
	5	BOLT, MACH GALV, 5/8" X 14", 2 - 3" SQ WASH. & 1 DBL COIL WASH. (E)	1	PGS 139, 140
	6	BOLT, MACH GALV, 5/8" X 20", 2 - 3" SQ WASH. & 1 DBL COIL WASH. (E)	1	PGS 139, 140
	7	BOLT, SPACE GALV, 5/8" X 20", 4 SQ WASH. & 4 DBL COIL WASH. (E)	2	PGS 139, 140
	8	BOLT, SPACE GALV, 5/8" X 28", 4 SQ WASH. & 4 DBL COIL WASH. (E)	2	PGS 139, 140
	9	SIGN, HIGH VOLTAGE & 8 ROOFING NAILS (E)	1	647648, 492224
UCD	10	ARRESTER, LIGHTNING 3KV	3	113216
	11	CUTOUT, FOR CURRENT-LIMITING FUSE	3	1200 SECTION
	12	STAPLES, FENCE GALV, 1 1/4" (A) (E)	25	678528
	13	MOULDING, HARDWOOD 1" (A)	55'	487200
	14	STAPLES, MOULDING GALV, 3" X 1 1/16" X 1/4" (A) (E)	25	678560
	15	WIRE, #2 BARE STRANDED COPPER (B)	44'	813664
	16	WIRE, #6 BARE STRANDED COPPER (B)	18'	813536
	17	WIRE, COPPER, SIZED PER U.G. CABLE AMPACITY.	8'	81
	18	ROD & CLAMP, GROUND (A) (C)	2	603072, 230016
	19	INSULATOR, 4KV WIRE HOLDER	1	413792
	20	FUSE, CURRENT-LIMITING SIZE AS SPECIFIED ON WORK ORDER	3	1200 SECTION
	21	CABLE, POLYETHYLENE, CONCENTRIC NEUTRAL PRIMARY	AS REQ'D	SEE UG. STDS
	22	RISER CONSTRUCTION	AS REQ'D	1400/4200 SECTION
	23	TERMINAL CABLE	3	UG BOOK
	24	BRACKET, CUTOUT /ARRESTER CROSSARM MOUNTING (E)	3	166070
	25			

OH 1499.202
~~UG 4299.202~~
SUPERSEDES
428.2 (11-16-81)

SDG&E ELECTRIC STANDARDS

CROSSARM MOUNTED TERMINALS 4KV 4 WIRE WYE

DATE 8-27-82
APPD

FIELD MAINTENANCE ONLY

REVISION HISTORY:

7/13/2016: All versions prior to 2016 are superseded by their current version found inside the Overhead Construction Standard Manual.

TABLE OF CONTENTS

© 1998 - 2016 San Diego Gas & Electric Company. All rights reserved. Removal of this copyright notice without permission is not permitted under law.

REV	CHANGE	BY	DSGN	APPV	DATE	REV	CHANGE	BY	DSGN	APPV	DATE
C						F					
B						E					
A	ORIGINAL ISSUE	JS	IL	MDJ	7/13/2016	D					

X Indicates Latest Revision | Completely Revised | New Page | Information Removed

SHEET
1 OF 1

SDG&E ELECTRIC OVERHEAD STANDARD

12.47KV AND BELOW 3Ø CABLE POLE 1/C PER Ø,
UPSWEEP BRACKET CONSTRUCTION

FMO
OH 1429

SCOPE: THIS STANDARD SHOWS TANGENT LINE (FIG.1) AND DEAD-END CONSTRUCTION (FIG.2) FOR 12.47 KV AND BELOW, 3Ø CABLE POLE WITH UPSWEEP BRACKET MOUNTED TERMINALS FOR #2/0 AND SMALLER UG CABLE.

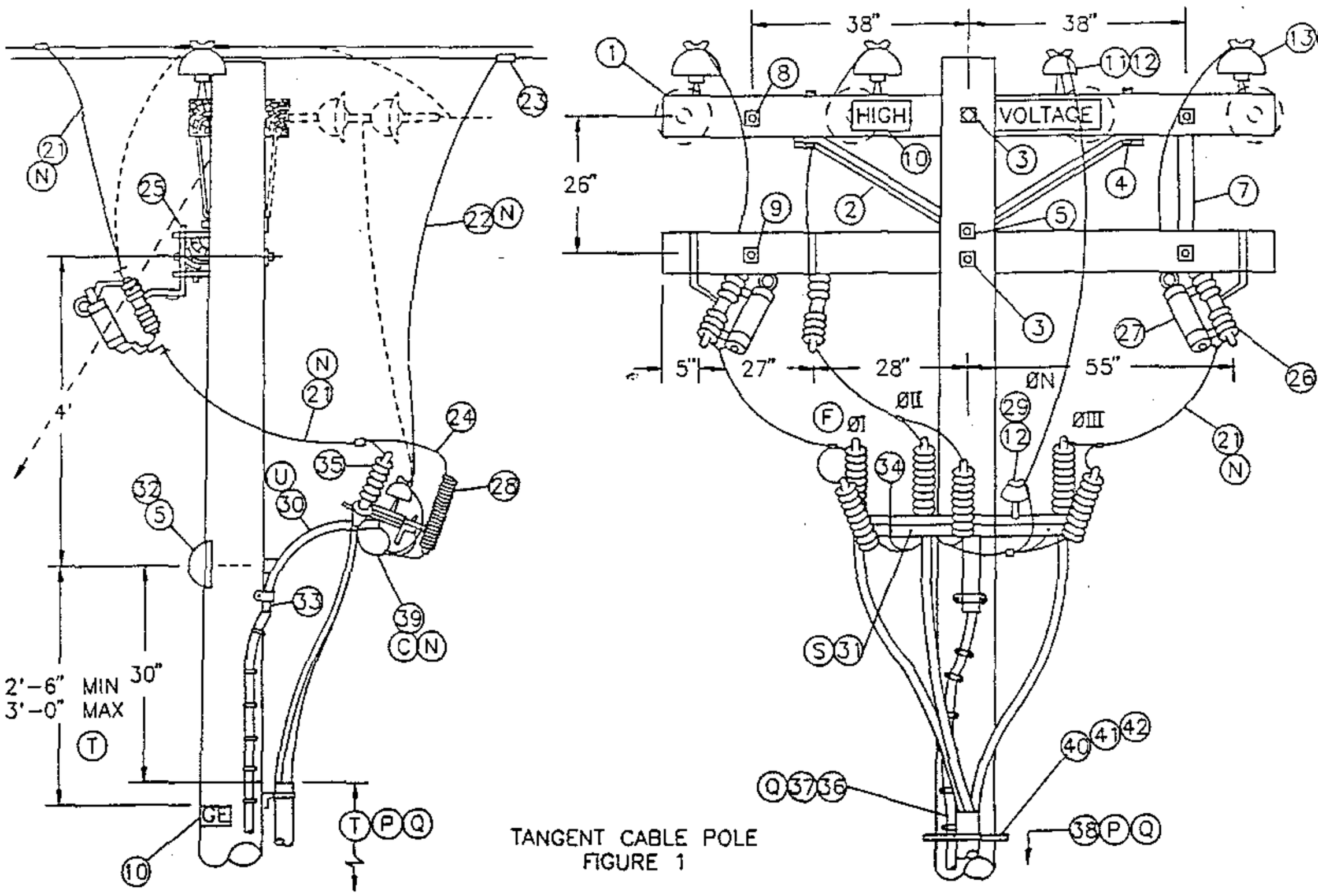

TANGENT CABLE POLE
FIGURE 1

NOTE:

- TANGENT CABLE POLE (FIG.1) OR DEAD-END CABLE POLE (DOTTED LINE) IS TO BE USED WHEN FURTHER LINE EXTENSION IS EXPECTED.
- DO NOT USE THIS UPSWEEP BRACKET CONSTRUCTION FOR 4KV, 3Ø CABLE POLE. INSTEAD, USE STANDARD 1439/4239.

FOR FIELD MAINTENANCE ONLY

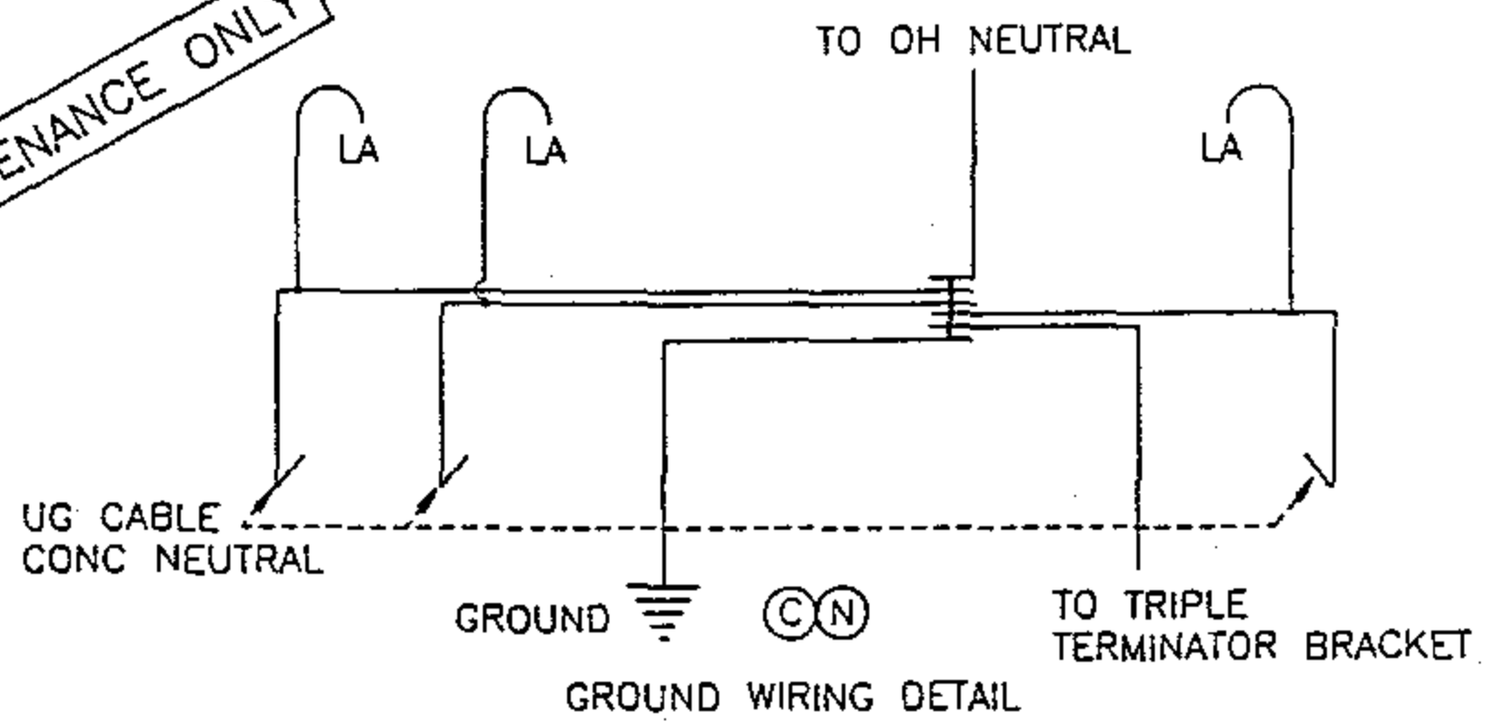

GROUND WIRING DETAIL

DATE 1-1-93 APPD JLB/BDJ	SDG&E ELECTRIC STANDARDS 12.47KV AND BELOW 3Ø CABLE POLE 1/C PER Ø, UPSWEEP BRACKET CONSTRUCTION	OH 1499.203 ~~UG 4299.203~~ SUPERCEDES 1429.1 (1-1-93)

TABLE OF CONTENTS

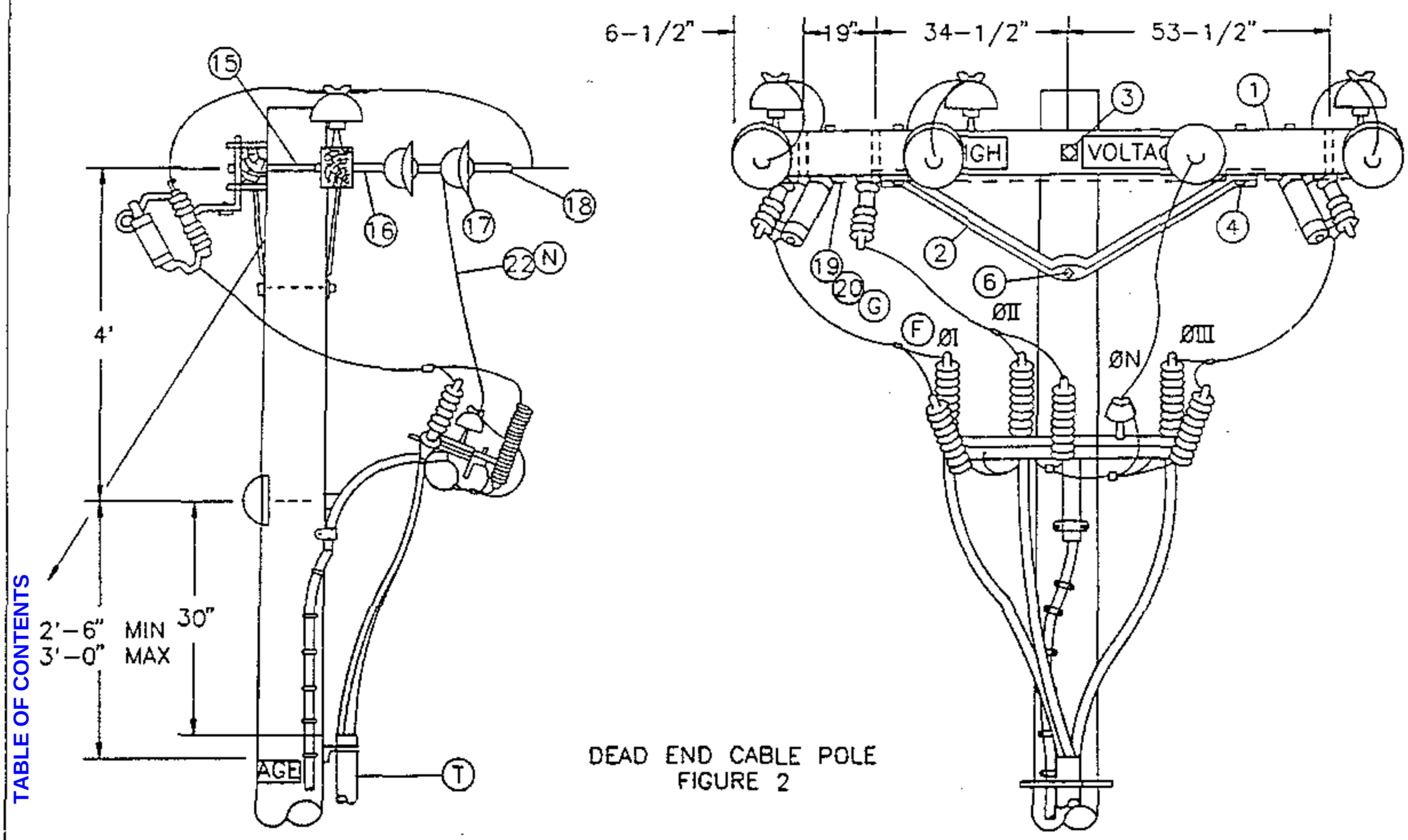

DEAD END CABLE POLE
FIGURE 2

NOTE:

- DEAD END CABLE POLE (FIG.2) IS TO BE USED ONLY WHEN NO FURTHER LINE EXTENSION OR NO RECONDUCTORING IS EXPECTED.

FOR FIELD MAINTENANCE ONLY

TABLE OF CONTENTS

OH 1499.204 ~~UG 4299.204~~ SUPERCEDES 1429.2 (1-1-93)	SDG&E ELECTRIC STANDARDS 12.47KV AND BELOW 3Ø CABLE POLE 1/C PER Ø UPSWEEP BRACKET CONSTRUCTION	DATE 1-1-93 APPD JYG/DDJ

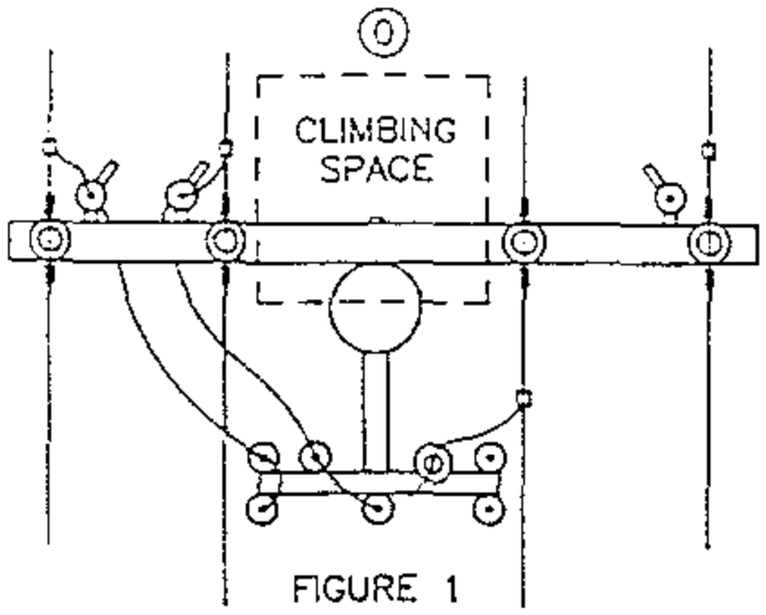

FIGURE 1

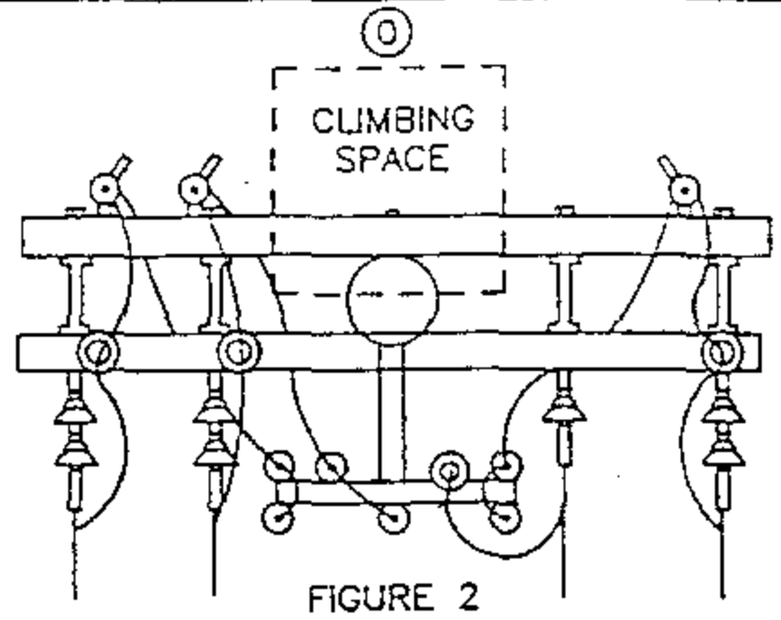

FIGURE 2

CLIMBING SPACE

BILL OF MATERIAL:

FOR FIELD MAINTENANCE ONLY

ITEM	DESCRIPTION	QUANTITY FIG.1	QUANTITY FIG.2	CONST STD OR PAGE NO	STOCK NUMBER
1	CROSSARM, 3-3/4" X 5-3/4" X 10'-0"	2	2	–	294128
2	BRACE, ANGLE, CROSSARM, 5'	1	2	–	164128
3	BOLT, MACH, GALV, 5/8" X (LENGTH AS REQ'D), 2 SQUARE & 1 DOUBLE COIL SPRING WASHER (E)	2	1	392	–
4	BOLT, MACH, GALV, 1/2" X 7", 1 ROUND & 1 DOUBLE COIL SPRING WASHER (E)	2	4	392	–
5	BOLT, MACH, GALV, 5/8" X (LENGTH AS REQ'D), 1 SQUARE & 1 DOUBLE COIL SPRING WASHER (E)	2	1	392	–
6	BOLT, MACH, GALV, 5/8" X (LENGTH AS REQ'D), 1 DOUBLE COIL SPRING WASHER (E)	–	1	392	–
7	BRACE, FLAT, CROSSARM, 28" (E)	2	–	–	164192
8	BOLT, MACH, GALV, 3/8" X (LENGTH AS REQ'D), 1 ROUND & 1 SPRING WASHER (E)	2	–	392	–
9	BOLT, MACH, GALV, 1/2" X (LENGTH AS REQ'D), 1 ROUND & 1 DOUBLE COIL SPRING WASHER (E)	2	–	392	–
10	SIGN, HIGH VOLTAGE AND (E)	3	3	–	647648
	9 ROOFING NAILS, GALV (E)	AS REQ'D		–	492224
11	PIN, INSULATOR, STRAIGHT, 12KV, 1" LEAD THREAD (D) (E)	1	–	–	532704
12	INSULATOR, LINE, 12KV, NEUTRAL (D) (E)	2	1	–	429216
13	PIN, INSULATOR, STRAIGHT, 12KV, 1" OR (E)	3	3	–	532704
	1-3/8" LEAD THREAD (E)	3	3	–	532448
14	INSULATOR, LINE, 12KV, 1" OR 1-3/8" PIN (E)	3	3	750	–
15	BOLT, SPACE, 5/8" X (LENGTH AS REQ'D) 3 SQ, 2 RD, 2 DOUBLE COIL SPRING WASHERS & 1 NUT (D) (E)	–	4	392	–
16	CLEVIS, DEAD END, 5/8" BOLT, STEEL (D) (E)	–	4	–	235712
17	INSULATOR, SUSPENSION, 12KV, CLEVIS (D)	–	7	750	–
18	CLAMP, STRAIGHT LINE, D.E. (D) (E)	–	4	741	–
19	WIRE, #8, BARE SOLID ANNEALED COPPER	10'	10'	–	812928
20	STAPLES, FENCE, GALV, 1-1/4" (E)	AS REQ'D		–	678528
21	WIRE, BARE STRANDED COPPER (OH JUMPER) (N)	21'	25'	715-716	–
22	WIRE, BARE STRANDED CU OR AL (OH NEUT JUMPER) (N)	9'	7'	711-716	–
23	CONNECTOR, WIRE COMPRESSION (SIZE AS REQ'D) (D) (E)	AS REQ'D		785-787	–

CABLE SIZE	UG MACRO UNIT PORCELAIN	
	W/O LADDER ARMS	W/LADDER ARMS
3C-#2 AL	CP-3#2	CP3#2L
3C-#2/0	CP#2/0	CP2/0L

TABLE OF CONTENTS

DATE 1-1-93 APPD JVB/LDG	SDG&E ELECTRIC STANDARDS 12.47KV AND BELOW 3Ø CABLE POLE 1/C PER Ø UPSWEEP BRACKET CONSTRUCTION	OH 1499.205 ~~UG 4299.205~~ SUPERCEDES 1429.3 (1-1-93)

BILL OF MATERIAL: (CONTINUED)

ITEM	DESCRIPTION	QUANTITY FIG. 1	QUANTITY FIG. 2	CONSTR. STD OR PAGE NO.	STOCK NUMBER
24	WIRE, #6, BARE STRANDED COPPER	9'	9'	–	813536
25	BRACKET, CUTOUT/ARRESTER, FOR CROSSARM MOUNTING (E)	3	3	–	166070
26	CUTOUT BODY FOR CURRENT LIMITING FUSE	3	3	–	297952
27	FUSE, CURRENT–LIMITING, SIZE AS REQ'D	3	3	1206	–
28	ARRESTER, LIGHTNING	3	3	1247	–
29	PIN, SHORT SHANK, 1" LEAD THREAD (D) (E)	1	1	–	534426
30	BRACKET, GALV, TERMINAL, UPSWEEP	1	1	–	166856
31	BRACKET, TRIPLE TERMINATOR (S)	1	1	–	166676
32	COVER, BOLT, PLASTIC & (E)	1	1	–	285696
	6 – 10D NAILS, GALV (E)	–	–	–	491392
33	SCREW, LAG, GALV, 1/2" X 4" (E)	2	2	–	621568
34	BOLT, MACH, GALV, 5/8" X 1 1/2", 1 ROUND AND 1 LOCK WASHER (E)	1	1	392	–
35	TERMINALS AND UNDERGROUND CABLE	3	3	4111	–
36	WIRE, #4, BARE STRANDED COPPER	50'	45'	–	813760
37	UNIT GROUND, COMPLETE (Q)	1	1	–	603136
38	RISER CONSTRUCTION	–	–	1400/4200	–
39	WIRE, COPPER BARE STRANDED (CABLE POLE NEUTRAL) (N)	5'	5'	715/716	–
40	BRACKET, LADDER ARM (E)	AS REQ'D		1404/4204	167184
41	NUT, CLAMPING CHANNEL, W/SPRING, 1/2" (E)	AS REQ'D		1404/4204	503488
42	CHANNEL, DOUBLE GALV, 24" (E)	AS REQ'D		1404/4204	216700

INSTALLATION:

A. NEW CABLE POLES SHALL HAVE A STANDARD DEPTH OF 9'. IN MOST CASES THIS WILL REQUIRE A 5' TALLER POLE.

B. THIS CONSTRUCTION TO BE USED WITH 2/0 AND SMALLER UNDERGROUND CABLE.

(C) CONNECT OVERHEAD NEUTRAL, TRIPLE TERMINAL BRACKET, AND CONCENTRIC CABLE NEUTRAL CONDUCTOR TO LIGHTNING ARRESTER GROUND.

(D) REDUCE QUANTITIES AS REQUIRED WHEN NOT USING NEUTRAL.

(E) EXEMPT MATERIAL.

(F) OMIT PHASE II AND PHASE N FOR SINGLE PHASE 12KV CABLE POLE; OMIT PHASE I AND PHASE II FOR SINGLE PHASE 6.9 KV CABLE POLE.

(G) INTERCONNECT CUTOUTS AND DEADEND BONDS PER G.O. 95 RULE 52.7D. BONDING SHOULD BE DONE IN ACCORDANCE WITH RULE 53.4.

(N)

UG CABLE SIZE AWG OR KCMIL, AL	OH JUMPER COND SIZE, AWG OR KCMIL, CU	OH NEUT JUMPER SIZE CU	OH NEUT JUMPER SIZE AL	OH NEUT JUMPER SIZE	CABLE POLE NEUT SIZE (CU) UNDER POTHEAD ARM OR TRIPLE TERM BRKT
2	4	6	2	–	#6 PER PHASE
2/0	4	6	2	–	#6 PER PHASE
350	4/0	1/0	3/0	–	#2 PER PHASE
750	500	4/0	336.4	OR SAME SIZE AS O.H. NEUT CONDUCTOR	1/0 PER PHASE
1000	500	4/0	336.4		1/0 PER PHASE

REFERENCE:

(O) ALLOWABLE WORKING AND CLIMBING SPACE – SEE STANDARD 251.

(P) POLE STEPPING – SEE STANDARD 363/4205.

(Q) GROUNDING METHODS – SEE PAGE 1002.5.

R. SEE STANDARD SECTION 1200/4300 FOR FUSING.

S. RISER POSITIONS – SEE STANDARD 1402/4202.

(T) MINIMUM VERTICAL SEPARATION AS PER G.O. 95 – SEE STANDARD 1406/4206.

(U) SEE STANDARD 1407/4207 FOR PORCELAIN AND NON–PORCELAIN TERMINAL MOUNTING BRACKET INSTALLATIONS AND MATERIALS.

FOR FIELD MAINTENANCE ONLY

TABLE OF CONTENTS

OH 1499.206 ~~UG 4299.206~~ SUPERCEDES 1429.4 (1–1–93)	SDG&E ELECTRIC STANDARDS 12.47KV AND BELOW 3 PHASE, CABLE POLE, 1/C PER PHASE, UPSWEEP BRACKET CONSTRUCTION	DATE 1–1–93 APPD JLG/DSG

FIELD MAINTENANCE ONLY

REVISION HISTORY:

7/13/2016: All versions prior to 2016 are superceded by their current version found inside the Overhead Construction Standard Manual.

2/20/2019: Install S706680 in place of old style Disconnect Switch.

TABLE OF CONTENTS

© 1998 - 2019 San Diego Gas & Electric Company. All rights reserved. Removal of this copyright notice without permission is not permitted under law.

REV	CHANGE	BY	DSGN	APPV	DATE	REV	CHANGE	BY	DSGN	APPV	DATE
C						F					
B	EDITORIAL CHANGES	GLW	JES	CZH	2/20/2019	E					
A	ORIGINAL ISSUE	JS	IL	MDJ	7/13/2016	D					

X Indicates Latest Revision | Completely Revised | New Page | Information Removed

SHEET 1 OF 1

SDG&E ELECTRIC OVERHEAD CONSTRUCTION STANDARDS

12.47KV AND BELOW CABLE POLE, UPSWEEP BRACKET, THREE-PHASE 1/C PER PHASE, LINE ARM MOUNTED DISCONNECTS, NON-PORCELAIN TERMINALS

FMO OH 1432

SCOPE: THIS STANDARD SHOWS THREE–PHASE CABLE POLE CONSTRUCTION USING NON–PORCELAIN TERMINALS FOR 350 KCMIL AND LARGER UG CABLE. (H)

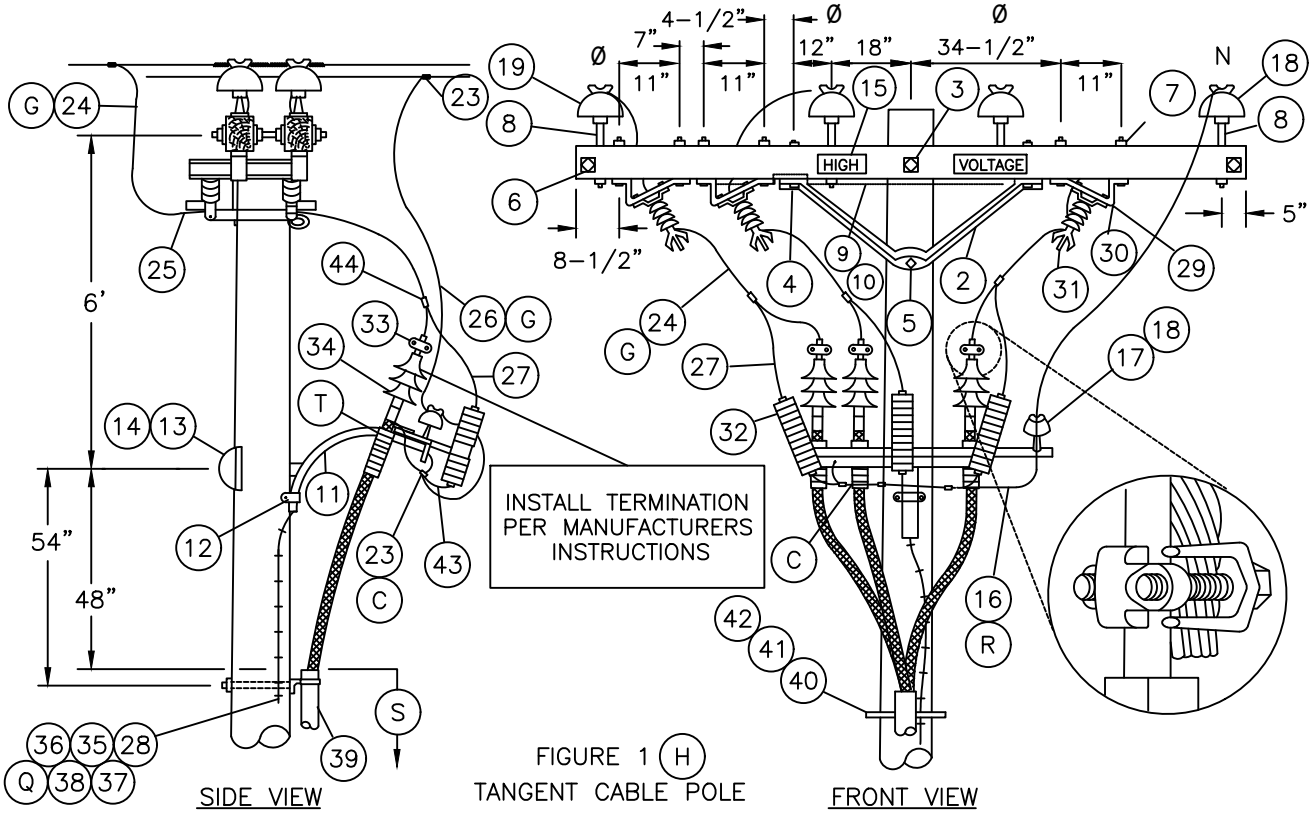

FIGURE 1 (H)
TANGENT CABLE POLE

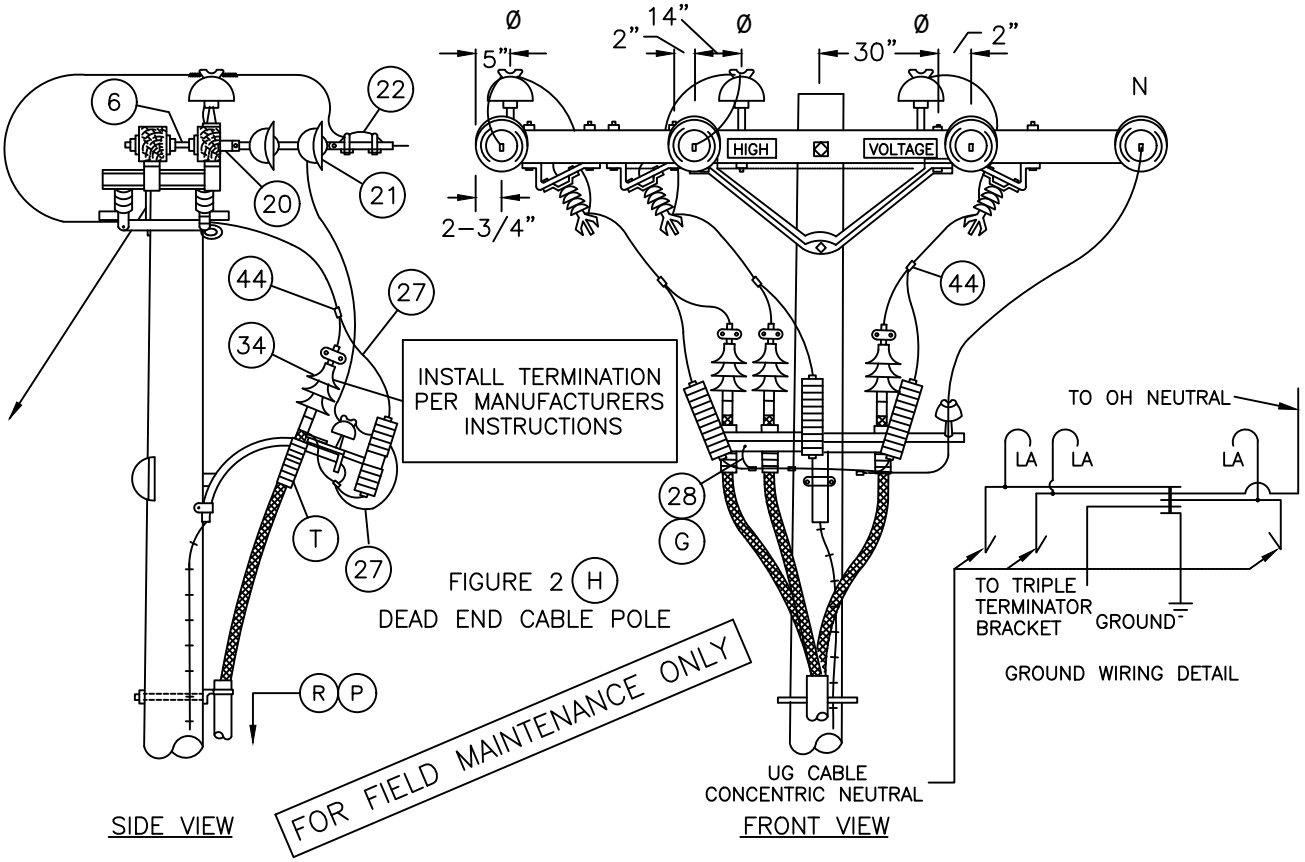

FIGURE 2 (H)
DEAD END CABLE POLE

© 1998 - 2010 San Diego Gas & Electric Company. All rights reserved. Removal of this copyright notice without permission is not permitted under law.

DATE 10–20–05 APPD PSA / JJ	SDG&E ELECTRIC STANDARDS 12.47KV AND BELOW CABLE POLE, UPSWEEP BRACKET, THREE–PHASE 1/C PER PHASE, LINE ARM MOUNTED DISCONNECTS, NON–PORCELAIN TERMINALS	OH 1499.310 UG 4299.310 SUPERSEDES 1432.1 (10–20–05)

TABLE OF CONTENTS

TABLE OF CONTENTS

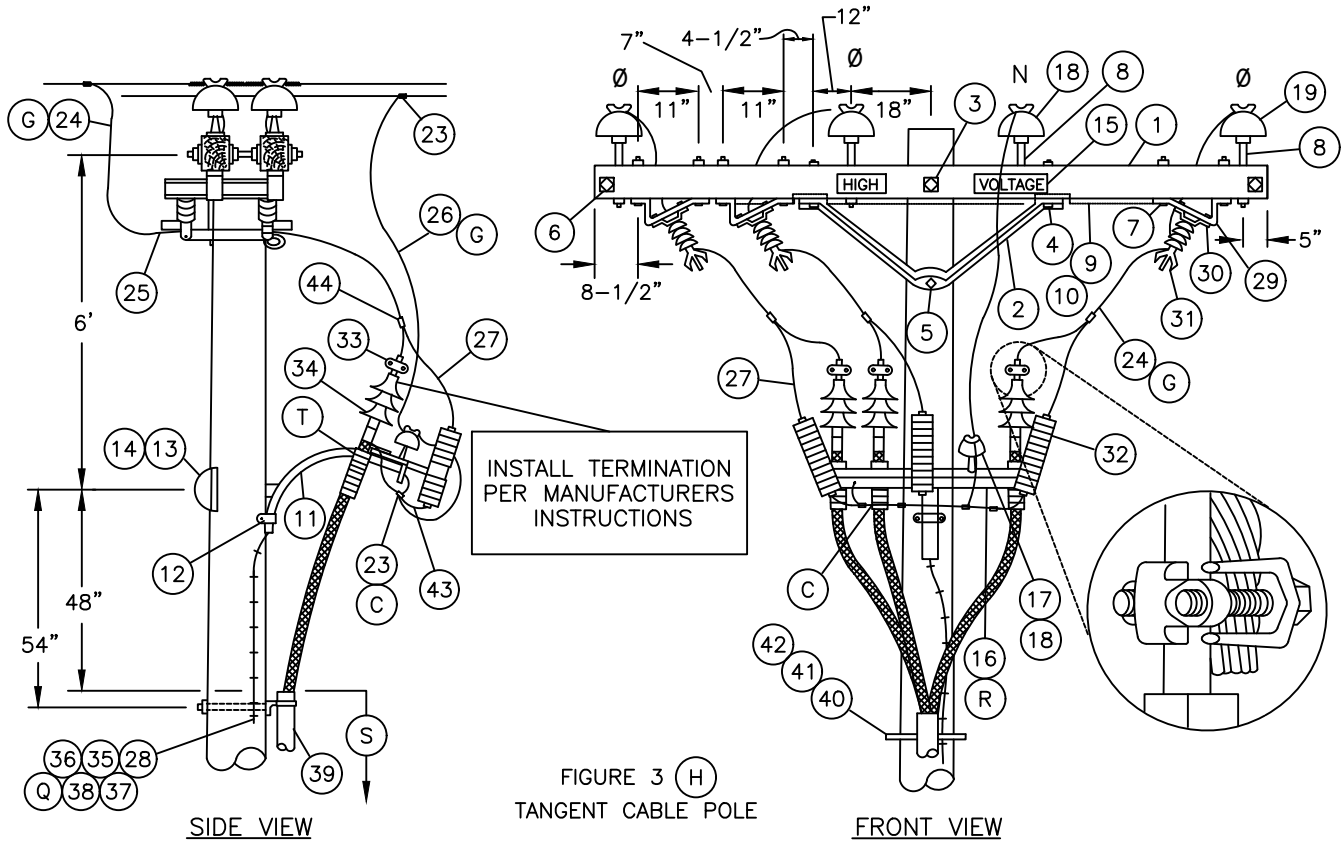

FIGURE 3 (H)
TANGENT CABLE POLE

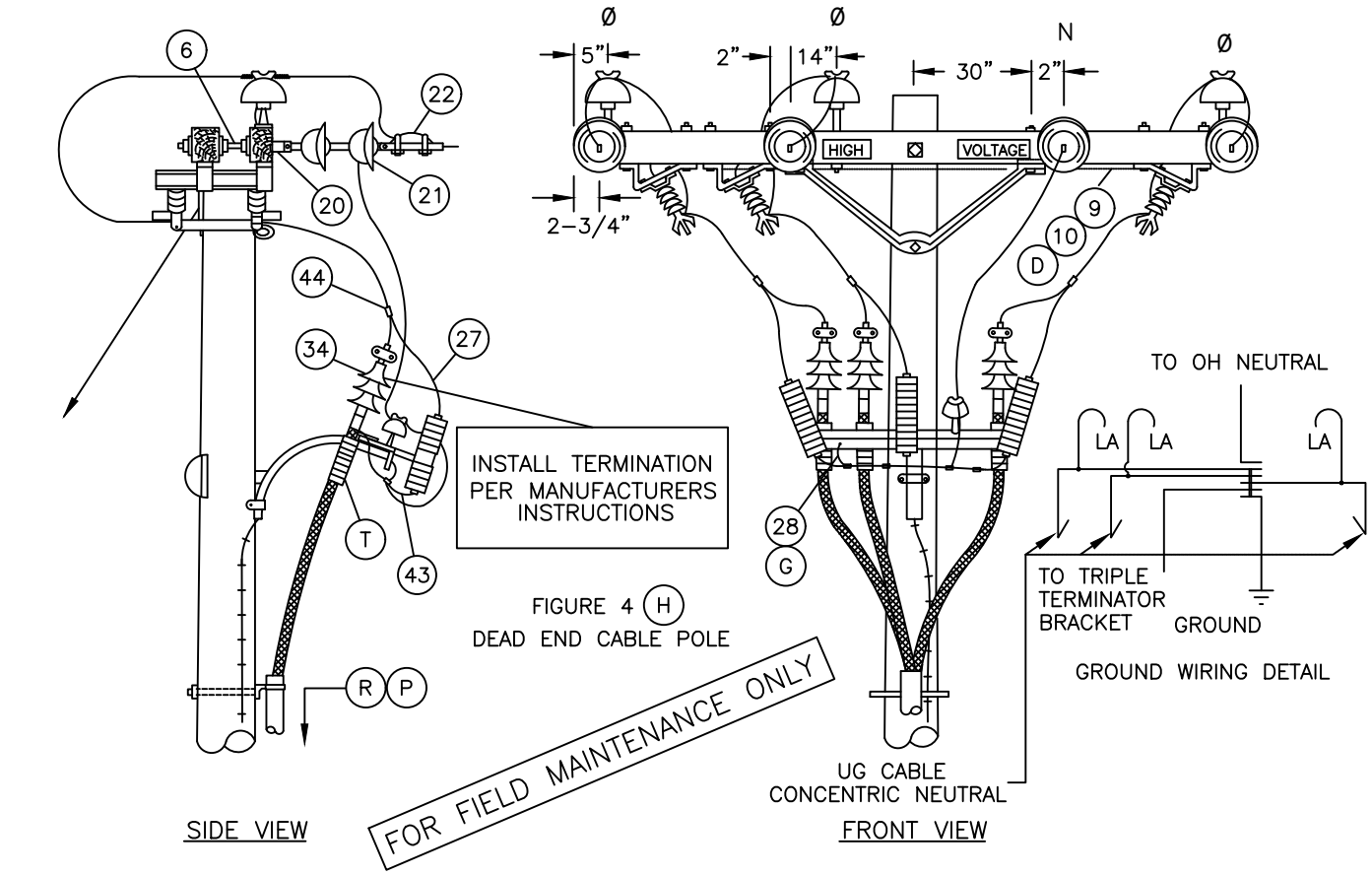

FIGURE 4 (H)
DEAD END CABLE POLE

FOR FIELD MAINTENANCE ONLY

© 1998 - 2005 San Diego Gas & Electric Company. All rights reserved. Removal of this copyright notice without permission is not permitted under law.

DATE 10-20-05 APPD PA / JJ	SDG&E ELECTRIC STANDARDS 12.47KV AND BELOW CABLE POLE, UPSWEEP BRACKET, THREE-PHASE 1/C PER PHASE, LINE ARM MOUNTED DISCONNECTS, NON-PORCELAIN TERMINALS	OH 1499.311 UG 4299.311 SUPERSEDES 1432.2 (10-20-05)

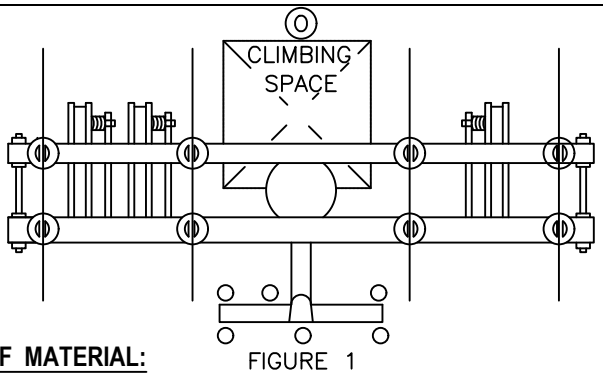

FIGURE 1

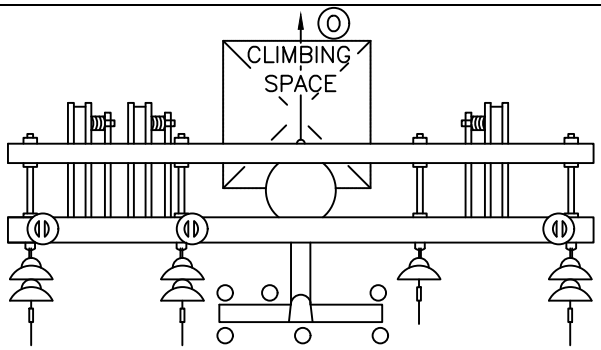

FIGURE 2

BILL OF MATERIAL:

ITEM	DESCRIPTION	QUANTITY FIG 1	QUANTITY FIG 2	CONSTR STANDARD	STOCK NUMBER
1	CROSSARM, 3–3/4" X 5–3/4" X 12'–0" (F)	2	2		294160
2	BRACE, ANGLE, CROSSARM, 5'	2	2	–	164128
3	BOLT, MACH., GALV, 5/8" X (LENGTH AS REQ'D), 2 SQUARE AND 1 DOUBLE COIL SPRING WASHERS	1	1	392	–
4	BOLT, MACH, GALV, 1/2" X 7", 1 RD, 1 DBL COIL SPR WASH	4	4	392	–
5	BOLT, MACH, GALV, 5/8" X (LENGTH AS REQ'D), AND 1 DOUBLE COIL SPRING WASHER	1	1	392	–
6	BOLT, SPACE, GALV, 5/8" X (LENGTH AS REQ'D), 4 SQUARE, 2 ROUND AND 2 DOUBLE COIL SPRING WASHERS (E)	2	4	392	–
7	BOLT, MACH, GALV, 1/2" X 8", 1 ROUND AND 1 DOUBLE COIL SPRING WASHER	12	12	392	–
8	PIN, INSULATOR, STRAIGHT, 12KV, 1" OR 1–3/8" (E)	8	3	–	532704
	(E)	8	3	–	532448
9	WIRE, #8, BARE SOLID ANNEALED COPPER	15'	15'	–	812928
10	STAPLES, FENCE, GALV, 1–1/4"	AS REQ'D		–	678528
11	BRACKET, GALV, TERMINAL UPSWEEP (Q)	1	1	–	166856
12	SCREW, LAG, GALV, 4"	2	2	–	621568
13	BOLT, MACH, GALV, 5/8" X (LENGTH AS REQ'D), 1 SQUARE AND 1 DOUBLE COIL SPRING WASHER	1	1	392	–
14	COVER, BOLT, PLASTIC, AND 6 – 10D NAILS, GALV	1	1	–	285696
					491392
15	SIGN, HIGH VOLTAGE, AND 9 ROOFING NAILS, GALV	2	2	–	647648
					492224
16	BRACKET, TRIPLE TERMINATOR	1	1	–	166676
17	PIN, SHORT SHANK, 1" LEAD THREAD (E)	1	1	–	532426
18	INSULATOR, 12KV, NEUTRAL (E)	3	1	–	429216
19	INSULATOR, LINE, 12KV, 1" OR 1–3/8" PIN	6	3	750	–
20	CLEVIS, DEAD END, 5/8" BOLT, STEEL (E)	–	4	–	235712
21	INSULATOR, SUSPENSION, 12KV, CLEVIS (E)	–	7	750	–
22	CLAMP, STRAIGHT LINE, D.E. (E)	–	4	741	–

FOR FIELD MAINTENANCE ONLY

TABLE OF CONTENTS

OH 1499.312 UG 4299.312 SUPERSEDES 1432.2 (1–1–98)	SDG&E ELECTRIC STANDARDS 12.47KV AND BELOW CABLE POLE, UPSWEEP BRACKET, THREE–PHASE 1/C PER PHASE, LINE ARM MOUNTED DISCONNECTS, NON–PORCELAIN TERMINALS	DATE 1–1–98 APPD PSA / CMK

BILL OF MATERIAL: (CONT'D)

ITEM	DESCRIPTION	QUANTITY FIG 1	QUANTITY FIG 2	CONSTR STANDARD	STOCK NUMBER	ASSEMBLY UNIT
23	CONNECTOR, WIRE COMPRESSION, (SIZE AS REQ'D)	AS REQ'D		783–786	–	–
24	WIRE, BARE STRANDED COPPER, (OH JUMPER) (G)	21'	30'	715	–	–
25	TERMINAL, COMPRESSION (SIZE AS REQ'D)	6	6	794–795	–	–
26	WIRE, BARE STRANDED COPPER, (OH NEUT JUMPER) (G)	9'	9'	715	–	–
27	WIRE, #6, BARE STRANDED COPPER	12'	12'	–	813536	–
28	#4 CU SOLID GROUND WIRE, PVC COVERED	50'	50'	–	812490	GNDPVC
29	BRACKET, DISCONNECT, ANGLE MOUNTING	6	6	–	166542	–
30	BOLT, MACH, GALV, 3/8" X 3", 2 RD WASH & 1 LOCK WASH	6	6	392	–	–
31	SWITCH, HOOKSTICK DISCONNECT, 14.4KV, 600 A OR 1200 A	3	3	1222	–	–
32	ARRESTER, LIGHTNING	3	3	1247	–	–
33	CONNECTOR, TWO BOLT, BRONZE (SIZE AS REQ'D)	3	3	4111	–	–
34	TERMINALS, UNDERGROUND CABLE (T)	3	3	4111	–	–
35	GROUND ROD, 5/8" X 8', COPPERWELD	1	1	–	603072	GNDPVC
36	COPPER BONDED GROUND CONNECTOR	1	1	–	259010	–
37	GROUND ENHANCING POWER SOLUTION (GEM)	AS REQ'D		–	424390	–
38	GALVANIZED STAPLES FOR PVC COVERED GROUND WIRE	AS REQ'D		–	678562	–
39	RISER CONSTRUCTION	AS REQ'D		1400/4200	–	–
40	BRACKET, LADDER ARM	AS REQ'D		1404/4204	167184	–
41	NUT, CLAMPING CHANNEL, W/SPRING, 1/2"	AS REQ'D		1404/4204	503488	–
42	CHANNEL, DOUBLE GALV., 24"	AS REQ'D		1404/4204	216700	–
43	FLEXIBLE ARRESTER GROUND STRAP	AS REQ'D		–	698754	–
44	HOT LINE CLAMP	3	3	788	227680	–

FOR FIELD MAINTENANCE ONLY

OVERHEAD MACRO UNIT
3NS–B

INSTALLATION:

A. NEW CABLE POLES SHALL HAVE A STANDARD DEPTH OF 9'. IN MOST CASES, THIS WILL REQUIRE A 5' TALLER POLE.

B. THIS CONSTRUCTION TO BE USED WITH 350 KCMIL AND LARGER UNDERGROUND CABLE.

(C) INTERCONNECT OVERHEAD NEUTRAL, TRIPLE TERMINAL BRACKET AND CONCENTRIC CABLE NEUTRAL TO LIGHTNING ARRESTER GROUND.

(D) INTERCONNECT SWITCH AND DEAD END BONDS PER G.O. 95 RULE 52.7 D.

(E) REDUCE QUANTITIES AS REQUIRED WHEN NOT USING NEUTRAL.

(F) WHEN ADDING THIS CONSTRUCTION TO AN EXISTING POLE WITH A 10' LINE ARM, AND SUFFICIENT POLE HEIGHT EXISTS, INSTALL 10' SWITCH ARMS AND ASSOCIATED HARDWARE BELOW THE LINE ARM TO AVOID CHANGING LINE ARM FROM 10' TO 12' (SEE O.H. STANDARD 1222. FIG. 1–B).

TABLE OF CONTENTS

INSTALLATION: (CON'T)

Ⓖ

UG CABLE SIZE AWG OR KCMIL, AL	OH JUMPER COND SIZE, AWG OR KCMIL, CU	OH NEUT JUMPER SIZE			CABLE POLE NEUT SIZE (CU) UNDER POTHEAD ARM OR TRIPLE TERM BRKT
		CU	AL		
350	4/0	1/0	3/0	–	#2 PER PHASE
750	500	4/0	336.4	OR SAME SIZE AS O.H. NEUT CONDUCTOR	1/0 PER PHASE
1000	500	4/0	336.4		1/0 PER PHASE
BECAUSE THE PROPER SIZE CONNECTOR IS NOT ALWAYS AVAILABLE, THE JUMPER FROM THE OVERHEAD LINE CONDUCTOR TO THE HOOKSTICK SWITCH CAN BE THE SAME SIZE AS, OR LARGER THAN THAT OF THE OVERHEAD CONDUCTOR.					

Ⓗ – USE FIGURE ONE AND TWO FOR ALL **NE** CONSTRUCTION AND WHEN ADDING TO EXISTING CONSTRUCTION WITH NEUTRAL ON OUTSIDE PIN POSITION. SEE DESIGN MANUAL PAGE 5124.2.

– USE FIGURE THREE AND FOUR ON EXISTING CONSTRUCTION WITH NEUTRAL ON INSIDE PIN POSITION.

REFERENCE:

Ⓞ ALLOWABLE WORKING AND CLIMBING SPACE – SEE STD. 251

Ⓟ POLE STEPPING – SEE STD. 363.

Ⓠ GROUNDING METHODS – SEE PAGE 1002.5.

Ⓡ RISER POSITIONS – SEE STANDARD 1402/4202.

Ⓢ MINIMUM VERTICAL SEPARATION AS PER G.O. 95 SEE STD. 1406/4206.

Ⓣ SEE STANDARD 1407/4207 FOR NON PORCELAIN TERMINAL MOUNTING INSTRUCTIONS AND MATERIALS.

FOR FIELD MAINTENANCE ONLY

TABLE OF CONTENTS

OH 1499.314 UG 4299.314 SUPERSEDES 1432.5 (10–20–05)	SDG&E ELECTRIC STANDARDS 12.47KV AND BELOW CABLE POLE, UPSWEEP BRACKET, THREE–PHASE 1/C PER PHASE, LINE ARM MOUNTED DISCONNECTS, NON–PORCELAIN TERMINALS	DATE 9–20–05 APPD PSA / JJ

FIELD MAINTENANCE ONLY

REVISION HISTORY:

7/13/2016: All versions prior to 2016 are superseded by their current version found inside the Overhead Construction Standard Manual.

TABLE OF CONTENTS

© 1998 - 2016 San Diego Gas & Electric Company. All rights reserved. Removal of this copyright notice without permission is not permitted under law.

REV	CHANGE	BY	DSGN	APPV	DATE	REV	CHANGE	BY	DSGN	APPV	DATE
C						F					
B						E					
A	ORIGINAL ISSUE	JS	IL	MDJ	7/13/2016	D					

X Indicates Latest Revision | Completely Revised | New Page | Information Removed

SHEET
1 OF 1

SDG&E ELECTRIC OVERHEAD STANDARD

BRACKET MOUNTED TERMINALS,
12KV 3 WIRE ARMLESS TANGENT CONSTRUCTION

FMO
OH 1437

TABLE OF CONTENTS

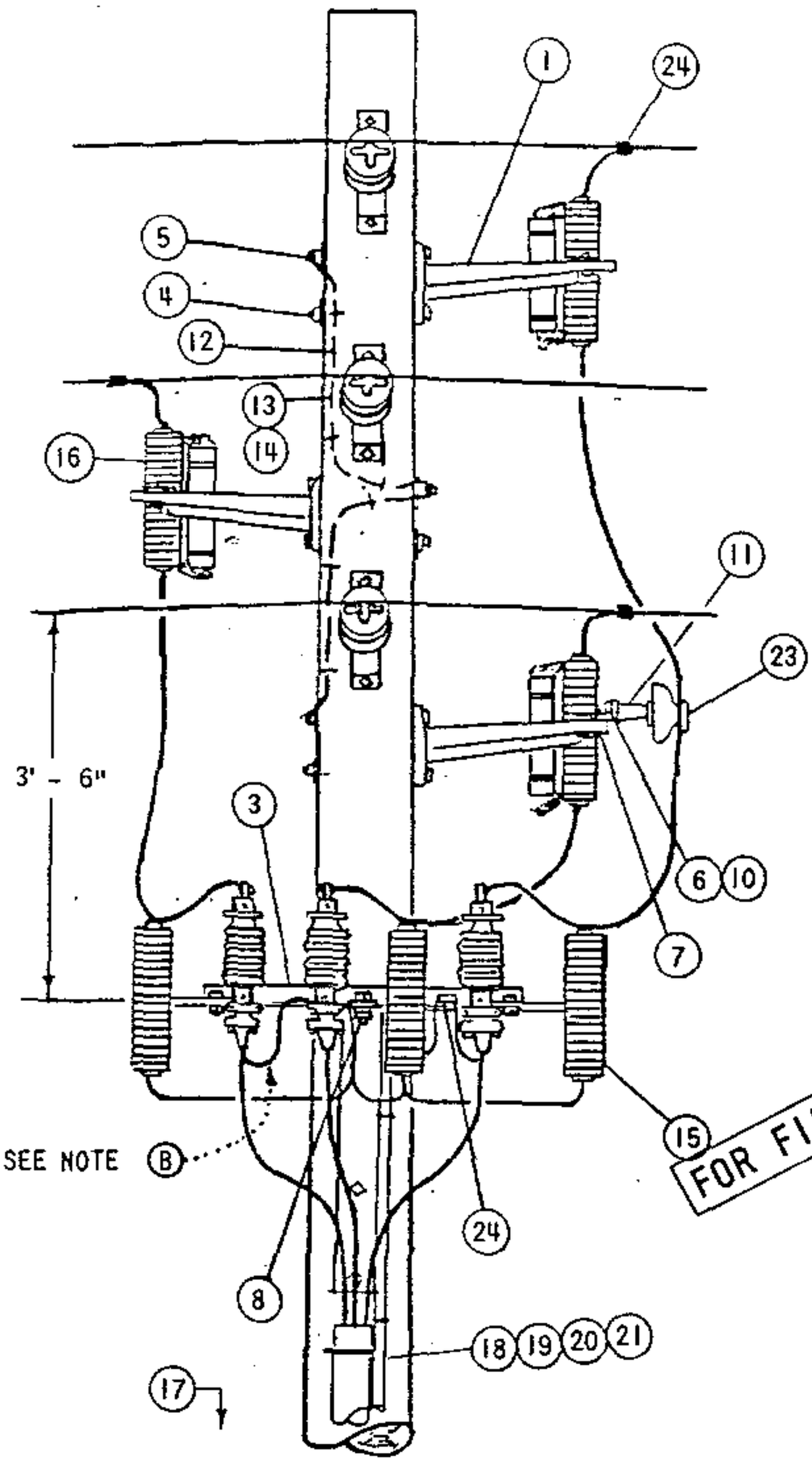

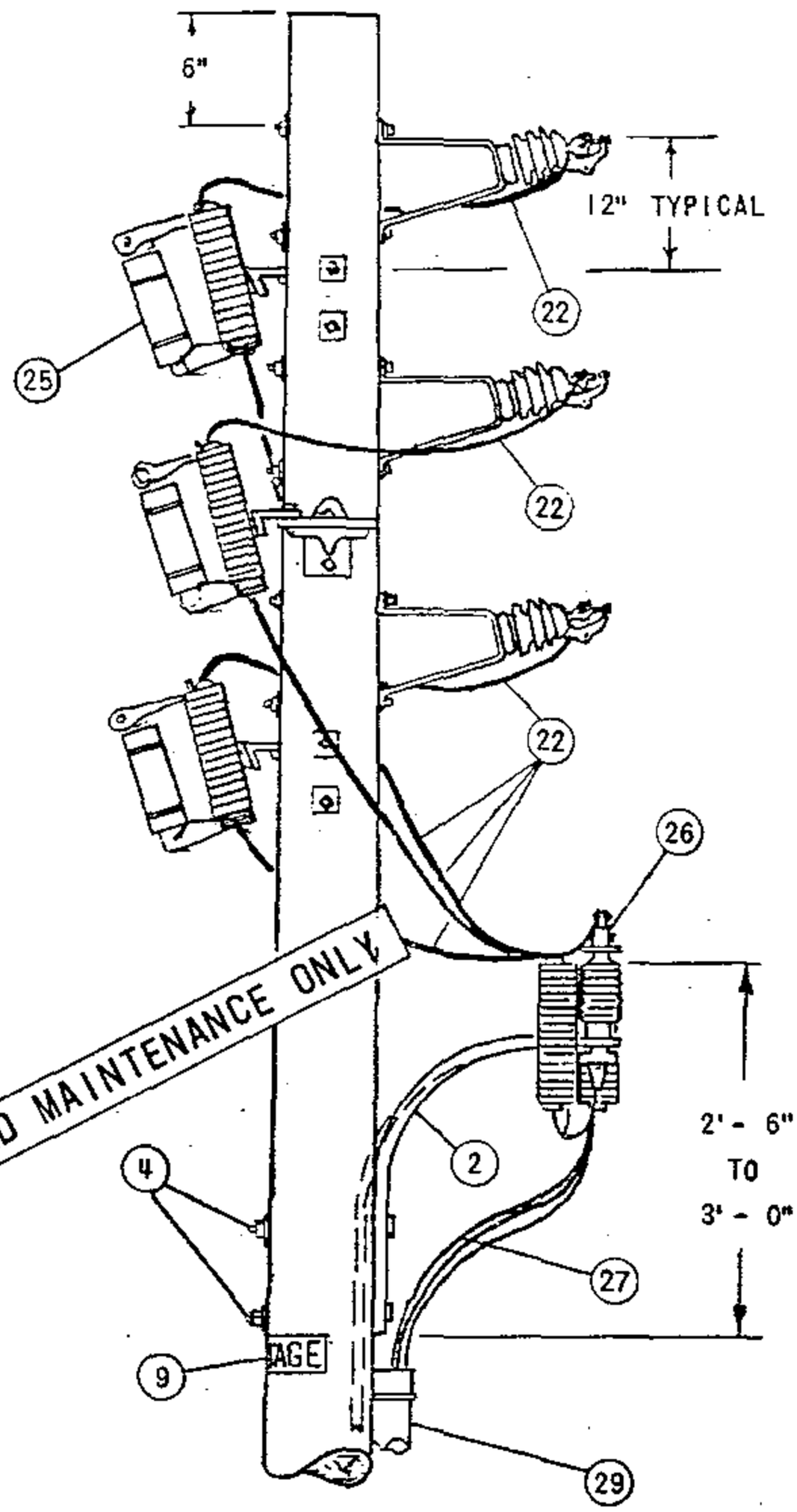

FOR FIELD MAINTENANCE ONLY

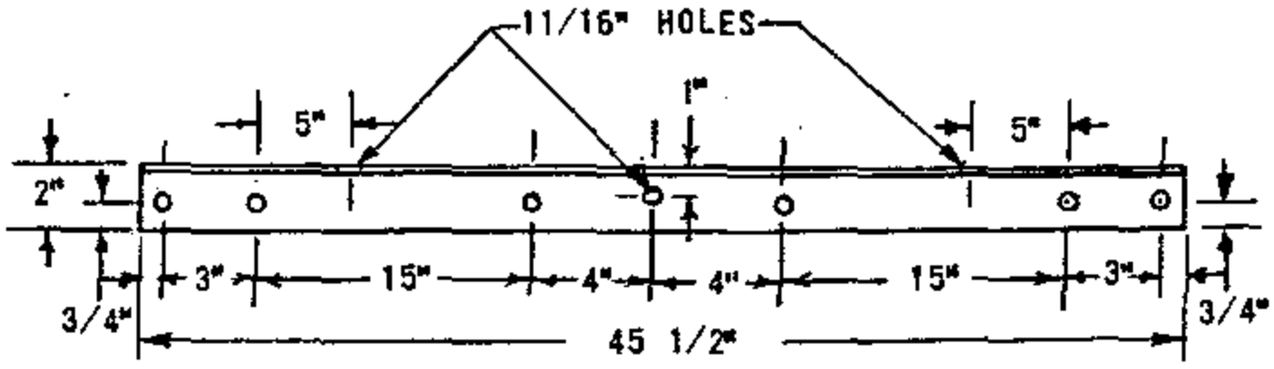

ALL HOLES 9/16" EXCEPT AS NOTED

FABRICATE FROM 2" X 2" X 3/16" STEEL ANGLE
HOT DIP GALVANIZE AFTER FABRICATION

ARMLESS TERMINAL MOUNTING BRACKET

DATE 8-27-82 APPD ORH	SDG&E ELECTRIC STANDARDS BRACKET MOUNTED TERMINALS, 12KV 3 WIRE ARMLESS TANGENT CONSTRUCTION	OH 1499.301 ~~UG 4299.301~~ SUPERSEDES 1437.1(11-16-81)

NOTES:

(A) UNIT GROUND, COMPLETE, ORDER 603120 WITH GRAY MOULDING, 603135 WITH PLAIN MOULDING.

(B) THE FIBERGLASS UPSWEEP TERMINAL BRACKET IS TO BE USED FOR UNDERGROUND CONDUCTORS 4/0 OR SMALLER. DO NOT USE FOR 500 KCM AND LARGER CONDUCTORS.

(C) USE TWO-ROD GROUND SPACED A MINIMUM OF 6 FEET APART.

D. CONNECT ONE STRAND OF CONCENTRIC NEUTRAL TO TERMINAL BOLT WITH DOUBLE NUT.

(E) EXEMPT MATERIAL

FOR FIELD MAINTENANCE ONLY

ITEM		DESCRIPTION	QUANTITY	STOCK NO. OR CONSTR STD
PTF	1	BRACKET, GALV., 4-HOLE, MOUNTING	3	166240
	2	BRACKET, FIBERGLASS, TERMINAL, UPSWEEP SEE NOTE (F)	1	166864
	3	BRACKET, ARMLESS, TERMINAL MOUNTING, SEE DETAIL PAGE 1437.1	1	166672
	4	MACH. BOLT, GALV., 5/8" X LENGTH AS REQ'D., 1-SQ. CURV. WASH., 1-DBL. COIL SPR. WASH. & 1-NUT (E)	5	PGS 139, 140
	5	MACH. BOLT, GALV., 5/8" X LENGTH AS REQ'D., 1-SQ., CURV. WASH., 1-DBL. COIL SPR.WASH., 2-FLAT RD. WASH. & 2-NUTS (E)	3	PGS 139, 140
	6	MACH. BOLT, GALV., 5/8" X 1 1/2", 1-LOCK WASH. (E)	1	PGS 139, 140
	7	MACH. BOLT, GALV., 1/2" X 1 1/2", 1-LOCK WASH.& 1-NUT (E)	1	PGS 139, 140
	8	MACH. BOLT, GALV., 5/8" X 2 1/2", 1-LOCK, 2-RD. WASH. & 2-NUTS (E)	1	PGS 139, 140
	9	HIGH VOLTAGE SIGN & 8-ROOFING NAILS, GALV. (E)	2	647648, 492224
	10	BRACKET, INSULATOR, MOUNTING ANGLE	1	166208
	11	PIN, INSULATOR, 12KV, 1" OR 1 3/8" LEAD THREAD	1	529248-529216
	12	WIRE, BOND, BARE SOLID ANNEALED, #6	6'	812928
	13	HARDWOOD MOULDING, 1" (OTHER THAN TOP CIRCUIT ON POLE)	6'	487200
	14	MOULDING STAPLES, GALV., 3" X 1 1/16" X 1/4" (OTHER THAN TOP CIRCUIT ON POLE)	6	678560
UCD	15	LIGHTNING ARRESTER, 12KV	3	113248
	16	CUTOUT, FOR CURRENT-LIMITING FUSE	3	1200 SECTION
	17	GROUND ROD & CLAMP (A) (C)	2	603072-230016 (E)
	18	HARDWOOD MOULDING, 1" (A)	36'	487200
	19	STAPLES,MOULDING, GALV., 3" X 1 1/16" X 1/4" (A) (E)	24	678560
	20	STAPLES, FENCE, GALV., 1 1/4" (A) (E)	1/3#	678528
	21	WIRE, BARE STRANDED COPPER, #2 (B)	50'	813664
	22	WIRE, BARE STRANDED, COPPER, (SIZE AS REQ'D)	25'	
	23	INSULATOR, 12KV, PIN TYPE (CLASS AS REQ'D)	1	429056-429152
	24	CONNECTOR, WIRE, COMPRESSION (SIZE AS REQ'D)	4	
	25	FUSE, CURRENT-LIMITING SIZE AS SPECIFIED ON WORK ORDER	3	1200 SECTION
	26	CABLE TERMINAL	3	SEE UG STDS
	27	CABLE, PRIMARY	AS REQ'D	SEE UG STDS
	28			
	29	RISER CONSTRUCTION	AS REQ'D	1400/4200 SECTION

TABLE OF CONTENTS

H 1499.302
~~G 4299.302~~
SUPERSEDES
37.2 (11-16-81)

SDG&E ELECTRIC STANDARDS

BRACKET MOUNTED TERMINALS,
12KV 3 WIRE ARMLESS TANGENT CONSTRUCTION

DATE 8-27-82
APPD

FIELD MAINTENANCE ONLY

REVISION HISTORY:

7/13/2016: All versions prior to 2016 are superseded by their current version found inside the Overhead Construction Standard Manual.

TABLE OF CONTENTS

© 1998 - 2016 San Diego Gas & Electric Company. All rights reserved. Removal of this copyright notice without permission is not permitted under law.

REV	CHANGE	BY	DSGN	APPV	DATE	REV	CHANGE	BY	DSGN	APPV	DATE
C						F					
B						E					
A	ORIGINAL ISSUE	JS	IL	MDJ	7/13/2016	D					

X Indicates Latest Revision | Completely Revised | New Page | Information Removed

SHEET
1 OF 1

SDG&E ELECTRIC OVERHEAD STANDARD

BRACKET MOUNTED TERMINALS, 12KV 3 WIRE,
ARMLESS DEAD END CONSTRUCTION

FMO
OH 1438

TABLE OF CONTENTS

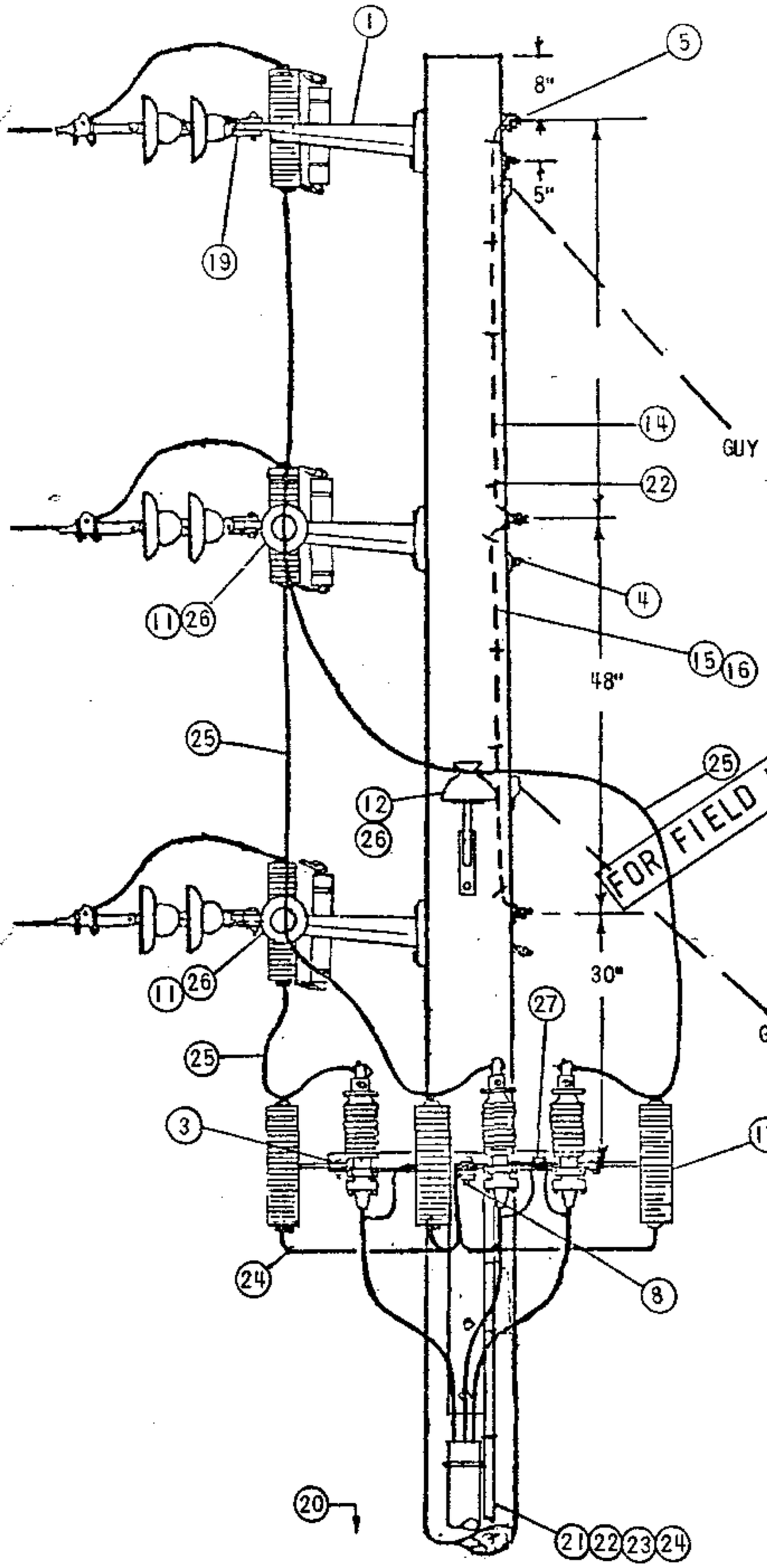

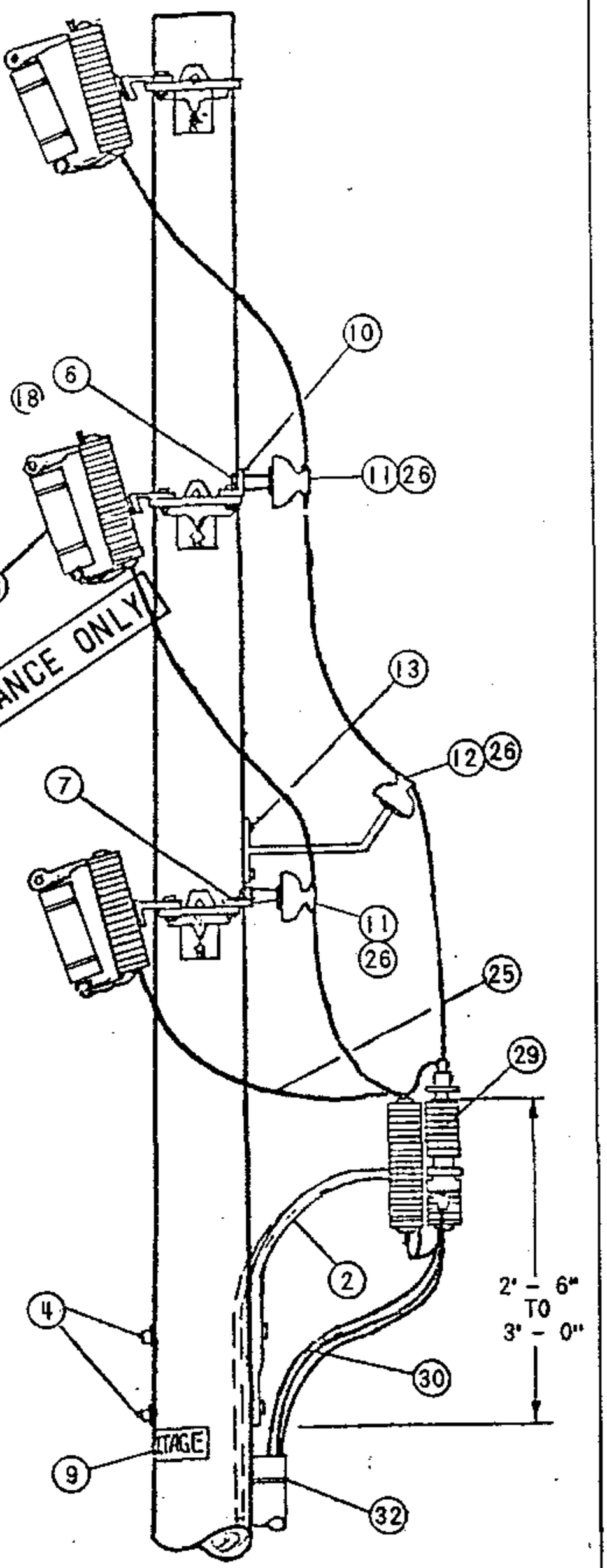

(DEAD ENDS OMITTED FOR CLARITY)

DATE 8-27-82 APPD LDR #	SDG&E ELECTRIC STANDARDS BRACKET MOUNTED TERMINALS, 12KV 3 WIRE, ARMLESS DEAD END CONSTRUCTION	OH 1499.303 ~~UG 4299.303~~ SUPERSEDES 1438.1(11-16-81)

NOTES:

(A) UNIT GROUND COMPLETE ORDER 603120 WITH GRAY MOULDING, 603136 WITH PLAIN MOULDING.

B. UNTWIST SUFFICIENT LENGTH OF #2 STRANDED WIRE TO CONNECT EACH ARRESTER AND POTHEAD (TERMINAL) GROUND WITH A SINGLE STRAND.

(C) USE TWO-ROD GROUND SPACED A MINIMUM OF 6 FEET APART.

D. THIS CONFIGURATION NOT TO BE USED WHERE A FUTURE EXTENSION IS ANTICIPATED

(E) EXEMPT MATERIALS.

F. THIS INSTALLATION DOES NOT INCLUDE GUYING MATERIAL

(G) THE FIBERGLASS UPSWEEP TERMINAL BRACKET IS TO BE USED FOR UNDERGROUND CONDUCTORS 4/0 OR SMALLER. DO NOT USE FOR 500 KCM AND LARGER CONDUCTORS

FOR FIELD MAINTENANCE ONLY

	ITEM	DESCRIPTION	QUANT	STOCK NO. OR CONSTR STDS
OH CREWS P T & F	1	BRACKET, GALV., 4-HOLE, MOUNTING SEE NOTE (G)	3	166240
	2	BRACKET, FIBERGLASS, TERMINAL, UPSWEEP	1	166864
	3	BRACKET, ARMLESS, TERMINAL MOUNTING (SEE DETAIL PG. 1437.1)	1	166672
	4	MACH. BOLT, GALV., 5/8" X LENGTH AS REQ'D., 1-SQ. CURV. WASH., 1-DBL. COIL SPR. WASH. & 1-NUT (E)	5	PGS 139, 140
	5	MACH. BOLT, GALV., 5/8" X LENGTH AS REQ'D,, 1-SQ. CURV. WASH., 1-DBL. COIL SPR. WASH., 2-FLAT RD. WASH. & 2-NUTS (E)	3	PGS 139, 140
	6	MACH. BOLT, GALV., 5/8" X 1 1/2" (E)	2	PGS 139, 140
	7	MACH. BOLT, GALV., 1/2" X 1 1/2" (E)	2	PGS 139, 140
	8	MACH. BOLT, GALV., 5/8" X 2 1/2", 1-LOCK, 2-rd. WASH. & 2-NUTS (E)	1	PGS 139, 140
	9	HIGH VOLTAGE SIGN & 8-ROOFING NAILS, GALV. (E)	2	647648, 492192
	10	BRACKET, INSULATOR, MOUNTING ANGLE	2	PG 151
	11	PIN, INSULATOR, 12KV, 1" OR 1 3/8" LEAD THREAD	2	529248-529216
	12	BRACKET, INSULATOR, 1" OR 1 3/8" LEAD THREAD	1	166144-166176
	13	SCREW, LAG, GALV., 1/2" X 4" (E)	2	621568
	14	WIRE, BOND, BARE SOLID ANNEALED, #8	10'	812928
	15	HARDWOOD MOULDING, 1", (OTHER THAN TOP CIRCUIT ON POLE)	10'	487200
	16	MOULDING STAPLES, GALV., 3" X 1 1/16" X 1/4" (OTHER THAN TOP CIRCUIT ON POLE) (E)	6	678560
UC & D	17	LIGHTNING ARRESTER, 12KV	3	113248
	18	CUTOUT, FOR CURRENT-LIMITING FUSE	3	1200 SECTION
	19	CLEVIS	3	235776
	20	GROUND ROD & CLAMP (C)	2	603072, 230016 (A) (E)
	21	HARDWOOD MOULDING, 1"	36'	487200 (A)
	22	STAPLES, MOULDING, GALV., 3" X 1 1/16" X 1/4" (E)	24	678560 (A)
	23	STAPLES, FENCE, GALV., 1 1/4" (E)	32	678528 (A)
	24	WIRE, BARE STRANDED, COPPER, #2	50'	813664
	25	WIRE, BARE STRANDED, COPPER, (SIZE AS REQ'D)	25'	PGS 715-717
	26	INSULATOR, 12KV, PIN TYPE, (CLASS 55-5 OR 56-1)	3	429056-429152
	27	CONNECTOR, WIRE, COMPRESSION, (SIZE AS REQ'D)	1	PGS 783-787
	28	FUSE, CURRENT-LIMITING AS SPECIFIED ON WORK ORDER	3	1200 SECTION
UG CREWS	29	CABLE TERMINAL	3	SEE UG STDS
	30	CABLE, PRIMARY	AS REQ'D	SEE UG STDS
	31			
	32	RISER CONSTRUCTION	AS REQ'D	1400/4200 SECTION

TABLE OF CONTENTS

OH 1499.304
~~UG 4299.304~~
SUPERSEDES
438.2 (11-16-81)

SDG&E ELECTRIC STANDARDS

BRACKET MOUNTED TERMINALS, 12KV 3 WIRE, ARMLESS DEAD END CONSTRUCTION

DATE 8-27-82
APPD

FIELD MAINTENANCE ONLY

REVISION HISTORY:

7/13/2016: All versions prior to 2016 are superseded by their current version found inside the Overhead Construction Standard Manual.

TABLE OF CONTENTS

© 1998 - 2016 San Diego Gas & Electric Company. All rights reserved. Removal of this copyright notice without permission is not permitted under law.

REV	CHANGE	BY	DSGN	APPV	DATE	REV	CHANGE	BY	DSGN	APPV	DATE
C						F					
B						E					
A	ORIGINAL ISSUE	JS	IL	MDJ	7/13/2016	D					

X Indicates Latest Revision | Completely Revised | New Page | Information Removed

SHEET
1 OF 1

SDG&E ELECTRIC OVERHEAD STANDARD

CROSSARM CABLE POLE, 3Ø, 1/C PER PHASE
DEAD END CONSTRUCTION, 12.47KV AND BELOW

FMO
OH 1439

SCOPE: THIS STANDARD SHOWS DEADEND CONSTRUCTION FOR 12.47KV AND BELOW, 3 PHASE CABLE POLE WITH CROSSARM MOUNTED TERMINALS FOR #2/0 AND SMALLER U.G. CABLE. THIS CONSTRUCTION IS TO BE USED IN CONTAMINATION DISTRICT 1 ONLY.

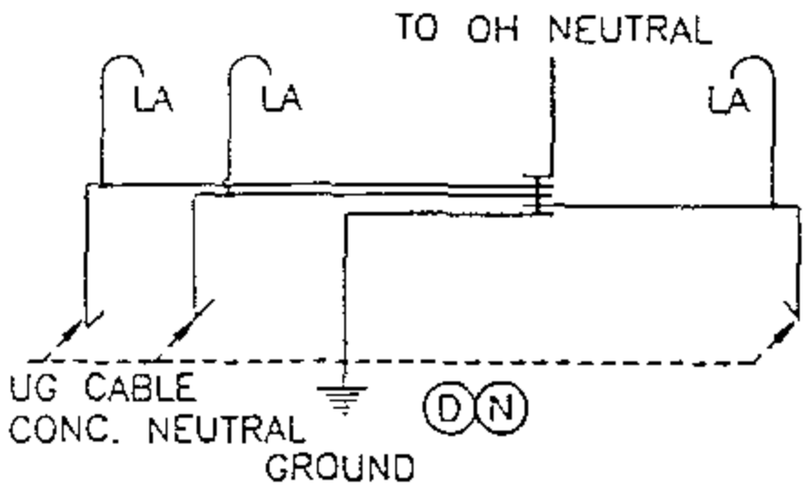

GROUND WIRING DETAIL

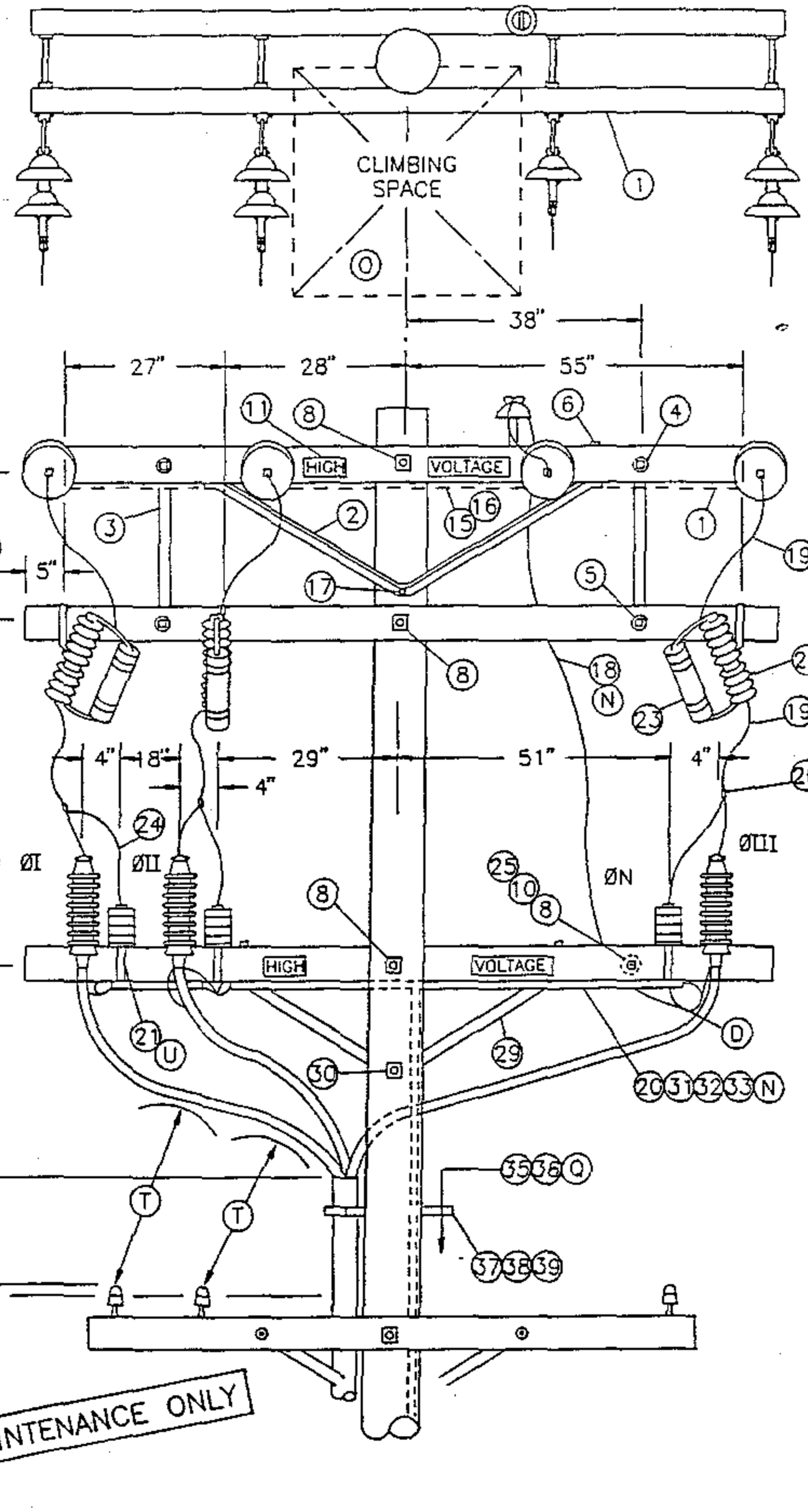

FOR FIELD MAINTENANCE ONLY

TABLE OF CONTENTS

DATE 1-1-93 APPD JLB/BDJ	SDG&E ELECTRIC STANDARDS CROSSARM CABLE POLE, 3Ø, 1/C PER PHASE DEADEND CONSTRUCTION, 12.47KV AND BELOW	OH 1499.307 ~~UG 4299.307~~ SUPERCEDES 1439.1 (1-1-93)

BILL OF MATERIAL:

ITEM	DESCRIPTION	QUANTITY	CONST STD OR PAGE NO	STOCK NUMBER
1	CROSSARM, 3-3/4" X 5-3/4" X 10' - 0"	4	-	294128
2	BRACE, ANGLE, CROSSARM, 5' - 0"	2	-	164128
3	BRACE, FLAT, CROSSARM, 28" (E)	2	-	164192
4	BOLT, WASHERHEAD, GALV, 3/8" X 4-1/2", 1 ROUND & 1 SPRING WASHER (E)	2	392	-
5	BOLT, MACH, GALV, 1/2-1 X 5", 1 ROUND & 1 DOUBLE COIL, SPRING WASHER (E)	2	392	-
6	BOLT, MACH, GALV, 1/2" X 7", 1 ROUND & 1 DOUBLE COIL SPRING WASHER (E)	6	392	-
7	BOLT, SPACE, GALV, 5/8" X (LENGTH AS REQ'D), 2 ROUND, 4 SQUARE & 2 DOUBLE COIL SPRING WASHERS (B) (E)	4	392	-
8	BOLT, MACH, GALV, 5/8" X (LENGTH AS REQ'D), 2 SQUARE & 1 DOUBLE COIL SPRING WASHER (B) (E)	4	392	-
9	PIN, INSULATOR, STRAIGHT, 12KV, 1" (B) (E)	1	-	532704
10	INSULATOR, LINE, 12KV NEUTRAL (B) (E)	2	-	429216
11	SIGN, HIGH VOLTAGE & (E)	4	-	647648
	9 ROOFING NAILS, GALV (E)	-	-	492224
12	CLEVIS, DEAD END, 5/8" BOLT STEEL (B) (E)	4	-	235712
13	INSULATOR, SUSPENSION, 12KV, CLEVIS (B)	7	750	-
14	CLAMP, STRAIGHT LINE, D.E. (B)	4	741	-
15	WIRE, #8, BARE SOLID ANNEALED COPPER	10'	-	812928
16	STAPLES, FENCE, GALV, 1-1/4" (E)	AS REQ'D	-	678528
17	BOLT, MACH, GALV, 5/3" X (LENGTH AS REQ'D) & 1 DOUBLE COIL SPRING WASHER (E)	1	392	-
18	WIRE, COPPER, BARE STRANDED OR ACSR/AW BARE (OH NEUTRAL JUMPER) (B) (N)	10'	711-715	-
19	WIRE, COPPER, BARE STRANDED (OH JUMPERS) (N)	18'	715	-
20	CONNECTOR, WIRE, COMPRESSION (SIZE AS REQ'D) (E)	AS REQ'D	783-787	-
21	BRACKET, CUTOUT/ARRESTER, FOR CROSSARM MOUNTING (E)	6	-	166070
22	CUTOUT, FOR CURRENT-LIMITING FUSE	3	1212	-
23	FUSE, CURRENT-LIMITING (SIZE AS SPECIFIED ON WORK ORDER)	3	1207	-
24	WIRE, BARE STRANDED COPPER, #6	14'	-	813536
25	PIN, TRANSFORMER ADAPTER, 1" LEAD THREAD (B) (E)	1	-	529248
26	ARRESTER, LIGHTNING	3	1247	-
27	BRACKET, CROSSARM, TERM (FOR #2 & #2/0 AL CABLE ONLY) (E)	3	-	166060
28	TERMINALS, UNDERGROUND CABLE	3	4111	-
29	BRACE, ANGLE, CROSSARM, 4' - 0"	1	-	164032
30	BOLT, MACH, GALV, 5/8" X (LENGTH AS REQ'D), 1 SQUARE & 1 DOUBLE COIL SPRING WASHER (E)	1	392	-
31	WIRE, BARE STRANDED COPPER (UNDER POTHEAD ARM) (N) (CABLE POLE NEUTRAL)	10'	715	-
32	CONDUIT, PVC TYPE 2, SCHEDULE 40, 1" (E)	10'	-	251200
33	STRAPS, PIPE, GALV, 1" & (E)	AS REQ'D	-	697792
	2 - 60 NAILS, GALV (E)		-	491552
34	RISER CONSTRUCTION	AS REQ'D	1400/4200	-
35	WIRE, #4, BARE STRANDED COPPER	45'	-	813760
36	UNIT GROUND, COMPLETE (S)	1		603136
37	BRACKET, LADDER ARM (E)	AS REQ'D	1404/4204	167184
38	NUT, CLAMPING CHANNEL, W/SPRING, 1/2" (E)	AS REQ'D	1404/4204	503488
39	CHANNEL, DOUBLE GALV, 24" (E)	AS REQ'D	1404/4204	216700

FOR FIELD MAINTENANCE ONLY

CABLE SIZE	UG MACRO UNIT	
	PORCELAIN	
	W/LADDER ARMS	W/O LADDER ARMS
3C #2/0 AL	CP2/0L	CP#2/0
3C-3#2 AL	CP3#2L	CP-3#2

TABLE OF CONTENTS

OH 1499.308 ~~UG 4299.308~~ SUPERCEDES 1439.2 (1-1-93)	SDG&E ELECTRIC STANDARDS CROSSARM CABLE POLE, 3Ø, 1/c PER PHASE DEADEND CONSTRUCTION, 12.47KV AND BELOW	DATE 1-1-93 APPD JLB/DSJ

INSTALLATION:

A. NEW CABLE POLES SHALL HAVE A STANDARD DEPTH OF 9'. IN MOST CASES THIS WILL REQUIRE A 5' TALLER POLE.

(B) REDUCE QUANTITIES AS REQUIRED WHEN NOT USING NEUTRAL.

C. USE THIS CONSTRUCTION FOR 2/0 AND SMALLER UNDERGROUND CABLE.

(D) INTERCONNECT OVERHEAD NEUTRAL, TERMINAL BASE, AND CONCENTRIC CABLE NEUTRAL CONDUCTOR TO LIGHTNING ARRESTER GROUND.

(E) EXEMPT MATERIAL.

(F) OMIT Ø II AND Ø N FOR SINGLE Ø 12KV CABLE POLE, OMIT Ø I AND ØII FOR SINGLE Ø 6.9KV CABLE POLE.

(N)

UG CABLE SIZE AWG OR KCMIL, AL	OH JUMPER COND SIZE, AWG OR KCMIL, CU	OH NEUT JUMPER SIZE			CABLE POLE NEUT SIZE (CU) UNDER POTHEAD ARM OR TRIPLE TERM BRKT
		CU	AL		
2	4	6	2	–	#6 PER PHASE
2/0	4	6	2	–	#6 PER PHASE
350	4/0	1/0	3/0	–	#2 PER PHASE
750	500	4/0	336.4	OR SAME SIZE AS O.H. NEUT CONDUCTOR	1/0 PER PHASE
1000	500	4/0	336.4		1/0 PER PHASE

TABLE OF CONTENTS

REFERENCE:

(O) ALLOWABLE WORKING AND CLIMBING SPACE – SEE STD. 251.

(P) POLE STEPPING – SEE STD. 363/4205.

(Q) GROUNDING METHODS – SEE PAGE 1002.5.

R. SEE STANDARD SECTION 1200/4300 FOR FUSING.

(S) RISER POSITIONS – SEE STANDARD 1402/4202.

(T) MINIMUM VERTICAL SEPARATION AS PER G.O. 95 – SEE STD. 1406/4206.

(U) SEE STANDARD 1407/4207 FOR PORCELAIN TERMINAL MOUNTING BRACKET INSTRUCTIONS AND MATERIALS.

FOR FIELD MAINTENANCE ONLY

DATE 1-1-93 APPD JLB/BDG	SDG&E ELECTRIC STANDARDS CROSSARM CABLE POLE, 3Ø, 1/C PER PHASE DEADEND CONSTRUCTION, 12.47KV AND BELOW	OH 1499.309 ~~UG 4299.309~~ SUPERCEDES 1439.3 (1-1-93)

FIELD MAINTENANCE ONLY

REVISION HISTORY:

7/13/2016: All versions prior to 2016 are superceded by their current version found inside the Overhead Construction Standard Manual.

2/20/2019: Install S706680 in place of old style Disconnect Switch.

TABLE OF CONTENTS

© 1998 - 2019 San Diego Gas & Electric Company. All rights reserved. Removal of this copyright notice without permission is not permitted under law.

REV	CHANGE	BY	DSGN	APPV	DATE	REV	CHANGE	BY	DSGN	APPV	DATE
C						F					
B	EDITORIAL CHANGES	GLW	JES	CZH	2/20/2019	E					
A	ORIGINAL ISSUE	JS	IL	MDJ	7/13/2016	D					

X Indicates Latest Revision | Completely Revised | New Page | Information Removed

SHEET
1 OF 1

SDG&E ELECTRIC OVERHEAD CONSTRUCTION STANDARDS

12.47 KV AND BELOW DEAD END CABLE POLE
ARM, 3Ø, 1/C PER Ø, HOOKSTICK SWITCHED

FMO
OH 1441

SCOPE: THIS STANDARD SHOWS CABLE POLE CONSTRUCTION USING PORCELAIN TERMINATIONS FOR 750 AND LARGER UNDERGROUND CABLE. (SEE STANDARD 1407/4207 FOR 350 KCMIL TERMINAL MOUNTING INFORMATION).

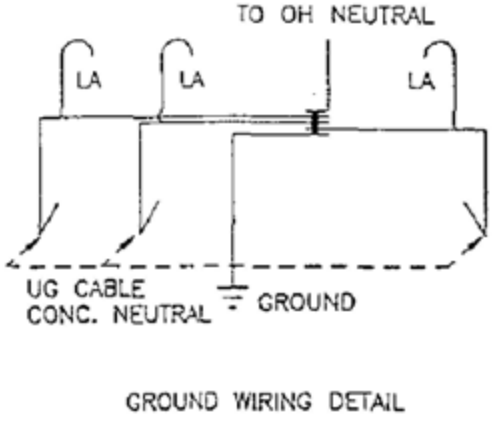

GROUND WIRING DETAIL

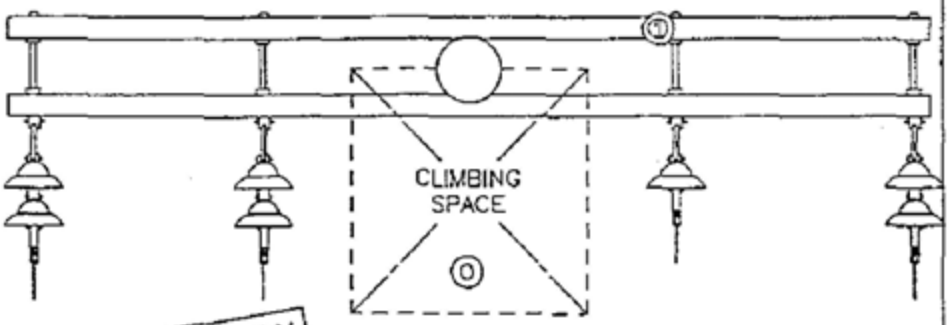

FOR FIELD MAINTENANCE ONLY

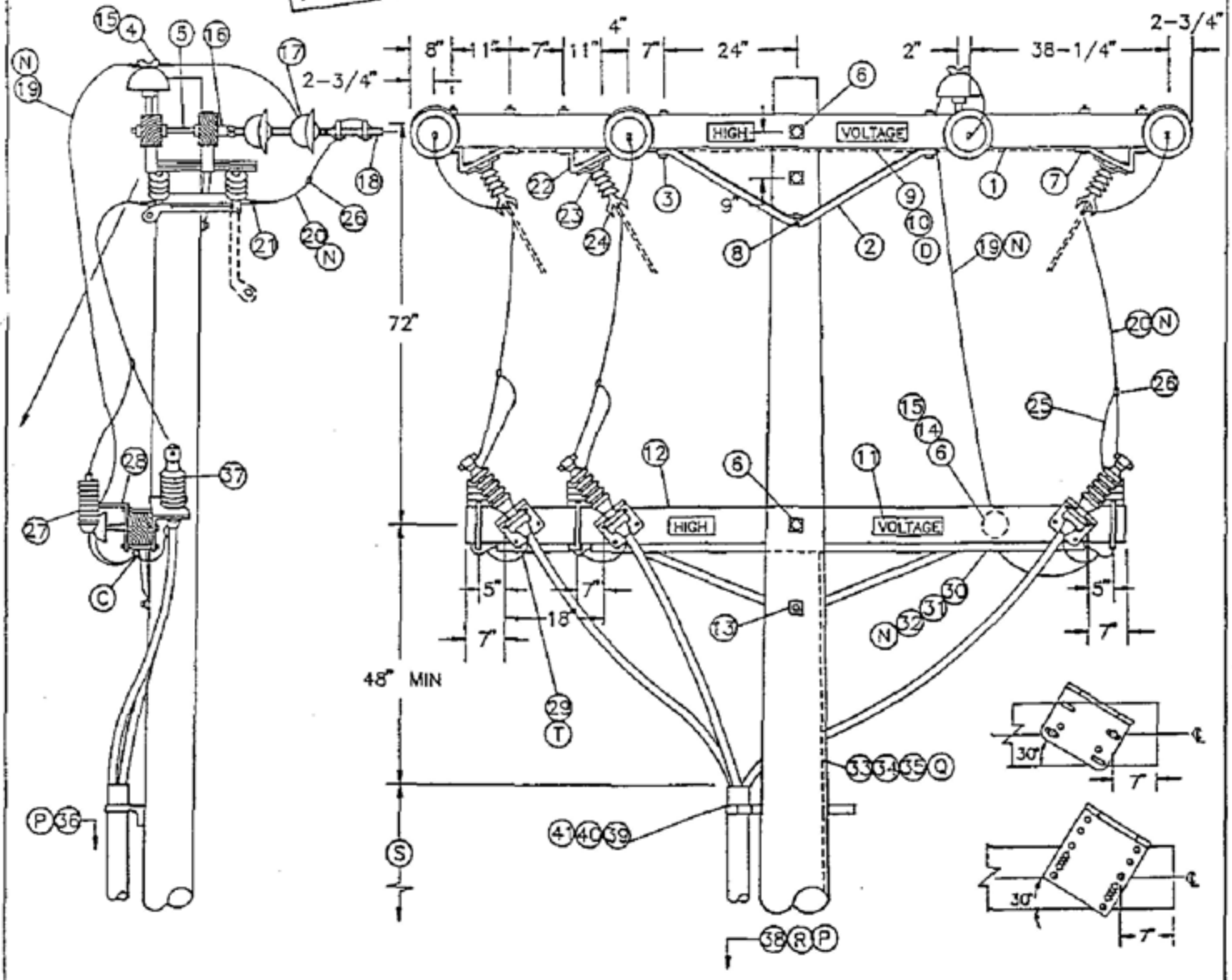

TABLE OF CONTENTS

DATE 1-1-93 APPD JVG/BOJ	SDG&E ELECTRIC STANDARDS 12.47 KV AND BELOW DEAD END CABLE POLE ARM, 3Ø, 1/C PER Ø, HOOKSTICK SWITCHED	OH 1499.401 ~~UG 4299.401~~ SUPERCEDES 1441.1 (1-1-93)

BILL OF MATERIAL:

ITEM	DESCRIPTION	QUANTITY	CONSTR STANDARD	STOCK NUMBER
1	CROSSARM, 3-3/4" X 5-3/4" X 12'- 0" (G)	2	–	294160
2	BRACE, ANGLE, CROSSARM, 4'- 0"	3	–	164032
3	BOLT, MACH, GALV, 1/2" X 7", 1 ROUND AND 1 DOUBLE COIL SPRING WASHER (E)	6	392	–
4	PIN, INSULATOR, STRAIGHT, 12KV, 1" LEAD THREAD (F)(E)	1	–	532704
5	BOLT, SPACE, GALV, 5/8" X (LENGTH AS REQ'D), 3 SQUARE, 2 ROUND AND 2 DOUBLE COIL SPRING WASHERS (F)(E)	4	392	–
6	BOLT, MACH, GALV, 5/8" X (LENGTH AS REQ'D), 2 SQUARE AND 1 DOUBLE COIL SPRING WASHERS (F)(E)	3	392	–
7	BOLT, MACH, GALV, 1/2" X 8", 1 ROUND AND 1 DOUBLE COIL SPRING WASHER (E)	12	392	–
8	BOLT, MACH, GALV, 5/8" X (LENGTH AS REQ'D) AND 1 DOUBLE COIL SPRING WASHER (E)	1	392	–
9	WIRE, #8, BARE SOLID ANNEALED COPPER	15'	–	812928
10	STAPLES, FENCE, GALV, 1-1/4" (E)	AS REQ'D	–	678528
11	SIGN, HIGH VOLTAGE AND 9 ROOFING NAILS, GALV (E)	4	–	647648 492224
12	CROSSARM, 3-3/4" X 5-3/4 X 10'- 0"	1	–	294128
13	BOLT, MACH, GALV, 5/8" X (LENGTH AS REQ'D), 1 SQUARE AND 1 DOUBLE COIL SPRING WASHER (E)	1	392	–
14	PIN, TRANSFORMER LEAD ADAPTER, 1" (F)(E)	1	–	529248
15	INSULATOR, 12KV, NEUTRAL (F)(E)	2	–	429216
16	CLEVIS, DEAD END, 5/8" BOLT STEEL (F)(E)	4	–	235712
17	INSULATOR, SUSPENSION, 12KV, CLEVIS (F)	7	750	–
18	CLAMP, STRAIGHT LINE, D.E. (F)	4	741	–
19	WIRE, BARE STRANDED CU OR AL (OH NEUT JUMPER) (N)(F)	12'	711-715	–
20	WIRE, BARE STRANDED COPPER (OH JUMPER) (N)	25'	715	–
21	TERMINAL, COMPRESSION (E)	6	794-795	–
22	BRACKET, DISCONNECT, ANGLE MOUNTING	6	–	166542
23	BOLT, MACH, GALV, 3/8" X 3", 2 ROUND & 1 LOCK WASHER (E)	6	392	–
24	SWITCH, HOOKSTICK DISCONNECT, 14.4KV, 600 A OR 1200 A	3	1222	–
25	WIRE, #6, BARE STRANDED COPPER	12'	–	813536
26	CONNECTOR, WIRE, COMPRESSION (SIZE AS REQ'D) (E)	AS REQ'D	783-787	–
27	ARRESTER, LIGHTNING (N)	3	–	113248
28	BRACKET, CUTOUT/ARRESTER (E)	3	–	166070
29	BRACKET, TERMINAL MOUNTING	3	–	166674
30	CONDUIT, PVC TYPE 2, SCHEDULE 40, 1" (E)	10'	–	251200
31	STRAPS, PIPE, GALV, 1" AND 2 – 6D NAILS , GALV (E)	AS REQ'D	–	697792 491552
32	WIRE, BARE STRANDED COPPER (CP NEUT-UNDER POTHEAD ARM) (N)	15'	715	–
33	WIRE, #4, BARE STRANDED COPPER	45'	–	813760
34	STAPLES, FENCE, GALV, 1-1/4" (E)	AS REQ'D	–	678528
35	UNIT GROUND, COMPLETE (Q)	1	–	603136
36	TAGS, SWITCH NUMBER (E)	2	–	720704
37	TERMINALS, UNDERGROUND CABLE	3	4111	–
38	RISER CONSTRUCTION	AS REQ'D	1400/4200	–
39	BRACKET, LADDER ARM (E)	AS REQ'D	1404/4204	167184
40	NUT, CLAMPING CHANNEL, W/SPRING, 1/2" (E)	AS REQ'D	1404/4204	503488
41	CHANNEL, DOUBLE GALV, 24" (E)	AS REQ'D	1404/4204	216700

FOR FIELD MAINTENANCE ONLY

CABLE SIZE	UG MACRO UNIT W/LADDER ARMS
3C-#350	CP350L
3C-#750	CP750L
3C-#1000	CP-1KL

TABLE OF CONTENTS

OH 1499.402
~~UG-4299.402~~
SUPERCEDES 1441.2 (1-1-93)

SDG&E ELECTRIC STANDARDS

12.47KV AND BELOW DEAD END CABLE POLE ARM, 3Φ, 1/C PER Φ, HOTSTICK SWITCHED

DATE 1-1-93
APPD JVB/BDB

INSTALLATION:

A. NEW CABLE POLES SHALL HAVE A STANDARD SETTING DEPTH OF 9'. IN MOST CASES THIS WILL REQUIRE A 5' TALLER POLE.

B. THIS CONSTRUCTION TO BE USED WITH 350 KCMIL AND LARGER UNDERGROUND CABLE.

(C) INTERCONNECT OVERHEAD NEUTRAL, TERMINAL BASE, AND CONCENTRIC CABLE NEUTRAL CONDUCTOR TO LIGHTNING ARRESTER GROUND.

(D) INTERCONNECT SWITCH AND DEADEND BONDS PER G.O. 95 RULE 52.7D. BONDING SHOULD BE DONE IN ACCORDANCE WITH RULE 53.4.

(E) EXEMPT MATERIAL.

(F) REDUCE QUANTITIES AS REQUIRED WHEN NOT USING NEUTRAL.

(G) WHEN ADDING THIS CONSTRUCTION TO AN EXISTING POLE WITH A 10' LINE ARM, AND SUFFICIENT POLE HEIGHT EXISTS, INSTALL 10' SWITCH ARMS AND ASSOCIATED HARDWARE BELOW THE LINE ARM TO AVOID CHANGING LINE ARM FROM 10' TO 12' (SEE O.H. STANDARD 1222, FIG. 1-B).

(N)

UG CABLE SIZE AWG OR KCMIL, AL	OH JUMPER COND SIZE, AWG OR KCMIL, CU	OH NEUT JUMPER SIZE			CABLE POLE NEUT SIZE (CU) UNDER POTHEAD ARM OR TRIPLE TERM BRKT
		CU	AL		
2	4	6	2	--	#6 PER PHASE
2/0	4	6	2	--	#6 PER PHASE
350	4/0	1/0	3/0	--	#2 PER PHASE
750	500	4/0	336.4	OR SAME SIZE AS O.H. NEUT CONDUCTOR	1/0 PER PHASE
1000	500	4/0	336.4		1/0 PER PHASE

REFERENCE:

(O) ALLOWABLE WORKING AND CLIMBING SPACE - SEE STANDARD 251.

(P) POLE STEPPING - SEE STANDARD 363.

(Q) GROUNDING METHODS - SEE STANDARD 1002.

(R) RISER POSITIONS - SEE STANDARD 1402/4202.

(S) MINIMUM VERTICAL SEPARATION AS PER G.O. 95 - SEE STANDARD 1406/4206.

(T) SEE STANDARD 1407/4207 FOR PORCELAIN AND NON PORCELAIN TERMINAL MOUNTING BRACKET INSTRUCTIONS AND MATERIALS.

FOR FIELD MAINTENANCE ONLY

TABLE OF CONTENTS

DATE 1-1-93 APPD JLG/BDJ	SDG&E ELECTRIC STANDARDS 12.47KV AND BELOW DEAD END CABLE POLE ARM, 3Ø, 1/C PER Ø, HOOKSTICK SWITCHED	OH 1499.403 ~~UG 4299.403~~ SUPERCEDES 1441.3 (1-1-93)

FIELD MAINTENANCE ONLY

REVISION HISTORY:

7/13/2016: All versions prior to 2016 are superseded by their current version found inside the Overhead Construction Standard Manual.

TABLE OF CONTENTS

© 1998 - 2016 San Diego Gas & Electric Company. All rights reserved. Removal of this copyright notice without permission is not permitted under law.

REV	CHANGE	BY	DSGN	APPV	DATE	REV	CHANGE	BY	DSGN	APPV	DATE
C						F					
B						E					
A	ORIGINAL ISSUE	JS	IL	MDJ	7/13/2016	D					

X Indicates Latest Revision | Completely Revised | New Page | Information Removed

SHEET 1 OF 1

SDG&E ELECTRIC OVERHEAD STANDARD

12.47 KV AND BELOW DEAD END CABLE POLE THREE-PHASE, 1/C PER PHASE, GANG OPERATED SWITCHED, NON-PORCELAIN TERMINALS

FMO OH 1443

SCOPE: THIS STANDARD SHOWS A DEADEND CONSTRUCTION FOR 12.47 KV AND BELOW, THREE-PHASE CABLE POLE USING NON-PORCELAIN TERMINALS WITH A MEMCO GANG OPERATED SWITCH FOR 350 KCMIL AND LARGER U.G. CABLE.

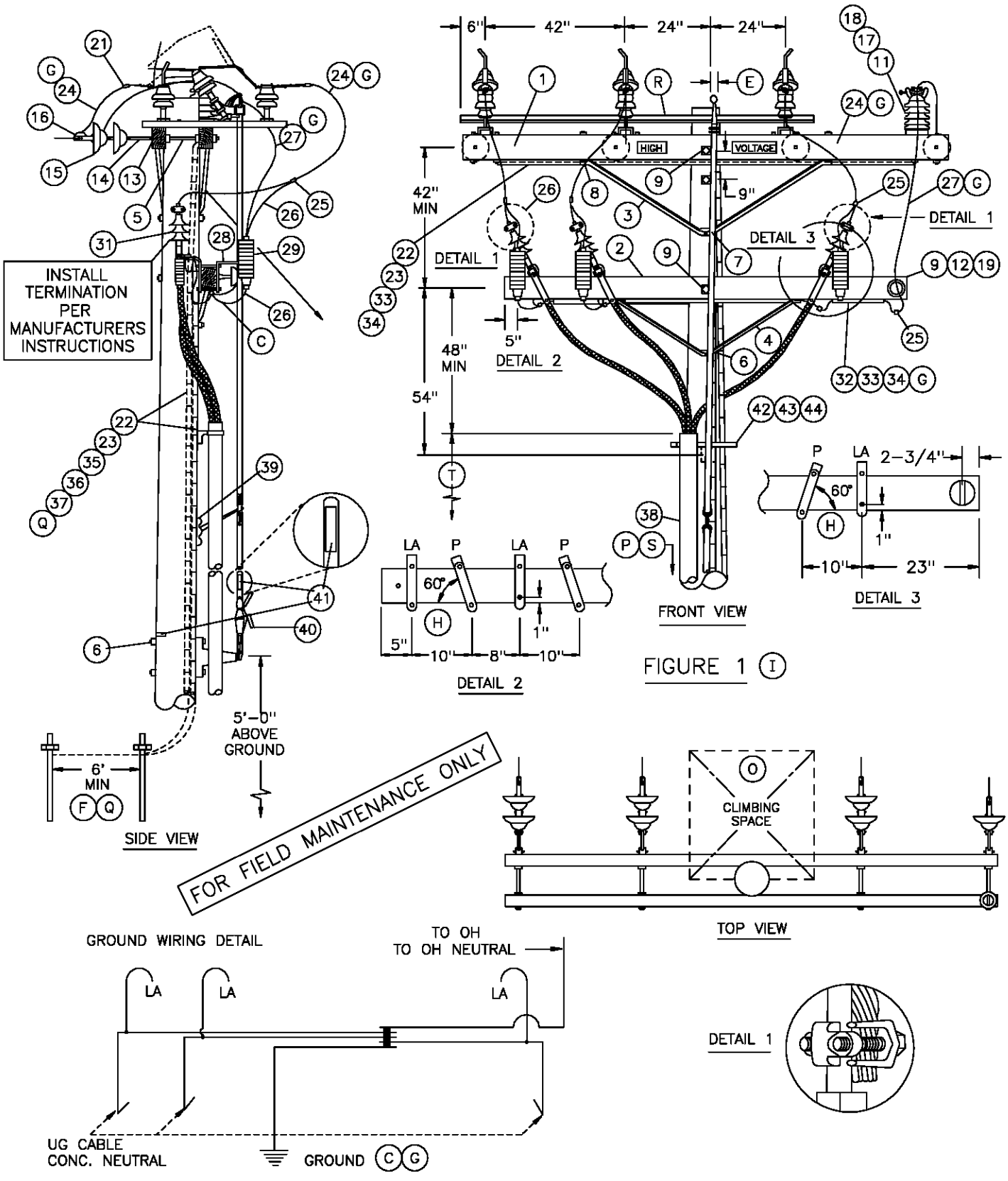

FIGURE 1 (I)

OH 1499.404 ~~UG 4299.404~~ SUPERSEDES 1443.1 (9-1-00)	SDG&E ELECTRIC STANDARDS 12.47KV AND BELOW DEAD END CABLE POLE THREE-PHASE, 1/C PER PHASE, GANG OPERATED SWITCHED, NON-PORCELAIN TERMINALS	DATE 1-1-96 APPD PBA / CMC

TABLE OF CONTENTS

TABLE OF CONTENTS

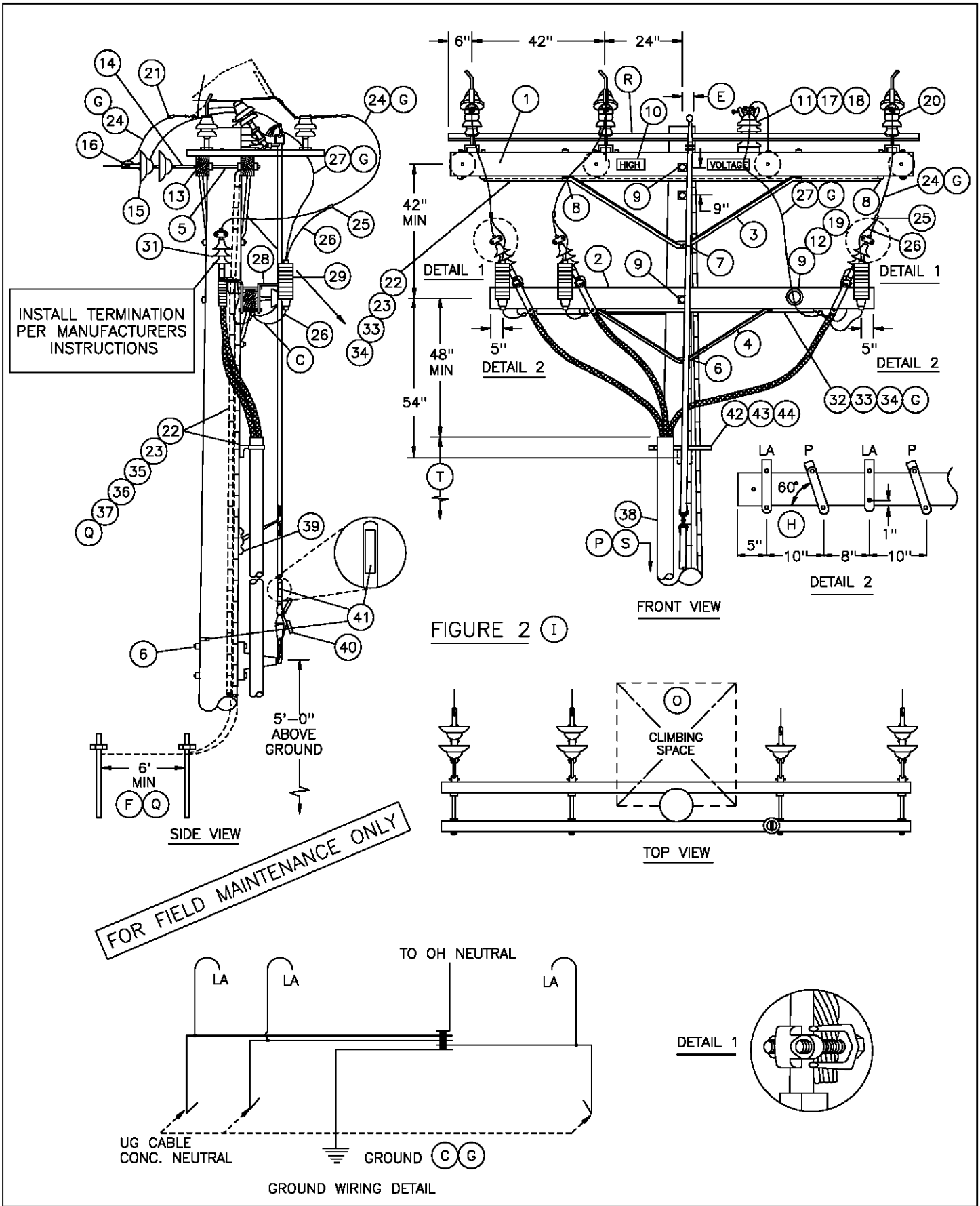

DATE 1-1-96 APPD PSA / CMC	SDG&E ELECTRIC STANDARDS 12.47KV AND BELOW DEAD END CABLE POLE THREE-PHASE, 1/C PER PHASE, GANG OPERATED SWITCHED, NON-PORCELAIN TERMINALS	OH 1499.405 ~~UG 4299.405~~ SUPERSEDES 1443.2 (9-1-00)

BILL OF MATERIAL:

ITEM	DESCRIPTION	QUANTITY	CONST STD OR PAGE NO	STOCK NUMBER
1	CROSSARM, 3–3/4" X 5–3/4" X 12'–0"	2	380.2	–
2	CROSSARM, 3–3/4" X 5–3/4" X 10'–0"	1	380.2	–
3	BRACE, 6', ANGLE, GALV	2	–	164160
4	BRACE, 4', ANGLE, GALV	1	–	164032
5	BOLT, SPACE, GALV, 5/8" X (LENGTH AS REQ'D), 3 SQ WASH & 2 DBL COIL SPRING WASH (D)	4	392.1 &.2	–
6	BOLT, MACH, GALV, 5/8" X (LENGTH AS REQ'D), 1 SQ WASH & 1 DBL COIL SPRING WASH	3	392.1 &.2	–
7	BOLT, MACH, GALV, 5/8" X (LENGTH AS REQ'D) & 1 DBL COIL SPRING WASH	1	392.1 &.2	–
8	BOLT, MACH, GALV, 1/2" X 7", 1 RD WASH & 1 DBL COIL SPRING WASH	18	392.1 &.2	–
9	BOLT, MACH, GALV, 5/8" X (LENGTH AS REQ'D), 2 SQ WASH & 1 DBL COIL SPRING WASH	3	392.1 &.2	–
10	SIGN, HIGH VOLTAGE & 9 ROOFING NAILS, GALV	2	–	647648 492224
11	STUD, 7–1/2" X 5/8" & 1 DBL COIL SPRING WASH (D)	1	–	701760 798560
12	PIN, TRANSFORMER ADAPTER, 1", LEAD THREAD (D)	1	–	529248
13	CLEVIS, DEAD END, 5/8", BOLT STEEL (OPEN TYPE) (D)	4	–	235618
14	LINK , EXTENSION, 1/2" X 2" X 12" (D)	4	–	466240
15	INSULATOR, SUSPENSION, 12KV, CLEVIS (D)	7	750.3	–
16	CLAMP, STRAIGHT LINE, D.E. (D)	4	741–743	–
17	INSULATOR, VERTICAL POST (D)	1	–	428608
18	CLAMP, POST INSULATOR (D)	1	–	227824
19	INSULATOR, LINE, 12KV NEUTRAL (D)	1	–	429216
20	SWITCH, TPST TILTING INSULATOR, 600 AMP	1	–	709254
21	TERMINAL, COMPRESSION	6	794–795	–
22	WIRE, #4, BARE STRANDED, COPPER	110'	–	813760
23	STAPLES, FENCE, GALV, 1–1/4"	AS REQ'D	–	678528
24	WIRE, BARE STRANDED COPPER (OH JUMPERS) (D)	20'	715	–
25	CONNECTOR, WIRE, COMPRESSION (SIZE AS REQ'D)	AS REQ'D	783–787	–
26	WIRE, #6, BARE STRANDED COPPER	12'	–	813536
27	WIRE, BARE STRANDED CU OR ACSR/AW BARE (OH NEUT JUMPER) (D)(G)	10'	711–715	–

FOR FIELD MAINTENANCE ONLY

OVERHEAD MACRO UNIT
3NGMXP

UG MACRO UNIT	
CABLE SIZE	ON LADDER ARMS
3C–#350	NP350L
3C–#750C	NP750L
3C–#1000	N1000L

TABLE OF CONTENTS

OH 1499.406 ~~UG 4299.406~~ SUPERSEDES 1443.3 (9–1–00)	SDG&E ELECTRIC STANDARDS 12.4KV AND BELOW DEAD END CABLE POLE THREE–PHASE, 1/C PER PHASE, GANG OPERATED SWITCHED, NON–PORCELAIN TERMINALS	DATE 1–1–98 APPD PSA / CMC

BILL OF MATERIAL: (CONTINUED)

ITEM	DESCRIPTION	QUANTITY	CONSTR STANDARD	STOCK NUMBER
28	BRACKET, CUTOUT/ARRESTER, FOR CROSSARM MOUNTING	3	–	166070
29	ARRESTER, LIGHTNING	3	1247	–
30				
31	TERMINALS & UNDERGROUND CABLE (U)	3	4111	–
32	WIRE, BARE STRANDED COPPER (UNDER POTHEAD ARM) (G)	20'	715	–
33	CONDUIT, PVC, TYPE 2, SCHEDULE 40, 1–1/2"	21'	–	251232
34	STRAPS, PIPE, GALV, 1–1/2" & 6–D NAILS	AS REQ'D	–	697664 491552
35	MOULDING, OAK HARDWOOD, 1" X 8' LONG	11'	–	487200
36	STAPLES, MOULDING, GALV, 3" X 1–1/16" X 1/4"	AS REQ'D	–	678560
37	ROD & CLAMP, GROUND	2 2	–	230016 603072
38	RISER CONSTRUCTION	AS REQ'D	1400/4200	–
39	SCREW, LAG, 1/2" X 4"	2	–	621568
40	PADLOCK, MEDECO	1	–	514862
41	TAGS, SWITCH NUMBER	2	204/3104	–
42	BRACKET, LADDER ARM	AS REQ'D	1404/4204	167184
43	NUT, CLAMPING CHANNEL, W/SPRING, 1/2"	AS REQ'D	1404/4204	503488
44	CHANNEL, DOUBLE GALV, 24"	AS REQ'D	1404/4204	216700

FOR FIELD MAINTENANCE ONLY

INSTALLATION:

A. NEW CABLE POLES SHALL HAVE A STANDARD SETTING DEPTH OF 9'. IN MOST CASES, THIS WILL REQUIRE A 5' TALLER POLE.

B. THIS CONSTRUCTION TO BE USED WITH 350 KCMIL AND LARGER UNDERGROUND CABLE.

(C) INTERCONNECT OVERHEAD NEUTRAL, TERMINAL BASE, AND CONCENTRIC CABLE NEUTRAL CONDUCTOR TO LIGHTNING ARRESTER GROUND.

(D) REDUCE QUANTITIES AS REQUIRED WHEN NOT USING NEUTRAL.

(E) OFFSET AS REQUIRED TO CLEAR ANCHOR GUY.

(F) SWITCH GROUND AND LIGHTNING ARRESTER GROUND TO BE CONNECTED ON THE SAME GROUND ROD.

(G)

UG CABLE SIZE AWG OR KCMIL, AL	OH JUMPER COND SIZE, AWG OR KCMIL, CU	OH NEUT JUMPER SIZE			CABLE POLE NEUT SIZE (CU) UNDER POTHEAD ARM OR TRIPLE TERM BRKT
		CU	AL		
350	4/0	1/0	3/0	–	#2 PER PHASE
750	500	4/0	336.4	OR SAME SIZE AS O.H. NEUT CONDUCTOR	1/0 PER PHASE
1000	500	4/0	336.4		1/0 PER PHASE

(H) TURN TOP OF BRACKET OUTWARD TO OBTAIN APPROX. 60° ANGLE.

	Indicates Latest Revision	Completely Revised	New Page	Information Removed

DATE 1–1–93
APPD JLB/RDJ

SDG&E ELECTRIC STANDARDS

12.4KV AND BELOW DEAD END CABLE POLE
THREE–PHASE, 1/C PER PHASE,
GANG OPERATED SWITCHED, NON–PORCELAIN TERMINALS

OH 1499.407
~~UG 4299.407~~
SUPERSEDES
1443.4 (9–1–00)

TABLE OF CONTENTS

INSTALLATION: (CON'T)

(I) – USE FIGURE ONE FOR ALL **NEW** CONSTRUCTION AND WHEN ADDING TO EXISTING CONSTRUCTION WITH NEUTRAL ON OUTSIDE PIN POSITION.

– USE FIGURE TWO ON EXISTING CONSTRUCTION WITH NEUTRAL ON INSIDE PIN POSITION.

REFERENCE:

(O) ALLOWABLE WORKING AND CLIMBING SPACE – SEE STD. 251.

(P) POLE STEPPING – SEE STD. 363.

(Q) GROUNDING METHODS – SEE PAGE 1002.5.

(R) GANG OPERATED SWITCH MOUNTING INSTRUCTIONS – SEE STD. SECTION 1200.

(S) RISER POSITION – SEE STANDARD 1402/4202.

(T) MINIMUM VERTICAL SEPARATION AS PER G.O. 95 – SEE STD. 1406/4206.

(U) SEE STANDARD 1407/4207 FOR NON–PORCELAIN TERMINAL MOUNTING BRACKET INSTRUCTIONS AND MATERIALS.

FOR FIELD MAINTENANCE ONLY

TABLE OF CONTENTS

	Indicates Latest Revision		Completely Revised		New Page		Information Removed

OH 1499.408 ~~UC 4299.408~~ SUPERSEDES 1443.5 (9–1–00)	SDG&E ELECTRIC STANDARDS 12.4KV AND BELOW DEAD END CABLE POLE THREE–PHASE, 1/C PER PHASE, GANG OPERATED SWITCHED, NON–PORCELAIN TERMINALS	DATE 1–1–93 APPD JLG/RDJ

FIELD MAINTENANCE ONLY

REVISION HISTORY:

7/13/2016: All versions prior to 2016 are superseded by their current version found inside the Overhead Construction Standard Manual.

TABLE OF CONTENTS

© 1998 - 2016 San Diego Gas & Electric Company. All rights reserved. Removal of this copyright notice without permission is not permitted under law.

REV	CHANGE	BY	DSGN	APPV	DATE	REV	CHANGE	BY	DSGN	APPV	DATE
C						F					
B						E					
A	ORIGINAL ISSUE	JS	IL	MDJ	7/13/2016	D					

X Indicates Latest Revision | Completely Revised | New Page | Information Removed

SHEET
1 OF 1

SDG&E ELECTRIC OVERHEAD STANDARD

12.47 KV DEAD END CABLE POLE, THREE-PHASE
WITH NEUTRAL, HORIZONTAL SCADA-MATE SWITCH

FMO
OH 1445

SCOPE: THIS STANDARD SHOWS A DEADEND CONSTRUCTION FOR 12.47 KV, THREE–PHASE CABLE POLE, WITH NEUTRAL, AND A HORIZONTAL MOUNTED SCADA–MATE SWITCH. (B)

NOTE: THIS INSTALLATION REQUIRES TRUCK ACCESS. CONTACT TELECOMMUNICATIONS BEFORE DESIGN BEGINS TO DETERMINE COMMUNICATIONS REQUIREMENT.

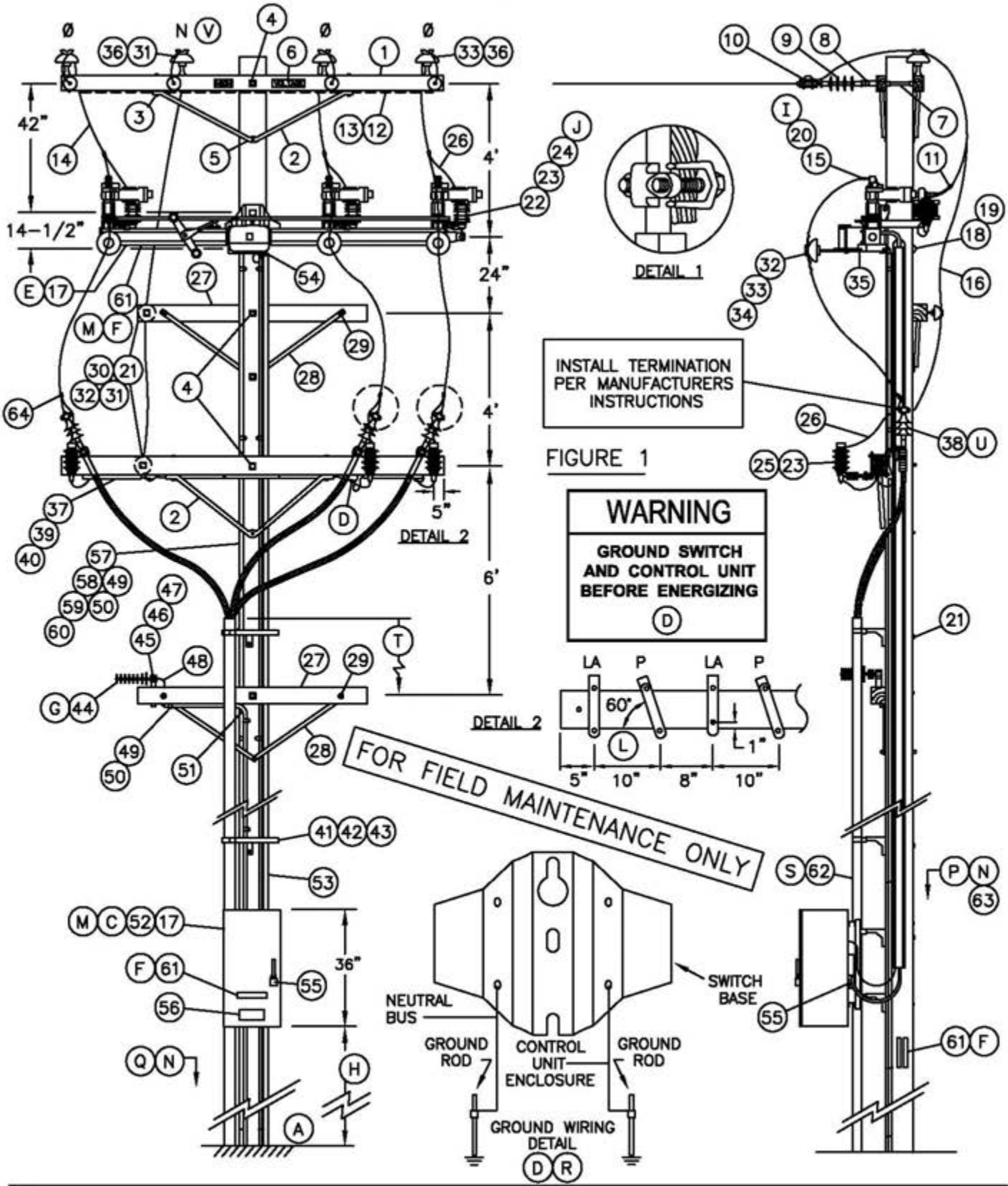

FIGURE 1

© 1998 - 2010 San Diego Gas & Electric Company. All rights reserved. Removal of this copyright notice without permission is not permitted under law.

1499.601 4299.601 SUPERSEDES 1445.1 (10–20–05)	SDG&E ELECTRIC STANDARDS 12.47 KV DEAD END CABLE POLE, THREE–PHASE WITH NEUTRAL, HORIZONTAL SCADA–MATE SWITCH	DATE 10–20–05 APPD PA / JJ

TABLE OF CONTENTS

TABLE OF CONTENTS

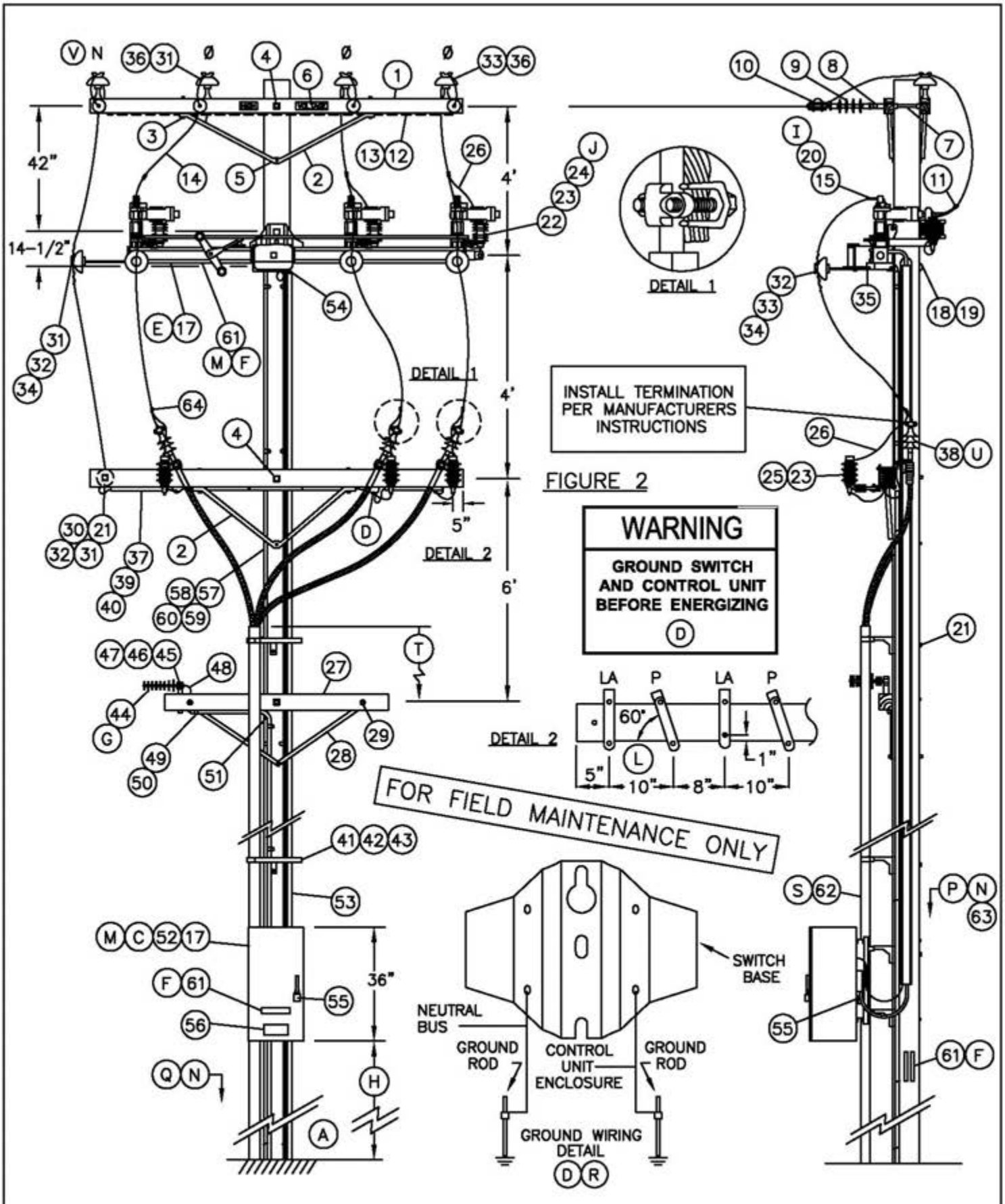

©1998 - 2010 San Diego Gas & Electric Company. All rights reserved. Removal of this copyright notice without permission is not permitted under law.

DATE 10-20-05 APPD PA / JJ	SDG&E ELECTRIC STANDARDS 12.47 KV DEAD END CABLE POLE, THREE-PHASE WITH NEUTRAL, HORIZONTAL SCADA-MATE SWITCH	1499.602 4299.602 SUPERSEDES 1445.2 (10-20-05)

BILL OF MATERIAL:

ITEM	DESCRIPTION		QUANTITY	CONSTR. STD	STOCK NUMBER	ASSEMBLY UNITS
1	CROSSARM, 3-3/4" X 5-3/4" X 10'-0"		3	–	294128	4–
2	BRACE, ANGLE, LINEARM=5'-0", PH ARM=4'-0"	4'	1	391	164032	4HUB
		5'	2	391	164128	5HUB
3	BOLT, MACH, GALV, 1/2" X 7", 1 ROUND AND 1 DOUBLE COIL SPRING WASHER		6	392	–	–
4	BOLT, MACH, GALV, 5/8" X (LENGTH AS REQ'D), 2 SQUARE AND 1 DOUBLE COIL SPRING WASHER		4	392	–	–
5	BOLT, MACH, GALV, 5/8" X (LENGTH AS REQ'D) AND 1 DOUBLE COIL SPRING WASHER		1	392	–	–
6	SIGN, HIGH VOLTAGE, AND		2	–	647648	HV
	9 ROOFING NAILS, GALV		–	–	492224	
7	BOLT, SPACE, GALV, 5/8" X (LENGTH AS REQ'D), 3 SQUARE, 2 ROUND, 2 DOUBLE COIL SPRING WASHERS AND 1 NUT		4	392	–	–
8	CLEVIS, DEAD END, 5/8" BOLT STEEL (CLOSED TYPE)		4	–	235712	–
9	INSULATOR, SUSPENSION, 12KV, CLEVIS		4	750	431650	4DE
10	CLAMP, STRAIGHT LINE, D.E.		4	741-743	–	–
11	CONNECTOR, WIRE COMPRESSION (SIZE AS REQ'D)		AS REQ'D	783-786	–	–
12	WIRE, #8 BARE SOLID ANNEALED COPPER		12'	–	812928	BOND8
13	STAPLE, FENCE, GALV, 1-1/4"		AS REQ'D	–	678528	
14	WIRE, BARE STRANDED COPPER (OH JUMPERS) (K)		45'	715	–	–
15	TERMINAL, COMPRESSION LUG (I)		6	794-795	–	–
16	WIRE, BARE STRANDED CU OR ACSR/AW BARE (OH NEUT JUMPER) (K)		14'	711-715	–	–
17	SWITCH, SCADA-MATE, 14.4 KV, POLE MOUNTED, INCLUDING 35' CONTROL CABLE, CONTROL UNIT AND RTU (E)		1	–	704690	AUTOSW (F)
18	BOLT, MACH, GALV, 5/8" X (LENGTH AS REQ'D), 1 SQUARE CURVED RIBBED AND 1 DOUBLE COIL SPRING WASHER		2	392	–	–
19	COVER, BOLT, PLASTIC &		2		285696	–
	6 – 10D NAILS, GALV		AS REQ'D		491392	–
20	BOLT, STAINLESS STEEL, 1/2" X 1-1/2" WITH 2 FLAT & 2 BELLEVILLE WASHERS & SILICONE BRONZE NUT (I)		12	392	148672	–
21	BOLT, MACH, GALV, 5/8" X (LENGTH AS REQ'D), 2 SQUARE & 1 DBL COIL SPRING WASHER		AS REQ'D	392	–	–
22	BOLT, MACH, GALV, 1/2 X 2-1/2", 1 ROUND AND 1 LOCK WASHER		3	392	–	–
23	ARRESTER, LIGHTNING (J)		6	–	113248	LA12C
24	SERVICE POST CONNECTOR		3	–	262560	–
25	BRACKET, CUTOUT/ARRESTER, FOR CROSSARM MOUNTING		3	–	166070	LA/B-C
26	WIRE, #6, BARE STRANDED COPPER	FT	18'	715	813536	BS6C
		LB	2			
27	CROSSARM, 3-1/2" X 4-1/2" X 6'-0"		2	380.2	294112	2S
28	BRACE, FLAT, CROSSARM, 28"		4	–	164192	
29	BOLT, MACH, GALV, 3/8" X 4-1/2" & 1 ROUND WASHER		4	392.2	–	–
30	PIN, TRANSFORMER LEAD ADAPTER, 1"		2	–	529248	PS/01
31	INSULATOR, 12KV NEUTRAL		3	–	429216	55-3C
32	WIRE, TIE		AS REQ'D	760-764	–	–
33	INSULATOR, 12KV, 55-5		6	750	429056	55-5C
34	INSULATOR STANDOFF BRACKET, 1" X 30"		3 OR 4	394	166144	KBKT30
35	"L" BRACKET , 2-1/2" X 2-1/2", GALV		3	–	166208	–
36	INSULATOR PIN, 12KV, 1"		4	396	532704	PS1
37	WIRE, BARE STRANDED COPPER (UNDER POTHEAD ARM) (K)		12'	715	–	–

FOR FIELD MAINTENANCE ONLY

TABLE OF CONTENTS

© 1998 - 2010 San Diego Gas & Electric Company. All rights reserved. Removal of this copyright notice without permission is not permitted under law.

1499.603 4299.603 SUPERSEDES 1445.3 (10-20-05)	SDG&E ELECTRIC STANDARDS 12.47 KV DEAD END CABLE POLE, THREE-PHASE WITH NEUTRAL, HORIZONTAL SCADA-MATE SWITCH	DATE 7-9-03 APPD PALMPB

BILL OF MATERIAL: (CON'T)

ITEM	DESCRIPTION		QUANTITY	CONSTR. STD	STOCK NUMBER	ASSEMBLY UNITS
38	TERMINALS AND UNDERGROUND CABLE (U)		3	4111	–	–
39	CONDUIT, PVC, TYPE 2, SCHEDULE 40, 1–1/2"		10'	–	251232	P11/2C
40	STRAPS, PIPE, GALV, 1–1/2", & 2 – 6D NAILS, GALV		AS REQ'D	–	697664	–
			AS REQ'D	–	491552	
41	BRACKET, LADDER ARM		AS REQ'D	1404/4204	167184	RSRARM
42	NUT, CLAMPING CHANNEL, W/SPRING, 1/2"		AS REQ'D	1404/4204	503488	
43	CHANNEL, DOUBLE GALV, 24"		AS REQ'D	1404/4204	216700	
44	ANTENNA, SCADA, COMMUNICATION, BROADBAND AND CONNECTORS (G)		1	–	109570	ANT
45	NIPPLE, PIPE 2" X 7", ALUM.		1	–	–	ANTXMB
46	BOLT, MACH, GALV. 1/2" X 9"		1	–	153184	
47	CENTERING WASHER, GALV.		2	–	795520	
48	CABLE, FLEXIBLE 1/2" COAXIAL SCADA ANTENNA		AS REQ'D	–	191906	ANTCAB
49	CONDUIT, PVC, SCHEDULE 40, 1/2"		150'	–	251168	P1/2–C
50	STRAPS, PIPE GALV, 1/2", & 6D NAILS, GALV		AS REQ'D	–	697728	–
			AS REQ'D	–	490656	–
51	ELBOW, PVC, 1/2"		1	–	–	–
52	TRANSCEIVER, 12V DC		1	–	749500	SOTRAN
53	U–GUARD, 2" X 10', POLYETHYLENE		3	–	249940	2UMOLD
54	GRIP, CONTROL CABLE		1	–	394018	–
55	PADLOCK, SCHLAGE ELECTRIC SERIES		2	–	514848	–
56	DECAL "SCADA" "INFORM S.C.O. UPON ENTRY"		1	207	301934	–
57	WIRE, #2 BARE STRANDED COPPER	FT	100'	–	813664	BS2R
		LB	20#			
58	STAPLES, FENCE, GALV, 1–1/4"		AS REQ'D	–	678528	–
	STAPLES, MOULDING, GALV, 3" X 1–1/16" X 1/4"		AS REQ'D	–	678560	–
59	GROUND ROD, 5/8" X 8' (D)(R)		2	1002	603072	ROD8
60	COPPER BONDED GROUND CONNECTOR		2	1002	259010	–
61	TAG, SWITCH NUMBER (F)		5	204	–	–
62	RISER CONSTRUCTION (S)		AS REQ'D	1400/4200	–	–
63	VISIBILITY STRIP (N)		4	208	304064	VSTRIP
64	HOT LINE CLAMP		3	788	227680	–

FOR FIELD MAINTENANCE ONLY

OH MACRO UNITS		
FIG.	NEUTRAL POSITION	MU
1	INSIDE	SMCPNI
2	OUTSIDE	SMCPNO

UG MACRO UNITS	
CABLE SIZE	W/LADDER ARMS
3C–#350	NP350L
3C–#750C	NP750L
3C–#1000	N1000L

INSTALLATION:

(A) NEW CABLE POLES SHALL HAVE A STANDARD SETTING DEPTH OF 9'. IN MOST CASES, THIS WILL REQUIRE A 5' TALLER POLE.

(B) THIS CONSTRUCTION TO BE USED WITH 350 KCMIL AND LARGER UNDERGROUND CABLE.

(C) SCADA SWITCH CONTROL IS SELF POWERED FROM POLE TOP SWITCH UNIT. NO LOCAL SECONDARY IS REQUIRED. FAULT INDICATION IS INTEGRATED WITH THE SWITCH CONTROL – NO EXTERNAL FAULT INDICATORS ARE REQUIRED.

© 1998 - 2010 San Diego Gas & Electric Company. All rights reserved. Removal of this copyright notice without permission is not permitted under law.

TABLE OF CONTENTS

DATE 10–20–05 APPD PBA / JJ	SDG&E ELECTRIC STANDARDS 12.47 KV DEAD END CABLE POLE, THREE–PHASE WITH NEUTRAL, HORIZONTAL SCADA–MATE SWITCH	1499.604 4299.604 SUPERSEDES 1445.4 (10–20–05)

Ⓓ **NOTE:** BEFORE ENERGIZING SWITCH, CONNECT GROUND LEADS TO THE GROUNDING POINT PROVIDED ON SWITCH MOUNTING BRACKET. INTERCONNECT OVERHEAD NEUTRAL, TERMINAL BASE AND CONCENTRIC CABLE CONDUCTOR TO LIGHTNING ARRESTER GROUND. INSTALL TWO SEPARATE GROUND RUNS FROM BASE OF SWITCH TO BASE OF POLE, UNDER SEPARATE COVERS, IN ADJACENT POLE QUADRANTS. CONNECT EACH RUN TO A SEPARATE SET OF GROUND RODS. CONNECT CONTROL UNIT ENCLOSURE GROUND WIRE TO ONE OF THE GROUND RUNS AND POTHEAD UNDERARM NEUTRAL BUS TO THE OTHER. – SEE GROUND WIRING DETAIL.

Ⓔ WHEN MOUNTING SCADA SWITCH TO POLE, DISCARD POLE BAND. **DO NOT INSTALL POLE BAND.**

Ⓕ SCADA SWITCH ASSEMBLY UNIT WILL GENERATE TWO SWITCH NUMBERS–ONE FOR THE SF6 INTERRUPTER AND ANOTHER FOR THE MANUAL OPERATED DISCONNECT. THE VISUAL BREAK, MANUALLY OPERATED DISCONNECT WILL ALWAYS BE A LINE SWITCH, NORMALLY CLOSED AND ASSIGNED THE LOWER OF THE SWITCH ASSIGNMENT NUMBERS. A TAG FOR THE MANUALLY OPERATED DISCONNECT WILL BE INSTALLED AT THE BASE OF THE POLE AND ON THE UNDERSIDE OF THE SWITCH BASE NEAR THE OPERATING LEVER. THE SF6 INTERRUPTER CAN BE EITHER A LINE SWITCH OR A TIE SWITCH. TAGS FOR THE SF6 INTERRUPTER WILL BE INSTALLED IN THREE LOCATIONS; AT THE BASE OF THE POLE, OUTSIDE OF THE CONTROL CABINET DOOR AND ANOTHER ON THE INSIDE OF THE DOOR. AN INTERRUPTER OPEN/CLOSED INDICATOR IS LOCATED ON ONE END OF THE SWITCH ARM.

Ⓖ PLANNER TO SPECIFY QUADRANT OF POLE FOR ANTENNA MOUNT WITH DATA FROM STANDARDS. POINTS LIST TO BE COMPLETED BY PLANNER AND SENT TO SENIOR ENGINEER, DISTRIBUTION OPERATIONS. SEE ELECTRIC STANDARDS TEAM FOR POINTS LIST FORMS.

Ⓗ RTU TO BE MOUNTED AT 10' FROM GROUND LEVEL TO BOTTOM OF RTU CABINET WHEN NOT SUBJECT TO TRAFFIC CONTACT. IF VULNERABLE TO VEHICLE DAMAGE, MOUNT RTU AT 13' – 6" FROM GROUND LEVEL TO BOTTOM OF RTU CABINET. CONSIDER LARGE VEHICLES PARKING PARALLEL TO CURB.

Ⓘ IF ATTACHING 1/0 OR 4/0 COPPER JUMPERS TO SCADA–MATE SWITCH, USE TWO BRONZE CABLE TAP LUGS (S/N 471296) IN PLACE OF BOLTS AND COMPRESSION LUG.

Ⓙ INSTALL LIGHTNING ARRESTERS ON THE VOLTAGE SENSOR SIDE OF SCADA–MATE SWITCH IN THE PARTIAL ARRESTER PROTECTION AREA. INSTALL LIGHTNING ARRESTERS ON BOTH SIDES OF SCADA–MATE SWITCH IN THE GENERAL ARRESTER PROTECTION AREA. REFER TO STANDARD PAGE 1247.2 FOR LIGHTNING ARRESTER APPLICATION MAP. LIGHTNING ARRESTERS ARE TO BE GROUNDED THROUGH THE SWITCH BASE.

Ⓚ

UG CABLE SIZE AWG OR KCMIL, AL	OH JUMPER COND SIZE, AWG OR KCMIL, CU	OH NEUT JUMPER SIZE			CABLE POLE NEUT SIZE (CU) UNDER POTHEAD ARM OR TRIPLE TERM BRKT
		CU	AL		
350	4/0	1/0	3/0	–	#2 PER PHASE
750	500	4/0	336.4	OR SAME SIZE AS O.H. NEUT CONDUCTOR	1/0 PER PHASE
1000	500	4/0	336.4		1/0 PER PHASE

Ⓛ TURN TOP OF BRACKET OUTWARD TO OBTAIN APPROXIMATELY 60° ANGLE.

Ⓜ CONTROL AND ANTENNA CONNECTIONS TO BE MADE BY SCADA PROJECT CREW. LINE CREW MOUNTS SWITCH TO POLE AND LEAVES CONTROL CABLE ON SITE.

REFERENCE:

Ⓝ REFLECTOR STRIPS ARE REQUIRED ON ALL SECTIONALIZING/TIELINE SWITCHES – SEE STANDARD 208.

O. FOR OPERATION OF SCADA–MATE SWITCH – SEE STANDARD PRACTICE 311.

Ⓟ ALLOWABLE WORKING AND CLIMBING SPACE – SEE STANDARD 251.

Ⓠ POLE STEPPING – SEE O.H. STANDARD 363.

Ⓡ GROUNDING METHODS – SEE O.H. STANDARD 1002.

FOR FIELD MAINTENANCE ONLY

Ⓢ RISER POSITION – SEE STANDARD 1402/4202.

Ⓣ MINIMUM VERTICAL SEPARATION AS PER G.O. 95 – SEE STANDARD 1406/4206.

Ⓤ SEE STANDARD 1407/4207 FOR NON–PORCELAIN TERMINAL MOUNTING BRACKET INSTRUCTIONS AND MATERIALS.

Ⓥ ON ALL NEW CONSTRUCTION AND WHEN ADDING TO EXISTING CONSTRUCTION, NEUTRAL TO BE INSTALLED IN OUTSIDE PIN POSITION PER DESIGN MANUAL PAGE 5124.2.

© 1998 - 2010 San Diego Gas & Electric Company. All rights reserved. Removal of this copyright notice without permission is not permitted under law.

TABLE OF CONTENTS

DATE 9–13–05 APPD PBA / JJ	SDG&E ELECTRIC STANDARDS 12.47 KV DEAD END CABLE POLE, THREE–PHASE WITH NEUTRAL, HORIZONTAL SCADA–MATE SWITCH	1499.605 4299.605 SUPERSEDES 1445.5 (10–20–05)

FIELD MAINTENANCE ONLY

REVISION HISTORY:

7/13/2016: All versions prior to 2016 are superceded by their current version found inside the Overhead Construction Standard Manual.

2/20/2019: Install S706680 in place of old style Disconnect Switch.

TABLE OF CONTENTS

© 1998 - 2019 San Diego Gas & Electric Company. All rights reserved. Removal of this copyright notice without permission is not permitted under law.

REV	CHANGE	BY	DSGN	APPV	DATE	REV	CHANGE	BY	DSGN	APPV	DATE
C						F					
B	EDITORIAL CHANGES	GLW	JES	CZH	2/20/2019	E					
A	ORIGINAL ISSUE	JS	IL	MDJ	7/13/2016	D					

X Indicates Latest Revision | Completely Revised | New Page | Information Removed

SHEET 1 OF 1

SDG&E ELECTRIC OVERHEAD CONSTRUCTION STANDARDS

12.47 KV AND BELOW DEAD END CABLE POLE, 6 OR 7 OH CONDUCTORS, 1 OR 2 TERMINALS PER CONDUCTOR, HOOKSTICK SWITCHED

FMO OH 1451

SCOPE: THIS STANDARD SHOWS 6 OR 7 CONDUCTOR DEAD END CABLE POLE WITH HOOKSTICK SWITCHES FOR 750 KCMIL AND LARGER U.G. CABLE. (SEE STANDARD 1407/4207 FOR 350 KCMIL TERMINAL MOUNTING INFORMATION).

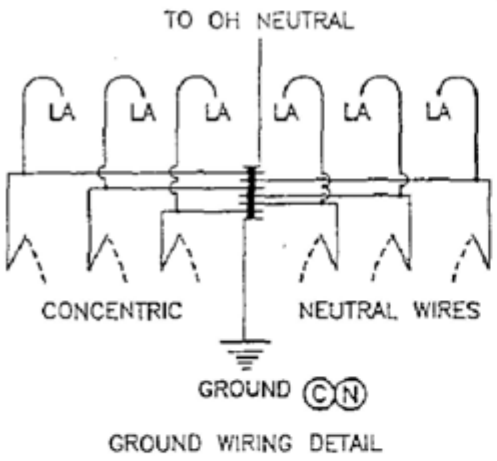

GROUND WIRING DETAIL

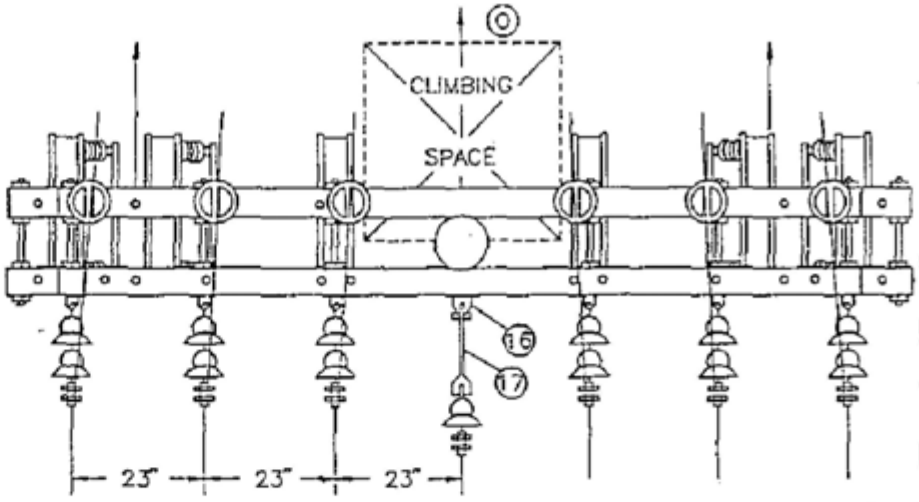

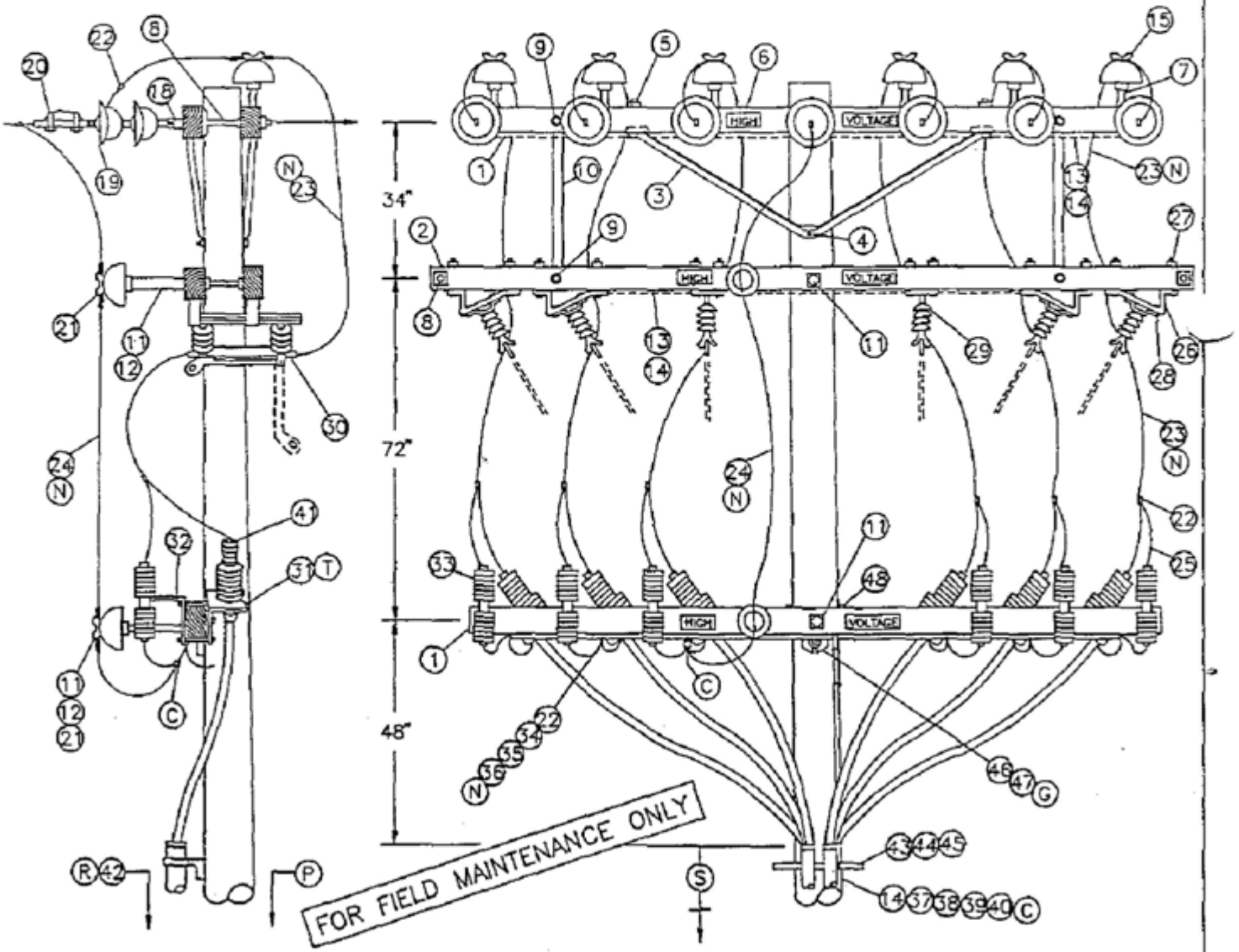

OH 1499.504 ~~UG 4299.504~~ SUPERCEDES 1451.1 (1-1-93)	SDG&E ELECTRIC STANDARDS 12.47KV AND BELOW DEAD END CABLE POLE, 6 OR 7 OH CONDUCTORS, 1 OR 2 TERMINALS PER CONDUCTOR, HOOKSTICK SWITCHED	DATE 1-1-93 APPD JVB/BDG

TABLE OF CONTENTS

BILL OF MATERIAL:

ITEM	DESCRIPTION		QUANTITY	CONST STD OR PG NO	STOCK NUMBER
1	CROSSARM, 3-3/4" X 5-3/4" X 12'-0"		3	–	294160
2	CROSSARM, 3-3/4" X 5-3/4" X 13'-6"		2	–	294368
3	BRACE, ANGLE, CROSSARM, 6"		3	–	164160
4	BOLT, MACH, GALV, 5/8" X (LENGTH AS REQ'D), 1 DBL COIL WASH	(E)	1	392.1&.2	–
5	BOLT, MACH, GALV, 1/2" X 7", 1 RD & 1 DBL COIL WASH	(E)	4	392.1&.2	–
6	SIGN, HIGH VOLTAGE & 8 ROOFING NAILS	(E)	6	–	647648 492224
7	PIN, INSULATOR, STRAIGHT, 12KV, 1" OR 1 3/8"	(E)	6	–	532704 532448
8	BOLT, SPACE, 5/8" X (LENGTH AS REQ'D), 3 SQ WASH & 2 DBL COIL WASH	(E)	8	392.1&.2	–
9	BOLT, MACH, GALV, 5/8" X (LENGTH AS REQ'D), 1 RD WASH & 1 DBL COIL WASH	(E)	8	392.1&.2	–
10	BRACE, VERTICAL, 36"	(E)	4	–	164224
11	BOLT, MACH, GALV, 5/8" X (LENGTH AS REQ'D), 2 SQ FLAT WASH & 1 DBL COIL WASH	(E)	5	392.1&.2	–
12	PIN, TRANSFORMER ADAPTER, 1" LEAD THREAD	(D) (E)	2	–	529248
13	WIRE, #8, BARE SOLID ANNEALED COPPER		2 LB	–	812928
14	STAPLES, FENCE, GALV, 1-1/4"	(D) (E)	AS REQ'D	–	678528
15	INSULATOR, LINE, 12KV, 1" OR 1-3/8" PIN		6	750	–
16	CLEVIS, DEAD END, 3/4" BOLT, STEEL (OPEN TYPE)	(D) (E)	1	–	235618
17	LINK, EXTENSION, 1/2" X 1-1/2" X 12"	(D)	1	–	466240
18	CLEVIS, DEAD END, 5/8" BOLT, STEEL (CLOSED TYPE)	(E)	6	–	235712
19	INSULATOR, SUSPENSION, 12KV	(D)	13	750	–
20	CLAMP, STRAIGHT LINE, D.E.	(D)	7	742-743	–
21	INSULATOR, LINE, 12KV, NEUTRAL	(D) (E)	2	–	429216
22	CONNECTOR, WIRE, (SIZE & TYPE AS REQ'D)	(E)	AS REQ'D	783-787	–
23	WIRE, BARE STRANDED COPPER, (OH JUMPER)	(N)	72'	715-716	–
24	WIRE, BARE STRANDED CU OR AL, (OH NEUT JUMPER)	(N)	12'	711-716	–
25	WIRE, #6, BARE STRANDED COPPER		25'	–	813536
26	BRACKET, DISCONNECT, ANGLE MOUNTING, 1/4" X 3"		8	–	166542
27	BOLT, MACH, GALV, 1/2" X 8", 1 RD & 1 DBL COIL WASH	(D)	24	392.1&.2	–
28	BOLT, MACH, GALV, 3/8" X 3"	(E)	8	392.1&.2	–
29	SWITCH, DISCONNECT, 14.4KV, 600 A OR 1200 A		6	1205	–
30	COMPRESSION TERMINALS, CU, 2 HOLE (SIZE AS REQ'D)		12	794-795	–
31	BRACKET, POTHEAD MOUNTING		6	1400/4200	–
32	BRACKET, CUTOUT/ARRESTER, FOR CROSSARM MOUNTING	(E)	6	–	166070
33	ARRESTER, LIGHTNING		6	1247	–
34	CONDUIT, PVC, SCHEDULE 40, 1-1/2"	(E)	10'	–	251232
35	STRAPS, PIPE, GALV, 1" & 6D NAILS, GALV	(E)	AS REQ'D	–	697792 491552
36	WIRE, BARE STRANDED CU, (G.P. NEUTRAL SIZE)	(N)	35'	715-716	–
37	WIRE, #4, BARE STRANDED COPPER		45'	–	813760
38	STAPLES, MOULDING, GALV, 3" X 1-1/16" X 1/4"	(D) (E)	AS REQ'D	–	678560
39	UNIT GROUND, COMPLETE	(Q)	1	–	603136
40	CLAMP, 5/8", GROUND ROD	(E)	2	–	230016
41	TERMINALS, UNDERGROUND CABLE		6	4111	–
42	RISER CONSTRUCTION		AS REQ'D	1400/4200	–
43	BRACKET, LADDER ARM	(E)	AS REQ'D	1404/4204	167184
44	NUT, CLAMPING CHANNEL, W/SPRING, 1/2"	(E)	AS REQ'D	1404/4204	503488
45	CHANNEL, DOUBLE GALV, 24"	(E)	AS REQ'D	1404/4204	216700
46	BOLT, MACH, GALV, 5/8" X (LENGTH AS REQ'D), 1 SQUARE, 1 ROUND & 1 DOUBLE COIL SPRING WASHER	(E)	1	392	–
47	GAIN, CROSSARM, BRACELESS	(G)	1	–	369598
48	BOLT, MACH, GALV, 5/8" X 7", 1 ROUND & 1 DOUBLE COIL SPRING WASHER	(E)	2	392	–

FOR FIELD MAINTENANCE ONLY

CABLE SIZE	UG MACRO UNIT PORCELAIN W/LADDER ARMS
3C-#750 AL TWO RUNS	2R750L
3C-#1000 AL TWO RUNS	2R-1KL

TABLE OF CONTENTS

DATE 1-1-93 APPD JVB/RDS	SDG&E ELECTRIC STANDARDS 12.47KV AND BELOW DEAD END CABLE POLE, 6 OR 7 OH CONDUCTORS 1 OR 2 TERMINALS PER CONDUCTOR, HOOKSTICK SWITCHED	OH 1499.505 ~~UG 4299.505~~ SUPERCEDES 1451.2 (1-1-93)

INSTALLATION:

A. NEW CABLE POLES SHALL HAVE A STANDARD DEPTH OF 9'. IN MOST CASES THIS WILL REQUIRE A 5' TALLER POLE.

B. THIS CONSTRUCTION TO BE USED WITH 350 KCMIL AND LARGER UNDERGROUND CABLE.

(C) INTERCONNECT OVERHEAD NEUTRAL, TERMINAL BASE, AND CONCENTRIC CABLE NEUTRAL CONDUCTOR TO LIGHTNING ARRESTER GROUND.

(D) REDUCE QUANTITIES AS REQUIRED WHEN NOT USING NEUTRAL .

(E) EXEMPT MATERIAL.

(F) INSTRUCTIONS TO INSTALL POTHEAD MOUNTING BRACKETS AND LIGHTNING ARRESTER BRACKETS.

(G) DO NOT CUT GAINS IN THE POLE WHEN INSTALLING THE VERTICALLY MOUNTED SECTIONALIZING SWITCH ARMS. THE GAIN HARDWARE USED HERE MAKE CUT GAINS UNNECESSARY.

(N)

UG CABLE SIZE AWG OR KCMIL, AL	OH JUMPER COND SIZE, AWG OR KCMIL, CU	OH NEUTRAL JUMPER SIZE CU OR AL	CABLE POLE NEUT SIZE (CU) UNDER POTHEAD ARM OR TRIPLE TERM BRKT
350	4/0	SAME SIZE	#2 PER PHASE
750	500	AS O.H. NEUT	1/0 PER PHASE
1000	500	CONDUCTOR	1/0 PER PHASE

REFERENCE:

(O) ALLOWABLE WORKING AND CLIMBING SPACE – SEE STD. 251.

(P) POLE STEPPING – SEE STD. 363.

(Q) GROUNDING METHODS – SEE PAGE 1002.5.

(R) RISER POSITIONS – SEE STANDARD 1402/4202.

(S) MINIMUM VERTICAL SEPARATION AS PER G.O. 95 – SEE STD. 1406/4206.

(T) SEE STANDARD 1407/4207 FOR PORCELAIN AND NON PORCELAIN TERMINAL MOUNTING BRACKET INSTRUCTIONS AND MATERIALS.

FOR FIELD MAINTENANCE ONLY

TABLE OF CONTENTS

OH 1499.506 ~~UG 4299.506~~ SUPERCEDES 1451.3 (1-1-93)	SDG&E ELECTRIC STANDARDS 12.47KV AND BELOW DEAD END CABLE POLE, 6 OR 7 OH CONDUCTORS 1 OR 2 TERMINALS PER CONDUCTOR, HOOKSTICK SWITCHED	DATE 1-1-93 APPD JLB/BDJ

FIELD MAINTENANCE ONLY

REVISION HISTORY:

7/13/2016: All versions prior to 2016 are superseded by their current version found inside the Overhead Construction Standard Manual.

TABLE OF CONTENTS

© 1998 - 2016 San Diego Gas & Electric Company. All rights reserved. Removal of this copyright notice without permission is not permitted under law.

REV	CHANGE	BY	DSGN	APPV	DATE	REV	CHANGE	BY	DSGN	APPV	DATE
C						F					
B						E					
A	ORIGINAL ISSUE	JS	IL	MDJ	7/13/2016	D					

X Indicates Latest Revision | Completely Revised | New Page | Information Removed

SHEET 1 OF 1

SDG&E ELECTRIC OVERHEAD STANDARD

POLETOP METERING, 2.4KV SINGLE PHASE

FMO OH 1481

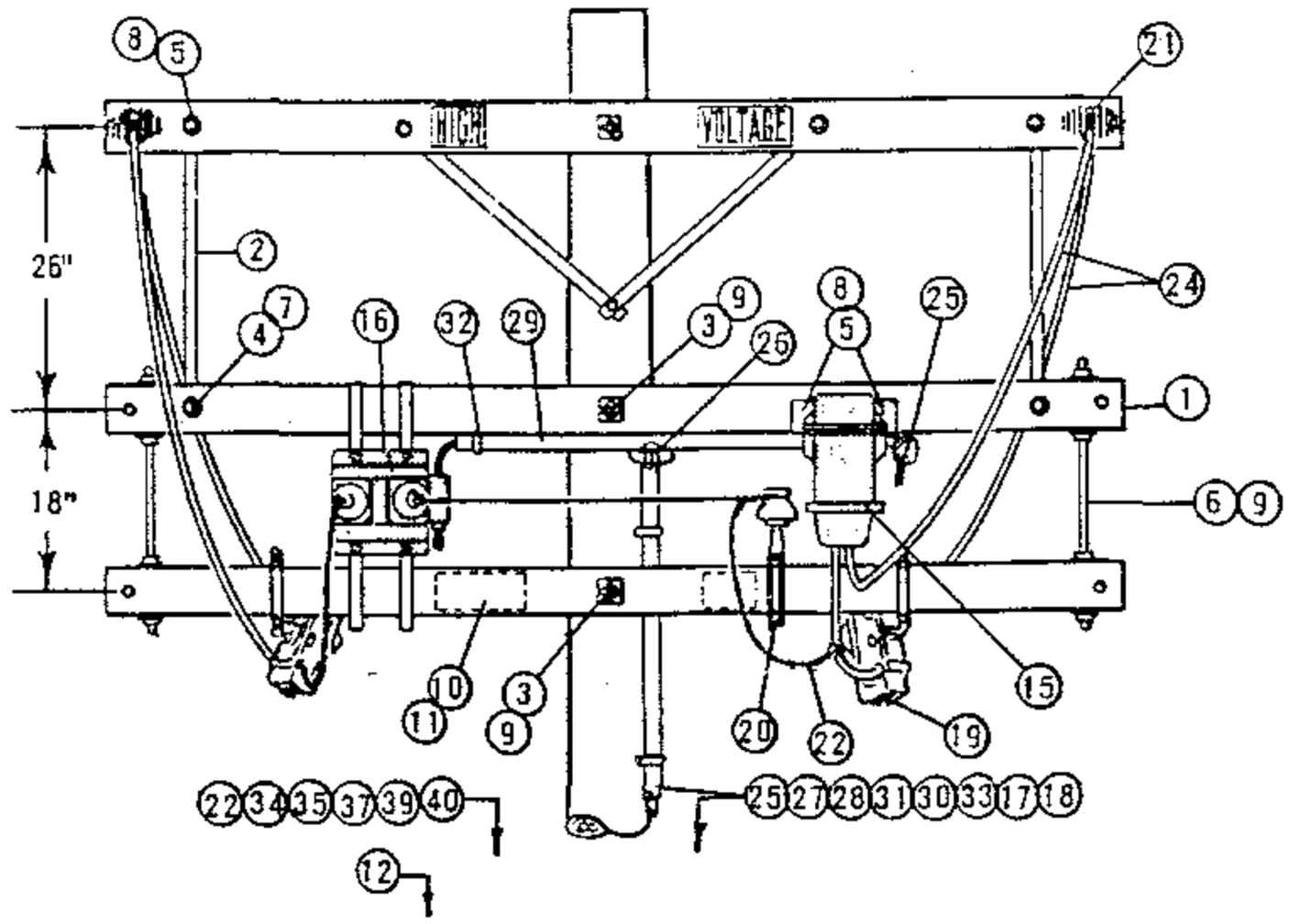

ELEVATION - LOAD SIDE

FOR FIELD MAINTENANCE ONLY

TABLE OF CONTENTS

NOTE:

(A) NOT REQUIRED WHERE METER BOX HAS HUB.

ITEM PTF	ITEM MI	DESCRIPTION	QUANTITY	STOCK NO. OR CONSTR STD
1		CROSSARM, 3 1/2" X 4 1/2" X 8' - 0"	2	PG 111 IT. 2
2		BRACE, FLAT CROSSARM 28"	2	164192
3		BOLT, MACH 5/8" X 14"	2	154880
4		BOLT, MACH 1/2" X 5"	2	153024
5		BOLT, MACH 3/8" X 4 1/2"	4	154368
6		BOLT, SPACE 5/8" X 24"	2	156640
7		WASHER, 1/2" ROUND	2	800192
8		WASHER, 3/8" ROUND	4	800288
9		WASHER, 3" SQ FLAT	12	799072.
10		SIGN, HIGH VOLTAGE	1	647648
11		NAILS, ROOFING #8 GALV	8	492224
12		POLE STEP	16	692992
13				
14				
	15	TRANSFORMER, CURRENT, WEST. TYPE WO 5KV, 5A	1	-
	16	TRANSFORMER, POTENTIAL, WEST. PTO, 2400/120V, HANGERS & BOLTS	1	-
	17	METER, SINGLE PHASE POWER	1	-
	18	CABINET, METER, TEST SWITCH, LAG SCREWS	1	161312
	19	CUTOUT, 5KV	2	PG 1211
	20	BRACKET, INSULATOR STAND OFF	1	166208
	21	CONNECTORS, SPLIT BOLT	7	PG 787
	22	WIRE, #6 BARE STRANDED COPPER	20'	813536
	23			

ITEM PTF	ITEM MI	DESCRIPTION	QUANTITY	STOCK NO. OR CONSTR STD
	24	WIRE, WP STRANDED (SAME SIZE AS PRIMARY)	24'	700 SECTION
	25	WIRE, #12 TYPE TW CODED COPPER, 3 CONDUCTORS, 41' EACH	123'	-
	26	BODY, CONDUIT, 3/4" PVC TYPE "T", BLANK COVER	1	147664
	27	BODY, CONDUIT, 3/4" PVC TYPE LB, BLANK COVER (A)	1	146384
	28	CONDUIT, 3/4" PVC SCH 80	31'	251520
	29	CONDUIT, 1" PVC SCH 40	4'	251200
	30	CONDUIT, 2" PVC SCH 40	20'	251296
	31	STRAP, PIPE 3/4" & 2-10D GALV NAILS	7	697888.491392
	32	STRAP, PIPE 1" & 2-8D GALV. NAILS	3	697792.491584
	33	STRAP, PIPE 2" & 2-10D GALV NAILS	12	697856.491392
	34	ROD, AND CLAMP, GROUND	1	630072.230016
	35	MOULDING, HARDWOOD	3'	487200
	36			
	37	STAPLES, MOULDING 3" X 1 1/16" X 1/4"	2	678560
	38			
	39	NAILS, 20D, GALV	4	491456
	40	STAPLES, FENCE 1 1/4" GALV	6	678528
	41			
	42			

SDG&E ELECTRIC STANDARDS

DATE 2-28-83
APPD JWT / HRH

POLETOP METERING, 2.4KV SINGLE PHASE

1499.801
SUPERSEDES
1481 (2-28-83)

FIELD MAINTENANCE ONLY

REVISION HISTORY:

7/13/2016: All versions prior to 2016 are superseded by their current version found inside the Overhead Construction Standard Manual.

TABLE OF CONTENTS

© 1998 - 2016 San Diego Gas & Electric Company. All rights reserved. Removal of this copyright notice without permission is not permitted under law.

REV	CHANGE	BY	DSGN	APPV	DATE	REV	CHANGE	BY	DSGN	APPV	DATE
C						F					
B						E					
A	ORIGINAL ISSUE	JS	IL	MDJ	7/13/2016	D					

X Indicates Latest Revision | Completely Revised | New Page | Information Removed

SHEET 1 OF 1

SDG&E ELECTRIC OVERHEAD STANDARD

POLETOP METERING, 2.4KV OPEN DELTA

FMO OH 1482

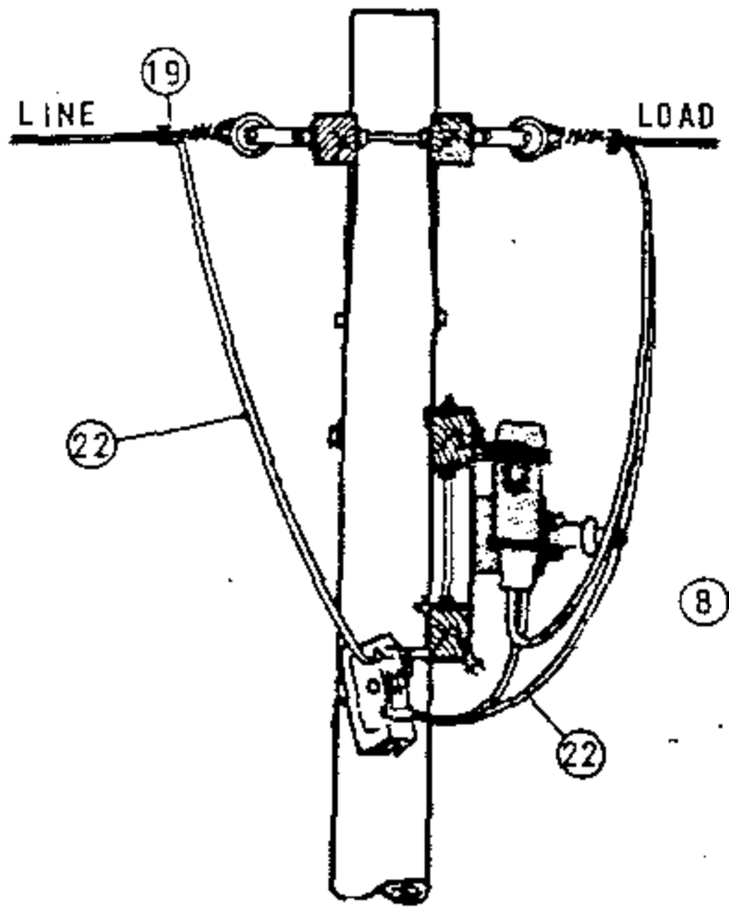

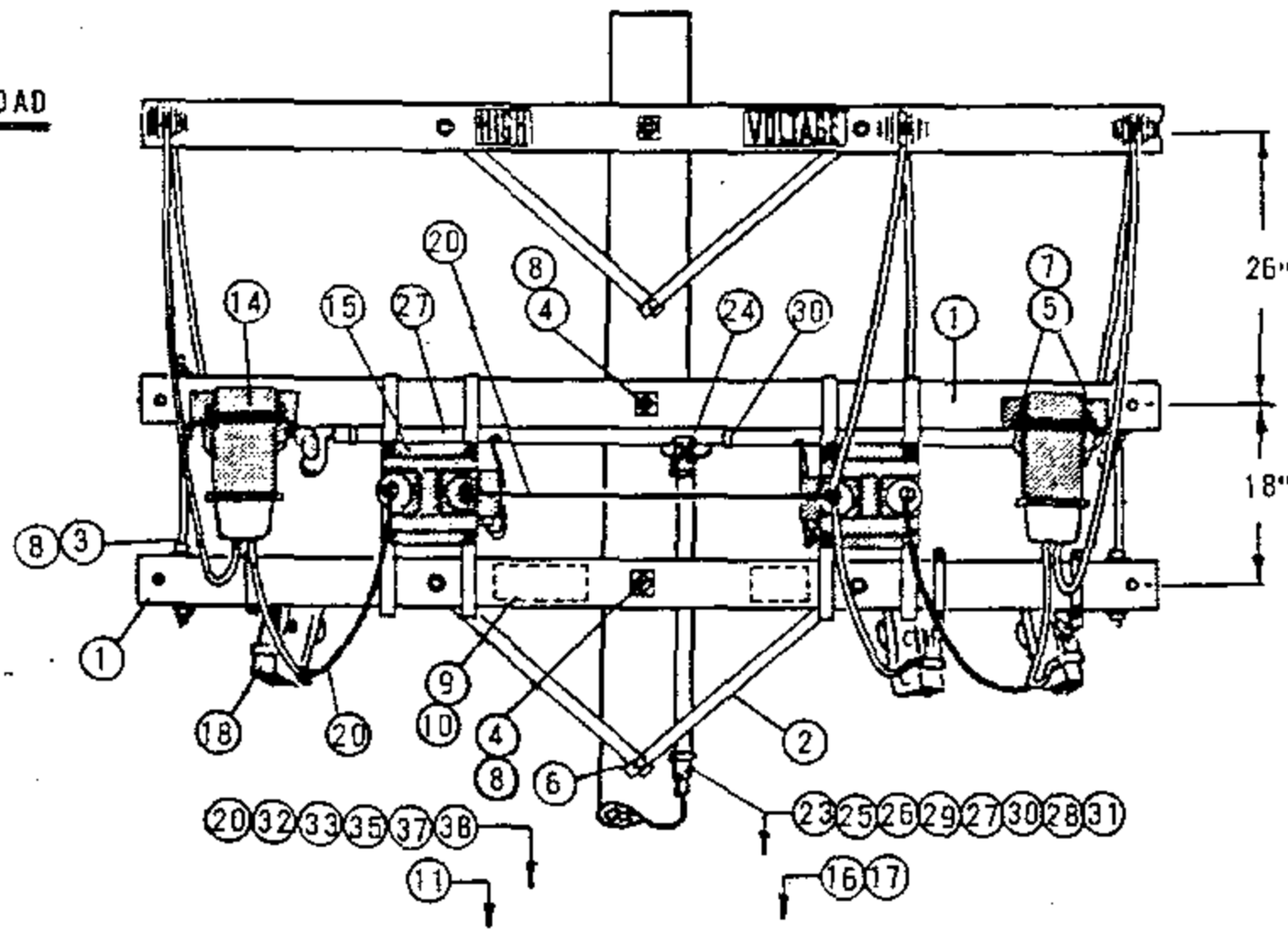

ELEVATION - LOAD SIDE

FOR FIELD MAINTENANCE ONLY

TABLE OF CONTENTS

NOTE:

(A) NOT REQUIRED WHERE METER BOX HAS HUB.

ITEM PTF	ITEM MI	DESCRIPTION	QUANTITY	STOCK NO. OR CONSTR STD
1		CROSSARM, 3 1/2" X 4 1/2" X 8' - 0"	2	PG 111 IT. 6
2		BRACE, FLAT CROSSARM 28"	2	164192
3		BOLT, SPACE 5/8" X __"	2	PG 139
4		BOLT, MACH 5/8" X __"	2	PG 139
5		BOLT, MACH 3/8" X 4 1/2"	4	154368
6		SCREW, LAG 1/2" X 4"	1	621568
7		WASHER, 3/8" ROUND	4	800288
8		WASHER, 3" SQUARE FLAT	12	799072
9		SIGN, HIGH VOLTAGE	1	647648
10		NAILS, ROOFING #8 GALV	8	492224
11		POLE STEPS	16	692992
12				
13				
	14	TRANSFORMER, CURRENT WEST. TYPE CTO 5KV 5A, HANGERS & BOLTS	2	-
	15	TRANSFORMER, POTENTIAL WEST TYPE PTO 2400/120V, HANGER & BOLTS	2	-
	16	METER, THREE PHASE POWER	1	-
	17	CABINET, METER TEST SWITCH; LAG SCREWS FOR MOUNTING	1	161312
	18	CUTOUT, 5KV	2	PG 1211
	19	CONNECTORS, SPLIT BOLT	9	PG 787
	20	WIRE, #6 BR STRANDED COPPER	18'	813536
	21			
	22	WIRE, WP STRANDED COPPER, 5KV (SAME SIZE AS PRIMARY)	34'	700 SECTION
	23	WIRE, #12 TYPE TW CODED CU 5 CONDUCTORS 46" EACH	230"	-
	24	BODY, CONDUIT, 3/4" PVC TYPE "T", BLANK COVER	1	147664
	25	BODY, CONDUIT 3/4" PVC TYPE LB, BLANK COVER (A)	1	146384
	26	CONDUIT, 3/4" PVC SCH 80	31'	251520
	27	CONDUIT, 1" PVC SCH 40	5'	251200
	28	CONDUIT, 2" PVC SCH 40	20'	251296
	29	STRAP, 3/4" PIPE & 2-10D NAILS	7	697888, 491392
	30	STRAP, 1" PIPE & 2-8D NAILS	3	697792, 491584
	31	STRAP, 2" PIPE & 2-10D NAILS	12	697856, 491392
	32	ROD & CLAMP, GROUND	1	630072, 230016
	33	MOULDING, HARDWOOD	3'	487200
	34			
	35	STAPLES, MOULDING	2	678560
	36			
	37	NAILS, 20D GALV	4	491456
	38	STAPLES, FENCE 1 1/4" GALV	6	678528

1499.802 SUPERSEDES 1482 (2-28-82)	SDG&E ELECTRIC STANDARDS POLETOP METERING, 2.4KV OPEN DELTA	DATE 2-28-83 APPD [illegible]

FIELD MAINTENANCE ONLY

REVISION HISTORY:

7/13/2016: All versions prior to 2016 are superseded by their current version found inside the Overhead Construction Standard Manual.

TABLE OF CONTENTS

© 1998 - 2016 San Diego Gas & Electric Company. All rights reserved. Removal of this copyright notice without permission is not permitted under law.

REV	CHANGE	BY	DSGN	APPV	DATE	REV	CHANGE	BY	DSGN	APPV	DATE
C						F					
B						E					
A	ORIGINAL ISSUE	JS	IL	MDJ	7/13/2016	D					

X Indicates Latest Revision | Completely Revised | New Page | Information Removed

SHEET 1 OF 1

SDG&E ELECTRIC OVERHEAD STANDARD

POLETOP METERING, 4KV SINGLE PHASE

FMO OH 1483

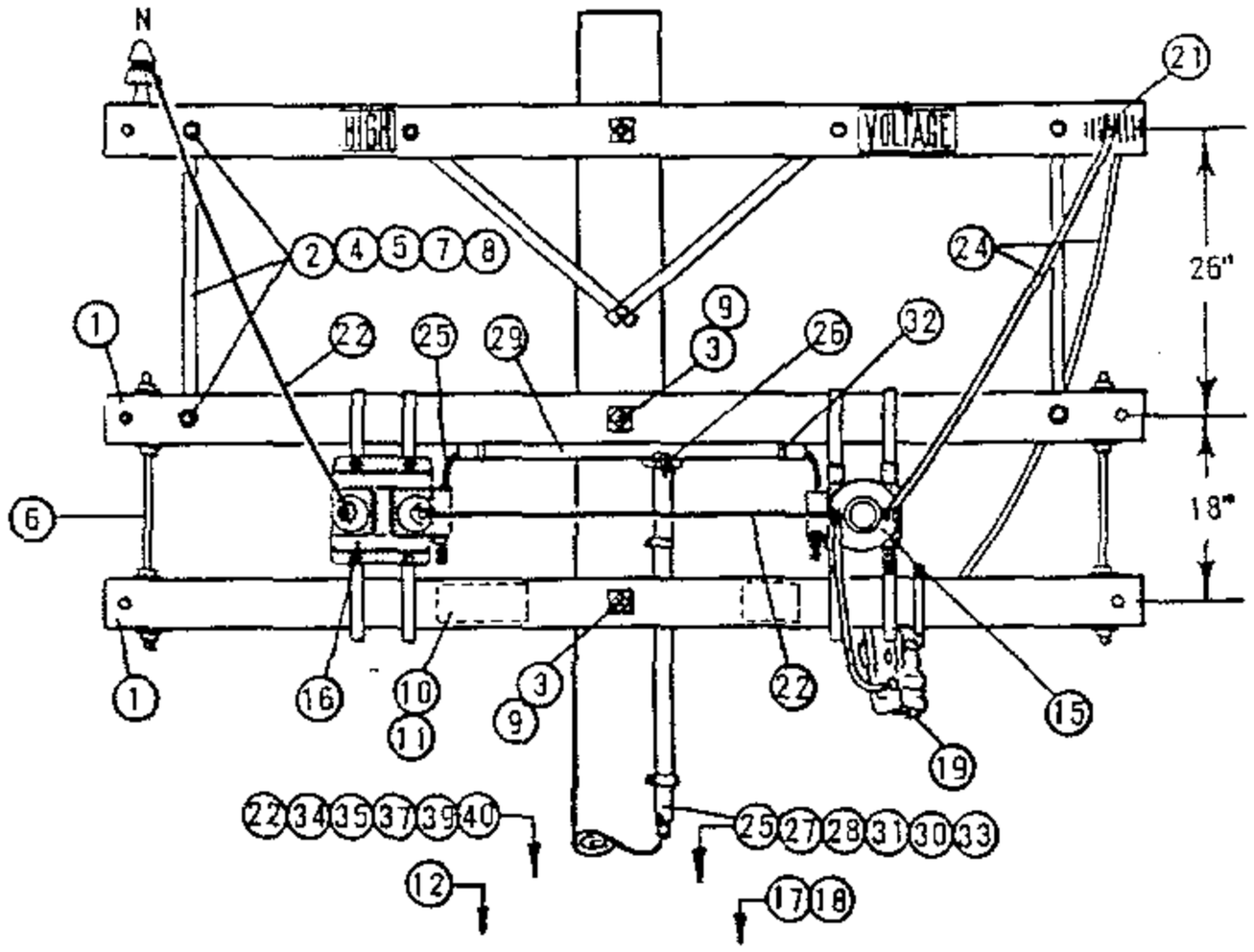

ELEVATION - LOAD SIDE

FOR FIELD MAINTENANCE ONLY

NOTE:

(A) NOT REQUIRED WHERE METER BOX HAS HUB.

ITEM PTF	ITEM MI	DESCRIPTION	QUANTITY	STOCK NO. OR CONSTR STD
1		CROSSARM, 3 1/2" X 4 1/2" X 8' - 0"	2	PG 111 IT. 2
2		BRACE, FLAT CROSSARM 28"	2	164192
3		BOLT, MACH 5/8" X 14"	2	154880
4		BOLT, MACH 1/2" X 5"	2	153024
5		BOLT, MACH 3/8" X 4 1/2"	4	154368
6		BOLT, SPACE 5/8" X 24"	2	156640
7		WASHER, 1/2" ROUND	2	800192
8		WASHER, 3/8" ROUND	4	800288
9		WASHER, 3" SQ FLAT	12	799072
10		SIGN, HIGH VOLTAGE	1	647648
11		NAILS, ROOFING #8 GALV	8	492224
12		POLE STEP	16	692992
13				
14				
	15	TRANSFORMER, CURRENT, WEST. TYPE WO 5KV, 5A	1	-
	16	TRANSFORMER, POTENTIAL, WEST. PTO, 2400/120V, HANGERS & BOLTS	1	-
	17	METER, SINGLE PHASE POWER	1	-
	18	CABINET, METER, TEST SWITCH, LAG SCREWS	1	161312
	19	CUTOUT, 5KV	2	PG 1211
	20			
	21	CONNECTORS, SPLIT BOLT	7	PG 787
	22	WIRE, #6 BARE STRANDED COPPER	20'	813536
	23		10'	194304

ITEM PTF	ITEM MI	DESCRIPTION	QUANTITY	STOCK NO. OR CONSTR STD
	24	WIRE, WP STRANDED (SAME SIZE AS PRIMARY)	24'	700 SECTION
	25	WIRE, #12 TYPE TW CODED COPPER, 3 CONDUCTORS, 41" EACH	123"	-
	26	BODY, CONDUIT, 3/4" PVC TYPE "T", BLANK COVER	1	147664
	27	BODY, CONDUIT, 3/4" PVC TYPE LB, BLANK COVER (A)	1	146384
	28	CONDUIT, 3/4" PVC SCH 80	31'	251520
	29	CONDUIT, 1" PVC SCH 40	4'	251200
	30	CONDUIT, 2" PVC SCH 40	20'	251296
	31	STRAP, PIPE 3/4" & 2-10D GALV NAILS	7	697888,491392
	32	STRAP, PIPE 1" & 2-8D GALV. NAILS	3	697792,491584
	33	STRAP, PIPE 2" & 2-10D GALV NAILS	12	697856,491392
	34	ROD, AND CLAMP, GROUND	1	630072,230016
	35	MOULDING, HARDWOOD	3'	487200
	36			486976,487008
	37	STAPLES, MOULDING 3" X 1 1/16"X1/4"	2	678560
	38			
	39	NAILS, 20D, GALV	4	491456
	40	STAPLES, FENCE 1 1/4" GALV	5	678528
	41			
	42			

SDG&E ELECTRIC STANDARDS

DATE 2-28-83
APPD JHT/HRH

POLETOP METERING, 4KV SINGLE PHASE

1499.803
SUPERSEDES
1483 (2-28-83)

TABLE OF CONTENTS

FIELD MAINTENANCE ONLY

REVISION HISTORY:

7/13/2016: All versions prior to 2016 are superseded by their current version found inside the Overhead Construction Standard Manual.

TABLE OF CONTENTS

© 1998 - 2016 San Diego Gas & Electric Company. All rights reserved. Removal of this copyright notice without permission is not permitted under law.

REV	CHANGE	BY	DSGN	APPV	DATE	REV	CHANGE	BY	DSGN	APPV	DATE
C						F					
B						E					
A	ORIGINAL ISSUE	JS	IL	MDJ	7/13/2016	D					

X Indicates Latest Revision | Completely Revised | New Page | Information Removed

SHEET
1 OF 1

SDG&E ELECTRIC OVERHEAD STANDARD

POLETOP METERING INSTALLATION, 4KV, 3 PHASE,
3 WIRE UG & OH SERVICES

FMO
OH 1484

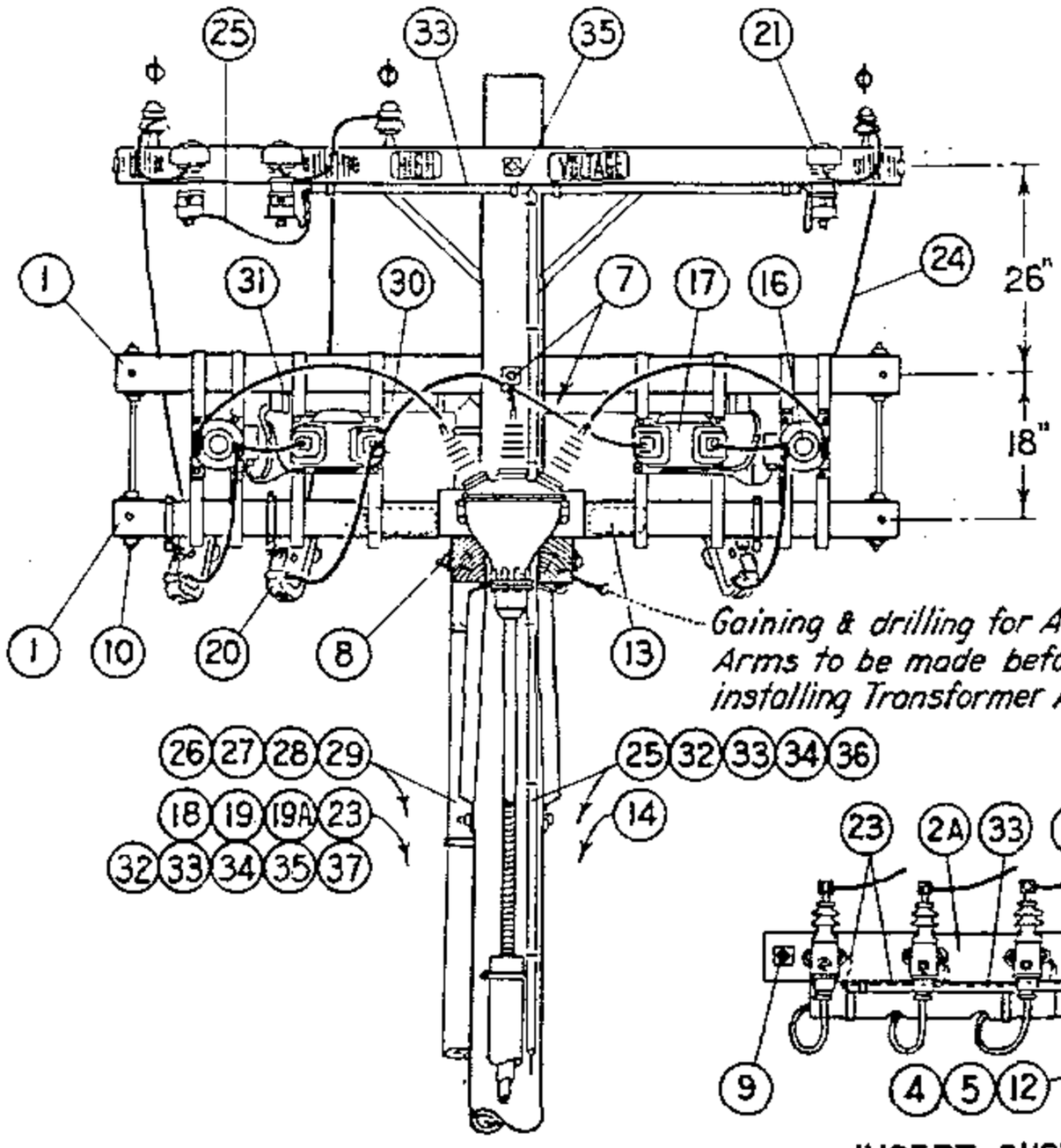

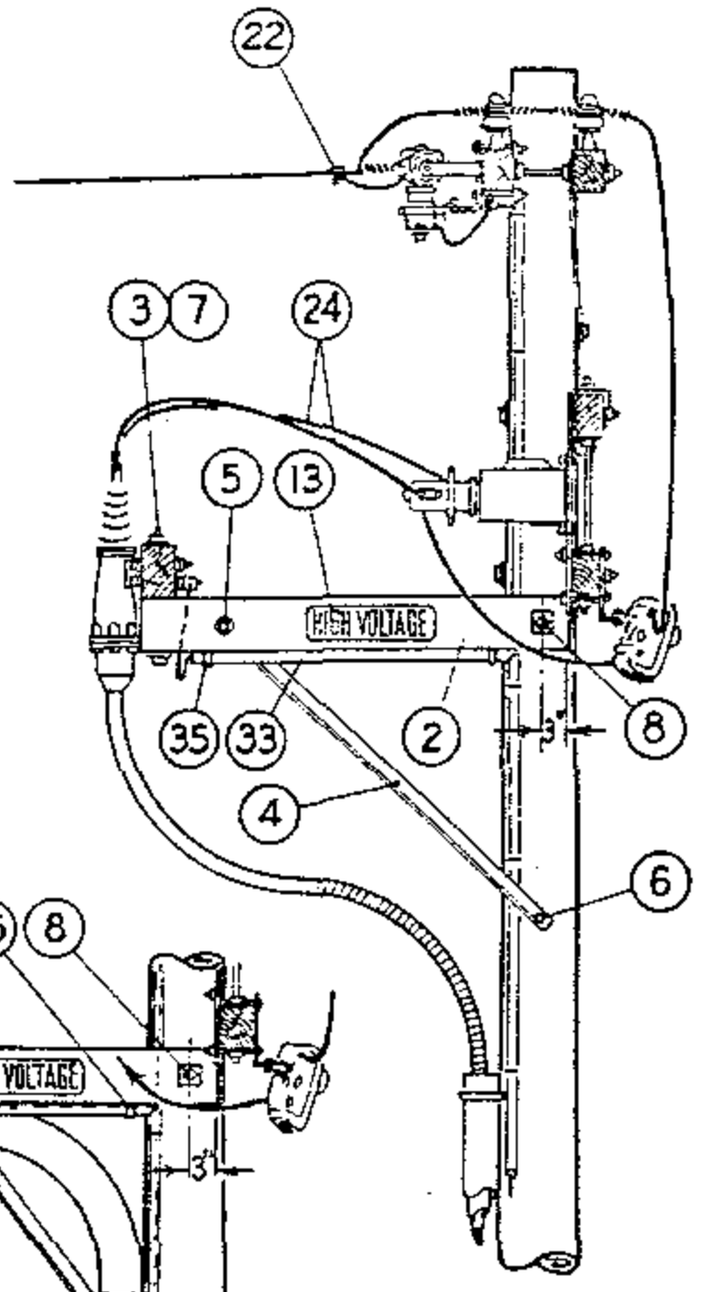

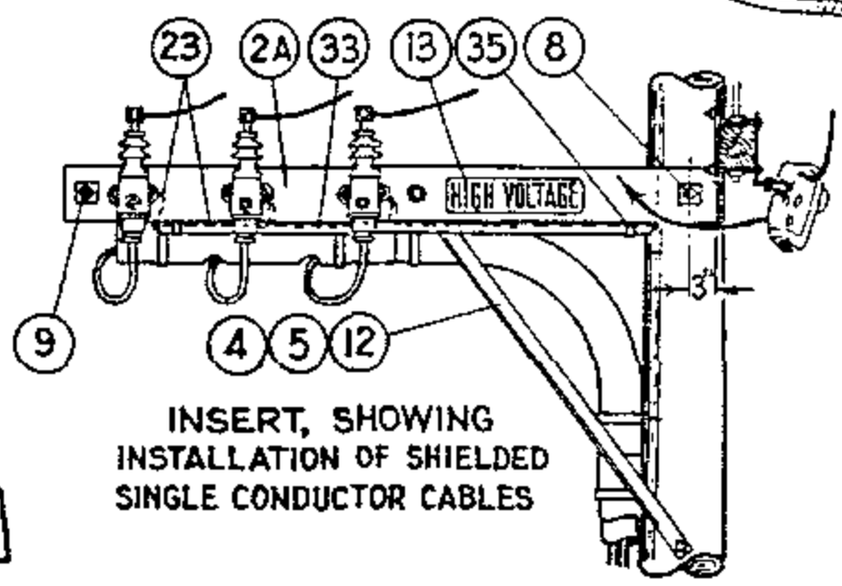

INSERT, SHOWING
INSTALLATION OF SHIELDED
SINGLE CONDUCTOR CABLES

FOR FIELD MAINTENANCE ONLY

UNDERGROUND SERVICE

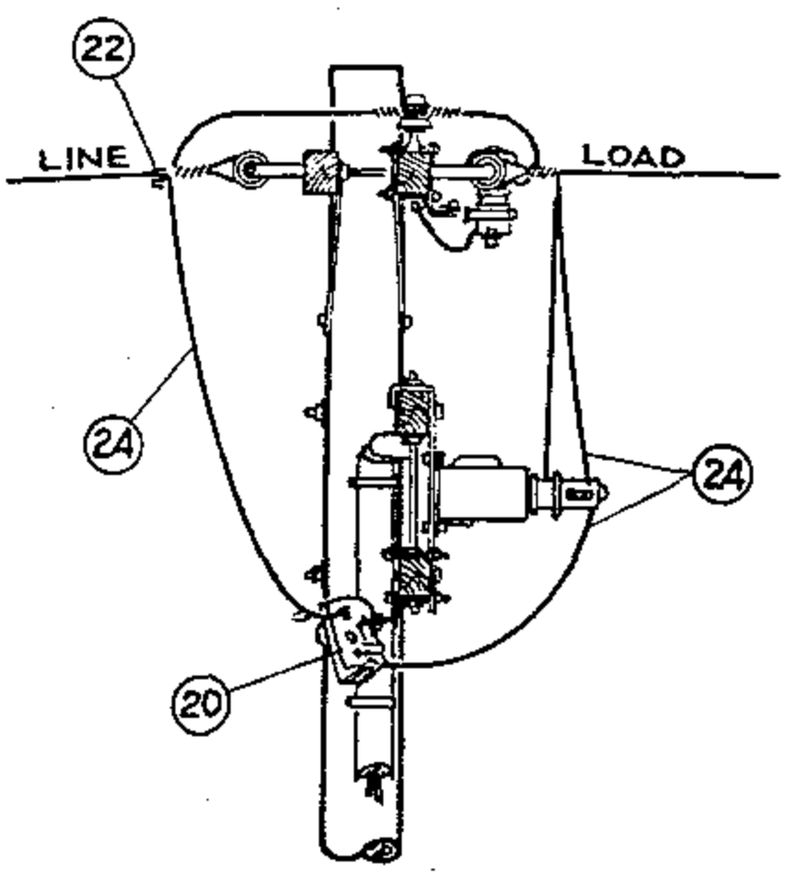

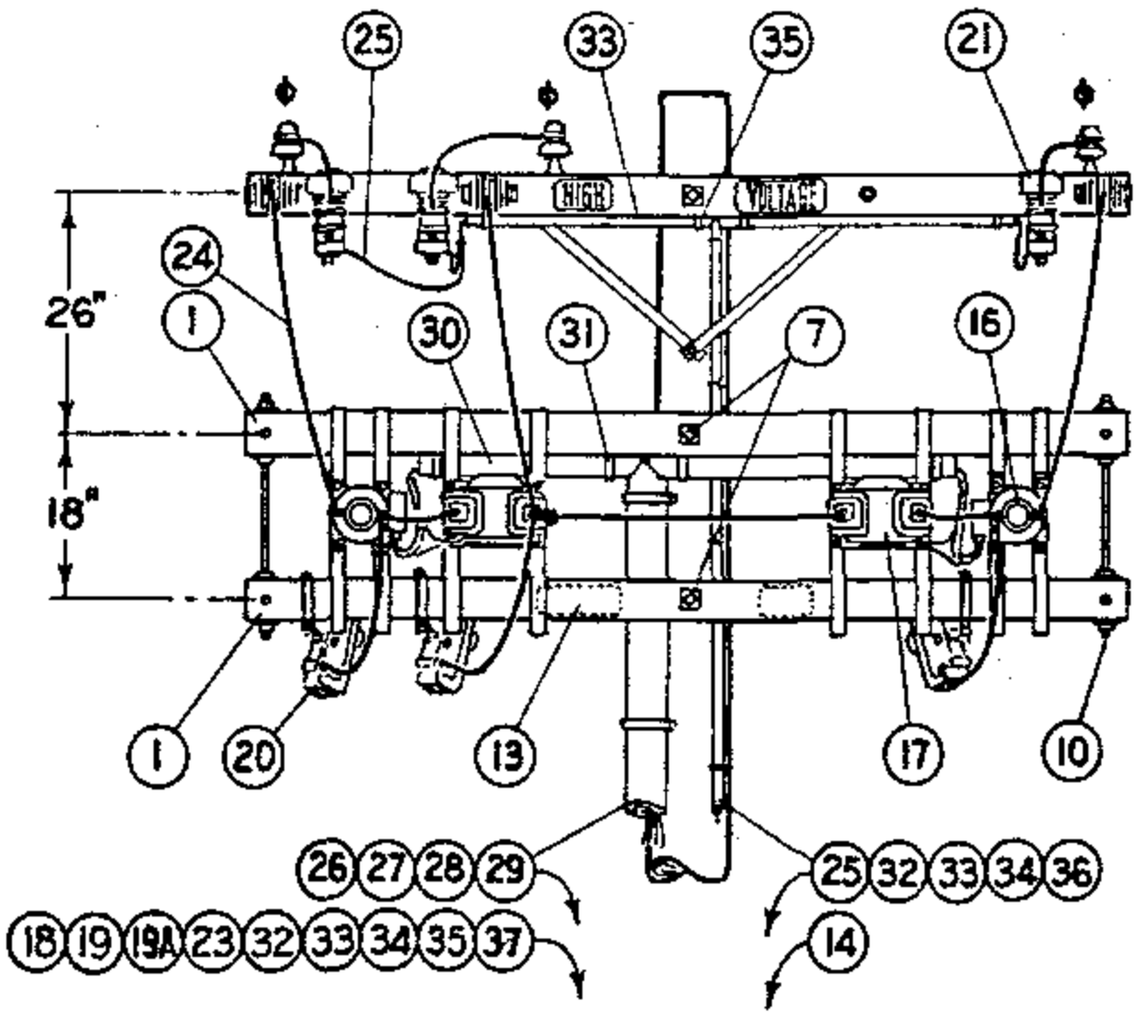

OVERHEAD SERVICE

1499.804 SUPERSEDES 1484.1 (2-28-83)	SDG&E ELECTRIC STANDARDS POLETOP METERING INSTALLATION, 4KV, 3 PHASE, 3 WIRE UG & OH SERVICES	DATE 2-28-83 APPD ~~WT~~/KRH

TABLE OF CONTENTS

FOR FIELD MAINTENANCE ONLY

NOTES:

(A) USE ONLY ONE GROUND ROD FOR LIGHTNING ARRESTER GROUND AND ONE GROUND ROD FOR METER GROUND WHERE A RESISTANCE OF LESS THAN 25 OHMS CAN BE OBTAINED WITH EACH ROD.

(B) DOUBLE METER CABINETS ARE REQUIRED FOR RKVAH METERING INSTALLATIONS.

(C) UNTWIST SUFFICIENT LENGTH OF #2 STRANDED WIRE TO CONNECT EACH ARRESTER AND POTHEAD GROUND WITH A SINGLE STRAND.

	ITEM	DESCRIPTION	QUANTITY U.G. SERVICE P.I.L.C.	QUANTITY U.G. SERVICE RUBBER LIKE	QUANTITY O.H. SERV.	STOCK NO. OR CONSTR STDS
P. T. & F.	1	3 1/2" x 4 1/2" x 8'-0" Crossarm, 6 Pin	2	2	2	PG 111 IT. 2
	2	3 3/4" x 5 3/4" x 4'-0" Pothead Alley Arm	2	–	–	PG 112 IT. 3
	2A	3 3/4" x 5 3/4" x 6'-0" (10 Pin arm, cut in half)	–	2	–	PG 111 IT. 4
	3	3 3/4" x 5 3/4" x 18" Wood Block, Pothead Support	1	–	–	–
	4	Pothead Alley Arm Brace, 4'-0"	2	1	–	163808
	5	Mach. Bolt, Galv. 5/8" x 5", 1 rd. Washer & 1 Nut	2	1	–	PGS 139, 140
	6	Mach. Bolt, Galv., 5/8" x 10"	1	–	–	PGS 139, 154816
	7	Mach. Bolt, Galv. 5/8" x 14", 2 Sq. Washers & 1 Nut	4	2	2	PGS 139, 140
	8	Mach. Bolt, Galv. 5/8" x 18", 2 Sq. Washers & 1 Nut	1	1	–	PGS 139, 140
	9	Space Bolt, Galv. 5/8" x 20", 4 Sq. Washers & 4 Nuts	–	1	–	PGS 139, 140
	10	Space Bolts, Galv. 5/8" x 26", 4 Sq. Washers & 4 Nuts	2	2	2	PGS 139, 140
	11					
	12	Lag Screw, Galv. 5/8" x 5"	–	1	–	621600
	13	High Voltage Sign & Galv. Roofing Nails	3	3	1	647648, 492224
	14	Pole Steps	16	16	16	692992
	15					
M. I.	16	Current Transformer, 5 Kv, Hangers & Bolts	2	2	2	–
	17	Potential Transformers, 4800/120V, Hangers & Bolts	2	2	2	–
	18	Meter Three Phase Power	1	1	1	–
	19	Meter Cabinet; Single, 15" x 30" x 10 1/2"; Double, 30" x 30" x 10 1/2"; Lag Screws for Mounting (B)	1	1	1	SINGLE 161312, DOUBLE 161184
	19A	Test Switch	1	1	1	710880-711008
	20	Cutout, Expulsion Fuse	3	3	3	PG 1211
	21	Lightning Arrester, 3 Kv.	3	3	3	113216
	22	Wire Connectors	5	5	8	PGS 783, 786
	23	#6 Bare Stranded Copper Wire, Meter Ground	14'	14'	14'	813536
	24	Bare Stranded Copper Wire, Size as Required	35'	35'	50'	PGS 715, 716, 717
	25	#2 Bare Stranded Copper Wire, L.A. Pothead Ground (C)	52'	52'	52'	813664
	26	#12 Type TW Coded Wire, 5 Conductors, 40' Each	200'	200'	200'	–
	27	Redwood Moulding	26'	26'	26'	PG 143 IT 1
	28	Moulding Straps, Galv.	13	13	13	697024
	29	3/4" Conduit, Rigid Iron; Pipe Strap & 2-8d Nails, Galv.	10'	10'	10'	251008, 696704
	30	2" Fibre Conduit	5'	5'	5'	251618
	31	2" Fibre Conduit Strap & 2-8d Nails, Galv.	4	4	4	PG 143, 491584
	32	Ground Rod and Clamp, incl. Conduit Ground Clamp	(A) 4	(A) 4	(A) 4	603072, 230016
	33	Hardwood Moulding	52'	54'	49'	487200
	34	Moulding Staples, Galv., 3" x 1 1/8" x 1/4"	24	22	22	678560
	35	3/4" Pipe Straps, Galv. & 2 8d Nails, Galv.	8	9	6	697888, 491584
	36	1/4" Fence Staples, Galv.	14	12	12	678528
	37	3/4" Type "LB" Condulet	1	1	1	146144
	38					

TABLE OF CONTENTS

DATE 2-28-83
APPD WT/RH

SDG&E ELECTRIC STANDARDS

POLETOP METERING INSTALLATION, 4KV, 3 PHASE, 3 WIRE UG & OH SERVICES

1499.805
SUPERSEDES
1484.2 (2-28-83)

FIELD MAINTENANCE ONLY

REVISION HISTORY:

7/13/2016: All versions prior to 2016 are superseded by their current version found inside the Overhead Construction Standard Manual.

TABLE OF CONTENTS

© 1998 - 2016 San Diego Gas & Electric Company. All rights reserved. Removal of this copyright notice without permission is not permitted under law.

REV	CHANGE	BY	DSGN	APPV	DATE	REV	CHANGE	BY	DSGN	APPV	DATE
C						F					
B						E					
A	ORIGINAL ISSUE	JS	IL	MDJ	7/13/2016	D					

X Indicates Latest Revision | Completely Revised | New Page | Information Removed

SHEET
1 OF 1

SDG&E ELECTRIC OVERHEAD STANDARD

POLETOP METERING INSTALLATION,
4KV, 3 PHASE, 4 WIRE UG & OH SERVICES

FMO
OH 1485

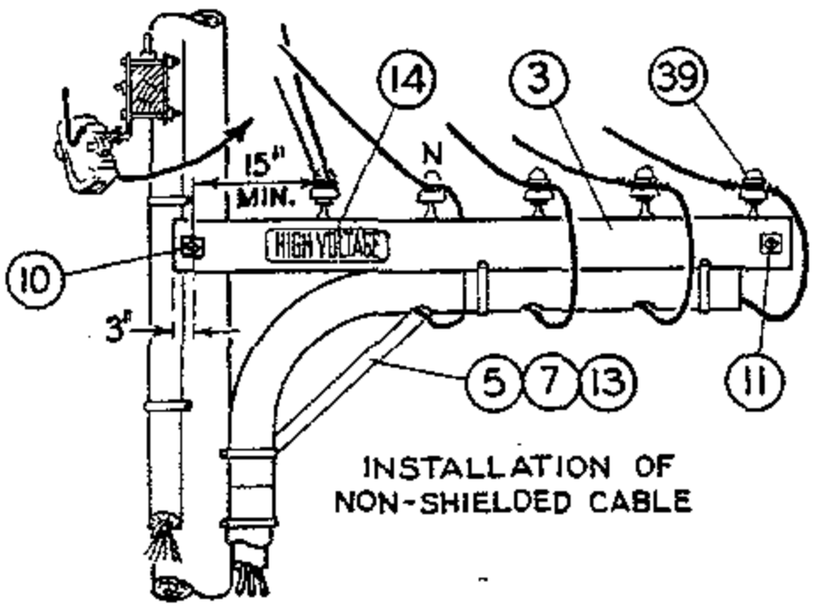

INSTALLATION OF NON-SHIELDED CABLE

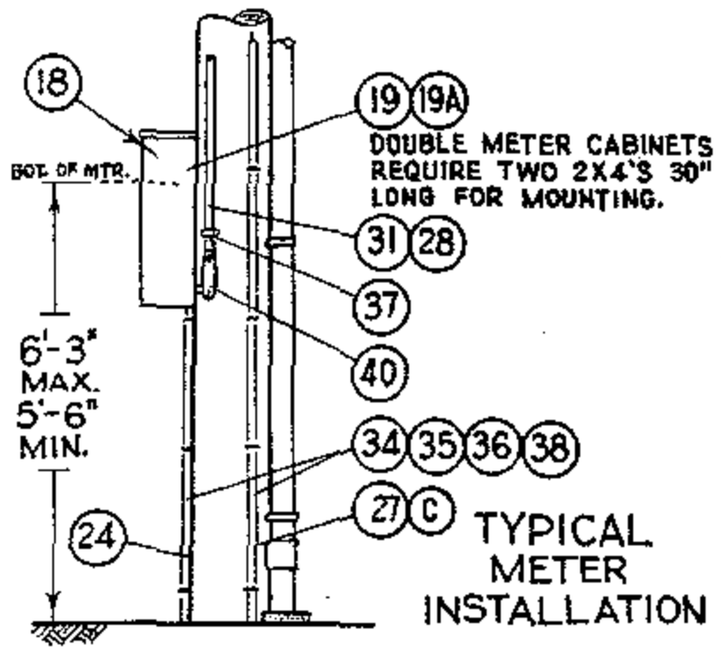

TYPICAL METER INSTALLATION

FOR FIELD MAINTENANCE ONLY

NOTES:

(A) USE ONLY ONE GROUND ROD FOR LIGHTNING ARRESTER GROUND AND ONE GROUND ROD FOR METER GROUND WHERE A RESISTANCE OF LESS THAN 25 OHMS CAN BE OBTAINED WITH EACH ROD.

(B) DOUBLE METER CABINETS ARE REQUIRED FOR RKVAH METERING INSTALLATIONS.

(C) UNTWIST SUFFICIENT LENGTH OF #2 STRANDED WIRE TO CONNECT EACH ARRESTER AND POTHEAD GROUND WITH A SINGLE STRAND.

	ITEM	DESCRIPTION	QUANTITY U.G. SERVICE P.I.L.C.	QUANTITY U.G. SERVICE SHIELD.	QUANTITY U.G. SERVICE NON SHIELD.	QUANTITY O.H. SERV.	STOCK NO. OR CONSTR STDS
P. T. & F.	1	3 3/4" x 5 3/4" x 10'- 0" Standard Arm	2	2	2	2	PG 119 IT. 2
	2	3 3/4" x 5 3/4" x 4'- 0" Pothead Alley Arm	2	–	–	–	PG 112 IT. 3
	3	3 3/4" x 5 3/4" x 12'- 0" (12Kv. Arm, Cut in Half	–	1	1	–	PG 119 IT. 4
	4	3 3/4" x 5 3/4" x 18" Wood Block, Pothead Support	1	–	–	–	–
	5	Pothead Alley Arm Brace, 4'- 0"	2	1	1	–	163808
	6						
	7	Machine Bolt, Galv., 5/8" x 5", 1 Round Washer & Nut	2	1	1	–	PGS 139, 140
	8	Machine Bolt, Galv., 5/8" x 10"	1	–	–	–	PGS 139, 140
	9	Machine Bolt, Galv., 5/8" x 14", 2 Square Washers & Nut	4	2	2	2	PGS 139, 140
	10	Machine Bolt, Galv., 5/8" x 18", 2 Square Washers & Nut	1	1	1	–	PGS 139, 140
	11	Space Bolt, Galv., 5/8" x 20", 4 Square Washers & 4 Nuts	–	1	1	–	PGS 139, 140
	12	Space Bolt, Galv., 5/8" x 28", 4 Square Washers & 4 Nuts	2	2	2	2	PGS 139, 140
	13	Lag Screw, Galv., 5/8" x 5"	–	1	1	–	621600
	14	High Voltage Sign & Galv. Roofing Nails	3	3	3	1	647648, 492224
	15	Pole Steps	16	16	16	17	692992
	16	Current Transformer, 5Kv., Hangers & Bolts	3	3	3	3	–
	17	Potential Transformer, 2400/120V, Hangers & Bolts	3	3	3	3	–
	18	Meter, Three Phase, Maximum Demand and/or Rkvah Recording	1	1	1	1	–
	19	Meter Cabinet; Single, 15" x 30" x 10 1/2"; Double, 30" x 30" x 10 1/2", Four Lag Screws for Mounting (B)	1	1	1	1	SINGLE 161312, DOUBLE 161184
	19A	Test Switch	1	1	1	1	710880 - 711008
	20	Cutout, Expulsion Fuse	3	3	3	3	PG 1211
	21	Lightning Arrester, 3Kv.	3	3	3	3	113216
	22	Standoff Bracket	–	–	–	2	165144
	23	Wire Connectors	6	6	6	13	PGS 783, 786
	24	#6 Bare Stranded Copper Wire, Meter Ground	14'	14'	14'	14'	813536
	25	Bare Stranded Copper Wire, Same Size as Line Neutral	14'	14'	14'	14'	PGS 715-717
	26	Bare Stranded Copper Wire, Size as Required	47'	52'	33'	33'	PGS 715-717
M. I.	27	#2 Bare Stranded Copper Wire, L. A. & Pothead Ground (C)	52'	52'	52'	52'	813664
	28	#12 Type TW Coded Wire, 7 Conductors, 40' Each	280'	280'	280'	280'	–
	29	Redwood Moulding	20'	20'	20'	20'	PG 143 IT 1
	30	Moulding Strap, Galv.	11	11	11	11	697024
	31	3/4" Conduit, Rigid Iron; Pipe Straps & 8d Nails; Galv.	10'	10'	10'	10'	251008, 696704, 491584
	32	2" Fibre Conduit	8'	8'	8'	8'	251616
	33	2" Fibre Conduit Straps & 2 8d Nails; Galv.	6	6	4	4	PG 143, 491584
	34	Ground Rod & Clamp, Including Conduit Ground Clamp	(A) 4	(A) 4	(A) 4	(A) 4	603072, 230016
	35	Hardwood Moulding, 1"	52'	55'	49'	49'	487200
	36	Moulding Staples, Galv., 3" x 1 1/8" x 1/4"	25	25	25	25	678560
	37	3/4" Pipe Straps, Galv. & 2 8d Nails, Galv.	8	9	6	6	697888, 491584
	38	1 1/4" Fence Staples, Galv.	14	12	12	12	678528
	39	Insulator, 4Kv. and Steel Pin	2	2	5	2	PG 750, 532608
	40	3/4" Type "LB" Condulet	1	1	1	1	146144
	41						
	42						

TABLE OF CONTENTS

DATE 2-28-83
APPD JHF/KRH

SDG&E ELECTRIC STANDARDS

POLETOP METERING INSTALLATION, 4KV, 3 PHASE, 4 WIRE UG & OH SERVICES

1499.807
SUPERSEDES
1485.2 (2-28-83)

FIELD MAINTENANCE ONLY

REVISION HISTORY:

7/13/2016: All versions prior to 2016 are superseded by their current version found inside the Overhead Construction Standard Manual.

TABLE OF CONTENTS

© 1998 - 2016 San Diego Gas & Electric Company. All rights reserved. Removal of this copyright notice without permission is not permitted under law.

REV	CHANGE	BY	DSGN	APPV	DATE	REV	CHANGE	BY	DSGN	APPV	DATE
C						F					
B						E					
A	ORIGINAL ISSUE	JS	IL	MDJ	7/13/2016	D					

X Indicates Latest Revision | Completely Revised | New Page | Information Removed

SHEET
1 OF 1

SDG&E ELECTRIC OVERHEAD STANDARD

POLETOP METERING INSTALLATION, 12KV, 3 PHASE,
3 WIRE UG & OH SERVICES

FMO
OH 1486

TABLE OF CONTENTS

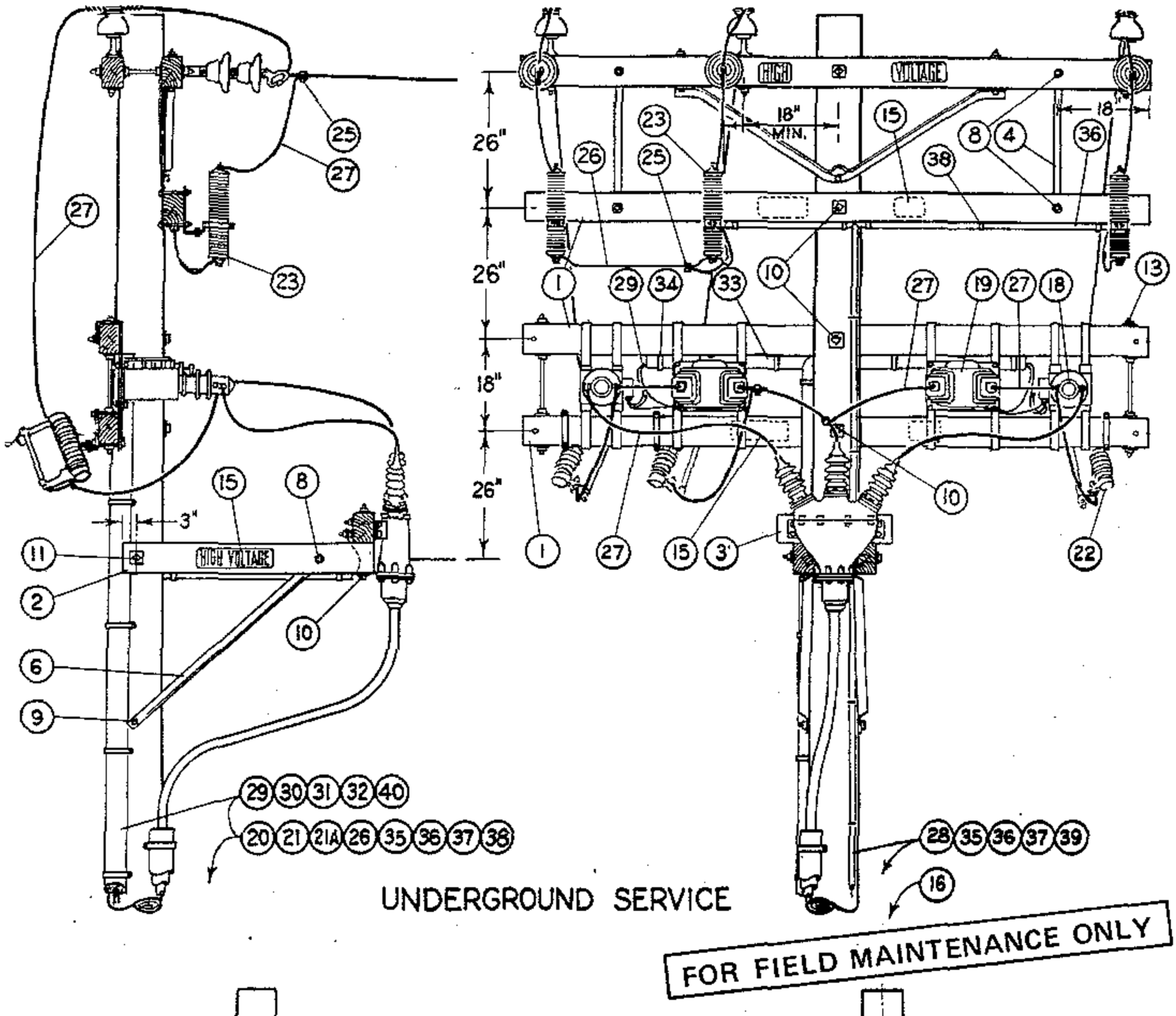

1499.808 SUPERSEDES 1486.1 (2-28-83)	SDG&E ELECTRIC STANDARDS POLETOP METERING INSTALLATION, 12KV, 3 PHASE, 3 WIRE U.G. & O.H. SERVICES	DATE 2-28-83 APPD JMT/ARH

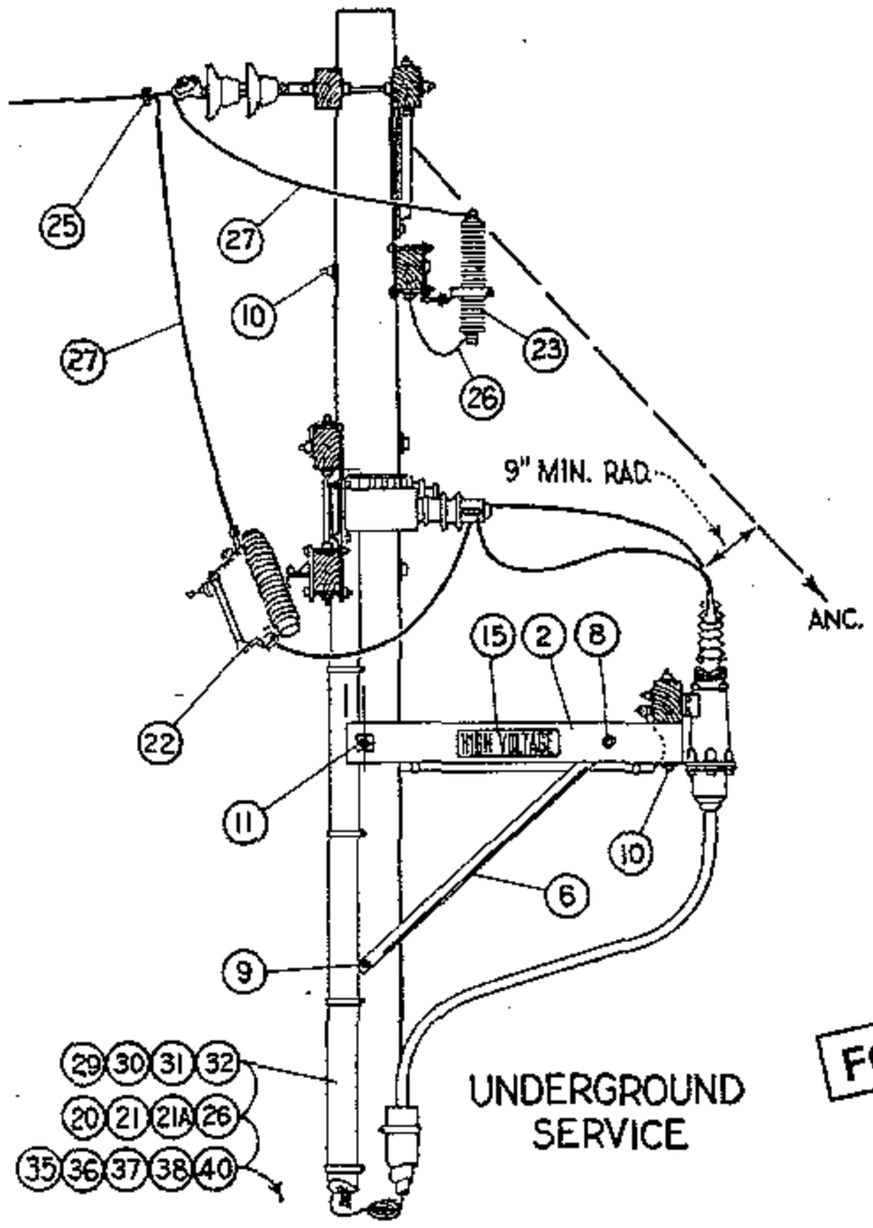

UNDERGROUND SERVICE

FOR FIELD MAINTENANCE ONLY

NOTES:

Ⓐ USE ONLY ONE GROUND ROD FOR LIGHTNING ARRESTER GROUND AND ONE GROUND ROD FOR METER GROUND WHERE RESISTANCE OF LESS THAN 25 OHMS CAN BE OBTAINED WITH EACH ROD.

Ⓑ DOUBLE METER CABINETS ARE REQUIRED FOR RKVAH METERING INSTALLATIONS.

	ITEM	DESCRIPTION	QUANTITY U.G. SERV.	QUANTITY O.H. SERV.	STOCK NO. OR CONSTR STDS
P. T. & F.	1	3 3/4" x 5 3/4" x 10'-0" Standard Arm	3	3	PG 119 IT. 2
	2	3 3/4" x 5 3/4" x 4'-0" Pothead Alley Arm	2	–	PG 112 IT. 3
	3	3 3/4" x 5 3/4" x 22" Wood Block, Pothead Support	1	–	–
	4	Flat Crossarm Brace, 36"	2	2	164224
	5				
	6	Pothead Alley Arm Brace, 4'-0"	2	–	163808
	7				
	8	Mach. Bolt, Galv., 5/8" x 5", 1 rd Washer, & 1 Nut	9	4	PGS 139, 140
	9	Mach. Bolt, Galv., 5/8" x 10"	1	–	PGS 139, 140
	10	Mach. Bolt, Galv., 5/8" x 14", 2 Sq. Washers & 1 Nut	5	3	PGS 139, 140
	11	Mach. Bolt, Galv., 5/8" x 18", 2 Sq. Washers & 1 Nut	1	–	PGS 139, 140
	12				
	13	Space Bolt, Galv., 5/8" x 26", 4 Sq. Washers & 4 Nuts	2	2	PGS 139, 140
	14				PGS 1212, 1213
	15	High Voltage Sign & Galv. Roofing Nails	2	2	647648, 492224
	16	Pole Steps	14	15	692992
	17				
M. I.	18	Current Transformer, 15 KV, Hangers & Bolts	2	2	–
	19	Potential Transformer, 12000/120 v, Hangers & Bolts	2	2	–
	20	Meter, Three Phase Power	1	1	–
	21	Meter Cabinet; Single, 15" x 30" x 10 1/2"; Double, 30" x 30" x 10 1/2"; Lag Screws for Mounting Ⓑ	1	1	SINGLE 161312, DOUBLE 161184
	21A	Test Switch	1	1	710680-711008
	22	Cutout, Expulsion Fuse	3	3	PGS 1212, 1213
	23	Lightning Arrester, 12 Kv.	3	3	113216
	24				
	25	Wire Connectors	5	8	PGS 783, 786
	26	#6 Bare Stranded Copper Wire - Meter Grnd. & L.A. Lateral	27'	27'	813536
	27	Bare Stranded Copper Wire, Size as Required	55'	65'	PGS 715-717
	28	#2 Bare Stranded Copper, Lightning Arrester Ground	54'	45'	813664
	29	#12 Type T W Coded Copper Wire, 5 Conductors @ 34'	170'	170'	–
	30	Redwood Moulding, C-54.1 #1	16'	16'	PG 143 IT. 1
	31	Moulding Strap, Galv., C-54.1 #1A	8	8	697024
	32	3/4" Conduit, Rigid Iron; Pipe Strap & 2-8d Nails, Galv.	10'	10'	251008, 696704, 491584
	33	2" Fibre Conduit	6'	6'	251616
	34	2" Pipe Straps & 2-8d Nails, Galv.	4	4	697856, 491584
	35	Ground Rod & Clamp	Ⓐ 4	Ⓐ 4	603072, 230016
	36	Hardwood Moulding, 1"	49'	45'	487200
	37	Moulding Staples, Galv., 3" x 1 1/8" x 1/4"	30	30	678560
	38	3/4" Pipe Strap & 2-8d Nails, Galv.	10	8	697888, 491584
	39	1 1/4" Fence Staples, Galv.	12	12	678528
	40	3/4" Type "LB" Condulet	1	1	146144

SDG&E ELECTRIC STANDARDS

DATE 2-28-83
APPD ONT/KVAR #

POLETOP METERING INSTALLATION, 12KV, 3 PHASE, 3 WIRE U.G. & O.H. SERVICES

1499.809
SUPERSEDES
1486.2 (2-28-83)

TABLE OF CONTENTS

OH1487/UG4287 FIELD MAINTENANCE ONLY

ALL VERSIONS IN FMO ARE SUPERSEDED BY THEIR CURRENT VERSION FOUND INSIDE THE OVERHEAD CONSTRUCTION STANDARD MANUAL.

REVISION HISTORY:

04/13/2020: CREATED IN FMO

TABLE OF CONTENTS

© 1998 - 2020 San Diego Gas & Electric Company. All rights reserved. Removal of this copyright notice without permission is not permitted under law.

REV	CHANGE	BY	DSGN	APPV	DATE	REV	CHANGE	BY	DSGN	APPV	DATE
C						F					
B						E					
A	ORIGINAL ISSUE	RSL	JES	CZH	04/13/2020	D					

Indicates Latest Revision | Completely Revised | X New Page | Information Removed

SHEET 1 OF 1

SDG&E ELECTRIC OVERHEAD AND UNDERGROUND FIELD MAINTENANCE ONLY STANDARDS

REVISED CT & PT POLETOP METERING INSTALLATION, 12KV, O.H. & U.G. SERVICES

FMO OH1487 UG4287

SCOPE: PRIMARY METERED DISTRIBUTION POLE: THIS STANDARD ILLISTRATES A PRIMARY METERED OVERHEAD AND UNDERGROUND DISTRIBUTION POLE AND HARDWARE.

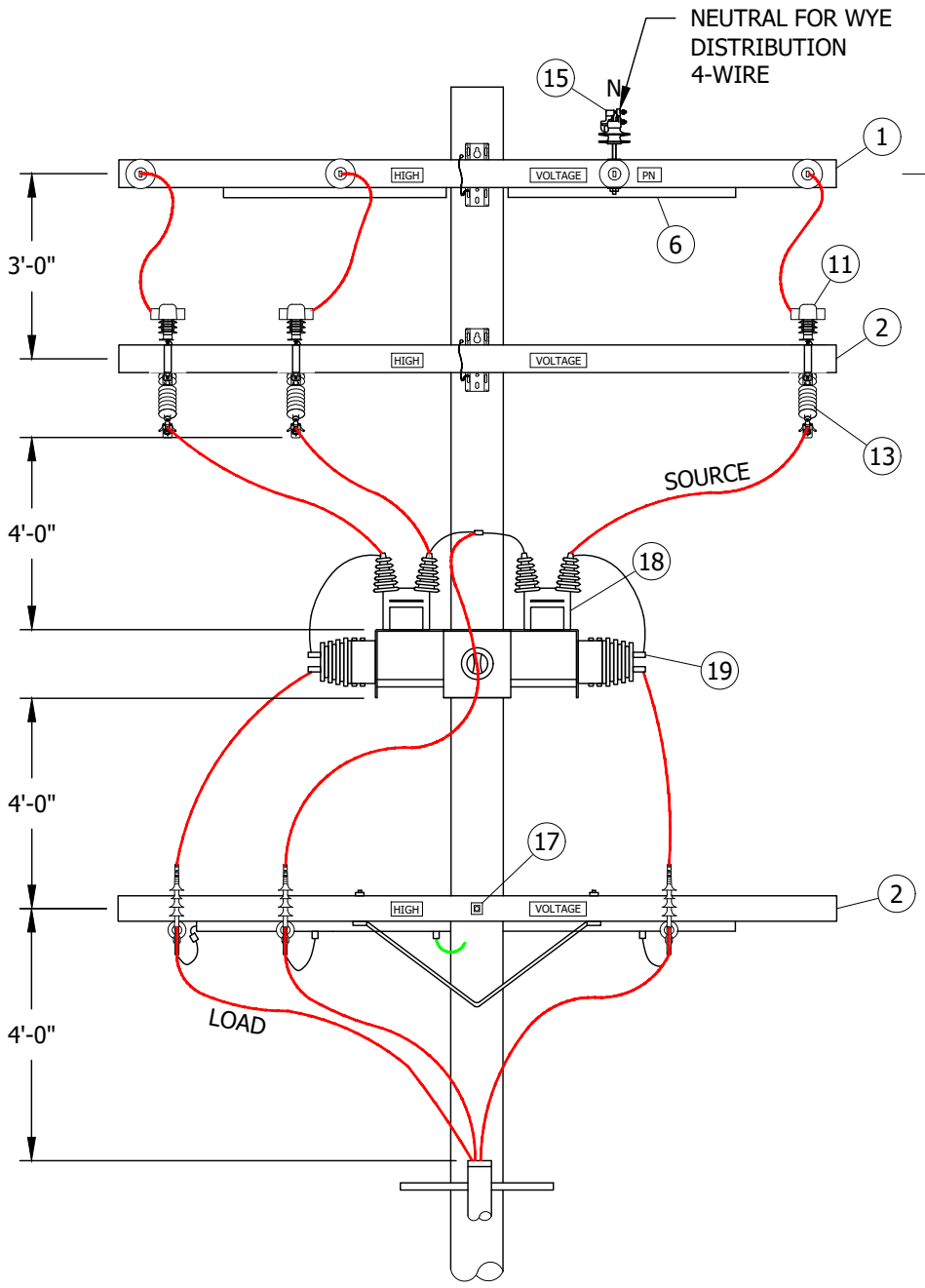

FIGURE 1
PRIMARY METERED UNDERGROUND CABLE POLE

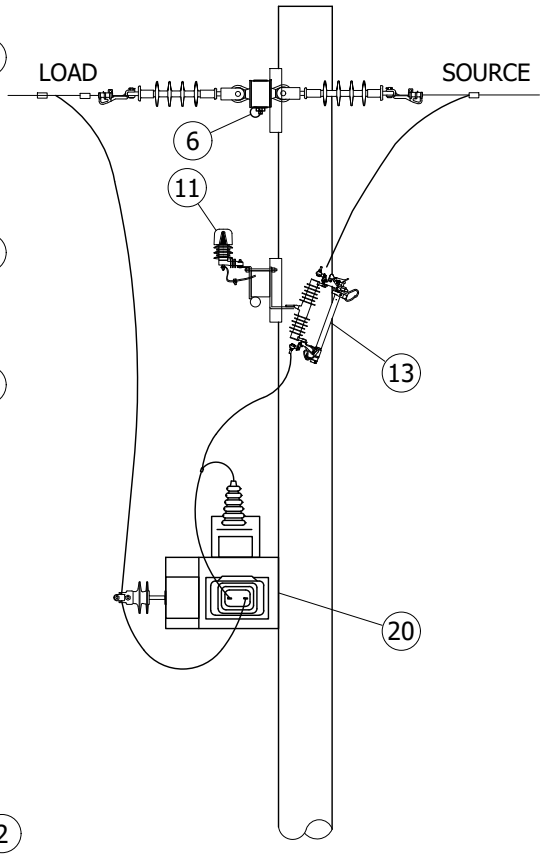

FIGURE 2
PRIMARY METERED OVERHEAD

FIELD MAINTENANCE ONLY

INSTALLATION: NONE

© 1998 - 2020 San Diego Gas & Electric Company. All rights reserved. Removal of this copyright notice without permission is not permitted under law.

REV	CHANGE	BY	DSGN	APPV	DATE	REV	CHANGE	BY	DSGN	APPV	DATE
C						F					
B						E					
A	ORIGINAL ISSUE	RSL	JES	CZH	04/13/2020	D					

X Indicates Latest Revision | Completely Revised | New Page | Information Removed

SDG&E ELECTRIC OVERHEAD AND UNDERGROUND FIELD MAINTENANCE ONLY STANDARDS

REVISED CT & PT POLETOP METERING INSTALLATION,
12KV, O.H. & U.G. SERVICES

FMO
OH1487.1
UG4287.1

TABLE OF CONTENTS

BILL OF MATERIALS:

ITEM	DESCRIPTION (a)		QUANTITY	STANDARD PAGE	STOCK NUMBER	DESIGN UNITS
1	CROSSARM, FG, DEADEND		AS REQ'D	-	AS REQ'D	-
2	CROSSARM, FG, TANGENT, EQUIPMENT		AS REQ'D	-	AS REQ'D	-
3	DBL ARRESTOR/CUTOUT BRACKET		3	-	S165422	-
4	28" STRAP BRACE		2	-	S164192	-
5	LIGHTNING ARRESTOR GROUND STRAP		3	-	S698754	-
6	1" PVC		AS REQ'D	-	S251200	-
7	#6 BS		AS REQ'D	-	S813536	-
8	#4 BS		AS REQ'D	-	S813764	-
9	#4 PVC COVERED GROUND WIRE		AS REQ'D	-	S812480	-
10	GROUND WIRE STAPLES		AS REQ'D	-	S678562	-
11	12KV LIGHTNING ARRESTER		3	1247	S113248	LA12
12	CUTOUT, INTERCHANGEABLE, NON-PORC	ZONE 1 ZONE 2	3	-	AS-REQ'D	-
13	FUSE HOLDER, SMU, FOR SMD30 CUTOUT BODY (100A)		3	-	S368674	-
14	STAND - OFF PIN, 1"		AS REQ'D	-	S529248	-
15	INSULATOR, VICE-TOP		1	-	S429060	IPCN1
16	FUSE (SIZE AS REQ'D)		AS REQ'D	-	AS REQ'D	-
17	SPACE BOLTS 5/8" X 26", SQUARE WASHERS & NUTS		AS REQ'D	392	-	-
18	12KV POTENTIAL TRANSFORMER		AS REQ'D	-	-	-
19	12KV CURRENT TRANSFORMER		AS REQ'D	-	-	-
20	P.T./C.T. BRACKET		1	-	S165380	-
21	C/O / LADDER BRACKET		AS-REQ'D	-	S166070	-
22	INDICATOR, CUTOUT, FIREFLY		3	-	S423606	-
23	COVER, CUTOUT, AVIAN PROTECTION		3	-	S298682	-

TABLE OF CONTENTS

NOTES:

I. DISTRIBUTION CONSTRUCTION CREW TO INSTALL ALL HIGH SIDE CONNECTORS, JUMPERS AND EQUIPMENT. AMO TO INSTALL LOW SIDE CONNECTORS AND CONDUCTORS.

II. MAXIMUM WEIGHT FOR PT AND CT TRANSFORMERS IS 85 LBS. EACH.

REFERENCE:

(a) THE ITEMS CONTAINED IN THE BILL OF MATERIALS REPRESENT WOOD CONSTRUCTION STANDARD, FOR STEEL CONSTRUCTION SEE CURRENT STANDARD.

b. FOR GROUNDING SEE STANDARD 1002.

c. CONTACT EMO FOR FUSING CORDINATION AND PT CT SELECTION.

FIELD MAINTENANCE ONLY

© 1998 - 2020 San Diego Gas & Electric Company. All rights reserved. Removal of this copyright notice without permission is not permitted under law.

REV	CHANGE	BY	DSGN	APPV	DATE	REV	CHANGE	BY	DSGN	APPV	DATE
C						F					
B						E					
A	ORIGINAL ISSUE	RSL	JES	CZH	04/13/2020	D					

X Indicates Latest Revision | Completely Revised | New Page | Information Removed

SDG&E ELECTRIC OVERHEAD AND UNDERGROUND FIELD MAINTENANCE ONLY STANDARDS

REVISED CT & PT POLETOP METERING INSTALLATION, 12KV, O.H. & U.G. SERVICES

FMO
OH1487.2
UG4287.2

FIELD MAINTENANCE ONLY

REVISION HISTORY:

7/13/2016: All versions prior to 2016 are superseded by their current version found inside the Overhead Construction Standard Manual.

TABLE OF CONTENTS

© 1998 - 2016 San Diego Gas & Electric Company. All rights reserved. Removal of this copyright notice without permission is not permitted under law.

REV	CHANGE	BY	DSGN	APPV	DATE	REV	CHANGE	BY	DSGN	APPV	DATE
C						F					
B						E					
A	ORIGINAL ISSUE	JS	IL	MDJ	7/13/2016	D					

X Indicates Latest Revision | Completely Revised | New Page | Information Removed

SHEET 1 OF 1

SDG&E ELECTRIC OVERHEAD STANDARD

METERING RACK, CUSTOMER OWNED, CONSTRUCTION DETAILS

FMO OH 1489

TABLE OF CONTENTS

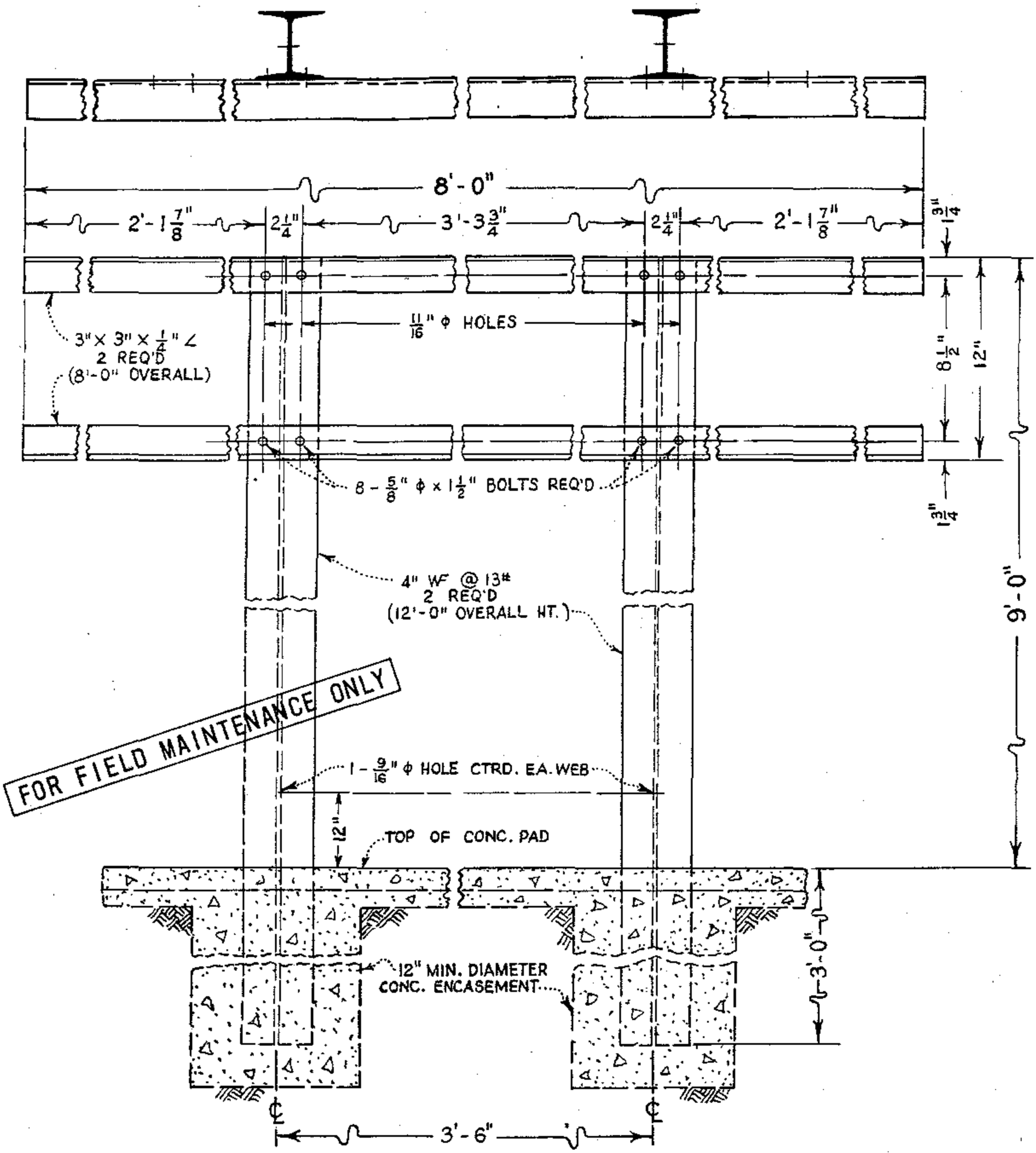

ALL STEEL TO BE HOT-DIP GALV. AFTER FABRICATION.

1499.810 SUPERSEDES 1489 (1-6-82)	SDG&E ELECTRIC STANDARDS METERING RACK, CUSTOMER OWNED, CONSTRUCTION DETAILS	DATE 2-28-83 APPD

FIELD MAINTENANCE ONLY

REVISION HISTORY:

7/13/2016: All versions prior to 2016 are superseded by their current version found inside the Overhead Construction Standard Manual.

TABLE OF CONTENTS

© 1998 - 2016 San Diego Gas & Electric Company. All rights reserved. Removal of this copyright notice without permission is not permitted under law.

REV	CHANGE	BY	DSGN	APPV	DATE	REV	CHANGE	BY	DSGN	APPV	DATE
C						F					
B						E					
A	ORIGINAL ISSUE	JS	IL	MDJ	7/13/2016	D					

X Indicates Latest Revision | Completely Revised | New Page | Information Removed

SHEET
1 OF 1

SDG&E ELECTRIC OVERHEAD STANDARD

4KV METERING INSTALLATION ON RACK, FOR 3 WIRE AND 4 WIRE, 3Ø SERVICES

FMO
OH 1490

TABLE OF CONTENTS

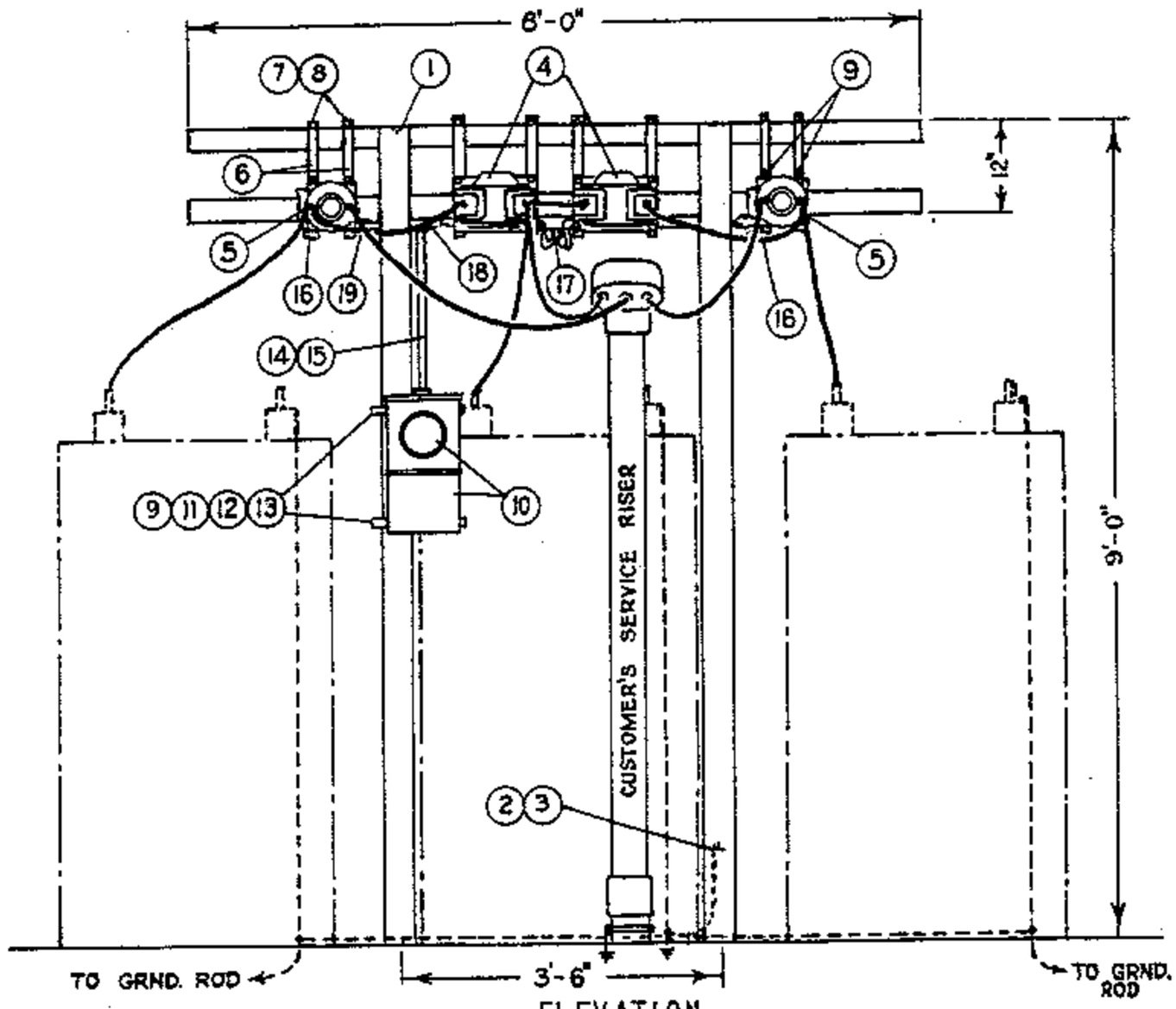

ELEVATION

3 WIRE, 3ϕ SERVICE

FOR FIELD MAINTENANCE ONLY

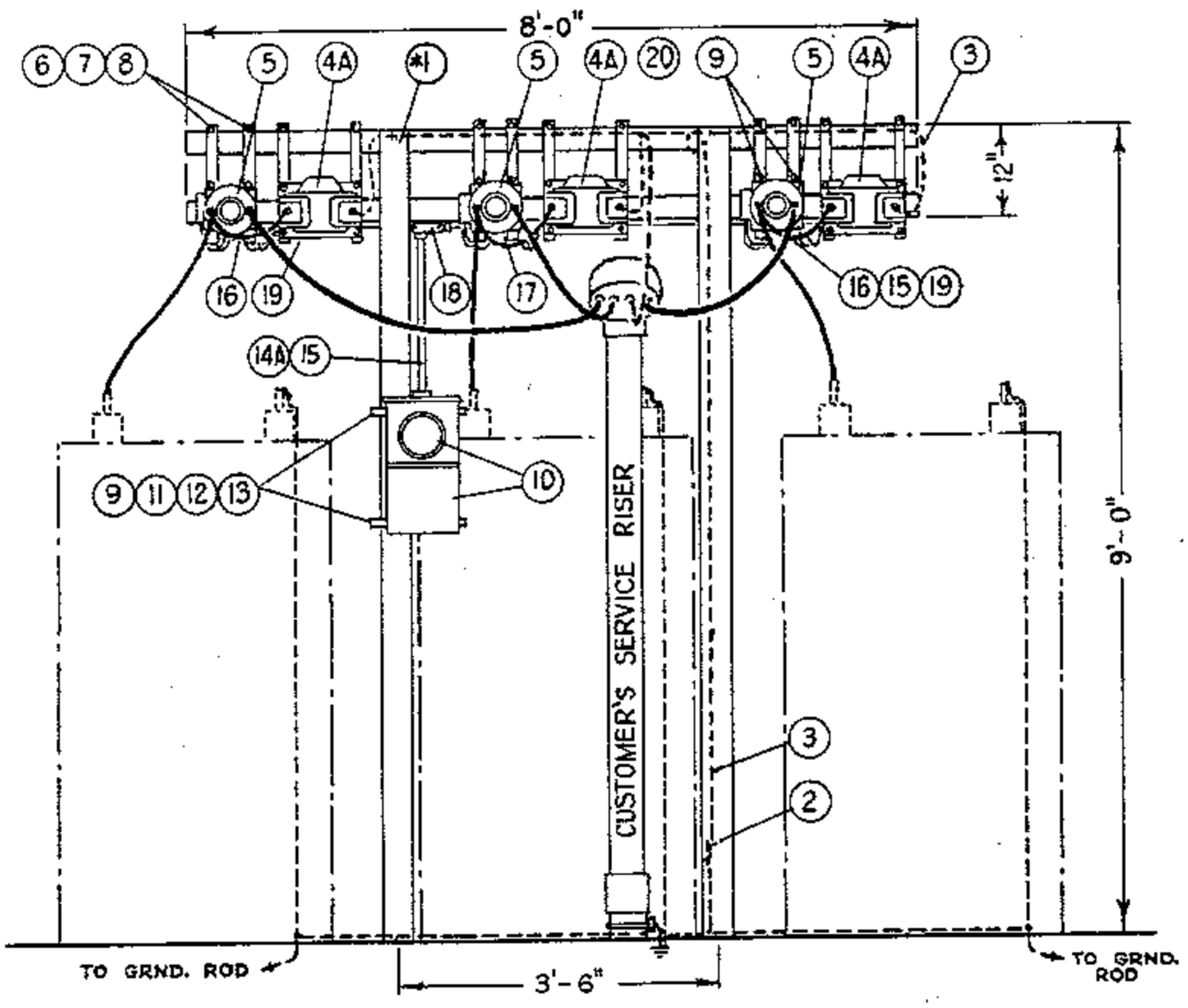

ELEVATION

4 WIRE, 3ϕ SERVICE

DATE 11-16-81 APPD JES	SDG&E ELECTRIC STANDARDS 4KV METERING INSTALLATION ON RACK, FOR 3 WIRE AND 4 WIRE, 3ϕ SERVICES	1499.901 SUPERSEDES 1490.1(11-16-81)

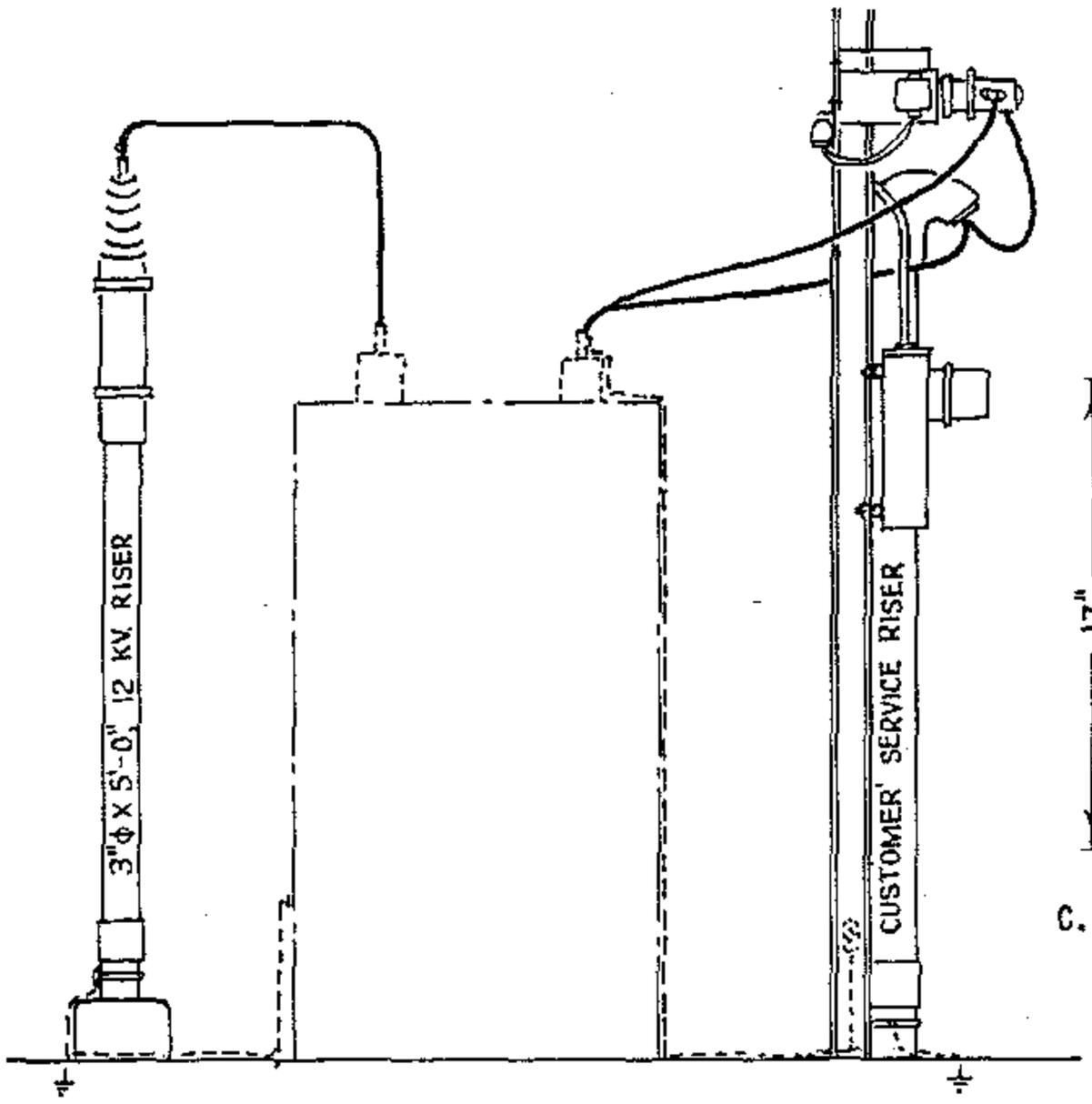

ELEVATION

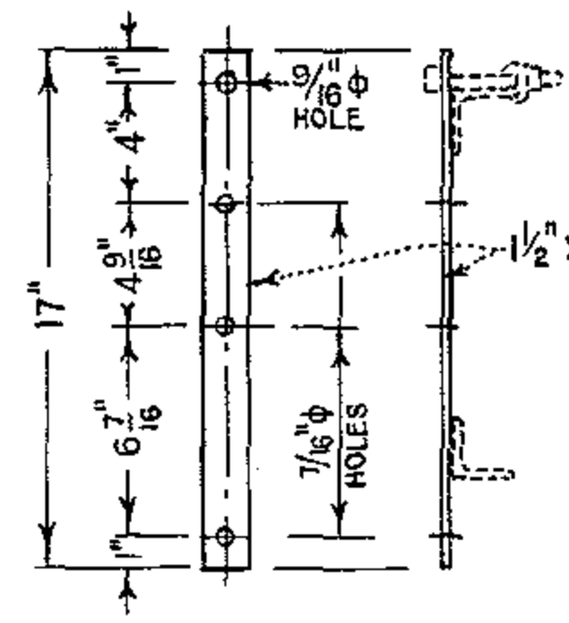

C.T. & P.T. MTG STRAPS
ITEM 6

FOR FIELD MAINTENANCE ONLY

TABLE OF CONTENTS

NOTE:

(A) TO BE FURNISHED AND INSTALLED BY CUSTOMER.

ITEM	DESCRIPTION	QUANTITY		STOCK NO. OR CONSTR STDS
		3 Wire	4 Wire	
1	Galv. Steel Metering Rack	(A) 1	(A) 1	PG 1479
2	Ground Connector, 1 bolt, single groove	1	1	230016
3	Ground Wire. Bare Strd. copper	5'	20'	PGS 715-716
4	Potential Transformer, 4800/120V, Base Mounted	2	-	-
4A	Potential Transformer, 2400/120V, Base Mounted	-	3	-
5	Current Transformer, 5 Kv. Base Mounted	2	3	-
6	P.T. & C.T. Straps, Galv., per detail	8	12	-
7	Mach. Bolts, Galv., 1/2" x 4", 2 washers & 1 nut	8	12	PG 139, 140
8	Nut Seats, Delta-Star	8	12	-
9	Mach. Bolts, Galv., 3/8" diam. X 1", 1 washer & 1 nut	20	24	PGS 139, 140
10	Meter & Meter Socket Box	1	1	-
11	Unistrut, type P-4000, galv.	30"	30"	-
12	Beam Grip, Delta-Star	4	4	392384
13	Cap Screw, Galv., 1/2" diam. x 13/16"	4	4	620320
14	5 - 1c #12 type TW Coded Wire	40"	-	-
14A	7 - 1c #12 type TW Coded Wire	-	64'	-
15	3/4" Conduit, Galv., Rigid Iron	6'	8'	251008
16	3/4" Condulet, Galv., Type "E" with 4 hole comp. cover	2	2	145568, 145376
17	3/4" Condulet, Galv., Type "C" with 4 hole comp. cover	1	1	145088, 145376
18	3/4" Condulet, Galv., Type "TR" with blank cover	1	1	-
19	Galv. steel conduit clamp	4	4	227104
20	Wire Connectors	-	2	PGS 783, 786

1499.902
SUPERSEDES
90.2 (11-16-81)

SDG&E ELECTRIC STANDARDS

4KV METERING INSTALLATION ON RACK, FOR 3 WIRE AND 4 WIRE, 3ϕ SERVICES

DATE 11-16-81
APPD JEG

PAGE	SUBJECT
1503	STREET LIGHT SWITCHING TIMES
1509	STREET LIGHT G.O. 95 MINIMUM CLEARANCES
1511	REPLACEMENT REFRACTORS
1519	LIGHTING INSTALLATION
1520	MERCURY VAPOR CONVENTIONAL LUMINAIRES AND REPLACEMENT REFRACTORS
1521	HIGH PRESSURE AND LOW PRESSURE SODIUM VAPOR LUMINAIRE, REPLACEMENT BALLAST AND STARTER
1555	SERIES CONTROLLED REGULATED OUTPUT STREET LIGHT TRANSFORMER INSTALLATION REMOTE CONTROL OUTDOOR CIRCUIT SWITCH CAPACITOR 4KV
1556	SERIES CONTROLLED R.O. STREET LIGHT TRANSFORMER AND R.C.O.C SWITCH, LINE ARM POSITION, 4KV
1562	P.E. CONTROLLED R.D. STREET LIGHT TRANSFORMER INSTALLATION, 12KV

MAIN TABLE OF CONTENTS

© 1998 - 2021 San Diego Gas & Electric Company. All rights reserved. Removal of this copyright notice without permission is not permitted under law.

REV	CHANGE	DR	BY	DSN	APV	DATE	REV	CHANGE	DR	BY	DSN	APV	DATE
C	OH1503 MOVED TO FMO	GLC	GLW	JES	CZH	10/09/2020	F						
B	EDITORIAL CHANGES	GLC	JIK	GLW	CZH	06/08/2020	E						
A	ORIGINAL ISSUE	-	JS	IL	MDJ	07/25/2016	D	EDITORIAL CHANGES	EDM	GLW	JES	CZH	08/24/2021

X Indicates Latest Revision | Completely Revised | New Page | Information Removed

SDG&E ELECTRIC OVERHEAD FIELD MAINTENANCE ONLY STANDARDS

LIGHTING FMO
TABLE OF CONTENTS

OH1503 FIELD MAINTENANCE ONLY

ALL VERSIONS LISTED IN FMO ARE SUPERSEDED BY THEIR CURRENT VERSION FOUND INSIDE THE OVERHEAD CONSTRUCTION STANDARD MANUAL.

REVISION HISTORY:

10/09/2020: MOVED TO FMO

TABLE OF CONTENTS

© 1998 - 2020 San Diego Gas & Electric Company. All rights reserved. Removal of this copyright notice without permission is not permitted under law.

REV	CHANGE	DR	BY	DSN	APV	DATE	REV	CHANGE	DR	BY	DSN	APV	DATE
C							F						
B							E						
A	ORIGINAL ISSUE	GLC	GLW	JES	CZH	10/09/2020	D						

	Indicates Latest Revision	Completely Revised	X New Page	Information Removed

SCOPE: THIS STANDARD PROVIDES A SCHEDULE FOR STREET LIGHT SWITCHING TIMES BASED ON TURN–ON 15 MINUTES AFTER SUNSET AND TURN–OFF 30 MINUTES BEFORE SUNRISE, CHANGING AT 5 DAY INTERVALS. THIS SCHEDULE PROVIDES ABOUT 4165 BURNING HOURS PER YEAR.

JANUARY			FEBRUARY			MARCH		
DATES	TIME ON	TIME OFF	DATES	TIME ON	TIME OFF	DATES	TIME ON	TIME OFF
1	5:10	6:20	5	5:40	6:10	2	6:05	5:45
6	5:15	6:20	10	5:45	6:05	7	6:05	5:40
11	5:20	6:20	15	5:50	6:00	12	6:10	5:35
16	5:25	6:20	20	5:55	5:55	17	6:15	5:25
21	5:30	6:20	25	6:00	5:50	22	6:20	5:20
26	5:35	6:15	**FIGURES FROM FIRST SUNDAY IN APRIL TO LAST SUNDAY IN OCTOBER INDICATE PACIFIC DAYLIGHT SAVING TIME**			27	6:20	5:15
31	5:40	6:15						

APRIL			MAY			JUNE		
DATES	TIME ON	TIME OFF	DATES	TIME ON	TIME OFF	DATES	TIME ON	TIME OFF
1	6:25/7:25	4:10/5:10	1	7:45	5:30	5	8:10	5:10
6	6:30	5:00	6	7:50	5:25	10	8:10	5:10
11	6:30	4:55	11	7:50	5:20	15	8:15	5:10
16	6:35	4:50	16	7:55	5:20	20	8:15	5:15
21	6:40	4:45	21	8:00	5:15	25	8:15	5:15
26	6:40/7:40	4:35/5:35	26	8:00	5:15	30	8:15	5:15
			31	8:05	5:15			

JULY			AUGUST			SEPTEMBER		
DATES	TIME ON	TIME OFF	DATES	TIME ON	TIME OFF	DATES	TIME ON	TIME OFF
5	8:15	5:20	4	8:00	5:35	3	7:25	5:55
10	8:15	5:20	9	7:55	5:40	8	7:20	6:00
15	8:10	5:25	14	7:50	5:40	13	7:15	6:00
20	8:10	5:25	19	7:45	5:45	18	7:05	6:05
25	8:05	5:30	24	7:40	5:50	23	7:00	6:05
30	8:05	5:30	29	7:35	5:50	28	6:55	6:10

FIELD MAINTENANCE ONLY

TABLE OF CONTENTS

© 1998 - 2020 San Diego Gas & Electric Company. All rights reserved. Removal of this copyright notice without permission is not permitted under law.

REV	CHANGE	DR	BY	DSN	APV	DATE	REV	CHANGE	DR	BY	DSN	APV	DATE
C							F						
B	MOVED TO FMO	GLC	GLW	JES	CZH	10/09/2020	E						
A	REVISION	--	--	--	PIA/RDJ	2/6/1981	D						

X Indicates Latest Revision | Completely Revised | New Page | Information Removed

SHEET 1 OF 2

SDG&E ELECTRIC OVERHEAD FIELD MAINTENANCE ONLY STANDARDS

STREET LIGHT SWITCHING TIMES

FMO OH1503.1

OCTOBER			NOVEMBER			DECEMBER		
DATES	TIME ON	TIME OFF	DATES	TIME ON	TIME OFF	DATES	TIME ON	TIME OFF
3	6:50	6:15	2	5:15	5:35	2	5:00	6:00
8	6:40	6:15	7	5:10	5:40	7	5:00	6:05
13	6:35	6:20	12	5:05	5:45	12	5:00	6:10
18	6:30	6:25	17	5:05	5:50	17	5:00	6:15
23	6:25	6:30	22	5:05	5:55	22	5:05	6:15
28	6:20/5:20	6:30/5:30	27	5:00	6:00	27	5:10	6:20

TABLE OF CONTENTS

FIELD MAINTENANCE ONLY

© 1998 - 2020 San Diego Gas & Electric Company. All rights reserved. Removal of this copyright notice without permission is not permitted under law.

REV	CHANGE	DR	BY	DSN	APV	DATE	REV	CHANGE	DR	BY	DSN	APV	DATE
C							F						
B	MOVED TO FMO	GLC	GLW	JES	CZH	10/09/2020	E						
A	REVISION	--	--	--	PIA/RDJ	2/6/1981	D						

X Indicates Latest Revision | Completely Revised | New Page | Information Removed

SDG&E ELECTRIC OVERHEAD FIELD MAINTENANCE ONLY STANDARDS

STREET LIGHT SWITCHING TIMES

FMO OH1503.2

OH1509 FIELD MAINTENANCE ONLY

ALL VERSIONS LISTED IN FMO ARE SUPERSEDED BY THEIR CURRENT VERSION FOUND INSIDE THE OVERHEAD CONSTRUCTION STANDARD MANUAL.

REVISION HISTORY:

08/24/2021: MOVED TO FMO

TABLE OF CONTENTS

© 1998 - 2021 San Diego Gas & Electric Company. All rights reserved. Removal of this copyright notice without permission is not permitted under law.

REV	CHANGE	DR	BY	DSN	APV	DATE	REV	CHANGE	DR	BY	DSN	APV	DATE
C							F						
B							E						
A	ORIGINAL ISSUE	EDM	GLW	JES	CZH	08/24/2021	D						

Indicates Latest Revision | Completely Revised | X | New Page | Information Removed

SHEET 1 OF 1

SDG&E ELECTRIC OVERHEAD FIELD MAINTENANCE ONLY STANDARDS

STREET LIGHT G.O. 95 MINIMUM CLEARANCES

FMO OH1509

SCOPE: THIS STANDARD SHOWS MINIMUM CLEARANCES FOR STREET LIGHT AS REQUIRED BY G.O. 95.

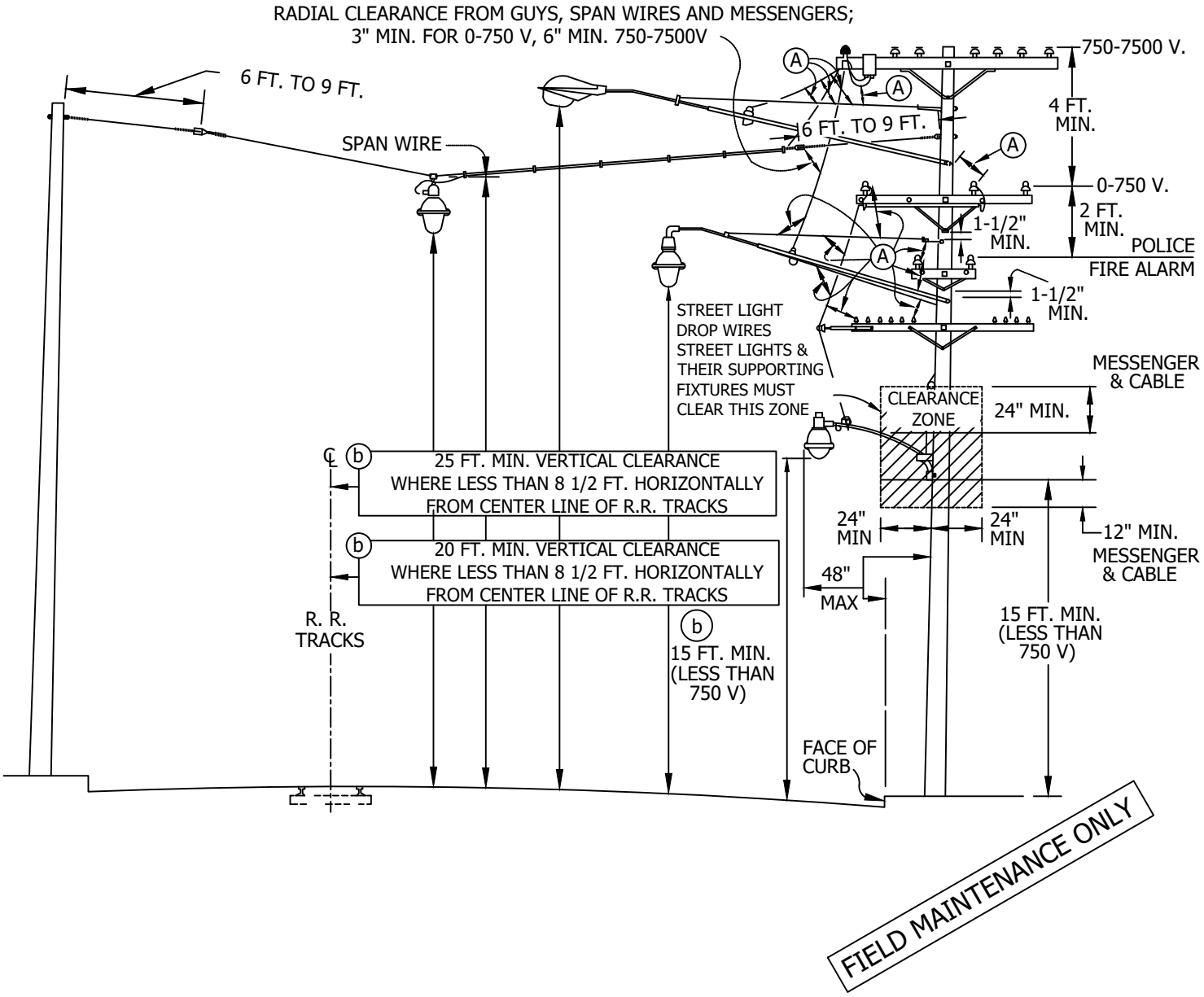

© 1998 - 2021 San Diego Gas & Electric Company. All rights reserved. Removal of this copyright notice without permission is not permitted under law.

REV	CHANGE	DR	BY	DSN	APV	DATE	REV	CHANGE	DR	BY	DSN	APV	DATE
C	MOVED TO FMO	EDM	GLW	JES	CZH	08/24/2021	F						
B	DRAWING UPDATE	-	PEI	-	-	02/04/2019	E						
A	ORIGINAL ISSUE	-	-	-	PTA/RDG	01/01/1988	D						

X Indicates Latest Revision | Completely Revised | New Page | Information Removed

SDG&E ELECTRIC OVERHEAD FIELD MAINTENANCE ONLY STANDARDS

STREET LIGHT G.O. 95 MINIMUM CLEARANCES

SHEET 1 OF 2

FMO OH1509.1

TABLE OF CONTENTS

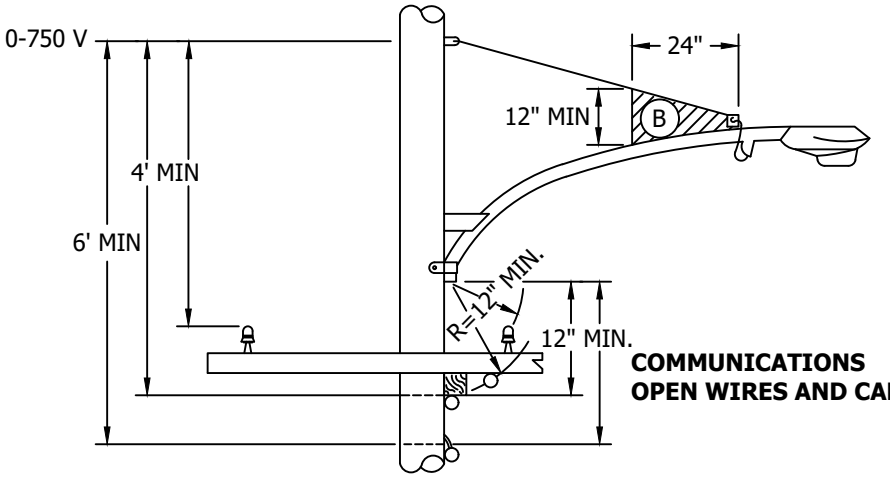

COMMUNICATIONS
OPEN WIRES AND CABLES

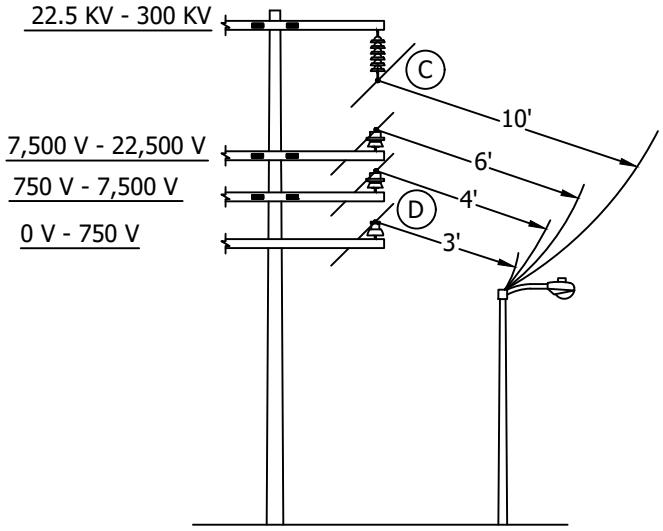

TABLE OF CONTENTS

INSTALLATION:

(A) ALL STREET LIGHT DROP WIRES, STREET LIGHTS AND THEIR SUPPORTING FIXTURES (INCLUDING RODS, BRACES AND GUYS) SHALL NOT BE LESS THAN 12" RADIALLY FROM UNPROTECTED CONDUCTORS NOT SUPPORTED ON MESSENGERS (INCLUDING LEAD WIRES & TAPS) EXCEPT LEAD WIRES SUPPLYING THE STREET LIGHTS WITHIN 24" OF THEIR POINTS OF ENTRANCE TO THE STREET LIGHTING EQUIPMENT.

(B) STREET LIGHT LEAD WIRE SHALL BE 12" MINIMUM RADIALLY FROM STREET LIGHT HARDWARE EXCEPT IN THE SHADED AREA.

(C) RADIAL CLEARANCES REQUIRED FOR VARIOUS VOLTAGE CONDUCTORS ARE THE SAME AT POLES AS AT MID-SPANS.

(D) MULTI-CONDUCTOR CABLE (SECONDARY CABLE AND SSC) 15" MINIMUM.

BILL OF MATERIALS: NONE

NOTES: NONE

FIELD MAINTENANCE ONLY

REFERENCE:

(b) SEE CONSTRUCTION PAGES IN 1500 SECTION FOR SPECIFIC MOUNTING HEIGHTS.

© 1998 - 2021 San Diego Gas & Electric Company. All rights reserved. Removal of this copyright notice without permission is not permitted under law.

REV	CHANGE	DR	BY	DSN	APV	DATE	REV	CHANGE	DR	BY	DSN	APV	DATE
C	MOVED TO FMO	EDM	GLW	JES	CZH	08/24/2021	F						
B	DRAWING UPDATE	-	PEI	-	-	02/04/2019	E						
A	ORIGINAL ISSUE	-	-	-	PTA/RDG	01/01/1988	D						

X Indicates Latest Revision | Completely Revised | New Page | Information Removed

SDG&E ELECTRIC OVERHEAD FIELD MAINTENANCE ONLY STANDARDS

STREET LIGHT G.O. 95 MINIMUM CLEARANCES

OH1511 UG4411 FIELD MAINTENANCE ONLY

ALL VERSIONS LISTED IN FMO ARE SUPERSEDED BY THEIR CURRENT VERSION FOUND INSIDE THE OVERHEAD AND UNDERGROUND CONSTRUCTION STANDARD MANUAL.

REVISION HISTORY:

6/8/2020**:** MOVED TO FMO

TABLE OF CONTENTS

© 1998 - 2020 San Diego Gas & Electric Company. All rights reserved. Removal of this copyright notice without permission is not permitted under law.

REV	CHANGE	DR	BY	DSN	APV	DATE	REV	CHANGE	DR	BY	DSN	APV	DATE
C							F						
B							E						
A	ORIGINAL ISSUE	GLC	JIK	GLW	CZH	6/8/2020	D						

SHEET 1 OF 1	Indicates Latest Revision	Completely Revised	X New Page	Information Removed
	SDG&E ELECTRIC OVERHEAD AND UNDERGROUND FIELD MAINTENANCE ONLY STANDARDS			
	REPLACEMENT REFRACTORS			FMO OH1511 UG4411

SCOPE: NONE

INSTALLATION:

(A) A GLASS OR LEXAN REFRACTOR MAY BE USED ON THESE LUMINAIRES.

B. LEXAN REFRACTORS TO BE USED IN HIGH VANDALISM AREAS ONLY.

BILL OF MATERIALS:

TABLE 1. REPLACEMENT REFRACTORS FOR LUMINAIRES ON PAGES 1521/4421

CONVENTIONAL LUMINAIRES		LAMP TYPE	LAMP WATTAGE	REPLACEMENT REFRACTOR		
MANUFACTURER	TYPE			TYPE	CATALOG NUMBER	STOCK NUMBER
GENERAL ELECTRIC	M250R2	HPSV	70, 100, 150	GLASS	35-962560-21	S579104
GENERAL ELECTRIC	M400R2	HPSV	200, 250, 400	GLASS	35-962620-05	S579102
GENERAL ELECTRIC	M1000	HPSV	1000	GLASS	35-130170R02	S579100
AMERICAN ELECTRIC	SERIES 113	HPSV	70, 100, 150	GLASS	13-2-A	S579110
AMERICAN ELECTRIC	SERIES 125	HPSV	200, 250, 400	GLASS	25-3-A	S579108
AMERICAN ELECTRIC	SERIES 327	HPSV	1000	GLASS	27-3-A	S79106

TABLE 1. REPLACEMENT REFRACTORS FOR LUMINAIRES ON PAGES 4422

DECORATIVE LUMINAIRES		LAMP TYPE	LAMP WATTAGE	REPLACEMENT REFRACTOR		
MANUFACTURER	TYPE			TYPE	CATALOG NUMBER	STOCK NUMBER
GENERAL ELECTRIC	MISSION BELL (A)	HPSV	70, 100, 150	GLASS	35-130583R01	S579264
				LEXAN	35-130707R01	S579248
		HPSV	250, 400	GLASS	35-2311374R1	S579296
				LEXAN	35-130015R02	S579312
GENERAL ELECTRIC	DECASHIELD	HPSV	250, 400	GLASS	35-962880-23	S578702
MCGRAW EDISON	CONCOURSE STYLE A	HPSV	70, 100, 150	GLASS	LO-340X1	S578694
			250, 400	GLASS	LO-340X2	S578696
GARDCO	FORM 10P	HPSV	70, 100, 150	GLASS	P1413	S578698
			250, 400	GLASS	P1913	S578700
GARDCO	FORM 10P	HPSV	250, 400	GLASS	P1913	S578700
KIM	SQUARE	HPSV	70, 200	GLASS	84044	S578730
BIEBER	SQUARE	HPSV	70	GLASS	BH-HP-GLASS	S578730

FIELD MAINTENANCE ONLY

© 1998 - 2020 San Diego Gas & Electric Company. All rights reserved. Removal of this copyright notice without permission is not permitted under law.

REV	CHANGE	DR	BY	DSN	APV	DATE	REV	CHANGE	DR	BY	DSN	APV	DATE
C	MOVED TO FMO	GLC	JIK	GLW	CZH	6/8/2020	F						
B	DRAWING UPDATE	PEI	-	-	-	02/04/2019	E						
A	ORIGINAL ISSUE	-	-	RDW	CAK	01/01/1998	D						

TABLE OF CONTENTS

BILL OF MATERIALS CONT'D:

TABLE 3. REPLACEMENT REFRACTORS FOR LUMINAIRES ON PAGES 4423 AND 4424

POST TOP & DW LUMINAIRES		LAMP TYPE	LAMP WATTAGE	REPLACEMENT REFRACTOR		
MANUFACTURER	TYPE			TYPE	CATALOG NUMBER	STOCK NUMBER
MCGRAW EDISON	LAWNAIRE	HPSV	50, 70, 100, 150	ACRYLIC	LO-307X1	S77920
MCGRAW EDISON	TRADITIONAL TYPE III	HPSV	100, 150	ACRYLIC	LT-144X11	S579232 (I)
				ACRYLIC	LT-148X11	S579220 (II)
				ACRYLIC	LT-144X12	S579228 (III)
				ACRYLIC	LT-144X13	S579224 (IV)
MCGRAW EDISON	TRADITIONAL TYPE V	HPSV	50, 70	ACRYLIC	LT-144X11	S577920 (V)
GENERAL ELECTRIC	TC-100R AND TC-100R MANSARD	HPSV	70, 150	ACRYLIC	35-963160-01	S579204 (VI)
HOLOPHANE	RSL-350	HPSV	100, 150	GLASS	3313	S578728
AMERON	VICTORIAN TYPE III	HPSV	70,200	GLASS	80645E	S578720

TABLE 4. REPLACEMENT REFRACTORS FOR LUMINAIRES ON PAGES 1533

FLOOD LIGHT LUMINAIRES	LAMP TYPE	LAMP WATTAGE	REPLACEMENT REFRACTOR		
MANUFACTURER			TYPE	CATALOG NUMBER	STOCK NUMBER
GENERAL ELECTRIC	HPSV	250, 400, 1000	GLASS	35-964960-21	S78712

TABLE OF CONTENTS

NOTES:

(I) REFRACTOR PANEL TO BE INSTALLED ON STREET SIDE.

(II) REFRACTOR PANEL TO BE INSTALLED ON HOUSE SIDE.

(III) REFRACTOR PANEL TO BE INSTALLED ON RIGHT SIDE.

(IV) REFRACTOR PANEL TO BE INSTALLED ON LEFT SIDE.

(V) REFRACTOR PANEL TO BE INSTALLED ON ALL FOUR SIDES.

(VI) REFRACTOR PANEL TO BE INSTALLED PER DESIGNATED SIDE.

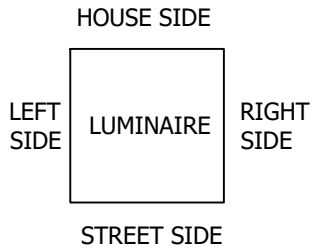

REFERENCE: NONE

FIELD MAINTENANCE ONLY

© 1998 - 2020 San Diego Gas & Electric Company. All rights reserved. Removal of this copyright notice without permission is not permitted under law.

REV	CHANGE	DR	BY	DSN	APV	DATE	REV	CHANGE	DR	BY	DSN	APV	DATE
C	MOVED TO FMO	GLC	JIK	GLW	CZH	6/8/2020	F						
B	DRAWING UPDATE	PEI	-	-	-	02/04/2019	E						
A	ORIGINAL ISSUE	-	-	RDW	CAK	01/01/1998	D						

FIELD MAINTENANCE ONLY

REVISION HISTORY:

7/13/2016: All versions prior to 2016 are superseded by their current version found inside the Overhead Construction Standard Manual.

TABLE OF CONTENTS

© 1998 - 2016 San Diego Gas & Electric Company. All rights reserved. Removal of this copyright notice without permission is not permitted under law.

REV	CHANGE	BY	DSGN	APPV	DATE	REV	CHANGE	BY	DSGN	APPV	DATE
C						F					
B						E					
A	ORIGINAL ISSUE	JS	IL	MDJ	7/13/2016	D					

X Indicates Latest Revision | Completely Revised | New Page | Information Removed

SDG&E ELECTRIC OVERHEAD STANDARD

LIGHTING INSTALLATION

FMO OH 1519

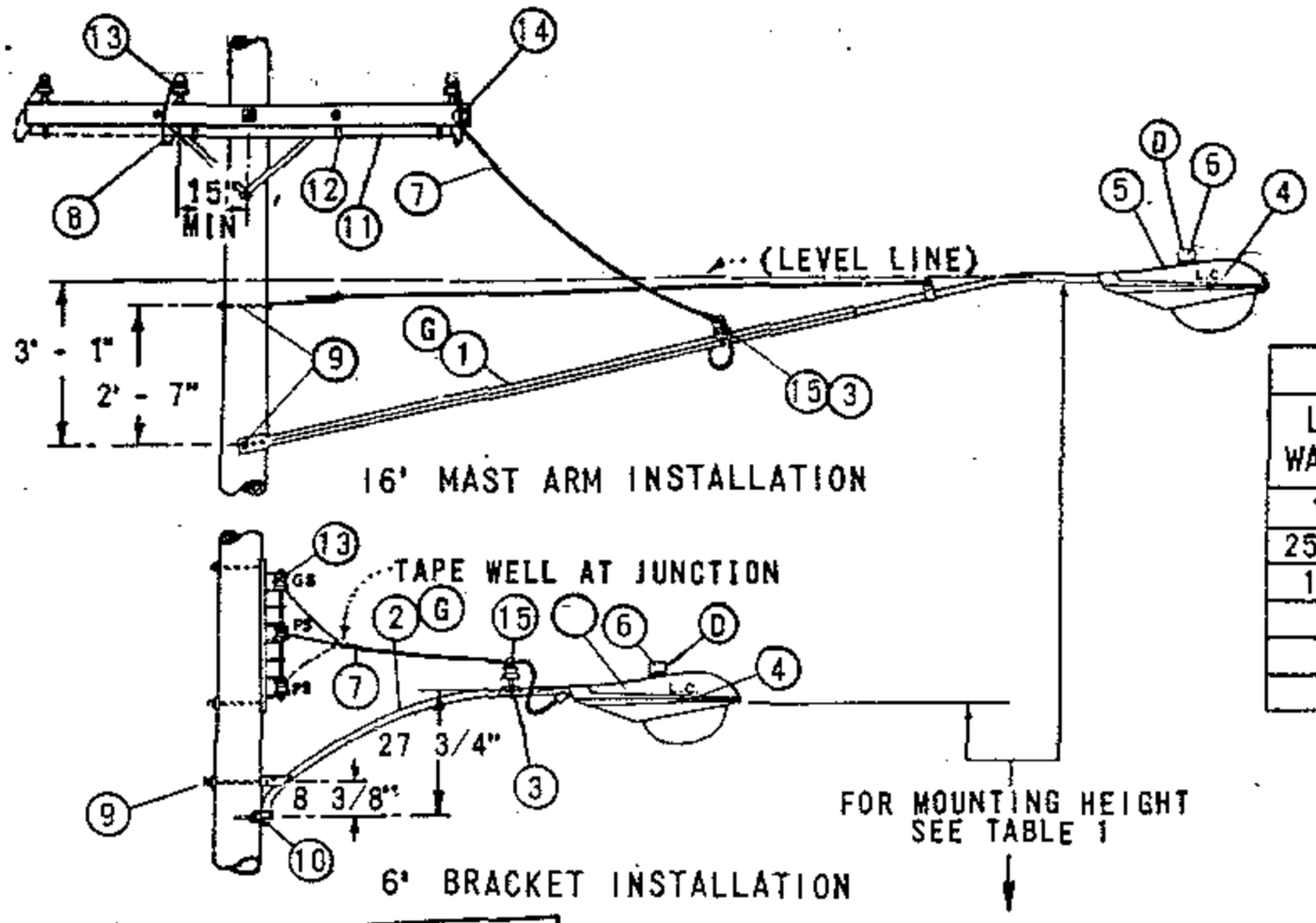

TABLE 1		
LAMP WATTAGE	MERCURY VAPOR MOUNTING HEIGHT	
175	25' - 28'	
250-400	30' - 32'	
1000	35' - 37'	

FOR FIELD MAINTENANCE ONLY

TABLE OF CONTENTS

TABLE 2 (F)

WATTS	LUMEN	MERCURY VAPOR STREET LIGHTING CODE						
		REGULATOR BALLAST		REACTOR BALLAST				
		BRACKET 6'	MAST ARM 16'	BRACKET 6'	MAST ARM 16'			
175	7000	6AG	16AG	6AR	16AR			
250	10000	6BG	16BG	6BR	16BR			
400	20000	6CG	16CG	-	-			
1000	55000	6DG	16DG					

NOTES:

(A) REQUIRED FOR SECONDARY LINE ARM CONSTRUCTION ONLY.

B. SEE STANDARDS PAGE 1509 FOR CLEARANCES.

(C) 30" STREET LIGHTING BRACKET, STOCK NUMBER 167200 MAY BE SUBSTITUTED.

(D) APPERTURE OF PHOTOELECTRIC CELL MUST BE SET TO FACE NORTH.

(E) EXEMPT MATERIALS.

(F) TABLE 2 IS PROVIDED FOR IDENTIFICATION OF LIGHTING INSTALLATIONS ON MAPS AND WORK ORDERS.

(G) A MAXIMUM OF ONE HALF OF MOUNTING BRACKET MAY BE INSTALLED IN CLIMBING SPACE.

ITEM		DESCRIPTION	QUANTITY BALLAST REGULATOR 6AG, 6BG, 6CG, 6DG	QUANTITY BALLAST REGULATOR 16AG, 16BG, 16CG, 16DG	QUANTITY BALLAST REACTOR 6AR, 6BR	QUANTITY BALLAST REACTOR 16AR, 16BR	STOCK NO. OR CONSTR STDS
	1	ARM, UPSWEEP MAST, 1 1/4" DIA, 16' - 0"	-	1	-	1	110880
	2	BRACKET, UPSWEEP, 1 1/4" DIA, 6' - 0" (C)	1	-	1	-	167264
	3	PIN, INSULATOR CLAMP (SUPPLIED WITH MAST ARM)	1	1	1	1	-
	4	LAMP	1	1	1	1	PG. 1510
	5	LUMINAIRE	1	1	1	1	PG. 1520, 1521
	6	CONTROL, PHOTOELECTRIC, TWISTLOCK BASE 105 TO 280 VOLT	1	1	1	1	273888
S	7	WIRE, #8, 600V, FLEXIBLE R.C. DUPLEX	AS REQ'D				811776
L	8	WIRE, #12, TYPE THW, 600V, INSULATED COPPER (A)	25'	25'	25'	25'	810272
S	9	BOLT, MACH, GALV, 5/8" X 10", 2 SQ WASH. & 1 NUT (E)	1	2	1	2	PGS 139, 140
S	10	SCREW, LAG, GALV, 1/2" X 4" (E)	2	-	2	-	621568
	11	CONDUIT, PLASTIC, PVC, TYPE II, SCHEDULE 40 3/4" (A) (E)	7' - 4"	7' - 4"	7' - 4"	7' - 4"	251328
	12	STRAP, PIPE, GALV, 2-10D NAILS, GALV, 3/4" (A) (E)	3	3	4	4	PG 143
	13	CONNECTOR, WIRE (E)	2	2	2	2	PGS 783-787
	14	CLEVIS, SECONDARY DEAD END (A)	1	1	1	1	235488
	15	INSULATOR, PIN TYPE, TOP TIE, 4KV (CLASS 55-1) WHITE (E)	1	1	1	1	429024

DATE 11-5-82
APPD JWF/RH

SDG&E ELECTRIC STANDARDS

LIGHTING INSTALLATION

1599.102
SUPERSEDES
1519 (11-5-82)

FIELD MAINTENANCE ONLY

REVISION HISTORY:

7/13/2016: All versions prior to 2016 are superseded by their current version found inside the Overhead Construction Standard Manual.

TABLE OF CONTENTS

© 1998 - 2016 San Diego Gas & Electric Company. All rights reserved. Removal of this copyright notice without permission is not permitted under law.

REV	CHANGE	BY	DSGN	APPV	DATE	REV	CHANGE	BY	DSGN	APPV	DATE
C						F					
B						E					
A	ORIGINAL ISSUE	JS	IL	MDJ	7/13/2016	D					

X Indicates Latest Revision | Completely Revised | New Page | Information Removed

SHEET
1 OF 1

SDG&E ELECTRIC OVERHEAD STANDARD

MERCURY VAPOR CONVENTIONAL LUMINAIRES
AND REPLACEMENT REFRACTORS

FMO
OH 1520

SCOPE: THIS STANDARD SHOWS MERCURY VAPOR LUMINAIRES USED TO PROVIDE ROADWAY AND DUSK TO DAWN LIGHTING, AND REPLACEMENT REFRACTORS.

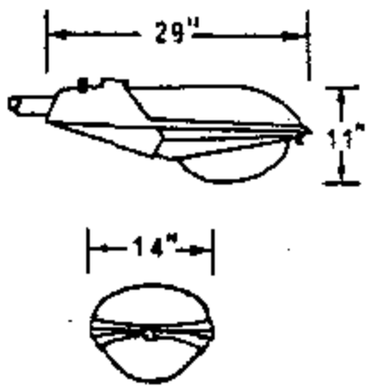

GENERAL ELECTRIC
M-250A POWR/DOOR

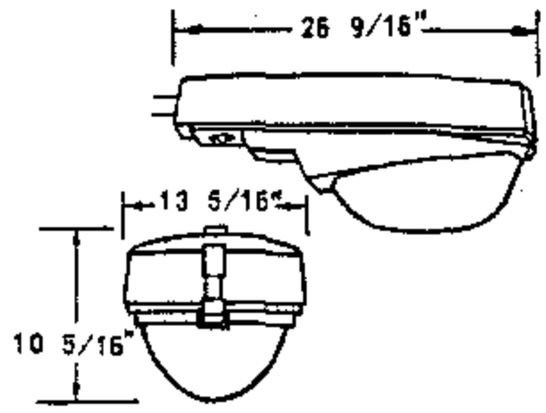

MCGRAW EDISON
UNIDOR 250

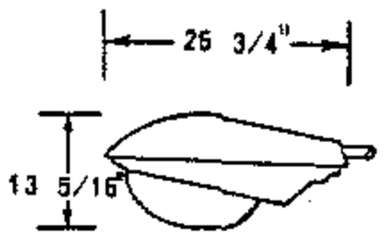

WESTINGHOUSE
OV-15

FIGURE 1

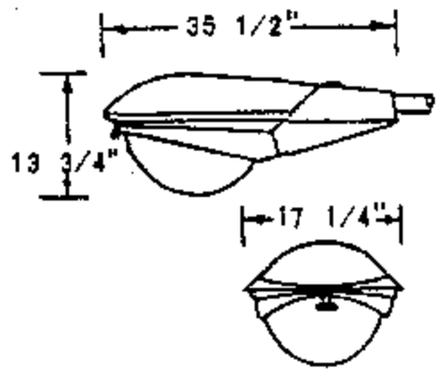

GENERAL ELECTRIC
M-400A POWR/DOOR

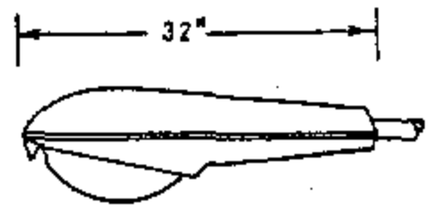

WESTINGHOUSE
OV-25

FOR FIELD MAINTENANCE ONLY

FIGURE 2

BILL OF MATERIAL:

FIG. NO.	STOCK NUMBER	LAMP SIZE WATTS	BALLAST		MANUFACTURER AND CATALOG NUMBER							
			TYPE	SOURCE VOLTAGE	GENERAL ELECTRIC		MCGRAW EDISON		WESTINGHOUSE		UNICORN ELECTRIC	
					TYPE	CAT. NO.	TYPE	CAT. NO.	TYPE	CAT. NO.	TYPE	CAT. NO.
1	473920	175	REGULATOR	120/240 (A)	M-250A POWR/DOOR	C727G002 (B)	UNIDOR 250	UU1104-120R	OV-15	811A208G04		
	474048		REACTOR NPF	240		C727G014 (B)		UU-1154R		811A208G20		
	473910		SERIES	6.6 AMPS	M-250-R2	M2AR17CXSIGMS31036					-	UCM-A66-175
2	474208	400	REGULATOR	120/240 (A)	M-400A POWR/DOOR	C723G001 (B)			OV-25	658A303G04		
	473912		SERIES	6.6 AMPS	M-250-R2	M4AR40CXSIGMN32043					-	UCM-A66-400

REPLACEMENT REFRACTORS FOR MERCURY VAPOR LUMINAIRES						
CONVENTIONAL LUMINAIRES		LAMP TYPE	LAMP WATTAGE	REPLACEMENT REFRACTOR		
MANUFACTURER	TYPE			TYPE	CATALOG NUMBER	STOCK NUMBER
GENERAL ELECTRIC	M-250A (C)	MV	175,250	GLASS	35-130583-01	579284
GENERAL ELECTRIC	M-400A (C)	MV	400	GLASS	35-231137-01	579296
				LEXAN	35-130015-02	579312
AMERICAN ELECTRIC	23 SERIES (C)	MV	175,250	GLASS	23-002	579284
AMERICAN ELECTRIC	25 SERIES (C)	MV	400	GLASS	25-003	578928 (F)
				LEXAN	25-003-6	- (F)
AMERICAN ELECTRIC	327 SERIES	MV	1000	GLASS	27-003	578936 (F)
WESTINGHOUSE	OV-15	MV	175,250	GLASS	464-D067-H01	578976 (F)
WESTINGHOUSE	OV-25 (C)	MV	400	GLASS	464-D336-H02	579040
				LEXAN	6716-D13-H01	579056 (F)

INSTALLATION:

(A) FACTORY WIRED FOR 120 VOLTS, DO NOT WIRE FOR 240 VOLTS ON NEW INSTALLATIONS.

(B) ASTRODOME UNITS ARE EQUIPPED WITH BUILT-IN PHOTOELECTRIC CELL. FOR REPLACEMENT SEE PAGE 1512/4412.

(C) A GLASS OR A LEXAN REFRACTOR MAY BE USED ON THESE LUMINAIRES.

D. LEXAN REFRACTORS TO BE USED IN HIGH VANDALISM AREAS ONLY.

(F) ITEM IS NO LONGER PURCHASED.

TABLE OF CONTENTS

DH 1599.201 ~~JG-4499.201~~ SUPERSEDES 1520.1 (11-5-82)	SDG&E ELECTRIC STANDARDS MERCURY VAPOR CONVENTIONAL LUMINAIRES AND REPLACEMENT REFRACTORS	DATE 1-1-89 APPD PEA/DTE

OH1521 UG4421 FIELD MAINTENANCE ONLY

ALL VERSIONS LISTED IN FMO ARE SUPERSEDED BY THEIR CURRENT VERSION FOUND INSIDE THE OVERHEAD AND UNDERGROUND CONSTRUCTION STANDARD MANUAL.

REVISION HISTORY:

10/03/2016: MOVED TO FMO

TABLE OF CONTENTS

© 1998 - 2016 San Diego Gas & Electric Company. All rights reserved. Removal of this copyright notice without permission is not permitted under law.

REV	CHANGE	DR	BY	DSN	APV	DATE	REV	CHANGE	DR	BY	DSN	APV	DATE
C							F						
B							E						
A	ORIGINAL ISSUE	-	JS	JS	MDJ	10/03/2016	D						

	Indicates Latest Revision		Completely Revised	X	New Page	Information Removed

SDG&E ELECTRIC OVERHEAD AND UNDERGROUND FIELD MAINTENANCE ONLY STANDARDS

HIGH PRESSURE AND LOW PRESSURE SODIUM VAPOR
LUMINAIRE, REPLACEMENT BALLAST AND STARTER

FMO
OH1521
UG4421

SCOPE: THIS STANDARD SHOWS HIGH PRESSURE AND LOW PRESSURE SODIUM VAPOR LUMINAIRES USED TO PROVIDE ROADWAY AND DUSK TO DAWN LIGHTING, AND STARTER.

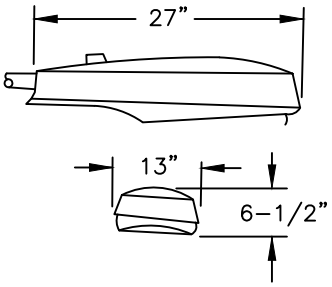

AMERICAN ELECTRIC
SERIES 115 CUTOFF
NON-POWER/PAD

FIGURE

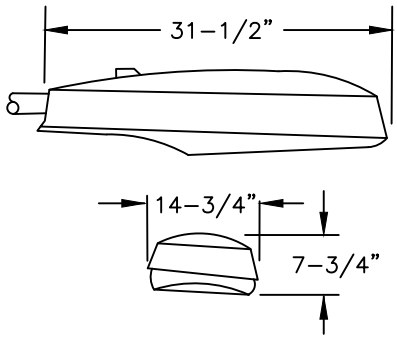

AMERICAN ELECTRIC
SERIES 125

FIGURE

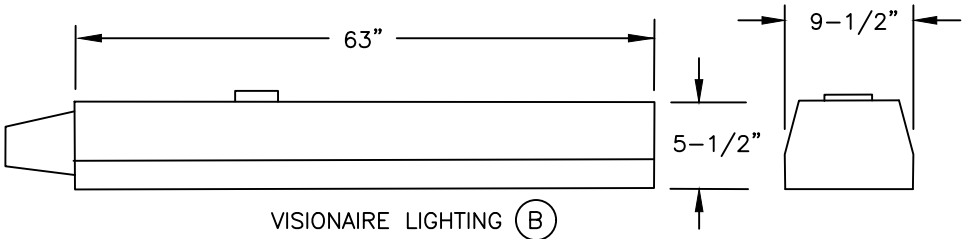

VISIONAIRE LIGHTING (B)
ROADWAY RDW-3 (135, 180W SHOWN)

FIGURE

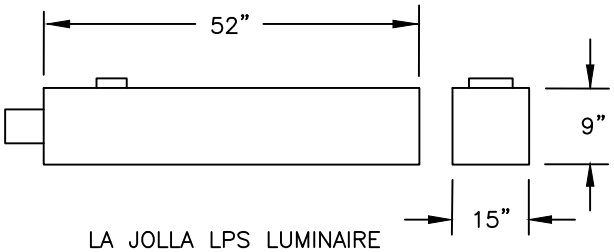

LA JOLLA LPS LUMINAIRE
(180W SHOWN)

FIGURE

TABLE OF CONTENTS

© 1998 - 2006 San Diego Gas & Electric Company. All rights reserved. Removal of this copyright notice without permission is not permitted under law.

	Indicates Latest Revision	X	Completely Revised		New Page	X	Information Removed

	SDG&E ELECTRIC STANDARDS	REVISION
OH 1521.1 UG 4421.1	HIGH PRESSURE AND LOW PRESSURE SODIUM VAPOR LUMINAIRE, REPLACEMENT BALLAST AND STARTER	DATE 2-3-06 APPD PA / JJ

(D) TABLE □□ □I□□ PRESS□RE SO□I□M □APOR □□PS□□L□MINAIRES □COMPLETE ASSEMBL□ □E□CL□□IN□ LAMP□					
FIG. NO.	MANUFACTURER TYPE	LAMP SIZE WATTS	BALLAST TYPE	BALLAST SOURCE VOLTAGE	STOCK NUMBER
1	SERIES 115	70	REACTOR–NPF	120	473400
	SERIES 115	100			473402
	SERIES 115	150			473404
2	SERIES 125	200	HIGH REACTANCE–NPF		473406
		250	HIGH REACTANCE–NPF		473408
		400	CWA		473410

TABLE □□ REPLACEMENT STARTER ONL□ FOR □I□□ PRESS□RE SO□I□M □APOR □□PS□□L□MINAIRES					
FIGURE NUMBER	MANUFACTURER	TYPE	LAMP SIZE WATTS	SOURCE VOLTAGE	STOCK NUMBER
1	AMERICAN ELECTRIC	SERIES 115	50–150	120	679142
2	AMERICAN ELECTRIC	SERIES 125	200–400	120	679144

TABLE OF CONTENTS

© 1998 - 2010 San Diego Gas & Electric Company. All rights reserved. Removal of this copyright notice without permission is not permitted under law.

Indicates Latest Revision | Completely Revised | New Page | Information Removed

REVISION DATE 2–3–06 APPD PSA / JJ

SDG&E ELECTRIC STANDARDS

HIGH PRESSURE AND LOW PRESSURE SODIUM VAPOR LUMINAIRE, REPLACEMENT BALLAST AND STARTER

OH 1521.2
UG 4421.2

TABLE □□ LO□ PRESS□RE SO□I□M □APOR □LPS□□L□MINAIRES □COMPLETE ASSEMBL□ □E□CL□□IN□ LAMP□					
FIG. NO.	MAX. LENGTH (IN INCHES)	LAMP SIZE (WATTS)	BALLAST		STOCK NUMBER
			TYPE	SOURCE VOLTAGE	
3 & 4	34	55	H P F REACTOR	120	473800
	39	90	H P F REACTOR	120	473802
	63	135	H P F REACTOR	120	473804
	63	180	H P F REACTOR	120	473806

INSTALLATION:

A. ALL LUMINAIRES ARE TO BE WIRED FOR 120 VOLTS ONLY. APPLICATION OF 240 VOLTS TO THESE UNITS WILL CAUSE SEVERE BALLAST DAMAGE.

(B) THE VISIONAIRE LUMINAIRE WILL ACCEPT BOTH 35 WATT AND 55 WATT LAMPS.

C. CUTOFF LUMINAIRES SHALL BE INSTALLED WITH THE OPTICAL ASSEMBLY (GLASSWARE) HORIZONTAL.

(D) STOCK NUMBERS IN TABLES 1 AND 3 ARE FOR COMPLETE LUMINAIRE UNITS.

REFERENCE:

J. SEE STANDARD 1512/4412 FOR PHOTOELECTRIC CONTROL.

K. SEE PAGE 1511.1/4411.1 FOR REPLACEMENT REFRACTORS.

L. SEE STANDARD 1514/4414 FOR IDENTIFICATION DECAL.

TABLE OF CONTENTS

©1998 - 2010 San Diego Gas & Electric Company. All rights reserved. Removal of this copyright notice without permission is not permitted under law.

	Indicates Latest Revision		Completely Revised		New Page		Information Removed

REVISION DATE 2-3-06 APPD PSA / JJ	SDG&E ELECTRIC STANDARDS HIGH PRESSURE AND LOW PRESSURE SODIUM VAPOR LUMINAIRE, REPLACEMENT BALLAST AND STARTER	OH 1521.3 UG 4421.3

FIELD MAINTENANCE ONLY

REVISION HISTORY:

7/13/2016: All versions prior to 2016 are superseded by their current version found inside the Overhead Construction Standard Manual.

TABLE OF CONTENTS

© 1998 - 2016 San Diego Gas & Electric Company. All rights reserved. Removal of this copyright notice without permission is not permitted under law.

REV	CHANGE	BY	DSGN	APPV	DATE	REV	CHANGE	BY	DSGN	APPV	DATE
C						F					
B						E					
A	ORIGINAL ISSUE	JS	IL	MDJ	7/13/2016	D					

X Indicates Latest Revision | Completely Revised | New Page | Information Removed

SHEET
1 OF 1

SDG&E ELECTRIC OVERHEAD STANDARD

SERIES CONTROLLED REGULATED OUTPUT STREET LIGHT
TRANSFORMER INSTALLATION REMOTE CONTROL
OUTDOOR CIRCUIT SWITCH CAPACITOR 4KV

FMO
OH 1555

SCOPE: THIS STANDARD SHOWS 4KV CONSTANT CURRENT SERIES LIGHTING TRANSFORMER INSTALLATION AND SHALL ONLY BE USED WHEN AN EXISTING TRANSFORMER INSTALLATION MUST BE RELOCATED OR REBUILT TO MAINTAIN SERVICE TO AN EXISTING SERIES STREET LIGHTING SYSTEM.

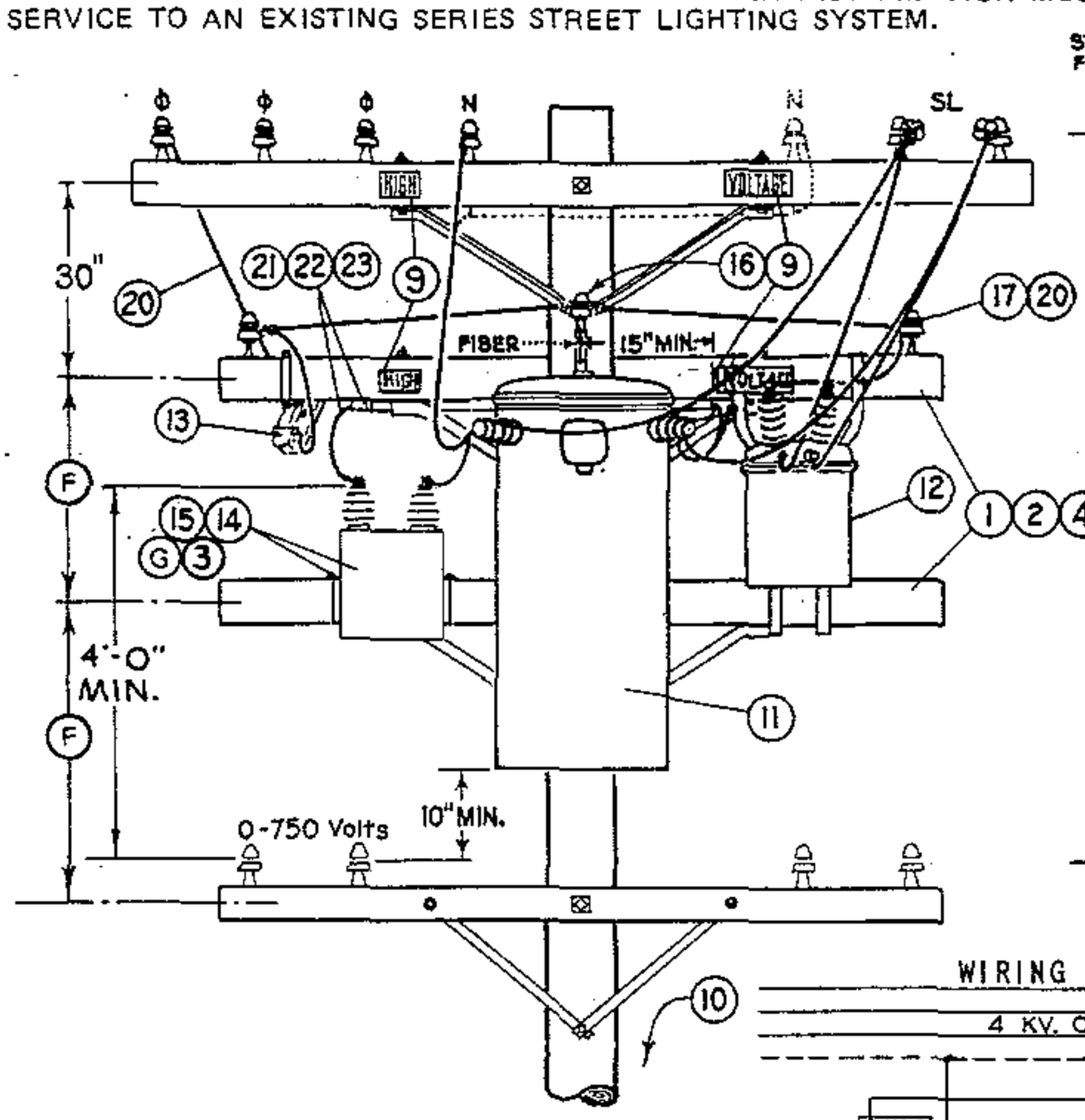

ELEVATION

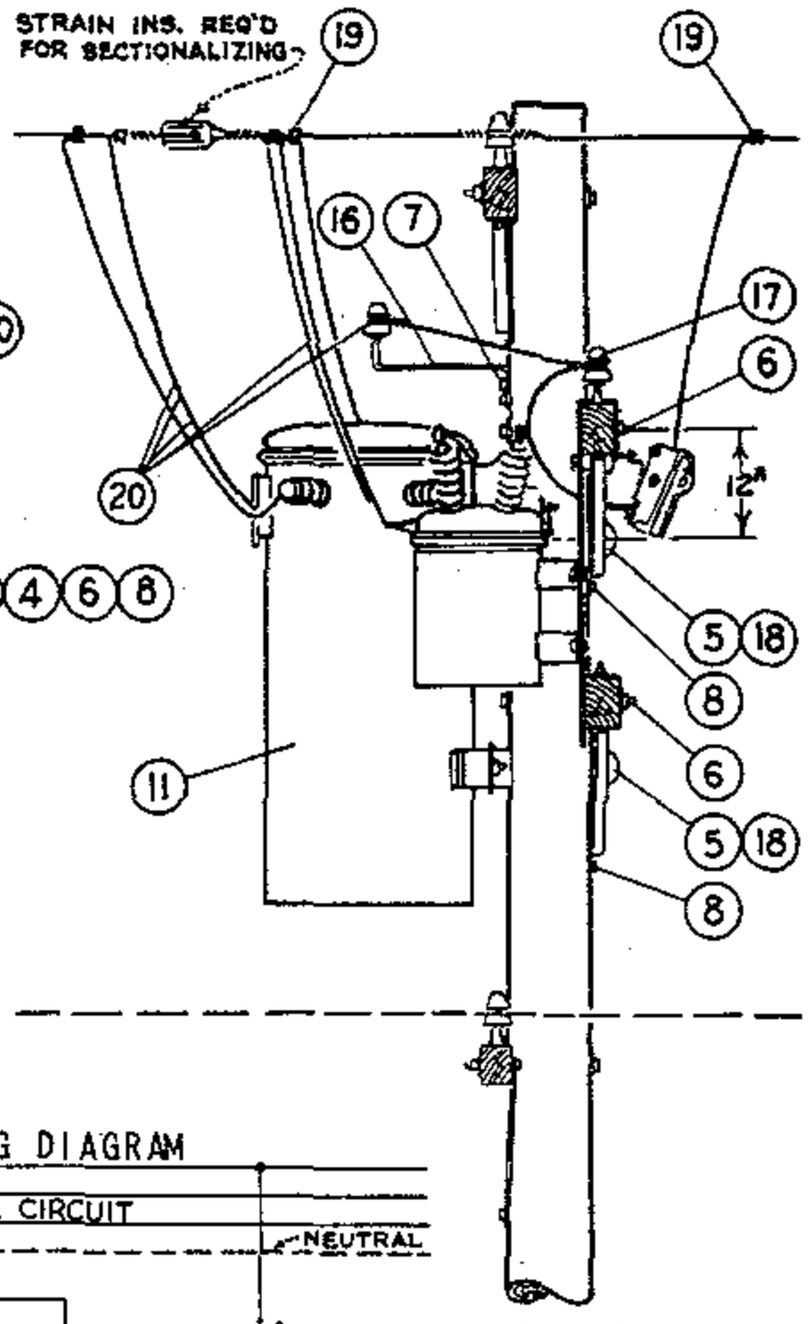

SIDE VIEW

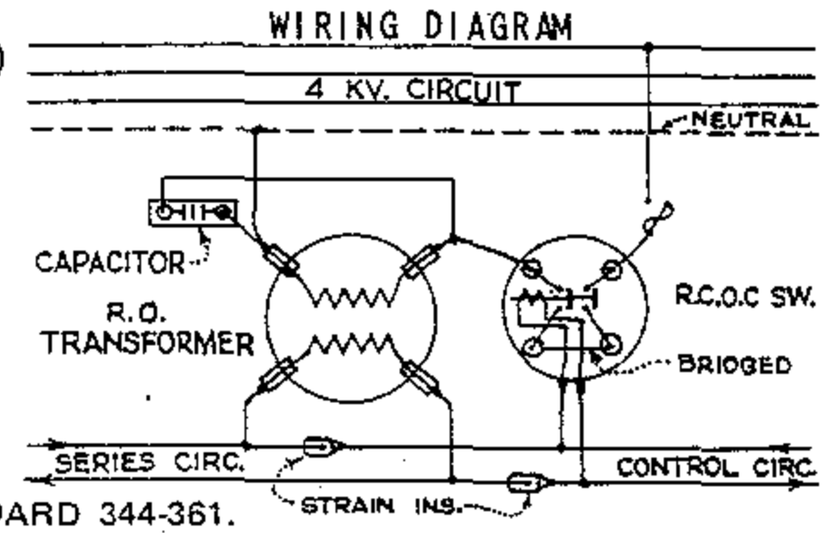

NOTES:

- CLASS OF POLE SHOULD BE DETERMINED PER STANDARD 344-361.

BILL OF MATERIAL:

ITEM		DESCRIPTION		QUANT.	CONST STD OR PAGE NO	STOCK NO.
P. T. & F.	1	3¾"x5¾"x8'-0" Transformer Arm		2	PAGE 380.5 IT.4	294960
	2	Angle Crossarm Brace, 4'-0"		2		164032
	3	Mach. Bolt, Galv., ⅜"x1½", 2 rd. washers & 1 nut	(E)	2	STDS 392	
	4	Mach. Bolt, Galv., ½"x7", 1 rd. washer & 1 nut	(E)	4	STDS 392	
	5	Mach. Bolt, Galv., ⅝"x12", 1 sq. curv. wash. & 1 nut	(E)	2	STDS 392	
	6	Mach. Bolt, Galv., ⅝"x14", 2 sq. washers & 1 nut	(E)	2	STDS 392	
	7	Lag Screw, Galv., ½"x4"	(E)	1		621568
	8	Lag Screw, Galv., ⅝"x5"	(E)	2		621600
	9	High Voltage Sign & 9 galv. roofing nails	(E)	1		647648, 492224
	10	POLE STEPS (SEE STANDARD 363)	(E)	-		692992
L. T. I.	11	R.O. Transformer with 2 pole bolt Adapter Plates & bolts		1	PG 1121	
	12	R.C.O.C. Switch, paired hangers, adapter plates where req'd		1		274656 (A) (B)
	13	Expulsion Fuse Indicating Cutout, 5 kv., 50 A.	(D)	1	SECTION 1200	
	14	Capacitor, 2.4 kv., 15 or 25 kvar.	(A)	1		207392 OR 207168
	15	Mounting Strap and 1-½"Φx3¾"x5¾" "U" bolt	(A)(C)	2		158432
	16	Stand-Off Bracket with Insulator		1		166144, 429216 (E)
	17	Insulator and 1" steel pin	(E)	2	PG 750	532608
	18	Cover Thru Bolt Plastic & Nails, Galv.	(E)	2		285696, 492192
	19	Wire Connector	(E)	7	STDS. 783 – 787	
	20	#6 D.B.W.P. Copper Wire		55'		812512
	21	#6 R.C. Strand. Copper Wire, 5 kv.		7'		194304
	22	1" PVC Conduit	(E)	4'		251200
	23	1¼" Pipe Strap and 2-6d nails, galv.	(E)	3		697696, 491552

INSTALLATION:

(A) NO LONGER PURCHASED.
(B) KEARNY MAINTENANCE WILL SUPPLY.
(C) SALVAGE FROM EXISTING INSTALLATIONS, MIRAMAR SALVAGE YARD HAS LIMITED SUPPLY.
(D) CAN BE SUBSTITUTED WITH 12KV 100A CUTOUT.
(E) EXEMPT MATERIAL.
(F) SPACE KICK ARM & BRACE TO CLEAR LOWER TRANSFORMERS THRU BOLT COVER.
(G) IF CAPACITOR FAILS OR STATION IS RELOCATED, DO NOT REPLACE CAPACITOR.

1599.502
SUPERCEDES
1555.1 (1-1-92)

SDG&E ELECTRIC STANDARDS

SERIES CONTROLLED REGULATED OUTPUT STREET LIGHT TRANSFORMER INSTALLATION REMOTE CONTROL OUTDOOR CIRCUIT SWITCH CAPACITOR 4KV

DATE 1-1-87
APPD AK/RDS

TABLE OF CONTENTS

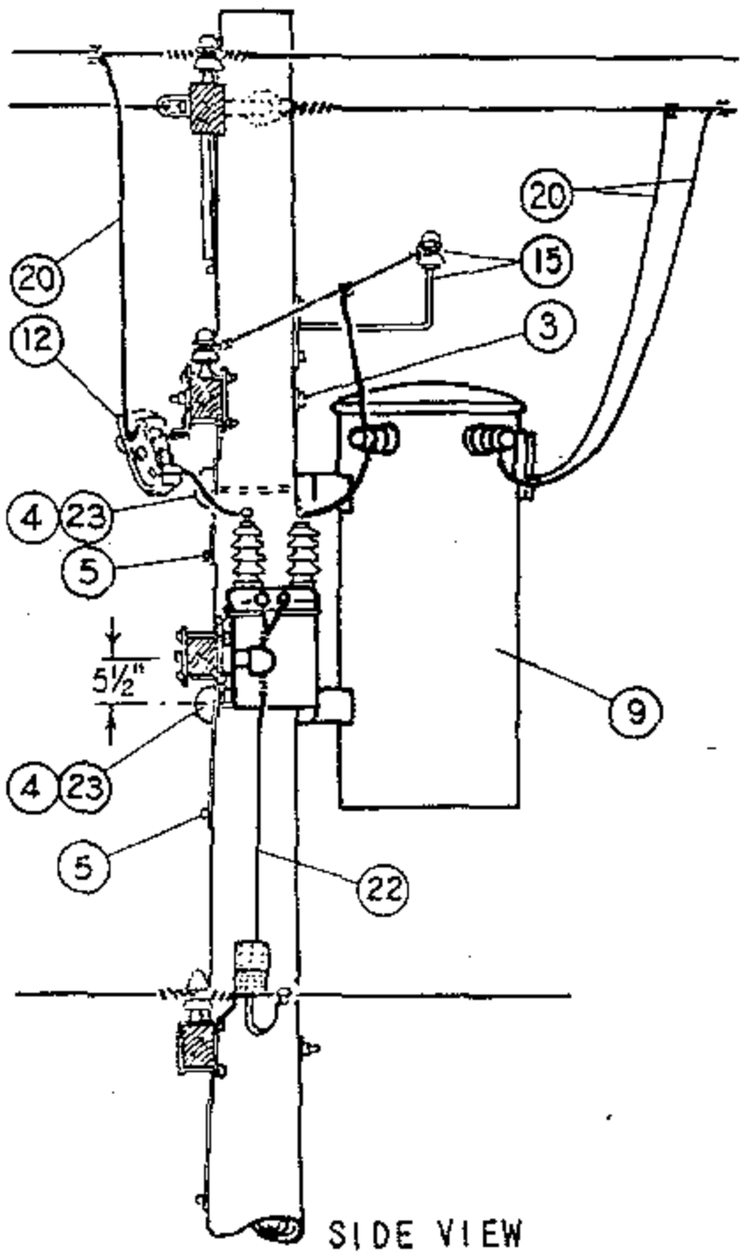

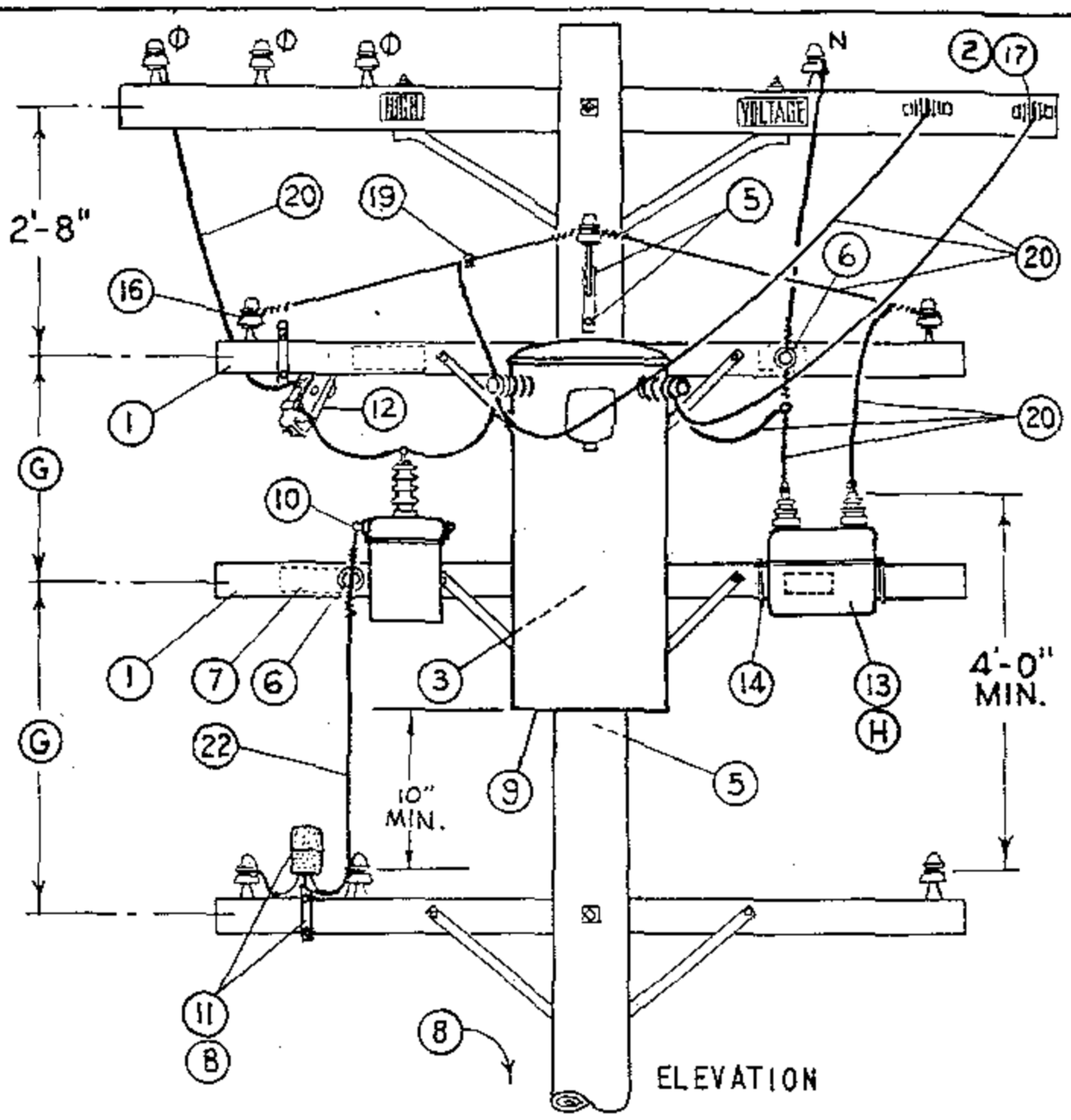

NOTES:

- CLASS OF POLE SHOULD BE DETERMINED PER STANDARD 344-361.

INSTALLATION:

A. ROTATE COVER OF OIL SWITCH 180°, WHERE NECESSARY, TO POSITION MANUAL OPERATING LEVER ADJACENT TO CLIMBING SPACE.

(B) FACE PHOTO CELL TO THE NORTH.

(C) NO LONGER PURCHASED. SALVAGE FROM EXISTING INSTALLATION OR OBTAIN FROM KEARNY MAINTENANCE.

(D) NO LONGER PURCHASED. SALVAGE FROM EXISTING INSTALLATION OR OBTAIN FROM MIRAMAR SALVAGE YARD.

(E) EXEMPT MATERIAL.

(F) CAN BE SUBSTITUTED WITH 12KV 100A CUTOUT.

(G) SPACE KICK ARM & BRACE TO CLEAR LOWER TRANSFORMER THRU BOLT COVER.

(H) IF CAPACITOR FAILS OR STATION IS RELOCATED, DO NOT REPLACE CAPACITOR.

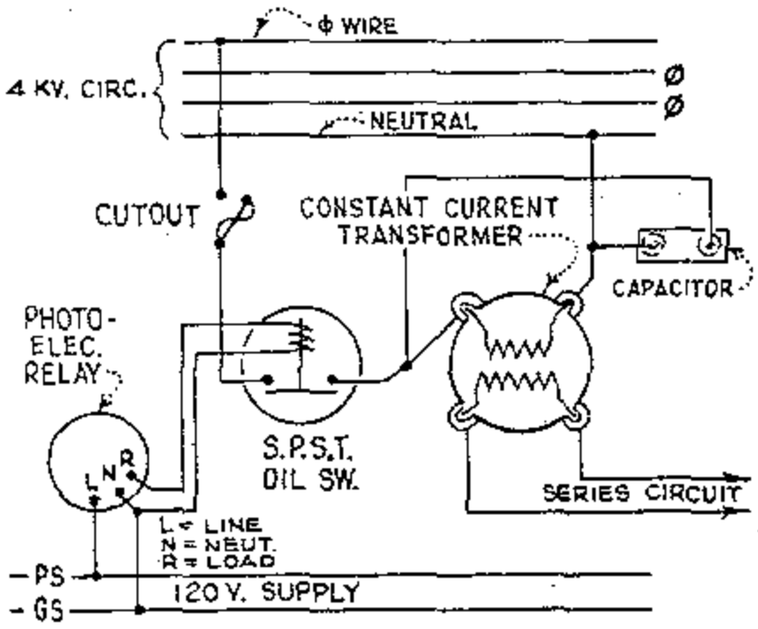

WIRING DIAGRAM

C.C. TRNSFMR. KW	CAPACITOR KVAR
7½ (D)	15
10 (D)	15
15 (D)	15
25	25

ITEM		DESCRIPTION		QUANTITY	STOCK NO. OR CONSTR STDS
P. T. & F.	1	3½" x 4½" x 8'-0" Crossarm		2	PG. 380.03 IT.1
	2	Mach. Bolt, Galv., 5/8" x 6", 1 sq. washer & 1 nut	(E)	2	STD 139, 140
	3	Mach. Bolt, Galv., 5/8" x 16", 2 sq. washers & 1 nut	(E)	2	STD 139, 140
	4	Mach. Bolt, Galv., ¾" x 12", 1 sq. curved washers & 1 nut	(E)	2	STD 139, 140
	5	Lag Screw, Galv., ½" x 4"	(E)	4	621568
	6	Pin, Transformer, Lead 1" Leadthread	(E)	2	529248
	7	High Voltage Sign & 8 galv. roofing nails	(E)	2	647744, 492224
	8	Pole Steps	(E)	15	692992
S. L. & S.	9	C. C. Transformer, 2.4 kv., incl. 2 pole bolt adapter plates		1	PG-1121.12
	10	South Bend Controller Co. Oil Switch, S.P.S.T., 75 A., 2.4 kv. type SPR-1-120 spec. 6210 with #6222 X-arm Mtg. Bracket		1	274528 (C)
	11	Photoelectric Relay, 1000 W. min., 120 V.		1	273888 166432
	12	Cutout, 5 kv., 50 A.	(F)	1	Section 1200
	13	Capacitor, Size per Table, 2.4 kv., 2-⅜" x 1" Mtg. Bolts & Washers	(H)	1	207328, 207168
	14	Capacitor Mounting Strap & "U" Bolt	(D)	2	697___ 158432
	15	Stand-Off Bracket with Insulator		1	166144
	16	Insulator and 1" steel pin	(E)	2	532608
	17	D.E., 4 kv.	(E)	2	235520
	18				
	19	Wire Connector		9	STD 783-787
	20	#6 B. Strand. Copper Wire		50'	813536
	21				
	22	2-C #16, 600 V. Type "S" Neoprene Jacketed Super Service Cord		5'	814400
	23	Cover Thru Bolt Plastics & 4 - 10d Nails, galv.	(E)	2	285696, 492192

DATE 11-5-82
APPD

SDG&E ELECTRIC STANDARDS

PHOTOELECTRIC CONTROLLED REGULATED OUTPUT STREET LIGHT TRANSFORMER INSTALLATION, 4KV

1599.503
SUPERCEDES
1555.2 (1-1-92)

TABLE OF CONTENTS

FIELD MAINTENANCE ONLY

REVISION HISTORY:

7/13/2016: All versions prior to 2016 are superseded by their current version found inside the Overhead Construction Standard Manual.

TABLE OF CONTENTS

© 1998 - 2016 San Diego Gas & Electric Company. All rights reserved. Removal of this copyright notice without permission is not permitted under law.

REV	CHANGE	BY	DSGN	APPV	DATE	REV	CHANGE	BY	DSGN	APPV	DATE
C						F					
B						E					
A	ORIGINAL ISSUE	JS	IL	MDJ	7/13/2016	D					

X Indicates Latest Revision | Completely Revised | New Page | Information Removed

SHEET
1 OF 1

SDG&E ELECTRIC OVERHEAD STANDARD

SERIES CONTROLLED R.O. STREET LIGHT TRANSFORMER
AND R.C.O.C. SWITCH, LINE ARM POSITION, 4KV

FMO
OH 1556

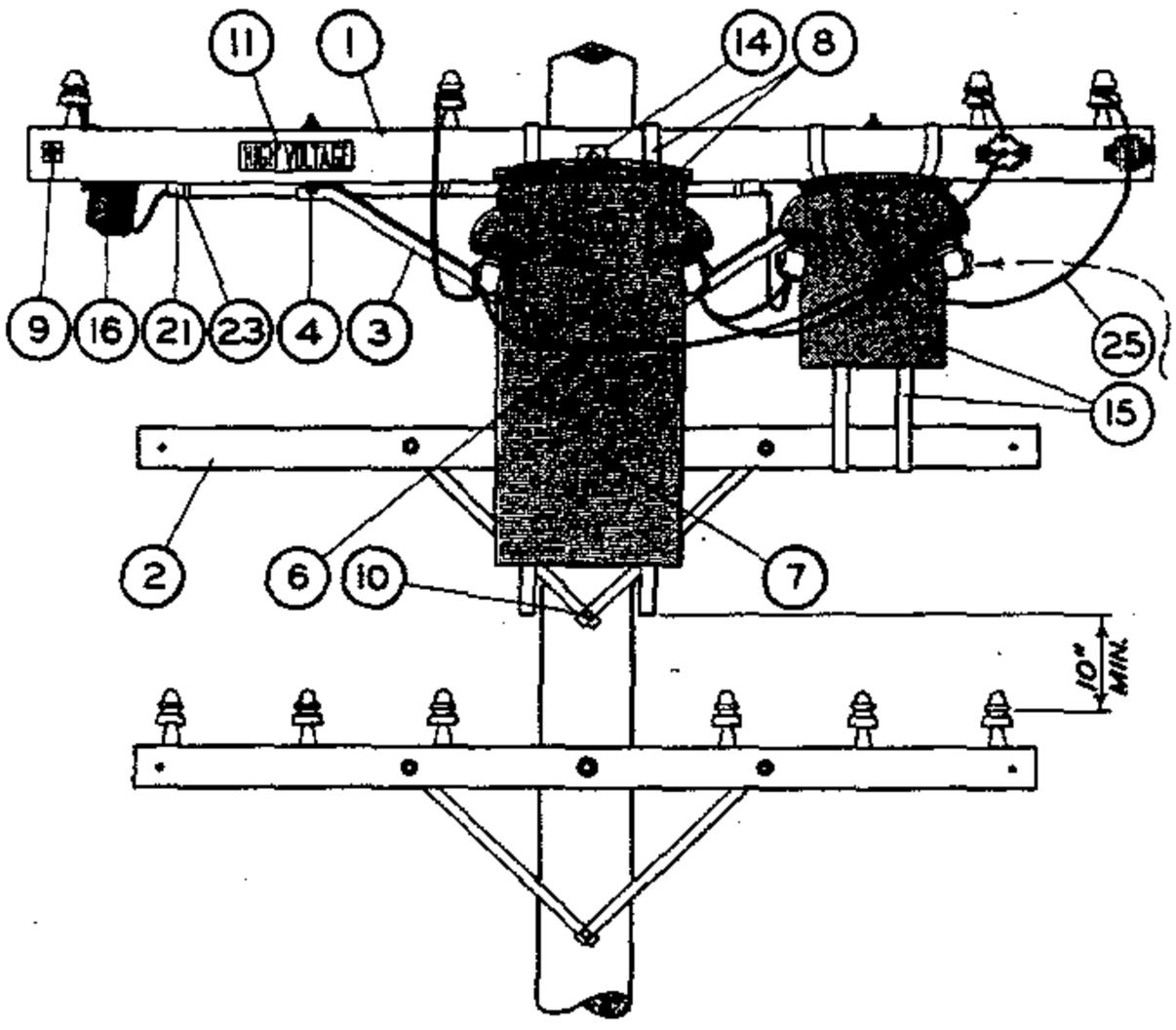

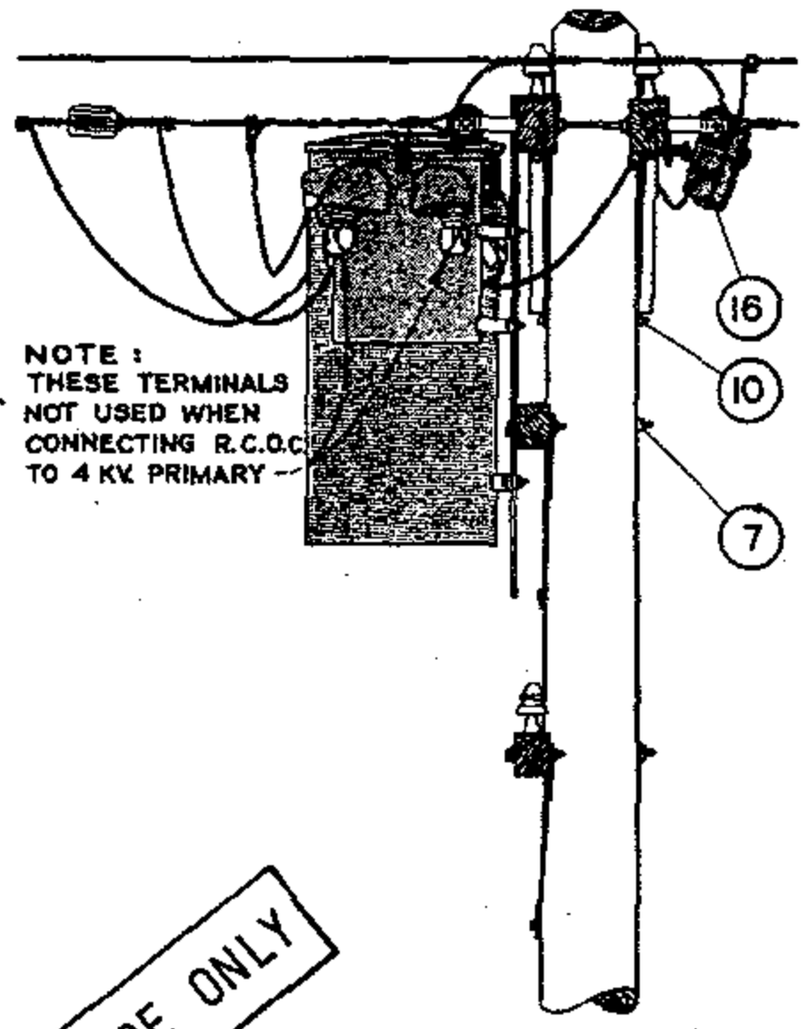

THIS PAGE FOR FIELD MAINTENANCE OFFICE ONLY

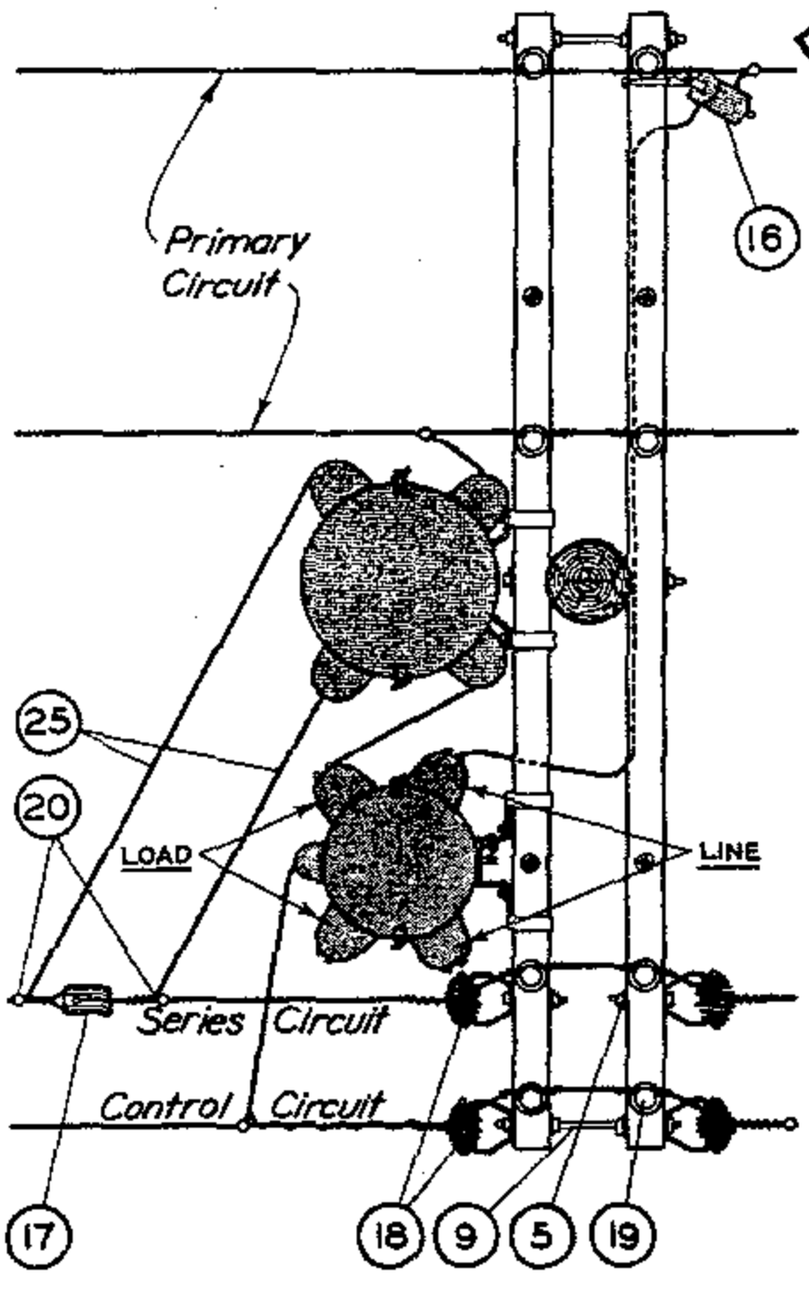

ITEM	DESCRIPTION	QUANTITY	CONSTR STDS STOCK NO OR
1	3-3/4"x 5-3/4"x 10'-0" Crossarm - 8 pin	2	PG 111 IT. 3
2	3-1/2"x 4-1/2"x 8'-0" Kick Arm	1	PG 111 IT. 2
3	Angle Crossarm Brace - 4' or 5'	2	164032 OR 164128
4	Mach. Bolt, Galv. 1/2"x 7" - 1 rd. washer & 1 nut	4	PGS 139, 140
5	Mach. Bolt, Galv. 5/8"x 5" - 1 rd. washer & 1 nut	2	PGS 139, 140
6	Mach. Bolt, Galv. 5/8"x 10" - 1 nut	1	PGS 139, 140
7	Mach. Bolt, Galv. 5/8"x 14" - 2 sq. washers & 1 nut	1	PGS 139, 140
8	Mach. Bolt, Galv. 5/8"x 18" - 2-3"x 4" washers & 1 nut	1	PGS 139, 140
9	Space Bolt, Galv. 5/8"x 18" - 4 washers & 4 nuts	2	PGS 139, 140
10	Lag Screw, Galv. 1/2"x 4"	1	621568
11	High Voltage Sign & Nails #8, Roofing	1	647648, 492224
12	Pole Step	16	692992
13			
14	R.O. Transformer & Hangers	1	PGS 1121.00-1121.12
15	R.C.O.C. Switch	1	274560
16	G.E. Expulsion Fuse Cutout	1	PG 1211
17	Insulator, Strain #506	1	430880
18	Insulator, 4 Kv. D.E.	4	235520
19	Insulator, D.G.D.P.	4	428960
20	#6 Wire Connector Split Bolt	6	269056
21	PVC Conduit, 1" diam.	5'	251200
23	1-1/4" Pipe Strap with 2 - 8d Nails	3	697696, 491552
25	#6 R.C. Strand. Copper Wire - 5 Kv.	42'	814112

SDG&E ELECTRIC STANDARDS

SERIES CONTROLLED R.O. STREET LIGHT TRANSFORMER AND R.C.O.C. SWITCH, LINE ARM POSITION, 4KV

DATE 4-30-82
APPD LRH

1599.501
SUPERSEDES
1556 (4-30-82)

TABLE OF CONTENTS

FIELD MAINTENANCE ONLY

REVISION HISTORY:

7/13/2016: All versions prior to 2016 are superseded by their current version found inside the Overhead Construction Standard Manual.

TABLE OF CONTENTS

© 1998 - 2016 San Diego Gas & Electric Company. All rights reserved. Removal of this copyright notice without permission is not permitted under law.

REV	CHANGE	BY	DSGN	APPV	DATE	REV	CHANGE	BY	DSGN	APPV	DATE
C						F					
B						E					
A	ORIGINAL ISSUE	JS	IL	MDJ	7/13/2016	D					

X Indicates Latest Revision | Completely Revised | New Page | Information Removed

SHEET
1 OF 1

SDG&E ELECTRIC OVERHEAD STANDARD

P.E. CONTROLLED
R.D. STREET LIGHT TRANSFORMER INSTALLATION, 12KV

FMO
OH 1562

SCOPE : THIS STANDARD SHOWS A CONSTANT CURRENT SERIES LIGHTING R.D. TRANSFORMER INSTALLATION. IT IS TO BE USED ON EXISTING INSTALLATIONS.

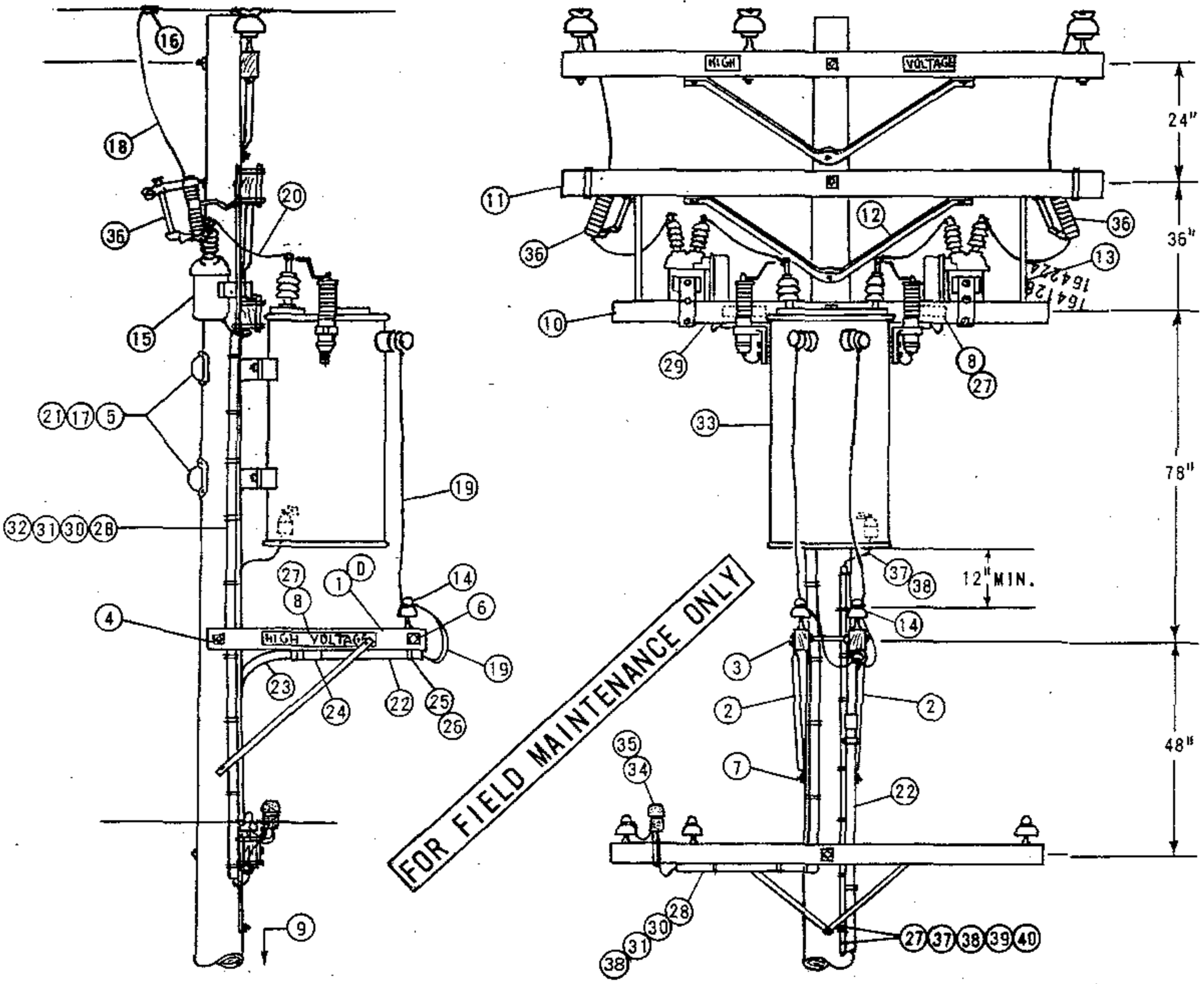

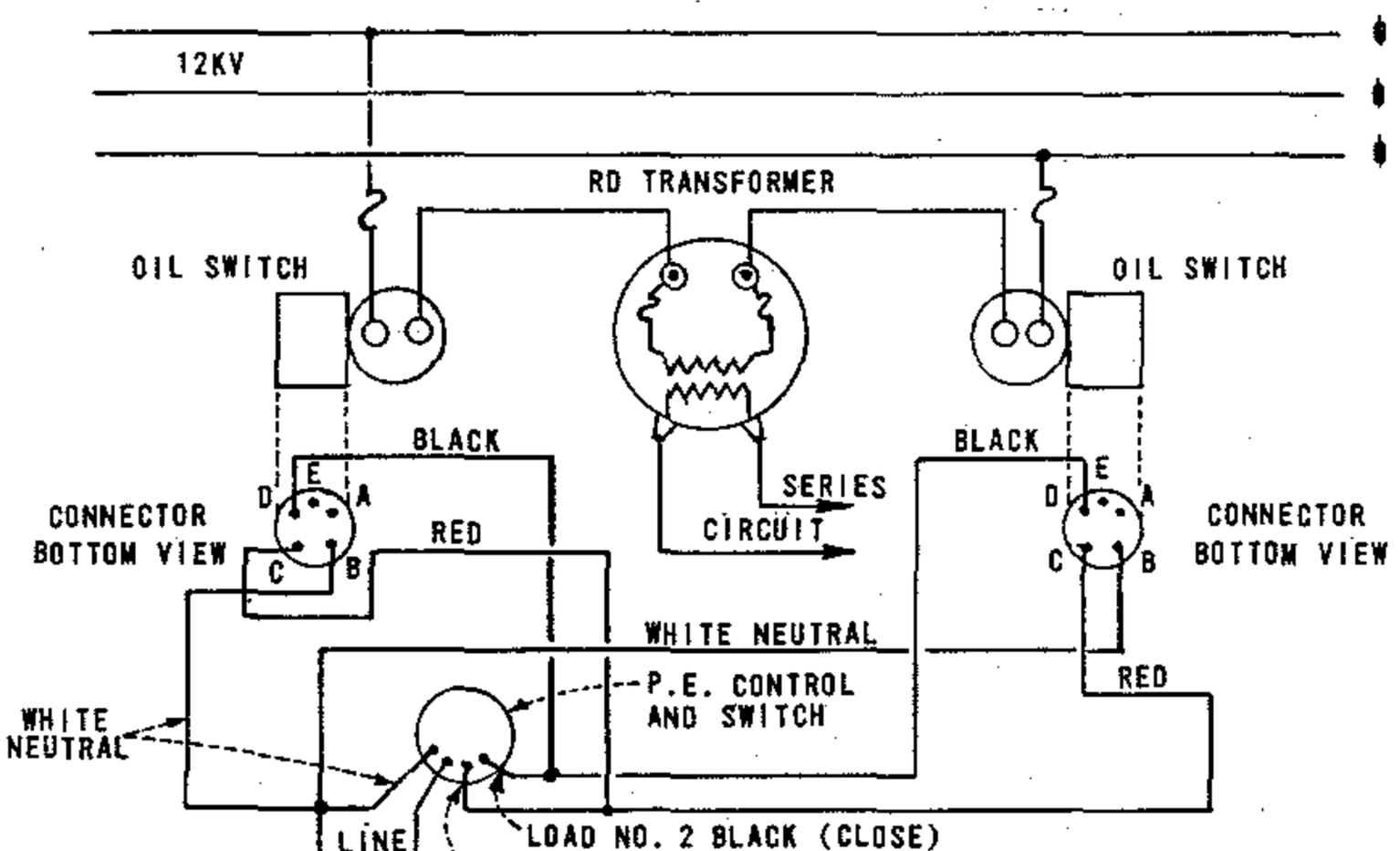

WIRING DIAGRAM

1599.601 SUPERSEDES 1562.1 (4-30-82)	SDG&E ELECTRIC STANDARDS P.E. CONTROLLED R.D. STREET LIGHT TRANSFORMER INSTALLATION, 12KV	DATE 4-30-82 APPD

BILL OF MATERIAL :

ITEM PTF	ITEM SL&SS	DESCRIPTION		QUANTITY	STOCK NO. OR CONSTR. STDS.
1		CROSSARM, 3 1/2" X 4 1/2" X 4'-0"	(D)	1	STD 380.05 IT. 3
2		BRACE, ALLEY ARM, 4'-0"		2	163808
3		BOLT, MACH. GALV., 5/8" X 5", 1 RD. WASHER & 1 NUT	(E)	1	STD 139, 140
4		BOLT, MACH. GALV., 5/8" X 18", 2 SQ. WASHERS & 1 NUT	(E)	1	STD 139, 140
5		BOLT, MACH. GALV., 3/4" X 12", 1 SQ. CURVED WASHER & 1 NUT		2	STD 139, 140
6		BOLT, SPACE, GALV., 5/8" X 20", 4 SQ. WASHERS & 4 NUTS	(E)	1	STD 139, 140
7		SCREW, LAG, GALV., 5/8" X 5"	(E)	1	621600
8		SIGN, HIGH VOLTAGE & NAILS, GALV ROOFING	(E)	3	647648,
9		STEPS, POLE	(E)	15	692992
10		CROSSARM, 3 3/4" X 5 3/4" X 8'		1	STD 380.01
11		CROSSARM, 3 3/4" X 5 3/4" X 10'		1	STD 380.1
12		BRACE, 5'-0"		1	
13		BRACE, STRUT, 36"		2	
	14	INSULATOR, 4KV	(E)	2	700 SECTION
	15	SWITCH, OIL, NR, 15KV, 200 AMP		2	705568
	16	CONNECTORS, COMPRESSION	(E)	2	700 SECTION
	17	NAILS, GALV. 10d	(E)	6	491392
	18	WIRE, COPPER #6/3 STRAND		10'	813536
	19	CABLE, 1/C #6, 5KV XLP		60'	194304
	20	WIRE, COPPER, #4 SOLID W.P.		10'	812480
	21	COVER, PVC THRU BOLT	(E)	2	285696
	22	PIPE, PLASTIC 1 1/2" DIAM., PVC TYPE II, SCHEDULE 80, 20' LENGTHS	(E)	1	251456
	23	PIPE, 1 1/2" DIAM. PLASTIC, 90° ELBOW, PVC TYPE II, SCHEDULE 80		1	322464
	24	COUPLING, 1 1/2" DIAM. PLASTIC PIPE, PVC	(E)	3	280512
	25	STRAP, PIPE 1 1/2" DIAM., GALV.	(E)	AS REQ'D.	697664
	26	NAILS, 10d GALV.	(E)	AS REQ'D.	491392
	27	CLAMP, GROUND ROD	(E)	2	230016
	28	CONDUIT, PVC, TYPE II, SCHEDULE 80, 1"	(E)	25'	251424
	29	PLUG, DISCONNECT CONDUCTOR, 5 TERMINAL	(F)	2	544838
	30	WIRE, COPPER, #12 TW, STRANDED WP, WHITE	(F)	25'	810016
	31	WIRE, COPPER, #12 TW, STRANDED WP, RED	(F)	25'	809920
	32	WIRE, COPPER, #12 TW, STRANDED WP, BLACK	(F)	25'	809504
	33	TRANSFORMER, R.D., 12KV, 25KVA		1	763426
	34	MOUNTING BRACKET		1	166432
	35	PHOTO ELECTRIC RELAY, 120 V., 1000 W MIN.		1	273920
	36	CUTOUT, 12KV 100A		2	297888
	37	WIRE, COPPER #6 B. STRD.		50'	813644
	38	UNIT, GROUND (LTN'G ARR.) PLAIN/GREY		1	603136, 603120
	39	STAPLE, FENCE 1 1/4"	(E)	AS REQ'D	678520
	40	STAPLE, MOULDING 3" x 1 1/16" x 1/4"	(E)	AS REQ'D	678560

FOR FIELD MAINTENANCE ONLY

TABLE OF CONTENTS

INSTALLATION :

A. CLASS OF POLES SHOULD BE DETERMINED PER STDS 344-361.

B. APERTURE OF PHOTOELECTRIC CELL MUST BE SET TO FACE NORTH.

C. 12KV/6.6A CONSTANT CURRENT TRANSFORMER HAS INTERNAL FUSES.

(D) WHEN THERE IS NO SECONDARY ON A POLE, A 6 PIN COMBINATION ARM FOR THE TWO WIRE SERIES AND THE SECONDARY MAY BE USED. THE 4' ALLEY ARMS WILL NOT BE NEEDED. IDENTIFY THE SECONDARY WITH 0-750 VOLT SIGNS.

(E) EXEMPT MATERIAL.

(F) 5 TERMINAL PLUGS AND WIRE TO BE FABRICATED BY KEARNY MAINTENANCE.

G.

H.

REFERENCE :

I. G.O. 95 RULE 58.2 REQUIRES PRIMARY CONSTANT CURRENT SERIES LIGHTING CIRCUITS BE TREATED AS MORE THAN 750 VOLTS.

J. S D G & E RULE DOES NOT ALLOW FOR CONSTANT CURRENT SERIES LIGHTING CIRCUITS OVER 750 VOLTS TO BE PLACED ON THE SAME ARM WITH 12KV.

	S D G & E ELECTRIC STANDARDS	
DATE 4-30-82 APPD	P.E. CONTROLLED R.D. STREET LIGHT TRANSFORMER INSTALLATION, 12KV	1599.602 SUPERSEDES 1562.2 (4-30-82)

PAGE	SUBJECT
1650	CROSSARM CONSTRUCTION - 3 & 4 WIRE TANGENT AVIAN SAFE CONSTRUCTION
1651	CROSSARM CONSTRUCTION - 3 WIRE DEADEND AVIAN SAFE CONSTRUCTION
1652	CROSSARM CONSTRUCTION - 4 WIRE DEADEND AVIAN SAFE CONSTRUCTION
1653	CROSSARM CONSTRUCTION - 3 WIRE LINE & BUCK AVIAN SAFE CONSTRUCTION
1660	POLE TOP NEST PLATFORM

MAIN TABLE OF CONTENTS

© 1998 - 2023 San Diego Gas & Electric Company. All rights reserved. Removal of this copyright notice without permission is not permitted under law.

REV	CHANGE	DR	BY	DSN	APV	DATE	REV	CHANGE	DR	BY	DSN	APV	DATE
C							F						
B	AVIAN SECTION FMO	ARC	RSL	JAS	KRG	04/07/2023	E						
A	OH1660 MOVED TO FMO	EDM	RSL	JAS	KRG	09/30/2022	D						

X Indicates Latest Revision | Completely Revised | New Page | Information Removed

SHEET 1 OF 1

SDG&E ELECTRIC OVERHEAD FIELD MAINTENANCE ONLY STANDARDS

WILDLIFE PROTECTION
TABLE OF CONTENTS

FMO
OH1601.1

OH1650 FIELD MAINTENANCE ONLY

ALL VERSIONS LISTED IN FMO ARE SUPERSEDED BY THEIR CURRENT VERSION FOUND INSIDE THE OVERHEAD CONSTRUCTION STANDARD MANUAL.

REVISION HISTORY:

04/07/2023: MOVED TO FMO

TABLE OF CONTENTS

© 1998 - 2023 San Diego Gas & Electric Company. All rights reserved. Removal of this copyright notice without permission is not permitted under law.

REV	CHANGE	DR	BY	DSN	APV	DATE	REV	CHANGE	DR	BY	DSN	APV	DATE
C							F						
B							E						
A	ORIGINAL ISSUE	ARC	RSL	JAS	KRG	04/07/2023	D						

	Indicates Latest Revision		Completely Revised	X	New Page
	Information Removed				

SHEET 1 OF 1

SDG&E ELECTRIC OVERHEAD FIELD MAINTENANCE ONLY STANDARDS

CROSSARM CONSTRUCTION - 3 & 4 - WIRE TANGENT
AVIAN SAFE CONSTRUCTION

FMO
OH1650

SCOPE: THIS STANDARD ILLUSTRATES PHASE CONDUCTOR POSITIONS FOR NEW SINGLE CIRCUIT, TANGENT, THREE AND FOUR WIRE CONSTRUCTION IN AN AVIAN PROTECTION AREA.

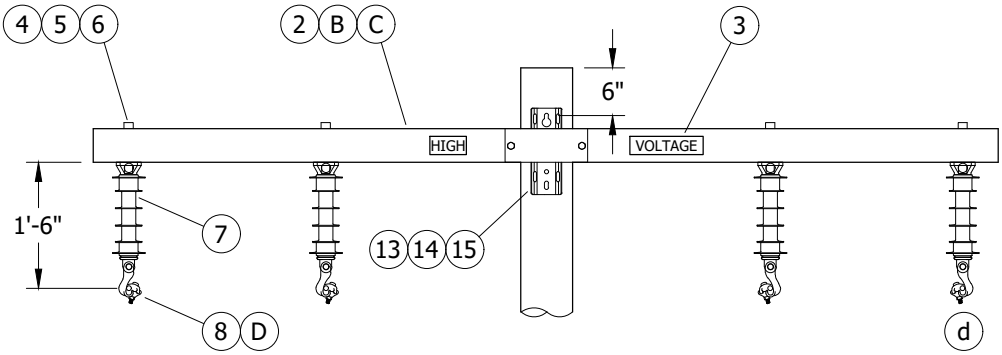

FIGURE 1

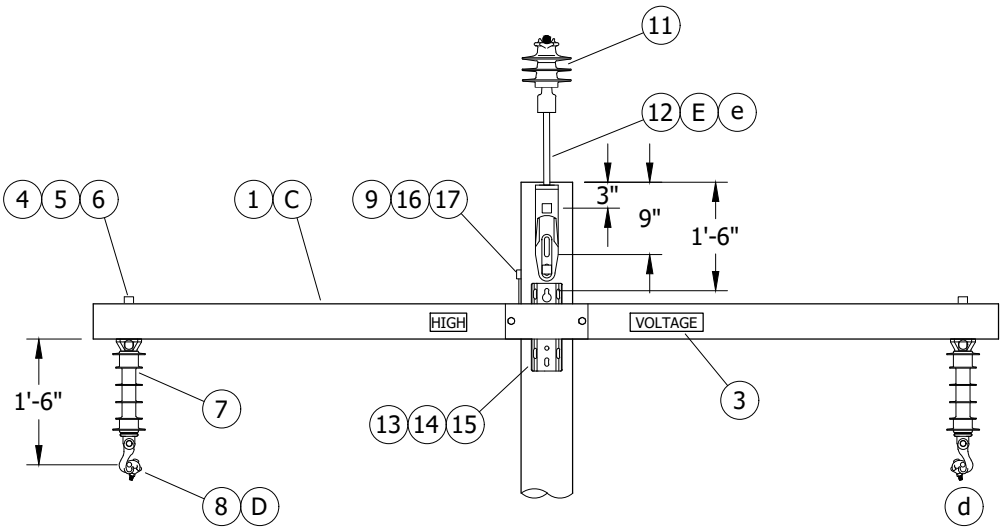

FIGURE 2

FIELD MAINTENANCE ONLY

TABLE OF CONTENTS

© 1998 - 2023 San Diego Gas & Electric Company. All rights reserved. Removal of this copyright notice without permission is not permitted under law.

REV	CHANGE	DR	BY	DSN	APV	DATE	REV	CHANGE	DR	BY	DSN	APV	DATE
C	BILL OF MATERIALS UPDATE	EDM	GLW	JES	CZH	01/14/2020	F						
B	DRAWING UPDATE	PEI	-	-	-	01/15/2019	E	MOVED TO FMO	ARC	RSL	JAS	KRG	04/07/2023
A	ORIGINAL ISSUE	-	JC	IL	JS	01/05/2015	D	NOTES UPDATE	EDM	MRF	GLW	CZH	10/01/2021

X Indicates Latest Revision | Completely Revised | New Page | Information Removed

SDG&E ELECTRIC OVERHEAD FIELD MAINTENANCE ONLY STANDARDS

CROSSARM CONSTRUCTION - 3 & 4 - WIRE TANGENT
AVIAN SAFE CONSTRUCTION

FMO
OH1650.1

INSTALLATION:

A. THE REQUIRED MINIMUM DISTANCE OF UNCOVERED CONDUCTOR PHASE-TO-PHASE, PHASE-TO-GROUND OR PHASE-TO-NEUTRAL IS SIXTY INCHES. IF THE RIDGE PIN IS INSTALLED INLINE, THE CENTER PHASE DOES NOT NEED TO BE COVERED.

(B) TWELVE-FOOT TANGENT FIBERGLASS CROSSARM IS THE MINIMUM SIZE REQUIRED FOR THIS TYPE OF CONSTRUCTION.

(C) ENSURE THE FOLLOWING CALCULATION IS NOT VIOLATED WHEN COMPARING APPLIED LOADS TO ALLOWABLE LOADS SO THAT AN OVERALL SAFETY FACTOR OF TWO IS MAINTAINED:

$$\frac{\text{(APPLIED VERTICAL LOAD)}}{\text{(ALLOWABLE VERTICAL LOAD)}} + \frac{\text{(APPLIED HORIZONTAL LOAD)}}{\text{(ALLOWABLE HORIZONTAL LOAD)}} + \frac{\text{(APPLIED TRANSVERSE LOAD)}}{\text{(ALLOWABLE TRANSVERSE LOAD)}} \leq 1$$

(D) USE LINE GUARD OVER ALUMINUM CONDUCTORS AT PIN AND ALL SUSPENSION SUPPORTS.

(E) ALLOWABLE TO INSTALL RIDGE PIN ON ANY SIDE OF POLE. INSTALL SPLIT BOLT IF INSTALLATION IS ON WOOD POLE.

BILL OF MATERIALS:

ITEM	DESCRIPTION	QUANTITY	STANDARD PAGE	STOCK NUMBER	DESIGN UNITS
1	CROSSARM, FIBERGLASS, LENGTH & SIZE AS REQ'D (C)	AS REQ'D	379	-	-
2	CROSSARM, FIBERGLASS, 12FT, TANGENT MINIMUM (C)	1	379	S294374	6FT
3	SIGN, ADHESIVE STICKER, HIGH VOLTAGE FOR GALV. STEEL & FIBERGLASS	2	208.4	S647650	HV/D
4	STUD, POST INSULATOR, 7 1/2"	2	751	S701760	STUD-W
5	WASHER, FLAT, SQUARE, 5/8"	AS REQ'D	392.2	S799040	5/8SQ
6	SPRING LOCK, WASHER, 5/8"	AS REQ'D	392.2	S796866 (X)	-
7	INSULATOR, UNDERARM	AS REQ'D	750.1	S431298	UA-INS
8	SUSPENSION CLAMP	AS REQ'D	775	-	-
9	WASHER, SPRING LOCK, 5/8"	AS REQ'D	390	S796866 (X)	-
10	LINE GUARD	AS REQ'D	759	-	-
11	INSULATOR, 1" THREAD, PIN TYPE	1	750.2	S429050	56-1NP
12	RIDGE PIN, 1" THREAD, FIBERLGASS PIN, 18" FIBERGLASS	1	396	S529220	PTP18
13	BOLT, MACHINE, GALV. W/NUT, 3/4" X (LENGTH AS REQ'D)	AS REQ'D	392.1	-	-
14	WASHER, CURVED, SQUARE, 3/4"	AS REQ'D	392.2	S797760	RIBWSH
15	SPRING LOCK, WASHER	AS REQ'D	750.2	S796802 (X)	LK-WSH
16	BOLT, MACHINE, GALV. W/NUT, 5/8" X (LENGTH AS REQ'D)	AS REQ'D	390	-	-
17	WASHER, CURVED, SQUARE, 5/8"	AS REQ'D	390	S797792	-

NOTES:

(X) THIS ITEM IS EXEMPT.

REFERENCE:

a. SEE OH1003 FOR BONDING FOR CONTAMINATION DISTRICT 1 ONLY.

b. SEE OH379 FIBERGLASS CROSSARM ALLOWABLE LOADING.

c. SEE OH718 FOR COVERED COPPER EQUIPMENT AND LINE WIRE JUMPERS.

(d) SEE OH220-OH224 FOR G.O. 95 CLEARANCES.

(e) SEE OH396 FOR MAXIMUM ALLOWABLE LOAD ON AN 18-INCH FIBERGLASS RIDGE PIN.

FIELD MAINTENANCE ONLY

TABLE OF CONTENTS

© 1998 - 2023 San Diego Gas & Electric Company. All rights reserved. Removal of this copyright notice without permission is not permitted under law.

REV	CHANGE	DR	BY	DSN	APV	DATE	REV	CHANGE	DR	BY	DSN	APV	DATE
C	BILL OF MATERIALS UPDATE	EDM	GLW	JES	CZH	01/14/2020	F						
B	DRAWING UPDATE	PEI	-	-	-	01/15/2019	E	MOVED TO FMO	ARC	RSL	JAS	KRG	04/07/2023
A	ORIGINAL ISSUE	-	JC	IL	JS	01/05/2015	D	NOTES UPDATE	EDM	MRF	GLW	CZH	10/01/2021

OH1651 FIELD MAINTENANCE ONLY

ALL VERSIONS LISTED IN FMO ARE SUPERSEDED BY THEIR CURRENT VERSION FOUND INSIDE THE OVERHEAD CONSTRUCTION STANDARD MANUAL.

REVISION HISTORY:

04/07/2023: MOVED TO FMO

TABLE OF CONTENTS

© 1998 - 2023 San Diego Gas & Electric Company. All rights reserved. Removal of this copyright notice without permission is not permitted under law.

REV	CHANGE	DR	BY	DSN	APV	DATE	REV	CHANGE	DR	BY	DSN	APV	DATE
C							F						
B							E						
A	ORIGINAL ISSUE	ARC	RSL	JAS	KRG	04/07/2023	D						

	Indicates Latest Revision		Completely Revised	X New Page		Information Removed

SDG&E ELECTRIC OVERHEAD FIELD MAINTENANCE ONLY STANDARDS

SHEET 1 OF 1

CROSSARM CONSTRUCTION - 3 WIRE
DEADEND AVIAN SAFE CONSTRUCTION

FMO
OH1651

SCOPE: THIS STANDARD ILLUSTRATES PHASE CONDUCTOR POSITIONS FOR NEW SINGLE CIRCUIT, DEADEND, THREE WIRE CONSTRUCTION IN AN AVIAN PROTECTION AREA.

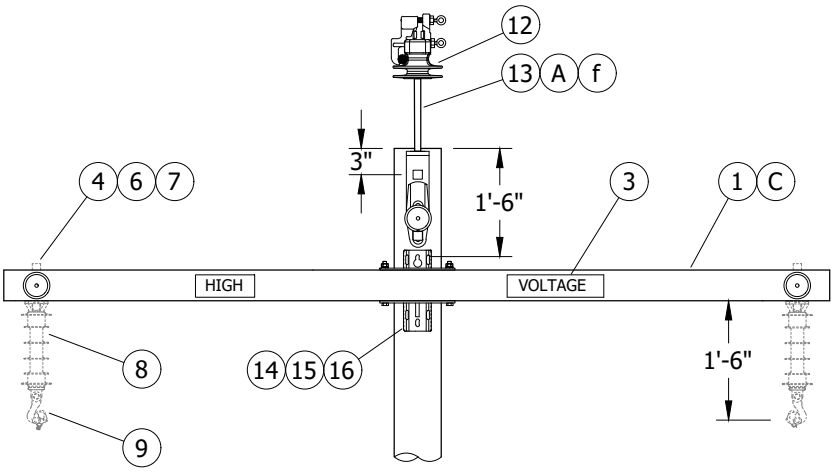

FIGURE 1
FRONT VIEW

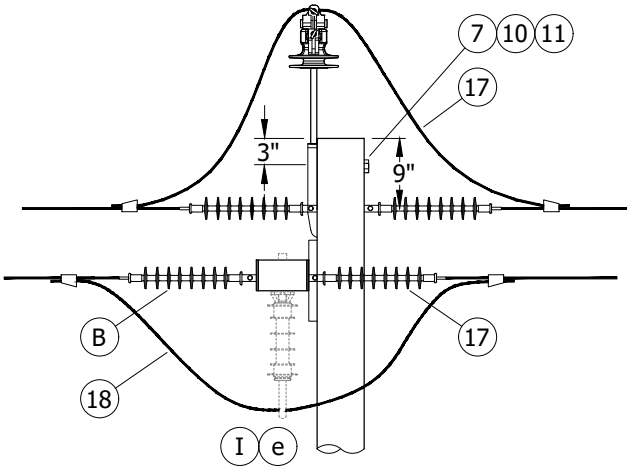

FIGURE 1
SIDE VIEW

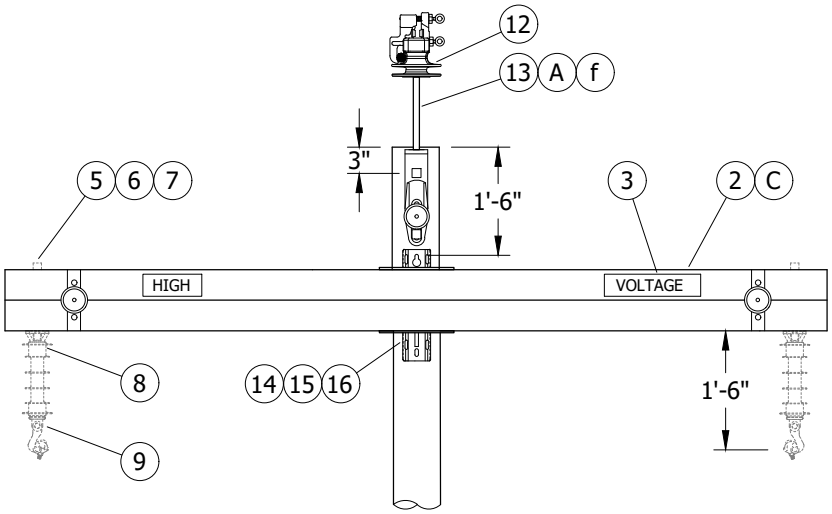

FIGURE 2
FRONT VIEW

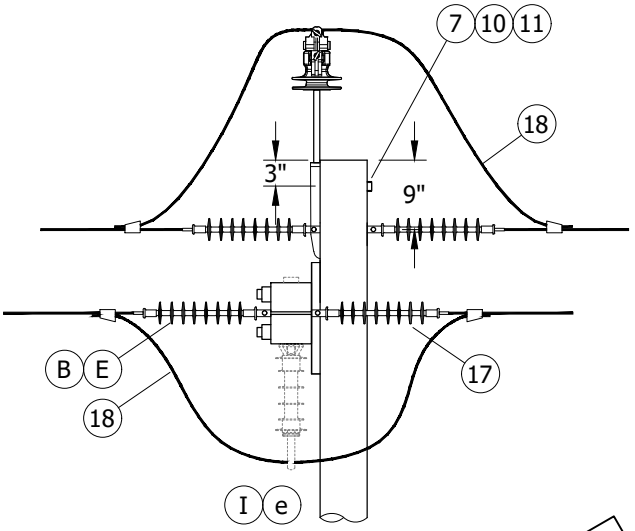

FIGURE 2
SIDE VIEW

FIELD MAINTENANCE ONLY

TABLE OF CONTENTS

© 1998 - 2023 San Diego Gas & Electric Company. All rights reserved. Removal of this copyright notice without permission is not permitted under law.

REV	CHANGE	DR	BY	DSN	APV	DATE	REV	CHANGE	DR	BY	DSN	APV	DATE
C	BILL OF MATERIAL UPDATE	EDM	GLW	JES	CZH	01/14/2020	F	MOVED TO FMO	ARC	RSL	JAS	KRG	04/07/2023
B	DRAWING UPDATE	PEI	-	-	-	01/15/2019	E	NOTES UPDATE	EDM	MRF	GLW	CZH	10/01/2021
A	ORIGINAL ISSUE	-	JC	IL	JS	01/05/2015	D	EDITORIAL CHANGES	EDM	GLW	JES	CZH	07/13/2020

X Indicates Latest Revision	Completely Revised	New Page	Information Removed	

SDG&E ELECTRIC OVERHEAD FIELD MAINTENANCE ONLY STANDARDS

CROSSARM CONSTRUCTION - 3 WIRE
DEADEND AVIAN SAFE CONSTRUCTION

FMO
OH1651.1

INSTALLATION:

(A) ALLOWABLE TO INSTALL RIDGE PIN ON ANY SIDE OF POLE.

(B) SHORTER DEADEND INSULATORS CAN BE USED ON OUTSIDE PHASE POSITION ON ARM SIDE.

(C) ENSURE THE FOLLOWING CALCULATION IS NOT VIOLATED WHEN COMPARING APPLIED LOADS TO ALLOWABLE LOADS SO THAT AN OVERALL SAFETY FACTOR OF TWO IS MAINTAINED:

$$\frac{\text{(APPLIED VERTICAL LOAD)}}{\text{(ALLOWABLE VERTICAL LOAD)}} + \frac{\text{(APPLIED HORIZONTAL LOAD)}}{\text{(ALLOWABLE HORIZONTAL LOAD)}} + \frac{\text{(APPLIED TRANSVERSE LOAD)}}{\text{(ALLOWABLE TRANSVERSE LOAD)}} \leq 1$$

(D) SIZE AS REQUIRED WITH MINIMUM SIZE EQUAL TO LINE CONDUCTOR AMPACITY OR GREATER.

(E) SHACKLES TO BE USED WITH FIBERGLASS, STACKED, DEADEND CROSSARMS IN TRANSVERSE (SIDE STRAIN) APPLICATIONS.

F. THE REQUIRED MINIMUM DISTANCE OF UNCOVERED CONDUCTOR PHASE-TO-PHASE, PHASE-TO-GROUND OR PHASE-TO-NEUTRAL IS SIXTY INCHES. IF THE RIDGE PIN IS INSTALLED INLINE, THE CENTER PHASE DOES NOT NEED TO BE COVERED.

BILL OF MATERIALS:

ITEM	DESCRIPTION	QUANTITY	STANDARD PAGE	STOCK NUMBER	DESIGN UNITS
1	CROSSARM, FIBERGLASS, DEADEND (C)	AS REQ'D	379	-	-
2	STACKED, DEADEND, FIBERGLASS CROSSARM (C)	AS REQ'D	379	-	-
3	SIGN, ADHESIVE STICKER, HIGH VOLTAGE FOR GALV. STEEL & FIBERGLASS	2	208	S647650	HV/D
4	STUD, POST INSULATOR, 7 1/2"	AS REQ'D	751	S701760	STUD-W
5	STUD, POST INSULATOR, 10"	AS REQ'D	396	S701762	STUD-L
6	WASHER, FLAT, SQUARE, 5/8"	AS REQ'D	390	S799040	5/8SQ
7	WASHER, SPRING LOCK, 5/8"	AS REQ'D	390	S796866 (X)	-
8	INSULATOR, UNDERARM	AS REQ'D	750	S431298	UA-INS
9	SUSPENSION CLAMP	AS REQ'D	775	-	-
10	WASHER, CURVED, SQUARE, 5/8"	AS REQ'D	390	S797792	-
11	BOLT, MACHINE, GALV., W/NUT, 5/8" X (LENGTH REQ'D)	AS REQ'D	390	-	-
12	INSULATOR, 1" THREAD, PIN TYPE	1	750	-	-
13	POLE TOP PIN, 1" COB, FIBERGLASS PIN, 30" OVERALL LENGTH	1	396	S529220	PTP18
14	BOLT, MACHINE, GALV., W/ NUT 3/4" X (LENGTH AS REQ'D)	AS REQ'D	392	-	-
15	WASHER, CURVED, SQUARE, 3/4"	AS REQ'D	392	S797760	RIBWSH
16	SPRING LOCK, WASHER, 3/4"	AS REQ'D	392	S796802 (X)	LK-WSH
17	INSULATOR, DEADEND, POLYMER, 35KV	AS REQ'D	750	S428958	LONGDE
18	WIRE, POLY COVERED, COPPER (D)	AS REQ'D	711	-	-
19	STRAIN CLAMPS (d)	AS REQ'D	739	-	-
20	SHACKLE, 5/8" PIN	AS REQ'D	739	S636432 (X)	30KSHK

NOTES:

(I) VERTICAL POST INSULATOR REQUIRED IF JUMPER WIRE VERTICAL DISTANCE BELOW CENTER OF CROSSARM IS GREATER THAN EIGHTEEN INCHES. THIS APPLIES TO ALL CROSSARMS.

(X) THIS ITEM IS EXEMPT.

FIELD MAINTENANCE ONLY

TABLE OF CONTENTS

© 1998 - 2023 San Diego Gas & Electric Company. All rights reserved. Removal of this copyright notice without permission is not permitted under law.

REV	CHANGE	DR	BY	DSN	APV	DATE	REV	CHANGE	DR	BY	DSN	APV	DATE
C	BILL OF MATERIAL UPDATE	EDM	GLW	JES	CZH	01/14/2020	F	MOVED TO FMO	ARC	RSL	JAS	KRG	04/07/2023
B	DRAWING UPDATE	PEI	-	-	-	01/15/2019	E	NOTES UPDATE	EDM	MRF	GLW	CZH	10/01/2021
A	ORIGINAL ISSUE	-	JC	IL	JS	01/05/2015	D	EDITORIAL CHANGES	EDM	GLW	JES	CZH	07/13/2020

REFERENCE:

a. SEE OH1003 FOR BONDING FOR CONTAMINATION DISTRICT 1 ONLY.
b. SEE OH379 FOR FIBERGLASS CROSSARM ALLOWABLE LOADING.
c. SEE OH718 FOR COVERED COPPER EQUIPMENT AND LINE WIRE JUMPERS.
(d) SEE OH741-OH743 FOR STRAIN CLAMP SIZE AND CONDUCTOR USE.
(e) SEE OH220-OH224 FOR G.O. 95 CLEARANCES.
(f) SEE OH396 FOR MAXIMUM ALLOWABLE LOAD ON AN 18-INCH FIBERGLASS RIDGE PIN.

TABLE OF CONTENTS

FIELD MAINTENANCE ONLY

© 1998 - 2023 San Diego Gas & Electric Company. All rights reserved. Removal of this copyright notice without permission is not permitted under law.

REV	CHANGE	DR	BY	DSN	APV	DATE	REV	CHANGE	DR	BY	DSN	APV	DATE
C	BILL OF MATERIAL UPDATE	EDM	GLW	JES	CZH	01/14/2020	F	MOVED TO FMO	ARC	RSL	JAS	KRG	04/07/2023
B	DRAWING UPDATE	PEI	-	-	-	01/15/2019	E	NOTES UPDATE	EDM	MRF	GLW	CZH	10/01/2021
A	ORIGINAL ISSUE	-	JC	IL	JS	01/05/2015	D	EDITORIAL CHANGES	EDM	GLW	JES	CZH	07/13/2020

X Indicates Latest Revision | Completely Revised | New Page | Information Removed

SDG&E ELECTRIC OVERHEAD FIELD MAINTENANCE ONLY STANDARDS

CROSSARM CONSTRUCTION - 3 WIRE
DEADEND AVIAN SAFE CONSTRUCTION

FMO
OH1651.3

OH1652 FIELD MAINTENANCE ONLY

ALL VERSIONS LISTED IN FMO ARE SUPERSEDED BY THEIR CURRENT VERSION FOUND INSIDE THE OVERHEAD CONSTRUCTION STANDARD MANUAL.

REVISION HISTORY:

04/07/2023: MOVED TO FMO

TABLE OF CONTENTS

© 1998 - 2023 San Diego Gas & Electric Company. All rights reserved. Removal of this copyright notice without permission is not permitted under law.

REV	CHANGE	DR	BY	DSN	APV	DATE	REV	CHANGE	DR	BY	DSN	APV	DATE
C							F						
B							E						
A	ORIGINAL ISSUE	ARC	RSL	JAS	KRG	04/07/2023	D						

Indicates Latest Revision | Completely Revised [X] | New Page | Information Removed

SDG&E ELECTRIC OVERHEAD FIELD MAINTENANCE ONLY STANDARDS

CROSSARM CONSTRUCTION - 4 WIRE
DEADEND AVIAN SAFE CONSTRUCTION

SCOPE: THIS STANDARD ILLUSTRATES PHASE CONDUCTOR POSITIONS FOR NEW SINGLE CIRCUIT, DEADEND, FOUR WIRE CROSSARM CONSTRUCTION IN AN AVIAN PROTECTION AREA.

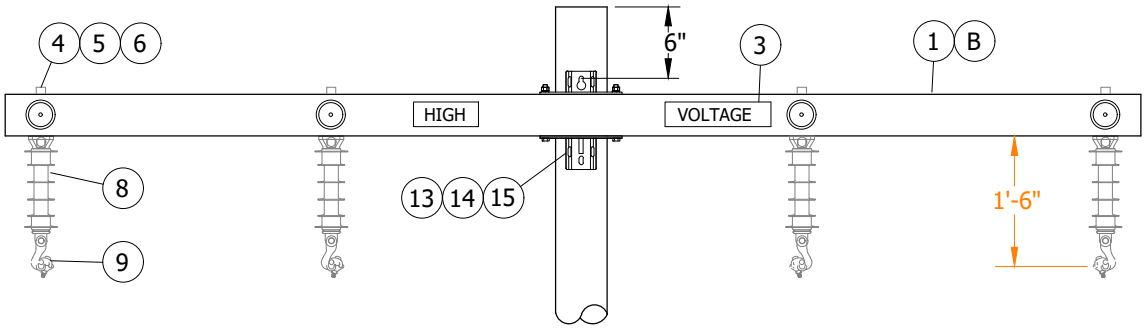

FIGURE 1
FRONT VIEW

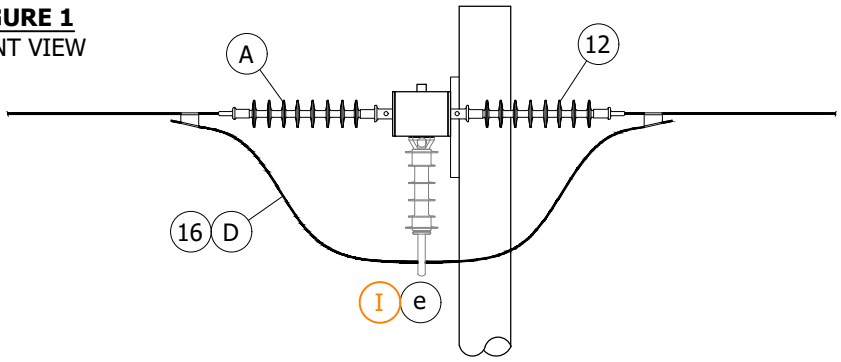

FIGURE 1
SIDE VIEW

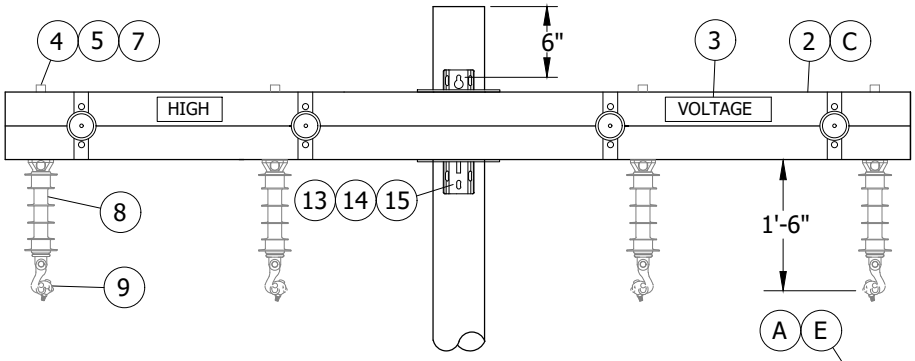

FIGURE 2
FRONT VIEW

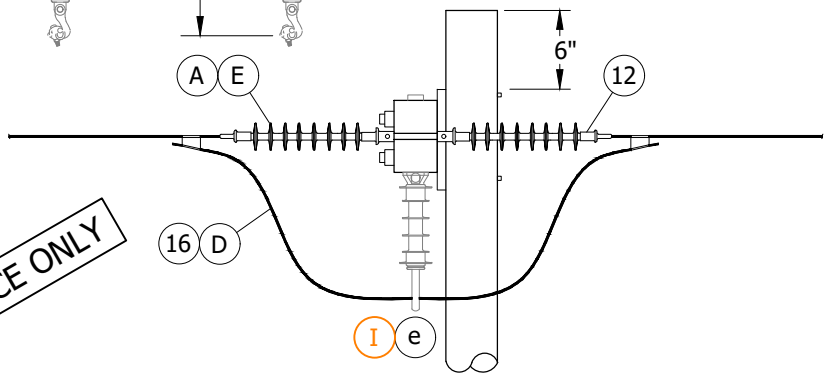

FIGURE 2
SIDE VIEW

FIELD MAINTENANCE ONLY

TABLE OF CONTENTS

© 1998 - 2023 San Diego Gas & Electric Company. All rights reserved. Removal of this copyright notice without permission is not permitted under law.

REV	CHANGE	DR	BY	DSN	APV	DATE	REV	CHANGE	DR	BY	DSN	APV	DATE
C	BILL OF MATERIALS UPDATE	EDM	GLW	JES	CZH	1/14/2020	F						
B	DRAWING UPDATE	PEI	-	-	-	01/15/2019	E						
A	ORIGINAL ISSUE	-	JC	IL	JS	01/05/2015	D	MOVED TO FMO	ARC	RSL	JAS	KRG	04/07/2023

X Indicates Latest Revision | Completely Revised | New Page | Information Removed

SDG&E ELECTRIC OVERHEAD FIELD MAINTENANCE ONLY STANDARDS

CROSSARM CONSTRUCTION - 4 WIRE
DEADEND AVIAN SAFE CONSTRUCTION

FMO
OH1652.1

INSTALLATION:

(A) SHORTER DEADEND INSULATORS CAN BE USED ON OUTSIDE PHASE POSITION ON ARM SIDE.

(B) TWELVE-FOOT TANGENT FIBERGLASS CROSSARM IS THE MINIMUM SIZE REQUIRED FOR THIS TYPE OF CONSTRUCTION.

(C) ENSURE THE FOLLOWING CALCULATION IS NOT VIOLATED WHEN COMPARING APPLIED LOADS TO ALLOWABLE LOADS SO THAT AN OVERALL SAFETY FACTOR OF TWO IS MAINTAINED:

$$\frac{\text{(APPLIED VERTICAL LOAD)}}{\text{(ALLOWABLE VERTICAL LOAD)}} + \frac{\text{(APPLIED HORIZONTAL LOAD)}}{\text{(ALLOWABLE HORIZONTAL LOAD)}} + \frac{\text{(APPLIED TRANSVERSE LOAD)}}{\text{(ALLOWABLE TRANSVERSE LOAD)}} \leq 1$$

(D) SIZE AS REQUIRED WITH MINIMUM SIZE EQUAL TO LINE CONDUCTOR AMPACITY OR GREATER.

(E) SHACKLES TO BE USED WITH FIBERGLASS, STACKED, DEADEND CROSSARMS IN TRANSVERSE (SIDE STRAIN) APPLICATIONS.

F. THE REQUIRED MINIMUM DISTANCE OF UNCOVERED CONDUCTOR PHASE -TO-PHASE, PHASE-TO-GROUND OR PHASE-TO-NEUTRAL IS SIXTY INCHES.

BILL OF MATERIALS:

ITEM	DESCRIPTION	QUANTITY	STANDARD PAGE	STOCK NUMBER	DESIGN UNITS
1	CROSSARM, FIBERGLASS, 12FT, DEADEND MINIMUM (C)	1	379	S294372	6DF
2	SQUARE FLAT WASHER 5/8"	AS REQ'D	392.2	S799040	5/8SQ
3	SIGN, ADHESIVE STICKER, HIGH VOLTAGE FOR GALV. STEEL & FIBERGLASS	2	208.3	S647650	HV/D
4	SQUARE FLAT WASHER 5/8"	AS REQ'D	392.2	S799040	5/8SQ
5	SPRING LOCK, WASHER, 5/8"	AS REQ'D	392.2	S796866 (X)	-
6	STUD, POST INSULATOR, 7 1/2"	AS REQ'D	751	S701760	STUD-W
7	STUD, POST INSULATOR, 10"	AS REQ'D	396.1	S701762	STUD-L
8	INSULATOR, UNDERARM	AS REQ'D	750.1	S431298	UA-INS
9	SUSPENSION CLAMP	AS REQ'D	775	-	-
10	STRAIN CLAMP (d)	AS REQ'D	741-743	-	-
11	SHACKLE, 5/8" PIN	AS REQ'D	744	S636432 (X)	30KSHK
12	INSULATOR, DE, POLYMER, 35kV	AS REQ'D	750.3	S428958	LONGDE
13	CURVED, WASHER, SQUARE 3/4"	AS REQ'D	392.2	S797760	LK-WSH
14	BOLT, MACHINE, GALV. W/NUT, 3/4" X (LENGTHS REQ'D)	AS REQ'D	392.1	-	–
15	SPRING, LOCK, WASHER 3/4"	AS REQ'D	392.1	S796802 (X)	LK-WSH
16	WIRE, POLY COVERED COPPER (D)	AS REQ'D	718	-	-

TABLE OF CONTENTS

FIELD MAINTENANCE ONLY

© 1998 - 2023 San Diego Gas & Electric Company. All rights reserved. Removal of this copyright notice without permission is not permitted under law.

REV	CHANGE	DR	BY	DSN	APV	DATE	REV	CHANGE	DR	BY	DSN	APV	DATE
C	BILL OF MATERIALS UPDATE	EDM	GLW	JES	CZH	1/14/2020	F						
B	DRAWING UPDATE	PEI	-	-	-	01/15/2019	E						
A	ORIGINAL ISSUE	-	JC	IL	JS	01/05/2015	D	MOVED TO FMO	ARC	RSL	JAS	KRG	04/07/2023

X Indicates Latest Revision | Completely Revised | New Page | Information Removed

SDG&E ELECTRIC OVERHEAD FIELD MAINTENANCE ONLY STANDARDS

CROSSARM CONSTRUCTION - 4 WIRE
DEADEND AVIAN SAFE CONSTRUCTION

FMO OH1652.2

NOTES:

(I) VERTICAL POST INSULATOR REQUIRED IF JUMPER WIRE VERTICAL DISTANCE BELOW CENTER OF CROSSARM IS GREATER THAN EIGHTEEN INCHES. THIS APPLIES TO ALL CROSSARMS.

(X) THIS ITEM IS EXEMPT.

REFERENCE:

a. BONDING FOR CONTAMINATION DISTRICT 1 ONLY, SEE STD. 1003.

b. FIBERGLASS CROSSARM ALLOWABLE LOADING, SEE STANDARD 379.

c. COVERED COPPER EQUIPMENT AND LINE WIRE JUMPERS, SEE STANDARD 718.

(d) STRAIN CLAMP SIZE AND CONDUCTOR USE, SEE STANDARD. 741-743.

(e) FOR G.O. 95 CLEARANCES, SEE STANDARD 220-224.

TABLE OF CONTENTS

FIELD MAINTENANCE ONLY

© 1998 - 2023 San Diego Gas & Electric Company. All rights reserved. Removal of this copyright notice without permission is not permitted under law.

REV	CHANGE	DR	BY	DSN	APV	DATE	REV	CHANGE	DR	BY	DSN	APV	DATE
C	BILL OF MATERIALS UPDATE	EDM	GLW	JES	CZH	1/14/2020	F						
B	DRAWING UPDATE	PEI	-	-	-	01/15/2019	E						
A	ORIGINAL ISSUE	-	JC	IL	JS	01/05/2015	D	MOVED TO FMO	ARC	RSL	JAS	KRG	04/07/2023

X Indicates Latest Revision | Completely Revised | New Page | Information Removed

SHEET 3 OF 3

SDG&E ELECTRIC OVERHEAD FIELD MAINTENANCE ONLY STANDARDS

CROSSARM CONSTRUCTION - 4 WIRE
DEADEND AVIAN SAFE CONSTRUCTION

FMO
OH1652.3

OH1653 FIELD MAINTENANCE ONLY

ALL VERSIONS LISTED IN FMO ARE SUPERSEDED BY THEIR CURRENT VERSION FOUND INSIDE THE OVERHEAD CONSTRUCTION STANDARD MANUAL.

REVISION HISTORY:

03/27/2023: MOVED TO FMO

TABLE OF CONTENTS

© 1998 - 2023 San Diego Gas & Electric Company. All rights reserved. Removal of this copyright notice without permission is not permitted under law.

REV	CHANGE	DR	BY	DSN	APV	DATE	REV	CHANGE	DR	BY	DSN	APV	DATE
C							F						
B							E						
A	ORIGINAL ISSUE	ARC	RSL	JAS	KRG	03/27/2023	D						

	Indicates Latest Revision		Completely Revised	X	New Page	Information Removed

SDG&E ELECTRIC OVERHEAD FIELD MAINTENANCE ONLY STANDARDS

CROSSARM CONSTRUCTION - 3 WIRE-LINE & BUCK AVIAN SAFE CONSTRUCTION

SCOPE: THIS STANDARD ILLUSTRATES PHASE CONDUCTOR POSITIONS FOR NEW SINGLE CIRCUIT, DEADEND, FOUR WIRE AND BUCK ARM CONSTRUCTION IN AN AVIAN PROTECTION AREA.

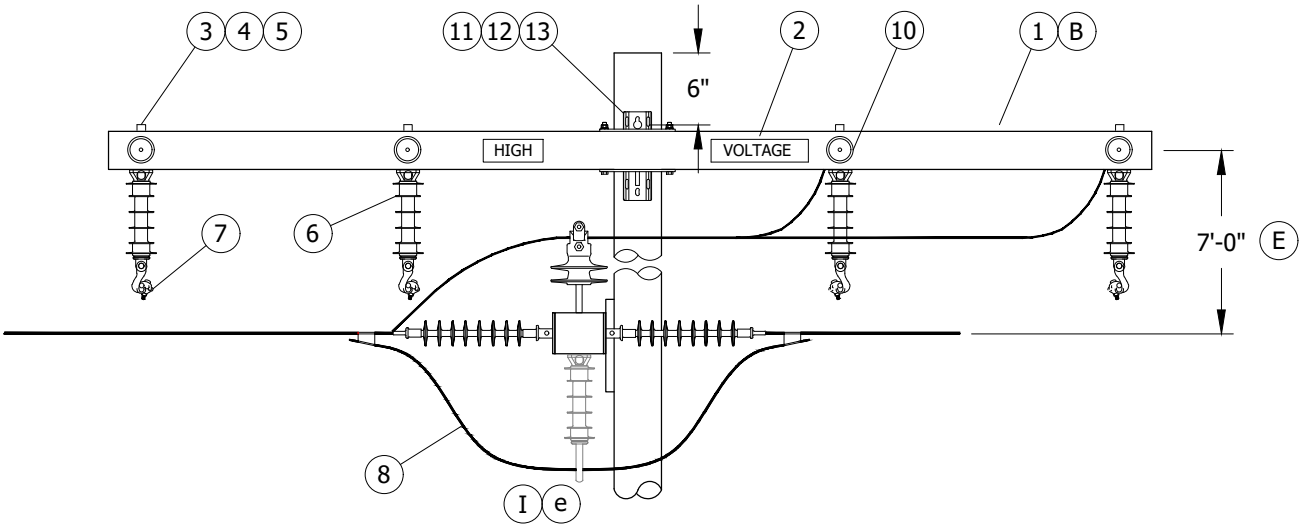

FIGURE 1
FRONT VIEW

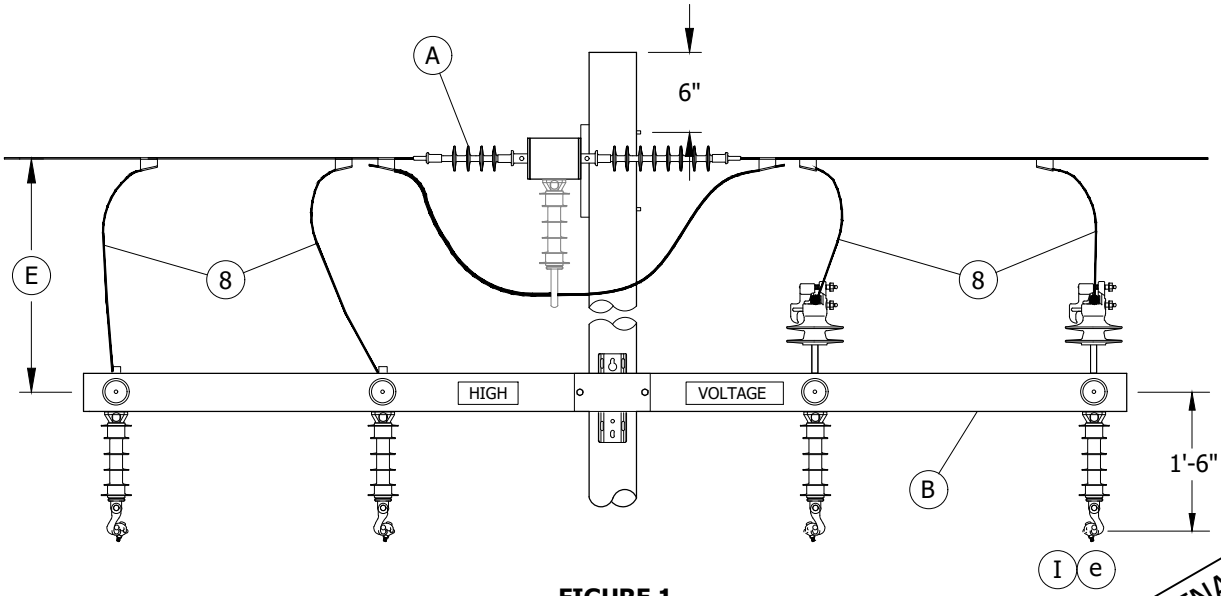

FIGURE 1
SIDE VIEW

FIELD MAINTENANCE ONLY

INSTALLATION:

(A) SHORTER DEADEND INSULATORS CAN BE USED ON OUTSIDE PHASE POSITION ON ARM SIDE.

(B) TWELVE-FOOT DEADEND FIBERGLASS CROSSARM IS THE MINIMUM SIZE REQUIRED FOR THIS TYPE OF CONSTRUCTION.

© 1998 - 2023 San Diego Gas & Electric Company. All rights reserved. Removal of this copyright notice without permission is not permitted under law.

REV	CHANGE	DR	BY	DSN	APV	DATE	REV	CHANGE	DR	BY	DSN	APV	DATE
D	DRAWING UPDATE	PEI	-	-	-	1/15/2019	G	MOVED TO FMO	ARC	RSL	JAS	KRG	3/27/2023
C	EDITORIAL CHANGES	-	JS	JS	MDJ	1/31/2017	F	EDITORIAL CHANGES	EDM	GLW	JES	CZH	7/13/2020
B	NO CHANGES-REAFFIRMED	-	JC	JS	MDJ	12/14/2016	E	FIGURE UPDATE	EDM	GLW	JES	CZH	1/14/2020

X Indicates Latest Revision | Completely Revised | New Page | Information Removed

SDG&E ELECTRIC OVERHEAD FIELD MAINTENANCE ONLY STANDARDS

CROSSARM CONSTRUCTION - 3 WIRE-LINE
& BUCK AVIAN SAFE CONSTRUCTION

FMO
OH1653.1

TABLE OF CONTENTS

INSTALLATION (CONT'D):

(C) ENSURE THE FOLLOWING CALCULATION IS NOT VIOLATED WHEN COMPARING APPLIED LOADS TO ALLOWABLE LOADS SO THAT AN OVERALL SAFETY FACTOR OF TWO IS MAINTAINED:

$$\frac{\text{(APPLIED VERTICAL LOAD)}}{\text{(ALLOWABLE VERTICAL LOAD)}} + \frac{\text{(APPLIED HORIZONTAL LOAD)}}{\text{(ALLOWABLE HORIZONTAL LOAD)}} + \frac{\text{(APPLIED TRANSVERSE LOAD)}}{\text{(ALLOWABLE TRANSVERSE LOAD)}}$$

(D) SIZE AS REQUIRED WITH MINIMUM SIZE EQUAL TO LINE CONDUCTOR AMPACITY OR GREATER.

(E) WHERE A POLE IS BUCKET TRUCK ACCESSIBLE, TO ACCOMMODATE THE USE OF A BUCKET TRUCK AND THE RUBBER GLOVING WORK METHOD, DESIGN AND MAINTAIN SUFFICIENT CLEARANCE FOR THIS PURPOSE IF ECONOMICALLY FEASIBLE. SUFFICIENT CLEARANCE WILL BE SIX FEET BETWEEN TWO PRIMARY LEVELS, PRIMARY AND SECONDARY LEVEL, OR PRIMARY AND COMMUNICATION LEVEL. FOR POLES THAT ARE NOT BUCKET TRUCK ACCESSIBLE, FOUR FEET CLEARANCE SHALL BE MAINTAINED.

F. THE REQUIRED MINIMUM DISTANCE OF UNCOVERED CONDUCTOR PHASE-TO-PHASE, PHASE-TO-GROUND OR PHASE-TO-NEUTRAL IS SIXTY INCHES.

BILL OF MATERIALS:

ITEM	DESCRIPTION	QUANTITY	STANDARD PAGE	STOCK NUMBER	DESIGN UNITS
1	CROSSARM, FIBERGLASS, 12FT, DEADEND MINIMUM (C)	AS REQ'D	379	S294372	6DF
2	SIGN, ADHESIVE STICKER, HIGH VOLTAGE FOR GALV. STEEL & FIBERGLASS	2	208	S647650	HV/D
3	WASHER, FLAT, SQUARE 5/8"	AS REQ'D	390	S799040	5/8SQ
4	SPRING LOCK, WASHER, 5/8"	AS REQ'D	390	S796866 (X)	-
5	STUD, INSULATOR, 7 1/2"	AS REQ'D	751	S701760	STUD-W
6	INSULATOR, UNDERARM	8	750	S431298	UA-INS
7	SUSPENSION CLAMP (D)	8	775	-	-
8	WIRE, POLY COVERED COPPER (d)	AS REQ'D	718	-	-
9	STRAIN CLAMPS	AS REQ'D	741-743	-	-
10	INSULATOR, DE, POLYMER, 35kV	16	750	S428958	LONGDE
11	BOLT, MACHINE, GALV, W/NUT 3/4" X (LENGTH AS REQ'D)	AS REQ'D	390	-	-
12	SPRING, LOCK, WASHER	AS REQ'D	390	S796802 (X)	LK-WSH
13	WASHER, CURVED, SQUARE 3/4"	AS REQ'D	390	S797760	RIBWSH
14	INSULATOR, 1" THREAD, PIN TYPE	AS REQ'D	750	-	-
15	PIN, TRANSFORMER, 1"	AS REQ'D	396	S529248	PS/01

TABLE OF CONTENTS

NOTES:

(I) VERTICAL POST INSULATOR REQUIRED IF JUMPER WIRE VERTICAL DISTANCE BELOW CENTER OF CROSSARM IS GREATER THAN EIGHTEEN INCHES. THIS APPLIES TO ALL CROSSARMS.

(X) THIS ITEM IS EXEMPT.

REFERENCE:

a. BONDING FOR CONTAMINATION DISTRICT 1 ONLY, SEE OH1003.

b. FIBERGLASS CROSSARM ALLOWABLE LOADING, SEE OH379.

c. COVERED COPPER EQUIPMENT AND LINE WIRE JUMPERS, SEE OH718.

(d) STRAIN CLAMP SIZE AND CONDUCTOR USE, SEE OH741-743.

(e) FOR G.O. 95 CLEARANCES, SEE OH220-224.

f. FOR BUCKET TRUCK AND RUBBER GLOVE METHOD, SEE OH303.2.

FIELD MAINTENANCE ONLY

© 1998 - 2023 San Diego Gas & Electric Company. All rights reserved. Removal of this copyright notice without permission is not permitted under law.

REV	CHANGE	DR	BY	DSN	APV	DATE	REV	CHANGE	DR	BY	DSN	APV	DATE
D	DRAWING UPDATE	PEI	-	-	-	1/15/2019	G	MOVED TO FMO	ARC	RSL	JAS	KRG	3/27/2023
C	EDITORIAL CHANGES	-	JS	JS	MDJ	1/31/2017	F	EDITORIAL CHANGES	EDM	GLW	JES	CZH	7/13/2020
B	NO CHANGES-REAFFIRMED	-	JC	JS	MDJ	12/14/2016	E	FIGURE UPDATE	EDM	GLW	JES	CZH	1/14/2020

OH1660 FIELD MAINTENANCE ONLY

ALL VERSIONS LISTED IN FMO ARE SUPERSEDED BY THEIR CURRENT VERSION FOUND INSIDE THE OVERHEAD CONSTRUCTION STANDARD MANUAL.

REVISION HISTORY:

09/30/2022: MOVED TO FMO

TABLE OF CONTENTS

© 1998 - 2022 San Diego Gas & Electric Company. All rights reserved. Removal of this copyright notice without permission is not permitted under law.

REV	CHANGE	DR	BY	DSN	APV	DATE	REV	CHANGE	DR	BY	DSN	APV	DATE
C							F						
B							E						
A	ORIGINAL ISSUE	EDM	RSL	JAS	KRG	09/30/2022	D						

	Indicates Latest Revision		Completely Revised	X New Page		Information Removed

SDG&E ELECTRIC OVERHEAD FIELD MAINTENANCE ONLY STANDARDS

POLE TOP NEST PLATFORM

SCOPE: THIS STANDARD ILLUSTRATES THE VARIOUS METHODS OF INSTALLING A POLE TOP NEST PLATFORM.

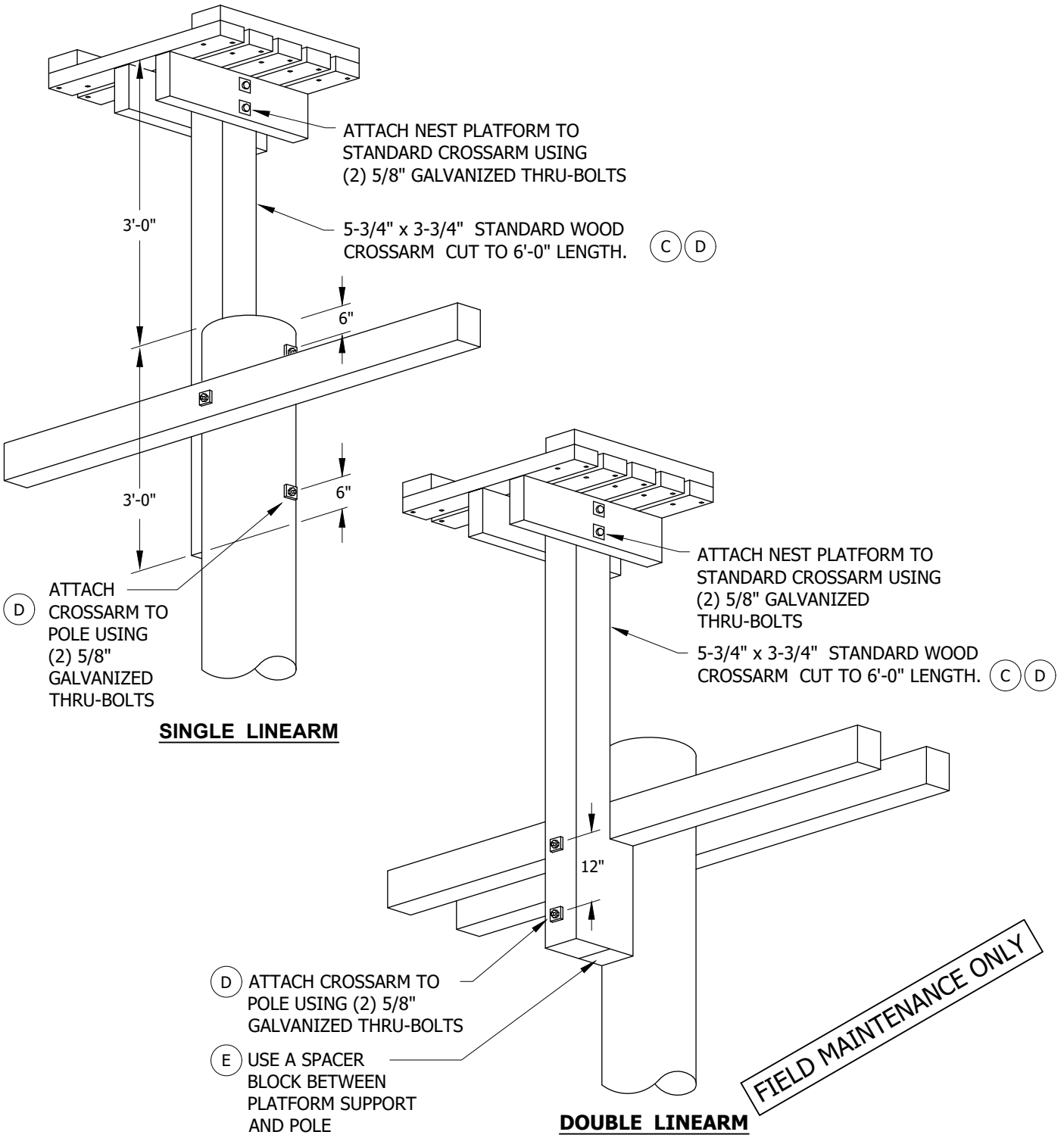

TABLE OF CONTENTS

© 1998 - 2022 San Diego Gas & Electric Company. All rights reserved. Removal of this copyright notice without permission is not permitted under law.

REV	CHANGE	DR	BY	DSN	APV	DATE	REV	CHANGE	DR	BY	DSN	APV	DATE
C	MOVED TO FMO	EDM	RSL	JAS	KRG	09/30/2022	F						
B	DRAWING UPDATE	PEI	-	-	-	01/15/2019	E						
A	ORIGINAL ISSUE	-	-	PTA	JJ	10/29/2005	D						

X Indicates Latest Revision | Completely Revised | New Page | Information Removed

SDG&E ELECTRIC OVERHEAD FIELD MAINTENANCE ONLY STANDARDS

SHEET 1 OF 2

POLE TOP NEST PLATFORM

FMO OH1660.1

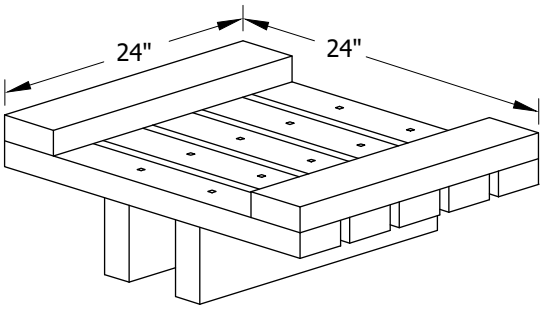

TOP VIEW (A) (B)

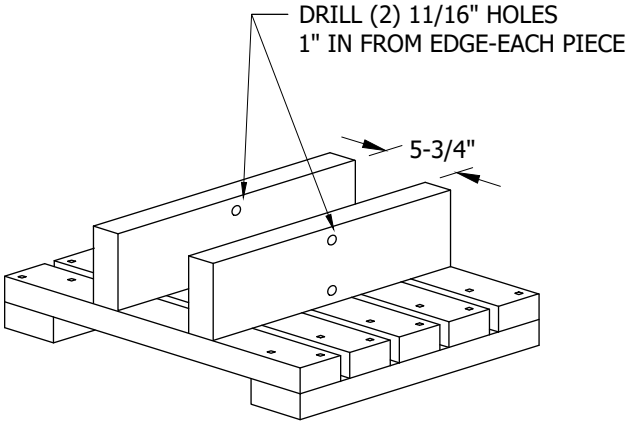

BOTTOM VIEW

INSTALLATION:

(A) POLE TOP NEST PLATFORMS ARE AN SDG&E SHOP MADE ITEM. AFTER ORDERING, ALLOW A TWO TO THREE WEEK LEAD TIME FOR THEIR MANUFACTURE.

(B) POLE TOP NEST PLATFORMS ARE CONSTRUCTED FROM UNTREATED, KILN-DRIED REDWOOD.

(C) NEST PLATFORMS ARE INSTALLED AT A LEVEL THREE FOOT ABOVE THE TOP OF THE POLE USING A 10' - 0" STANDARD CROSSARM THAT HAS BEEN CUT DOWN TO 6' - 0".

(D) ALL MOUNTING HARDWARE TO BE 5/8" GALVANIZED THRU-BOLTS. SEE DRAWINGS FOR DETAILS.

(E) TO MAKE SPACER BLOCK CUT A 15" SECTION FROM A 5-3/4" X 3-3/4" STANDARD CROSSARM.

BILL OF MATERIALS:

NONE

NOTES:

NONE

REFERENCE:

NONE

FIELD MAINTENANCE ONLY

TABLE OF CONTENTS

© 1998 - 2022 San Diego Gas & Electric Company. All rights reserved. Removal of this copyright notice without permission is not permitted under law.

REV	CHANGE	DR	BY	DSN	APV	DATE	REV	CHANGE	DR	BY	DSN	APV	DATE
C	MOVED TO FMO	EDM	RSL	JAS	KRG	09/30/2022	F						
B	DRAWING UPDATE	PEI	-	-	-	01/15/2019	E						
A	ORIGINAL ISSUE	-	-	PTA	JJ	10/29/2005	D						

X Indicates Latest Revision | Completely Revised | New Page | Information Removed

TABLE OF CONTENTS

PAGE(S)	SUBJECT
1705	STEEP GRADE LINE ANGLES: 0 TO 6 DEGREES

MAIN TABLE OF CONTENTS

© 1998 - 2019 San Diego Gas & Electric Company. All rights reserved. Removal of this copyright notice without permission is not permitted under law.

REV	CHANGE	BY	DSGN	APPV	DATE	REV	CHANGE	BY	DSGN	APPV	DATE
C						F					
B						E					
A	ORIGINAL ISSUE	JK	JS	CZH	2/1/2019	D					

Indicates Latest Revision | Completely Revised [X] | New Page | Information Removed

SHEET 1 OF 1

SDG&E ELECTRIC UNDERGROUND CONSTRUCTION STANDARD

SPACER CABLE SYSTEM FMO
TABLE OF CONTENTS

FMO
OH1701

OH1705 FIELD MAINTENANCE ONLY

ALL VERSIONS LISTED IN FMO ARE SUPERSEDED BY THEIR CURRENT VERSION FOUND INSIDE THE OVERHEAD CONSTRUCTION STANDARD MANUAL.

REVISION HISTORY:

07/08/2019: MOVED TO FMO

TABLE OF CONTENTS

© 1998 - 2019 San Diego Gas & Electric Company. All rights reserved. Removal of this copyright notice without permission is not permitted under law.

REV	CHANGE	BY	DSGN	APPV	DATE	REV	CHANGE	BY	DSGN	APPV	DATE
C						F					
B						E					
A	ORIGINAL ISSUE	JES	JES	CZH	07/08/2019	D					

Indicates Latest Revision | Completely Revised | X | New Page | Information Removed

SHEET 1 OF 1

SDG&E ELECTRIC OVERHEAD FIELD MAINTENANCE ONLY STANDARDS

STEEP GRADE LINE ANGLES: 0 TO 6 DEGREES

FMO OH1705

SCOPE: FOR SLOPES LESS THAN 10 DEGREES, AND LINE ANGLES FROM 0 TO 6 DEGREES.

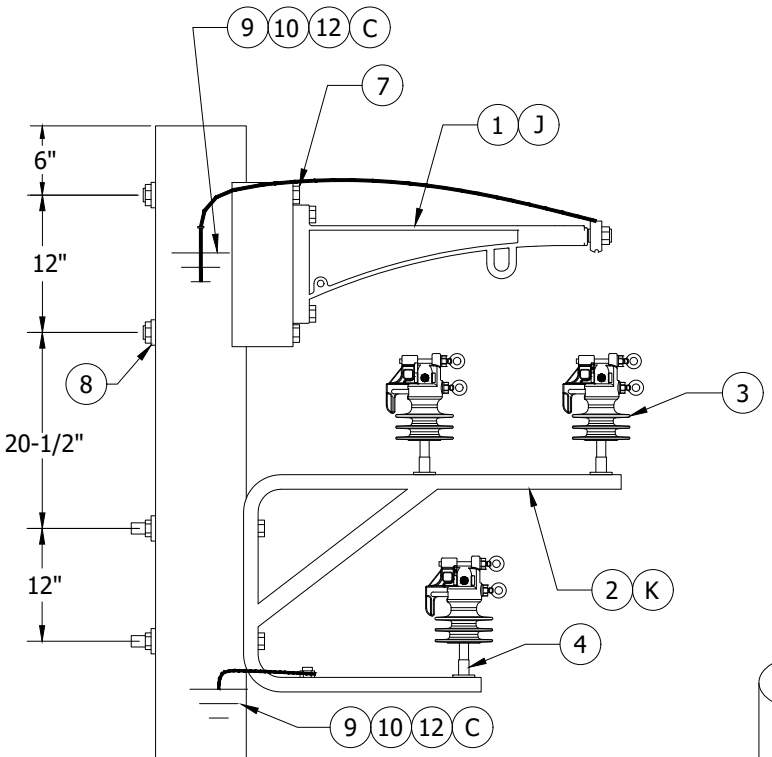

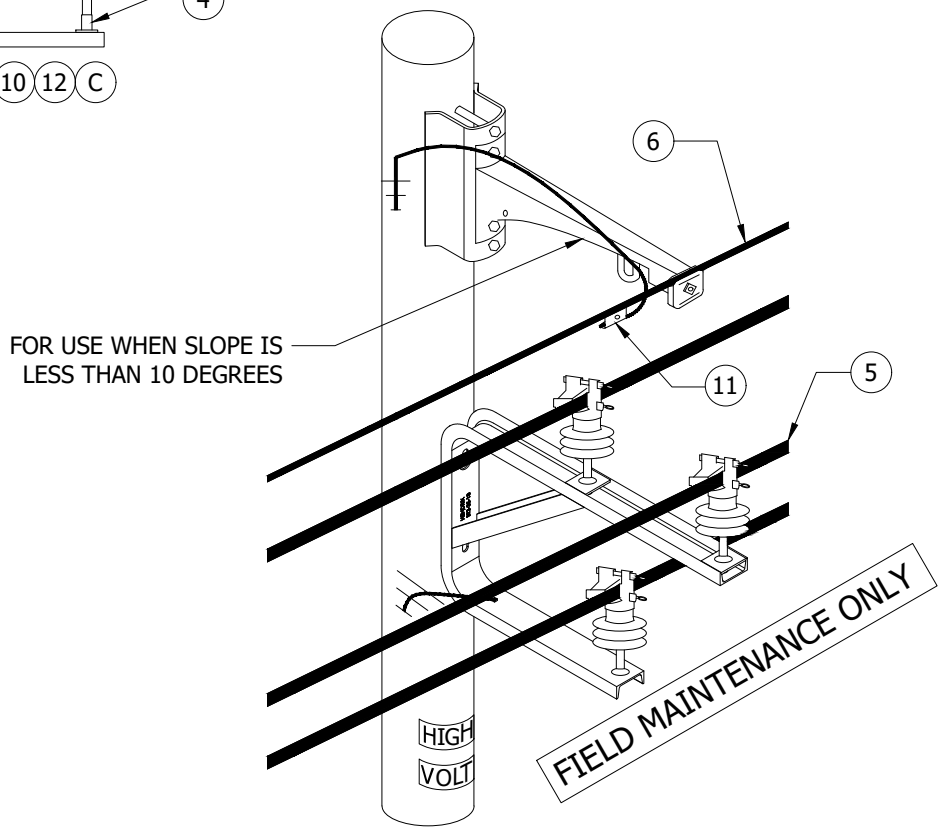

TABLE OF CONTENTS

© 1998 - 2019 San Diego Gas & Electric Company. All rights reserved. Removal of this copyright notice without permission is not permitted under law.

REV	CHANGE	BY	DSGN	APPV	DATE	REV	CHANGE	BY	DSGN	APPV	DATE
C	DRAWING UPDATES	PEI	-	-	01/15/2019	F					
B	EDITORIAL CHANGES	JS	JS	CZH	08/01/2018	E					
A	ORIGINAL ISSUE	-	JC	IL	11/07/2014	D	MOVED TO FMO	JES	JES	CZH	07/08/2019

X Indicates Latest Revision | Completely Revised | New Page | Information Removed

SDG&E ELECTRIC OVERHEAD FIELD MAINTENANCE ONLY STANDARDS

STEEP GRADE LINE ANGLES: 0 TO 6 DEGREES

FMO OH1705.1

INSTALLATION:

A. WHEN A GO95 SPACER IS REQUIRED FOR USE ON A MIDSPAN SLOPE GREATER THAN 20 DEGREES, A RTL-GO95DM SPACER (S663282) MUST BE USED INSTEAD.

B. REFERENCE STANDARDS PAGE 1706 FOR BEFORE & AFTER SLOPES THAT ARE EQUAL, IF NOT REFERENCE STANDARDS PAGE 1707.

(C) REFER TO WOOD AND STEEL POLE GROUNDING STANDARD 1002.

D. WHEN INSTALLING SPACER CABLE WIRE ABOVE OR IN THE PRESENCE OF 3-PHASE EQUIPMENT, REFERENCE STANDARD 1710 FOR CLEARANCE AND HARDWARE. SPACER CABLE WIRE MUST BE A MINIMUM OF 7 FEET FROM 3-PHASE EQUIPMENT.

E. WHEN INSTALLING SPACER CABLE WIRE ABOVE OR IN THE PRESENCE OF SINGLE-PHASE EQUIPMENT REFERENCE STANDARD 1710 FOR SINGLE-PHASE EQUIPMENT CLEARANCES AND HARDWARE. SPACER CABLE WIRE MUST BE A MINIMUM OF 7 FEET FROM SINGLE-PHASE EQUIPMENT.

F. LOWEST SPACER CABLE WIRE MUST BE INSTALLED A MINIMUM OF 6 FEET FROM FIBER/TELCO.

G. FOR EXTRA HEAVY LOADING CONDITIONS USE 127AWA MESSENGER (S814055) WITH DEAD-END MESSENGER GRIP ME-4179 (S392940) COLOR CODED, BLACK.

H. REFERENCE G.O. 95 CLEARANCES.

(J) TANGENT BRACKET - BRACKETS DESIGNED TO SUPPORT THE SPACER CABLE MESSENGER WIRE. THEY ARE USED ON TANGENT POLES AND FOR TRANSVERSE ANGLES UP TO 6 DEGREES.

(K) THESE BRACKETS MAINTAIN THE DIAMOND CONFIGURATION OF THE PHASE CONDUCTORS ON THE POLE.

TABLE OF CONTENTS

BILL OF MATERIALS:

ITEM	DESCRIPTION	QUANTITY	STANDARD PAGE	STOCK NUMBER	ASSEMBLY UNITS
1	TANGENT BRACKET	2	-	S166150	GUYARM
2	BRACKET, "C", TRANSFORMER TAP	1	-	S166152	C-BKT
3	INSULATOR, PIN TYPE	3	750.2	S429060	IPCN1
4	INSULATOR PIN, SHORT SHANK, 1" LEAD THREAD	3	396	S532426	PSS1
5	SPACER CABLE (SIZE AND VOLTAGE RATING AS REQ.)	AS REQ	1702	-	-
6	MESSENGER (SIZE AND TYPE AS REQUIRED)	AS REQ	1702	-	-
7	MACHINE BOLT, 3/4" X REQ. LENGTH	AS REQ	392.1	-	-
8	WASHER, CURVED, SQUARE	AS REQ	392.2	S797760	-
9	#4, 7 STRAND, COVERED JUMPER WIRE	AS REQ	718	S815044	POLY4J
10	RIVNUT, THREADED, 1/2" X 13	AS REQ	1002.2	S692998	-
11	CONNECTOR, WEDGE (SIZE AND TYPE AS REQ.)	AS REQ	784.5	-	-
12	CONNECTOR, SPLIT BOLT, BRONZE 1/2" X 13	AS REQ	1002.3	S263360	SPCONN

FIELD MAINTENANCE ONLY

NOTES:
NONE

REFERENCE:
NONE

© 1998 - 2019 San Diego Gas & Electric Company. All rights reserved. Removal of this copyright notice without permission is not permitted under law.

REV	CHANGE	BY	DSGN	APPV	DATE	REV	CHANGE	BY	DSGN	APPV	DATE
C	DRAWING UPDATES	PEI	-	-	01/15/2019	F					
B	EDITORIAL CHANGES	JS	JS	CZH	08/01/2018	E					
A	ORIGINAL ISSUE	-	JC	IL	11/07/2014	D	MOVED TO FMO	JES	JES	CZH	07/08/2019

X Indicates Latest Revision | Completely Revised | New Page | Information Removed

SDG&E ELECTRIC OVERHEAD FIELD MAINTENANCE ONLY STANDARDS

STEEP GRADE LINE ANGLES: 0 TO 6 DEGREES

PAGE(S)	SUBJECT

MAIN TABLE OF CONTENTS

No FMO content available at this time.

© 1998 - 2020 San Diego Gas & Electric Company. All rights reserved. Removal of this copyright notice without permission is not permitted under law.

REV	CHANGE	BY	DSGN	APPV	DATE	REV	CHANGE	BY	DSGN	APPV	DATE
C						F					
B						E					
A						D					

	Indicates Latest Revision		Completely Revised	X	New Page	Information Removed

SHEET
1 OF 1

SDG&E ELECTRIC OVERHEAD FIELD MAINTENANCE ONLY STANDARDS

ENGINEERED STEEL POLES
TABLE OF CONTENTS

FMO
OH1801.1

1900 - MISCELLANEOUS EQUIPMENT

1900 - MISCELLANEOUS EQUIPMENT

PAGE(S)	SUBJECT

MAIN TABLE OF CONTENTS

No FMO content available at this time.

© 1998 - 2020 San Diego Gas & Electric Company. All rights reserved. Removal of this copyright notice without permission is not permitted under law.

REV	CHANGE	BY	DSGN	APPV	DATE	REV	CHANGE	BY	DSGN	APPV	DATE
C						F					
B						E					
A						D					

2000-COVERED CONDUCTOR

2000-COVERED CONDUCTOR

PAGE(S)	SUBJECT

MAIN TABLE OF CONTENTS

No FMO content available at this time.

© 1998 - 2020 San Diego Gas & Electric Company. All rights reserved. Removal of this copyright notice without permission is not permitted under law.

REV	CHANGE	BY	DSGN	APPV	DATE	REV	CHANGE	BY	DSGN	APPV	DATE
C						F					
B						E					
A						D					

LEGACY OVERHEAD FIELD MAINTENANCE ONLY

PAGES	SUBJECT
200-400	DISTRIBUTION POLE TOPS
500	TRANSMISSION
600-900	SECONDARIES, CONDUCTOR, GUYING
1100	TRANSFORMERS
1200	SECTIONALIZING
1300	CAPACITORS, REGULATORS
1400-1500	CABLE POLES, LIGHTING

FMO MAIN TABLE OF CONTENTS

© 1998 - 2019 San Diego Gas & Electric Company. All rights reserved. Removal of this copyright notice without permission is not permitted under law.

REV	CHANGE	BY	DSGN	APPV	DATE	REV	CHANGE	BY	DSGN	APPV	DATE
C						F					
B						E					
A	ORIGINAL ISSUE	JIK	JES	CZH	10/20/2019	D					

Indicates Latest Revision | Completely Revised X | New Page | Information Removed

SHEET 1 OF 1

SDG&E ELECTRIC OVERHEAD FIELD MAINTENANCE ONLY STANDARDS

LEGACY OVERHEAD FIELD MAINTENANCE
MAIN TABLE OF CONTENTS

OH LEGACY
OHL100.1

PAGE	SUBJECT
203	DISTRIBUTION STATION NUMBERING
204	OVERHEAD DISTRIBUTION SWITCH NUMBERING
212	GFMS SUMMARY OPERATING, UNDERGROUND OPERATING AND FACILITY MAPS
218	POLE TOP RAIL
269	12KV SINGLE CIRCUIT TRANSPOSITION
299.201	AERIAL CABLE CLEARANCE
399.401	PROTECTIVE COVERINGS, MOLDINGS AND STRAPS
399.402	"J" BOLT FOR CABLE POLE RISERS
399.501	CAPACITOR MOUNTING STRAP
399.502	MOUNTING BRACKETS
399.503-.504	HORIZONTAL AND VERTICAL POLE LOADING
399.701-.702	REINFORCING WOOD POLES WITH STEEL SLEEVES
399.703	REINFORCING WOOD POLES WITH FIBERGLASS WRAP
499.101	FIBERGLASS SUPPORT CONSTRUCTION, 12KV AND BELOW
499.102-.103	POST INSULATOR AND BRACKET CONSTRUCTION, ANGLES 0° TO 5°, 12 AND 12.47KV
499.104-.105	POST INSULATOR AND BRACKET CONSTRUCTION, ANGLES 5° TO 30°, 12 AND 12.47KV
499.201	VERTICAL CONSTRUCTION 30° TO 60° ANGLES, 12 AND 12.47KV
499.202	VERTICAL CONSTRUCTION 60° TO 90° ANGLES, 12 AND 12.47KV
499.203-.204	POST INSULATOR AND BRACKET CONSTRUCTION, "4 WAY AND 'T' CORNERS", 12 AND 12.47KV
499.301	750-7500 VOLT BUCKARM CORNERS
499.701	POLE TOP EXTENSION, FOR SERVICE CLEARANCE ARMS

MAIN TABLE OF CONTENTS

© 1998 - 2019 San Diego Gas & Electric Company. All rights reserved. Removal of this copyright notice without permission is not permitted under law.

REV	CHANGE	BY	DSGN	APPV	DATE	REV	CHANGE	BY	DSGN	APPV	DATE
C						F					
B	COMPLETELY REVISED	JK	JS	CZH	10/15/2019	E					
A	ORIGINAL ISSUE	JK	JS	CZH	6/13/2019	D					

Indicates Latest Revision | X | Completely Revised | New Page | Information Removed

SDG&E ELECTRIC OVERHEAD FIELD MAINTENANCE ONLY STANDARDS

LEGACY OVERHEAD FIELD MAINTENANCE
TABLE OF CONTENTS
DISTRIBUTION POLE TOPS

I. STATION NUMBERS GIVE A UNIQUE NUMBER TO, AND BRIEFLY DESCRIBE, DISTRIBUTION STATIONS. ALL STATION NUMBERS ARE ASSIGNED BY THE TRANSFORMER CLERK (EXT 1217 OR MICROWAVE 02167).

II. THE STATION NUMBER IS BROKEN UP INTO THREE PARTS: CIRCUIT; NUMBER; AND SUFFIX. [40 – 118 – MRO (CIRCUIT NUMBER SUFFIX)]

CIRCUIT – THE CIRCUIT DESIGNATION DESCRIBES THE VOLTAGE THAT FEEDS THE STATION. IF IT IS ONLY NUMERIC CHARACTERS, THEN THE CIRCUIT ORIGINATING AT THE SUBSTATION IS 12KV. IF IT HAS ALPHABETIC CHARACTERS IN IT, THEN THE CIRCUIT VOLTAGE IS 4 OR 2.4KV. (SEE NOTE F).

EXAMPLES:

40 – CIRCUIT 40 IS 12KV

NO1 – NORTH OTAY ONE IS 4KV

NUMBER – CONTAINS ONLY NUMERIC CHARACTERS. THIS PART IS ARBITRARY.

EXAMPLES:

118 – NUMBER SELECTED BY TRANSFORMER CLERK

908 – NUMBER SELECTED BY TRANSFORMER CLERK

SUFFIX – THE SUFFIX IS DESCRIPTIVE OF THE STATION, (SEE NOTE C) HIERARCHY (ARRANGEMENT IN SERIES) FOR COMBINING SUFFIXES IS:

I. NUMERIC CHARACTERS (1–99) (SEE NOTE D)
II. M, V, B, BU, G, R, L, SW, UP, N
III. RO, RC, SL
IV. Y, X, C
V. S

FOR FIELD MAINTENANCE ONLY

EXAMPLES:

C – CAPACITOR STATION
M – 12KV PRIMARY METERED STATION
MRO – METERED STREET LIGHT STATION
D – 4 OR 2.4KV STATION THAT IS FED FROM A STEPDOWN STATION SERVING ONLY 1 CUSTOMER OR ONLY PRIMARY METERED CUSTOMER(S)
1M – 4 OR 2.4KV PRIMARY METERED STATION FED FROM A STEPDOWN STATION

III. THESE PARTS ARE BROUGHT TOGETHER AS FOLLOWS:

A. WHEN WRITING THE STATION NUMBERS ON OTHER THAN FORMS FOR KEYPUNCH USE, EACH PART OF THE STATION NUMBER IS SEPARATED BY A DASH.

EXAMPLES:

40–118	12KV TRANSFORMER STATION
40–216–C	12KV CAPACITOR STATION
NO1–118	4 OR 2.4KV TRANSFORMER STATION
NO1–216–MRO	4 OR 2.4KV METERED STREET LIGHT STATION
40–908–D	12 TO 4KV OR 12 TO 2.4KV STEPDOWN STATION (INDICATED BY D) (SEE NOTES A, B & F)
40–118–2G	12KV REGULATOR STATION, 2ND POLE OF 3–1Ø REGULATORS ON 3 POLES.

B. THE FOLLOWING FORMS WILL BE USED FOR KEYPUNCHING AND THE STATION NUMBER IS REQUIRED ON THEM:

1. APARTMENT LIST	101–4145A	7. NEW SERVICE INPUT DOCUMENT	124–10152
2. CIS MASTER STATION UPDATE	124–13152	8. STATION FILE CUTOVERS	111–391
3. CUSTOMER NEW SERVICE REQUEST	124–6201	9. TRANSFORMER TAG	120–5240A
4. ELECTRIC CONSTRUCTION ORDER	(NO FILE NUMBER)	10. TRANSFORMER STATION FILE PUNCH FORM	110–591/21A
5. ELECTRIC SERVICE ORDER	107–212L	11. TAG NOTICE TO ELECTRIC TROUBLEMAN	(TEMPORARY FORM)
6. GAS/ELECTRIC SET ORDER	124–610	12. CURRENT STATION/CUSTOMER TIE	(COMPUTER LISTING)

	[X]	Indicates Latest Revision		Completely Revised		New Page		Information Removed

ISSUE 1993 DATE 1–1–89 APPD /	SDG&E ELECTRIC STANDARDS DISTRIBUTION STATION NUMBERING	OH 299.001 ~~UG 3199.001~~ SUPERCEDES 203.1 (1–1–93)

TABLE OF CONTENTS

C. THE RULES FOR FILLING IN THE STATION NUMBER ON THESE FORMS ARE AS FOLLOWS:

1. ALL ALPHABETIC CHARACTER O'S ARE TO BE WRITTEN WITH A SLANT MARK; i.e., Ø. THIS IS TO AVOID CONFUSION WITH THE NUMERIC CHARACTER ZERO.

2. INSTRUCTIONS FOR FILLING IN FORMS.

   a. THE CIRCUIT FIELD (COLUMN). SEE TABLE 1 BELOW.
   ALPHABETIC CHARACTERS ARE TO BE LEFT JUSTIFIED AND THE NUMERIC CHARACTERS RIGHT JUSTIFIED (SEE NOTE E). IN MOST CASES, THERE WILL BE BLANK COLUMNS IN THIS FIELD.

   b. THE NUMBER FIELD (COLUMN). SEE TABLE 1 BELOW.
   THE NUMERIC CHARACTERS ARE RIGHT JUSTIFIED AND ZEROS ARE ADDED TO COMPLETE FIELD.

   c. THE SUFFIX FIELD (COLUMN). SEE TABLE 1 BELOW.
   IF STATION NUMBER HAS NO SUFFIX, LEAVE THIS BLANK.
   THE ENTIRE PROPERLY FORMED SUFFIX IS LEFT JUSTIFIED AND ZEROS ARE ADDED TO COMPLETE FIELD.

EXAMPLES OF STATION NUMBERS WRITTEN ON FORMS:

TABLE 1

	CIRCUIT	NUMBER	SUFFIX	
	0040	0118		
	0040	0216	C00	0
*	NØ01	0118		
*	NØ01	0216	MRØ	0 *
	0040	0908	D00	0
	0040	0908	310	0

FOR FIELD MAINTENANCE ONLY

NOTES:

Ⓐ REFER TO THE DISTRIBUTION ENGINEER BEFORE ADDING LOAD TO THESE AREAS TO ENSURE THAT THE STEPDOWN STATION IS NOT OVERLOADED.

Ⓑ INDICATES A 2.4 OR 4KV STEPDOWN STATION SERVING ONLY ONE CUSTOMER OR ONLY PRIMARY METERED CUSTOMER(S).

Ⓒ SEE PAGE 299.126 OVERHEAD OR 3199.126 UNDERGROUND – ABBREVIATIONS & CODES, STATION SUFFIX FOR SUFFIX MEANINGS.

Ⓓ NUMERIC CHARACTERS 1 – 9 ARE RESERVED FOR STATIONS WITH ADDITIONAL SUFFIXES.

Ⓔ RIGHT AND LEFT JUSTIFICATION MAY BE A NEW TERM FOR MOST PEOPLE. RIGHT JUSTIFIED MEANS TO START WITH THE RIGHT MOST CHARACTER OF THE GROUP AND PUT IT INTO THE RIGHT MOST COLUMN, WORKING LEFT UNTIL ALL CHARACTERS ARE USED UP AND IN ALL REMAINING BLOCKS AND ZEROS. SIMILARLY FOR LEFT JUSTIFIED, ONLY WORK FROM LEFT TO RIGHT AND ADD ZEROS TO FILL UNUSED BLOCKS.

EXAMPLE: RIGHT JUSTIFY: 198

STEP 1				8	
STEP 2			9	8	
STEP 3		1	9	8	
FINAL STEP 4	0	1	9	8	ADD ZERO IN REMAINING BLOCK(S)

LEFT JUSTIFY ALPHABETIC CHARACTERS, RIGHT JUSTIFY NUMERIC CHARACTERS: NO1

STEP 1		N			
STEP 2	*	NØ			ALPHABETIC CHARACTERS LEFT JUSTIFIED
STEP 3	*	NØ		1	NUMERIC CHARACTER RIGHT JUSTIFIED
FINAL STEP 4		NØ	0	1	ADD ZERO IN REMAINING BLOCK(S)

Ⓕ STEPDOWN STATIONS WILL BE GIVEN NAME EXCEPT FOR THOSE SERVING ONLY ONE CUSTOMER OR ONLY PRIMARY METERED CUSTOMER(S)

* SEE III, C, 1.

	[X] Indicates Latest Revision		Completely Revised		New Page		Information Removed

OH 299.002 ~~UG 3199.002~~ SUPERCEDES 203.2 (1–1–93)	SDG&E ELECTRIC STANDARDS DISTRIBUTION STATION NUMBERING	ISSUE 1993 DATE 1–1–87 APPD /

TABLE OF CONTENTS

SCOPE: THIS STANDARD EXPLAINS THE METHOD OF OVERHEAD DISTRIBUTION SWITCH NUMBERING.

1. EACH SWITCH IS IDENTIFIED BY A UNIQUE NUMBER THAT INDICATES THE CIRCUIT(S) ON WHICH IT OPERATES.

2. THERE ARE TWO TYPES OF SWITCH NUMBERS: **LINE** AND **TIE**

   2.1 **LINE SWITCH NUMBERS** ARE BROKEN UP INTO TWO PARTS:

   CIRCUIT AND NUMBER — 375 (CIRCUIT) – 40–L (NUMBER)

   CIRCUIT – DESCRIBES THE VOLTAGE AND CIRCUIT NUMBER TO WHICH THE LINE SWITCH IS CONNECTED. IF THE CIRCUIT CONTAINS ONLY NUMERIC CHARACTERS, THEN THE CIRCUIT VOLTAGE IS 12KV. IF IT CONTAINS ALPHABETIC CHARACTERS (e.g. CD10), THEN THE CIRCUIT VOLTAGE IS 4 OR 2.4KV.

   NUMBER – CONTAINS ONLY NUMERIC CHARACTERS, OR, NUMERIC CHARACTERS FOLLOWED BY AN "L". THE "L" INDICATES THAT THIS IS A LOADBREAK SWITCH. THE NUMERIC PORTION IS ARBITRARY AND EACH NUMBER SHALL NOT BE ASSIGNED TO MORE THAN ONE SWITCH FOR EACH CIRCUIT.

   EXAMPLES:

   375–40–L INDICATES A LINE SWITCH ON 12KV CIRCUIT 375 WITH AN ARBITRARY NUMBER 40, AND LOADBREAK CAPABILITY.

   GAI–2 INDICATES A LINE SWITCH ON 4KV OR 2.4KV CIRCUIT GA 1 WITH AN ARBITRARY NUMBER 2, AND NO LOADBREAK CAPABILITY.

   2.2 **TIE SWITCH NUMBERS** ARE BROKEN UP INTO THREE PARTS:

   CIRCUIT; ALPHA NUMERIC; AND CIRCUIT — 375 (CIRCUIT) – T1 (ALPHA/NUMERIC) – 376 (CIRCUIT)

   CIRCUIT – DESCRIBES THE VOLTAGE AND CIRCUIT NUMBERS THE TIE SWITCH CONNECTS AS STATED ABOVE.

   ALPHA/NUMERIC – ALWAYS CONTAINS THE ALPHA CHARACTER "T" AND IS FOLLOWED BY A BY A NUMBER (1,2,3, ETC.) WHICH IS CONSECUTIVELY ASSIGNED FOR TIE SWITCHES BETWEEN THE SAME TWO CIRCUITS. EACH ALPHA/NUMERIC IDENTIFICATION SHALL NOT BE ASSIGNED TO MORE THAN ONE TIE SWITCH BETWEEN THE SAME TWO CIRCUITS. TIE SWITCHES WITH THE NUMBER FOLLOWED BY AN "L" HAVE LOADBREAK CAPABILITY.

   EXAMPLES:

   85–T1–380 INDICATES THE FIRST TIE SWITCH BETWEEN CIRCUITS 85 & 380.

   86–T2–87–L INDICATES THE SECOND TIE SWITCH, WITH LOADBREAK CAPABILITY, BETWEEN CIRCUITS 86 & 87.

   88–T–89 INDICATES THE ONLY TIE SWITCH INSTALLED BEFORE 4–1–77, BETWEEN CIRCUITS 88 & 89. IF INSTALLED AFTER 4–1–77, THIS TIE SWITCH SHALL BE NUMBERED 88–T1–89.

3. WHERE SWITCHES IN PARALLEL ARE INSTALLED AS LINE OR TIE SWITCHES, EACH SWITCH WILL BE ASSIGNED AN INDIVIDUAL NUMBER AS DESCRIBED IN PARAGRAPH 2.

4. SWITCH NUMBERS WILL NOT BE ASSIGNED TO NORMALLY OPEN, BRIDGED, OR FUSED CUTOUTS, UNLESS THEY ARE USED FOR TIE PURPOSES.

FOR FIELD MAINTENANCE ONLY

© 1998 - 2015 San Diego Gas & Electric Company. All rights reserved. Removal of this copyright notice without permission is not permitted under law.

TABLE OF CONTENTS

TABLE OF CONTENTS

BOOST/BUCK (OH)
123-342B
100HR
P377016

FUSE-BRIDGED (UG)
3-BRGD

PRIMARY METERING STATION (OH)
123-234M
P77676

SWITCH: (OH) GANG OPERATED
123-412
P77676

OPEN TO ADJACENT CIRCUIT (UG)
CIRCUIT 281 OPEN

INLINE SWITCH AND FUSE
3-80A
241-3
P23769

TIE FUSE
AM1-T1-RD3
P123456

CABLE POLE
P233679

FUSE WITH BY-PASS (OH)
123-45 (OPEN)
3-60A
P677001

PRIMARY METERING STATION (UG) W/CUSTOMER OWNED STRUCTURE
123-345M
D12345 CO

SWITCH: (OH) GANG OPERATED (SCADA)
SCADA 95
123-17
P67778

PAD MOUNTED SWITCH AND FUSE
3-80A
463-11

FUSE - D&W
3-80A D&W
P234673

CABLE POLE (FUSED)
3-150A
P227692

SWITCH - ON/OFF (UG)
123-324

GROUNDING BANK (OH)
123-254GB

SERVICE RESTORER WITH BY-PASS (OH)
123-25 (OPEN)
123-24R
P75678

SWITCH-HOOK STICK (OH)
123-234
P76455

NEUTRAL

FUSE (OH)
1-10A
P17723

ELECTRONIC SECTIONALIZER (OH)
3-100A
P58961

FAULT INDICATOR
1000A

CAPACITOR (OH)
CF - FIXED
CW - SWITCHED
CM - SWITCHED, IN MANUAL MODE
123-435CW
1200KVAR
P79707

FOR FIELD MAINTENANCE ONLY

GROUNDING BANK (UG)
123-365GB

REGULATOR BYPASS WITH DISCONNECTS (OH)
123-123G
100A
P47487

FUSE-BRIDGED (O.H.)
3-BRGD
P570164

CUSTOMER GENERATION
CG103023
CG103023
EFI
939 COAST BLVD
250 KW

SIREN
(FOR SAN ONOFRE)
0C03
D6954127

CAPACITOR (UG)
CW - SWITCHED
CM - SWITCHED, IN MANUAL MODE
123-234CW
1200KVAR

REGULATOR (OH) UN-BYPASSED
123-123G
100A
P67423

REGULATOR INDUCTION (OH)
123-123G
P87219

OPEN TO ADJACENT CIRCUIT (OH)
CIRCUIT 123 OPEN

PAD MOUNTED SUB
JOHNSON
STEP-DOWN
12/4 KV
2000 HPP
HIGH FUSING: 1-150A
LOW FUSING: -NONE
FEED: CIR.552
D104329

POLE MOUNTED SUB
MISSION BEACH
STEP-DOWN
12/4 KV
300 HO
HIGH FUSING: 3-30A
LOW FUSING: -NONE
FEED: CIR. 58
P2321269883

© 1998 - 2005 San Diego Gas & Electric Company. All rights reserved. Removal of this copyright notice without permission is not permitted under law.

	Indicates Latest Revision		Completely Revised		New Page		Information Removed

REVISION
DATE 12-3-05
APPD TR/ MF

SDG&E ELECTRIC STANDARDS

GFMS
SUMMARY OPERATING MAP SYMBOL TABLE

OH 212.1
UG 3112.1

TABLE OF CONTENTS

OPEN TO SAME CIRCUIT

OPEN
P57769

STEP UP/DN (OH)

144–190SD
12000/4160
P470649

FUSE (UG)

3–30A CL

WITH BY–PASS
3–30A CL BP

PRIMARY WIRE & CALLOUT (OH)

< 3–3/0 ACSR >

(U.G.)
< 750 XLPE AL–3ØN >

FUSED ON/OFF SWITCHING CABINET

3–600A
287–5

PRIMARY JUMP

OH GROUP SWITCH SCADA MATE

SCADA 96
715–16
715–1
P79699

PME5 SWITCH

790–13
3–600A

PADMOUNT SERVICE RESTORER

SCADA 98
57–42

PME3 SWITCH

SCADA 99
228–7

OH DPQM

107–1
107–DPQM
P123456

FLYING TAP

LOADBREAK GANG OPERATED SWITCH

715–23–L
P234567

OH SCADA RTU POLE

SCADA 62
P123456A

SUBSTATION
EL CAJON
SUB
69/12KV

SPRING VALLEY
SUB
12/4KV

BOOST (UG)

280–124B
3750 HHR

THROWOVER AT A SUBSTATION

AUTO
206–VS PREF
208–VS ALT
VISTA
SUB
12/4KV

THROWOVER W/BUS BAR

109–11M
190–CUST1 PREF
110–CUST1 ALT
109 CUST1
PREF: SWI GEAR B LEVEL SIDE OF BLDG: 24 HR ACCESS PHONE LOADING DOCK N/E CORNER OF BLDG:

FOR MAINTENANCE ONLY

AUTO
CITY OF SD
CUST OWNED
U100311

THROWOVER W/O BUS BAR

456–8 ALT
428–8 PREF
428–18 PREF:
E ST W/O 15TH
BASEMENT "B"

MAN
CITY OF SD – POLICE DEPT
SDGE OWNED
D2013772340

PADMOUNT THROWOVER SWITCH PMH–6 STYLE

930–470 PREF:
NORTHWEST CORNER OF FACILITY, NEXT TO OUTDOOR CUSTOMER SWITCHGEAR

930–470 PREF
934–230 ALT
3–150A CL

AUTO
U.S. POSTAL SERVICE
SDG&E OWNED
Y100012

5–WAY TRAYER WITH SCADA W/AUTOSECTIONALIZING AND/OR FAULT INTERRUPTION

SCADA 987
WAY–1 321–12 AE
WAY–2 321–13 F
WAY–3 321–TI–432
WAY–4 321–14
WAY–5 321–15 AE

4–WAY TRAYER WITH SCADA W/AUTOSECTIONALIZING AND/OR FAULT INTERRUPTION

SCADA 987
WAY–1 321–12 AE
WAY–2 321–13 F
WAY–3 321–TI–432
WAY–4 321–14

4–WAY TRAYER, MANUAL

WAY–1 456–12
WAY–2 456–13
WAY–3 456–TI–458
WAY–4 456–15

SCHEMATIC DETAIL OF A TYPICAL 4 WAY SWITCH

123–8
123–9
123–10
123–11

M2346788654

© 1998 - 2006 San Diego Gas & Electric Company. All rights reserved. Removal of this copyright notice without permission is not permitted under law.

X Indicates Latest Revision | Completely Revised | New Page | Information Removed

OH 212.2
UG 3112.2

SDG&E ELECTRIC STANDARDS

GFMS
SUMMARY OPERATING MAP SYMBOL TABLE

REVISION
DATE 10–31–06
APPD TR/ MF

TABLE OF CONTENTS

PME-3



712-19 1000A
D130145

PME-3 WITH SCADA

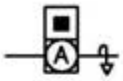

1000A
RTU 178
SCADA 178
435-21 1000A
D131755

PME-10



1000A
1000A
1000A
1000A
D123456

PME-11 WITH SCADA W/AUTOSECTIONALIZING

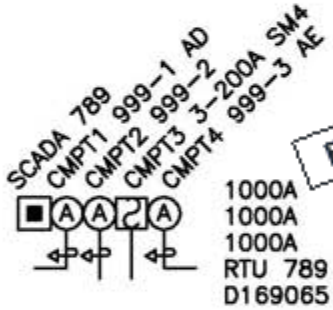

1000A
1000A
1000A
RTU 789
D169065

6-WAY SWITCH W/3 FAULT INTERUPTERS & SCADA

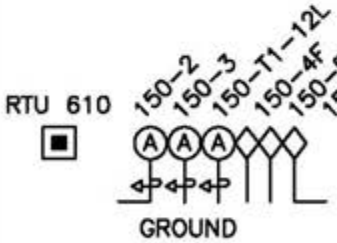

1000A
1000A
1000A
U123568

PME-9

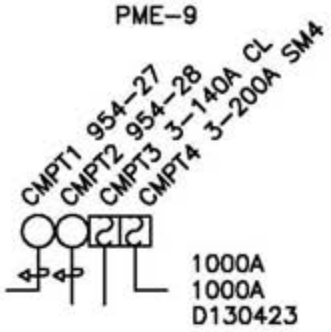

1000A
1000A
D130423

PME-10 WITH SCADA W/AUTOSECTIONALIZING

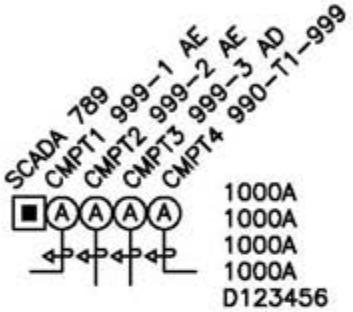

1000A
1000A
1000A
1000A
D123456

3-WAY PADMOUNT SWITCH W/GROUND

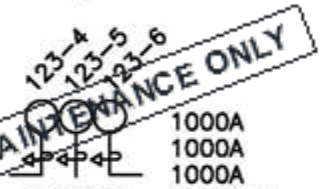

1000A
1000A
1000A
GROUND D123477

FOR FIELD MAINTENANCE ONLY

4-WAY SWITCH W/GROUND

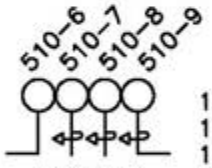

1000A
1000A
1000A
GROUND H775837

4-WAY SWITCH W/GROUND SCADA

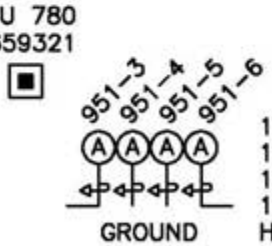

1000A
1000A
1000A
1000A
GROUND H785477

PME-9 WITH SCADA W/AUTOSECTIONALIZING

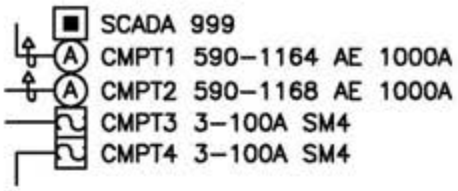

D131370

PME-11



1000A
1000A
1000A
D130489

3-WAY PADMOUNT SWITCH W/GROUND SCADA

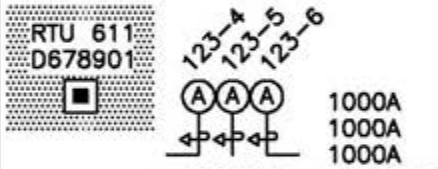

1000A
1000A
1000A
GROUND D123477

PME SOURCE TRANSFER SCADA

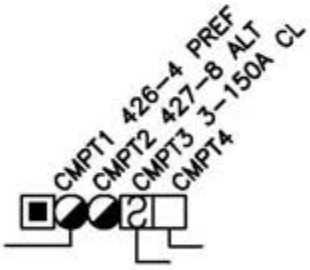

SCADA 56
MAN
SDGE OWNED
D100896

© 1998 - 2005 San Diego Gas & Electric Company. All rights reserved. Removal of this copyright notice without permission is not permitted under law.

	Indicates Latest Revision		Completely Revised		New Page		Information Removed

REVISION	SDG&E ELECTRIC STANDARDS	
DATE 12-3-05 APPD TR/ MF	GFMS SUMMARY OPERATING MAP SYMBOL TABLE	OH 212.3 UG 3112.3

BOOST STATION
155–76B
3750 HHR
D2791269123

600 AMP EXTENSION SPLICE
M123456
3–ES

CAPACITOR STATION
CW – SWITCHED
CM – SWITCHED, IN MANUAL MODE
124–61CW
900 KVAR
D2617473210

CIRCUIT (CABLE)
30/ #2PECN CU 100.

CONNECTORS LD. BREAK ELBOWS
395–76
D2617673212

CABLE TAPS (LD. BREAK ELBOWS)
H2617673212
3314 .3–4

PIGGY BACK ELBOWS
224–73
1–25 HDD
D3127573322
2–PB

"T" CONNECTOR W/200 AMP LBE
H3217573424
3316 3–T

HAND SPLICE
T SPLICE
H321773326
3314 .1–HS
1–TS

STRAIGHT CONNECTOR TRANSITION MODULE
M3217773326
3326 .1–SC
1–TM

"T" CONNECTOR
H3217773326
3314 .3–T

"Y" CONNECTOR
H3217833734
3314 .1–Y

W/200A LB CAPABILITY
H225678
3316

PAD MOUNTED SUB
JOHNSON
STEP–DOWN
12/4 KV
2000 HPP
HIGH FUSING: 1–150A
LOW FUSING: –NONE
FEED: CIR. 552
D104329

OPEN/SAME CIRCUIT
OPEN
44–68
1–500HAL
D3112559335

600A JUNCTION BAR W/GROUNDING POINT
3–TG

PASS THROUGH
H3227233832
3314 .3–PT

(LIVE FRONT)
D3237433835

MANHOLE
M2468176543
3324

(LIVE FRONT) CONNECTIONS
270–77
1–50 NEP
D3237333832

PRIMARY METERING STATION (UG)
CUSTOMER OWNED STATION (UG)
D123456 CO
123–345M
(STRESS CONE)

SDGE OWNED
D346678
123–456M
(600A TEE)
(200A LB ELBOW)

OPEN/DIFFERENT CIRCUIT
CIR 50 OPEN
H5470873521
3314 3–4

PAD D3407672348
TERMINALS

PRIMARY HANDHOLE
H2735784212
3315

GROUNDING BANK
800–632GB
D2175075201

STEP DOWNSTATION
125–201 SD
12000/2400/4160Y
D2185271210

STEP UP STATION
521–102SU
12000/2400/4160Y
D1581210217

SUBSTATION
EL CAJON SUB
69/12KV

SUBSTATION
SPRING VALLEY
12/4 KV

SUBSURFACE ENCLOSURE
S2345678690
3399

SUBSURFACE SWITCH ON/OFF
800–13
M3120560124
3322

FUSED ON/OFF SWITCH PAD MOUNTED
200–10
3–80A
D2335479573

HOOKSTICK SWITCH ON A CABLE POLE
122–8
P13064

GANG OPERATED SWITCH ON A CABLE POLE
113–10
P323040

FUSED ELBOWS
1–18A F.E.
900–75
1–25 NDD
D2918276127

3–30A F.E.
H2617673222
3314 .3–4

CONNECTOR (DEAD FRONT)
155–62
1–75YES
S3217773324
3399

CUSTOMER GENERATION
CG
CG01–310–599

FUSE CABINET
3–80A
D3124476143

WITH BY–PASS
3–30A CL BP
D1234567890

CABLE POLE
1–30A C.L.
P767412

BRIDGED FUSE
1–BRGD
D2454576262

3–BRGD
P10450

REGULATOR STATION BYPASS
715–117G
200A
D1404575271
3324

UNBYPASS
BY1–110G
100A
D2147536087
3322

FOR FIELD MAINTENANCE ONLY

TABLE OF CONTENTS

Indicates Latest Revision	Completely Revised	New Page	Information Removed

OH 212.4
UG 3112.4

SDG&E ELECTRIC STANDARDS

GFMS
UNDERGROUND OPERATING MAP SYMBOL TABLE

REVISION
DATE 12–5–05
APPD MF / JJ

TABLE OF CONTENTS

1Ø PAD MOUNTED (DEAD FRONT) RADIAL
159–253
1–75 HDD
D1479273159

1Ø PAD MOUNTED (DEAD FRONT) LOOP
561–173
1–25 NDD
D106009

1Ø PAD MOUNTED (DEAD FRONT) LOOP W/TAP
–OR–
561–173
1–25 NDL
D107077

1Ø PAD MOUNTED (LIVE FRONT)
561–139
1–50 NEP
D5114055518

3Ø PAD MOUNTED (DEAD FRONT) RADIAL
561–407
1–75 HZB
D118892

3Ø PAD MONTED (DEAD FRONT) LOOP
561–410
1–750 HNB
D118893

3Ø PAD MOUNTED (LIVE FRONT)
561–233
1–1000 HAP
D5109955539

CLOSED DELTA (DEAD FRONT)
100–55
1–25 HDD
2–75 NDD
D2125576655

OPEN DELTA (LIVE FRONT)
100–54
1–50 HEP
1–75 HEP
D2125576655

1Ø SUBSURFACE
165–65
1–15 WS
S3240064800
3399

3Ø PAD MOUNTED OPEN DELTA (DEAD FRONT)
900–75
2–75 HDL
D3123560390

3Ø TERMINATOR (LIVE FRONT)
D3108560114

PADMOUNT SERVICE RESTORER
SCADA 98
57–4R
D123456
3–C
3–C
PMSR W/"N" TRANSFORMER

SIREN (FOR SAN ONOFRE)
OC01
D2461767

UG SCADA RTU
RTU 88
D116890

1Ø PAD MOUNTED (LIVE FRONT)
"YP" TRANSFORMER
1–BRGD
1–18A NX
220–66
D3125676082

DEAD FRONT TERMINATOR
D123456
3–4

1Ø TERMINATOR WITH .1–4
D3099560044
1–4

PME5 SWITCH
790–13
3–150A
D126194

4–WAY SWITCH
80–15
80–16
80–17
80–18

THROWOVER AT A SUBSTATION
VISTA SUB
12/4KV
AUTO
206–VS PREF
208–VS ALT

10 PAD MOUNTED "YP" (LIVE FRONT)
1–BRGD 3Ø
1–35A NX 3Ø
700–357
D3215457

PME3 SWITCH
228–7
D135790

FOR FIELD MAINTENANCE ONLY

5–WAY TRAYER WITH SCADA W/AUTOSECTIONALIZING AND/OR FAULT INTERRUPTION
SCADA 987
WAY–1 321–12 AE
WAY–2 321–13 F
WAY–3 321–11–432
WAY–4 321–14
WAY–5 321–15 AE

FAULT INDICATOR
800A

VAULT U2743171342

4–WAY TRAYER WITH SCADA W/AUTOSECTIONALIZING AND/OR FAULT INTERRUPTION
SCADA 987
WAY–1 321–12 AE
WAY–2 321–13 F
WAY–3 321–11–432
WAY–4 321–14

THROWOVER W/BUS BAR
109–11M
190– CUST1 PREF
110– CUST1 ALT
AUTO
CITY OF SD
CUST OWNED
U100311

109 CUST1 PREF: SWI GEAR B LEVEL – SIDE OF BLDG: 24 HR ACCESS PHONE – LOADING DOCK N/E CORNER OF BLDG:

PADMOUNT THROWOVER SWITCH PMH _6 STYLE
930–470 PREF
934–230 ALT
3–150A CL
AUTO
U.S. POSTAL SERVICE
SDG&E OWNED
Y100012

930–470 PREF: NORTHWEST CORNER OF FACILITY, NEXT TO OUTDOOR CUSTOMER SWITCHGEAR

THROWOVER W/O BUS BAR
426 –8 ALT
428 –18 PREF
MAN
CITY OF SD – POLICE DEPT
SDGE OWNED
D2013772340

428–18 PREF: E ST W/O 15TH BASEMENT "B"

4–WAY TRAYER, MANUAL
WAY–1 456–12
WAY–2 456–13
WAY–3 456–11–458
WAY–4 456–15

© 1998 - 2006 San Diego Gas & Electric Company. All rights reserved. Removal of this copyright notice without permission is not permitted under law.

Indicates Latest Revision | Completely Revised | New Page | Information Removed

REVISION
DATE 10–31–06
APPD TR/ MF

SDG&E ELECTRIC STANDARDS

GFMS
UNDERGROUND OPERATING MAP SYMBOL TABLE

OH 212.5
UG 3112.5

TABLE OF CONTENTS

PME-3



712-19 1000A
D130145

PME-3 WITH SCADA
& CAM-LINK CONNECTOR



1000A
RTU 178
SCADA 178
435-21 1000A
D131755
3-C

PME-9

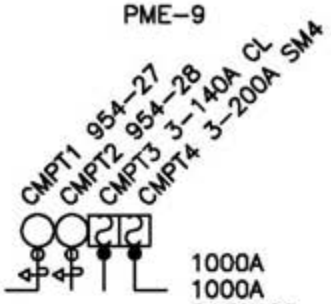

1000A
1000A
D130423

PME-9 WITH SCADA

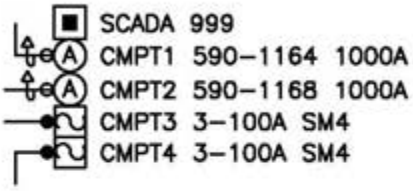

D131370

PME-10

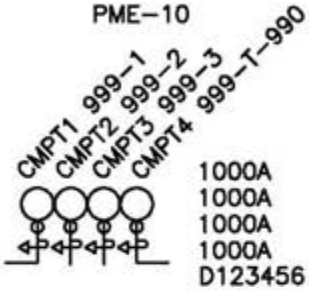

1000A
1000A
1000A
1000A
D123456

PME-10 WITH SCADA
W/AUTOSECTIONALIZING

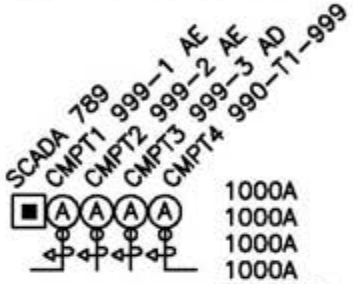

1000A
1000A
1000A
1000A
D123456

PME-11

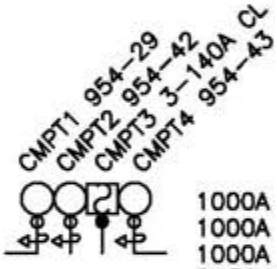

1000A
1000A
1000A
D130489

PME-11 WITH SCADA
W/AUTOSECTIONALIZING



1000A
1000A
1000A
RTU 789
D169065

FOR FIELD MAINTENANCE ONLY

3-WAY PADMOUNT SWITCH
W/GROUND

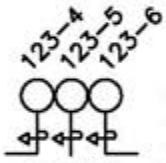

1000A
1000A
1000A
GROUND D123477

3-WAY PADMOUNT SWITCH
W/GROUND SCADA

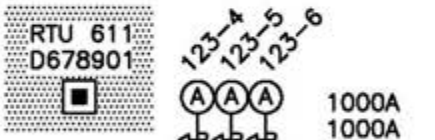

1000A
1000A
1000A
GROUND D123477

6-WAY SWITCH W/3 FAULT
INTERRUPTERS & SCADA

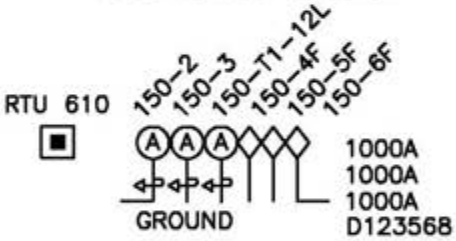

1000A
1000A
1000A
GROUND D123568

PME SOURCE TRANSFER SCADA

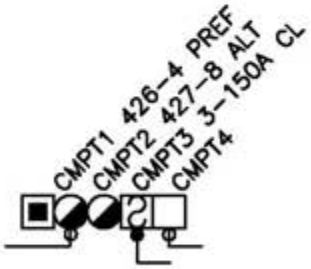

SCADA 56
MAN
SDGE OWNED
D100896

4-WAY SWITCH W/GROUND

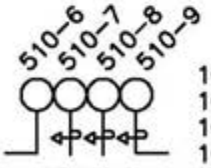

1000A
1000A
1000A
1000A
GROUND H775837

4-WAY SWITCH W/GROUND SCADA

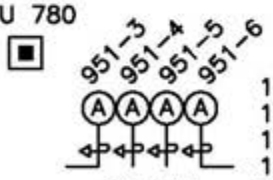

1000A
1000A
1000A
1000A
GROUND H785477

©1998 - 2005 San Diego Gas & Electric Company. All rights reserved. Removal of this copyright notice without permission is not permitted under law.

	X Indicates Latest Revision		Completely Revised		New Page		Information Removed

OH 212.6 UG 3112.6	SDG&E ELECTRIC STANDARDS GFMS UNDERGROUND OPERATING MAP SYMBOL TABLE	REVISION DATE 5-22-06 APPD TR/

TABLE OF CONTENTS

BOOST STATION (1 PHASE)
242-66B 100HR P76933

BRIDGED FUSE
CIR 242 3- BRGD JP433234

CAPACITOR STATION
CF - FIXED
CW - SWITCHED
CM - SWITCHED, IN MANUAL MODE
242-65 CW/CM 1200 KVAR P234990

BUCK STATION (3 PHASE)
242-543BU 3750 HHT P43440

OH SCADA CABLE
SCADA 45

POLE MOUNTED SUB
MISSION BEACH STEP-DOWN 12/4 KV P2321269883

GROUNDING BANK STATION
242-74GB 3-50 YF P99032

STREET LIGHT TRANSFORMER STATION
242-85RO 1-25R P45433

SUBSTATION 12/4
POWAY SUB 12/4

OVERHEAD STREET LIGHT
P00710

REGULATOR STATION (3 PHASE)
242-227G 100A P124450

CUSTOMER GENERATION STATION
CG01-16-601 242-16M JP321881

POLE
P567332

STUB POLE
P116740S

REGULATOR STATION (PHASE 1)
242-105G 25A JP55609

SWITCH (GANG)
242-43 JP44302

SECONDARY CIRCUIT & POLE LINE
3-#4 B. STRD N

SWITCH (HOOKSTICK)
242-12 P445760

AVIAN PROTECTION PLAN (APP) WILDLIFE SYMBOL
432-10 1-25 HE P123456

SINGLE PHASE TRANSFORMER STATION
242-65 1-15 HE P44212

SECONDARY CABLE POLE
P990321

TRANSMISSION POLELINE & CIRCUIT
CIRCUIT 903

STEP UP STATION
242-60SU 12000/2400/4160Y P114532

PRIMARY CABLE POLE
P667990

PRIMARY CIRCUIT & POLE LINE
CIR 242 3ØN 4-#2 5005 N

STEP DOWN STATION
242-143SD 12000/2400/4160Y P445320

THREE PHASE TRANSFORMER STATION
242-145 3-75HF P554354

PRIMARY METERING STATION
242-60M P993111

SUPERVISORY CABLE

TERMINATION (SECONDARY DEAD ENDS)
JP556753

FOR FIELD MAINTENANCE ONLY

SERVICE RESTORER
242-20R P44358

SUBSTATION 69/12
ASH SUB 69/12

TRANSMISSION DOUBLE POLE
Z557090

TRANSMISSION POLE
Z554354

TRANSMISSION TOWER
Z113454

FUSE (CUTOUT)
CIR 242 3-30A P334143

ELECTRONIC SECTIONALIZER (CUTOUT)
CIR 455 3-100A P19926

SCADA ANTENNA POLE
P123456A

OH SCADA RTU POLE
SCADA 62 P123456A

DPQM
107-2 107-DPQM P123456

LOADBREAK GANG OPERATED SWITCH
58-23-L P234567

FT 58
FLYING TAP

PRIMARY DEAD END (MULTIPLE CIRCUITS SINGLE CIRCUIT OPEN)
CIR 242 OPEN CIR 242 OPEN P435431

PRIMARY DEAD END (MULTIPLE CIRCUITS)
CIR 169 OPEN CIR 242 OPEN P89000

THREE PHASE TRANSFORMER STATION (DBL POLE)
242-241 3-37.5 HGT JP44530

THROWOVER AT A SUBSTATION
AUTO
206-VT PREF
208-VT ALT
VISTA SUB 12/4KV

SCADA MATE OH GROUP SWITCH
SCADA 96 715-16 715-1 P79699

© 1998 - 2005 San Diego Gas & Electric Company. All rights reserved. Removal of this copyright notice without permission is not permitted under law.

	Indicates Latest Revision	Completely Revised	New Page	Information Removed

REVISION
DATE 12-5-05
APPD TR/ MF

SDG&E ELECTRIC STANDARDS

GFMS
OH STANDARD FACILITY MAP SYMBOL TABLE

OH 212.7
UG 3112.7

PAD MOUNTED SUB

JOHNSON STEP-DOWN 12/4 KV D104329

SERVICE POINT

SP

BOOST STATION (3 PHASE)

242-231B 3750 HHR D2234375400

CUSTOMER GENERATION

CG

M

CG01-310-599 242-439M D2345267898

DUCT BANK SECONDARY

ATLAS TEXT

23.11E

DUCT BANK (PRIMARY)

1 DB 3" 210'

CAPACITOR CW SWITCHED CM - SWITCHED, IN MANUAL MODE

242-55CW 1200 KVAR D2617473210

DUCT BANK (STREET LIGHT)

PAD

D2335479431

STEP DOWN STATION (3 PHASE)

242-89SD 12000/7200 D2233175212

SWITCH ON-OFF

242-21 H2133276443 3314

DUCT BANK (SUPERVISORY)

PRIMARY CIRCUIT

CIR 242 2ØN #2 PECN AL XY 120' 1 DB 3"

SUBSURFACE ENCLOSURE

S2341175331 3399

DUCT BANK (TRANSMISSION) & CIRCUIT

CIR 696

PRIMARY HANDHOLE

H2345977612 3316

TERMINATOR

T

D2312275112

BRIDGED FUSE

CIR 242 3-BRGD D2362174182

PRIMARY METERING STATION W/CUSTOMER OWNED STRUCTURE

M

242-439M D2617473210

SWITCH-FUSE (PAD MOUNTED)

CIR 242 2-80A 242-10 D2212376221

FUSE CABINET

CIR 242 2-150A D2241472001

REGULATOR STATION (3 PHASE)

242-70G 200A D2432176221

THREE PHASE TRANSFORMER (OPEN DELTA)

242-231 1-50 NDD 1-75 NDD D1983275321

FUSED ELBOW

CIR 242 3-30A F.E. H2362174162

SECONDARY CIRCUIT

3/0 SIDA

THREE PHASE TRANSFORMER

242-121 1-150 HMP D2112572121

GROUP SWITCH

242-8 242-9 242-10 242-11 M2578668752 3324

SECONDARY HANDHOLE

SUBSURFACE TRANSFORMER (THREE PHASE)

A7-3S 1-100WS 1-1 15WS S1990272028 3399 3-T

MANHOLE

M2354622132 3324

SINGLE PHASE TRANSFORMER

242-1021 1-25 HDD D2001275843

THREE PHASE TRANSFORMER (CLOSED DELTA)

242-71 1-25 HDD 2-75 NDD D2315476411

OPEN (CALLOUT ONLY)

CIR 242 OPEN CIR 242 OPEN H2234576212 3314

STEP UP STATION (1 PHASE)

242-43SU 2400/7200 D2376377291

VAULT

U2311476125

UNDERGROUND STREETLIGHT

2344341GM7 (OLD) L10099GG7 (NEW)

THROWOVER

100-2 ALT 100-1 PREF M111111 3324

UG SCADA CABLE

SCADA CABLE 100' 1 DB 4"

PADMOUNT SERVICE RESTORER

R

57-4R D123456

PME3

A

SCADA 99 228-7 D135790

GROUPS SWITCH W/SCADA

A

SCADA 56 115-8 115-7 115-6 115-5 U1985071902

SCADA RTU

RTU 88 D105276

PME5 SWITCH

N

790-13 3-600A D126194

Indicates Latest Revision		Completely Revised		New Page		Information Removed

OH 212.8
UG 3112.8

SDG&E ELECTRIC STANDARDS

GFMS
UG STANDARD FACILITY MAP SYMBOL TABLE

REVISION
DATE 12-9-05
APPD TR/ MF

TABLE OF CONTENTS

5-WAY TRAYER WITH SCADA

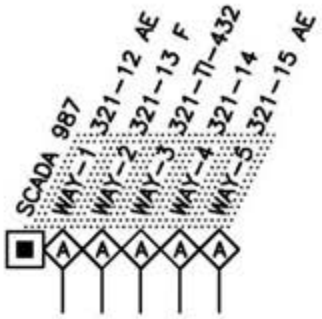

4-WAY TRAYER WITH SCADA

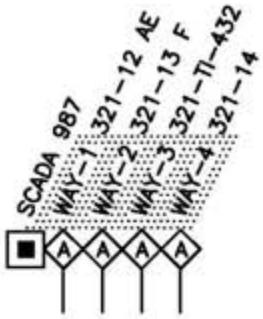

4-WAY TRAYER, MANUAL

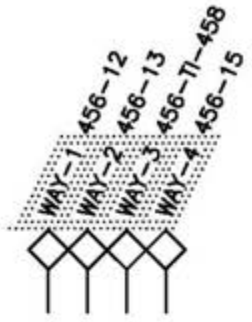

FOR FIELD MAINTENANCE ONLY

TABLE OF CONTENTS

© 1998 - 2006 San Diego Gas & Electric Company. All rights reserved. Removal of this copyright notice without permission is not permitted under law.

	X	Indicates Latest Revision		Completely Revised	X	New Page		Information Removed

REVISION	SDG&E ELECTRIC STANDARDS	
DATE 10-31-06	GFMS UG STANDARD FACILITY MAP SYMBOL TABLE	OH 212.9 UG 3112.9
APPD TR/ MF		

SCOPE: THIS STANDARD SHOWS THE INSTALLATION OF A POLE GUARD RAIL.

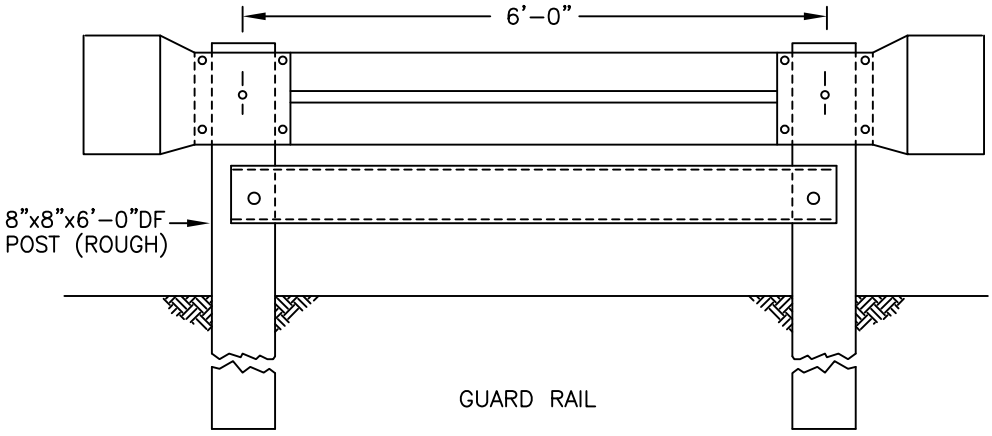

GUARD RAIL

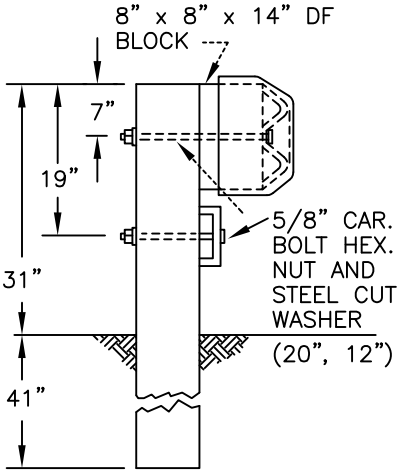

END VIEW

FOR FIELD MAINTENANCE ONLY

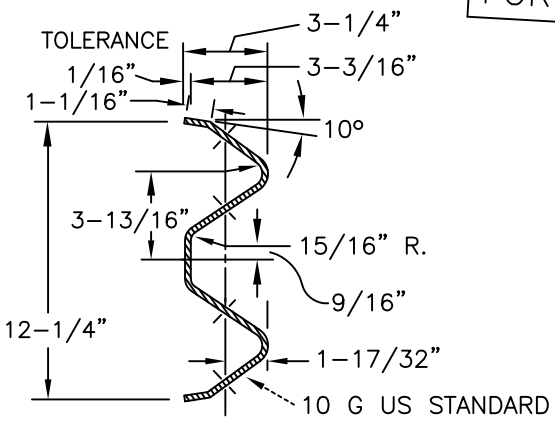

SECTION RAIL BEAM

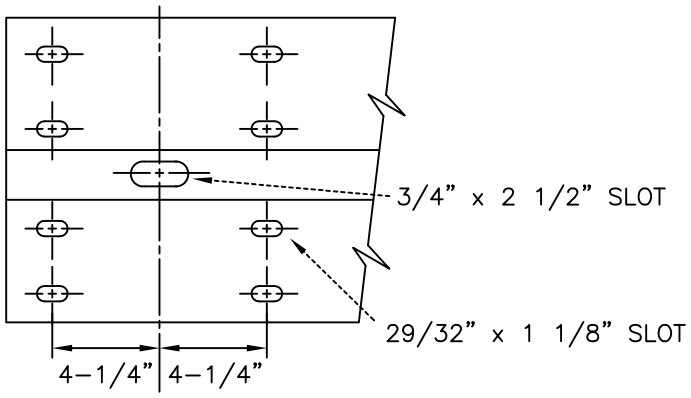

℄ POST BOLT SLOT

RAIL BEAM DRILLING
5/8" x 1-1/4" BUTTONHEAD OVAL SHOULDER
BOLTS WITH HEX. NUTS, 4 PER TERMINAL

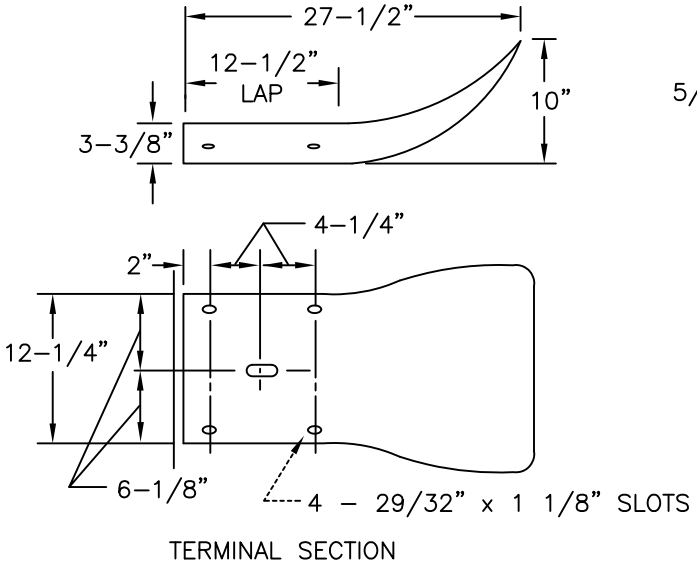

TERMINAL SECTION

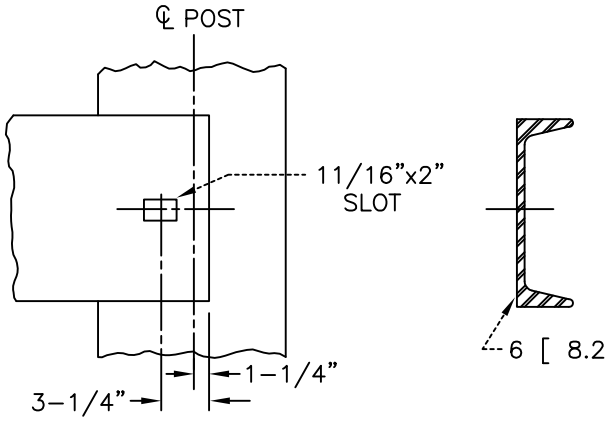

CHANNEL

NOTES:

- POLE GUARD RAILS ARE DESIGNED TO BE INSTALLED IN PUBLIC R/W'S, NOT PRIVATE PROPERTY, MAINLY TO MAKE A POLE MORE VISIBLE. THEY HAVE LITTLE VALUE IN STOPPING A VEHICLE, AND SHOULD HAVE LIMITED USE.
- THE DISTRIBUTION OR TRANSMISSION ENGINEER SHALL SPECIFY OR APPROVE EACH INSTALLATION.

© 1998 - 2015 San Diego Gas & Electric Company. All rights reserved. Removal of this copyright notice without permission is not permitted under law.

	SDG&E ELECTRIC STANDARDS	
DATE 3-2-84 APPD PLA / RDG	POLE GUARD RAIL	218

TABLE OF CONTENTS

SCOPE: THIS STANDARD ILLUSTRATES VARIOUS METHODS OF 12KV, SINGLE CIRCUIT TRANSPOSITION.

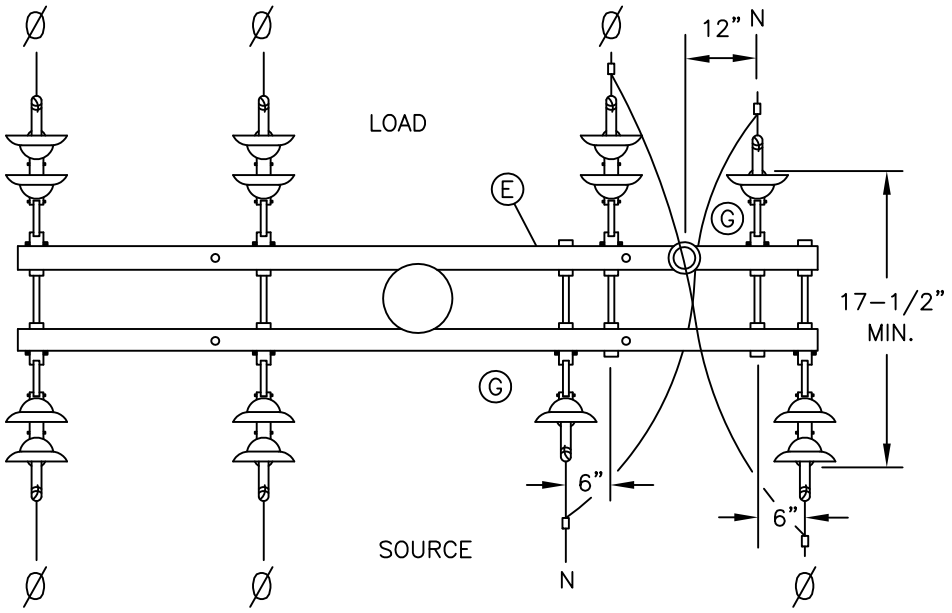

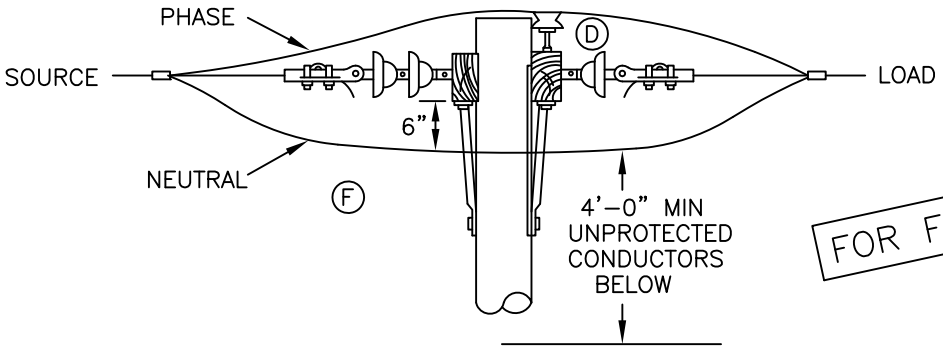

FOR FIELD MAINTENANCE ONLY

SINGLE POLE–NEUTRAL/PHASE WIRE TRANSPOSITION (PREFERRED)

FIGURE 1

Ⓒ

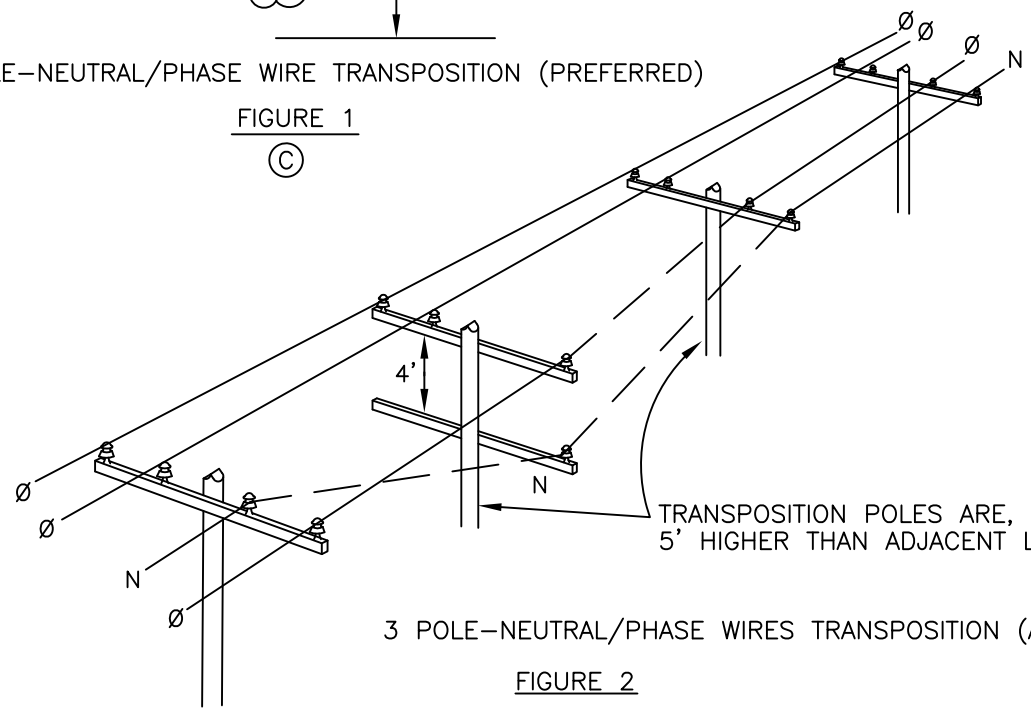

TRANSPOSITION POLES ARE, NORMALLY,
5' HIGHER THAN ADJACENT LINE POLES

3 POLE–NEUTRAL/PHASE WIRES TRANSPOSITION (ALTERNATE)

FIGURE 2

Ⓒ

© 1998 - 2013 San Diego Gas & Electric Company. All rights reserved. Removal of this copyright notice without permission is not permitted under law.

	Indicates Latest Revision	Completely Revised	New Page	Information Removed

REVISION DATE 8–29–2013 APPD TQ / DW	SDG&E ELECTRIC STANDARDS 12KV SINGLE CIRCUIT TRANSPOSITION	269.1

TABLE OF CONTENTS

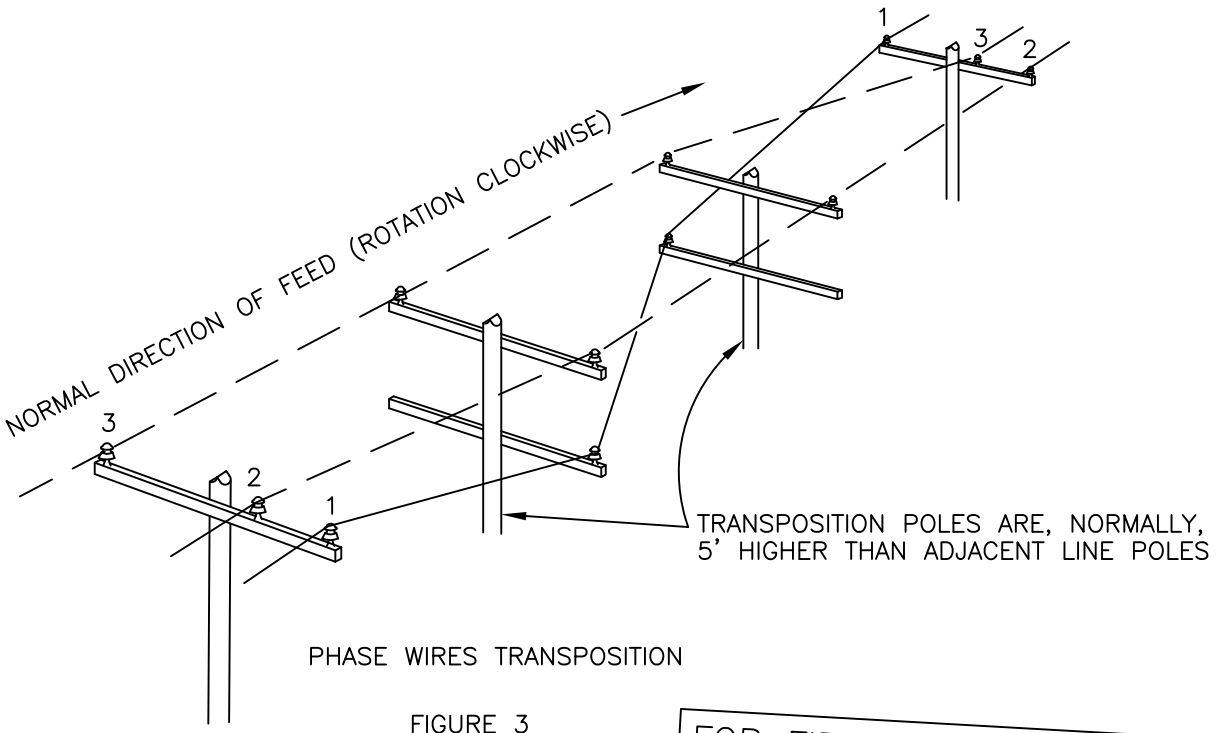

PHASE WIRES TRANSPOSITION

FIGURE 3
(B)

FOR FIELD MAINTENANCE ONLY

INSTALLATION:

A. ALL PROPOSED 12KV LINE EXTENSIONS CREATING PARALLELS WITH EXISTING OPEN WIRE COMMUNICATION LEADS SHALL BE REFERRED TO THE TELEPHONE COMPANY FOR COORDINATION OF TRANSPOSITIONS IN THE SUPPLY AND COMMUNICATION LINES.

(B) BUILDING FOUR WIRE, "PHASE WIRE ONLY" TRANSPOSITION, (FIG. 3), OR ADDING FOURTH WIRE (NEUTRAL) TO EXISTING TRANSPOSITION, REQUIRES NO DEVIATION.

(C) SINGLE POLE–NEUTRAL/PHASE WIRE TRANSPOSITION (FIG. 1) IS PREFFERED OVER THREE POLE NEUTRAL/PHASE WIRE TRANSPOSITION (FIG. 2).

(D) ON SINGLE POLE–NEUTRAL/PHASE WIRE TRANSPOSITION (FIG. 1), ALWAYS JUMPER PHASE WIRE OVER TOP OF ARM AND TIE INTO PIN AND INSULATOR.

(E) SINGLE POLE–NEUTRAL/PHASE WIRE TRANSPOSITION (FIG. 1) REQUIRES CROSSARM MINIMUM OF 10' IN LENGTH. IF TRANSPOSITION IS EXTENSION FROM EXISTING 8' CROSSARMS, CHANGE OUT TO 10' CROSSARMS.

(F) IN SINGLE POLE–NEUTRAL/PHASE WIRE TRANSPOSITION (FIG. 1), INSTALL NEUTRAL JUMPER NO LESS THAN 6" FROM BOTTOM OF CROSSARM.

(G) ON ALL TRANSPOSITIONS, MARK CROSSARM NEUTRAL POSITION WITH "PN" SIGN, EVEN THOUGH SIGN IS NOT REQUIRED BY STANDARD 208.

© 1998 - 2010 San Diego Gas & Electric Company. All rights reserved. Removal of this copyright notice without permission is not permitted under law.

	Indicates Latest Revision		Completely Revised		New Page		Information Removed

	SDG&E ELECTRIC STANDARDS	REVISION
269.2	12KV SINGLE CIRCUIT TRANSPOSITION	DATE 1-1-93 APPD PSA 1/2009

TABLE OF CONTENTS

TABLE OF CONTENTS

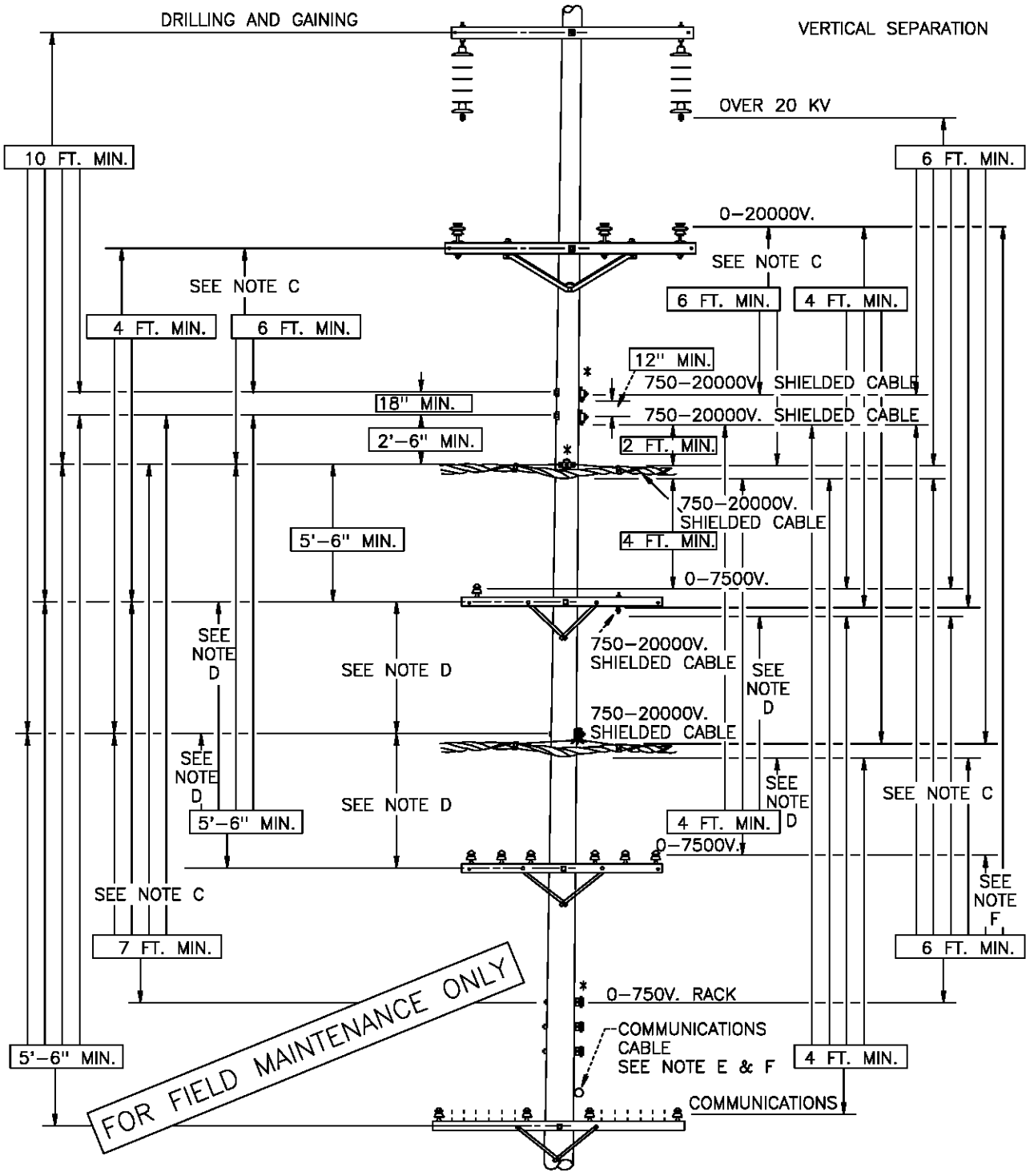

NOTES:

A. DIFFERENCES DUE TO SAG OF DIFFERENT SIZE CONDUCTORS MUST BE COMPENSATED FOR AT POINTS OF SUPPORT.

B. VERTICAL SEPARATION OF UNPROTECTED SUPPLY CONDUCTORS FROM 750–7500V SHIELDED AERIAL CABLE WHICH HAS BEEN BONDED AND EFFECTIVELY GROUNDED AS PER GENERAL ORDER 95, RULE 57.8

(C) INSTALLATION OF GUARD ARMS PERMITS A REDUCTION OF 2 FT. (* REPRESENTS GUARD ARM PLACEMENT). (G.O. 95, RULE 57.4–F)

(D) VERTICAL SEPARATION MAY BE REDUCED 2 FT. IF OPEN WIRE IS 0–750V

(E) 6 FT MINIMUM CLEARANCE IS REQUIRED TO POWER CONDUCTORS.

(F) GUARD ARMS MAY BE USED TO REDUCE REQUIRED CLEARANCE BY 2 FT FOR CONDUCTORS OR CABLES OF 0–750V.

DATE 2–18–74 APPD PDA/DSG	SDG&E ELECTRIC STANDARDS AERIAL CABLE, VERTICAL CLEARANCE FROM OPEN WIRE CONDUCTORS ON SAME POLE	299.201 SUPERCEDES 223 (1–1–98)

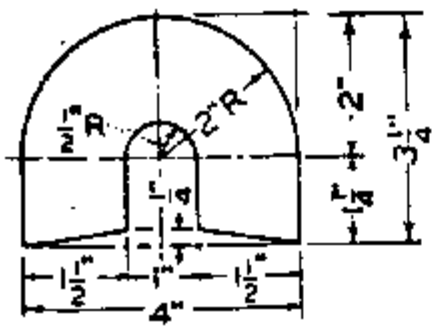

ITEM NO. 1
FOR 0-600 V VERTICAL RUNS
MAX. CONDTR. SIZE 3-#1/0

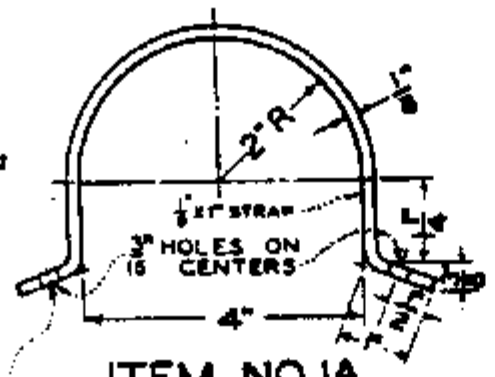

ITEM NO. 1A
USE GALV. 10D COMM. NAILS

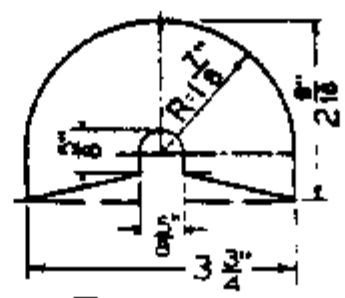

ITEM NO. 2
FOR GROUND WIRE

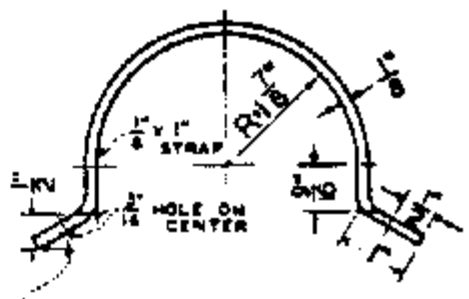

ITEM NO. 2A
USE GALV. 10D COMM NAILS

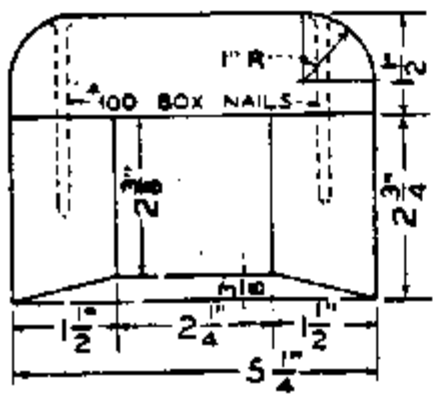

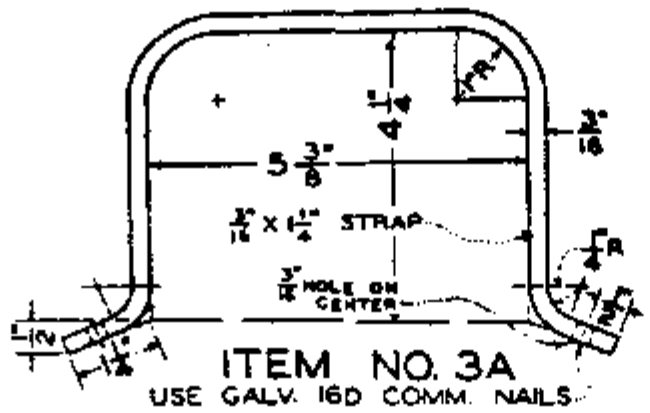

ITEM NO. 3A
USE GALV. 16D COMM. NAILS

ITEM NO. 3, FOR CABLE AND CONDUITS UP TO 1½" DIAMETER

FOR FIELD MAINTENANCE ONLY

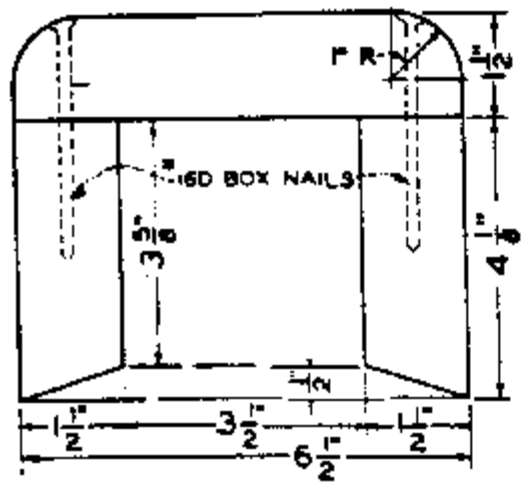

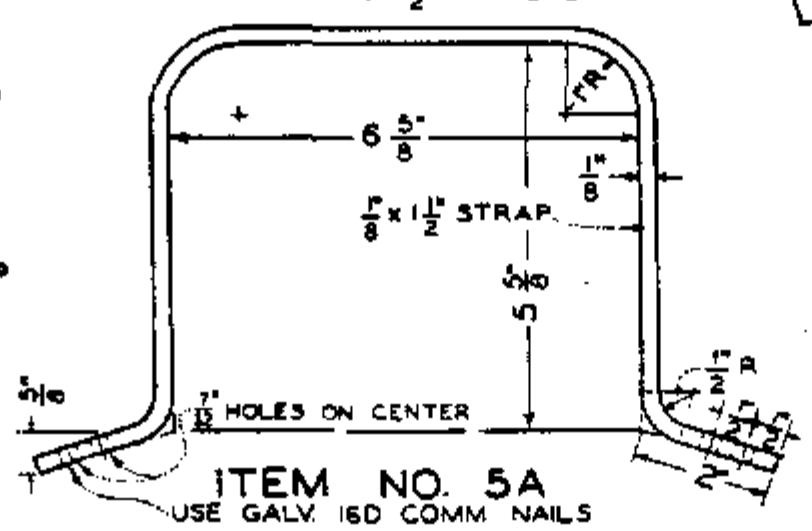

ITEM NO. 5A
USE GALV. 16D COMM NAILS

ITEM NO. 5, FOR CABLE AND CONDUITS 1¾" TO 2½" DIAMETER

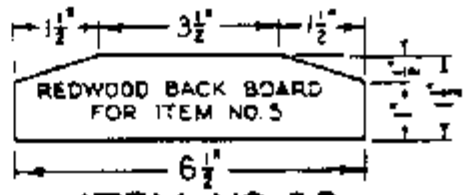

ITEM NO. 5B

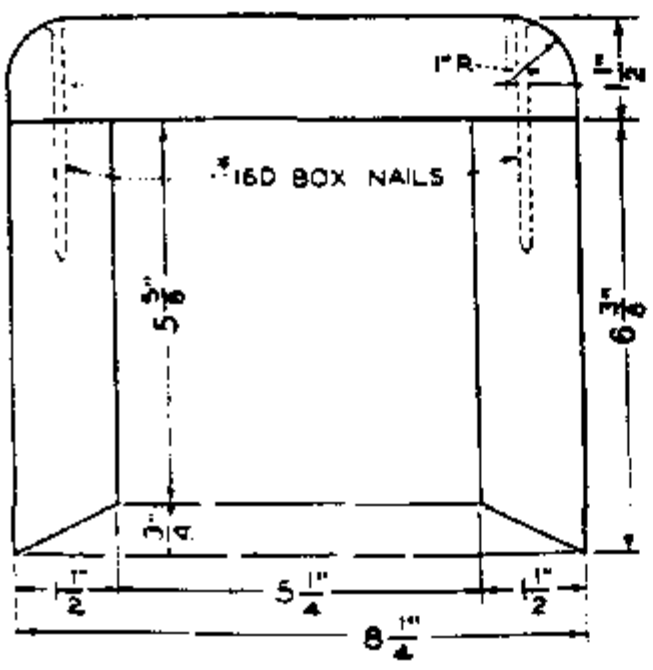

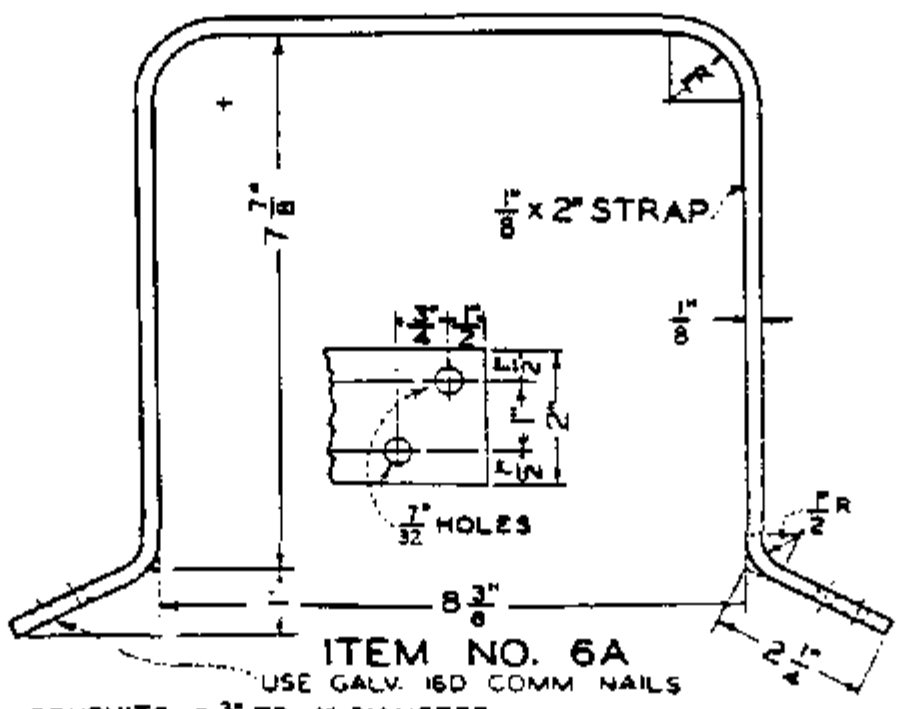

ITEM NO. 6A
USE GALV. 16D COMM NAILS

ITEM NO. 6, FOR CABLE AND CONDUITS 2¾" TO 4" DIAMETER

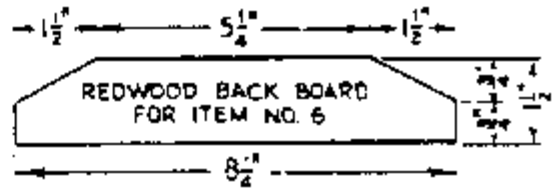

ITEM NO. 6B

A. ITEMS 1, 3, 5 & 6 TO BE MAKE FROM SELECT REDWOOD HEART IN FULL 8' LENGTHS.
B. ITEM 2 TO BE MADE FROM SELECT REDWOOD HEART IN FULL 4' LENGTHS.
C.
D. ITEMS 5B & 6B TO BE MADE FROM SELECT REDWOOD HEART IN FULL 10' LENGTHS.
F. GALV. NAILS IN EDGES OF BOX COVERS TO BE SPACED 12" APART.

ITEM	DESCRIPTION	STOCK NO.	ITEM	DESCRIPTION	STOCK NO.
1	MOULDING	487232	5	MOULDING	487072
1A	STRAP	697024	5A	STRAP	697056
2	MOULDING, FIELD MAINTENANCE ONLY		5B	MOULDING, BACK BOARD	486976
2A	STRAP, FIELD MAINTENANCE ONLY		6	MOULDING	487104
3	MOULDING, FIELD MAINTENANCE ONLY	487040	6A	STRAP	697088
3A	STRAP, FIELD MAINTENANCE ONLY	697120	6B	MOULDING, BACK BOARD	487008

DATE 12-10-82
APPD JAF / GRH

SDG&E ELECTRIC STANDARDS

PROTECTIVE COVERINGS
MOULDINGS AND STRAPS

399.401
SUPERSEDES
143 (12-10-82)

TABLE OF CONTENTS

FOR FIELD MAINTENANCE ONLY

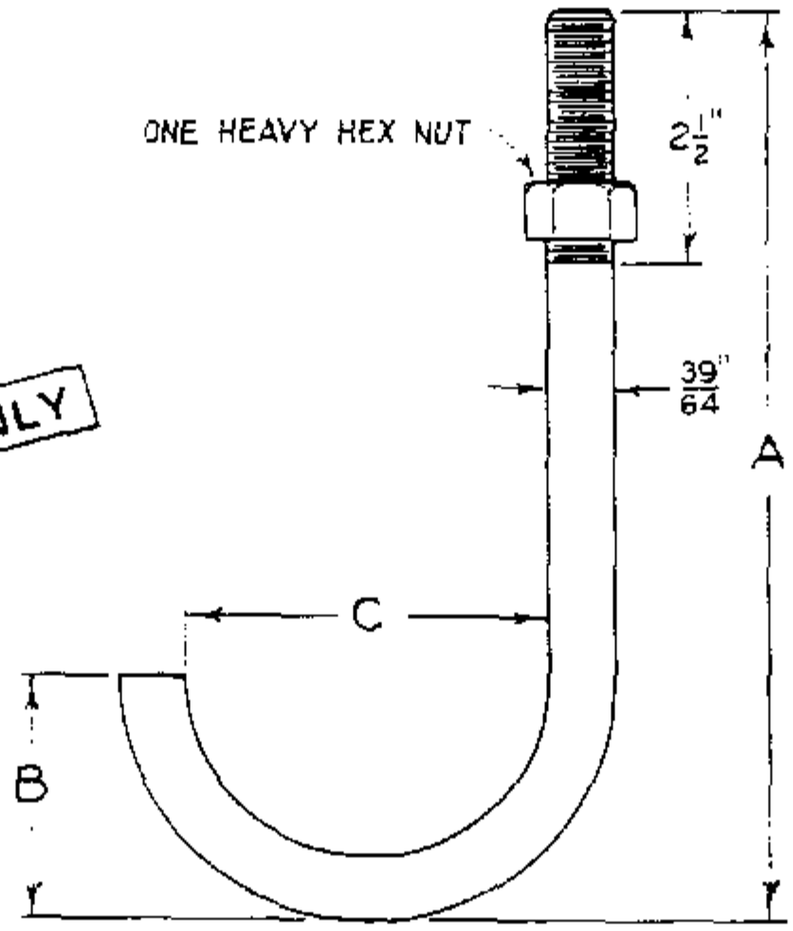

"J" BOLT

FOR SECURING PIPE RISERS TO SUPPORT ARMS ON CABLE POLES.

CONDUIT SIZE INCHES	DIMENSIONS - INCHES			DESCRIPTION	STOCK NO.	CONDUIT SIZE INCHES	DIMENSIONS - INCHES			DESCRIPTION	STOCK NO.
	A	B	C				A	B	C		
2	8	1 7/8	2 7/16		-						
3	9	2 3/8	3 9/16		151360						
4	10	2 7/8	4 9/16		151392						

NOTE:

- ABOVE ITEM TO BE HOT DIP GALVANIZED PER A.S.T.M. SPECS. A153 - 53.

399.402 SUPERSEDES 144 (12-10-82)	SDG&E ELECTRIC STANDARDS	DATE 12-10-82 APPD WT/DRH
	'J' BOLT FOR CABLE POLE RISERS	

TABLE OF CONTENTS

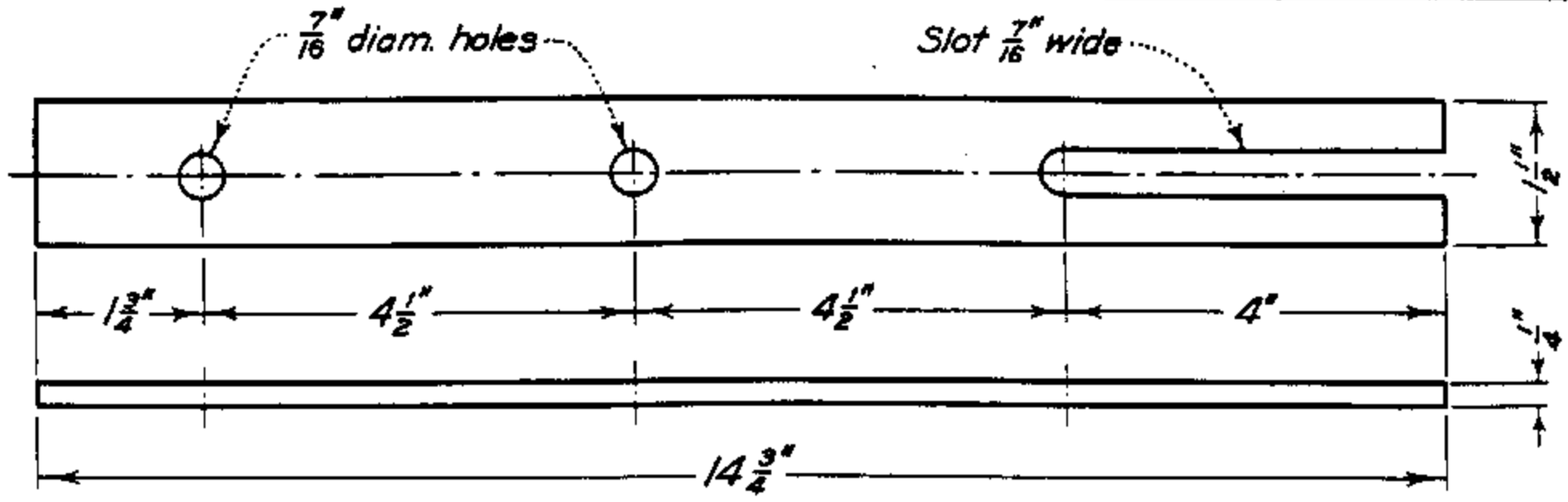

ITEM NO. 1
G. I. STRAP FOR MTG. 15 OR 25 KVAR CAPTR. UNITS BET. X-ARMS

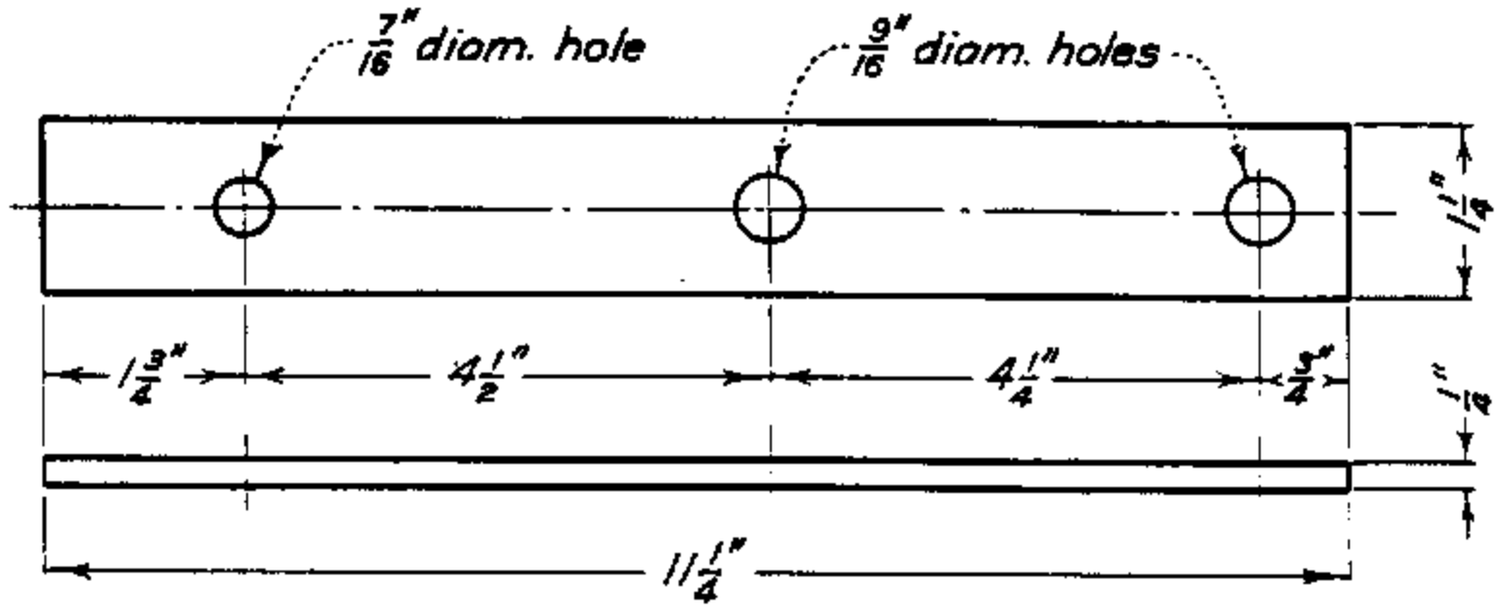

ITEM NO. 2
G. I. STRAP FOR MTG. A 15 OR 25 KVAR CAPTR. UNIT ON FACE OF X-ARM

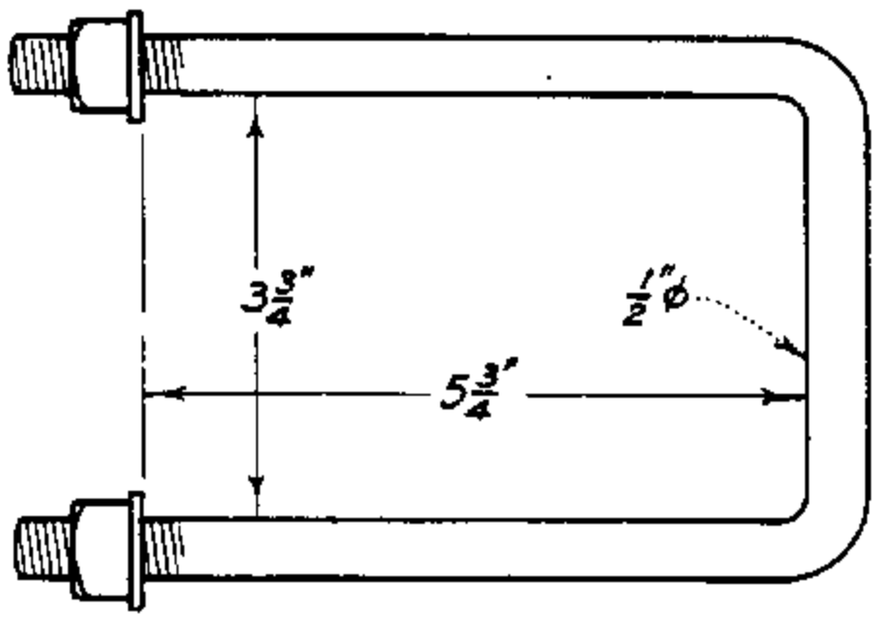

ITEM NO. 3
HORIZ. MTG. "U" BOLT FOR ITEM NO. 2
FOR 3¾" X 5¾" CROSSARMS

FOR FIELD MAINTENANCE ONLY

ITEM	DESCRIPTION	STOCK NO.	ITEM	DESCRIPTION	STOCK NO.
1	STRAP, FIELD MAINTENANCE ONLY	697216			
	STRAP	697184			
3	BOLT, 'U'	158432			

SDG&E ELECTRIC STANDARDS

DATE 12-10-82
APPD [illegible]/DRH

CAPACITOR MOUNTING STRAP

399.501
SUPERSEDES
157 (12-10-82)

TABLE OF CONTENTS

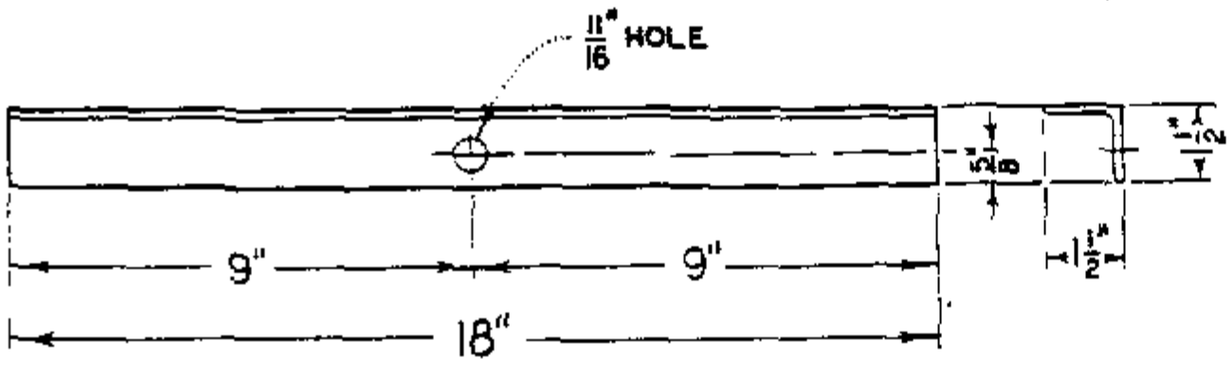

ITEM NO. 1
1½" X 1½" X 3/16" Angle, Galv.

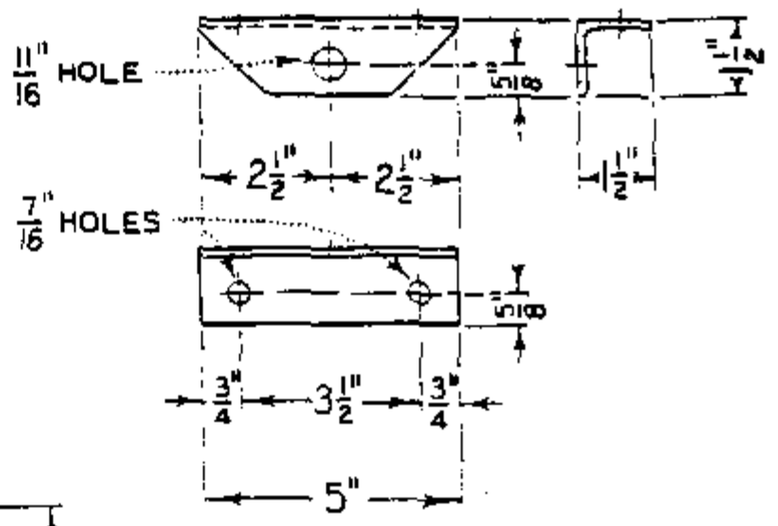

ITEM NO. 2
1½" X 1½" X 3/16" Angle, Galv.

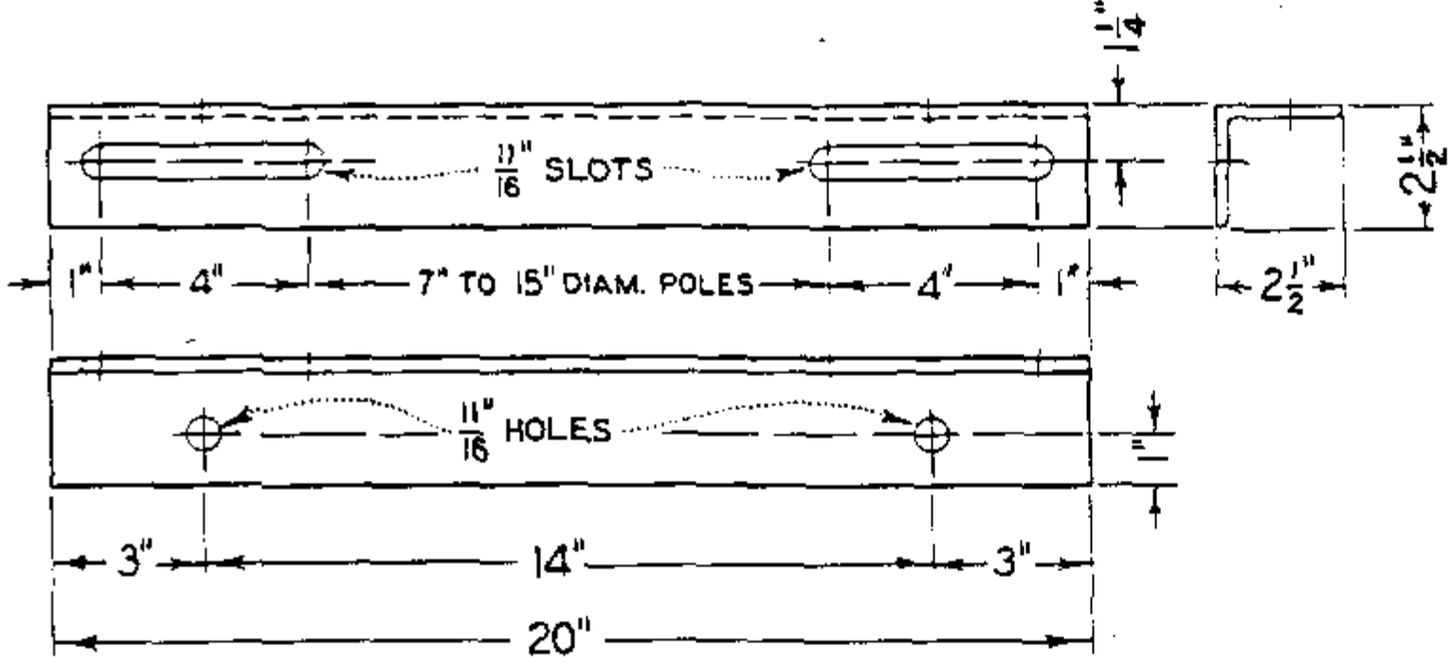

ITEM NO. 3
2½" X 2½" X ¼" Angle, Galv.

TABLE OF CONTENTS

FOR FIELD MAINTENANCE ONLY

NOTE:

A. STOCK NUMBER 166464 CONSIST OF ITEMS 1, 2 & 3 ABOVE.

399.502 SUPERSEDES 158 (12-10-82)	SDG&E ELECTRIC STANDARDS MOUNTING BRACKETS	DATE 12-10-82 APPD

SCOPE: THIS STANDARD LISTS VARIOUS TYPES OF CHEMICALLY TREATED POLES WITH THEIR USABLE STRENGTHS, WEIGHTS AND PHYSICAL DIMENSIONS.

LENGTH FT	CLASS	HEIGHT FT	TREATMENT (H) STOCK NUMBER (F) NATURAL	CREOSOTE	(F) GRAY	WIND LOADING USABLE STRENGTH FT. - LBS. SF=4	SF=3	SF=2	VERTICAL LOADING USABLE STRENGTH LBS. SF=4	SF=3	SF=2	WEIGHT (F) LBS	(G) LBS	MIN TOP DIA IN	DIA 6' FROM BUTT DOUG. FIR	POND. PINE
25	1	20.5	559984	550910	551966	19677	26672	40663	26944	35982	54060	600	846	8.6	10.7	12.0
	2		(C)	(C)	-	15925	21640	33070	20354	27186	40849	521	693	8.0	10.0	"
	3		(C)	(C)	552034	13191	17964	27510	14965	19991	30044	456	576	7.3	9.4	10.3
	4		-	(C)	-	10727	14650	22497	11037	14748	22169	-	490	6.7	8.8	9.5
	5		550432	551760	552062	8292	11372	17530	7737	10343	15555	342	419	6.1	8.1	8.9
	6		-	(C)	-	5914	8170	12680	4908	6567	9884	-	360	5.4	7.3	8.1
30	1	25.0	550000	550912	551970	24368	33159	50742	21222	28365	42651	806	093	8.6	11.6	12.7
	2		(C)	(C)	-	19416	26510	40699	15899	21257	31972	707	924	8.0	10.8	11.9
	3		550336	551472	552038	16255	22249	34239	11793	15773	23731	612	787	7.3	10.2	11.1
	4		-	(C)	-	12484	17175	26557	8418	11265	16959	-	670	6.7	9.4	10.3
	5		550448	551776	552066	10146	14012	21743	6104	8172	12308	464	564	6.1	8.8	9.5
	6		-	(C)	-	7416	10325	16144	3936	5275	7954	-	470	5.4	8.0	8.9
35	1	30.0	550016	550928	551974	29226	39958	61422	16764	22433	33769	1041	1340	8.6	12.4	13.5
	2		(C)	(C)	-	23598	32387	49966	12672	16965	25550	908	1148	8.0	11.6	12.7
	3		550352	551488	552042	18757	25859	40064	9121	12219	18415	787	987	7.3	10.8	11.9
	4		-	(C)	-	14560	20196	31468	6563	8800	13275	-	858	6.7	10.0	11.0
	5		550464	551792	552070	11074	15476	24278	4582	6152	9291	597	736	6.1	9.2	10.2
	6		-	(C)	-	8863	12467	19675	3120	4195	6345	-	635	5.4	8.6	9.5
40	1	34.5	550032	550944	551978	33331	45779	70674	14074	18858	28425	1300	1610	8.6	13.1	14.3
	2		(C)	(C)	-	27171	37477	58090	10533	14123	21303	1129	1387	8.0	12.2	13.5
	3		550368	551504	552046	21827	30254	47110	7768	10424	15736	984	1199	7.3	11.5	12.6
	4		-	(C)	-	17192	23987	37576	5639	7576	11450	-	1042	6.7	10.7	11.6
	5		550480	551808	552074	13251	18535	29403	3976	5350	8099	745	905	6.1	9.9	10.8
	6		-	(C)	-	9899	14077	22434	2605	3515	5336	-	787	5.4	9.1	10.0
45	1	39.0	550048	550960	551982	36856	50881	78930	11968	16062	24250	1573	1899	8.6	13.7	15.1
	2		(C)	(C)	-	30245	41954	65371	9155	12296	18578	1372	1633	8.0	12.9	14.2
	3		550384	551520	552050	23099	32290	50672	6446	8671	13123	1189	1422	7.3	11.9	13.2
	4		-	(C)	-	18242	25701	40619	4695	6327	9589	-	1234	6.7	11.1	12.3
	5		550496	551824	552078	14114	20074	31994	3320	4484	6813	904	1089	6.1	10.3	11.5
50	1	43.5	550064	550976	551986	40595	56327	87793	10402	13987	21158	1873	2209	8.6	14.3	15.8
	2		(C)	(C)	-	32663	45605	71489	7871	10596	16044	1630	1892	8.0	13.4	14.8
	3		550400	551536	552054	25102	35356	55863	5568	7510	11395	1417	1645	7.3	12.4	13.8
	5		550512	551840	552082	15521	22287	35820	2891	3920	5978	1075	1277	6.1	10.8	11.9
55	1	48.0	550080	550992	551990	43538	60768	95228	9063	12217	18525	2193	2558	8.6	14.8	16.4
	2		(C)	(C)	-	34308	48274	76207	6882	9290	14105	1908	2193	8.0	13.9	15.4
	3		550416	551552	552058	27190	38588	61384	4892	6618	10071	1664	1880	7.3	12.9	14.3
	4		-	(C)	-	21642	31020	49776	3589	4869	7428	-	1653	6.7	12.1	13.4
	5		(C)	(C)	-	15873	23125	37628	3160	4286	6539	-	1480	6.1	-	-

INSTALLATION:

A. ULTIMATE FIBER STRESS 8000 PSI FOR DOUGLAS FIR AND 6000 PSI FOR PONDEROSA PINE.
B. BENDING MOMENT DUE TO WIND ON THE POLE HAS BEEN DEDUCTED FROM TOTAL POLE STRENGTH.
(C) DENOTES NOT A STOCK ITEM, BUT IS IN SERVICE.
D. USE SALVAGED CREOSOTE POLES IN PREFERENCE TO CELLON TREATED POLES IN APPROVED LOCATIONS.
(F) PRESSURE TREATMENT DONE BY THE CELLON OR DOW PROCESS.
(G) CREOSOTE TREATED POLES.

FOR FIELD MAINTENANCE ONLY

REFERENCE:

(H) SEE PAGE 354.1 TO 354.3 FOR PENTA-IN-OIL TREATED POLES.

TABLE OF CONTENTS

LENGTH FT	CLASS	HEIGHT FT	TREATMENT Ⓗ STOCK NUMBER Ⓕ NATURAL	CREOSOTE	Ⓕ GRAY	WIND LOADING USABLE STRENGTH FT. - LBS. SF=4	SF=3	SF=2	VERTICAL LOADING USABLE STRENGTH LBS SF=4	SF=3	SF=2	WEIGHT Ⓕ LBS	Ⓖ LBS	MIN TOP DIA IN	DIA 6' FROM BUTT DOUG. FIR	POND. PINE
60	1	53.0	550096	551008	551994	47095	66158	104285	7845	10610	16139	2535	2949	8.6	15.3	17.0
	2		550224	Ⓒ	-	37271	52832	83953	5888	7978	12158	2204	2515	8.0	14.3	16.1
	3		Ⓒ	Ⓒ	-	29687	42481	68069	4264	5792	8848	1923	2146	7.3	13.4	14.8
	5		Ⓒ	Ⓒ	-	16933	25009	41162	2549	3497	5393	-	1888	6.7	11.5	12.6
65	1	57.5	550112	551024	551998	50278	71052	112600	7004	9509	14519	2892	3431	8.6	15.8	17.5
	2		Ⓒ	Ⓒ	-	39965	57033	91170	5283	7185	10989	2516	2855	8.0	14.8	16.4
	3		Ⓒ	Ⓒ	-	31115	44941	72590	3779	5156	7910	2193	2405	7.3	13.8	15.3
	5		Ⓒ	Ⓒ	-	17827	26675	44371	2259	3121	4846	-	2152	6.7	11.9	13.4
70	1	62.5	550128	551040	552002	52892	75325	120190	6109	8338	12796	3268	3948	8.6	16.2	18.0
	2		Ⓒ	Ⓒ	-	43163	62049	99823	4693	6414	9855	2846	3231	8.0	15.3	16.9
	3		Ⓒ	Ⓒ	-	33760	49166	79980	3371	4623	7125	2478	2687	7.3	14.3	15.8
	5		Ⓒ	Ⓒ	-	18890	28677	48252	1901	2656	4166	-	2405	6.7	12.1	13.5
75	1	67.0	550144	551056	552006	56261	80606	129296	5546	7608	11730	3659	4442	8.6	16.7	18.5
	2		Ⓒ	Ⓒ	-	43880	63719	103396	4152	5708	8821	3196	3619	8.0	15.6	17.3
	3		Ⓒ	Ⓒ	-	34292	50537	83028	2984	4119	6389	-	3000	7.3	14.6	16.2
80	1	72.0	550160	551072	552010	60261	86901	140182	4975	6869	10655	4074	5013	8.6	17.2	18.9
	2		Ⓒ	Ⓒ	-	47191	69036	112727	3739	5175	8046	3553	4050	8.0	16.1	17.8
85	1	76.5	550176	551088	552014	61163	89003	144684	4424	6161	9633	4514	5640	8.6		19.4
	2		Ⓒ	Ⓒ	-	47844	70750	116563	3336	4655	7294	3929	4500	8.0	16.4	18.1
90	1	81.5	550192	551104	552018	62481	91842	150565	3871	5454	8619	4967	6376	8.6	17.8	19.9
	2		Ⓒ	Ⓒ	-	51259	76367	126581	3023	4257	6726	4321	5017	8.0	16.9	18.6
95	1	86.0	550208	551120	552022	62352	92458	152671	3517	4986	7926	5734	6559	8.6	18.1	20.2
	2		Ⓒ	Ⓒ	-	51097	76894	128488	2693	3841	6138	4735	5608	8.0	17.2	18.9
100	HI	91.0	549954	-	-	76453	118928	-	4171	5951	9510	8675	-	9.2	19.7	22.0
	1		549952	550816	552026	66415	99155	-	3192	4578	7350	5917	7229	8.6	18.6	20.7
	2		Ⓒ	Ⓒ	-	52001	79254	-	2389	3451	5574	-	6000	8.0	17.5	19.4
110	HI	100	549970	-	-	86151	134013	-	3387	4982	8174	10672	-	9.2	20.5	22.8
	1		549968	550832	552030	70199	106952	-	2501	3736	6208	6950	9240	8.6	19.3	21.5
	2		Ⓒ	Ⓒ	-	53483	83784	-	1782	2723	4604	-	8000	8.0	18.1	20.0

FOR FIELD MAINTENANCE ONLY

INSTALLATION:

A. ULTIMATE FIBER STRESS 8000 PSI FOR DOUGLAS FIR AND 6000 PSI FOR PONDEROSA PINE.
B. BENDING MOMENT DUE TO WIND ON THE POLE HAS BEEN DEDUCTED FROM TOTAL POLE STRENGTH.
Ⓒ DENOTES NOT A STOCK ITEM, BUT IS IN SERVICE.
D. USE SALVAGED CREOSOTE POLES IN PREFERENCE TO CELLON TREATED POLES IN APPROVED LOCATIONS.
Ⓕ PRESSURE TREATMENT DONE BY THE CELLON OR DOW PROCESS.
Ⓖ CREOSOTE TREATED POLES.

REFERENCE:

Ⓗ SEE PAGE 354.1 TO 354.3 FOR PENTA-IN-OIL TREATED POLES.

TABLE OF CONTENTS

SCOPE: THIS STANDARD SHOWS A METHOD OF REINFORCING DETERIORATED WOOD POLES USING A STEEL SLEEVE.

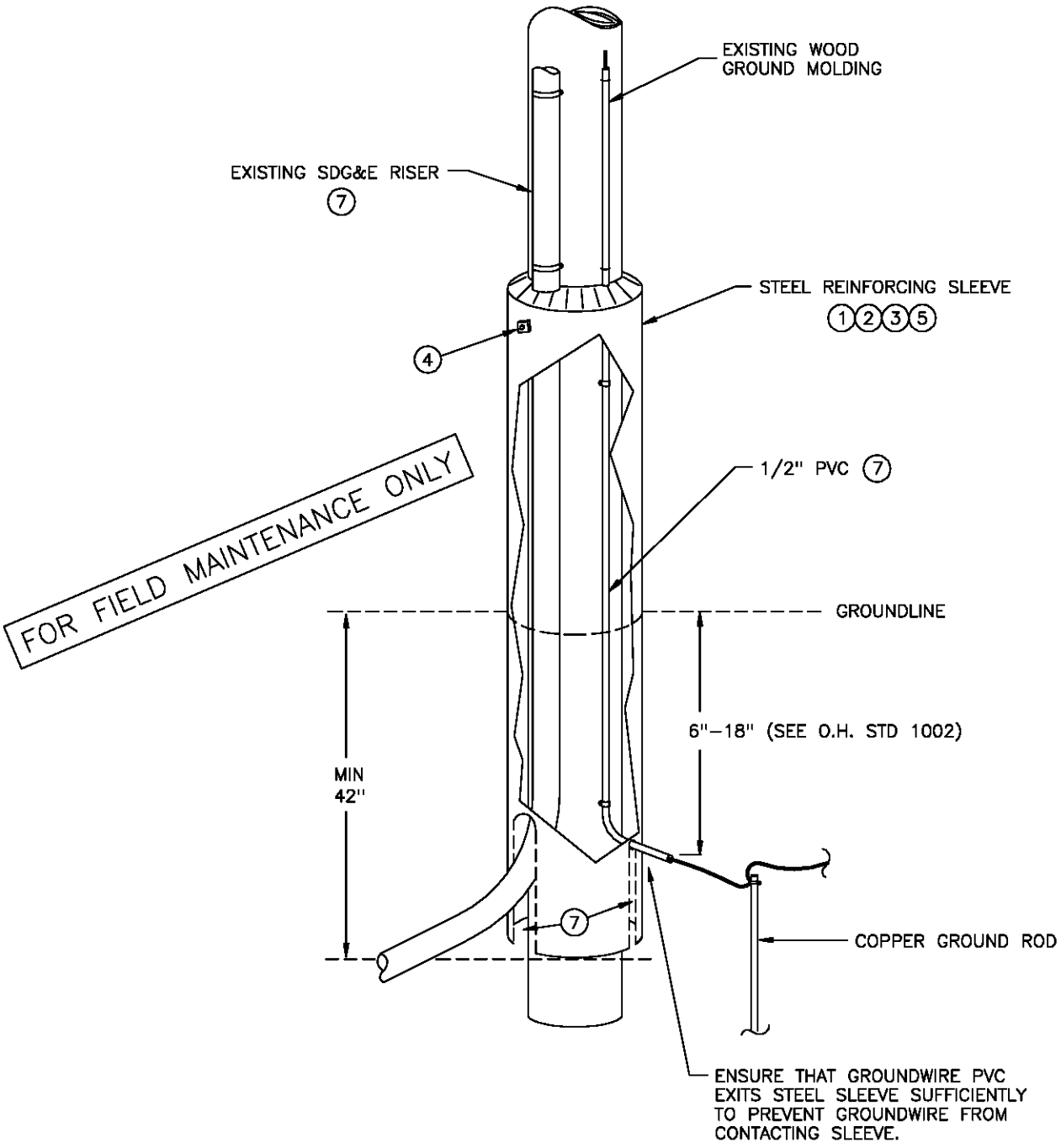

NOTES:

–PRESENTLY ALL STEEL SLEEVES ARE INSTALLED BY OUTSIDE CONTRACTORS AS PART OF GROUND LINE TREATMENT AND REINFORCEMENT PROGRAM.

–FOR USE ON POLES SUFFERING FROM BUTT ROT ONLY OR WHERE VEHICLE CONTACT HAS WEAKENED THE POLE AT GROUND LINE SUFFICIENTLY TO REQUIRE RESTORATION.

	SDG&E ELECTRIC STANDARDS	
DATE 1–1–96 APPD PA 1/2009	REINFORCING WOOD POLES WITH STEEL SLEEVES	399.701

TABLE OF CONTENTS

MINIMUM REQUIREMENTS FOR POLE

–POLE MUST NOT BE PART OF A GRADE "A" CONSTRUCTION PER G.O. 95 RULE 42 AND RULE 49.1.

MINIMUM REQUIREMENTS FOR INSTALLATION

–COMPLETE WOOD TREATMENT, REINFORCING MATERIALS AND METHOD OF INSTALLATION REQUIREMENTS ARE OUTLINED IN **"TECHNICAL SPECIFICATION FOR THE GROUNDLINE RESTORATION OF DETERIORATED WOOD POLES".**

–INCLUDED IN THE SPECIFICATION ARE, BUT NOT LIMITED TO, THE FOLLOWING REQUIREMENTS: (CONTACT CONSTRUCTION STANDARDS FOR A COMPLETE COPY)

1. THE MINIMUM DIAMETER OF THE SLEEVE SHALL BE 5 INCHES GREATER THAN THE GROUNDLINE DIAMETER OF THE POLE.
2. THE SLEEVE SHALL BE OF SUFFICIENT LENGTH THAT:
   –FROM THE TOP OF THE INSTALLED SLEEVE TO A POINT MEASURED 18 INCHES BELOW THE TOP OF THE INSTALLED SLEEVE, THE MINIMUM GOOD WOOD SHELL THICKNESS OF THE POLE IS 2 INCHES.
   –THERE IS AT LEAST 42 INCHES OF SLEEVE BURIED WITH A MINIMUM OF 30" DEEP ANNULUS.
   –THERE IS AT LEAST 42 INCHES OF SLEEVE ABOVE GROUND.
3. THE INSTALLED SLEEVE SHALL BE PLACED CONCENTRICALLY ABOUT THE POLE SUCH THAT THE RADIAL DISTANCE FROM THE SURFACE OF THE POLE TO THE INSIDE EDGE OF THE SLEEVE DOES NOT VARY MORE THAN 1/2 INCH.
4. CLIMBING STEP ATTACHMENTS:
   –A MINIMUM OF TWO 5/8 INCH SQUARE STEEL NUTS SHALL BE WELDED TO THE EXTERIOR OF THE SLEEVE AT 18 INCH INTERVALS, 90 DEGREES APART, FOR THE PURPOSE OF TEMPORARY STEP ATTACHMENT.
   –REMOVE ANY PERMANENT POLE STEPS ATTACHED TO THE POLE WHICH ARE WITHIN 8 FEET OF THE TOP OF THE SLEEVE.
5. THE SLEEVE SHALL BE PAINTED ACCORDING TO THE SPECIFICATION.
6. WHEN THE POLE IS WITHIN 12 FEET OF A TRAVELED ROADWAY, OR IN AN ALLEY OR PARKING AREA, REFLECTIVE STRIPS MUST BE ATTACHED TO THE STEEL SLEEVE AS NOTED IN SPECIFICATION.
7. IF THE SLEEVE IS TO BE INSTALLED ON A POLE WITH EXISTING GROUND RUNS OR POLE MOUNTED RISERS, THE HOLE MUST BE HAND DUG AND THE SLEEVE NOTCHED SO AS NOT TO DISTURB THE UNDERGROUND CONDUITS. THE GROUND WIRE MUST BE ENCASED IN A 1/2" PVC CONDUIT BEFORE BEING ENCAPSULATED IN THE EPOXY AND AGGREGATE FILLER AS NOTED IN DRAWING.

FOR FIELD MAINTENANCE ONLY

TABLE OF CONTENTS

ADDING RISERS OR GROUND RUNS TO POLE WITH EXISTING STEEL SLEEVE

–WHEN ADDING A RISER TO A POLE WITH AN EXISTING STEEL SLEEVE, RISER MUST BE ATTACHED TO LADDER ARM BRACKETS (SEE STANDARD 1404/4204).

–ADDING A GROUND RUN TO A POLE WITH AN EXISTING STEEL SLEEVE SHOULD BE AVOIDED. IF THERE IS NO ALTERNATIVE, CONTACT CONSTRUCTION STANDARDS FOR INSTALLATION METHOD.

	SDG&E ELECTRIC STANDARDS	
399.702	REINFORCING WOOD POLES WITH STEEL SLEEVES	DATE 1–1–96 APPD PA 12/09

SCOPE: THIS STANDARD SHOWS A METHOD OF REINFORCING DETERIORATED WOOD POLES USING A FIBERGLASS WRAP.

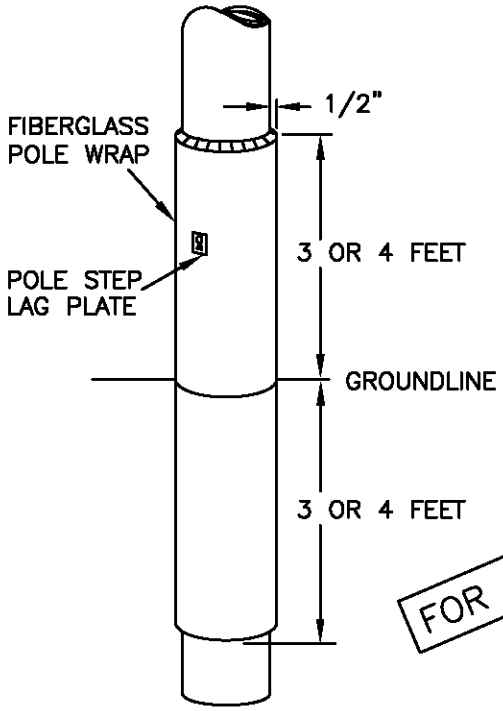

FOR FIELD MAINTENANCE ONLY

NOTES:

- ALL FIBERGLASS POLE WRAPS ARE INSTALLED BY AN OUTSIDE CONTRACTOR AS PART OF A GROUNDLINE TREATMENT AND REINFORCEMENT PROGRAM.
- FOR USE ON POLES SUFFERING FROM BUTT ROT ONLY OR WHERE VEHICLE CONTACT HAS WEAKENED THE POLE AT GROUNDLINE SUFFICIENTLY TO REQUIRE RESTORATION.

MINIMUM REQUIREMENTS FOR POLE

- POLE MUST NOT BE PART OF A GRADE "A" CONSTRUCTION PER G.O. 95 RULE 42 AND 49.1.

MINIMUM REQUIREMENTS FOR INSTALLATION

- COMPLETE WOOD TREATMENT, REINFORCING MATERIALS AND METHOD OF INSTALLATION REQUIREMENTS ARE OUTLINED IN **"TECHNICAL SPECIFICATION FOR GROUNDLINE RESTORATION OF DETERIORATED WOOD POLES.**
- THE FIBERGLASS WRAP TYPICALLY EXTENDS 3 TO 4 FEET ABOVE AND BELOW GROUNDLINE, BUT IT CAN EXTEND AS FAR UP THE POLE AS NEEDED TO A POINT WHERE THERE IS AN AVERAGE SHELL THICKNESS OF 4 INCHES.
- PRIOR TO THE POLE BEING WRAPPED, IT WILL BE TREATED WITH APPROVED PRESERVATIVES AND FUMIGANT TO STOP THE DECAY PROCESS.
- THE FIBERWRAP WILL EXTEND OUT FROM THE POLE NO MORE THAN 1/2".
- THE INSTALLATION CONTRACTOR WILL INSTALL POLE STEP LAG PLATES (S/N 541212) IN ACCORDANCE WITH G.O. 95 RULE 51.7.
- IF THE FIBERWRAP IS TO BE INSTALLED ON A POLE WITH EXISTING GROUND RUN, MOLDINGS AND STAPLES WILL BE REMOVED AND THE GROUNDWIRE PULLED AWAY FROM THE POLE. AFTER THE RESIN HAS GELLED, THE GROUNDWIRE WILL BE PLACED AGAINST THE POLE, AND COVERED WITH MOLDING BY PRE-DRILLING FOR THE MOLDING STAPLES. A NEW GROUND RUN MAY BE ATTACHED TO A POLE WITH EXISTING FIBER- WRAP USING THE SAME METHOD.
- EXISTING RISERS ATTACHED TO THE POLE WILL BE MOVED OUT BY SDG&E CREW PRIOR TO FIBERWRAP INSTALLATION, AND RE-ATTACHED AFTER INSTALLATION.

© 1998 - 2005 San Diego Gas & Electric Company. All rights reserved. Removal of this copyright notice without permission is not permitted under law.

DATE 1-1-96 APPD PEA / RDG	SDG&E ELECTRIC STANDARDS REINFORCING WOOD POLES WITH FIBERGLASS WRAP	399.703 SUPERSEDES 375 (1-1-96)

TABLE OF CONTENTS

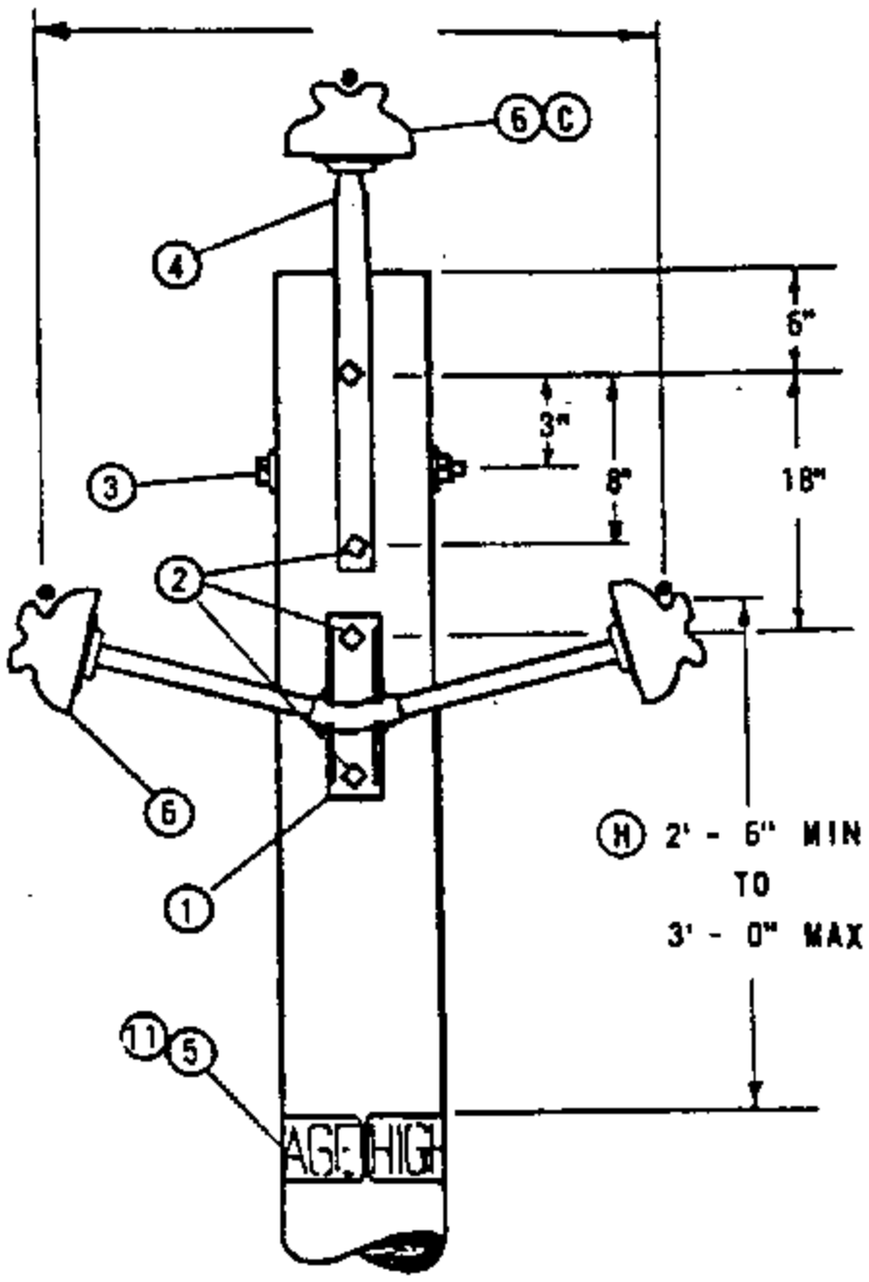

FIGURE 1
WORK ORDER DESIGNATION
"FGS AND PTP"

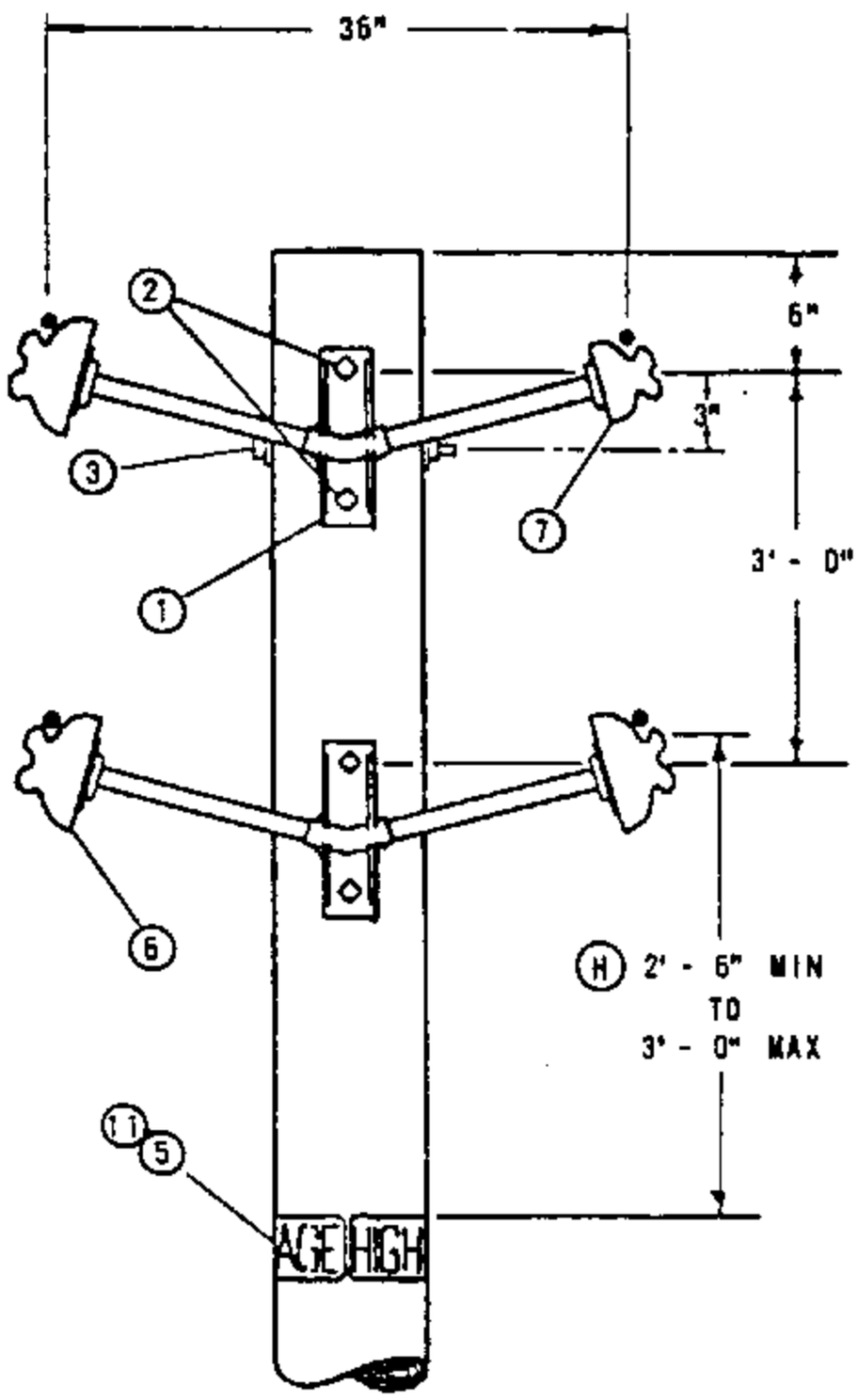

FIGURE 2
WORK ORDER DESIGNATION
"FGS"

NOTES:

A. USE MAXIMUM ANGLE OF DEVIATION OF 2.25°, BASED ON CLIMBING SPACE REQUIREMENTS (G.O. 95, RULE 54.7A2).

B. USE IN CONTAMINATION DISTRICTS 2 AND 3 AS DEFINED ON STANDARDS PAGE 287.

(C) SUBSTITUTE ONE 55-3 FOR ONE 55-5 INSULATOR AND CORRESPONDING PREFORMED TYPE TIE ON NEUTRAL WIRE FOR IDENTIFICATION.

(E) EXEMPT MATERIALS.

(F) ITEM 10 IS PREFERRED OVER ITEMS 8 & 9.

(G) 636 KCM AND 1033.5 KCM CONDUCTORS CANNOT BE USED SINCE NO CLAMP INSULATORS OF THIS TYPE ARE AVAILABLE.

(H) THESE DIMENSIONS ARE IN ACCORDANCE WITH G.O. 95.

I MAXIMUM SPAN LENGTH FOR THIS CONSTRUCTION IS 200'. IF SPAN LENGTH IS GREATER, PLEASE CONTACT SYSTEM STANDARDS.

ITEM PTF	ITEM OCD	DESCRIPTION	QUANTITY FIG. 1 1Ø	QUANTITY FIG. 1 3Ø	QUANTITY FIG. 2 4 WIRE	STOCK NO. OR CONSTR. STDS.
1		BRACKET, 2 PHASE PIN	1	1	2	166912
2		BOLT, MACH 5/8 X ___", 1-2 1/4" FLAT WASH., 1 DBL COIL SPR. WASH. (E)	2	4	4	PGS 139, 140
3		BOLT, MACH 5/8" X ___", 2-2 1/4" FLAT WASH., 1 DBL COIL SPR WASH. (E)	1	1	1	PGS 139, 140
4		PIN, POLE TOP, 24", 1" LEAD THREADS	-	1	-	532480
5		SIGN, HIGH VOLTAGE (E)	2	2	2	647616
	6	INSULATOR, PIN TYPE, CLASS 55-5	2	3	3	429056
	7	INSULATOR, PIN TYPE, CLASS 55-3	(C)	(C)	1	429216
	8	WIRE TIE, (F)	IF REQ'D.			700 SECTION
	9	GUARD, LINE, ALUM CONDUCTOR (F)	IF REQ'D.			700 SECTION
	10	TIE, PREFORMED, ALUMINUM CONDUCTORS, (F)	2	3	4	PG 760
11		NAILS, 1 3/4" GALV (E)	16	16	16	492192

APP'D JLWK
SYS STDS ENGR

SDG&E ELECTRIC STANDARDS

FIBERGLASS SUPPORT CONSTRUCTION, 12KV AND BELOW

499.101
SUPERCEDES
413 (1-1-92)

TABLE OF CONTENTS

SCOPE: THIS STANDARD SHOWS DISTRIBUTION CONSTRUCTION OF 12 AND 12.47 KV LINES WITH A LINE ANGLE NOT EXCEEDING 5°, USING ARMLESS VERTICAL CONSTRUCTION.

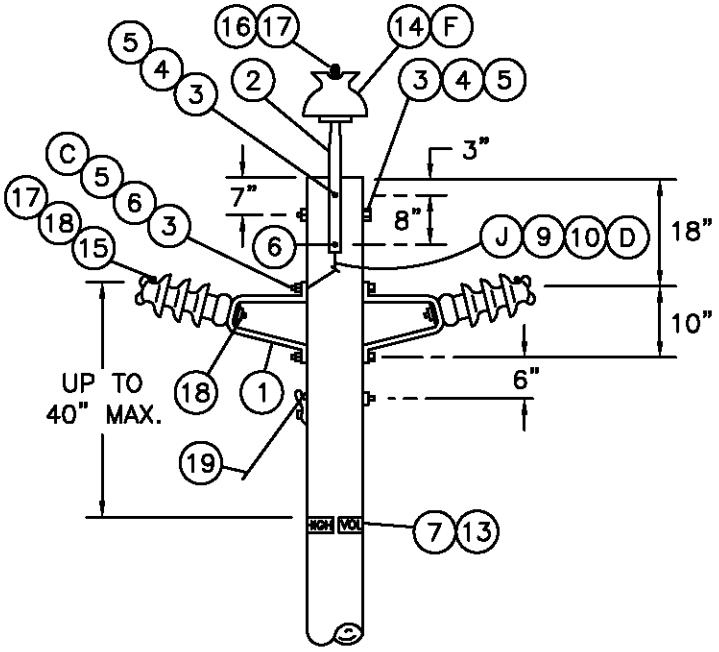

FIGURE 1

POLE TOP POSITION 3 WIRE CIRCUIT,
WORK ORDER DESIGNATION PTP, PIB, & TPI

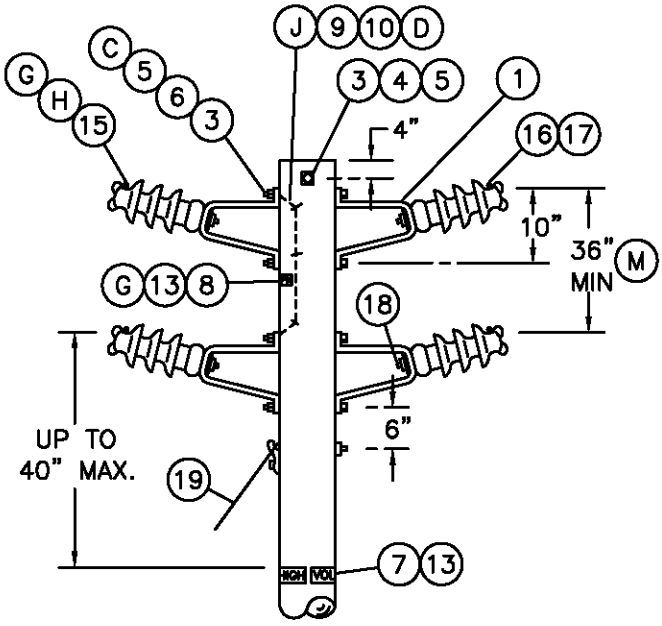

FIGURE 2

POLE TOP POSITION 2, 3, OR 4 WIRE CIRCUIT,
WORK ORDER DESIGNATION PIB & TPI

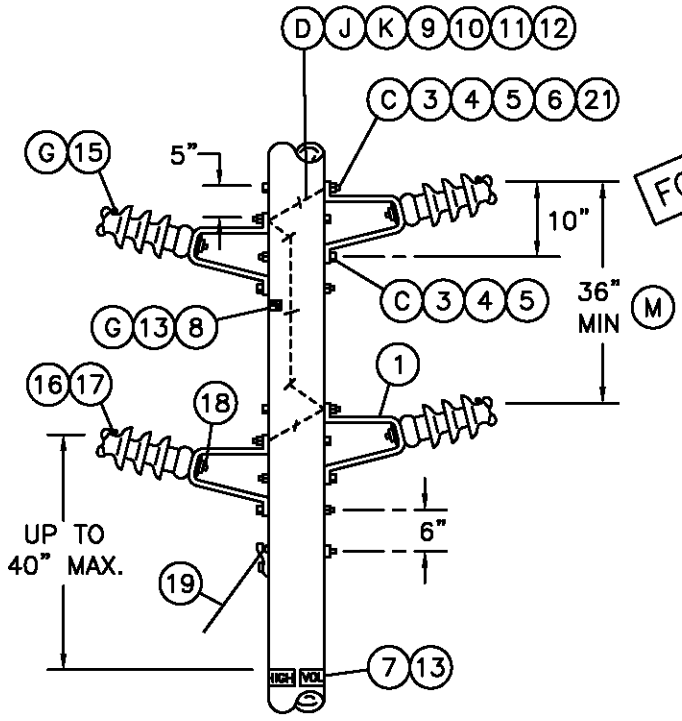

FIGURE 3

BELOW POLE TOP POSITION 2, 3, OR 4 WIRE CIRCUIT
WORK ORDER DESIGNATION PIB & TPI

FOR FIELD MAINTENANCE ONLY

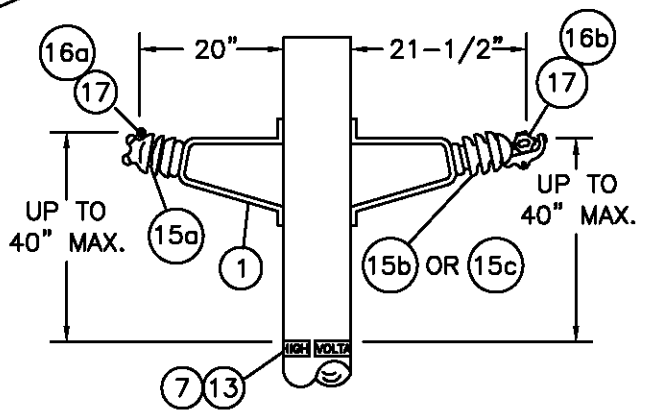

FIGURE 4

HORIZONTAL POST INSULATOR
WORK ORDER DESIGNATION PIB, TPI, & HPI

TABLE OF CONTENTS

DATE 1-1-96 APPD PA/BOG	SDG&E ELECTRIC STANDARDS POST INSULATOR AND BRACKET CONSTRUCTION, ANGLES 0° TO 5°, 12 AND 12.47KV	499.102 SUPERSEDES 414.1 (1-1-96)

INSTALLATION:

A. CLIMBING SPACE MUST BE PROVIDED PER STANDARDS PAGE 252.

B. USE CLAMP TOP LINE POST INSULATORS AND CLAMPS FOR 1033 KCMIL ACSR.

(C) INSTALL DOUBLE COIL SPRING WASHER SO IT CONTACTS BRACKET.

(D) BONDING OF THE BRACKETS IS ONLY REQUIRED WITHIN HEAVY CONTAMINATION AREA, DISTRICT 1 ON PAGE 287. USE BONDING PROVISIONS ON BRACKETS, IF THEY ARE FURNISHED.

(F) SUBSTITUTE A CLASS 55-3 INSULATOR (STOCK NO. 429216) FOR NEUTRAL IDENTIFICATION.

(G) IF A SMALLER LINE POST INSULATOR IS NOT AVAILABLE FOR NEUTRAL AS COMPARED TO THOSE ON THE PHASE POSITION, THE "PN" SIGN SHALL BE USED TO IDENTIFY THE NEUTRAL.

(H) RESISTANCE GLAZE (RG) CLAMP TOP POST INSULATORS (STOCK NO 428952) SHALL BE USED WHEN AVAILABLE ON TRIAL APPLICATIONS ON PHASE CONDUCTORS IN HEAVY CONTAMINATION AREAS AS DEFINED ON PAGE 287 AND ONLY USING FIGURE 2 CONSTRUCTION. CONDUCTOR CLAMPS ARE REQUIRED WITH "RG" INSULATORS. INSTALL A "DO NOT WASH" SIGN ABOVE THE POLE TAGS IN SIGHT OF ON-COMING TRAFFIC.

I. USE FIGURES 2 OR 3 WHERE NEUTRAL MAY BE REQUIRED IN THE FUTURE. CONSULT WITH DISTRICT ENGINEER.

(J) TO PREVENT RADIO INFLUENCE VOLTAGE (R.I.V.), DO NOT LOCATE BOND WIRE STAPLES WITHIN 1" OF BOLTS.

(L) ORDER (ITEM 18) FOR HPI ONLY.

(M) FOR SPAN LENGTHS GREATER THAN 250', THE CONDUCTOR SPACING IS DETERMINED BY THE FORMULA:

$$\text{SPACING} = 3' + \left[\frac{\text{SPAN LENGTH} - 250'}{50}\right]$$

IF SPAN LENGTH IS GREATER THAN 325', PLEASE CONTACT DISTRIBUTION STANDARDS.

N. AN INSULATOR MOUNTED DIRECTLY ON THE SIDE OF A POLE SHALL BE CONSIDERED AS IN A HORIZONTAL POSITION (SEE FIG. 4). AN INSULATOR MOUNTED DIRECTLY AT THE TOP OF THE POLE IN A VERTICAL POSITION SHALL BE CONSIDERED AS IN A VERTICAL POSITION (SEE G.O. 95 RULE 54.11 A).

BILL OF MATERIAL:

FOR FIELD MAINTENANCE ONLY

ITEM	DESCRIPTION	QUANTITY FIG. 1	QUANTITY FIG. 2 2 WIRE	QUANTITY FIG. 2 3 WIRE	QUANTITY FIG. 2 4 WIRE	QUANTITY FIG. 3 2 WIRE	QUANTITY FIG. 3 3 WIRE	QUANTITY FIG. 3 4 WIRE	STOCK NO. OR CONSTR STDS	ASSEMBLY UNITS
1	BRACKET, POST INSULATOR (PIB)	2	2	3	4	2	3	4	166848	PIB
2	PIN, POLE TOP 24", 1" OR 1 3/8" LEAD THREAD AS REQ'D	1	–	–	–	–	–	–	532480	PTP1
3	BOLT, MACH, 5/8" X ___"	5	3	5	5	4	6	8	STD 392	–
4	WASHER, 2 1/4" SQ FLAT	4	2	4	2	4	6	8	STD 392	–
5	WASHER, 5/8" DOUBLE COIL SPRING	5	3	5	5	4	6	8	STD 392	–
6	WASHER, 5/8" ROUND (WHERE BONDING IS REQ'D (D))	4	–	4	4	4	6	8	STD 392	–
7	SIGN, HIGH VOLTAGE	2	2	2	2	2	2	2	647648	HV
8	SIGN, PN (PRIMARY NEUTRAL) IF REQ'D	1	1	1	1	1	1	1	648000	PN
9	WIRE, BARE SOLID ANNEALED COPPER #8 (WHERE BONDING IS REQ'D)	3'	–	6'	6'	2'	6'	8'	812928	BOND8
10	STAPLES, GALV FENCE 1 1/4" (WHERE BONDING IS REQ'D)	2	–	4	4	1	4	5	678528	–
11	MOULDING, 1" HARDWOOD	–	–	–	–	–	2.5	2.5	487200	MLDG
12	STAPLES, MOULDING GALV 3" X 1 1/16" X 1/4"	–	–	–	–	–	2	2	678560	–
13	NAILS, 1 3/4" GALV	AS REQ'D							492192	–
14	INSULATOR, PIN TYPE, CLASS AS REQ'D	1	–	–	–	–	–	–	700 SECTION	–
15	INSULATOR, POST a TIE TOP (TPI)	2	2	3	4	2	3	4	700 SECTION	–
	INSULATOR, POST b HORIZONTAL CLAMP TOP (HPI)									
	INSULATOR, POST c HORIZONTAL CLAMP TOP RG (HPI) (H)	–				–	–	–		
16	TIE a FORMED OR WIRE	3	2	3	4	2	3	4	700 SECTION	–
	TIE b CLAMP, HORIZONTAL POST INSULATOR									
17	GUARD, LINE, ALUMINUM, IF REQ'D	3	2	3	4	2	3	4	PG 759	–
18	STUD, LINE POST, 5/8" X 1 3/4" (L)	2	2	3	4	2	3	4	701728	STUD-S
19	GUY	AS REQ'D							900 SECTION	
20	SIGN, "DO NOT WASH" (H)	IF REQ'D							648024	NOWASH
21	NUT, 5/8" GALV	AS REQ'D							506880	–

TABLE OF CONTENTS

DATE 1-1-98 APPD PSA/CMC	SDG&E ELECTRIC STANDARDS POST INSULATOR AND BRACKET CONSTRUCTION, ANGLES 0° TO 5°, 12 AND 12.47KV	499.103 SUPERSEDES 414.2 (1-1-98)

SCOPE: THIS STANDARD SHOWS DISTRIBUTION CONSTRUCTION OF 12 AND 12.47KV LINES WITH A LINE ANGLE GREATER THAN 5°, BUT NOT EXCEEDING 30°, USING ARMLESS VERTICAL CONSTRUCTION.

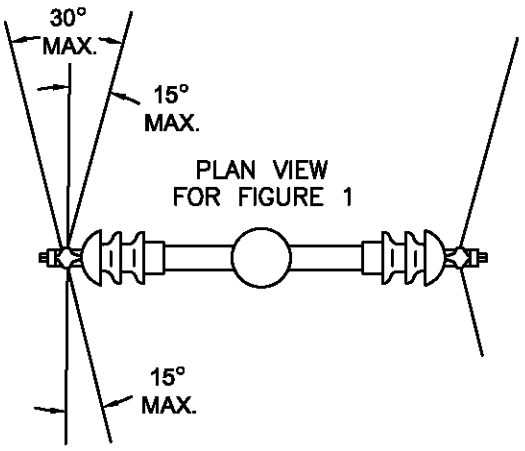

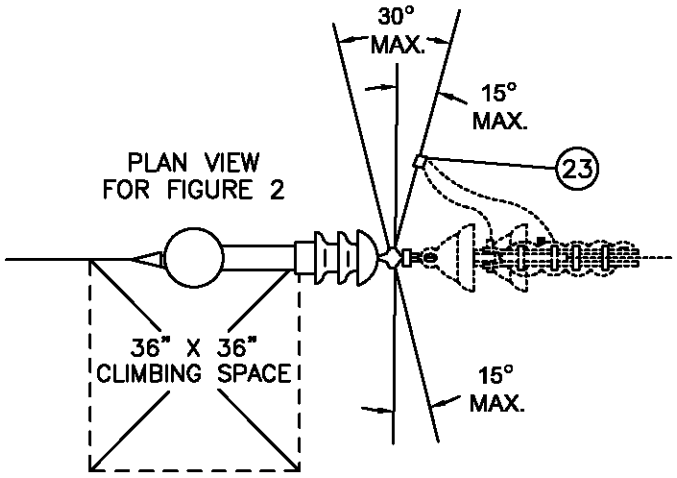

FOR FIELD MAINTENANCE ONLY

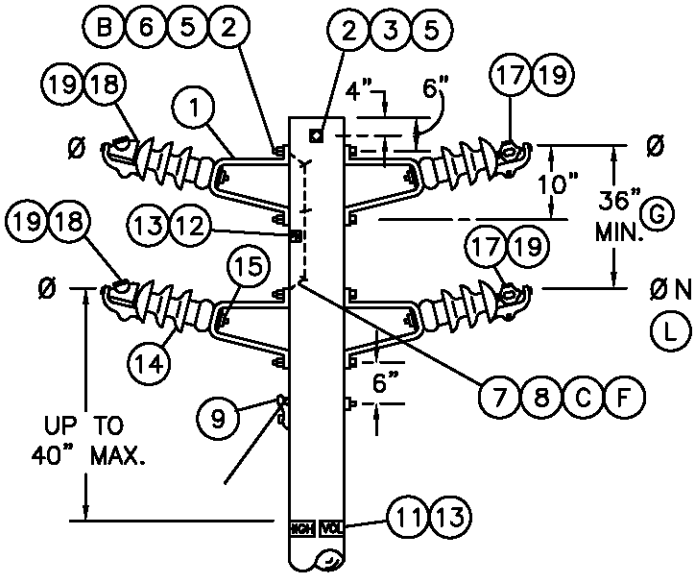

FIGURE 1 (J)

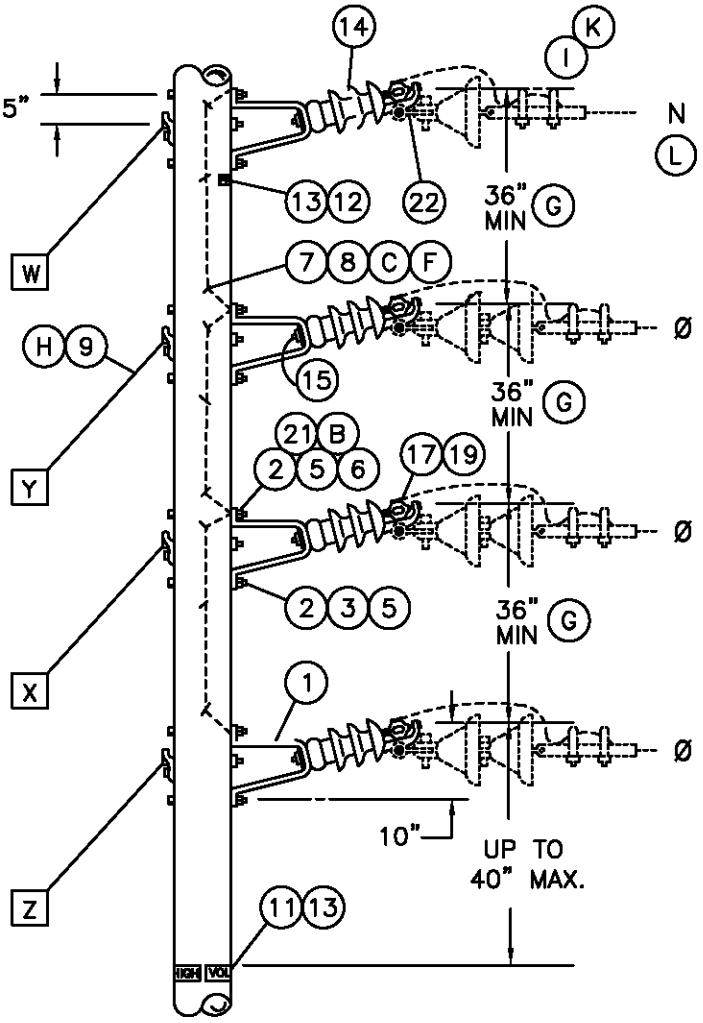

FIGURE 2

2, 3, OR 4 WIRE CIRCUIT,
ANGLES TO 30° BELOW POLE TOP
WORK ORDER DESIGNATION PIB & HPI

TABLE OF CONTENTS

499.104 SUPERSEDES 415.1 (9–13–05)	SDG&E ELECTRIC STANDARDS POST INSULATOR AND BRACKET CONSTRUCTION, ANGLES 5° TO 30°, 12 AND 12.47KV	DATE 9–13–05 APPD PBA / JJ

INSTALLATION:

A. CLIMBING SPACE MUST BE MAINTAINED PER STANDARD 252.

(B) INSTALL DOUBLE COIL SPRING WASHER SO IT CONTACTS BRACKET.

(C) BONDING OF THE BRACKETS IS ONLY REQUIRED WITHIN HEAVY CONTAMINATION AREA, DISTRICT 1, AS SHOWN ON STANDARD 287. USE BONDING PROVISIONS ON BRACKETS, IF THEY ARE FURNISHED.

(D) RESISTANCE GLAZE (RG) CLAMP TOP POST INSULATORS SHALL BE USED ONLY ON FIGURE 1 CONSTRUCTION WHEN AVAILABLE ON TRIAL APPLICATION ON PHASE CONDUCTORS IN HEAVY CONTAMINATION AREA. INSTALL A "DO NOT WASH" SIGN ABOVE THE POLE TAGS IN SIGHT OF ON-COMING TRAFFIC.

(F) TO PREVENT RADIO INFLUENCE VOLTAGE (R.I.V.) DO NOT LOCATE BOND WIRE STAPLES WITHIN 1" OF BOLTS.

(G) FOR SPAN LENGTHS GREATER THAN 250', DETERMINE CONDUCTOR SPACING BY THE FORMULA:

$$\text{SPACING} = 3' + \left[\frac{\text{SPAN LENGTH} - 250'}{50}\right]$$

IF SPAN LENGTH IS GREATER THAN 325', PLEASE CONTACT DISTRIBUTION STANDARDS.

(H) ADD THE GUYS IN ORDER INDICATED (W,X,Y,Z) AS REQUIRED IN THE GUYING SECTION.

(I) WHERE REQUIRED TO ADD A TAP TO THIS CONSTRUCTION, ATTACH DEADEND ASSEMBLY ON PAGE 422.1 AND 422.2 TO HPIs WITH DEADEND CLEVIS. IF PAGE 756 REQUIRES THIS ASSEMBLY TO BE BONDED, CONTACT DISTRIBUTION STANDARDS.

(J) WHERE REQUIRED TO ADD A TAP TO THIS CONSTRUCTION, USE FIG. 2.

(K) PER G.O.-95 RULE 54.4-C4 (b), ONLY TWO CONDUCTORS ARE ALLOWED TO BE DEAD ENDED FOR 4 KV OPERATION.

REFERENCE:

(L) ON ALL NEW CONSTRUCTION AND WHEN ADDING TO EXISTING CONSTRUCTION, NEUTRAL TO BE PLACED IN THE TOP OR BOTTOM PIN POSITIONS PER DESIGN MANUAL PAGE 5124.2.

TABLE OF CONTENTS

BILL OF MATERIAL:

FOR FIELD MAINTENANCE ONLY

ITEM PTF	ITEM OCD	DESCRIPTION	QUANTITY FIGURE 1 2 WIRE	FIGURE 1 3 WIRE	FIGURE 1 4 WIRE	FIGURE 2 2 WIRE	FIGURE 2 3 WIRE	FIGURE 2 4 WIRE	STOCK NO. OR CONSTR STD
1		BRACKET, POST INSULATOR (PIB)	2	3	4	2	3	4	166848
2		BOLT, MACH, 5/8" X ___"	2	4	4	4	6	8	STD.139
3		WASHER, 2 1/4" FLAT SQ WASH.	–	2	–	2	2	4	799040
4		WASHER, 3" CURVED SQ WASH.	–	–	–	2	4	4	797792
5		WASHER, 5/8" DBL COIL SPRING	2	4	4	4	6	8	798560
6		WASHER, 5/8" ROUND	–	4	4	4	6	8	800320
7		WIRE, #8 SOLID BARE ANNEALED COPPER	–	5'	5'	2'	8'	8'	812928
8		STAPLES, 1 1/4" FENCE	–	3	3	1	4	5	678528
9		GUY	AS REQ'D						900 SECTION
10									
11		SIGN, HIGH VOLTAGE	2	2	2	2	2	2	647648
12		SIGN, PRIMARY NEUTRAL, (PN)	2 IF REQ'D	2 IF REQ'D	2	2 IF REQ'D	2 IF REQ'D	2	648000
13		NAILS, 1 3/4"	24	24	24	24	24	24	492192
	14	INSULATOR CLAMP TOP POST a HORIZONTAL				2	3	4	700 SECTION
		INSULATOR CLAMP TOP POST b HORIZONTAL RG (D)	2	3	4	–	–	–	
	15	STUD, LINE POST, 5/8" X 1 3/4"	2	3	4	2	3	4	701728
	16								
	17	CLAMP, POST INSULATOR, STANDARD	1	2	2	1	2	2	STD. 773
	18	CLAMP, POST INSULATOR, ANGLE	1	1	2	1	1	2	STD. 773
	19	GUARD, LINE, ALUMINUM, IF REQ'D	2	3	4	2	3	4	STD. 759
20		SIGN "DO NOT WASH" & 8 NAILS (IF REQ'D)(D)	1	1	1	1	1	1	648024/492192
21		NUT, 5/8" GALV	AS REQ'D						506880
	22	CLEVIS, DEADEND (I)	2	3	4	2	3	4	235776
	23	CONNECTOR, WIRE	–	–	–	4	6	8	STD. 783-787

DATE 9-20-05 APPD PBA / JJ	SDG&E ELECTRIC STANDARDS POST INSULATOR AND BRACKET CONSTRUCTION, ANGLES 5° TO 30°, 12 AND 12.47KV	499.105 SUPERSEDES 415.2 (9-20-05)

SCOPE: THIS STANDARD SHOWS DISTRIBUTION CONSTRUCTION OF 12 & 12.47 KV LINES WITH A LINE ANGLE GREATER THAN 30°, BUT NOT EXCEEDING 60°, USING ARMLESS VERTICAL CONSTRUCTION.

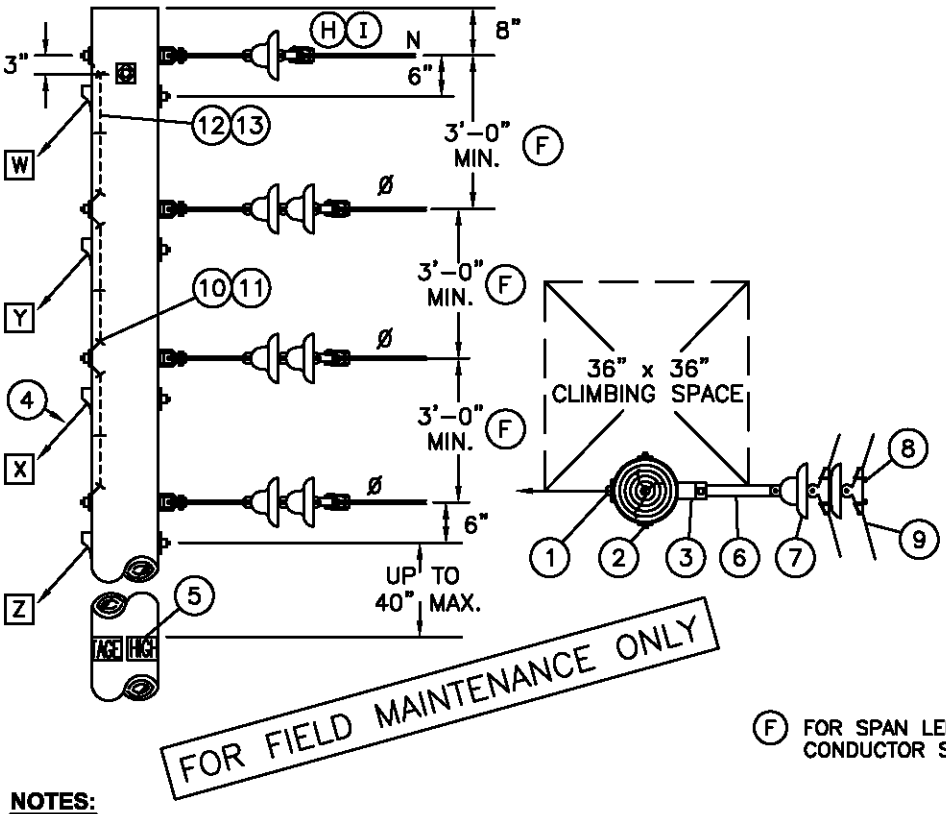

12KV VERTICAL CONSTRUCTION ASSEMBLY – MACRO UNITS			
	QUANTITY		
TYPE	12KV DE	NDE	MU ID
1/2 Y	1	1	HY1N
1/2 Y	2	–	HY2
1/2 Y	2	1	HY2N
1/2 Y	3	–	HY3
1/2 Y	3	1	HY3N
Y	2	2	Y1N
Y	4	–	Y2
Y	4	2	Y2N
Y	6	–	Y3
Y	6	2	Y3N
Z	1	1	Z1N
Z	2	–	Z2
Z	2	1	Z2N
Z	3	–	Z3
Z	3	1	Z3N

NOTES:

A. MINIMUM VERTICAL PHASE TO PHASE SPACING OF TWO FEET MAY BE USED TO ELIMINATE POLE CHANGEOUTS ON FULL TENSION SPANS 100 FEET AND SHORTER.

B. INSTALL GUYS IN ORDER INDICATED ABOVE (W,X,Y,Z) AS REQUIRED BY THE "GUYING SECTION".

C. USE BONDING INSULATORS OR INSTALL NON STATIC CLIPS (237648) ON UNBONDED SUSPENSION INSULATORS WHEN THE RESULTANT MAXIMUM GUYING TENSION PER PHASE AT THESE ANGLES IS LESS THAN 1500 POUNDS.

D. TO PREVENT RADIO INFLUENCE VOLTAGE (R.I.V.), DO NOT LOCATE STAPLES WITHIN 1" OF BOLTS.

(F) FOR SPAN LENGTHS GREATER THAN 250', DETERMINE CONDUCTOR SPACING BY THE FORMULA: SPACING=3'+ $\left[\frac{\text{SPAN LENGTH}-250'}{50}\right]$

IF SPAN IS GREATER THAN 325', PLEASE CONTACT DISTRIBUTION STANDARDS.

G. THE WORK ORDER DESIGNATION FOR THIS CONSTRUCTION IS "Z–CORNER".

(H) PER G.O. 95 RULE 54.4 – C4 (b), ONLY TWO CONDUCTORS ARE ALLOWED TO BE DEAD ENDED FOR 4 KV OPERATION.

(I) ON ALL NEW CONSTRUCTION AND WHEN ADDING TO EXISTING CONSTRUCTION, NEUTRAL TO BE PLACED IN THE TOP OR BOTTOM PIN POSITIONS PER DESIGN MANUAL PAGE 5124.2.

BILL OF MATERIAL:

ITEM	DESCRIPTION	QUANTITY			STOCK NO. OR CONSTR STD
		1Ø	3Ø	3Ø & N	
1	BOLT, MACH, GALV 5/8" X ___", 1–3" SQ CURV WASH., 1 DBL COIL WASHER, 2–5/8" RD WASH. & 1 NUT	2	3	4	STD.392
2	BOLT, MACH, GALV 5/8" X ___", 2–2 1/4" SQ WASH., 1 DBL COIL WASH., 2–5/8" RD WASH.	1	1	1	STD.392
3	CLEVIS, DEADEND 5/8" BOLT STEEL (OPEN TYPE)	2	3	4	235618
4	GUY	AS REQ'D			900 SECTION
5	SIGN, HIGH VOLTAGE & 9 NAILS	2	2	2	647648, 492192
6	LINK, EXTENSION, 12KV, 1/2" X 2" X 12"	2	3	4	466240
7	INSULATOR, SUSPENSION	4	6	7	PG 750
8	CLAMP, SUSPENSION	2	3	4	STD. 776
9	GUARD, LINE, ALUMINUM	2	3	4	STD. 759
10	WIRE, BOND, BARE SOLID ANNEALED, COPPER, #8	4'	6'	8'	812928
11	STAPLE, FENCE	3	6	9	678528
12	MOULDING, HARDWOOD, 1" (OTHER THAN TOP CIRCUIT ON POLE)	3'–6"	5'–6"	7'–6"	487200
13	STAPLES, MOULDING, GALV, 3" X 1 1/16" X 1/4" (OTHER THAN TOP CIRCUIT ON POLE)	2	4	6	678560

499.201 SUPERSEDES 420 (9–12–05)	SDG&E ELECTRIC STANDARDS VERTICAL CONSTRUCTION 30° TO 60° ANGLES, 12 AND 12.47KV	DATE 9–12–05 APPD PSA / JJ

TABLE OF CONTENTS

SCOPE: THIS STANDARD SHOWS DISTRIBUTION CONSTRUCTION OF 12 & 12.47 KV LINES WITH A LINE ANGLE GREATER THAN 60°, BUT NOT EXCEEDING 90°, USING ARMLESS VERTICAL CONSTRUCTION.

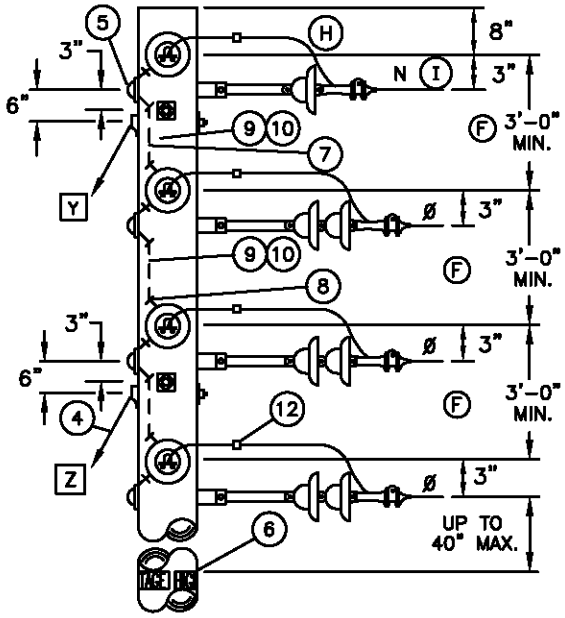

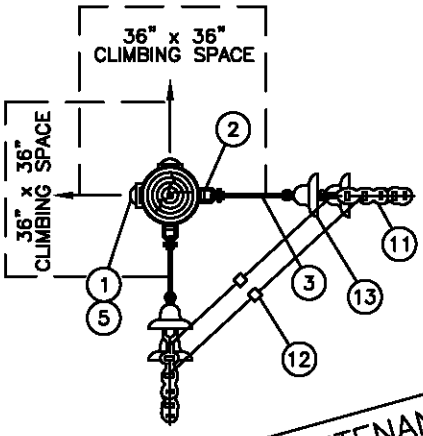

FOR FIELD MAINTENANCE ONLY

INSTALLATION:

A. MINIMUM VERTICAL PHASE TO PHASE SPACING OF TWO FEET MAY BE USED TO ELIMINATE POLE CHANGEOUTS ON FULL TENSION SPANS 100 FEET AND SHORTER.

B. INSTALL GUYS IN ORDER INDICATED ABOVE (Y,Z) AS REQUIRED BY THE "GUYING SECTION" AND IN COMPLIANCE WITH G.O. 95 RULE 54.7A4.

C. USE BONDED INSULATORS WHEN THE MAXIMUM GUYING TENSION IS LESS THAN 1000 POUNDS PER CONDUCTOR.

D. TO PREVENT RADIO INFLUENCE VOLTAGE (R.I.V.), DO NOT LOCATE STAPLES WITHIN 1" OF BOLT.

(F) FOR SPAN LENGTHS GREATER THAN 250', DETERMINE CONDUCTOR SPACING BY THE FORMULA: SPACING=3'+ $\frac{\text{SPAN LENGTH}-250'}{50}$ IF SPAN LENGTH IS GREATER THAN 325', PLEASE CONTACT DISTRIBUTION STANDARDS.

G. THE WORK ORDER DESIGNATION FOR THIS CONSTRUCTION IS "Y-CORNER".

(H) PER G.O. 95 RULE 54.4-C4 (b), ONLY TWO CONDUCTORS ARE ALLOWED TO BE DEAD ENDED FOR 4 KV OPERATION.

REFERENCE:

(I) ON ALL NEW CONSTRUCTION AND WHEN ADDING TO EXISTING CONSTRUCTION, NEUTRAL TO BE PLACED IN THE TOP OR BOTTOM PIN POSITIONS PER DESIGN MANUAL PAGE 5124.2.

BILL OF MATERIAL:

ITEM	DESCRIPTION	QUANTITY			STOCK NUMBER OR CONSTR. STD.
		1Ø	3Ø	3Ø & N	
1	BOLT, MACH, GALV 5/8" X ___", 1-3" SQ CURV WASH., 1 DBL COIL WASHER, 2-5/8"RD WASH. & 1 NUT	4	6	8	STD 392
2	CLEVIS, DEADEND 5/8" BOLT STEEL (OPEN TYPE)	4	6	8	235618
3	LINK, EXTENSION, 12KV, 1/2" X 2" X 12"	4	6	8	466240
4	GUY	AS REQ'D			900 SECTION
5	COVER, BOLT, PLASTIC, & 6-10 D NAILS	4	6	8	285696, 492192
6	SIGN, HIGH VOLTAGE & 9-10 D NAILS	2	2	2	647648, 492192
7	WIRE, BOND, BARE SOLID ANNEALED, COPPER, #8	4'	7'	8'	812928
8	STAPLES, FENCE, GALV, 1 1/4"	4	7	10	678528
9	MOULDING, HARDWOOD, 1" (OTHER THAN TOP CIRCUIT ON POLE)	2'-6"	4'-6"	6'-6"	487200
10	STAPLES, MOULDING, GALV, 3" X 1 1/16" X 1/4" (OTHER THAN TOP CIRCUIT ON POLE)	2	4	6	678560
11	CLAMP, DEADEND	4	6	8	STDS 741, 743
12	CONNECTOR	2	3	4	700 SECTION
13	INSULATOR, SUSPENSION	8	12	14	PG. 750.4

	SDG&E ELECTRIC STANDARDS	
DATE 9-20-05 APPD PBA / JJ	VERTICAL CONSTRUCTION 60° TO 90° ANGLES, 12 AND 12.47KV	499.202 SUPERSEDES 421 (9-20-05)

TABLE OF CONTENTS

SCOPE: THIS STANDARD SHOWS DISTRIBUTION CONSTRUCTION OF 12 & 12.47KV LINES OF THE "4 WAY AND 'T' CORNERS" USING ARMLESS VERTICAL CONSTRUCTION.

FOR FIELD MAINTENANCE ONLY

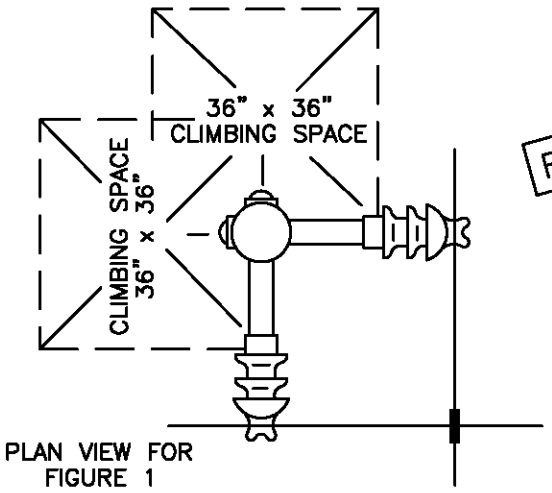

PLAN VIEW FOR FIGURE 1

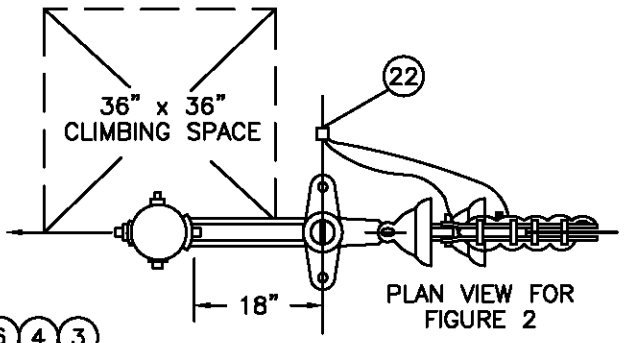

PLAN VIEW FOR FIGURE 2

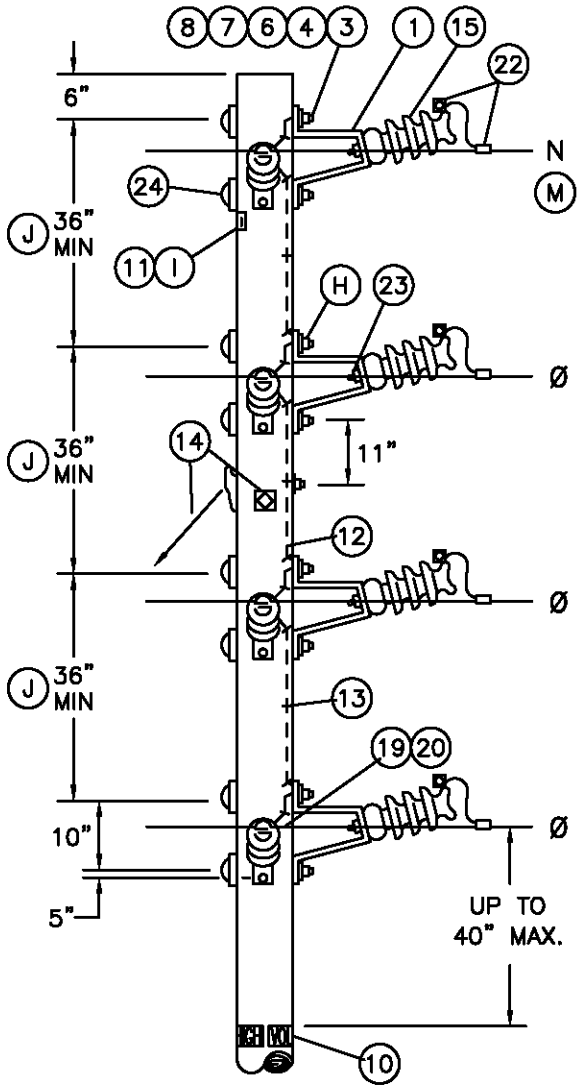

FIGURE 1
4 WAY CORNER

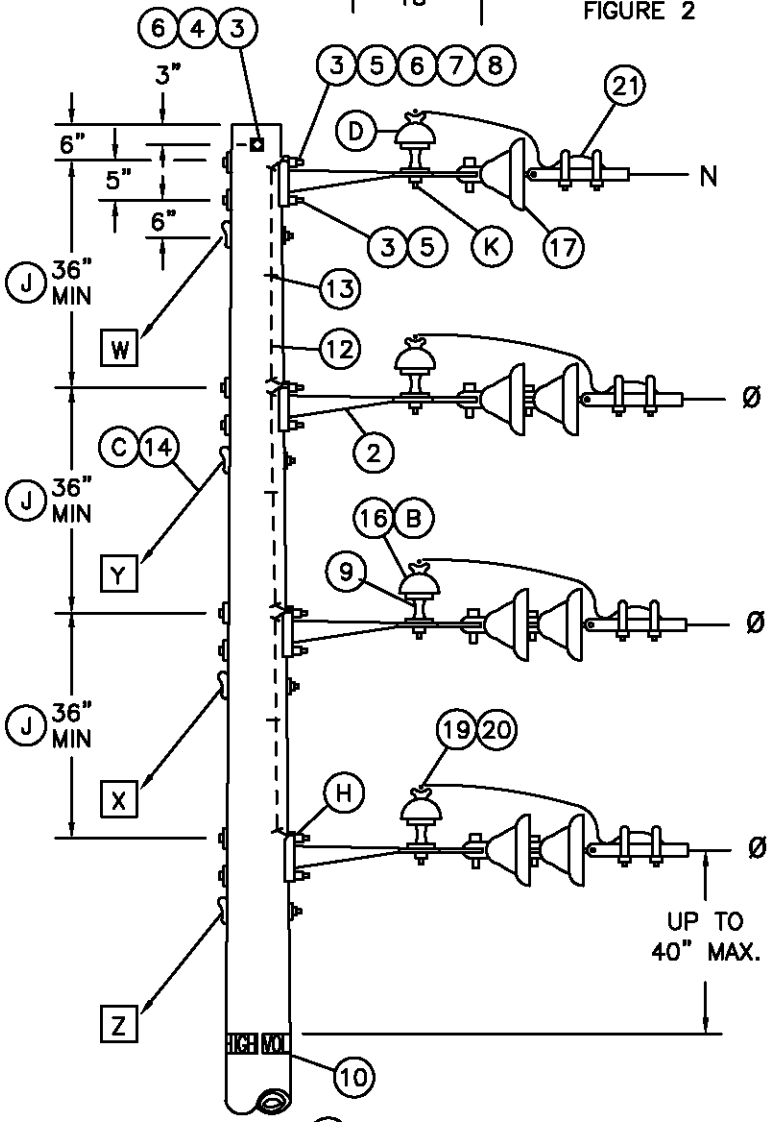

FIGURE 2 (L)
THROUGH CIRCUIT WITH SIDE TAP
"T" CORNER

TABLE OF CONTENTS

499.203 SUPERSEDES 422.1 (9-13-05)	SDG&E ELECTRIC STANDARDS POST INSULATOR AND BRACKET CONSTRUCTION, "4 WAY AND 'T' CORNERS", 12 AND 12.47KV	DATE 9-13-05 APPD PA / JJ

INSTALLATION:

A. TO PREVENT RADIO INFLUENCE VOLTAGE (R.I.V.) DO NOT LOCATE BOND WIRE STAPLES WITHIN 1" OF BOLTS.

(B) USE CLAMP TOP LINE POST INSULATORS AND CLAMPS FOR 1033 KCMIL ACSR.

(C) ADD THE GUYS IN ORDER INDICATED (W,X,Y,Z) AS REQUIRED IN THE GUYING SECTION.

(D) SUBSTITUTE A CLASS 55-3 INSULATOR (STOCK NO. 429216) FOR NEUTRAL IDENTIFICATION.

F. BONDING IS REQUIRED WITHIN HEAVY CONTAMINATION AREA, DISTRICT 1 ON STD. 287. USE BONDING PROVISIONS ON BRACKETS, IF THEY ARE FURNISHED.

(H) INSTALL DOUBLE COIL SPRING WASHER SO IT CONTACTS BRACKET.

(I) IF A SMALLER LINE POST INSULATOR IS NOT AVAILABLE FOR NEUTRAL AS COMPARED TO THOSE IN THE PHASE POSITIONS, THE "PN" SIGN SHALL BE USED TO IDENTIFY THE NEUTRAL.

(J) FOR SPAN LENGTHS GREATER THAN 250', DETERMINE CONDUCTOR SPACING BY THE FORMULA:

$$\text{SPACING} = 3' + \left[\frac{\text{SPAN LENGTH} - 250'}{50}\right]$$

IF SPAN LENGTH IS GREATER THAN 325', PLEASE CONTACT DISTRIBUTION STANDARDS.

FOR FIELD MAINTENANCE ONLY

(K) IF BONDING IS REQUIRED, ATTACH BOND WIRE TO INSULATOR PIN WITH ADDITIONAL NUT.

L TO BE USED FOR NEW CONSTRUCTION ONLY, FOR SIDE TAPS FROM EXISTING CONSTRUCTION, USE PGS. 415.1 & 415.2.

REFERENCE:

(M) ON ALL NEW CONSTRUCTION AND WHEN ADDING TO EXISTING CONSTRUCTION, NEUTRAL TO BE PLACED IN THE TOP OR BOTTOM PIN POSITIONS PER DESIGN MANUAL PAGE 5124.2.

12KV VERTICAL CONSTRUCTION ASSEMBLY – TYPE YT MACRO UNITS			
QUANTITY			MU ID
12KV DE	NDE	P & I	
1	1	2/55-5	YT1N
2	–	2/55-5	YT2
2	1	2/55-5 1/55-3	YT2N
3	–	3/55-5	YT3
3	1	3/55-5 1/55-3	YT3N

BILL OF MATERIAL:

ITEM	DESCRIPTION	FIGURE 1				FIGURE 2				STOCK NO. OR CONSTR STD	ASSEMBLY UNITS
		NEUTRAL WIRE	Ø WIRES			NEUTRAL WIRE	Ø WIRES				
			1	2	3		1	2	3		
1	BRACKET, POST INSULATOR (PIB)	2	2	4	6	–	–	–	–	166848	PIB
2	BRACKET, 4 HOLE MOUNTING	–	–	–	–	1	1	2	3	166240	4H-BKT
3	BOLT, 5/8" X __", GALV MACH	4	4	8	12	2	3	5	7	STD392	–
4	WASHER, 2 1/2" SQ FLAT	4	4	8	12	–	2	2	2	STD392	–
5	WASHER, 3" SQ CURVED	–	–	–	–	2	2	4	6	STD392	–
6	WASHER, 5/8" DBL COIL SPRING	4	4	8	12	1	2	3	4	798560	–
7	WASHER, 5/8" ROUND (F)	4	4	8	12	2	2	4	6	800320	–
8	NUT, 5/8" (F)	2	2	4	6	2	2	4	6	506880	–
9	PIN, SHORT SHANK INSULATOR,1" OR 1 3/8" LEAD THREADS (B)	–	–	–	–	1	1	2	3	532426/532434	PSS1
10	SIGN, HIGH VOLTAGE AND 9-10D NAILS	–	2	2	2	–	2	2	2	647648/492192	HV
11	SIGN, PRIMARY NEUTRAL (PN) AND 4-10D NAILS (I)	2	–	–	–	–	–	–	–	648000/492192	PN
12	WIRE, BARE SOLID ANNEALED #8 COPPER,	5'	2'	6'	10'	4'	–	4'	8'	812928	BOND8
13	STAPLES, FENCE 1 1/4"	4	1	5	9	3	–	3	6	678528	–
14	GUY (C)	–	IF REQ'D			AS REQ'D				900 SECTION	–
15	INSULATOR, POST a TIE TOP / b HORIZONTAL CLAMP TOP	2	2	4	6	–	–	–	–	700 SECTION	–
16	INSULATOR, PIN TYPE, CLASS AS REQ'D (B)	–	–	–	–	1	1	2	3	700 SECTION	–
17	INSULATOR, SUSPENSION CLEVIS	–	–	–	–	1	2	4	6	STD750, 756	–
18											
19	GUARD, ALUMINUM IF REQ'D	2	2	4	6	1	1	2	3	STD759	–
20	TIE a FORMED OR WIRE / b CLAMP,HORIZONTAL POST INSULATOR (B)	2	2	4	6	1	1	2	3	700 SECTION	–
21	CLAMP, DEAD END	–	–	–	–	1	1	2	3	STD 741-743	–
22	CONNECTOR, WIRE	2	2	4	6	1	1	2	3	STD783-787	–
23	STUD, LINE POST, 5/8" X 1 3/4"	2	2	4	6	–	–	–	–	701728	STUD-S
24	BOLT, COVER PLASTIC & 6-1 3/4" NAILS	4	4	8	12	–	–	–	–	285696/42919	BCS

TABLE OF CONTENTS

DATE 9-20-05
APPD PA / JJ

SDG&E ELECTRIC STANDARDS

POST INSULATOR AND BRACKET CONSTRUCTION, "4 WAY AND 'T' CORNERS", 12 AND 12.47KV

499.204
SUPERSEDES
422.2 (9-20-05)

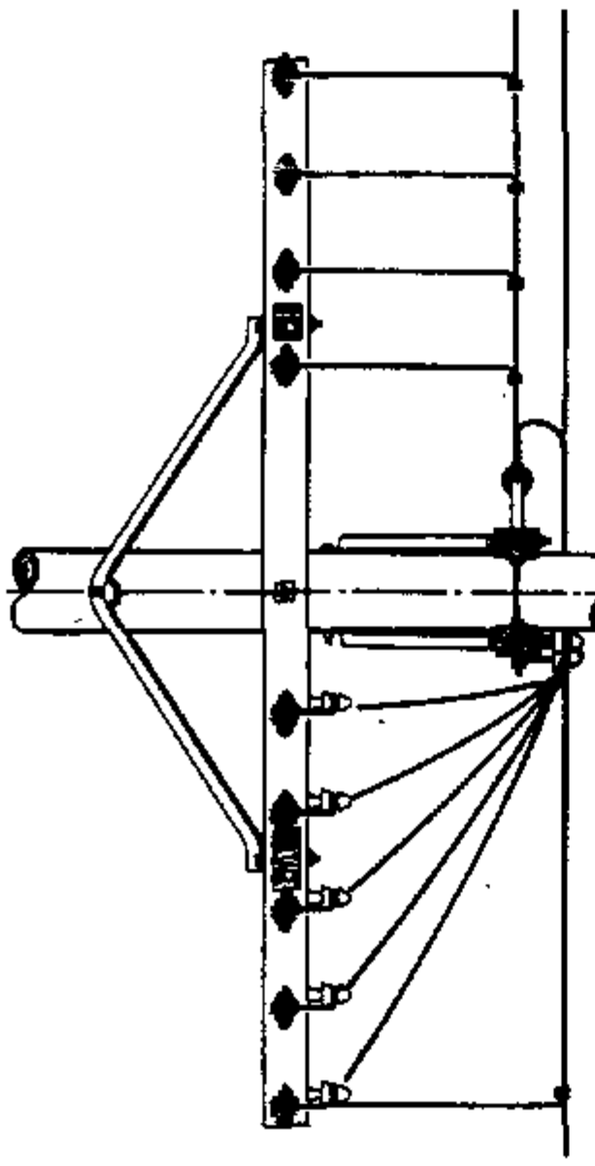

FIGURE 1

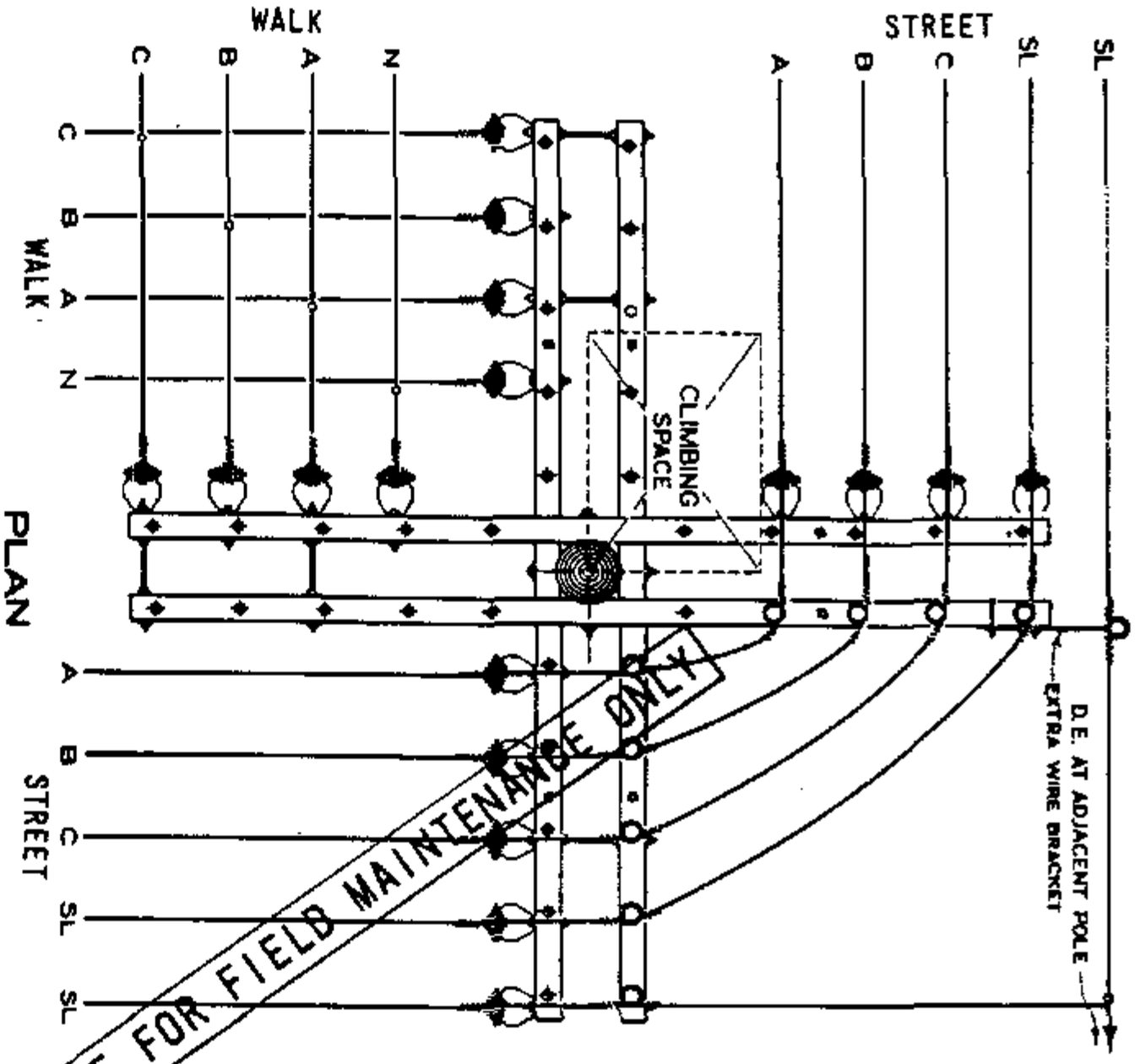

THIS PAGE FOR FIELD MAINTENANCE ONLY

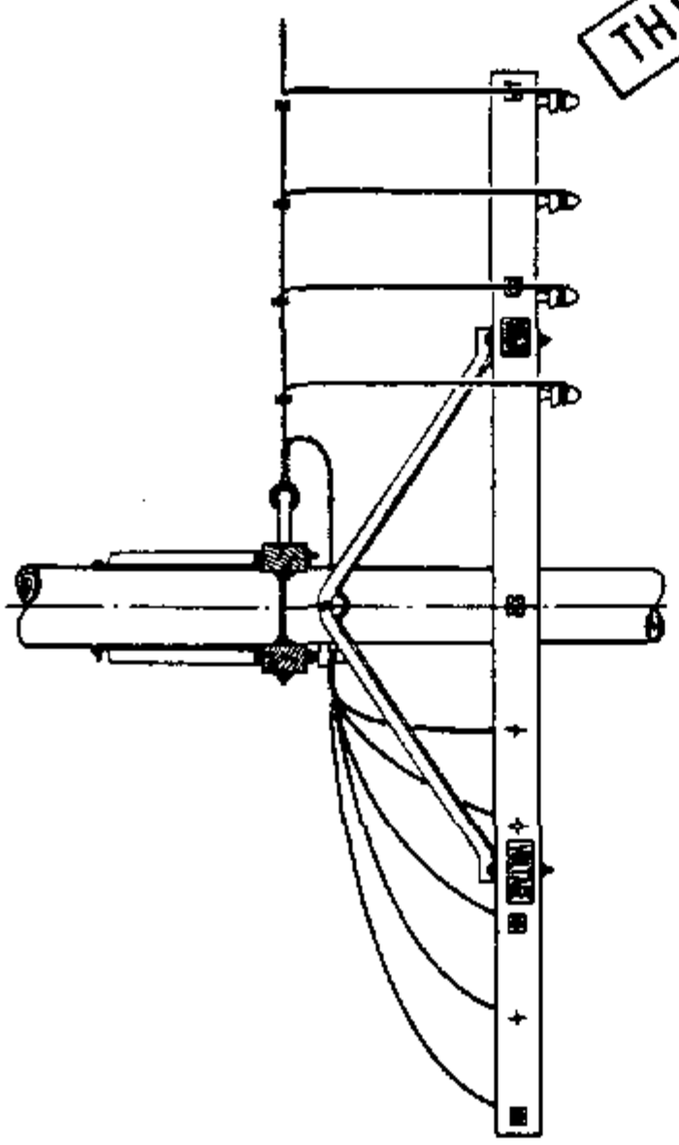

FIGURE 2

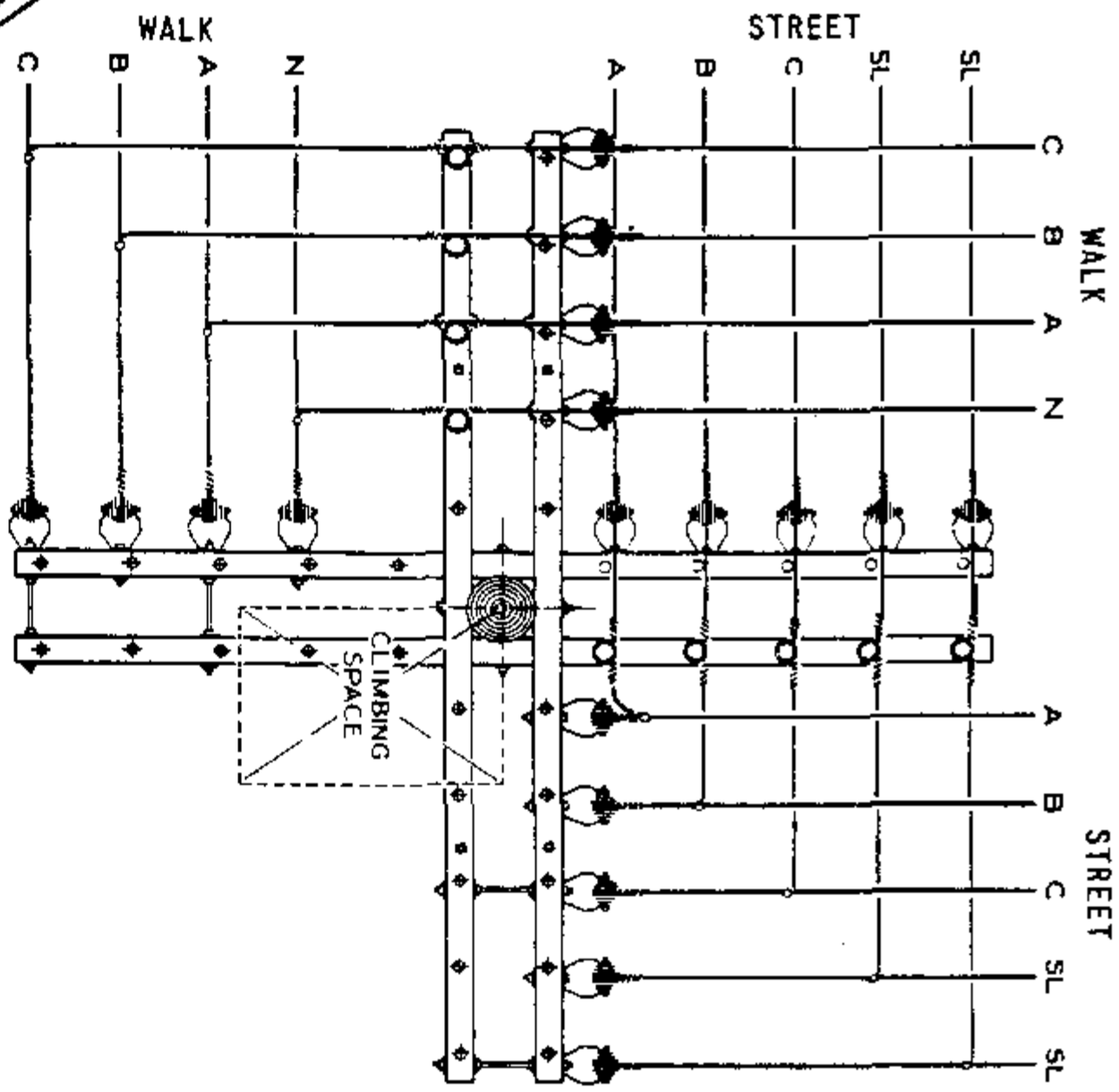

TABLE OF CONTENTS

APPD SYS STDS ENGR	SDG&E ELECTRIC STANDARDS 750 - 7500 VOLT BUCKARM CORNERS	499.301 SUPERSEDES 434 (6-4-82)

TABLE OF CONTENTS

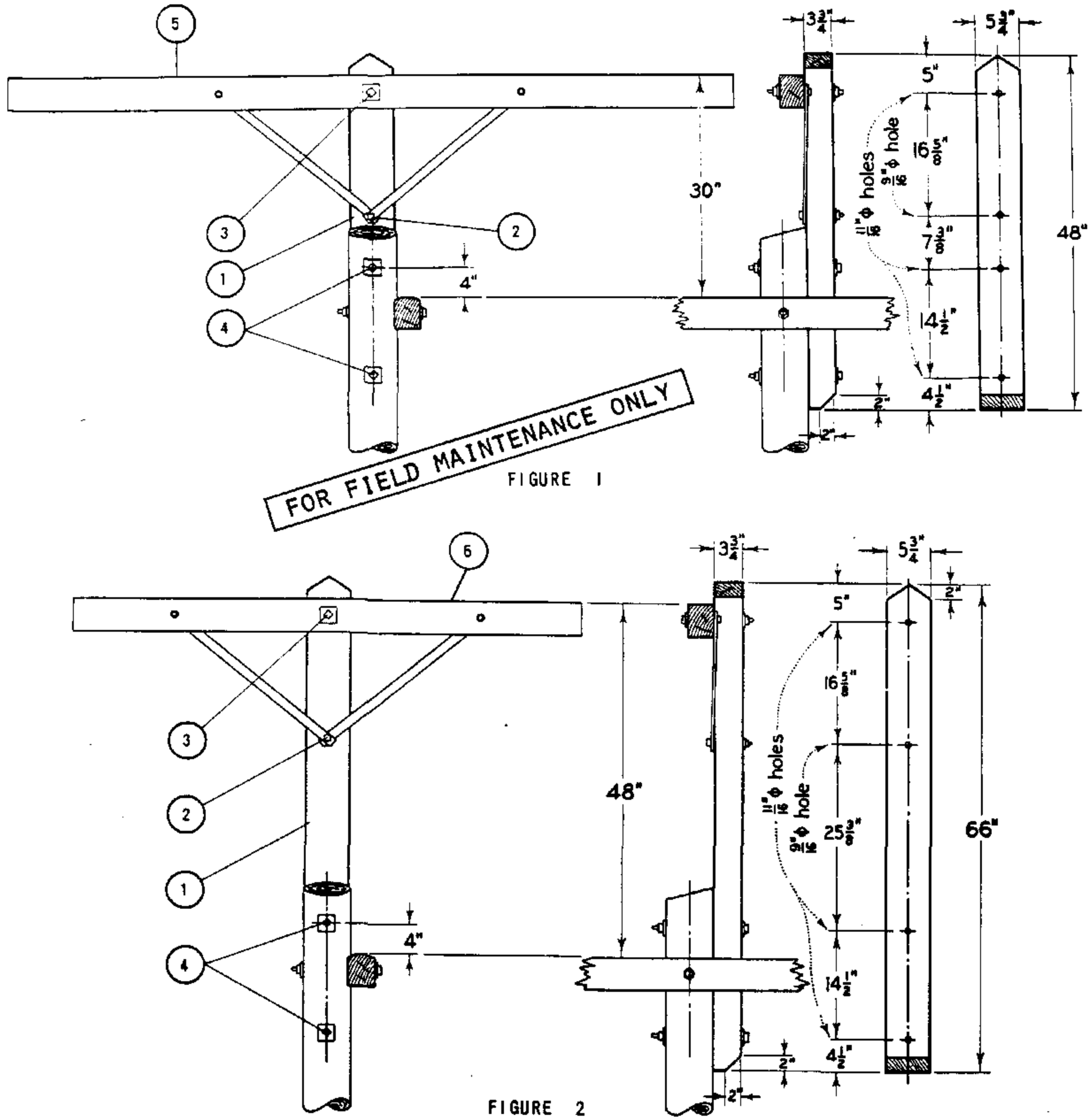

FIGURE 1

FIGURE 2

INSTALLATION :

A. DO NOT FLATTEN SURFACE OF POLE TO RECEIVE EXTENSION. HOWEVER, SHARP HUMPS OR KNOTS SHOULD BE REMOVED.

(E) EXEMPT MATERIAL.

BILL OF MATERIAL :

ITEM		DESCRIPTION		QUANTITY	STOCK NO. OR CONSTR STD
P T F	1	EXTENSION, 3 3/4" X 5 3/4" DOUGLAS FIR POLE TOP, 48" OR 66" LONG		1	336288, 336352
	2	BOLT, MACHINE 1/2" X 5" GALV, 1 RD WASHER	(E)	1	STD 139, 140
	3	BOLT, MACHINE 5/8" X 10" GALV, 2 SQ WASHERS	(E)	1	STD 139, 140
	4	BOLT, MACHINE 5/8" X 16" GALV, 2 SQ WASHERS	(E)	2	STD 139, 140
	5	CROSSARM, 3 1/2" X 4 1/2" X 8' - 0"		1	SECTION 300
	6	CROSSARM, 3 1/2" X 4 1/2" X 5' - 7"		1	SECTION 300

499.701 SUPERSEDES 476 (9-17-82)	SDG&E ELECTRIC STANDARDS **POLE TOP EXTENSIONS FOR SERVICE CLEARANCE ARMS**	DATE 9-17-82 APPD

500 TRANSMISSION

500 TRANSMISSION

MAIN TABLE OF CONTENTS

PAGE	SUBJECT
599.001-.005	TRANSMISSION CROSSARMS - 69KV
599.006-.007	TRANSMISSION SUSPENSION INSULATORS
599.101-.103	TRANSMISSION HORIZONTAL POST INSULATORS
599.104	TRANSMISSION POST INSULATOR STUDS
599.105	TRANSMISSION STEEL TOWER GROUNDING
599.106	TRANSMISSION HARDWARE
599.201-.305	TRANSMISSION CONSTRUCTION
599.306-.310	OVERHEAD SCADA SWITCH, 12KV, HORIZONTAL LOADBREAK TYPE, SINGLE CIRCUIT, MOTOR OPERATED
599.501	TRANSMISSION LINE INSULATION TABLE
599.901	TRANSMISSION HARDWARE CROSSARM TIE-PLATE
599.902	TRANSMISSION HARDWARE "J" BOLT, HEXAGONAL C.I. FILLER
599.903-.905	SCADA LOAD MONITOR

© 1998 - 2019 San Diego Gas & Electric Company. All rights reserved. Removal of this copyright notice without permission is not permitted under law.

REV	CHANGE	BY	DSGN	APPV	DATE	REV	CHANGE	BY	DSGN	APPV	DATE
C						F					
B	COMPLETELY REVISED	JK	JS	CZH	10/15/2019	E					
A	ORIGINAL ISSUE	JK	JS	CZH	6/13/2019	D					

Indicates Latest Revision | X | Completely Revised | | New Page | | Information Removed

SHEET 1 OF 1

SDG&E ELECTRIC OVERHEAD FIELD MAINTENANCE ONLY STANDARDS

LEGACY OVERHEAD FIELD MAINTENANCE
TABLE OF CONTENTS
TRANSMISSION

OH LEGACY
OHL501.1

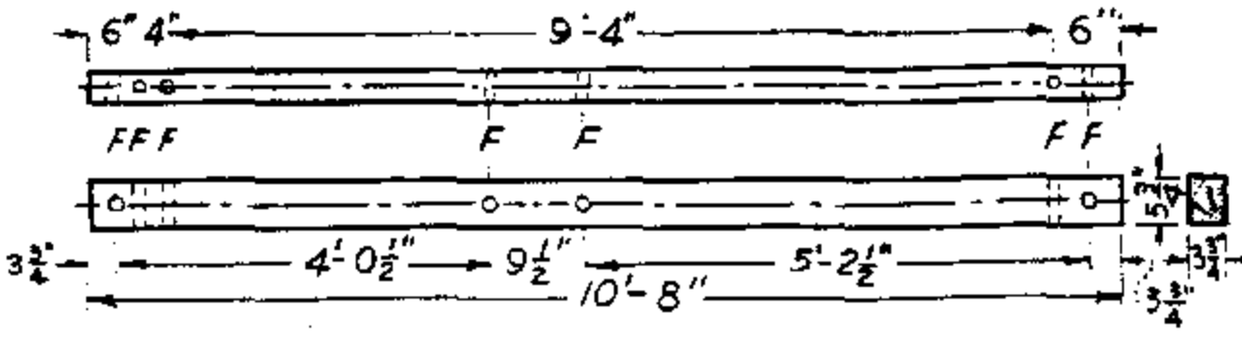

ITEM 1

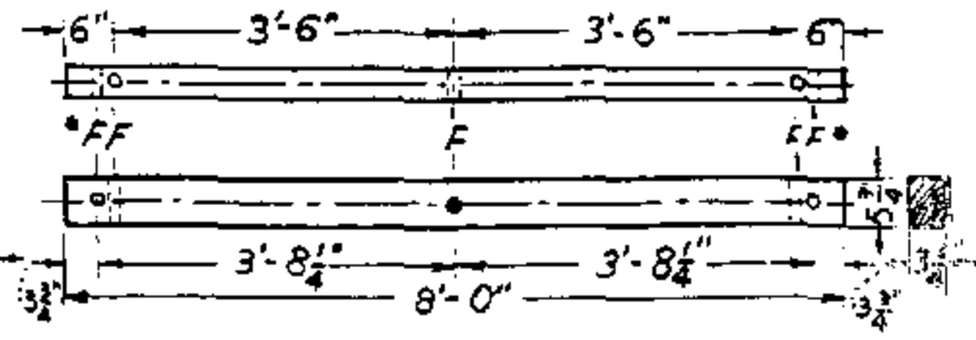

ITEM 2

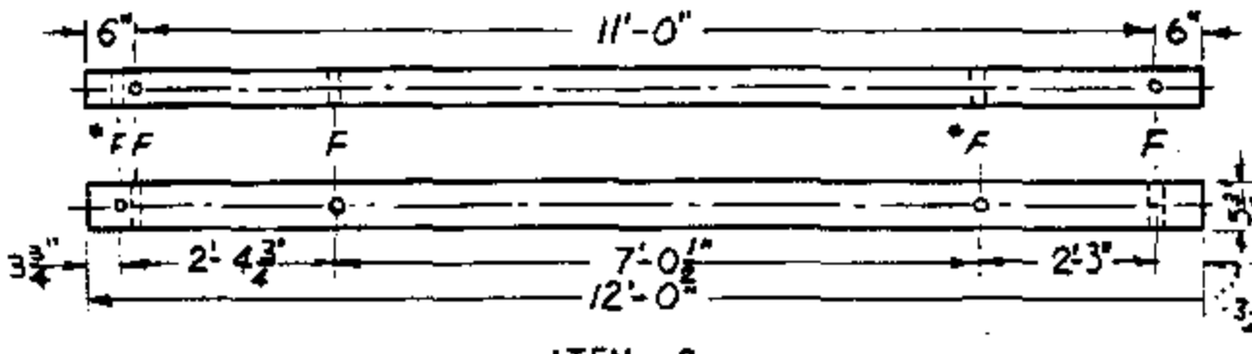

ITEM 3

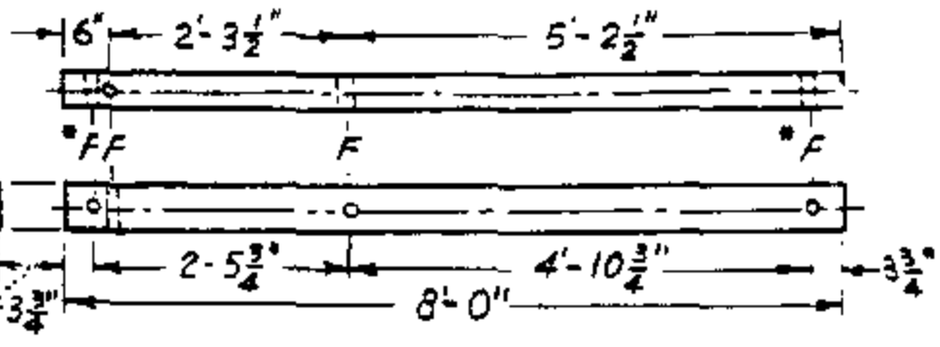

ITEM 2A

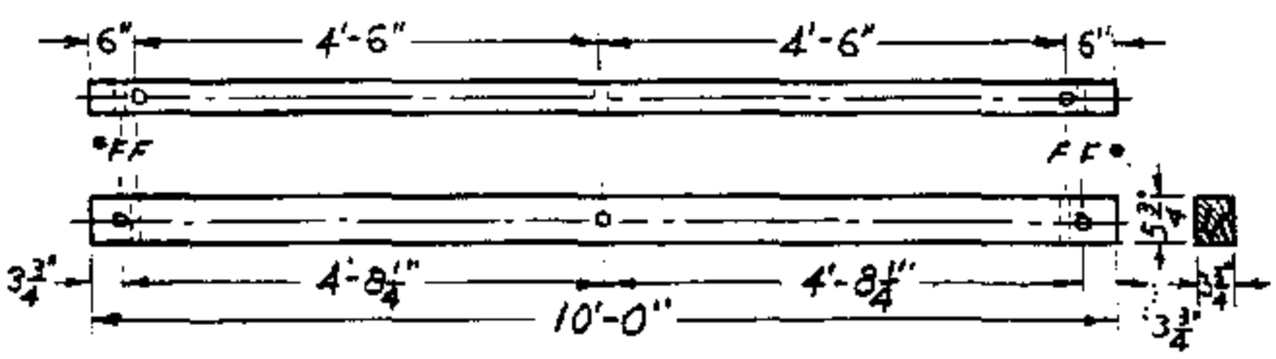

ITEM 4

FOR FIELD MAINTENANCE ONLY

REFERENCE

F - 11/16 DIA. HOLES

* TO BE DRILLED IN THE FIELD.

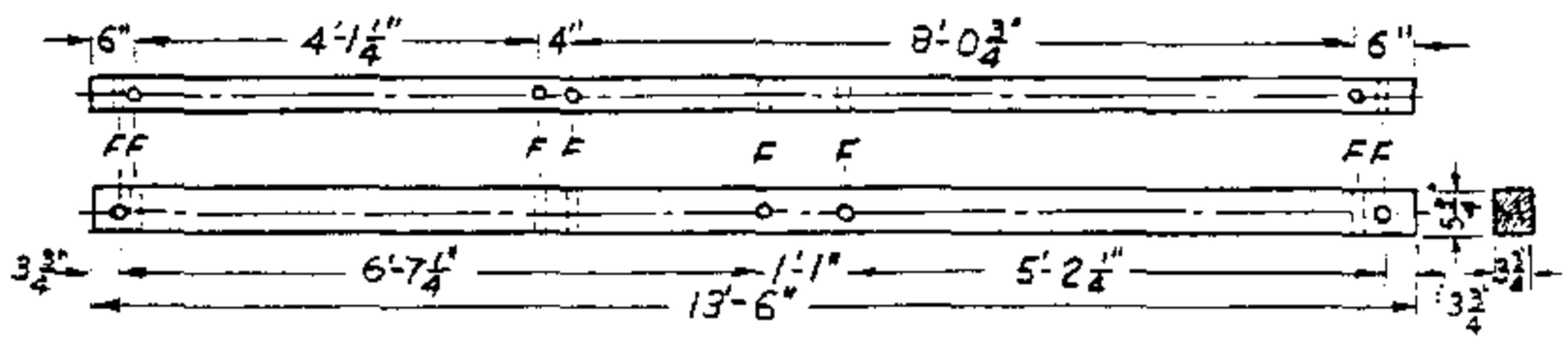

ITEM 5

ITEM	DESCRIPTION	STOCK NO.	ITEM	DESCRIPTION	STOCK NO.
1	CELLON	294352	5	CREOSOTE	294528
	CREOSOTE	294496			
2	FIELD MAINTENANCE ONLY	-			
2A	FIELD MAINTENANCE ONLY	-			
3	FIELD MAINTENANCE ONLY	-			
4	FIELD MAINTENANCE ONLY	-			
5					
	CELLON	294368			

DATE 1-1-86
APPD AK/[illegible]

SDG&E ELECTRIC STANDARDS

TRANSMISSION CROSSARMS - 69KV

599.001
SUPERCEDES
380.6 (1986)

TABLE OF CONTENTS

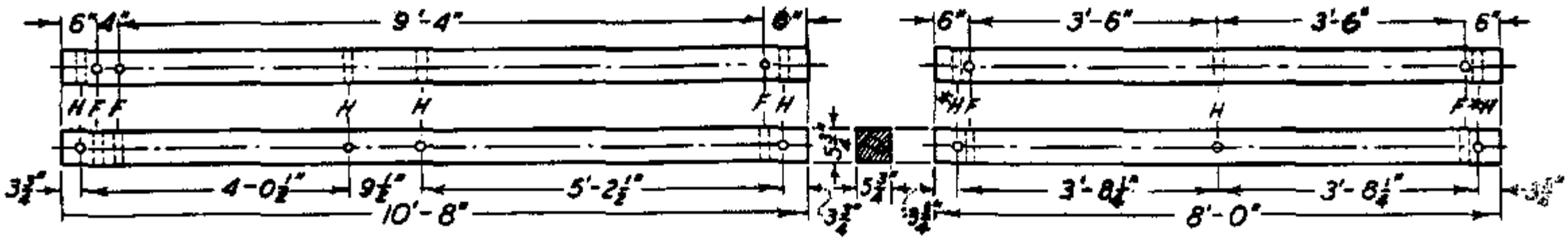

ITEM NO. 1

ITEM NO. 2

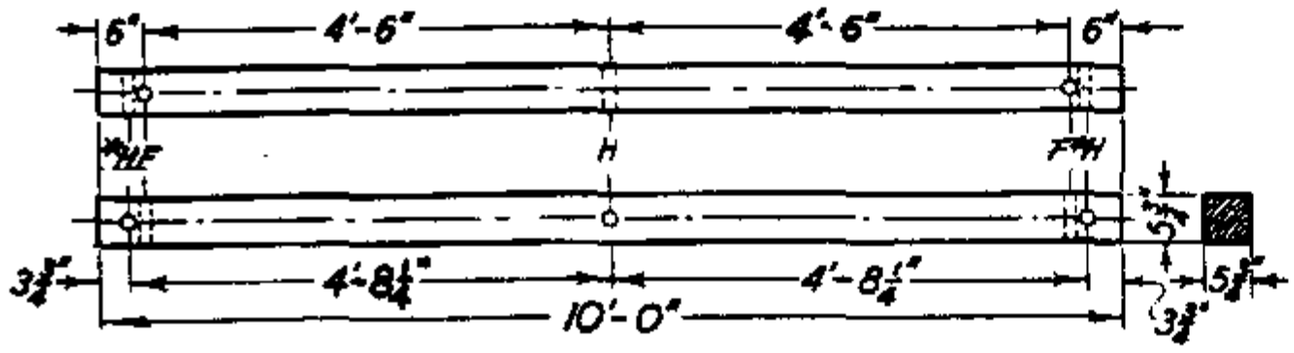

ITEM NO. 3

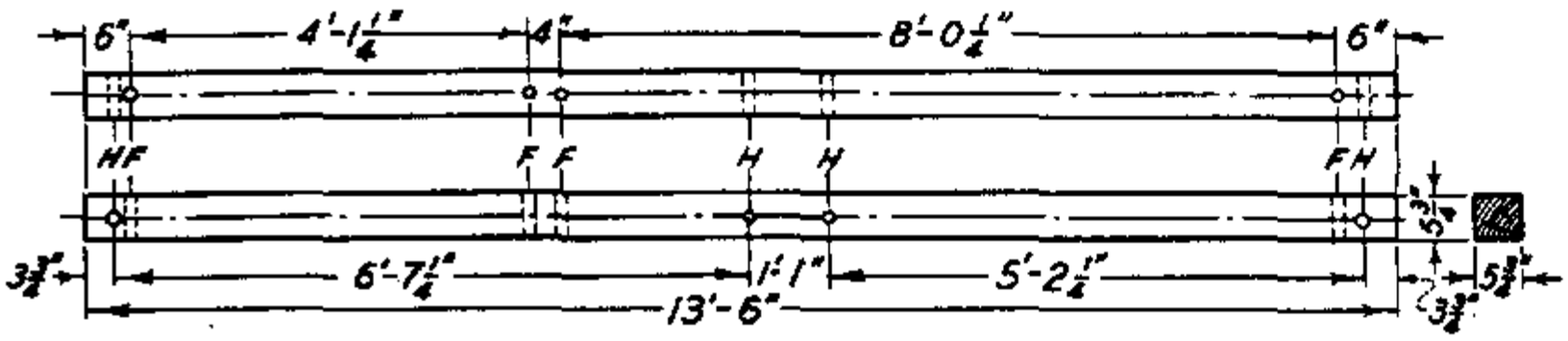

ITEM NO. 4

REFERENCE

F – 11/16" DIAM. HOLES
H – 13/16" " "

*TO BE DRILLED IN THE FIELD.

FOR FIELD MAINTENANCE ONLY

ITEM	DESCRIPTION	STOCK NO.	ITEM	DESCRIPTION	STOCK NO.
1	FIELD MAINTENANCE ONLY	—			
2	CREOSOTE, FIELD MAINTENANCE ONLY	294816			
3	FIELD MAINTENANCE ONLY	—			
4	CREOSOTE, FIELD MAINTENANCE ONLY	294800			

DATE 1-1-86
APPD AK / RDX

SDG&E ELECTRIC STANDARDS

TRANSMISSION HEAVY CROSSARMS - 69KV

599.002
SUPERCEDES
380.7 (1986)

TABLE OF CONTENTS

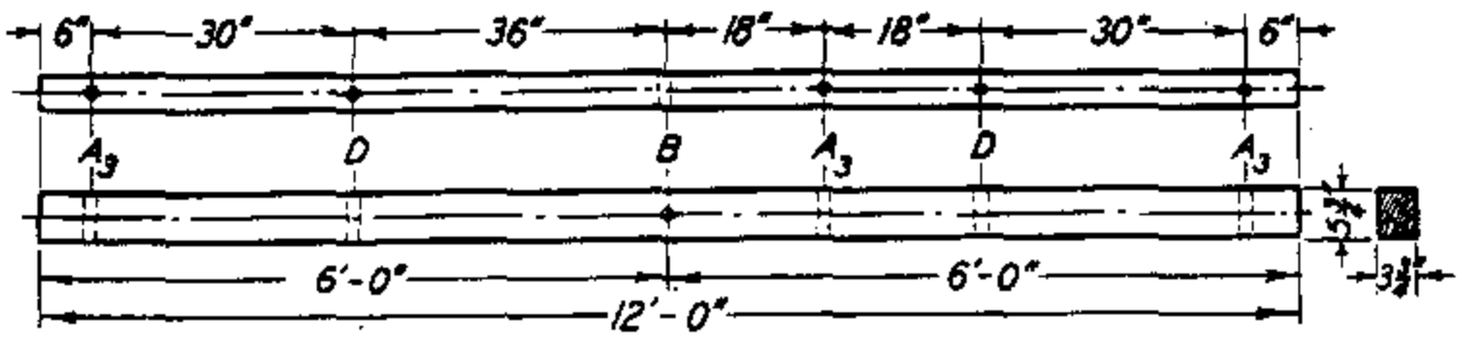

ITEM NO. 1 - LINE POST TANGENT ARM - 0° TO 3° ANGLES
(6' BRACE)

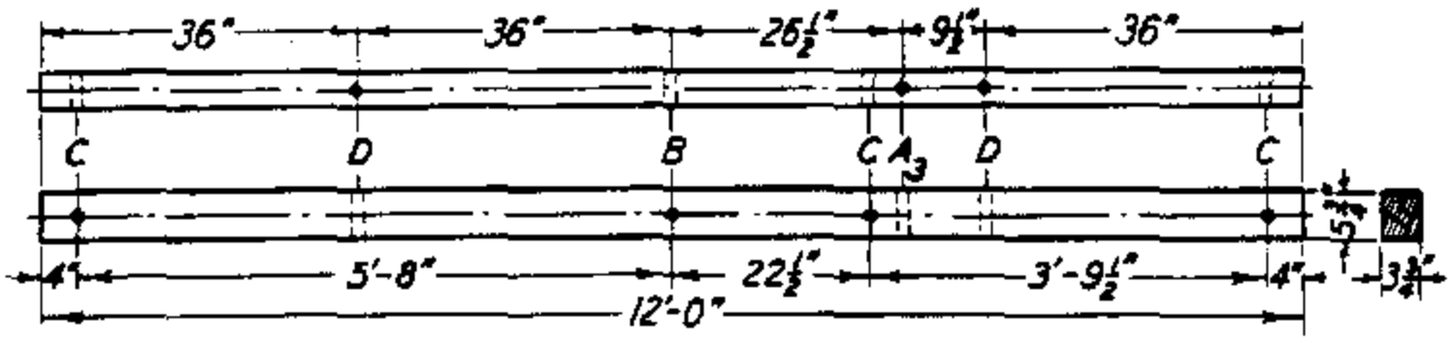

ITEM NO. 2 - LINE POST DEAD END ARM
(6' BRACE)

ITEMS 1, 2 & 3 ARE 69KV ARMS FOR HORIZONTAL CONSTRUCTION

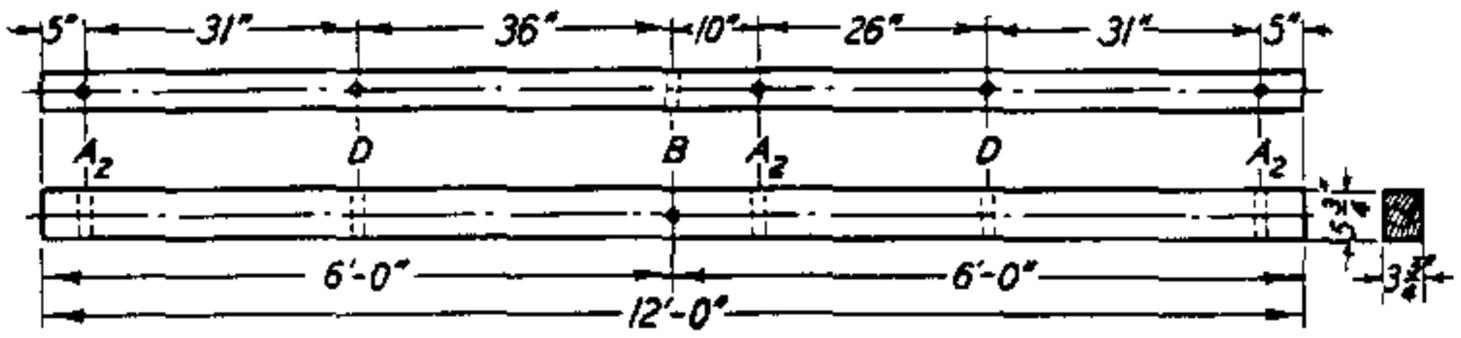

ITEM NO. 3 - LINE POST ANGLE PIN ARM - 3° TO 9° ANGLES
(6' BRACE)

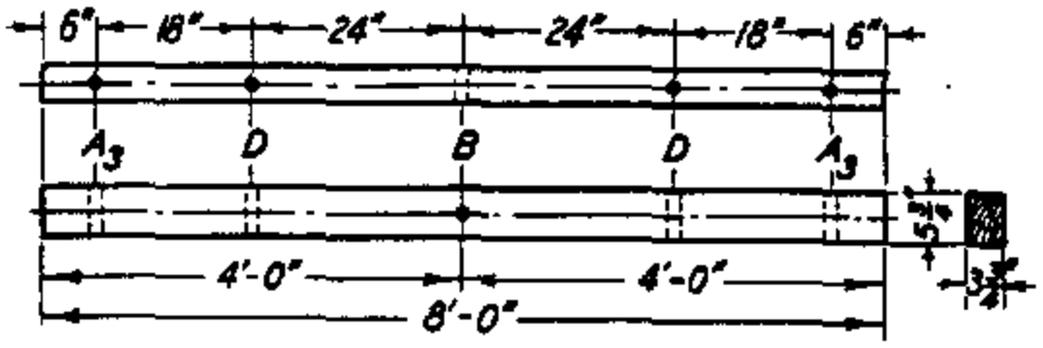

ITEM NO. 4 - LINE POST ARM
69KV ARM FOR TRIANGULAR CONSTRUCTION
(4' BRACE)

REFERENCES

A_2 - PIN HOLES 13/16" DIAM.
A_3 - PIN HOLES 15/16" DIAM.
B - THRU BOLT HOLES 11/16" DIAM.
C - SPACE BOLT HOLES 11/16" DIAM.
D - BRACE BOLT HOLES 11/16" DIAM.

FOR FIELD MAINTENANCE ONLY

ITEM	DESCRIPTION	STOCK NO.	ITEM	DESCRIPTION	STOCK NO.
1	FIELD MAINTENANCE ONLY	—			
2	FIELD MAINTENANCE ONLY	—			
3	FIELD MAINTENANCE ONLY	—			
4	—	—			

599.003 SUPERCEDES 380.8 (1986)	SDG&E ELECTRIC STANDARDS TRANSMISSION CROSSARMS-69KV	DATE 1-1-86 APPD AE/RDF

TABLE OF CONTENTS

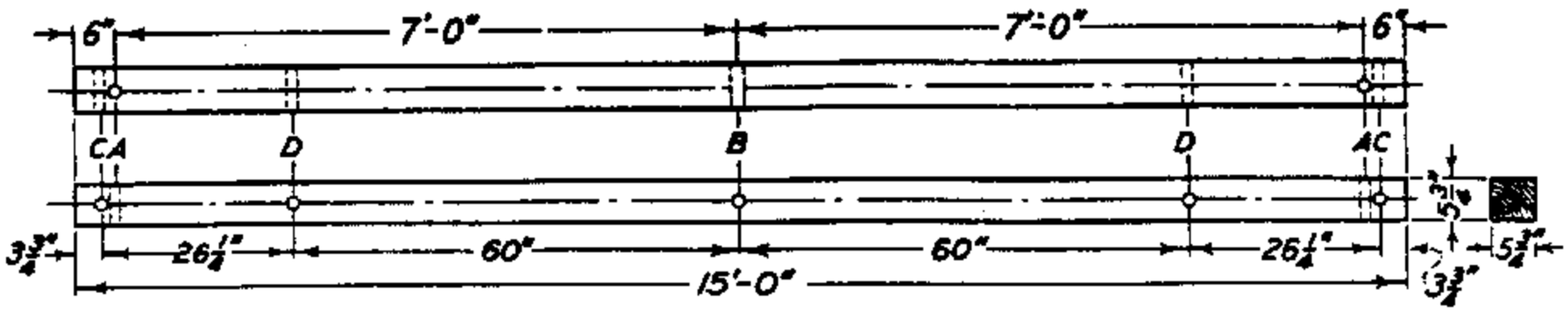

ITEM NO. 1 - LONG SPAN CROSSARM
(6'-9" BRACES, SEE PAGE 599.106 ITEM 2)

REFERENCES

A - BRACKET BOLT HOLES 11/16" DIAM.
B - THRU BOLT HOLE 13/16" DIAM.
C - SPACE BOLT HOLES 13/16" DIAM.
D - BRACE BOLT HOLES 11/16" DIAM.

TABLE OF CONTENTS

FOR FIELD MAINTENANCE ONLY

ITEM	DESCRIPTION	STOCK NO.	ITEM	DESCRIPTION	STOCK NO.
1	—	—			

DATE 1-1-87 APPD AK/RDS	SAN DIEGO GAS & ELECTRIC CO OVERHEAD STANDARDS TRANSMISSION CROSSARMS -69KV TRIANGULAR CONFIGURATION	599.004 SUPERCEDES 380.09 (1986)

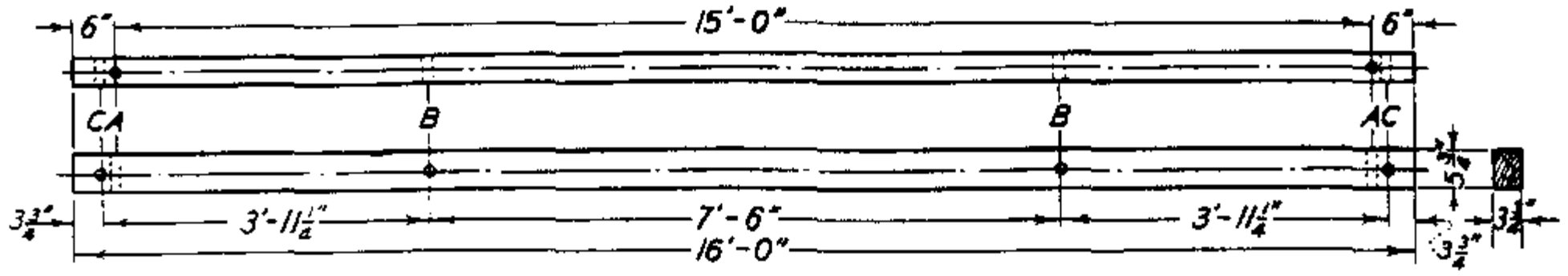

ITEM NO. 1 - 16 FT. TANGENT ARM - 0° TO 3° ANGLES

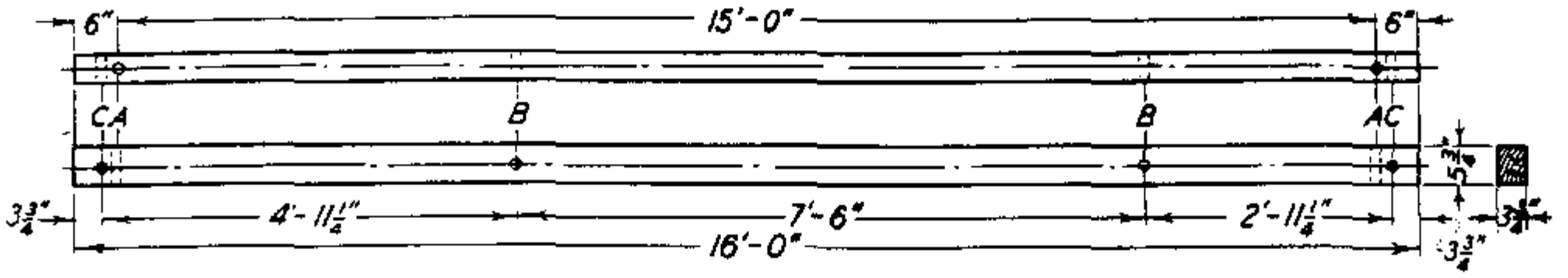

ITEM NO. 2 - 3° TO 15° ANGLE CROSSARM

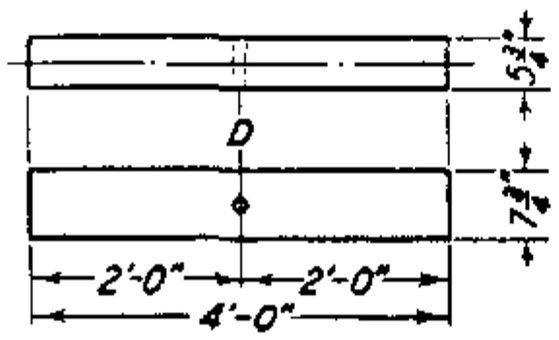

ITEM NO. 3 - BEARING BLOCK

REFERENCE

A - "J" BOLT HOLES 11/16" DIAM.
B - THRU BOLT HOLES 11/16" DIAM.
C - SPLIT BOLT HOLES 9/16" DIAM.
D - BEARING BLOCK HOLES 13/16" DIAM.

FOR FIELD MAINTENANCE ONLY

TABLE OF CONTENTS

ITEM	DESCRIPTION	STOCK NO.	ITEM	DESCRIPTION	STOCK NO.
1	CREOSOTE, UNDRILLED	294896			
2	CREOSOTE, UNDRILLED	294896			
3		—			

599.005
SUPERCEDES
380.10 (1986)

SAN DIEGO GAS & ELECTRIC CO OVERHEAD STANDARDS

TRANSMISSION CROSSARMS - 69KV "H" FRAME CONSTRUCTION

DATE 1-1-86
APPD

SCOPE: THIS STANDARD SHOWS THE VARIOUS TYPES OF INSULATORS USED IN THE TRANSMISSION SYSTEM.

HORIZONTAL POST TYPE INSULATORS

APPLICATION	DESCRIPTION	COLOR	MANUFACTURER	CATALOG NUMBER	STOCK NUMBER
138KV FOR GENERAL APPLICATION CODE 138P		GRAY	LAPP (SHOWN) NGK (ONE PC PORCELAIN)	70149 DA85205Y	429280
138KV FOR GENERAL BUNDLED APPLICATION CODE 138PB	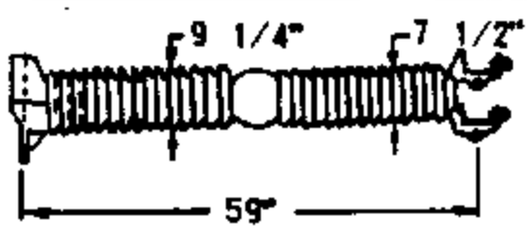	GRAY	LAPP	93349-70	429296
69KV FOR GENERAL APPLICATION CODE 69P	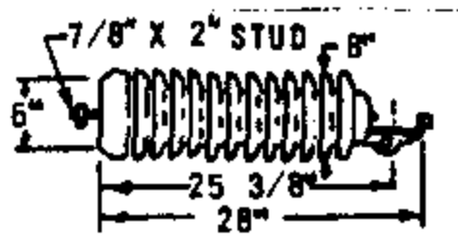	GRAY	LAPP NGK OHIO BRASS	F4688-C-70 DA85192Z 48539-7100 (D)	429312
69KV FOR GENERAL BUNDLED APPLICATION CODE 69PB	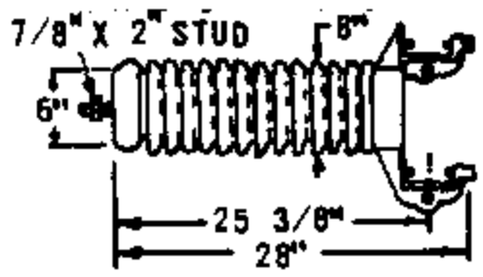	GRAY	LAPP	F-97517-70	429328
69KV USE IN CONTAMINATION DISTRICT 1, TRIAL APPLICATION - CODE 69PR (A)(F)		GRAY	LAPP	F-510188	-
69KV FOR GENERAL APPLICATION CODE 69V	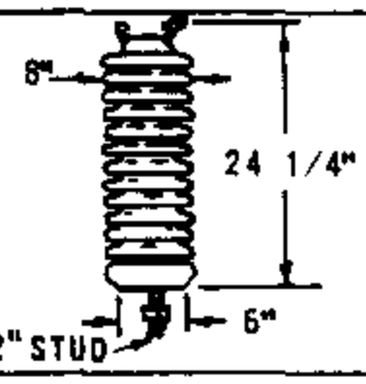	GRAY	LAPP	4288-70	428672 (C)
69KV USE IN CONTAMINATION DISTRICT 1, TRIAL APPLICATION CODE 69VR (A)(F)	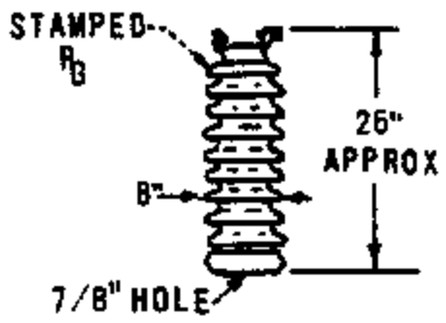	GRAY	LAPP	510088	-

INSTALLATION:

(A) USE THIS INSULATOR WHICH HAS A SPECIAL RESISTIVE GLAZE, AVAILABLE ON A TRIAL BASIS, TO REDUCE FLASHOVER PROBLEMS. BASES MUST BE BONDED AND INSULATORS MUST NOT BE MIXED WITH OTHER TYPES ON PHASE WIRES ON ONE POLE. DO NOT WASH OR INSULGREASE THESE INSULATORS. FOR THREE PHASE APPLICATION ONLY.

B. LINE POST INSULATORS FOR DISTRIBUTION USE HAVE A 3/4" HOLE FOR MOUNTING STUD, WHILE 69 & 88KV POSTS HAVE A 7/8" HOLE. STUDS ARE STOCKED BY REFERENCING THE SIZE OF THE STUD WHICH MATES WITH THE REST OF THE STRUCTURE. THEREFORE, USE 3/4" STUDS FOR DISTRIBUTION AND 7/8" STUDS FOR TRANSMISSION. SEE PAGE 751.

(C) NO LONGER PURCHASED.

(D) NO LONGER MANUFACTURED.

FOR FIELD MAINTENANCE ONLY

REFERENCE:

(F) CONTAMINATION DISTRICTS IDENTIFIED ON STANDARDS PAGE 287.

TABLE OF CONTENTS

APPLICATION	DESCRIPTION OF SUSPENSION TYPE INSULATORS DEMENSIONS	WORKING LOAD/ M&E RATING	BONDING	COLOR	MANUFACTURER	CATALOG NUMBER	STOCK NUMBER
69 AND 138KV SUSPENSION INSTALLATIONS CONTAMINATION DISTRICT 1 CODE FB6	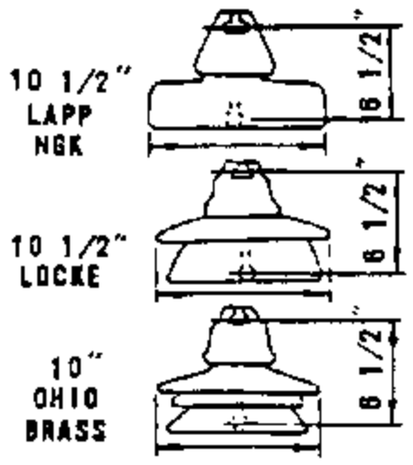	7,500/ 15,000	BONDED	GRAY	LAPP LOCKE NGK OHIO BRASS	98392-70 18134 DWG#21852 47360 (B)	431296 (A)
				BROWN	LAPP	98392	431300 (A)
69 AND 138KV SUSPENSION INSTALLATIONS CONTAMINATION DISTRICT 1 CODE F6			UN-BONDED	GRAY	LAPP LOCKE OHIO BRASS	98392-70 18134 47360 (B)	431328 (A)
				BROWN	LAPP	98392	431332 (A)
69 AND 138KV SUSPENSION INSTALLATIONS CONTAMINATION DISTRICT 1 CODE FB5	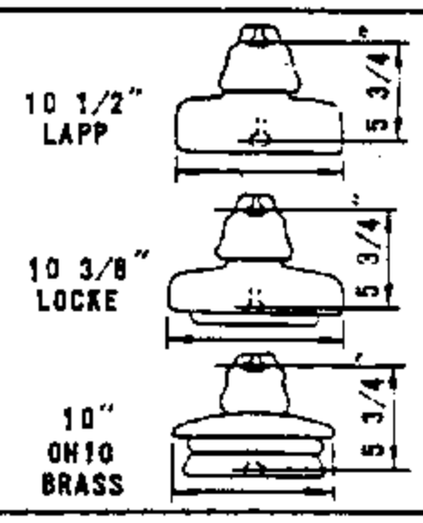	FOR FIELD MAINTENANCE ONLY 7,500/ 15,000	BONDED	GRAY	LAPP LOCKE OHIO BRASS	98391-70 20S185 47350 (B)	431344
69 AND 138KV DEAD END INSTALLATIONS USE FOR TENSIONS ABOVE 5000 POUNDS PER PHASE CODE DH	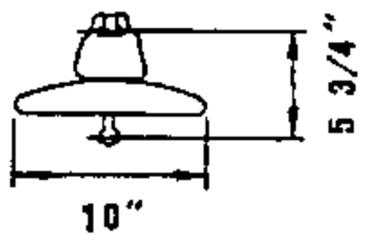	12,500/ 25,000	UN-BONDED	GRAY	CHANCE LAPP LOCKE NGK OHIO BRASS	C907-1005 5960G-70 30S255 CA 500 MQ 47410 (B)	431776
				BROWN	LAPP LOCKE OHIO BRASS	5960G 30S255 47410 (B)	431376 (A)
69 AND 138KV SUSPENSIONS INSTALLATIONS CONTAMINATION DISTRICTS 2 AND 3 & FOR DEAD ENDS BELOW 1000 POUNDS TENSION PER PHASE EVERYWHERE CODE DB	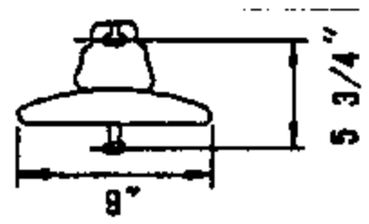	7,500/ 15,000	BONDED	GRAY	CHANCE LAPP LOCKE NGK	C907-1903 74165-70 15S419 CA 557 MH	431520
				BROWN	LAPP	74165	431524 (A)
69 AND 138KV DEAD ENDS ABOVE 1000 POUNDS TENSION PER PHASE EVERYWHERE CODE D	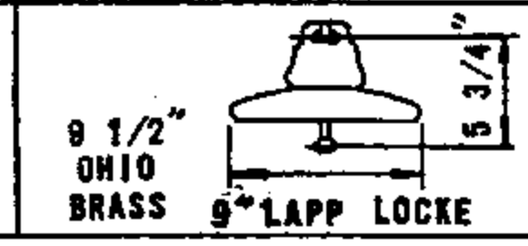	7,500/ 15,000	UN-BONDED	GRAY	LAPP LOCKE OHIO BRASS	74165-70 15S419 48008 (B)	431424
				BROWN	LAPP	74165	431420 (A)

INSTALLATION:

(A) NO LONGER PURCHASED. BROWN INSULATORS SHALL BE USED ON BROWN POLES TO ELIMINATE STOCK. DO NOT MIX BROWN AND GRAY SUSPENSION INSULATORS AT A GIVEN LEVEL ON A POLE.

(B) NO LONGER MANUFACTURED.

C. USE BONDED INSULATORS IN SUSPENSION APPLICATIONS THROUGH RESIDENTIAL AND COMMERCIAL AREAS.

REFERENCE:

F. CONTAMINATION DISTRICTS IDENTIFIED ON STANDARDS PAGE 287.

G. SEE STANDARDS PAGE 599.501 FOR TRANSMISSION LINE INSULATION TABLE.

TABLE OF CONTENTS

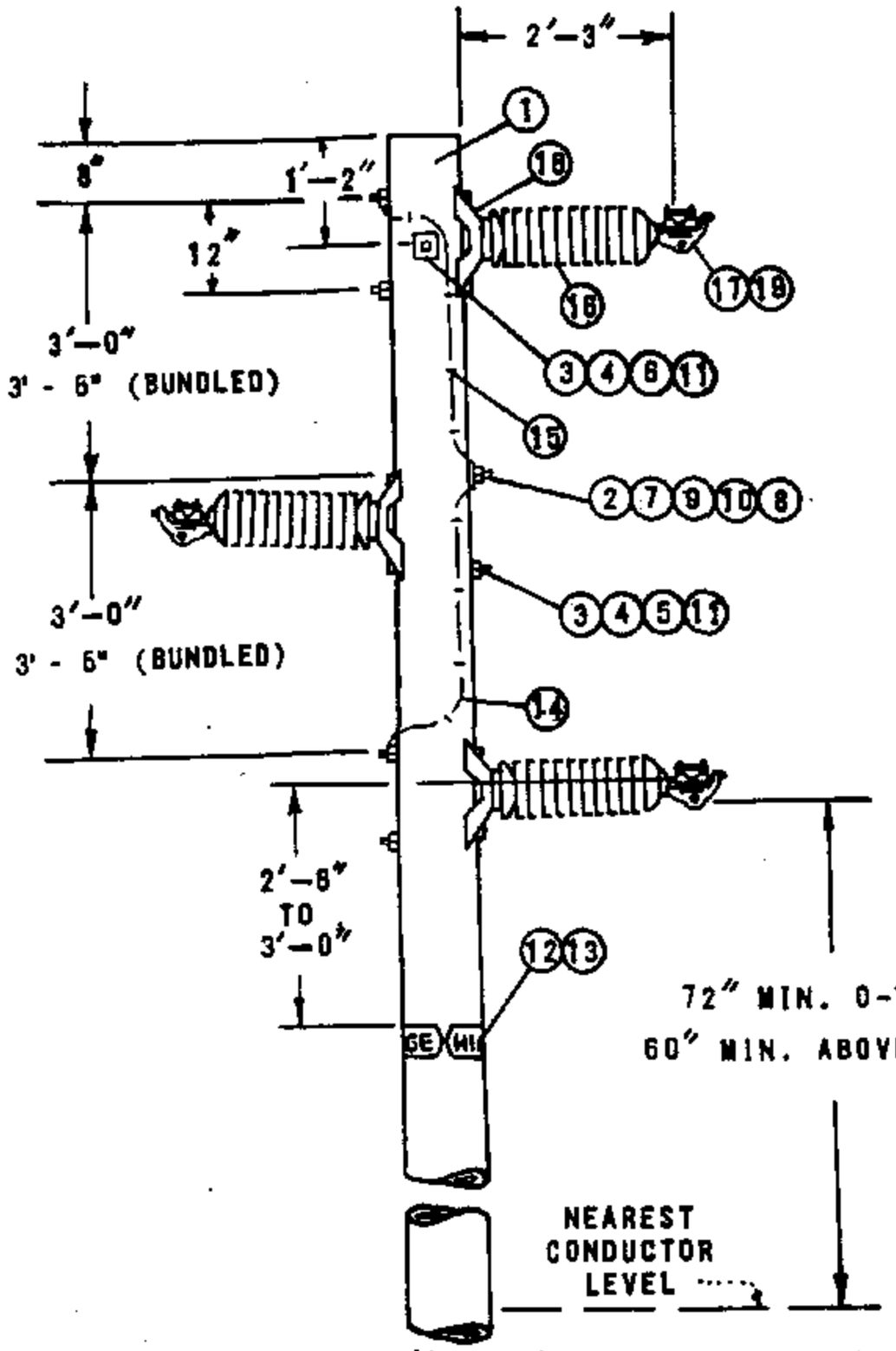

WORK ORDER DESIGNATION "69KV WPI"

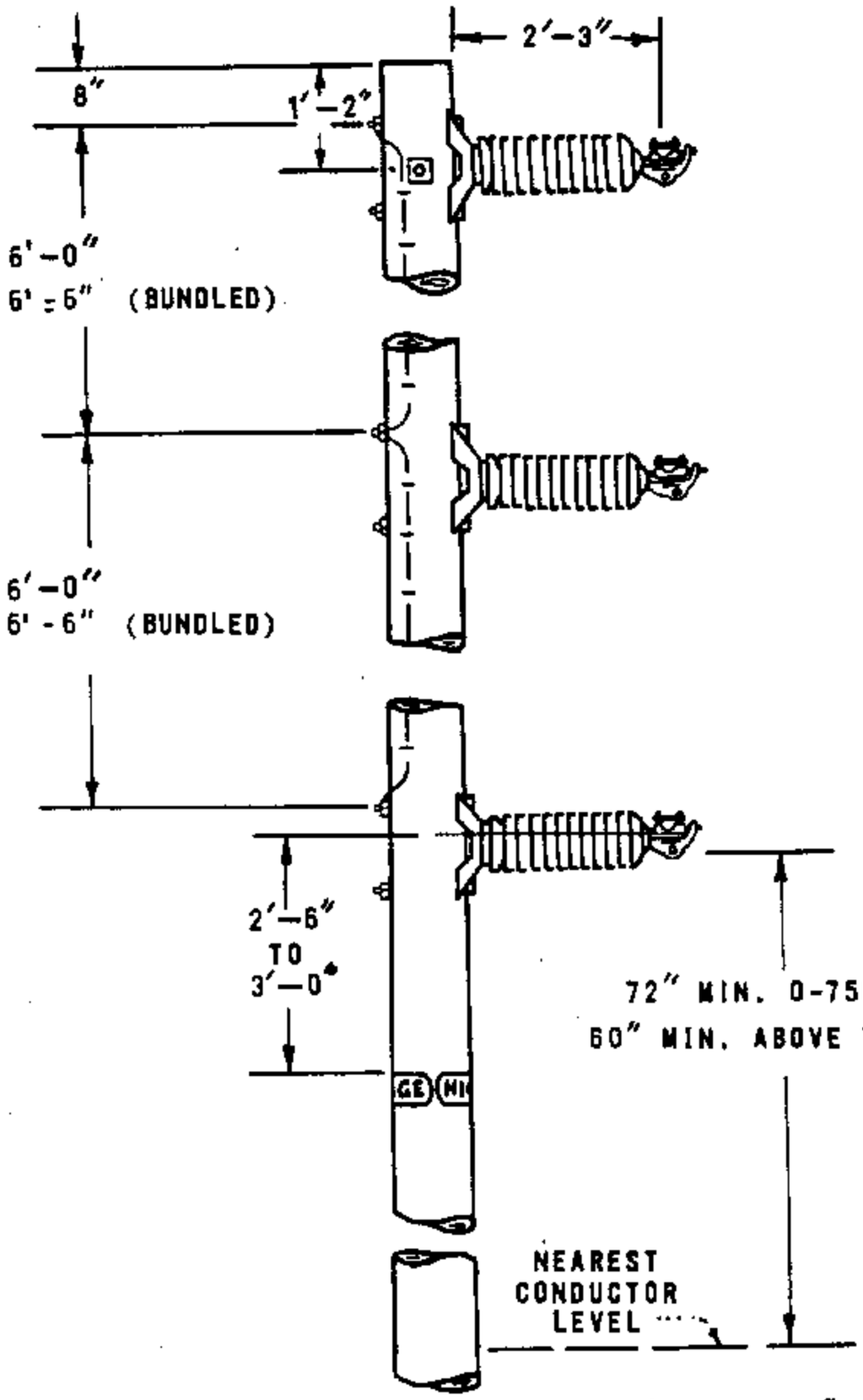

WORK ORDER DESIGNATION "69 KV ZPI"

NOTES:

A. FOR USE ON LINE ANGLES 0 TO 30 DEGREES.

B. FOR LINE ANGLE CONSTRUCTION, GUY AS REQUIRED.

(E) EXEMPT MATERIALS.

ITEM TPF	ITEM TOC	DESCRIPTION	QUANTITY	STOCK NO. OR CONSTR STD
1		POLE, CLASS AND HEIGHT (AS REQUIRED)	1	300 SECTION
2		BOLT, MACHINE 3/4" (LENGTH AS REQ'D)	3	100 SECTION
3		BOLT, MACHINE 5/8" (LENGTH AS REQ'D)	(E) 4	100 SECTION
4		WASHER, 3" SQUARE CURVED RIB	(E) 2	797782
5		WASHER, 3" SQ. CURV	3	798912
6		WASHER, SPRING DBL COIL 5/8"	(E) 4	798560
7		WASHER, 4" SQUARE CURVED RIB	6	797760
8		WASHER, RD. FLAT 3/4"	6	800256
9		NUTS, 3/4"	3	504768
10		LOCKNUT, M-F 3/4"	3	504576
11		LOCKNUT, M-F 5/8"	4	504608
12		SIGN, HIGH VOLTAGE	(E) 2	647648
13		NAILS, ROOFING G GALV.	(E) 16	492224
14		WIRE, #8 S. SOLID ANNEALED COPPER	1 LB	812928
15		STAPLES, 1 1/4" , FENCE, GALV.	(E) AS REQ'D	678528
	16	INSULATOR, 69KV HORIZ, SINGLE CONDUCTOR/BUNDLED	3	429312/429328
	17	CLAMP, CONDUCTOR	3	700 SECTION
	18	INSULATOR BASE	3	125728
	19	GUARD LINE (FOR ALUMINUM CONDUCTORS)	3 SETS	700 SECTION

FOR FIELD MAINTENANCE ONLY

SDG&E ELECTRIC STANDARDS

DATE 7-1-84

APPD. RCL/JRH

69KV SINGLE CIRCUIT - HORIZONTAL POST INSULATORS

599.101

SUPERSEDES

511 (1985)

TABLE OF CONTENTS

SCOPE: THIS STANDARD SHOWS 138KV CONSTRUCTION USED WHEN DESIGNING SINGLE CIRCUIT TRANSMISSION LINES USING HORIZONTAL POST INSULATORS.

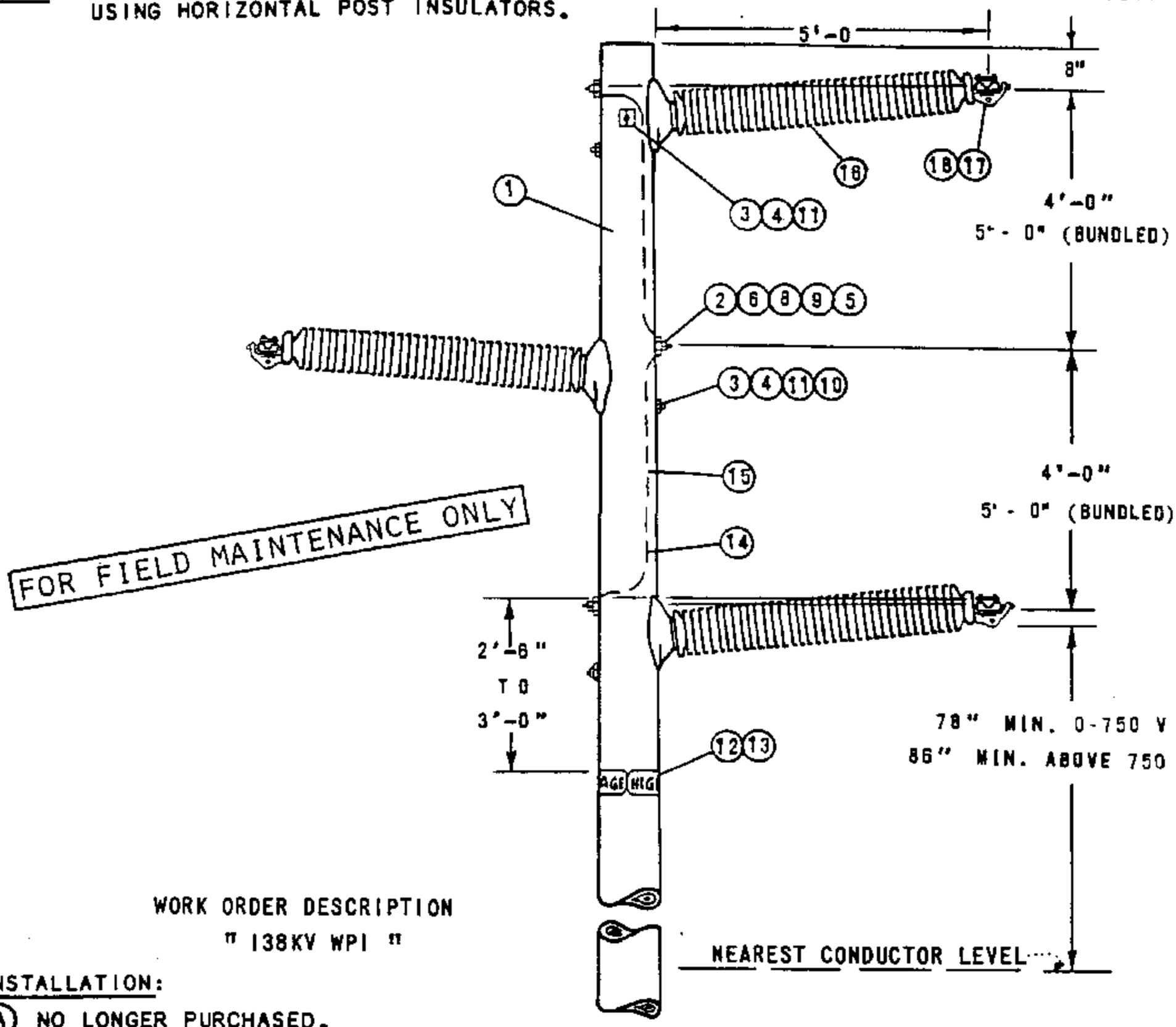

WORK ORDER DESCRIPTION
" 138KV WPI "

INSTALLATION:

(A) NO LONGER PURCHASED.
(E) EXEMPT MATERIAL.

ITEM NUMBER T.P.F.	ITEM NUMBER T.O.C.	DESCRIPTION	QUANTITY	STOCK NO. OR CONSTR. STD.
1		POLE, CLASS AND HEIGHT (AS REQUIRED)	1	STD 361
2		BOLT, MACHINE 3/4"(LENGTH AS REQUIRED)	3	STD 139
3		BOLT, MACHINE 5/8"(LENGTH AS REQUIRED)	(E) 4	STD 139
4		WASHER, 3" SQUARE CURVED RIB	(E) 2	797792
5		WASHER, RD FLAT 3/4"	(E) 6	800256
6		WASHER, 4" SQUARE, CURVED RIB	(E) 3	797780
7		WASHER, 3" SQ. CURVED	(A) (E) 3	800384
8		NUTS 3/4"	(E) 6	504768
9		LOCKNUT, M-F 3/4"	(E) 3	504576
10		LOCKNUT, M-F 5/8"	(E) 3	504608
11		WASHER, SPRING DBL COIL 5/8"	(E) 3	798560
12		SIGN, HIGH VOLTAGE	(E) 2	547548
13		NAILS, ROOFING 8 GALV.	(E) 16	492192
14		WIRE, #6 B. SOLID ANNEALED COPPER	1 LB	812828
15		STAPLES,1 1/4"FENCE, GALV.	(E) AS REQ'D	878528
	16	INSULATOR, 138KV, SINGLE CONDUCTOR/BUNDLED	3	429280/429296
	17	CONDUCTOR CLAMP	3	STD 775, 776
	18	GUARD, LINE (FOR ALUMINUM CONDUCTORS)	3	STD 759

599.102
SUPERSEDES
512 (1985)

SDG&E ELECTRIC STANDARDS

138KV SINGLE CIRCUIT - HORIZONTAL POST INSULATORS

ISSUE 1993
DATE 7-1-84
APPD [signature]

TABLE OF CONTENTS

SCOPE: THIS STANDARD SHOWS 69KV CONSTRUCTION USED WHEN DESIGNING SINGLE AND TWIN CIRCUIT TRANSMISSION LINES USING HORIZONTAL POST INSULATORS.

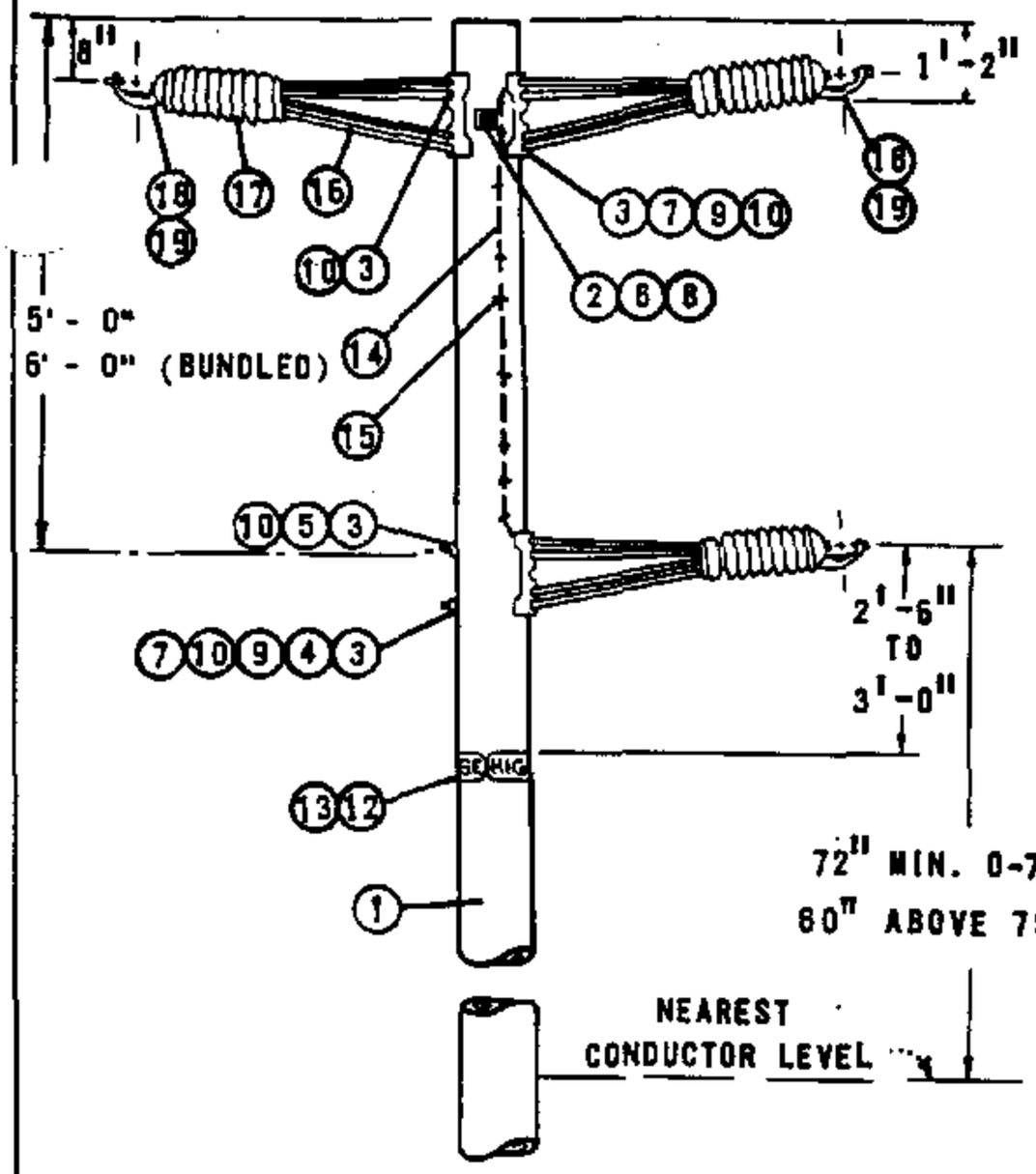

SINGLE CIRCUIT

WORK ORDER DESIGNATION "69 KV 2/1 WPI"

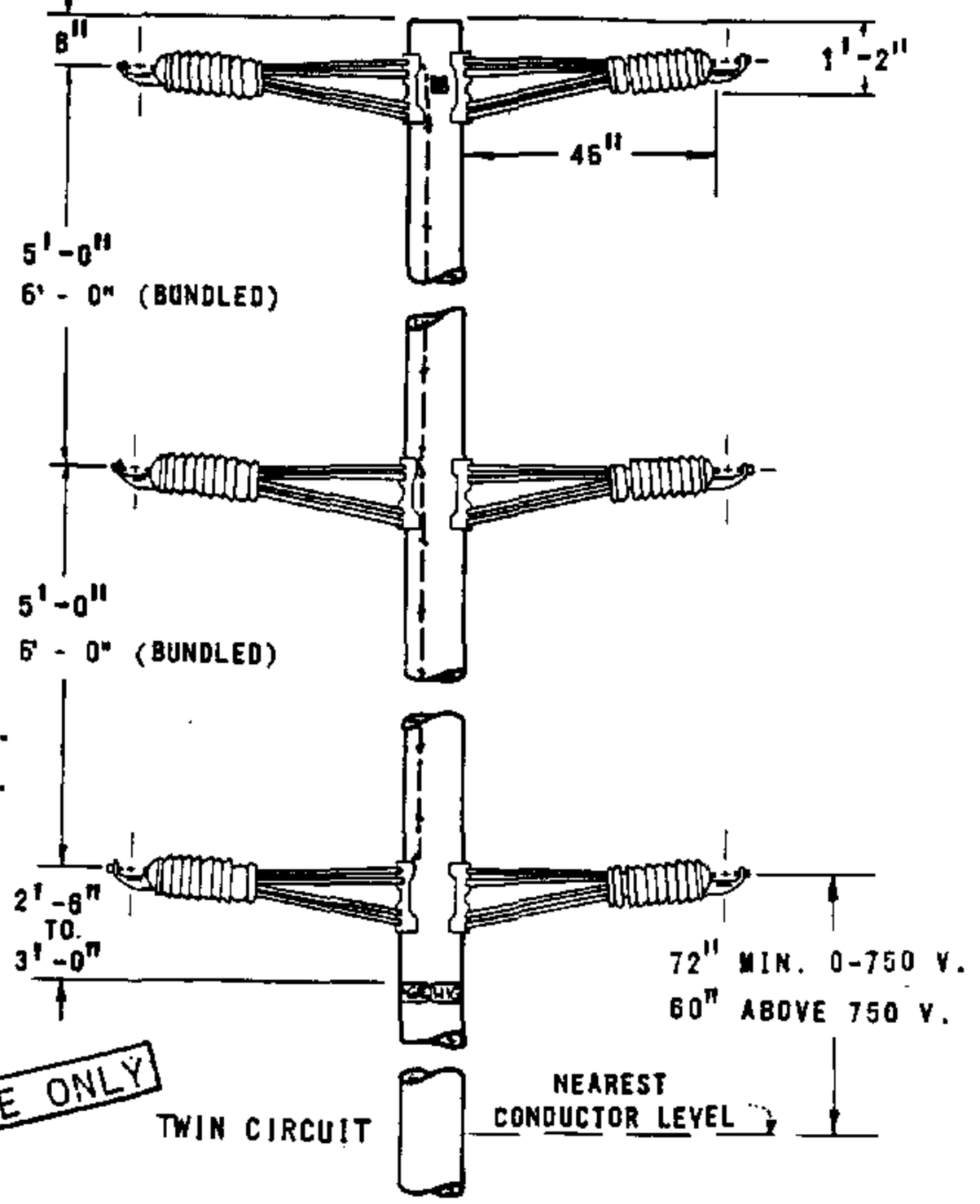

TWIN CIRCUIT

WORK ORDER DESIGNATION "69KV T.C. WPI"

FOR FIELD MAINTENANCE ONLY

INSTALLATION:

(E) EXEMPT MATERIALS.

ITEM PTF	ITEM TOC	DESCRIPTION	QUANTITY SGL CIR	QUANTITY DBL CIR	STOCK NO. OR CONSTR STD
1		POLE, CLASS AND HEIGHT (AS REQ'D)	1	1	PG. 361
2		BOLT, MACHINE 5/8" X (LENGTH AS REQ'D)	(E) 1	1	PG. 139
3		BOLT, MACHINE 3/4" X (LENGTH AS REQ'D)	4	6	PG. 139
4		WASHER, 3" SQUARE CURVED	(E) 1	-	798912
5		WASHER, 4" SQUARE CURVED RIB	(E) 1	-	797760
6		WASHER, 3" SQUARE CURVED RIB	(E) 2	2	797792
7		WASHER, SPRING DBL. COIL 3/4"	(E) 2	3	798496
8		WASHER, SPRING DBL. COIL 5/8"	(E) 1	1	798560
9		WASHER, 3/4" ROUND	(E) 3	6	800256
10		LOCKNUT, M-F 3/4"	(E) 4	6	504576
11					
12		SIGN, HIGH VOLTAGE	(E) 2	2	647648
13		NAILS, ROOFING 8 GALV.	(E) 16	16	492224
14		WIRE, #6 B. SOLID ANNEALED COPPER	.5 lb	1 lb.	812928
15		STAPLES, 1 1/4", FENCE GALV.	(E) 6	12	678528
16		ARM, EXTENSION	3	6	110752
	17	INSULATOR, 88KV HORIZ. LINE POST W/STUD	3	6	429312
	18	CLAMP, CONDUCTOR	3	6	PG 775, 776
	19	GUARD, LINE (FOR ALUMINUM CONDUCTORS)	3 SETS	6 SETS	PG. 759

SDG&E ELECTRIC STANDARDS

DATE 7-1-84
APPD RES/SCH

69KV SINGLE & TWIN CIRCUITS - HORIZONTAL POST INSULATORS

599.103
SUPERSEDES
513 (1985)

TABLE OF CONTENTS

SCOPE: THIS STANDARD SHOWS THE PROPER ASSEMBLY OF TRANSMISSION POST INSULATOR STUDS.

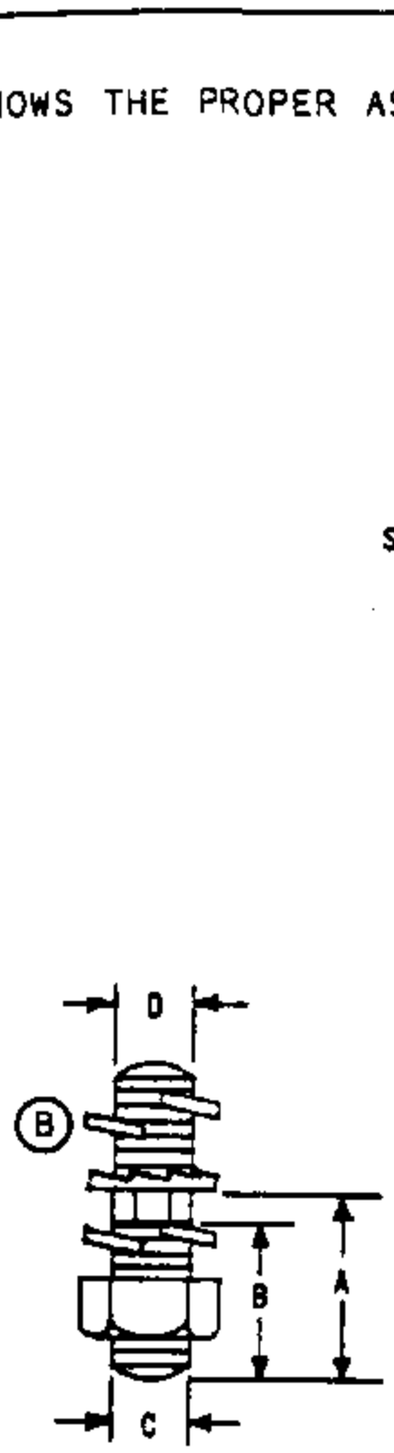

FIG. 1
FOR STEEL CROSS ARM
OR BRACKET

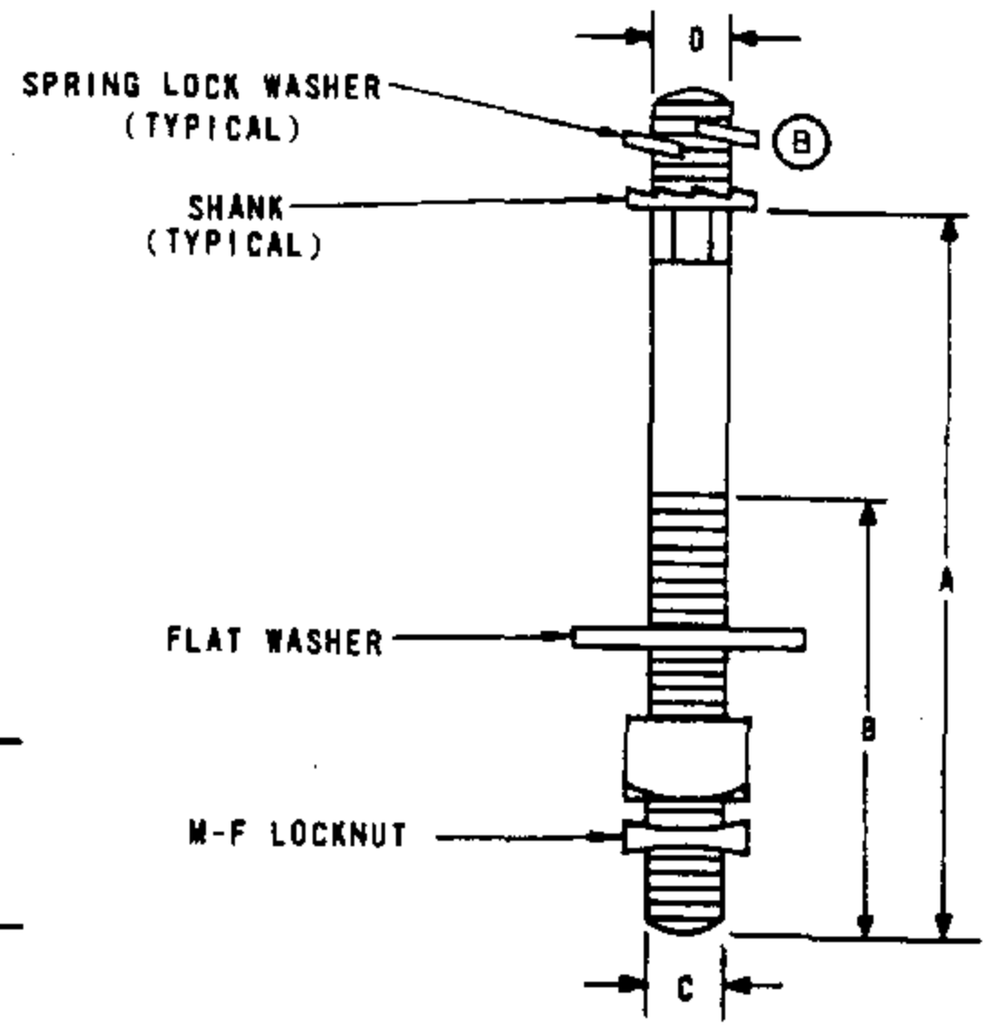

FIG. 2
FOR WOOD CROSS ARM

FOR FIELD MAINTENANCE ONLY

BILL OF MATERIAL:

SIZE OF INSULATOR STUD				FIGURE NUMBER	VOLTAGE CLASSIFICATION	JOSLYN CATALOG NUMBER	LAPP CATALOG NUMBER	STOCK NUMBER
A	B	C	D					
2"	1 11/16"	7/8"	7/8"	1	88KV	-	301616	701776 (A)
8"	4"	7/8"	7/8"	2	88KV	-	10362A	701792 (A)

INSTALLATION:

(A) NOT NORMALLY PURCHASED.

(B) WHEN ASSEMBLING STUD TO INSULATOR, MOVE A LOCKWASHER TO THE TOP OF THE STUD.

599.104	SDG&E ELECTRIC STANDARDS POST INSULATOR STUDS	DATE 1-1-86 APPD AK/RDX

TABLE OF CONTENTS

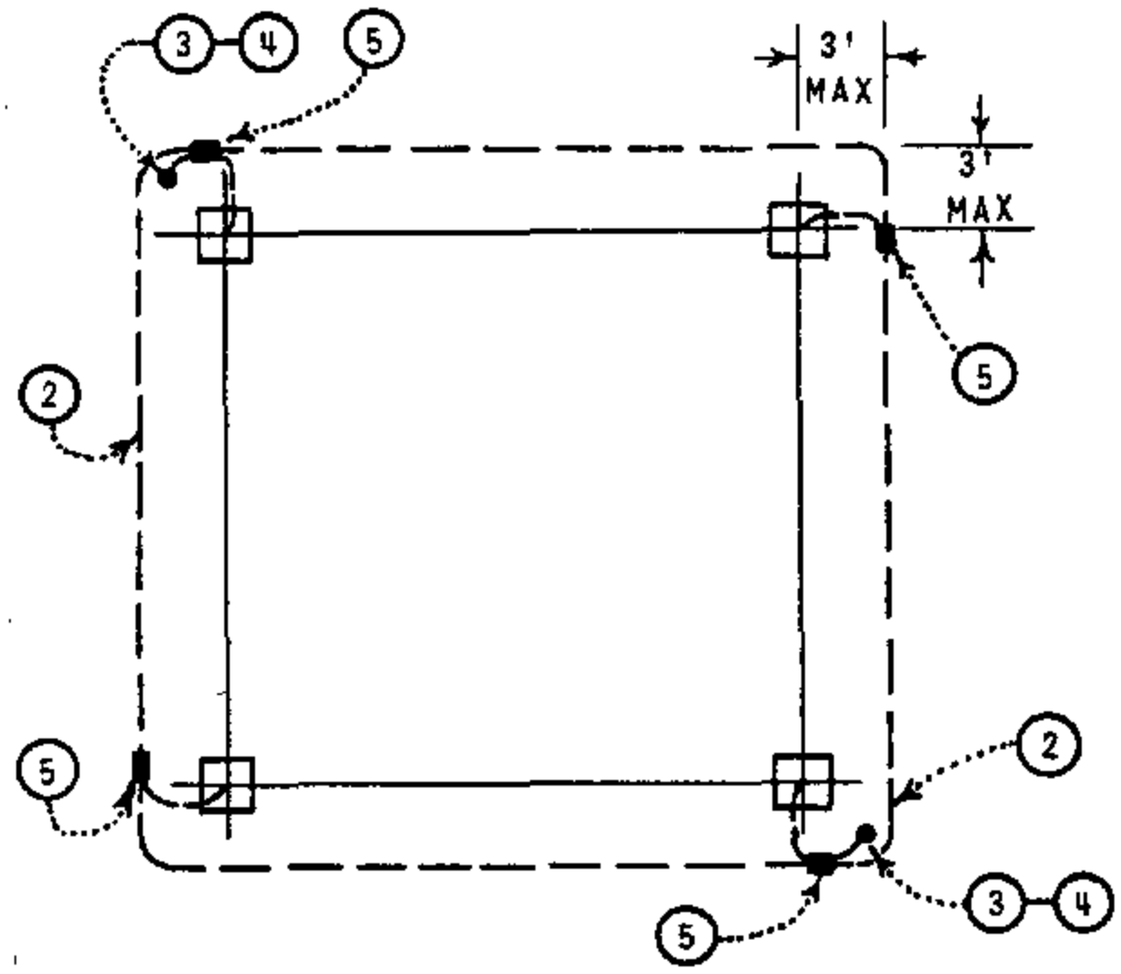

PLAN

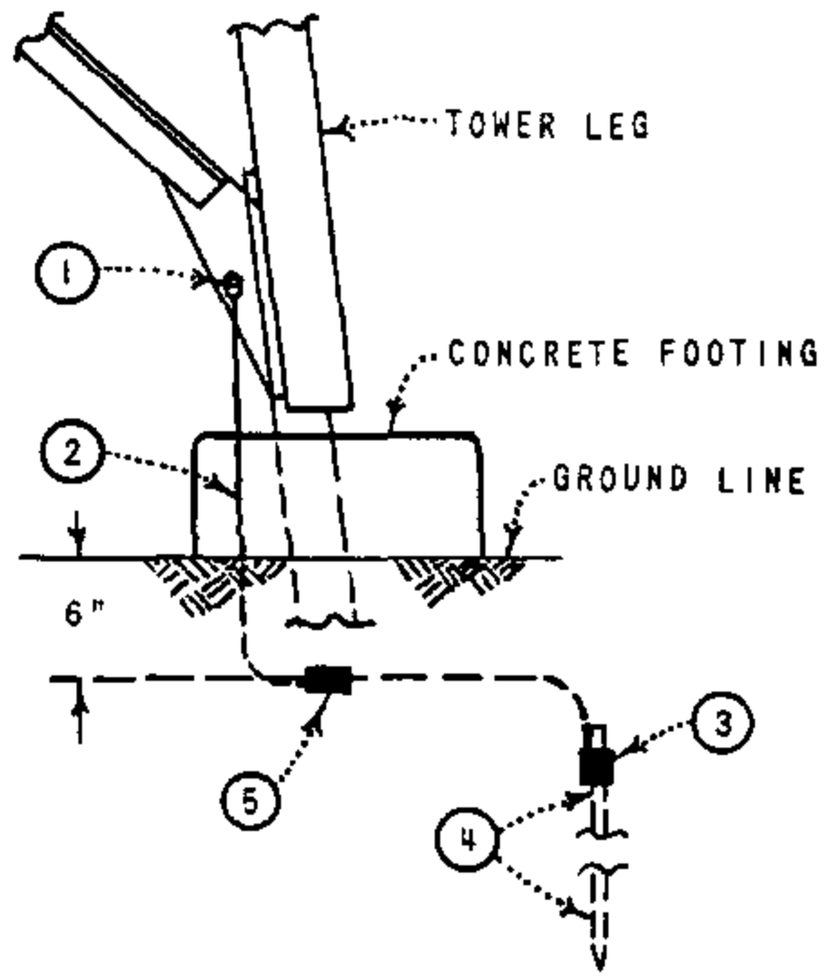

ELEVATION

TABLE OF CONTENTS

FOR FIELD MAINTENANCE ONLY

ITEM	DESCRIPTION	QUANTITY	STOCK NUMBER
1	CONNECTOR, FLAT GROUND	4	261600
2	WIRE, #2 BARE SOLID COPPERWELD	as req'd	813056
3	CONNECTOR, COMPRESSION	2	257888
4	ROD: GROUND. COPPERWELD 5/8" X 8' - 0"	2	603072
5	CONNECTOR, COMPRESSION	4	257792

DATE 1-1-86
APPD AK/RDS

SDG&E ELECTRIC STANDARDS

STEEL TOWER GROUNDING

599.105
SUPERCEDES
1011 (1986)

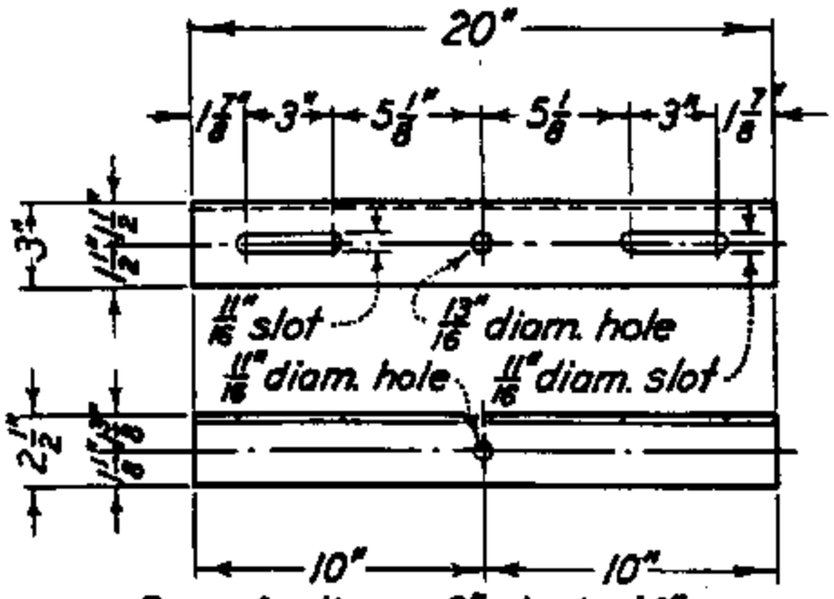

For pole diams. 8" min. to 14" max.

ITEM 1

3" X 2 1/2" X 5/16" ANGLE BRACKET

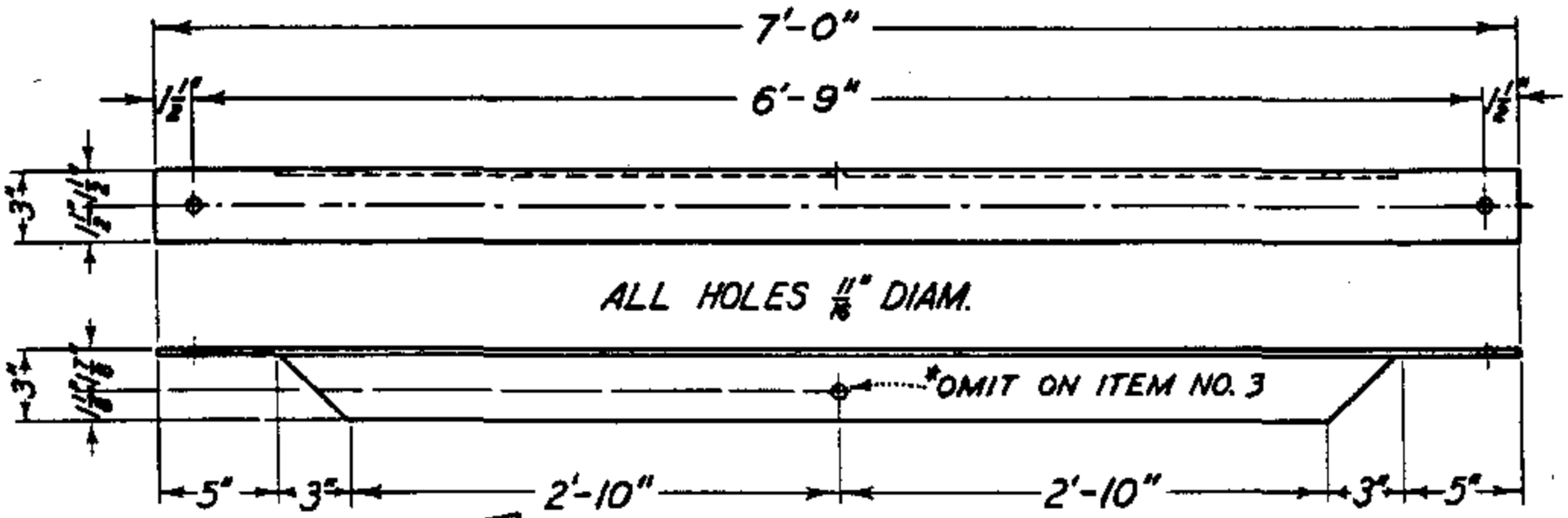

ITEM 2

3" X 3" X 1/4" HORIZONTAL ANGLE BRACE

FOR FIELD MAINTENANCE ONLY

ITEM 3

SAME AS ITEM 2, EXCEPT *OMIT CENTER HOLE

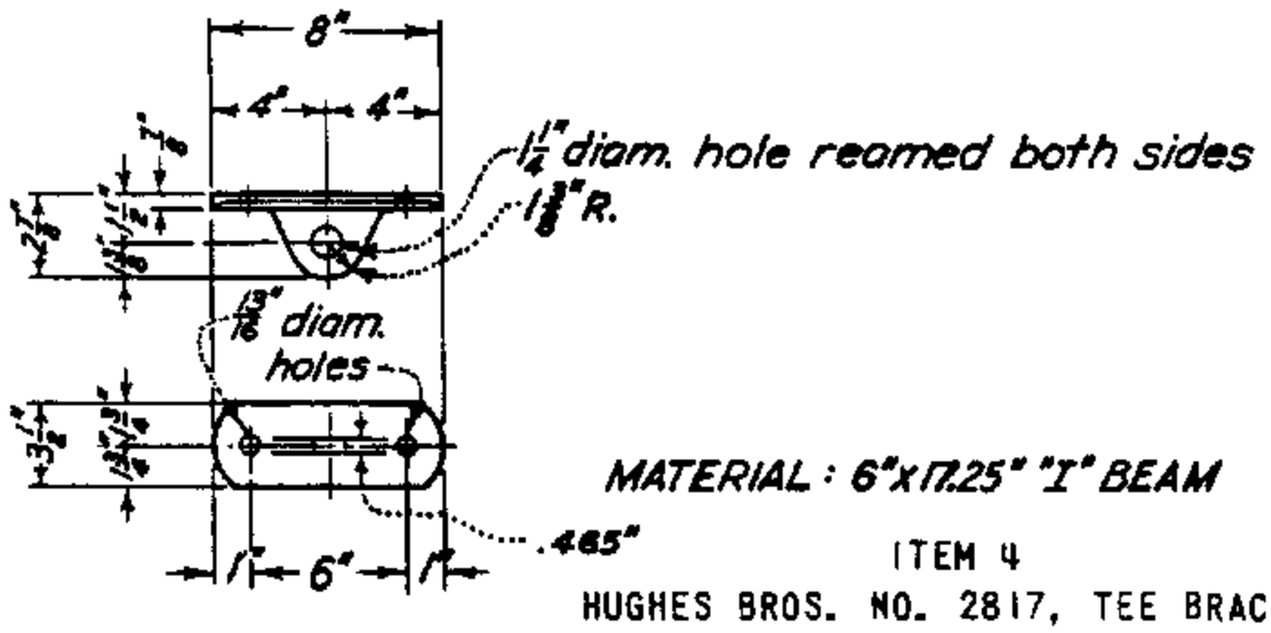

MATERIAL : 6"x17.25" "I" BEAM

ITEM 4

HUGHES BROS. NO. 2817, TEE BRACKET

INSTALLATION:

A. ITEMS TO BE MADE OF STEEL, HOT-DIP GALVANIZED AFTER FABRICATION.

(E) EXEMPT MATERIAL.

ITEM	DESCRIPTION	STOCK NO.	ITEM	DESCRIPTION	STOCK NO.
1	BRACKET (DOUBLE ARMING)	165376			
2	HORIZONTAL ANGLE CROSSARM BRACE (E)	164416			
3	HORIZONTAL ANGLE X-ARM BRACE (E)	164416			
4	TEE BRACKET FOR DEAD END ATTACHMENT	723968			

DATE 1-1-86
APPD AK/RDA

SDG&E ELECTRIC STANDARDS

TRANSMISSION HARDWARE ANGLE BRACKETS, HORIZONTAL BRACE

599.106
SUPERSEDES
391.1 (1986)

TABLE OF CONTENTS

SCOPE: THIS PAGE IS TO BE USED WHEN DESIGNING SINGLE CIRCUIT, 69KV TRANSMISSION LINES USING HORIZONTAL POST INSULATORS.

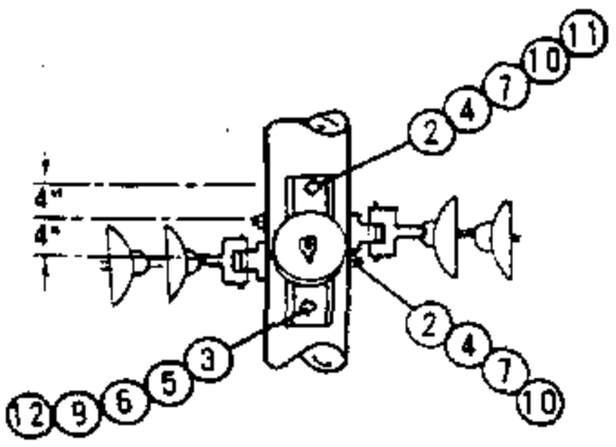

TYPICAL DRILLING DETAIL

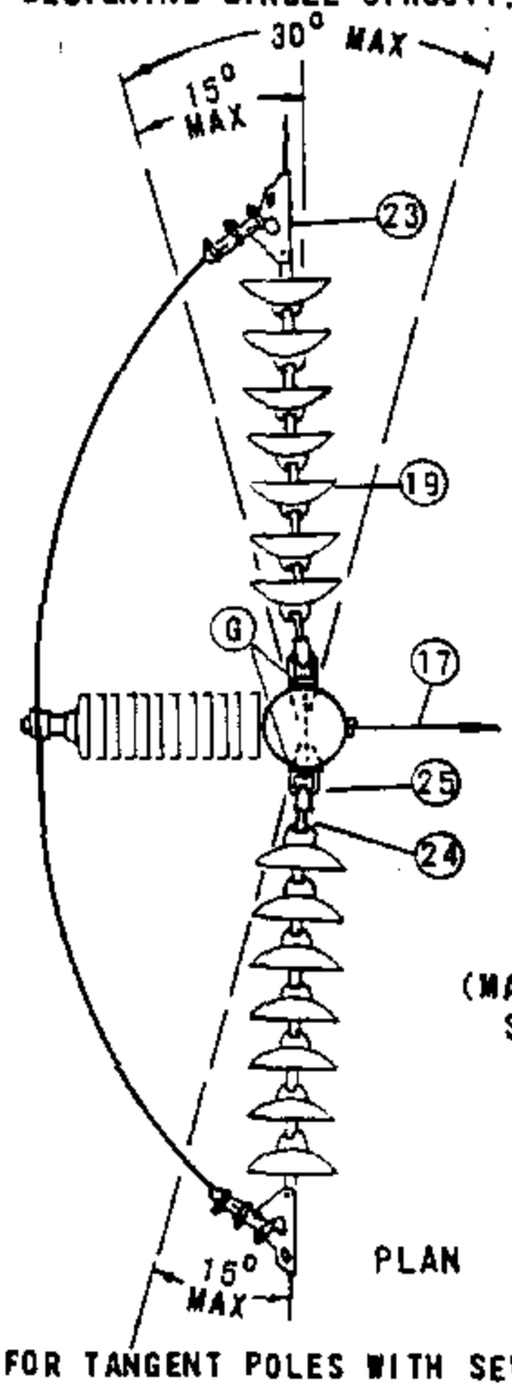

PLAN

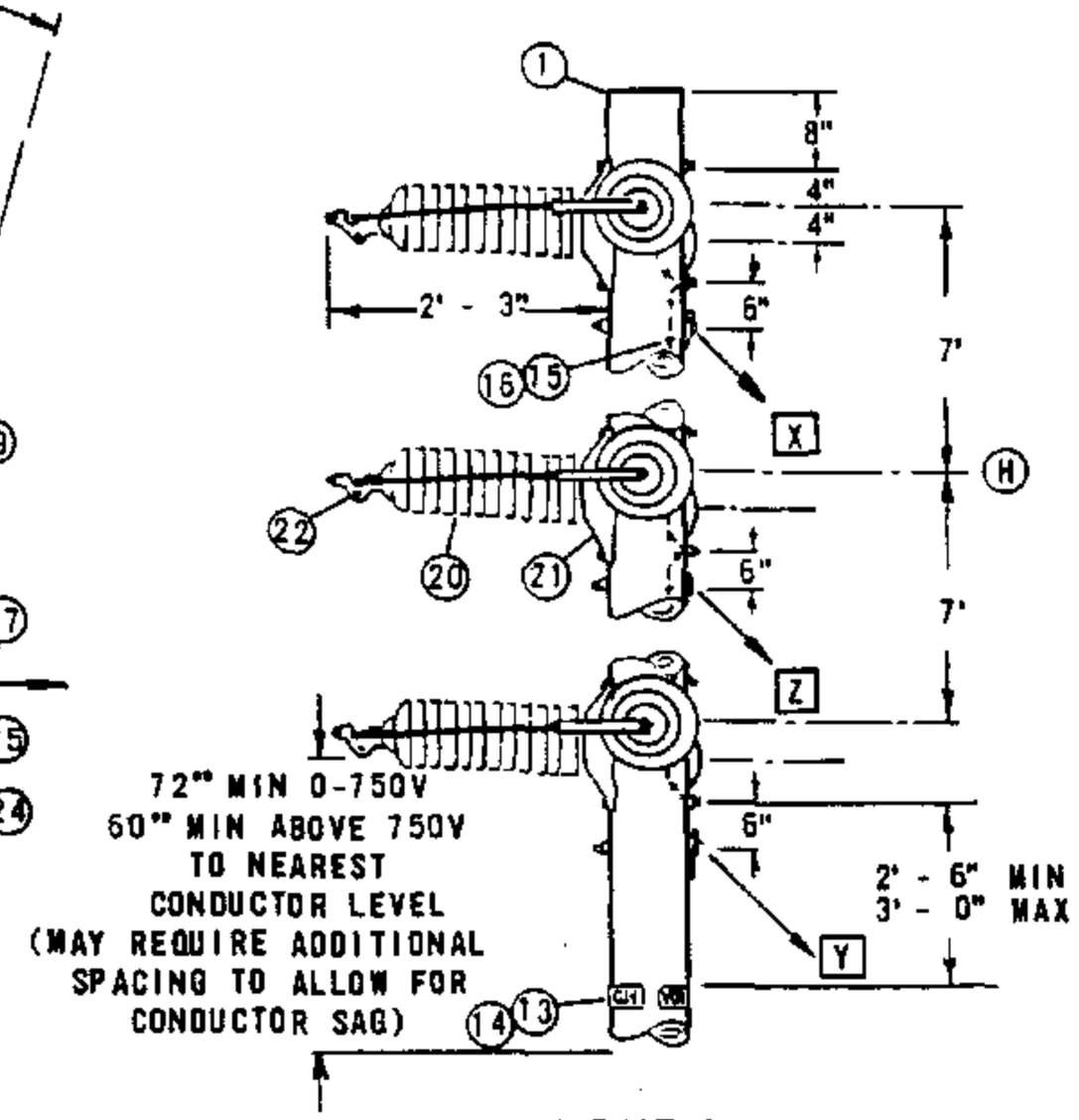

ELEVATION

SINGLE CIRCUIT
WORK ORDER DESIGNATION
"69KV YP1"

INSTALLATION:

A. FOR USE ON ANGLES UP TO 30° AND FOR TANGENT POLES WITH SEVERE UPLIFT OR DOWN PULL.

B. GUY UPLIFT POLES IF UPLIFT IS GREATER THAN 80% OF STRUCTURE WEIGHT.

(C) ADD THE GUYS ON EITHER SIDE IN THE ORDER INDICATED ABOVE (X, Y, Z) AS REQUIRED BY THE GUYING SECTION.

D. POLE BANDS MAY BE SUBSTITUTED FOR MACHINE BOLTS WHEN ADDITIONAL STRENGTH IS REQUIRED UNDER HIGH TENSION CONDITIONS WHEN SPECIFIED BY THE TRANSMISSION ENGINEER.

(E) EXEMPT MATERIALS.

(F) CONTACT TRANSMISSION ENGINEERING WHEN USING BUNDLED CONDUCTOR.

(G) THRU BOLTS TO BE IN LINE WITH INSULATOR STRING.

(H) USE 7' FOR BOTH BUNDLED AND SINGLE CONDUCTOR INSTALLATIONS.

ITEM TPF	ITEM TOC	DESCRIPTION	QUANTITY	STOCK NO. OR CONSTR. STD
1		POLE, CLASS AND HEIGHT (AS REQ'D)	1	STDS 353, 354
2		BOLT, MACH 3/4" X __"	9	STD 139
3		BOLT, MACH 5/8" X __" (E)	4	STD 139
4		WASHER, 4" SQUARE CURVED RIB	12	797760
5		WASHER, 3" SQUARE CURVED RIB (E)	2	797792
6		WASHER, 3" SQUARE CURVED	3	798912
7		WASHER, 3/4" ROUND	18	800256
9		WASHER, SPRING DBL COIL 5/8" (E)	4	798560
10		NUT, 3/4"	9	504768
11		LOCKNUT, M-F 3/4"	3	504578
12		LOCKNUT, M-F 5/8" (E)	4	504608
13		SIGN, HIGH VOLTAGE (E)	2	647648
14		NAILS, ROOFING 8 GALV (E)	16	492224
15		WIRE #8 BARE SOLID ANNEALED COPPER	2.0#	812928
16		STAPLES, 1 1/4" FENCE, GALV (E)	10	678528
17		GUY (C)	AS REQ'D	900 SECTION
18				
	19	INSULATOR, SUSPENSION B/S DISC	AS REQ'D	STD 750
	20	INSULATOR, 88KV HORIZ LINE POST W/STUD	3	429312
	21	INSULATOR, BASE	3	125728
	22	CLAMP, 1 CONDUCTOR/BUNDLED	3	STD 773/(F)
	23	CLAMP, STRAIN WITH SOCKET EYE	6	STDS 742, 744
	24	CLEVIS, BALL	6	235392
	25	EYELET, STANDARD (E)	6	235648

FOR FIELD MAINTENANCE ONLY

599.201 SUPERSEDES 520 (1985)	SDG&E ELECTRIC STANDARDS TRANSMISSION CONSTRUCTION, 69KV SINGLE CIRCUIT, HORIZONTAL POST INSULATORS	DATE 7-1-84 APPD

TABLE OF CONTENTS

SCOPE: THIS PAGE IS TO BE USED WHEN DESIGNING SINGLE CIRCUIT 69KV TRANSMISSION LINES USING 'Z' TYPE VERTICAL CONSTRUCTION.

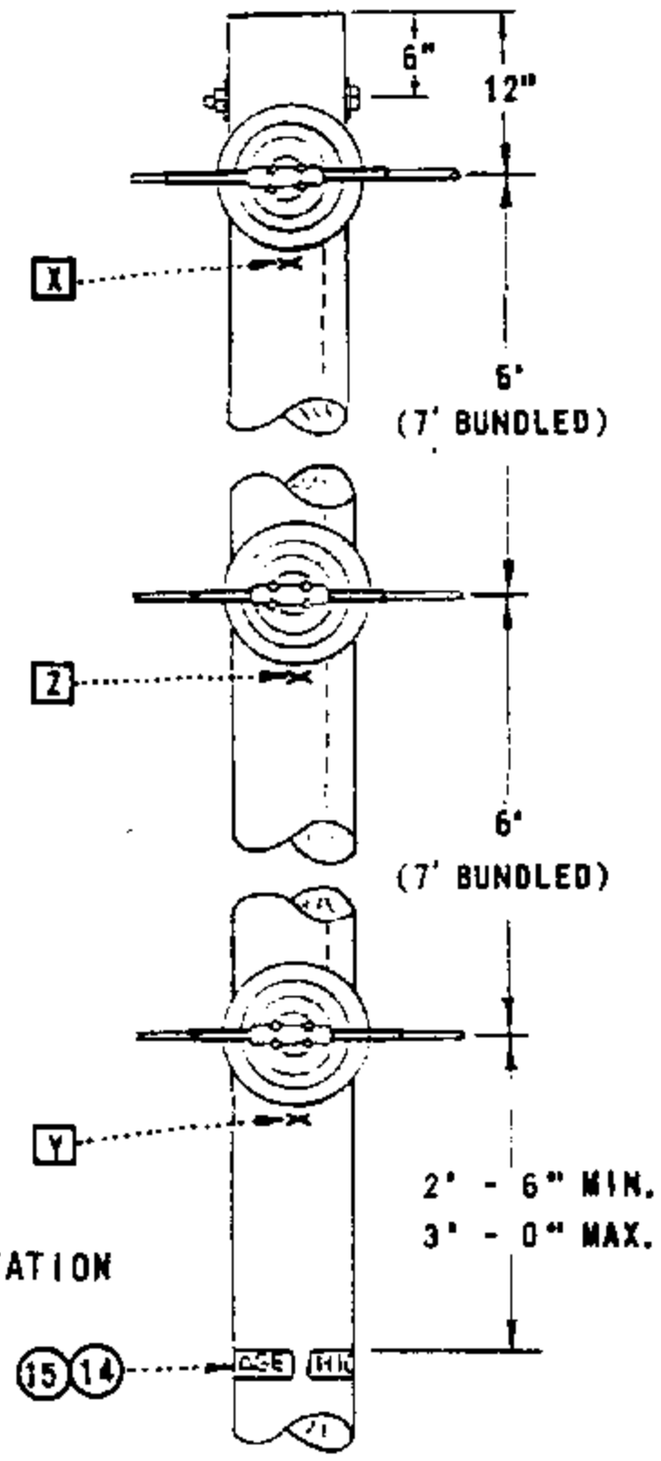

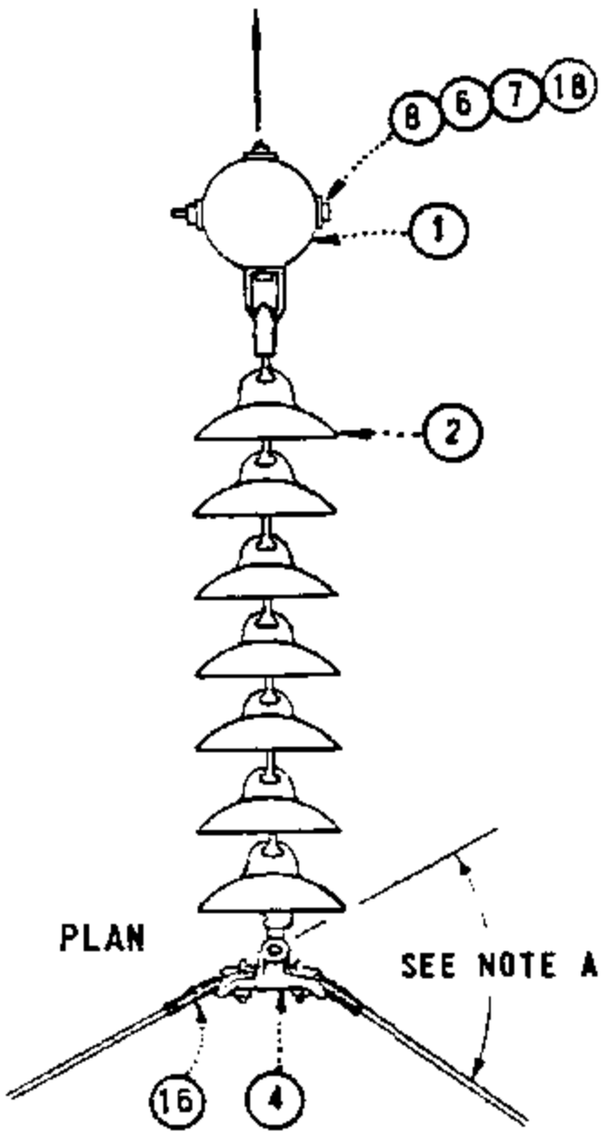

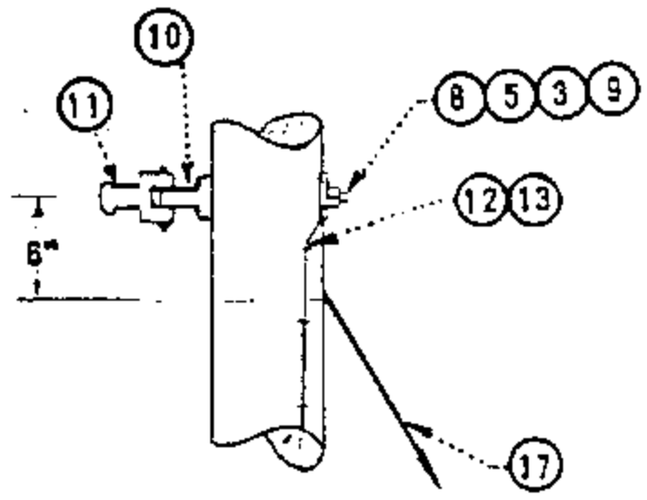

HARDWARE DETAIL

FOR FIELD MAINTENANCE ONLY

STALLATION

A. FOR USE WITH LINE ANGLES FROM 30° - 60°.

B. POLE BANDS MAY BE SUBSTITUTED FOR MACHINE BOLTS WHEN ADDITIONAL STRENGTH IS REQUIRED UNDER HIGH TENSION CONDITIONS WHEN SPECIFIED BY THE TRANSMISSION ENGINEER.

C. ADD THE GUYS IN ORDER INDICATED ABOVE (X, Y, Z) AS REQUIRED BY THE GUYING SECTION.

(E) EXEMPT MATERIAL.

ITEM NUMBER		DESCRIPTION	QUANTITY	STOCK NO. OR CONSTR. STD.
T.P.F.	T.O.C.			
1		POLE, CLASS AND HEIGHT (AS REQ'D)	1	300 SECTION
	2	INSULATOR, SUSPENSION, B/S DISC.	AS REQ'D	700 SECTION
3		WASHER, 3/4" ROUND (E)	6	800256
	4	CLAMP, SUSPENSION	3	700 SECTION
5		WASHER, 4" SQUARE CURVED RIB (E)	3	797760
6		WASHER, SPRING DBL. COIL 3/4" (E)	1	798496
7		WASHER, 3" X 3" SQUARE CURVE (E)	2	798912
8		BOLT, MACHINE 3/4" X (LENGTH AS REQ'D)	4	STD 139
9		NUTS 3/4" (E)	3	504768
	10	EYELET, STANDARD (E)	3	235648
	11	CLEVIS, BALL (E)	3	235392
12		WIRE, #8 B. SOLID ANNEALED COPPER	1.5 LB	812928
13		STAPLES, 1 1/4", FENCE, GALV. (E)	10	678528
14		SIGN, HIGH VOLTAGE (E)	2	647648
15		NAILS, ROOFING, 8 GALV. (E)	16	492192
16		GUARD, LINE	3 SETS	STD 759
17		GUY (SEE NOTE C)	AS REQ'D.	900 SECTION
18		LOCKNUT, M-F 3/4" (E)	1	504576

DATE 7-1-84
APPD SRL/DRH

SDG&E ELECTRIC STANDARDS

TRANSMISSION CONSTRUCTION - 69KV
SINGLE CIRCUIT - VERTICAL CONFIGURATION - TYPE Z

599.202
SUPERSEDES
521 (1985)

TABLE OF CONTENTS

SCOPE: THIS PAGE IS TO BE USED WHEN DESIGNING SINGLE CIRCUIT 69KV TRANSMISSION LINES USING 'Y' TYPE VERTICAL CONSTRUCTION.

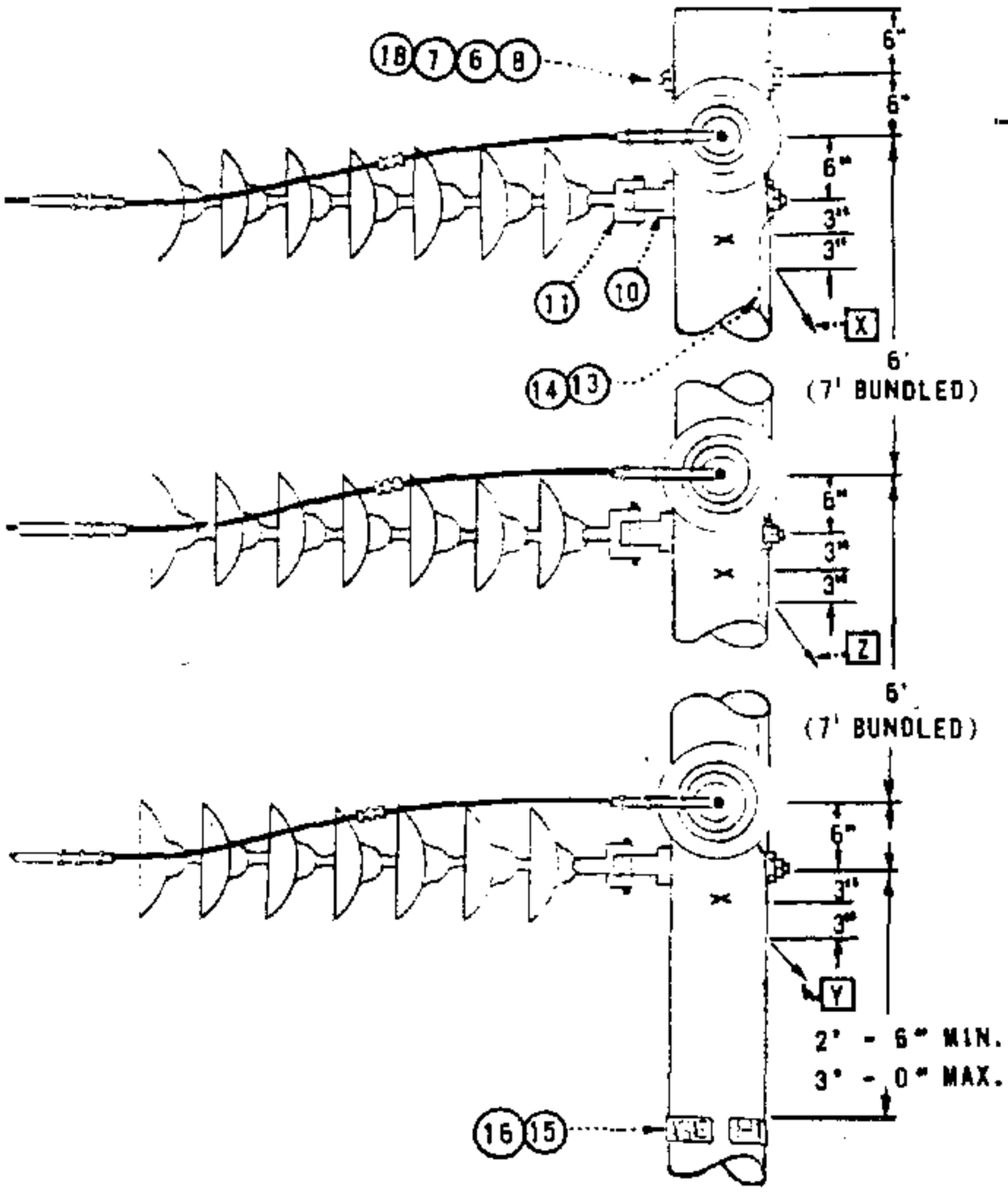

ELEVATION

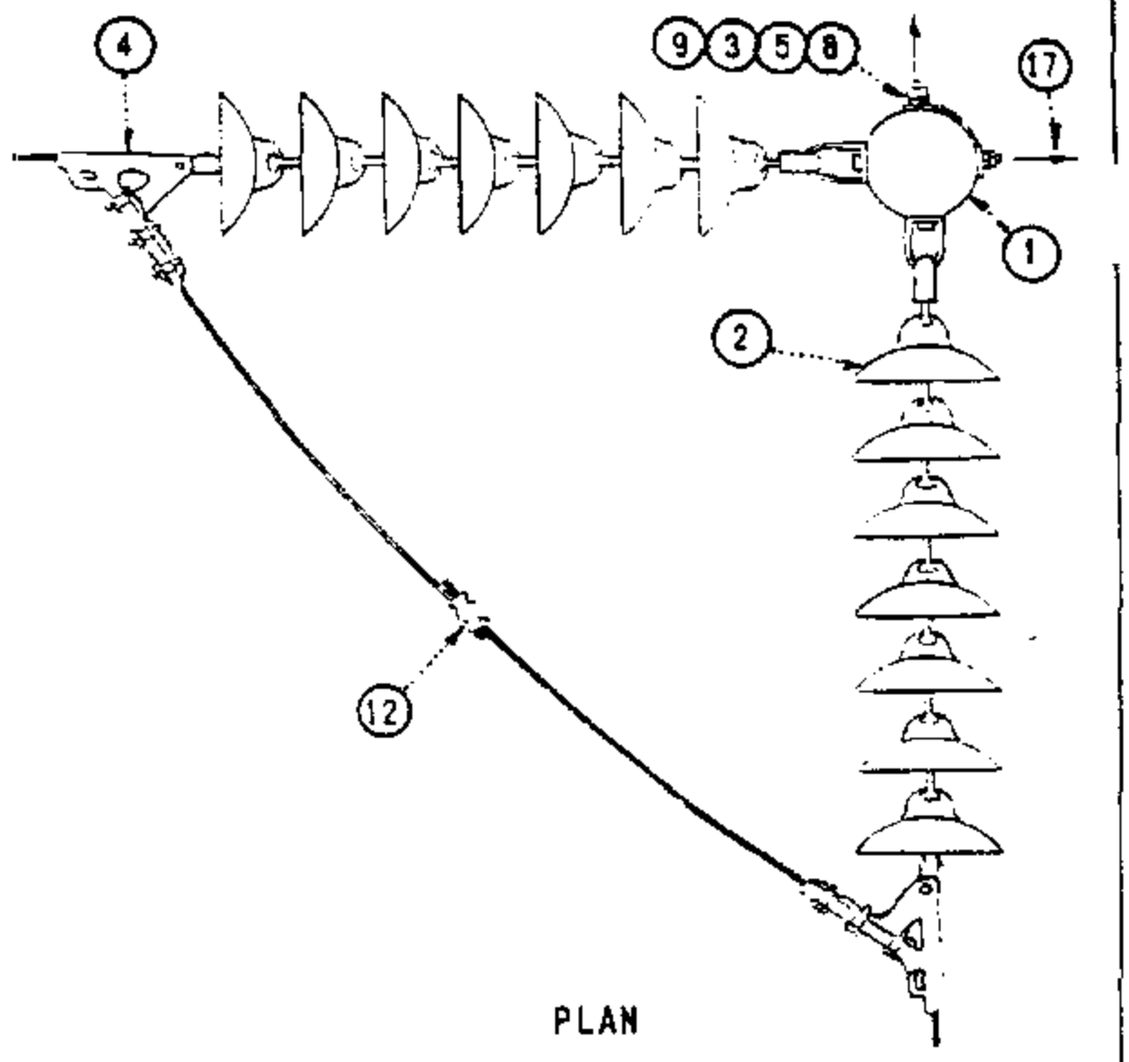

PLAN

FOR FIELD MAINTENANCE ONLY

INSTALLATION:

A. FOR USE WITH LINE ANGLES GREATER THAN 60°.

B. POLE BANDS MAY BE SUBSTITUTED FOR MACHINE BOLTS WHEN ADDITIONAL STRENGTH IS REQUIRED UNDER HIGH TENSION CONDITIONS WHEN SPECIFIED BY THE TRANSMISSION ENGINEER.

C. ADD THE GUYS ON EITHER SIDE IN THE ORDER INDICATED ABOVE (X, Y, Z) AS REQUIRED BY THE GUYING SECTION.

(E) EXEMPT MATERIAL

ITEM NUMBER		DESCRIPTION	QUANTITY	STOCK NO. OR CONSTR. STD.
T.P.F.	T.O.C.			
1		POLE, CLASS AND HEIGHT (AS REQ'D)	1	300 SECTION
	2	INSULATOR, SUSPENSION, B/S DISC.	AS REQ'D	700 SECTION
3		WASHER, 3/4" ROUND (E)	12	800256
	4	CLAMP, STRAIN, WITH SOCKET EYE	6	700 SECTION
5		WASHER, 4" SQUARE CURVED RIB (E)	6	797760
6		WASHER, SPRING DBL COIL, 3/4" (E)	1	798496
7		WASHER, 3" X 3" SQUARE CURVED (E)	2	798912
8		BOLT, MACHINE 3/4" X (LENGTH AS REQ'D)	7	100 SECTION
9		NUTS, 3/4" (E)	6	504768
	10	EYELET, STANDARD (E)	6	235648
	11	CLEVIS, BALL (E)	6	235392
	12	CONNECTOR, COMPRESSION	3	700 SECTION
13		WIRE #8 B. SOLID ANNEALED COPPER	1.5 LB	812928
14		STAPLES, 1 1/4" FENCE, GALV. (E)	10	678528
15		SIGN, HIGH VOLTAGE (E)	2	647648
16		NAILS, ROOFING 8 GALV. (E)	16	492192
17		GUY (SEE NOTE C)	AS REQ'D	900 SECTION
18		LOCKNUT, M-F 3/4" (E)	1	504576

599.203
SUPERSEDES
522 (1985)

SDG&E ELECTRIC STANDARDS

TRANSMISSION CONSTRUCTION - 69KV
SINGLE CIRCUIT - VERTICAL CONFIGURATION - TYPE Y

DATE 7-1-84
APPD GRJ / SCH

TABLE OF CONTENTS

TABLE OF CONTENTS

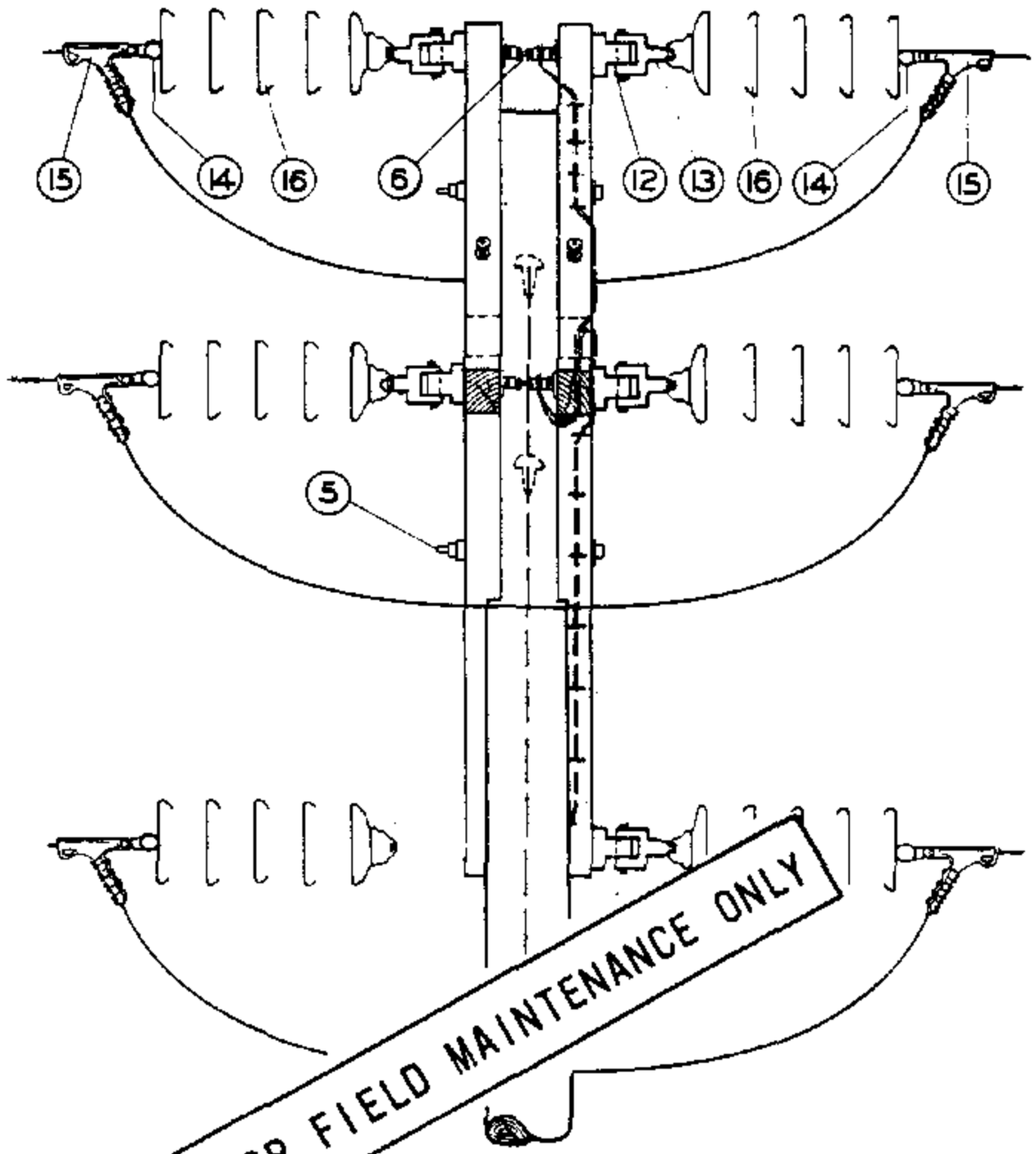

SIDE

THIS PAGE FOR FIELD MAINTENANCE ONLY

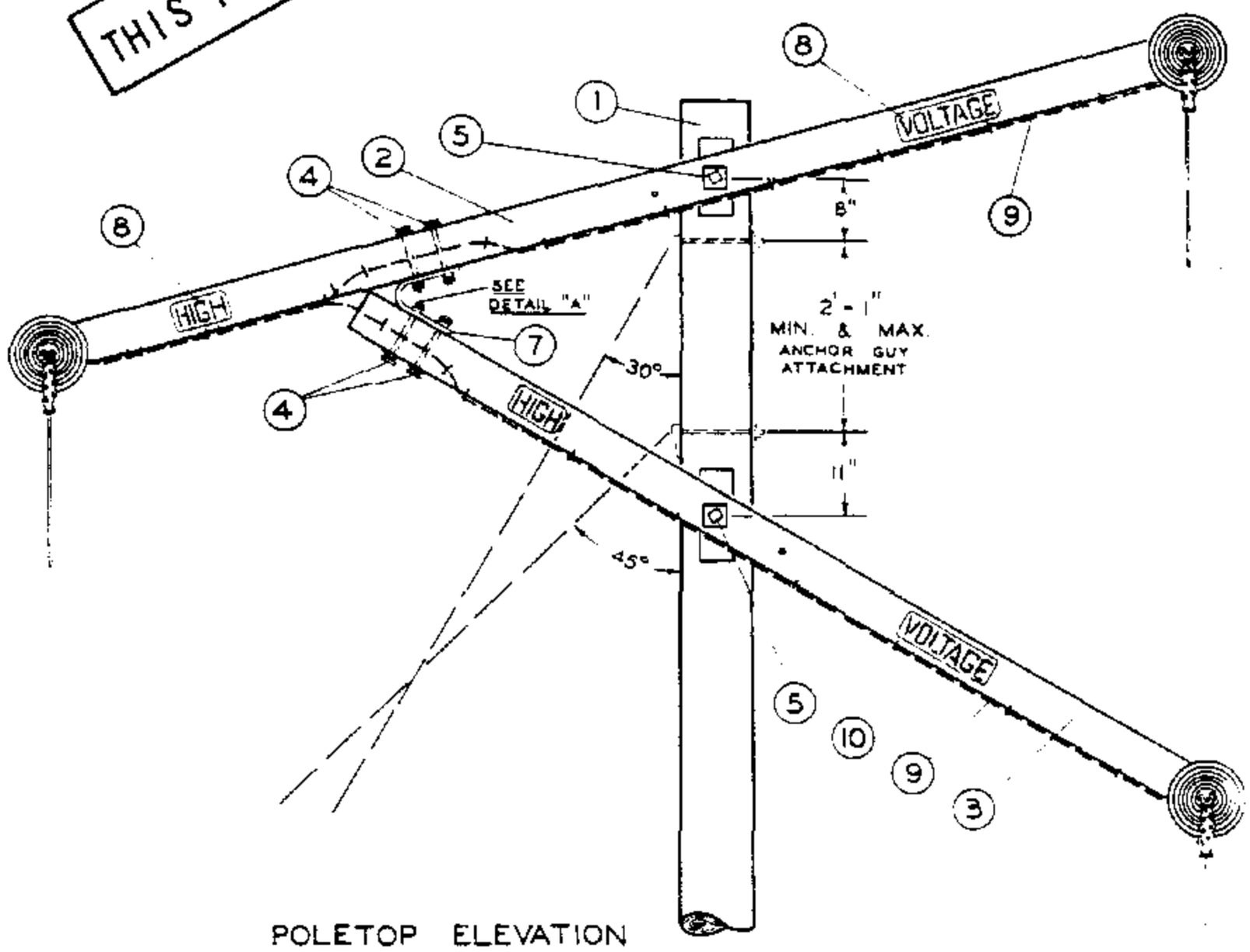

POLETOP ELEVATION

ISSUE 1993 DATE 7-1-84 APPD [signature]	SDG&E ELECTRIC STANDARDS TRANSMISSION CONSTRUCTION, 69KV, SINGLE CIRCUIT, FIGURE "4", TYPE X	599.301 SUPERSEDES 532 (4-1-74)

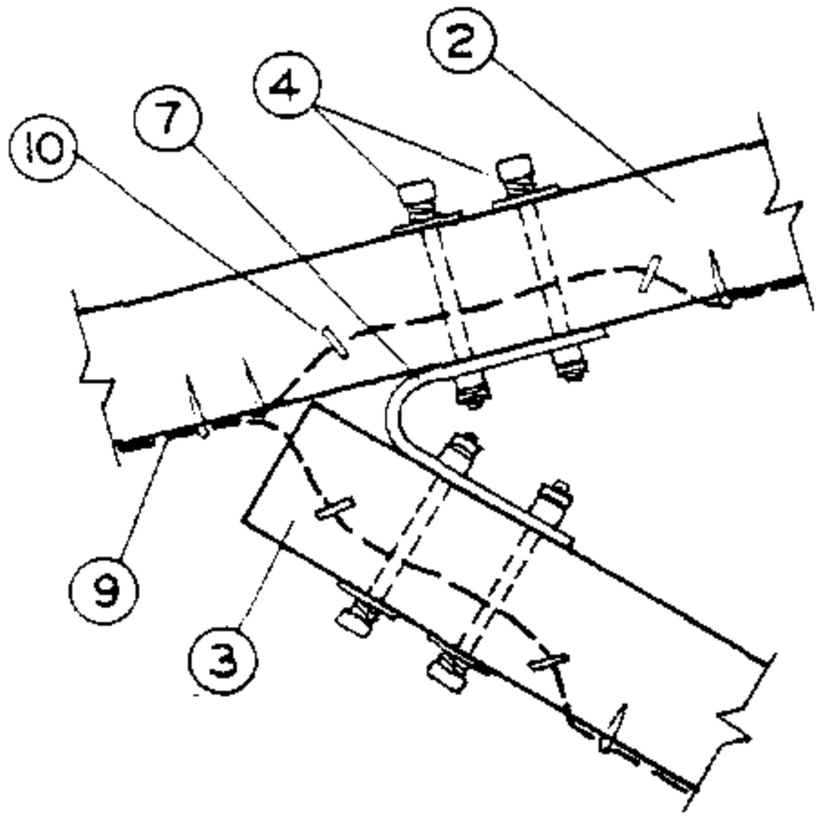

DETAIL "A"

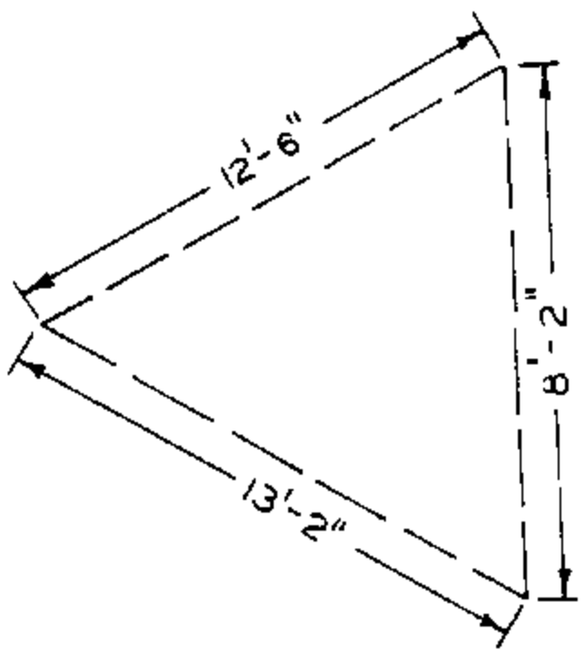

CONDUCTOR
REACTANCE SPACING

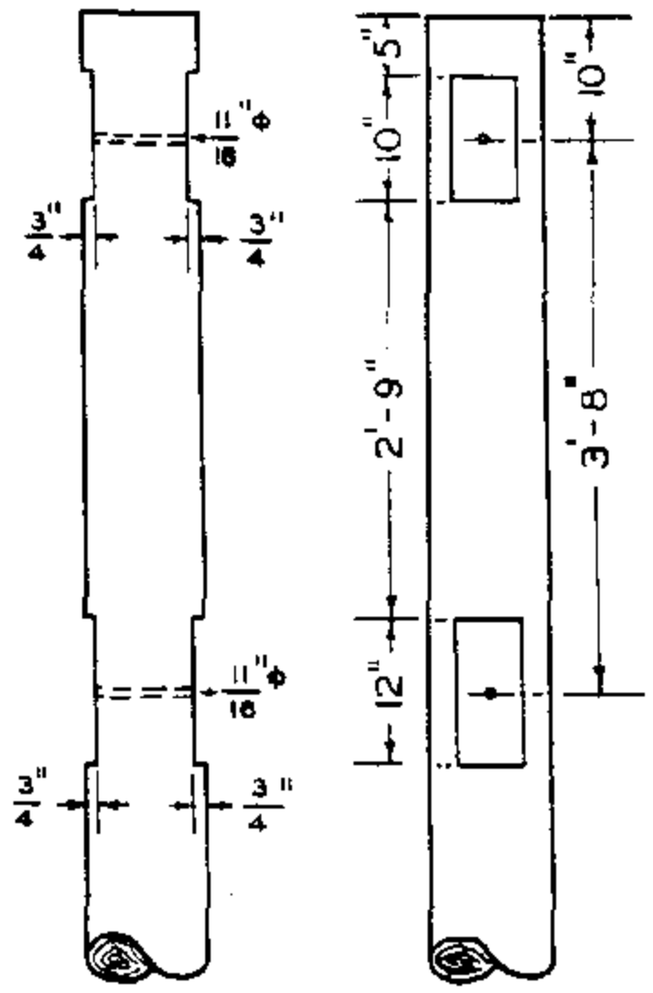

POLETOP
GAINING AND DRILLING

THIS PAGE FOR FIELD MAINTENANCE ONLY

ITEM		DESCRIPTION	QUANT.	STOCK NO. OR CONSTR STDS
T. P. & F.	1	Pole, Class and Height as required	1	SECTION 300
	2	3 3/4" X 5 3/4" X 13'-6" Crossarm	2	STD 120 1T 5
	3	3 3/4" X 5 3/4" X 10'-8" Crossarm	2	STD 120 1T 5
	4	Mach. Bolt, Galv., 5/8" X 8", 1-3" sq. wash., 1-dbl. coil spr. wash., 1-nut & 1-MF lock nut	8	STDS 138 140
	5	Mach. Bolt, Galv., 5/8" X 18", 2-3" sq. wash., 1-flat spr. wash., 1-nut & 1-MF lock nut	2	STDS 139 140
	6	Space Bolt, Galv., 5/8" X 20", 4-3" sq. wash., 5-nuts, 2-dbl. coil spr. wash., 2-rd. wash., & 2-MF lock nuts	3	STDS 138 140
	7	Crossarm Tie Plate, Galv.	2	543200
	8	High Voltage Sign & 8 roofing nails, Galv.	4	647648, 492224
	9	#8 Bare Solid Annealed Copper Wire	1 1/2#	812928
	10	1 1/4" Fence Staples, Galv.	23	678528
	11			
T. O. C. & D.	12	EYELET, STANDARD	6	235848
	13	CLEVIS, BALL	6	235392
	14	Socket Eye	6	-
	15	Clamp, Strain	6	STD 742
	16	Suspension Insulator, Ball & Socket	as reqd	STD 750
	17			

599.302
SUPERSEDES
533 (4-1-74)

SDG&E ELECTRIC STANDARDS

TRANSMISSION CONSTRUCTION, 69KV, SINGLE CIRCUIT,
FIGURE "4", TYPE X

DATE 7-1-84
APPD GH/DRH

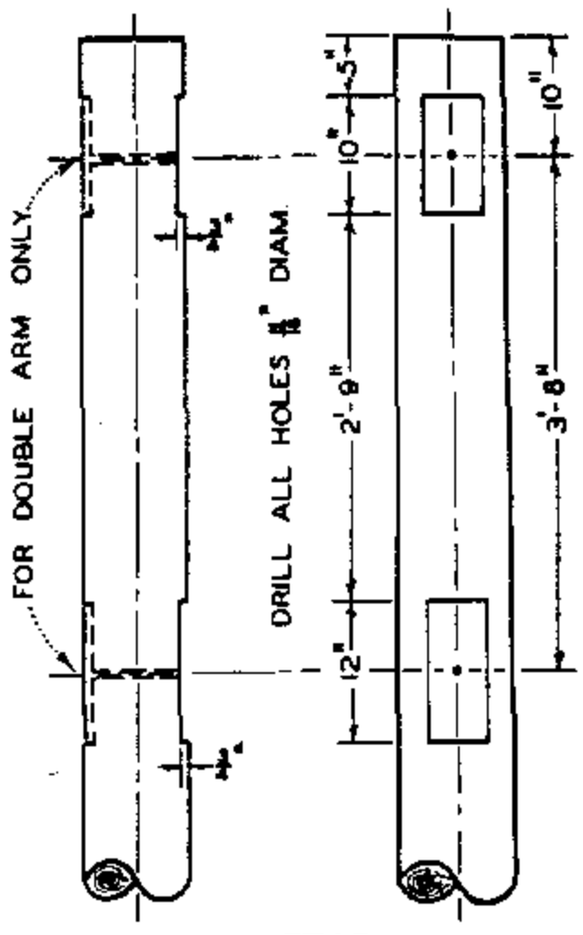

POLETOP
GAINING AND DRILLING

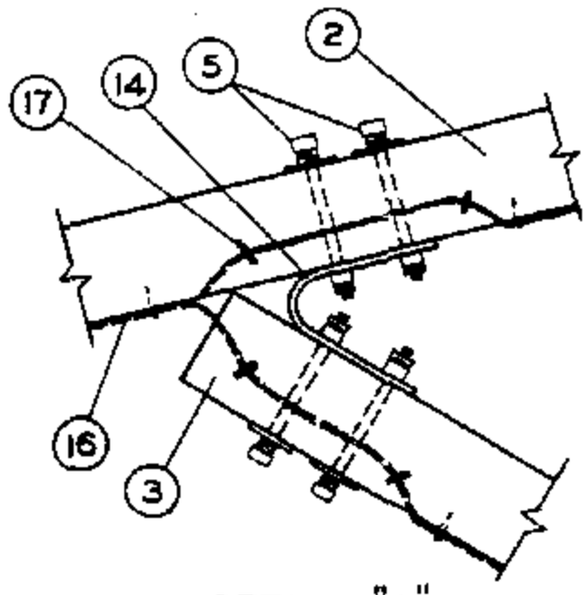

DETAIL "A"

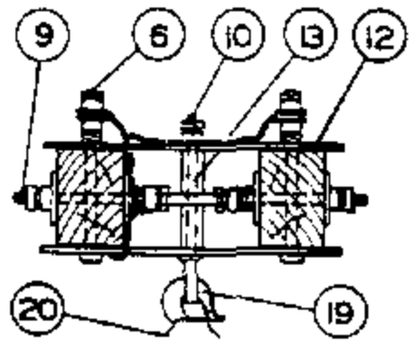

DETAIL "B"

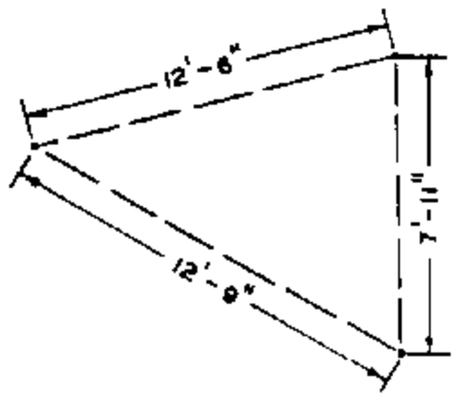

CONDUCTOR REACTANCE SPACING

THIS PAGE FOR FIELD MAINTENANCE ONLY

TABLE OF CONTENTS

ITEM		DESCRIPTION	QUANTITY SINGLE ARM	QUANTITY DOUBLE ARM	STOCK NO. OR CONSTR STDS
	1	Pole, Class and Height as required	1	1	SECTION 300
	2	3 3/4" X 3 3/4" X 13'-6" Crossarm	1	1	PG 120 IT. 5
	3	3 3/4" X 5 3/4" X 10'-2" Crossarm	1	1	PG 120 IT. 1
	4	Mach. Bolt, Galv., 5/8" X 6", 2-3" sq. wash.,1-dbl. coil spr. wash.,1-nut & 1-MF lock nut	6	8	PGS 139, 140
	5	Mach. Bolt, Galv., 5/8" X 8", 1-2" sq. wash.,1-dbl. coil spr. wash.,1-nut & 1-MF lock nut	4	6	PGS 139, 140
	6	Mach. Bolt, Galv., 5/8" X 9", 1-dbl. coil spr. wash.,2-nuts,2-rd. wash.,& 1-MF lock nut	2	6	PGS 139, 140
	7	Mach. Bolt, Galv., 5/8" X 14", 2-3" sq. wash.,1-flat spr. wash.,1-nut & 1-MF lock nut	2	2	PGS 139, 140
T.	8	Mach. Bolt, Galv., 5/8" X 18", 2-3" sq. wash.,1-flat spr. wash.,1-nut & 1-MF lock nut	2	2	PGS 139, 140
P.	9	Space Bolt, Galv., 5/8" X 30", 4-3" sq. wash.,4-nuts,2-dbl. coil spr. wash. 4-MF lock nuts	2	2	PGS 139, 140
&	10	Shoulder Eye Bolt, Galv., 5/8" X 8", 1-rd. wash.,1-nut & 1-MF lock nut	2	2	PGS 139, 140
F.	11	Shoulder Eye Bolt, Galv., 5/8" X 9", 1-2 1/4" sq. wash.,1-dbl. coil spr. wash., 2-rd.wash., 2-nuts & 1-MF lock nut	2	2	PGS 139, 140
	12	Double Aiming Plate, 4" X 1/4" X 17"	2	6	541088
	13	Spacer, 3/4" diameter X 5 3/4" pipe, Galv.	2	2	663552
	14	Crossarm Tie Plate, Galv.	1	1	543200
	15	High Voltage Sign & 8 roofing nails, Galv.	4	4	647648, 492224
	16	#6 Bare Solid Annealed Copper Wire	1 1/2#	1 1/2#	812928
	17	1 1/4" Fence Staples, Galv.	28	28	678528
	18				
T.	19	Ball Hook, short	2	2	414880 OR 414912
O.	20	Suspension Insulator, Ball & Socket	as required		PG 750
C.	21	Suspension Clamp, complete with socket eye	2	2	PGS 775, 776
.	22				

DATE 7-1-84 APPD RE2/DRH	SDG&E ELECTRIC STANDARDS TRANSMISSION CONSTRUCTION, 69KV, SINGLE CIRCUIT, FIGURE "6", TYPE W	599.303 SUPERSEDES 531 (4-1-74)

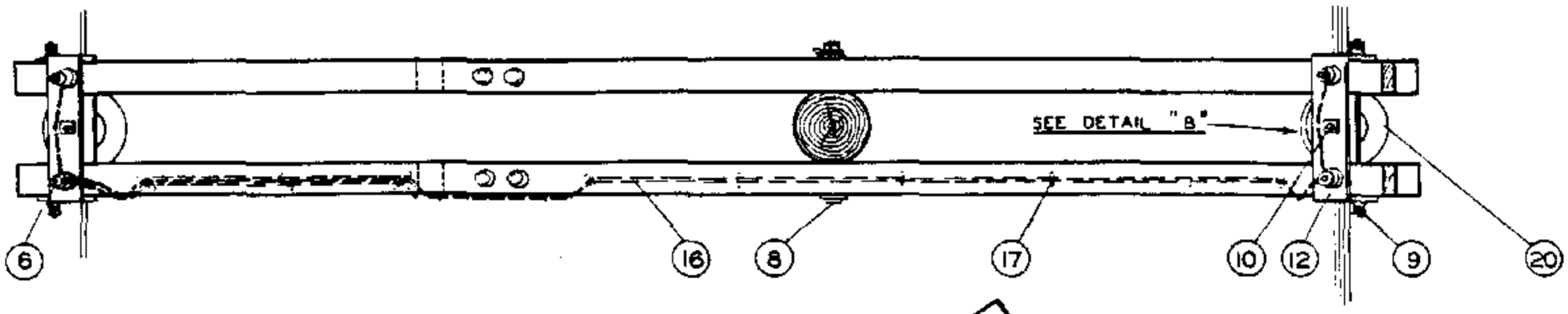

PLAN - DOUBLE ARM

THIS PAGE FOR FIELD MAINTENANCE ONLY

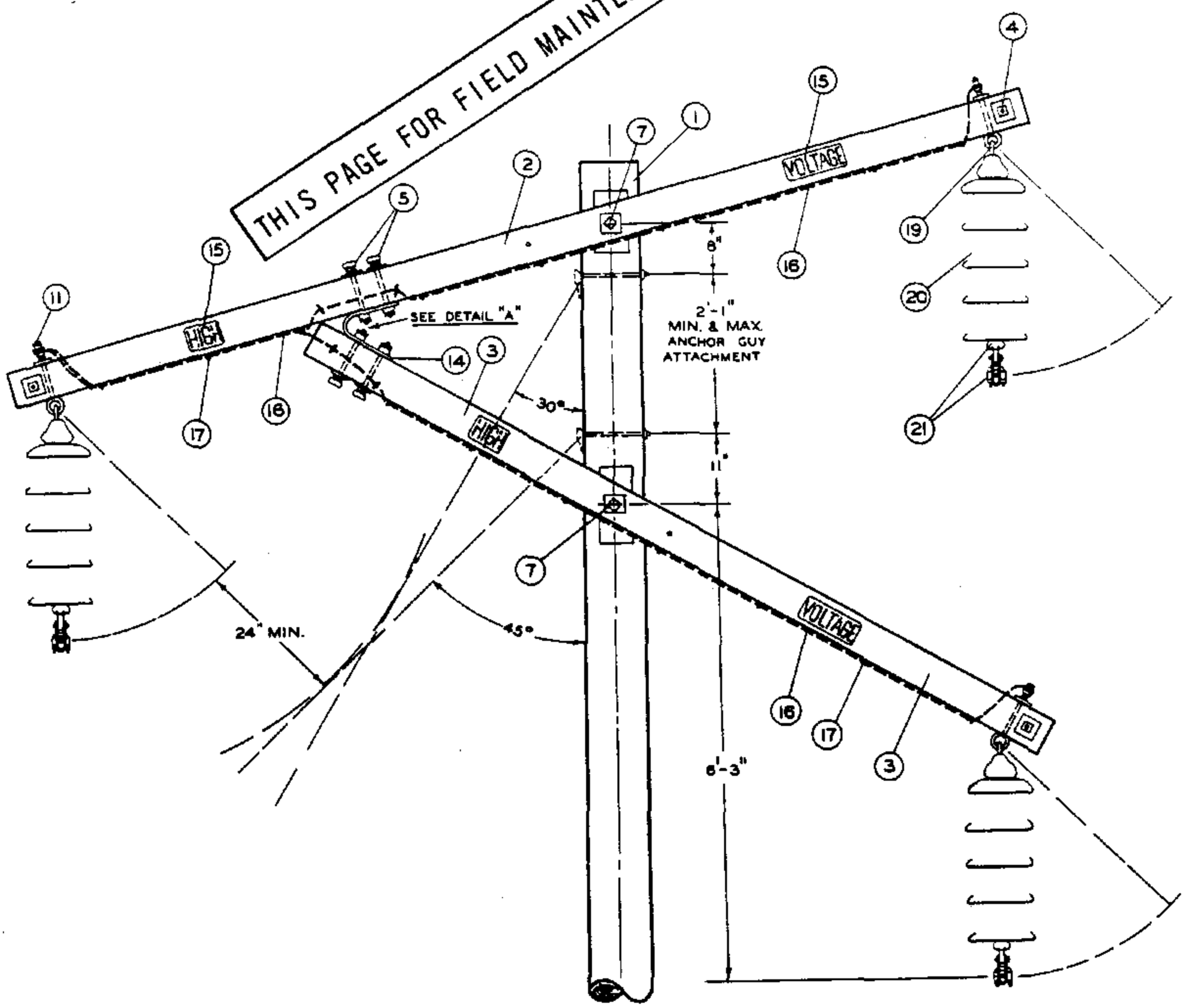

POLETOP ELEVATION - SINGLE ARM

599.304 SUPERSEDES 530 (4-1-74)	SDG&E ELECTRIC STANDARDS TRANSMISSION CONSTRUCTION, 69KV, SINGLE CIRCUIT, FIGURE "4", TYPE W	DATE 7-1-84 APPD

TABLE OF CONTENTS

SCOPE: THIS PAGE IS TO BE USED WHEN DESIGNING SINGLE CIRCUIT 69KV TRANSMISSION LINES USING TYPE X-△ TRIANGULAR DEADEND CONFIGURATION

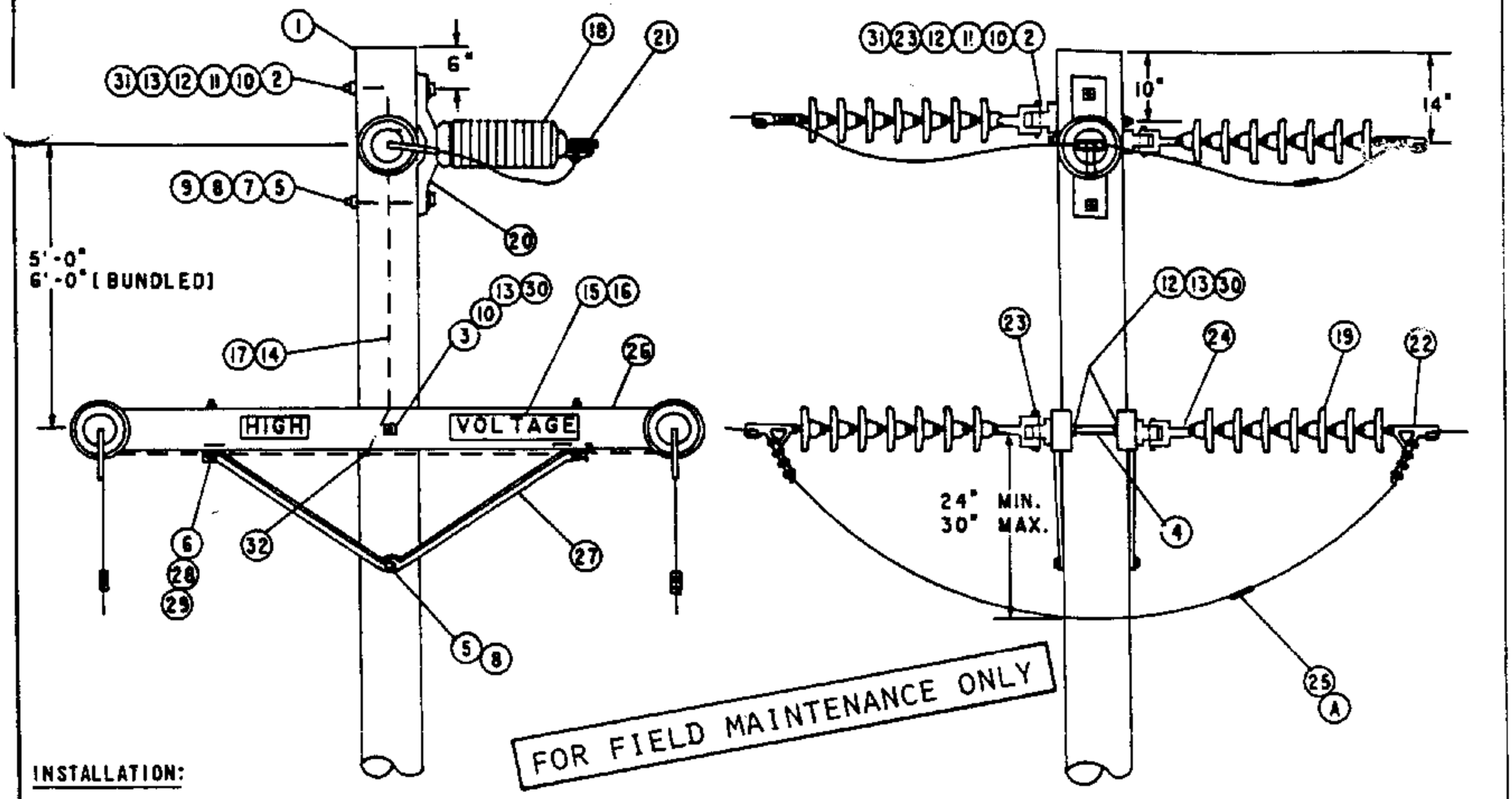

INSTALLATION:

(A) USE ONLY FOR CONDUCTOR REPLACEMENT. MAKE CONTINUOUS JUMPERS ON NEW CONSTRUCTION.

(E) EXEMPT ITEM.

ITEM F	ITEM TOC	DESCRIPTION	QUANTITY	STOCK NO. OR CONST. STD.
1		POLE, CLASS AND HEIGHT AS REQ'D.	1	STDS 353, 354
2		BOLT, MACH., 3/4" X 14"	3	153440
3		BOLT, MACH., 3/4" X 26"	1	153728
4		BOLT, SPACE, 3/4" X 26"	2	156288
5		BOLT, MACH., 5/8" X 14", WITH NUT	2	154880
6		WASHER, ROUND 1/2" FLAT (E)	2	800192
7		WASHER, 3" SQ. CURVED, 5/8" (E)	1	798912
8		WASHER, 5/8" DBL. COIL SPRING (E)	2	798560
9		LOCKNUT, M-F 5/8" (E)	2	504608
10		LOCKNUT, M-F 3/4" (E)	12	504576
11		WASHER, 4" SQ. CURVED, 3/4" RIB	3	797760
12		WASHER, ROUND 3/4" FLAT	1	800256
13		WASHER, 3/4" DBL. COIL SPRING	6	798496
14		WIRE, #8 B. SOLID ANNEALED COPPER	1.5 LB.	812928
15		SIGN, HIGH VOLTAGE (E)	2	647648
16		NAILS, ROOFING, #8 GALV. (E)	16	492224
17		STAPLES, 1 1/4" FENCE, GALV. (E)	20	498528
	18	INSULATOR, 88KV HORZ. POST	1	429312
	19	INSULATOR, SUSPENSION B/S DISC.	AS REQ'D	PG. 750.4
	20	BASE, INSULATOR	1	125728
	21	CLAMP, CONDUCTOR POST INSULATOR	1	STD 773
	22	CLAMP, CONDUCTOR STRAIN	6	STDS 742, 744
	23	EYELET, STANDARD (E)	6	235648
	24	CLEVIS, BALL	6	235392
	25	SLEEVE, JUMPER (A)	3	700 SECTION
26		CROSSARM 3 3/4" X 5 3/4" X 10'	2	294128
27		BRACE, ANGLE 5'	2	164128
28		BOLT, MACH. 1/2" X 7" WITH NUT (E)	2	153120
29		WASHER, DBL. COIL, 1/2" (E)	2	798464
30		WASHER, 3" SQ. FLAT (E)	10	799104
31		NUTS, MACHINE, 3/4"	17	504768
12		CONNECTOR, SPLIT BOLT (E)	1	269632

DATE 7-1-84 APPD [signature]	SDG&E ELECTRIC STANDARDS TRANSMISSION - 69KV TYPE X-△ STRUCTURE SINGLE CIRCUIT - TRIANGULAR DEADEND	599.305 SUPERSEDES 535 (1985)

TABLE OF CONTENTS

SCOPE: THIS STANDARD SHOWS A MOTOR OPERATED HORIZONTAL BREAK GANG OPERATED POLE TOP SWITCH FOR SCADA.

NOTE:

– A. B. CHANCE TYPE "D" SWITCH ILLUSTRATED.

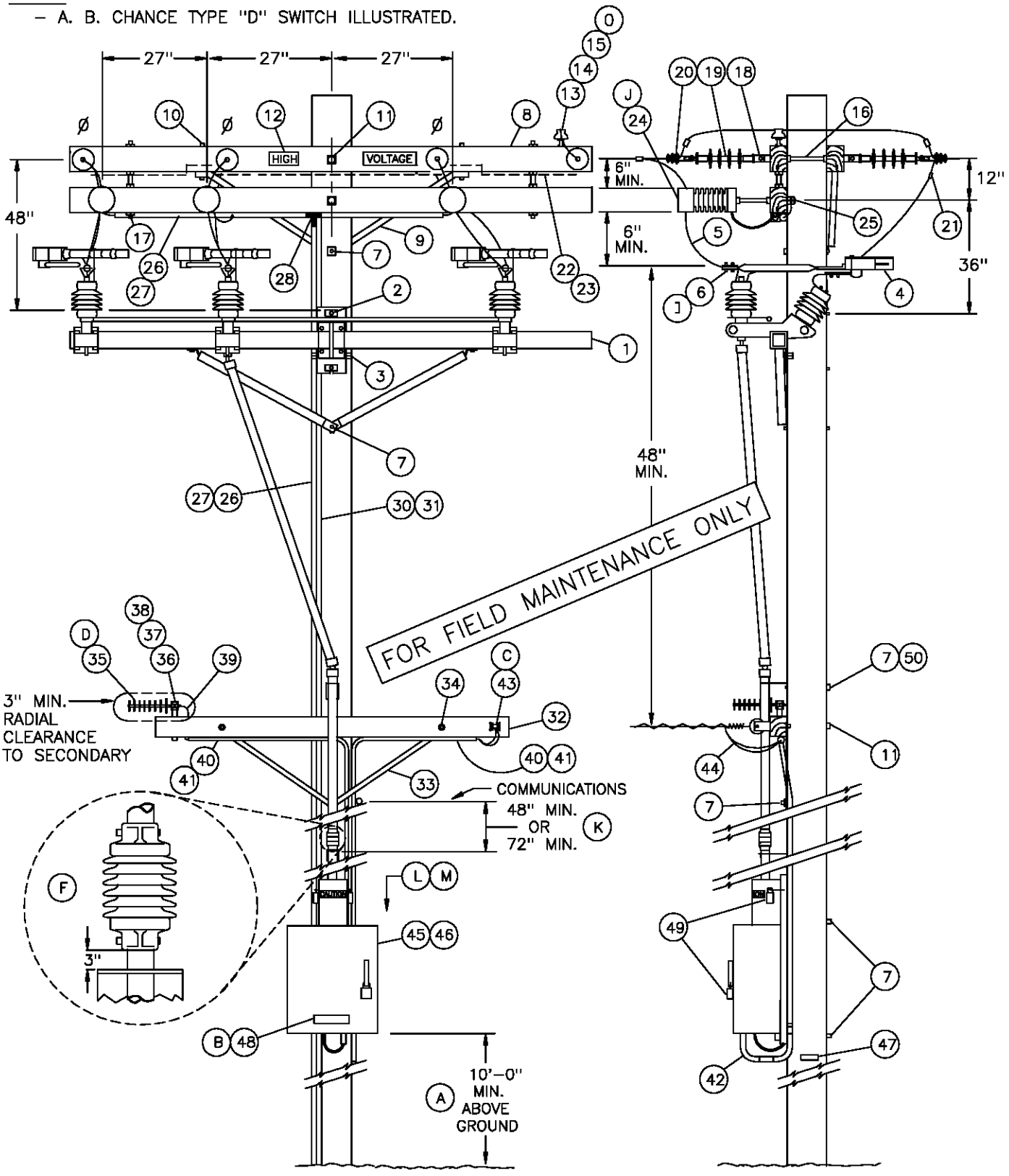

TABLE OF CONTENTS

599.306 SUPERSEDES 535.1 (11–1–98)	SDG&E ELECTRIC STANDARDS OVERHEAD SCADA SWITCH 12KV HORIZONTAL LOADBREAK TYPE SINGLE CIRCUIT MOTOR OPERATED	DATE 11–1–98 APPD PA / CMC

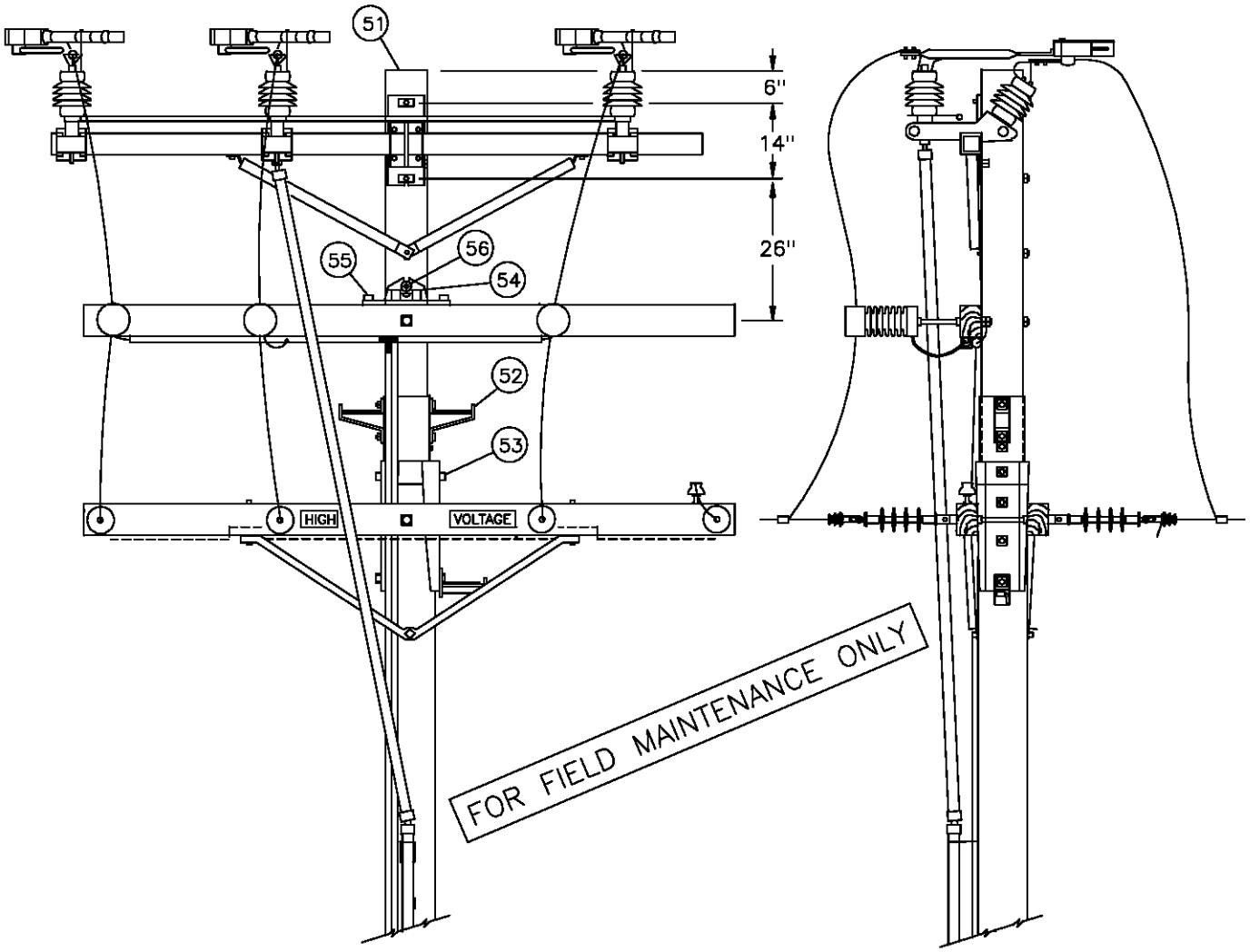

GANG–OPERATED SWITCH AND CURRENT SENSORS
MOUNTED ABOVE LINEARM (E)

BILL OF MATERIAL:

ITEM	DESCRIPTION		QUANTITY	CONSTR. STD. OR PAGE NO.	STOCK NUMBER	ASSEMBLY UNITS
1	SWITCH, GANG–OPERATED, 15KV, 600 AMP, WITH LOAD INTERRUPTERS, INCLUDING 40' OF CONTROL ROD (G)		1	–	709258	GANG–S
	ADDITIONAL 10'–6" CONTROL ROD WITH GUIDE BEARING AND COUPLING	A. B. CHANCE	AS REQ'D	–	604428	C–ROD
		S & C	AS REQ'D	–	602934	S–ROD
2	BOLT, MACH, GALV, 3/4" X (LENGTH AS REQ'D), 1 SQUARE AND 1 DOUBLE COIL SPRING WASHER		2	392	–	–
3	SCREW, LAG, GALV, 1/2" X 4" (CHANCE SWITCH ONLY)		2	–	621568	–
4	LOAD INTERRUPTER–A. B. CHANCE SWITCH ONLY IF RETRO–FITTING REQUIRED	TYPE D	3	–	433794	LDBRKD
		TYPE S	3	–	433796	LDBRKS
5	WIRE, BARE STRANDED CU OR AL (SIZE AS REQ'D)		33'	711–715	–	–
6	TERMINAL, COMPRESSION LUG (I)		6	794–795	–	–

CONTINUED NEXT PAGE:

DATE 12–1–98 APPD PSA / CMK	SDG&E ELECTRIC STANDARDS OVERHEAD SCADA SWITCH 12KV HORIZONTAL LOADBREAK TYPE SINGLE CIRCUIT MOTOR OPERATED	599.307 SUPERSEDES 535.2 (12–1–98)

TABLE OF CONTENTS

BILL OF MATERIAL, CON'T:

ITEM	DESCRIPTION	QUANTITY	CONSTR. STD. OR PAGE NO.	STOCK NUMBER	ASSEMBLY UNITS
7	BOLT, MACH, GALV, 5/8" X (LENGTH AS REQ'D), 1 SQUARE AND 1 DOUBLE COIL SPRING WASHER	6	392	–	–
8	CROSSARM, 3 3/4" X 5 3/4" X 10' – 0"	3	–	294128	4–
9	BRACE, ANGLE, 5' – 0"	1	–	164128	5HUB
10	BOLT, MACH, GALV, 1/2" X 7", 1 ROUND AND 1 DOUBLE COIL SPRING WASHER	2	392	–	–
11	BOLT, MACH, GALV, 5/8" X (LENGTH AS REQ'D), 2 SQUARE AND 1 DOUBLE COIL SPRING WASHER	3	392	–	–
12	SIGN, HIGH VOLTAGE, AND	2	–	647648	HV
	9 ROOFING NAILS, GALV	–	–	492224	–
13	PIN, INSULATOR, STRAIGHT, 12KV, 1" (H)	2	–	532704	PS1
14	INSULATOR, 12KV NEUTRAL (H)	2	–	429216	55–3/I
15	WIRE, TIE (DOUBLE) (H)	1	760–764	–	–
16	BOLT, SPACE, GALV, 5/8" X (LENGTH AS REQ'D), 3 SQUARE, 2 ROUND, 2 DOUBLE COIL SPRING WASHERS AND 1 NUT (H)	4	392	–	–
17	BOLT SPACE GALV. 5/8" X (LENGTH AS REQ'D) 4 SQUARE & 2 DOUBLE COIL SPRING WASHERS	2	392	–	–
18	CLEVIS, DEAD END, 5/8" BOLT STEEL (CLOSED TYPE) (H)	8	–	235712	–
19	INSULATOR, SUSPENSION, 12KV, CLEVIS, NON PORC (H)	8	750	–	–
20	CLAMP, STRAIGHT LINE, D.E. (H)	8	741–743	–	–
21	CONNECTOR, WIRE COMPRESSION (SIZE AS REQ'D)	AS REQ'D	783–786	–	–
22	WIRE, #8 BARE SOLID ANNEALED COPPER	12'	–	812928	BOND8
23	STAPLE, FENCE, GALV, 1 1/4"	AS REQ'D	–	678528	–
24	LINE POST CURRENT SENSOR & 50' CABLE ASSEMBLY (J)	3	–	116000	CURSEN
25	BOLT, SPACE, GALV, 3/4" X (LENGTH AS REQ'D) 2 SQUARE, 2 ROUND & 2 DBL COIL SPRING WASHERS	3	392	–	–
26	CONDUIT, PVC, SCHED 40, 1"	40'	–	251200	PVC–1
27	STRAPS, PIPE, GALV, 1", AND	AS REQ'D		697792	–
	2–6D NAILS, GALV.	AS REQ'D	–	490656	–
28	ACCESS FITTING BODY, TYPE "T", PVC, 1"	1	–	348900	TEE–1
29	UNIT GROUND, COMPLETE, AND	1	–	603136	GND6
	#6 B.S. COPPER WIRE (N)	6 LBS	–	813536	–
30	CONDUIT, PVC, SCHEDULE 40, 1/2"	20'	–	251168	PVC1/2
31	STRAPS, PIPE, GALV, 1/2", AND	AS REQ'D	–	697728	–
	6D NAILS, GALV.	AS REQ'D	–	490656	–
32	CROSSARM, 3–1/2" X 4–1/2" X 6'–0"	1	380.2	294112	2S

FOR FIELD MAINTENANCE ONLY

CONTINUED NEXT PAGE:

TABLE OF CONTENTS

BILL OF MATERIAL, CON'T:

ITEM	DESCRIPTION	QUANTITY	CONSTR. STD. OR PAGE NO.	STOCK NUMBER	ASSEMBLY UNITS
33	BRACE, 28", FLAT, CROSSARM	2	–	164192	–
34	BOLT, MACH, GALV, 3/8" X 4–1/2" & 1 RD. WASHER	2	392.2	–	–
35	ANTENNA, BROADBAND, YAGI (D)	1	–	109570	ANT
36	NIPPLE, PIPE 2" X 6", GALV	1	–	500960	ANTXMB
37	BOLT, MACH, GALV. 1/2" X 9"	1	392.2	153184	
38	CENTERING WASHER, GALV.	2	–	795520	
39	CABLE, SUPERFLEX, ANTENNA	AS REQ'D	–	197810	ANTCAB
40	CONDUIT, PVC, SCHEDULE 40, 3/4"	40'	–	251328	PVC3/4
41	STRAPS, PIPE, GALV, 3/4", AND 2–6D NAILS, GALV.	AS REQ'D	–	697888	–
		AS REQ'D	–	490656	–
42	ELBOW, PVC. 3/4"	4	–	322166	EL3/4
43	SECONDARY DEADEND (C)	1	–	235488	1SDE
44	WIRE, THW, #12, BLACK	100'	–	808096	THW12
45	MOTOR OPERATOR, INCLUDING COUPLING AND RTU	1	–	509580	ADMO
46	TRANSCEIVER, FIXED CHANNEL	1	–	749500	FCTRAN
	OR				
	TRANSCEIVER SPREAD SPECTRUM	1	–	749504	SSTRAN
47	TAG, SWITCH NUMBER	2	204	–	–
48	TAG, RTU NUMBER	1	208.5	(B)	TAGRE
49	PADLOCK, SCHLAGE ELECTRIC SERIES	3	–	514848	–
50	SCREW, LAG, GALV, 5/8" X 5"	2	–	621600	–
51	6' WOOD POLE TOP EXTENSION	1	473	336324	WPTX6
52	POLE STEP KIT	1	473	692950	–
53	BOLT, MACH, GALV, 5/8" X (LENGTH AS REQ'D) AND 1 DOUBLE COIL SPRING WASHER	3	392	–	–
54	GAIN, CROSSARM, BRACELESS	1	–	369598	BCGAIN
55	BOLT, MACH, GALV, 5/8" X 7" 1 ROUND AND 1 DOUBLE COIL SPRING WASHER	2	392	–	–
56	BOLT, MACH, GALV, 5/8" X (LENGTH AS REQ'D) 1 SQUARE, 1 ROUND & 1 DOUBLE COIL SPRING WASHER	1	392	–	–

FOR FIELD MAINTENANCE ONLY

INSTALLATION:

(A) MOTOR OPERATOR TO BE MOUNTED AT (13'–6") FROM GROUND–LEVEL TO BOTTOM OF CABINET WHEN LOCATED ON STREET–SIDE OF POLE. IF NOT VULNERABLE TO VEHICLE DAMAGE, MOUNT RTU AT 10' FROM GROUND–LEVEL TO BOTTOM OF CABINET.

(B) RTU NUMBER TO BE ASSIGNED BY DISTRIBUTION OPERATIONS AND ADDED TO JOB WITH DPSS NOTE.

(C) THIS ITEM NOT NECESSARY IF EXISTING SECONDARY RACK CONSTRUCTION.

DATE 11–1–98 APPD PSA / CMK	SDG&E ELECTRIC STANDARDS OVERHEAD SCADA SWITCH 12KV HORIZONTAL LOADBREAK TYPE SINGLE CIRCUIT MOTOR OPERATED	599.309 SUPERSEDES 535.4 (11–1–98)

TABLE OF CONTENTS

INSTALLATION:

(D) PLANNER TO SPECIFY WHICH SIDE OF POLE FOR ANTENNA MOUNT WITH DATA FROM STANDARDS. POINTS LIST TO BE COMPLETED BY PLANNER AND SENT TO SENIOR ENGINEER, DISTRIBUTION OPERATIONS. SEE ELECTRIC STANDARDS TEAM FOR POINTS LIST FORMS AND COMMUNICATIONS REQUIREMENTS.

(E) IF INSUFFICIENT CLEARANCE BELOW THE LINEARM, MOUNT THE GANG-OPERATED SWITCH AND CURRENT SENSOR ARM ABOVE THE LINEARM USING A POLE TOP EXTENSION (SEE STANDARD 473). THIS CONFIGURATION MAY ALSO BE USED IF DISTRIBUTION IS UNDERBUILT ON A TRANSMISSION POLE.

(F) INSTALL CONTROL PIPE INSULATOR THREE INCHES ABOVE NEXT GUIDE BEARING ABOVE MOTOR OPERATOR

(G) SWITCHES ARE FURNISHED WITH 40 FEET OF OPERATING CONTROL ROD. THE TOP SECTION OF THE CONTROL ROD IS MADE OF FIBER GLASS, THE LOWER SECTIONS ARE MADE OF GALVANIZED PIPE.

(H) REDUCE QUANTITIES AS REQUIRED WHEN NOT USING NEUTRAL.

(I) WHEN ATTACHING 1/0 AND 4/0 COPPER CONDUCTORS TO A POLE TOP SWITCH, USE A BRONZE CABLE TAP LUG, STOCK NUMBER 471296. IF EXCESSIVE VIBRATION OR WHIPPING COULD OCCUR, USE TWO LUGS IN SERIES.

(J) NOTE: BEFORE ENERGIZING SENSORS, GROUND ALL CURRENT SENSOR BASES BY ATTACHING GROUND WIRE TO MOUNTING BOLT ON BACKSIDE OF CROSSARM.

(K) THE MINIMUM CLEARANCE FROM GROUNDED METAL BOXES, HARDWARE AND EQUIPMENT AT THE COMMUNICATIONS LEVEL TO THE UPPERMOST GROUNDED PORTION OF THE CONTROL ROD IS 72". IF NO GROUNDED METAL BOXES, HARDWARE OR EQUIPMENT ARE PRESENT, CLEARANCE MAY BE REDUCED TO 48".

TABLE OF CONTENTS

REFERENCES:

(L) POLE STEPPING – SEE STANDARD 363.

(M) REFLECTOR STRIPS ARE REQUIRED ON ALL SECTIONALIZING/TIELINE SWITCHES AND SERVICE RESTORER POLES. (SEE STD. 208.3 ITEM 12)

(N) NEUTRALS SHALL BE SOLIDLY TIED TOGETHER AT ALL SWITCHES REGARDLESS WHETHER THEY ARE NORMALLY OPEN OR CLOSED. THIS INCLUDES TIE SWITCHES TO CIRCUITS EMANATING FROM DIFFERENT SUBSTATIONS. (SEE DESIGN MANUAL STANDARD PAGE 6221.2, D.3).

(O) GROUNDING METHODS – SEE STANDARDS 1002.

FOR FIELD MAINTENANCE ONLY

599.310 SUPERSEDES 535.5 (11-1-98)	SDG&E ELECTRIC STANDARDS OVERHEAD SCADA SWITCH 12KV HORIZONTAL LOADBREAK TYPE SINGLE CIRCUIT MOTOR OPERATED	DATE 12-1-98 APPD PSA / CMK

INSULATION TABLE FOR TRANSMISSION LINES							
VOLTAGE		INSULATION DISTRICT (A)					
	STRUCTURE	HEAVY CONTAMINATION		MEDIUM CONTAMINATION		LIGHT CONTAMINATION	
		INSULATOR UNITS AND TYPE					
KV	TYPE	SUSPENSION	DEAD END	SUSPENSION	DEAD END	SUSPENSION	DEAD END
69	WOOD POLES & STRUCTURES	5 FOGS	7 DISCS	5 DISCS	6 DISCS	4 DISCS	5 DISCS
69	STEEL TOWERS & STRUCTURES	6 FOGS	8 DISCS	6 DISCS	7 DISCS	5 DISCS	6 DISCS
138	WOOD POLES & STRUCTURES	9 FOGS	11 DISCS	9 DISCS	11 DISCS	8 DISCS	10 DISCS
138	STEEL TOWERS & STRUCTURES	10 FOGS	12 DISCS	10 DISCS	12 DISCS	9 DISCS	11 DISCS

NOTES:

(A) CONTAMINATION DISTRICTS IDENTIFIED ON STANDARD PAGE 287.

B. USE BONDED SUSPENSION UNITS THROUGH RESIDENTIAL AND COMMERCIAL AREAS.

C. SEE STANDARDS PAGE 750.4 FOR SUSPENSION INSULATORS.

D. FOR BONDING DETAILS SEE STANDARDS PAGE 756.

FOR FIELD MAINTENANCE ONLY

TABLE OF CONTENTS

DATE 1-1-86 APPD	SDG&E ELECTRIC STANDARDS TRANSMISSION LINE INSULATION TABLE	599.501 SUPERSEDES 755 (1986)

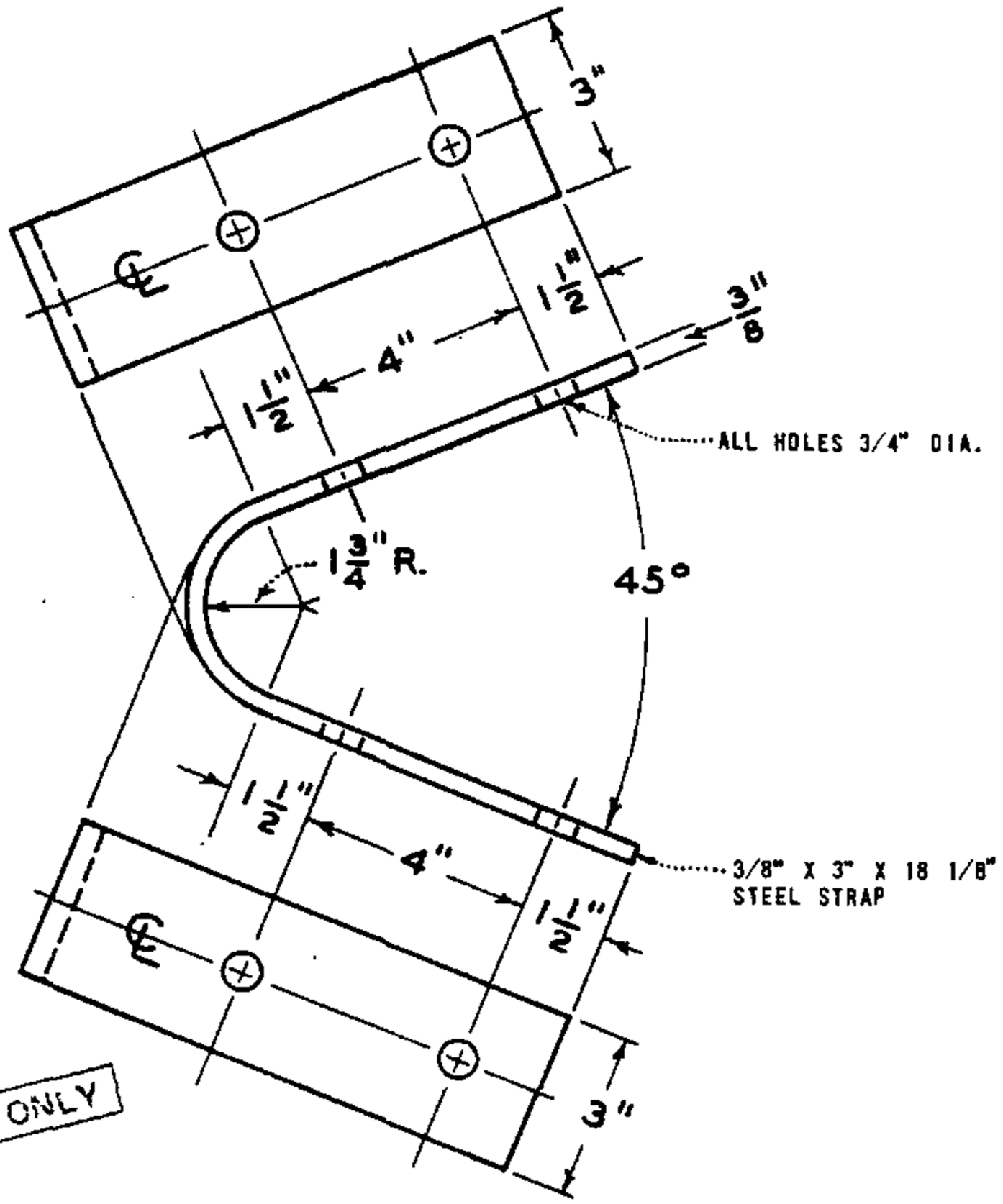

FOR FIELD MAINTENANCE ONLY

ITEM NO. 1

TO BE HOT-DIP GALV. AFTER FABRICATION

ITEM	DESCRIPTION	STOCK NO.	ITEM	DESCRIPTION	STOCK NO.
1	CROSSARM TIE-PLATE (FIGURE 4 CONSTRUCTION)	543200			

DATE 1-1-86
APPD AK / RD

SDG&E ELECTRIC STANDARDS

TRANSMISSION HARDWARE CROSSARM TIE-PLATE

599.901
SUPERSEDES
172 (12-10-82)

TABLE OF CONTENTS

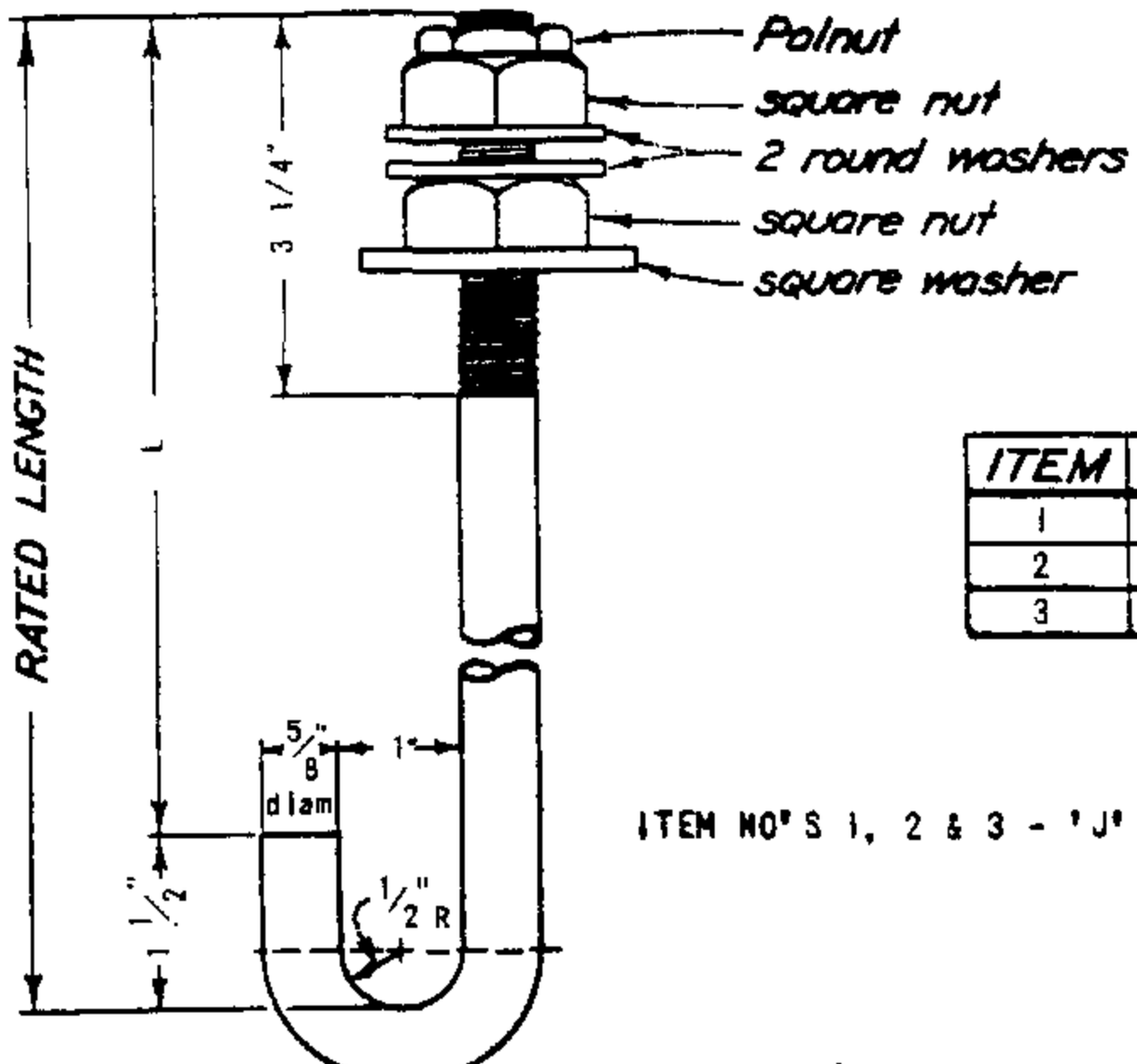

ITEM	FOR CROSSARM	"L"	RATED LENGTH
1	5 3/4" deep	8"	9 1/2"
2	6 3/4" deep	9"	10 1/2"
3	7 3/4" deep	10"	11 1/2"

ITEM NO'S 1, 2 & 3 - 'J' BOLT

FOR FIELD MAINTENANCE ONLY

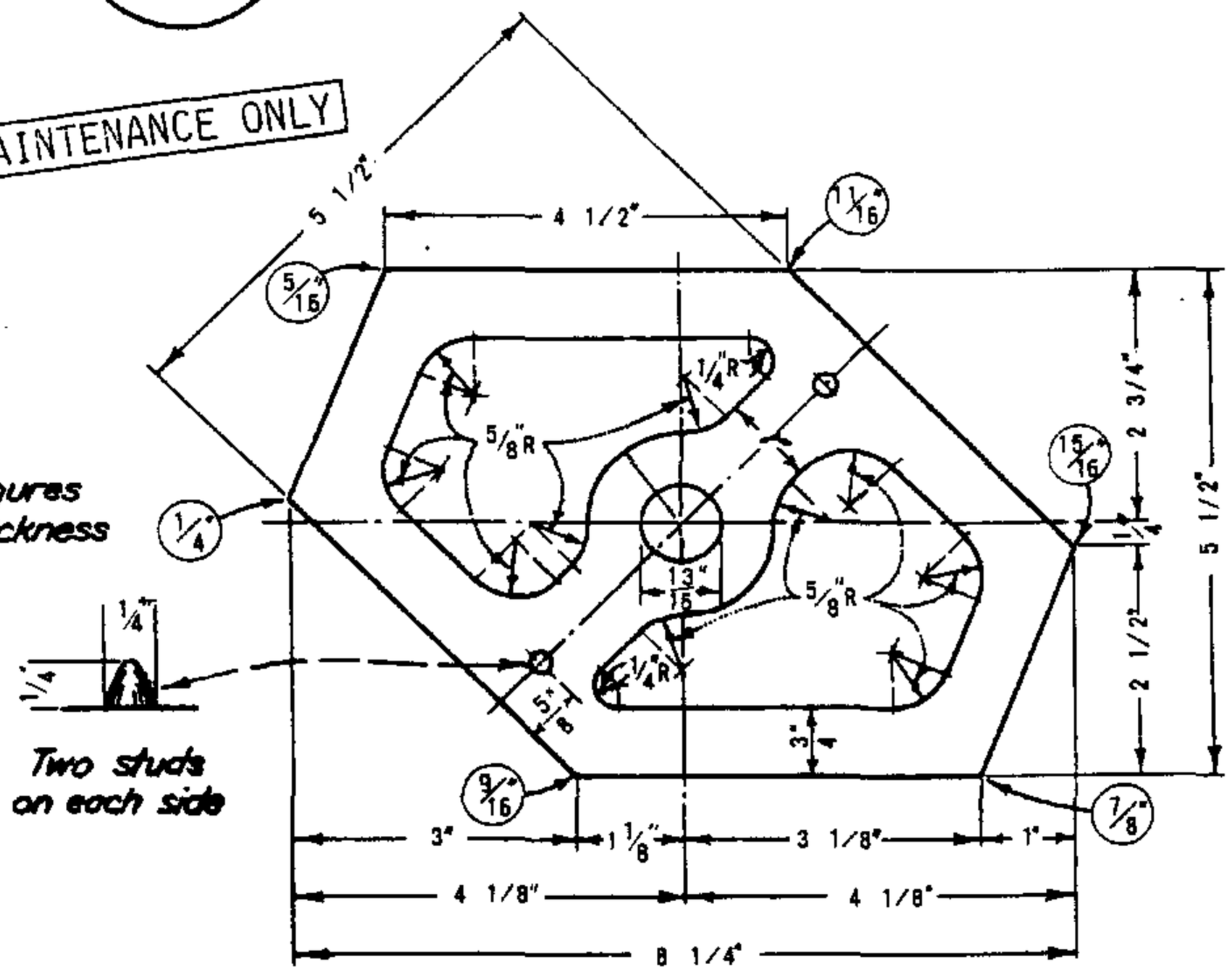

Encircled figures represent thickness at that point

Two studs on each side

ITEM NO. 4 - HEXAGONAL C. I. FILLER, GALV.

ITEM	DESCRIPTION	STOCK NO.	ITEM	DESCRIPTION	STOCK NO.
1	FIELD MAINTENANCE ONLY	151328			
2	FIELD MAINTENANCE ONLY	151296			
3	FIELD MAINTENANCE ONLY	—			
4	FIELD MAINTENANCE ONLY	542400			

599.902
SUPERSEDES
173 (12-10-82)

SDG&E ELECTRIC STANDARDS

TRANSMISSION HARDWARE 'J' BOLT, HEXAGONAL C. I. FILLER

DATE 1-1-86
APPD A.K. Hoff

SCOPE: THIS STANDARD SHOWS THE INSTALLATION OF A SCADA LOAD MONITOR WITH VARIOUS CONFIGURATIONS OF POWER SOURCE AND ANTENNA MOUNTING.

NOTES:

– CONTACT STANDARDS BEFORE DESIGN BEGINS TO DETERMINE COMMUNICATIONS REQUIREMENT.

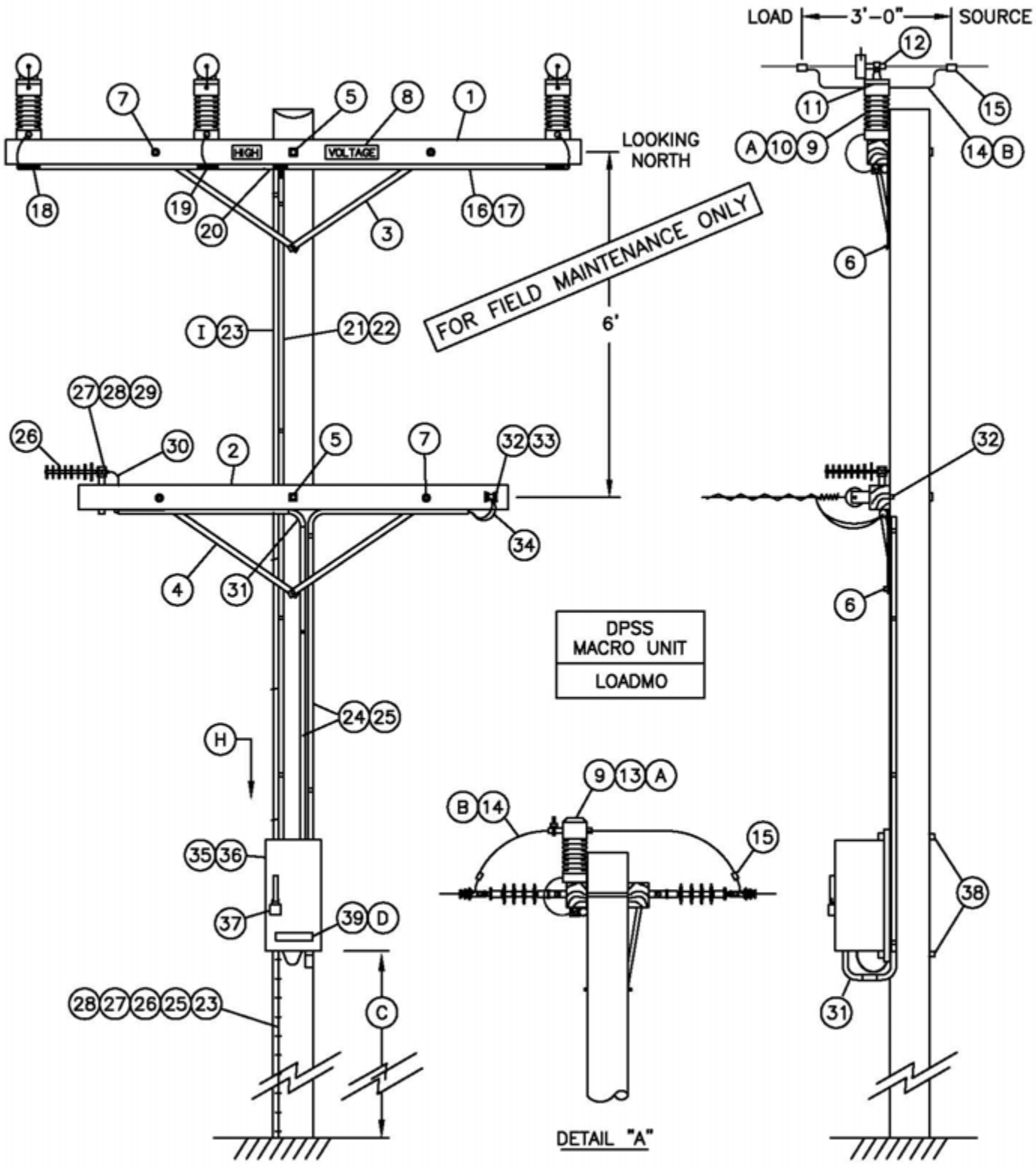

© 1998 - 2005 San Diego Gas & Electric Company. All rights reserved. Removal of this copyright notice without permission is not permitted under law.

DATE 9-30-05 APPD PA / BDG	SDG&E ELECTRIC STANDARDS SCADA LOAD MONITOR	599.903 SUPERCEDES 540.1 (9-30-05)

TABLE OF CONTENTS

TABLE OF CONTENTS

BILL OF MATERIAL:

ITEM	DESCRIPTION	QUANTITY	CONSTR. STD OR PAGE NO.	STOCK NUMBER	ASSEMBLY UNITS
1	CROSSARM, 3-3/4" X 5-3/4" X 10'-0"	1	380.2	294128	–
2	CROSSARM, 3-1/2" X 4-1/2" X 6'-0"	1	380.2	294112	2S
3	BRACE, 36", FLAT, CROSSARM	2	–	164224	36FLAT
4	BRACE, 28", FLAT, CROSSARM	2	–	164192	–
5	BOLT, MACH. GALV, 5/8" X (LENGTH AS REQ'D), 2 SQUARE AND 1 DOUBLE COIL SPRING WASHER	2	392.2	–	–
6	BOLT, LAG, GALV, 1/2" X 4"	2	392.2	–	–
7	BOLT, MACH, GALV, 3/8" X 4-1/2" & 1 RD. WASHER	4	392.2	–	–
8	SIGN, HIGH VOLTAGE & 9 ROOFING NAILS, GALV.	2	–	647648	HV
		–	–	492224	–
9	VIP STUD, 7-1/2"	3	–	701760	STUD-W
10	LINE POST VOLTAGE/CURRENT SENSOR (CLAMP TOP TYPE) AND 45' CONNECTOR CABLE (A)	3	–	635902	C/VCT
11	TRUNION CLAMP ADAPTER WITH HARDWARE	3	–	102926	
12	TRUNION CLAMP, #2-336 ACSR OR AWAC CONDUCTOR	3	–	229250	TRU336
	OR				
	TRUNION CLAMP, 636 ACSR CONDUCTOR	3	–	229256	TRU636
	OR				
	TRUNION CLAMP, #4-4/0 CU CONDUCTOR	3	–	229252	TRU4/0
	OR				
	TRUNION CLAMP, 500 KCMIL CU CONDUCTOR	3	–	229258	TRU500
13	LINE POST VOLTAGE/CURRENT SENSOR (SUBSTATION TYPE) AND 45' CONNECTOR CABLE (A)	3	–	635904	C/VSUB
14	WIRE, JUMPER, SAME SIZE & TYPE AS LINE WIRE	12'	711-715	(B)	–
15	CONNECTOR, WIRE, COMPRESSION (SIZE AS REQ'D)	AS REQ'D	783-787	–	–
16	CONDUIT, PVC, SCHEDULE 40, 3/4"	10'	–	251328	PVC3/4
17	STRAPS, PIPE, GALV. 3/4", AND 6D NAILS, GALV.	AS REQ'D	–	697888	–
		AS REQ'D	–	490656	–
18	ACCESS FITTING BODY, TYPE "T", PVC, 3/4"	2	–	147792	–
19	ACCESS FITTING BODY, TYPE "LL" PVC, 3/4" AND TYPE "LR", PVC, 3/4"	1	–	(F)	–
		1	–	(F)	–
20	ACCESS FITTING BODY, TYPE "T", PVC, 1" AND (2) 3/4" REDUCERS	1	–	(F)	–
21	CONDUIT, PVC, SCHED 40, 1"	30'	–	251200	PVC-1
22	STRAPS, PIPE, GALV, 1", AND 2-6D NAILS, GALV.	AS REQ'D	–	697792	–
		AS REQ'D	–	490656	–
23	#4 CU SOLID GROUND WIRE, PVC COVERED	50'	–	812490	GNDPVC
24	CONDUIT, PVC, SCHEDULE 40, 1/2"	60'	–	251168	PVC1/2
25	GROUND ROD, 5/8" X 8', COPPERWELD	1	–	603072	GNDPVC
26	COPPER BONDED GROUND CONNECTOR	1	–	259010	–
27	GROUND ENHANCING POWER SOLUTION (GEM)	AS REQ'D	–	424390	–
28	GALVANIZED STAPLES FOR PVC COVERED GROUND WIRE	AS REQ'D	–	678562	–

FOR FIELD MAINTENANCE ONLY

© 1998 - 2005 San Diego Gas & Electric Company. All rights reserved. Removal of this copyright notice without permission is not permitted under law.

DATE 9-30-05 APPD PLA / RDG	SDG&E ELECTRIC STANDARDS SCADA LOAD MONITOR	599.904 SUPERCEDES 540.2 (9-30-05)

BILL OF MATERIAL: CON'T:

ITEM	DESCRIPTION	QUANTITY	CONSTR. STD OR PAGE NO.	STOCK NUMBER	ASSEMBLY UNITS
25	STRAPS, PIPE, GALV, 1/2", AND	AS REQ'D	–	697728	–
	6D NAILS, GALV.	AS REQ'D	–	490656	–
26	ANTENNA, BROADBAND, YAGI (E)	1	–	109570	ANT
27	NIPPLE, PIPE 2" X 6", GALV	1	–	500960	ANTXMB
28	BOLT, MACH, GALV. 1/2" X 9"	1	392.2	153184	
29	CENTERING WASHER, GALV.	2	–	795520	
30	CABLE, SUPERFLEX, ANTENNA	AS REQ'D	–	197810	ANTCAB
31	ELBOW, PVC. 1/2"	AS REQ'D	–	–	–
32	BOLT, MACHINE, GALV, 5/8" X (LENGTH AS REQ'D) 1 SQ. & 1 DOUBLE COIL SPRING WASHER	1	392.2	–	–
33	SECONDARY DEADEND	1	–	235488	1SDE
34	WIRE, THW, #12, BLACK	100'	–	808096	THW12
35	TRANSCEIVER, 12V DC	1	–	905390	–
	OR				
	SPREAD SPECTRUM RADIO	1	–	749504	–
36	RTU	1	–	(F) 484600	LMRTU
37	PADLOCK, SCHLAGE ELECTRIC SERIES	1	–	514848	–
38	BOLT, MACHINE, GALV, 5/8" X (LENGTH AS REQ'D) 1 SQUARE AND 1 DOUBLE COIL SPRING WASHER	2	392.2	–	–
39	TAG, RTU NUMBER	1	208.5	(D)	TAGRE

FOR FIELD MAINTENANCE ONLY

INSTALLATION:

(A) THE RANGE OF WIRE FOR THE CLAMP TOP TYPE VOLTAGE/CURRENT SENSOR IS .25" TO .8". THE APPLICATION OF THIS STANDARD TO EXISTING #6 LINE WIRE REQUIRES USE OF THE SUBSTATION STYLE VOLTAGE/CURRENT SENSOR AND FOR THE LINE WIRE TO BE DEAD-ENDED (SEE DETAIL "A"). ANY SIZE EXISTING DEAD-ENDED LINE WIRE CONSTRUCTION REQUIRES THE USE OF SUBSTATION STYLE VOLTAGE/CURRENT SENSORS.

NOTE: BEFORE ENERGIZING SENSORS, GROUND ALL VOLTAGE/CURRENT SENSOR BASES BY ATTACHING GROUND WIRE TO MOUNTING STUD, ON BOTTOM OF CROSSARM. WHEN INSTALLING SENSORS, IT IS PREFERRED THAT THE SENSOR CABLE CONNECTOR GO ON THE LOADSIDE. THIS WOULD PLACE THE "H1" LABEL ON THE SOURCE (LINE) SIDE.

(B) ALWAYS USE JUMPER WIRE OF AMPACITY EQUAL TO THAT OF THE MAIN CONDUCTOR.

(C) RTU TO BE MOUNTED AT 10' FROM GROUND LEVEL TO BOTTOM OF RTU CABINET WHEN NOT SUBJECT TO TRAFFIC CONTACT. IF VULNERABLE TO VEHICLE DAMAGE, MOUNT RTU AT 13' – 6" FROM GROUND LEVEL TO BOTTOM OF RTU CABINET. CONSIDER LARGE VEHICLES PARKING PARALLEL TO CURB. IN REMOTE AREAS WHERE VEHICLE ACCESS IS NOT POSSIBLE, MOUNT RTU AT 5' FROM GROUND LEVEL TO BOTTOM OF RTU CABINET.

(D) RTU NUMBER TO BE ASSIGNED BY DISTRIBUTION OPERATIONS AND ADDED TO JOB WITH DPSS NOTE.

(E) PLANNER TO SPECIFY QUADRANT OF POLE FOR ANTENNA MOUNT WITH DATA FROM STANDARDS. POINTS LIST TO BE COMPLETED BY PLANNER AND SENT TO SENIOR ENGINEER, DISTRIBUTION OPERATIONS. SEE ELECTRIC STANDARDS TEAM FOR POINTS LIST FORMS AND COMMUNICATIONS REQUIREMENTS.

(F) THESE ITEMS SUPPLIED BY SCADA PROJECT CREW (KEARNY). 120V SUPPLY, ANTENNA CONNECTIONS AND SENSOR CONNECTIONS TO BE MADE BY SCADA PROJECT CREW (KEARNY). LINE CREW MOUNTS RTU TO POLE.

REFERENCE:

(H) POLE STEPPING – SEE STANDARDS 363.

(I) GROUNDING METHODS – SEE STANDARDS 1002.

© 1998 - 2005 San Diego Gas & Electric Company. All rights reserved. Removal of this copyright notice without permission is not permitted under law.

TABLE OF CONTENTS

600-900 SECONDARIES, CONDUCTOR, GUYING

600-900 SECONDARIES, CONDUCTOR, GUYING

MAIN TABLE OF CONTENTS

PAGE	SUBJECT
699.101	SECONDARY RACK CONSTRUCTION
699.102	MID-SPAN SERVICES
699.201	SECONDARY RACKS
699.202	SERVICE DROP ATTACHMENTS
699.301	SERVICE INSULATING BRACKETS, SINGLE
699.302	HEAVY DUTY SERVICE INSULATOR BRACKET
699.500	TV AMPLIFIER AND 120V METER INSTALLATION
776	ANGLE SUSPENSION CLAMPS
799.101	COPPER AND COPPERWELD WIRE TABLE
799.102	COPPER TREE WIRE
799.103	AUTOMATIC SLEEVES FOR COPPER & COPPERWELD CONDUCTORS
799.401	GALVANIZED DEAD END STRAIN CLAMP FOR COPPER CONDUCTORS
799.402	12KV AL STRAIGHT STRAIN CLAMP FOR ACSR & 5005 AL ALLOY CONDUCTORS
799.501	PORCELAIN SUSPENSION INSULATOR BONDING
799.801	ALUMINUM PARALLEL GROVE CLAMPS
962	GUY HARDWARE
999.601	ALUMOWELD GUY WIRE
999.602	COPPER & COPPERWELD GUY GRIPS
999.603	ALUMOWELD GUY GRIPS
999.604	ALUMINUM GUY SPLICES

© 1998 - 2019 San Diego Gas & Electric Company. All rights reserved. Removal of this copyright notice without permission is not permitted under law.

REV	CHANGE	BY	DSGN	APPV	DATE	REV	CHANGE	BY	DSGN	APPV	DATE
C						F					
B	COMPLETELY REVISED	JK	JS	CZH	10/15/2019	E					
A	ORIGINAL ISSUE	JK	JS	CZH	6/13/2019	D					

Indicates Latest Revision | X | Completely Revised | | New Page | | Information Removed

SHEET 1 OF 1

SDG&E ELECTRIC OVERHEAD FIELD MAINTENANCE ONLY STANDARDS

LEGACY OVERHEAD FIELD MAINTENANCE
TABLE OF CONTENTS
SECONDARIES, CONDUCTORS, GUYING

OH LEGACY
OHL601.1

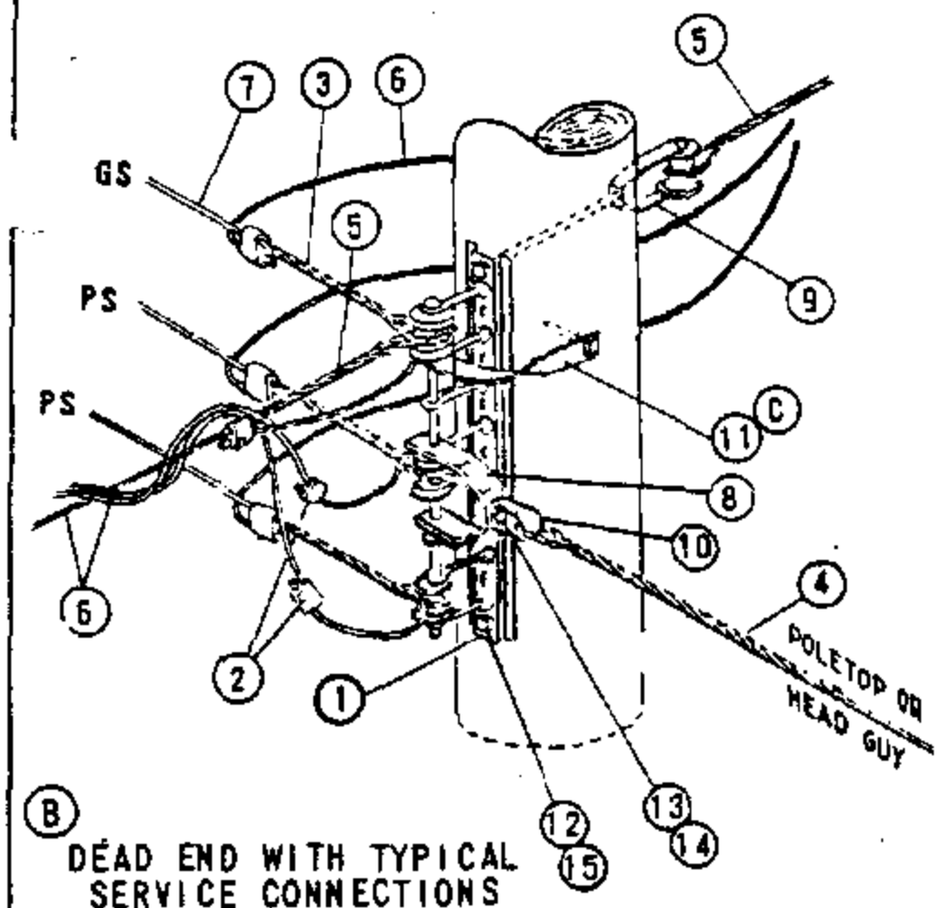

(B) DEAD END WITH TYPICAL SERVICE CONNECTIONS

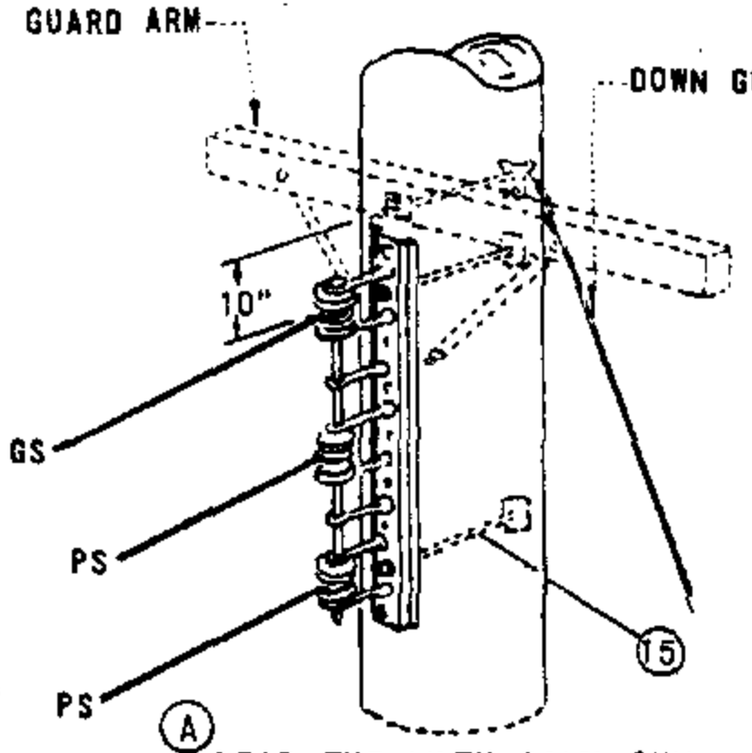

(A) DEAD END WITH DOWN GUY

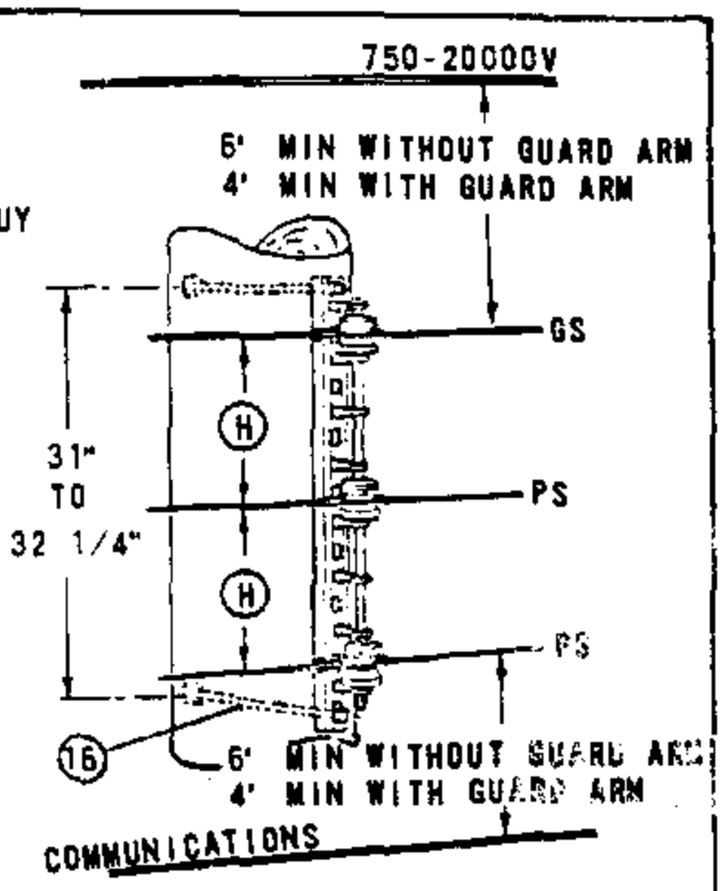

TANGENT OR ANGLE

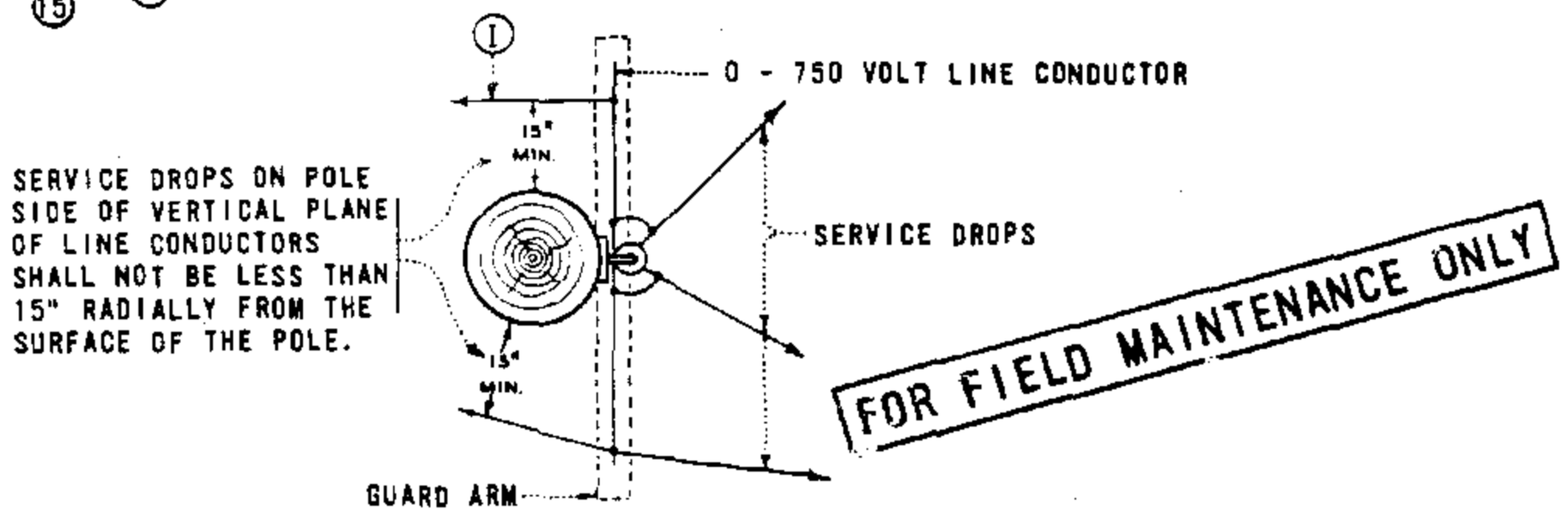

FOR FIELD MAINTENANCE ONLY

NOTES:

(A) DEAD END WITH DOWN GUY IS PREFERRED CONSTRUCTION WHERE THERE IS NO FUTURE EXTENSION OF SECONDARY.

(B) DEAD END WITH POLETOP OR HEAD GUY IS PREFERRED CONSTRUCTION WHERE FUTURE EXTENSION OF SECONDARY IS EXPECTED.

(C) USE DEAD ENDING STRAPS BEHIND EACH CONDUCTOR WHERE RACK GUY CANNOT BE USED, SEE PAGE 629.

D. TO OBTAIN RADIAL CLEARANCE BETWEEN SUPPLY CONDUCTORS, OVERHEAD GUYS, AND CLIMBING SPACE USE EXTENSION BRACKET. SEE PAGE 629.

E. SEE PAGE 255 FOR CLIMBING SPACE REQUIREMENTS.

F. GUARD ARMS ARE REQUIRED WHEN REDUCING CLEARANCE FROM THE NORMAL 6 FT MINIMUM TO A 4 FT MINIMUM BETWEEN THE SECONDARY CABLE AND THE CONDUCTORS ABOVE.

G. WHEN USING GUARD ARMS, ADDITIONAL CLEVISES CANNOT BE ADDED TO THE POLE. REPLACE WITH MID-SPAN SERVICES SEE PAGE 618.

(H) MINIMUM VERTICAL SEPARATION FOR SPAN LENGTHS 200 FT OR LESS SHALL BE 8 IN. 200 FT THROUGH 330 FT MINIMUM SEPARATION SHALL BE 12 IN.

(I) WHEN USING GUARD ARMS, SERVICE DROPS ARE NOT PERMITTED TO PASS ABOVE OR BELOW THE GUARD ARM ON THE POLE SIDE OF THE RACK SECONDARY.

ITEM PTF	ITEM OCD	DESCRIPTION	QUANTITY	STOCK NO. OR CONSTR STD
	1	RACK, 3 OR 4 WIRE SECONDARY	1	PG 629
	2	CONNECTORS	AS REQ'D	PGS 783, 787
	3	GRIPS, DEAD END FOR COATED SEC CONDUCTORS	AS REQ'D	PGS 745, 747
	4	GRIPS, GUY	AS REQ'D	PGS 745, 747
	5	GRIPS, TRIPLEX NEUTRALS SERVICE	AS REQ'D	PGS 745, 747
	6	WIRE, TRIPLEX SERVICE	AS REQ'D	PGS 711, 715, 716
	7	WIRE, W.P. SECONDARY	AS REQ'D	PGS 711, 715, 716
		CLEVIS, 4KV DEAD END	1	235520
	9	CLEVIS, SECONDARY DEAD END	1	235488
10		EYELET, THIMBLE	1	338176

ITEM PTF	ITEM OCD	DESCRIPTION	QUANTITY	STOCK NO. OR CONSTR STD
	11	STRAP, DEAD ENDING, CURVED	AS REQ'D	PG 629
	12	BOLT, MCH, 5/8" X LENGTH AS REQ'D	2	PG 139
	13	BOLT, MACH, 5/8" X 2"	1	155040
	14	WASHER 5/8" LOCK SPRING	1	796864
	15	WASHER, 3" SQ CURVED	AS REQ'D	797792
	16	WASHER, 2 1/4" SQ FLAT	AS REQ'D	799040

DATE 6-4-82
APPD

SDG&E ELECTRIC STANDARDS

SECONDARY RACK CONSTRUCTION

699.101
SUPERSEDES
616 (6-4-82)

TABLE OF CONTENTS

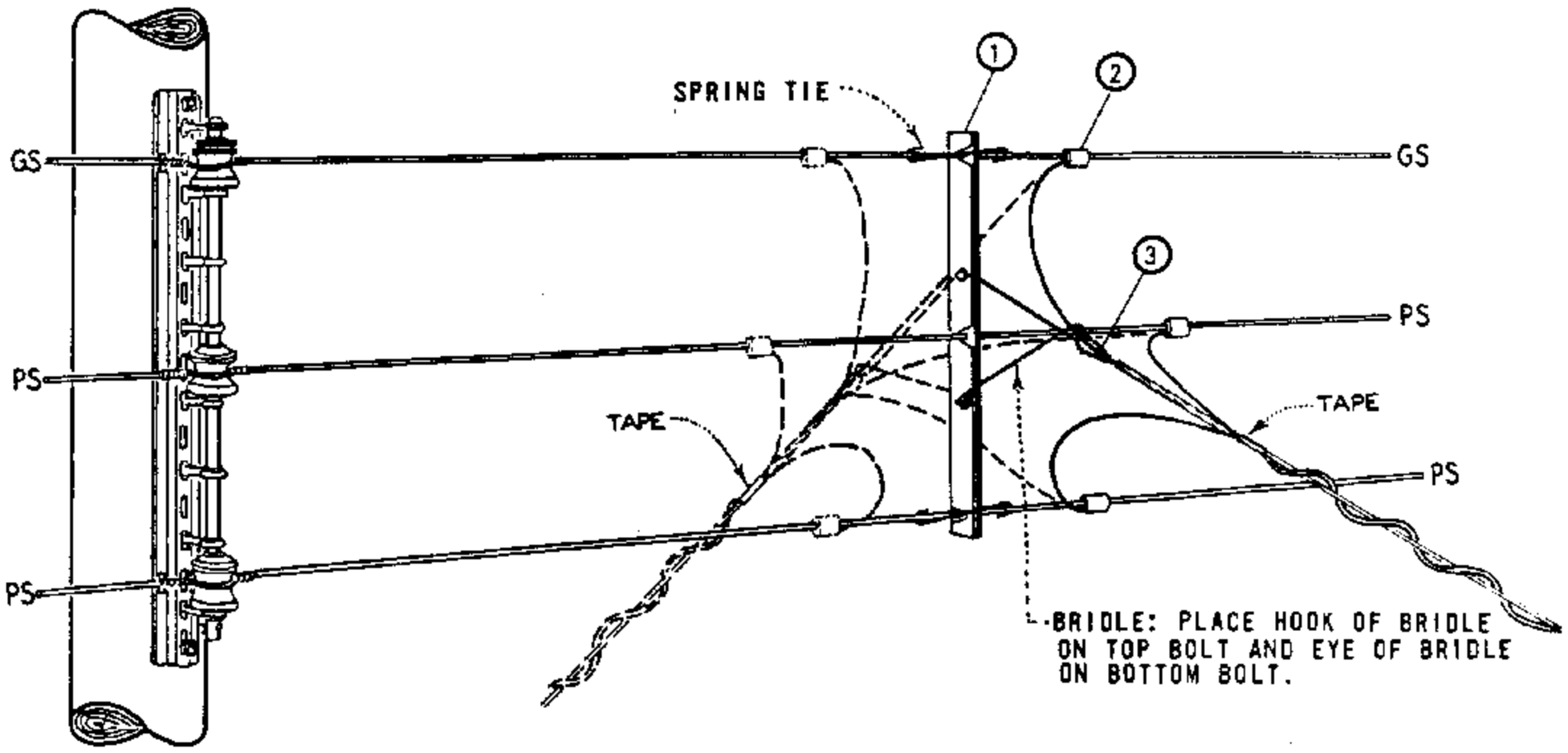

FOR FIELD MAINTENANCE ONLY

TABLE OF CONTENTS

SECONDARY CONDUCTOR SPREADER

NO. WIRES	SPACING (IN)	WIRE SLOT (IN)						MATERIAL THICKNESS (IN)	MANUFACTURER			
		TOP		MIDDLE		BOTTOM			NAME	CATALOG NUMBER	NAME	CATALOG NUMBER
		DIA.	MAX. WIRE SIZE	DIA.	MAX. WIRE SIZE	DIA.	MAX. WIRE SIZE					
3	12	1/2	.500	19/32	.594	19/32	.594	1/4	A.T. FLOWER	AF332-93	JOSLYN	32312

NOTES.

A. FOR USE ON SERVICE DROPS 100 FEET OR LESS IN LENGTH.

B. WHERE TWO TO FOUR TRIPLEX SERVICE DROPS ARE INSTALLED ON ONE SECONDARY CONDUCTOR SPREADER, CONNECT RESPECTIVE SERVICE CONDUCTORS TO LINE CONDUCTOR WITH ONE COMPRESSION CONNECTOR AS PERMITTED BY STOCKED CONNECTOR SIZES.

C. SEE OTHER PAGES IN 'SECONDARIES, SERVICES' SECTION FOR RACK CONSTRUCTION DETAILS.

ITEM	DESCRIPTION	QUANTITY	STOCK NO. OR CONSTR. STD.
1	SECONDARY CONDUCTOR SPREADER, COMPLETE WITH 1-SPREADER, BRIDLES AND SPRING TIES	1	670592
2	CONNECTOR, COMPRESSION	AS REQ'D	PGS 783, 7
3	GRIPS, SERVICE	AS REQ'D	PGS 746, 747

699.102
SUPERSEDES
618 (3-25-83)

SDG&E ELECTRIC STANDARDS

MID-SPAN SERVICES FROM VERTICAL RACK SECONDARY

DATE 4-5-83
APPD JWF/GRH

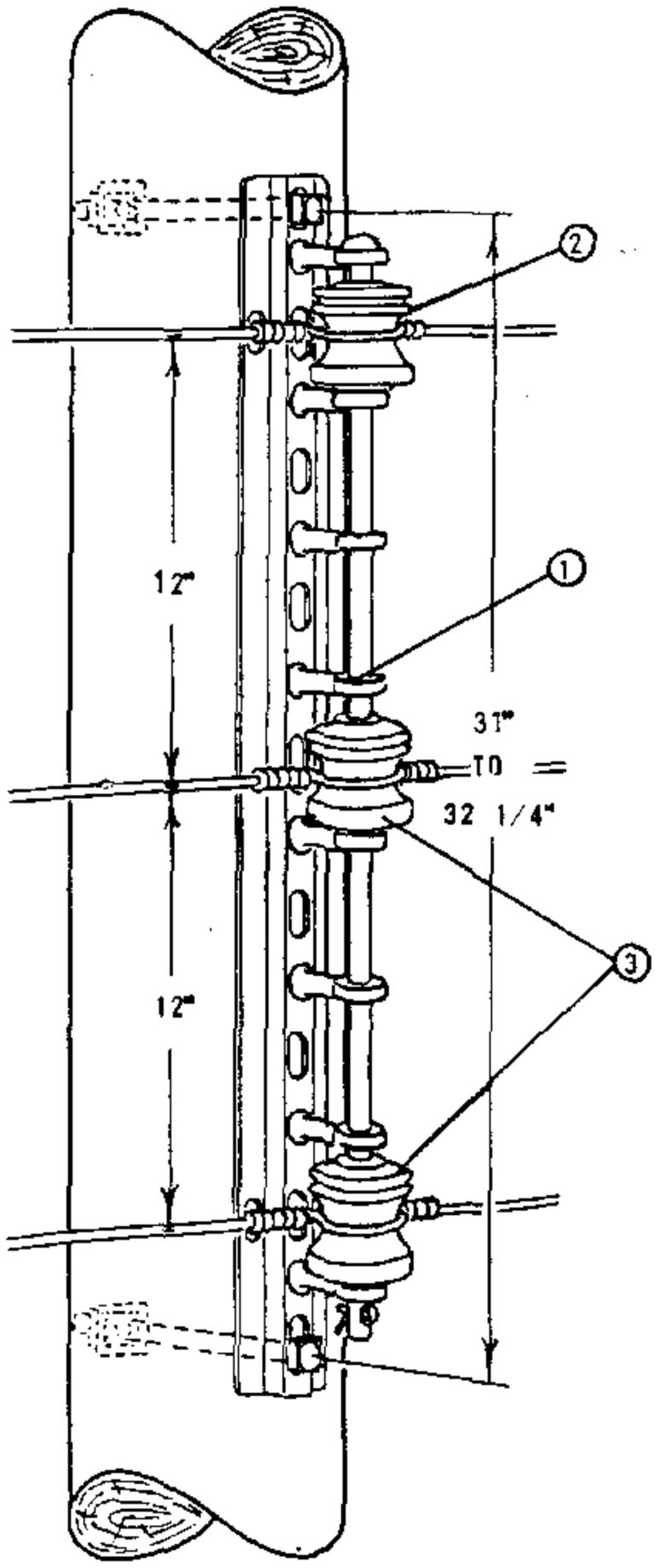

TANGENT OR ANGLE

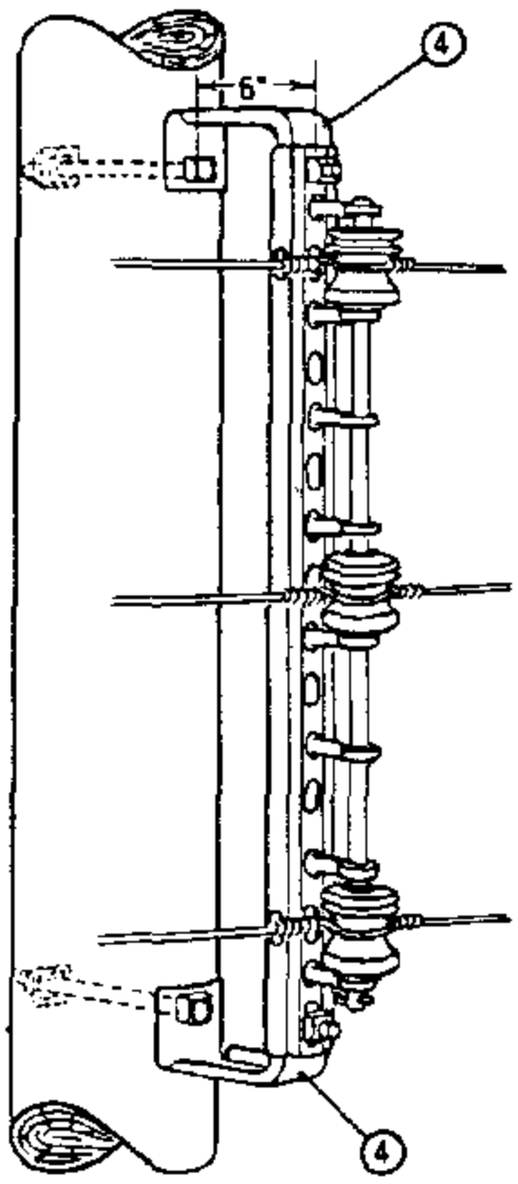

TANGENT OR ANGLE
EXTENSION BRACKET
(A)

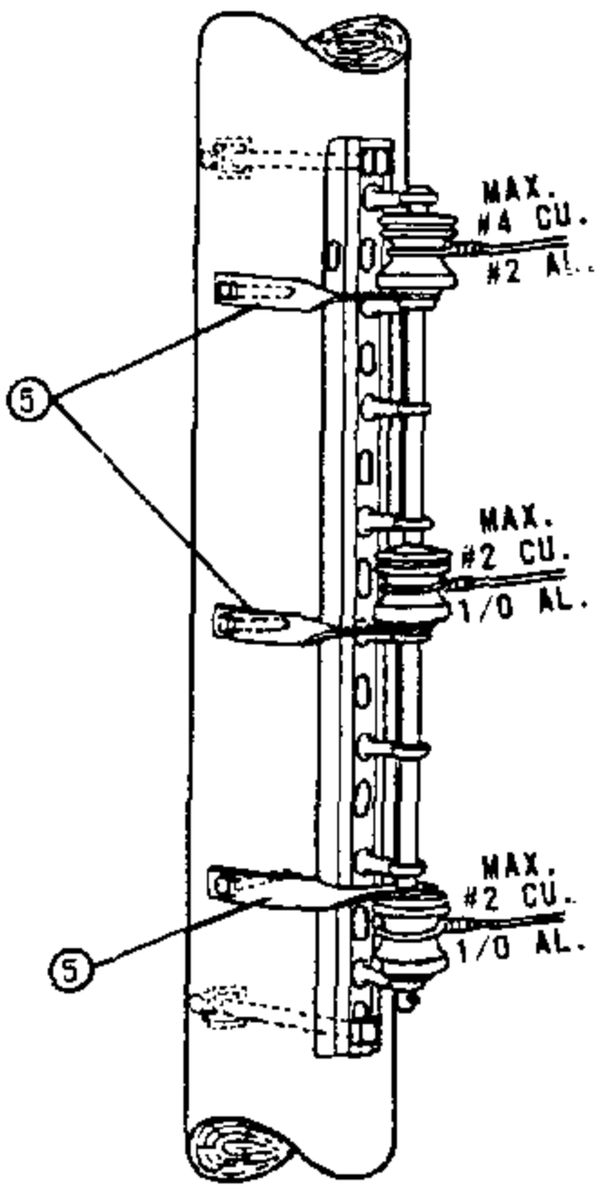

DEAD END ON
SIDE OF POLE
(B)

FOR FIELD MAINTENANCE ONLY

NOTES:

(A) USED TO OBTAIN RADIAL CLEARANCE BETWEEN SUPPLY CONDUCTORS AND OVERHEAD GUYS, ALSO TO OBTAIN CLIMBING SPACE.

(B) TO BE USED FOR TANGENT, ANGLE, OR CORNER CONSTRUCTION WHERE SECONDARY MAY BE EXTENDED AND WHERE RACK GUY CANNOT BE USED.

ITEM	DESCRIPTION	CATALOG NUMBER							STOCK NUMBER
		CHANCE	HUBBARD	JOSLYN	KORTICK	McGRW ED	OLIVER		
1	SECONDARY RACK	-	1478	-	K-6748	-	8348		564864
2	SPOOL INSULATOR, (WHITE)	255W	455W	-	-	-	-		430816
3	SPOOL INSULATOR, (BROWN)	-	-	-	-	-	-		430656
4	EXTENSION BRACKET	-	3355	J-2355	K-4830	-	-		166016
5	DEAD ENDING STRAP, CURVED, 1/4" X 1 1/4"	-	1000	J-3120	K-4833	OR4MI	-		696832

DATE 6-4-82
APPD

SDG&E ELECTRIC STANDARDS

SECONDARY RACKS

699.201
SUPERSEDES
629 (6-4-82)

TABLE OF CONTENTS

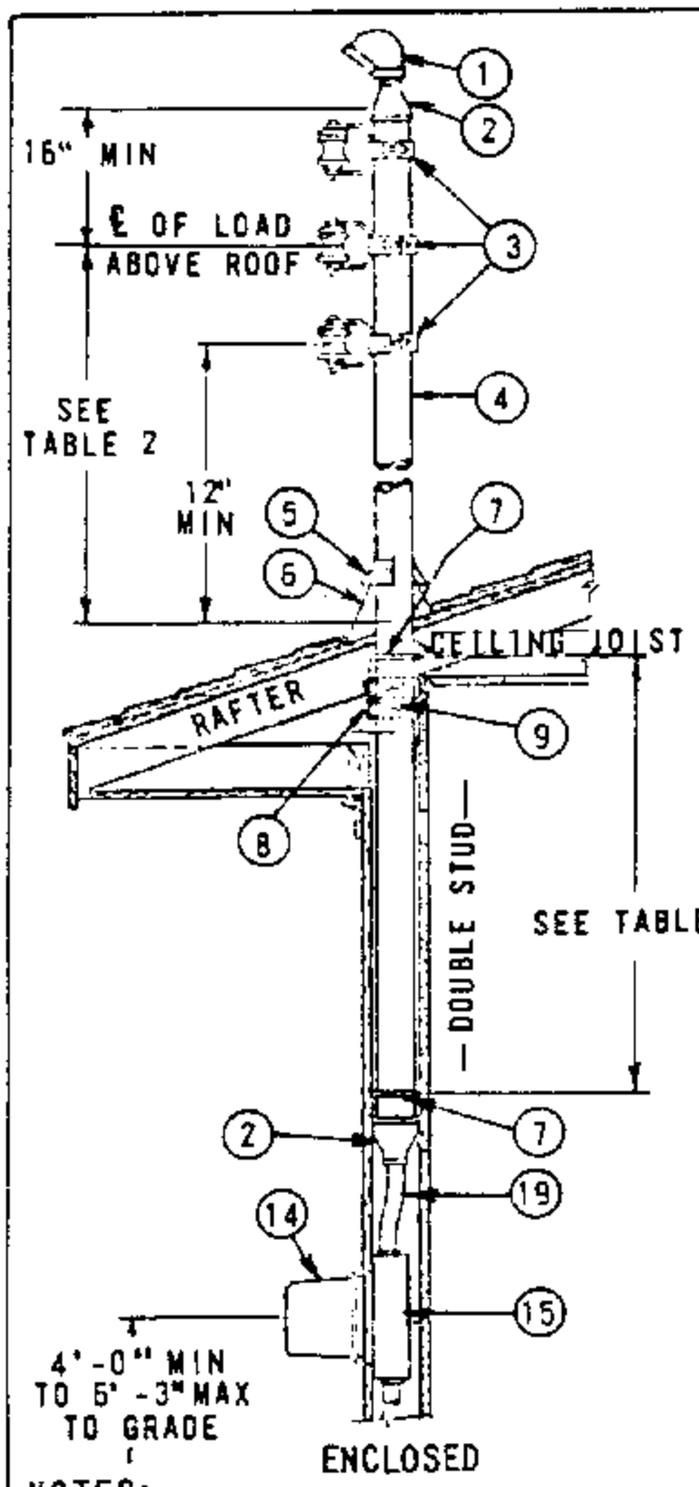

ENCLOSED

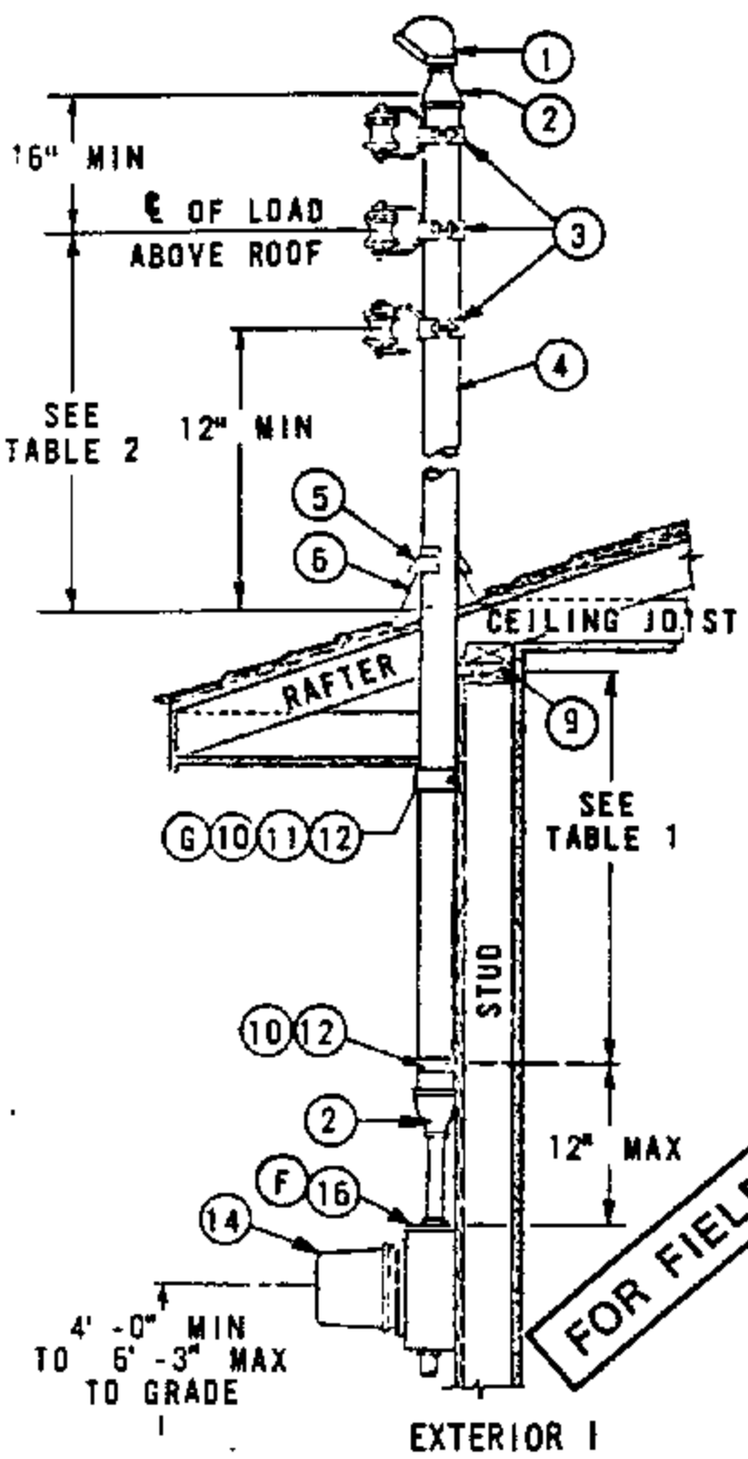

EXTERIOR 1

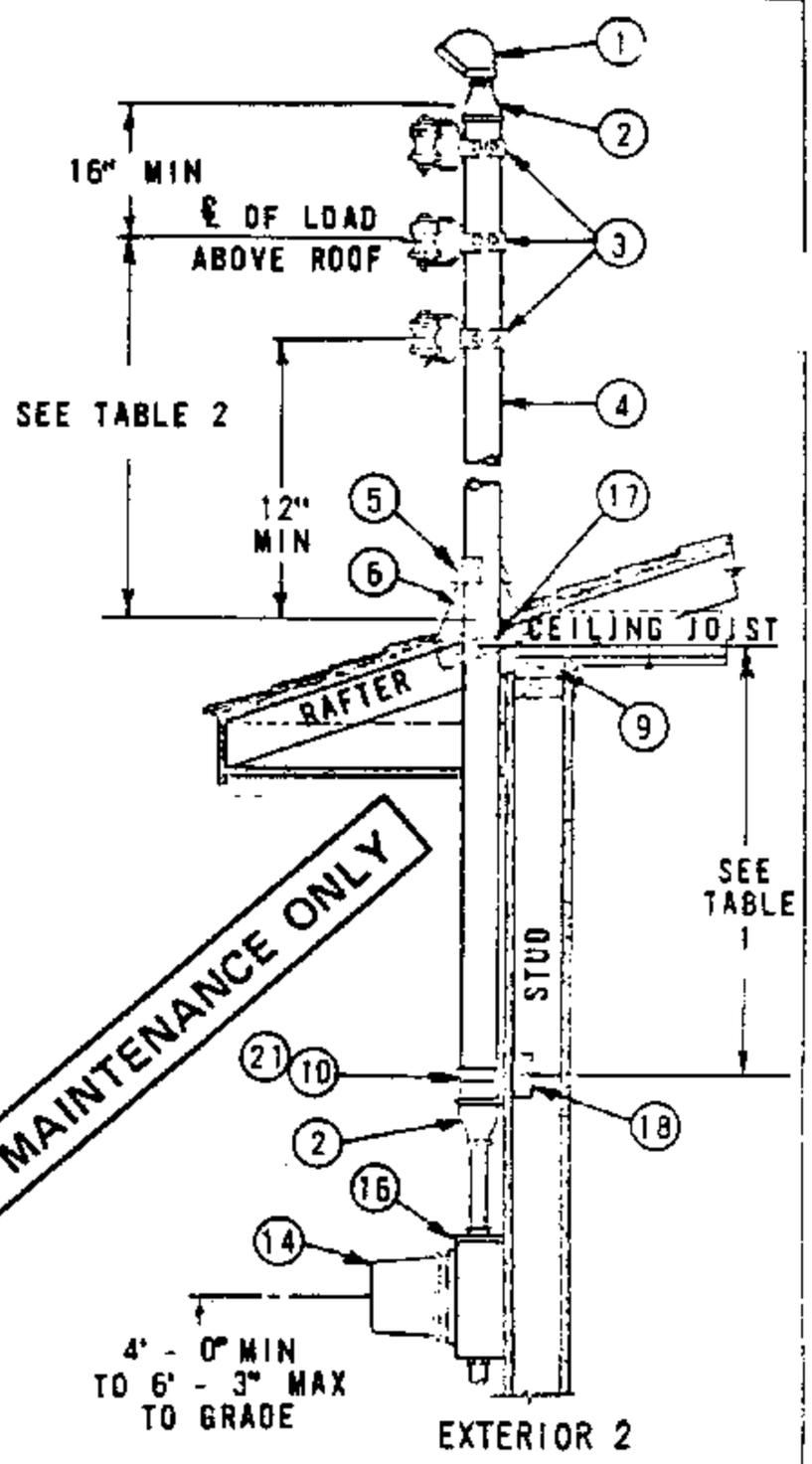

EXTERIOR 2

FOR FIELD MAINTENANCE ONLY

NOTES:

A. SDG&E WILL NOT BE RESPONSIBLE FOR ANY DAMAGE TO THE BUILDING CAUSED BY RAIN OR STRUCTURAL FAILURE.

B. THESE METHODS ARE SUGGESTED TO OBTAIN THE REQUIRED GROUND AND ROOF CLEARANCES AS REQUIRED BY THE AUTHORITIES HAVING JURISDICTION. WHEN THIS METHOD IS USED IT WILL BE ACCEPTABLE TO SDG&E PROVIDED THE DIMENSIONS AND CONSTRUCTION DETAILS ARE COMPLIED WITH.

C. THE DIMENSIONS SHOWN ARE BASED ON A "SLACK SPAN" SERVICE DROP LENGTH OF NOT MORE THAN 100 FEET. FOR SERVICE LENGTH GREATER THAN 100 FEET, SEE STANDARD 644.

D. NO COUPLINGS WILL BE PERMITTED BETWEEN THE TOP OF THE RISER AND THE LOWEST POINT OF SUPPORT FOR CONDUIT SIZES 1 1/4" TO 2" INCLUSIVE. IF A COUPLING IS NECESSARY IN THE 2 1/2" SIZE CONDUIT TO SECURE THE MAXIMUM HEIGHT, THE COUPLING SHALL BE INSTALLED AT THE UPPER END NEAR THE SERVICE CAP.

E. THESE CONDUIT RISERS SHALL BE USED FOR ATTACHMENT OF #2 OR LARGER SERVICE DROPS.

(F) METER SOCKET BOX MUST HAVE MINIMUM WIDTH OF 14".

(G) WHEN ROOF CONSTRUCTION HAS NO SOFFIT, MOVE STRAP UP AND LAG INTO PLATE 9. HEAVY DUTY ONE HOLE PIPE STRAP IS ACCEPTABLE IF USED WITH 1/4" X 3 1/2" LAG SCREW INTO WALL STUD.

ITEM	DESCRIPTION	QUANTITY		
		ENCLOSED	EXTERIOR 1	EXTERIOR 2
1	CAP, SERVICE	1	1	1
2	REDUCER, PIPE, GALV IRON, IF REQ'D	1	1	1
3	INSULATOR AND CLAMPS, FURNISHED & INSTALLED BY SDG&E	3	3	3
4	CONDUIT, GALV RIGID IRON, OR INTERMEDIATE METAL CONDUIT	1	1	1
5	COLLAR, METAL OR NEOPRENE RAINSHED	1	1	1
6	FLASHING	1	1	1
7	BOLT, "U", 3/8"	2	-	-
8	STRAPS ON PLATES	AS REQ'D	-	-
9	PLATES	-	-	-
10	STRAP, PIPE, HEAVY DUTY, TWO HOLE (G)	-	2	-
11	SCREW, LAG, 1/4" X 3 1/2"	-	2	-
12	BOLT, TOGGLE, 1/4"	-	2	-
13				
14	METER	1	1	1
15	BOX, METER SOCKET, FLUSH TYPE	1	-	-
16	BOX, METER SOCKET, SURFACE MOUNTED TYPE	-	1	1
17	BLOCKING, 2" X 4", BETWEEN RAFTERS (SOLIDLY INSTALLED)	-	-	AS REQ'D
18	BLOCKING, 2" X 4", BETWEEN STUDS	-	-	AS REQ'D
19	NIPPLE, CONDUIT, OFFSET	1	-	-
20				
21	SCREW, LAG, 1/4" X 3"	-	-	AS REQ'D

TABLE 1

MIN. DISTANCE BETWEEN SUPPORTS SHOWN

CONDUIT SIZE	DISTANCE
1 1/4"	12'
1 1/2"	15'
2"	22"
2 1/2"	30"

TABLE 2

MAX DISTANCE OF ℄ OF LOAD ABOVE ROOF

CONDUIT SIZE	DISTANCE
1 1/4"	30"
1 1/2"	40"
2"	5'-0"
2 1/2"	8'-0"

699.202
SUPERCEDES
642 (1-1-90)

SDG&E ELECTRIC STANDARDS

SERVICE DROP ATTACHMENTS TO CONDUIT RISERS

DATE 1-1-90
APPD

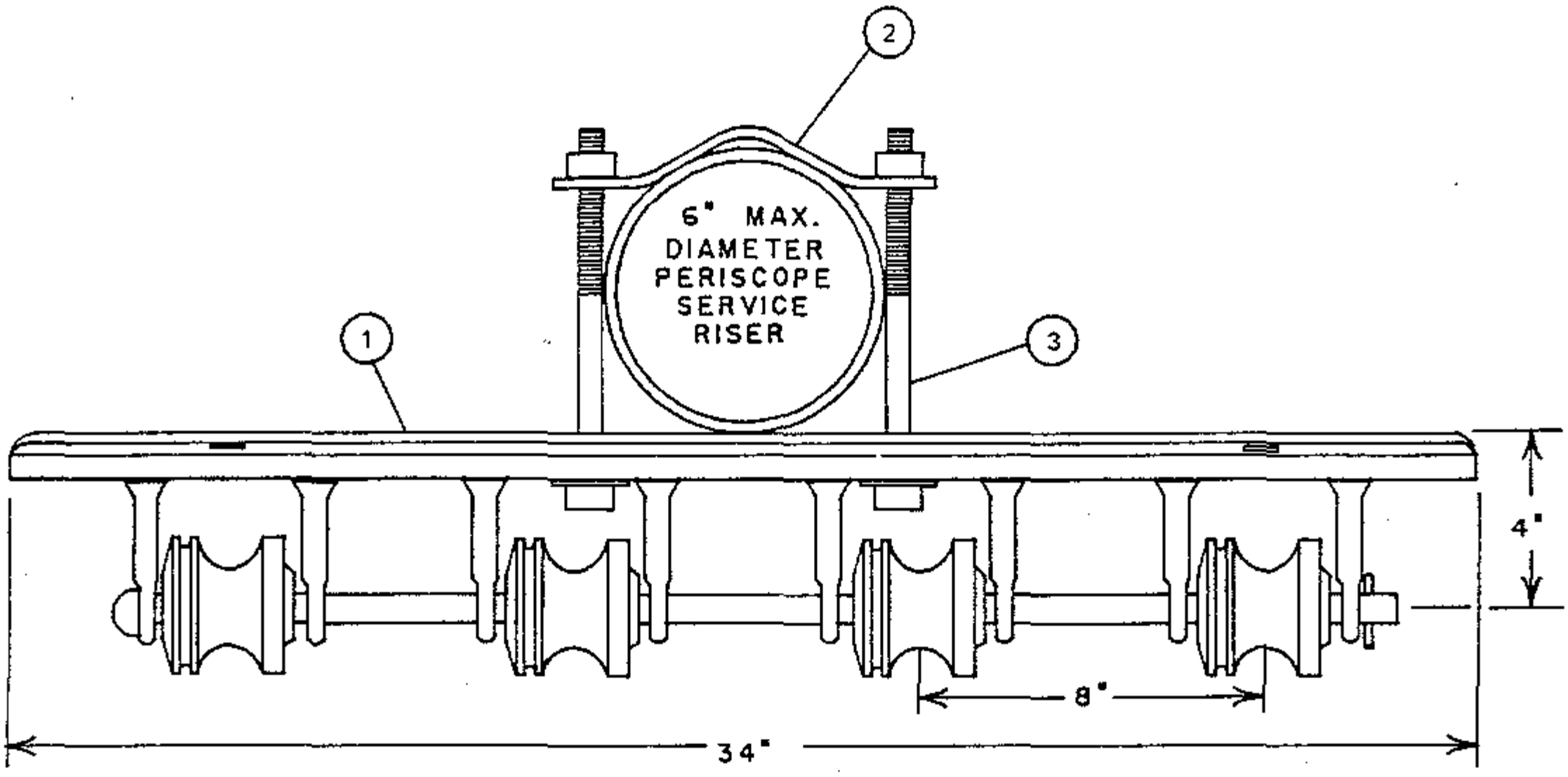

FOUR SPOOL SERVICE INSULATOR BRACKET-ITEMS 1,2,3

FOR FIELD MAINTENANCE ONLY

ITEM	DESCRIPTION	CATALOG NUMBER	QUANTITY	STOCK NO. OR CONST. STD.
1	RACK, FOUR SPOOL SERVICE INSULATOR	HUBBARD 1478 KORTICK K-6748 OLIVER 8348	1	564864
2	STRAP, CURVED BACK	-	1	698016
3	BOLT, MACH., GALV., 1/2" X [LENGTH AS REQ'D.]	-	2	PG. 139

TABLE OF CONTENTS

DATE 9-17-82
APPD

SDG&E ELECTRIC STANDARDS

SERVICE INSULATOR BRACKETS, SINGLE

699.301
SUPERSEDES
631 (9-17-82)

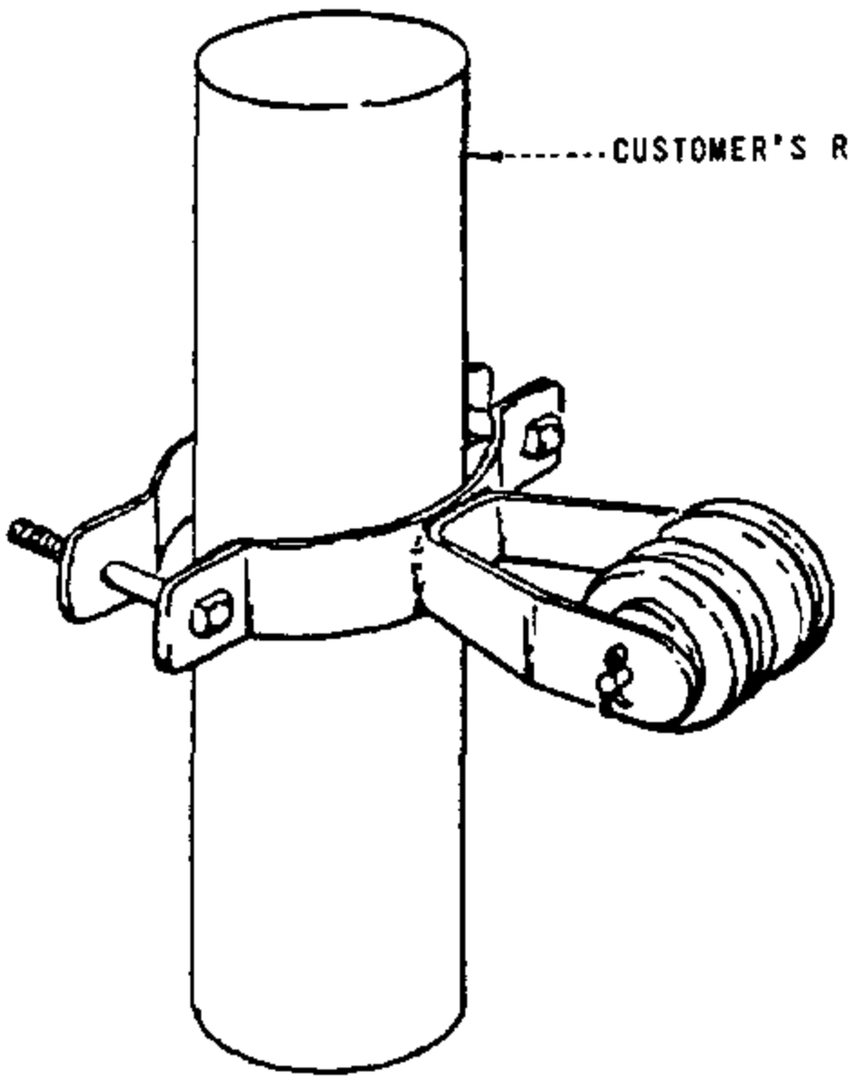

BRACKET ASSEMBLED

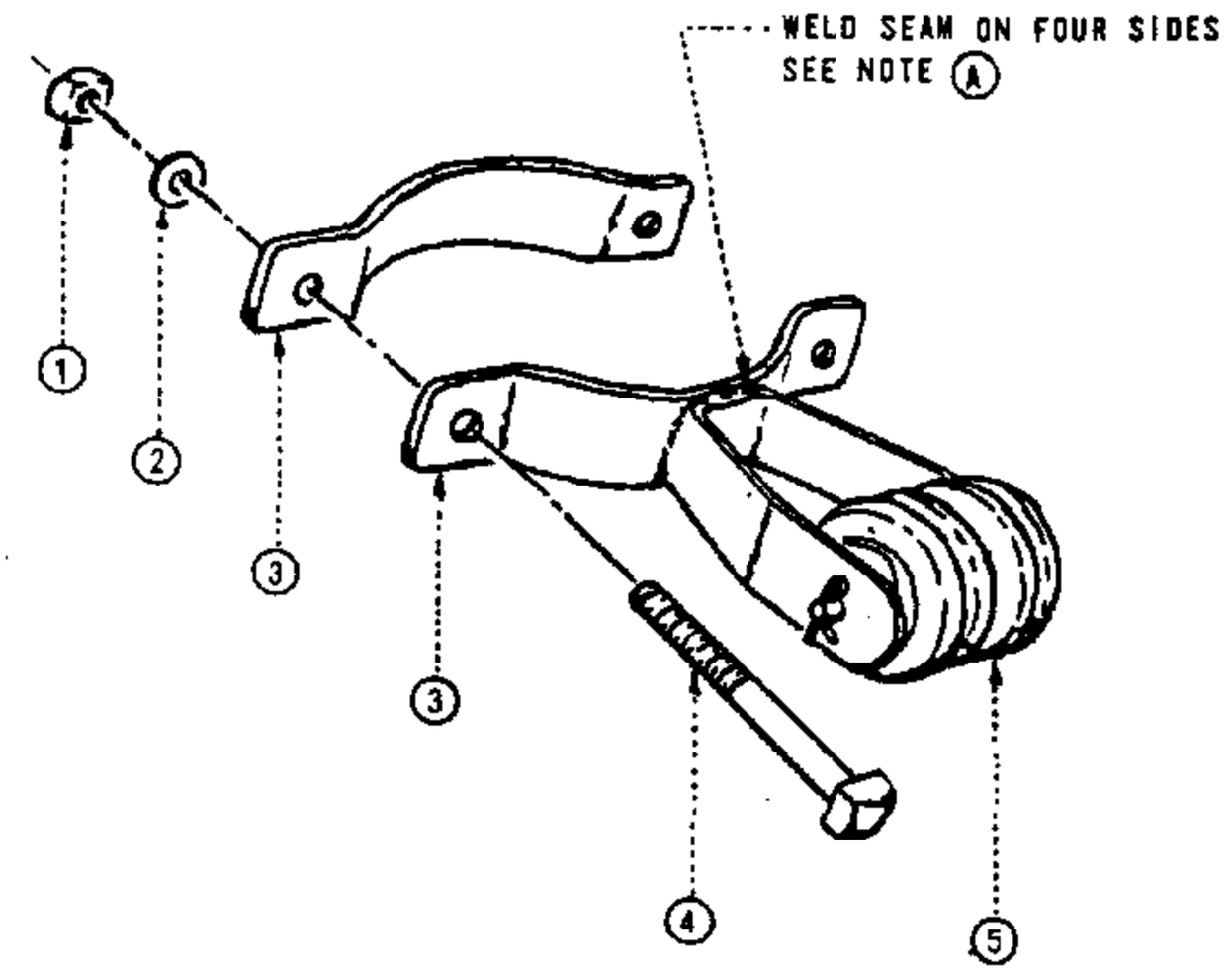

BRACKET EXPLODED

FOR FIELD MAINTENANCE ONLY

NOTES:

(A) ITEM TO BE GALVALLOY ZINC AT WELDED JOINT OR HOT DIP GALVANIZED AFTER FABRICATION.

(B) ASSEMBLY WILL ACCOMODATE CUSTOMER'S RISER FROM 3" MINIMUM TO 6" MAXIMUM.

ITEM	DESCRIPTION	QUANTITY	STOCK NO. OR CONSTR STDS
1	NUT, GALV., 1/2" X 13 COURSE THREAD	2	504736
2	WASHER, FLAT, GALV., 1/2" DIAMETER	2	800192
3	STRAP, BACK, CURVED, GALV.	2	698016
4	BOLT, MACH., GALV., 1/2" X (LENGTH AS REQ'D)	2	PG. 139
5	4KV DEADEND ASSEMBLY	1	166128

699.302
SUPERSEDES
632 (9-17-82)

SOG&E ELECTRIC STANDARDS

HEAVY DUTY SERVICE INSULATOR BRACKET

DATE 9-17-82
APPD

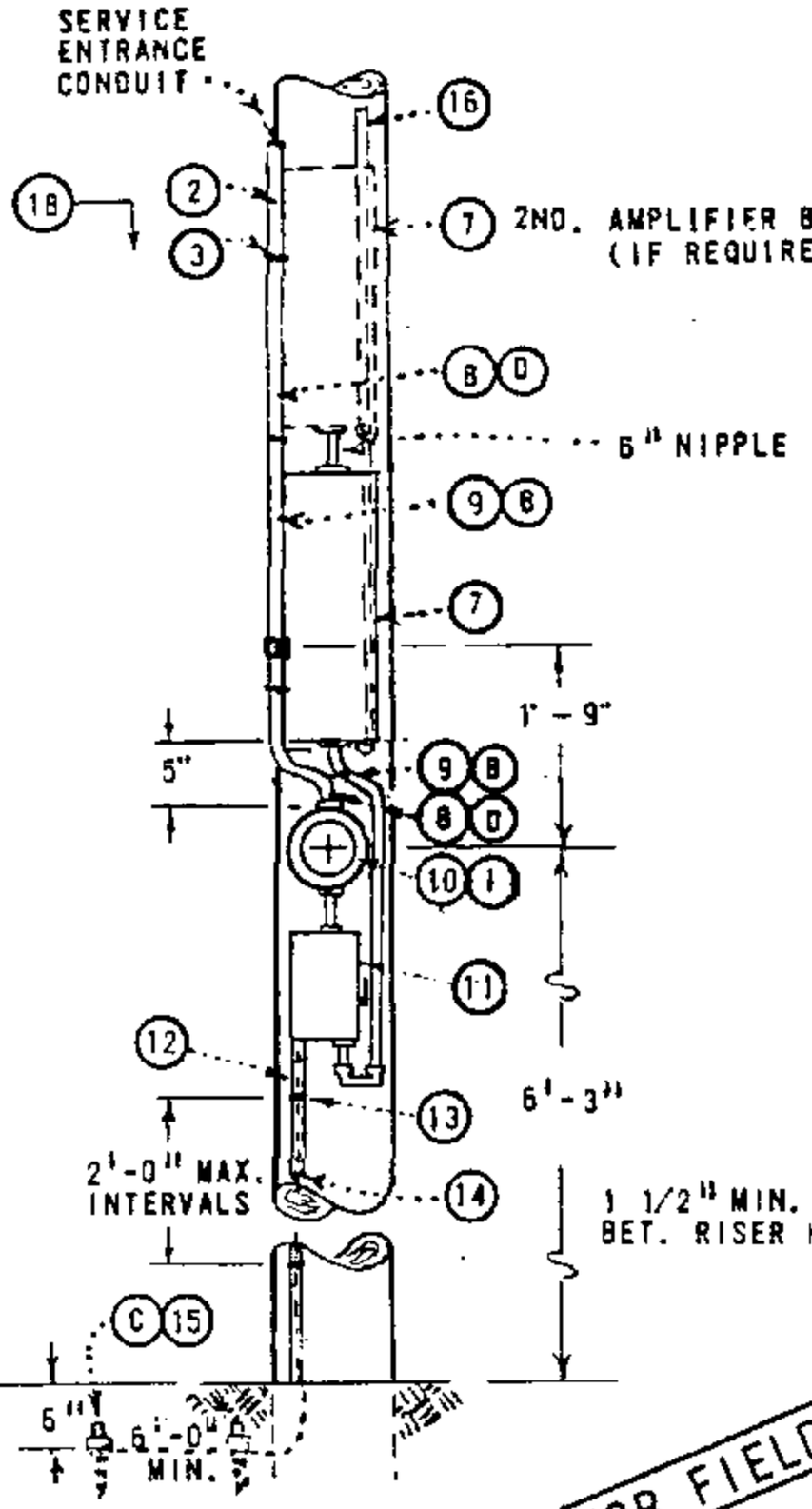

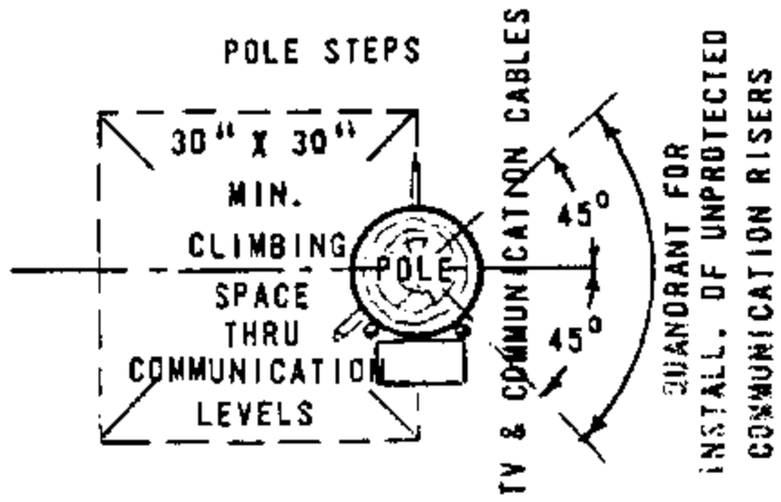

PLAN OF CLIMBING SPACE

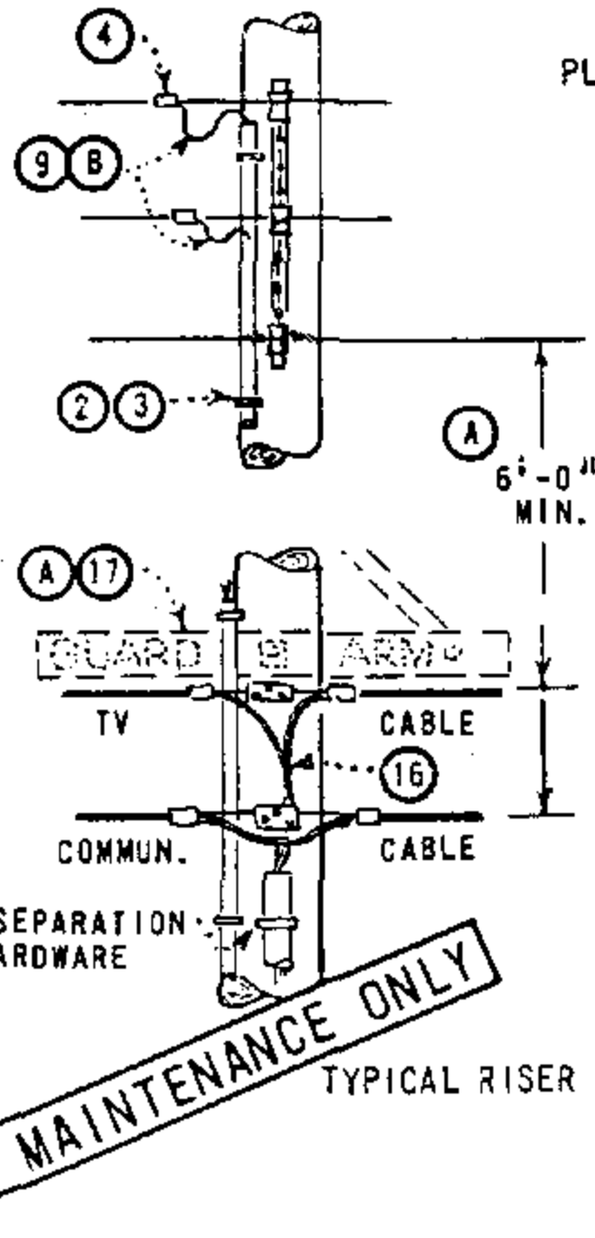

TYPICAL RISER TERMINATION



NOTES:

(A) SEPARATION BETWEEN SECONDARY LINE AND TV CABLE MAY BE REDUCED TO NOT LESS THAN 4'-0" WHERE A GUARD ARM HAS BEEN INSTALLED IMMEDIATELY ABOVE TV CABLE.

(B) CUSTOMER'S SERVICE ENTRANCE CONDUCTORS SHALL RUN CONTINUOUSLY WITHOUT SPLICES FROM METER SOCKET TERMINALS TO OVERHEAD SECONDARY LINE AND SHALL BE OF A LENGTH SUFFICIENT TO FORM LOOPS AT TOP OF THE RISER.

(C) USE TWO GROUND RODS WHERE AN IMPEDANCE OF LESS THAN 25 OHMS CANNOT BE OBTAINED WITH ONE GROUND ROD.

(D) IF PVC CONDUIT IS USED, ALL EQUIPMENT MOUNTED ON POLE BELOW 8' LEVEL TO BE EFFECTIVELY GROUNDED AND CONDUIT GROUND OMITTED.

E. THE EQUIPMENT ON LOADSIDE OF THE METER IS SUBJECT TO APPROVAL BY THE LOCAL INSPECTION AUTHORITIES.

F. ATTACH ONE SET OF LEADS FROM METER TO EXO SWITCH ONLY. LOWER AMPLIFIER MAY BE USED AS A JUNCTION BOX WHEN SECOND AMPLIFIER BOX IS REQUIRED.

G. THIS INSTALLATION SHALL BE LIMITED TO UTILITY POLES WHICH CONTAIN NO OTHER VERTICAL RUNS.

MATERIAL FURNISHED AND INSTALLED BY SDG&E

ITEM	DESCRIPTION	QUANTITY	STOCK NO./ STD. PAGE
1	METER	1	481840
2	CONDUIT 3/4" DIAM., PVC, TYPE II, SCH. 80 (E)	AS REQ'D.	251520
3	STRAPS, PIPE, GALV., 3/4", 2-10d. NAILS (E)	AS REQ'D.	697888
4	CONNECTORS, WIRE (SIZE AS REQ'D.)	2	783 OR 786
5	COUPLING, PLASTIC, (SIZE AS REQ'D)	1	

MATERIAL FURNISHED AND INSTALLED BY CUSTOMER

	7	TV AMPLIFIER EQUIPMENT(1 OR 2 BOX INSTALLATION)
(D)	8	G.I. RIGID OR PVC CONDUIT SCH. 80, WITH FITTINGS (TO 8'-0" LEVEL)
(B)	9	WIRE, 600V, #12, TYPE THW, (SERVICE CONDUCTORS)
	10	APPROVED METER SOCKET
	11	EXO SWITCH, COMPLETE WITH PROTECTION
	12	HARDWOOD MOULDING, 1"
	13	PIPE STRAPS, GALV., 1" & 2-10d. NAILS, GALV.
	14	WIRE, BARE STRANDED COPPER, #6
(C)	15	GROUND ROD AND CLAMP, 5/8" X 8'-0"
	16	CO-AXIAL TV CABLES
(A)	17	GUARD ARM, 3" X 4 1/4" X 4'-0" (IF REQ'D.) WITH BRACE
	18	POLE STEPS (AS REQ'D) PAGE 363

DATE 8-31-81
APPD

SAN DIEGO GAS & ELECTRIC CO OVERHEAD STANDARDS

CUSTOMER OWNED - 1 & 2 BOX TV AMPLIFIER & 120V. METER INSTALLATION

699.500
SUPERSEDES
652 (8-31-81)

TABLE OF CONTENTS

SCOPE: THIS PAGE SHOWS THE DIMENSIONS AND ULTIMATE VERTICAL LOADING STRENGTH OF THE ANGLE SUSPENSION CLAMP. THE CLAMP IS TO BE USED IN CONJUNCTION WITH THE CLEVIS OR SOCKET EYE CONNECTORS FOR SUPPORTING CONDUCTORS ON VERTICAL CONSTRUCTION. MAXIMUM ANGLE FOR CONSTRUCTION USING THIS CLAMP IS 30° .

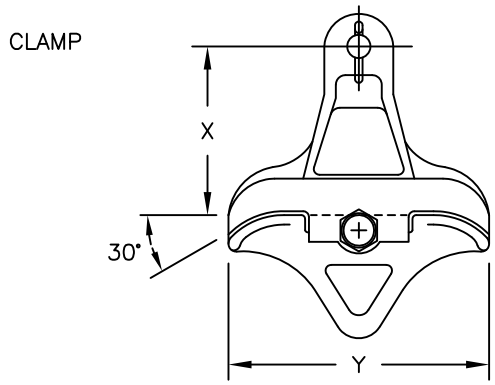

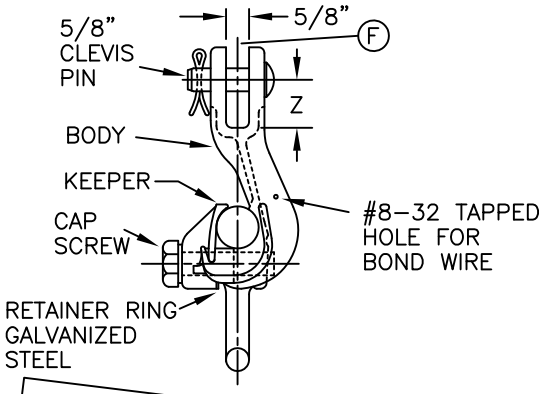

FOR FIELD MAINTENANCE ONLY

INSTALLATION:

(A) LINE GUARDS ARE TO BE USED WITH CLAMPS.

B. BONDING IS REQUIRED IN CONTAMINATION DISTRICT 1. (SEE STANDARD 287)

REFERENCE:

C. TABLE 1 IS TO BE USED TO DETERMINE PHYSICAL DIMENSIONS AND STRENGTHS OF SUSPENSION CLAMPS.

D. TABLE 2 SHOWS THE PROPER SIZING OF SUSPENSION CLAMPS FOR CONDUCTORS.

(F) SEE STANDARD 777 FOR USE OF CLEVIS AND SOCKET EYES.

TABLE 1

MANUFACTURER		CLAMP RANGE DIA. (INCHES)		DIMENSIONS (INCHES)			ULTIMATE STRENGTH VERT.LOAD	MATERIAL	STOCK NUMBER
CAT.NO.	NAME	MIN.	MAX.	X	Y	Z			
1301	LINDSEY	.160	.430	3–7/16	5–1/2	1–1/2	18,000	DUCTILE IRON	226662
1305	LINDSEY	.300	.650	4–1/4	6–1/2	1–1/2	18,000	DUCTILE IRON	226664
1308	LINDSEY	.50	.70	4–1/4	7	1–1/4	12,000	ALUM.	232004
1312	LINDSEY	.68	1.00	4–1/4	6–7/8	1	12,000	ALUM.	232008
1316	LINDSEY	1.00	1.313	5–3/8	6–7/8	1–1/4	12,000	ALUM.	232012
1320	LINDSEY	1.24	1.500	5–5/8	7	1–1/4	15,000	ALUM.	226660

TABLE 2

COPPER												COPPERWELD						STOCK NUMBER	ASSEMBLY UNITS
6	4	3 SOL.	2	1	1/0	2/0	3/0	4/0	250 KCM			8A	6	4					
X	X	X	X	X	X	X						X	X	X				226662	SCACS
							X	X	X									226664	SCACL

AWAC (A)			ACSR (A)									5005 (A)						STOCK NUMBER	ASSEMBLY UNITS
2	1/0		4	2	1/0	3/0	4/0	336 18/1	336 26/7	397	636	4	2	1/0	3/0	394.5			
X	X		X	X	X							X	X	X				232004	SC4 SC1/0
						X	X	X							X			232008	–
									X	X						X		232012	SC397
											X							226660	SC636

© 1998 - 2010 San Diego Gas & Electric Company. All rights reserved. Removal of this copyright notice without permission is not permitted under law.

Indicates Latest Revision | Completely Revised | New Page | Information Removed

	SDG&E ELECTRIC STANDARDS	REVISION
776	ANGLE SUSPENSION CLAMPS	DATE 1–1–94 APPD PA 1/99

TABLE OF CONTENTS

TABLE OF CONTENTS

COPPER WIRE (FOR FIELD MAINTENANCE ONLY)

SIZE OF WIRE	AWG	6	1	–	–
	CIRC MILS (CU EQUIV)	26250	83690	250K	400K
STOCK NUMBER		S813536	S812352	S813696	S812416
NUMBER OF STRANDS		3	7	19	19
DIAMETER (INCHES)		.201	.328	.574	.726
WEIGHT (LBS/1000 FT)		82.5	258.4	771.9	1235
ULTIMATE TENSILE STRENGTH (LBS)		1204	3154	9366	13850
AMPACITY (AMPERES) AT 75° C		130	270	540	730
RESISTANCE AT 75° C OHMS/1000 FT		.49	.15	.052	.033

FOR FIELD MAINTENANCE ONLY

COPPERWELD WIRE (FOR FIELD MAINTENANCE ONLY)

SIZE OF WIRE	AWG	6	4			–	–	–
	CIRC MILS (CU EQUIV)	26250	47140			47124	92667	370100
STOCK NUMBER		S813120	S813088	S813152	S813216	S813280	S813312	S813184
CW. CONDUCTOR TYPE NO.		6A	4A	4D	4N	3/8 (7 #8)	9/16 (7 #5)	.810E
NUMBER OF STRANDS CW/CU		1/2	1/2	2/1	5/2	40% 7-HS	40% 7-HS	7/12
DIAMETER (INCHES)		.230	.290	.348	.328	.385	.546	.810
WEIGHT (LBS/1000 FT)		101.6	161.5	225.5	240.0	323.9	649.4	1484
ULTIMATE TENSILE STRENGTH (LBS)		2585	3938	7340	8460	10460	18510	34290
AMPACITY (AMPERES) AT 75° C		140	180	190	180	200	305	660
RESISTANCE AT 75° C OHMS/1000 FT		.50	.32	.32	.32	.28	.14	.035

© 1998 - 2011 San Diego Gas & Electric Company. All rights reserved. Removal of this copyright notice without permission is not permitted under law.

799.101 SUPERSEDES 715 (5-6-83)	SDG&E ELECTRIC STANDARDS	DATE 3-23-2011 APPD PJA/MJC
	COPPER AND COPPERWELD WIRE TABLE	

SIZE OF WIRE						
	A.W.G.	4	2	1/0	3/0	4/0
	CIRCULAR MILS.	41740	66370	105500	167800	211600
STOCK NUMBER		815456	815520	815488	815552	–
NUMBER OF STRANDS		3	7	7	7	7
CONDUCTOR AREA SQUARE INCHES		.0328	.0521	.0829	.1318	.1662
NOMINAL O.D. INCHES		.566	.604	.680	.766	.839
APPROX. WEIGHT LBS. PER M FT.		215	300	440	650	800
ULTIMATE TENSILE STRENGTH – LBS.		1564	2517	3953	6204	7772
CAPACITY AMPERES AT 75° C		125	166	222	294	343
RESISTANCE AT 75° C OHMS M FEET		.32	.20	.12	.079	.062
ASSEMBLY UNITS		TR4	TR2	TR1/0	TR3/0	–

FOR FIELD MAINTENANCE ONLY

TABLE OF CONTENTS

DATE 1–1–96 APPD PA / RDG	SDG&E ELECTRIC STANDARDS COPPER TREE WIRE	799.102 SUPERSEDES 717 (1–1–96)

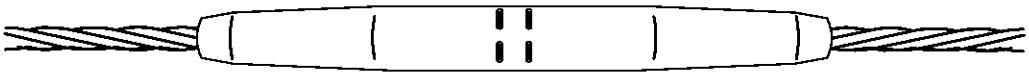

AUTOMATIC COPPER SLEEVE

NOTES:

- SLEEVES SHALL NOT BE INSTALLED IN GRADE A CROSSING SPANS OR IN TRANSMISSION CONSTRUCTION.
- AUTOMATIC SLEEVES DEPEND ON LINE TENSION FOR THEIR OPERATION. THEY SHALL NOT BE USED IN TAPS, JUMPERS, OR REDUCED TENSION.

AUTOMATIC SLEEVES FOR COPPER CONDUCTORS		
WIRE		STOCK NUMBER
SIZE	STRAND	
6	SOLID	S653318
6	3	S653320
4	SOLID	S653320

AUTOMATIC SLEEVES FOR COPPERWELD CONDUCTORS		
WIRE		STOCK NUMBER
SIZE	STRAND	
8A	1/2	S653320
6A	1/2	S653342

FOR FIELD MAINTENANCE ONLY

© 1998 - 2014 San Diego Gas & Electric Company. All rights reserved. Removal of this copyright notice without permission is not permitted under law.

DATE 9–16–2014 APPD IL / DW	SDG&E ELECTRIC STANDARDS AUTOMATIC SLEEVES FOR COPPER AND COPPERWELD CONDUCTORS	799.103 SUPERSEDES 720.8 (2–11–2014)

TABLE OF CONTENTS

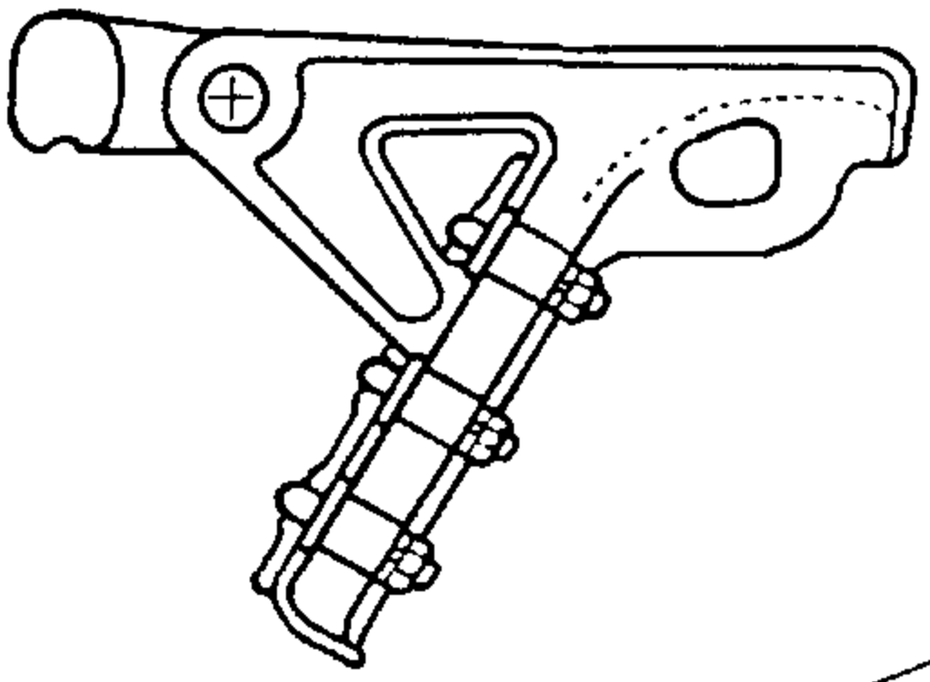

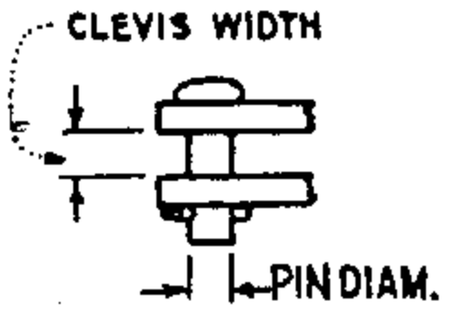

THIS PAGE FOR FIELD MAINTENANCE ONLY

RECOMMENDED U-BOLT NUT TORQUE

1/2" = 50 FT. LBS.

9/16"= 67 FT. LBS.

5/8" = 83 FT. LBS.

NOTES:

A. REFER TO PAGE 777 FOR CLAMP CONNECTORS.

B. HAND TIGHTEN U BOLT NUTS AND THEN ALTERNATELY APPLY WRENCH UNTIL DESIRED TORQUE IS ACHIEVED.

Ⓒ NO LONGER PURCHASED, BUT WILL BE SALVAGED.

Ⓓ ITEM 231488 IS BRONZE

COPPER WIRE SIZE AND DIAMETER (INCHES)									CLAMP RANGE		CONNECTION	CLEVIS WIDTH	PIN DIAM.	STOCK NO OR CONST STD
4 .254	2 .320	1/0 .368	4/0 .527	250MCM .574	400MCM .726	500MCM .813	750MCM .997	1000MCM 1.151	MIN.	MAX.				
X	X	X	X	-	-	-	-	-	.20	.55	SOCKET	11/16"	5/8"	231264
-	-	X	X	X	-	-	-	-	.30	.68	SOCKET	13/16"	5/8"	231328
-	-	-	X	X	X	-	-	-	.48	.84	SOCKET	7/8"	5/8"	231392 Ⓒ
-	-	-	X	X	X	X	-	-	.50	.96	SOCKET	1"	5/8"	231456 Ⓒ
-	-	-	-	-	X	X	X	X	.71	1.30	SOCKET	1 7/16"	3/4"	231488 Ⓓ
-	X	X	X	X	-	-	-	-	.30	.68	NONE	13/16"	5/8"	231136
	-	-	X	X	X	X	-	-	.48	.84	NONE	7/8"	5/8"	231200 Ⓒ

DATE 1-1-88

APPD

SDG&E ELECTRIC STANDARDS

GALVANIZED DEAD END STRAIN CLAMPS FOR COPPER CONDUCTORS

799.401

SUPERSEDES 744 (8-31-81)

SCOPE: THIS STANDARD SHOWS STRAIGHT STRAIN CLAMPS USED TO ATTACH ACSR AND 5005 ALUMINUM ALLOY CONDUCTORS TO DEAD END INSULATORS.

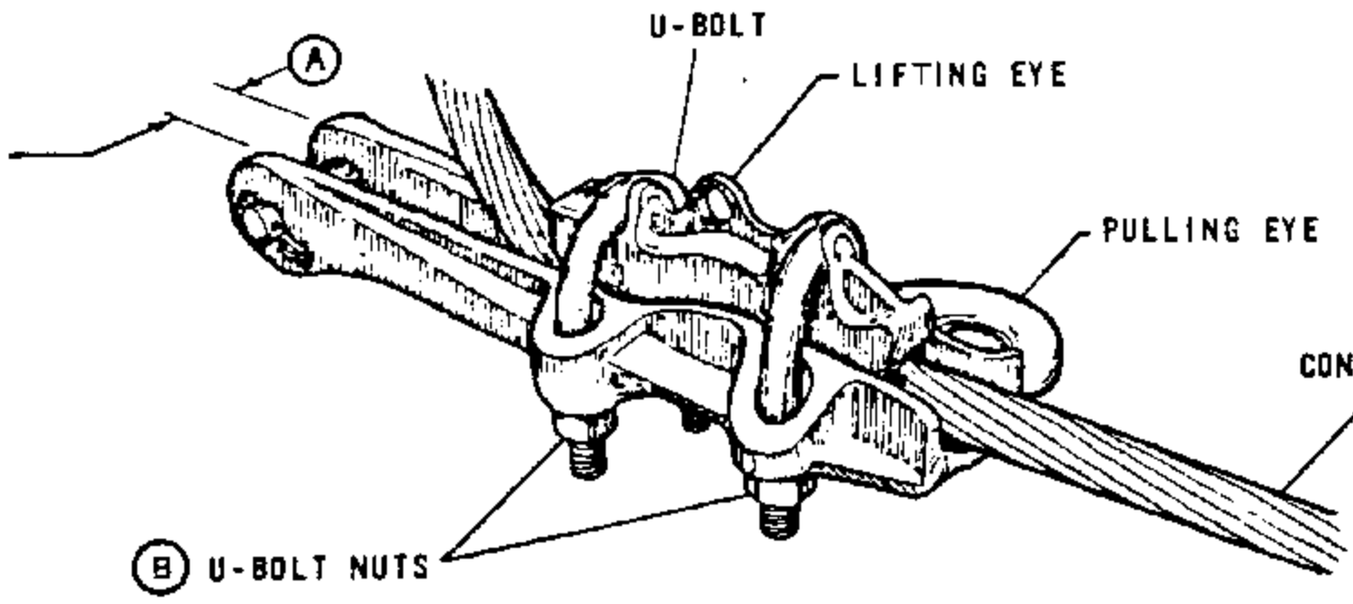

FIG. 1

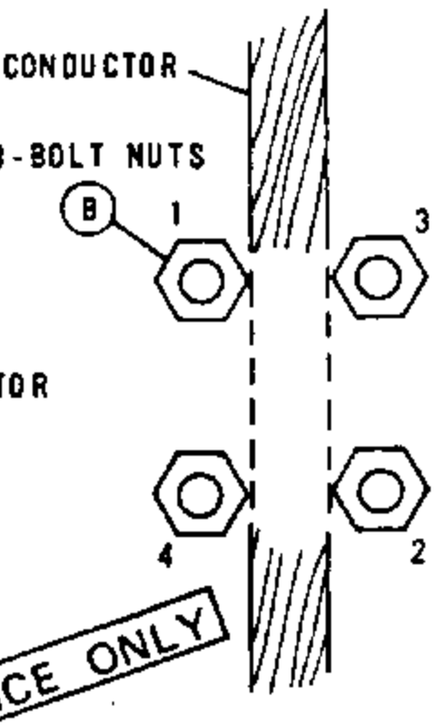

TORQUING SEQUENCE
FIG. 2

FOR FIELD MAINTENANCE ONLY

NOTES:

- DO NOT USE STRAIGHT STRAIN CLAMP ON AWAC CONDUCTORS.
- THIS CLAMP MAY BE USED IN ALL LOADING DISTRICTS.

BILL OF MATERIAL:

WIRE SIZE								CLAMP RANGE (INCHES)		CLAMP DATA		MFG	CATALOG NUMBER	STOCK NO OR CONSTR STD
ACSR OR 5005 (AWG)			ACSR				5005							
2 6/1	1/0 6/1	3/0 6/1	336.4 KCMIL 18/1	336.4 KCMIL 26/7	636 KCMIL 24/7	1033.5 KCMIL 45/7	394.5 KCMIL 19	MIN	MAX	TORQUE (FT-LBS)	CLEVIS WIDTH (A)			
X	X	X	-	-	-	-	-	.184	.563	35	5/8	ALCOA	E221.2	230432 (E)
X	X	X	X	X	-	-	X	.316	.814	40	13/16		E222.3	230512
-	-	-	X	X	X	-	X	.522	1.153	40	3/4		E223.4	- (C)
-	-	-	-	-	-	X	-	1.022	1.454	40	3/4		225	- (C)
X	X	-	-	-	-	-	-	.19	.47	25	11/16	BETHEA	ASD-2-N	230432 (E)
-	-	X	X	X	-	-	X	.46	.75	45	3/4		ASD-37-N	230464 (E)
X	X	-	-	-	-	-	-	.191	.447	20	3/4	FARGO	GD-971A	230432 (E)
X	X	X	X	-	-	-	X	.25	.724	45	3/4		GD-972A	230512
X	-	-	-	-	-	-	-	.15	.37	50	11/16	OHIO BRASS	87650	- (C)
X	X	X	-	-	-	-	-	.30	.60	50	3/4		91560	- (C)
-	-	X	X	X	-	-	X	.46	.88	50	7/8		91570	230464 (E)
-	-	-	-	-	X	X	-	.86	1.30	40	1-1/16	ANDERSON	ADE-130-N	230496

INSTALLATION:

(A) SEE CLAMP DATA COLUMN FOR CLEVIS WIDTH.
(B) HAND TIGHTEN U-BOLT NUTS AND THEN TORQUE BOLTS AS SHOWN IN FIG. 2 TO THE VALUES IN CLAMP DATA COLUMN.
(C) SPECIAL ORDER.
(E) EXEMPT MATERIAL

799.402
SUPERCEDES
741 (1986)

SDG&E ELECTRIC STANDARDS

12KV ALUMINUM STRAIGHT STRAIN CLAMP FOR ACSR & 5005 ALUMINUM ALLOY CONDUCTORS

DATE 1-1-86
APPD AK/RDS

TABLE OF CONTENTS

TABLE OF CONTENTS

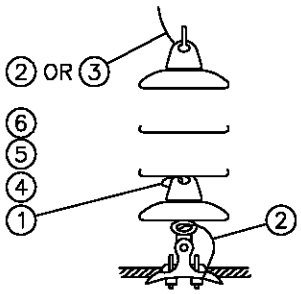

SUSPENSION

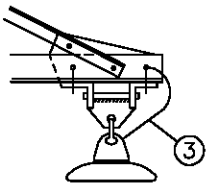

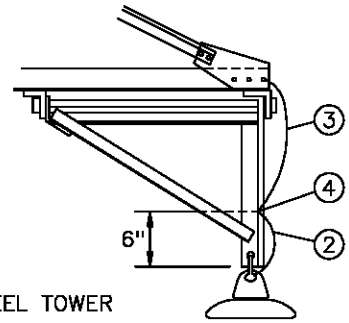

STEEL TOWER

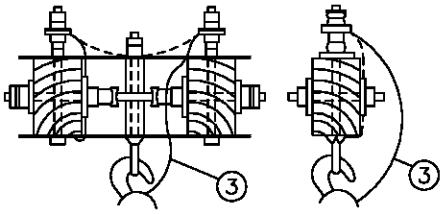

DOUBLE & SINGLE ARM

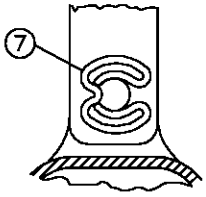

SIDE VIEW

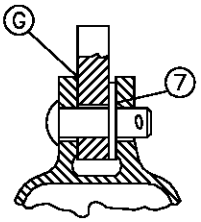

LOCATION BETWEEN EXTENSION LINK OR INSULATOR EYE AND OPEN CLEVIS

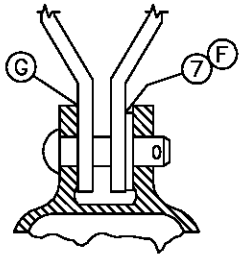

LOCATION BETWEEN CLOSED CLEVIS AND INSULATOR CLEVIS

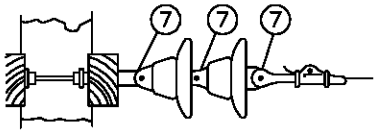

12KV DEAD END USING RIV CLIPS
SEE NOTE "B2b"

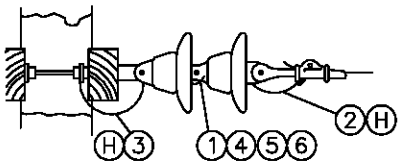

RIV CLIP INFORMATION – SEE NOTE "B2b"

12KV DEAD END USING BOND WIRES
SEE NOTE "B1 AND B2a"

NOTES:

A. USE BONDED INSULATORS ON 138 AND 69KV WHERE: 1) MAXIMUM GUYING TENSION PER CONDUCTOR IS BELOW 1000 POUNDS, OR 2) THROUGH RESIDENTIAL, COMMERCIAL, AND INDUSTRIAL AREAS. ALSO, WHERE FUTURE DEVELOPMENT OF SIMILAR AREAS ADJACENT TO TRANSMISSION LINES ARE ANTICIPATED.

(B) USE THE FOLLOWING TO DETERMINE WHEN TO USE BONDED OR UNBONDED INSULATORS, AND WHEN RIV CLIPS ARE TO BE ADDED TO UNBONDED INSULATORS ON 12KV AND 12.47KV SYSTEMS IN CONTAMINATION DISTRICTS DESCRIBED ON PAGE 287.

1) SLACK SPANS (SPANS INSTALLED AT MORE THAN NORMAL SAG): IN ALL CONTAMINATION DISTRICTS: USE BONDED INSULATORS.

2) FULL TENSION INSTALLATIONS WHERE MAXIMUM GUYING TENSION PER CONDUCTOR IS 1000 POUNDS OR LESS:
   a) CONTAMINATION DISTRICT 1, USE BONDED INSULATORS.
   b) CONTAMINATION DISTRICTS 2 AND 3, USE UNBONDED INSULATORS WITH RIV CLIPS

3) FULL TENSION INSTALLATIONS WHERE MAXIMUM GUYING TENSION PER CONDUCTOR IS OVER 1000 POUNDS: ALL CONTAMINATION DISTRICTS: USE UNBONDED INSULATORS.

C. INSULATORS BONDED PER SDG&E SPECIFICATION 138 INCLUDE ITEMS 1 THROUGH 6 LISTED BELOW.

D. SEE STANDARDS PAGE 750.4 FOR SUSPENSION INSULATOR INFORMATION.

(F) INSTALL RIV CLIP BETWEEN CLEVIS AND INSULATOR CAP AS SHOWN.

(G) ADD SECOND RIV CLIP IF ONLY ONE CLIP DOES NOT MAKE TIGHT CONNECTION BETWEEN HARDWARE. NEVER USE MORE THAN 2 RIV CLIPS AT ONE CONNECTION, OR, ON ONE PIN.

(H) ATTACH BOND WIRES LEAVING SHORT LOOPS AS SHOWN. CUT OFF EXCESS BOND WIRE.

BILL OF MATERIAL:

FOR FIELD MAINTENANCE ONLY

ITEM	DESCRIPTION	QUANTITY	STOCK NO. OR CONSTR STDS	ASSEMBLY UNITS
1	WIRE ROPE, 3" STAINLESS STEEL, MACWYTE, 1/16" OD, 7x7 PREFORMED, AIFI TYPE 304	AS REQ'D	606720	12BOND
2	WIRE ROPE, 12" STAINLESS STEEL, MACWYTE, 1/16" OD, 7x7 PREFORMED, AIFI TYPE 304	AS REQ'D		
3	WIRE ROPE, 24" STAINLESS STEEL, MACWYTE, 1/16" OD, 7x7 PREFORMED, AIFI TYPE 304	AS REQ'D		
4	SCREW, 8–32, STAINLESS STEEL, PHILLIPS HEAD	AS REQ'D	622464	–
5	TERMINAL, AMP 322334, #8 STUD, STAINLESS STEEL OR NICKEL	AS REQ'D	732064	–
6	LOCKWASHER, EXTERNAL TOOTH, #8 STUD, STAINLESS STEEL	AS REQ'D	796352	–
7	CLIP, INSULATOR NON STATIC (RIV)	AS REQ'D	237648	RIVCLP

DATE 1–1–94 APPD PA / RDG	SDG&E ELECTRIC STANDARDS PORCELAIN SUSPENSION INSULATOR BONDING	799.501 SUPERSEDES 756 (1–1–98)

NOTES: (A) TO CHOOSE THE PROPER GROOVE CLAMP, LOCATE THE TWO WIRE SIZES ON THE CHART, DRAW A HORIZONTAL LINE FROM THE LARGER CONDUCTOR SIZE AND A VERTICAL LINE FROM THE SMALLER SO THAT THEY INTERSECT. THE AREA CONTAINING THE INTERSECTION INDICATES THE CORRECT STOCK NUMBER.

EXAMPLE: FOR CONDUCTOR SIZES 3/0 ACSR AND #2 ACSR, THE CORRECT GROOVE CLAMP STOCK NUMBER IS 277968.

B. THE ADJACENT TABLE CAN BE USED TO DETERMINE THE SPECIFIC MANUFACTURER'S CATALOG NUMBER FOUND UNDER A STOCK NUMBER.

C. BE SURE TO CLEAN CONDUCTOR WHICH WILL BE UNDER CLAMP, CLEAN CONDUCTOR GROOVES OF CLAMP IF NECESSARY, AND FILL THE GROOVES WITH INHIBITOR (247200) BEFORE INSTALLING THE CLAMP.

D. FOR USE WHEN MAKING AL. TO AL. AND AL. TO CU. PERMANENT CONNECTIONS AND WHERE CONNECTIONS MAY BE OPENED OCCASIONALLY FOR OPERATING CONVENIENCE.

F. WHEN MAKING AL. TO CU. CONNECTIONS, LOCATE THE CU. AT THE SAME LEVEL OR BELOW THE AL. CONDUCTOR.

CONDUCTOR DIA. IN.	AWG OR KCM	DESCRIPTION
.162	6	SOLID
.184	6	7 STR.
.198	6	ACSR 6/1
.198	6	5005 7W
.199	8A	CUWLD 3 STR.
.202	6	3 STR.
.204	4	SOLID
.229	3	SOLID
.230	6A	CUWLD 3 STR.
.232	4	7 STR.
.250	4	ACSR 6/1
.250	4	5005 7W
.254	4	3 STR.
.258	2	SOLID
.276	6D	CUWLD 3 STR.
.289	1	SOLID
.290	4A	CUWLD 3 STR.
.292	2	7 STR.
.316	2	ACSR 6/1
.316	2	5005 7W
.320	2	3 STR.
.324	1/0	SOLID
.325	2	ACSR 7/1
.328	4N	CUWLD 7 STR.
.330	2	AWAC 5/2
.338	1/0	7 STR. COMP.
.348	4D	CUWLD 3 STR.
.360	1	3 STR.
.368	1/0	7 STR.
.373	1/0	19 STR.
.386	2	AWAC 3/4
.398	1/0	ACSR 6/1
.398	1/0	5005 7W
.409	3/0	SOLID
.414	2/0	7 STR.
.426	3/0	7 STR. COMP.
.447	1/0	AWAC 4/3
.460	4/0	SOLID
.464	3/0	7 STR.
.470	3/0	19 STR.
.502	3/0	ACSR 6/1
.502	3/0	5005 7W
.522	4/0	7 STR.
.528	4/0	19 STR.
.533	4/0	37 STR.
.563	4/0	ACSR 6/1
.575	250	19-37 STR.
.629	300	19-37 STR.
.666	336	19 STR.
.680	350	19-37 STR.
.684	336	ACSR 18/1
.721	336	ACSR 26/7
.721	394	5005 19W
.727	400	19-37 STR.
.743	397	ACSR 18/1
.783	397	ACSR 26/7
.811	500	19 STR.
.977	636	ACSR 24/7
.998	750	37-61 STR.
1.152	1000	61-91 STR.

EXAMPLE (A)

227936

ASSEMBLY UNITS
PG6C
PG4C
PG2A
PG2C
PG1/0A
PG1/0C

227968

ASSEMBLY UNITS
PG3/0A
PG4/0C

NO CONNECTOR AVAILABLE

228000

ASSEMBLY UNITS
PG336
PG394
PG400

228032

ASSEMBLY UNITS
PG500–

228064 (G)

ASSEMBLY UNITS STK No. 228064
PG397
PG500
PG636
PG750
PG1000

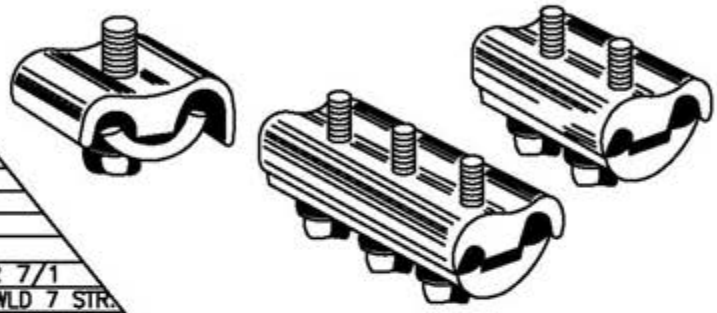

STOCK NUMBER	BOLTS NO.	BOLTS SIZE IN.	BOLTS TORQUE LB.-FT	ALCOA CATALOG NUMBER
227936	1	3/8	13	396.6
227968	2	1/2	25	482.1
228000	3	1/2	25	482.2
228032	2	5/8	40	483.2
228064	3	5/8	40	483.3

© 1998 - 2005 San Diego Gas & Electric Company. All rights reserved. Removal of this copyright notice without permission is not permitted under law.

	Indicates Latest Revision		Completely Revised		New Page		Information Removed

REVISION
DATE 1-1-94
APPD PSA 1/20/94

SDG&E ELECTRIC STANDARDS

ALUMINUM PARALLEL GROOVE CLAMPS

799.801
SUPERSEDES
785 (1-20-06)

TABLE OF CONTENTS

TABLE OF CONTENTS

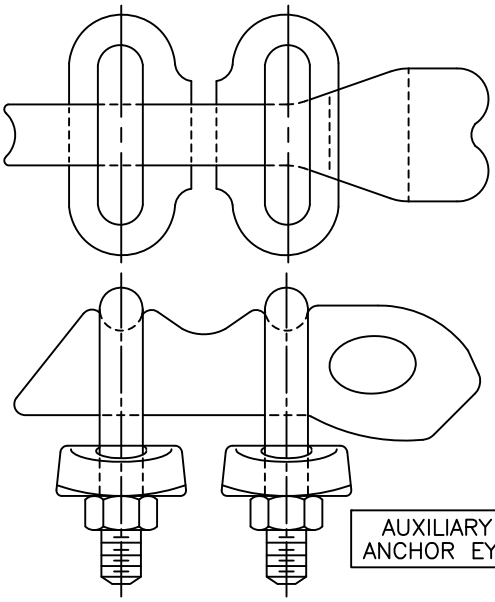

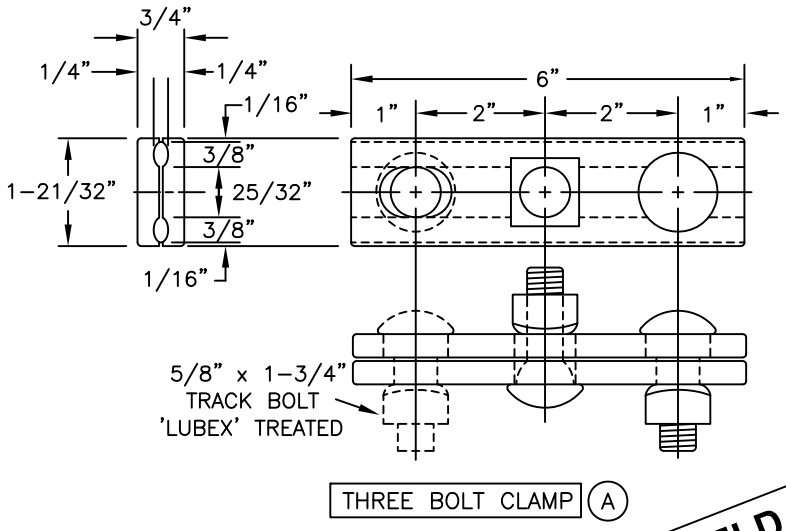

THREE BOLT CLAMP (A)

FOR FIELD MAINTENANCE ONLY

INSTALLATION:

(A) NO LONGER PURCHASED. USE FACTORY GUY GRIP WHEN PRACTICAL. SALVAGE THREE BOLT CLAMP AND USE ONLY WHEN A GUY GRIP CANNOT BE USED.

DESCRIPTION	MOUNTING BOLT SIZE	STOCK NUMBER	ASSEMBLY UNITS
CLAMP, THREE BOLT	–	227296	–
EYE, AUX ANCHOR	–	337536	AUXEYE
THIMBLE, 1/2", OPEN	–	736600	OPTHMB

© 1998 - 2010 San Diego Gas & Electric Company. All rights reserved. Removal of this copyright notice without permission is not permitted under law.

SCOPE: THIS STANDARD LISTS TYPES AND SIZES OF GUY STRAND WIRE USED IN DISTRIBUTION CONSTRUCTION.

ALUMOWELD GUY STRAND (A)				
TYPE DESIGNATION	4M	6M	10M	16M
STOCK NUMBER	810944	810976	811008	811040
ASSEMBLY UNITS	4M	6M	10M	16M
NOMINAL DIAMETER (INCHES)	.220	.242	.306	.386
NUMBER OF STRANDS	3	7	7	7
STRAND DIAMETER (INCHES)	.102	.081	.102	.128
POUNDS PER 100 FEET	7	10.4	16.5	26.2
FEET PER POUND	14.3	9.6	6.1	3.8
WORKING STRENGTH (LBS) (C)	2000	3000	5000	8000 (B)

INSTALLATION:

(A) ALUMOWELD GUY STRAND WIRE IS PREFERRED IN CONTAMINATION DISTRICT 1, BUT IS LEFT TO THE DISCRETION OF THE DISTRICT.

(B) WHEN STRAIN INSULATORS ARE USED TO SECTIONALIZE GUY WIRE, THE LOADING MUST NOT EXCEED THE WORKING STRENGTH OF THE INSULATOR, 6,000 LBS FOR 54–2, 10,000 LBS FOR THE 54–3.

(C) A SAFETY FACTOR OF TWO IS INCLUDED IN THE WORKING STRENGTH VALUE.

REFERENCE:

F. CONTAMINATION DISTRICTS ARE DEFINED ON STANDARDS PAGE 287.

FOR FIELD MAINTENANCE ONLY

TABLE OF CONTENTS

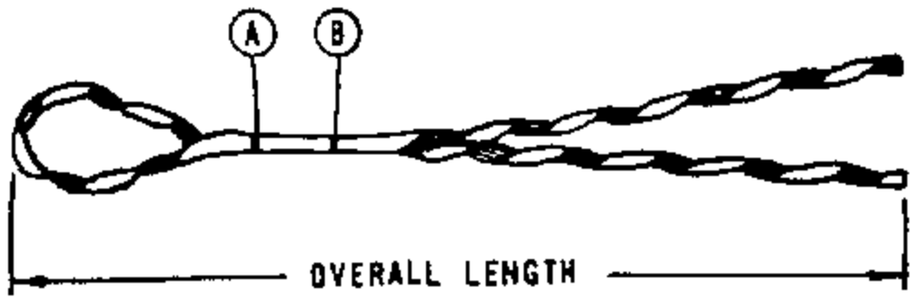

COPPERWELD (M SERIES)

4M	3 WIRE	.209"	WHITE	CDE-8106	18	—	—	(E) 393056
6M	7 WIRE	.237"	YELLOW	CDE-3103	21	—	—	(E) 393088
10M	7 WIRE	.303"	RED	CDE-3109	25	—	—	(E) 392992
16M	7 WIRE	.386"	WHITE	CDE-3115	31	—	—	(E) 393024
COPPERWELD - COPPER & COPPERWELD								
#8C	1CW/2CU	.179"	RED	CDE-8102	17	—	—	(E) 393120
#6A	1CW/2CU	.230"	YELLOW	CDE-3103	21	—	—	(E) 393088
#6C	1CW/2CU	.225"	YELLOW	CDE-3103	21	—	—	(E) 393088
#4A	1CW/2CU	.290"	RED	CDE-3109	25	—	—	(E) 392992
#2F	1CW/6CU	.308"	RED	CDE-3109	25	—	—	(E) 392992
—	—	—	—	—	—	—	—	—

FOR FIELD MAINTENANCE ONLY

TABLE OF CONTENTS

INSTALLATION:

(A) COLORED MARK INDICATES CROSSOVER POINT FOR SMALL INSULATORS OR THIMBLEYES.

(B) COLORED MARK INDICATES CROSSOVER POINT FOR LARGE INSULATORS.

(E) EXEMPT MATERIAL

DATE 9-17-82
APPD

SDG&E ELECTRIC STANDARDS

COPPER & COPPERWELD GUY GRIPS

999.602
SUPERSEDES
965 (9-17-82)

SCOPE: THIS STANDARD LISTS TYPES AND SIZES OF GUY GRIPS USED TO ATTACH GUY WIRE TO SUPPORT EQUIPMENT.

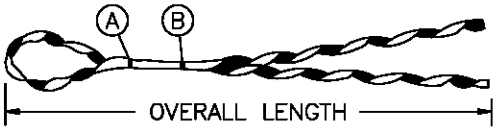

FORMED GUY GRIPS									
ALUMOWELD STRAND									
GUY WIRE STRAND DATA		MEAN DIAM	COLOR CODE	MANUFACTURER				STOCK NO. OR CONSTR STD	ASSEMBLY UNITS
				PREFORMED		CHANCE			
SIZE	STRANDING			CAT. NO.	LENGTH(IN)	CAT. NO.	LENGTH(IN)		
4M	3 WIRE	.220"	GREEN	AWDE-4108	21	4M-AWSBG	18	392928	–
6M	7 WIRE	.242"	YELLOW	AWDE-4110	22	6M-AWSBG	21	392960	GR6M
10M	7 WIRE	.306"	BLACK	AWDE-4116	26	10M-AWSBG	25	392864	GR10M
16M	7 WIRE	.386"	ORANGE	AWDE-4122	32	16M-AWSBG	30 1/2	392896	GR16M

INSTALLATION:

(A) COLORED MARK INDICATES CROSSOVER POINT FOR SMALL INSULATORS OR THIMBLEYES.

(B) COLORED MARK INDICATES CROSSOVER POINT FOR LARGE INSULATORS.

FOR FIELD MAINTENANCE ONLY

TABLE OF CONTENTS

999.603	SDG&E ELECTRIC STANDARDS ALUMOWELD GUY GRIPS	DATE 1-1-98 APPD PSA/CMK

SCOPE: THIS STANDARD LISTS TYPES AND SIZES OF GUY SPLICES USED TO SPLICE GUY WIRE.

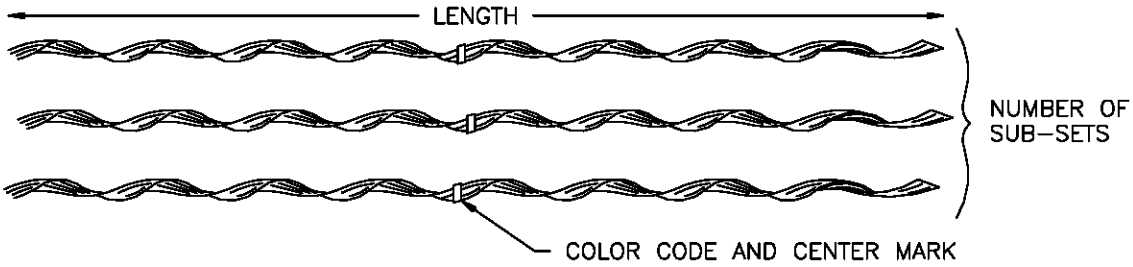

NOTES:

A. INDIVIDUAL RODS ARE ASSEMBLED INTO SUBSETS AND GRITTED INTO GROUPS OF TWO, THREE, OR FOUR.

B. CENTER MARK ESTABLISHES ALIGNMENT OF RODS DURING APPLICATION.

C. COLOR CODE AND LENGTH ASSIST IN IDENTIFICATION OF STRAND SIZE.

FORMED SPLICES											
ALUMOWELD STRAND											
GUY WIRE STRAND DATA			COLOR CODE	NO. SUBSETS		MANUFACTURER				STOCK NO. OR CONSTR STD	ASSEMBLY UNITS
						PREFORMED		FANNER			
SIZE	STRANDING	MEAN DIAM.		PLP	FAN	CAT. NO.	LENGTH(IN)	CAT. NO.	LENGTH(IN)		
4M	3 WIRE	.220"	GREEN	2	2	AWLS–4108	24	4MAWFS	23	667488	–
6M	7 WIRE	.242"	YELLOW	2	2	AWLS–4110	25	6MAWFS	24	667520	SP6M
10M	7 WIRE	.306"	BLACK	3	2	AWLS–4116	30	10MAWFS	29	667424	SP10M
16M	7 WIRE	.386"	ORANGE	3	3	AWLS–4122	38	16MAWFS	38	667456	SP16M

FOR FIELD MAINTENANCE ONLY

TABLE OF CONTENTS

DATE 1–1–98 APPD PSA / CMK	SDG&E ELECTRIC STANDARDS ALUMOWELD GUY SPLICES	999.604

PAGE	SUBJECT
1199.201-.207	PREFIXES
1199.208-.209	2.4KV OR 4KV, SINGLE PHASE TRANSFORMER INSTALLATION
1199.301-.306	2.4KV OR 4KV, SINGLE PHASE TRANSFORMER INSTALLATION, CONTINUED
1199.401-.405	7.2KV OR 12KV, SINGLE TRANSFORMER INSTALLATION
1199.501-.504	4KV OPEN WYE OR 2.4KV OPEN DELTA TRANSFORMER INSTALLATION
1199.601-.603	12KV OPEN DELTA TRANSFORMER INSTALLATION
1199.701	4KV, THREE PHASE INSTALLATION, SINGLE PHASE TRANSFORMERS
1199.704-.707	7.2 & 12KV THREE-PHASE TRANSFORMER CLUSTER MOUNT INSTALLATION - ALLEY ARM CONSTRUCTION
1199.801-.806	12KV, THREE PHASE INSTALLATION, SINGLE PHASE TRANSFORMERS
1199.901-.902	GROUNDING BANK INSTALLATION

MAIN TABLE OF CONTENTS

© 1998 - 2019 San Diego Gas & Electric Company. All rights reserved. Removal of this copyright notice without permission is not permitted under law.

REV	CHANGE	BY	DSGN	APPV	DATE	REV	CHANGE	BY	DSGN	APPV	DATE
C						F					
B	COMPLETELY REVISED	JK	JS	CZH	10/15/2019	E					
A	ORIGINAL ISSUE	JK	JS	CZH	6/13/2019	D					

Indicates Latest Revision | X | Completely Revised | | New Page | | Information Removed

SDG&E ELECTRIC OVERHEAD FIELD MAINTENANCE ONLY STANDARDS

LEGACY OVERHEAD FIELD MAINTENANCE
TABLE OF CONTENTS
TRANSFORMERS

OH LEGACY
OHL1101.1

PREFIX	VOLTAGE		DESCRIPTION AND APPLICATION	KVA	(D) (F) TAPS	STOCK NUMBER
	PRIMARY	SECONDARY				
A	240	120	1Ø SECONDARY	1	-	- (A)
				3	-	750368 (G)
BB	240/120	240/120	AUTO TRANSF'MR 5% BUCK OR BOOST, DRY TYPE	25	-	750400 (G)
				37.5	-	- (A)
X	480	120/240	1Ø SECONDARY	2	-	757792 (A)
				3	(H)	757824 (A)
				5	(H)	757856 (A)
				10	(H)	757760 (A)
W	2400/4160Y	120/240	1Ø SECONDARY 3Ø SECONDARY (K)	1.5	-	- (A)
				2	-	- (A)
				3	-	755296 (A)
				3	(J)	755328 (A)
				5	-	755424 (A)
				5	(J)	755456 (A)
				7.5	-	755520 (A)
				7.5	(J)	755552 (A)
				10	(J)	754912 (A)
				15	(B) & (J)	755040 (A)
				20	-	755136 (A)
				25	(J)	755200 (A)
				30	-	- (A)
				37.5	-	755360 (A)
				37.5	(J)	755392 (A)
				40	-	- (A)
				50	(B) & (J)	755488 (A)
				75	(B) & (J)	755616 (A)
				100	(J)	754976 (A)
				150	-	- (A)
				167	(J)	755104 (A)
				200	-	- (A)
				250	(J)	775264 (A)
WE	2400/4160Y	120/240	INTERNALLY FUSED, SECONDARY BREAKER, 1Ø SECONDARY 3Ø SECONDARY (K)	10	-	755696 (A)
				15	-	755712 (A)
				25	-	755728 (A)
				50	-	755776 (A)
				50	(J)	755808 (A)
WJ	2400/4160Y	120/240	INTERNALLY FUSED, SECONDARY BREAKER, LIGHTNING ARRESTER, 1Ø SECONDARY 3Ø SECONDARY (K)	1.5	-	756800 (A)
				3	-	756928 (A)
				3	(J)	756960 (A)
				5	-	757024 (A)
				7.5	-	757056 (A)
				7.5	(J)	757088 (A)
				10	(J)	756848 (A)
				15	(J)	756880 (A)
				25	(J)	756912 (A)
				37.5	-	756992 (A)
WF	2400/4160Y	240/480	SINGLE-PHASE TRANSFORMER 1Ø SECONDARY 3Ø SECONDARY (K)	10	-	755840 (A)
				15	-	755968 (A)
				25	-	756128 (A)
				37.5	-	756192 (A)
				37.5	(B)	756224 (A)
				50	-	756288 (A)
				75	-	756336 (A)
				100	-	755904 (A)
				200	(J)	756096 (A)

FOR FIELD MAINTENANCE ONLY

TABLE OF CONTENTS

1199.201	SDG&E ELECTRIC STANDARDS TRANSFORMER PREFIXES, POLE-MOUNTED SINGLE PHASE	DATE 1-1-88 APPD AK/RDS

PREFIX	VOLTAGE PRIMARY	VOLTAGE SECONDARY	DESCRIPTION AND APPLICATION	KVA	(D) (F) TAPS	STOCK NUMBER
WFY	2400/4160Y	277	1Ø TRANSFORMER, 1Ø SEC, 3Ø SEC (K)	25	-	- (A)
OY	4160	120/240	1Ø SECONDARY 3Ø SECONDARY (K)	15	(J)	754656 (A)
				37.5	-	754688 (A)
				37.5	(J)	754720 (A)
				50	(J)	754752 (A)
				75	-	754784 (A)
				75	(J)	754800 (A)
				100	(J)	754620 (A)
				167	-	- (A)
WYN	7200 X 2400	120/240-277	PORTABLE SUBSTATION FOR GT GENERATOR	-	-	- (A)
YNG	7200 X 2400	277 X 120	PORTABLE	250	-	- (A)
Y	7200/12470Y	120/240	3Ø SECONDARY (K)	1.5	-	757936 (A)
				3	-	757988 (A)
				3	(I) & (J)	757990 (A)
				5	-	757960 (A)
				5	(B) (I) (J)	757986 (A)
				7.5	(I) & (J)	757964 (A)
				10	(I) & (J)	757948 (A)
				15	(J)	757954 (A)
				25	(J)	757984 (A)
				50	(J)	757980 (A)
YE	7200/12470Y	120/240	INTERNALLY FUSED, SECONDARY BREAKER 1Ø SECONDARY 3Ø SECONDARY (K)	10	-	757923 (A)
				15	-	757924 (A)
				25	-	757992 (G)
				25	(B)	757993 (A)
				25	(J)	750432 (A)
				50	-	757925 (A)
				75	-	757926 (A)
YJ	7200/12470Y	120/240	INTERNALLY FUSED, SECONDARY BREAKER LIGHTNING ARRESTER, 1Ø SECONDARY 3Ø SECONDARY (K)	3	(J)	758002 (A)
				5	-	758006 (A)
				5	(J)	758008 (A)
				7.5	(J)	758014 (A)
				10	(J)	757995 (A)
				15	(J)	757999 (A)
				25	(J)	758001 (A)
				37.5	-	758004 (A)
				37.5	(J)	758005 (A)
				50	(J)	758013 (A)
				75	(J)	758011 (A)
H	12000	120/240	3Ø SECONDARY (K)	1	-	- (A)
				2.5	-	750752 (A)
				3	-	750880 (A)
				3	(J)	750912 (A)
				5	-	751040 (A)
				5	(J)	751072 (A)
				7.5	-	751200 (A)
				7.5	(J)	751216 (A)
				10	(J)	750496 (A)
				15	(J)	750656 (A)
				25	(J)	750848 (A)

FOR FIELD MAINTENANCE ONLY

TABLE OF CONTENTS

DATE 1-1-88
APPD AK/BOS

SDG&E ELECTRIC STANDARDS

TRANSFORMER PREFIXES, POLE-MOUNTED
SINGLE PHASE

1199.202

PREFIX	VOLTAGE PRIMARY	VOLTAGE SECONDARY	DESCRIPTION AND APPLICATION	KVA	(D) & (F) TAPS	STOCK NUMBER
H	12000	120/240	3Ø SECONDARY (K)	37.5	-	750976 (A)
				37.5	(J)	751008 (A)
				50	(J)	751136 (A)
				75	(J)	751264 (A)
				100	(J)	750560 (A)
				200	-	750784 (A)
				200	(B)	750800 (G)
				250	(B)	750864 (G)
				333	-	750944 (G)
				500	-	751168 (G)
HE	12000	120/240	INTERNALLY FUSED, SECONDARY BREAKER 1Ø SECONDARY	3	-	752160 (A)
				3	(J)	752192 (A)
				5	-	752288 (A)
				5	(J)	752320 (A)
				10	(J)	751936 (A)
				15	(J)	752064 (A)
				25	(J)	752128 (A)
				37.5	-	752224 (A)
				37.5	(J)	752256 (A)
				50	(J)	752384 (A)
				75	(J)	752448 (A)
				100	-	751968 (G)
				100	(J)	752000 (G)
HEB	12000	120/240	INTERNALLY FUSED, SECONDARY BREAKER, USED ON BANKED SECONDARY SYSTEM, 1Ø SECONDARY	10	-	752480 (A)
				10	(J)	752512 (A)
				15	-	752544 (A)
				15	(J)	752576 (A)
				25	-	752608 (A)
				25	(J)	752640 (A)
				37.5	(J)	752864 (A)
HF	12000	240/480	SINGLE PHASE TRANSFORMER 1Ø SECONDARY 3Ø SECONDARY (K)	75	-	- (A)
				250	(B) & (J)	752800 (G)
				333	(B)	752832 (G)
				500	(B)	752960 (G)
HJ	12000	120/240	INTERNALLY FUSED, SECONDARY BREAKER LIGHTNING ARRESTER, 1Ø SECONDARY	2.5	-	- (A)
				2.5	(J)	753408 (A)
				3	-	- (A)
				3	(J)	753504 (A)
				5	-	753536 (A)
				5	(J)	753568 (A)
				7.5	-	- (A)
				7.5	(J)	753600 (A)
				10	(J)	753312 (A)
				15	(J)	753376 (A)
				25	(J)	753472 (A)
				50	(J)	- (A)
				75	-	- (A)
				75	(J)	- (A)
				100	(J)	753328 (A)
HY	12000	277	SINGLE PHASE TRANSFORMER 1Ø SECONDARY 3Ø SECONDARY (K)	100	(B)	754602 (G)
				333	(B)	754604 (G)
				500	(B)	754608 (G)

FOR FIELD MAINTENANCE ONLY

TABLE OF CONTENTS

1199.203	SDG&E ELECTRIC STANDARDS TRANSFORMER PREFIXES, POLE-MOUNTED SINGLE PHASE	DATE 1-1-88 APPD AE / RBS

PREFIX	VOLTAGE		DESCRIPTION AND APPLICATION	KVA	(D) (F) TAPS	STOCK NUMBER
	PRIMARY	SECONDARY				
HD	12000	480X2400	SINGLE PHASE TRANSFORMER, STEPDOWN 1Ø SECONDARY 3Ø SECONDARY (K)	50	-	751808 (A)
				100	-	751584 (A)
				100	(J)	751616 (A)
				200	-	751680 (A)
				200	(H)	751712 (A)
				250	-	- (A)
				333	-	751744 (A)
				333	(J)	751776 (A)
				500	(J)	751840 (A)
HO	12000	2400/4160Y	SINGLE PHASE TRANSFORMER STEPDOWN 12KV	100	-	- (A)
				150	-	753888 (A)
				150	(J)	- (A)
				200	(J)	753984 (A)
				250	-	754048 (A)
				250	(B)	754080 (A)
				333	-	754112 (A)
				500	-	754208 (A)
				833	-	754304 (A)
				1250	-	753856 (A)
HOY	12000	7200X2400	SINGLE PHASE TRANSFORMER STEPDOWN	100	-	754528 (A)
				100	(B)	754560 (A)
				333	(B)	754592 (A)

FOR FIELD MAINTENANCE ONLY

TRANSFORMER PREFIXES, STREETLIGHT:

PREFIX	COIL RATING	DESCRIPTION & APPLICATION	KVA	TAPS (D)	STOCK NUMBER
RCA	240 - 6.6A	CONSTANT CURRENT WITH BUILT-IN CAPACITOR	4.95	-	763424 (G)
R	2400 - 6.6A	CONSTANT CURRENT	5	-	763296 (G)
			7.5	-	763328 (G)
			10	-	763168 (G)
			15	-	763200 (G)
			20	-	- (G)
			30	-	763264 (G)
RC	2400 - 6.6A	CONSTANT CURRENT WITH BUILT-IN CAPACITOR	10	-	763360 (G)
			15	-	763392 (G)
RH	12000 - 6.6A	CONSTANT CURRENT	20	-	763504 (G)
RS	2400 - 6.6A	SUBWAY TYPE, CONSTANT CURRENT	5	-	- (G)
			10	-	763616 (G)
			15	-	763648 (G)
			25	(J)	763712 (G)
			30	-	763744 (G)
RR	2400 - 20A	CONSTANT CURRENT	10	-	763528 (G)
			30	-	763584 (G)
RRS	2400 - 20A	SUBWAY TYPE, CONSTANT CURRENT	30	(J)	763746 (G)
L	6.6A - 6.6A	CONSTANT CURRENT	.5	-	- (G)
			1	-	762976 (G)
			2	-	763040 (G)
			3	-	763072 (G)
			4	-	763104 (G)
			5	-	763136 (G)
			10	-	763008 (G)

PREFIX	VOLTAGE		DESCRIPTION AND APPLICATION	KVA	(D) (F) TAPS	STOCK NUMBER
	PRIMARY	SECONDARY				
WT	2400X4160Y	240/480	THREE-PHASE TRANSFORMER WITH A 120V TERMINAL RATED 5% OF KVA RATING WHEN CONNECTED FOR 240V OPERATION	10	-	- (A)
				15	-	- (A)
				25	-	- (A)
				30	-	- (A)
				37.5	-	757600 (A)
				45	-	- (A)
				50	-	- (A)
				75	-	757632 (A)
				100	-	757568 (A)
				112.5	-	- (A)
WAT	2400/4160Y	240	THREE-PHASE TRANSFORMER WITH A TERMINAL RATED 5% OF KVA RATING	30	-	755664 (A)
				45	-	755680 (A)
WFT	2400X4160Y	240/480	THREE-PHASE TRANSFORMER	25	-	756480 (A)
				25	(H)	756512 (A)
				30	-	756544 (A)
				30	(H)	756576 (A)
				37.5	-	756608 (A)
				37.5	(H)	756640 (A)
				45	-	756672 (A)
				45	(H)	756704 (A)
				50	-	756736 (A)
				50	(H)	756768 (A)
				112.5	-	756416 (A)
HGT	12000	208Y/120	THREE-PHASE TRANSFORMER	75	(H)	753152 (A)
				150	(B)	753056 (A)
				225	(J)	753072 (A)
				300	(B)	753104 (A)
				500	(B)	753136 (G)
				750	(B)	753184 (G)
HZT	12000	208Y/120	INTERNALLY FUSED, SECONDARY BREAKER	75	-	754616 (A)
				75	(B)	754618 (A)
				150	-	754612 (A)
				150	(B)	754614 (A)

FOR FIELD MAINTENANCE ONLY

TABLE OF CONTENTS

PREFIX	VOLTAGE		DESCRIPTION AND APPLICATION	KVA	(D) (F) TAPS	STOCK NUMBER
	PRIMARY	SECONDARY				
HAT	12000	240	THREE-PHASE TRANSFORMER INCLUDES A 120V TERMINAL RATED 5% OF KVA RATING	30	(C) & (H)	751328 (A)
				45	(H)	751392 (A)
				150	-	751296 (A)
				500	-	- (A)
HBT	12000	240 X 480	THREE-PHASE TRANSFORMER INCLUDES A 120V TERMINAL RATED 5% OF KVA RATING WHEN CONNECTED FOR 240V OPERATION FOR FIELD MAINTENANCE ONLY	10	-	- (A)
				15	-	- (A)
				25	-	- (A)
				30	-	751424 (A)
				30	(C)	751456 (A)
				37.5	-	- (A)
				45	(C)	751488 (A)
				50	-	- (A)
				75	-	751520 (A)
				75	(C)	751552 (A)
				100	-	- (A)
				112.5	-	- (A)
HLT	12000	240 X 480	THREE-PHASE TRANSFORMER	25	-	- (A)
				25	(C)	753696 (A)
				37.5	-	- (A)
				100	-	753664 (A)
HMT	12000	480	THREE-PHASE TRANSFORMER	45	-	- (A)
HJM	12000	480	THREE PHASE TRANSFORMER INTERNALLY FUSED, SECONDARY BREAKER LIGHTNING ARRESTER	45	-	753632 (A)
HNT	12000	480Y/277	THREE-PHASE TRANSFORMER	225	(B)	- (G)
				300	(B)	- (G)
				500	(B)	753760 (G)
				750	(B)	753792 (G)
				1000	(B)	753728 (G)

TABLE OF CONTENTS

PREFIX	VOLTAGE		DESCRIPTION AND APPLICATION	KVA	(D) (F) TAPS	STOCK NUMBER
	PRIMARY	SECONDARY				
HOT	12000	4160Y/2400	THREE PHASE TRANSFORMER STEPDOWN FOR FIELD MAINTENANCE ONLY	150	-	754368 (G)
				1250	(B)	754336 (G)
				1500		754400 (G)
				2000	(B)	754432 (G)
				2500	-	754464 (G)
				3750	-	- (G)
				5000/ 6250	(B)	754496 (G)

TRANSFORMER PREFIXES, SUBSTATION:

PREFIX	VOLTAGE		DESCRIPTION AND APPLICATION
	PRIMARY	SECONDARY	
KO	69000	4160	SUBSTATION USE 1Ø
K	69000	12000	SUBSTATION USE 1Ø
KOT	69000	4160	SUBSTATION USE 3Ø
KT	69000	12000	SUBSTATION USE 3Ø
KHT	69000 X 33000	12000/4160Y	SUBSTATION USE 3Ø
KK	138000	69000	SUBSTATION USE 1Ø
KNT	138000	12000	SUBSTATION USE 3Ø
KKT	138000	69000	SUBSTATION USE 3Ø
KLT	230000	69000	SUBSTATION USE 3Ø
KMT	230000	138000	SUBSTATION USE 3Ø
KXX	-	-	NON-STANDARD ALL VOLTAGE GENERATING STATION USE ONLY

INSTALLATION:

(A) NO LONGER PURCHASED.

(B) TWO 2 1/2% TAPS ABOVE AND BELOW.

(C) ONE 5% TAP ABOVE AND BELOW.

(D) WHEN MIRAMAR SUBSTITUTES TAPPED TRANSFORMERS FOR UNTAPPED ONES, THEY SHALL BE USED IN THE FLAT (STRAIGHT OR NEUTRAL) TAP POSITION.

(F) AUTHORIZATION FROM DISTRICT ENGINEERING REQUIRED BEFORE USING TAPS. IF AFTER NORMAL WORKING HOURS, AND TAPS MUST BE USED, INFORM DISTRICT ENGINEERING OF THE USE AND TAP SETTING THE NEXT DAY.

(G) SPECIAL ORDER.

(H) TWO 5% TAPS BELOW.

(I) THREE 4 1/2% TAPS BELOW.

(J) FOUR 2 1/2% TAPS BELOW.

(K) 3Ø SECONDARY AVAILABLE WHEN BANKED.

REFERENCE:

L. FOR SINGLE AND THREE PHASE PAD-MOUNTS, AND SUBSURFACE TRANSFORMERS, SEE UG STANDARDS BOOK.

1199.207	SDG&E ELECTRIC STANDARDS TRANSFORMER PREFIXES, POLE-MOUNTED AND SUBSTATION, SINGLE AND THREE-PHASE	DATE 1-1-88 APPD

TABLE OF CONTENTS

SCOPE: THIS STANDARD SHOWS THE INSTALLATION METHOD OF A TYPE 'W' TRANSFORMER, ON ARMLESS TANGENT CONSTRUCTION.

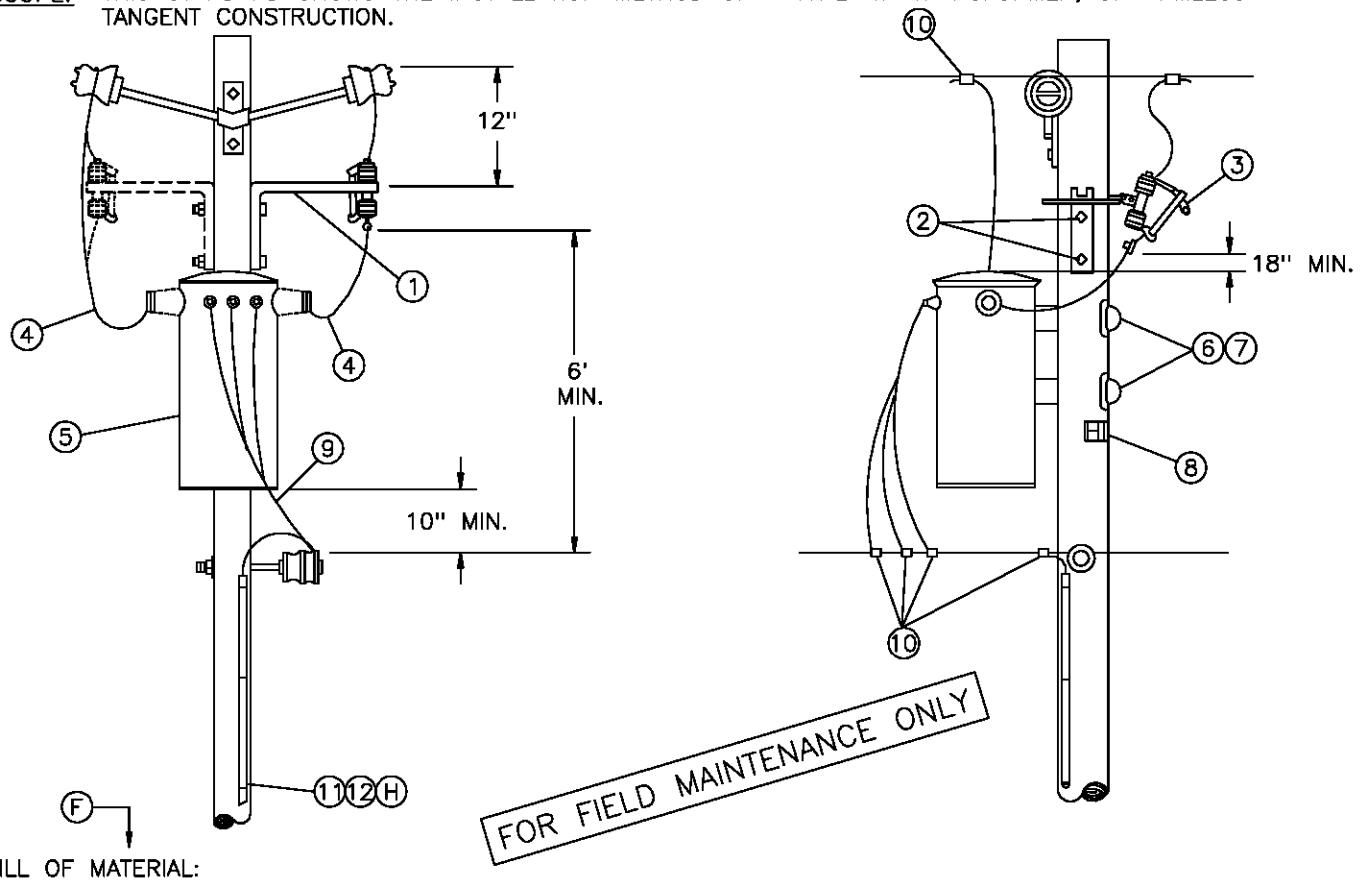

BILL OF MATERIAL:

ITEM	DESCRIPTION	QUANTITY		STOCK NO OR CONSTR STANDARD
		2.4KV	4KV	
1	BRACKET, CUTOUT MOUNTING	2	1	166448
2	BOLT, MACH, GALV, 5/8" X (LENGTH AS REQ'D) & 1 SQ CURVED WASHER	2	2	STD 392
3	CUTOUT, 12KV	2	1	STD 1212
4	WIRE, 5KV INSULATED, XLP, #6 STRANDED COPPER	8'	10'	194304
5	TRANSFORMER, SINGLE PHASE, TYPE W	1	1	STD 1121
6	BOLT, MACH, GALV, 5/8" OR 3/4" X (LENGTH AS REQ'D), 1 SQ CURV & 1 DBL COIL SPRING WASHER	2	2	STD 392
7	COVER, BOLT, PLASTIC & 6 – 10D NAILS, GALV	2 –	2 –	285696 491392
8	SIGN, HIGH VOLTAGE & 9 ROOFING NAILS, GALV	1 –	1 –	647648 492224
9	WIRE, W.P. (SIZE GOVERNED BY TRANSFORMER CAPACITY)	21'	21'	STD 1125
10	CONNECTORS, WIRE COMPRESSION, CU OR AL, AS REQ'D	AS REQ'D		783–787
11	WIRE, BARE STRANDED, COPPER, #6	42'	42'	813536
12	UNIT GROUND, COMPLETE	1	1	603136

REFERENCE:

(F) POLE STEPPING – SEE STANDARD 363.

G. FOR LIGHTNING ARRESTER REQUIREMENTS – SEE STANDARD 1247.

(H) GROUNDING METHODS – SEE STANDARD 1002.

I. FOR POLE TOP MATERIAL – SEE DISTRIBUTION POLE TOPS (SECTION 400).

DATE 1–1–86 APPD /	SDG&E ELECTRIC STANDARDS 2.4 OR 4KV SINGLE PHASE TYPE "W" TRANSFORMER INSTALLATION 100 KVA MAXIMUM, ARMLESS TANGENT CONST	1199.208 SUPERSEDES 1128 (1–1–93)

TABLE OF CONTENTS

SCOPE: THIS STANDARD SHOWS THE INSTALLATION METHOD OF A TYPE 'W' TRANSFORMER, ON ARMLESS DEADEND CONSTRUCTION.

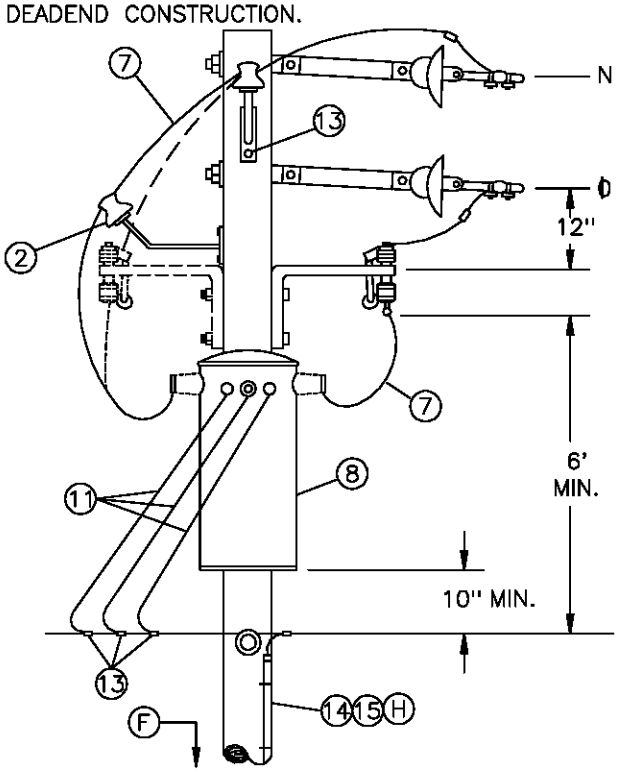

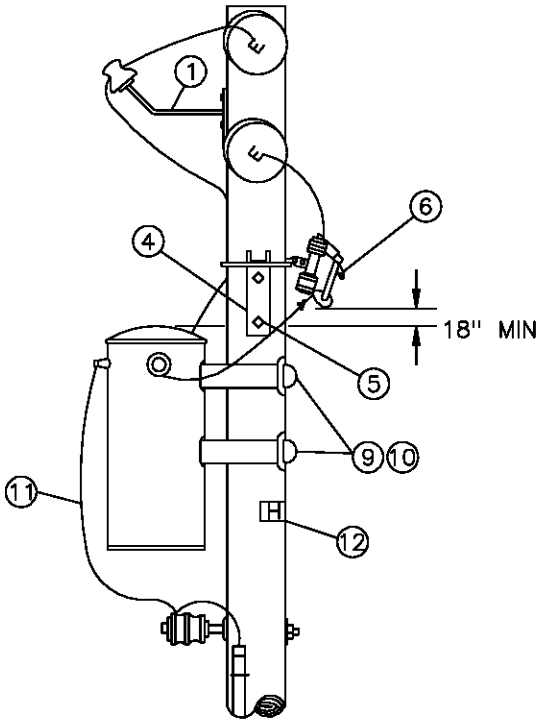

ITEM	DESCRIPTION	QUANTITY		STOCK NO OR CONSTR STANDARD
		2.4KV	4KV	
1	BRACKET, INSULATOR, 1" LEAD THREAD	2	2	166134
2	INSULATOR, CLASS AS REQUIRED	1	2	STD 750
3	SCREW, LAG, GALV. 1/2" X 4"	2	2	621568
4	BRACKET, CUTOUT MOUNTING	2	1	166448
5	BOLT, MACH, GALV, 5/8" X (LENGTH AS REQ'D) & 1 SQ CURVED WASHER	2	2	STD 392
6	CUTOUT, 12KV	2	1	STD 1212
7	WIRE, 5KV INSULATED, XLP, #6 STRANDED COPPER	10'	12'	194304
8	TRANSFORMER, SINGLE PHASE, TYPE W	1	1	STD 1211
9	BOLT, MACH, GALV, 5/8" OR 3/4" X (LENGTH AS REQ'D), 1 SQ CURVED & 1 DBL COIL SPRING WASHER	2	2	STD 392
10	COVER, BOLT, PLASTIC & 6 – 10D NAILS, GALV	2 –	2 –	285696 491392
11	WIRE, W.P. (SIZE GOVERNED BY TRANSFORMER CAPACITY)	21'	21'	STD 1125
12	SIGN, HIGH VOLTAGE & 9 ROOFING NAILS, GALV	1 –	1 –	647648 492224
13	CONNECTORS, WIRE COMPRESSION, CU OR AL, AS REQ'D	AS REQ'D		783–787
14	WIRE, BARE STRANDED, COPPER, #6	42'	42'	813536
15	UNIT GROUND, COMPLETE	1	1	603136

REFERENCE:

(F) POLE STEPPING – SEE STANDARD 363.

G. FOR LIGHTNING ARRESTER REQUIREMENTS – SEE STANDARD 1247.

(H) GROUNDING METHODS – SEE STANDARD 1002.

I. FOR POLE TOP MATERIAL – SEE DISTRIBUTION POLE TOPS (SECTION 400).

	SDG&E ELECTRIC STANDARDS	
DATE 1–1–86 APPD /	2.4 OR 4KV, SINGLE PHASE TYPE "W" TRANSFORMER INSTALLATION 100KVA MAXIMUM, ARMLESS DEAD END CONST	1199.209 SUPERSEDES 1129 (1–1–93)

TABLE OF CONTENTS

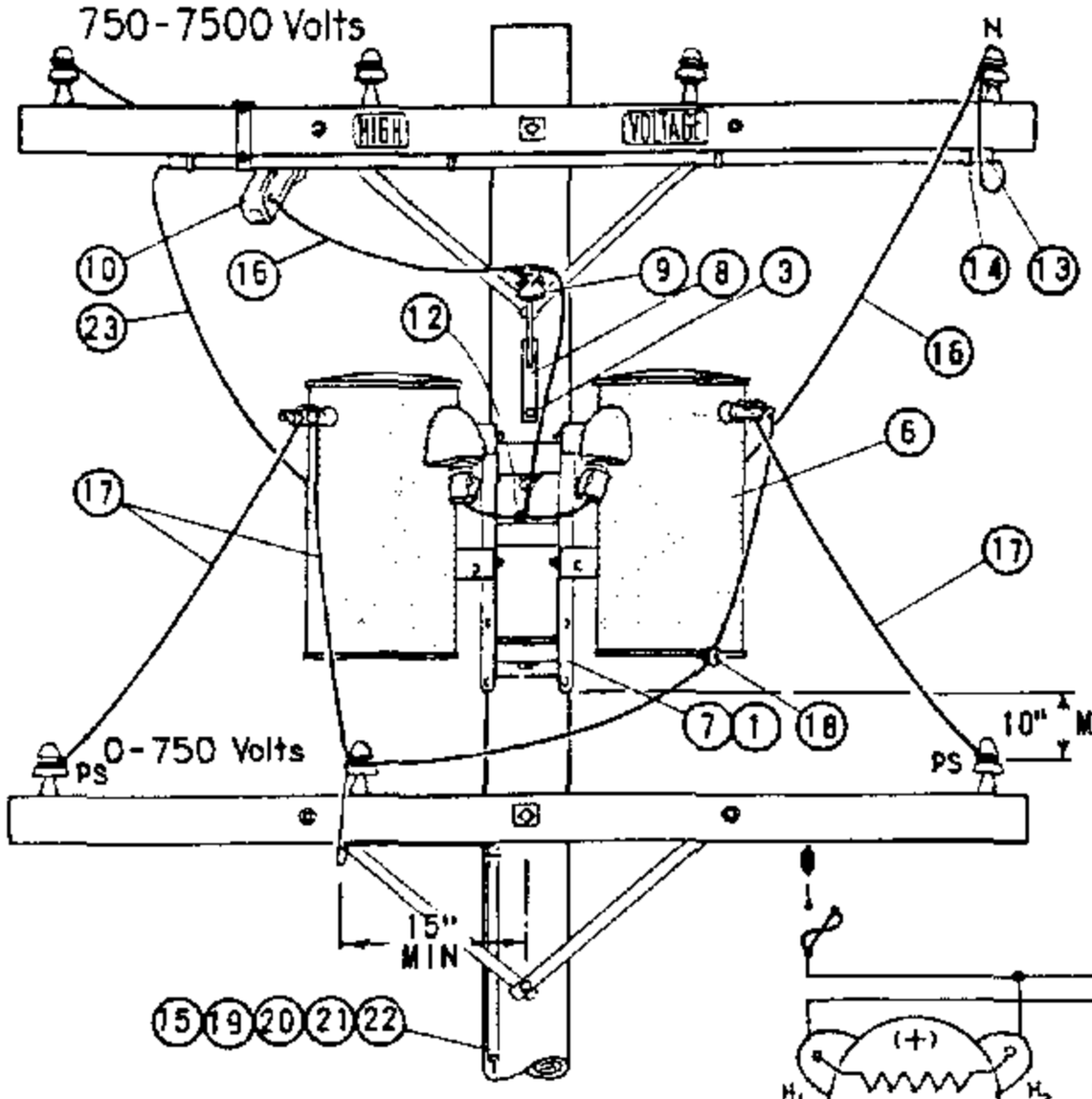

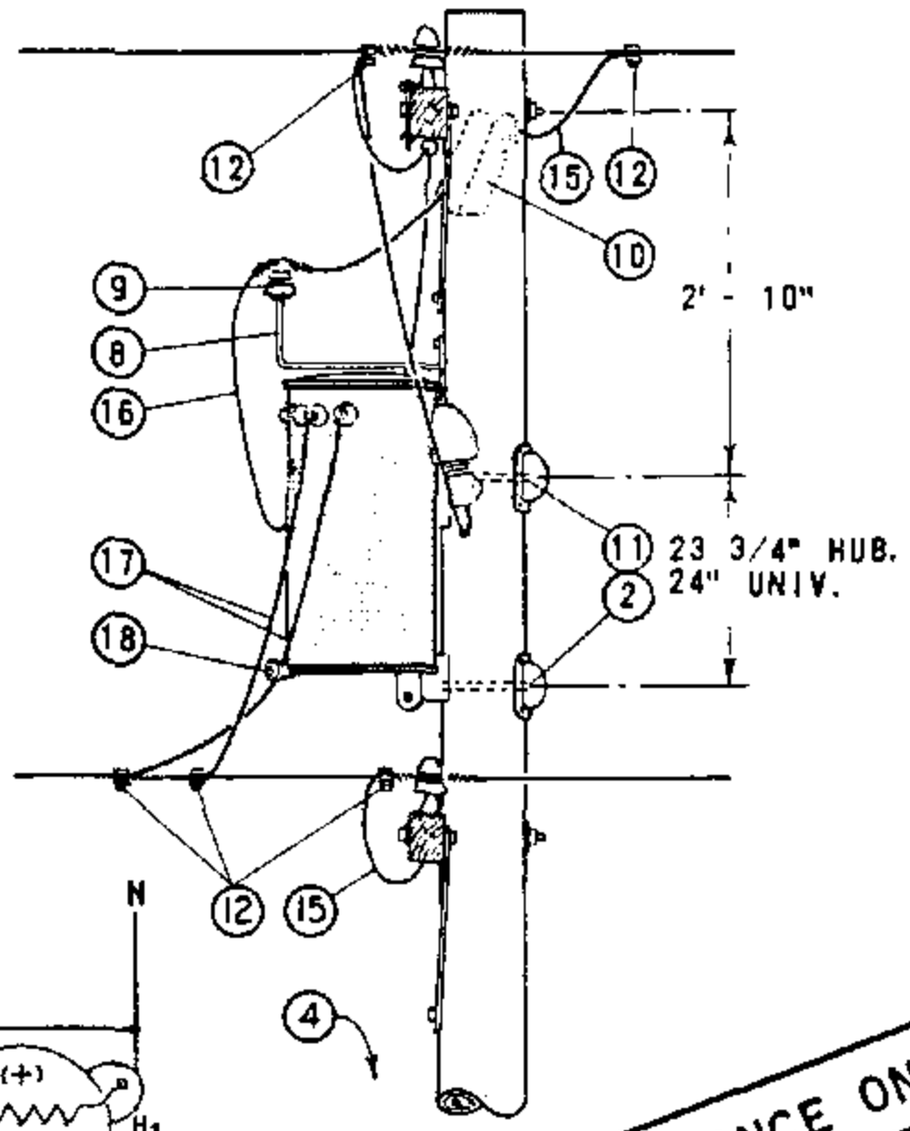

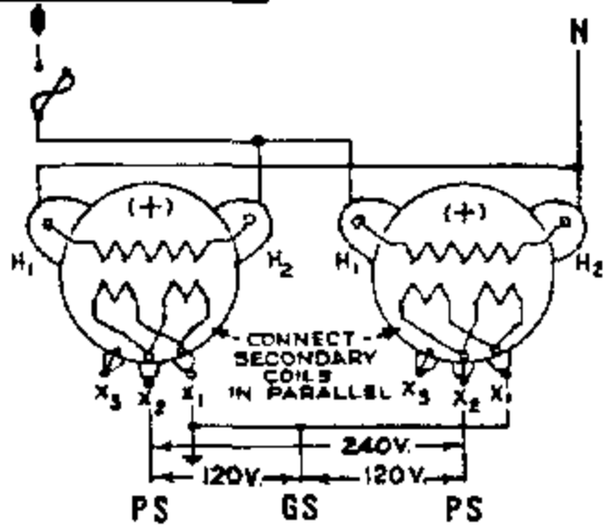

WIRING DIAGRAM

FOR FIELD MAINTENANCE ONLY

NOTES:

(A) LIMITED TO TWO 15 KVA TRANSFORMERS.

(B) USE TWO GROUND RODS SPACED A MINIMUM OF 6 FEET APART FOR EACH GROUND UNIT.

(C) PHASE TO PHASE CONNECTIONS ON 2.4 KV DELTA AND 4 KV WYE SYSTEMS REQUIRE TWO CUTOUTS.

D. FUSE FOR COMBINED KVA OF PARALLELED TRANSFORMERS.

(E) EXEMPT MATERIALS.

(F) UNIT GROUND COMPLETE ORDER 603120 WITH GRAY MOULDING, 603136 WITH PLAIN MOULDING.

ITEM PTF	ITEM LTI	DESCRIPTION	QUANTITY	STOCK NO. OR CONSTR STDS
1		BOLT, MACH GALV, 5/8" (E) OR 3/4" X 2", 2 WASH & 1 NUT.	4	PGS 139, 140
2		BOLT, MACH GALV, 3/4" X 10", 1 SQ CURV WASH. & 1 NUT.	2	PGS 139, 140
3		SCREW, LAG GALV, 1/2" X 4" (E)	2	621568
4		STEP, POLE (E)	16	692992
5				
	6	TRANSFORMER, SINGLE PHASE TYPE W OR OY (A)	2	PGS 1121.01-1121.12
	7	BRACKET, TRANSFORMER MTG	1	402976
	8	BRACKET, INSULATOR, 1" OR 1 3/8" THREAD, AS REQ'D	1	166144 / 166176
	9	INSULATOR, 12KV	1	700 SECTION
	10	CUTOUT, 5KV (C)	2	PG 1211
	11	COVER, THRU BOLT & 6-10D NAILS GALV	2	285696, 491392
	12	CONNECTOR, WIRE, AS REQ'D	7	PGS 783-787
	13	CONDUIT, PLASTIC PVC, 3/4" SCHEDULE 40, TYPE II (E)	5'	251328
	14	STRAP, PIPE 3/4" & 2-6D NAILS, GALV (E)	3	697888, 491552
	15	WIRE, BARE STRANDED COPPER, #6	48'	813536
	16	WIRE, #4 SOLID WP COPPER	8'	814112
	17	WIRE, WP COPPER, SIZE GOVERNED BY TRANSFORMER CAPACITY	24'	PG 1125
	18	BRACKET, INSULATOR	1	167520
	19	ROD & CLAMP, GROUND (B) (F)	2	603072, 230016 (E)
	20	MOULDING, HARDWOOD 1" (F)	27'	487200
	21	STAPLES, MOULDING, GALV 3" X 1 1/16" X 1/4" (F) (E)	18	678560
	22	STAPLES, FENCE, GALV 1 1/4" (F) (E)	16	678528
	23	WIRE, 5KV INSULATED, XLP, #6 STRANDED COPPER	16'	194304

1199.301 SUPERSEDES 1138 (1-1-86)	SDG&E ELECTRIC STANDARDS 2.4KV OR 4KV, SINGLE PHASE PARALLELED TRANSFORMER INSTALLATION	DATE 1-1-86 APPD AK/RDS

TABLE OF CONTENTS

SCOPE: THIS STANDARD SHOWS THE INSTALLATION METHOD OF A TYPE 'WE' TRANSFORMER, ON SECONDARY RACK CONSTRUCTION.

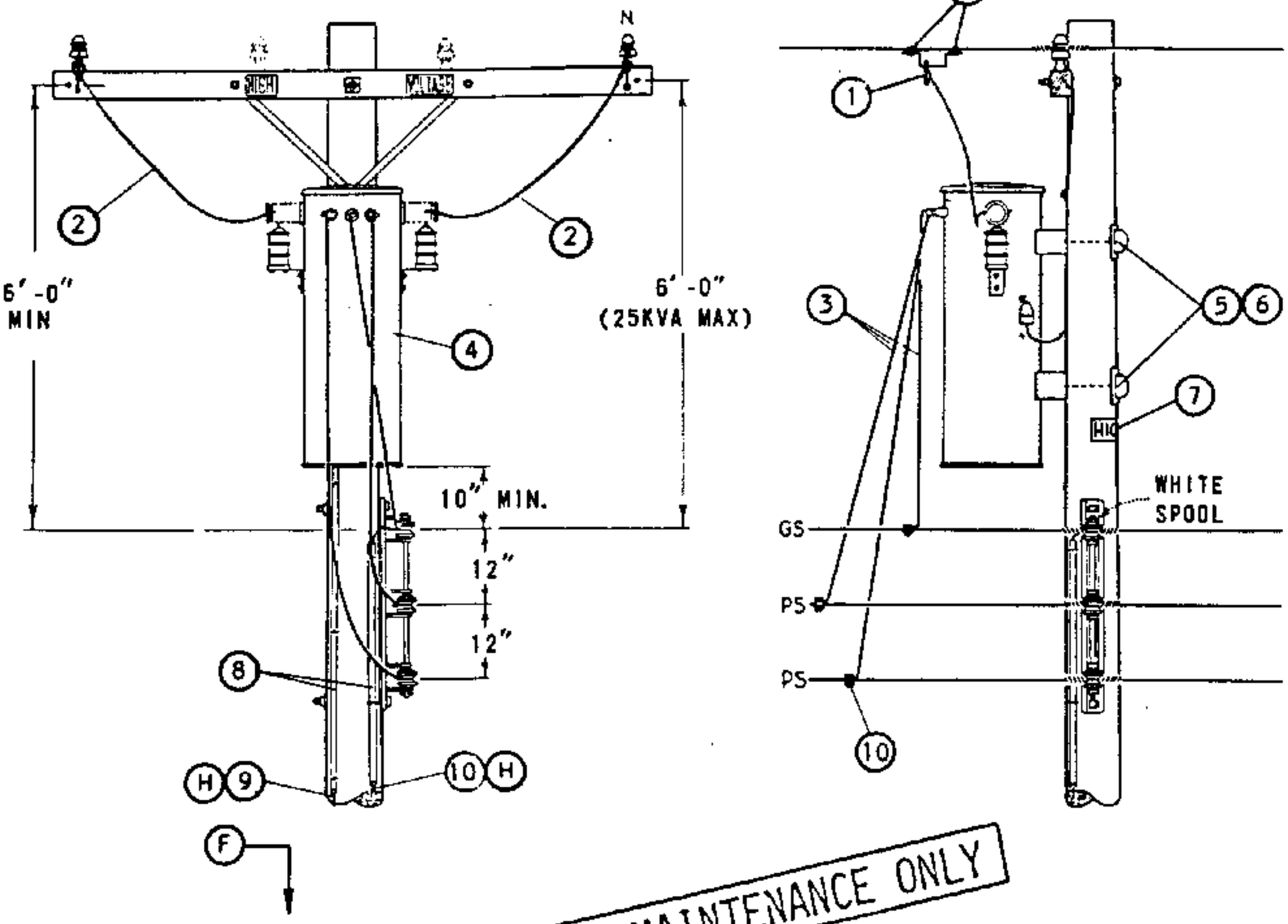

FOR FIELD MAINTENANCE ONLY

BILL OF MATERIAL:

ITEM	DESCRIPTION	QUANTITY	STOCK NO OR CONSTR STANDARD
1	CLAMP, HOTLINE & STIRRUP (E)	2	STD 788
2	WIRE, 5KV INSULATED, XLP, #6 STRANDED COPPER	12'	194304
3	WIRE, W.P., COPPER (SIZE GOVERNED BY TRANSFORMER CAPACITY)	21'	STD 1125
4	TRANSFORMER, SINGLE PHASE (TYPE 'WE' OR 'WJ')	1	STD 1121
5	BOLT, MACH, GALV, 5/8" OR 3/4" X (LENGTH AS REQ'D), 1 SQ CURVED & 1 DBL COIL SPRING WASHER (E)	2	STD 392
6	COVER, BOLT, PLASTIC & (E) 6 - 10D NAILS, GALV (E)	2 -	285696 491392
7	SIGN, HIGH VOLTAGE & (E) 9 ROOFING NAILS, GALV (E)	1 -	647648 492224
8	UNIT GROUND, COMPLETE (A)	2	603136
9	WIRE, #4 BARE STRANDED COPPER (A)	42'	813760
10	WIRE, #6 BARE STRANDED COPPER	42'	813536
11	CONNECTORS, WIRE COMPRESSION, CU OR AL, AS REQ'D (E)	AS REQ'D	783-787

INSTALLATION:

(A) OMIT LIGHTNING ARRESTER GROUND ON TYPE 'WE' TRANSFORMER INSTALLATION.

(E) EXEMPT MATERIAL.

REFERENCE:

(F) POLE STEPPING - SEE STANDARD 363.

G. WHEN LIGHTNING ARRESTERS ARE REQUIRED PER STANDARD 1247, USE TYPE 'WJ' TRANSFORMER.

(H) GROUNDING METHODS - SEE STANDARD 1002.

DATE 1-1-86
APPD AK/RAS

SDG&E ELECTRIC STANDARDS

2.4 OR 4KV, SINGLE PHASE, TYPE "WE" TRANSFORMER INSTALLATION, 25 KVA MAX, SECONDARY RACK CONSTRUCTION

1199.302
SUPERSEDES
1131 (1-1-93)

TABLE OF CONTENTS

SCOPE: THIS STANDARD SHOWS THE INSTALLATION METHOD OF A TYPE 'WE' TRANSFORMER, ON SECONDARY LINE ARM CONSTRUCTION.

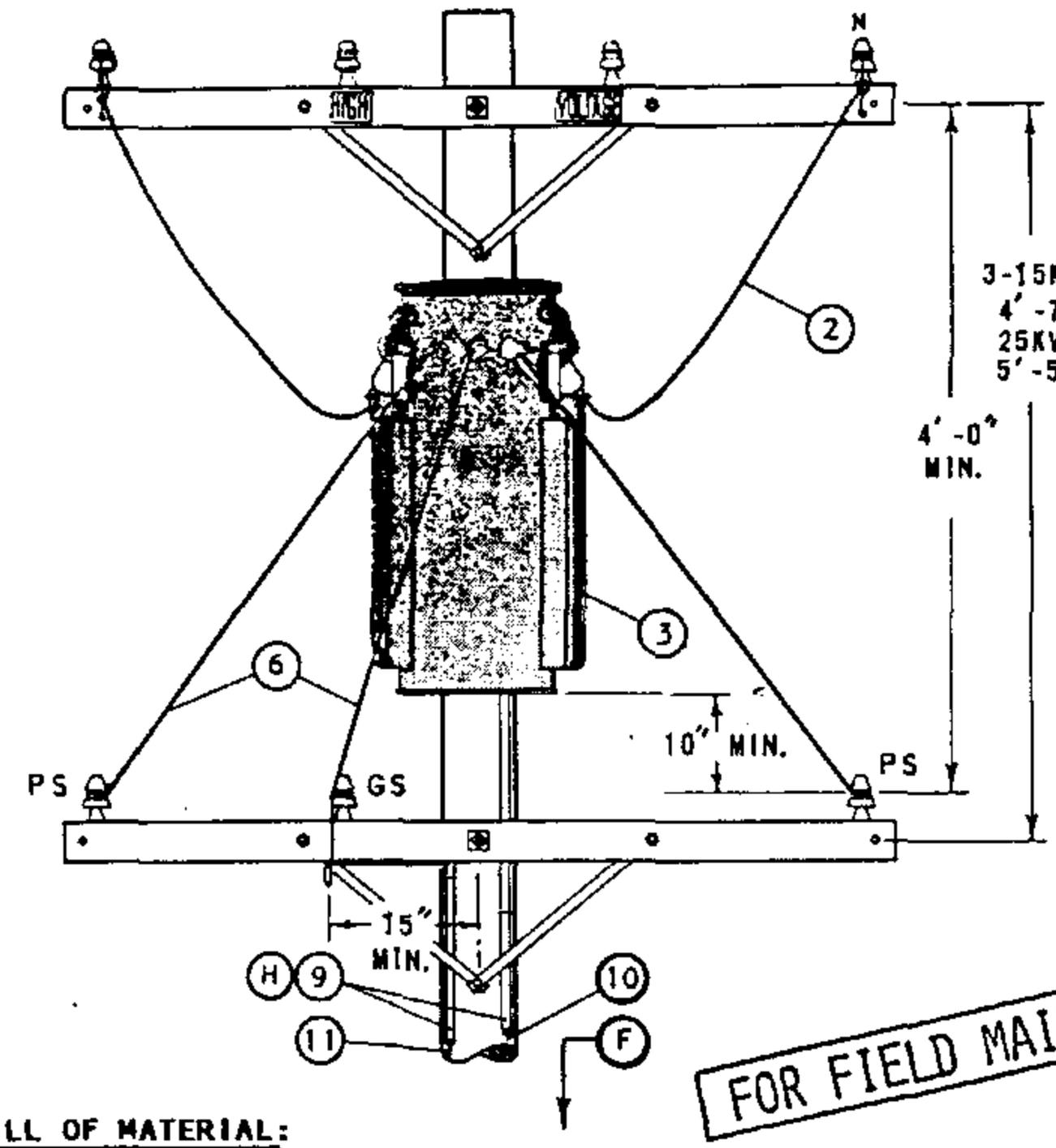

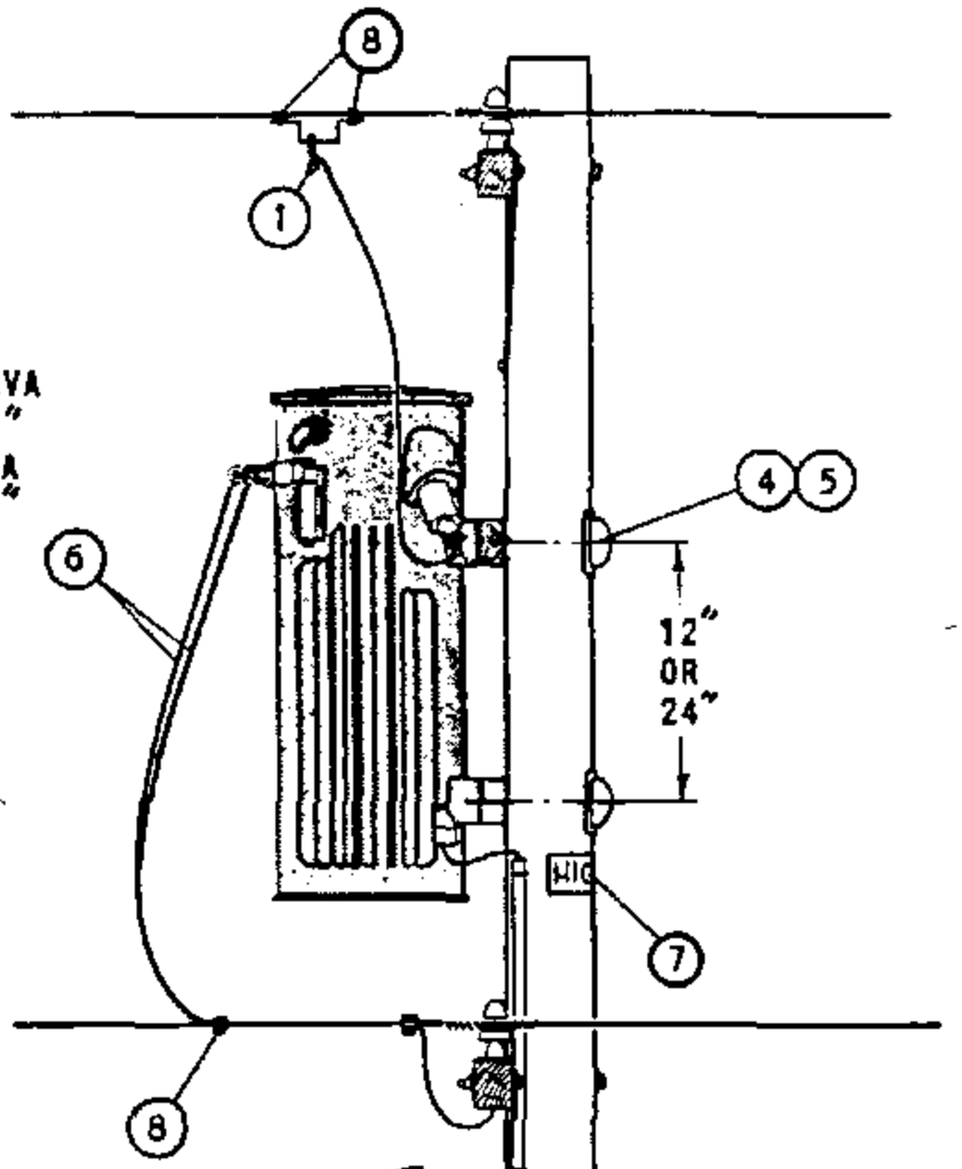

FOR FIELD MAINTENANCE ONLY

BILL OF MATERIAL:

ITEM	DESCRIPTION	QUANTITY	STOCK NO OR CONSTR STANDARD
1	CLAMP, HOTLINE & STIRRUP (E)	2	STD 788
2	WIRE, 5KV INSULATED, XLP, #6 STRANDED COPPER	12'	194304
3	TRANSFORMER, SINGLE PHASE (TYPE 'WE' OR 'WJ')	1	STD 1121
4	BOLT, MACH, GALV, 5/8" OR 3/4" X (LENGTH AS REQ'D), 1 SQ CURVED & 1 DBL COIL SPRING WASHER (E)	2	STD 392
5	COVER, BOLT, PLASTIC (E) 6 - 10D NAILS, GALV (E)	2 -	285696 491392
6	WIRE, W.P., COPPER (SIZE GOVERNED BY TRANSFORMER CAPACITY)	21'	STD 1125
7	SIGN, HIGH VOLTAGE (E) 9 ROOFING NAILS, GALV (E)	1 -	647648 492224
8	CONNECTORS, WIRE COMPRESSION, CU OR AL, AS REQ'D (E)	AS REQ'D	783-787
9	UNIT GROUND, COMPLETE (A)	2	603136
10	WIRE, #4 BARE STRANDED COPPER (A)	41'	813760
11	WIRE, #6 BARE STRANDED COPPER	42'	813536

INSTALLATION:

(A) OMIT LIGHTNING ARRESTER GROUND ON TYPE 'WE' TRANSFORMER INSTALLATION.

(E) EXEMPT MATERIAL.

REFERENCE:

(F) POLE STEPPING - SEE STANDARD 363.

G. WHEN LIGHTNING ARRESTERS ARE REQUIRED, PER STANDARD 1247, USE TYPE 'WJ' TRANSFORMER.

(H) GROUNDING METHODS - SEE STANDARD 1002.

1199.303 SUPERSEDES 1132 (1-1-93)	SDG&E ELECTRIC STANDARDS 2.4 OR 4KV, SINGLE PHASE, TYPE "WE" TRANSFORMER INSTALLATION, 25 KVA MAX, SECONDARY LINE ARM CONSTRUCTION	DATE 1-1-86 APPD AK/RSB

TABLE OF CONTENTS

SCOPE: THIS STANDARD SHOWS THE INSTALLATION METHOD OF A TYPE 'W' TRANSFORMER, ON SECONDARY RACK CONSTRUCTION.

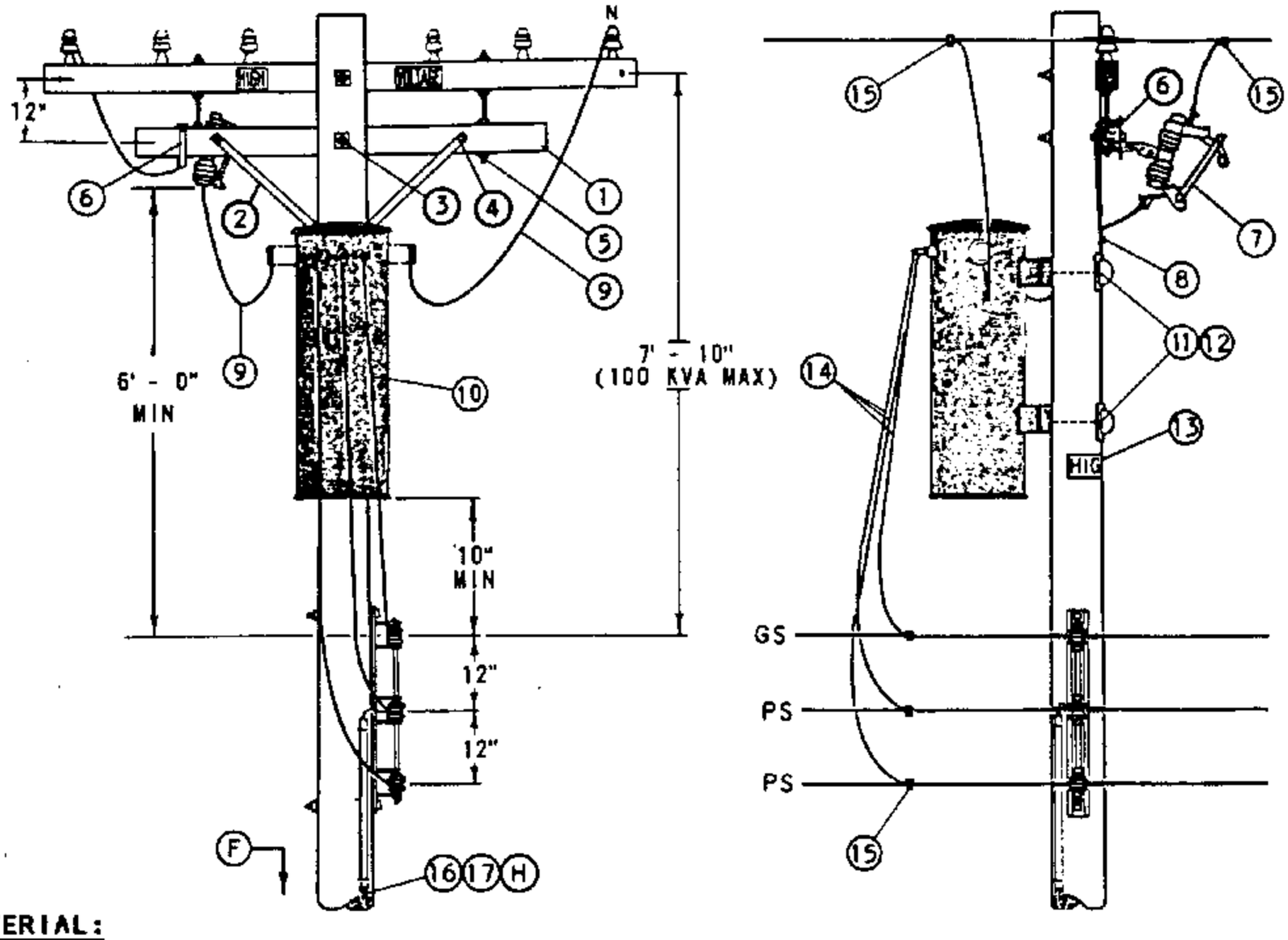

BILL OF MATERIAL:

ITEM	DESCRIPTION		QUANTITY	STOCK NO OR CONSTR STANDARD
1	CROSSARM, 3 1/2" X 4 1/2" X 6' - 0"		1	294112
2	BRACE, FLAT, CROSSARM, 28"	(E)	1	164192
3	BOLT, MACH, GALV, 5/8" X (LENGTH AS REQ'D), 2 SQ & 1 DBL COIL SPRING WASHER	(E)	1	STD 392
4	BOLT, MACH, GALV, 3/8" X 4 1/2", 1 RD & 1 SPRING LOCK WASHER	(E)	2	STD 392
5	BOLT, SPACE, GALV, 5/8" X 20", 4 SQ & 2 DBL COIL SPR WASHERS	(E)	2	STD 392
6	BRACKET, CUTOUT/ARRESTER, FOR CROSSARM MOUNTING	(E)	1	166070
7	CUTOUT, 12KV	(A)	1	STD 1212
8	BOLT, MACH, GALV, 1/2" X (LENGTH AS REQ'D), 1 SQ & 1 DBL COIL SPRING WASHER	(E)	1	STD 392
9	WIRE, 5KV INSULATED, XLP, #6 STRANDED COPPER		12'	194304
10	TRANSFORMER, SINGLE PHASE, TYPE 'W'		1	STD 1121
11	BOLT, MACH, GALV, 5/8" X (LENGTH AS REQ'D), 1 SQ CURVED & 1 DBL COIL SPRING WASHER	(E)	2	STD 392
12	COVER, BOLT, PLASTIC & 6 - 10D NAILS, GALV	(E) (E)	2 -	285696 491392
13	SIGN, HIGH VOLTAGE & 9 ROOFING NAILS, GALV	(E) (E)	1 -	647648 492224
14	WIRE, W.P., COPPER (SIZE GOVERNED BY TRANSFORMER CAPACITY)		21'	STD 1125
15	CONNECTORS, WIRE COMPRESSION, CU OR AL, AS REQ'D	(E)	AS REQ'D	783-787
16	WIRE, BARE STRANDED COPPER, #6		42'	813536
17	UNIT GROUND, COMPLETE		1	603136

FOR FIELD MAINTENANCE ONLY

INSTALLATION:

(A) 2.4KV SINGLE PHASE INSTALLATIONS REQUIRE TWO CUTOUTS.

(E) EXEMPT MATERIAL.

REFERENCE:

(F) POLE STEPPING - SEE STANDARD 363.

G. FOR LIGHTNING ARRESTER REQUIREMENTS - SEE STANDARD 1247.

(H) GROUNDING METHODS - SEE STANDARD 1002.

DATE 1-1-86
APPD AK/RDS

SDG&E ELECTRIC STANDARDS

2.4 OR 4KV, SINGLE PHASE TYPE "W" TRANSFORMER INSTALLATION, 100 KVA MAXIMUM, C.O. ARM, SECONDARY RACK CONSTRUCTION

1199.304
SUPERSEDES
1133 (1-1-93)

TABLE OF CONTENTS

SCOPE: THIS STANDARD SHOWS THE INSTALLATION METHOD OF A TYPE 'W' TRANSFORMER, ON SECONDARY RACK CONSTRUCTION WITH CUTOUT ON LINE ARM.

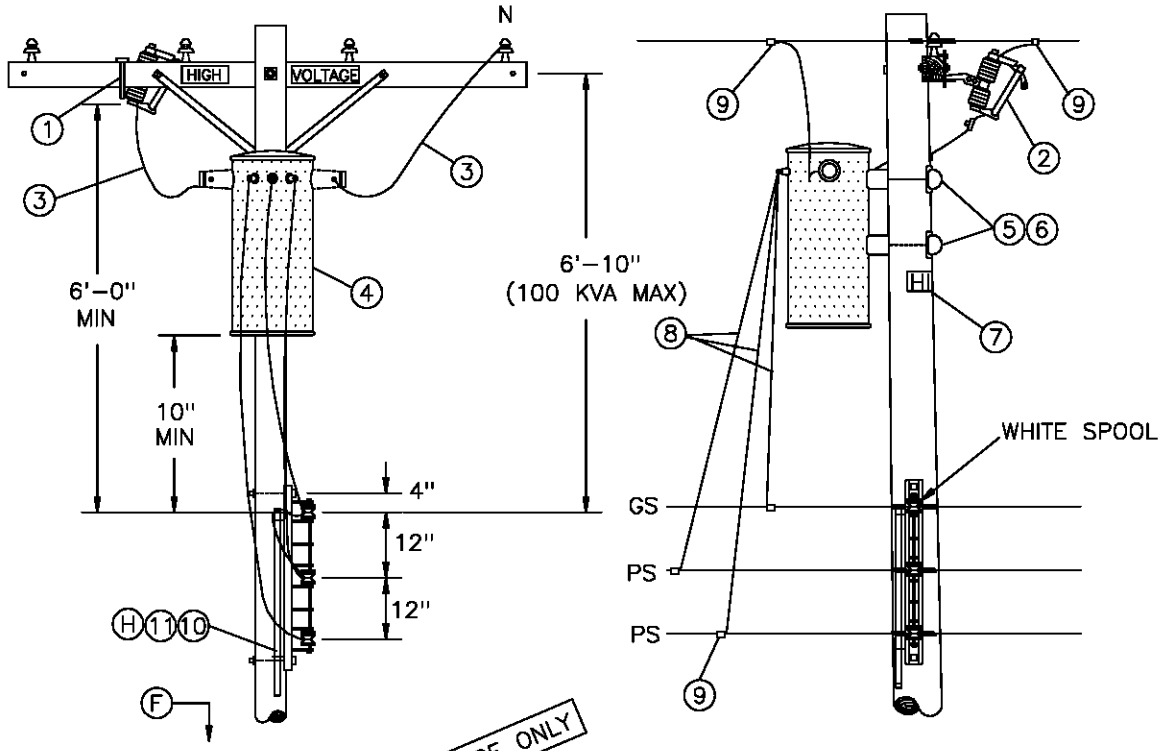

FOR FIELD MAINTENANCE ONLY

BILL OF MATERIAL:

ITEM	DESCRIPTION	QUANTITY	STOCK NO OR CONSTR STANDARD
1	BRACKET, CUTOUT/ARRESTER, FOR CROSSARM MOUNTING	1	166070
2	CUTOUT, 12KV (A)	1	STD 1212
3	WIRE, 5KV INSULATED, XLP, #6 STRANDED COPPER	12'	194304
4	TRANSFORMER, SINGLE PHASE, TYPE 'W'	1	STD 1121
5	BOLT, MACH, GALV, 5/8" X (LENGTH AS REQ'D), 1 SQ CURVED & 1 DBL COIL SPRING WASHER	2	STD 392
6	COVER, BOLT, PLASTIC & 6 – 10D NAILS, GALV	2 –	285696 491392
7	SIGN, HIGH VOLTAGE & 9 ROOFING NAILS, GALV	1 –	647648 492224
8	WIRE, W.P., COPPER (SIZE GOVERNED BY TRANSFORMER CAPACITY)	21'	STD 1125
9	CONNECTORS, WIRE COMPRESSION, CU OR A, AS REQ'D	AS REQ'D	783–787
10	WIRE, BARE STRANDED COPPER, #6	42'	813536
11	UNIT GROUND, COMPLETE	1	603136

INSTALLATION:

(A) 2.4KV SINGLE PHASE INSTALLATIONS REQUIRE TWO CUTOUTS.

REFERENCE:

(F) POLE STEPPING – SEE STANDARD 363.

G. FOR LIGHTNING ARRESTER REQUIREMENTS – SEE STANDARD 1247.

(H) GROUNDING METHODS – SEE STANDARD 1002.

1199.305 SUPERSEDES 1135 (1–1–93)	SDG&E ELECTRIC STANDARDS 2.4 OR 4KV, SINGLE PHASE TYPE "W" TRANSFORMER INSTALLATION, 100 KVA MAXIMUM LINE ARM MOUNTED C.O., SECONDARY RACK CONSTRUCION	DATE 1–1–86 APPD /

TABLE OF CONTENTS

SCOPE: THIS STANDARD SHOWS THE INSTALLATION METHOD OF A TYPE 'W' TRANSFORMER, WITH SECONDARY LINE ARM CONSTRUCTION AND CUTOUT MOUNTED ON LINE ARM.

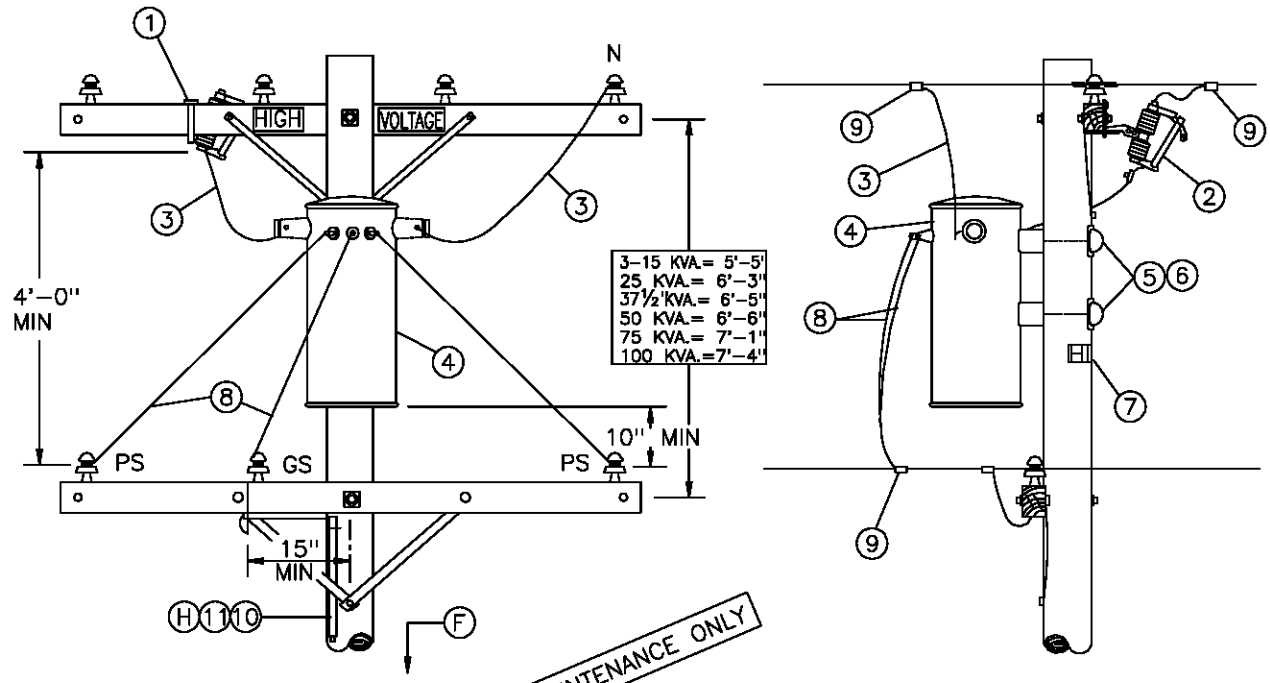

BILL OF MATERIAL:

FOR FIELD MAINTENANCE ONLY

ITEM	DESCRIPTION	QUANTITY	STOCK NO OR CONSTR STANDARD
1	BRACKET, CUTOUT/ARRESTER, FOR CROSSARM MOUNTING	1	166070
2	CUTOUT, 12KV (A)	1	STD 1212
3	WIRE, 5KV INSULATED, XLP, #6 STRANDED COPPER	12'	194304
4	TRANSFORMER, SINGLE PHASE, TYPE 'W'	1	STD 1121
5	BOLT, MACH, GALV, 5/8" X (LENGTH AS REQ'D), 1 SQ CURVED & 1 DBL COIL SPRING WASHER	2	STD 392
6	COVER, BOLT, PLASTIC & 6 – 10D NAILS, GALV	2 –	285696 491392
7	SIGN, HIGH VOLTAGE & 9 ROOFING NAILS, GALV	1 –	647648 492224
8	WIRE, W.P., COPPER (SIZE GOVERNED BY TRANSFORMER CAPACITY)	21'	STD 1125
9	CONNECTORS, WIRE COMPRESSION, CU OR AL, AS REQ'D	AS REQ'D	783–787
10	WIRE, BARE STRANDED COPPER, #6	42'	813536
11	UNIT GROUND, COMPLETE	1	603136

INSTALLATION:

(A) 2.4KV SINGLE PHASE INSTALLATIONS REQUIRE TWO CUTOUTS.

REFERENCE:

(F) POLE STEPPING – SEE STANDARD 363.

G. FOR LIGHTNING ARRESTER REQUIREMENTS – SEE STANDARD 1247.

(H) GROUNDING METHODS – SEE STANDARD 1002.

DATE 1–1–86 APPD /	SDG&E ELECTRIC STANDARDS 2.4 OR 4KV, SINGLE PHASE TYPE "W" TRANSFORMER INSTALLATION, 100 KVA MAXIMUM LINE ARM MOUNTED C.O., SECONDARY LINE ARM CONSTRUCTION	1199.306 SUPERSEDES 1136 (1–1–93)

TABLE OF CONTENTS

SCOPE: THIS STANDARD SHOWS THE INSTALLATION METHOD OF A SINGLE PHASE TRANSFORMER, ON ARMLESS TANGENT CONSTRUCTION.

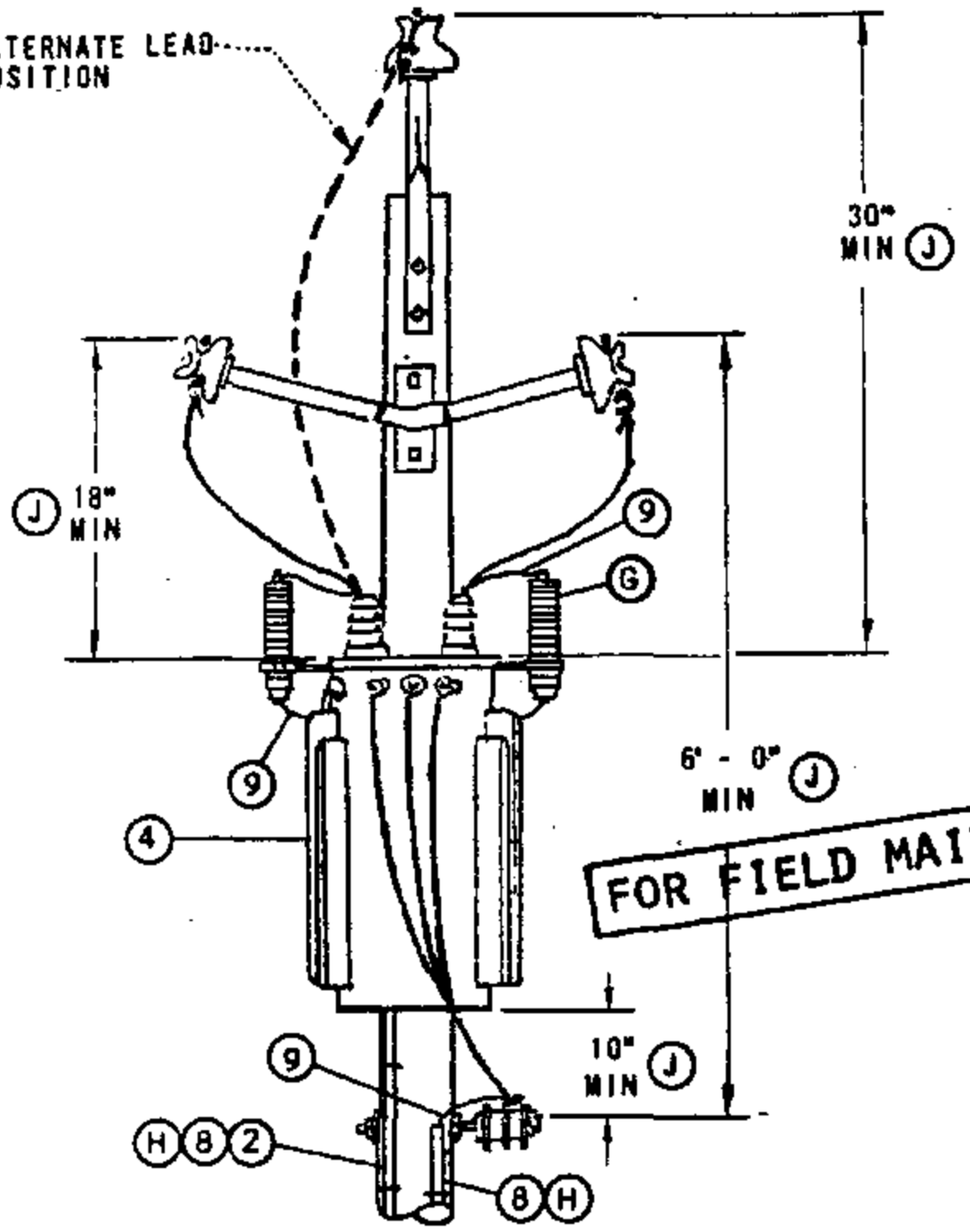

FOR FIELD MAINTENANCE ONLY

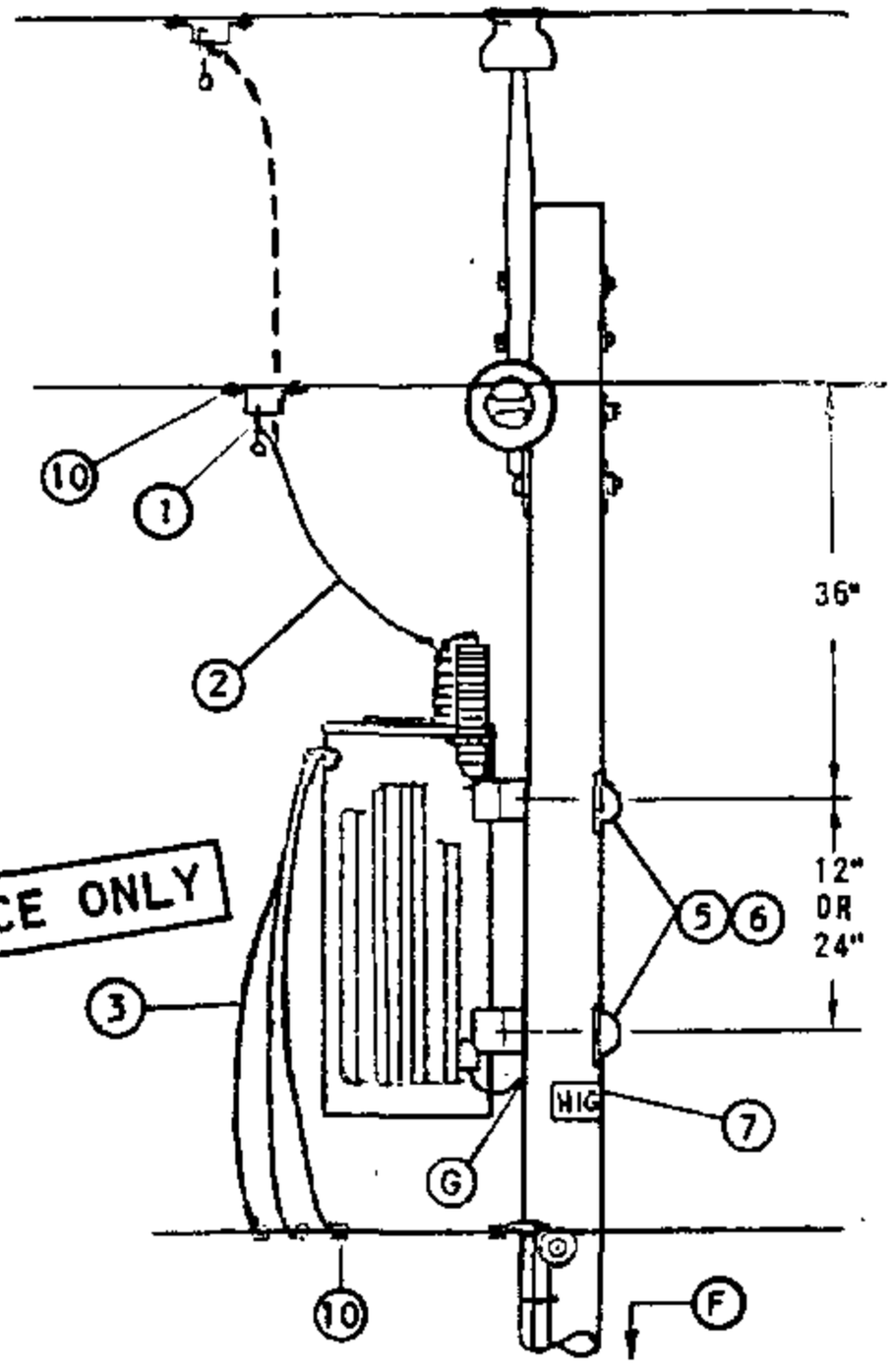

BILL OF MATERIAL:

ITEM	DESCRIPTION	QUANTITY HE, YE	QUANTITY HJ, YJ	STOCK NO OR CONSTR STANDARD
1	CLAMP, HOTLINE & STIRRUP (E)	2	2	STD 788
2	WIRE, #4, BARE STRANDED COPPER	7'	55'	813760
3	WIRE, W.P., COPPER (SIZE GOVERNED BY TRANSFORMER CAPACITY)	21'	21'	STD 1125
4	TRANSFORMER, SINGLE PHASE (TYPE 'HE', 'HJ', 'YE' OR 'YJ')	1	1	STD 1121
5	BOLT, MACH, GALV, 5/8" OR 3/4" X (LENGTH AS REQ'D), 1 SQ CURVED & 1 OBL COIL SPRING WASHER (E)	2	2	STD 392
6	COVER, BOLT, PLASTIC & (E) 6 - 10D NAILS, GALV (E)	2 -	2 -	285696 491392
7	SIGN, HIGH VOLTAGE & (E) 8 ROOFING NAILS, GALV (E)	1 -	1 -	647648 492224
8	UNIT GROUND, COMPLETE (H)	1	2	603136
9	WIRE, #6 BARE STRANDED COPPER	42'	50'	813536
10	CONNECTORS, WIRE COMPRESSION, CU OR AL, AS REQ'D (E)	AS REQ'D		783-787

INSTALLATION:

A. WHEN INSTALLING A NEW STATION ON THE 7.2/12.47KV SYSTEM IN MEOD, IF NO PRIMARY NEUTRAL GROUND EXISTS ON THE POLE, INCLUDE THE NECESSARY MATERIALS TO INSTALL THE REQUIRED PRIMARY NEUTRAL GROUND. CONNECT TO TRANSFORMER TANK GAP GROUND.

(E) EXEMPT MATERIAL.

REFERENCE:

(F) POLE STEPPING - SEE STANDARD 363.

(G) WHEN LIGHTNING ARRESTERS ARE REQUIRED PER STANDARD 1247, USE TYPE 'HJ' OR 'YJ' TRANSFORMERS, AND GROUND TANK GAP.

(H) GROUNDING METHODS - SEE STANDARD 1002.

I. FOR POLE TOP MATERIAL - SEE DISTRIBUTION POLE TOPS (SECTION 400). FGS AND PTP ARE SHOWN FOR ILLUSTRATIVE PURPOSES ONLY.

(J) G.O. 95 MINIMUM REQUIREMENTS.

K. FOR AERIAL CABLE CONSTRUCTION - SEE SECTION 600.

TABLE OF CONTENTS

SDG&E ELECTRIC STANDARDS

DATE 1-1-86
APPD AK/RDS

7.2 OR 12KV SINGLE PHASE YE, YJ, HE, OR HJ TRANSFORMER INSTALLATION 100 KVA MAXIUM ARMLESS TANGENT CONSTRUCTION

1199.401
SUPERSEDES
1141 (1-1-86)

SCOPE: THIS STANDARD SHOWS THE INSTALLATION METHOD OF A SINGLE PHASE TRANSFORMER, ON ARMLESS DEADEND CONSTRUCTION.

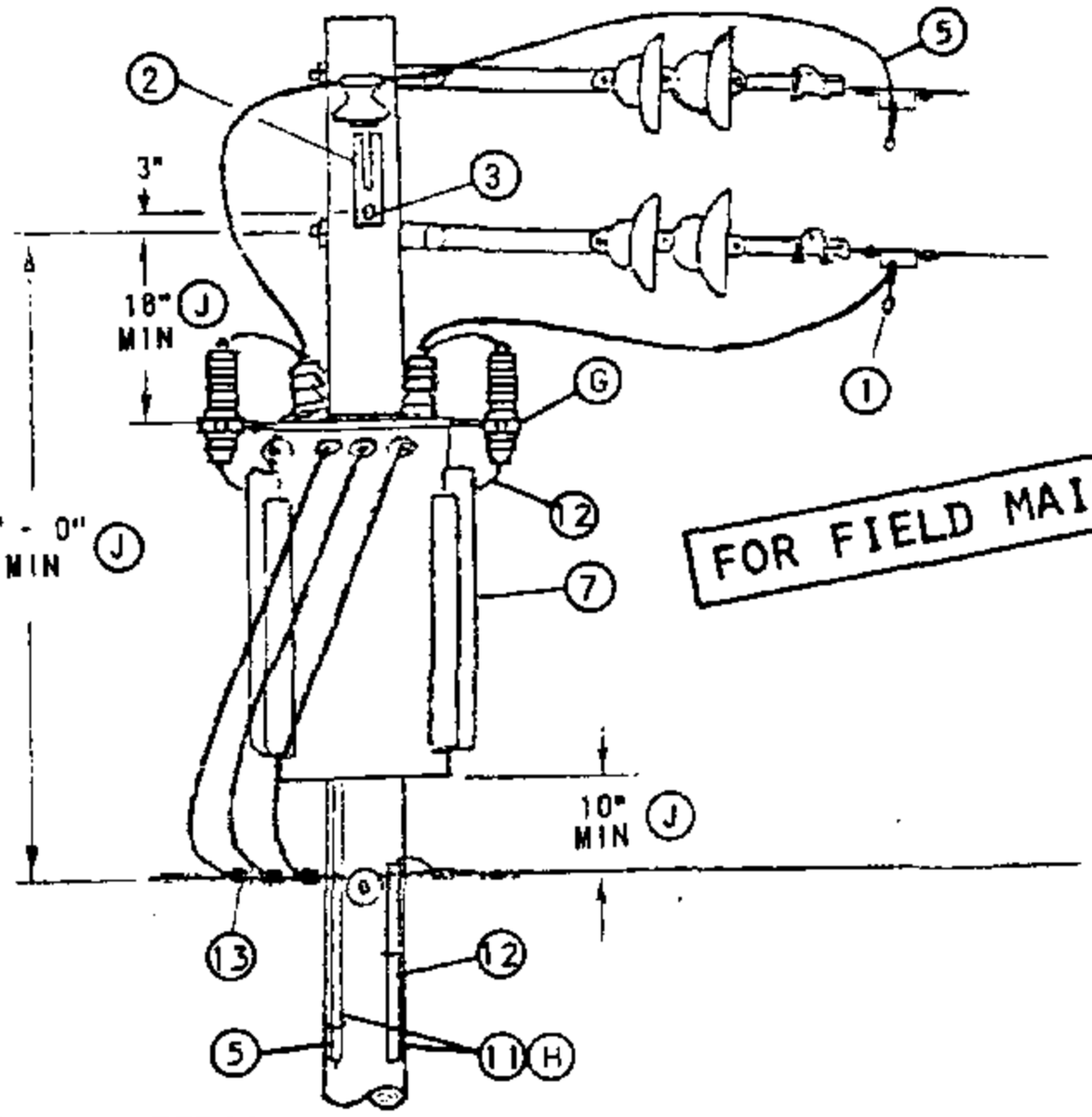

FOR FIELD MAINTENANCE ONLY

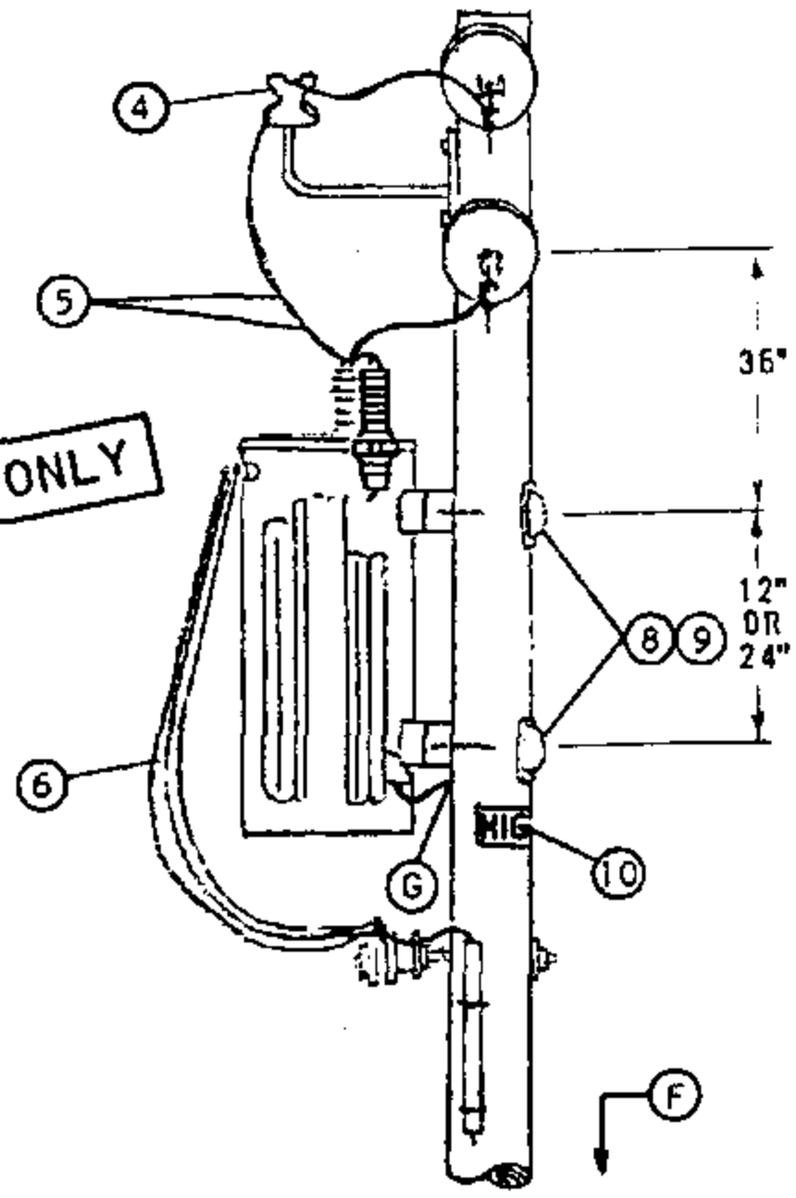

BILL OF MATERIAL:

ITEM	DESCRIPTION	QUANTITY HE, YE	QUANTITY HJ, YJ	STOCK NO OR CONSTR STANDARD
1	CLAMP, HOTLINE & STIRRUP (E)	2	2	STD 788
2	BRACKET, INSULATOR, 1", LEAD THREAD	1	1	166144
3	SCREW, LAG, GALV, 1/2" X 4" (E)	2	2	621568
4	INSULATOR, 12KV, CLASS 55-5	1	1	429056
5	WIRE, #4, BARE STRANDED COPPER	12'	55'	813760
6	WIRE, W.P., COPPER (SIZE GOVERNED BY TRANSFORMER CAPACITY)	21'	21'	STD 1125
7	TRANSFORMER, SINGLE PHASE (TYPE 'HE', 'HJ', 'YE' OR 'YJ')	1	1	STD 1121
8	BOLT, MACH, GALV, 5/8" OR 3/4" X (LENGTH AS REQ'D), 1 SQ CURVED & 1 DBL COIL SPRING WASHER (E)	2	2	STD 392
9	COVER, BOLT, PLASTIC & (E) 6 - 10D NAILS, GALV (E)	2 -	2 -	285696 491392
10	SIGN, HIGH VOLTAGE & (E) 8 ROOFING NAILS, GALV (E)	1 -	1 -	647648 492224
11	UNIT GROUND, COMPLETE (H)	1	2	603136
12	WIRE, #6 BARE STRANDED COPPER	42'	50'	813536
13	CONNECTORS, WIRE COMPRESSION, CU OR AL, AS REQ'D (E)	AS REQ'D		783-787

INSTALLATION:

A. WHEN INSTALLING A NEW STATION ON THE 7.2/12.47KV SYSTEM IN MEOD, AND IF NO PRIMARY NEUTRAL GROUND EXIST ON THE POLE, INCLUDE THE NECESSARY MATERIALS TO INSTALL THE REQUIRED PRIMARY NEUTRAL GROUND. CONNECT TO TRANSFORMER TANK GAP GROUND.

B. FOR USE ONLY WHERE FUTURE EXTENSION IS UNLIKELY, SUCH AS CUL-DE-SACS.

(E) EXEMPT MATERIAL.

REFERENCE:

(F) POLE STEPPING - SEE STANDARD 363.

(G) WHEN LIGHTNING ARRESTERS ARE REQUIRED PER STANDARD 1247, USE TYPE 'HJ' OR 'YJ' TRANSFORMERS, AND GROUND TANK GAP.

(H) GROUNDING METHODS - SEE STANDARD 1002.

(J) FOR POLE TOP MATERIAL - SEE DISTRIBUTION POLE TOPS (SECTION 400).
G.O. 95 MINIMUM REQUIREMENTS.

K. FOR AERIAL CABLE CONSTRUCTION - SEE SECTION 600.

1199.402 SUPERSEDES 1142 (1-1-86)	SDG&E ELECTRIC STANDARDS 7.2 OR 12KV SINGLE PHASE YE, YJ, HE, OR HJ TRANSFORMER INSTALLATION 100 KVA MAXIMUM ARMLESS DEAD END CONSTRUCTION	ISSUE 1993 DATE 1-1-86 APPD AK

TABLE OF CONTENTS

SCOPE: THIS STANDARD SHOWS THE INSTALLATION METHOD OF A SINGLE PHASE TRANSFORMER, WITH SECONDARY RACK CONSTRUCTION.

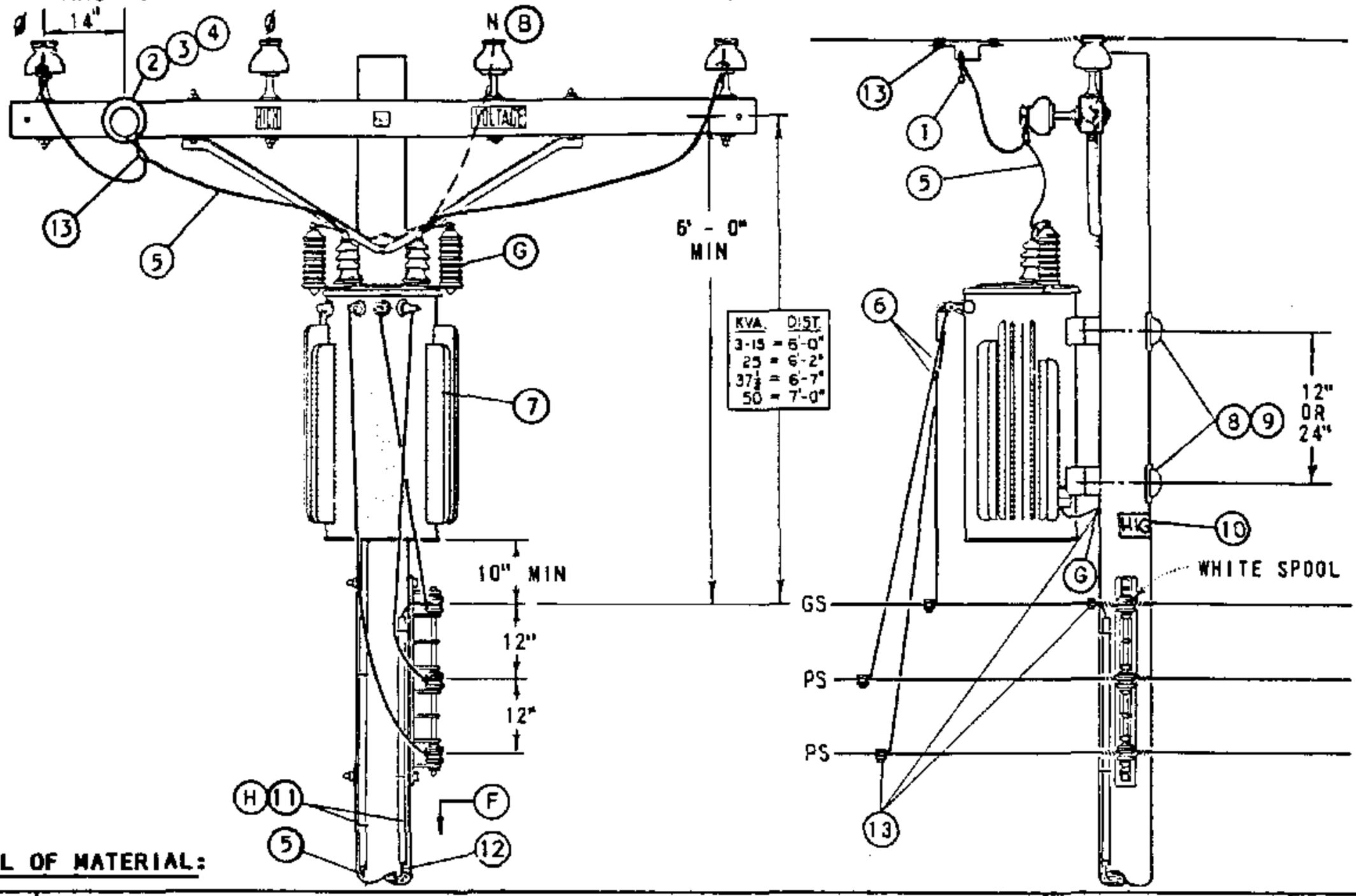

BILL OF MATERIAL:

ITEM	DESCRIPTION	QUANTITY HE,YE	QUANTITY HJ,YJ	STOCK NO OR CONSTR STANDARD
1	CLAMP, HOTLINE & STIRRUP (E)	2	2	STD 788
2	BOLT, MACH, GALV, 5/8" X (LENGTH AS REQ'D), 2 SQ WASHERS & 1 DBL COIL SPRING WASHER (E)	1	1	STD 392
3	PIN, TRANSFORMER LEAD ADAPTER 1" OR (E)	1	1	529248
	1 3/8" (E)	1	1	529216
4	INSULATOR, 12KV, 1" OR 1 3/8" PIN	1	1	STD 750
5	WIRE, #4, BARE STRANDED COPPER	14'	55'	813760
6	WIRE, W.P., COPPER (SIZE GOVERNED BY TRANSFORMER CAPACITY)	21'	21'	STD 1125
7	TRANSFORMER, SINGLE PHASE (TYPE HE, HJ, OR YJ, YE)	1	1	STD 1121
8	BOLT, MACH, GALV, 5/8" OR 3/4" X (LENGTH AS REQ'D), 1 SQ CURVED & 1 DBL COIL SPRING WASHER (E)	2	2	STD 392
9	COVER, BOLT, PLASTIC & (E)	2	2	285696
	6 - 10D NAILS, GALV (E)	-	-	491392
10	SIGN, HIGH VOLTAGE & (E)	1	1	647648
	9 ROOFING NAILS, GALV (E)	-	-	492224
11	UNIT GROUND, COMPLETE (H)	1	2	603136
12	WIRE, #6 BARE STRANDED COPPER	42'	50'	813536
13	CONNECTORS, WIRE COMPRESSION, CU OR AL, AS REQ'D (E)	AS REQ'D		783-787

FOR FIELD MAINTENANCE ONLY

INSTALLATION:

A. WHEN INSTALLING A NEW STATION ON THE 7.2/12.47KV SYSTEM IN MEOD IF NO PRIMARY NEUTRAL GROUND EXISTS ON THE POLE, INCLUDE THE NECESSARY MATERIALS TO INSTALL THE REQUIRED PRIMARY NEUTRAL GROUND. CONNECT TO TRANSFORMER TANK GAP GROUND.

(B) YE & YJ TRANSFORMERS ARE TO BE CONNECTED PHASE TO NEUTRAL.

(E) EXEMPT MATERIAL.

REFERENCE:

(F) POLE STEPPING - SEE STANDARD 363.

(G) WHEN LIGHTNING ARRESTERS ARE REQUIRED PER STANDARD 1247, USE 'HJ' OR 'YJ' TYPE TRANSFORMER WITH TANK GAP GROUND.

(H) GROUNDING METHODS - SEE STANDARD 1002.

DATE 1-1-86
APPD AK/RBB

SDG&E ELECTRIC STANDARDS

7.2 OR 12KV SINGLE Ø YE, YJ, HE OR HJ TRANSFORMER INSTALLATION, SECONDARY RACK CONSTRUCTION

1199.403
SUPERSEDES
1145 (1-1-93)

TABLE OF CONTENTS

SCOPE: THIS STANDARD SHOWS THE INSTALLATION METHOD OF A TYPE 'H' TRANSFORMER, WITH CUTOUT ARM AND SECONDARY RACK CONSTRUCTION.

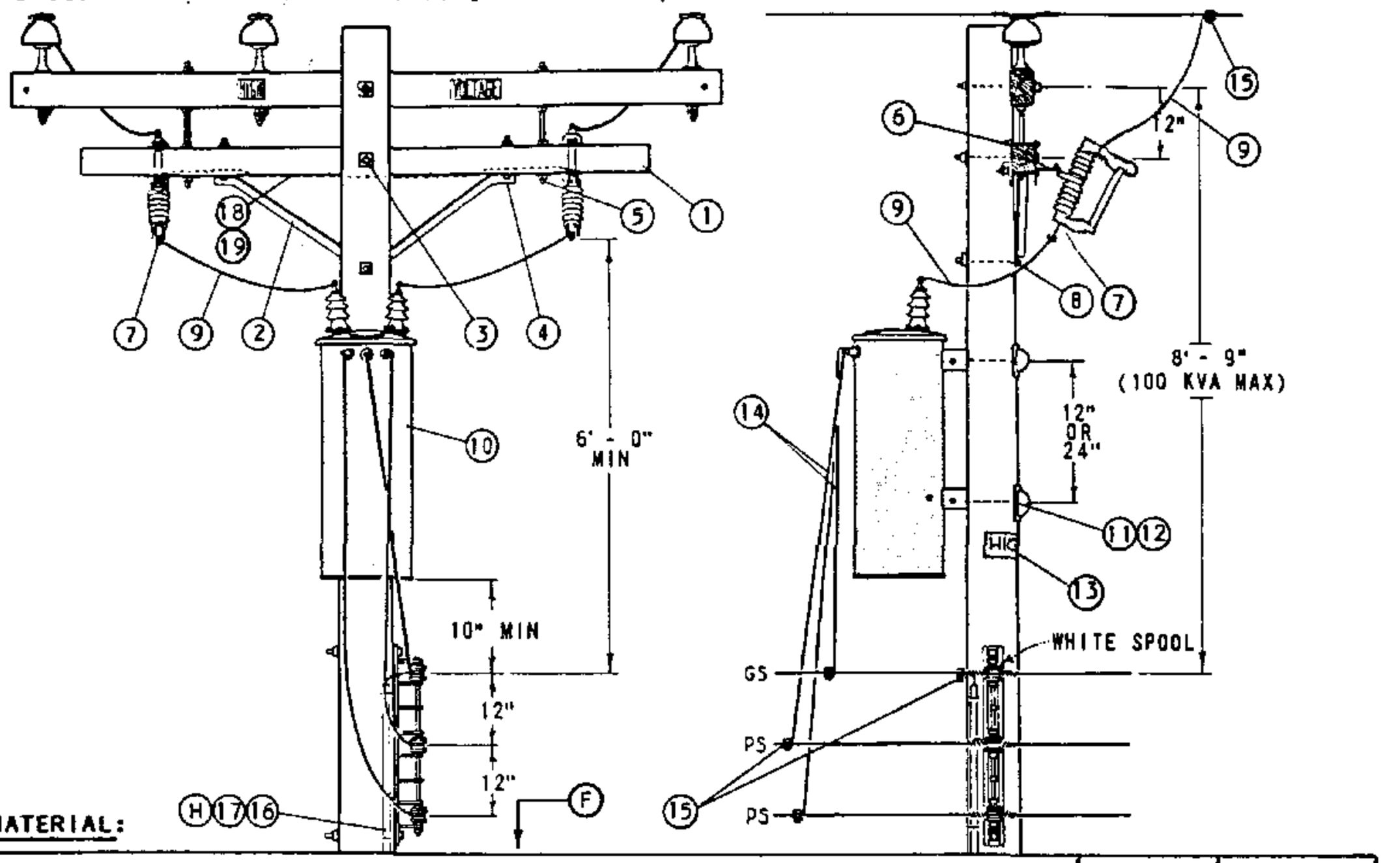

BILL OF MATERIAL:

ITEM	DESCRIPTION		QUANTITY	STOCK NO. OR CONSTR STANDARD
1	CROSSARM, 3 1/2" X 4 1/2" X 8' - 0"		1	293680
2	BRACE, ANGLE, CROSSARM, 4' - 0"		1	164032
3	BOLT, MACH, GALV, 5/8" X (LENGTH AS REQ'D), 2 SQ & 1 DBL COIL SPRING WASHER	(E)	1	STD 392
4	BOLT, MACH, GALV, 1/2" X 7", 1 RD & 1 SPRING LOCK WASHER	(E)	2	STD 392
5	BOLT, SPACE, GALV, 5/8" X 20", 4 SQ & 2 DBL COIL SPR WASHERS	(E)	2	STD 392
6	BRACKET, CUTOUT/ARRESTER, FOR CROSSARM MOUNTING	(E)	2	166070
7	CUTOUT, 12KV		2	STD 1212
8	BOLT, MACH, GALV, 5/8" X (LENGTH AS REQ'D), 1 SQ & 1 DBL COIL SPRING WASHER	(E)	1	STD 392
9	WIRE, #4 BARE STRANDED COPPER		14'	813760
10	TRANSFORMER, SINGLE PHASE, TYPE 'H'		1	STD 1121
11	BOLT, MACH, GALV, 5/8" OR 3/4" X (LENGTH AS REQ'D), 1 SQ CURVED & 1 DBL COIL SPRING WASHER	(E)	2	STD 392
12	COVER, BOLT, PLASTIC &	(E)	2	285696
	6 - 10D NAILS, GALV	(E)	-	491392
13	SIGN, HIGH VOLTAGE &	(E)	1	647648
	9 ROOFING NAILS, GALV	(E)	-	492224
14	WIRE, W.P., COPPER (SIZE GOVERNED BY TRANSFORMER CAPACITY)		21'	STD 1125
15	CONNECTORS, WIRE COMPRESSION, CU OR AL, AS REQ'D	(E)	AS REQ'D	783-787
16	WIRE, #6 BARE STRANDED COPPER		40'	813536
17	UNIT GROUND, COMPLETE	(H)	1	603136
18	WIRE, #8 BARE SOLID ANNEALED COPPER	(I)	8'	812928
19	STAPLES, FENCE, GALV, 1 1/4"	(I) (E)	AS REQ'D	678528

FOR FIELD MAINTENANCE ONLY

INSTALLATION:

(E) EXEMPT MATERIAL.

REFERENCE:

(F) POLE STEPPING - SEE STANDARD 363.

(G) FOR LIGHTNING ARRESTER REQUIREMENTS - SEE STANDARD 1247.

(H) GROUNDING METHODS - SEE STANDARD 1002.

(I) BOND ALL CUTOUTS IN HEAVY CONTAMINATION DISTRICT AS IDENTIFIED ON STANDARDS PAGE 287. IF BONDING IS REQUIRED, ORDER ADDITIONAL ITEMS 18 & 19.

TABLE OF CONTENTS

1199.404
SUPERSEDES
1147 (1-1-93)

SDG&E ELECTRIC STANDARDS

12KV, SINGLE PHASE TYPE "H" TRANSFORMER INSTALLATION, C.O. ARM, SECONDARY RACK CONSTRUCTION

DATE 1-1-86
APPD AK/RBF

SCOPE: THIS STANDARD SHOWS THE INSTALLATION METHOD OF A TYPE 'H' TRANSFORMER, WITH THE CUTOUTS MOUNTED ON THE LINE ARM AND SECONDARY RACK CONSTRUCTION.

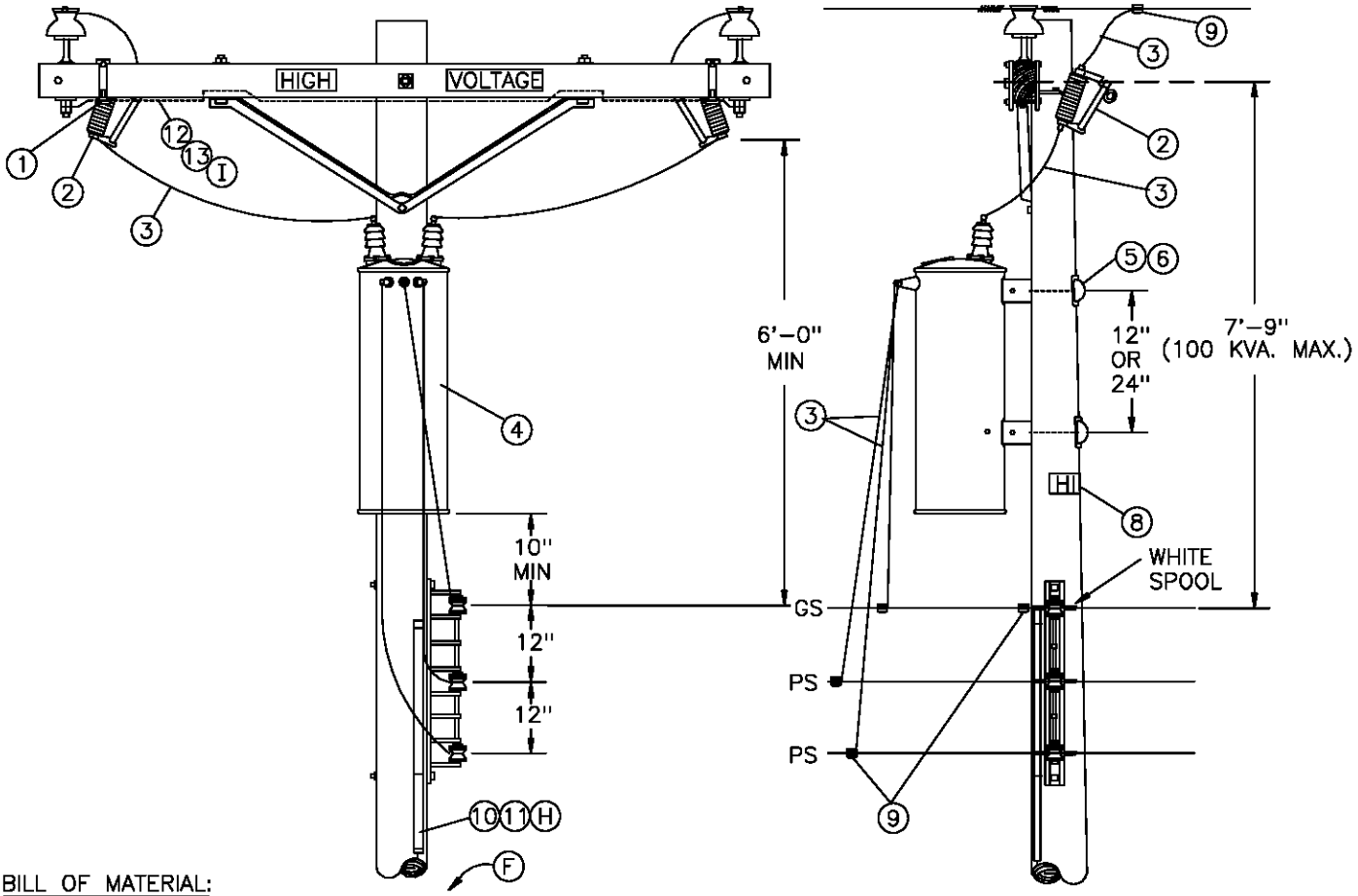

BILL OF MATERIAL:

ITEM	DESCRIPTION	QUANTITY	STOCK NO. OR CONSTR STANDARD
1	BRACKET, CUTOUT/ARRESTER, FOR CROSSARM MOUNTING	2	166070
2	CUTOUT, 12KV	2	STD 1212
3	WIRE, #4 BARE STRANDED COPPER	14'	813760
4	TRANSFORMER, SINGLE PHASE, TYPE 'H'	1	STD 1121
5	BOLT, MACH, GALV, 5/8" OR 3/4" X (LENGTH AS REQ'D), 1 SQ CURVED & 1 DBL COIL SPRING WASHER	2	STD 392
6	COVER, BOLT, PLASTIC & 6 – 10D NAILS, GALV	2 –	285696 491392
7	WIRE, W.P., COPPER (SIZE GOVERNED BY TRANSFORMER CAPACITY)	21'	STD 1125
8 1	SIGN, HIGH VOLTAGE & 8 ROOFING NAILS, GALV	1 –	647648 492224
9	CONNECTORS, WIRE COMPRESSION, CU OR AL, AS REQ'D	AS REQ'D	783–787
10	WIRE, #6 BARE STRANDED COPPER	40'	813536
11	UNIT GROUND, COMPLETE (H)	1	603136
12	WIRE, #8 BARE SOLID ANNEALED COPPER (I)	10'	812928
13	STAPLES, FENCE, GALV, 1 1/4" (I)	AS REQ'D	678528

FOR FIELD MAINTENANCE ONLY

REFERENCE:

(F) POLE STEPPING – SEE STANDARD 363.
G. FOR LIGHTNING ARRESTER REQUIREMENTS – SEE STANDARD 1247.
(H) GROUNDING METHODS – SEE STANDARD 1002.
BOND ALL CUTOUTS IN HEAVY CONTAMINATION DISTRICT AS IDENTIFIED ON STANDARDS PAGE 827.
(I) IF BONDING IS REQUIRED, ORDER ADDITIONAL ITEMS 12 & 13.

	SDG&E ELECTRIC STANDARDS	
DATE 1–1–86 APPD /	12KV SINGLE PHASE TYPE "H" TRANSFORMER INSTALLATION 100KVA MAX, LINE ARM MOUNTED CO'S, SECONDARY RACK CONSTRUCTION	1199.405 SUPERSEDES 1149 (1–1–93)

TABLE OF CONTENTS

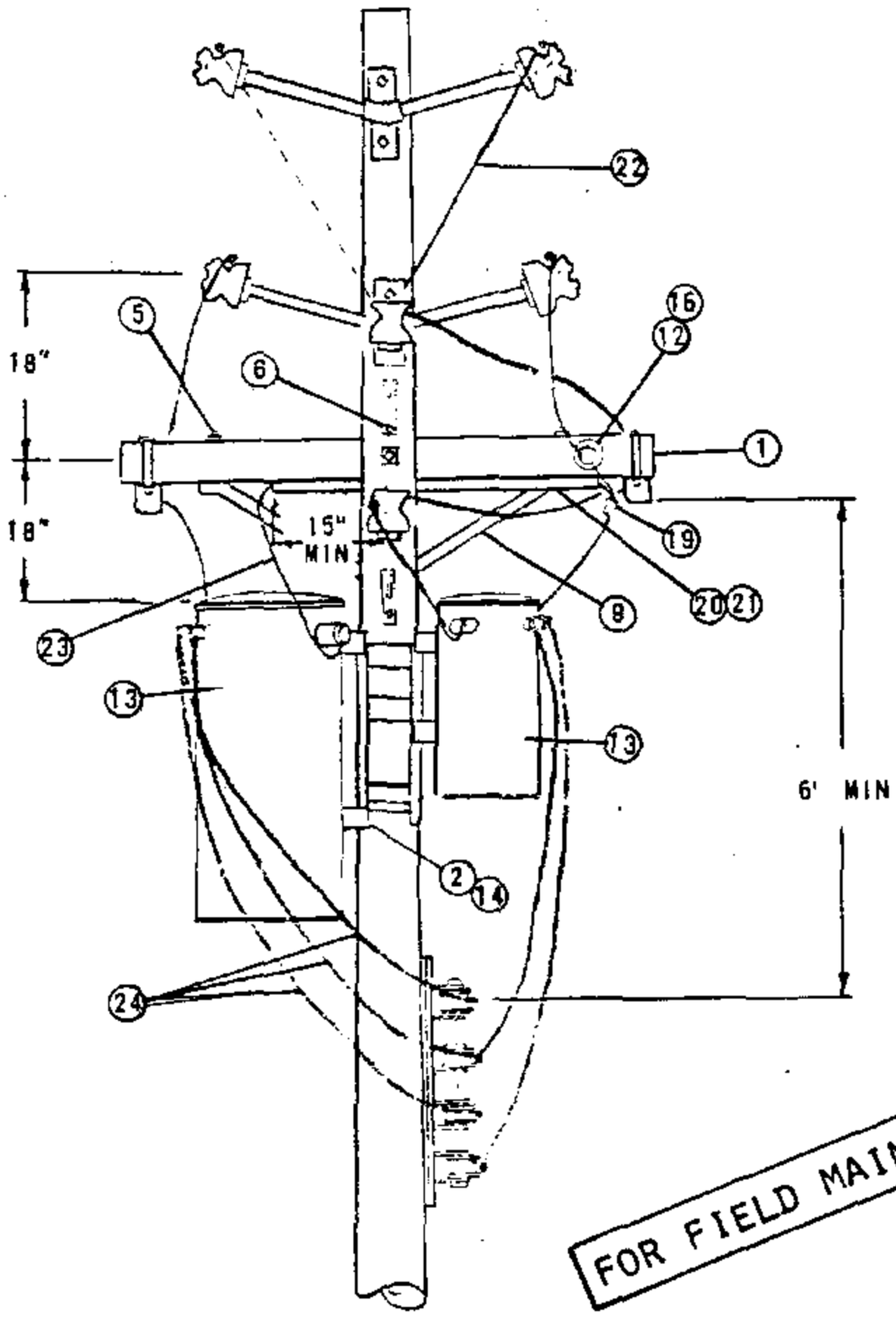

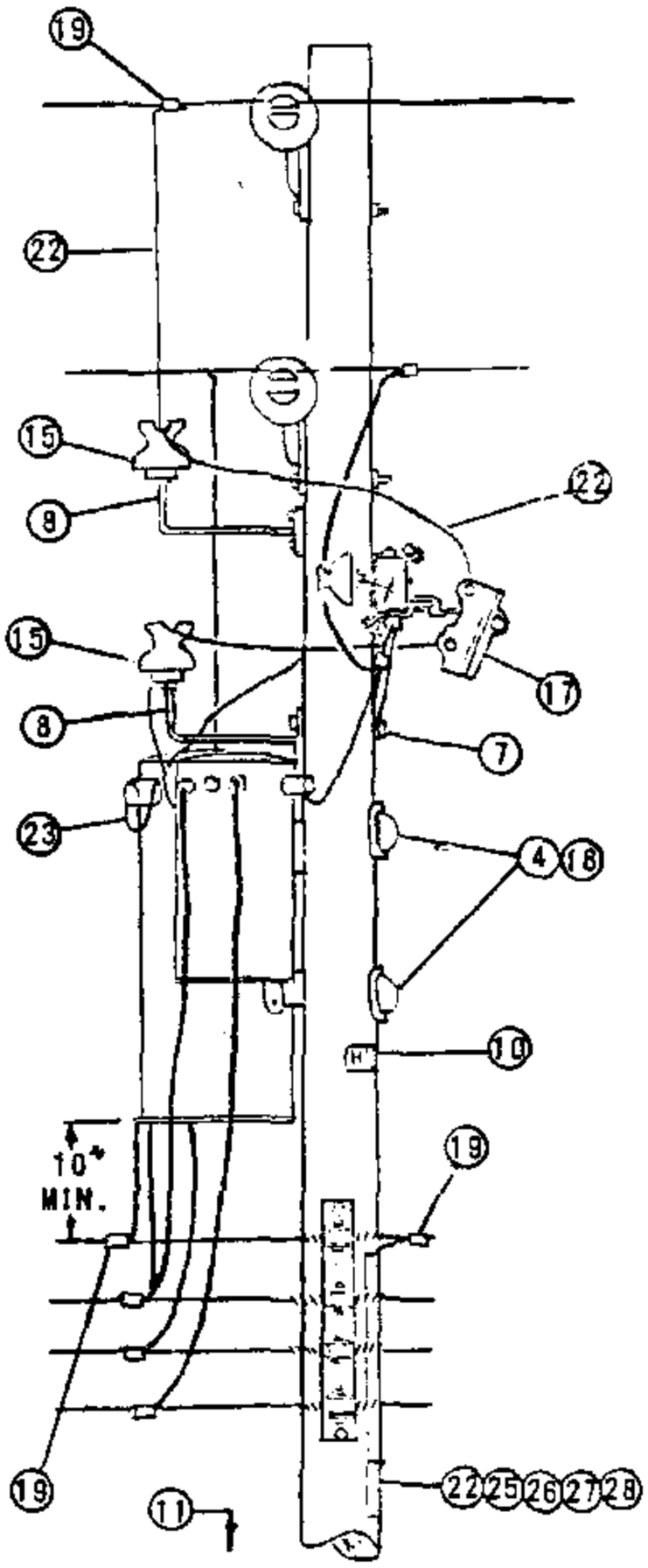

FOR FIELD MAINTENANCE ONLY

TABLE OF CONTENTS

DATE 1-1-86 APPD AE/KDS	SDG&E ELECTRIC STANDARDS 4KV OPEN WYE OR 2.4KV OPEN DELTA TYPE "W" TRANSFORMER INSTALLATION 2-50KVA MAX., ARMLESS TANGENT CONSTRUCTION	1199.501 SUPERSEDES 1154.1 (1-1-86)

NOTES:

(A) LIMITED TO TWO 50KVA MAXIMUM TRANSFORMER BECAUSE OF ENCROACHMENT INTO CLIMBING SPACE.
(B) USE TWO GROUND RODS SPACED A MINIMUM OF 6 FEET APART FOR EACH GROUND UNIT.
(C) 2.4KV 3ϕ OPEN DELTA INSTALLATIONS REQUIRE THREE CUTOUTS. FOR CONNECTIONS SEE PAGES 1117 AND 1118.
D. DO NOT USE OPEN DELTA OR OPEN WYE CONSTRUCTION WHERE SIZE OF A SINGLE 3ϕ MOTOR IS 15 HP OR LARGER.
(E) EXEMPT MATERIAL.
F. SEE DISTRIBUTION POLE TOPS SECTION FOR POLE TOP MATERIAL.
(G) UNIT GROUND COMPLETE ORDER 603120 WITH GRAY MOULDING, 603136 WITH PLAIN MOULDING.
H. SEE ARRESTER SECTION FOR ARRESTER REQUIREMENTS.

ITEM PTF	ITEM LTI	DESCRIPTION	QUANTITY	STOCK NO. OR CONSTR STD.
1		CROSSARM, 3 1/2"X 4 1/2"X 6'-0"	1	PG
2		BOLT, MACH., GALV., 5/8" (E) OR 3/4"X 2", 1 LOCK SPR WASH.	4	PGS 139, 140
3		BOLT, MACH., GALV., 5/8"X___", 2 SQ WASH. 1 DBL. COIL SPR. WASH. (E)	1	PGS 139, 140
4		BOLT, MACH., GALV., 3/4"X___", 1 SQ. CURV. WASH. WASH & 1 DBL COIL SPR. WASH.	2	PGS 139, 140
5		BOLT, MACH., GALV., 1/2"X 6", 1 RD WASH., 1 DBL. COIL SPR. WASH. (E)	2	153088
6		SCREW, LAG. GALV., 1/2"X 4" (E)	4	621568
7		SCREW, LAG. GALV., 5/8"X 5" (E)	1	621600
8		BRACKET, INSULATOR, 1"	2	166144
9		BRACE, CROSSARM, ANGLE 4'-0"	1	164032
10		SIGN, HIGH VOLTAGE & 8 ROOFING NAILS, GALV. (E)	1	647648, 492224
11		STEPS, POLE (E)	16	692992
	12	BOLT, MACH. 5/8" X 5" (E)	1	155488
	13	TRANSFORMER, SINGLE PHASE	2	PGS 1121.1-1121.12
	14	BRACKET, TRANSFORMER MOUNTING	1	402976
	15	INSULATOR (E)	2	429024, 429216
	16	PIN ADAPTER, 1 INCH THREAD	1	529248
	17	CUTOUT, 5KV (C)	2	PG 1211
	18	COVER, PLASTIC THRU BOLT & 2-20D NAILS, GALV. (E)	2	285696, 491392
	19	CONNECTORS, WIRE COMPRESSION	9	PGS 783-787
	20	CONDUIT, PVC, 3/4", SCHEDULE 40, TYPE 11 (E)	4'-0"	251328
	21	STRAPS, PIPE, 3/4", 2-6D NAILS, GALV. (E)	3	697888
	22	WIRE, BARE STRANDED COPPER #6	41'	813536
	23	WIRE, INSULATED, XLP, STRANDED COPPER, 5KV, #6	30'	194304
	24	WIRE, W.P., COPPER, (SIZE GOVERNED BY TRANSFORMER CAPACITY)	30'	PG 1125
	25	ROD, GROUND & CLAMP (B) (G)	2	603072, 230016 (E)
	26	MOULDING, HARDWOOD, 1" (G)	27'	487200
	27	STAPLES, MOULDING, GALV., 3"X 1 1/16"x 1/4" (G) (E)	18	678560
	28	STAPLES, FENCE, GALV., 1 1/4" (G) (E)	20	678528
	29			

FOR FIELD MAINTENANCE ONLY

TABLE OF CONTENTS

1199.502
SUPERSEDES
1154.2 (1-1-86)

SDG&E ELECTRIC STANDARDS

4KV OPEN WYE OR 2.4KV OPEN DELTA TYPE "W" TRANSFORMER
INSTALLATION 2-50KVA MAX., ARMLESS TANGENT CONSTRUCTION

DATE 1-1-86
APPD AK/RDS

SCOPE: THIS STANDARD SHOWS THE INSTALLATION METHOD OF A TYPE 'H' TRANSFORMER, WITH THE CUTOUTS MOUNTED ON THE LINE ARM AND SECONDARY CROSSARM CONSTRUCTION.

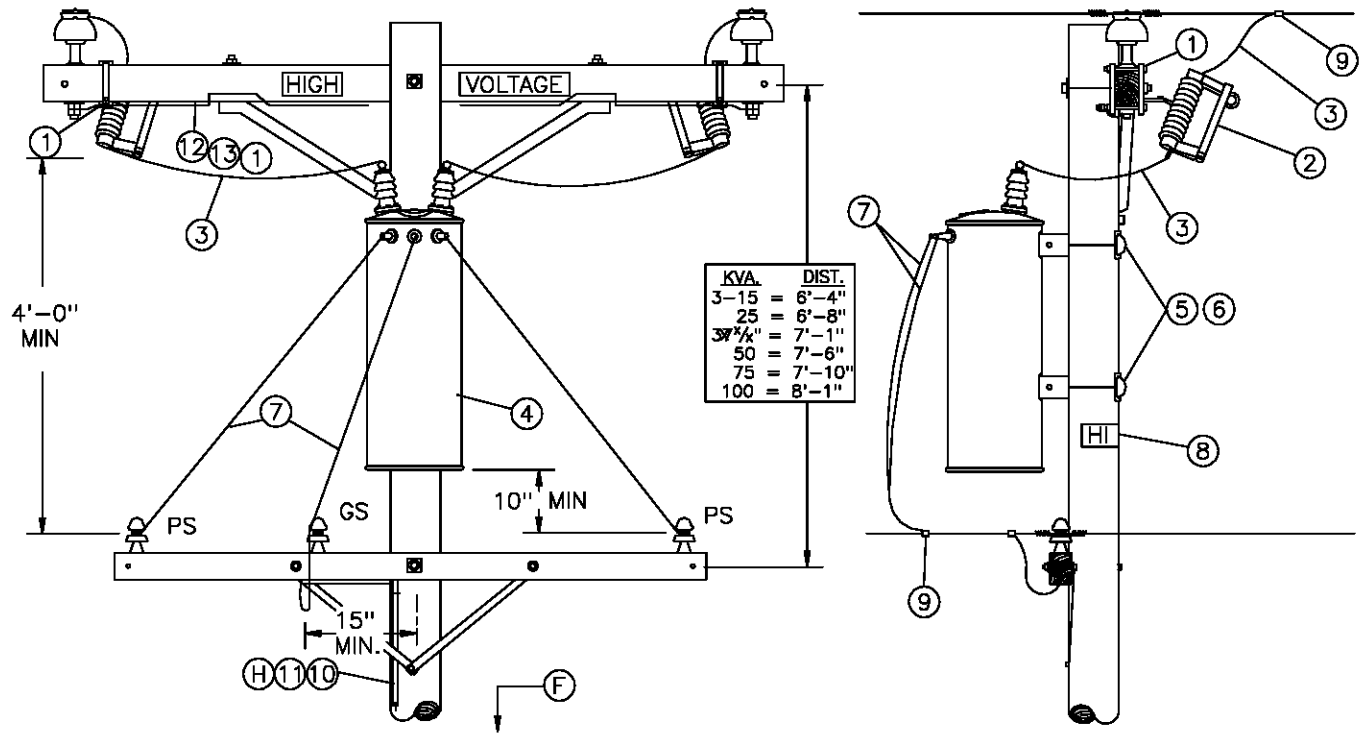

BILL OF MATERIAL:

ITEM	DESCRIPTION	QUANTITY	STOCK NO. OR CONTR STANDARD
1	BRACKET, CUTOUT/ARRESTER, FOR CROSSARM MOUNTING	2	166070
2	CUTOUT, 12KV	2	STD 1212
3	WIRE, #4 BARE STRANDED COPPER	14'	813536
4	TRANSFORMER, SINGLE PHASE, TYPE 'H'	1	STD 1121
5	BOLT, MACH, GALV, 5/8" OR 3/4" X (LENGTH AS REQ'D), 1 SQ CURVED & 1 DBL COIL SPRING WASHER	2	STD 392
6	COVER, BOLT, PLASTIC & 6 – 10D NAILS, GALV	2 –	285696 491392
7	WIRE, W.P., COPPER (SIZE GOVERNED BY TRANSFORMER CAPACITY)	21'	STD 1125
8	SIGN, HIGH VOLTAGE & 8 ROOFING NAILS, GALV	1 –	647648 492224
9	CONNECTORS, WIRE COMPRESSION, CU OR AL, AS REQ'D	AS REQ'D	783–787
10	WIRE, #6 BARE STRANDED COPPER	40'	813536
11	UNIT GROUND, COMPLETE (H)	1	603136
12	WIRE, #8 BARE SOLID ANNEALED COPPER (I)	10'	812928
13	STAPLES, FENCE, GALV, 1 1/4" (I)	AS REQ'D	678528

FOR FIELD MAINTENANCE ONLY

REFERENCE:

(F) POLE STEPPING – SEE STANDARD 363.

G. FOR LIGHTNING ARRESTER REQUIREMENTS – SEE STANDARD 1247.

(H) GROUNDING METHODS – SEE STANDARD 1002.

(I) BOND ALL CUTOUTS IN HEAVY CONTAMINATION DISTRICT AS IDENTIFIED ON STANDARDS PAGE 287. IF BONDING IS REQUIRED, ORDER ADDITIONAL ITEMS 12 & 13.

DATE 1-1-86 APPD /	SDG&E ELECTRIC STANDARDS 12KV SINGLE PHASE TYPE "H" TRANSFORMER INSTALLATION, 100 KVA MAX, LINE ARM MOUNTED CO'S, SECONDARY LINE ARM CONSTRUCTION	1199.503 SUPERSEDES 1150 (1-1-93)

TABLE OF CONTENTS

SCOPE: THIS STANDARD SHOWS THE INSTALLATION METHOD OF A 4KV OPEN WYE WITH TYPE 'W' TRANSFORMERS, AND SECONDARY LINE ARM CONSTRUCTION.

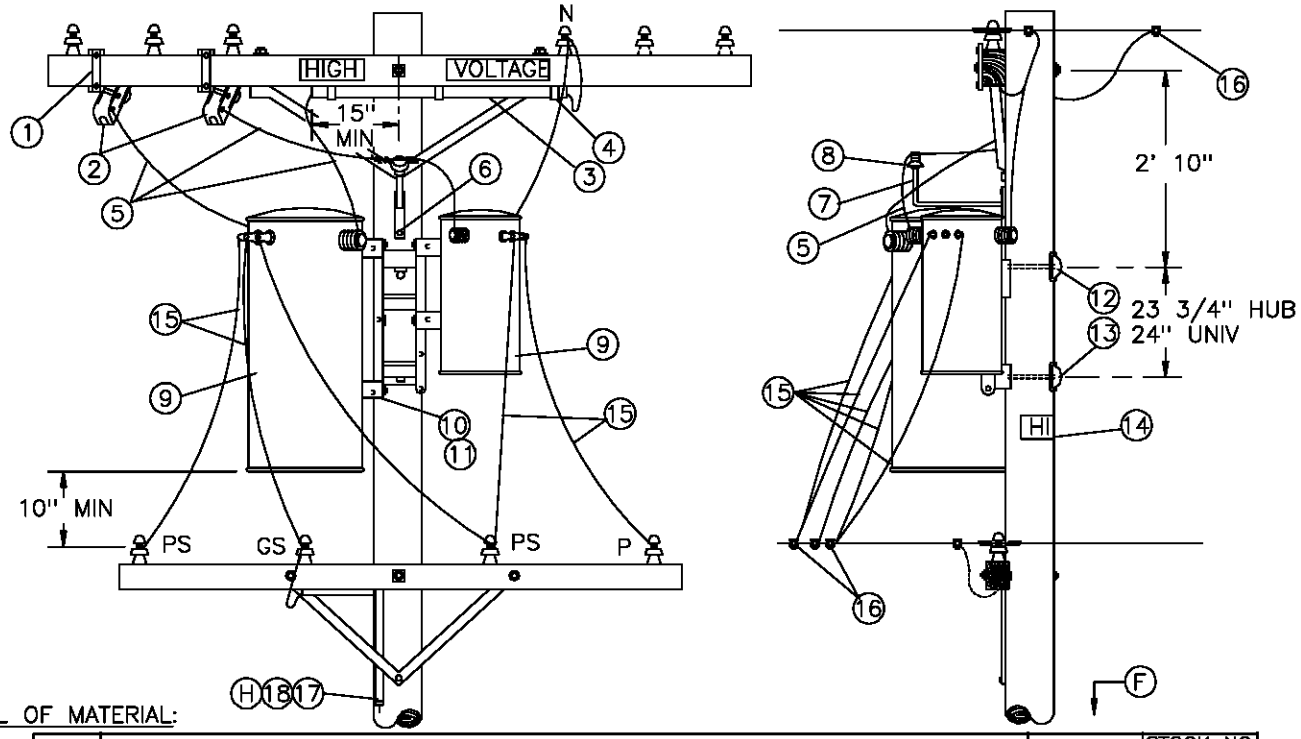

BILL OF MATERIAL:

ITEM	DESCRIPTION	QUANTITY	STOCK NO OR CONSTR STANDARD
1	BRACKET, CUTOUT/ARRESTER, FOR CROSSARM MOUNTING	2	166070
2	CUTOUT, 12KV (B)	2	STD 1212
3	CONDUIT, PVC, 3/4" X 4', SCHED 40, TYPE 2	1	251328
4	STRAP, CONDUIT, 3/4", GALV & 2 – 6D NAILS, GALV	3 –	697888 491552
5	WIRE, 5KV INSULATED, XLP, #6 STRANDED COPPER	25'	194304
6	SCREW, LAG, 1/2" X 4"	2	621568
7	BRACKET, INSULATOR, 1" LEAD THREAD	1	166134
8	INSULATOR, 12KV NEUTRAL	1	429216
9	TRANSFORMER, SINGLE PHASE, TYPE W (A)	1	STD 1121
10	BRACKET, TRANSFORMER MOUNTING	1	402976
11	BOLT, MACH, GALV, 5/8" OR 3/4" X 2", 2 RD & 1 LOCK WASHER	4	STD 392
12	BOLT, MACH, GALV, 3/4" X (LENGTH AS REQ'D), 1 SQ CURV & 1 DBL COIL SPRING WASHER	2	STD 392
13	COVER, VOLT, PLASTIC & 6 – 10D NAILS, GALV	2 –	285696 491392
14	SIGN, HIGH VOLTAGE & 8 ROOFING NAILS, GALV	1 –	647648 492224
15	WIRE, W.P. (SIZE GOVERNED BY TRANSFORMER CAPACITY)	35'	STD 1125
16	CONNECTORS, WIRE COMPRESSION, CU OR AL, AS REQ'D	AS REQ'D	783–787
17	WIRE, BARE STRANDED, COPPER, #6	40'	813536
18	UNIT GROUND, COMPLETE (H)	1	603136

FOR FIELD MAINTENANCE ONLY

INSTALLATION:

(A) LIMITED TO 50 KVA MAXIMUM TRANSFORMER BECAUSE OF ENCROACHMENT INTO CLIMBING SPACE.
(B) 2.4KV 30 OPEN DELTA INSTALLATIONS REQUIRE THREE CUTOUTS. FOR CONNECTIONS SEE PAGE 1117.
C. DO NOT USE OPEN DELTA OR OPEN WYE CONSTRUCTION WHERE SIZE OF A SINGLE 3Ø MOTOR IS 15 HP OR LARGER.

REFERENCE:

(F) POLE–STEPPING – SEE STANDARD 363.
G. FOR LIGHTNING ARRESTER REQUIREMENTS – SEE STANDARD 1247.
(H) GROUNDING METHODS – SEE STANDARD 1002.
I. BOND ALL CUTOUTS IN HEAVY CONTAMINATION DISTRICTS AS IDENTIFIED ON STANDARD 287.

TABLE OF CONTENTS

1199.504 SUPERSEDES 1156 (1–1–93)	SDG&E ELECTRIC STANDARDS 4KV OPEN WYE TYPE "W" TRANSFORMER INSTALLATION, SECONDARY LINE ARM CONSTRUCTION	DATE 1–1–86 APPD /

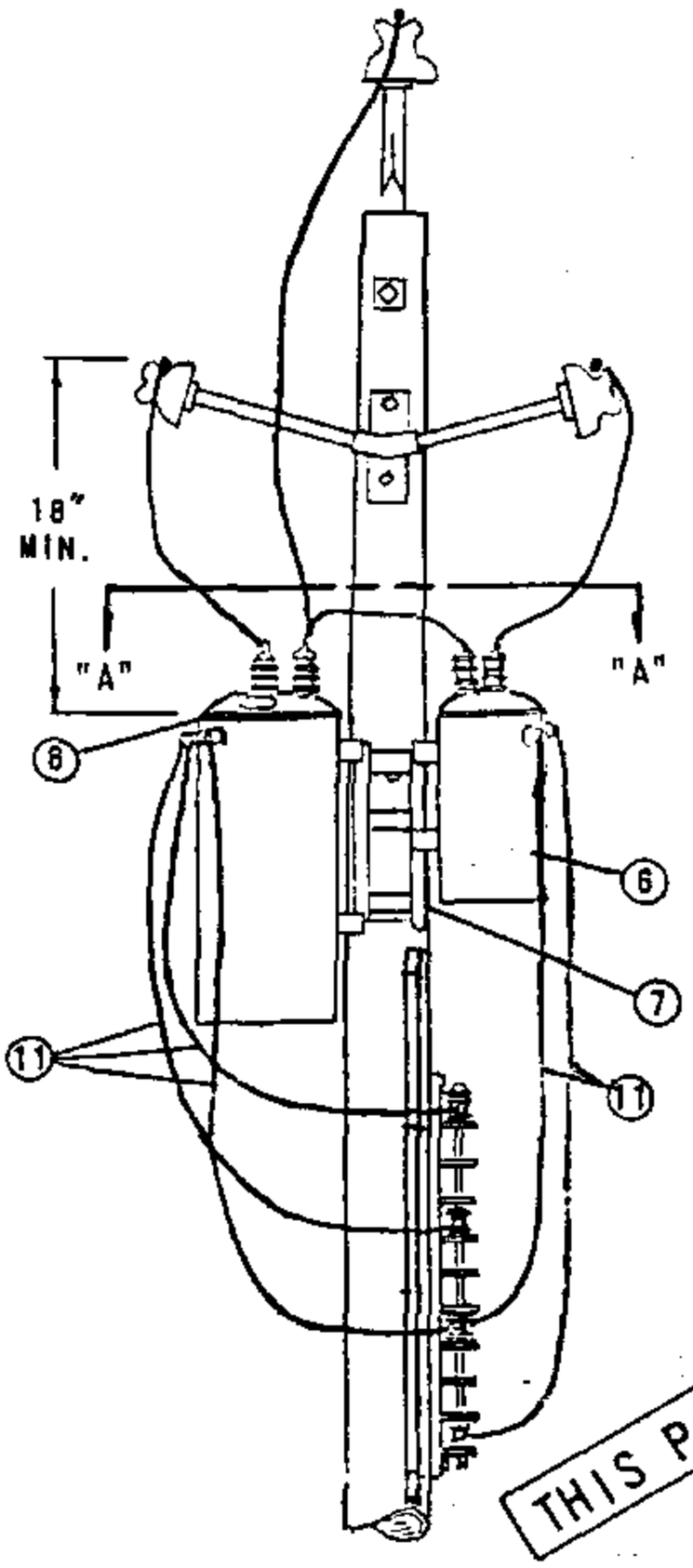

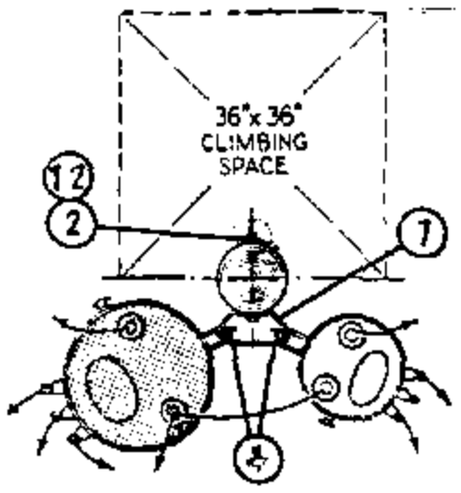

SECTION "A" - "A"

THIS PAGE FIELD MAINTENANCE ONLY

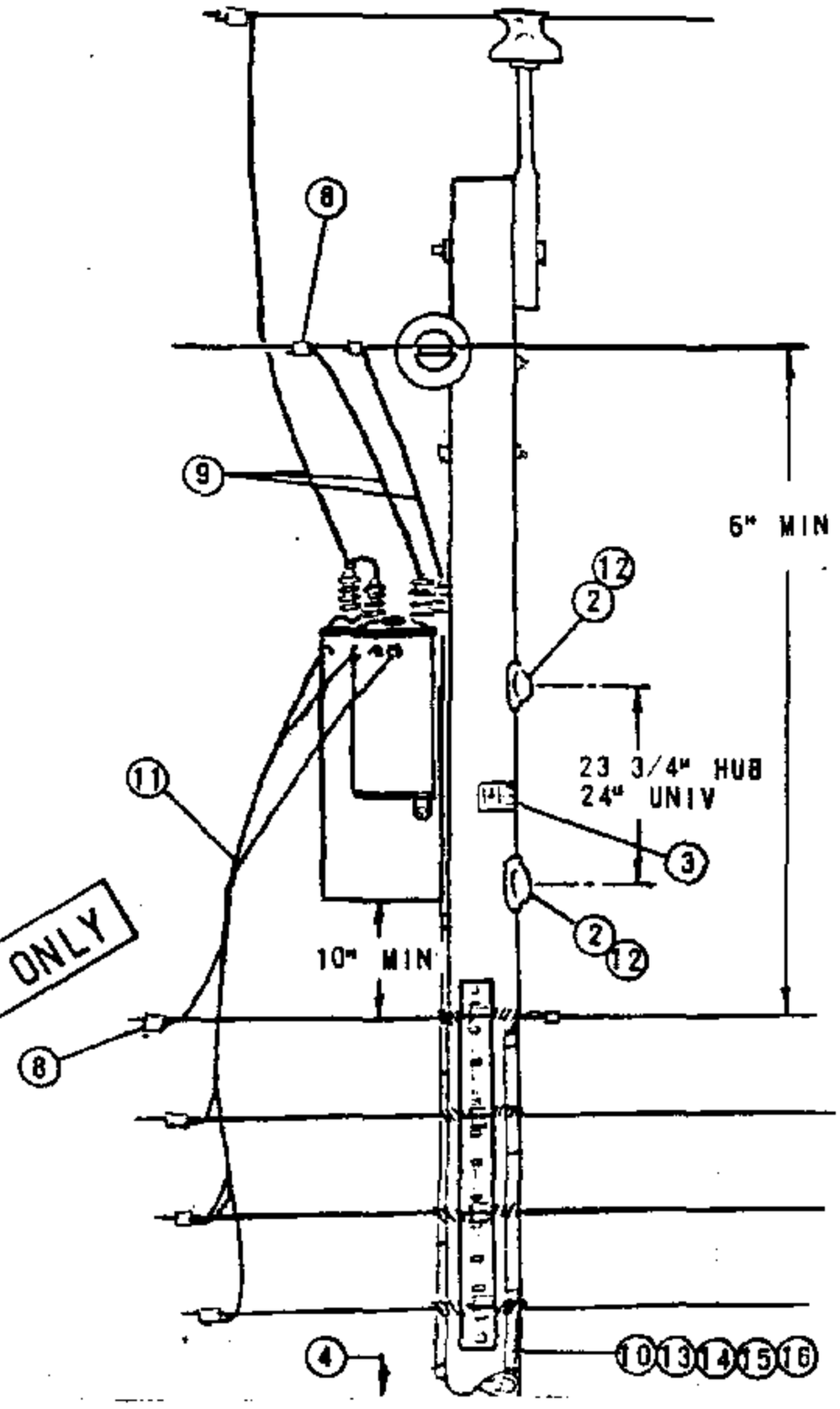

NOTES:

(A) UNIT GROUND COMPLETE ORDER 603120 WITH GRAY MOULDING, 603136 WITH PLAIN MOULDING.

(B) USE TWO ROD GROUND.

C. SEE DISTRIBUTION POLE TOP SECTION FOR POLE TOP MATERIAL.

D. LIMITED TO TWO 50KVA MAXIMUM TRANSFORMER BECAUSE OF ENCROACHMENT INTO CLIMBING SPACE.

(E) EXEMPT MATERIAL.

F. WHEN ARRESTERS ARE REQUIRED PER STANDARDS PAGE 1247, USE TYPE "HJ" TRANSFORMERS.

ITEM PTF	ITEM LTI	DESCRIPTION	QUANTITY HE	QUANTITY HJ	STOCK NO. OR CONSTR. STD.
		BOLT, MACH., GALV., 5/8" (E) OR 3/4" X 2", 1 SQ. CURV WASH., 1 LOCK SPR WASH.	4	4	PGS 139, 140
2		BOLT, MACH., GALV., 3/4"X___" 1 SQ. CURV. WASH, 1 DBL COIL SPR WASH.	2	2	PGS 139,140
3		SIGN, HIGH VOLTAGE & 8 ROOFING NAILS, GALV (E)	1	1	647648, 492192
4		STEPS, POLE (E)	16	16	592992
5					
	6	TRANSFORMER, SELF PROTECTED TYPE, SINGLE PHASE (HE or HJ)	2	2	PGS 1121.01-1121.12
	7	BRACKET, TRANSFORMER MOUNTING	1	1	402976
	8	CONNECTORS, WIRE, COMPRESSION	10	11	PGS 783 - 787
	9	WIRE, BARE STRANDED, COPPER, #6	70'	70'	813536
	10	WIRE, BARE STRANDED, COPPER, #2	—	40'	813664
	11	WIRE, W.P. COPPER, (SIZE GOVERNED BY TRANSFORMER CAPACITY)	30'	30'	PG 1125
	12	COVER, PVC THRU BOLT & 6-100. NAILS, GALV. (E)	2	2	285696, 491392
	13	ROD, GROUND & CLAMP (B) (A)	2	4	603072, 230016 (E)
	14	MOULDING, HARDWOOD, 1" (A)	27'	57'	487200
	15	STAPLES, MOULDING, GALV., 3"X 1 1/16"X 1/4" (A) (E)	20	38	678560
	16	STAPLES, FENCE, GALV., 1 1/4" (A) (E)	25	50	678528
	17				

SDG&E ELECTRIC STANDARDS

DATE 1-1-86
APPD AE/RDS

12KV OPEN DELTA TYPE "HE" OR "HJ" TRANSFORMER INSTALLATION, 2-50KVA MAX., ARMLESS TANGENT CONSTRUCTION

1199.601
SUPERSEDES
1161 (1-1-86)

TABLE OF CONTENTS

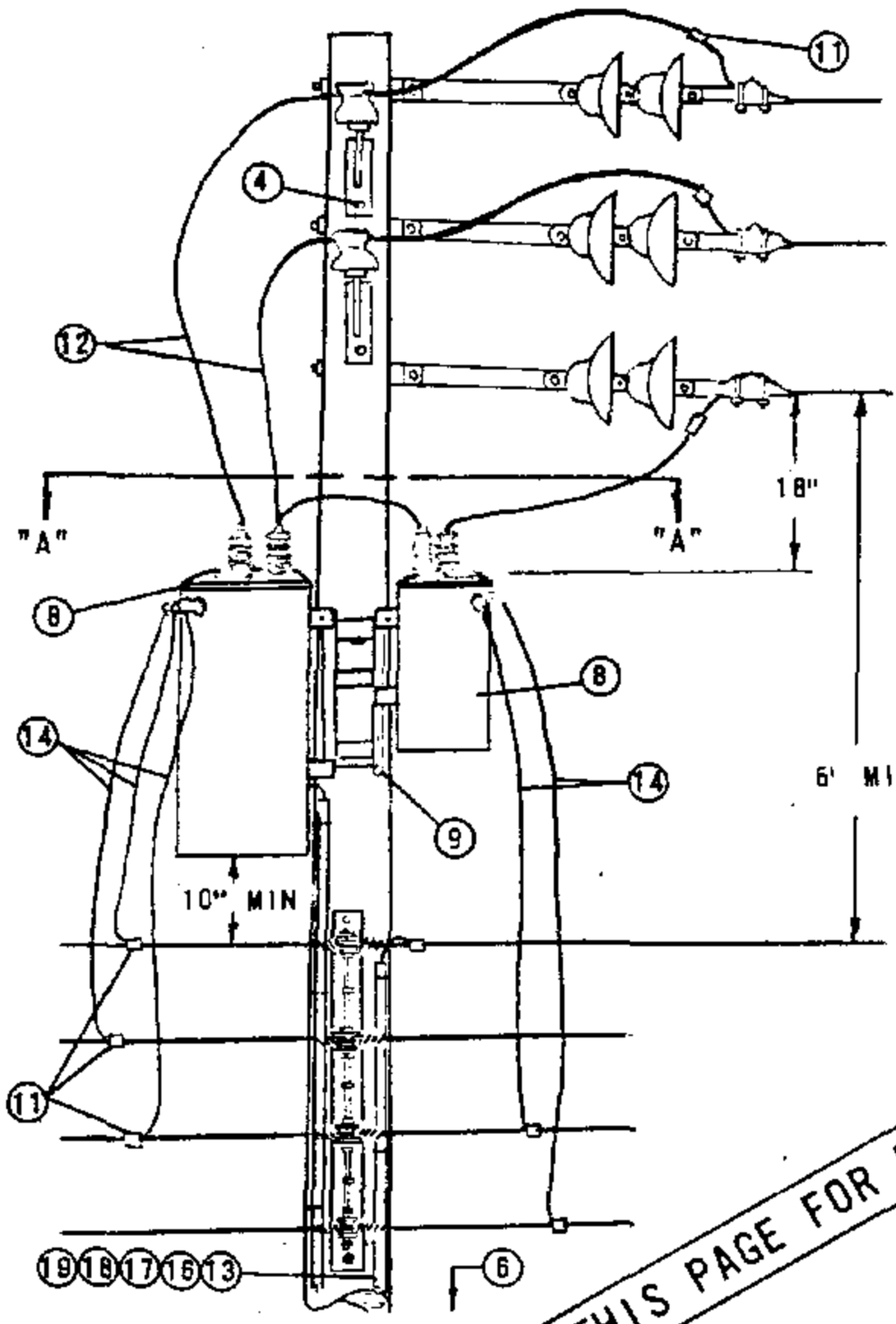

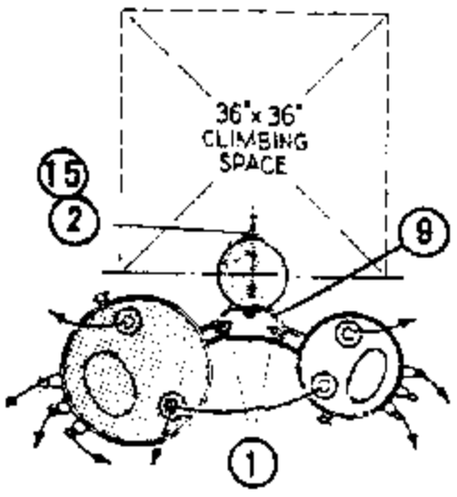

SECTION "A" - "A"

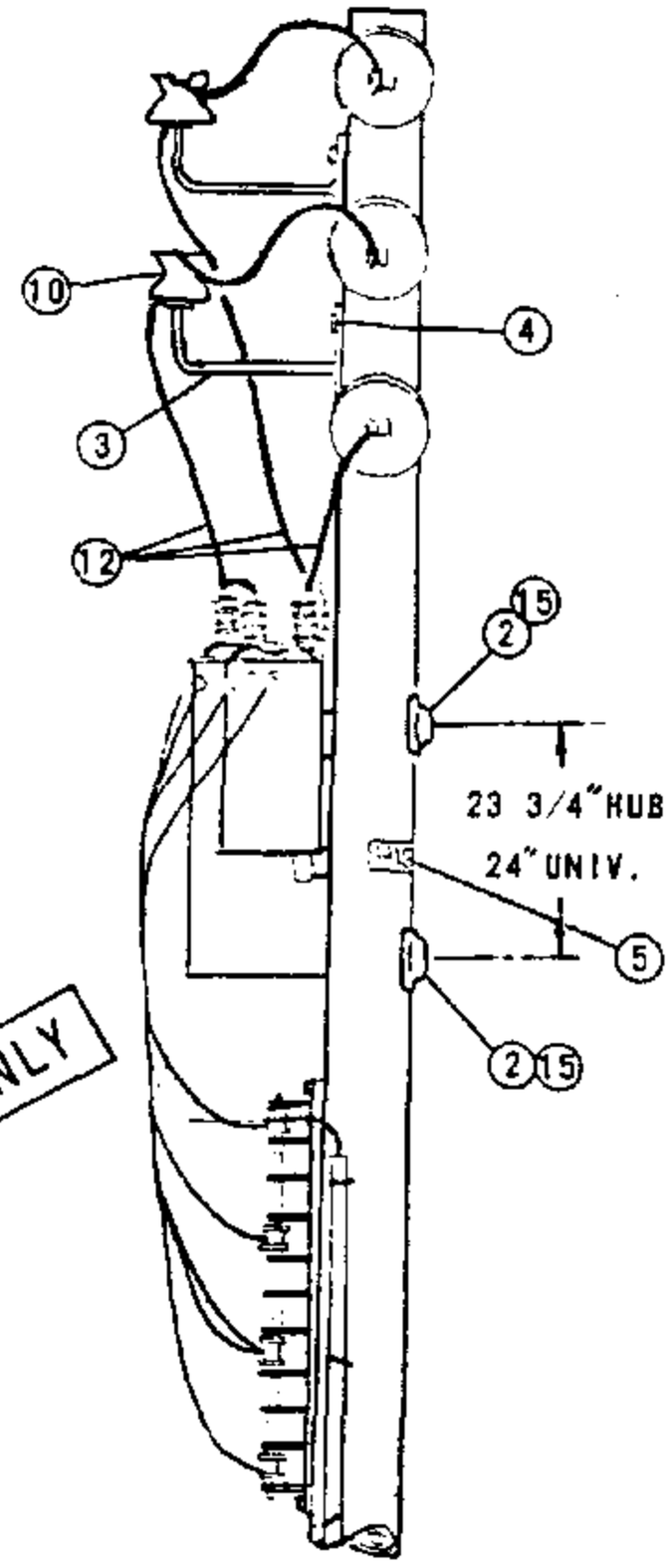

THIS PAGE FOR FIELD MAINTENANCE ONLY

NOTES:

(A) UNIT GROUND COMPLETE ORDER 603120 WITH GRAY MOULDING, 603136 WITH PLAIN MOULDING.
(B) USE TWO ROD GROUND.
C. SEE DISTRIBUTION POLE TOP SECTION FOR POLE TOP MATERIAL.
D. LIMITED TO TWO 50KVA MAXIMUM TRANSFORMER BECAUSE OF ENCROACHMENT INTO CLIMBING SPACE.
(E) EXEMPT MATERIAL.
F. WHEN ARRESTERS ARE REQUIRED PER STANDARDS PAGE 1247, USE TYPE 'HJ' TRANSFORMERS.

ITEM PTF	ITEM LTI	DESCRIPTION	QUANTITY HE	QUANTITY HJ	STOCK NO. OR CONSTR STD
1		BOLT, MACH., GALV., 5/8" (E) DR 3/4"X 2", 1 SQ. CURV WASH., 1 LOCK SPR WASH.	4	4	PGS 139, 140
2		BOLT, MACH., GALV., 3/4"X__" 1 SQ. CURV WASH., 1 DBL. COIL SPR. WASH.	2	2	PGS 139, 140
3		BRACKET, INSULATOR, 1"OR 1 3/8"LEAD THREAD	2	2	166144-166176
4		SCREW, LAG, GALV., 1/2"X 4" (E)	4	4	621568
5		SIGN, HIGH VOLTAGE, & 8 ROOFING NAILS, GALV. (E)	1	1	647648, 492192
6		STEPS, POLE (E)	16	16	692992
7					
	8	TRANSFORMER, SELF PROTECTED TYPE, SINGLE PHASE, (HE or HJ)	2	2	PGS 1121.01-1121.12
	9	BRACKET, TRANSFORMER MOUNTING	1	1	402976
	10	INSULATOR, 12KV, (CLASS 55-5 OR 56-1)	2	2	PG 750
	11	CONNECTORS, WIRE COMPRESSION	9	9	PGS 783-787
	12	WIRE, BARE STRANDED, COPPER #6	70'	70'	813536
	13	WIRE, BARE STRANDED, COPPER #2	—	40'	813664
	14	WIRE, W.P. COPPER (SIZE GOVERNED BY TRANSFORMER CAPACITY)	30'	30'	PG 1125
	15	COVER, PVC THRU BOLT & 6-10D NAILS, GALV.	2	2	285696, 491392
	16	ROD, GROUND & CLAMP (B) (A)	2	4	603072, 230016 (E)
	17	MOULDING, HARDWOOD, 1" (A)	27'	57'	487200
	18	STAPLES, MOULDING GALV., 3"X 1 1/16"X 1/4" (A) (E)	20	38	678560
	19	STAPLES, FENCE, GALV., 1 1/4" (A) (E)	25	50	678528

1199.602
SUPERSEDES
1162 (1-1-86)

SDG&E ELECTRIC STANDARDS

12KV OPEN DELTA TYPE "HE" OR "HJ" TRANSFORMER INSTALLATION
2-50KVA MAX., ARMLESS DEAD END CONSTRUCTION

DATE 1-1-86
APPD AK/RPS

TABLE OF CONTENTS

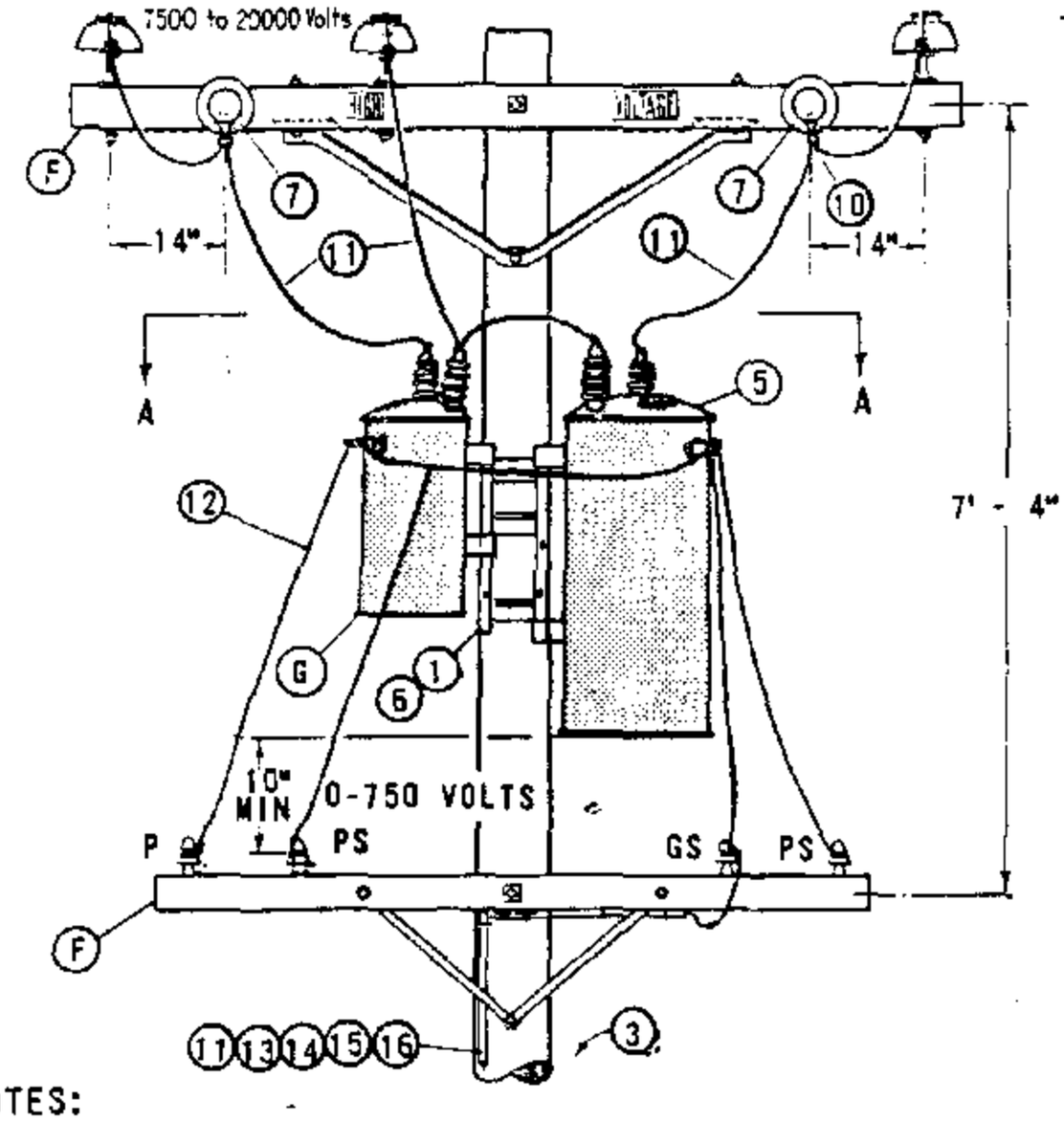

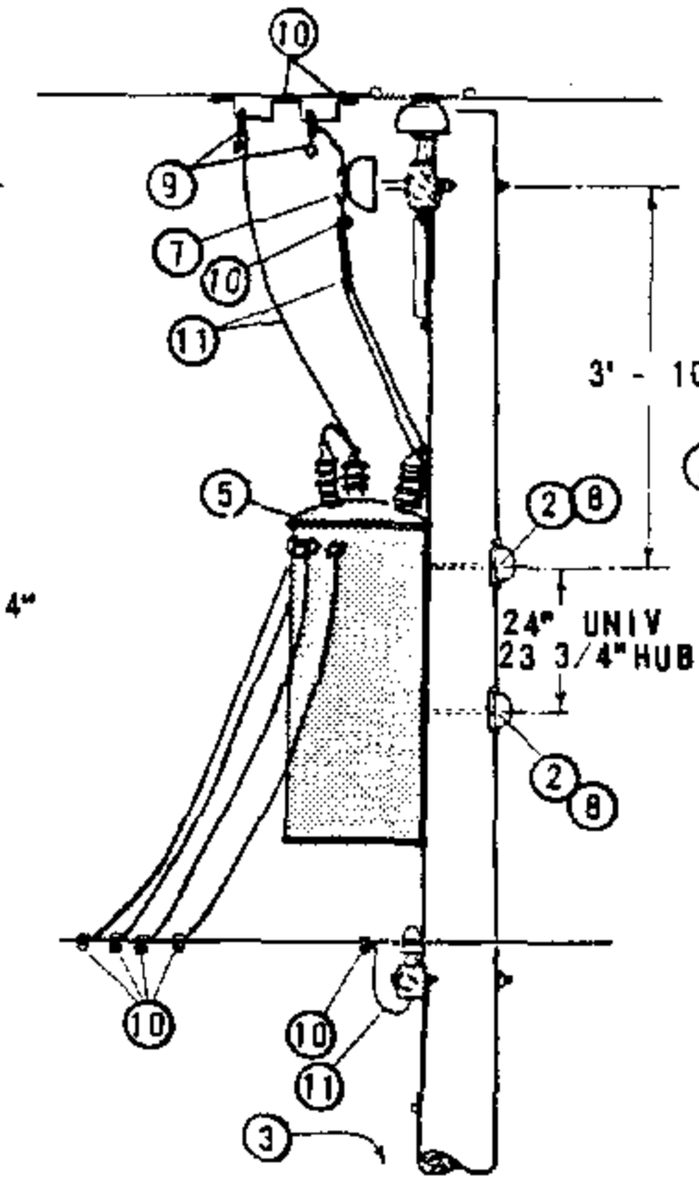

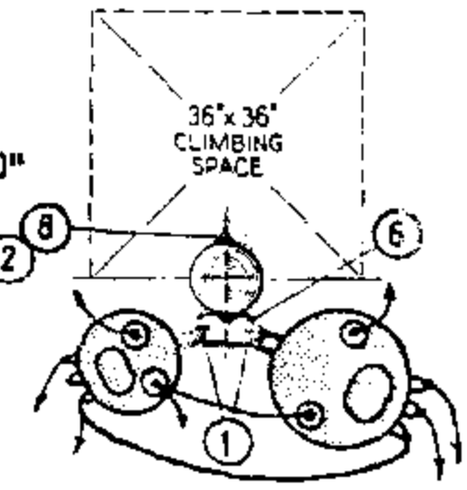

PLAN AT A - A

NOTES:

A. USE PAGE 1165 FOR NEW CONSTRUCTION. THIS CONSTRUCTION MAY BE USED TO ELIMINATE POLE CHANGEOUTS ON EXISTING POLES WITH THE PRIMARY ALREADY ON ARMS.

(B) LIMITED TO TWO 50 KVA MAXIMUM TRANSFORMERS BECAUSE OF ENCROACHMENT ON CLIMBING SPACE. 75 KVA TRANSFORMERS MAY BE USED IF THEY HAVE SMALL CASES.

(C) USE TWO GROUND RODS SPACED NOT LESS THAN 6 FEET APART.

(D) UNIT GROUND COMPLETE ORDER 603120 WITH GRAY MOULDING, 603136 WITH PLAIN MOULDING.

(E) EXEMPT MATERIAL.

(F) PRIMARY AND SECONDARY CONSTRUCTION SHOWN ARE TYPICAL, AND THEIR MATERIALS ARE NOT INCLUDED. MAY BE INSTALLED WITH ARMLESS PRIMARY, RACK SECONDARY, ETC.

(G) POWER TRANSFORMER TO BE HUNG ON THE SAME SIDE OF POLE AS 2 PHASE WIRES TO PREVENT PHASING PROBLEMS WHEN CLOSING DELTA.

ITEM PTF	ITEM LTI	DESCRIPTION	QUANTITY	STOCK NO OR CONSTR STDS
1		BOLT, MACH GALV, 5/8" (E) OR 3/4" X 2", 1 RD WASH. & 1 NUT, 1 DBL COIL SPR WASH.	4	PGS 139, 140
2		BOLT, MACH GALV, 3/4" X 10", 1" SQ CURVE WASH., 1 NUT & 1 DBL COIL SPR WASH.	2	PGS 139, 140
3		STEP, POLE (E)	19	592992
4				
	5	TRANSFORMER, SELF PROTECTED TYPE, SINGLE PHASE (HE, HJ) (B)	2	PGS 1121.01-1121.12
	6	BRACKET, TRANSFORMER MTG	1	402976
	7	INSULATOR & PIN, 12KV	2	700 SECTION
	8	COVER, PVC THRU BOLT & 6-10D NAILS, GALV (E)	2	285696, 491392
	9	CLAMP, HOT LINE (E) & STIRRUP	3	PG 788
	10	CONNECTORS, WIRE, COPPER, AS REQ'D	13	PGS 783-787
	11	WIRE, STRANDED #6 COPPER	70'	813536
	12	WIRE, WP COPPER (SIZE GOVERNED BY TRANSFORMER CAPACITY)	30'	PG 1125
	13	ROD & CLAMP, GROUND (D) (C)	2	603072, 230016(E)
	14	MOULDING, HARDWOOD 1" (D)	30'	487200
	15	STAPLES, MOULDING GALV, 3" X 1 1/16" X 1/4" (D) (E)	20	678560
	16	STAPLES, FENCE GALV, 1 1/4" (D) (E)	25	678528

FOR FIELD MAINTENANCE ONLY

	SDG&E ELECTRIC STANDARDS	
DATE 1-1-86 APPD AE/RDS	12KV, OPEN DELTA TYPE "HE" OR "HJ" TRANSFORMER INSTALLATION, 2-50 KVA MAX, SECONDARY ARM CONSTRUCTION	1199.603 SUPERSEDES 1167 (1-1-86)

TABLE OF CONTENTS

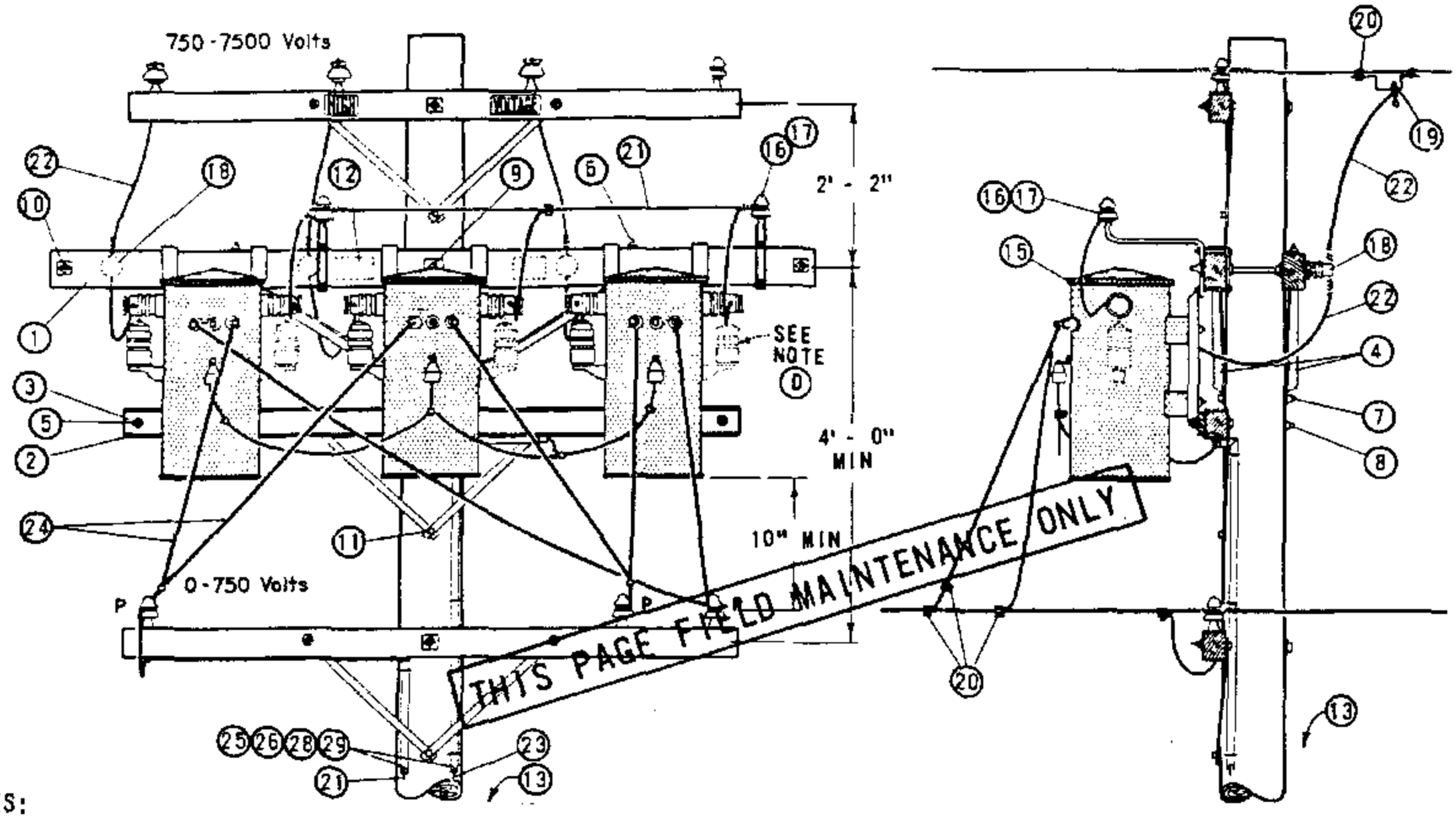

NOTES:

(A) UNIT GROUND COMPLETE ORDER 603120 WITH GRAY MOULDING, 603136 WITH PLAIN MOULDING.

B. SEE DISTRIBUTION POLE TOP SECTION FOR POLE TOP MATERIALS.

(C) USE TWO ROD GROUND

(D) REMOVE RIGHT HAND LIGHTNING ARRESTERS BEFORE INSTALLING TRANSFORMERS.

(E) EXEMPT MATERIAL.

F. WHEN ARRESTERS ARE REQUIRED PER STANDARDS PAGE 1247, USE TYPE "WJ" TRANSFORMERS.

G. SEE STANDARDS PAGE 1118 FOR TRANSFORMER CONNECTION DIAGRAMS. CONNECTION SHOWN IS FOR ILLUSTRATIVE PURPOSES ONLY.

ITEM PTF	ITEM LTI	DESCRIPTION	QUANTITY	STOCK NO. OR CONSTR STD
1		CROSSARM, 3 1/4" X 5 3/4" X 10' - 0"	2	PG 111 IT. 2
2		CROSSARM, KICK 3 3/4" X 5 3/4" X 8' - 0"	1	PG 116 IT. 1
3		COVER STRIP, 1 5/8" X 4 1/2" X 8' - 0" (2X4 S4S)	1	699328
4		BRACE, ANGLE CROSSARM	2	164128
5		BOLT, MACH GALV 3/8" X 6", 2 RD WASH. & 1 NUT (E)	2	PGS 139, 140
6		BOLT, MACH GALV 1/2" X 7", 1 RD WASH. & 1 NUT (E)	4	PGS 139, 140
7		BOLT, MACH GALV 5/8" X 10" (E)	1	PGS 139, 140
8		BOLT, MACH GALV 5/8" X 14", 2 SQ WASH. & 1 NUT (E)	1	PGS 139, 140
9		BOLT, MACH GALV 5/8" X 18", 2 - 3 SQ WASH & 1 NUT (E)	1	PGS 139, 140
10		BOLT, SPACE GALV 5/8" X 20", 4 WASH. & 4 NUTS (E)	2	PGS 139, 140
11		SCREW, LAG GALV 1/2" X 4" (E)	1	621568
12		SIGN, HIGH VOLTAGE & 8 ROOFING NAILS, GALV (E)	1	647648, 492224
13		STEPS, POLE (E)	16	692992
14				
	15	TRANSFORMER, SINGLE PHASE TYPE WE OR WJ, #1 TEE HANGER	3	PGS 1121.01-1121.12
	16	BRACKET, INSULATOR, 1"	2	166208
	17	INSULATOR, 5KV	2	428960
	18	HOLDER, WIRE	3	413792
	19	CLAMP, HOT LINE (E) & STIRRUP	3	PG 788
	20	CONNECTOR, WIRE, AS REQ'D	12	PGS 783-787
	21	WIRE, #6 BARE STRANDED COPPER	60'	813536
	22	CABLE, 5KV, 1/C #6 STRANDED COPPER	34'	194304
	23	WIRE #2 BARE STRANDED COPPER, TANK GROUND	50'	813664
	24	WIRE, W.P. COPPER, SIZE GOVERNED BY TRANSFORMER CAPACITY	45'	PG 1125
	25	ROD & CLAMP, GROUND (A) (C)	4	603072, 230015 (E)
	26	MOULDING, HARDWOOD, 1" (A)	64'	487200
	27			
	28	STAPLES, 3" X 1 1/16" X 1/4" MOULDING, GALV (A) (E)	40	678560
	29	STAPLES, 1 1/4" FENCE, GALV (A) (E)	36	678528

1199,701 SUPERSEDES 1172 (1-1-86)	SAN DIEGO GAS & ELECTRIC CO OVERHEAD STANDARDS 4KV, THREE PHASE, TYPE "WE" OR "WJ" TRANSFORMER INSTALLATION, 3-25 KVA MAX SECONDARY LINE ARM CONSTRUCTION	DATE 1-1-86 APPD AK/BBS

TABLE OF CONTENTS

SCOPE: THIS STANDARD SHOWS THE INSTALLATION OF 7.2 AND 12KV, 3Ø TRANSFORMERS, ALLEY ARM CONSTRUCTION, WITH CLUSTER MOUNTING BRACKET AND SECONDARY RACK CONSTRUCTION.

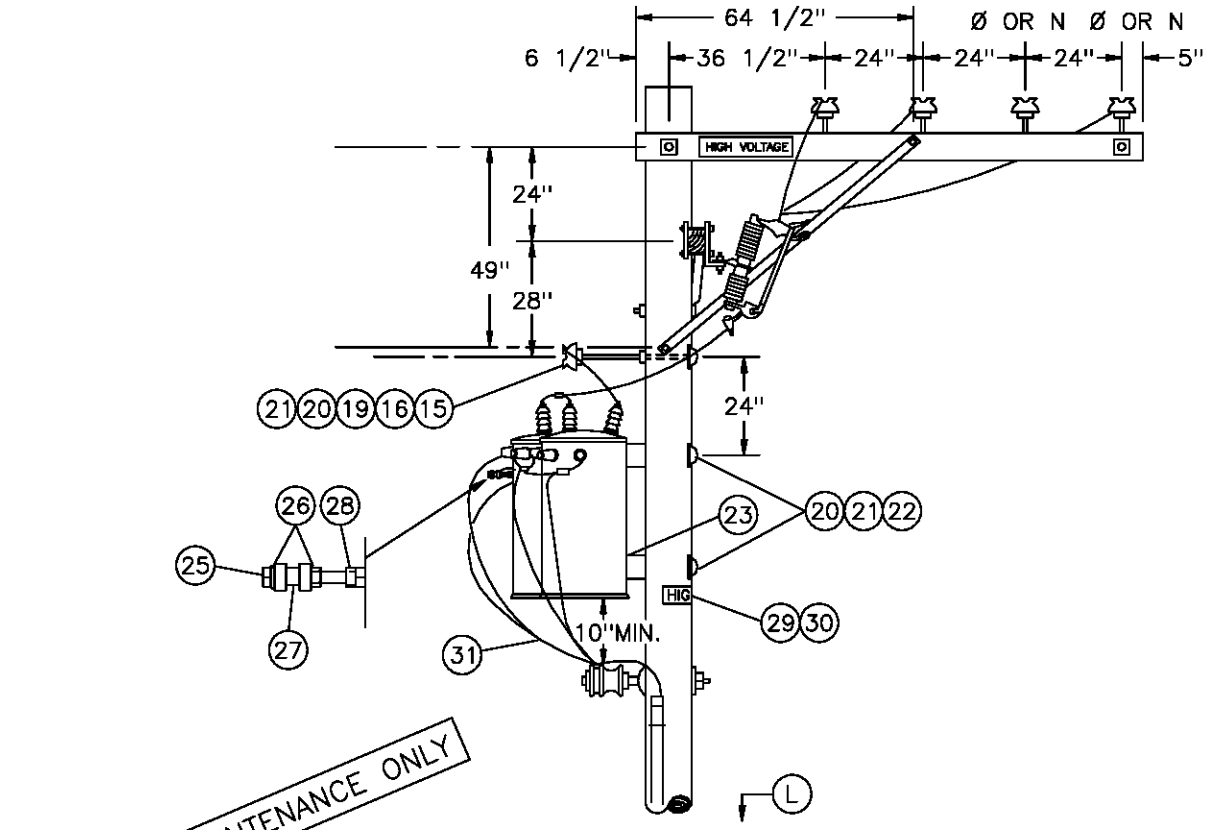

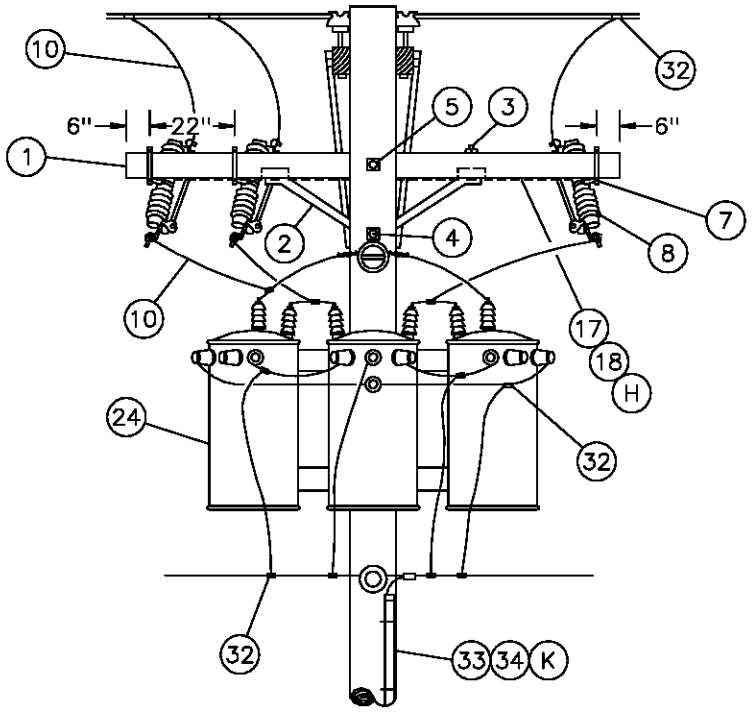

DELTA PRIMARY CONNECTION

DATE 1-1-89 APPD PSA / DTE	SDG&E ELECTRIC STANDARDS 7.2 AND 12KV THREE-PHASE TRANSFORMER CLUSTER MOUNT INSTALLATION-ALLEY ARM CONSTRUCTION	1199.704 SUPERSEDES 1174.1 (1-1-93)

TABLE OF CONTENTS

TABLE OF CONTENTS

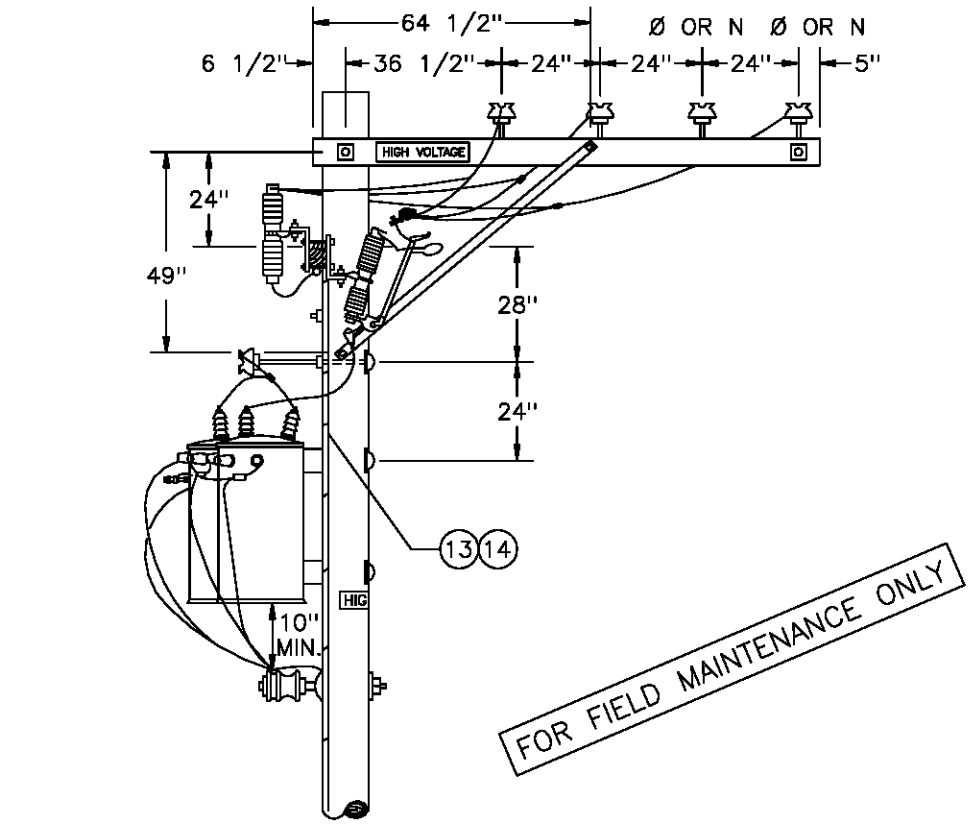

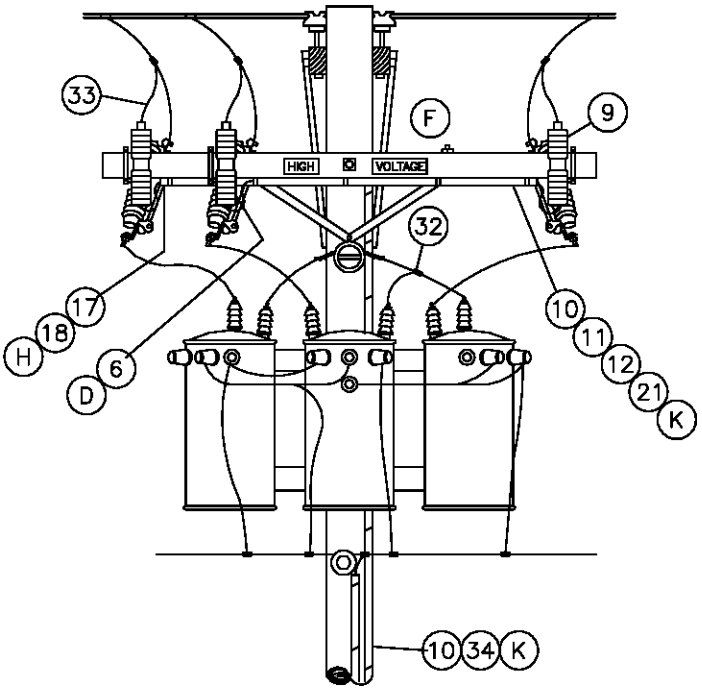

WYE PRIMARY CONNECTION
WITH LIGHTNING ARRESTERS (J)

DATE 1-1-91 APPD PA/DG	SDG&E ELECTRIC STANDARDS 7.2 AND 12KV THREE-PHASE TRANSFORMER CLUSTER MOUNT INSTALLATION-ALLEY ARM CONSTRUCTION	1199.705 SUPERSEDES 1174.2 (1-1-93)

BILL OF MATERIAL:

ITEM	DESCRIPTION	QUANTITY		STOCK NUMBER OR CONSTR STANDARD
		STATION WITH (J) ARRESTERS	STATION WITHOUT ARRESTERS	
1	CROSSARM, 3 3/4" X 5 3/4" X 10' – 0"	1	1	294128
2	BRACE, ANGLE, CROSSARM, 4'	1	1	164032
3	BOLT, MACH, GALV, 1/2" X 7", 1 RD & 1 DBL COIL SPRING WASHER (E)	2	2	STD. 392
4	BOLT, MACH, GALV, 5/8" X (LENGTH AS REQ'D), 1 SQUARE & 1 DOUBLE COIL SPRING WASHER (E)	1	1	STD. 392
5	BOLT, MACH, GALV, 5/8" X (LENGTH AS REQ'D), 2 SQUARE & 1 DOUBLE COIL SPRING WASHER (E)	1	1	STD. 392
6	BRACKET, DOUBLE, CUTOUT/ARRESTER, FOR CROSSARM MOUNTING (E)	3	–	165442
7	BRACKET, CUTOUT/ARRESTER, FOR CROSSARM MOUNTING (E)	–	3	166070
8	CUTOUT, 12KV, WITH LOADBUSTER HOOK	3	3	STD. 1212
9	ARRESTER, LIGHTNING	3	–	113248
10	WIRE, #4 BARE STRANDED COPPER FT / LB	100 / 13	40 / 5	813760
11	CONDUIT, PVC, TYPE 2, SCHEDULE 40, 1" X 10' (E)	1	–	251200
12	STRAPS, PIPE, GALV, 1" (E)	AS REQ'D	–	697792
13				
14				
15	INSULATOR, PIN TYPE, CLASS AS REQ'D	1	1	STD. 750
16	WIRE, TIE (E)	1	1	815232
17	WIRE, #8 BARE SOLID ANNEALED COPPER (G) FT / LB	15 / 1	15 / 1	812928
18	STAPLES, 1 1/4", FENCE, GALV (G)(E)	AS REQ'D	AS REQ'D	678528
19	BRACKET, INSULATOR, 1" OR 1 3/8" THREAD (AS REQ'D)	1 / 1	1 / 1	166144 / 166176
20	COVER, BOLT, PLASTIC (E)	3	3	285696
21	NAILS, GALV, 1 3/4" ROOFING (E)	AS REQ'D	AS REQ'D	492192
22	BOLT, MACH, GALV, 3/4" X (LENGTH AS REQ'D), 1 SQUARE CURVED & 1 DOUBLE COIL SPRING WASHER (E)	2	2	STD. 392
23	BRACKET, TRANSFORMER CLUSTER MOUNTING	1	1	403008
24	TRANSFORMER, SINGLE PHASE, TYPE 'Y', 'YF', 'H' OR 'HF'	3	3	STD. 1121
25	BOLT, MACH, GALV, 1/2" X 5" (E)	1	1	153024
26	WASHER, GALV, 1/2", ROUND (E)	2	2	800192
27	INSULATOR, SECONDARY, SPOOL, PORCELAIN (E)	1	1	430752
28	NUT, GALV, 1/2" (E)	1	1	504736
29	SIGN, HIGH VOLTAGE (E)	3	1	647648
30	NAILS, GALV, 7/8" ROOFING (E)	27	9	492224

FOR FIELD MAINTENANCE ONLY

TABLE OF CONTENTS

1199.706 SUPERSEDES 1174.3 (1–1–93)	SDG&E ELECTRIC STANDARDS 7.2 AND 12KV THREE–PHASE TRANSFORMER CLUSTER MOUNT INSTALLATION–ALLEY ARM CONSTRUCTION	DATE 1–1–91 APPD PLA / BDG

BILL OF MATERIAL: (CONT'D)

ITEM	DESCRIPTION		QUANTITY		STOCK NUMBER OR CONSTR STANDARD
			STATION WITH (J) ARRESTERS	STATION WITHOUT ARRESTERS	
31	WIRE, THW COPPER, SIZED PER TRANSFORMER CAPACITY		35'	35'	STD 1125
32	CONNECTOR, WIRE, COMPRESSION, CU OR AL AS REQ'D (E)		AS REQ'D	AS REQ'D	783–786
33	WIRE, #6, 3 STRAND, BARE COPPER	FT	55	40	813536
		LB	4	3	
34	UNIT, GROUND, COMPLETE (K)		2	1	603136
35	CONDUIT, PVC, TYPE 2, SCHEDULE 40, 1/2" (E)		10'	–	251168
36	STRAPS, PIPE, GALV. 1/2" AND 1–3/4" ROOFING NAILS (E)		AS REQ'D	–	697728

INSTALLATION:

A. USE THIS CONSTRUCTION FOR TRANSFORMERS RATED 12KV AND BELOW WHICH HAVE HIGH VOLTAGE BUSHINGS MOUNTED ON TOP OF COVER.

B. LIMITED TO TRANSFORMERS 100 KVA AND SMALLER, EACH WEIGHING 1200 POUNDS OR LESS.

C. WHEN PRACTICAL, BOLT TRANSFORMERS TO BRACKET ON THE GROUND AND INSTALL THEM AS A PREWIRED ASSEMBLY.

(D) DRILL THROUGH CROSSARM 1" UP FROM LOWER EDGE SO THAT LOWER CROSSARM MOUNTING BRACKET BOLT DOES NOT INTERFERE WITH PVC CONDUIT.

(E) EXEMPT MATERIAL.

(F) INSTALL LA/CO CROSSARM ON SAME SIDE OF POLE AS TRANSFORMERS.

(H) BOND ALL CUTOUTS IN HEAVY CONTAMINATION DISTRICT, AS IDENTIFIED ON STANDARD 287. IN AREAS WHERE BONDING IS REQUIRED, TO AVOID BONDWIRE AND LIGHTNING ARRESTER GROUNDWIRE ON THE ON THE SAME CROSSARM, USE TWO CROSSARMS; ONE FOR CUTOUTS AND ONE FOR LIGHTNING ARRESTERS

REFERENCE:

I. PRIMARY AND SECONDARY CONNECTIONS ARE SHOWN FOR ILLUSTRATIVE PURPOSES. SEE STANDARD 1118–1119 FOR SPECIFIC CONNECTION DIAGRAMS.

(J) LIGHTNING ARRESTER APPLICATION, SEE STANDARD 1247.

(K) GROUNDING METHOD AND APPLICATION, SEE STANDARD 1002.

(L) POLE STEPPING, SEE STANDARD 363.

FOR FIELD MAINTENANCE ONLY

TABLE OF CONTENTS

DATE 1–1–91 APPD PBA / DTE	SDG&E ELECTRIC STANDARDS 7.2 AND 12KV THREE PHASE TRANSFORMER CLUSTER MOUNT INSTALLATION–ALLEY ARM CONSTRUCTION	1199.707 SUPERSEDES 1174.4 (1–1–93)

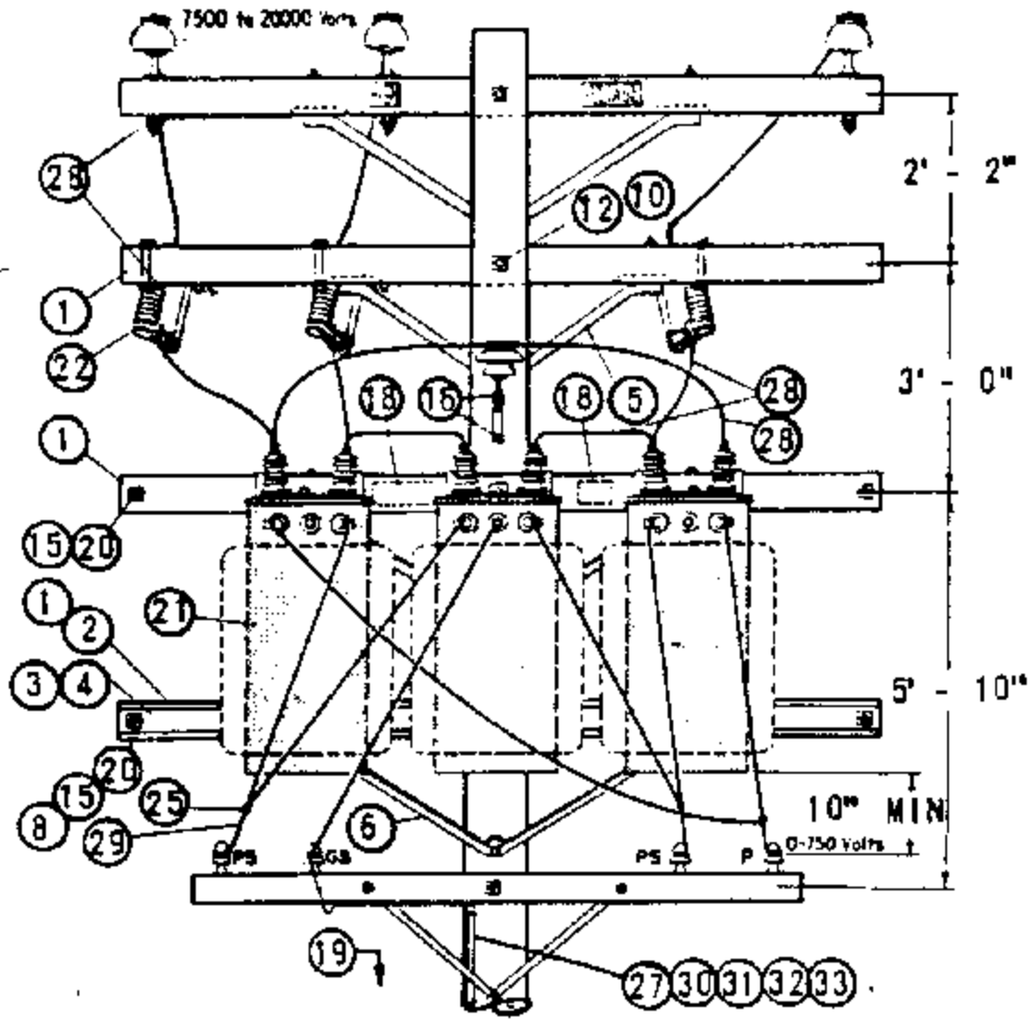

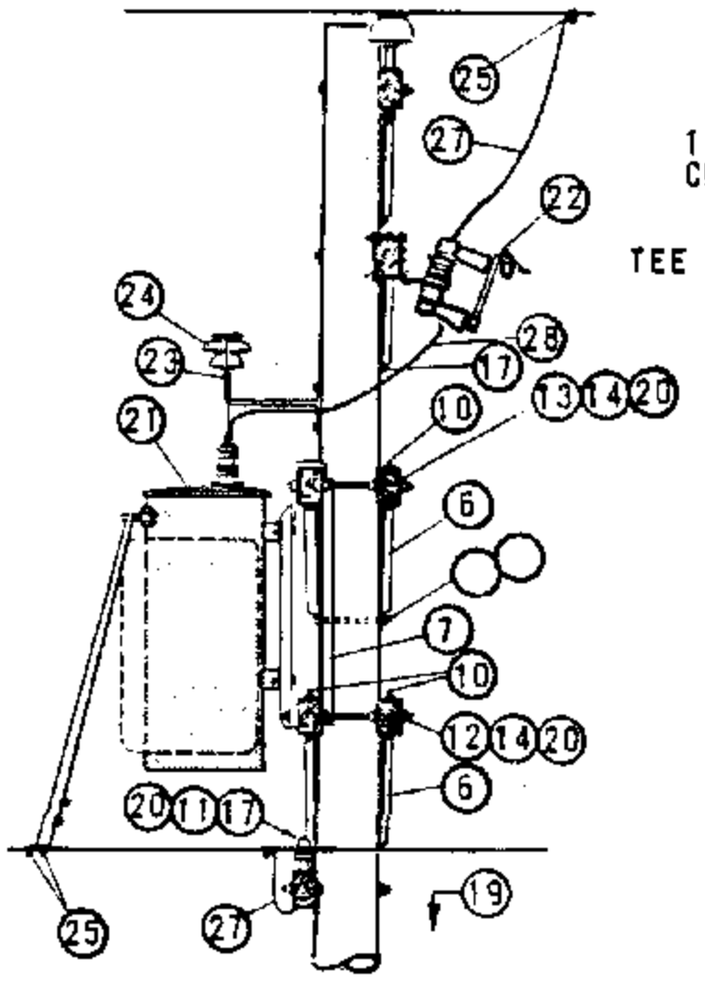

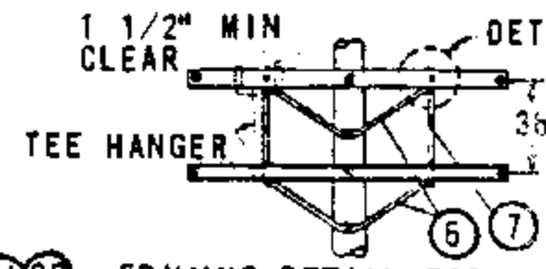

FRAMING DETAIL FOR 3 - 37.5 TO 3 - 75 KVA INSTALLATIONS

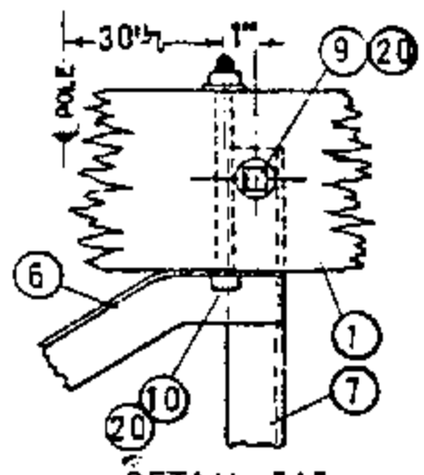

DETAIL "A"

NOTES:

(A) UNIT GROUND COMPLETE ORDER 603120 WITH GRAY MOULDING, 603135 WITH PLAIN MOULDING.

B. SEE ARRESTER SECTION FOR ARRESTER REQUIREMENTS.

(C) USE TWO ROD GROUND.

D. BOND ALL CUTOUTS IN HEAVY CONTAMINATION DISTRICTS AS IDENTIFIED ON STANDARDS PAGE 287.

(E) EXEMPT MATERIAL

F. USE EXTRA HEAVY CLASS ONE POLES WITH 10" MINIMUM TOP DIAMETER ON NEW CONSTRUCTION FOR 3 - 37.5 TO 3 - 75 KVA TRANSFORMER INSTALLATIONS.

G. LIMITED TO TRANSFORMERS WEIGHING 1200# OR LESS.

H. SPACING OF TRANSFORMERS TO BE AS CLOSE AS PRACTICABLE BUT NOT TO EXCEED 33.5" CENTER TO CENTER.

I. SEE STANDARDS PAGE 1119 FOR SPECIFIC TRANSFORMER CONNECTIONS. 240V, 4 WIRE DELTA IS SHOWN FOR ILLUSTRATIVE PURPOSES ONLY.

ITEM	MLT	DESCRIPTION	QUANTITY 5 TO 25 KVA	QUANTITY 37.5 TO 75 KVA	STOCK NO. OR CONSTR STD
1		CROSSARM, 3 3/4" X 5 3/4" X 10' - 0"	3	5	PG. 119 IT. 2
2		CROSSARM, 3 3/4" X 5 3/4" X 8' - 0"	1	0	PG. 116 IT. 1
3		COVER STRIP, 1 5/8" X 3 5/8" X 8' - 0" (2X4S4S)	1	0	699328
4		COVER STRIP, 1 5/8" X 3 5/8" X 10' - 0" (2X4S4S)	0	1	699360
5		BRACE, ANGLE CROSSARM, GALV, 4' - 0"	1	1	164032
6		BRACE, ANGLE CROSSARM, GALV, 5' - 0"	2	4	164128
7		BRACE, VERTICAL 36"	0	2	164256
8		BOLT, MACH GALV, 3/8" X 6", 2 RD WASH & 1 NUT (E)	2	0	PGS 139, 140
9		BOLT, MACH GALV, 5/8" X 5", 1 RD WASH. & 1 NUT (E)	0	4	PGS 139, 140
10		BOLT, MACH GALV, 1/2" X 8", 1 RD WASH & 1 NUT (E)	6	10	PGS 139, 140
11		BOLT, MACH GALV, 5/8" X __", 1 NUT (E)	1	2	PGS 139, 140
12		BOLT, MACH GALV, 5/8" X 14", 2 SQ WASH & 1 NUT (E)	2	1	PGS 139, 140
13		BOLT, MACH GALV, 5/8" X 20", 2 - 3" SQ WASH & 1 NUT (E)	1	0	PGS 139, 140
14		BOLT, MACH GALV, 3/4" X 20", 2 - 3" SQ WASH & 1 NUT	0	2	PGS 139, 140
15		BOLT, SPACE GALV, 5/8" X __", 4 SQ WASH, & 4 NUTS (E)	2	4	PGS 139, 140
16		SCREW, LAG GALV, 1/2" X 4" (E)	3	2	621568
17		SCREW, LAG GALV, 5/8" X 5" (E)	1	1	621600
18		SIGN, HIGH VOLTAGE & 8 ROOFING NAILS, GALV (E)	1	1	647648, 492224
19		STEP, POLE (E)	19	19	692992
20		WASHER, DOUBLE COIL SPRING, FOR ITEMS 8 THRU 15	AS REQ'D		PG 140
	21	TRANSFORMER, SINGLE PHASE, TYPE H OR HF	3	3	PGS 1121.01-1121.12
	22	CUTOUT, 12KV	3	3	PGS 1212, 1213
	23	BRACKET, INSULATOR	1	1	166176
	24	INSULATOR, 12KV	1	1	429152
	25	CONNECTOR, WIRE	11	11	PGS 783-787
	26	WIRE, BARE SOLID ANNEALED COPPER #8	AS REQ'D		812928
	27	WIRE, BARE STRANDED COPPER #6	70'	70'	813536
	28	WIRE, SOLID W.P. COPPER #4	10'	10'	813536
	29	WIRE, W.P. COPPER, SIZE GOVERNED BY TRANSFORMER CAPACITY	60'	60'	PG 1125
	30	ROD & CLAMP (A) (C)	2	2	603072, 230016 (E)
	31	MOULDING, HARDWOOD 1" (A)	27'	27'	487200
	2	STAPLES, MOULDING GALV, 3" X 1 1/16" X 1/4" (A) (E)	18	18	678560
	33	STAPLES, FENCE GALV, 1 1/4" (A) (E)	17	17	678528

FOR FIELD MAINTENANCE ONLY

DATE 1-1-86
APPD AK/RDS

SAN DIEGO GAS & ELECTRIC CO OVERHEAD STANDARDS

12KV, THREE PHASE, TYPE "H" OR "HF" TRANSFORMER INSTALLATION, THREE 75 KVA MAXIMUM, SECONDARY LINE ARM CONSTRUCTION

1199.801
SUPERSEDES
1181 (1-1-86)

TABLE OF CONTENTS

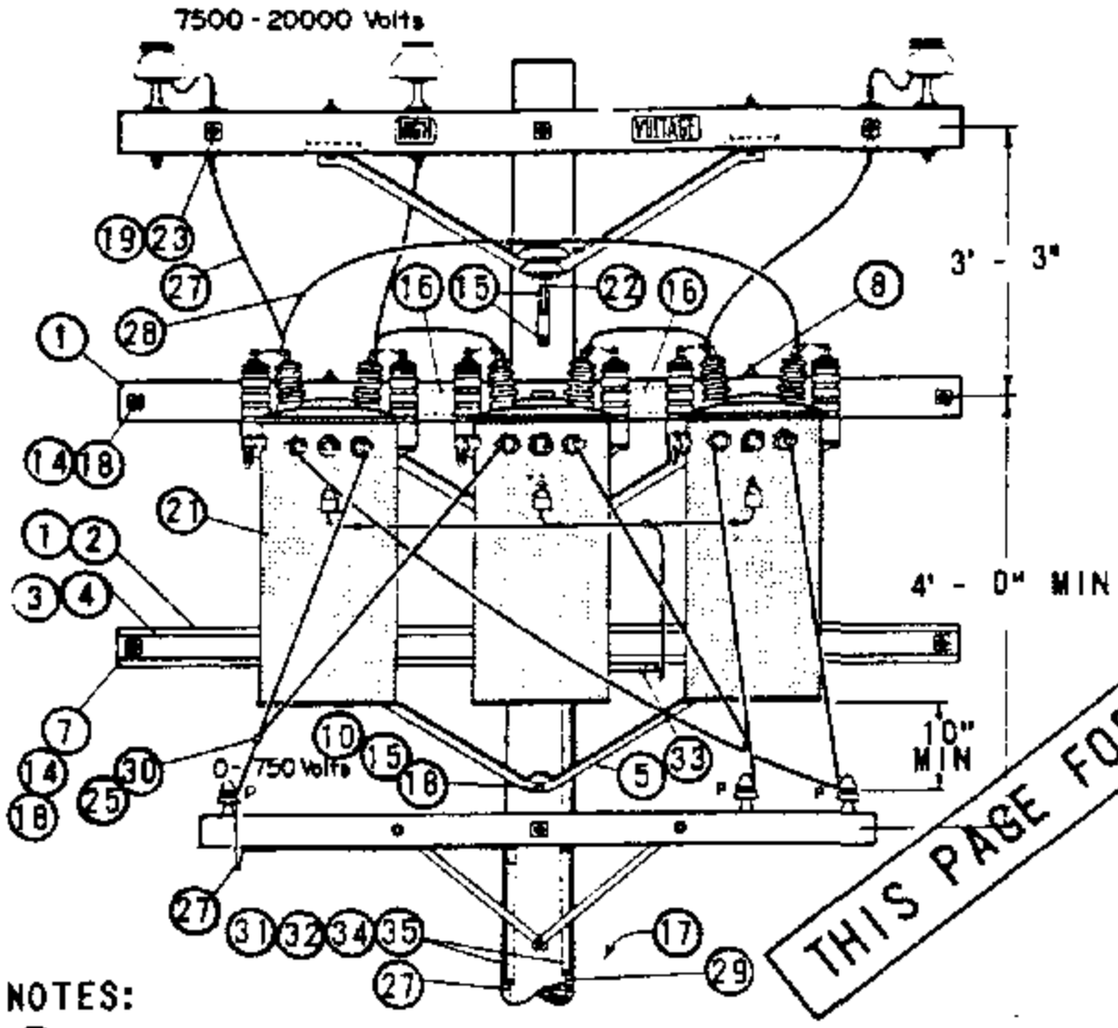

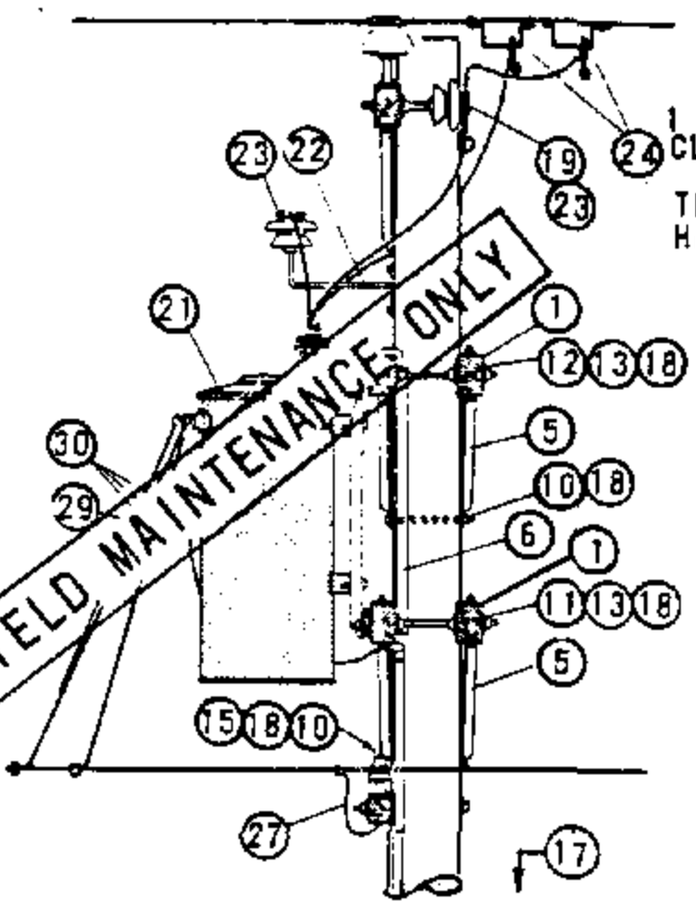

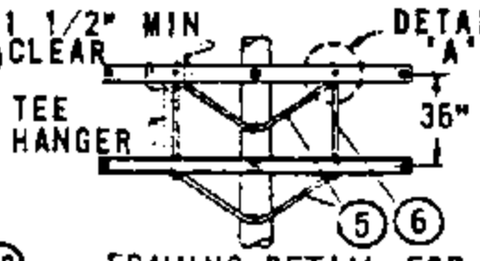

FRAMING DETAIL FOR 3 - 37.5 TO 3 - 75 KVA INSTALLATIONS

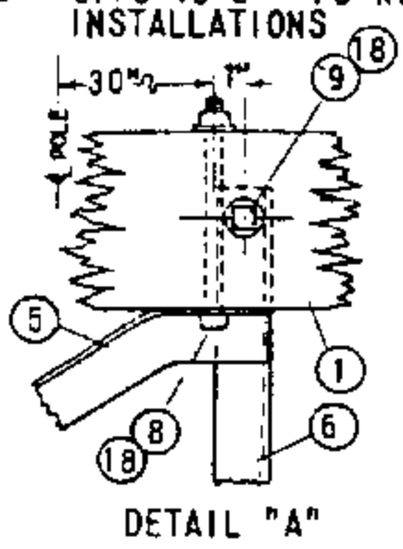

DETAIL "A"

NOTES:

(A) UNIT GROUND COMPLETE ORDER 603120 WITH GRAY MOULDING, 603136 WITH PLAIN MOULDING.

(B) USE TWO ROD GROUND.

C. THIS PAGE FOR FIELD MAINTENANCE ONLY. USE TYPE 'H' TRANSFORMERS ON NEW INSTALLATIONS.

D. USE EXTRA HEAVY CLASS ONE POLES WITH 10" MINIMUM TOP DIAMETER ON NEW CONSTRUCTION FOR 3 - 37.5 TO 3 - 75 KVA TRANSFORMER INSTALLATIONS.

(E) EXEMPT MATERIALS

F. LIMITED TO TRANSFORMERS WEIGHING 1200# OR LESS.

G. SPACING OF TRANSFORMERS TO BE AS CLOSE AS PRACTICABLE BUT NOT TO EXCEED 33.5" CENTER TO CENTER.

H. SEE DISTRIBUTION POLE TOPS SECTION FOR POLE TOP MATERIALS.

I. OMIT LIGHTNING ARRESTER TANK GAP GROUNDING MATERIAL WHERE INSTALLING TRANSFORMERS NOT EQUIPPED WITH ARRESTERS.

ITEM PTF.	ITEM LTI	DESCRIPTION	QUANTITY 5 TO 25 KVA	QUANTITY 37.5 TO 75 KVA	STOCK NO. OR CONSTR STD
1		CROSSARMS, 3 3/4" X 5 3/4" X 10' - 0"	2	4	PG 119 LT 2
2		CROSSARMS, 3 1/2" X 4 1/2" X 8' - 0"	1	0	PG 111 LT 2
3		COVER STRIP, 1 5/8" X 3 5/8" X 8' - 0" (2X4S4S)	1	0	699328
4		COVER STRIP, 1 5/8" X 3 5/8" X 10' - 0" (2X4S4S)	0	1	699360
5		BRACE, ANGLE CROSSARM 5' - 0"	2	4	164128
6		BRACE, VERTICAL 36"	0	2	164256
7		BOLT, MACH GALV, 3/8" X 6", 2 RD WASH. (E)	2	0	PGS 139,140
8		BOLT, MACH GALV, 1/2" X 8", 1 RD WASH (E)	4	8	PGS 139, 140
9		BOLT, MACH GALV, 5/8" X 5", 1 RD WASH. (E)	0	4	PGS 139, 140
10		BOLT, MACH GALV, 5/8" X ___", (E)	1	2	PGS 139, 140
11		BOLT, MACH GALV, 5/8" X 14", 2 SQ WASH. (E)	1	0	PGS 139, 140
12		BOLT, MACH GALV, 5/8" X 20", 2 - 3" SQ WASH. (E)	1	0	PGS 139, 140
13		BOLT, MACH GALV, 3/4" X 20", 2 - 3" SQ WASH.	0	2	PGS 139, 140
14		BOLT, SPACE GALV, 5/8" X ___", 4 SQ WASH (E)	2	4	PGS 139, 140
15		SCREW, LAG GALV, 1/2" X 4" (E)	3	2	621568
16		SIGN, HIGH VOLTAGE & 8 ROOFING NAILS, GALV (E)	1	1	647648, 492224
17		STEP, POLE (E)	19	19	692992
18		WASHER, DOUBLE COIL SPRING FOR ITEMS 7 THRU 14	AS REQ'D		PG 140
19		PIN, INSULATOR 12KV, SIZE PER ITEM 23, 1 /1 3/8"	2	2	531072/532448
20					
	21	TRANSFORMER, SINGLE PHASE, TYPE HE OR HJ	3	3	PGS 1121.01-1121.12
	22	BRACKET, INSULATOR, SIZE PER ITEM 23	1	1	PG 152
	23	INSULATOR, 12KV, CLASS AS REQ'D	3	3	PG 750
	24	CLAMP, HOT LINE (E) AND STIRRUP	7	7	PG 788
	25	CONNECTOR, WIRE	7	7	PGS 783-787
	26				
	27	WIRE, BARE STRANDED COPPER #6	76'	76'	813536
	28	WIRE, BARE STRANDED COPPER #4	8'	8'	813760
	29	WIRE, BARE STRANDED COPPER #2	50'	50'	813664
	30	WIRE, W.P. COPPER, SIZE GOVERENED BY TRANSFORMER CAPACITY	60'	60'	PG 1125
	31	ROD AND CLAMP, GROUND (A) (B)	4	4	603072, 230016 (E)
	32	MOULDING, HARDWOOD 1" (A)	64'	64'	487200
	33				
	34	STAPLES, MOULDING GALV 1 1/4" X 3 1/16" X 1/4" (A) (E)	40	40	678560
	35	STAPLES, FENCE GALV 1 1/4" (A) (E)	36	36	678528

1199.802 SUPERSEDES 1184 (1-1-86)	SAN DIEGO GAS & ELECTRIC CO OVERHEAD STANDARDS 12KV, THREE PHASE, TYPE "HE" OR "HJ" TRANSFORMER INSTALLATION, THREE 75 KVA MAXIMUM, SECONDARY LINE ARM CONSTRUCTION	DATE 1-1-86 APPD AE/RDS

TABLE OF CONTENTS

SCOPE: THIS STANDARD SHOWS THE INSTALLATION OF 7.2 AND 12KV, 3Ø TRANSFORMERS, ALLEY ARM CONSTRUCTION, WITH CLUSTER MOUNTING BRACKET AND SECONDARY RACK CONSTRUCTION.

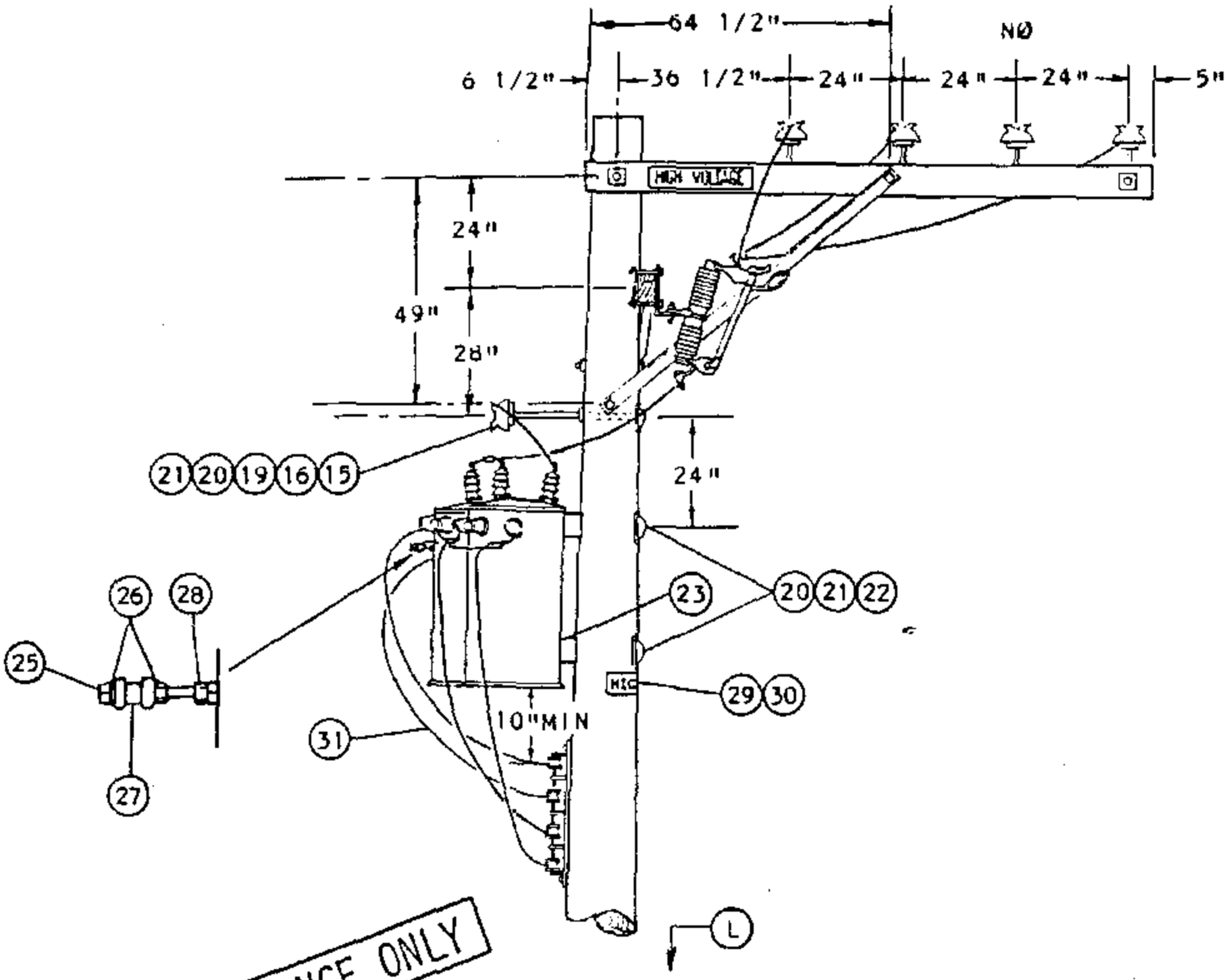

FOR FIELD MAINTENANCE ONLY

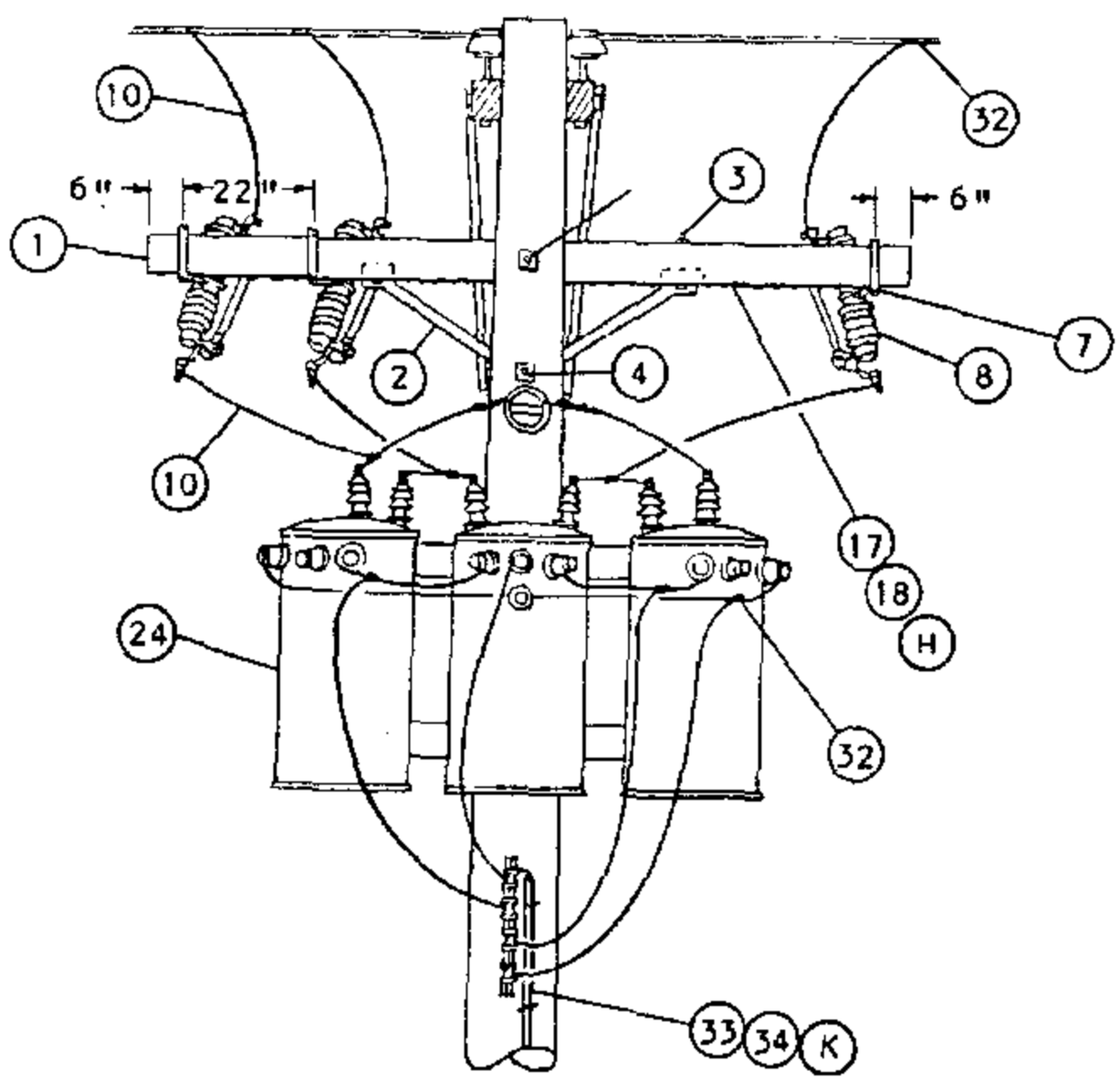

DELTA PRIMARY CONNECTION

DATE 1-1-89 APPD PLA / DTE	SDG&E ELECTRIC STANDARDS 7.2 AND 12KV THREE PHASE TRANSFORMER CLUSTER MOUNT INSTALLATION-ALLEY ARM CONSTRUCTION	1199.8C3 SUPERSEDES 1174.1 (1-1-93)

TABLE OF CONTENTS

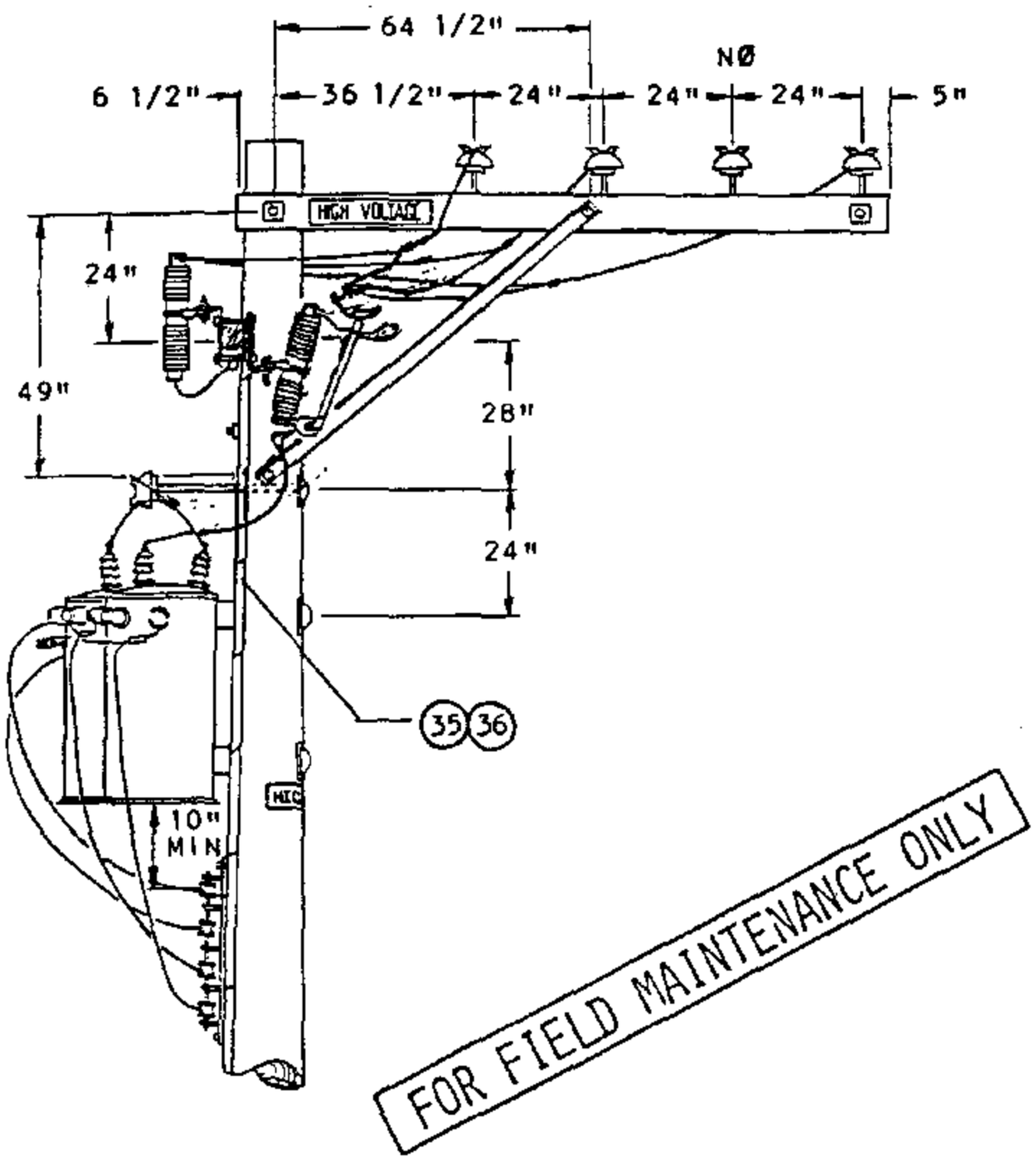

FOR FIELD MAINTENANCE ONLY

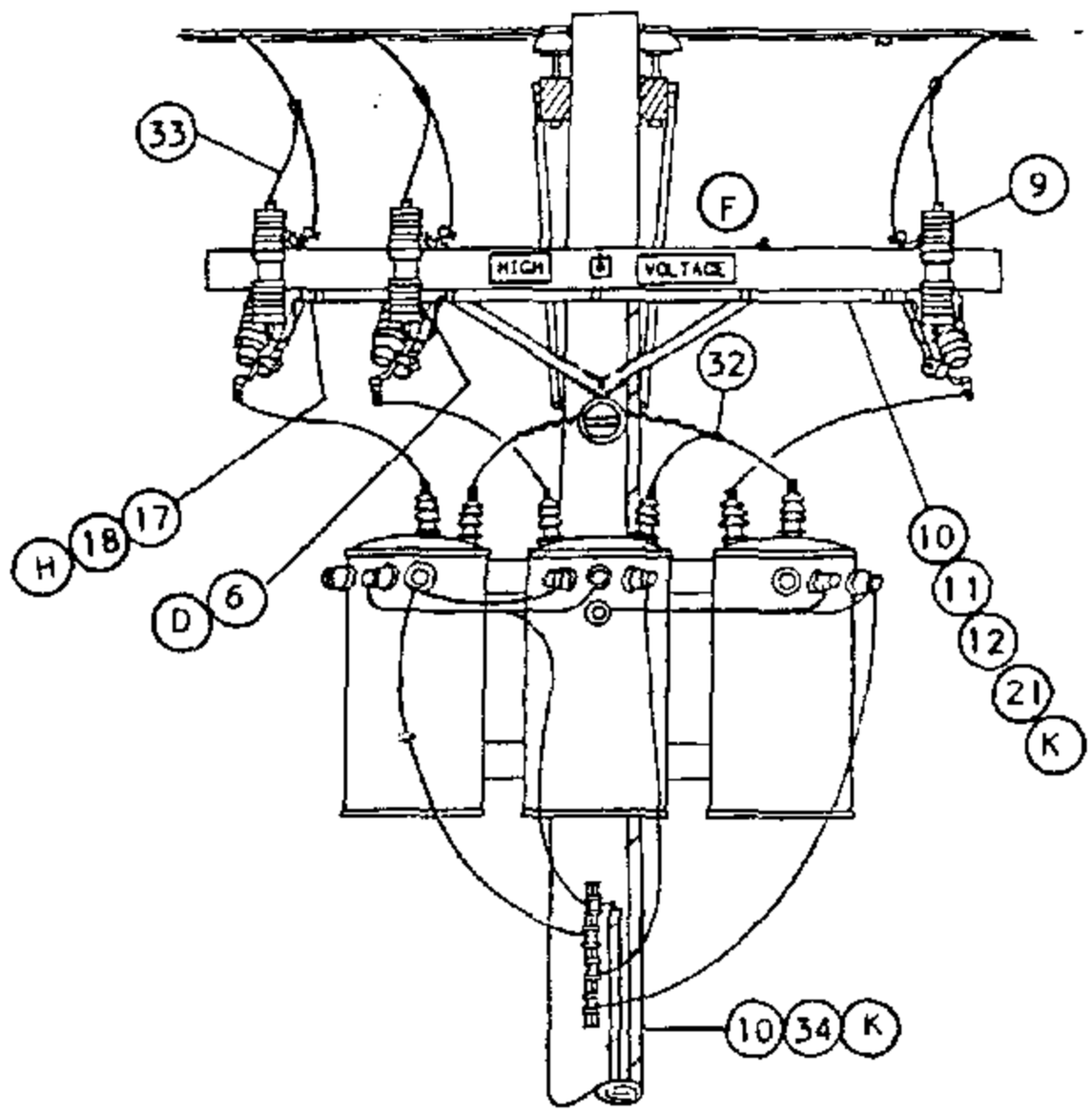

WYE PRIMARY CONNECTION
WITH LIGHTNING ARRESTERS (J)

1199.804 SUPERSEDES 1174.2 (1-1-93)	SDG&E ELECTRIC STANDARDS 7.2 AND 12KV THREE PHASE TRANSFORMER CLUSTER MOUNT INSTALLATION-ALLEY ARM CONSTRUCTION	DATE 1-1-91 APPD PGA/DS

TABLE OF CONTENTS

BILL OF MATERIAL:

ITEM	DESCRIPTION	QUANTITY: STATION (J) WITH ARRESTERS	QUANTITY: STATION WITHOUT ARRESTERS	STOCK NUMBER OR CONSTR STANDARD
1	CROSSARM, 3 3/4" X 5 3/4" X 10' - 0"	1	1	294128
2	BRACE, ANGLE, CROSSARM, 4'	1	1	164032
3	BOLT, MACH, GALV, 1/2" X 7", 1 RD & 1 DBL COIL SPRING WASHER (E)	2	2	STD. 392
4	BOLT, MACH, GALV, 5/8" X (LENGTH AS REQ'D), 1 SQUARE & 1 DOUBLE COIL SPRING WASHER (E)	1	1	STD. 392
5	BOLT, MACH, GALV, 5/8" X (LENGTH AS REQ'D), 2 SQUARE & 1 DOUBLE COIL SPRING WASHER (E)	1	1	STD. 392
6	BRACKET, DOUBLE, CUTOUT/ARRESTER, FOR CROSSARM MOUNTING (E)	3	-	165442
7	BRACKET, CUTOUT/ARRESTER, FOR CROSSARM MOUNTING (E)	-	3	166070
8	CUTOUT, 12KV, WITH LOADBUSTER HOOK	3	3	STD. 1212
9	ARRESTER, LIGHTNING	3	-	113248
10	WIRE, #4 BARE STRANDED COPPER (E) FT / LB	100 / 13	40 / 5	813760
11	CONDUIT, PVC, TYPE 2, SCHEDULE 40, 1" X 10' (E)	1	-	251200
12	STRAPS, PIPE, GALV, " (E)	AS REQ'D	-	697792
13				
14				
15	INSULATOR, PIN TYPE, CLASS AS REQ'D	1	1	STD. 750
16	WIRE, TIE (E)	1	1	815232
17	WIRE, #8 BARE SOLID ANNEALED COPPER (G) FT / LB	15 / 1	15 / 1	812928
18	STAPLES, 1 1/4", FENCE, GALV (G) (E)	AS REQ'D	AS REQ'D	678528
19	BRACKET, INSULATOR, 1" OR 1 3/8" THREAD (AS REQ'D)	1 / 1	1 / 1	166144 / 166176
20	COVER, BOLT, PLASTIC (E)	3	3	285696
21	NAILS, GALV, 1 3/4" ROOFING (E)	AS REQ'D	AS REQ'D	492192
22	BOLT, MACH, GALV, 3/4" X (LENGTH AS REQ'D), 1 SQUARE CURVED & 1 DOUBLE COIL SPRING WASHER (E)	2	2	STD. 392
23	BRACKET, TRANSFORMER CLUSTER MOUNTING	1	1	403008
24	TRANSFORMER, SINGLE PHASE, TYPE 'Y', 'YF', 'H' OR 'HF'	3	3	STD 1121
25	BOLT, MACH, GALV, 1/2" X 5" (E)	1	1	153024
26	WASHER, GALV, 1/2", ROUND (E)	2	2	800192
27	INSULATOR, SECONDARY, SPOOL, PORCELAIN (E)	1	1	430752
28	NUT, GALV, 1/2" (E)	1	1	504736
29	SIGN, HIGH VOLTAGE (E)	3	1	647648
30	NAILS, GALV, 7/8" ROOFING (E)	27	9	492224

FOR FIELD MAINTENANCE ONLY

TABLE OF CONTENTS

SDG&E ELECTRIC STANDARDS

7.2 AND 12KV THREE PHASE TRANSFORMER CLUSTER MOUNT INSTALLATION-ALLEY ARM CONSTRUCTION

DATE 1-1-91
APPD PLA/ESS

1199.805
SUPERSEDES
1174.3 (1-1-93)

BILL OF MATERIAL: (CONT'D)

ITEM	DESCRIPTION	QUANTITY STATION (J) WITH ARRESTERS	QUANTITY STATION WITHOUT ARRESTERS	STOCK NUMBER OR CONSTR STANDAR
31	WIRE, W.P. COPPER, SIZED PER TRANSFORMER CAPACITY	35'	35'	STD 1125
32	CONNECTOR, WIRE, COMPRESSION, CU OR AL AS REQ'D (E)	AS REQ'D	AS REQ'D	783-786
33	WIRE, #6, 3 STRAND, BARE COPPER FT / LB	55 / 4	40 / 3	813536
34	UNIT, GROUND, COMPLETE (K)	2	1	603136
35	CONDUIT, PVC. TYPE 2, SCHEDULE 40, 1/2" (E)	10'	–	251168
36	STRAPS, PIPE, GALV. 1/2" AND 1 3/4" ROOFING NAILS (E)	AS REQ'D.	–	697728

INSTALLATION:

A. USE THIS CONSTRUCTION FOR TRANSFORMERS RATED 12KV AND BELOW WHICH HAVE HIGH VOLTAGE BUSHINGS MOUNTED ON TOP OF COVER.

B. LIMITED TO TRANSFORMERS 100 KVA AND SMALLER, EACH WEIGHING 1200 POUNDS OR LESS.

C. WHEN PRACTICAL, BOLT TRANSFORMERS TO BRACKET ON THE GROUND AND INSTALL THEM AS A PREWIRED ASSEMBLY.

(D) DRILL THROUGH CROSSARM 1" UP FROM LOWER EDGE SO THAT LOWER CROSSARM MOUNTING BRACKET BOLT DOES NOT INTERFERE WITH PVC CONDUIT.

(E) EXEMPT MATERIAL.

(F) INSTALL LA/CO CROSSARM ON SAME SIDE OF POLE AS TRANSFORMERS.

(H) BOND ALL CUTOUTS IN HEAVY CONTAMINATION DISTRICT, AS IDENTIFIED ON STANDARD 287. IN AREAS WHERE BONDING IS REQUIRED, TO AVOID BONDWIRE AND LIGHTNING ARRESTER GROUNDWIRE ON THE SAME CROSSARM, USE TWO CROSSARMS; ONE FOR CUTOUTS AND ONE FOR LIGHTNING ARRESTERS.

REFERENCE:

1. PRIMARY AND SECONDARY CONNECTIONS ARE SHOWN FOR ILLUSTRATIVE PURPOSES. SEE STANDARD 1118-1119 FOR SPECIFIC CONNECTION DIAGRAMS.

(J) LIGHTNING ARRESTER APPLICATION, SEE STANDARD 1247.

(K) GROUNDING METHOD AND APPLICATION, SEE STANDARD 1002.

(L) POLE STEPPING, SEE STANDARD 363.

FOR FIELD MAINTENANCE ONLY

TABLE OF CONTENTS

1199.806 SUPERSEDES 1174.4 (1-1-93)	SDG&E ELECTRIC STANDARDS 7.2 AND 12KV THREE PHASE TRANSFORMER CLUSTER MOUNT INSTALLATION-ALLEY ARM CONSTRUCTION	DATE 1-1-89 APPD

TABLE OF CONTENTS

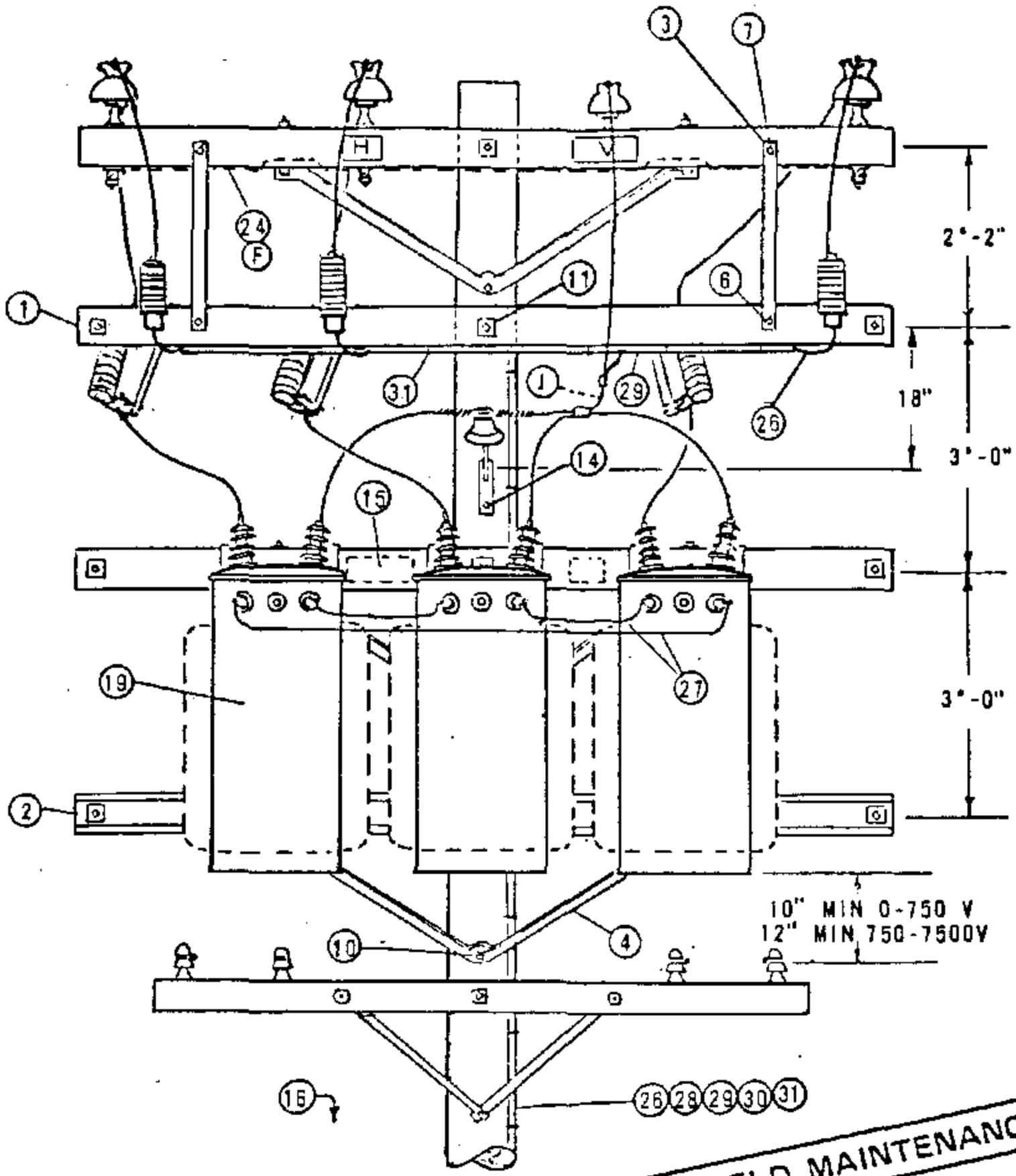

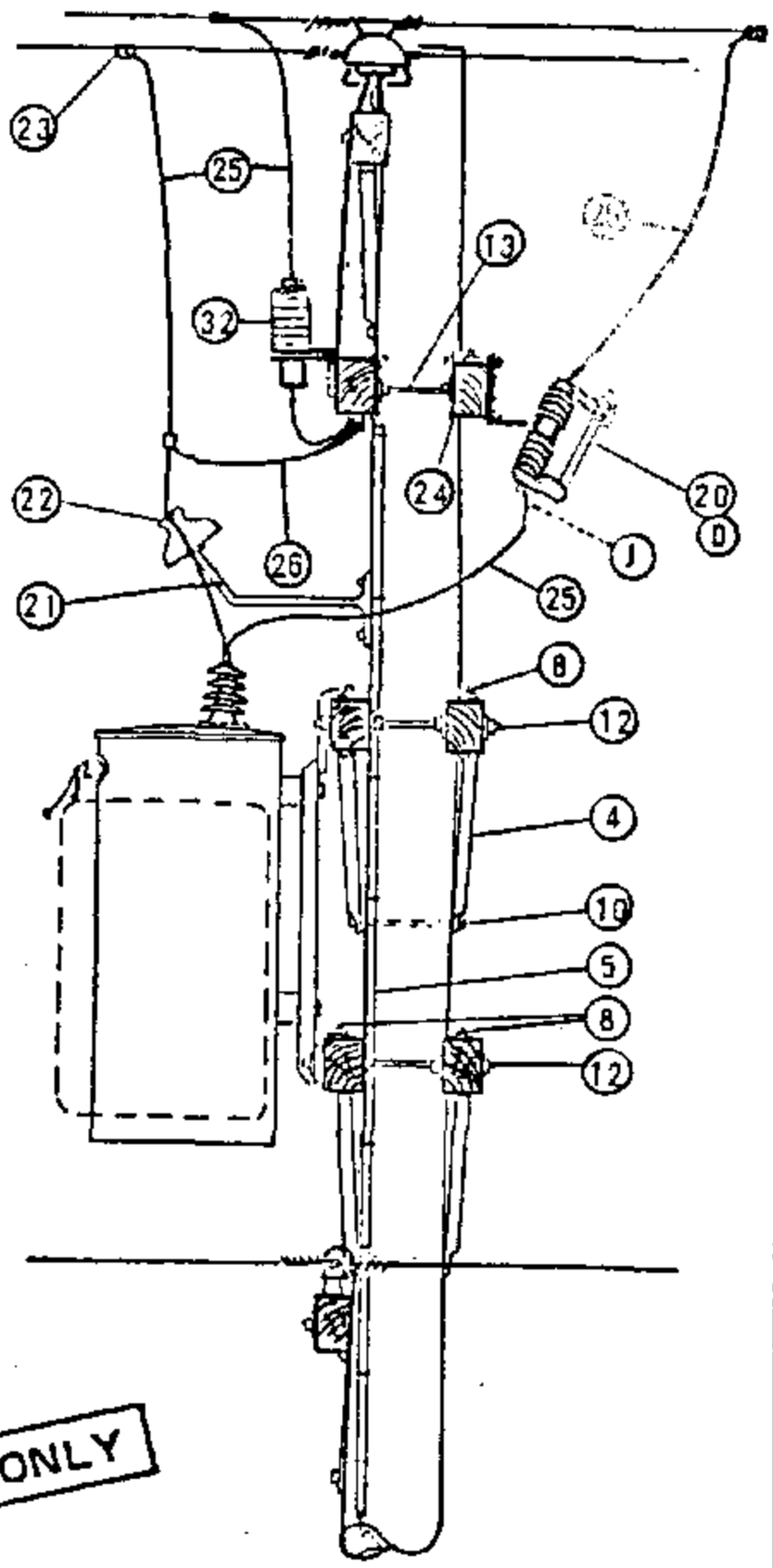

FOR FIELD MAINTENANCE ONLY

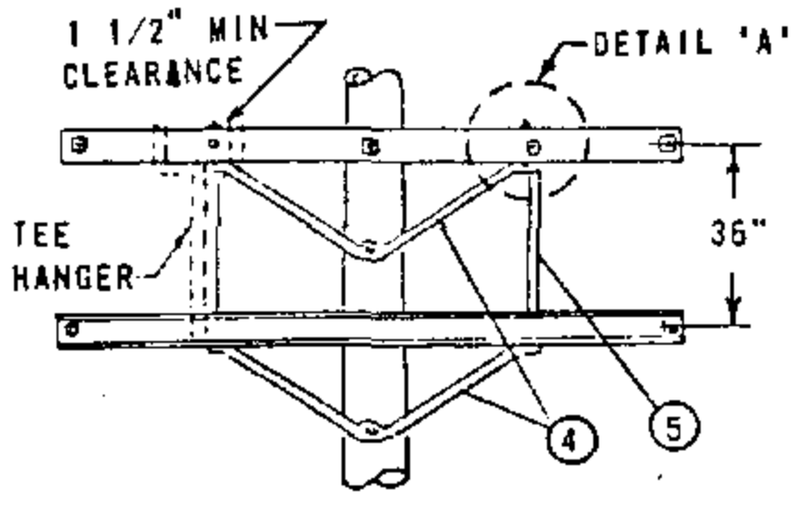

FRAMING DETAIL

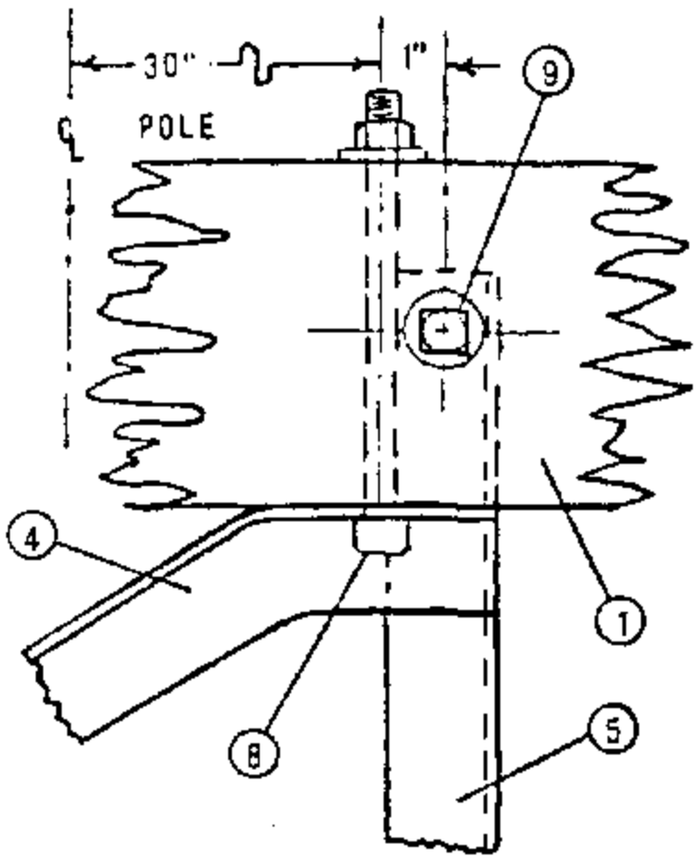

DETAIL "A"

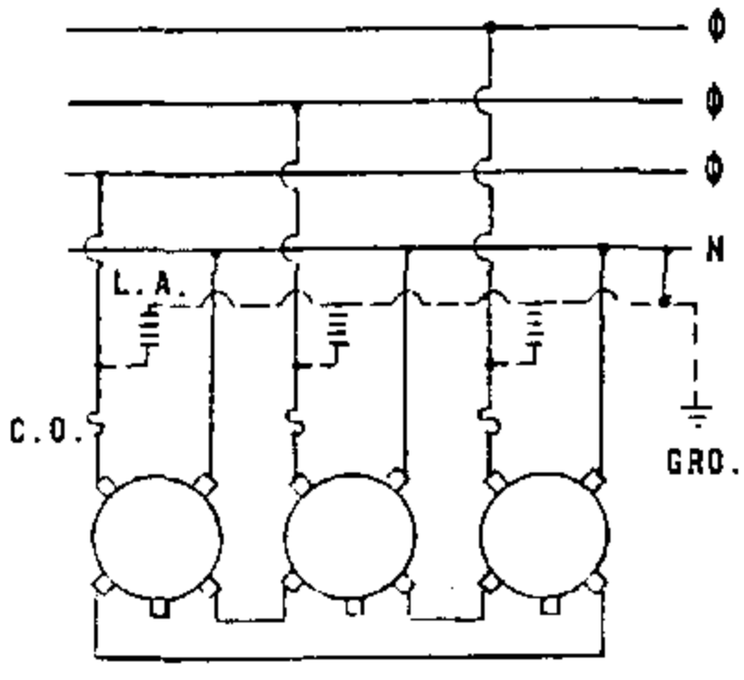

SCHEMATIC WIRING DIAGRAM

DATE 1-1-88 APPD AK/RSK	SDG&E ELECTRIC STANDARDS 12KV GROUNDING BANK INSTALLATION	1199.901

NOTES:

A. USE EXTRA HEAVY CLASS ONE POLE WITH 10" MIN. TOP DIAMETER ON NEW CONSTRUCTION.

(B) CONSTRUCT USING 3-50 OR 3-75 KVA TRANSFORMERS WEIGHING 1200# OR LESS APIECE.

C. SPACING OF TRANSFORMERS TO BE AS CLOSE AS PRACTICAL AND NOT TO EXCEED 33 1/2" CENTER TO CENTER.

(D) FUSE ALL INSTALLATIONS AT 15 AMP.

E. DO NOT GROUND SECONDARY.

(F) BOND ALL CUTOUTS AND LINE HARDWARE WITHIN 3 MILES OF COAST.

G. BOND ALL DEADEND HARDWARE EVERYWHERE.

H. USE TWO ROD GROUNDS.

(I) UNIT GROUND COMPLETE, ORDER 603120 (WITH GRAY MOULDING) OR 603136 (WITH PLAIN MOULDING).

(J) BARE 2" OF WIRE TO PERMIT APPLICATION OF TEMPORARY WORKING GROUNDS. NEUTRAL WORKING GROUND MAY BE ATTACHED TO BARE CONDUCTOR.

FOR FIELD MAINTENANCE ONLY

	ITEM	DESCRIPTION	QUANTITY	STOCK NO. OR STD. PAGE
P T & F	1	CROSSARM, 3 3/4" X 5 3/4" X 10'-0"	6	PG 119 IT 2
	2	COVER STRIP, 1 5/8" X 3 5/8" X 10'-0" (2X4S4S)	1	699360
	3	FLAT CROSSARM BRACE, 28"	2	164192,
	4	ANGLE CROSSARM BRACE, 5'-0"	4	164128
	5	VERTICAL BRACE, 36"	2	164256,
	6	MACH. BOLT, GALV., 3/8" X 5", 1-RD. WASH. & 1 NUT	2	PGS 139, 140
	7	MACH. BOLT, GALV., 1/2" X 5", 1-RD. WASH. & 1 NUT	2	PGS 139, 140
	8	MACH. BOLT GALV., 1/2" X 8", 1-RD. WASH.. & 1 NUT	8	PGS 139, 140
	9	MACH. BOLT, GALV., 5/8" X 5", 1-RD. WASH 1 DBL COIL SPR WASH & 1 NUT	4	PGS 139, 140
	10	MACH. BOLT, GALV., 5/8" X 10" OR 12", 1 DBL COIL SPR WASH & 1 NUT	2	PGS 139, 140
	11	MACH. BOLT, GALV., 5/8" X 20", 2-3" SQ. WASH. 1 DBL COIL SPR WASH & 1 NUT	1	PGS 139, 140
	12	MACH. BOLT, GALV., 3/4" X 20", 2-3" SQ. WASH. 1 DBL COIL SPR WASH & 1 NUT	2	PGS 139, 140
	13	SPACE BOLT, GALV., 5/8" X 20" OR 22", 4-SQ. WASH. 2 DBL COIL SPR WASH & 2 NUTS	6	PGS 139, 140
	14	LAG SCREW, GALV., 1/2" X 4"	2	621568
	15	HIGH VOLTAGE SIGN & 8-ROOFING NAILS, GALV.	1	647776-492224
	16	POLE STEPS	19	692992
	17			
	18			
L T I	19	TRANSFORMER, SINGLE PHASE (WITH T HANGERS) HF OR YF	3	PG 1121 (B)
	20	CUTOUT, 12KV, HEAVY DUTY, 100A.	3	PGS 1212, 1213
	21	INSULATOR BRACKET, 1" LEAD THREAD	1	166144
	22	INSULATOR, 12KV, (CLASS 55-3)	1	429152-429152
	23	WIRE CONNECTORS, COMPRESSION (SIZE AS REQ'D)	9	PGS 783, 786
	24	WIRE, BARE SOLID ANNEALED, #8	AS REQ'D	812928
	25	WIRE, #4 CU WP	AS REQ'D	812480
	26	WIRE, BARE STRANDED, #2	55'	813664
	27	WIRE, COPPER, POLYETHYLENE, W.P. 3-50KVA - 1/0 3-75KVA - 4/0	10 LBS 15 LBS	812576 812640
	28	GROUND ROD AND CLAMP	2	603072-230018 (1)
	29	HARDWOOD MOULDING, 1"	47'	487200 (1)
	30	MOULDING STAPLES, GALV., 3" X 1 1/16" X 1/4"	35	678560 (1)
	31	FENCE STAPLES, GALV., 1 1/4"	30	678528 (1)
	32	ARRESTER LIGHTNING, 12KV	3	113248
	33			

TABLE OF CONTENTS

SDG&E ELECTRIC STANDARDS

1199.902

12KV GROUNDING BANK INSTALLATION

DATE 1-1-88

APPD AE/RJ

1200 SECTIONALIZING

1200 SECTIONALIZING

PAGE	SUBJECT
1299.001	OVERHEAD 12KV CURRENT - LIMITING FUSE INSTALLATION
1299.101	12KV EXPULSION FUSED CUTOUT
1299.201-.203	POLE TOP SWITCH VERTICAL BREAK TYPE SINGLE CIRCUIT HORIZONTAL CONFIGURATION
1299.204	POLE TOP SWITCH INSTALLATION, 4KV DISCONNECT SWITCH, HOOKSTICK OPERATED
1299.205-.206	LINE TENSION DISCONNECT SWITCH - HOOKSTICK OPERATED
1299.207	IN-LINE DISCONNECT SWITCHES WEDGE TAP CONNECTED - 12KV AND BELOW
1299.208-.209	POLE TOP SWITCH 12KV VERTICAL BREAK TYPE SINGLE CIRCUIT HORIZONTAL CONFIGURATION
1299.301-.304	POLE TOP SWITCH INSTALLATION, 12KV SINGLE CIRCUIT, HORIZONTAL AND VERTICAL CONFIGURATION
1299.305-.306	POLE TOP SWITCH INSTALLATION, 69KV SINGLE CIRCUIT, TRIANGULAR CONFIGURATION
1299.307-.309	POLE TOP SWITCH INSTALLATION, 12KV, HORIZONTAL BREAK
1299.401	POLE TOP SWITCH INSTALLATION, 4KV WESTINGHOUSE OIL SWITCH, TYPE FO 11
1299.701-.703	SERVICE RESTORER WITH CUTOUT DISCONNECT
1299.704-.706	SERVICE RESTORER WITH HOOKSTICK SWITCH DISCONNECT
1299.707-.711	SERVICE RESTORER BUCK POSITION, HOOKSTICK SWITCH

MAIN TABLE OF CONTENTS

© 1998 - 2019 San Diego Gas & Electric Company. All rights reserved. Removal of this copyright notice without permission is not permitted under law.

REV	CHANGE	BY	DSGN	APPV	DATE	REV	CHANGE	BY	DSGN	APPV	DATE
C						F					
B	COMPLETELY REVISED	JK	JS	CZH	10/15/2019	E					
A	ORIGINAL ISSUE	JK	JS	CZH	6/13/2019	D					

Indicates Latest Revision | X | Completely Revised | | New Page | | Information Removed

SHEET 1 OF 1

SDG&E ELECTRIC OVERHEAD FIELD MAINTENANCE ONLY STANDARDS

LEGACY OVERHEAD FIELD MAINTENANCE
TABLE OF CONTENTS
SECTIONALIZING

OH LEGACY
OHL1201.1

Back-up current-limiting fuses, such as the Chance K-Mate fuse, shall be permanently installed only at the direction of the Protection Engineer in conjunction with expulsion fuses. Current-limiting fuses have the ability to limit high values of fault current so it remains within the interrupting capability of some cutouts. Back-up type current-limiting fuses are used in series with expulsion fuses in order to clear both low and high values of fault current. The back-up current-limiting fuse insures clearing of high current and the expulsion fuse, low current faults.

If a small amount of fault current passes through the two fuses (expulsion fuse in the cutout and current-limiting fuse), only the expulsion fuse will operate and the fuse tube will drop out as normal. At higher fault currents, both fuses will operate, but only the expulsion fused cutout will give the visual indication that it has operated. If the expulsion fuse has operated, always check the current-limiting fuse. To do this, remove the current-limiting fuse, and check for continuity.

The recommended method of installing these current-limiting fuses (Stock No. 365634) is to insert the stud end into the transformer cover mounted high voltage bushing terminal and connect the transformer riser in the eye bolt connector furnished with the current-limiting fuse, as shown below.

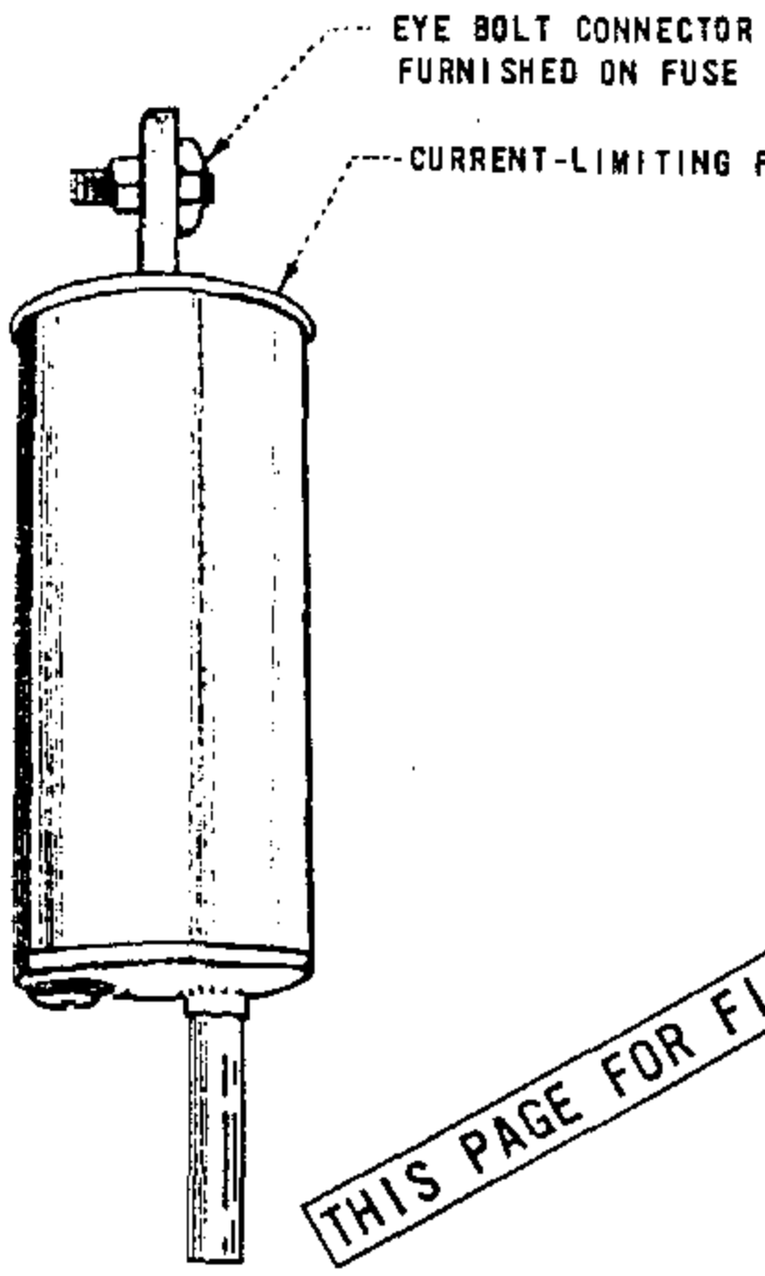

FUSE DETAIL

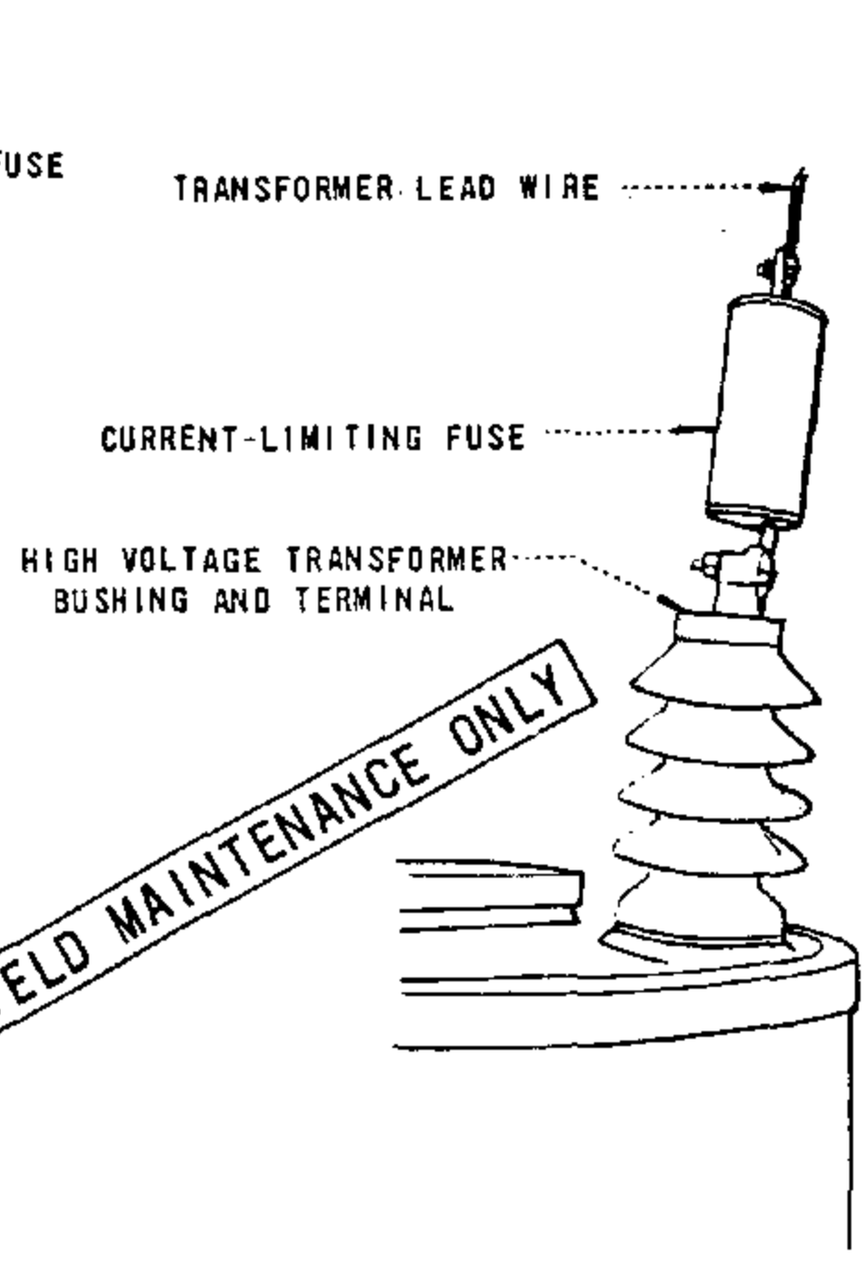

METHOD OF MOUNTING

THIS PAGE FOR FIELD MAINTENANCE ONLY

TABLE OF CONTENTS

DATE 4-5-83 APPD JMT/DCH	SDG&E ELECTRIC STANDARDS OVERHEAD 12KV CURRENT-LIMITING FUSE INSTALLATION	1299.001 SUPERSEDES 1206.1 (3-25-83)

SCOPE: THIS STANDARD SHOWS A 12KV STANDARD LEAKAGE EXPULSION FUSED CUTOUT AND THE GENERAL APPLICATION.

FOR FIELD MAINTENANCE ONLY

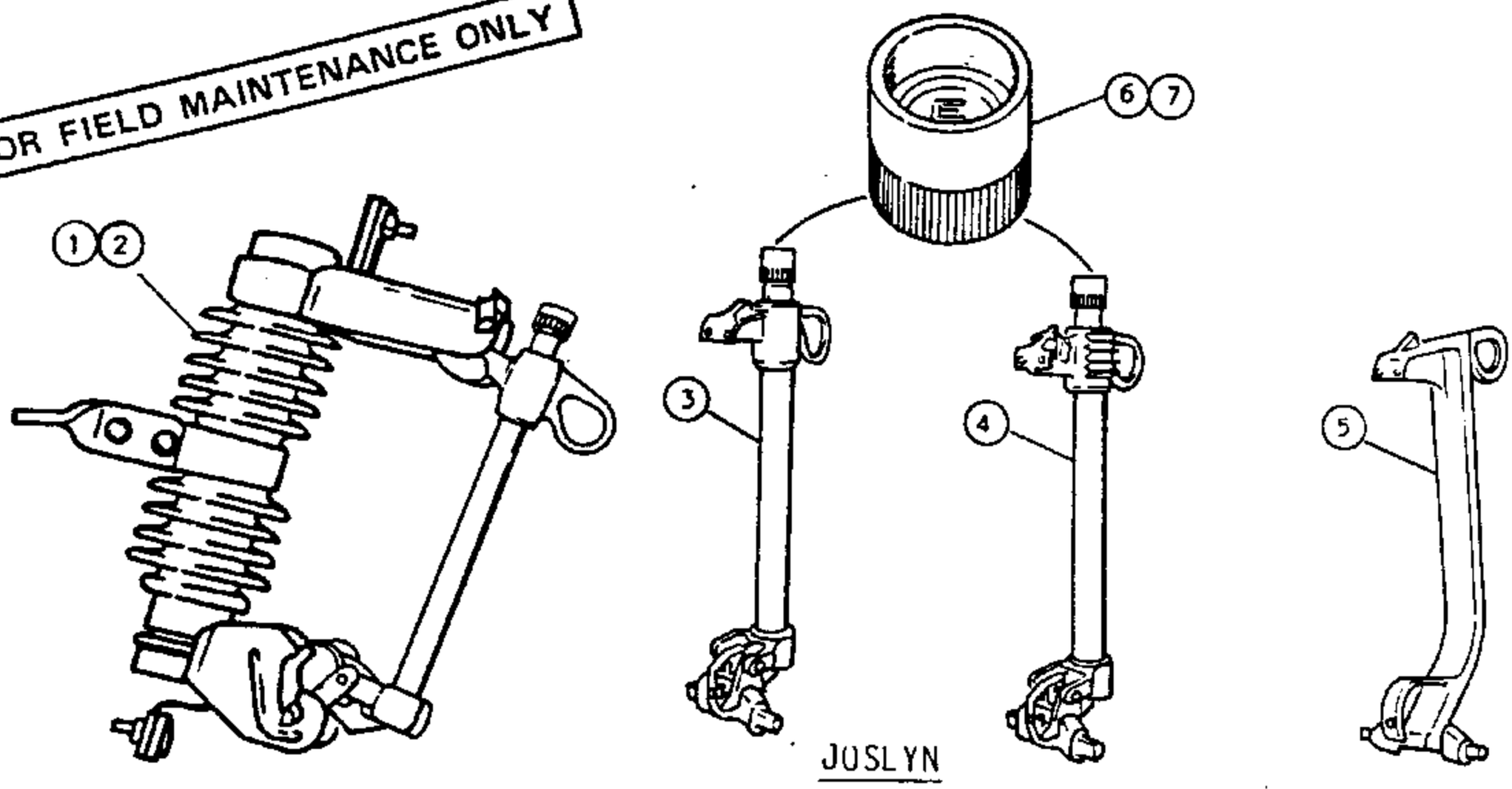

JUSLYN

BILL OF MATERIAL:

ITEM	CURRENT RANGE	CONTAMINATION DISTRICT	DESCRIPTION	STOCK NUMBER
1	FUSE 5 THRU 100A	2 & 3	CUTOUT BODY, STANDARD LEAKAGE, JOSLYN, COMPLETE WITH 100A HD FUSEHOLDER (A) (C) (D) (F)	297888
2	FUSE 125 THRU 200A	2 & 3	CUTOUT BODY, STANDARD LEAKAGE, JOSLYN, COMPLETE WITH 200A HD FUSEHOLDER (A) (C) (D) (F)	297920
3	FUSE 5 THRU 100A	2 & 3	FUSEHOLDER ONLY, 100A WITH EXPENDABLE CAP, REPLACEMENT PART FOR CUTOUT BODY ITEM #1 (F)	413192
4	FUSE 125 THRU 200A	2 & 3	FUSEHOLDER ONLY, 200A WITH EXPENDABLE CAP, REPLACEMENT PART FOR CUTOUT BODY ITEM #2 (F)	413194
5	SOLID 5 THRU 300A	2 & 3	SOLID BLADE 300A, FOR USE IN CUTOUT BODY ITEM #1 OR #2	138816
6	FUSE 5 THRU 100A	ALL	CAP, 100A, DOUBLE VENTING, EXPENDABLE REPLACEMENT PART FOR FUSEHOLDER ITEM #1 & #3 (E)	203882
7	FUSE 125 THRU 200A	ALL	CAP, 200A, DOUBLE VENTING, EXPENDABLE REPLACEMENT PART FOR FUSEHOLDER ITEM #2 & #4 (E)	203890

INSTALLATION:

(A) NO LONGER PURCHASED OR SALVAGED.

B. HIGH LEAKAGE CUTOUTS SHALL BE USED ON ALL NEW CABLE POLES IN ALL CONTAMINATION DISTRICTS.

(C) HIGH LEAKAGE CUTOUTS SHALL BE USED WHEN CUTOUTS ARE MOUNTED ON A COMMON METAL BRACKET OR WHEN THEIR MOUNTING BRACKET IS BONDED OR GROUNDED.

(D) HIGH LEAKAGE CUTOUTS SHALL BE USED IN CONTAMINATION DISTRICT 1, AND MAY BE USED IN CONTAMINATION DISTRICTS 2 & 3 IF STANDARD LEAKAGE CUTOUTS ARE NOT AVAILABLE.

(E) EXEMPT MATERIAL.

(F) ALL JOSLYN CUTOUTS AND FUSE HOLDERS PURCHASED PRIOR TO JULY 1984 HAVE NON EXPENDABLE CAPS. IF THE FAULT DUTY EXCEEDS 8000 AMPS REPLACE THE NON EXPENDABLE CAPS WITH EXPENDABLE CAPS, ITEM (6) OR (7) AS REQUIRED.

G. CUTOUT BODIES OF ITEM (1) AND (2) ARE THE SAME.

H. CUTOUTS ARE PURCHASED WITHOUT CROSSARM MOUNTING BRACKETS - THESE BRACKETS (UNDER STOCK #166070) ARE EXEMPT MATERIALS.

1299.101	SDG&E ELECTRIC STANDARDS 12KV EXPULSION FUSED CUTOUT	DATE 1-1-88 APPD AE/RDS

TABLE OF CONTENTS

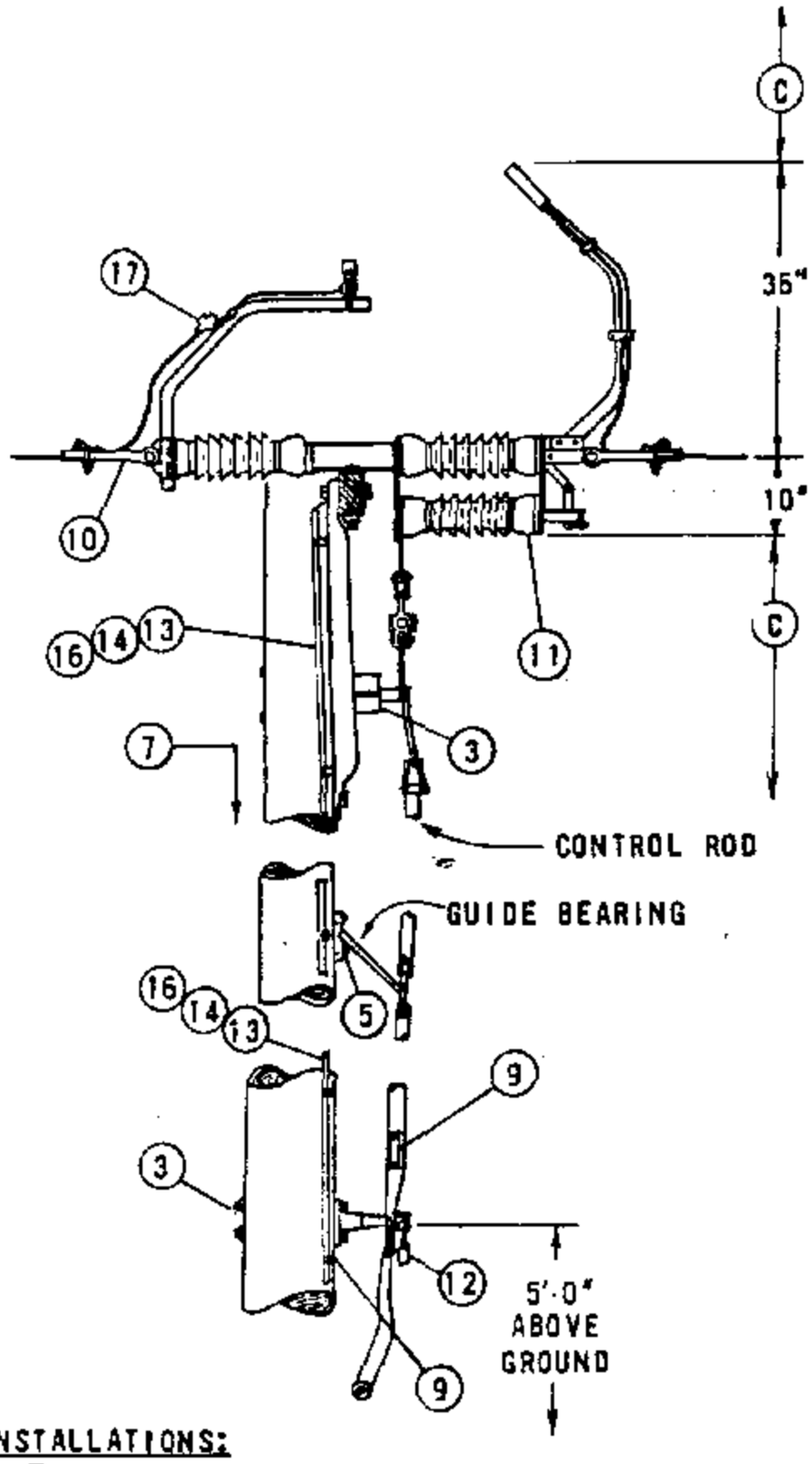

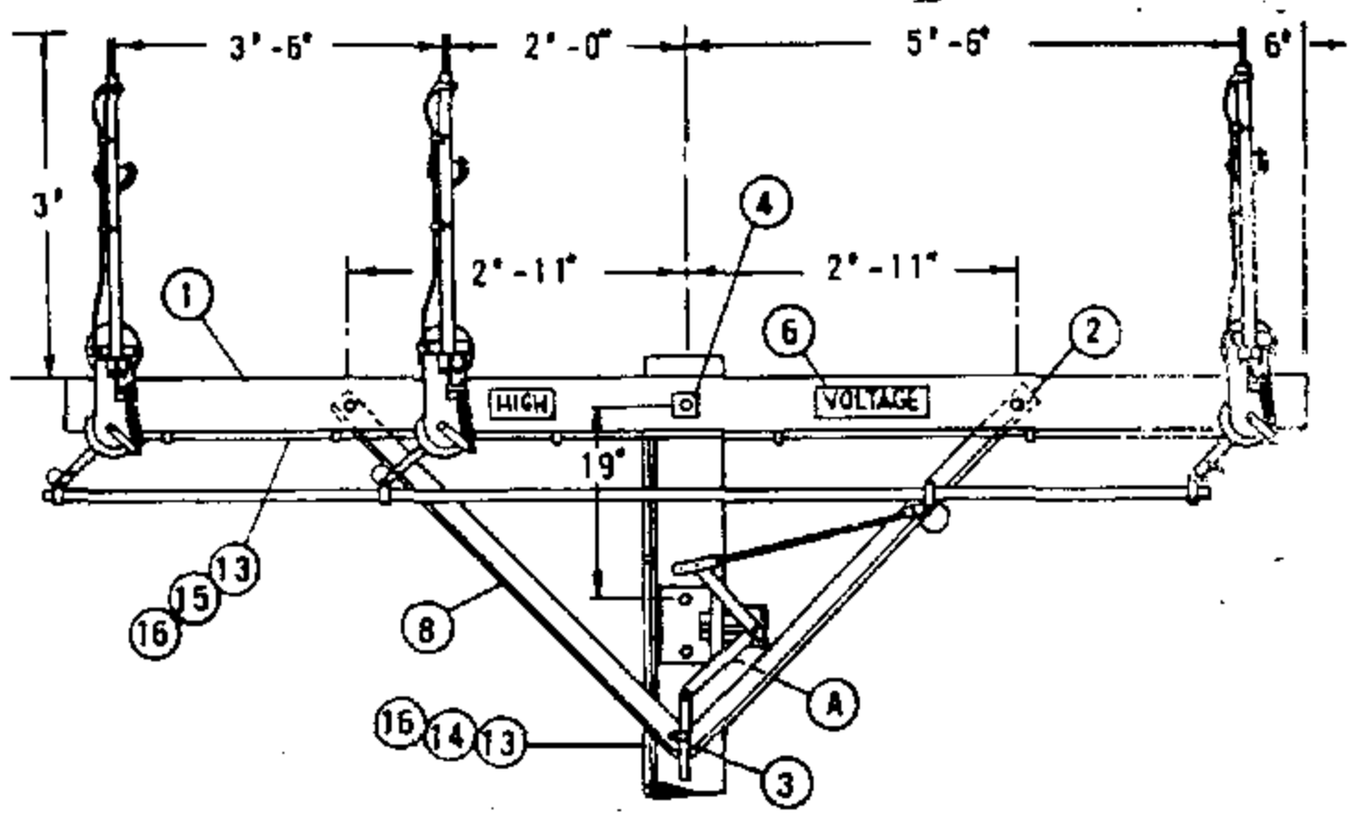

THIS PAGE FOR FIELD MAINTENANCE ONLY

INSTALLATIONS:

(A) POSITION OF BELL CRANK ASSEMBLY WITH SWITCH IN OPEN POSITION.
(E) EXEMPT MATERIAL

REFERENCES:

B. SEE PAGE 1230 TO DETERMINE WHEN THIS SWITCH SHALL BE USED.
(C) SEE SECTIONS 200 AND 500 FOR MINIMUM VERTICAL SEPARATION.

	ITEM	DESCRIPTION		QUANTITY	STOCK NO. OR CONST. STDS.
P T F	1	CROSSARM, 3 3/4" X 5 3/4" X 12'-0"		1	300 SECTION
	2	BOLT, MACH, GALV, 5/8" X 5", 1-RD WASH, & 1-DBL COIL WASH	(E)	2	100 SECTION
	3	BOLT, MACH, GALV, 5/8" X ___", 1-DBL COIL WASH & 1-SQ WASH	(E)	5	100 SECTION
	4	BOLT, MACH, GALV, 5/8" X ___", 2-SQ WASH, & 1-DBL COIL WASH	(E)	1	100 SECTION
	5	SCREW, LAG, GALV, 1/2" X 4"	(E)	2	621568
	6	SIGN, HIGH VOLTAGE AND NAILS, 9 ROOFING, GALV	(E)	2	647648, 492224
	7	STEPS, POLE	(E)	16	692992
	8	BRACE, 4', SPECIAL		2	163808
	9	TAG, SWITCH NUMBER	(E)	2	300 SECTION
O C O	10	CLAMP, STRAIGHT LINE, D.E.		6	700 SECTION
	11	SWITCH, T.P.S.T., 600 AMP		1	709248
	12	PADLOCK		1	514848
	13	WIRE, BARE STRANDED, #6		55'	813536
	14	GROUND UNIT, (GRAY OR PLAIN)		1	603120, 603136
	15	MOULDING, HARDWOOD 1"(GRAY OR PLAIN)		24'	487184, 487200
	16	STAPLE, FENCE, GALV, 1 1/4"	(E)	30	678528
	17	TERMINAL, COMPRESSION LUG		6	700 SECTION

SDG&E ELECTRIC STANDARDS

DATE 6-4-82
APPD JRH

POLE TOP SWITCH 12KV VERTICAL BREAK TYPE SINGLE CIRCUIT
HORIZONTAL CONFIGURATION - DOUBLE DEAD END

1299.201
SUPERSEDES
1229 (6-4-82)

TABLE OF CONTENTS

SCOPE: THIS SWITCH IS TO BE USED FOR TANGENT CONFIGURATIONS. IT IS TO BE USED FOR CIRCUIT TIES AND FOR SECTIONALIZING PURPOSES. MAXIMUM ALLOWABLE LINE ANGLE FOR THIS SWITCH IS 6 DEGREES.

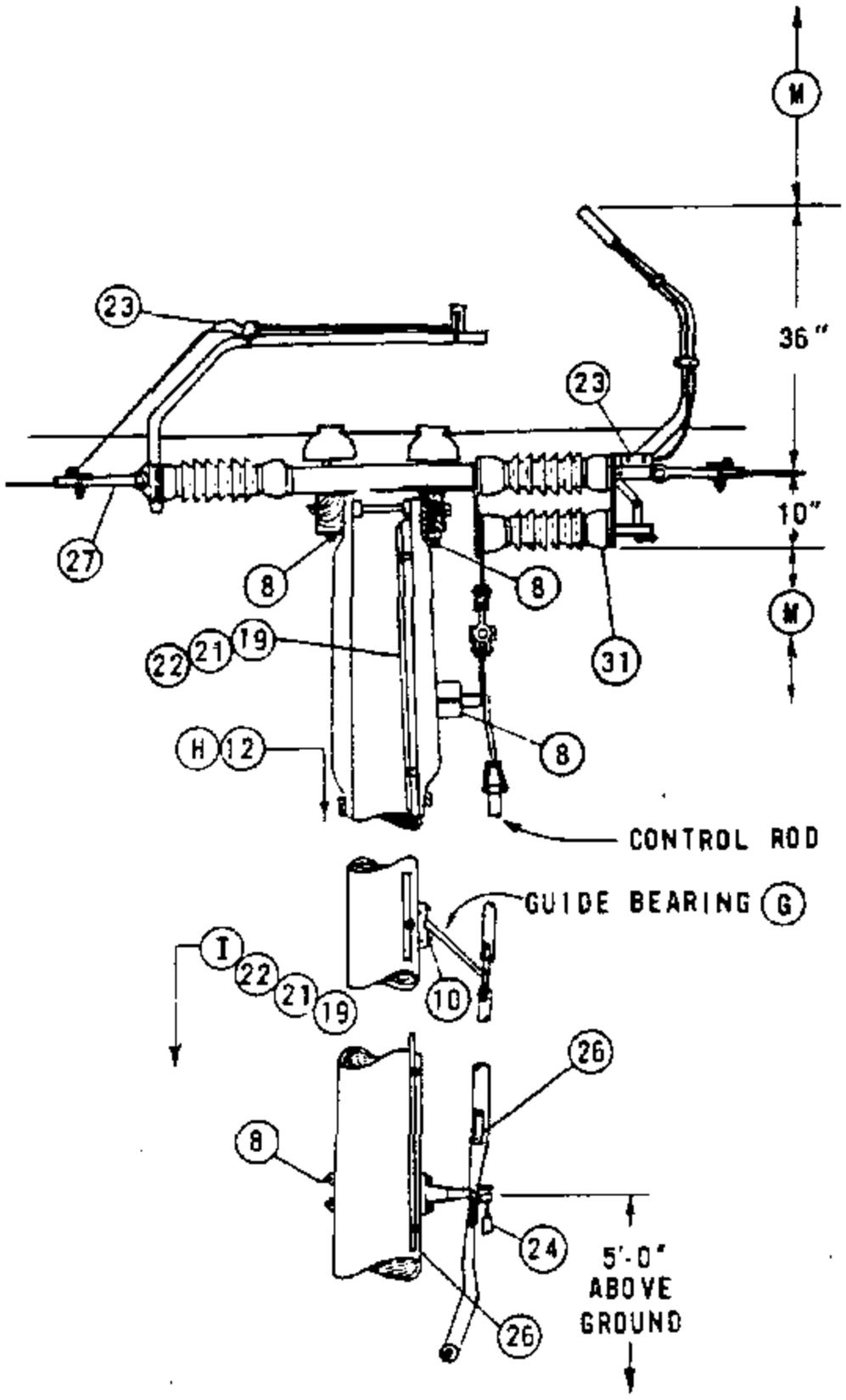

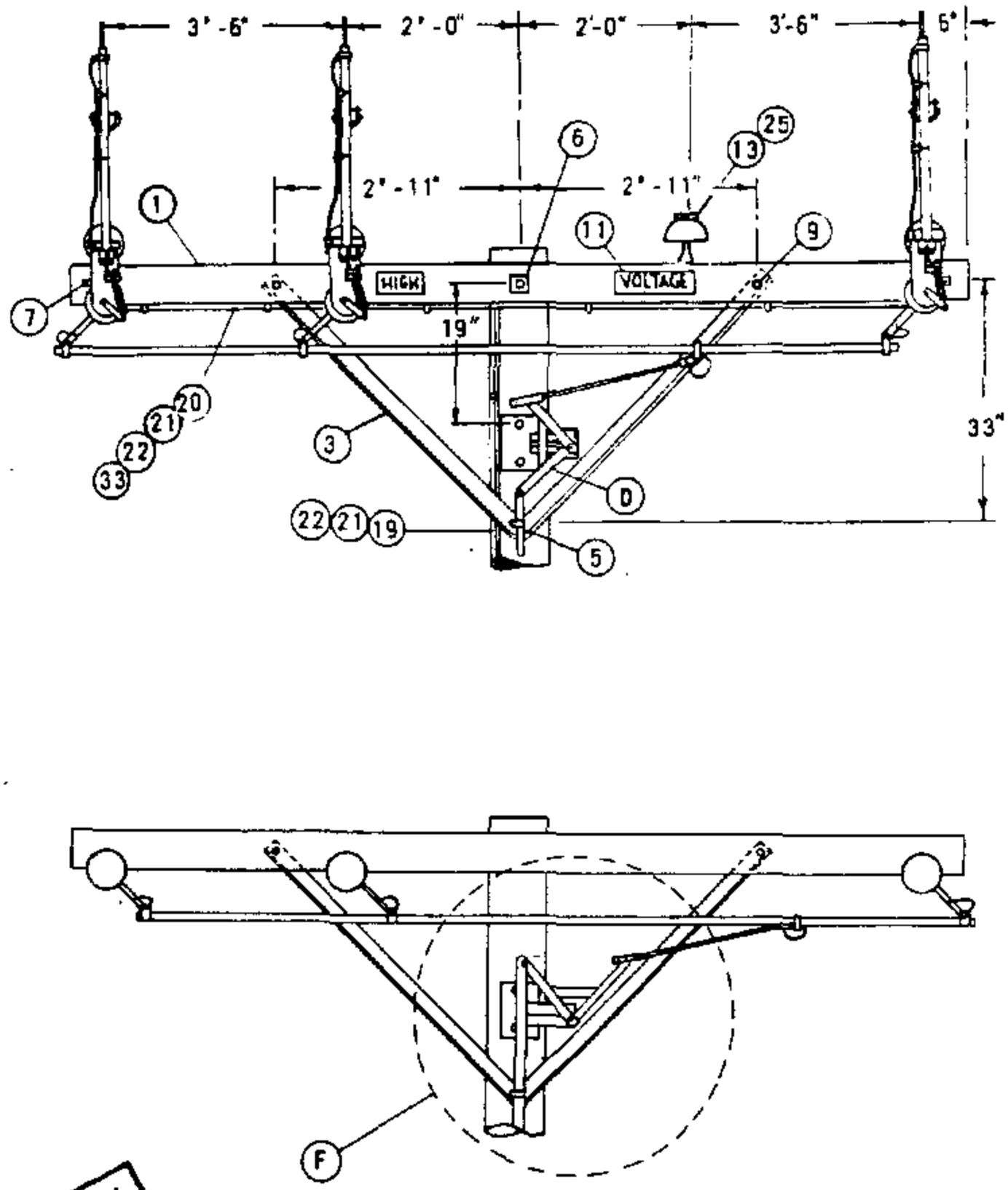



FOR FIELD MAINTENANCE ONLY

SEE PAGE 1299.203 FOR NOTES AND BILL OF MATERIAL.

TABLE OF CONTENTS

INSTALLATIONS:

A. CONTROL ROD AND SWITCH HANDLE ARE NOT ALLOWED IN THE CLIMBING SPACE. (G.O. 95 54.7-A4)

B. ATTACH GROUND WIRE TO SWITCH MOUNTING BOLTS BY USING AN ADDITIONAL ROUND WASHER.

(C) REDUCE QUANTITIES AS REQUIRED WHEN NOT USING NEUTRAL.

(D) POSITION OF BELL CRANK ASSEMBLY WITH SWITCH IN OPEN POSITION.

(E) EXEMPT MATERIAL.

(F) POSITION OF BELL CRANK ASSEMBLY WITH SWITCH IN CLOSED POSITION.

(G) GUIDE BEARING PIVOTS THROUGH 90°. IN THE OPENED AND CLOSED POSITIONS THE GUIDE BEARING MAKES A 45° ANGLE WITH THE POLE.

(H) POLES ARE TO BE STEPPED PER STANDARD 363.

(I) USE TWO GROUND RODS SPACED A MINIMUM OF 6' APART PER G.O. 95 RULE 21.1.

REFERENCES:

J. SEE STANDARD 1443 FOR SINGLE DEADEND CONFIGURATION.

K. SEE STANDARD 1205 TO DETERMINE WHEN TO USE GANG OR HOOKSTICK SWITCHES.

L. SEE DESIGN MANUAL PAGE 5621 - CRITERIA AND GENERAL PRACTICES FOR SECTIONALIZING.

(M) SEE SECTIONS 200 AND 500 FOR MINIMUM VERTICAL SEPARATION.

(N) SEE STANDARD 759 FOR USE OF LINE GUARD.

FOR FIELD MAINTENANCE ONLY

ITEM	DESCRIPTION		QUANTITY	STOCK NO. OR CONSTR. STDS.
1	CROSSARM, 3 3/4" X 5 3/4" X 12'-0"		2	300 SECTION
2	BRACE, ANGLE, 6'-0"		-	164160
3	BRACE, 4' SPECIAL		4	163808
4	BOLT, MACH, GALV, 1/2" X 7", 1-RD WASH, & 1-DBL COIL WASH	(E)	-	100 SECTION
5	BOLT, MACH, GALV, 5/8" X__", & 1-DBL COIL WASH	(E)	1	100 SECTION
6	BOLT, MACH, GALV, 5/8" X__", 2-SQ WASH & 1-DBL COIL WASH	(E)	1	100 SECTION
7	BOLT, SPACE, GALV, 5/8" X__", 4-SQ WASH & 2- DBL COIL WASH	(C) (E)	2	100 SECTION
8	BOLT, MACH, GALV, 5/8" X__", 1-SQ WASH & 1-DBL COIL WASH	(E)	16	100 SECTION
9	BOLT, MACH, GALV, 5/8" X 5", 1-RD WASH & 1-DBL COIL WASH	(E)	4	100 SECTION
10	SCREW, LAG, GALV, 1/2" X 4"	(E)	2	621568
11	SIGN, HIGH VOLTAGE AND NAILS, 9 ROOFING, GALV	(E)	2	647648, 492224
12	STEPS, POLE	(H) (E)	16	692992
13	PIN, INSULATOR, STRAIGHT, 12KV, 1" & 1-DBL COIL WASH	(C)	2	532704, 798560 (E)
14	STUD, 7 1/2" & 1-DBL COIL WASH	(C)	-	701760, 798560 (E)
15				
16	CLEVIS, DEAD END, 5/8" BOLT STEEL (OPEN TYPE)	(C) (E)	-	235618
17	LINK, EXTENSION GALV, 1/2" X 2" X 12"	(C)	-	466240
18	STRAP, EXTENSION GALV, 1/2" X 1 1/2" X 28"	(C)	-	696864
19	GROUND UNIT (GRAY OR PLAIN)		1	603120, 603136
20	MOULDING, HARDWOOD 1" (GRAY OR PLAIN)		24'	487184, 487200
21	STAPLE, FENCE, GALV, 1 1/4"	(E)	30	678528
22	WIRE, BARE STRANDED, #6		5 LBS	813536
23	TERMINAL, COMPRESSION LUG		6	700 SECTION
24	PADLOCK		1	514848
25	INSULATOR, LINE, 12KV NEUTRAL	(C) (E)	2	429216
26	TAG, SWITCH NUMBER		2	300 SECTION
27	CLAMP, STRAIGHT LINE, O.E.	(C)	6	700 SECTION
28	CLAMP, POST INSULATOR	(N) (C)	-	700 SECTION
29	INSULATOR, VERTICAL POST	(C)	-	428608
30	INSULATOR, SUSPENSION	(C)	-	700 SECTION
31	SWITCH, T.P.S.T., 600 AMP		1	709246
32	SWITCH, T.P.S.T., 600 AMP		-	709250
33	STAPLES, MOULDING, GALV, 3" X 1 1/16" X 1/4"	(E)	AS REQD	678560
34	CONNECTOR, WIRE COMPRESSION (SIZE AS REQ'D)	(C)	-	700 SECTION

SDG&E ELECTRIC STANDARDS

DATE 1-1-87
APPD AK/RD

POLE TOP SWITCH 12KV VERTICAL BREAK TYPE SINGLE CIRCUIT HORIZONTAL CONFIGURATION

1299.203
SUPERSEDES
1228.3 (1-1-87)

TABLE OF CONTENTS

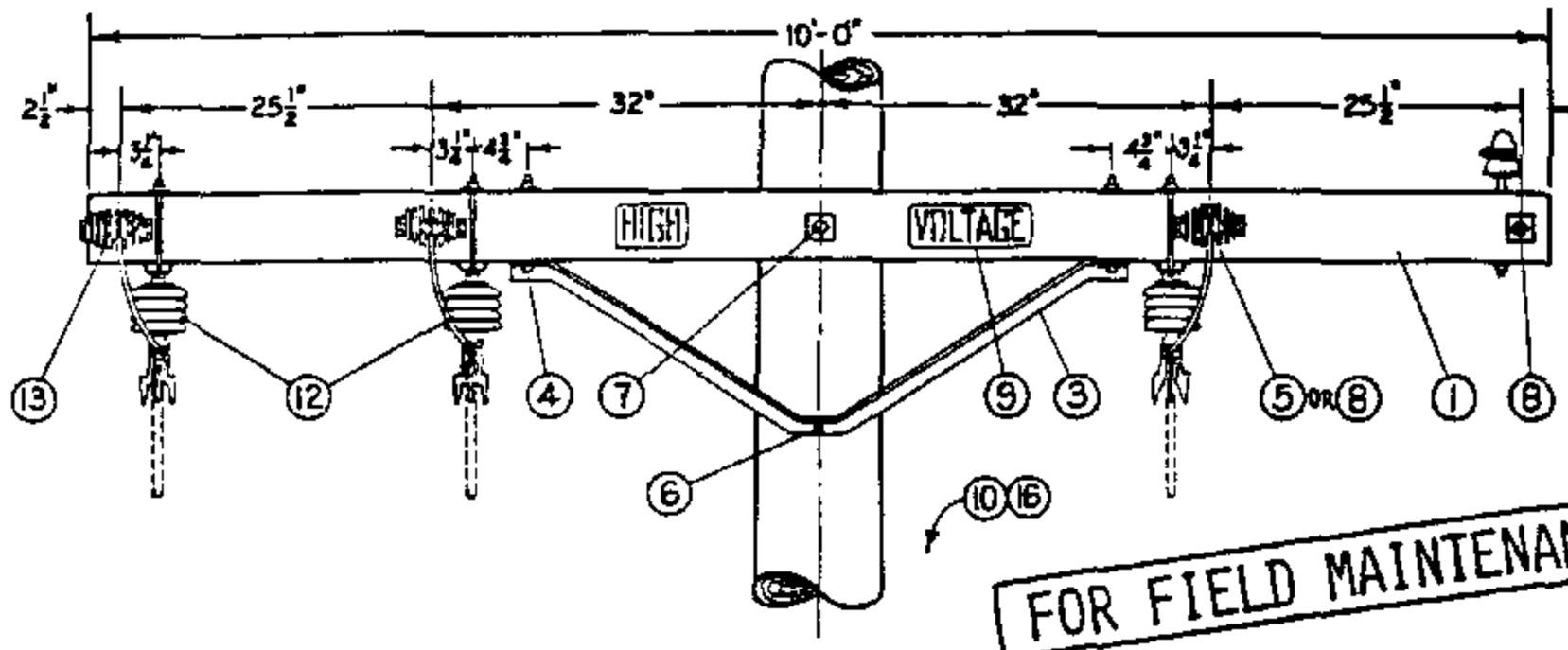

FIGURE 1
SPREAD CONSTRUCTION

FOR FIELD MAINTENANCE ONLY

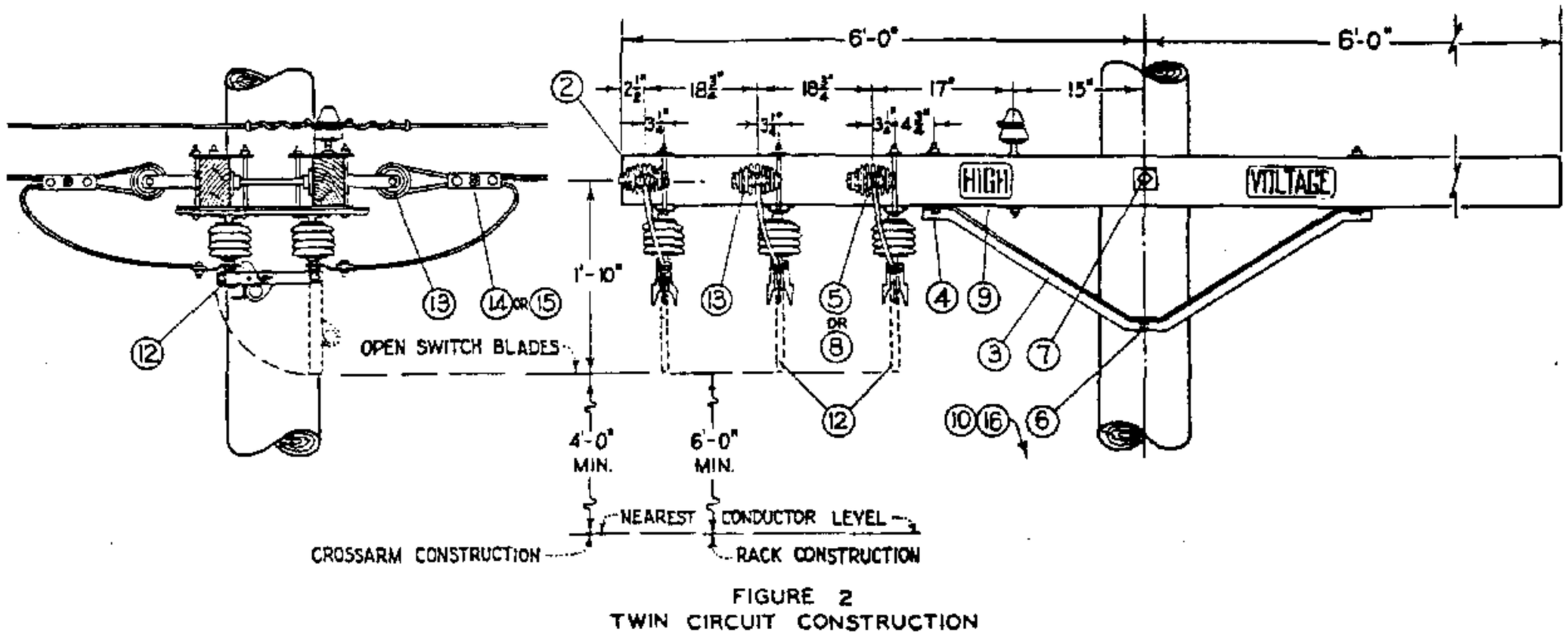

FIGURE 2
TWIN CIRCUIT CONSTRUCTION

NOTE:

A. FOR ARM-END CONSTRUCTION, REDRILL CROSSARMS IN FIELD AS SPECIFIED BY FIGURE 2

	ITEM	DESCRIPTION	QUANTITY				STOCK NO. OR CONSTR. STDS.
			FIGURE 1		FIGURE 2		
			#4 or SMALLER	#2 or LARGER	#4 or SMALLER	#2 or LARGER	
P T & F	1	Crossarm, 3 3/4" X 5 3/4" X 10'-0"	2	2	-	-	PG 119 IT. 2
	2	Crossarm, 3 3/4" X 5 3/4" X 12'-0"	-	-	2	2	PG 119 IT. 4
	3	Angle Crossarm Brace, 4'-0"	2	2	2	2	164032
	4	Mach. Bolt, Galv., 1/2" X 7", 1-rd. wash. & 1-nut	4	4	4	4	PGS 139, 140
	5	Mach. Bolt, Galv., 5/8" X 5", 1-sq. wash. & 1-nut	4	-	4	-	PGS 139, 140
	6	Mach. Bolt, Galv., 5/8" X 10", 1-nut	1	1	1	1	PGS 139, 140
	7	Mach. Bolt, Galv., 5/8" X 18", 2-sq. wash. & 1-nut	1	1	1	1	PGS 139, 140
	8	Space Bolt, Galv., 5/8" X 20", 4-sq. wash & 4-nuts	2	4	2	4	PGS 139, 140
	9	High Voltage Sign & 8-Roofing Nails, Galv.	2	2	2	2	647776, 492192
	10	Pole Steps	17	17	17	17	692992
	11						
D C & D	12	Disconnect Switch, 14.4 KV, 600 A, S.P.S.T., with Hanger Straps and Bolts	3	3	3	3	707008
	13	Insulator, D. E.	6	6	6	6	235520
	14	Wire Connector, Split Bolt	12	-	12	-	PGS 783, 786
	15	Wire Connector, 3-Bolt Clamp	-	6	-	6	227296
	16	Switch Tag	2	2	2	2	—

1299.204
SUPERSEDES
1221 (1-1-87)

SDG&E ELECTRIC STANDARDS

POLE TOP SWITCH INSTALLATION
4KV DISCONNECT SWITCH, HOOK STICK OPERATED

DATE 1-1-87
APPD AK/DS

TABLE OF CONTENTS

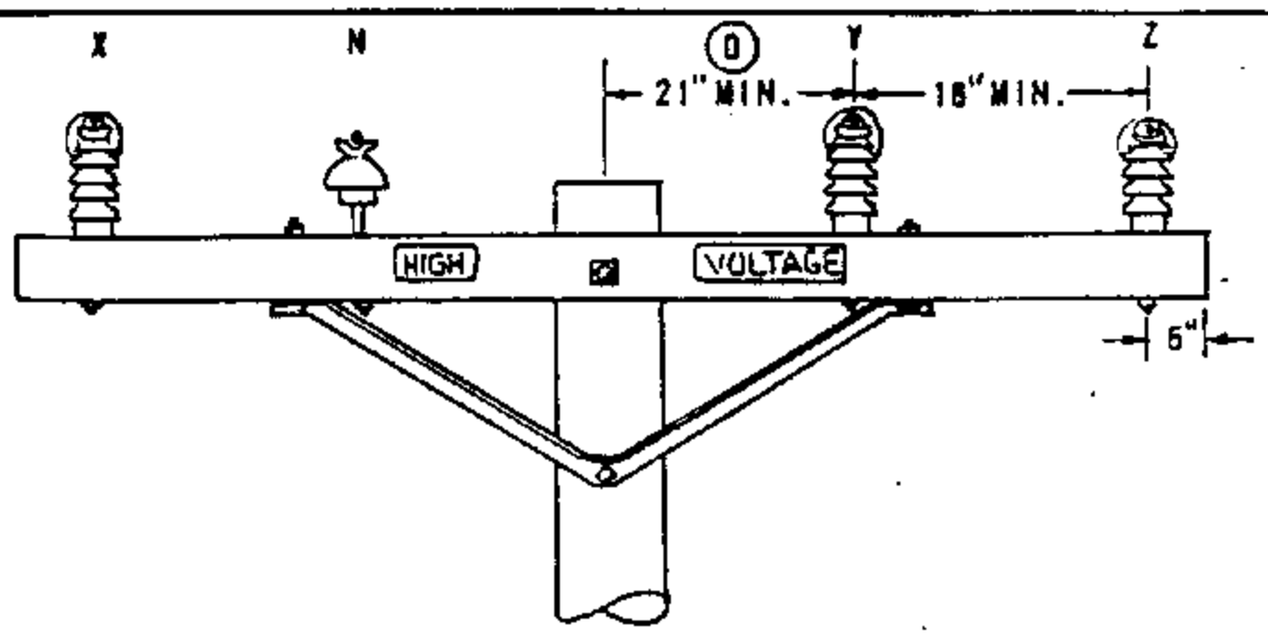

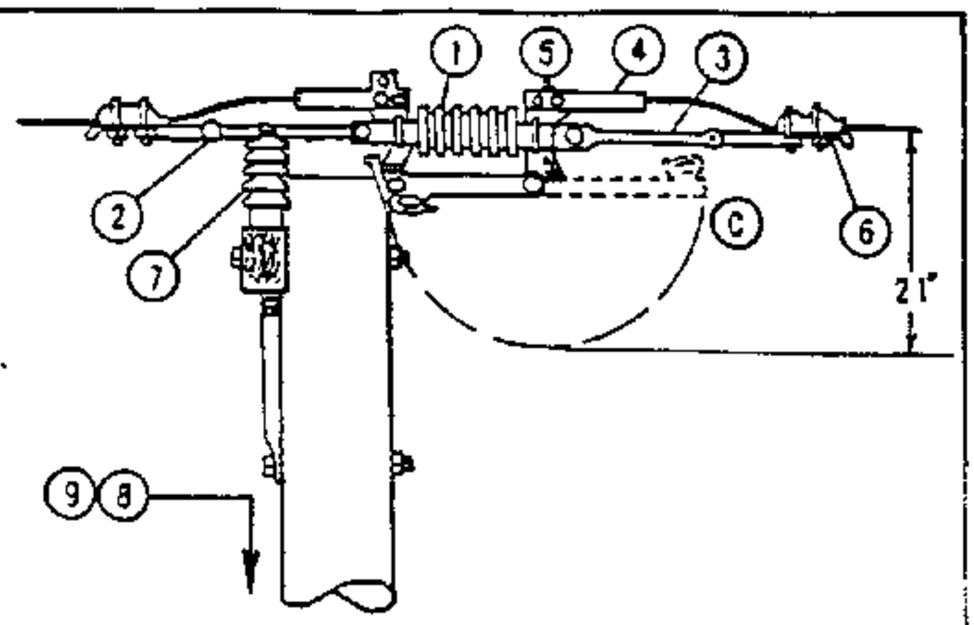

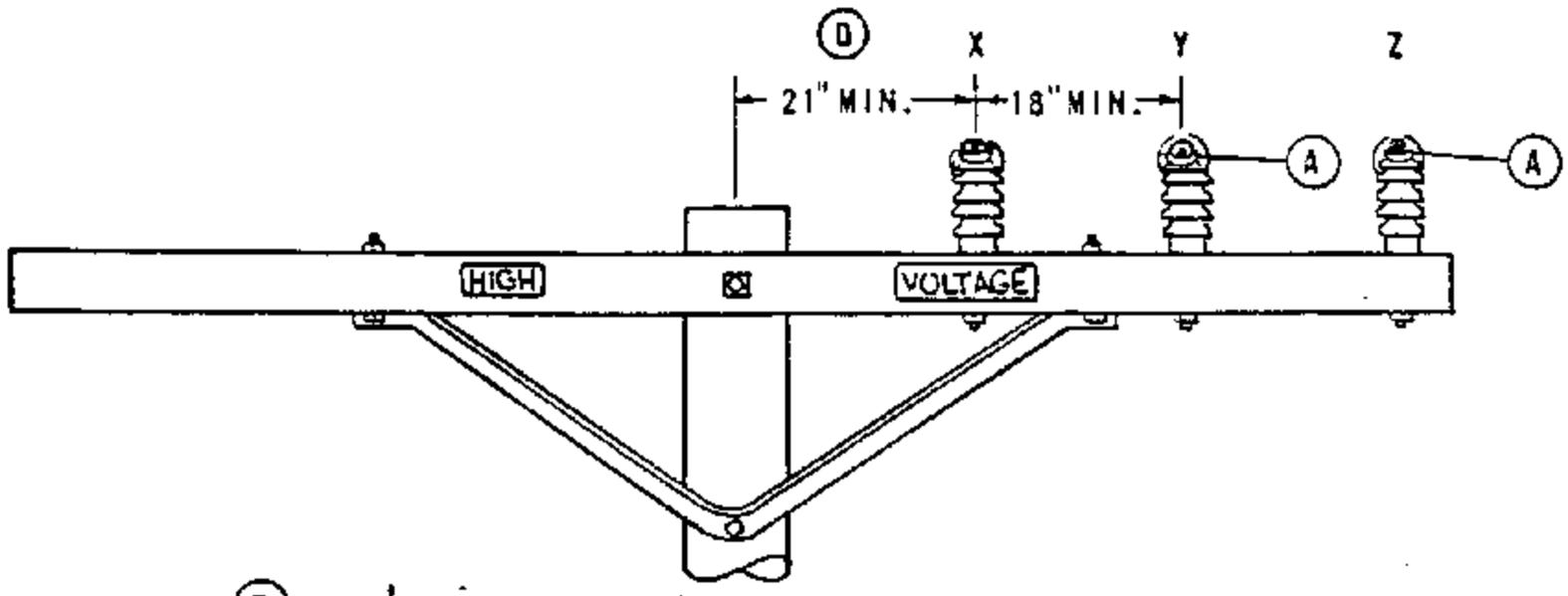

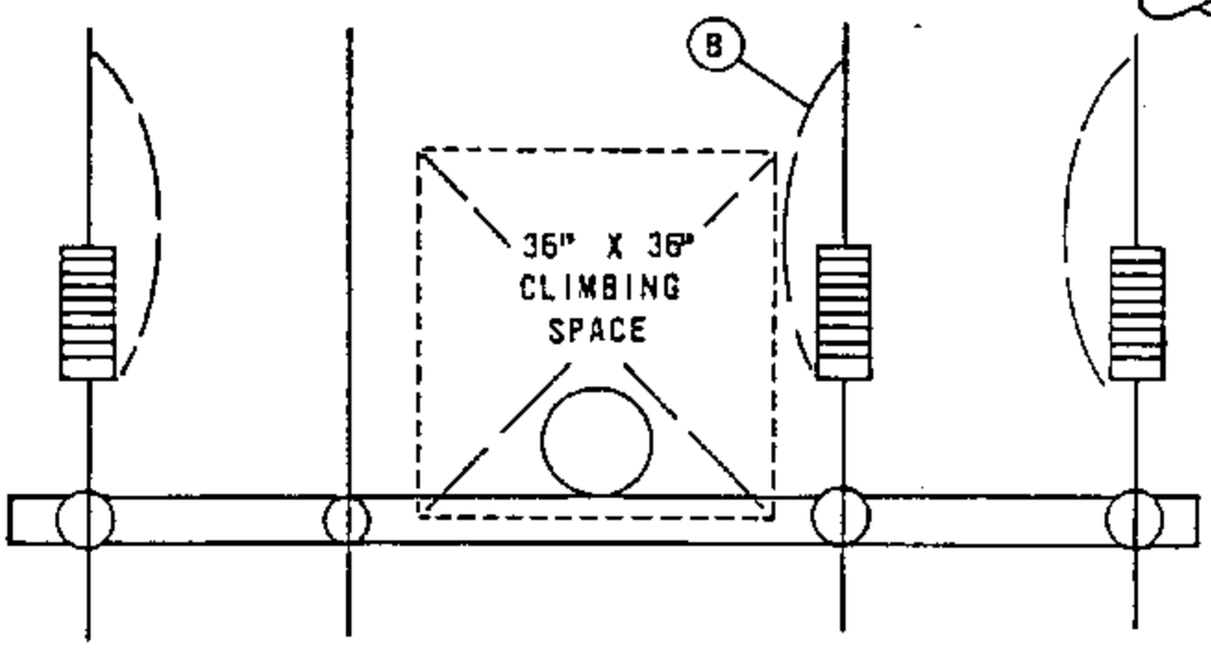

FOR FIELD MAINTENANCE ONLY

NOTES:

(A) ROTATE DISCONNECTS TOWARD THE POLE USING ADJUSTABLE TRUNNION LINKS TO PERMIT EASE OF OPERATION.

(B) KEEP THIS DISCONNECT VERTICAL TO KEEP IT OUT OF THE CLIMBING SPACE.

(C) LOCK AS SHOWN WHEN LEFT IN THE OPEN POSITION.

(D) G.O. 95 MINIMUM SPACING REQUIREMENT. THIS DIMENSION WILL ALLOW A 36" CLIMBING SPACE ON THE SAME SIDE OF THE POLE AS THE SWITCHES.

(E) EXEMPT MATERIAL.

F. INSTALL ONLY IN FULL TENSION SPANS OF 3/0 ACSR, 3/0 5005, 1/0 COPPER, OR LARGER CONDUCTOR.

(G) SEE 400 SECTION FOR POLE TOP MATERIALS.

H. BOND INSULATOR STUDS IN CONTAMINATION DISTRICT 1.

ITEM PTF	ITEM OCD	DESCRIPTION	QUANTITY	STOCK NO. OR CONSTR. STD.
	1	SWITCH, LINE TENSION DISCONNECT, 15KV, 600 AMPS	3	707014
	2	LINK, ADJUSTABLE TRUNNION, 12"	3	465550
	3	LINK, EXTENSION, GALV., 1/2"X 1-3/4"X 12"	3	466272
	4	TERMINAL, ALUMINUM COMPRESSION, 2-HOLE	6	700 SECTION
	5	BOLT, MACH, STAINLESS STEEL, ASSEMBLY, 1/2" X 1 1/2" (E)	12	148672
	6	CLAMPS, DEAD-END	6	700 SECTION
	7	INSULATOR, VERTICAL POST CLAMP TYPE (ITEM 2 CONTAINS CLAMP)	3	700 SECTION
8		STEPS, POLE (E)	AS REQ'D.	692992
9		TAG, SWITCH NUMBER (E)	2	300 SECTION
	10	STUD 7 1/2"	3	701760
	11	WASHER, 5/8" DOUBLE COIL SPRING (E)	3	798560
	12	WASHER, 2 1/4" X 2 1/4" FLAT (E)	3	799040

DATE 2-3-78
APPD JAF

SDG&E ELECTRIC STANDARDS

LINE TENSION DISCONNECT SWITCH HOOK STICK OPERATED

1299.205
SUPERSEDES
1225 (1-1-92)

TABLE OF CONTENTS

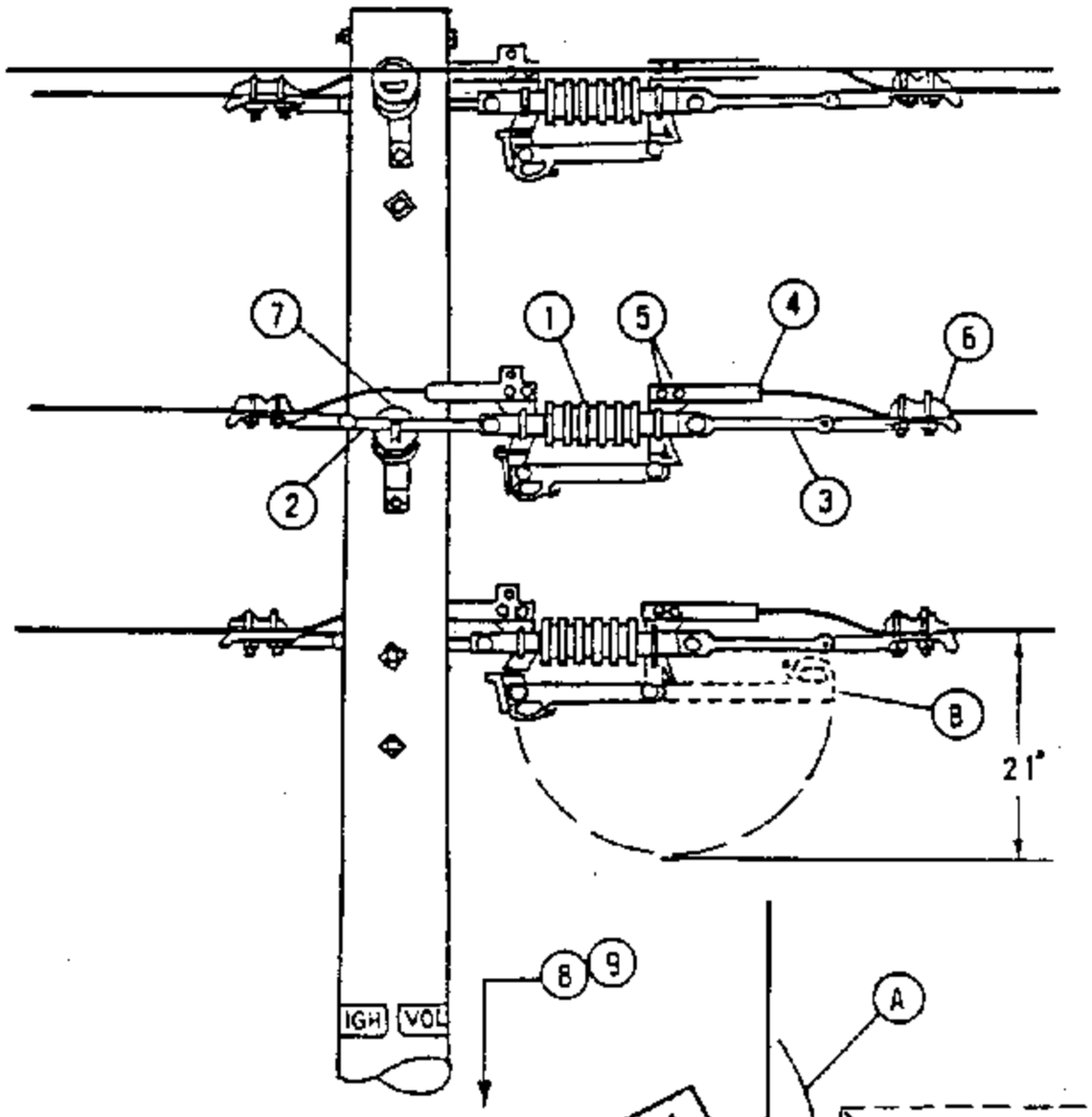

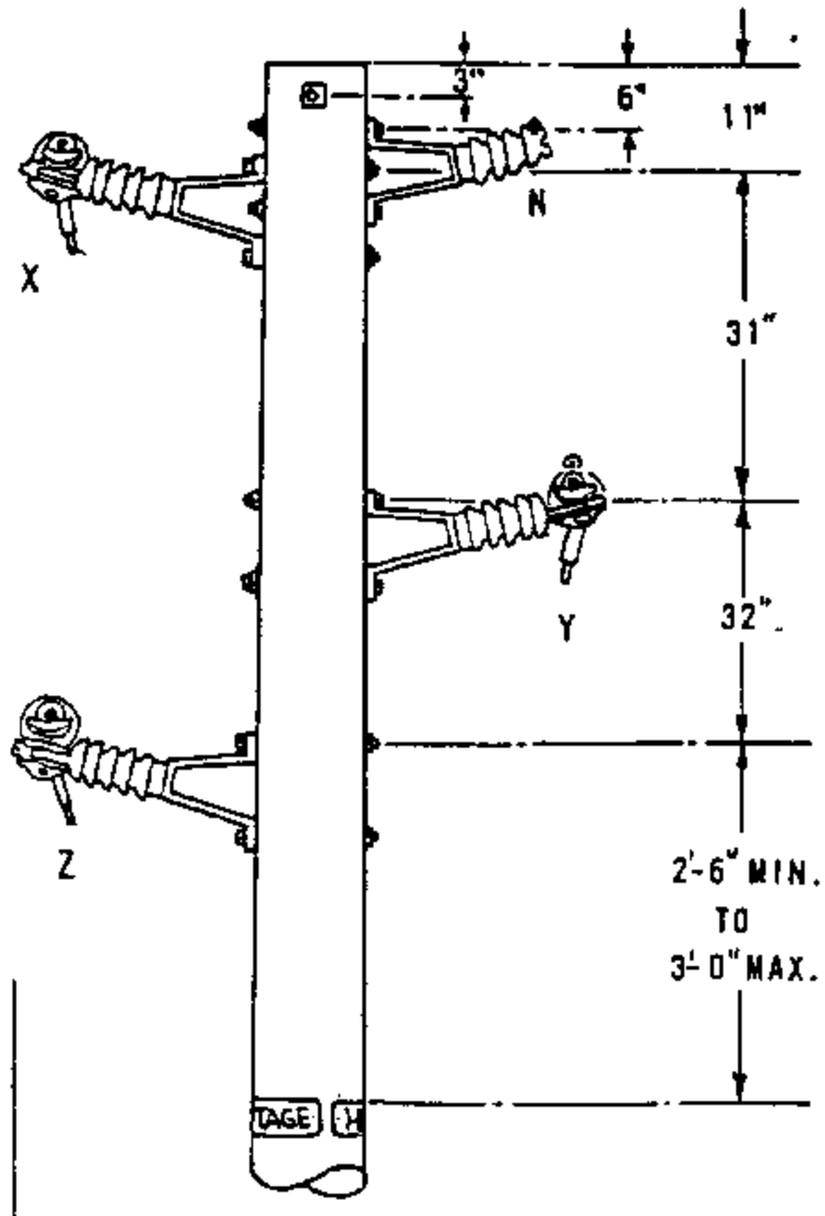

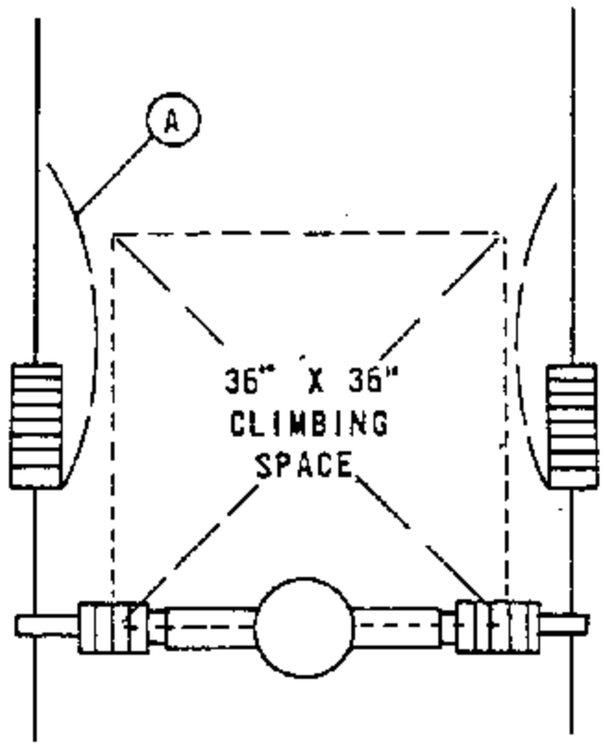

FOR FIELD MAINTENANCE ONLY

NOTES:

(A) ROTATE DISCONNECTS AS SHOWN USING ADJUSTABLE TRUNNION LINK FOR EASE OF OPERATION, KEEPING BLADE OUT OF CLIMBING SPACE.

(B) LOCK AS SHOWN WHEN LEFT IN THE OPEN POSITION.

C. INSTALL ONLY IN FULL TENSION SPANS OF 3/0 ACSR, 3/0 5005, 1/0 COPPER OR LARGER CONDUCTOR.

D. SEE 400 SECTION FOR POLE TOP MATERIALS, SPAN LIMITATIONS AND OTHER REQUIREMENTS.

(E) EXEMPT MATERIAL.

F. BOND INSULATOR BRACKETS IN CONTAMINATION DISTRICT 1.

ITEM PTF	ITEM OCD	DESCRIPTION	QUANTITY	STOCK NO. OR CONSTR. STD.
	1	SWITCH, LINE TENSION DISCONNECT, 15KV, 600 AMPS	3	707014
	2	LINK, ADJUSTABLE, TRUNNION, 12"	3	465550
	3	LINK, EXTENSION, GALV., 1/2"X 1 3/4"X 12"	3	466272
	4	TERMINAL, ALUMINUM COMPRESSION, 2-HOLE	6	700 SECTION
	5	BOLT, MACH, STAINLESS STEEL, ASSEMBLY, 1/2" X 1 1/2" (E)	12	148672
	6	CLAMPS, DEAD END	6	700 SECTION
	7	INSULATOR, HORIZONTAL POST CLAMP TYPE (ITEM 2 CONTAINS CLAMP)	3	700 SECTION
8		STEPS, POLE (E)	AS REQ'D.	692992
9		TAG, SWITCH NUMBER (E)	2	300 SECTION

1299.206
SUPERSEDES
1226 (1-1-92)

SDG&E ELECTRIC STANDARDS

LINE TENSION DISCONNECT SWITCH HOOK OPERATED ARMLESS

DATE 2-3-78
APPD TAF

TABLE OF CONTENTS

SCOPE: THIS STANDARD SHOWS THE INSTALLATION OF PRIMARY IN–LINE HOOKSTICK DISCONNECTS, WEDGE TAP CONNECTED. THIS IS A PREFERRED METHOD FOR EXISTING PIN AND INSULATOR CONSTRUCTION. THESE SWITCHES CAN BE INSTALLED ON 336 AND 636 ACSR CONDUCTOR ONLY.

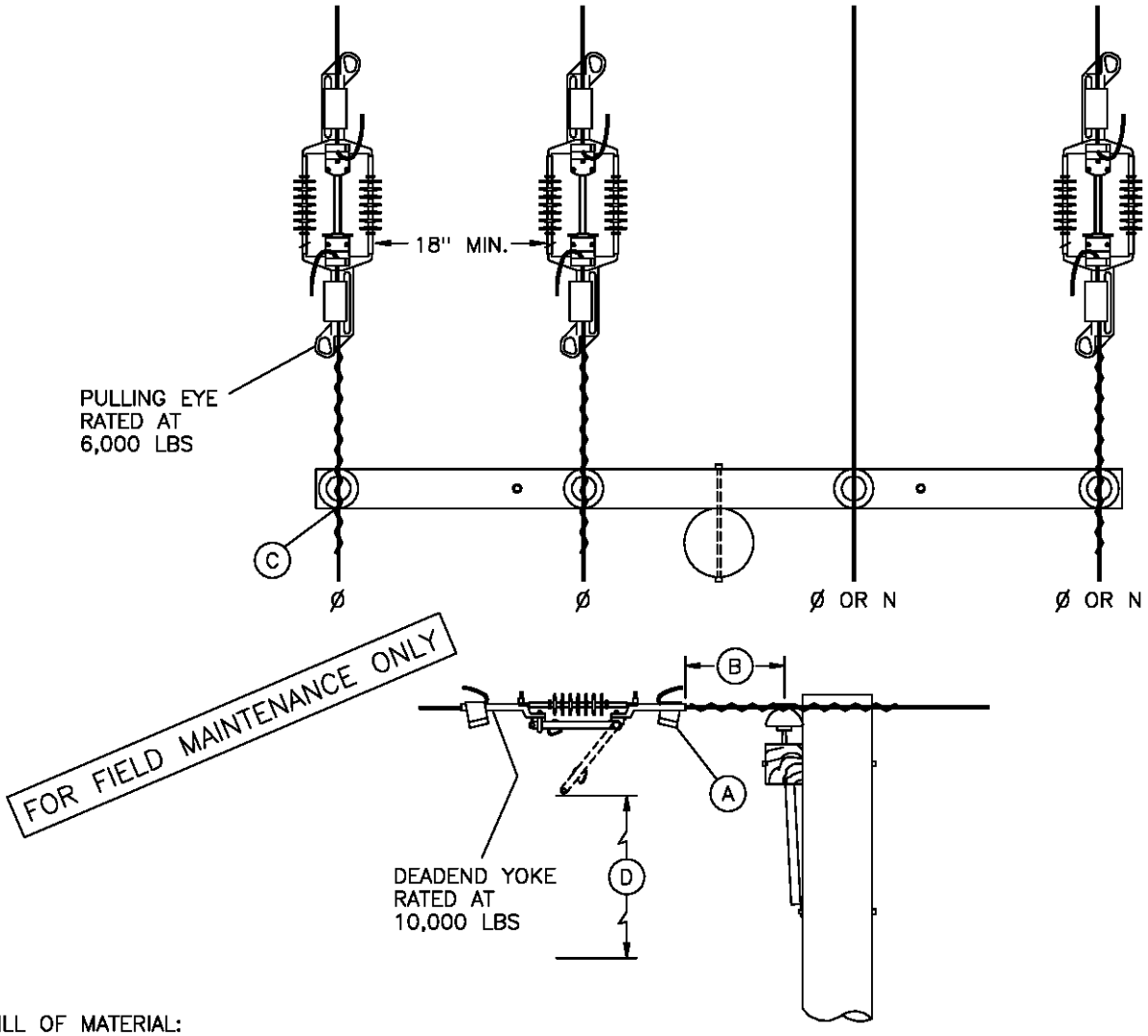

BILL OF MATERIAL:

ITEM	DESCRIPTION		QUANTITY	STOCK NUMBER	ASSEMBLY UNITS
1	SWITCH, DISCONNECT, IN–LINE, 900A INCLUDING 2 WEDGE TYPE TAP CONNECTORS	336.4 ACSR	3	707010	ILD336
		636 ACSR	3	707012	ILD636
2	TAP CONNECTORS, WEDGE TYPE, (REPLACEMENT) (A)	336.4 ACSR	AS REQ'D	265940	–
		636 ACSR		265942	–

INSTALLATION:

(A) WHEN INSTALLING SWITCH, USE ONLY WEDGE TYPE DEADEND TAP CONNECTORS SUPPLIED WITH SWITCH, OR EQUIVALENT REPLACEMENT ITEM. **DO NOT REUSE DEADEND TAP CONNECTORS.** IF REINSTALLING SWITCH, USE NEW DEADEND TAP CONNECTORS.

(B) WHEN INSTALLING, POSITION SWITCH ON CONDUCTOR 18 INCHES FROM INSULATOR PIN TO SWITCH PULLING EYE, OR, 18 INCHES FROM DEADEND CLAMP PULLING EYE TO SWITCH PULLING EYE.

(C) IF TIE WIRE EXISTING, REPLACE WITH PREFORMED TIE. DO NOT REPLACE EXISTING CLAMP TOP INSULATOR.

(D) 4'–0" MIN. CLEARANCE TO NEAREST CONDUCTOR BELOW WHEN SWITCH IS OPEN. WHERE CONSTRUCTION IS REQUIRED BELOW SWITCH, IT SHALL NOT INTERFERE WITH OPERATION OF ANY SWITCH FROM THE POLE.

DATE 1–1–98 APPD PSA / CMK	SDG&E ELECTRIC STANDARDS IN–LINE DISCONNECT SWITCHES WEDGE TAP CONNECTED–12K AND BELOW	1299.207 SUPERSEDES 1220 (4–30–99)

TABLE OF CONTENTS

SCOPE: THIS STANDARD SHOWS A GANG OPERATED POLE TOP SWITCH FOR CIRCUIT TIES OR SECTIONALIZING PURPOSES AND IS TO BE USED FOR TANGENT AND DEAD-END CONFIGURATIONS.

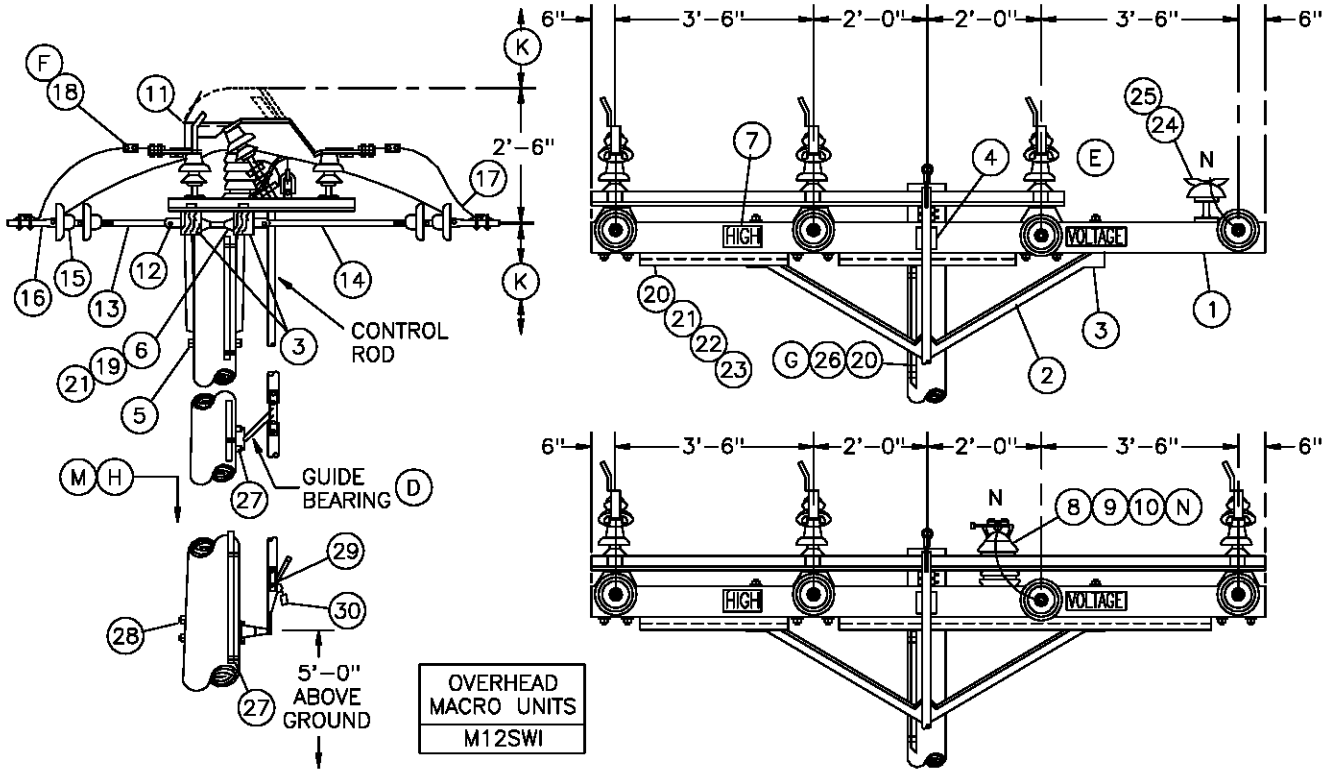

BILL OF MATERIAL:

FOR FIELD MAINTENANCE ONLY

ITEM	DESCRIPTION	QUANTITY	STOCK NO. OR CONSTR STANDARD	ASSEMBLY UNITS
1	CROSSARM, 3 3/4" x 5 3/4" x 12'-0"	2	294160	6-
2	BRACE, ANGLE, 6'-0"	2	164160	6HUB
3	BOLT, MACH, GALV, 1/2" X 7", 1 ROUND AND 1 DOUBLE COIL SPRING WASHER	16	STD 392	-
4	BOLT, MACH, GALV, 5/8" x (LENGTH AS REQ'D), 2 SQUARE AND 1 DOUBLE COIL SPRING WASHER	1	STD 392	-
5	BOLT, MACH, GALV, 5/8" x (LENGTH AS REQ'D) AND 1 DOUBLE COIL SPRING WASHER	1	STD 392	-
6	BOLT, SPACE, GALV, 5/8" (LENGTH AS REQ'D), 2 SQUARE, 2 ROUND, 2 DOUBLE COIL SPRING WASHERS AND 1 NUT (C)	4	STD 392	-
7	SIGN, HIGH VOLTAGE, AND	2	647648	HV
	9 ROOFING NAILS, GALV	18	492224	-
8	STUD, 5/8" x 7 1/2" AND 1 DOUBLE COIL SPRING WASHER (C)	1	701760	STUD-W
		1	798560	-
9	INSULATOR, VERTICAL POST (C)	1	428608	VPI
10	CLAMP, POST INSULATOR (L)(C)	1	STD 773	-
11	SWITCH T.P.S.T. 600 AMP, INCLUDING 31' OF CONTROL ROD	1	709254	MEMCO
	ADDITIONAL INTERMEDIATE 10'-6" CONTROL ROD WITH GUIDE BEARING AND END FITTINGS	AS REQ'D	604432	FC-ROD
	REPLACEMENT UPPER CONTROL ROD WITH END FITTINGS	AS REQ'D	604434	-
	REPLACEMENT LOWER CONTROL ROD WITH END FITTINGS	AS REQ'D	604436	-
12	CLEVIS, DEAD END, 5/8" BOLT STEEL (OPEN TYPE) (C)	8	235618	-

TABLE OF CONTENTS

TABLE OF CONTENTS

BILL OF MATERIAL: (CON'T)

ITEM	DESCRIPTION	QUANTITY	STOCK NO. OR CONSTR STANDARD	ASSEMBLY UNITS
13	LINK, EXTENSION, GALV, 1/2" X 2" X 12" (C)	4	466240	DEEXT
14	STRAP, EXTENSION, GALV, 1/2" X 1 1/2" x 28" (C)	4	696864	–
15	INSULATOR, SUSPENSION (C)	14	STD 750	–
16	CLAMP, STRAIGHT LINE, D.E. (C)	8	741–743	–
17	CONNECTOR, WIRE COMPRESSION (SIZE AS REQ'D)	AS REQ'D	783–786	–
18	TERMINAL, COMPRESSION LUG (F)	6	794–795	–
19	WIRE, #8 BARE SOLID ANNEALED COPPER	15'	812928	BOND8
20	WIRE, BARE STRANDED, #4	65'	813760	BS4
21	STAPLE, FENCE, GALV, 1 1/4"	AS REQ'D	678528	–
22	MOULDING, OAK HARDWOOD, 1"	10'	487200	MLDG
23	STRAPS, GALV, 3/4" AND 2–1 3/4" ROOFING NAILS	AS REQ'D	697888	–
24	PIN, INSULATOR, STRAIGHT, 12KV, 1"	1	532704	PS1
25	INSULATOR, LINE, 12KV, NEUTRAL	1	429216	55–3/I
26	GROUND UNIT, COMPLETE	1	603136	GND4
27	SCREW, LAG, GALV, 1/2" X 4"	2	621568	–
28	BOLT, MACH, GALV, 5/8" X (LENGTH AS REQ'D), 1 SQUARE AND 1 DOUBLE COIL SPRING WASHER	2	STD 392	–
29	TAG, SWITCH NUMBER	2	STD 204	–
30	PADLOCK, SCHLAGE ELECTRIC SERIES	1	514848	–

FOR FIELD MAINTENANCE ONLY

INSTALLATION:

A. CONTROL ROD AND SWITCH HANDLE ARE NOT ALLOWED IN THE CLIMBING SPACE (G.O. 95, 54.7–A4).

B. ATTACH GROUND WIRE TO SWITCH MOUNTING BOLTS BY USING AN ADDITIONAL ROUND WASHER.

(C) REDUCE QUANTITIES AS REQUIRED WHEN NOT USING NEUTRAL.

(D) GUIDE BEARING PIVOTS THROUGH 90°. IN THE OPENED AND CLOSED POSITIONS THE GUIDE BEARING MAKES A 45° ANGLE WITH THE POLE.

(E) CUT OFF EXCESS INTERPHASE SHAFT.

(F) WHEN ATTACHING 1/0 AND 4/0 COPPER CONDUCTORS TO A POLE TOP SWITCH, USE A BRONZE CABLE TAP LUG, STOCK NUMBER 471296. IF EXCESSIVE VIBRATION OR WHIPPING COULD OCCUR, USE TWO LUGS IN SERIES.

REFERENCES:

(G) GROUNDING METHODS – SEE STANDARD 1002.

(H) POLE STEPPING – SEE STANDARD 363.

I. SEE STANDARD 1443 FOR SINGLE DEADEND CONFIGURATION.

J. SEE DESIGN MANUAL PAGE 6111 – FEEDER CIRCUIT SECTIONALIZING AND PROTECTION.

(K) SEE SECTION 200 FOR MINIMUN VERTICAL SEPARATION.

(L) SEE STANDARD 759 FOR USE OF LINE GUARD.

(M) REFLECTOR STRIPS ARE REQUIRED ON ALL SECTIONALIZING/TIELINE SWITCHES AND SERVICE RESTORER POLES. (SEE STD. 208.3 ITEM 12).

(N) NEUTRALS SHALL BE SOLIDLY TIED TOGETHER AT ALL SWITCHES REGARDLESS WHETHER THEY ARE NORMALLY OPEN OR CLOSED. THIS INCLUDES TIE SWITCHES TO CIRCUITS EMANATING FROM DIFFERENT SUBSTATIONS. (SEE DESIGN MANUAL STANDARD PAGE 6221.2, D.3).

DATE 1–1–93 APPD PEA / RDG	SDG&E ELECTRIC STANDARDS POLE TOP SWITCH 12KV VERTICAL BREAK TYPE SINGLE CIRCUIT HORIZONTAL CONFIGURATION	1299.209 SUPERSEDES 1228.2 (8–1–00)

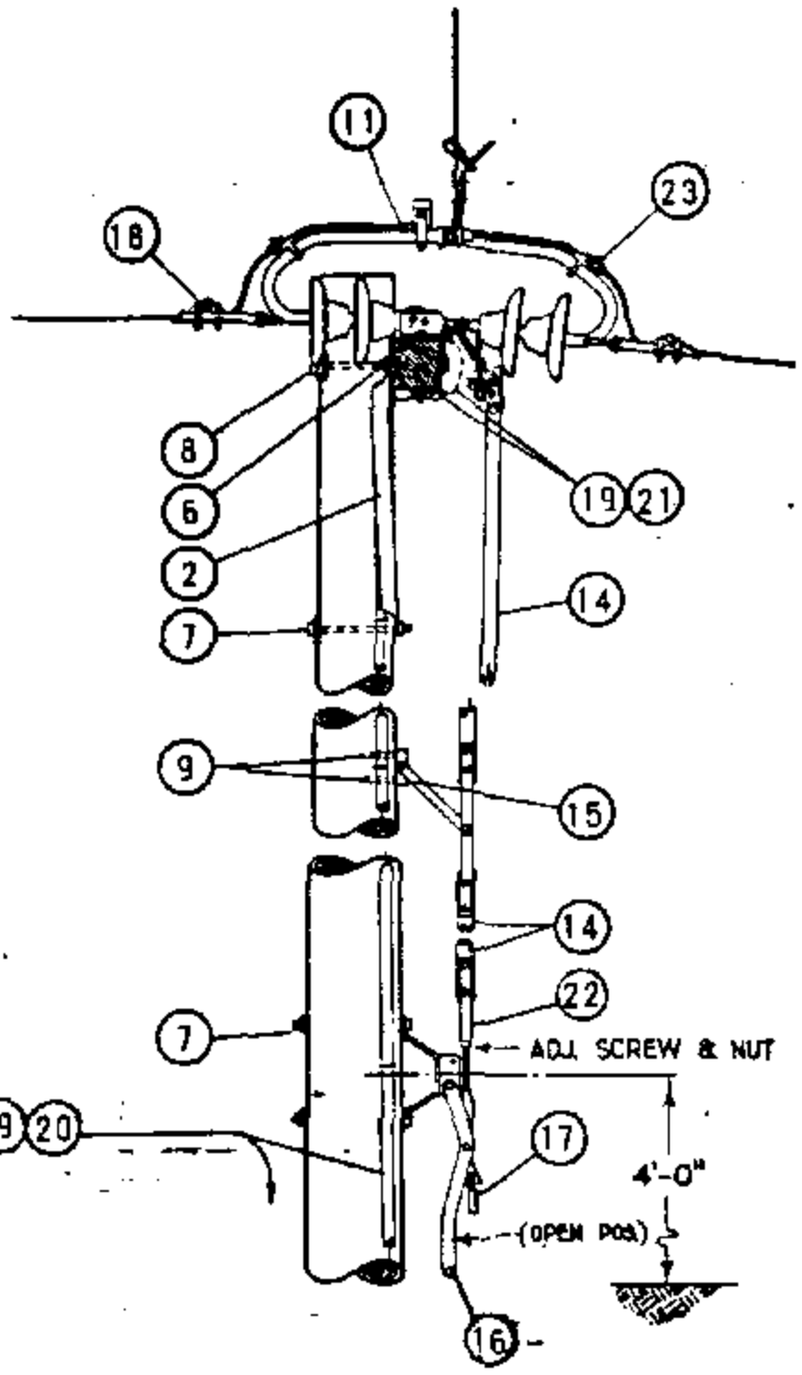

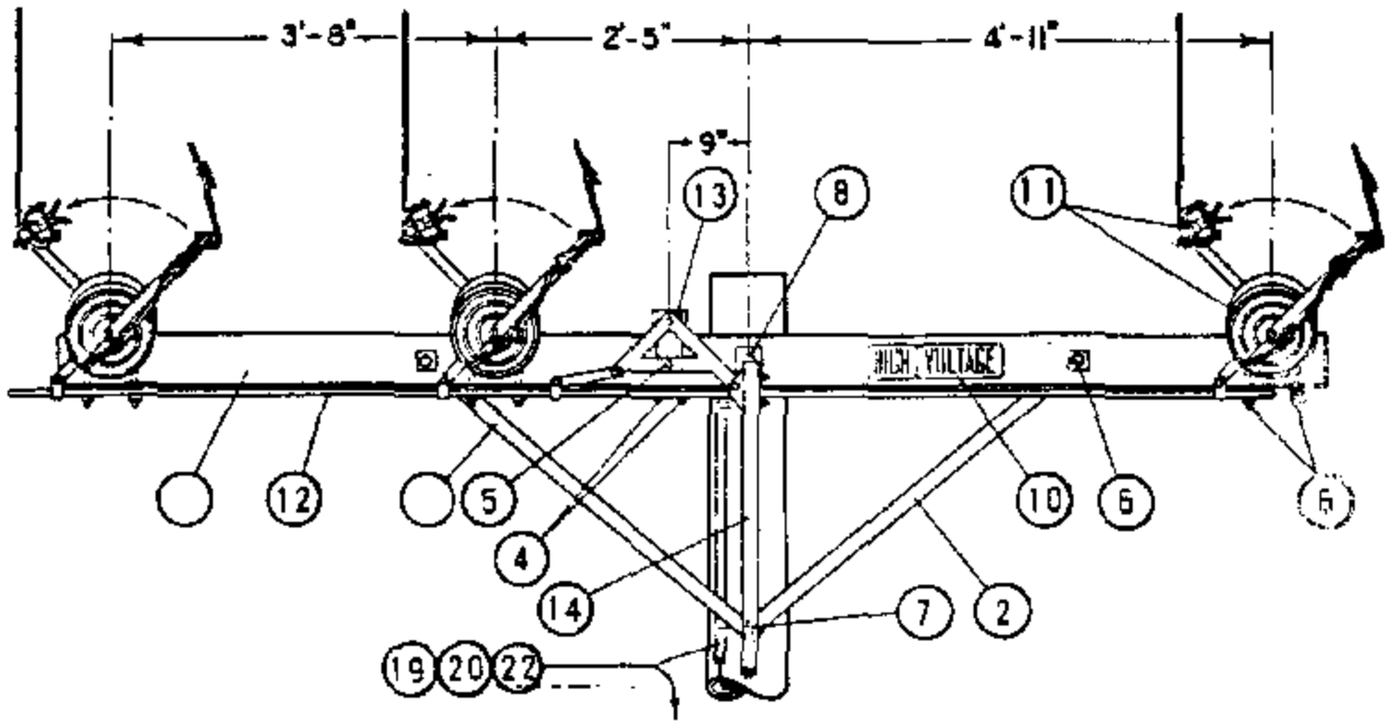

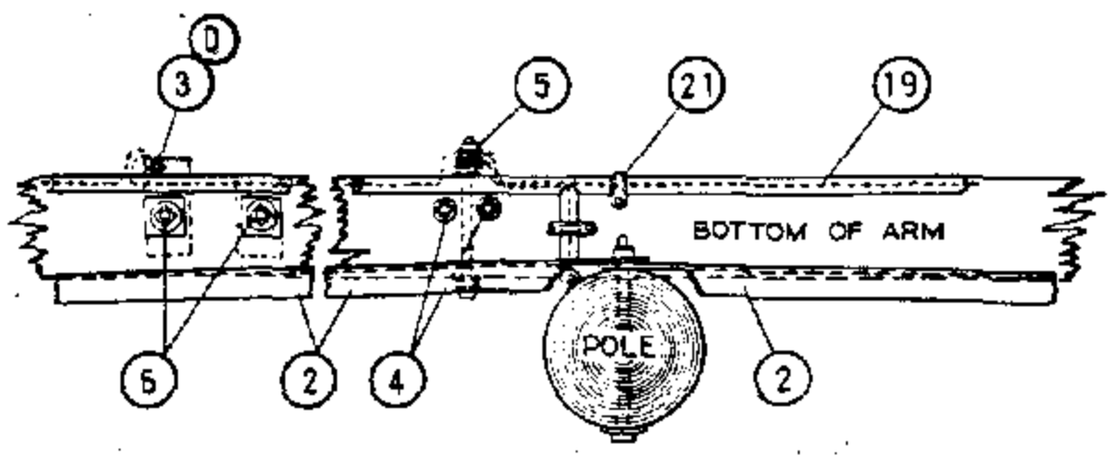

GROUNDING DETAIL

FOR FIELD MAINTENANCE ONLY

NOTES:

A. MAXIMUM VERTICAL ANGLE SHALL NOT EXCEED 7° FOR ANY CONDUCTOR SIZE.

B. WHERE THE VERTICAL ANGLE EXCEEDS 7° OR THE HORIZONTAL ANGLE EXCEEDS THE VALUE SHOWN IN THE TABLE BELOW, USE SWITCH CONSTRUCTION PG. 1229.

(C) IF THE MAXIMUM DESIGN TENSION IS GREATER THAN 3000 LBS, THE ANGLE CAN BE CALCULATED BY: THE SINE OF THE ANGLE $= \frac{200}{\text{TENSION}}$. THE ANGLE THEN CAN BE DETERMINED FROM TRIGONOMETRIC FUNCTION TABLES.

(D) ITEM 3 IS A BOLT USED TO GROUND THE SWITCH MOUNTING HARDWARE.

MAXIMUM ALLOWABLE LINE ANGLE FOR SWITCHES

CONDUCTOR SIZE AWG OR KCM	COPPER				COPPERWELD COPPER		5005				ACSR						
	4	2	1/0	4/0	4A	4N	2	1/0	3/0	394.5	2 6/1	1/0 6/1	3/0 6/1	336.4 18/1	336.4 26/7	636 24/7	1033 45/7
LINE ANGLE DEGREES	15	9	6	5	7	3	16	11	8	4	13	9	6	5	4	4	4
MAXIMUM DESIGN TENSION LBS/CONDUCTOR	752	1218	1900	2424	1575	3384	717	1050	1480	2898	845	1300	1860	2450	(C) 3000	(C) 3000	(C) 3000

DATE 1-1-87
APPD AL/BDS

SDG&E ELECTRIC STANDARDS

POLE TOP SWITCH INSTALLATION 12KV SINGLE CIRCUIT
HORIZONTAL CONFIGURATION

1299.301
SUPERSEDES
1230.1 (1-1-87)

METHOD OF ADJUSTING SWITCH

A. FIRST CLOSE SWITCH AND TIGHTEN SWITCH UNIT CRANK CLAMPS TO INTERPHASE CONNECTING PIPE (12)

B. THEN OPEN SWITCH UNTIL SWITCH UNIT CRANK CLAMPS ARE PERPENDICULAR TO ARM.

C. WITH SHORT ARM BELL CRANK (13) ALSO PERPENDICULAR TO ARM, TIGHTEN BELL CRANK CLAMP.

D. WHILE CRANKS ARE PERPENDICULAR TO ARM, CONNECT WOODEN CONTROL ROD (14) TO LONG LEG OF BELL CRANK, CLAMP GUIDES (15) AND CONTOL HANDLE (16) SHOULD BE PERPENDICULAR TO POLE AND HOLD DOWN HOLES (9) DRILLED WHILE IN THIS POSITION

(E) EXEMPT MATERIAL

F. LUBRICATE MOVING PARTS WITH A THIN LAYER OF #89 MEDIUM SILICONE GREASE OR EQUIVALENT.

G. GIVE SWITCH A FEW TRAIL OPERATIONS AND MAKE ADJUSTMENTS ON ADJUSTING SCREW AS NECESSARY.

H. 400 AMP SWITCHES MAY BE USED WITH 336.4 KCMIL AND SMALLER CONDUCTORS. 600 AMP SWITCHES SHALL BE USED ON 636 KCMIL CONDUCTOR AND 1200 AMP SWITCHES SHALL BE USED ON 1033.5 KCMIL CONDUCTOR.

FOR FIELD MAINTENANCE ONLY

ITEM		DESCRIPTION		QUAN.	STOCK NO. OR CONSTR. STD.
P T & F	1	CROSSARM, 5 3/4" X 5 3/4" X 12'-0"		1	294016
	2	BRACE, ALLEY ARM, 4'-0"		2	163808
	3	BOLT, MACH., GALV., 1/2" X 1 1/2", 2-RD., 1-LOCK WASH. & 1-NUT	(E)	3	100 SECTION
	4	BOLT, MACH., GALV., 1/2" X 8", 1-RD., 1-DBL. COIL SPR. WASH & 1-NUT	(E)	2	100 SECTION
	5	BOLT, MACH., GALV., 1/2" X 8", 3-RD., 1-DBL. COIL SPR. WASH. & 2-NUTS	(E)	1	100 SECTION
	6	BOLT, MACH., GALV., 5/8" X 8", 1-2 1/4" SQ., 1-DBL. COIL SPR. WASH. & 1-NUT	(E)	8	100 SECTION
	7	BOLT, MACH., GALV., 5/8" X (LENGTH AS REQ'D), 1-DBL. COIL SPR. WASH. & 1-NUT	(E)	3	100 SECTION
	8	BOLT, MACH., GALV., 3/4" X 16", 1-3" SQ., 1-FLAT, 1-CURV., 1-DBL. COIL SPR. WASH & 1-NUT		1	100 SECTION
	9	SCREW, LAG, GALV., 1/2" X 4"	(E)	4	621568
	10	SIGN, HIGH VOLTAGE, 8-ROOFING NAILS, GALV.	(E)	2	647648, 492192
O C & D	11	POLE TOP SWITCH, 15KV, T.P.S.T., HORIZONTALLY MOUNTED, RIGID DISC. INSULATORS ARCING HORNS & INCLUDING ITEMS #13 THRU #17.		1	709168 400A 709184 600A 709280 1200A
	12	PIPE, INTERPHASE CONNECTING, GALV., 1/2" X 11'-6" OR WOOD 1 3/4" X 1 3/4" X 11'-6"		1	-
	13	BELL CRANK ASSEMBLY		1	290624
	14	ROD, CONTROL, 1 3/4" X 1 3/4" X 10'-0", LAMINATED WOOD		4	602938
	15	GUIDE BEARING, INTERMEDIATE		3	398688
	16	OPERATING LEVER ASSEMBLY COMPLETE WITH ADJUSTING SCREW & NUT		1	-
	17	PADLOCK, ELECTRIC FF		1	514848
	18	CLAMP, STRAIGHT LINE O.E.		6	700 SECTION
	19	WIRE, BARE STRANDED COPPER, #6 BONDING & GROUNDING WIRE		60'	813536
	20	GROUND UNIT (GRAY OR PLAIN)		1	603120, 603136
	21	PIPE STRAP, 3/4" & 2-8D NAILS, GALV.	(E)	9	697888, 491584
	22	TAGS, SWITCH NUMBER	(E)	2	720704
	23	CONNECTOR, COPPER TO ALUMINUM #1/0-336.4 MCM ACSR OR 5005, WHERE REQ'D.		6	700 SECTION

TABLE OF CONTENTS

1299.302
SUPERSEDES
1230.2 (1-1-87)

SDG&E ELECTRIC STANDARDS

POLE TOP SWITCH INSTALLATION
12KV SINGLE CIRCUIT HORIZONTAL CONFIGURATION

DATE 1-1-87
APPD AK /

TABLE OF CONTENTS

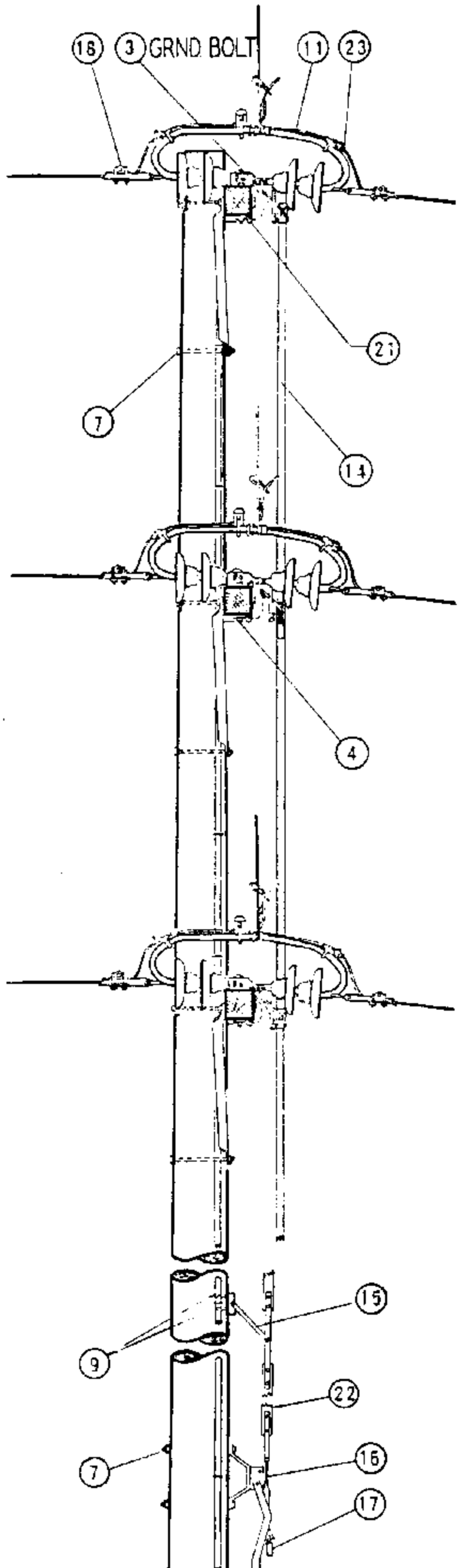

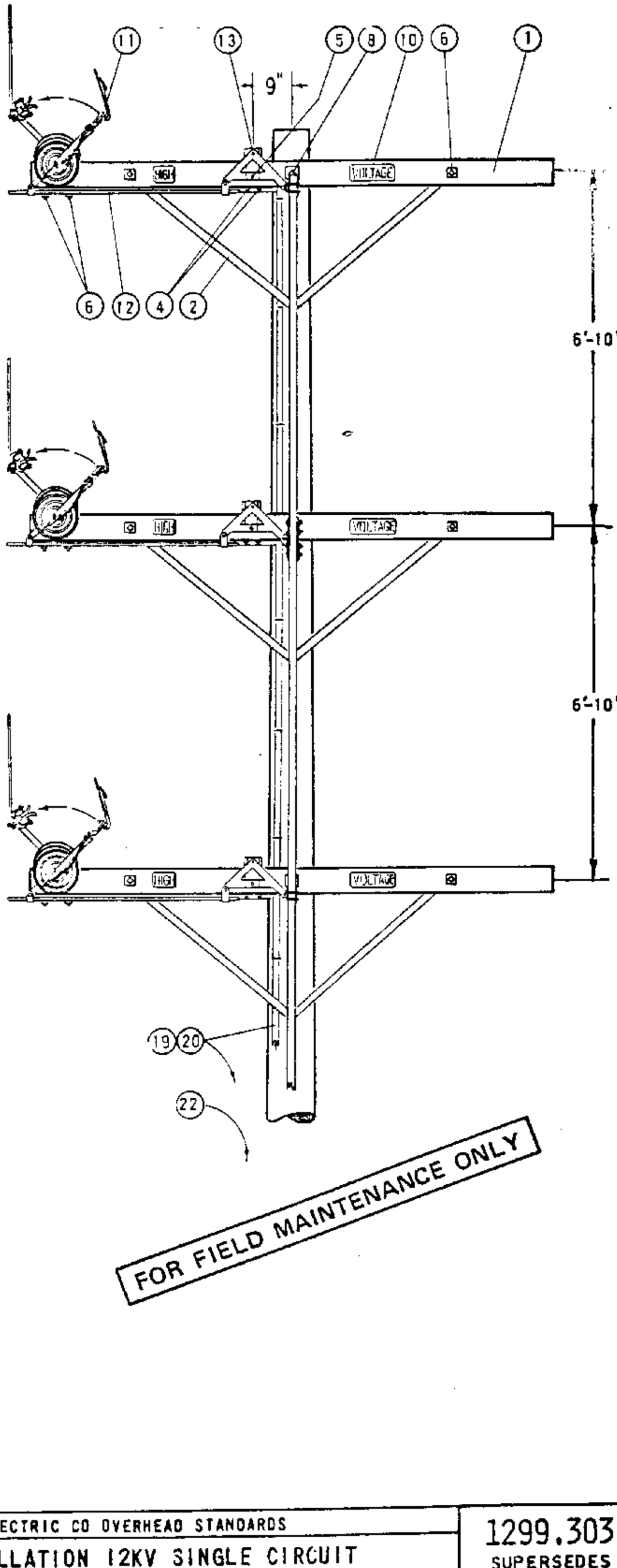

FOR FIELD MAINTENANCE ONLY

DATE 1-1-87 APPD AK/RJS	SAN DIEGO GAS & ELECTRIC CO OVERHEAD STANDARDS POLE TOP SWITCH INSTALLATION 12KV SINGLE CIRCUIT VERTICAL CONFIGURATION	1299.303 SUPERSEDES 1231.1 (1-1-87)

FOR FIELD MAINTENANCE ONLY

NOTES:
A. FOR METHOD OF ADJUSTING SWITCH, SEE PAGE 1230.
(E) EXEMPT MATERIAL.

ITEM		DESCRIPTION		QUAN.	STOCK NO. OR CONSTR. STD.
P T B F	1	CROSSARM, 5 3/4" X 5 3/4" X 10'-0"		3	294016
	2	BRACE, ALLEY ARM, 4'-0"		6	163808
	3	BOLT, MACH., GALV., 1/2" X 1 1/2", 2-RD., 1-LOCK WASH. & 1-NUT	(E)	3	100 SECTION
	4	BOLT, MACH., GALV., 1/2" X 8", 1-RD., 1-DBL. COIL SPR. WASH & 1-NUT	(E)	6	100 SECTION
	5	BOLT, MACH., GALV., 1/2" X 8", 3-RD., 1-DBL. COIL SPR. WASH. & 1-NUT	(E)	3	100 SECTION
	6	BOLT, MACH., GALV., 5/8" X 8", 1-2 1/4" SQ., 1-DBL. COIL SPR. WASH. & 1-NUT	(E)	12	100 SECTION
	7	BOLT, MACH., GALV., 5/8" X (LENGTH AS REQ'D), 1-DBL. COIL SPR. WASH. & 1-NUT	(E)	5	100 SECTION
	8	BOLT, MACH., GALV., 3/4" X 16", 1-3" SQ., 1-FLAT, 1-CURV., 1-DBL. COIL SPR. WASH & 1-NUT		3	100 SECTION
	9	SCREW, LAG, GALV., 1/2" X 4"	(E)	6	621568
	10	SIGN, HIGH VOLTAGE, 8-ROOFING NAILS, GALV.	(E)	6	647648, 492192
O C B D	11	POLE TOP SWITCH, 15KV, T.P.S.T., VERTICALLY MOUNTED, RIGID DISC. INSULATORS ARCING HORNS & INCLUDING ITEMS #13 THRU #17.		1	709168 400A 709184 600A
	12	PIPE, INTERPHASE CONNECTING, GALV., 1/2" X 4'-6"		3	-
	13	BELL CRANK ASSEMBLY		3	290624
	14	ROD, CONTROL, 1 3/4" X 1 3/4" X 10'-0", LAMINATED WOOD		6	602938
	15	GUIDE BEARING, INTERMEDIATE		4	398688
	16	OPERATING LEVER ASSEMBLY COMPLETE WITH ADJUSTING SCREW & NUT		1	-
	17	PADLOCK, ELECTRIC FF		1	514848
	18	CLAMP, STRAIGHT LINE D.E.		6	700 SECTION
	19	WIRE, BARE STRANDED COPPER, #6		70'	813536
	20	GROUND UNIT (GRAY OR PLAIN)		1	603120, 603136
	21	PIPE STRAP, 3/4" & 2-8D NAILS, GALV.	(E)	9	697888, 491584
	22	TAGS, SWITCH NUMBER	(E)	2	720704
	23	CONNECTOR, COPPER TO ALUMINUM #1/0-336.4 MCM ACSR OR 5005, WHERE REQ'D.		6	700 SECTION

1299.304
SUPERSEDES
1231.2 (1-1-87)

SDGBE ELECTRIC STANDARDS

POLE TOP SWITCH INSTALLATION
12KV SINGLE CIRCUIT VERTICAL CONFIGURATION

DATE 1-1-87
APPD AK 1/87

TABLE OF CONTENTS

TABLE OF CONTENTS

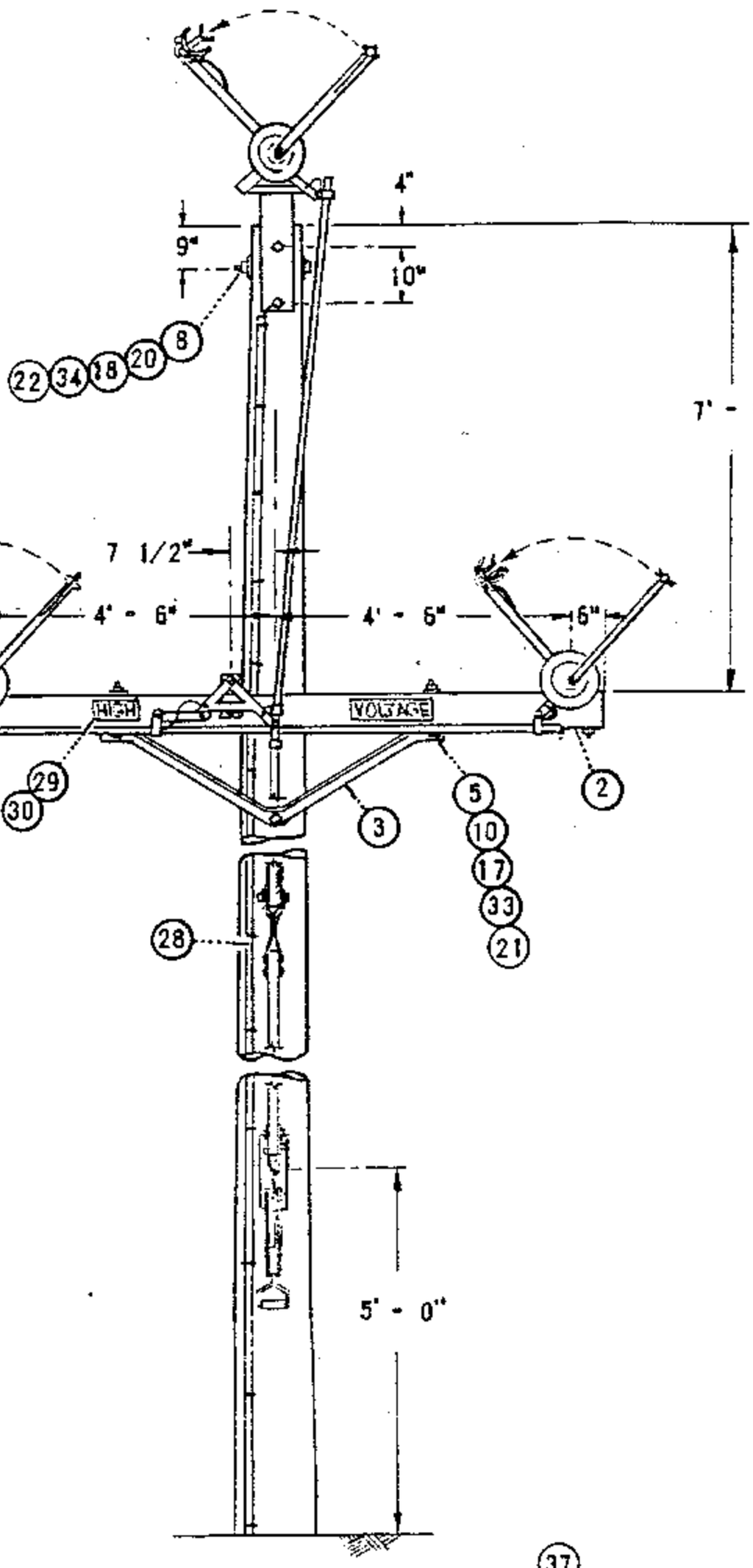

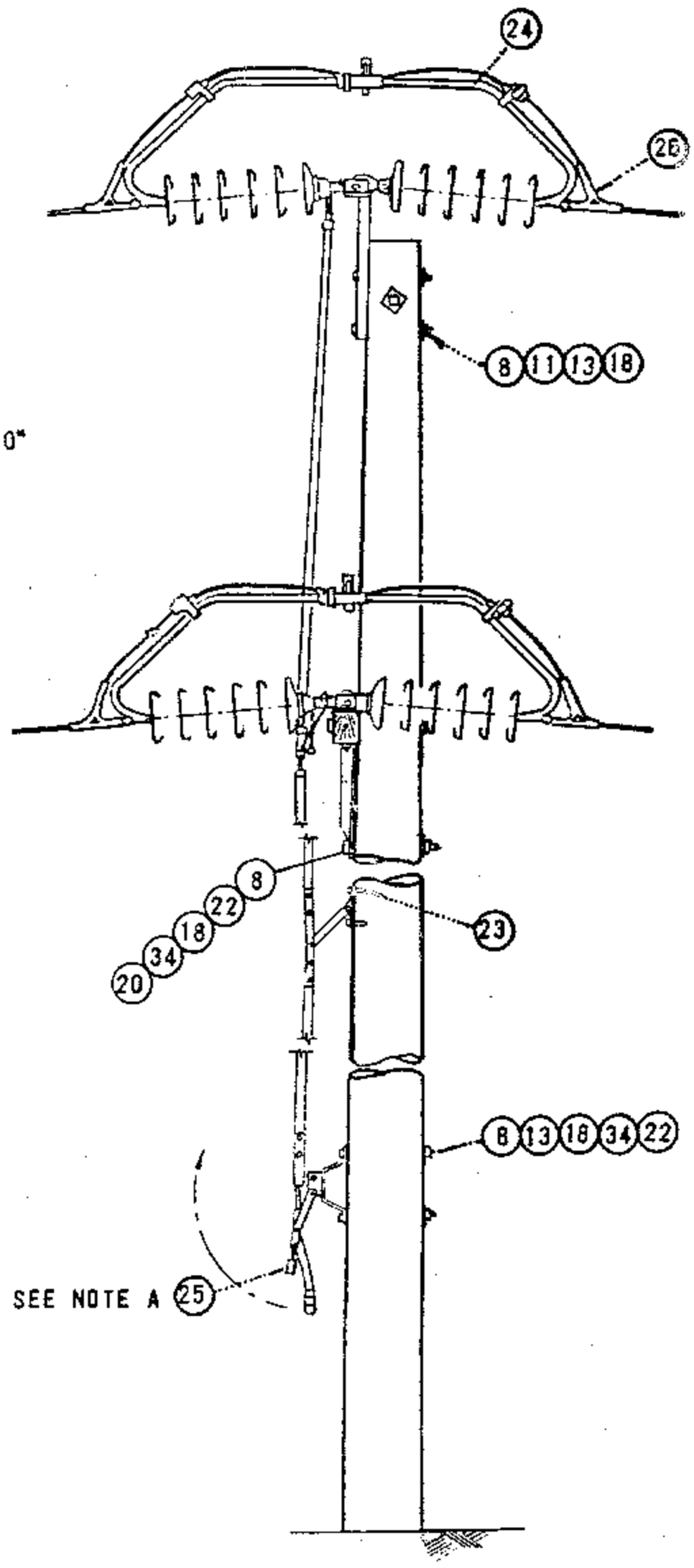

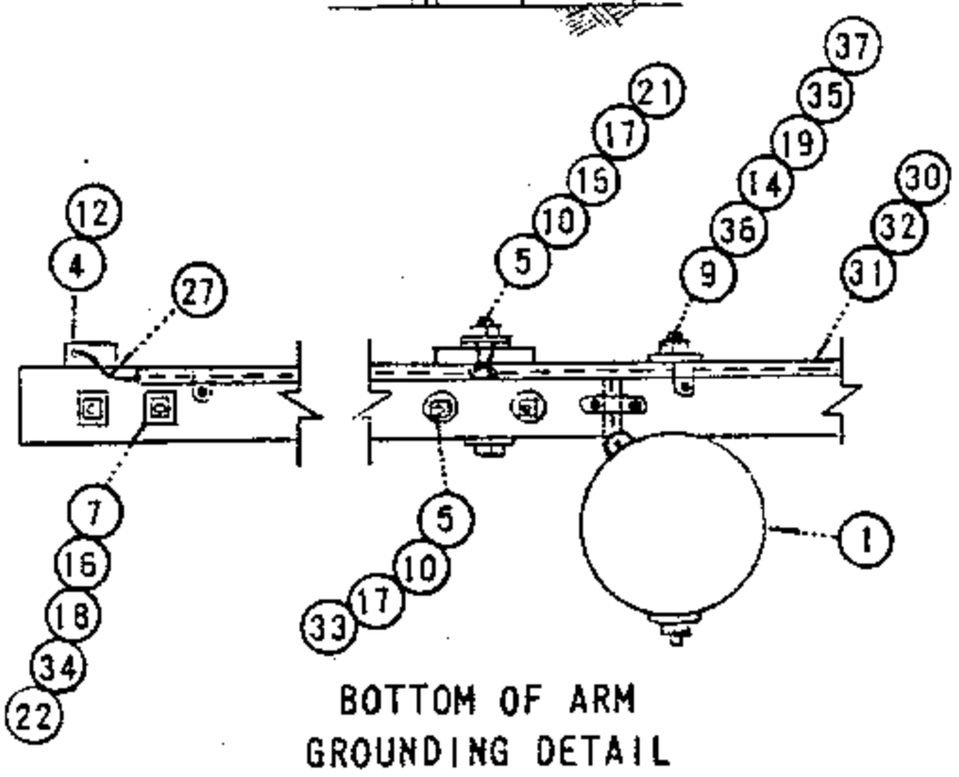

BOTTOM OF ARM
GROUNDING DETAIL

FOR FIELD MAINTENANCE ONLY

DATE 1-1-87 APPD AK/DSS	SAN DIEGO GAS & ELECTRIC CO OVERHEAD STANDARDS POLE TOP SWITCH INSTALLATION 69KV SINGLE CIRCUIT TRIANGULAR CONFIGURATION	1299.305 SUPERSEDES 1236.1 (1-1-87)

FOR FIELD MAINTENANCE ONLY

NOTES:

A. SWITCH HANDLE SHOWN IN OPEN POSITION.

B. REFER TO PAGE 1230 FOR METHOD OF ADJUSTING SWITCH AND FOR DETERMINING MAXIMUM LINE ANGLE PERMITTED FOR SWITCH.

C. THE 600 AMP SWITCH MAY BE USED ON SINGLE CIRCUIT 636 KCMIL AND SMALLER CONDUCTORS.

(E) EXEMPT MATERIAL.

ITEM PTF	ITEM TOC	MATERIAL		QUANTITY	STOCK NO OR CONSTR STD.
1		POLE, CLASS AND HEIGHT (AS REQ'D)		1	300 SECTION
2		CROSSARM, 5 3/4" X 5 3/4" X 10' - 0" (CELLON OR GRAY)		1	294144 OR 294304
3		BRACE, CROSSARM 5' - 0" ANGLE STEEL		1	164128
4		BOLT, MACH. 1/2" X 1 1/2"	(E)	3	152608
5		BOLT, MACH. 1/2" X 8"	(E)	5	153152
6					
7		BOLT, MACH. 5/8" X 8"	(E)	4	155584
8		BOLT, MACH. 5/8" X (LENGTH AS REQ'D)	(E)	6	100 SECTION
9		BOLT, MACH 3/4" X (LENGTH AS REQ'D)		1	100 SECTION
10		WASHER, 1/2" ROUND	(E)	11	800192
11		WASHER, 5/8" ROUND	(E)	2	800320
12		WASHER, 1/2" LOCK	(E)	3	796768
13		WASHER, 3" SQUARE CURVED RIB	(E)	5	797792
14		WASHER, 4" SQUARE CURVED RIB		1	797760
15					
16		WASHER, 2 1/4" SQUARE FLAT	(E)	7	799040
17		WASHER, SPRING DOUBLE COIL 1/2"	(E)	5	798464
18		WASHER, SPRING DOUBLE COIL 5/8"	(E)	12	798560
19		WASHER, SPRING DOUBLE COIL 3/4"		1	798496
20		WASHER, 3" SQUARE CURVED		2	798912
21		NUT, 1/2"	(E)	8	504736
22		NUT 5/8"	(E)	12	506880
23		SCREW, LAG 1/2" X 4"	(E)	2	621568
	24	POLE TOP SWITCH, 69KV, 600 AMP		1	709088
	25	PAD LOCK, ELECTRIC FF		1	514848
	26	CLAMPS, STRAIN		6	700 SECTION
27		WIRE, BARE STRANDED COPPER, #6		60'	813536
28		ROD, GROUND UNIT (GRAY OR PLAIN)		1	603120, 603136
29		SIGN, HIGH VOLTAGE	(E)	2	647648
30		NAILS, ROOFING 8 GALV.	(E)	28	492192
31		CONDUIT, SCH. 40, 1/2"	(E)	9'	251168
32		STRAP, 1/2" PIPE	(E)	5	697728
33		LOCKNUT, M-F 1/2"	(E)	5	504544
34		LOCKNUT, M-F 5/8"	(E)	10	504608
35		LOCKNUT, M-F 3/4"		1	504576
36		WASHER, 3" SQUARE FLAT		1	799104
37		NUT, 3/4		1	100 SECTION
38		TAGS, SWITCH NUMBER		2	720704

TABLE OF CONTENTS

1299.306
SUPERSEDES
1236.2 (1-1-87)

SDG&E ELECTRIC STANDARDS

POLE TOP SWITCH INSTALLATION 69KV
SINGLE CIRCUIT TRIANGULAR CONFIGURATION

DATE 1-1-87
APPD AK RDS

SCOPE: THIS STANDARD SHOWS A HORIZONTAL BREAK GANG OPERATED POLE TOP SWITCH FOR CIRCUIT TIES OR SECTIONALIZING PURPOSES. THIS INSTALLATION IS PREFERRED OVER STANDARD 1228.

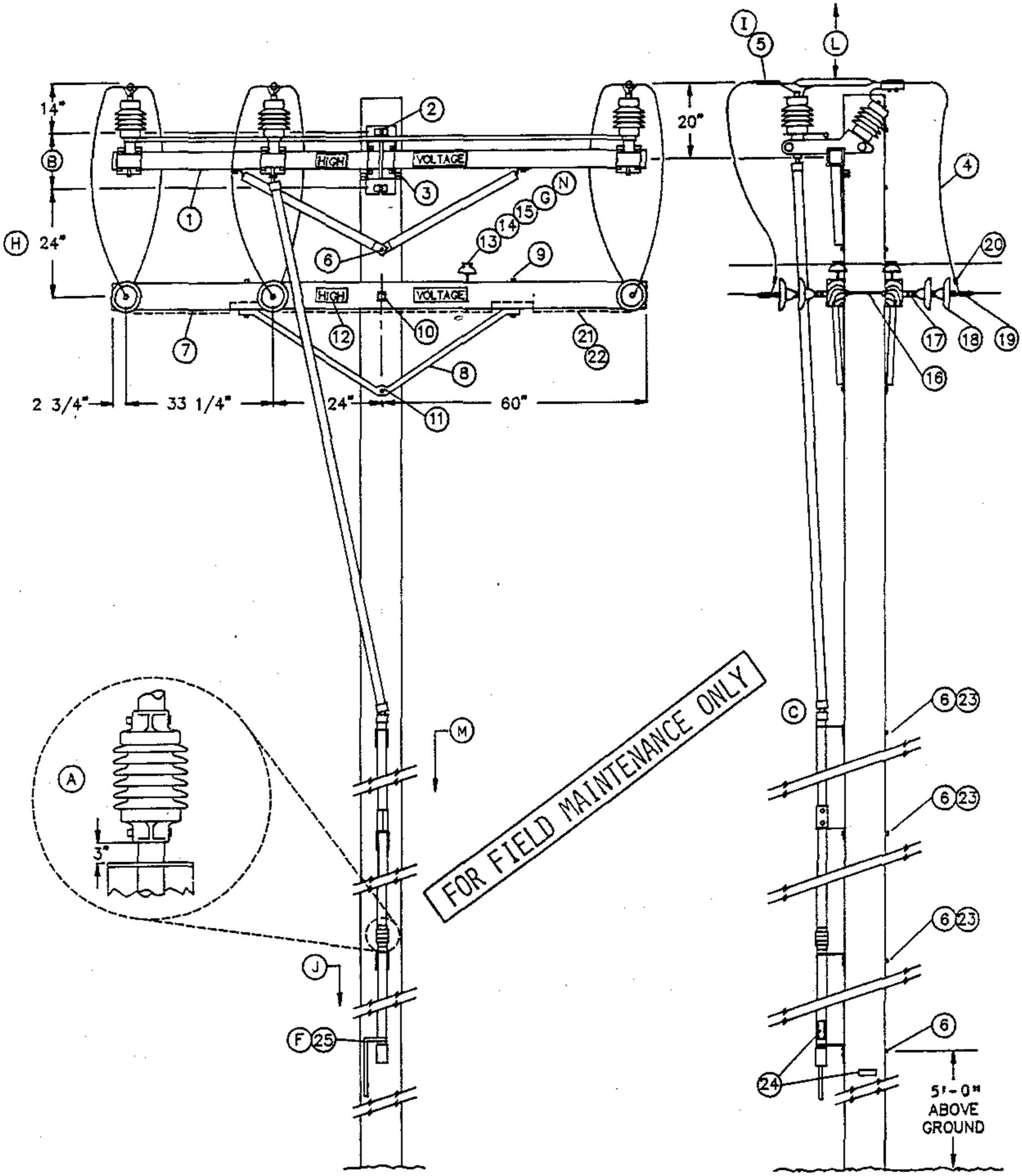

TABLE OF CONTENTS

DATE 1-1-93 APPD	SDG&E ELECTRIC STANDARDS POLE TOP SWITCH 12KV HORIZONTAL BREAK TYPE SINGLE CIRCUIT HORIZONTAL CONFIGURATION	1299.307 SUPERSEDES 1230.1 (1-1-92)

BILL OF MATERIAL:

ITEM	DESCRIPTION	QUANTITY	CONSTR. STD	STOCK NUMBER
1	SWITCH, T.P.S.T., 600 AMP, INCLUDING 40' OF CONTROL ROD (C)	1	-	709250
	ADDITIONAL 10'-6" CONTROL ROD WITH GUIDE BEARING AND COUPLING	AS REQ'D	-	604428
2	BOLT, MACH, GALV, 3/4" X (LENGTH AS REQ'D), 1 SQUARE AND 1 DOUBLE COIL SPRING WASHER (E)	2	392	-
3	SCREW, LAG, GALV, 1/2" X 4" (E)	2	-	621568
4	WIRE, BARE STRANDED CU OR AL (SIZE AS REQ'D)	33'	711-715	-
5	TERMINAL, COMPRESSION LUG (I) (E)	6	794-795	-
6	BOLT, MACH, GALV, 5/8" X (LENGTH AS REQ'D), 1 SQUARE AND 1 DOUBLE COIL SPRING WASHER (E)	5	392	-
7	CROSSARM, 3 3/4" X 5 3/4" X 10' - 0"	2	-	294128
8	BRACE, ANGLE, 5' - 0"	2	-	164128
9	BOLT, MACH, GALV, 1/2" X 7", 1 ROUND AND 1 DOUBLE COIL SPRING WASHER (E)	4	392	-
10	BOLT, MACH, GALV, 5/8" X (LENGTH AS REQ'D), 2 SQUARE AND 1 DOUBLE COIL SPRING WASHER (E)	1	392	-
11	BOLT, MACH, GALV, 5/8" X (LENGTH AS REQ'D) AND 1 DOUBLE COIL SPRING WASHER (E)	1	392	-
12	SIGN, HIGH VOLTAGE, AND (E) 9 ROOFING NAILS, GALV (E)	2 -	- -	647648 492224
13	PIN, INSULATOR, STRAIGHT, 12KV, 1" (G) (E)	2	-	532704
14	INSULATOR, 12KV NEUTRAL (G)	2	-	429216
15	WIRE, TIE (DOUBLE) (G) (E)	1	760-764	-
16	BOLT, SPACE, GALV, 5/8" X (LENGTH AS REQ'D), 2 SQUARE, 2 ROUND, 2 DOUBLE COIL SPRING WASHERS AND 1 NUT (E)	3	392	-
17	CLEVIS, DEAD END, 5/8" BOLT STEEL (CLOSED TYPE) (E)	6	-	235712
18	INSULATOR, SUSPENSION, 12KV, CLEVIS	12	750	-
19	CLAMP, STRAIGHT LINE, D.E.	6	741-743	-
20	CONNECTOR, WIRE COMPRESSION (SIZE AS REQ'D) (E)	AS REQ'D	783-786	-
21	WIRE, #8 BARE SOLID ANNEALED COPPER	12'	-	812928
22	STAPLE, FENCE, GALV, 1 1/4" (E)	AS REQ'D	-	678528
23	SCREW, LAG, GALV, 5/8" X 5" (E)	2	-	621600
24	TAG, SWITCH NUMBER	2	204	-
25	PADLOCK , MEDECO	1	-	514862

TABLE OF CONTENTS

FOR FIELD MAINTENANCE ONLY

INSTALLATION:

(A) INSTALL CONTROL PIPE INSULATOR THREE INCHES ABOVE THE NEXT GUIDE BEARING UP FROM THE SWITCH HANDLE.

(B) USE THE FOLLOWING THROUGH-BOLT DRILLING DIMENSIONS: A.B. CHANCE = 13-1/4", S&C = 14".

(C) SWITCHES ARE FURNISHED WITH 40 FEET OF OPERATING CONTROL ROD. THE TOP SECTION OF THE CONTROL ROD IS MADE OF FIBER GLASS, THE LOWER SECTIONS ARE MADE OF GALVANIZED PIPE.

D. SWITCH CONTROL MECHANISM DOES NOT REQUIRE GROUNDING.

(E) EXEMPT MATERIAL.

(F) THE SWITCH IS SHIPPED FACTORY ADJUSTED. HOWEVER, THE SWITCH HANDLE LOCK SEGMENTS WILL REQUIRE ADJUSTMENT. REFER TO INSTALLATION INSTRUCTIONS PROVIDED WITH SWITCH.

(G) REDUCE QUANTITIES AS REQUIRED WHEN NOT USING NEUTRAL.

(H) SWITCH MAY BE INSTALLED BELOW LINEARM. DRILL SWITCH ARM UPPER MOUNTING BOLT HOLE 36" BELOW LINE ARM THRU BOLT (SEE STANDARD 1444).

(I) WHEN ATTACHING 1/0 AND 4/0 COPPER CONDUCTORS TO A POLE TOP SWITCH, USE A BRONZE CABLE TAP LUG, STOCK NUMBER 471296. IF EXCESSIVE VIBRATION OR WHIPPING COULD OCCUR, USE TWO LUGS IN SERIES.

REFERENCES:

(J) POLE STEPPING – SEE STANDARD 363.

K. SEE DESIGN MANUAL PAGE 6111 – FEEDER CIRCUIT SECTIONALIZING AND PROTECTION.

(L) SEE SECTION 200 FOR MINIMUM VERTICAL SEPARATION.

(M) REFLECTOR STRIPS ARE REQUIRED ON ALL SECTIONALIZING/TIELINE SWITCHES AND SERVICE RESTORER POLES. (SEE STD. 208.3 ITEM 12)

(N) NEUTRALS SHALL BE SOLIDLY TIED TOGETHER AT ALL SWITCHES REGARDLESS WHETHER THEY ARE NORMALLY OPEN OR CLOSED. THIS INCLUDES TIE SWITCHES TO CIRCUITS EMANATING FROM DIFFERENT SUBSTATIONS. (SEE DESIGN MANUAL STANDARD PAGE 6221.2, D.3).

O. CONTROL PIPE AND SWITCH HANDLE ARE NOT ALLOWED IN THE CLIMBING SPACE (G.O. 95, 54.7-A4).

TABLE OF CONTENTS

FOR FIELD MAINTENANCE ONLY

DATE 1-1-93 APPD P.A./2009	SDG&E ELECTRIC STANDARDS POLE TOP SWITCH 12KV HORIZONTAL BREAK TYPE SINGLE CIRCUIT HORIZONTAL CONFIGURATION	1299.309 SUPERSEDES 1230.3 (1-1-92)

THIS PAGE FOR FIELD MAINTENANCE ONLY

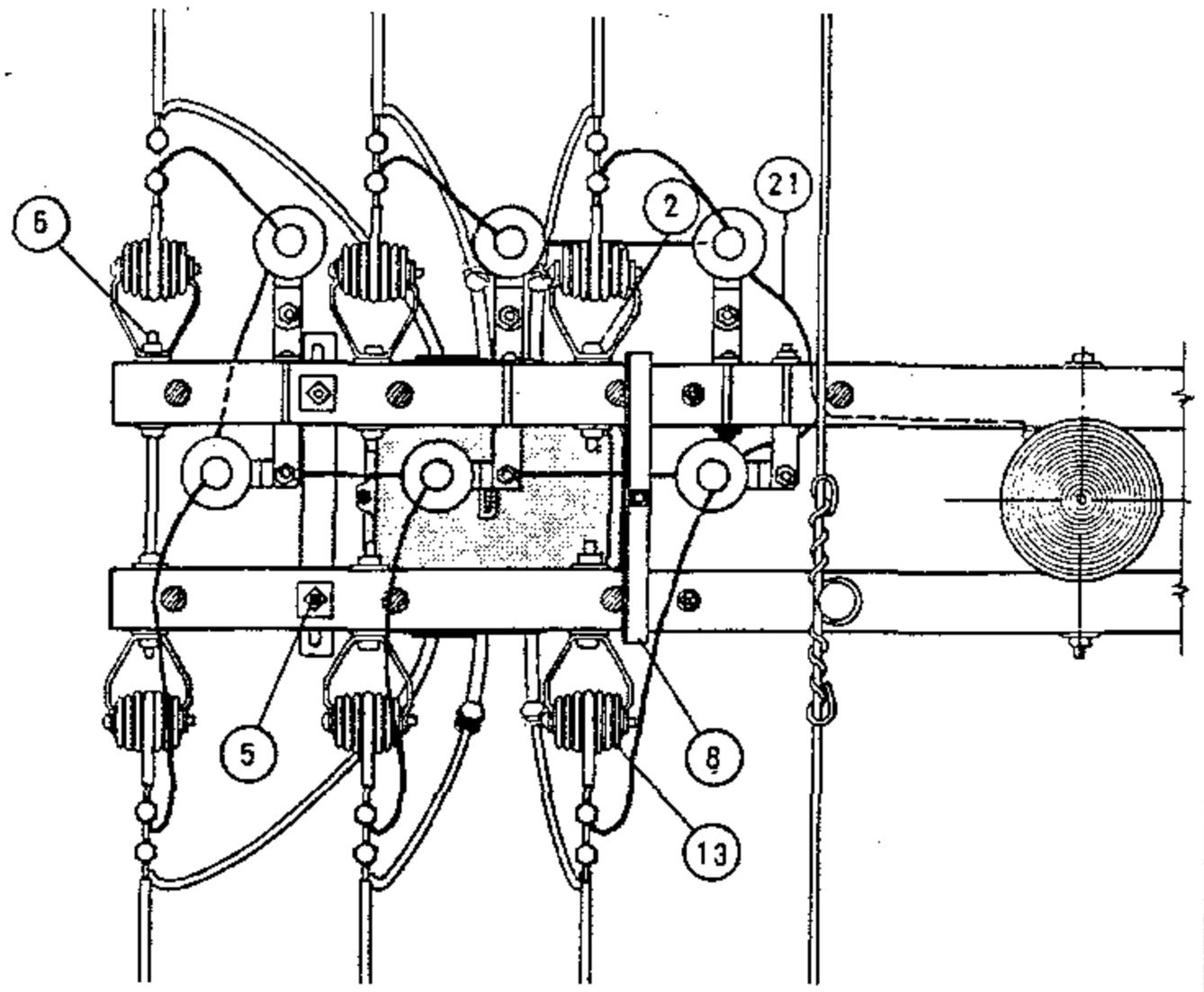

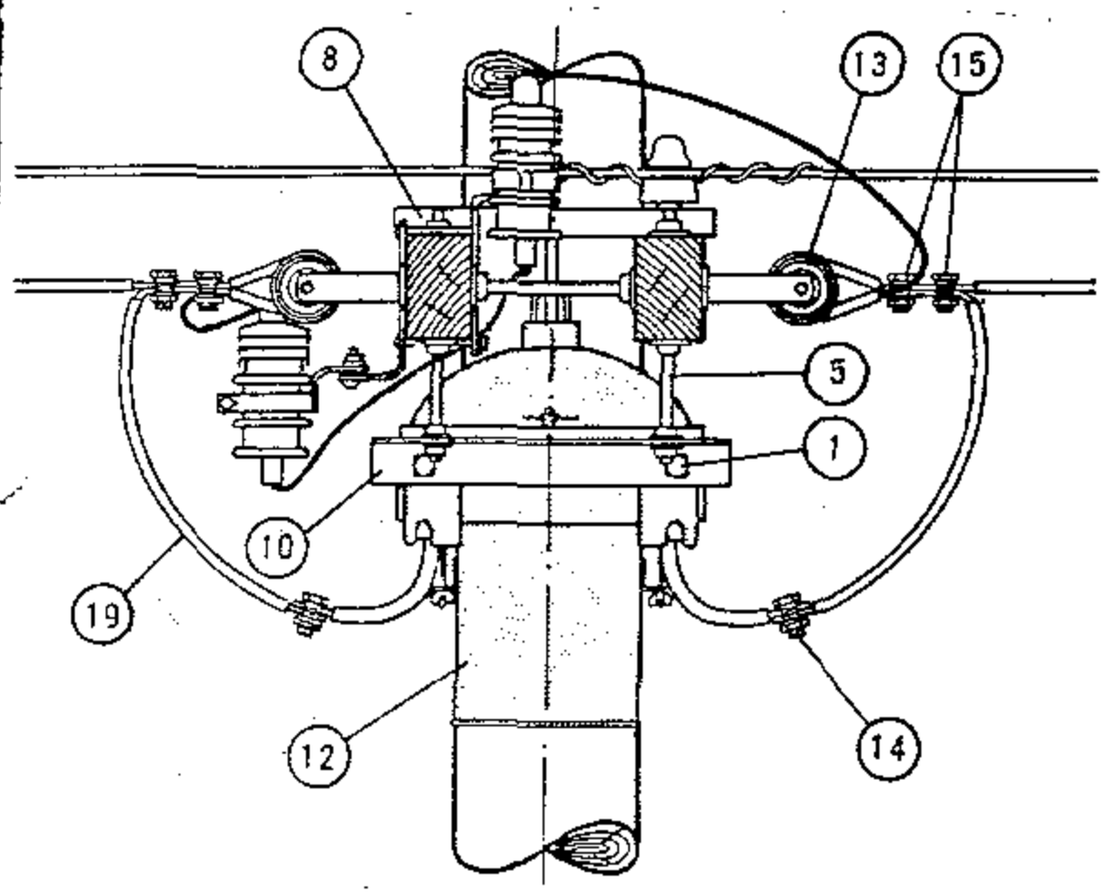

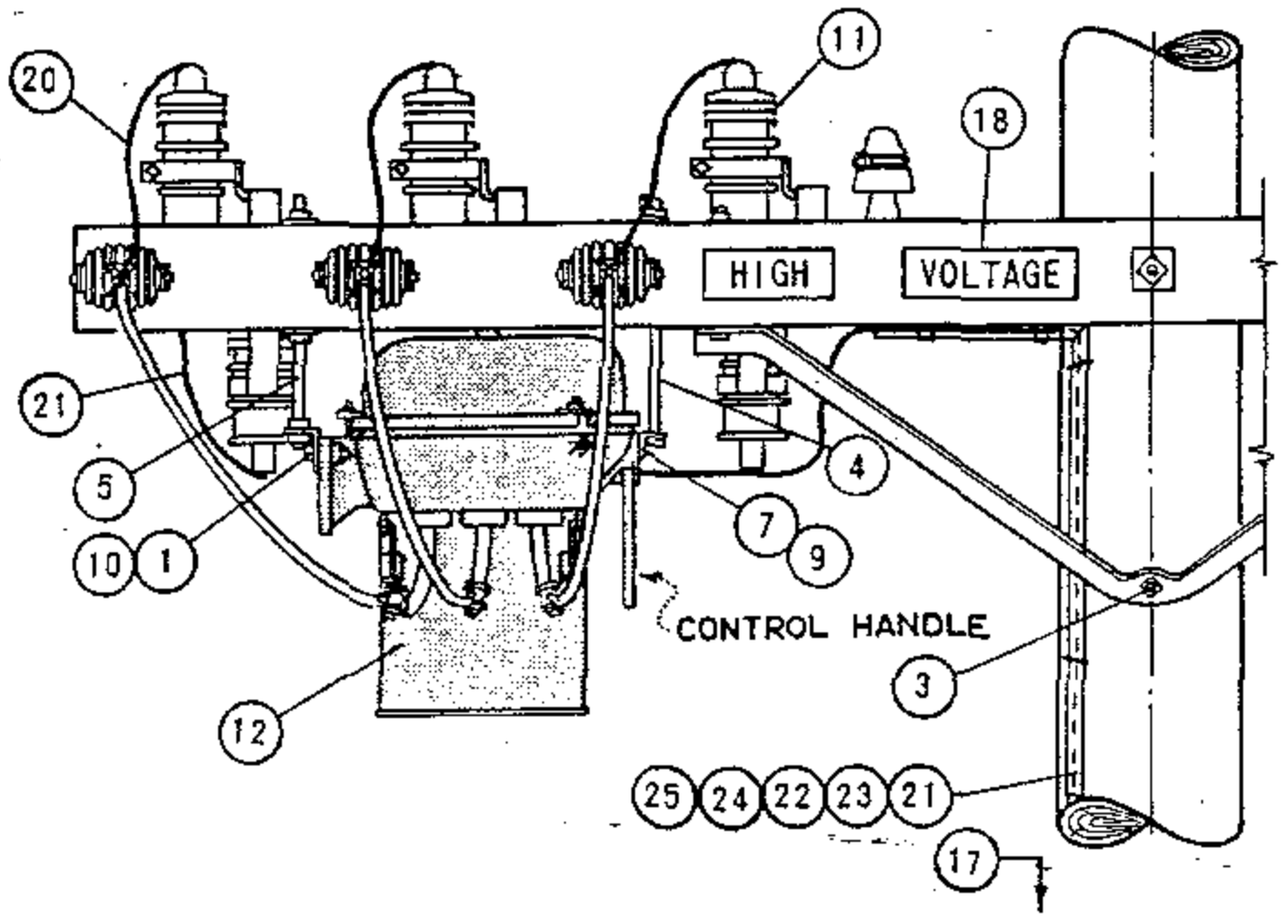

A. BETWEEN SWITCH CASE AND ARRESTER, 1 1/2 INCH CLEARANCE MUST BE MAINTAINED. USE LONGER BOLTS FOR SWITCH SUPPORTS IF REQUIRED.

(E) EXEMPT MATERIAL

ITEM	DESCRIPTION	QUANTITY #6 #4 OR	QUANTITY #2 UP	STOCK NO. OR CONSTR STD
1	MACH BOLT, GALV, 5/8" X 2" 1 RD WASHER & 1 NUT (E)	2	2	PGS 139, 140
2	MACH BOLT, GALV, 5/8" X 5" 1-2 1/2" SQ WASHER & 1 NUT (E)	4	0	PGS 139, 140
3	MACH BOLT, GALV, 5/8" X 10" TO 16", 1 NUT (E)	1	1	PGS 139, 140
4	MACH BOLT, GALV, 5/8" X 14", 1 NUT (E)	1	1	PGS 139, 140
5	SPACE BOLT, GALV, 5/8" X 16", 2 RD & 2 SQ WASH & 2 NUTS (E)	2	2	PGS 139, 140
6	SPACE BOLT, GALV, 5/8" X 16" TO 24", 4 SQ WASHER & 4 NUTS (E)	2	2	PGS 139, 140
7	CAP SCREW, GALV, 3/8" X 3/4"	2	2	619328
8	MOUNTING BRACKET, OIL SWITCH	1	1	166464
9	MOUNTING BRACKET, OIL SWITCH	1	1	166464
9	MOUNTING BRACKET, OIL SWITCH	1	1	166464
11	ARRESTER, 3 KV	6	6	PG 1247
12	POLETOP SWITCH, WEST. TYPE FO 11, 5KV, 400 A	1	1	171584
13	INSULATOR, 4KV O.E. WITH CLEVIS (E)	6	6	430848
14	WIRE CONNECTOR, SPLIT BOLT, SIZE AS REQUIRED (E)	19	7	PG 783
15	WIRE CLAMP OR O.E.	0	6	PGS 743, 787
16				
17	POLE STEPS (E)	17	17	592992
18	SIGN, HIGH VOLTAGE & ROOFING NAILS (E)	2	2	647648, 492224
19	WIRE SAME SIZE AS LINE	15'	15'	PGS 711 716
20	WIRE, BARE COPPER #6	12	12	813536
21	WIRE, BARE COPPER #2	AS REQ'D		813664
22	MOULDING, 1" HARDWOOD	AS REQ'D		487200
23	STAPLES, FENCE GALV 1 1/4" (E)	AS REQ'D		678528
24	STAPLES, 3" GALV (E)	AS REQ'D		678560
25	ROD, GROUND & CLAMP	2	2	603072, 230015 (E)

DATE 6-4-82
APPD JRH

SDG&E ELECTRIC STANDARDS

POLE TOP SWITCH INSTALLATION
4 KV WESTINGHOUSE OIL SWITCH, TYPE FO11

1299.401
SUPERSEDES
1240 (6-4-82)

TABLE OF CONTENTS

SCOPE: THIS STANDARD SHOWS THE INSTALLATION METHOD OF A DISTRIBUTION SERVICE RESTORER WHICH MAY BE USED WITH #3/0 ACSR OR #1/0 COPPER AND SMALLER CONDUCTORS.

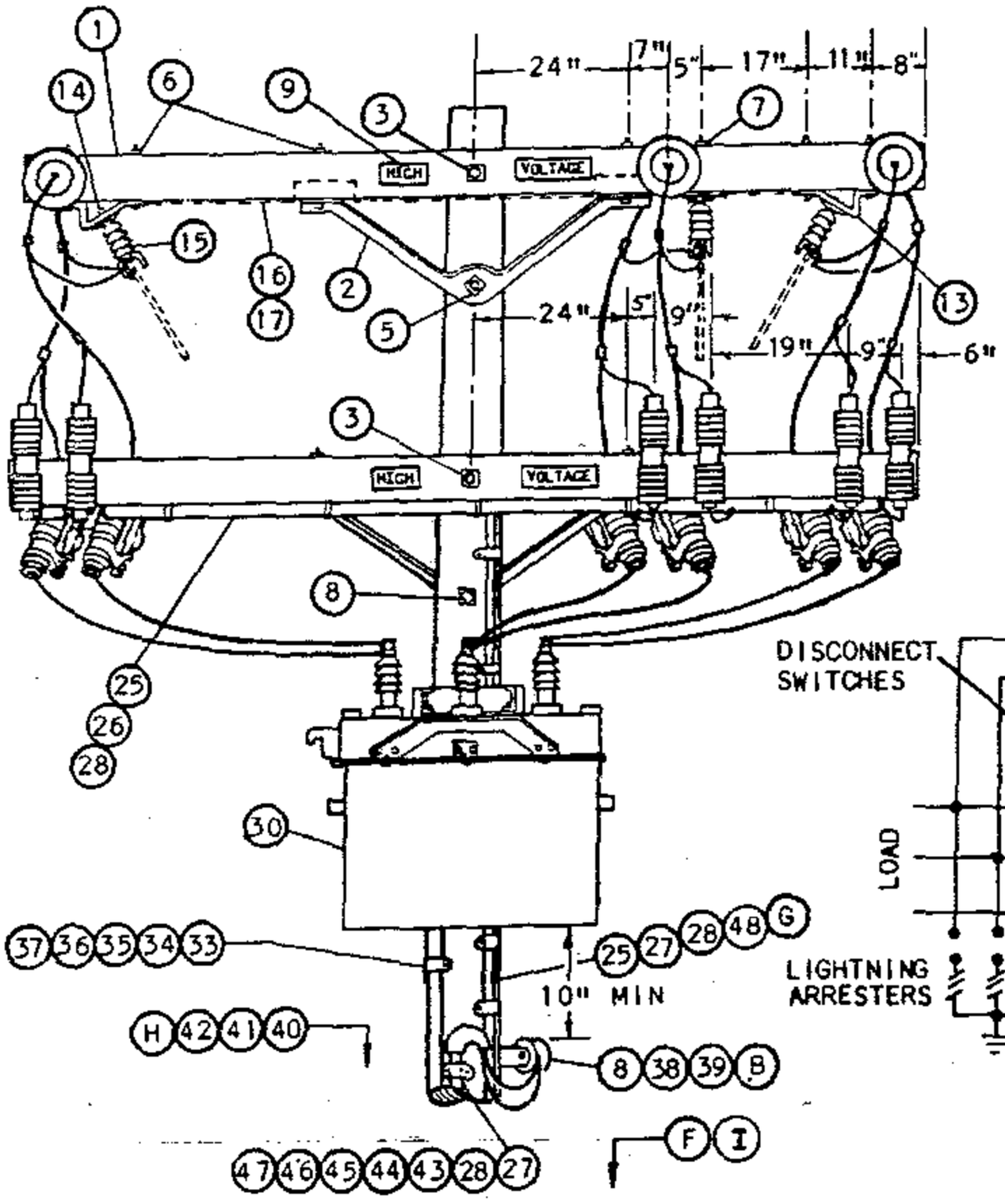

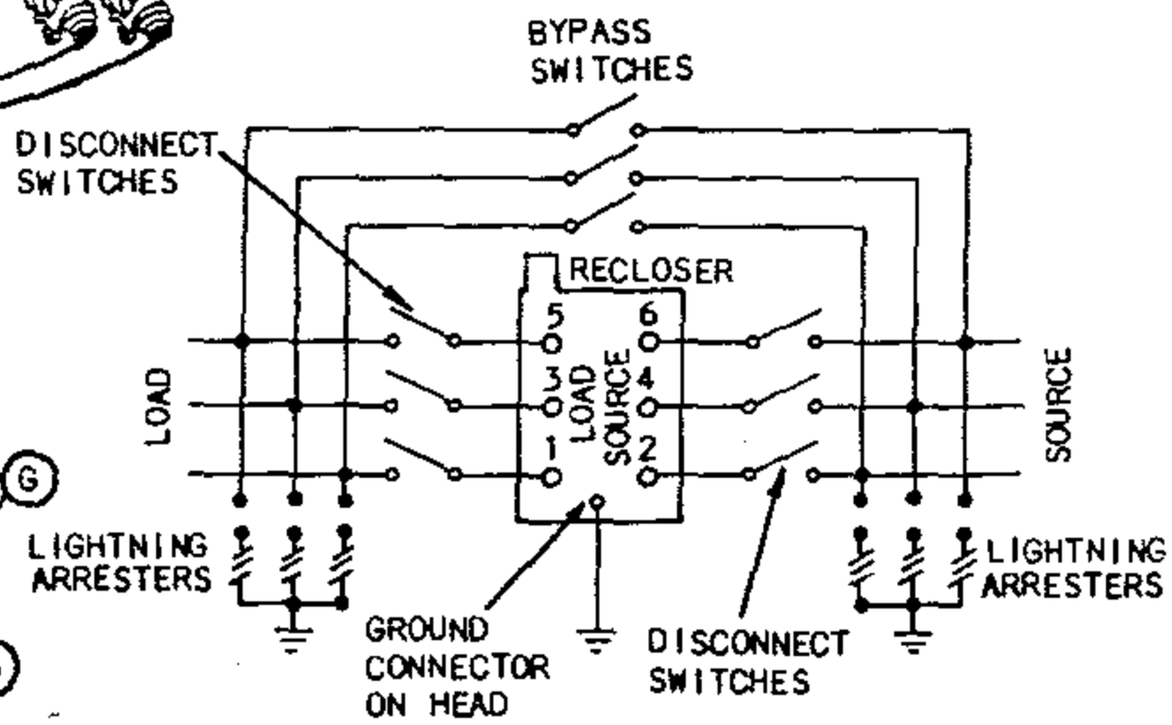

SCHEMATIC DIAGRAM

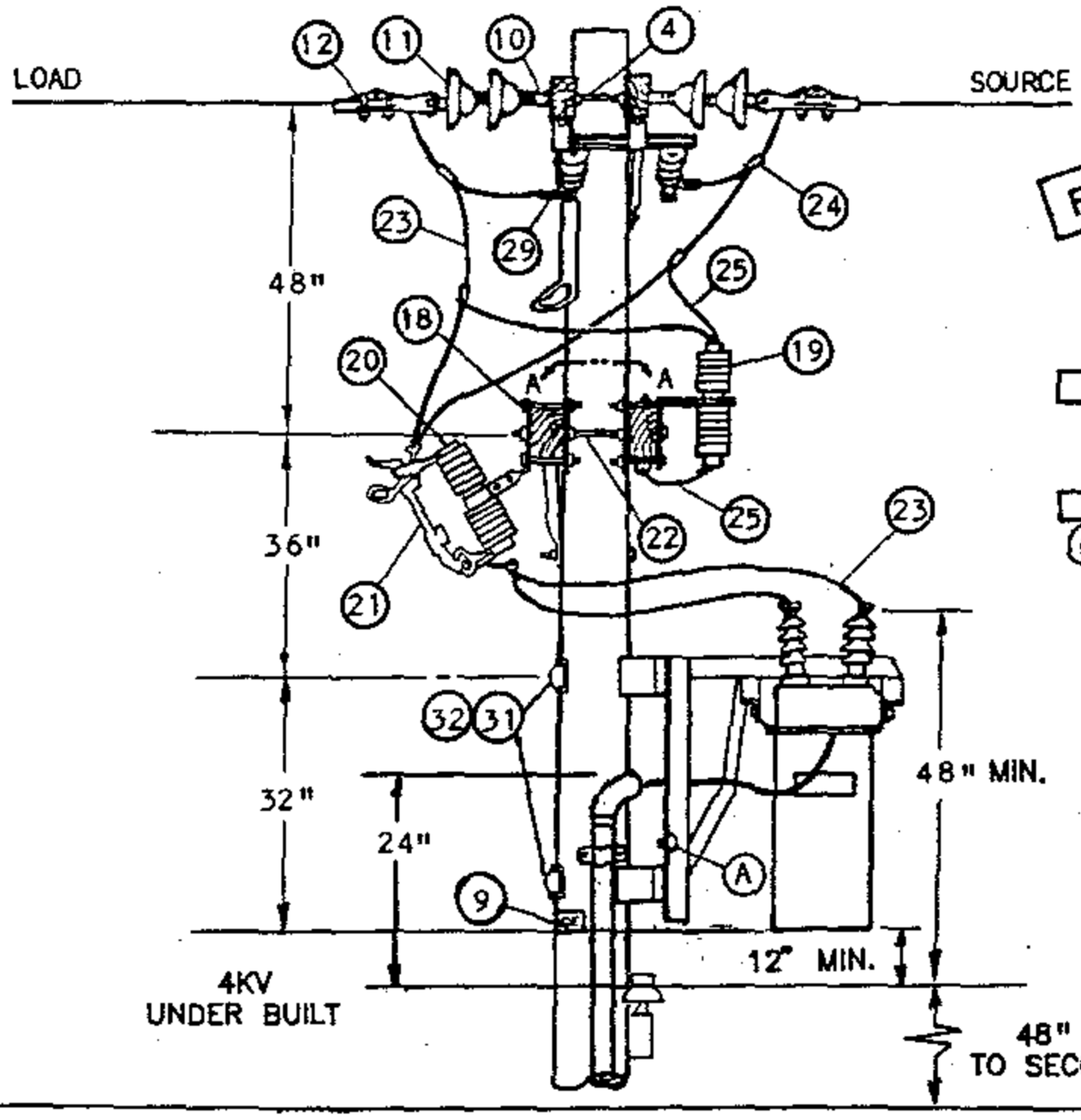

FOR FIELD MAINTENANCE ONLY

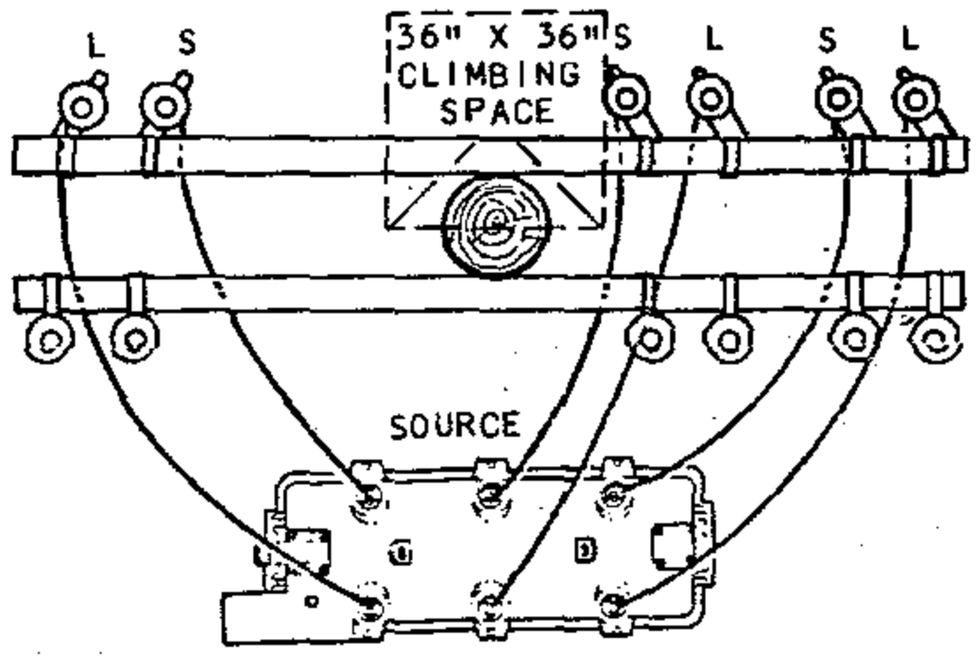

SECTION VIEW A-A

1299.701 SUPERSEDES 1270.1 (1-1-90)	SDG&E ELECTRIC STANDARDS SERVICE RESTORER WITH CUTOUT DISCONNECT	DATE 1-1-90 APPD PHA / DTC

BILL OF MATERIAL:

ITEM	DESCRIPTION	QUANTITY	CONST STD OR PAGE NO	STOCK NUMBER
1	CROSSARM, 3 3/4" X 5 3/4" X 12' - 0"	4	-	294160
2	BRACE, 4', ANGLE, GALV	3	-	164032
3	BOLT, MACH, GALV, 5/8" X (LENGTH AS REQ'D), 2 SQUARE AND 1 DOUBLE COIL SPRING WASHERS (E)	2	392	-
4	BOLT, SPACE, GALV, 5/8" X (LENGTH AS REQ'D), 2 ROUND, 2 SQUARE, 2 DOUBLE COIL SPRING WASHERS AND 1 NUT (E)	3	392	-
5	BOLT, MACH, GALV, 5/8" X (LENGTH AS REQ'D) AND 1 DOUBLE COIL SPRING WASHER (E)	1	392	-
6	BOLT, MACH, GALV, 1/2" X 7", 1 ROUND AND 1 DOUBLE COIL SPRING WASHER (E)	14	392	-
7	BOLT, MACH, GALV, 1/2" X 8", 1 ROUND AND 1 DOUBLE COIL SPRING WASHER (E)	2	392	-
8	BOLT, MACH, GALV, 5/8" X (LENGTH AS REQ'D), 1 SQUARE AND 1 DOUBLE COIL SPRING WASHER (E)	2	392	-
9	SIGN, HIGH VOLTAGE & (E) 9 ROOFING NAILS, GALV (E)	5 -	- -	647648 492224
10	CLEVIS, DEAD-END, 5/8", BOLT STEEL (CLOSED TYPE)	6	-	235712
11	INSULATOR, SUSPENSION, 12KV, CLEVIS	12	-	431616
12	CLAMP, STRAIGHT LINE, O.E.	6	741-743	-
13	BRACKET, DISCONNECT, ANGLE MOUNTING	4	-	166542
14	BOLT, MACH, GALV, 3/8" X 2", 2 ROUND & 1 LOCK WASHER (E)	4	392	-
15	SWITCH, DISCONNECT, 14.4KV, 600A	3	-	707008
16	WIRE, BARE SOLID ANNEALED COPPER, #8	30'	-	812928
17	STAPLES, FENCE, GALV, 1 1/4" (E)	AS REQ'D	-	678528
18	BRACKET, CUTOUT/ARRESTER, FOR CROSSARM MOUNTING (E)	12	-	166070
19	ARRESTER, LIGHTNING, 12KV	6	-	113248
20	CUTOUT BODY, 12KV	6	1212	297956
21	SOLID BLADE, 300A, 12KV CUTOUT	6	1212	138850
22	BOLT, SPACE, GALV, 5/8" X (LENGTH AS REQ'D), 2 ROUND, 4 SQUARE, 2 DOUBLE COIL SPRING WASHERS AND 1 NUT (E)	2	392	-
23	WIRE, BARE STRANDED COPPER, 1/0	75'	-	813568
24	CONNECTOR, WIRE, COMPRESSION (SIZE AS REQ'D) (E)	AS REQ'D	783-787	-
25	WIRE, BARE STRANDED COPPER, #4	105'	-	813760
26	CONDUIT, PVC, TYPE 2, SCHEDULE 40, 1" X 10', AND (E) STRAPS, PIPE, GALV, 1" AND 2-1 3/4" ROOFING NAILS (E)	1 AS REQ'D	- -	251200 697792
27	CONDUIT, PVC, TYPE 2, SCHEDULE 80, 3/4" X 10' (E)	3	-	251520
28	STRAPS, PIPE, GALV, 3/4" AND (E) 2 - 6D NAILS, GALV (E)	AS REQ'D AS REQ'D	- -	697888 491552
29	TERMINAL, COMPRESSION, CU OR AL (SIZE AS REQ'D) (E)	6	794/795	-
30	RECLOSER, MCGRAW-EDISON, 560A, TYPE WE (INCLUDING BRACKET) (C)	1	-	572110

FOR FIELD MAINTENANCE ONLY

TABLE OF CONTENTS

SDG&E ELECTRIC STANDARDS

DATE 1-1-90
APPD PEA/DTB

SERVICE RESTORER WITH CUTOUT DISCONNECT

1299.702
SUPERSEDES
1270.2 (1-1-90)

BILL OF MATERIAL:

ITEM	DESCRIPTION	QUANTITY	CONST STD OR PAGE NO	STOCK NUMBER
31	BOLT, MACH, GALV, 3/4" X (LENGTH AS REQ'D), 1 SQUARE CURVE RIBBED AND 1 DOUBLE COIL SPRING WASHER - (E)	2	392	-
32	COVER, BOLT, PLASTIC AND (E) 6 10-D NAILS, GALV (E)	2 -	- -	285696 491392
33	CONTROL CABLE FOR McGRAW-EDISON RECLOSER (H)	1	-	192010
34	CONDUIT, PVC, SCHEDULE 40, 2" X 10' (E)	2	-	251296
35	ELBOW, PVC, SCHEDULE 40, 2" (E)	2	-	321792
36	ELBOW, PVC, SCHEDULE 40, 2", 12" RADIUS (E)	1	-	321816
37	STRAP, PIPE, GALV, 2" AND (E) 2 - 10D NAILS, GALV, (E)	AS REQ'D AS REQ'D	- -	697856 491392
38	BRACKET, SERVICE INSULATOR	1	-	166128
39	WIRE, COPPER #8, 600 VOLT, DUPLEX (B)	AS REQ'D	-	196432
40	CONTROLLER, RECLOSER, McGRAW-EDISON (H)	1	-	273928
41	SCREW, LAG, GALV, 1/2" X 4" (E)	2	-	621568
42	PADLOCK, CORBIN #27 (FF KEY) (E)	1	-	514848
43	COVER, PVC, DRIP LOOP, 3/4" (E)	1	-	287248
44	COUPLING, PVC, 3/4" (E)	2	-	280416
45	TERMINAL, ADAPTOR, PVC, 3/4"	1	-	102754
46	ELBOW, 90 , PULLING, PVC, 3/4" (E)	2	-	-
47	NIPPLE, PIPE SCREW, GALV, 3/4" X 1"	1	-	-
48	UNIT, GROUND, COMPLETE	1	-	603136

INSTALLATION:

(A) CONNECT RECLOSER RACK GROUND LEAD TO LIGHTNING ARRESTER GROUND.

(B) RECLOSER CONTROL REQUIRES 120 VOLT SUPPLY, PREFERABLY COMING FROM THE SOURCE SIDE.

(C) THE 400A, TYPE RXE RECLOSER (S/N 572100) IS NO LONGER PURCHASED.

(E) EXEMPT MATERIAL.

FOR FIELD MAINTENANCE ONLY

REFERENCE:

(F) POLE STEPPING – SEE STANDARD 363.

(G) GROUNDING METHODS – SEE STANDARD 1002. (INSTALL GROUND MOULDING IN SUCH A MANNER AS NOT TO INTERFERE WITH A LADDER WHEN PLACED AGAINST THE POLE).

(H) CONTROL INSTALLATION TO BE DONE BY SUBSTATION CONSTRUCTION AND MAINTENANCE AND IS TO BE INSTALLED A MINIMUM OF 13'–6" ABOVE GROUND LEVEL.

(I) REFLECTOR STRIPS ARE REQUIRED ON ALL SECTIONALIZING/TIELINE SWITCHES AND SERVICE RESTORER POLES. (SEE STD. 208.3 ITEM 12)

1299.703 SUPERSEDES 1270.3 (1-1-90)	SDG&E ELECTRIC STANDARDS SERVICE RESTORER WITH CUTOUT DISCONNECT	DATE 1-1-90 APPD PEA/DTS

TABLE OF CONTENTS

SCOPE: THIS STANDARD SHOWS THE INSTALLATION METHOD OF A DISTRIBUTION SERVICE RESTORER TO BE USED WITH ALL CONDUCTOR SIZES

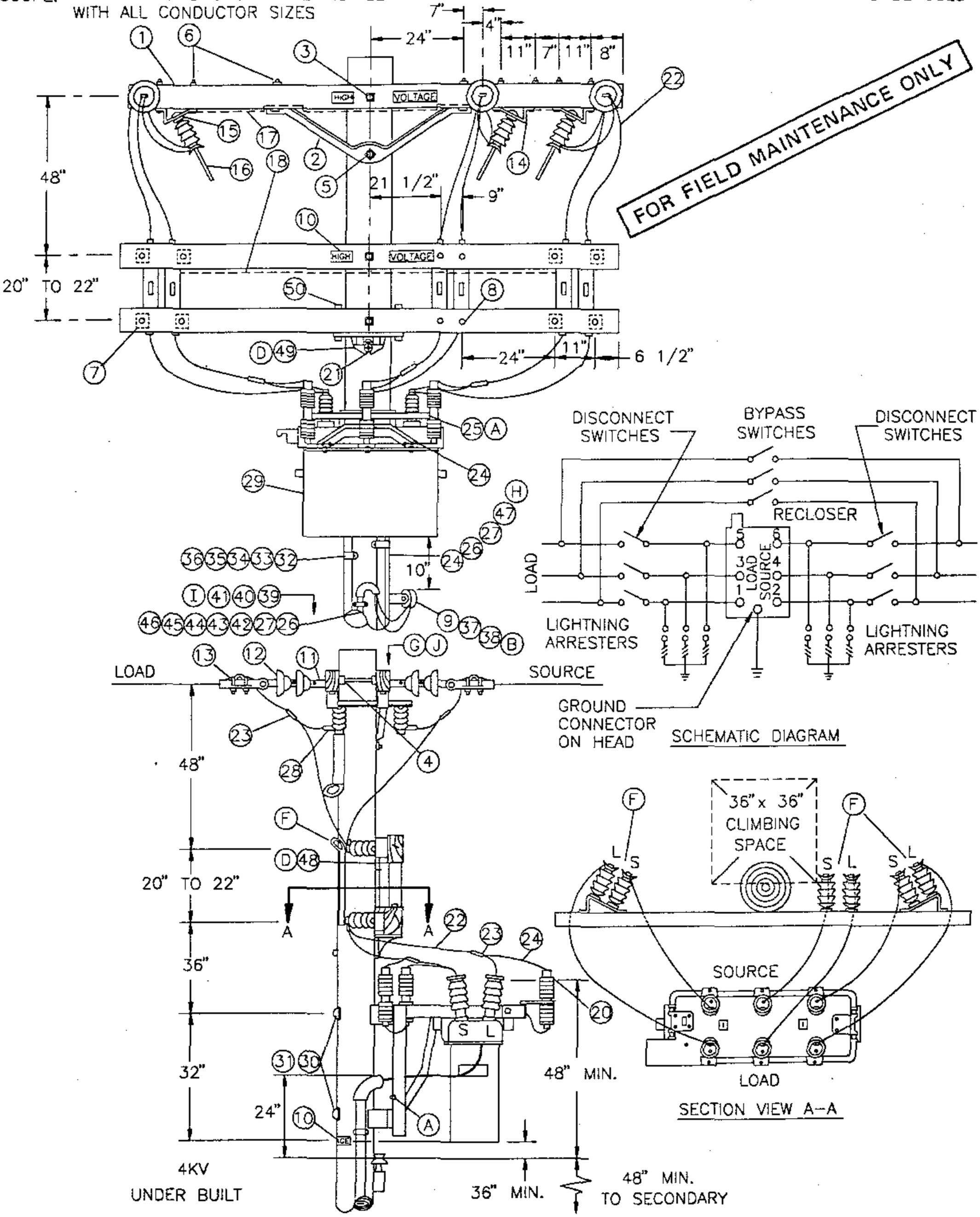

TABLE OF CONTENTS

DATE 1-1-93 APPD PHA/BDJ	SDG&E ELECTRIC STANDARDS SERVICE RESTORER WITH HOOK STICK SWITCH DISCONNECT	1299.704 SUPERSEDES 1271.1 (1-1-94)

BILL OF MATERIAL:

ITEM	DESCRIPTION	QUANTITY	CONST STANDARD OR PAGE NO.	STOCK NUMBER
1	CROSSARM, 3 3/4" X 5 3/4" X 12' – 0"	5	–	294160
2	BRACE, ANGLE, CROSSARM, 4' – 0"	2	–	164032
3	BOLT, MACH, GALV, 5/8" X (LENGTH AS REQ'D), 2 SQUARE & 1 DOUBLE COIL SPRING WASHERS	3	392	–
4	BOLT, SPACE, GALV, 5/8" X (LENGTH AS REQ'D) 2 SQUARE, 2 ROUND & 2 DOUBLE COIL SPRING WASHERS	3	392	–
5	BOLT, MACH, GALV, 5/8" X (LENGTH AS REQ'D) & 1 DOUBLE COIL SPRING WASHERS	1	392	–
6	BOLT, MACH, GALV, 1/2" X 7", 1 ROUND & 1 DOUBLE COIL SPRING WASHERS	16	392	–
7	BOLT, MACH, GALV, 1/2" X 5", 1 ROUND & 1 DOUBLE COIL SPRING WASHERS	8	392	–
8	BOLT, MACH, GALV, 3/8" X 6", 1 ROUND & 1 DOUBLE COIL SPRING WASHERS	4	392	–
9	BOLT, MACH, GALV, 5/8" X (LENGTH AS REQ'D), 1 SQUARE & 1 DOUBLE COIL SPRING WASHERS	1	392	–
10	SIGN, HIGH VOLTAGE &	5	–	647648
	9 ROOFING NAILS, GALV	AS REQ'D	–	492224
11	CLEVIS, DEAD–END, 5/8", BOLT STEEL (CLOSED TYPE)	6	–	235712
12	INSULATOR, SUSPENSION, 12KV, CLEVIS	12	–	431616
13	CLAMP, STRAIGHT LINE, D.E.	6	741–743	–
14	BRACKET, DISCONNECT, ANGLE MOUNTING	10	–	166542
15	BOLT, MACH, GALV, 3/8" X 2", 2 ROUND & 1 LOCK WASHER	14	392	–
16	SWITCH, DISCONNECT, 14.4KV, 600A	9	–	707008
17	WIRE, #8, BARE SOLID ANNEALED COPPER	30'	–	812928
18	STAPLES, FENCE, GALV, 1 1/4"	AS REQ'D	–	678528
19				
20	ARRESTER, LIGHTNING, 12KV	6	–	113248
21	BOLT, MACH, GALV, 5/8" X (LENGTH AS REQ'D) 1 SQUARE, 1 ROUND & 1 DOUBLE COIL SPRING WASHER	1	392	–
22	WIRE, BARE STRANDED COPPER, (SIZE AS REQ'D WITH MINIMUM SIZE EQUAL TO LINE CONDUCTOR AMPACITY, OR GREATER) ©	75'	715	–
23	CONNECTOR, WIRE, COMPRESSION (SIZE AS REQ'D)	AS REQ'D	783–787	–
24	WIRE, #4, BARE STRANDED COPPER	100'	–	813760
25	CONNECTOR, SPLIT BOLT, #2	2	–	269536
26	CONDUIT, PVC, TYPE 2, SCHEDULE 80, 3/4" X 10'	3	–	251520
27	STRAPS, PIPE, GALV, 3/4" &	AS REQ'D	–	697888
	2 – 6D NAILS, GALV	AS REQ'D	–	491552
28	TERMINAL, COMPRESSION, CU OR AL (SIZE AS REQ'D)	6	794/795	–
29	RECLOSER, MCGRAW–EDISON, 560A, TYPE WE (INCLUDING BRACKET) ©	1	–	572110

FOR FIELD MAINTENANCE ONLY

TABLE OF CONTENTS

1299.705 SUPERSEDES 1271.2 (1–1–94)	SDG&E ELECTRIC STANDARDS SERVICE RESTORER WITH HOOK STICK SWITCH DISCONNECT	DATE 1–1–90 APPD

BILL OF MATERIAL:

ITEM	DESCRIPTION	QUANTITY	CONST STD OR PAGE NO	STOCK NUMBER
30	BOLT, MACH, GALV, 3/4" X (LENGTH AS REQ'D), 1 SQUARE CURVED RIBBED & 1 DOUBLE COIL SPRING WASHER	2	392	–
31	COVER, BOLT, PLASTIC &	2	–	285696
	6 – 10D NAILS, GALV	AS REQ'D	–	491392
32	CONTROL CABLE, FOR MCGRAW–EDISON RECLOSER (I)	1	–	192010
33	CONDUIT, PVC, SCHED 40, 2" X 10' (I)	2	–	251296
34	ELBOW, PVC, SCHED 40, 2", 12" RADIUS (I)	1	–	321816
35	ELBOW, PVC, SCHED 40, 2" (I)	2	–	–
36	STRAPS, PIPE, GALV, 2" & (I)	AS REQ'D	–	697856
	2 – 10 D NAILS, GALV	AS REQ'D	–	491392
37	BRACKET, SERVICE INSULATOR	1	–	166128
38	WIRE, COPPER, #8, 600 VOLT, DUPLEX (B)	AS REQ'D	–	196432
39	CONTROLLER, RECLOSER, MCGRAW–EDISON (I)	1	–	273928
40	SCREW, LAG, GALV, 1/2" X 4"	2	–	621568
41	PADLOCK, CORBIN #27 (FF KEY)	1	–	514848
42	COVER, PVC, DRIPLOOP, 3/4"	1	–	287248
43	COUPLING, PVC, 3/4"	2	–	280416
44	TERMINAL, ADAPTOR, PVC, 3/4"	1	–	102754
45	ELBOW, 90°, PULLING, PVC, 3/4"	2	–	–
46	NIPPLE, PIPE SCREW, GALV, 3/4" X 1"	1	–	–
47	UNIT, GROUND, COMPLETE	1	–	603136
48	GAIN, CROSSARM (D)	1	–	369596
49	GAIN, CROSSARM, BRACELESS (D)	1	–	369598
50	BOLT, MACH, GALV, 5/8" X 7" 1 ROUND & 1 DOUBLE COIL SPRING WASHER	2	392	–

FOR FIELD MAINTENANCE ONLY

INSTALLATION:

(A) CONNECT GROUND LEAD TO RECLOSER MOUNTING FRAME. CONNECT LIGHTNING ARRESTER GROUND LEADS TO LIGHTNING ARRESTER MOUNTING BRACKETS. CONNECT GROUND CONNECTOR ON HEAD TO RECLOSER MOUNTING FRAME.

(B) RECLOSER CONTROL REQUIRES 120 VOLT SUPPLY, PREFERABLY COMING FROM THE SOURCE SIDE.

(C) THE 400A, TYPE RXE RECLOSER (S/N 572100) IS NO LONGER PURCHASED.

(D) DO NOT CUT GAINS IN THE POLE WHEN INSTALLING THE VERTICALLY MOUNTED SECTIONALIZING SWITCH ARMS. THE GAIN HARDWARE USED HERE MAKE CUT GAINS UNNECESSARY.

(F) IT IS NECESSARY TO CUT OFF INSIDE LOAD BREAK EARS ON EACH PAIR OF VERTICALLY MOUNTED DISCONNECT SWITCHES TO PREVENT PHYSICAL CONTACT.

REFERENCE:

(G) POLE STEPPING – SEE STANDARD 363.

(H) GROUNDING METHODS – SEE STANDARD 1002.

(I) CONTROL INSTALLATION TO BE DONE BY SUBSTATION CONSTRUCTION AND MAINTENANCE AND IS TO BE INSTALLED A MINIMUM OF 13'–6" ABOVE GROUND LEVEL. INSTALLER WILL SUPPLY CONDUIT ITEMS 33 THRU 36.

(J) REFLECTOR STRIPS ARE REQUIRED ON ALL SECTIONALIZING/TIELINE SWITCHES AND SERVICE RESTORER POLES. (SEE STD. 208.3 ITEM 12)

TABLE OF CONTENTS

SCOPE: THIS STANDARD SHOWS THE INSTALLATION METHOD OF A DISTRIBUTION SERVICE RESTORER TO BE USED WITH ALL CONDUCTOR SIZES.

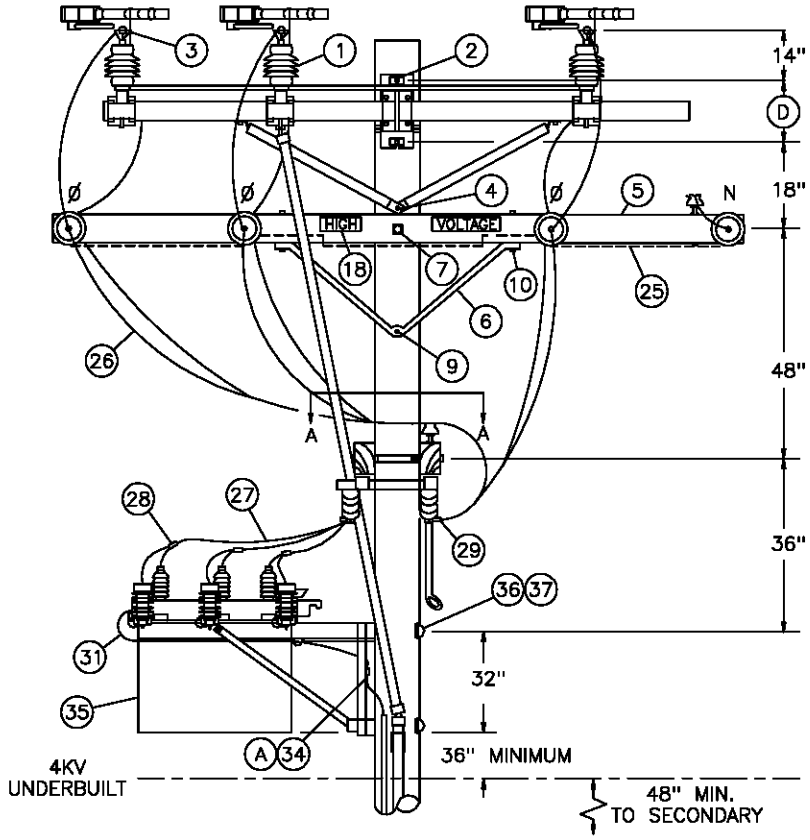

FOR FIELD MAINTENANCE ONLY

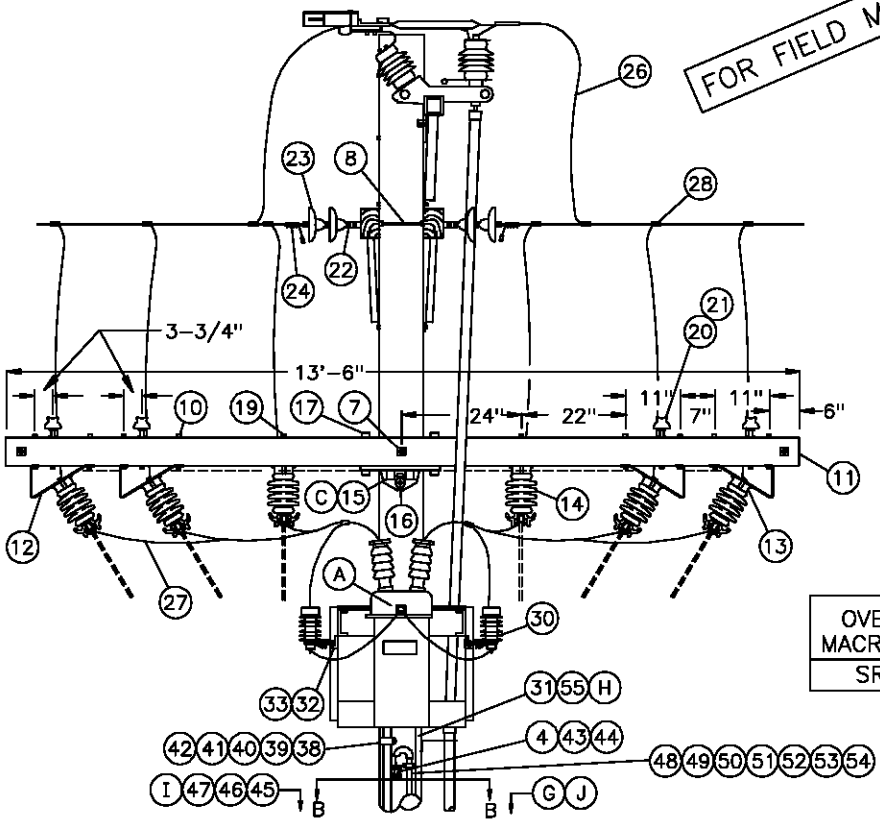

OVERHEAD MACRO UNITS
SR560S

1299.707 SUPERSEDES 1271.1 (1-1-98)	SDG&E ELECTRIC STANDARDS SERVICE RESTORER-BUCK POSITION HOOKSTICK SWITCH DISCONNECT LOADBREAK GANG SWITCH BY-PASS	DATE 1-1-98 APPD PSA / CMK

TABLE OF CONTENTS

TABLE OF CONTENTS

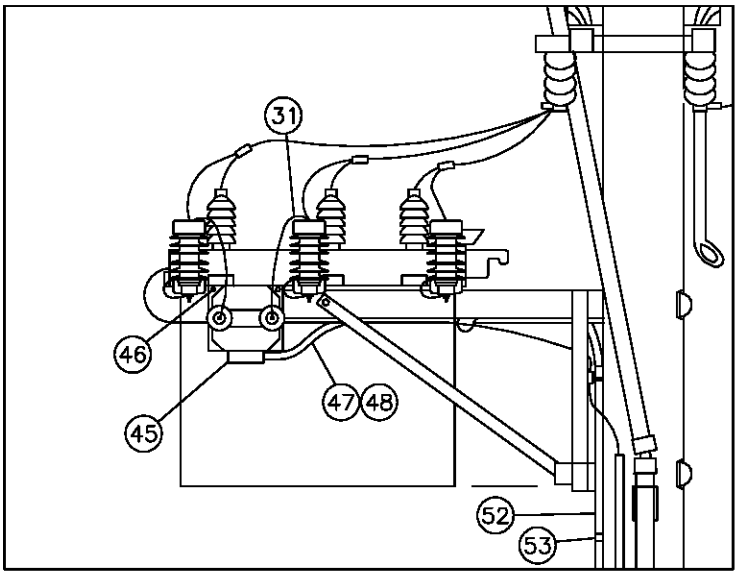

OVERHEAD MACRO UNIT
SRSEC

POTENTIAL TRANSFORMER–SECONDARY POWER SOURCE (B)

STREET SIDE (PREFERRED)

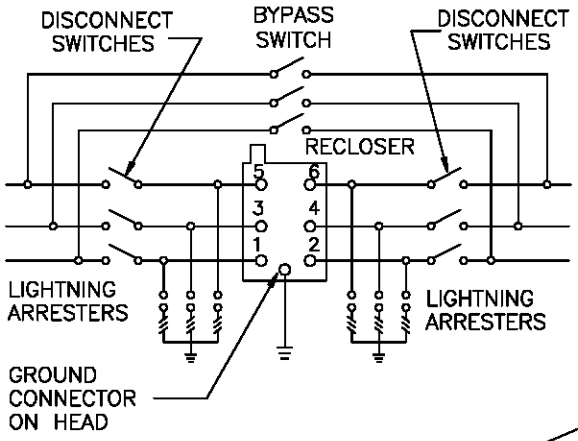

SCHEMATIC DIAGRAM

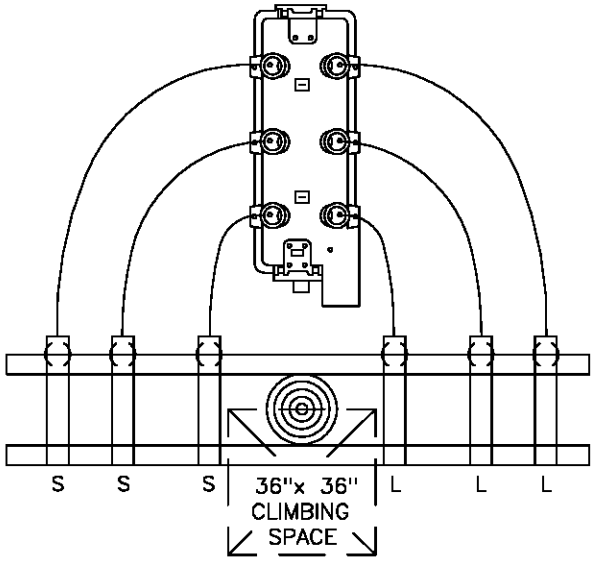

SECTION VIEW A–A

FOR FIELD MAINTENANCE ONLY

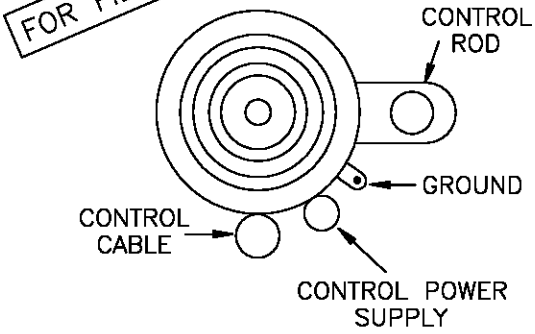

SECTION VIEW B–B

DATE 1–1–98 APPD PSA / CMC	SDG&E ELECTRIC STANDARDS BUCK POSITION SERVICE RESTORER HOOKSTICK SWITCH DISCONNECT LOADBREAK GANG SWITCH BY–PASS	1299.708 SUPERSEDES 1271.2 (1–1–98)

BILL OF MATERIAL:

ITEM	DESCRIPTION	QUANTITY	CONST STANDARD OR PAGE NO.	STOCK NUMBER	ASSEMBLY UNITS
1	SWITCH, GANG–OPERATED, 15KV, 600AMP,WITH DUOGAP INTERRUPTERS, INCLUDING 40' OF CONTROL ROD	1	–	709250	CHANCE
2	BOLT, MACH, GALV, 3/4" X (LENGTH AS REQ'D), 1 SQUARE & 1 DOUBLE COIL SPRING WASHER	2	392	–	–
3	LUG, EYEBOLT TERMINAL, BRONZE	12	–	471296	–
4	BOLT, MACH, GALV, 5/8" X (LENGTH AS REQ'D), 1 SQUARE & 1 DOUBLE COIL SPRING WASHERS	2	392	–	–
5	CROSSARM, 3 3/4" X 5 3/4" X 12' – 0"	2	–	294160	6–
6	BRACE, ANGLE, CROSSARM, 4' – 0"	2	392	164032	4HUB
7	BOLT, MACH, GALV, 5/8" X (LENGTH AS REQ'D), 2 SQUARE & 1 DOUBLE COIL SPRING WASHERS	2	392	–	–
8	BOLT, SPACE, GALV, 5/8" X (LENGTH AS REQ'D) 2 SQUARE, 2 ROUND & 2 DOUBLE COIL SPRING WASHERS	6	392	–	–
9	BOLT, MACH, GALV, 5/8" X (LENGTH AS REQ'D) & 1 DOUBLE COIL SPRING WASHERS	1	392	–	–
10	BOLT, MACH, GALV, 1/2" X 7", 1 ROUND & 1 DOUBLE COIL SPRING WASHERS	20	392	–	–
11	CROSSARM 3–3/4" X 5–3/4" X 13'–6"	2	–	294368	13SWI–
12	BRACKET, DISCONNECT, ANGLE MOUNTING	8	–	166542	ABRKT
13	BOLT, MACH, GALV, 3/8" X 2", 2 ROUND & 1 LOCK WASHER	8	392	–	–
14	SWITCH, DISCONNECT, 14.4KV, 600A	6	–	707008	D600
15	GAIN, CROSSARM, BRACELESS Ⓒ	1	–	369598	BCGAIN
16	BOLT, MACH, GALV, 5/8" X (LENGTH AS REQ'D) 1 SQUARE, 1 ROUND & 1 DOUBLE COIL SPRING WASHER	1	392	–	–
17	BOLT, MACH, GALV, 5/8" X 7", 1 ROUND & 1 DOUBLE COIL SPRING WASHER	2	392	–	–
18	SIGN, HIGH VOLTAGE & 9 ROOFING NAILS, GALV	2	–	647648	HV
		AS REQ'D	–	492224	–
19	BOLT, MACH, 1/2" X 9", 1 ROUND AND 1 DOUBLE COIL SPRING WASHER	4	392	–	–
20	PIN, INSULATOR, STRAIGHT, 12KV 1" OR 1–3/8" THREAD	5	396	–	–
21	INSULATOR, LINE, 12KV	5	750	–	–
22	CLEVIS, DEAD–END, 5/8", BOLT STEEL (CLOSED TYPE)	8	–	235712	–
23	INSULATOR, SUSPENSION, 12KV, CLEVIS	14	–	431616	6DE
24	CLAMP, STRAIGHT LINE, D.E.	8	739–743	–	–
25	WIRE, #8, BARE SOLID ANNEALED COPPER, AND	30' 1.5#	–	812928	BOND8
	STAPLES, FENCE, GALV, 1 1/4"	AS REQ'D	–	678528	–
26	WIRE, BARE STRANDED CU OR AL (SIZE AS REQ'D)	90'	711–715	–	–
27	WIRE, BARE STRANDED COPPER, (SIZE AS REQ'D WITH MINIMUM SIZE EQUAL TO LINE CONDUCTOR AMPACITY, OR GREATER)	25'	715	–	–
28	CONNECTOR, WIRE, COMPRESSION (SIZE AS REQ'D)	AS REQ'D	783–787	–	–
29	TERMINAL, COMPRESSION, CU OR AL (SIZE AS REQ'D)	12	794–795	–	–
30	ARRESTER, LIGHTNING, 12KV	6	–	113248	LA12
31	WIRE, #4, BARE STRANDED COPPER	100' 13#	–	813760	Ⓔ

FOR FIELD MAINTENANCE ONLY

TABLE OF CONTENTS

1299.709 SUPERSEDES 1271.3 (1–1–98)	SDG&E ELECTRIC STANDARDS BUCK POSITION SERVICE RESTORER HOOKSTICK SWITCH DISCONNECT LOADBREAK GANG SWITCH BY–PASS	DATE 1–1–98 APPD PSA / CMC

BILL OF MATERIAL:

ITEM	DESCRIPTION	QUANTITY	CONST STD OR PAGE NO	STOCK NUMBER	ASSEMBLY UNITS
32	Z–BRACKET, GALV, 1–5/8"	6	–	703168	–
33	BOLT, MACH, GALV, 1/2" X 2", 1 ROUND & 1 LOCK WASHER	12	392	–	–
34	CONNECTOR, SPLIT BOLT, #2	2	–	269536	–
35	RECLOSER, MCGRAW–EDISON, 560A, TYPE WE (INCLUDING BRACKET)	1	–	572110	SR560
36	BOLT, MACH, GALV, 3/4" X (LENGTH AS REQ'D), 1 SQUARE CURVED RIBBED & 1 DOUBLE COIL SPRING WASHER	2	392	–	–
37	COVER, BOLT, PLASTIC & 6 – 10D NAILS, GALV	2	–	285696	–
		AS REQ'D	–	491392	–
38	CONTROL CABLE, FOR MCGRAW–EDISON RECLOSER, 35' (I)	1	–	192010	(E)
39	CONDUIT, PVC, SCHED 40, 2" X 10' (I)	2	–	251296	(E)
40	ELBOW, PVC, SCHED 40, 2", 12" RADIUS (I)	1	–	321816	(E)
41	ELBOW, PVC, SCHED 40, 2" (I)	2	–	–	–
42	STRAPS, PIPE, GALV, 2" & 2 – 10 D NAILS, GALV (I)	AS REQ'D	–	697856	–
		AS REQ'D	–	491392	–
43	BRACKET, SERVICE INSULATOR	1	–	166128	–
44	WIRE, COPPER, #8, 600 VOLT, DUPLEX (B)	AS REQ'D	–	196432	DX8C
45	POTENTIAL TRANSFORMER, 12000/120 VOLTS (B)	1	–	762722	SRPT
46	BOLT, MACH, GALV, 3/8" X 1–1/2", AND 1 LOCK WASHER (B)	2	–	154144	–
47	CONDUIT, 3/4", FLEXABLE STEEL (B)	6'	–	250112	–
48	WIRE, THHN, #12, WHITE (B)	40'	–	808704	THW12W
	WIRE, THHN, #12, BLACK (B)	40'	–	808096	THW12
49	CONTROLLER, RECLOSER, COOPER, MODEL KME5 (I)	1	–	273930	C/RSTR
50	SCREW, LAG, GALV, 1/2" X 4"	2	–	621568	–
51	PADLOCK, SCHLAGE ELECTRIC SERIES	1	–	514848	(E)
52	CONDUIT, PVC, TYPE 2, SCHEDULE 80, 3/4" X 10'	3	–	251520	(E)
53	STRAPS, PIPE, GALV, 3/4" & 2 – 6D NAILS, GALV	AS REQ'D	–	697888	–
		AS REQ'D	–	491552	–
54	COVER, PVC, DRIPLOOP, 3/4"	1	–	287248	(E)
55	COUPLING, PVC, 3/4"	2	–	280416	(E)
56	TERMINAL, ADAPTOR, PVC, 3/4"	1	–	102754	(E)
57	ELBOW, 90°, PULLING, PVC, 3/4"	2	–	–	–
58	NIPPLE, PIPE SCREW, GALV, 3/4" X 1"	1	–	–	–
59	UNIT, GROUND, COMPLETE	1	–	603136	(E)

FOR FIELD MAINTENANCE ONLY

TABLE OF CONTENTS

DATE 1–1–2000 APPD PSA/VCL	SDG&E ELECTRIC STANDARDS BUCK POSITION SERVICE RESTORER HOOKSTICK SWITCH DISCONNECT LOADBREAK GANG SWITCH BY–PASS	1299.710 SUPERSEDES 1271.4 (1–1–2000)

INSTALLATION:

Ⓐ CONNECT GROUND LEAD TO RECLOSER MOUNTING FRAME. CONNECT LIGHTNING ARRESTER GROUND LEADS AND GROUND CONNECTOR ON HEAD TO RECLOSER MOUNTING FRAME.

Ⓑ RECLOSER CONTROL REQUIRES 120 VOLT SUPPLY, PREFERABLY COMING FROM THE SOURCE SIDE. IF IMPRACTICAL, POWER MAY ORIGINATE FROM THE LOAD SIDE.

NOTE: IF SECONDARY POWER SOURCE NOT AVAILABLE, OR WOULD BE DIFFICULT TO INSTALL, POWER MAY BE SUPPLIED BY MOUNTING POTENTIAL TRANSFORMER ON SERVICE RESTORER FRAME.

Ⓒ DO NOT CUT GAINS IN THE POLE WHEN INSTALLING THE HORIZONTALLY MOUNTED SECTIONALIZING SWITCH ARMS. THE GAIN HARDWARE USED HERE MAKE CUT GAINS UNNECESSARY.

Ⓓ USE THE FOLLOWING THRU-BOLT DRILLING DIMENSIONS: A.B. CHANCE=13-1/4", S&C=14".

Ⓔ THESE MATERIAL ITEMS INCLUDED WITH CONTROLLER ASSEMBLY UNIT "C/RSTR".

REFERENCE:

F. DETERMINE MIMIMUM POLE CLASS DUE TO SERVICE RESTORER MOUNTED IN THE BUCK POSITION-SEE STANDARD 347.

Ⓖ POLE STEPPING - SEE STANDARD 363.

Ⓗ GROUNDING METHODS - SEE STANDARD 1002.

Ⓘ CONTROL INSTALLATION TO BE DONE BY SUBSTATION CONSTRUCTION AND MAINTENANCE, AND, IS TO BE INSTALLED 14'-0" FROM GROUND LEVEL TO BOTTOM OF CONTROLLER WHEN LOCATED ON STREET SIDE OF POLE. CONTROLLER LOCATED ON PROPERTY SIDE OF POLE WILL BE MOUNTED NO MORE THAN 9' FROM GROUND LEVEL TO BOTTOM OF CONTROLLER. STANDARD CONTROL CABLE LENGTH IS 35'. HOWEVER, LONGER CABLE LENGTHS ARE AVAILABLE IF REQUIRED. INSTALLER WILL SUPPLY CONDUIT ITEMS 39 THROUGH 42.

Ⓙ REFLECTOR STRIPS ARE REQUIRED ON ALL SECTIONALIZING/TIELINE SWITCHES AND SERVICE RESTORER POLES. (SEE STD. 208.3 ITEM 12)

K. POLE TOP SWITCH INSTALLATION-SEE STANDARD 1230.

TABLE OF CONTENTS

FOR FIELD MAINTENANCE ONLY

1299.711 SUPERSEDES 1271.5 (1-1-98)	SDG&E ELECTRIC STANDARDS BUCK POSITION SERVICE RESTORER HOOKSTICK SWITCH DISCONNECT LOADBREAK GANG SWITCH BY-PASS	DATE 1-1-98 APPD PSA / CMC

MAIN TABLE OF CONTENTS

PAGE	SUBJECT
1399.001-.003	CAPACITOR MARKING INSTRUCTION, DECALS & TAGS
1399.101	CAPACITOR INFORMATION
1399.102-.106	CAPACITOR CONNECTION
1399.107-.109	CAPACITOR INSTALLATION, 4KV WYE, 150-450 KVAR
1399.110-.111	FIXED CAPACITOR INSTALLATION, 4.16KV DELTA, UNGROUNDED RACK
1399.112-.113	SWITCH CAPACITOR INSTALLATION, 4.16KV DELTA - 2 OIL SWITCHES
1399.201-.202	FIXED CAPACITOR INSTALLATION, 4.16KV WYE, 300 KVAR - GROUNDED RACK
1399.203-.204	SWITCHED CAPACITOR INSTALLATION, 4.16KV - WYE - 3 OIL SWITCHES
1399.205-.206	12 & 12.47KV SWITCHED CAPACITOR INSTALLATION, 3 OIL SWITCHES INLINE
1399.207	CAPACITOR INSTALLATIONS, 12KV - WYE - 900 KVAR MAX
1399.208-.210	SWITCHED CAPACITORS - CURRENT SENSOR 12 & 12.47KV
1399.211-.213	FIXED CAPACITOR INSTALLATION, 4KV WYE 4KV WYE GROUNDED RACK
1399.301	CAPACITOR CONTROL MATERIAL AND INSTALLATIONS VOLTAGE WITH TIME BIAS (TYPE 'TB')
1399.302	CAPACITOR CONTROL MATERIAL AND INSTALLATION TYPE 'VAR'
1399.401	STEP VOLTAGE REGULATOR STATION, OPEN DELTA, 12KV
1399.402	STEP VOLTAGE REGULATOR STATION, OPEN DELTA, 12KV
1399.403	STEP VOLTAGE REGULATOR STATION, CLOSED DELTA, 12KV, TWO POLES
1399.404	STEP VOLTAGE REGULATOR STATION, CLOSED DELTA, 12KV, TWO POLES
1399.405	STEP VOLTAGE REGULATOR STATION, CLOSED DELTA, 12KV, TWO POLES
1399.501	STEP VOLTAGE REGULATOR STATION, CLOSED DELTA, 12KV, TWO POLES
1399.502	STEP VOLTAGE REGULATOR STATION, CLOSED DELTA, 12KV, TWO POLES
1399.503	STEP VOLTAGE REGULATOR STATION, CLOSED DELTA, 12KV, TWO POLES
1399.504-.507	FIXED CAPACITOR INSTALLATION, 4KV WYE GROUNDED RACK
1399.508-.510	12 & 12.47 SWITCHED CAPACITOR INSTALLATION 2 OIL SWITCHES IN CAPACITOR NEUTRAL
1399.511-.513	CAPACITOR CONTROL MATERIAL AND INSTALLATION

© 1998 - 2019 San Diego Gas & Electric Company. All rights reserved. Removal of this copyright notice without permission is not permitted under law.

REV	CHANGE	BY	DSGN	APPV	DATE	REV	CHANGE	BY	DSGN	APPV	DATE
C						F					
B	COMPLETELY REVISED	JK	JS	CZH	10/15/2019	E					
A	ORIGINAL ISSUE	JK	JS	CZH	6/13/2019	D					

Indicates Latest Revision | X | Completely Revised | | New Page | | Information Removed

SHEET 1 OF 1

SDG&E ELECTRIC OVERHEAD FIELD MAINTENANCE ONLY STANDARDS

LEGACY OVERHEAD FIELD MAINTENANCE
TABLE OF CONTENTS
CAPACITORS, REGULATORS

OH LEGACY
OHL1301.1

SCOPE: THIS STANDARD DESCRIBES CAPACITOR MARKING AND HANDLING PROCEDURES.

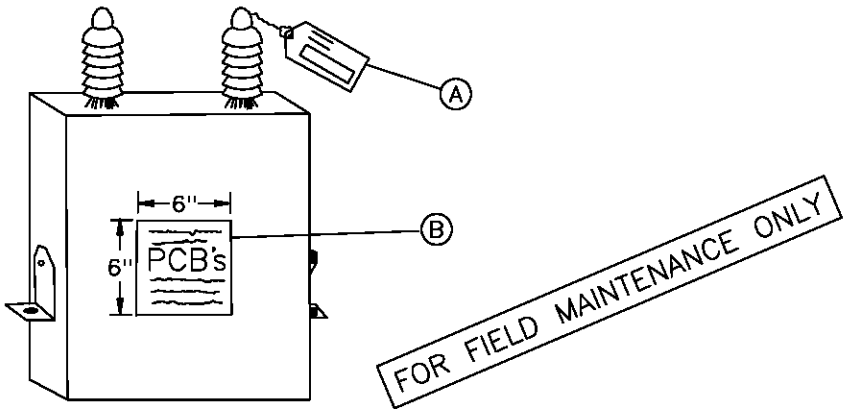

(A) CAPACITOR TAGS

THIS IDENTIFICATION TAG (SDG&E FORM 120-7240, STK. NO. 043450) IS USED FOR TRACKING THE CAPACITOR DURING REMOVAL/RETIREMENT AND INSTALLATION. IT SHALL BE USED ON ALL CAPACITORS, PCB UNITS AND NON-PCB UNITS.

EACH CAPACITOR UNIT IN STOCK WILL BE AFFIXED WITH A CAPACITOR IDENTIFICATION TAG BEFORE IT IS REMOVED FROM STOCK. THIS TAG IS TO BE COMPLETED BY THE FIELD PERSONNEL WHO EITHER REMOVES OR INSTALLS A CAPACITOR UNIT. ONE SIDE OF THIS TAG IS USED FOR REMOVAL AND THE OTHER FOR INSTALLATION.

1. INSTALLATION

   THE DISTRICT STOCKKEEPER SHALL COMPLETE AS MUCH OF THE CAPACITOR TAG(S) AS POSSIBLE ON THE INSTALLATION SIDE OF THE TAG AND ATTACH TO THE SPECIFIC UNIT. WHEN THE INSTALLATION IS COMPLETED, THE CREW FOREMAN SHALL REMOVE THE TAG AND COMPLETE THE REQUESTED INFORMATION.

2. REPLACEMENT

   WHEN A CAPACITOR UNIT IS REPLACING ONE THAT IS BEING REMOVED, THE FOREMAN SHALL FILL OUT BOTH SIDES OF THE TAG.

   IF REMOVAL AND REPLACEMENT IS NOT COMPLETED WITHIN TWO CONSECUTIVE WORKDAYS, TWO FORMS ARE TO BE COMPLETED, ONE FOR A REMOVAL, AND ANOTHER FOR INSTALLATION.

   IF REPLACEMENT IS DUE TO FAILURE OF ONE OR MORE UNITS, AN EQUIPMENT FAILURE REPORT IS REQUIRED.

3. REMOVAL

   WHEN A CAPACITOR UNIT IS REMOVED, THE CREW FOREMAN SHALL COMPLETE THE REMOVAL PORTION ONLY. IF TAGS ARE NOT STORED ON THE TRUCKS, THE DISPATCHER SHALL PROVIDE THE CREW WITH SUFFICENT TAGS FOR EACH CAPACITOR UNIT TO BE REMOVED.

TABLE OF CONTENTS

4. RETIREMENT

WHEN A CAPACITOR UNIT IS RETIRED, THE RETIRED PORTION OF THE CAPACITOR TAG MUST BE FILLED OUT BY THE PERSONNEL RETIRING THE UNIT.

5. DISPOSITION

IT SHALL BE THE DISPATCHER'S RESPONSIBILITY TO SEE THAT THE COMPLETED TAGS ARE SENT TO THE DISTRICT'S RECORDS SECTION, ATTENTION OF THE ENGINEERING CLERK, WITHIN ONE WORKING DAY AFTER THE CAPACITOR UNITS HAVE BEEN INSTALLED OR REMOVED.

Ⓑ DECAL

THIS DECAL (STOCK NO. 301880) IS TO BE PLACED ON ALL CAPACITOR UNITS WHICH CONTAIN PCB'S.

FIELD PERSONNEL AND STOCKKEEPERS SHOULD MAKE EVERY EFFORT TO INSURE THAT ALL PCB UNITS HAVE A DECAL, AND THAT ALL WORN, WEATHERED DECALS BE REPLACED WITH NEW DECALS. THE DECAL IS BLACK PRINT ON EITHER YELLOW OR WHITE BACKGROUND.

1. MARKING

EVERY CAPACITOR IN SERVICE OR IN STORAGE, WHICH USES AN INSULATING FLUID CONTAINING PCB'S, SHALL BE LABELED WITH THE DECAL (STOCK NO. 301880).

EVERY PCB CAPACITOR WHICH IS REMOVED FROM SERVICE AND DOES NOT HAVE THE DECAL (STOCK NO. 301880) SHALL HAVE THE DECAL PUT ON IT AT THE TIME IT IS REMOVED FROM SERVICE. THIS SHALL BE DONE BY THE WORK CREW THAT REMOVES THE UNIT. IF A PCB UNIT ARRIVES AT A STOREYARD WITH NO PCB DECAL, THE STOCKKEEPER SHALL PUT A DECAL ON.

NOTE: ALL CAPACITOR UNITS PURCHASED BEFORE 1977 USED AN INSULATING FLUID WHICH CONTAINED PCB'S. THE UNITS WITH THE PCB FLUIDS CAN BE IDENTIFIED BY THE WORDS "NON-FLAMMABLE LIQUID" ON NAMEPLATE OR BY THE MANUFACTURER'S TRADE NAMES WHICH ARE:

G.E. – PYRANOL
WESTINGHOUSE – INERTEEN
MCGRAW-EDISON – ELEMEX
CORNEL DUBILIER OR FEDERAL PACIFIC – DYKANOL
SANGAMO – DIACHLOR
ALLIS CHALMERS – CHLOREXTOL

FOR FIELD MAINTENANCE ONLY

ALL OF THE CAPACITOR UNITS RECEIVED THAT DO NOT CONTAIN PCB INSULATING FLUIDS HAVE THE WORDS "CONTAINS A NON-PCB INSULATING FLUID" ON THE NAMEPLATE OR ON A BLUE TANK DECAL.

2. HANDLING CAPACITORS CONTAINING POLYCHLORINATED BIPHENYLS (PCB)

CAPACITORS CONTAINING PCB SHALL BE HANDLED AS SPECIFIED IN THE PCB HANDLING AND PERSONAL SAFETY PROCEDURES. (SEE CONSTRUCTION MANAGEMENT STANDARD PRACTICE 107).

3. RETIRING RUPTURED OR DAMAGED UNITS

WHENEVER TRANSPORTATION OR KEARNY MAINTENANCE RETIRES A CAPACITOR AND DISPOSES OF IT, SPECIFIC DATA (I.E. SERIAL NUMBER, PCB OR NON-PCB, MANUFACTURER, SIZE, ETC.) MUST BE RECORDED ON THE CAPACITOR TAG AND SENT TO THE DISTRICT'S RECORDS SECTION, ATTENTION OF THE ENGINEERING CLERK.

TABLE OF CONTENTS

C. PRECAUTIONARY MEASURES – DAMAGED CAPACITOR UNITS

DAMAGED CAPACITOR UNITS WITH BULGED CASES MAY HAVE EXCESSIVE PRESSURE INSIDE. THE UNITS MAY RUPTURE WHEN HANDLED OR BUMPED. SINCE THE INSULATING LIQUID IN THE UNITS IS TOXIC, CARE SHALL BE EXERCISED WHEN WORKING WITH BULGED OR OTHERWISE DAMAGED UNITS. UNITS WITH BULGED OR DAMAGED CASES SHALL NOT BE RE–ENERGIZED.

D. CAPACITOR NAMEPLATES

THE CAPACITOR NAMEPLATE AND UNIT SHALL REMAIN INTACT. UNDER NO CIRCUMSTANCES SHALL THE NAMEPLATE BE REMOVED FROM THE CAPACITOR UNIT.

F. SERIES STREET LIGHTING TRANSFORMERS

THE TROUBLEMAN AND/OR CREW SHALL CHECK THE NAMEPLATE OF ANY RUPTURED 2400 VOLT, CONSTANT CURRENT STREET LIGHTING TRANSFORMER TO DETERMINE IF IT CONTAINS AN INTERNAL CAPACITOR. IF NO CAPACITOR IS SHOWN ON THE NAMEPLATE, THE TRANSFORMER IS TO BE TREATED AS ANY OTHER TRANSFORMER ON THE SYSTEM, NO SPECIAL HANDLING OR DISPOSAL IS REQUIRED. IF IT DOES, IT SHALL BE TREATED AS ANY PCB CONTAINING DEVICE UNTIL IT REACHES KEARNY MAINTENANCE. (SEE CONSTRUCTION MANAGEMENT STANDARD PRACTICE 107).

KEARNY SHALL REMOVE THE INTERNAL CAPACITOR IMMEDIATELY AND CHECK TO SEE IF IT HAS LEAKED. IF IT HAS NOT LEAKED, THE CAPACITOR SHALL BE DISPOSED OF IN ACCORDANCE WITH THE EPA REGULATIONS. THE TRANSFORMER MAY THEN RE–ENTER THE SYSTEM AS AN RO UNIT OR BE SCRAPPED.

IF PCB CONTAMINATION OF THE TRANSFORMER OIL IS SUSPECTED, KEARNY MAINTENANCE SHALL HAVE THE BEST LAB VERIFY THE LEVEL OF CONTAMINATION. IF IT IS 500PPM OR GREATER, THE OIL AND THE TRANSFORMER SHALL BE DISPOSED OF ACCORDING TO EPA REGULATIONS.

FOR FIELD MAINTENANCE ONLY

TABLE OF CONTENTS

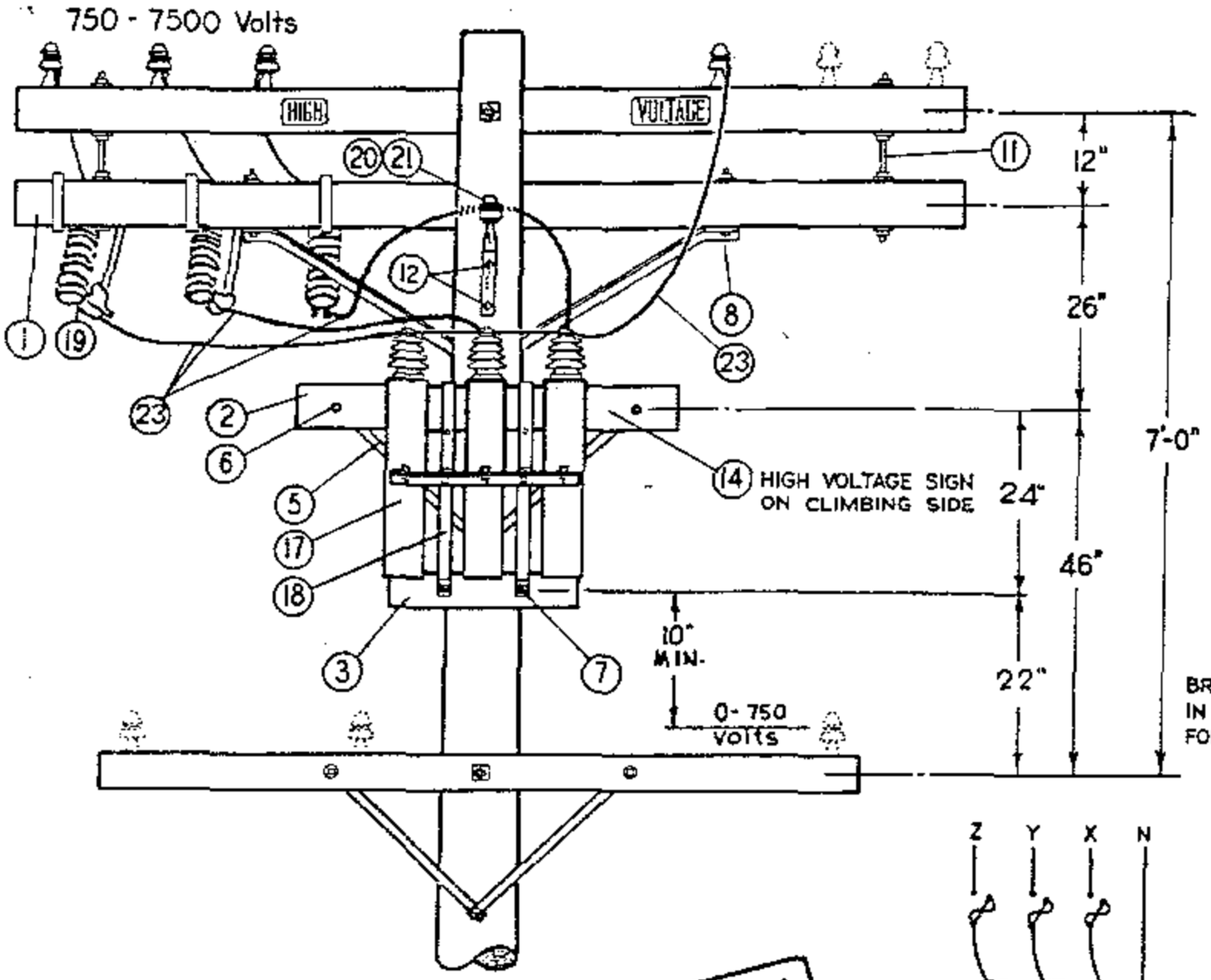

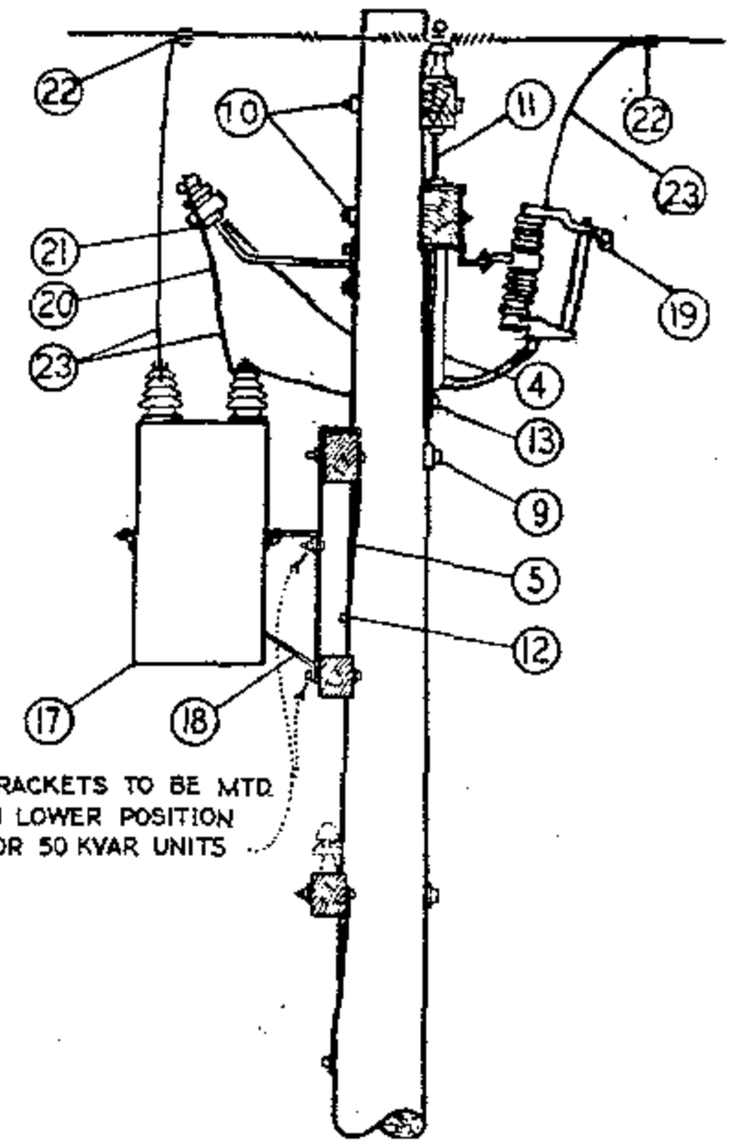

DIAGRAM OF 4 KV. WYE CONNECTIONS
150 KVAR (3-50 KVAR UNITS)
75 KVAR (3-25 KVAR UNITS)
45 KVAR (3-15 KVAR UNITS)

FOR FIELD MAINTENANCE ONLY

INSTALLATION:

A. CAPACITOR RACK TO BE MOUNTED ON OPPOSITE SIDE OF LINE AND CUTOUT ARMS.
(B) NO LONGER PURCHASED.
C. FOR POLE STEPPING REFER TO STD. 363.
(E) EXEMPT MATERIAL.

	ITEM	DESCRIPTION	QUANTITY	STOCK NO. OR CONSTR. STD.
P T & F	1	CROSSARM, 3 3/4" X 5 3/4" X 10' - 0"	1	PG 380.01 IT.2
	2	CROSSARM, 3 3/4" X 5 3/4" X 4' - 0"	1	PG 380.05 IT.3
	3	CROSSARM, 3 1/2" X 4 1/2" X 2' - 0"	1	PG 380.05 IT.1
	4	BRACE, ANGLE CROSSARM, 5' - 0"	1	164128
	5	BRACE, FLAT CROSSARM, 28"	2	164192
	6	BOLT, MACH., GALV., 3/8" X 4 1/2", 1 RD. WASH. & 1 NUT	2	STD 139, 140 (E)
	7	BOLT, MACH., GALV., 1/2" X 5", 1 RD. WASH. & 1 NUT	2	STD 139, 140 (E)
	8	BOLT, MACH., GALV., 1/2" X 7", 1 RD. WASH. & 1 NUT	2	STD 139, 140 (E)
	9	BOLT, MACH., GALV., 5/8" X (AS REQ'D) 3 SQ. WASH, 1 FLAT, 1 CURV & 1 NUT	1	STD 139, 140 (E)
	10	BOLT, MACH., GALV., 5/8" X (AS REQ'D) 2-2 1/4" SQ WASH & 1 NUT	2	STD 139, 140 (E)
	11	BOLT, SPACE, GALV., 5/8" X 22", 4 SQ. WASH. & 4 NUTS	2	STD 139, 140 (E)
	12	LAG SCREW, GALV., 1/2" X 4"	3	621568 (E)
	13	LAG SCREW, GALV., 5/8" X 5"	1	621600 (E)
	14	SIGN, HIGH VOLTAGE & 8 ROOFING NAILS	1	647648-492224 (E)
	15			
	16			
L T I	17	CAPACITOR UNIT (2.4KV, 50 KVAR ILLUSTRATED) (B)	3	207200
	18	RACK, CAPACITOR	1	402624
	19	CUTOUT, 12KV, 100A, HEAVY DUTY, WITH LOADBUSTER HOOKS	3	297688
	20	BRACKET, INSULATOR 1" LEAD THREAD	1	166134
	21	INSULATOR, PIN TYPE, CLASS AS REQUIRED	1	PG 750.3
	22	CONNECTOR, COMPRESSION	4	PGS 786, 783 (E)
	23	WIRE, BARE STRANDED, #6	30'	813536

1399.101
SUPERSEDES
1315 (1-1-87)

SDG&E ELECTRIC STANDARDS

CAPACITOR INSTALLATION 4KV-WYE-150 KVAR MAXIMUM

DATE 1-1-87
APPD AK/RDS

SCOPE: THIS STANDARD LISTS THE INFORMATION NEEDED TO DETERMINE PROPER CAPACITOR APPLICATIONS.

PREFIX	PHASE	VOLTAGE	DESCRIPTION		KVAR	STOCK NUMBER	ASSEMBLY UNITS
C	1	2400/4160Y	CAPACITOR UNITS		100	(A) 207330	–
CT	3	2400/4160Y	FIXED CAPACITOR RACK CONSISTING OF 3 100KVAR 1Ø UNITS, 4 WIRE CONNECTED WYE.		300	564772	CT3F
			SWITCHED CAPACITOR RACK CONSISTING OF 3–100KVAR 1Ø UNITS AND 3 OIL SWITCHES WITH 2.4KV POTENTIAL TRANSFORMER.		300	564773	CT3S
CTD	3	4160 △	SWITCHED CAPACITOR RACK CONSISTING OF 3–200 KVAR, 7200V UNITS DELTA CONNECTED AND A POTENTIAL TRANSFORMER RATED AT 2400–120V FOR USE ON 4KV SYSTEM.	2 – OIL SWITCHES	(B) 200	564758	CTD2S
			FIXED CAPACITOR RACK CONSISTING OF 3–200 KVAR, 7200V UNITS DELTA CONNECTED FOR USE ON 4KV SYSTEM.		(B) 200	564759	CTD2F
YC	1	7200/12470Y	CAPACITOR UNITS		150	(A) 207344	YC150
HC	3	7200/12470Y	CAPACITOR UNITS		300	(A) 207336	–
HCT	3	2400/4160Y	FIXED CAPACITOR RACK CONSISTING OF 3–400 KVAR, 7200V UNITS WYE CONNECTED FOR USE ON 4KV SYSTEM.		130	564776	HCT1F
	3	7200/12470Y	SWITCHED CAPACITOR RACK CONSISTING OF 6–150KVAR 1Ø UNITS WITH 7.2KV POTENTIAL TRANSFORMER	3 – OIL SWITCHES	900	(A)564706	–
			SWITCHED CAPACITOR RACK CONSISTING OF 6–150KVAR 1Ø UNITS WITH 12KV POTENTIAL TRANSFORMER	2 – OIL SWITCHES	900	(A)564708	–
			SWITCHED CAPACITOR RACK CONSISTING OF 6–150KVAR 1Ø UNITS WITH 12KV POTENTIAL TRANSFORMER	3 – OIL SWITCHES	900	(A)564704	–
			FIXED CAPACITOR RACK CONSISTING OF 6–150 KVAR 1Ø UNITS		900	(A)564680	900F
			SWITCHED CAPACITOR RACK CONSISTING OF 9–150KVAR 1Ø UNITS WITH 7.2KV POTENTIAL TRANSFORMER	3 – OIL SWITCHES	1350	(A)564754	–
			SWITCHED CAPACITOR RACK CONSISTING OF 9–150KVAR 1Ø UNITS WITH 12KV POTENTIAL TRANSFORMER	2 – OIL SWITCHES	1350	(A)564756	–
				3 – OIL SWITCHES	1350	(A)564752	–
			FIXED CAPACITOR RACK CONSISTING OF 9–150KVAR 1Ø UNITS		1350	(A)564744	1350F

FOR FIELD MAINTENANCE ONLY

INSTALLATION:

(A) NO LONGER PURCHASED.

(B) THE KVAR RATING OF 7200 VOLT CAPACITORS IS REDUCED BY A FACTOR OF THREE WHEN WIRED IN DELTA AND CONNECTED TO THE 4160 VOLT SYSTEM.

TABLE OF CONTENTS

SCOPE: THIS STANDARD LISTS THE INFORMATION NEEDED TO DETERMINE PROPER CAPACITOR APPLICATIONS.

PREFIX	PHASE	VOLTAGE	DESCRIPTION	KVAR	STOCK NUMBER	ASSEMBLY UNITS
YC	1	7200/12470Y	CAPACITOR UNITS	200	207350	YC200
				400	207348	–
HCT	3	2400/4160Y	FIXED CAPACITOR RACK CONSISTING OF 3–400 KVAR, 7200V UNITS WYE CONNECTED FOR USE ON 4KV SYSTEM.	130	564776	HCT1F
	3	2400/4160Y	FIXED CAPACITOR RACK CONSISTING OF 3–200 KVAR, 7200V UNITS WYE CONNECTED FOR USE ON 4KV SYSTEM.	65	564759	HCT6F
	3	7200/12470Y	SWITCHED CAPACITOR RACK CONSISTING OF 3–200 KVAR SINGLE–PHASE UNITS WITH 12KV POTENTIAL TRANSFORMER	600	564761	600S
	3	7200/12470Y	FIXED CAPACITOR RACK CONSISTING OF 3–200 KVAR SINGLE–PHASE UNITS.	600	564763	600F
	3	7200/12470Y	SWITCHED CAPACITOR RACK CONSISTING OF 3–400KVAR SINGLE–PHASE UNITS WITH 12KV POTENTIAL TRANSFORMER — 2 – OIL SWITCHES	1200	564770	1200S
			FIXED CAPACITOR RACK CONSISTING OF 3–400 KVAR SINGLE–PHASE UNITS	1200	564764	1200F

FOR FIELD MAINTENANCE ONLY

TABLE OF CONTENTS

750 - 7500 Volts

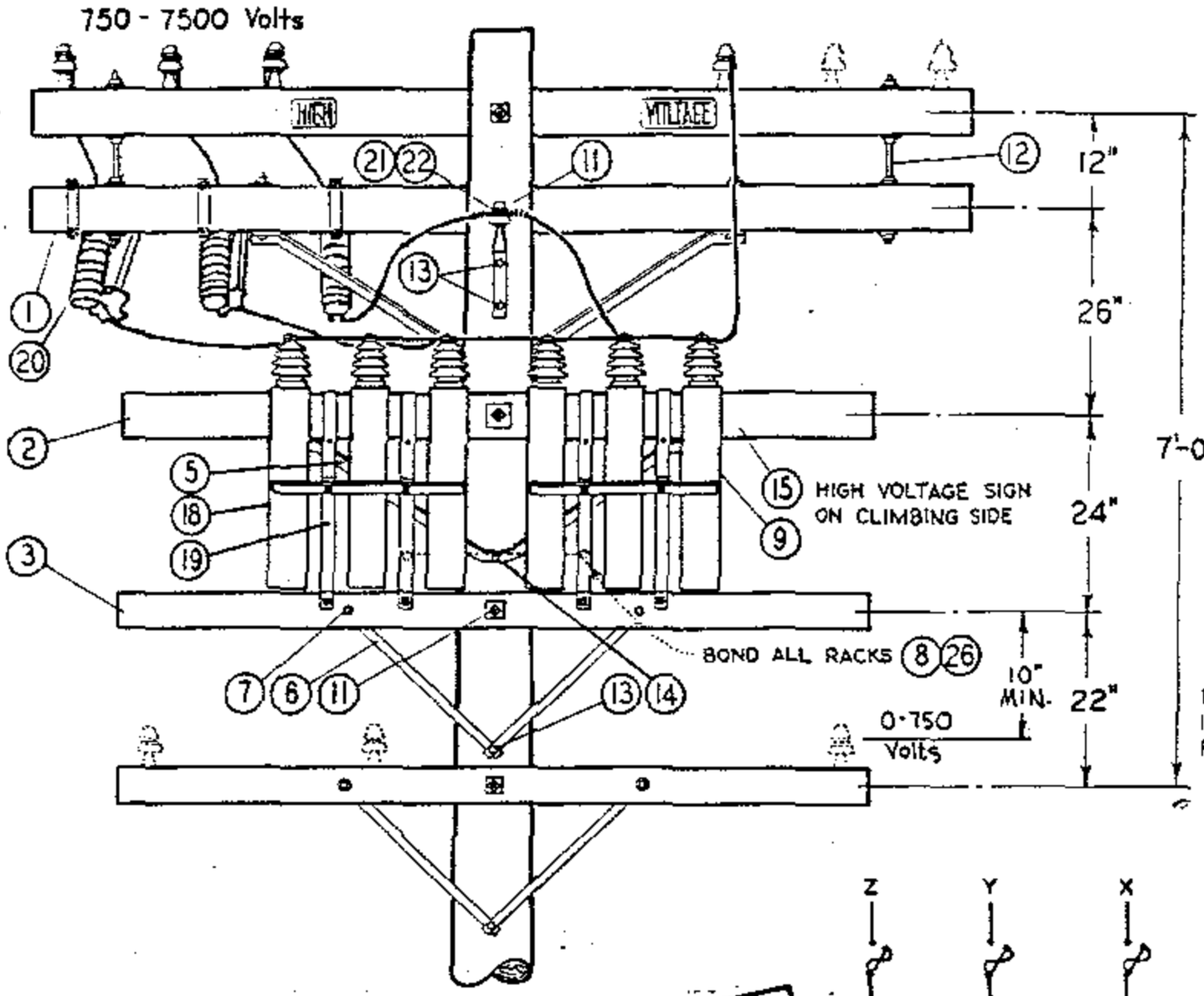

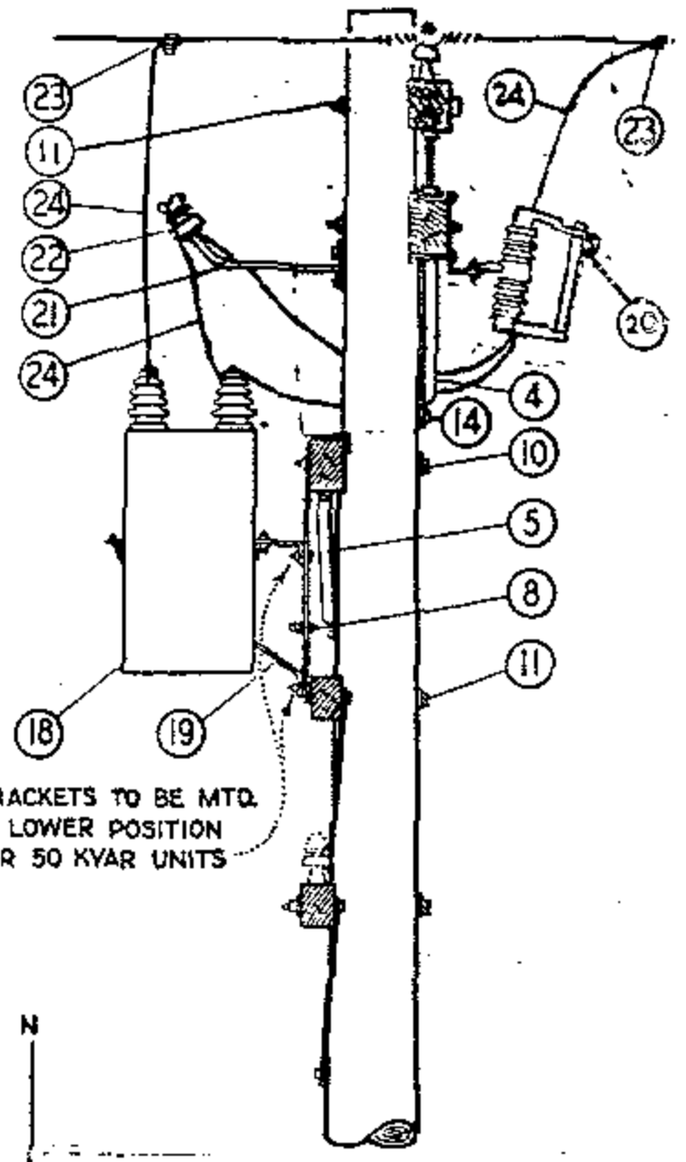

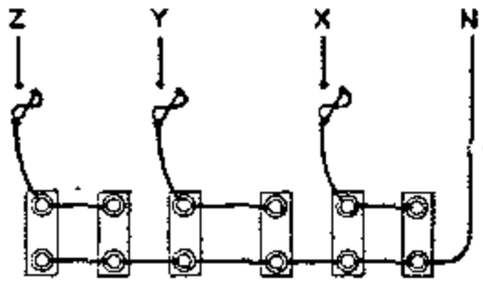

DIAGRAM OF 4 KV. WYE CONNECTIONS
300 KVAR (6-50 KVAR UNITS)
150 KVAR (6-25 KVAR UNITS)
90 KVAR (6-15 KVAR UNITS)

FOR FIELD MAINTENANCE ONLY

INSTALLATION:

A. CAPACITOR RACKS TO BE MOUNTED ON OPPOSITE SIDE OF LINE AND CUTOUT ARMS.
(B) NO LONGER PURCHASED.
C. FOR POLE STEPPING REFER TO STD. 363.
(E) EXEMPT MATERIAL.

ITEM		DESCRIPTION	QUANTITY	STOCK NO. OR CONSTR. STD.
P T & F	1	CROSSARM, 3 3/4" X 5 3/4" X 10' -0"	1	PG. 380.01
	2	CROSSARM, 3 3/4" X 5 3/4" X 8' - 0"	1	PG. 380.05
	3	CROSSARM, 3 1/2 X 4 1/2 X 8 - 0	1	PG. 380.05
	4	BRACE, ANGLE CROSSARM, 5' - 0"	1	164128
	5	BRACE, ANGLE CROSSARM, 4' - 0"	1	164032
	6	BRACE, FLAT CROSSARM, 28"	2	164192
	7	BOLT, MACH., GALV., 3/8" X 4 1/2", 1 RD. WASH. & 1 NUT	2	STD 139, 140(E)
	8	BOLT, MACH., GALV., 1/2" X 1 1/2", 2 RD. WASH. & 1 NUT	2	STD 139, 140(E)
	9	BOLT, MACH., GALV., 1/2" X 7", 1 RD. WASH. & 1 NUT	4	STD 139, 140(E)
	10	BOLT, MACH., GALV., 5/8" X (AS REQ'D) 3 SQ. WASH., 1 FLAT, 1 CURV. & 1 NUT	1	STD 139, 140(E)
	11	BOLT, MACH., GALV., 5/8" X (AS REQ'D) 2-2 1/4 SQ. WASH. & 1 NUT	2	STD 139, 140(E)
	12	BOLT, SPACE, GALV., 5/8" X 22", 4 SQ. WASH. & 4 NUTS	2	STD 139, 140(E)
	13	LAG SCREW, GALV., 1/2" X 4"	3	621568 (E)
	14	LAG SCREW, GALV., 5/8" X 5"	2	621600 (E)
	15	SIGN, HIGH VOLTAGE & ROOFING NAILS	1	647648-492224(E)
	16			
	17			
L T I	18	CAPACITOR UNIT (2.4KV, 50 KVAR ILLUSTRATED) (B)	6	207200
	19	RACK, CAPACITOR (B)	2	402620
	20	CUTOUT, 12KV 100A, HEAVY DUTY, WITH LOADBUSTER HOOKS	3	297888
	21	BRACKET, INSULATOR 1" LEAD THREAD	1	166134
	22	INSULATOR, PIN TYPE, CLASS AS REQUIRED	1	PG. 750.3
	23	CONNECTOR, COMPRESSION	4	STD 786, 783(E)
	24	WIRE, #6 BARE STRANDED COPPER	30'	813536
	25			
	26	WIRE, BARE SOLID ANNEALED COPPER #8	2'-6"	812928
	27			

DATE 1-1-87
APPD AK/RDS

SDG&E ELECTRIC STANDARDS

CAPACITOR INSTALLATION 4KV - WYE - 300 KVAR MAXIMUM

1399.102
SUPERSEDES
1316 (1-1-87)

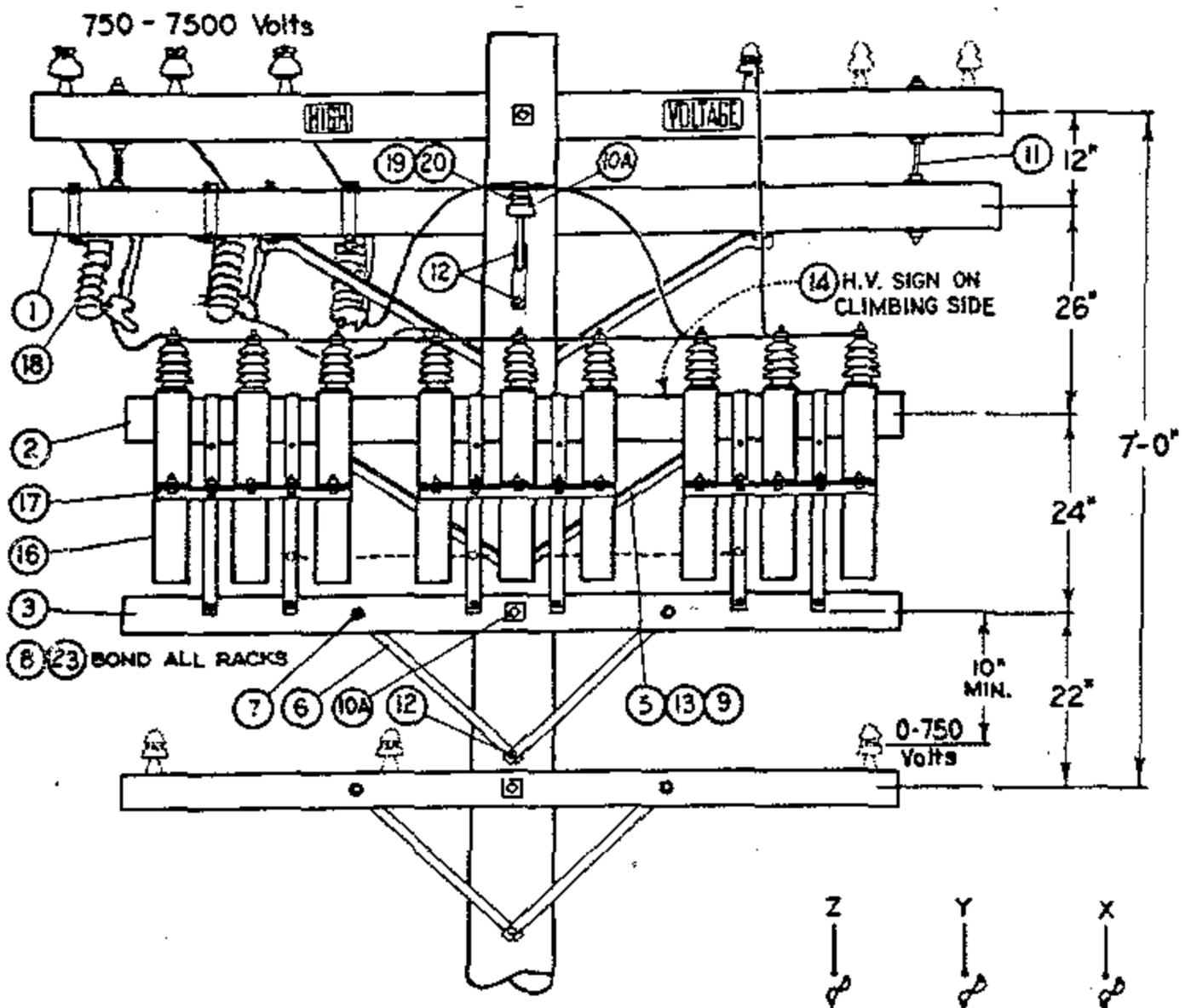

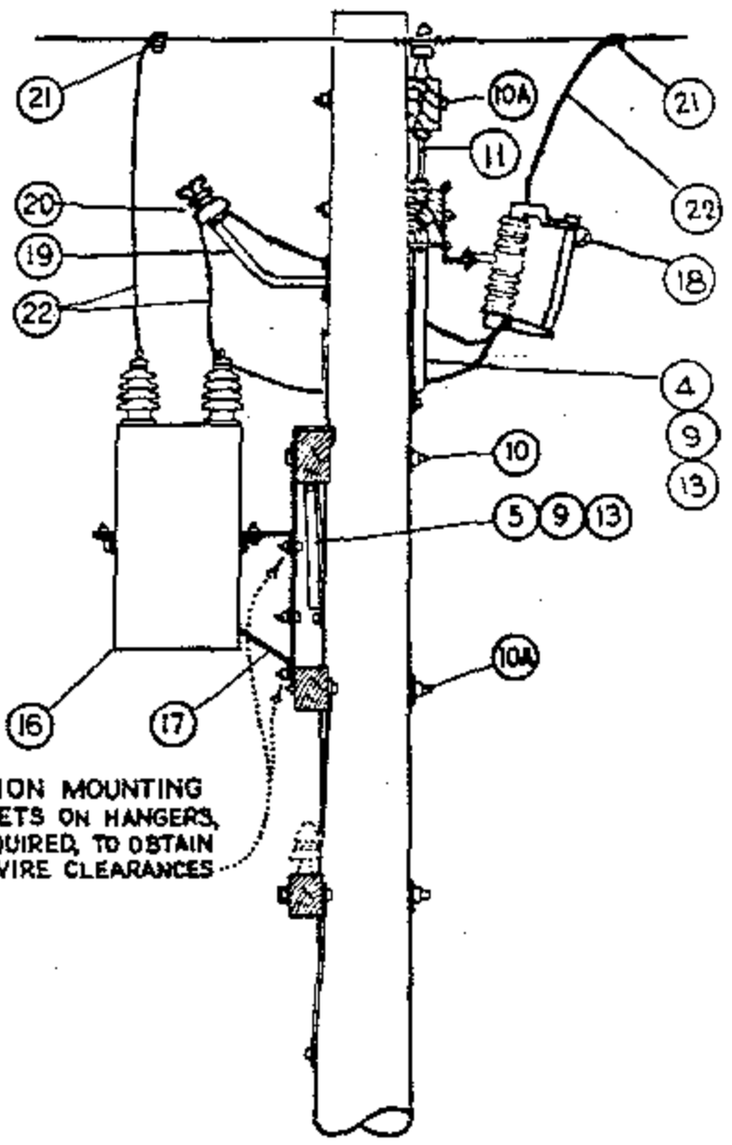

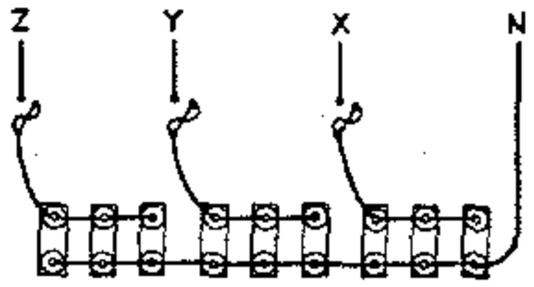

DIAGRAM OF 4 KV. WYE CONNECTIONS
450 KVAR (9-50 KVAR UNITS)
225 KVAR (9-25 KVAR UNITS)
135 KVAR (9-15 KVAR UNITS)

FOR FIELD MAINTENANCE ONLY

INSTALLATION:

A. CAPACITOR RACKS TO BE MOUNTED ON OPPOSITE SIDE OF LINE AND CUTOUT ARMS.
(B) NO LONGER PURCHASED.
C. FOR POLE STEPPING REFER TO STD. 363.
(E) EXEMPT MATERIAL.

	ITEM	DESCRIPTION	QUANTITY	STOCK NO. OR CONSTR. STD.
P T & F	1	CROSSARM, 3 3/4" X 5 3/4" X 10' - 0"	1	380.01
	2	CROSSARM, 3 3/4" X 5 3/4" X 8' - 0"	1	380.05
	3	CROSSARM, 3 1/2" X 4 1/2" X 8' - 0"	1	380.05
	4	BRACE, ANGLE CROSSARM, 5' - 0"	1	164128
	5	BRACE, ANGLE CROSSARM, 4' - 0"	1	164032
	6	BRACE, FLAT CROSSARM, 28"	2	164192
	7	BOLT, MACH., GALV., 3/8" X 4 1/2", 1 RD. WASH. & 1 NUT	2	STD 139, 140(E)
	8	BOLT, MACH., GALV., 1/2" X 1 1/2", 2 RD. WASH. & 1 NUT	3	STD 139, 140(E)
	9	BOLT, MACH., GALV., 1/2" X 7", 1 RD. WASH. & 1 NUT	4	STD 139, 140(E)
	10	BOLT, MACH., GALV., 5/8" X (AS REQ'D) 3" SQ. WASH., 1 FLAT, 1 CURV., & 1 NUT	1	STD 139, 140(E)
	10A	BOLT, MACH., GALV., 5/8" X (AS REQ'D) 2-2 1/4" SQ. WASH. & 1 NUT	2	STD 139, 140(E)
	11	BOLT, SPACE, GALV., 5/8" X 22", 4 SQ. WASH. & 4 NUTS	2	STD 139, 140(E)
	12	LAG SCREW, GALV. 1/2" X 4"	3	621568 (E)
	13	LAG SCREW, GALV. 5/8" X 5"	2	621600 (E)
	14	SIGN, HIGH VOLTAGE, & ROOFING NAILS (E)	1	647648-492224
	15			
L T I	16	CAPACITOR UNIT, 2.4KV, (50 KVAR UNITS ILLUSTRATED) (B)	9	207200
	17	RACK, CAPACITOR	3	402624
	18	CUTOUT 12KV, 100A, HEAVY DUTY, WITH LOADBUSTER HOOKS	3	297888
	19	BRACKET, INSULATOR 1" LEAD THREAD	1	166134
	20	INSULATOR, PIN TYPE, CLASS AS REQUIRED	1	750.3
	21	CONNECTOR, COMPRESSION	4	PGS 786, 783(E)
	22	WIRE, #6 BARE STRANDED COPPER	30'	813536
	23	WIRE, BARE SOLID ANNEALED COPPER #8	6'	812928
	24			
	25			
	26			

1399.103
SUPERSEDES
1317 (1-1-87)

SDG&E ELECTRIC STANDARDS

CAPACITOR INSTALLATION 4KV - WYE - 450 KVAR MAXIMUM

DATE 1-1-87
APPD AK/DSG

TABLE OF CONTENTS

TABLE OF CONTENTS

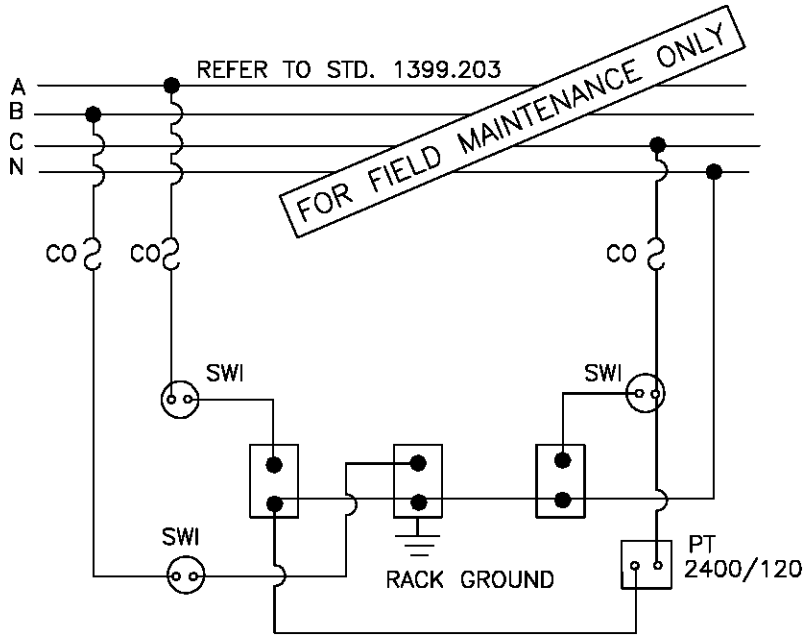

DIAGRAM OF 4KV WYE CONNECTED
SWITCHED 300KVAR (3–100KVAR UNITS)

NOTE:

– DO NOT GROUND THE CAPACITOR NEUTRAL BUS. IT IS ALREADY GROUNDED THROUGH THE 4KV NEUTRAL SYSTEM.

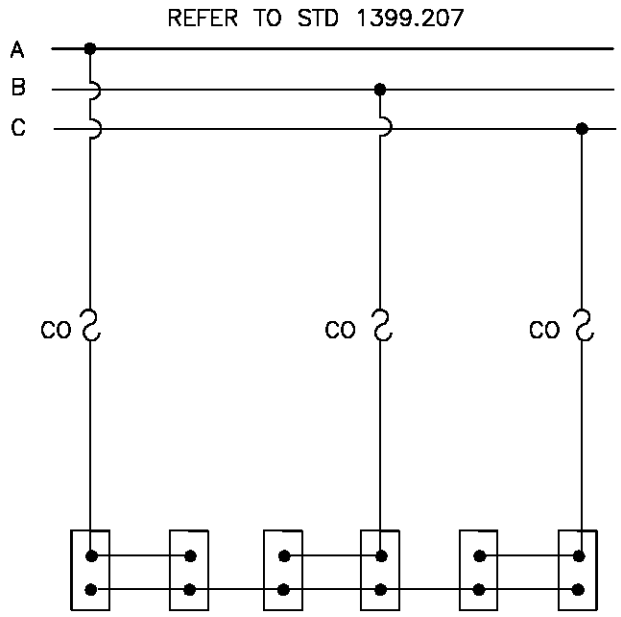

SCHEMATIC DIAGRAM

600 KVAR (6–100 KVAR UNITS)
300 KVAR (6–50 KVAR UNITS)
150 KVAR (6–25 KVAR UNITS)

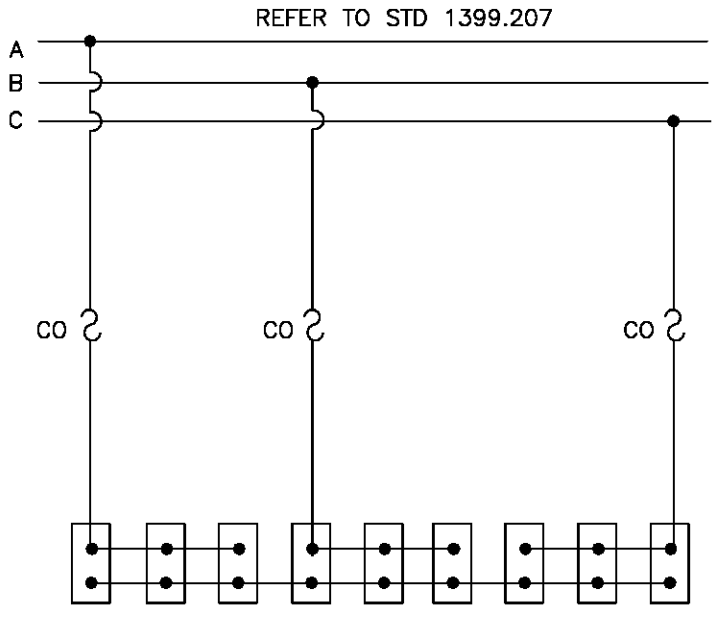

SCHEMATIC DIAGRAM

900 KVAR (9–100 KVAR UNITS)
450 KVAR (9–50 KVAR UNITS)
225 KVAR (9–25 KVAR UNITS)

DATE 12–1–98 APPD PA 12/98	SDG&E ELECTRIC STANDARDS CAPACITOR CONNECTION 4KV WYE	1399.104 SUPERSEDES 1314.3 (12–1–98)

TABLE OF CONTENTS

REFER TO STD 1399.207

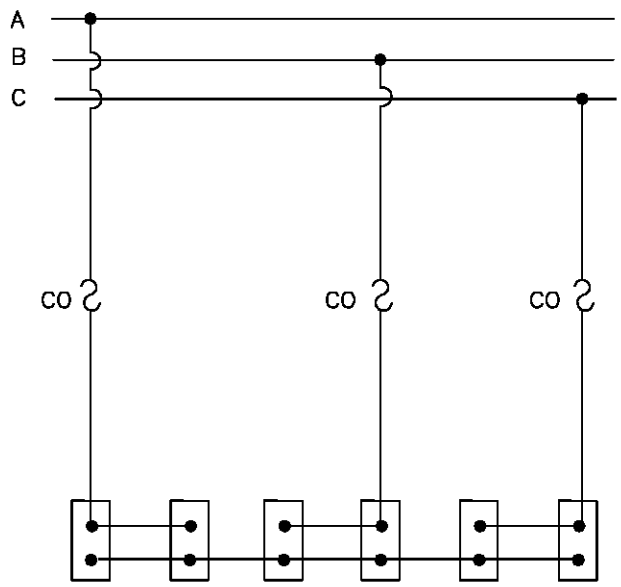

SCHEMATIC DIAGRAM

600 KVAR (6–100 KVAR UNITS)
300 KVAR (6–50 KVAR UNITS)
150 KVAR (6–25 KVAR UNITS)

FOR FIELD MAINTENANCE ONLY

REFER TO STD 1399.207

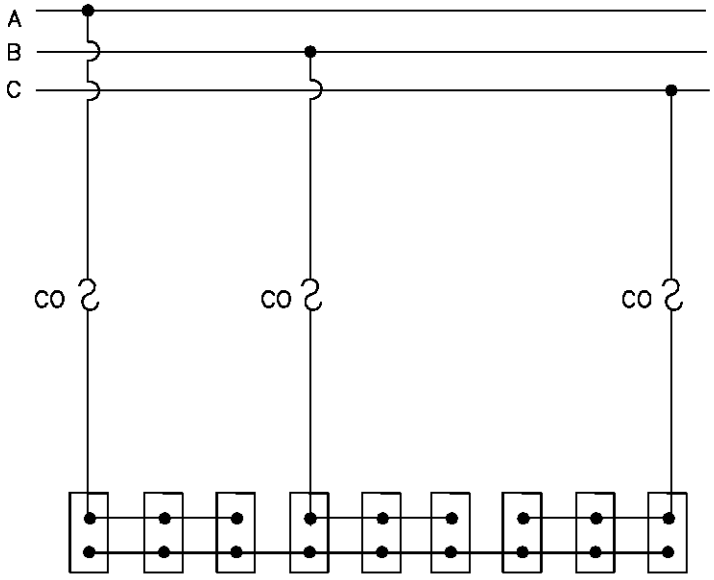

SCHEMATIC DIAGRAM

900 KVAR (9–100 KVAR UNITS)
450 KVAR (9–50 KVAR UNITS)
225 KVAR (9–25 KVAR UNITS)

NOTE:

–SEE STD. 1309 FOR CAPACITOR FUSING.

1399.105 SUPERSEDES 1314.4 (12–1–98)	SDG&E ELECTRIC STANDARDS CAPACITOR CONNECTION 12KV–WYE (FIXED)	DATE 12–1–98 APPD PEA / [illegible]

TABLE OF CONTENTS

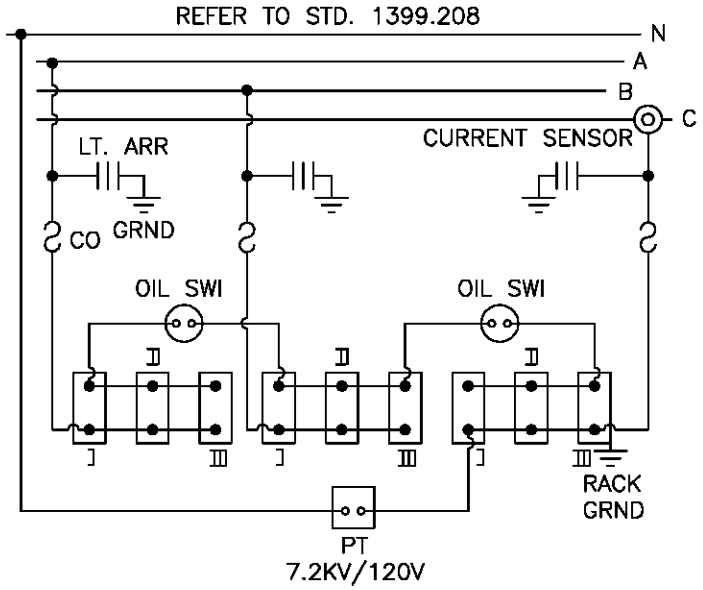

SCHEMATIC DIAGRAM

1350 KVAR (9–150 KVAR UNITS) I, II, III
1200 KVAR (6–200 KVAR UNITS) I & III
900 KVAR (6–150 KVAR UNITS) I & III
600 KVAR (3–200 KVAR UNITS) II

FOR FIELD MAINTENANCE ONLY

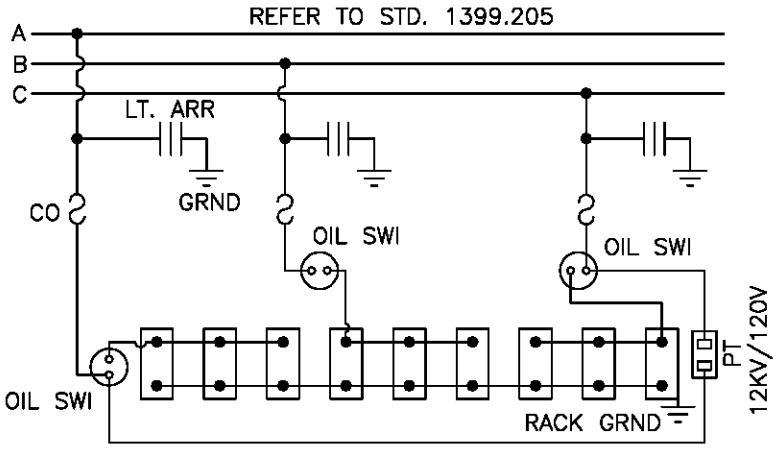

SCHEMATIC DIAGRAM
1350 KVAR (9–150 KVAR UNITS)
WITH 3 OIL SWITCHES

NOTE:

–SEE STD. 1309 FOR CAPACITOR FUSING.

DATE 12–1–98 APPD PA / RDG	SDG&E ELECTRIC STANDARDS CAPACITOR CONNECTION 12 & 12.47KV–WYE (SWITCHED)	1399.106 SUPERSEDES 1314.5 (12–1–98)

750 - 7500 Volts

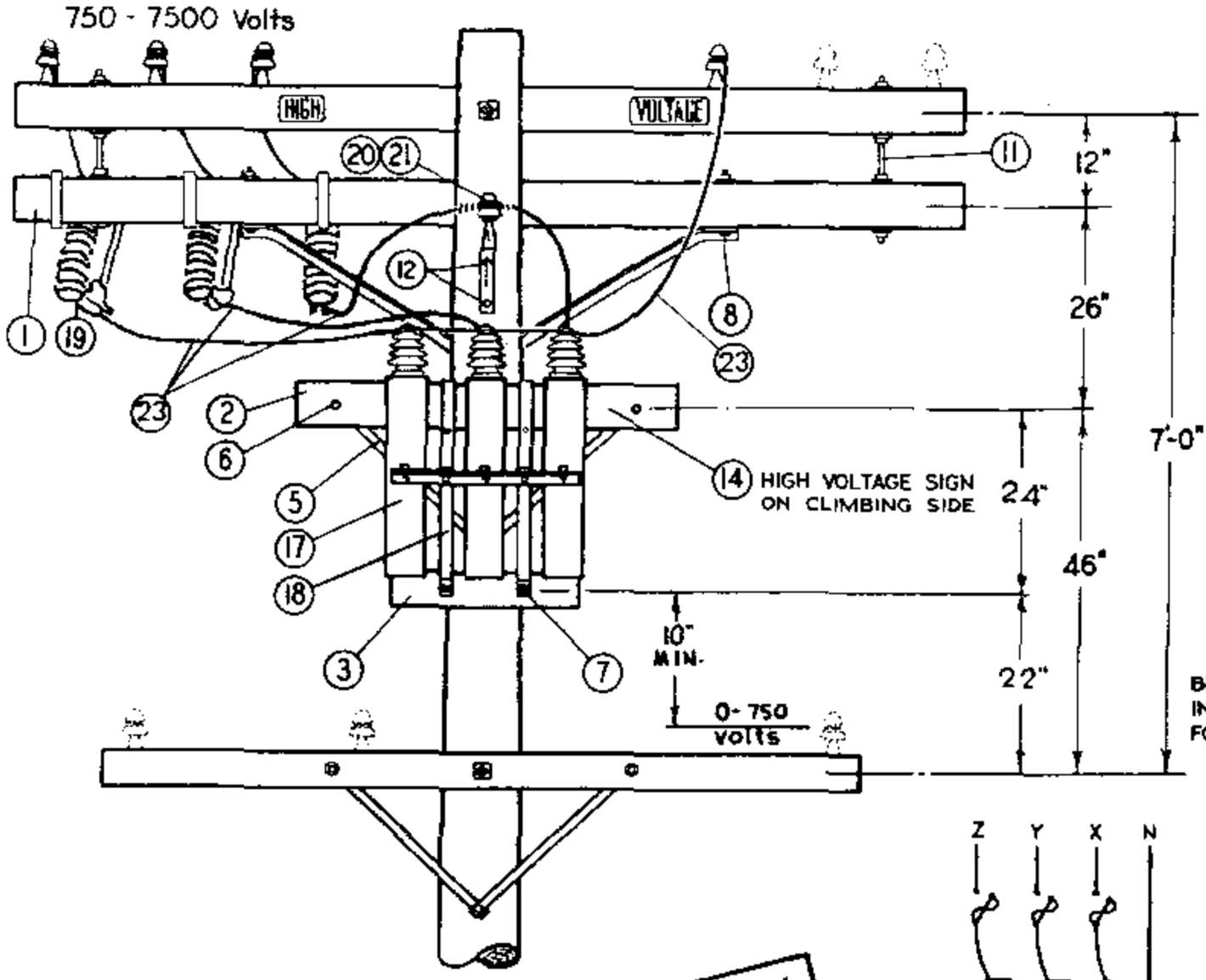

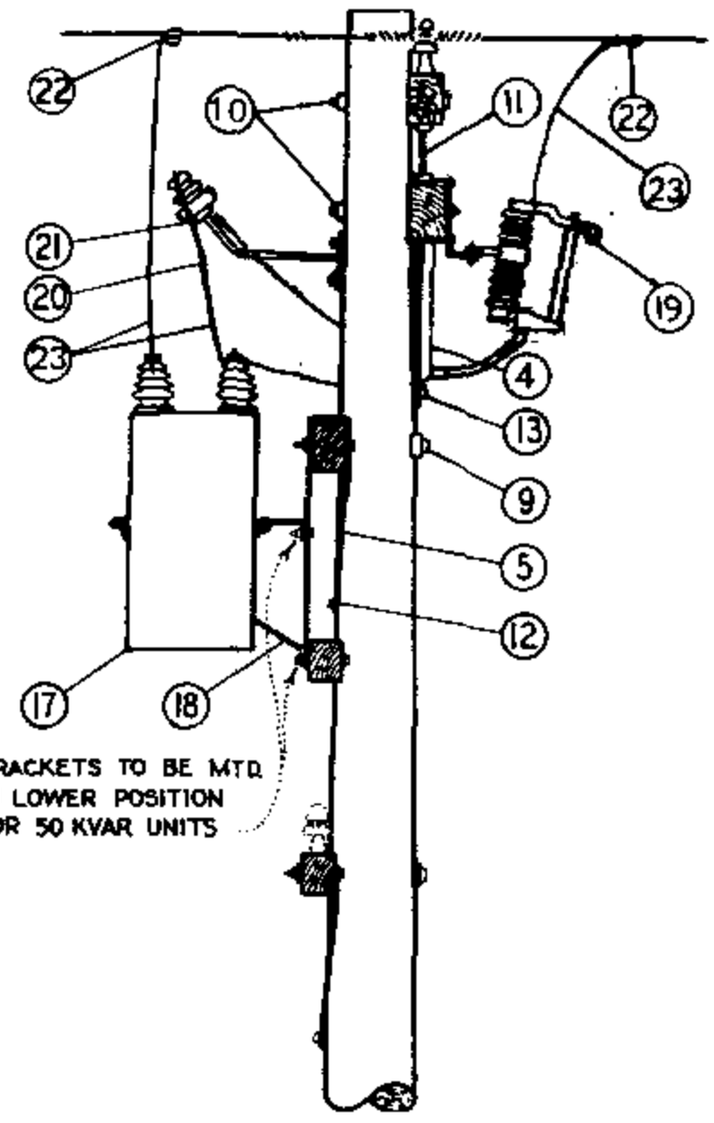

DIAGRAM OF 4 KV. WYE CONNECTIONS
150 KVAR (3-50 KVAR UNITS)
75 KVAR (3-25 KVAR UNITS)
45 KVAR (3-15 KVAR UNITS)

FOR FIELD MAINTENANCE ONLY

INSTALLATION:

A. CAPACITOR RACK TO BE MOUNTED ON OPPOSITE SIDE OF LINE AND CUTOUT ARMS.
(B) NO LONGER PURCHASED.
C. FOR POLE STEPPING REFER TO STD. 363.
(E) EXEMPT MATERIAL.

TABLE OF CONTENTS

	ITEM	DESCRIPTION	QUANTITY	STOCK NO. OR CONSTR. STD.
P T & F	1	CROSSARM, 3 3/4" X 5 3/4" X 10' - 0"	1	PG 380.01 IT. 2
	2	CROSSARM, 3 3/4" X 5 3/4" X 4' - 0"	1	PG 380.05 IT. 3
	3	CROSSARM, 3 1/2" X 4 1/2" X 2' - 0"	1	PG 380.05 IT. 1
	4	BRACE, ANGLE CROSSARM, 5' - 0"	1	164128
	5	BRACE, FLAT CROSSARM, 26"	2	164192
	6	BOLT, MACH., GALV., 3/8" X 4 1/2", 1 RD. WASH. & 1 NUT	2	STD 139, 140 (E)
	7	BOLT, MACH., GALV., 1/2" X 5", 1 RD. WASH. & 1 NUT	2	STD 139, 140 (E)
	8	BOLT, MACH., GALV., 1/2" X 7", 1 RD. WASH. & 1 NUT	2	STD 139, 140 (E)
	9	BOLT, MACH., GALV., 5/8" X (AS REQ'D) 3 SQ. WASH, 1 FLAT, 1 CURV & 1 NUT	1	STD 139, 140 (E)
	10	BOLT, MACH., GALV., 5/8" X (AS REQ'D) 2-2 1/4" SQ WASH & 1 NUT	2	STD 139, 140 (E)
	11	BOLT, SPACE, GALV., 5/8" X 22", 4 SQ. WASH. & 4 NUTS	2	STD 139, 140 (E)
	12	LAG SCREW, GALV., 1/2" X 4"	3	621568 (E)
	13	LAG SCREW, GALV., 5/8" X 5"	1	621600 (E)
	14	SIGN, HIGH VOLTAGE & 8 ROOFING NAILS	1	647648-492224 (E)
	15			
	16			
L T I	17	CAPACITOR UNIT (2.4KV, 50 KVAR ILLUSTRATED) (B)	3	207200
	18	RACK, CAPACITOR	1	402624
	19	CUTOUT, 12KV, 100A, HEAVY DUTY, WITH LOADBUSTER HOOKS	3	297888
	20	BRACKET, INSULATOR 1" LEAD THREAD	1	166134
	21	INSULATOR, PIN TYPE, CLASS AS REQUIRED	1	PG 750.3
	22	CONNECTOR, COMPRESSION	4	PGS 786, 783 (E)
	23	WIRE, BARE STRANDED, #6	30'	813536

1399.107
SUPERSEDES
1315 (1-1-87)

SDG&E ELECTRIC STANDARDS

CAPACITOR INSTALLATION 4KV-WYE-150 KVAR MAXIMUM

DATE 1-1-87
APPD AK/RDS

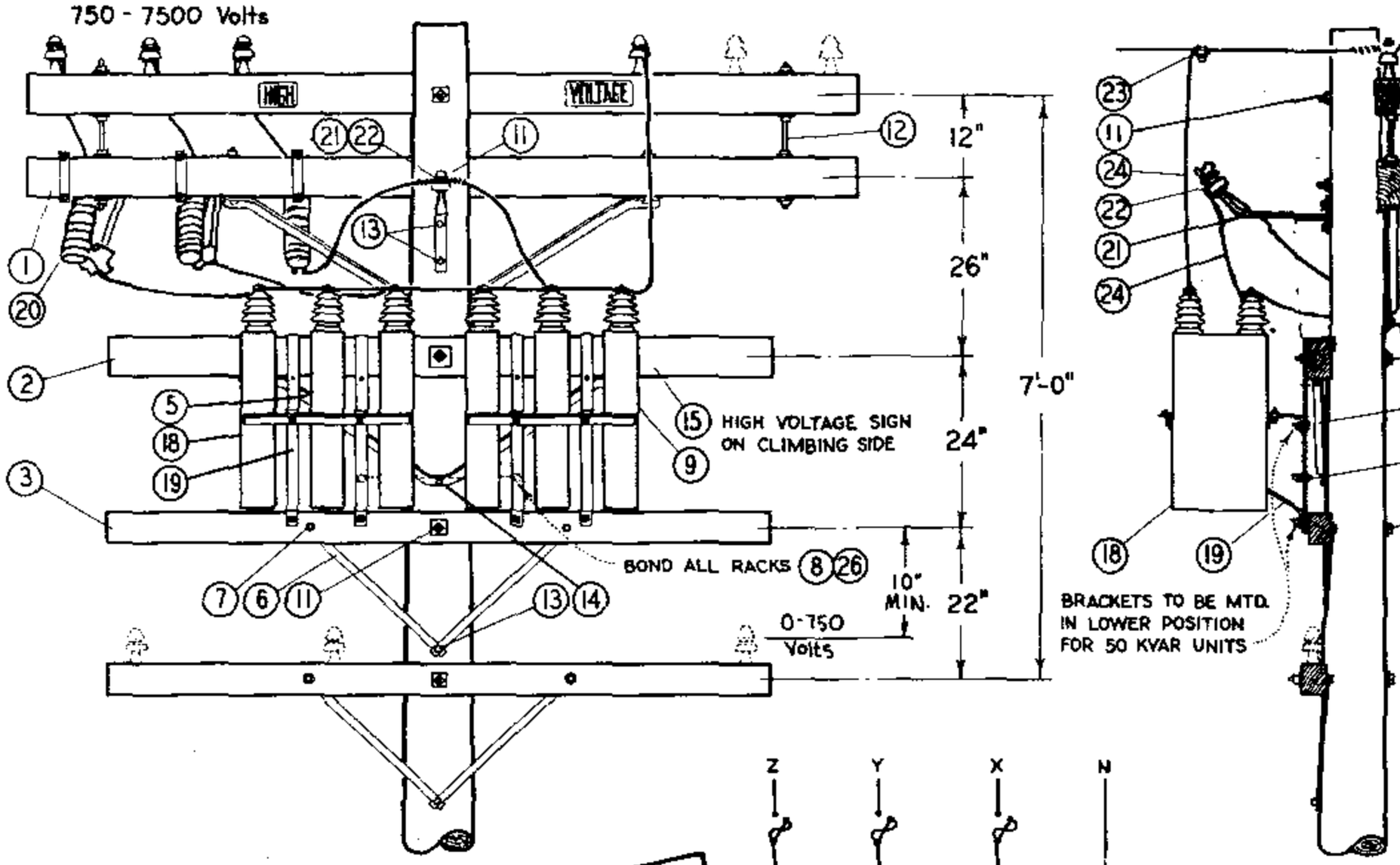

DIAGRAM OF 4 KV. WYE CONNECTIONS
300 KVAR (6-50 KVAR UNITS)
150 KVAR (6-25 KVAR UNITS)
90 KVAR (6-15 KVAR UNITS)

INSTALLATION:

A. CAPACITOR RACKS TO BE MOUNTED ON OPPOSITE SIDE OF LINE AND CUTOUT ARMS.
(B) NO LONGER PURCHASED.
C. FOR POLE STEPPING REFER TO STD. 363.
(E) EXEMPT MATERIAL.

	ITEM	DESCRIPTION	QUANTITY	STOCK NO. OR CONSTR. STD.
PT&F	1	CROSSARM, 3 3/4" X 5 3/4" X 10' -0"	1	PG. 380.01
	2	CROSSARM, 3 3/4" X 5 3/4" X 8' - 0"	1	PG. 380.05
	3	CROSSARM, 3 1/2 X 4 1/2 X 8 - 0	1	PG. 380.05
	4	BRACE, ANGLE CROSSARM, 5' - 0"	1	164128
	5	BRACE, ANGLE CROSSARM, 4' - 0"	1	164032
	6	BRACE, FLAT CROSSARM, 28"	2	164192
	7	BOLT, MACH., GALV., 3/8" X 4 1/2", 1 RD. WASH. & 1 NUT	2	STD 139, 140(E)
	8	BOLT, MACH., GALV., 1/2" X 1 1/2", 2 RD. WASH. & 1 NUT	2	STD 139, 140(E)
	9	BOLT, MACH., GALV., 1/2" X 7", 1 RD. WASH. & 1 NUT	4	STD 139, 140(E)
	10	BOLT, MACH., GALV., 5/8" X (AS REQ'D) 3 SQ. WASH., 1 FLAT, 1 CURV. & 1 NUT	1	STD 139, 140(E)
	11	BOLT, MACH., GALV., 5/8" X (AS REQ'D) 2-2 1/4 SQ. WASH. & 1 NUT	2	STD 139, 140(E)
	12	BOLT, SPACE, GALV., 5/8" X 22", 4 SQ. WASH. & 4 NUTS	2	STD 139, 140(E)
	13	LAG SCREW, GALV., 1/2" X 4"	3	621568 (E)
	14	LAG SCREW, GALV., 5/8" X 5"	2	621600 (E)
	15	SIGN, HIGH VOLTAGE & ROOFING NAILS	1	647648-492224(E)
	16			
	17			
LI	18	CAPACITOR UNIT (2.4KV, 50 KVAR ILLUSTRATED) (B)	6	207200
	19	RACK, CAPACITOR (B)	2	402620
	20	CUTOUT, 12KV 100A, HEAVY DUTY, WITH LOADBUSTER HOOKS	3	297888
	21	BRACKET, INSULATOR 1" LEAD THREAD	1	166134
	22	INSULATOR, PIN TYPE, CLASS AS REQUIRED	1	PG. 750.3
	23	CONNECTOR, COMPRESSION	4	STD 786, 783(E)
	24	WIRE, #6 BARE STRANDED COPPER	30'	813536
	25			
	26	WIRE, BARE SOLID ANNEALED COPPER #8	2'-6"	812928
	27			

DATE 1-1-87
APPD AK/RDS

SDG&E ELECTRIC STANDARDS

CAPACITOR INSTALLATION 4KV - WYE - 300 KVAR MAXIMUM

1399.108
SUPERSEDES
1316 (1-1-87)

TABLE OF CONTENTS

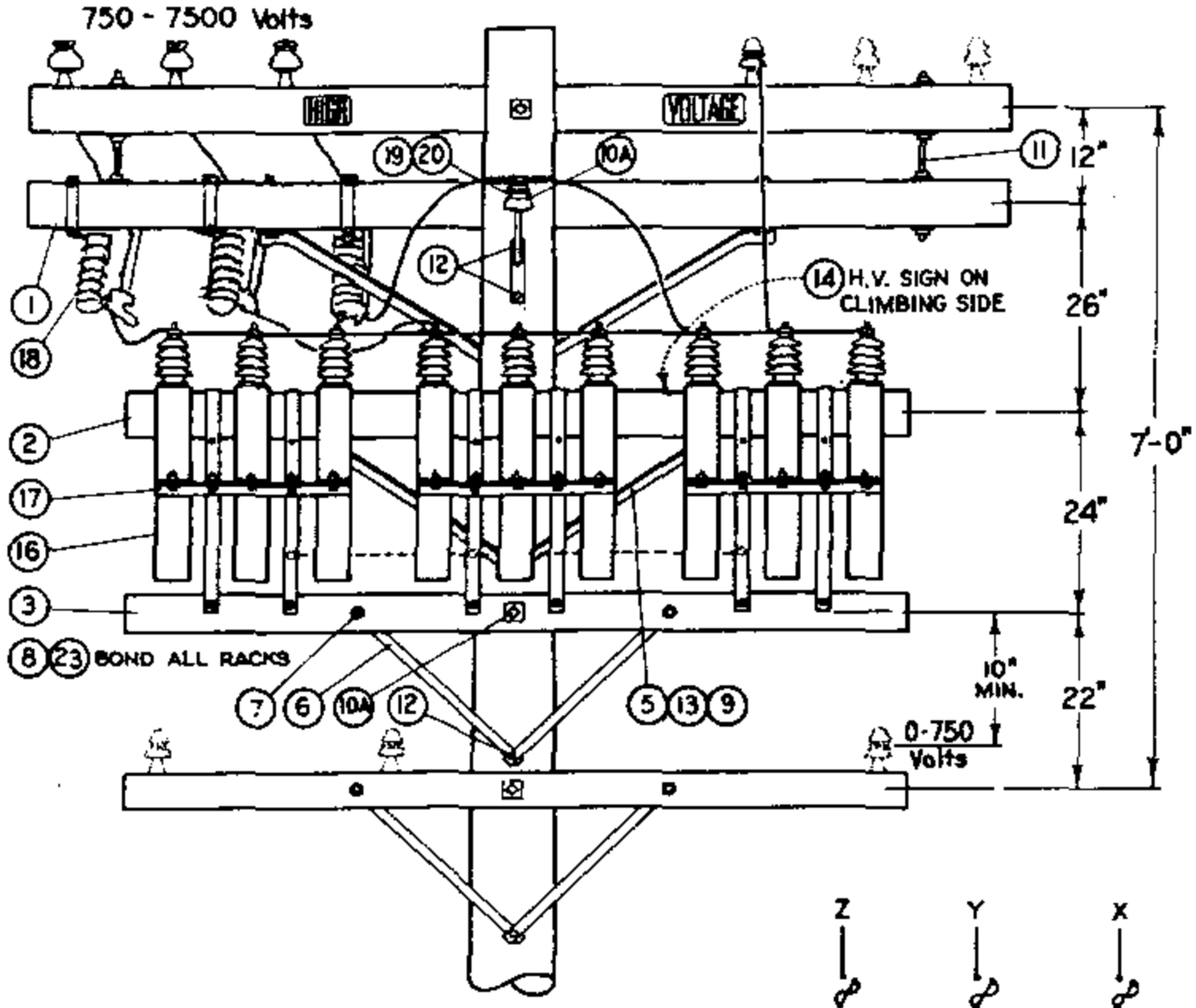

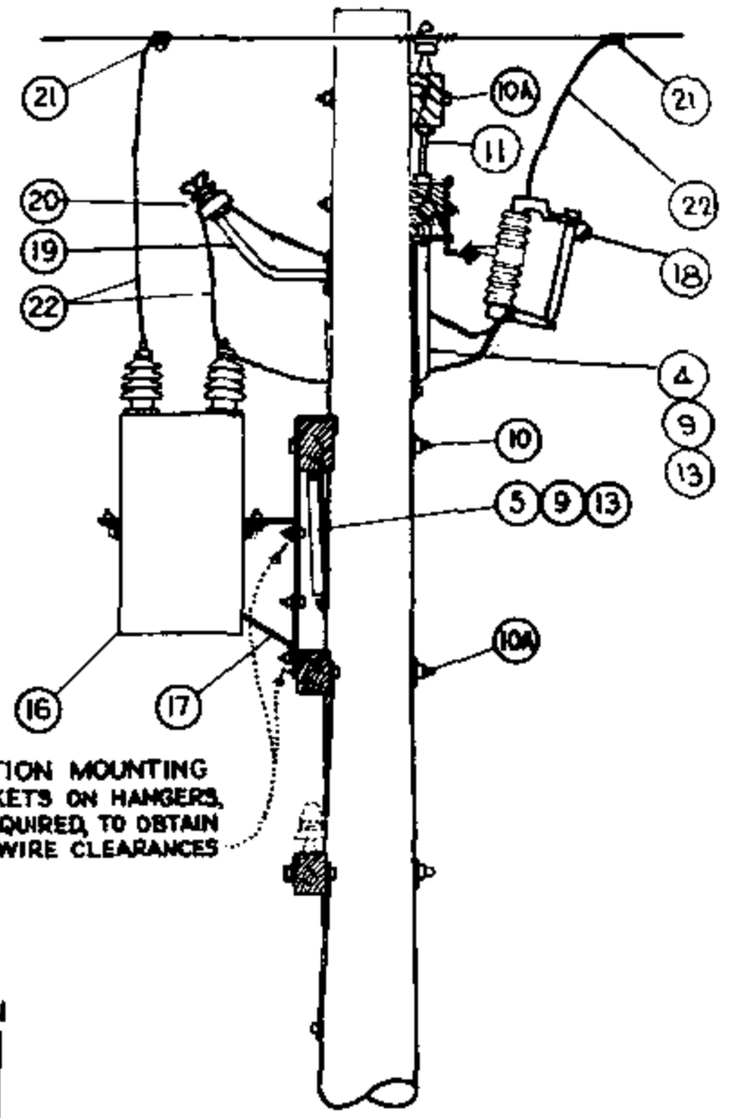

FOR FIELD MAINTENANCE ONLY

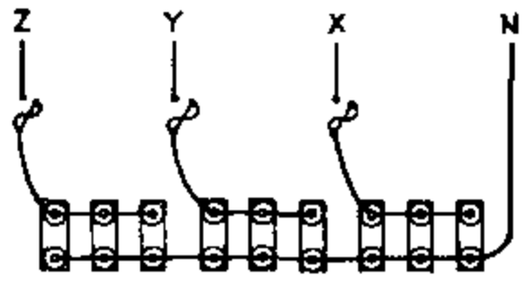

DIAGRAM OF 4 KV. WYE CONNECTIONS
450 KVAR (9-50 KVAR UNITS)
225 KVAR (9-25 KVAR UNITS)
135 KVAR (9-15 KVAR UNITS)

INSTALLATION:

A. CAPACITOR RACKS TO BE MOUNTED ON OPPOSITE SIDE OF LINE AND CUTOUT ARMS.
(B) NO LONGER PURCHASED.
C. FOR POLE STEPPING REFER TO STD. 363.
(E) EXEMPT MATERIAL.

	ITEM	DESCRIPTION		QUANTITY	STOCK NO. OR CONSTR. STD.
P T & F	1	CROSSARM, 3 3/4" X 5 3/4" X 10' - 0"		1	380.01
	2	CROSSARM, 3 3/4" X 5 3/4" X 8' - 0"		1	380.05
	3	CROSSARM, 3 1/2" X 4 1/2" X 8' - 0"		1	380.05
	4	BRACE, ANGLE CROSSARM, 5' - 0"		1	164128
	5	BRACE, ANGLE CROSSARM, 4' - 0"		1	164032
	6	BRACE, FLAT CROSSARM, 28"		2	164192
	7	BOLT, MACH., GALV., 3/8" X 4 1/2", 1 RD. WASH. & 1 NUT		2	STD 139, 140 (E)
	8	BOLT, MACH., GALV., 1/2" X 1 1/2", 2 RD. WASH. & 1 NUT		3	STD 139, 140 (E)
	9	BOLT, MACH., GALV., 1/2" X 7", 1 RD. WASH. & 1 NUT		4	STD 139, 140 (E)
	10	BOLT, MACH., GALV., 5/8" X (AS REQ'D) 3" SQ. WASH., 1 FLAT, 1 CURV., & 1 NUT		1	STD 139, 140 (E)
	10A	BOLT, MACH., GALV., 5/8" X (AS REQ'D) 2-2 1/4" SQ. WASH. & 1 NUT		2	STD 139, 140 (E)
	11	BOLT, SPACE, GALV., 5/8" X 22", 4 SQ. WASH. & 4 NUTS		2	STD 139, 140 (E)
	12	LAG SCREW, GALV. 1/2" X 4"		3	621568 (E)
	13	LAG SCREW, GALV. 5/8" X 5"		2	621600 (E)
	14	SIGN, HIGH VOLTAGE, & ROOFING NAILS	(E)	1	647648-492224
	15				
L T I	16	CAPACITOR UNIT, 2.4KV, (50 KVAR UNITS ILLUSTRATED)	(B)	9	207200
	17	RACK, CAPACITOR		3	402624
	18	CUTOUT 12KV, 100A, HEAVY DUTY, WITH LOADBUSTER HOOKS		3	297888
	19	BRACKET, INSULATOR 1" LEAD THREAD		1	166134
	20	INSULATOR, PIN TYPE, CLASS AS REQUIRED		1	750.3
	21	CONNECTOR, COMPRESSION		4	PGS 786, 783 (E)
	22	WIRE, #6 BARE STRANDED COPPER		30'	813536
	23	WIRE, BARE SOLID ANNEALED COPPER #8		6'	812928
	24				
	25				
	26				

1399.109	SDG&E ELECTRIC STANDARDS	DATE 1-1-87
SUPERSEDES 1317 (1-1-87)	CAPACITOR INSTALLATION 4KV - WYE - 450 KVAR MAXIMUM	APPD AK / RDG

SCOPE: THIS STANDARD SHOWS THE INSTALLATION METHOD OF A 4.16KV DELTA FIXED CAPACITOR.

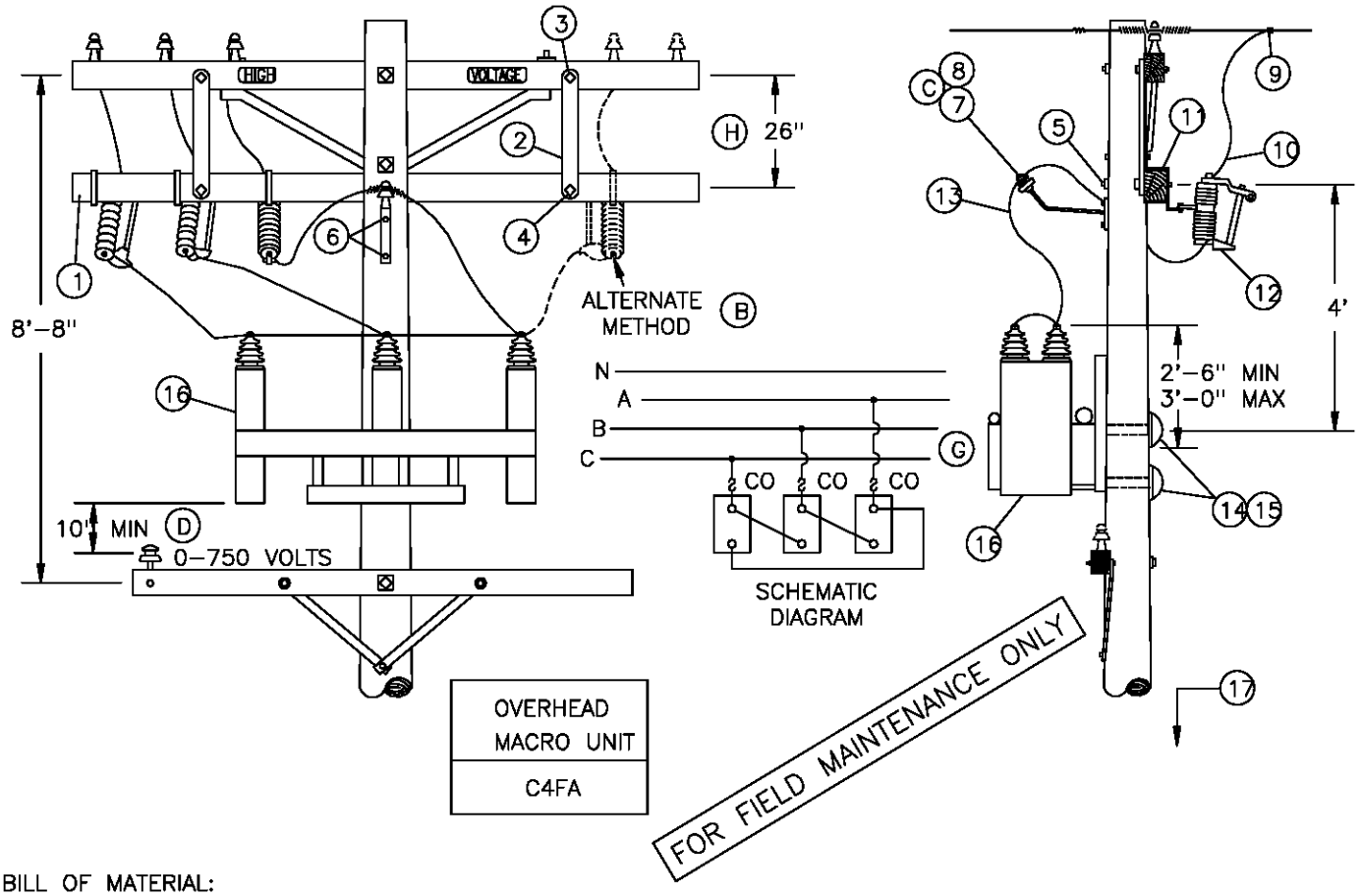

BILL OF MATERIAL:

ITEM	DESCRIPTION	QUANTITY	CONST STD OR PAGE NO	STOCK NUMBER
1	CROSSARM 3 3/4" X 5 3/4" X 10' - 0"	1	-	294128
2	BRACE, FLAT, CROSSARM, 28"	2	-	164192
3	BOLT, MACH, GALV, 1/2" X 5", 1 ROUND AND 1 DOUBLE COIL SPRING WASHER	2	392	-
4	BOLT, MACH, GALV, 3/8" X 4 1/2", 1 RD & 1 SPRING WASHER	2	392	-
5	BOLT, MACH, GALV, 5/8" X (LENGTH AS REQ'D), 2 SQUARE FLAT AND 1 DOUBLE COIL SPRING WASHER	1	392	-
6	LAG SCREW, GALV, 1/2" X 4" (C)	2	-	621568
7	BRACKET, INSULATOR, 1" LEAD THREAD (C)	1	-	166134
8	INSULATOR, PIN TYPE, CLASS AS REQUIRED (C)	1	750	-
9	CONNECTOR, COMPRESSION, CU OR AL (SIZE AS REQ'D)	AS REQ'D	783, 786	-
10	WIRE, BARE STRANDED, #6, COPPER	9'	-	813536
11	BRACKET, CUTOUT/ARRESTER, FOR CROSSARM MOUNTING	3	-	166070
12	CUTOUT, 12KV, 100A, HVY DUTY, WITH LOADBUSTER HOOK	3	-	297888
13	WIRE, BARE STRANDED, #4 COPPER	12'	-	813760
14	BOLT, MACH, GALV, 3/4" X (LENGTH AS REQ'D), 1 SQUARE CURVED AND 1 DOUBLE COIL SPRING WASHER	2	392	-
15	COVER, THRU BOLT, PLASTIC &	2	-	285696
	6-10D NAILS, GALV	-	-	491392
16	RACK, CAPACITOR (4.16KV, 200 KVAR) (G)	1	-	564759
17	TAG, STATION NUMBER	1	200 SECT	-

DATE 12-1-98 APPD PA/BSG	SDG&E ELECTRIC STANDARDS FIXED CAPACITOR INSTALLATION, 4.16KV DELTA UNGROUNDED RACK	1399.110 SUPERSEDES 1318.1 (12-1-98)

TABLE OF CONTENTS

INSTALLATION:

A. CAPACITOR RACKS TO BE MOUNTED ON OPPOSITE SIDE OF LINE AND CUTOUT ARMS.

(B) INSTALL ONE CUTOUT AS SHOWN ON THE ALTERNATE METHOD IF THE 4KV CONDUCTORS ARE SPREAD OUT.

(C) OMIT ITEMS 6, 7, & 8 IF ALTERNATE METHOD (B) IS USED.

(D) FROM BOTTOM OF THE CAPACITOR RACK OR THE CASE, WHICHEVER IS LOWER.

F. CAPACITOR MUST BE INSTALLED ON POLES ACCESSIBLE BY BUCKET TRUCK.

(G) THE KVAR RATING OF 7200 VOLT CAPACITORS IS REDUCED BY A FACTOR OF THREE WHEN WIRED IN DELTA AND CONNECTED TO THE 4160 VOLT SYSTEM.

(H) IF ADDITIONAL SPACE IS REQUIRED BELOW THE CUTOUT ARM, THE SEPARATION BETWEEN THE LINE ARM AND CUTOUT ARM MAY BE REDUCED TO 12" WITH THE USE OF SPACE BOLTS.

FOR FIELD MAINTENANCE ONLY

TABLE OF CONTENTS

1399.111 SUPERSEDES 1318.2 (12-1-98)	SDG&E ELECTRIC STANDARDS FIXED CAPACITOR INSTALLATION, 4.16KV DELTA UNGROUNDED RACK	DATE 12-1-98 APPD PSA/CMK

TABLE OF CONTENTS

SCOPE: THIS STANDARD SHOWS THE INSTALLATION METHOD OF A 4.16KV DELTA SWITCHED CAPACITOR.

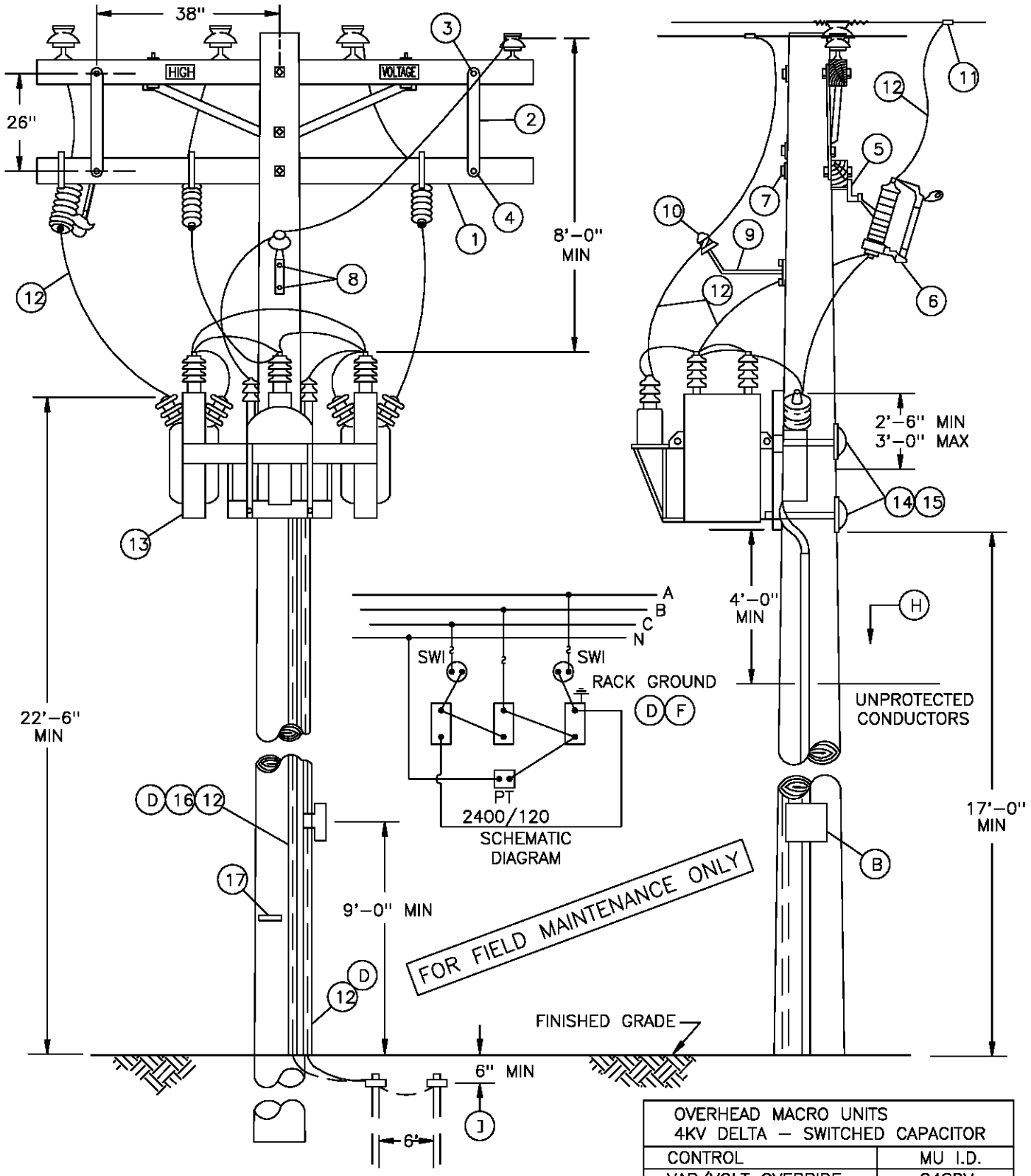

OVERHEAD MACRO UNITS 4KV DELTA – SWITCHED CAPACITOR	
CONTROL	MU I.D.
VAR/VOLT OVERRIDE	C4SDV
VOLT W/TIME BIAS	C4STD

NOTES:

– CLASS OF POLE TO BE DETERMINED PER STANDARD 344–354.

DATE 12–1–98 APPD PSA/CMK	SDG&E ELECTRIC STANDARDS SWITCHED CAPACITOR INSTALLATION 4.16 KV DELTA – 2 OIL SWITCHES	1399.112 SUPERSEDES 1319.1 (12–1–98)

BILL OF MATERIAL:

ITEM	DESCRIPTION	QUANTITY	CONST STD OR PAGE NO	STOCK NUMBER
1	CROSSARM, 3 3/4" X 5 3/4" X 10' – 0"	1	--	249128
2	BRACE, FLAT, CROSSARM, 28"	2	--	164192
3	BOLT, MACH, GALV, 3/8" X 4 1/2", 1 SPR WASH & 1 RD WASH	2	392	--
4	BOLT, MACH, GALV, 1/2 X 5", 1 RD WASH, 1 DBL COIL WASH	2	392	--
5	BRACKET, CUTOUT/ARRESTER, FOR CROSSARM MOUNTING	3	--	166070
6	CUTOUT, 12KV, 100A, HEAVY DUTY, WITH LOADBUSTER HOOKS	3	1212	--
7	BOLT, MACH, GALV, 5/8" X (LENGTH AS REQ'D) 2 SQ WASH & 1 DBL COIL WASH	1	392	--
8	LAG SCREW, GALV, 1/2" X 4"	2	--	621568
9	BRACKET, INSULATOR, 1" LEAD THREAD	1	--	166134
10	INSULATOR, PIN TYPE, CLASS AS REQUIRED	1	750	--
11	CONNECTOR, WIRE, COMPRESSION, CU OR AL, AS REQ'D	AS REQ'D	783–786	--
12	WIRE, BARE STRANDED, #4, COPPER	100'	--	813760
13	RACK, SWITCHED CAPACITOR, COMPLETE WITH SWITCHES AND POTENTIAL TRANSFORMER, (4.16KV, 200KVAR) (F)	1	--	564758
14	BOLT, MACH, GALV, 3/4" X (LENGTH AS REQ'D), 1 SQ CURVE RIB WASH & 1 DBL COIL SPR WASH	2	392	--
15	COVER, BOLT, PLASTIC & 6 – 1 3/4" NAILS, GALV	2	--	285696
		--	--	492192
16	UNIT GROUND, COMPLETE	1	--	603136
17	TAG, STATION NUMBER	1	200 SECT.	--

FOR FIELD MAINTENANCE ONLY

TABLE OF CONTENTS

INSTALLATION:

A. CAPACITOR RACKS TO BE MOUNTED ON OPPOSITE SIDE OF LINE AND CUTOUT ARMS.

(B) SHOWN FOR ILLUSTRATIVE PURPOSES ONLY. SEE STANDARD 1330 FOR CONTROL INSTALLATION AND MATERIAL.

C. CAUTION: OPEN OIL SWITCHES BEFORE OPENING CUTOUTS.

(D) CONNECT CAPACITOR RACK GROUND LEAD TO GROUND ROD. A SECOND GROUND WIRE IS REQUIRED FOR THE CONTROL PANEL TO BE CONNECTED ON THE SAME GROUND ROD. COIL LOOSE END OF CONTROL PANEL GROUND WIRE AND STAPLE TO POLE (TO BE WORKED BY SERVICE CREW).

(F) THE KVAR RATING OF 7200 VOLT CAPACITORS IS REDUCED BY A FACTOR OF THREE WHEN WIRED IN DELTA AND CONNECTED TO THE 4160 VOLT SYSTEM.

G. CAPACITOR MUST BE INSTALLED ON POLES ACCESSIBLE BY BUCKET TRUCK.

REFERENCE:

(H) POLE STEPPING – SEE STANDARD 363.

(I) GROUNDING METHODS – SEE STANDARD 1002.

J. PVC CONDUIT IS NOT PERMITTED IN THE CLIMBING SPACE – G.O. 95 RULE 22.2 (C).

1399.113 SUPERSEDES 1319.2 (12–1–98)	SDG&E ELECTRIC STANDARDS SWITCHED CAPACITOR INSTALLATION 4.16 KV DELTA – OIL SWITCHES	DATE 12–1–98 APPD PSA / CMK

APPLICATION: THIS CONSTRUCTION SHALL BE USED FOR ALL VOLTAGE, TIME, OR TIME-VOLTAGE SWITCHED CAPACITORS WITH THREE OIL SWITCHES.

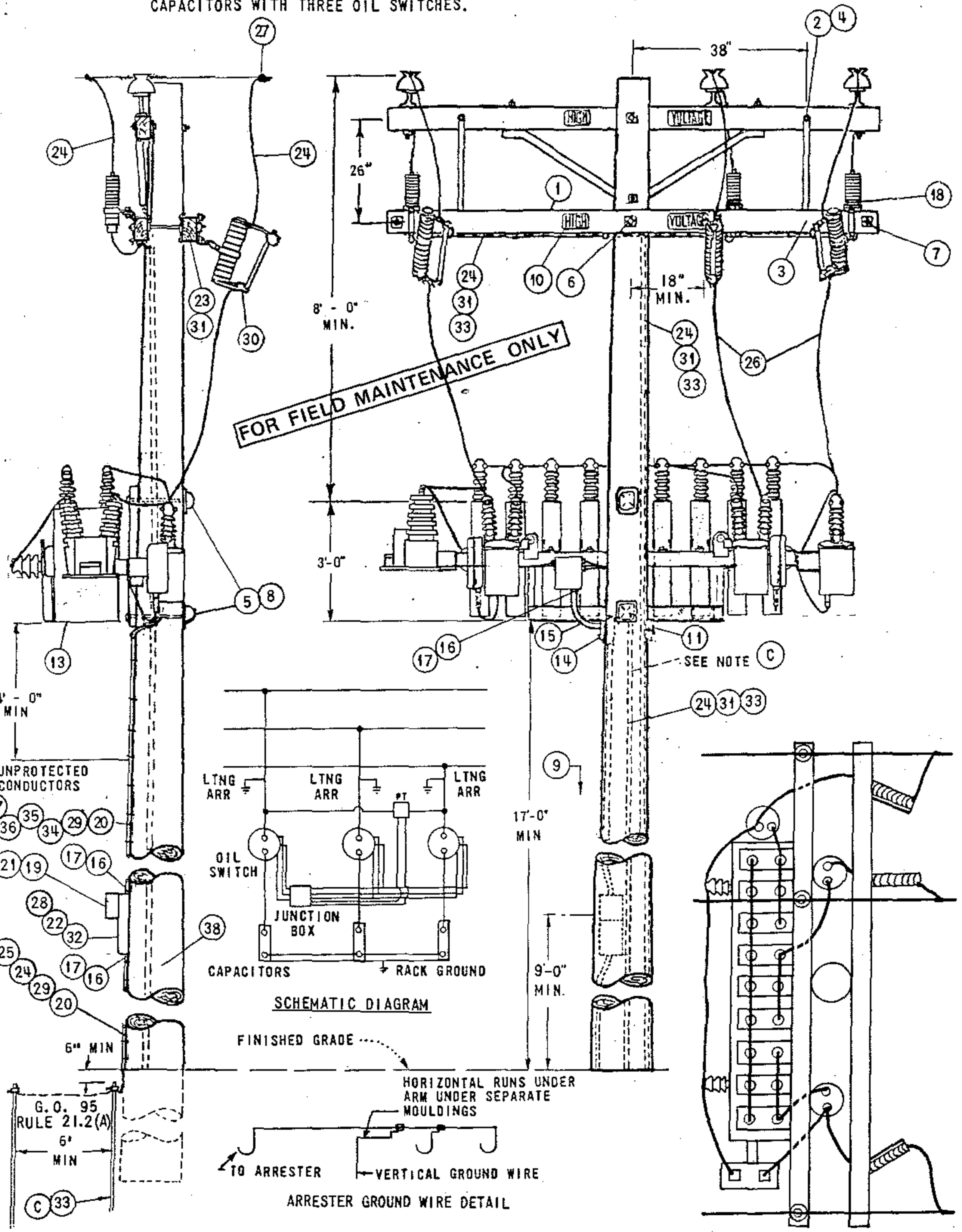

DATE 9-17-82 APPD JAT	SDG&E ELECTRIC STANDARDS 12 & 12.47 KV SWITCHED CAPACITOR INSTALLATION 3 OIL SWITCHES IN LINE	1399.201 SUPERSEDES 1324.1 (9-17-82)

TABLE OF CONTENTS

NOTES:

A. CAUTION: OPEN OIL SWITCHES BEFORE OPENING CUTOUTS.
B. BOND CUTOUTS IN HEAVY CONTAMINATION DISTRICTS. AS IDENTIFIED ON STANDARDS PAGE 287.
(C) ONE GROUND IS REQUIRED FOR THE CAPACITOR RACK, ONE IS REQUIRED FOR THE ARRESTERS, AND A THIRD FOR THE CONTROL PANEL. THESE GROUNDS ARE NOT TO BE INTERCONNECTED.
D. DO NOT TIE CAPACITOR BANK NEUTRAL TO 12KV CIRCUIT NEUTRAL. IT IS TO REMAIN FLOATING.
(E) EXEMPT MATERIALS.
(F) TO BE INSTALLED BY KEARNY ELECTRIC MAINTENANCE.
G. INSTALL CONTROL ON SAME SIDE OF POLE AS CAPACITOR RACK.
H. RACKS THAT CONTAIN PT'S WITH METAL TANKS TO BE INSULATED FROM RACK BY KEARNY MAINTENANCE BEFORE REINSTALLATION.
(I) THE POTENTIAL TRANSFORMERS FOR THIS INSTALLATION ARE CONNECTED PHASE-TO-PHASE. FOR POTENTIAL TRANSFORMERS CONNECTED PHASE-TO-NEUTRAL, SEE PAGE 1326.
J. PVC CONDUIT IS NOT PERMITTED IN THE CLIMBING SPACE. G.O. 95 RULE 22.2(C).
K. CAPACITORS MUST BE INSTALLED ON POLES ACCESSIBLE BY BUCKET TRUCK.

	ITEM	DESCRIPTION			QUANTITY	STOCK NO. OR CONSTR. STD.
P T & F	1	CROSSARM, 3 3/4" X 5 3/4" X 10' - 0"			2	300 SECTION
	2	BRACE, FLAT CROSSARM 28"			2	164192
	3	BOLT, MACHINE, GALV., 3/8" X 4 1/2", & 1 SPRING LOCK WASH.		(E)	2	PGS 139, 140
	4	BOLT, MACHINE, GALV., 1/2" X 5", 1 RD. WASH, 1 DBL. COIL SPR. WASH		(E)	2	PGS 139, 140
	5	BOLT, MACHINE, GALV., 3/4" X___, 1 SQ CURV RIB WASH, 1 DBL COIL SPR WASH			2	PGS 139, 140
	6	BOLT, MACHINE, GALV, 5/8" X___, 2 SQ WASH, 1 DBL COIL SPR WASH		(E)	1	PGS 139, 140
	7	BOLT, SPACE, GALV., 5/8" X___, 4 SQ WASH, 2 DBL COIL SPR WASH, 2 RD WASH.		(E)	2	PGS 139,140
	8	COVER, BOLT, PLASTIC, 10 D NAILS, GALV		(E)	2	285696
	9	STEPS, POLE		(E)	16	692992
	10	SIGN, HIGH VOLTAGE & NAILS, GALV.		(E)	4	647648, 492224
	11	SCREW, LAG, GALV, 4"		(E)	2	621568
	12					
	13	SWITCHED CAPACITOR RACK, COMPLETE WITH CAPACITORS, SWITCHES & POTENTIAL TRANSFORMER	900 KVAR (6 @ 150 KVAR)		1	564704
			1350 KVAR (9 @ 150 KVAR)		1	564752
	14	ACCESS FITTING BODY TYPE LB PVC 3/4"		(F) (E)	1	146384
	15	ELBOW, STANDARD RADIUS PVC 3/4"		(F)	1	322166
	16	REDUCER COUPLING PVC 3/4"TO 1"		(F)	3	573410
	17	TERMINAL ADAPTOR PVC 1"		(F)	3	102756
	18	ARRESTERS, LIGHTNING, 12KV			3	113248
	19	CONTROL, CAPACITOR (SELECT TYPE AS REQ'D)	a TIME SWITCH	(F)	1	706160
			b TIME SWITCH W/VOLTAGE OVERRIDE	(F)	1	706176
			c VOLTAGE	(F)	1	273984
L T I	20	CONDUIT, PVC, SCHEDULE 40, 3/4"		(F) (E)	40'	251328
	21	PADLOCK, MASTER 7			1	514912
	22	BRACKETS, CONTROL MOUNTING		(F)	2	SHOP MADE
	23	WIRE, #8 SOL, ANNEALED BARE COPPER			10' (1/2#)	812928
	24	WIRE, BARE STRANDED COPPER, #6			110'	813536
	25	ROD & CLAMP, GROUND			2	603072, 230016 (E)
	26	WIRE, #4 COPPER, WP			20'	812480
	27	CONNECTORS, WIRE, COMPRESSION, COPPER OR ALUMINUM AS REQ'D		(E)	6	PGS 786, 783
	28	SCREW, 1/4" X 2" LAG		(F)	4	621888
	29	STRAPS, PIPE GALV, 3/4", 6D NAILS, GALV.		(F) (E)	AS REQ'D	697888
	30	CUTOUTS 12KV 100A WITH LOADBUSTER HOOKS			3	1200 SECTION
	31	STAPLES, WIRE GALV, 1 1/4"		(E)	AS REQ'D	678528
	32	BOX, METER SOCKET SAFETY, 5 TERMINAL, 100 AMP		(F)	1	161856
	33	UNIT GROUND COMPLETE (WITH PLAIN MLDG, WITH GRAY MLDG)			2	603136, 603120
	34	WIRE, THW #12 WHITE		(F)	30'	808704
	35	WIRE, THW #12 BLACK		(F)	30'	808096
	36	WIRE, THW #12 RED		(F)	30'	808576
	37	WIRE, THW #12 BLUE		(F)	30'	808416
	38	TAG, STATION NUMBER			1	300 SECTION

FOR FIELD MAINTENANCE ONLY

TABLE OF CONTENTS

1399.202 SUPERSEDES 1324.2 (9-17-82)	SDG&E ELECTRIC STANDARDS 12 & 12.47 KV SWITCHED CAPACITOR INSTALLATION 3 OIL SWITCHES IN LINE	DATE 9-17-82 APPD JHT.

TABLE OF CONTENTS

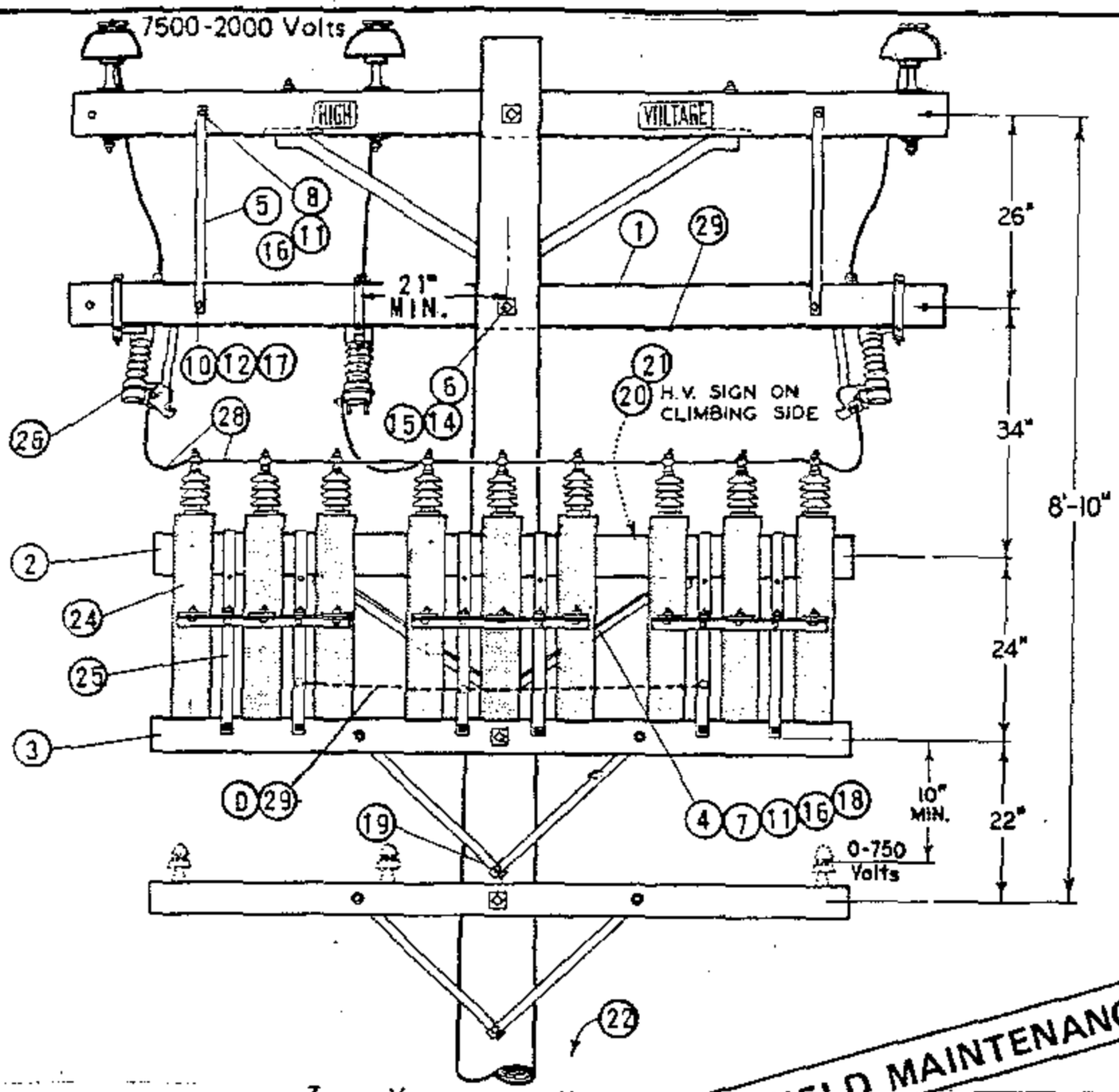

DIAGRAM OF 12KV WYE CONNECTIONS

600 KVAR (6-100 KVAR UNITS)
300 KVAR (6-50 KVAR UNITS)
150 KVAR (6-25 KVAR UNITS)

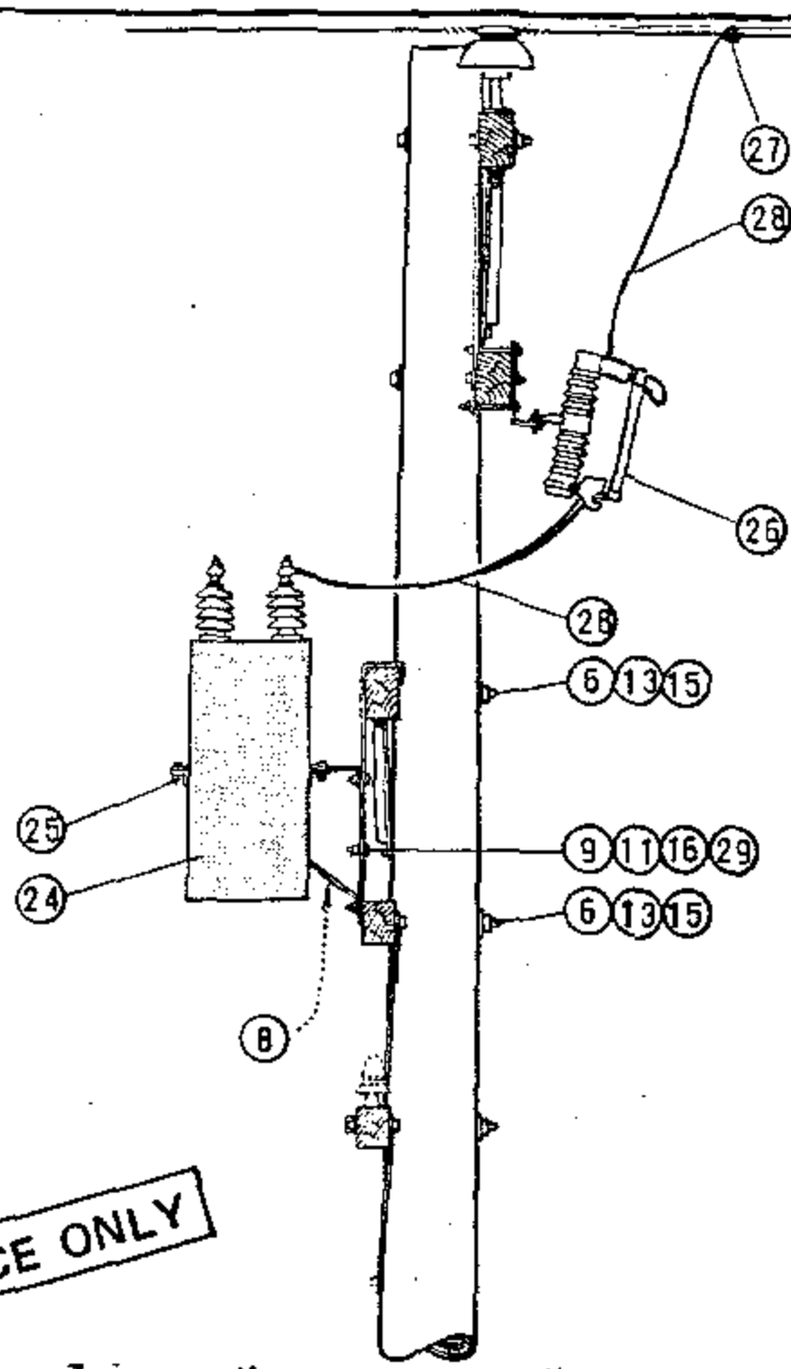

FOR FIELD MAINTENANCE ONLY

DIAGRAM OF 12KV WYE CONNECTIONS

900 KVAR (9-100 KVAR UNITS)
450 KVAR (9-50 KVAR UNITS)
225 KVAR (9-25 KVAR UNITS)

INSTALLATION:

(A) QUANTITY BASED ON 45' POLE.
(B) BRACKETS TO BE MOUNTED IN LOWER POSITION FOR 50 AND 100 KVAR UNITS.
C. BOND ALL 12KV HARDWARE WITHIN 3 MILES OF COAST.
(D) BOND ALL RACKS AS SHOWN IN ILLUSTRATION.
(E) EXEMPT MATERIAL.
(F) NO LONGER PURCHASED.
G. SEE PAGE 1323 FOR MATERIAL NEEDED FOR LIGHTING ARRESTERS ON 900 KVAR INSTALLATIONS.

	ITEM	DESCRIPTION	QUANTITY UNITS 6	QUANTITY UNITS 9	STOCK NO. OR CONSTR. STD.
PT&F	1	CROSSARM, 3 3/4" X 5 3/4" X 10' - 0"	1	1	380.01
	2	CROSSARM, 3 3/4" X 5 3/4" X 8' - 0"	1	1	380.05
	3	CROSSARM, 3 1/2" X 4 1/2" X 8' - 0"	1	1	380.05
	4	BRACE, ANGLE CROSSARM, 4' - 0"	1	1	164032
	5	BRACE, FLAT CROSSARM, 28"	2	2	164192
	6	BOLT, MACH. GALV. 5/8" X (LENGTH AS REQ'D) & 1 NUT	3	3	139 (E)
	7	BOLT, MACH. 1/2" X 7" & 1 NUT	2	2	153120 (E)
	8	BOLT, MACH. GALV. 1/2" X 5" & 1 NUT	2	2	153024 (E)
	9	BOLT, MACH. GALV. 1/2" X 1 1/2" & 1 NUT	2	3	152608 (E)
	10	BOLT, MACH. GALV. 3/8" X 5" & 1 NUT	2	2	154368 (E)
	11	WASHER, 1/2" ROUND	10	8	800192 (E)
	12	WASHER, 3/8" ROUND	2	2	800288 (E)
	13	WASHER, 3" SQ. CURVED	4	4	798912 (E)
	14	WASHER, 2 1/4" SQ. FLAT	2	2	799040 (E)
	15	WASHER, 5/8" SPRING DBL COIL	3	3	798560 (E)
PT&F	16	WASHER, 1/2" SPRING DBL COIL	6	6	798464 (E)
	17	WASHER, 3/8" SPRING DBL COIL	2	2	798528 (E)
	18	SCREW, LAG GALV. 5/8" X 5"	1	1	621600 (E)
	19	SCREW, LAG GALV. 1/2" X 4"	1	1	621568 (E)
	20	SIGN, HIGH VOLTAGE	1	1	647648 (E)
	21	NAILS, ROOFING #8 GALV.	8	8	492224 (E)
	22	STEPS, POLE (A)	16	16	692992 (E)
	23				
LTI	24	CAPACITOR, UNIT 7.2KV (100 KVAR UNITS ILLUSTRATED) (F)	6	9	207232
	25	RACK, CAPACITOR	2	3	402656
	26	CUTOUT, 12KV, 100A HEAVY DUTY WITH LOADBUSTER HOOKS	3	3	297888
	27	CONNECTORS, COMPRESSION	3	3	786, 783 (E)
	28	WIRE, #6 BARE STRANDED COPPER	33'	35'	813536
	29	WIRE, #8 BARE SOLID ANNEALED COPPER	13'	15'	812928
	30				

SDG&E ELECTRIC STANDARDS

DATE 11-5-82
APPD JHT/RCH

CAPACITOR INSTALLATIONS, 12KV - WYE - 900 KVAR MAX.

1399.203
SUPERSEDES
1322 (11-5-82)

BILL OF MATERIAL:

ITEM	DESCRIPTION	QUANTITY	CONST STD OR PAGE NO	STOCK NUMBER
1	CROSSARM, 3 3/4" X 5 3/4" X 10' – 0"	1	–	294128
2	BRACE, FLAT, CROSSARM, 28"	2	–	164192
3	BOLT, MACH, GALV, 3/8" X 4 1/2", 1 SPR & 1 RD WASHER	2	392	–
4	BOLT, MACH, GALV, 1/2" X 5", 1 ROUND & 1 DOUBLE COIL SPRING WASHER	2	392	–
5	BOLT, MACH, GALV, 5/8" X (LENGTH AS REQ'D) 2 SQUARE & 1 DOUBLE COIL SPRING WASHER	1	392	–
6	CONNECTOR, WIRE, COMPRESSION, CU OR AL, AS REQ'D	AS REQ'D	783, 786	–
7	WIRE, #4, BARE STRANDED COPPER	95'	–	813760
8	BRACKET, CUTOUT/ARRESTER, FOR CROSSARM MOUNTING	3	–	166070
9	CUTOUT, 12KV, 100A, HEAVY DUTY, WITH LOADBUSTER HOOKS	3	1212	–
10	INSULATOR, PIN TYPE, CLASS AS REQUIRED	1	–	429216
11	BRACKET, INSULATOR, 1" LEAD THREAD	1	–	166134
12	LAG SCREW, GALV, 1/2" X 4"	2	–	621568
13	RACK, SWITCHED CAPACITOR, COMPLETE WITH SWITCHES AND POTENTIAL TRANSFORMER, (4.16KV, 300KVAR)	1	–	564773
14	BOLT, MACH, GALV, 3/4" X (LENGTH AS REQ'D), 1 SQUARE CURVE RIBBED & 1 DOUBLE COIL SPRING WASHER	2	392	–
15	COVER, BOLT, PLASTIC & 6 – 1 3/4" NAILS, GALV	2	–	285696
		–	–	492192
16	UNIT GROUND, COMPLETE	1	–	603136
17	TAG, STATION NUMBER	1	338	–

FOR FIELD MAINTENANCE ONLY

OVERHEAD MACRO UNITS 4KV WYE – SWITCHED CAPACITOR	
CONTROL	MU I.D.
VAR/VOLT OVERRIDE	C4S3DV
VOLT W/TIME BIAS	C4S3TD

INSTALLATION:

A. CAPACITOR RACKS TO BE MOUNTED ON OPPOSITE SIDE OF LINE AND CUTOUT ARMS.

B. CAUTION: OPEN OIL SWITCHES BEFORE OPENING CUTOUTS.

Ⓒ CONNECT CAPACITOR RACK GROUND LEAD TO GROUND ROD. A SECOND GROUND WIRE IS REQUIRED FOR THE CONTROL PANEL TO BE CONNECTED ON THE SAME GROUND ROD. COIL LOOSE END OF CONTROL PANEL GROUND WIRE AND STAPLE TO POLE (TO BE WORKED BY SERVICE CREW).

REFERENCE:

Ⓕ SHOWN FOR ILLUSTRATIVE PURPOSES ONLY. SEE STANDARD 1330 FOR CONTROL INSTALLATION AND MATERIAL.

Ⓖ POLE STEPPING, SEE STANDARD 363.

Ⓗ GROUNDING METHOD, SEE STANDARD 1002.

I. PVC CONDUIT IS NOT PERMITTED IN THE CLIMBING SPACE – G.O. 95 RULE 22.2 (C).

J. CAPACITOR MUST BE INSTALLED ON POLES ACCESSIBLE BY BUCKET TRUCK. SEE DESIGN STANDARDS PAGE 5811.5.

TABLE OF CONTENTS

1399.204 SUPERSEDES 1321.2 (12-1-98)	SDG&E ELECTRIC STANDARDS SWITCHED CAPACITOR INSTALLATION 4.16 KV WYE – 3 OIL SWITCHES	DATE 12-1-98 APPD PSA/CMC

APPLICATION: THIS CONSTRUCTION SHALL BE USED FOR ALL VOLTAGE, TIME, OR TIME-VOLTAGE SWITCHED CAPACITORS WITH THREE OIL SWITCHES.

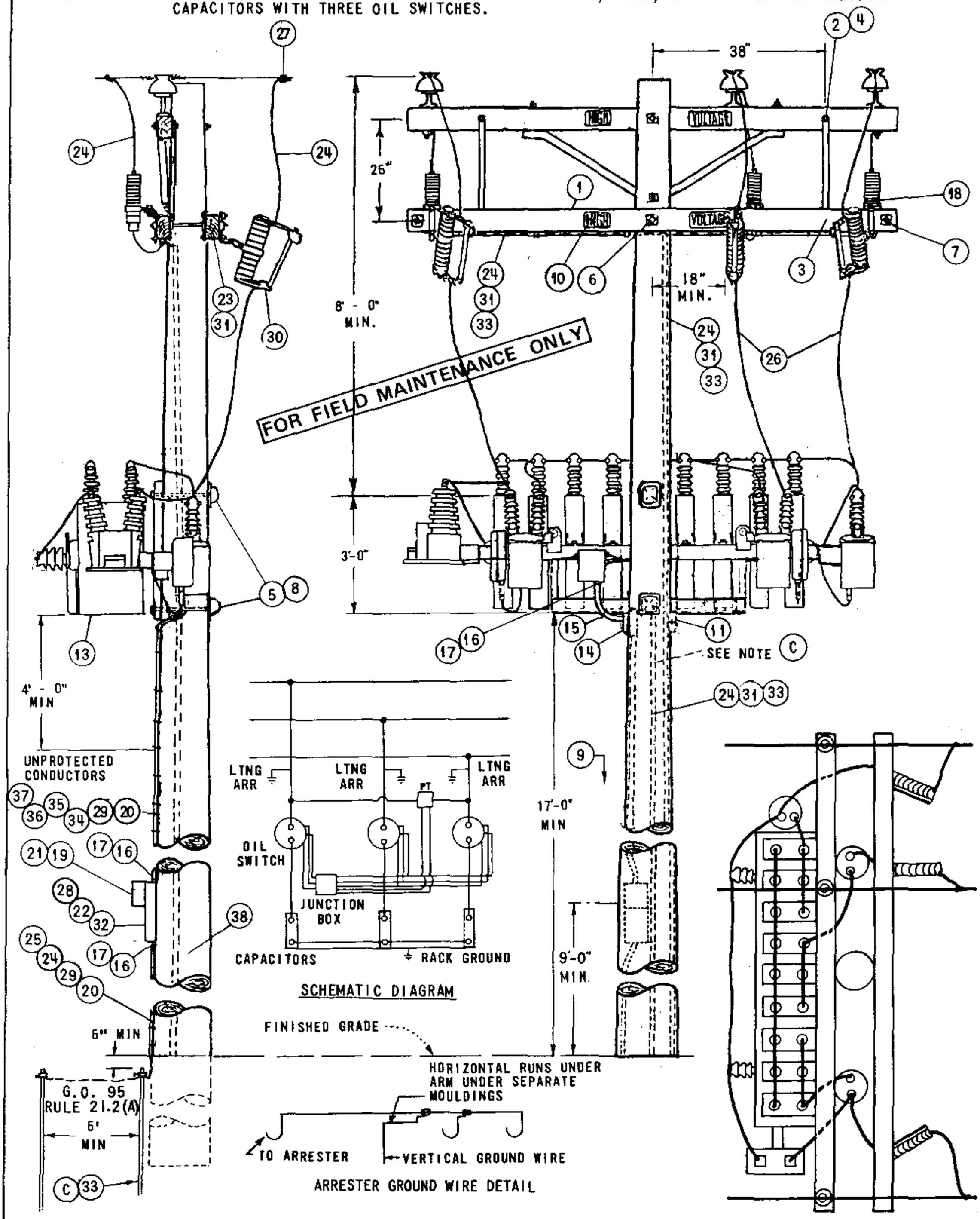

TABLE OF CONTENTS

DATE 9-17-82 APPD JNT	SDG&E ELECTRIC STANDARDS 12 & 12.47 KV SWITCHED CAPACITOR INSTALLATION 3 OIL SWITCHES IN LINE	1399.205 SUPERSEDES 1324.1 (9-17-82)

NOTES:

A. CAUTION: OPEN OIL SWITCHES BEFORE OPENING CUTOUTS.
B. BOND CUTOUTS IN HEAVY CONTAMINATION DISTRICTS. AS IDENTIFIED ON STANDARDS PAGE 287.
(C) ONE GROUND IS REQUIRED FOR THE CAPACITOR RACK, ONE IS REQUIRED FOR THE ARRESTERS, AND A THIRD FOR THE CONTROL PANEL. THESE GROUNDS ARE NOT TO BE INTERCONNECTED.
D. DO NOT TIE CAPACITOR BANK NEUTRAL TO 12KV CIRCUIT NEUTRAL. IT IS TO REMAIN FLOATING.
(E) EXEMPT MATERIALS.
(F) TO BE INSTALLED BY KEARNY ELECTRIC MAINTENANCE.
G. INSTALL CONTROL ON SAME SIDE OF POLE AS CAPACITOR RACK.
H. RACKS THAT CONTAIN PT'S WITH METAL TANKS TO BE INSULATED FROM RACK BY KEARNY MAINTENANCE BEFORE REINSTALLATION.
(I) THE POTENTIAL TRANSFORMERS FOR THIS INSTALLATION ARE CONNECTED PHASE-TO-PHASE. FOR POTENTIAL TRANSFORMERS CONNECTED PHASE-TO-NEUTRAL. SEE PAGE 1326.
J. PVC CONDUIT IS NOT PERMITTED IN THE CLIMBING SPACE. G.O. 95 RULE 22.2(C).
K. CAPACITORS MUST BE INSTALLED ON POLES ACCESSIBLE BY BUCKET TRUCK.

ITEM		DESCRIPTION		QUANTITY	STOCK NO. OR CONSTR. STD.
P T & F	1	CROSSARM, 3 3/4" X 5 3/4" X 10' - 0"		2	300 SECTION
	2	BRACE, FLAT CROSSARM 28"		2	164192
	3	BOLT, MACHINE, GALV., 3/8" X 4 1/2" & 1 SPRING LOCK WASH.	(E)	2	PGS 139, 140
	4	BOLT, MACHINE, GALV., 1/2" X 5", 1 RD. WASH, 1 DBL. COIL SPR. WASH	(E)	2	PGS 139, 140
	5	BOLT, MACHINE, GALV., 3/4" X___, 1 SQ CURV RIB WASH, 1 DBL COIL SPR WASH		2	PGS 139, 140
	6	BOLT, MACHINE, GALV, 5/8" X___, 2 SQ WASH, 1 DBL COIL SPR WASH	(E)	1	PGS 139, 140
	7	BOLT, SPACE, GALV., 5/8" X___, 4 SQ WASH, 2 DBL COIL SPR WASH, 2 RD WASH.	(E)	2	PGS 139,140
	8	COVER, BOLT, PLASTIC, 10 D NAILS, GALV	(E)	2	285696
	9	STEPS, POLE	(E)	16	692992
	10	SIGN, HIGH VOLTAGE & NAILS, GALV.	(E)	4	647648, 492224
	11	SCREW, LAG, GALV, 4"	(E)	2	621568
	12				
	13	SWITCHED CAPACITOR RACK, COMPLETE WITH CAPACITORS, SWITCHES & POTENTIAL TRANSFORMER — 900 KVAR (6 @ 150 KVAR)		1	564704
		SWITCHED CAPACITOR RACK, COMPLETE WITH CAPACITORS, SWITCHES & POTENTIAL TRANSFORMER — 1350 KVAR (9 @ 150 KVAR)		1	564752
	14	ACCESS FITTING BODY TYPE LB PVC 3/4"	(F) (E)	1	146384
	15	ELBOW, STANDARD RADIUS PVC 3/4"	(F)	1	322166
	16	REDUCER COUPLING PVC 3/4"TO 1"	(F)	3	573410
	17	TERMINAL ADAPTOR PVC 1"	(F)	3	102756
	18	ARRESTERS, LIGHTNING, 12KV		3	113248
L T I	19	CONTROL, CAPACITOR (SELECT TYPE AS REQ'D) — a TIME SWITCH	(F)	1	706160
		b TIME SWITCH W/VOLTAGE OVERRIDE	(F)	1	706176
		c VOLTAGE	(F)	1	273984
	20	CONDUIT, PVC, SCHEDULE 40, 3/4"	(F) (E)	40'	251328
	21	PADLOCK, MASTER 7		1	514912
	22	BRACKETS, CONTROL MOUNTING	(F)	2	SHOP MADE
	23	WIRE, #8 SOL, ANNEALED BARE COPPER		10' (1/2#)	812928
	24	WIRE, BARE STRANDED COPPER, #6		110'	813536
	25	ROD & CLAMP, GROUND		2	603072, 230016 (E)
	26	WIRE, #4 COPPER, WP		20'	812480
	27	CONNECTORS, WIRE, COMPRESSION, COPPER OR ALUMINUM AS REQ'D	(E)	6	PGS 786, 783
	28	SCREW, 1/4" X 2" LAG	(F)	4	621888
	29	STRAPS, PIPE GALV, 3/4", 6D NAILS, GALV.	(F) (E)	AS REQ'D	697888
	30	CUTOUTS 12KV 100A WITH LOADBUSTER HOOKS		3	1200 SECTION
	31	STAPLES, WIRE GALV, 1 1/4"	(E)	AS REQ'D	678528
	32	BOX, METER SOCKET SAFETY, 5 TERMINAL, 100 AMP	(F)	1	161856
	33	UNIT GROUND COMPLETE (WITH PLAIN MLDG, WITH GRAY MLDG)		2	603136, 603120
	34	WIRE, THW #12 WHITE	(F)	30'	808704
	35	WIRE, THW #12 BLACK	(F)	30'	808096
	36	WIRE, THW #12 RED	(F)	30'	808576
	37	WIRE, THW #12 BLUE	(F)	30'	808416
	38	TAG, STATION NUMBER		1	300 SECTION

FOR FIELD MAINTENANCE ONLY

TABLE OF CONTENTS

1399.206
SUPERSEDES
1324.2 (9-17-82)

SDG&E ELECTRIC STANDARDS

12 & 12.47 KV SWITCHED CAPACITOR INSTALLATION 3 OIL SWITCHES IN LINE

DATE 9-17-82
APPD

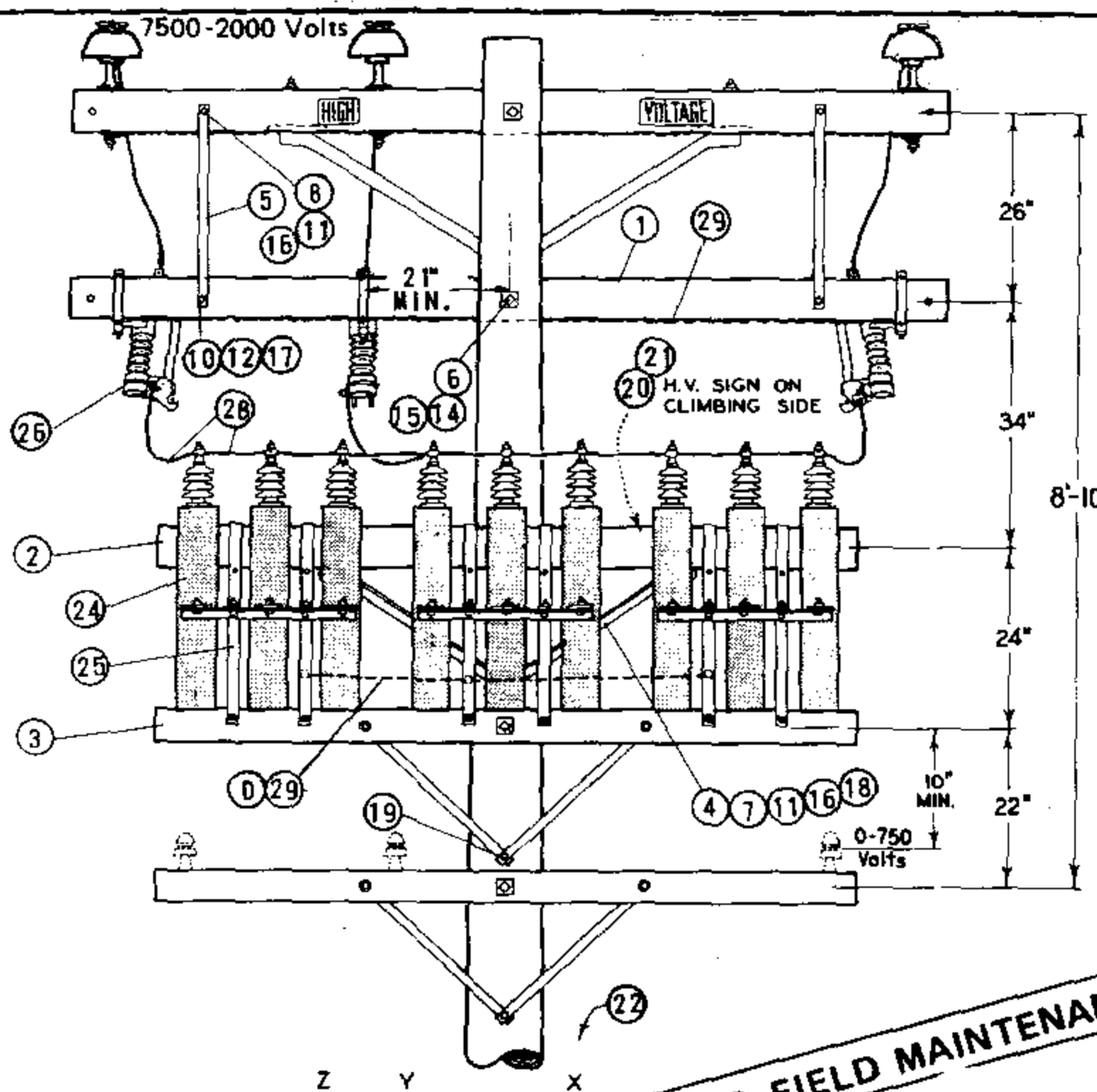

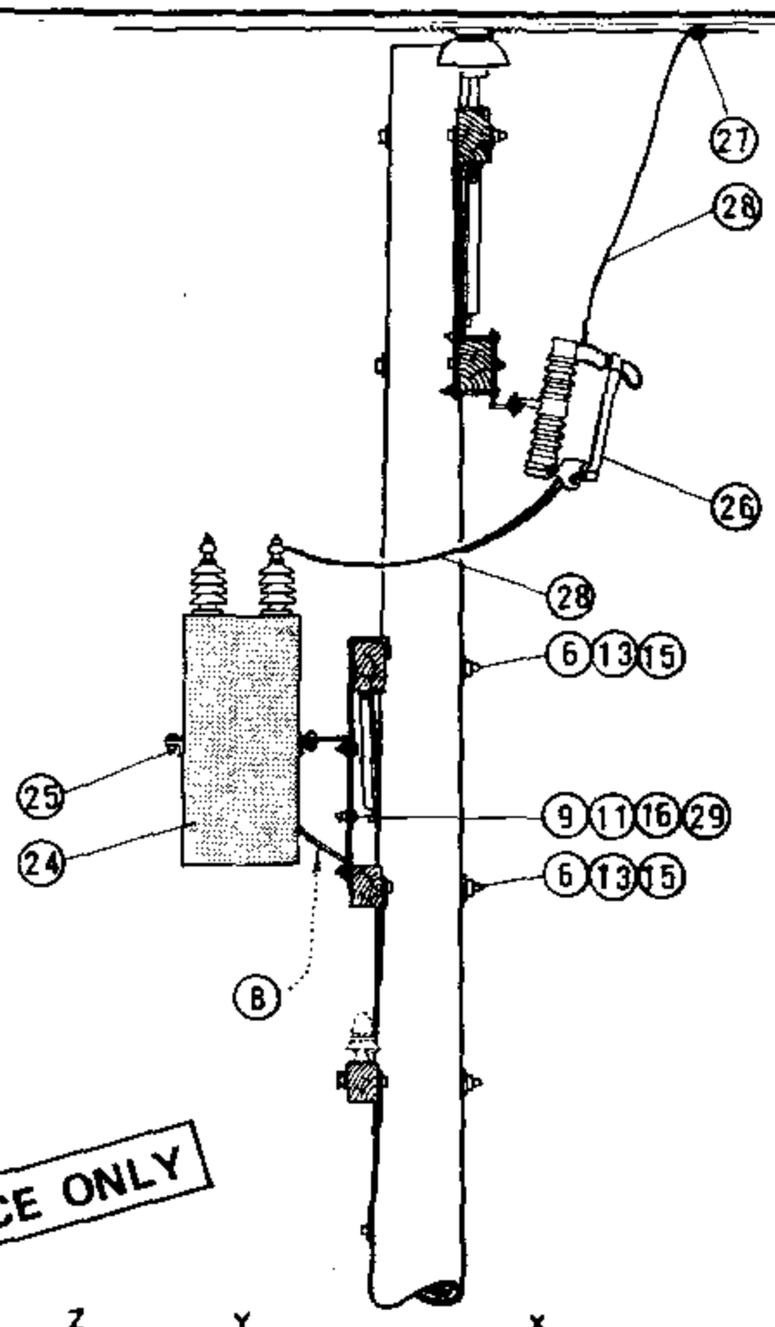

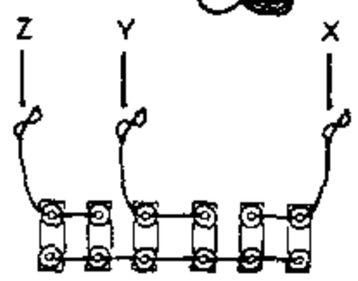

DIAGRAM OF 12KV WYE CONNECTIONS

600 KVAR (6-100 KVAR UNITS)
300 KVAR (6-50 KVAR UNITS)
150 KVAR (6-25 KVAR UNITS)

FOR FIELD MAINTENANCE ONLY

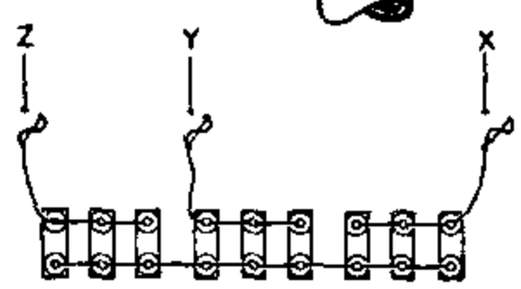

DIAGRAM OF 12KV WYE CONNECTIONS

900 KVAR (9-100 KVAR UNITS)
450 KVAR (9-50 KVAR UNITS)
225 KVAR (9-25 KVAR UNITS)

INSTALLATION:

(A) QUANTITY BASED ON 45' POLE.
(B) BRACKETS TO BE MOUNTED IN LOWER POSITION FOR 50 AND 100 KVAR UNITS.
C. BOND ALL 12KV HARDWARE WITHIN 3 MILES OF COAST.
(D) BOND ALL RACKS AS SHOWN IN ILLUSTRATION.
(E) EXEMPT MATERIAL.
(F) NO LONGER PURCHASED.
G. SEE PAGE 1323 FOR MATERIAL NEEDED FOR LIGHTING ARRESTERS ON 900 KVAR INSTALLATIONS.

ITEM		DESCRIPTION	QUANTITY UNITS 6	QUANTITY UNITS 9	STOCK NO. OR CONSTR. STD.
P T & F	1	CROSSARM, 3 3/4" X 5 3/4" X 10' - 0"	1	1	380.01
	2	CROSSARM, 3 3/4" X 5 3/4" X 8' - 0"	1	1	380.05
	3	CROSSARM, 3 1/2" X 4 1/2" X 8' - 0"	1	1	380.05
	4	BRACE, ANGLE CROSSARM, 4' - 0"	1	1	164032
	5	BRACE, FLAT CROSSARM, 28"	2	2	164192
	6	BOLT, MACH. GALV. 5/8" X (LENGTH AS REQ'D) & 1 NUT	3	3	139 (E)
	7	BOLT, MACH. 1/2" X 7" & 1 NUT	2	2	153120 (E)
	8	BOLT, MACH. GALV. 1/2" X 5" & 1 NUT	2	2	153024 (E)
	9	BOLT, MACH. GALV. 1/2" X 1 1/2" & 1 NUT	2	3	152608 (E)
	10	BOLT, MACH. GALV. 3/8" X 5" & 1 NUT	2	2	154368 (E)
	11	WASHER, 1/2" ROUND	10	8	800192 (E)
	12	WASHER, 3/8" ROUND	2	2	800288 (E)
	13	WASHER, 3" SQ. CURVED	4	4	798912 (E)
	14	WASHER, 2 1/4" SQ. FLAT	2	2	799040 (E)
	15	WASHER, 5/8" SPRING DBL COIL	3	3	798560 (E)
P T & F	16	WASHER, 1/2" SPRING DBL COIL	6	6	798464 (E)
	17	WASHER, 3/8" SPRING DBL COIL	2	2	798528 (E)
	18	SCREW, LAG GALV. 5/8" X 5"	1	1	621600 (E)
	19	SCREW, LAG GALV. 1/2" X 4"	1	1	621568 (E)
	20	SIGN, HIGH VOLTAGE	1	1	647648 (E)
	21	NAILS, ROOFING #8 GALV.	8	8	492224 (E)
	22	STEPS, POLE (A)	16	16	692992 (E)
	23				
L T I	24	CAPACITOR, UNIT 7.2KV (100 KVAR UNITS ILLUSTRATED) (F)	6	9	207232
	25	RACK, CAPACITOR	2	3	402656
	26	CUTOUT, 12KV, 100A HEAVY DUTY WITH LOADBUSTER HOOKS	3	3	297888
	27	CONNECTORS, COMPRESSION	3	3	786, 783 (E)
	28	WIRE, #6 BARE STRANDED COPPER	33'	35'	813536
	29	WIRE, #8 BARE SOLID ANNEALED COPPER	13'	15'	812928
	30				

DATE 11-5-82
APPD JHT/RCH

SDG&E ELECTRIC STANDARDS

CAPACITOR INSTALLATIONS, 12KV - WYE - 900 KVAR MAX.

1399.207
SUPERSEDES 1322 (11-5-82)

TABLE OF CONTENTS

SCOPE: THIS CONSTRUCTION SHALL BE USED FOR ALL SWITCHED CAPACITOR BANKS REQUIRING A CURRENT SENSOR.

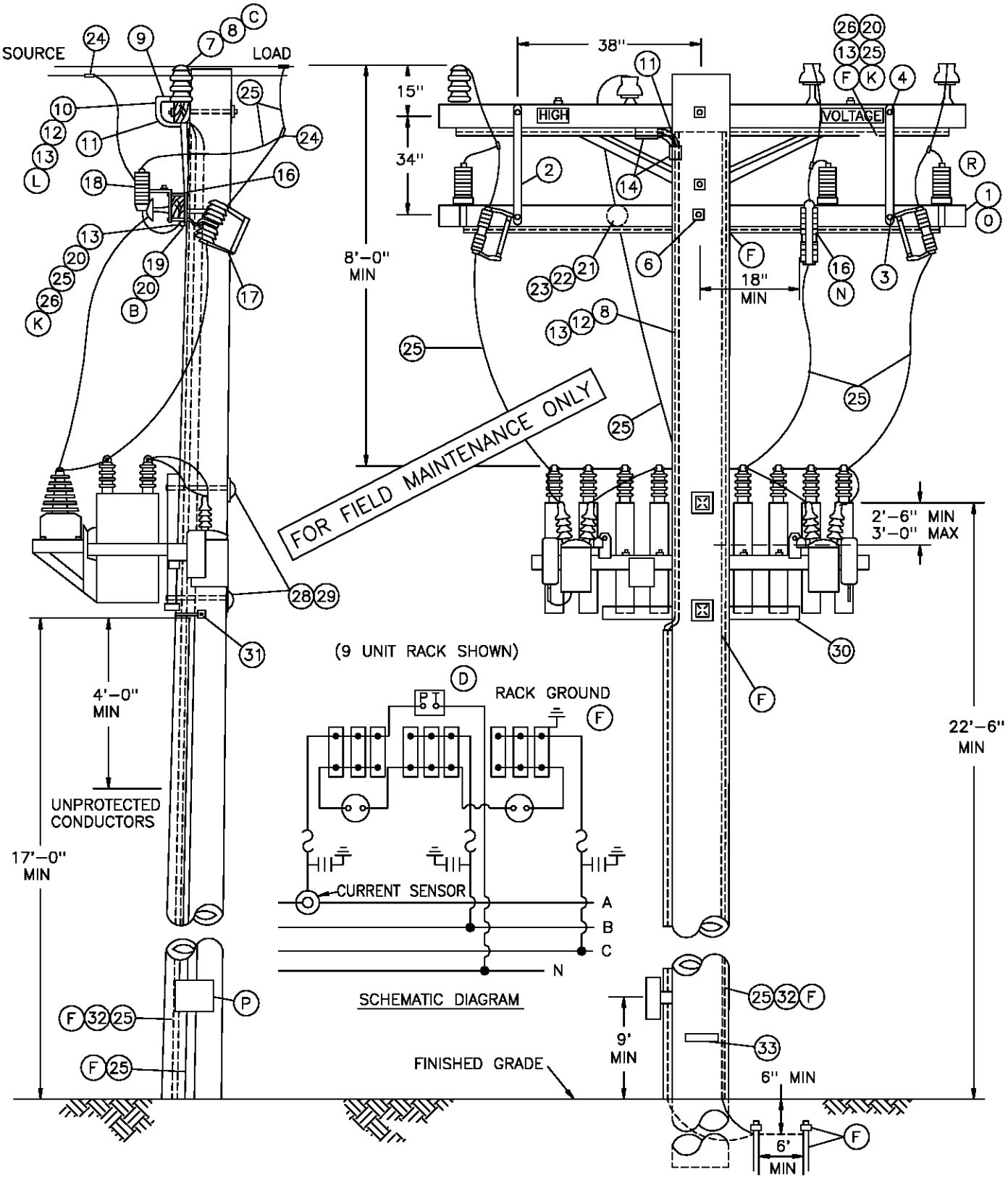

TABLE OF CONTENTS

1399.208 SUPERSEDES 1326.1 (12–1–98)	SDG&E ELECTRIC STANDARDS SWITCHED CAPACITORS – CURRENT SENSOR 12 & 12.47KV	DATE 12–1–98 APPD PSA / CMK

NOTES:

- SENSOR PRODUCES ONE VOLT FOR EACH 60 AMPERES OF LINE CURRENT. OPEN CIRCUIT VOLTAGE IS NOT SIGNIFICANTLY HIGH.
- CLASS OF POLE IS TO BE DETERMINED PER STANDARD 344–354.

BILL OF MATERIAL:

ITEM	DESCRIPTION		QUANTITY	STOCK NO. OR CONSTR STANDARD
1	CROSSARM, 3 3/4" X 5 3/4' X 10' – 0" (B)		1	294128
2	BRACE, FLAT, CROSSARM, 28" (O)		2	164192
3	BOLT, MACH, GALV, 3/8" X 4 1/2", 1 ROUND & 1 LOCK WASHER (O)		2	STD 392
4	BOLT, MACH, GALV, 1/2" X 5", 1 ROUND & 1 DBL COIL SPR WASH (O)		2	STD 392
5				
6	BOLT, MACH, GALV, 5/8" X (LENGTH AS REQ'D), 2 SQUARE & 1 DBL COIL SPRING WASHER		1	STD 392
7	STUD, INSULATOR		1	701760
8	SENSOR, CURRENT, COMPLETE WITH WHITE, GREEN AND BLACK INSULATED CONTROL WIRE		1	635820
9	TERMINAL ADAPTOR, PVC, 3/4"		1	102754
10	SLIP ELBOW, 90 PVC, 3/4"		2	322174
11	ELBOW, STANDARD RADIUS, PVC, 3/4"		2	322166
12	CONDUIT, PVC, TYPE 2, SCHED 40, 3/4"		15'	251328
13	STRAPS, PIPE, GALV, 3/4" & 2 – 1 3/4" ROOFING NAILS, GALV.		AS REQ'D	697888
			–	492192
14	COUPLING, PVC, 3/4"		2	280416
15				
16	BRACKET, DOUBLE CUTOUT/ARRESTER, FOR CROSSARM MOUNTING.		3	165442
17	CUTOUT, 12KV, 100A, WITH LOADBUSTER HOOKS		3	STD 1212
18	ARRESTER, LIGHTNING, 12KV		3	113248
19	WIRE, #8 BARE SOLID ANNEALED COPPER (B)		15' OR 1 LB	812928
20	STAPLES, WIRE, GALV, 1 1/4" (B)		AS REQ'D	678528
21	BOLT, MACH, GALV, 5/8" X (LENGTH AS REQ'D) 2 SQUARE AND 1 DOUBLE COIL SPRING WASHER		1	STD 392
22	PIN, TRANSFORMER ADAPTOR, 1" LEAD THREAD		1	529248
23	INSULATOR, LINE, 12KV NEUTRAL		1	429216
24	CONNECTOR, WIRE COMPRESSION, CU OR AL (SIZE AS REQ'D)		AS REQ'D	783–786
25	WIRE, #4 BARE STRANDED COPPER		130' OR 17 LBS	813760
26	MOULDING, OAK HARDWOOD, 1" X 8'		2	487200
27				
28	BOLT, MACH, GALV, 3/4" X (LENGTH AS REQ'D), 1 SQ CURV RIBBED & 1 DBL COIL SPRING WASHER		2	STD 392
29	COVER, BOLT PLASTIC & 6 – 1 3/4" NAILS, GALV		2	285696
			–	492192
30	CAPACITOR RACK – COMPLETE WITH CAPACITORS	600 KVAR (3 @ 200 KVAR)	1	564761
		900 KVAR (6 @ 150 KVAR)	(J) 1	564706
		1200 KVAR (3 @ 400 KVAR)	(M) 1	564770
		1350 KVAR (9 @ 150 KVAR)	(J) 1	564754
31	SCREW, LAG, GALV, 4"		2	621568
32	UNIT GROUND, COMPLETE		1	603136
33	TAG, STATION NUMBER		1	200 SECT.

FOR FIELD MAINTENANCE ONLY

TABLE OF CONTENTS

DATE 12-1-98 APPD PEA / CMK	SDG&E ELECTRIC STANDARDS SWITCHED CAPACITORS – CURRENT SENSOR 12 & 12.47KV	1399.209 SUPERSEDES 1326.2 (12-1-98)

OVERHEAD MACRO UNITS 12KV SWITCHED CAPACITOR W/CURRENT SENSOR		
KVAR	CONTROL	MU I.D.
600	VAR/VOLT OVERRIDE	C6CV
600	VOLT W/TIME BIAS	C6CTB
900	VAR/VOLT OVERRIDE	C9CV
900	VOLT W/TIME BIAS	C9CTB
1200	VAR/VOLT OVERRIDE	C12CV
1200	VOLT W/TIME BIAS	C12CTB
1350	VAR/VOLT OVERRIDE	C13CV
1350	VOLT W/TIME BIAS	C13CTB

INSTALLATION:

A. CAUTION: OPEN OIL SWITCHES BEFORE OPENING CUTOUTS.

Ⓑ BOND CUTOUTS IN HEAVY CONTAMINATION DISTRICTS AS SHOWN ON STANDARD 287. IN AREAS WHERE BONDING IS REQUIRED, TO AVOID BONDWIRE AND LIGHTNING ARRESTER GROUNDWIRE ON THE SAME CROSSARM, USE TWO CROSSARMS; ONE FOR CUTOUTS AND ONE FOR LIGHTNING ARRESTER.

Ⓒ THE CONTROL IS POLARITY SENSITIVE. WIRE AS SHOWN, ALWAYS FACE NIPPLE OF CURRENT SENSOR TOWARD LOAD, AND INSTALL CUTOUTS ON THE SOURCE SIDE.

Ⓓ THE H1 TERMINAL OF THE POTENTIAL TRANSFORMER MUST BE CONNECTED TO THE SAME PHASE AS THE CURRENT SENSOR.

Ⓕ CONNECT CAPACITOR RACK GROUND LEAD, CURRENT SENSOR BASE AND ALL INSULATOR PINS GROUND LEAD TO LIGHTNING ARRESTER GROUND. A SECOND GROUND WIRE IS REQUIRED FOR THE CONTROL PANEL TO BE CONNECTED ON THE SAME GROUND ROD. COIL LOOSE END OF CONTROL PANEL GROUND WIRE AND STAPLE TO POLE (TO BE WORKED BY SERVICE CREW).

G. DO NOT TIE CAPACITOR BANK NEUTRAL TO 12KV CIRCUIT NEUTRAL. IT IS TO REMAIN FLOATING.

H. RACKS THAT CONTAIN POTENTIAL TRANSFORMERS WITH METAL TANKS ARE TO BE INSULATED FROM RACK BEFORE REINSTALLATION.

I. CAPACITORS MUST BE INSTALLED ON POLES ACCESSIBLE BY BUCKET TRUCKS.

Ⓙ NO LONGER PURCHASED.

FOR FIELD MAINTENANCE ONLY

Ⓚ PVC CONDUIT 3/4" SCHEDULE 40 MAY BE USED IN PLACE OF HARDWOOD MOULDING.

Ⓛ REMOVE STEEL NIPPLE FROM CURRENT SENSOR BASE.

Ⓜ ON VAR CONTROL BANKS, REPLACE 12,000 – 120 POTENTIAL TRANSFORMER (STOCK #762708) WITH 7200–120 POTENTIAL TRANSFORMER (STOCK #762734).

Ⓝ DRILL THROUGH CROSSARM 1" UP FROM LOWER EDGE SO THAT LOWER CROSSARM MOUNTING BRACKET BOLT DOES NOT INTERFERE WITH PVC CONDUIT.

Ⓞ WHEN LA/CO CROSSARM AND CAPACITORS CANNOT BE INSTALLED ON THE SAME SIDE OF THE POLE AS AN EXISTING LINEARM, DELETE ITEMS 2, 3, & 4. INSTEAD, FIELD DRILL LA/CO CROSSARM FOR 2 – 36" FLAT BRACES. SECURE BRACES TO POLE WITH A LAG SCREW. (SEE STD. 380.1, ITEM 1 FOR DRILLING MEASUREMENTS).

REFERENCE:

Ⓟ SHOWN FOR ILLUSTRATIVE PURPOSES ONLY. SEE STANDARD 1330 FOR CONTROL INSTALLATION AND MATERIAL.

Ⓠ PVC CONDUIT IS NOT PERMITTED IN THE CLIMBING SPACE, G.O. 95 RULE 22.2(C).

Ⓡ SECTIONALIZING CUTOUT INSTALLATION MAY VARY WITH POSITION OF NEUTRAL CONDUCTOR – SEE STANDARD 1240.

TABLE OF CONTENTS

1399.210 SUPERSEDES 1326.3 (12–1–98)	SDG&E ELECTRIC STANDARDS SWITCHED CAPACITORS – CURRENT SENSOR 12 & 12.47KV	DATE 12–1–98 APPD PLA/BSG

SCOPE: THIS STANDARD SHOWS THE PREFERRED METHOD OF CONSTRUCTION FOR A FIXED CAPACITOR WHEN A NEW POLE IS REQUIRED.

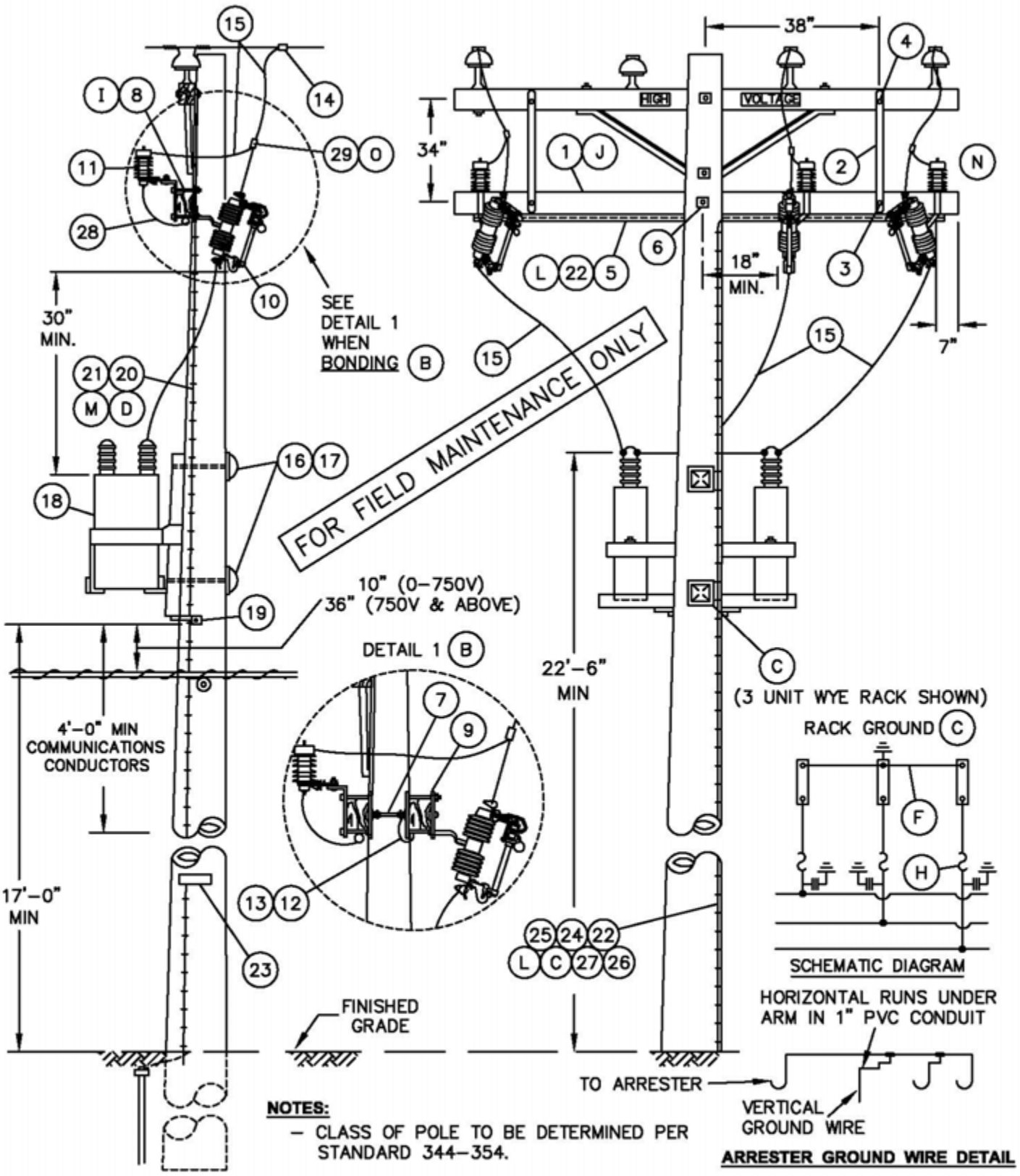

NOTES:

– CLASS OF POLE TO BE DETERMINED PER STANDARD 344–354.

TABLE OF CONTENTS

	SDG&E ELECTRIC STANDARDS	
1399.211	FIXED CAPACITOR INSTALLATION, 4KV WYE 4KV WYEGROUNDED RACK	DATE 6-9-09 APPD PBA /MC

OVERHEAD MACRO UNITS 4KV CAPACITOR STATIONS		
FIXED–UNGROUNDED (FIG. 2)		
4	130	C4F3P

FOR FIELD MAINTENANCE ONLY

INSTALLATION:

A. CAPACITORS MUST BE INSTALLED ON POLES ACCESSIBLE BY BUCKET TRUCK.

(B) BOND CUTOUTS IN HEAVY CONTAMINATION DISTRICTS AS SHOWN ON STANDARD 287. IN AREAS WHERE BONDING IS REQUIRED, TO AVOID BONDWIRE AND LIGHTNING ARRESTER GROUNDWIRE ON THE SAME CROSSARM, USE TWO CROSSARMS; ONE FOR CUTOUTS AND ONE FOR LIGHTNING ARRESTERS.

(C) CONNECT CAPACITOR RACK GROUND LEAD TO LIGHTNING ARRESTER GROUND

(D) RUN 1/2" SCHEDULE 40 PVC CONDUIT WITH LIGHTNING ARRESTER GROUND FROM LIGHTNING ARRESTER ARM TO A MINIMUM OF 2 FEET BELOW CAPACITOR RACK, THEN CONTINUE DOWN THE POLE USING PVC COVERED GROUND WIRE.

(G) TEN INCHES FROM 0–750V CONDUCTORS BELOW, 12 INCHES FOR CONDUCTORS OF 750–7500V, 18 INCHES FOR CONDUCTORS OF 7500–22,500V PER G.O. 95 RULE 58.1–D.

(H) FUSE STATION ACCORDING TO CAPACITOR FUSING TABLE, STANDARD 1309.

(I) DRILL THROUGH CROSSARM 1" UP FROM LOWER EDGE SO THAT LOWER CROSSARM MOUNTING BRACKET BOLT DOES NOT INTERFERE WITH PVC CONDUIT.

(J) WHEN LA/CO CROSSARM AND CAPACITORS CANNOT BE INSTALLED ON THE SAME SIDE OF THE POLE AS AN EXISTING LINEARM, DELETE ITEMS 2, 3, & 4. INSTEAD, FIELD DRILL LA/CO CROSSARM FOR 2–36" FLATBRACES. SECURE BRACES TO POLE WITH A LAG SCREW. (SEE STD. 380.1, ITEM 1

REFERENCE:

(L) FOR GROUNDING REQUIREMENTS AND APPLICATION – SEE STANDARD 1002.

(M) PVC CONDUIT IS NOT PERMITTED IN THE CLIMBING SPACE PER G. O. 95, RULE 22.2B.

(N) SECTIONALIZING CUTOUT INSTALLATION MAY VARY WITH POSITION OF NEUTRAL CONDUCTOR – SEE STANDARD 1240.

(O) FOR HOT LINE CLAMP CONNECTION, SEE STANDARD 788.

TABLE OF CONTENTS

DATE 6-9-09 APPD PBA /MC	SDG&E ELECTRIC STANDARDS FIXED CAPACITOR INSTALLATION, 4KV WYE	1399.212

BILL OF MATERIAL:

ITEM	DESCRIPTION		QUANTITY (B) UNBONDED	QUANTITY (B) BONDED	STOCK NO. OR CONSTR STANDARD	ASSEMBLY UNIT
1	CROSSARM, 3 3/4" X 5 3/4" X 10' – 0" (B)		1	2	294128	–
2	BRACE, FLAT, CROSSARM, 36" (J)		2	2	164224	–
3	BOLT, MACH, GALV, 3/8" X 4 1/2", 1 ROUND & 1 LOCK WASHER (J)		2	2	STD 392	–
4	BOLT, MACH, GALV, 1/2" X 5", 1 ROUND & 1 DBL COIL SPR WASH (J)		2	2	STD 392	–
5	CONDUIT, PVC, TYPE 2, SCHEDULE 40, 1" AND		10'	10'	251200	–
	STRAPS, PIPE, GALV. 1" WITH 1 3/4" ROOFING NAILS		AS REQ'D		697792	–
6	BOLT, MACH, GALV, 5/8" X (LENGTH AS REQ'D), 2 SQUARE & 1 DBL COIL SPRING WASHER		1	1	STD 392	–
7	BOLT, SPACE, GALV, 5/8" X (LENGTH AS REQ'D), 2 ROUND 4 SQUARE, 2 DOUBLE COIL SPRING WASHERS & 2 NUTS		–	2	STD 392	–
8	BRACKET, DOUBLE CUTOUT/ARRESTER, FOR CROSSARM MOUNTING.		3	–	165442	–
9	BRACKET, ARRESTER OR CUTOUT		–	6	166070	–
10	CUTOUT, 12KV, 100A, WITH LOADBUSTER HOOKS		3	3	STD 1212	–
11	ARRESTER, LIGHTNING (SEE STD. 1247 FOR 4KV APPLICATION)	4 KV	3	3	113216	–
	OR	12 KV	3	3	113248	–
12	WIRE, #8 BARE SOLID ANNEALED COPPER (B)	FT	–	15	812928	–
		LB	–	1		
13	STAPLES, WIRE, GALV, 1 1/4" (B)		AS REQ'D		678528	–
14	CONNECTOR, WIRE COMPRESSION, CU OR AL (SIZE AS REQ'D)		AS REQ'D		783–786	–
15	WIRE, #4 BARE STRANDED COPPER	FT	100		813760	–
		LB	13			
16	BOLT, MACH, GALV, 3/4" X (LENGTH AS REQ'D), 1 SQ CURV RIBBED & 1 DBL COIL SPRING WASHER		2	2	STD 392	–
17	COVER, BOLT PLASTIC &		2	2	285696	–
	6 – 1 3/4" NAILS, GALV		–	–	492192	–
18	CAPACITOR RACK – COMPLETE WITH CAPACITORS	4KV 130 KVAR (3 @ 400 KVAR)	1	1	564776	–
19	SCREW, LAG, GALV, 4"		2	2	621568	–
20	CONDUIT, PVC, TYPE 2, SCHEDULE 40, 1/2" (D)		10'	10'	251168	–
21	STRAPS, PIPE, GALV, 1/2", AND		AS REQ'D		697728	–
	2– 1 3/4" ROOFING NAILS, GALV.		–	–	492192	–
22	#4 CU SOLID GROUND WIRE, PVC COVERED		50'	50'	812490	GNDPVC
23	TAG, STATION NUMBER		1	1	200 SECT.	–
24	GROUND ROD, 5/8" X 8', COPPERWELD		1	1	603072	GNDPVC
25	COPPER BONDED GROUND CONNECTOR		1	1	259010	–
26	GROUND ENHANCING POWER SOLUTION (GEM)		AS REQ'D		424390	–
27	GALVANIZED STAPLES FOR PVC COVERED GROUND WIRE		AS REQ'D		678562	–
28	FLEXIBLE ARRESTER GROUND STRAP		AS REQ'D		698754	–
29	HOT LINE CLAMP		3	3	227680	–

FOR FIELD MAINTENANCE ONLY

TABLE OF CONTENTS

1399.213	SDG&E ELECTRIC STANDARDS FIXED CAPACITOR INSTALLATION, 4KV WYE	DATE 6-9-09 APPD PBA /MC

TABLE OF CONTENTS

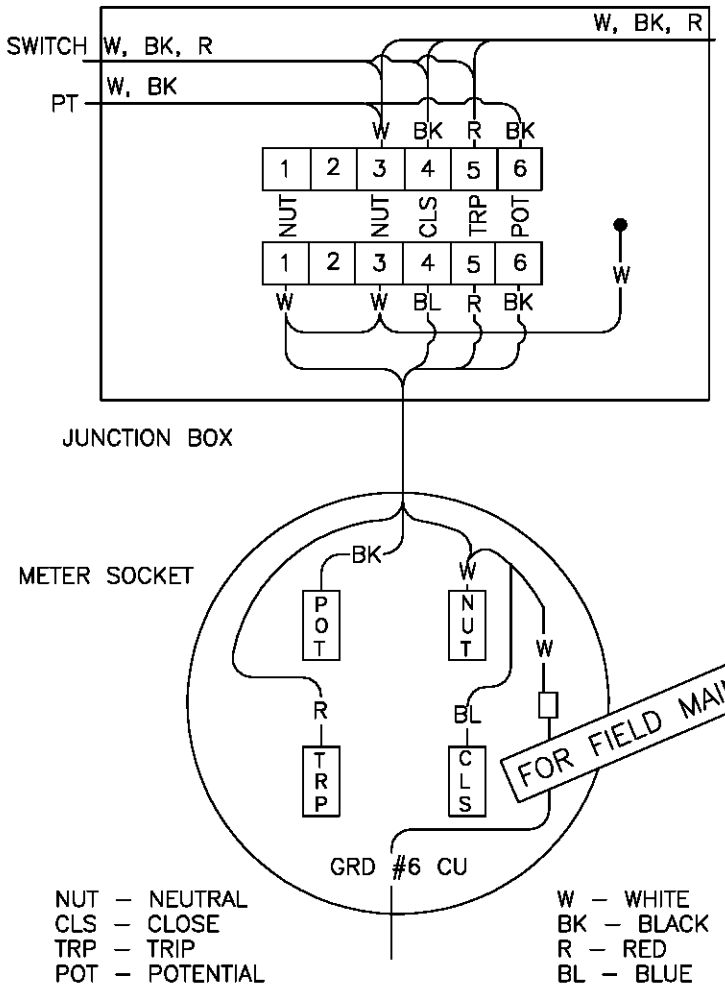

CAPACITOR CONTROL WIRING
VOLTAGE W/TIME BIAS

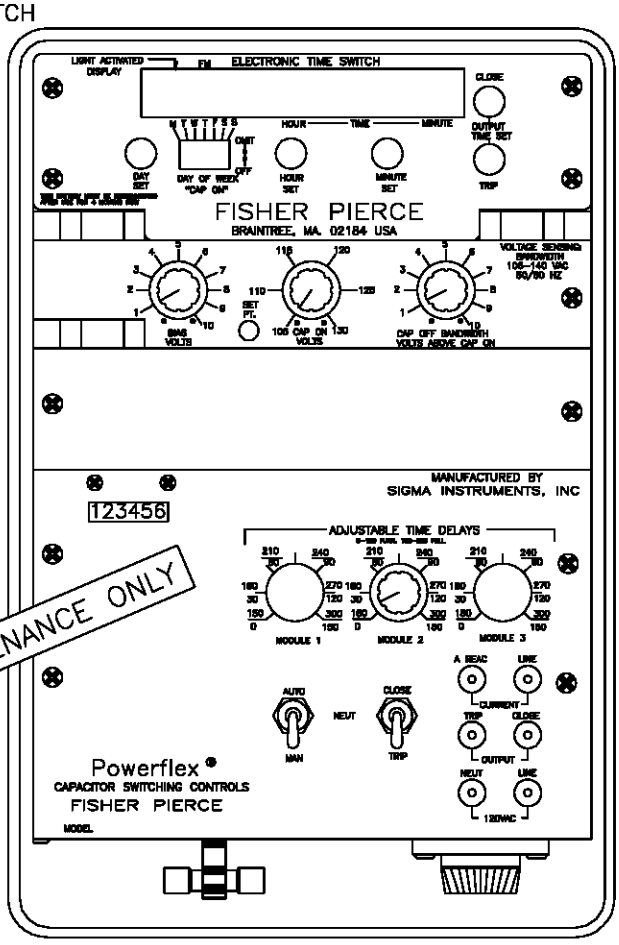

CONTROL PANEL
FISHER PIERCE (MODEL 2416)

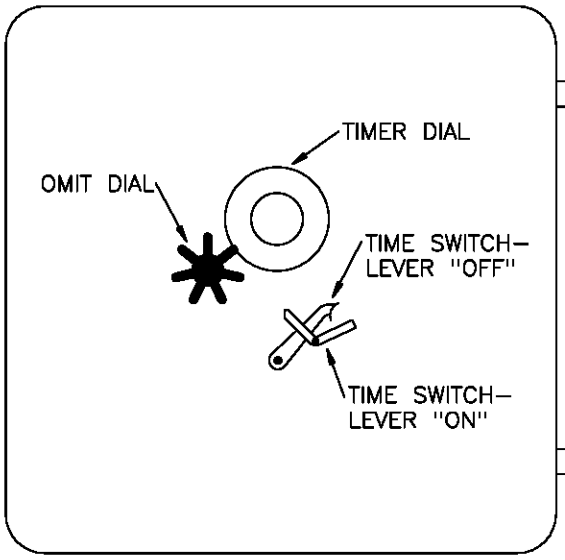

CONTROL PANEL – SANGAMO (MODEL VS)

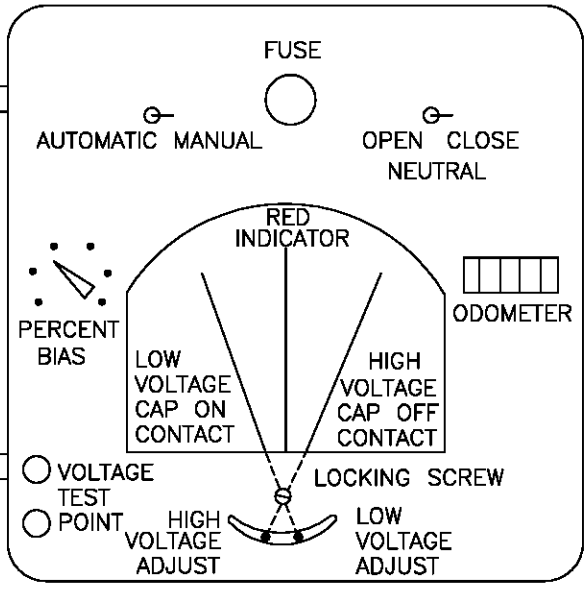

FUSE REPLACEMENT 10 AMP BUSS FNM10

DATE 1–1–2000 APPD PBA / BDG	SDG&E ELECTRIC STANDARDS CAPACITOR CONTROL MATERIAL AND INSTALLATION VOLTAGE WITH TIME BIAS (TYPE 'TB')	1399.301 SUPERSEDES 1330.2 (1–1–90)

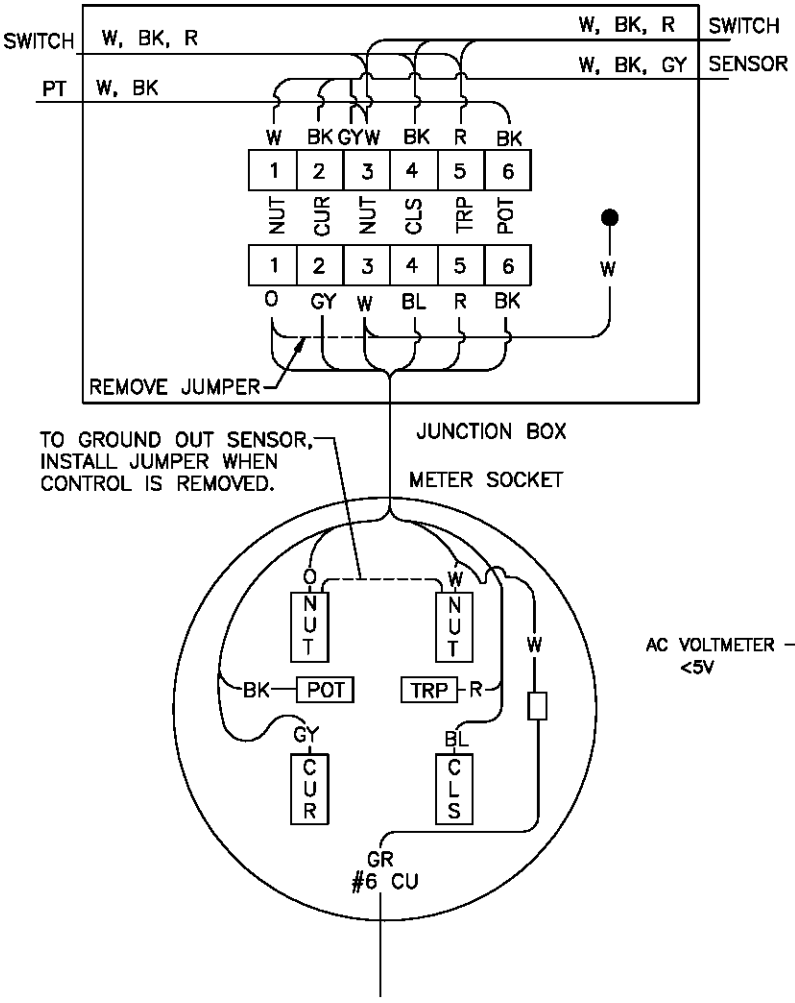

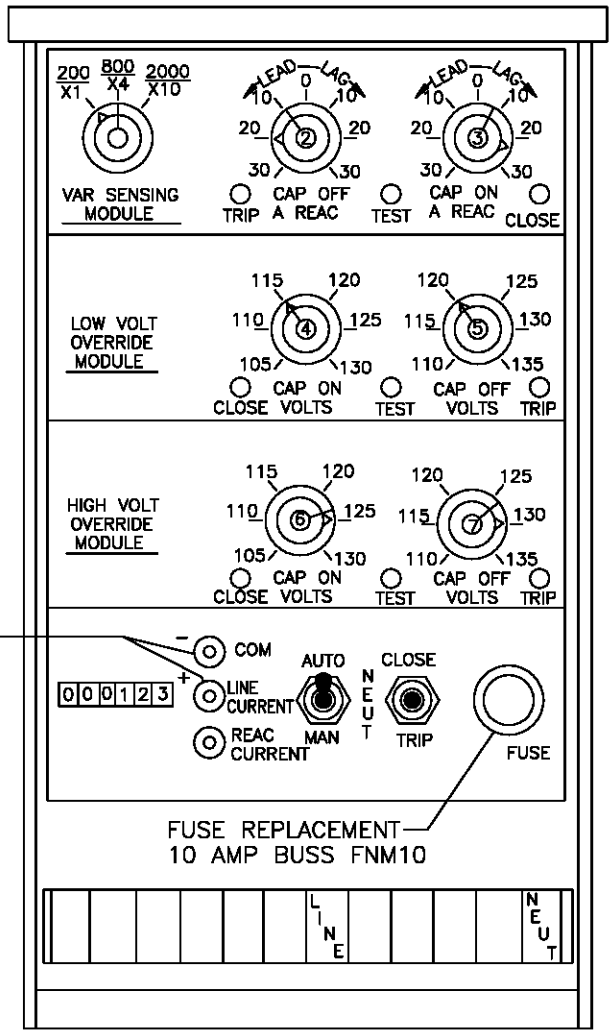

CONTROL WIRE LEGEND

NUT – NEUTRAL
CUR – CURRENT SENSOR POTENTIAL
CLS – CLOSE
TRP – TRIP
POT – POTENTIAL

W – WHITE
BK – BLACK
GY – GREEN
R – RED
O – ORANGE
BL – BLUE

FOR FIELD MAINTENANCE ONLY

CONTROL PANEL
FISHER PIERCE (MODEL 4604)

CAPACITOR CONTROL WIRING
VAR W/VOLTAGE OVERRIDE

TABLE OF CONTENTS

1399.302 SUPERSEDES 1330.3 (1–1–90)	SDG&E ELECTRIC STANDARDS CAPACITOR CONTROL MATERIAL AND INSTALLATION TYPE 'VAR'	DATE 1–1–2000 APPD PJA/DSG

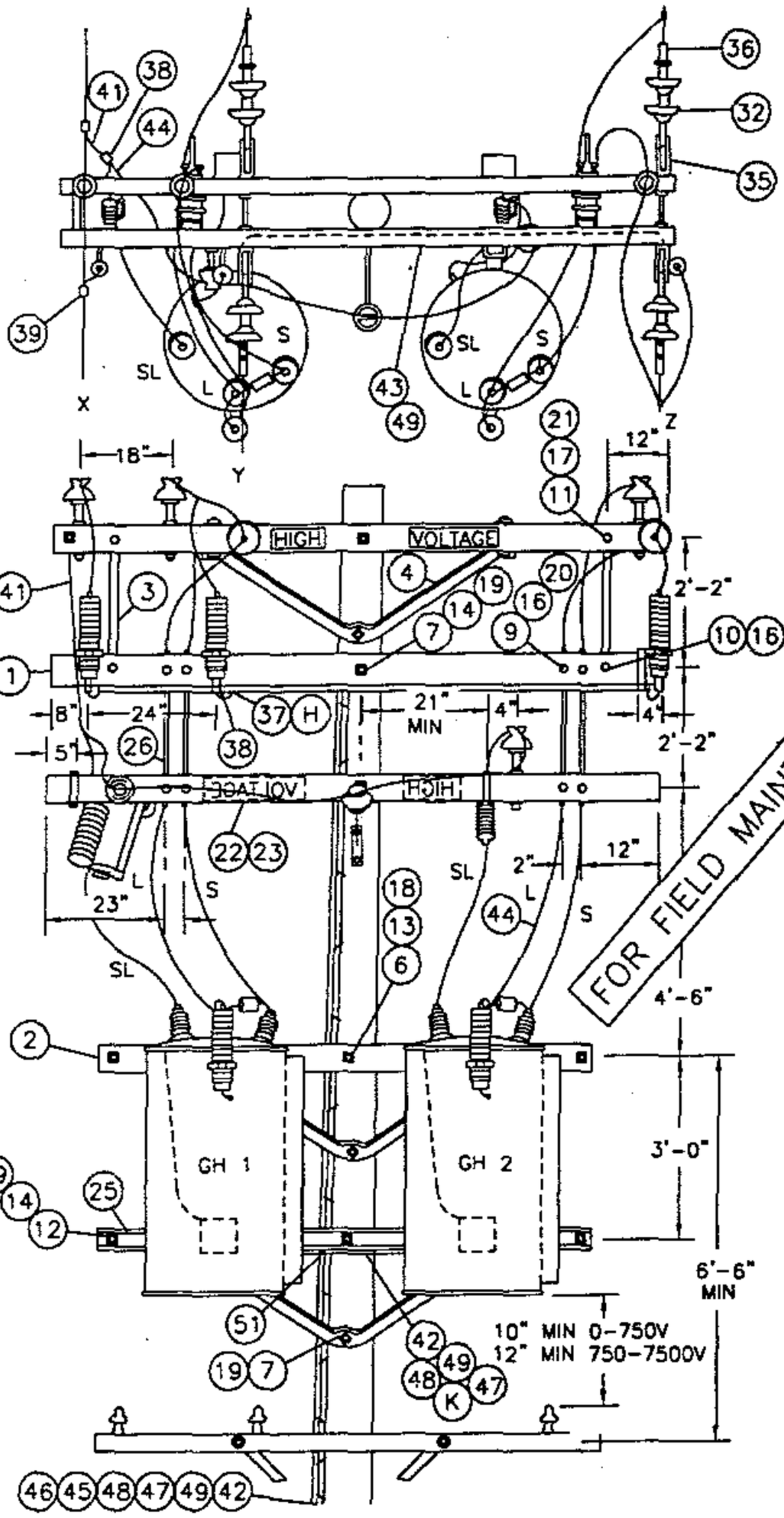

SCHEMATIC DIAGRAM OF A 12KV OPEN DELTA REGULATOR STATION

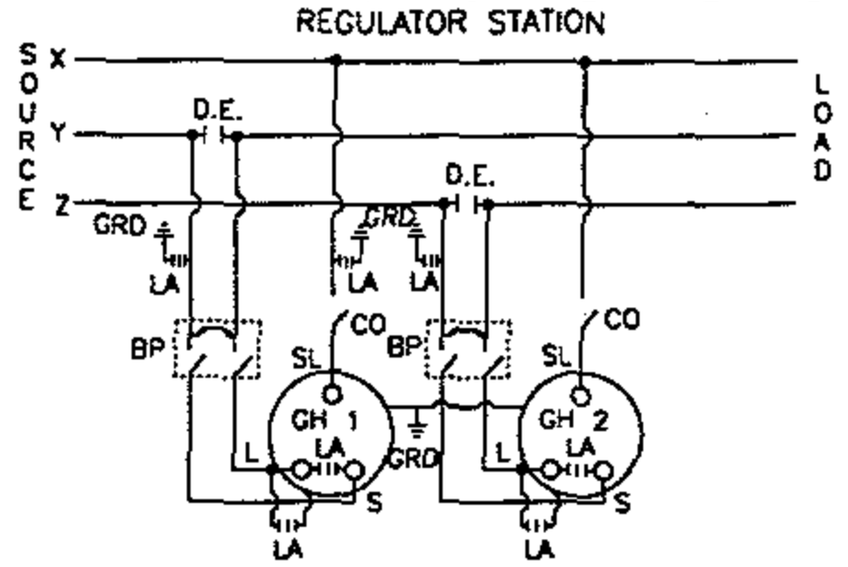

FOR FIELD MAINTENANCE ONLY

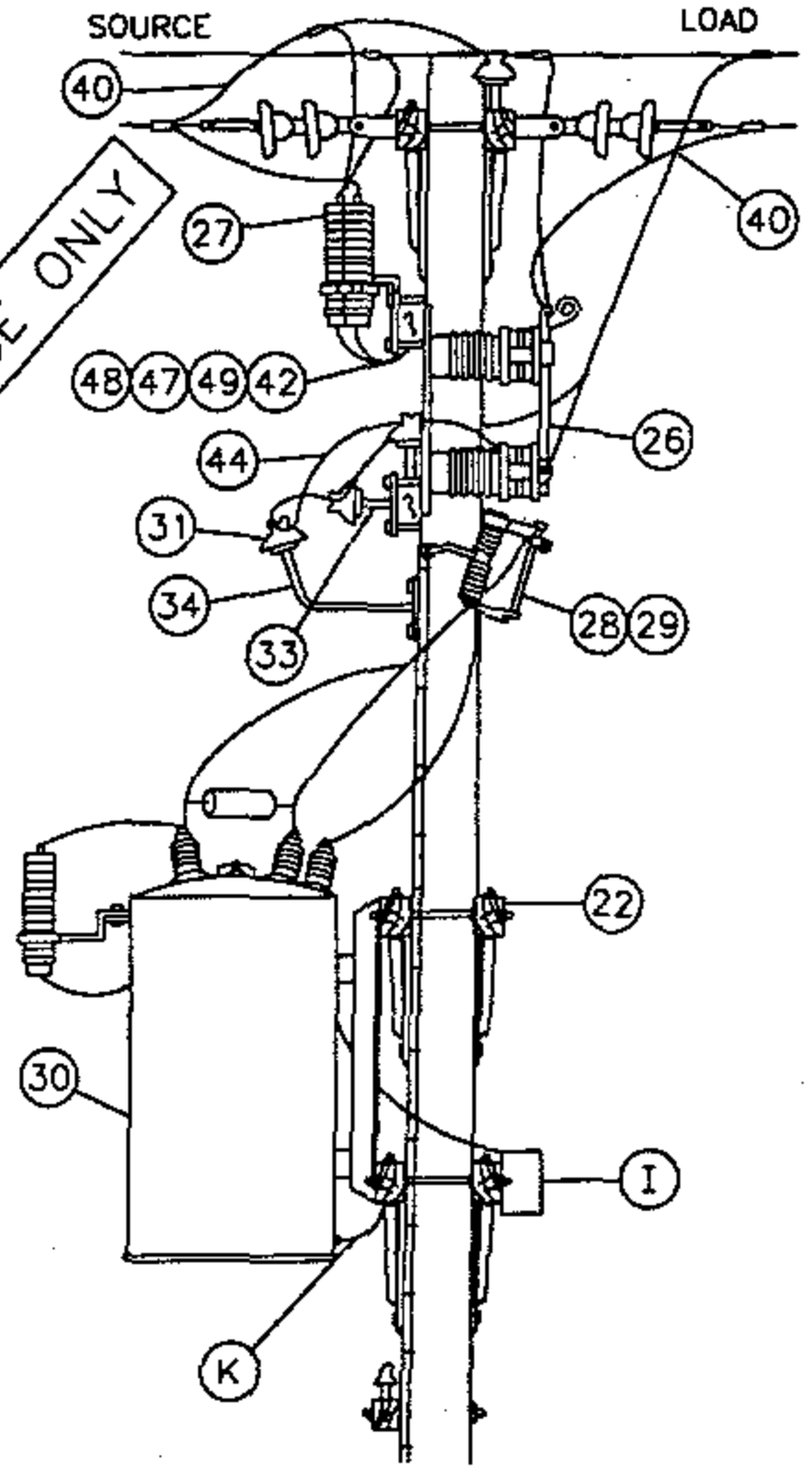

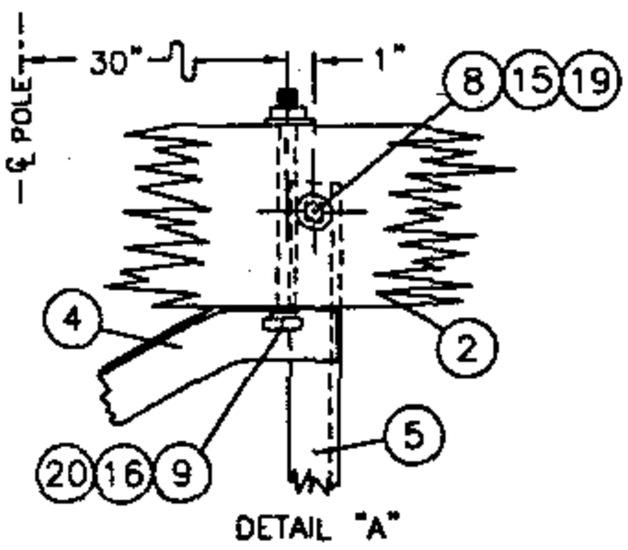

DETAIL "A"

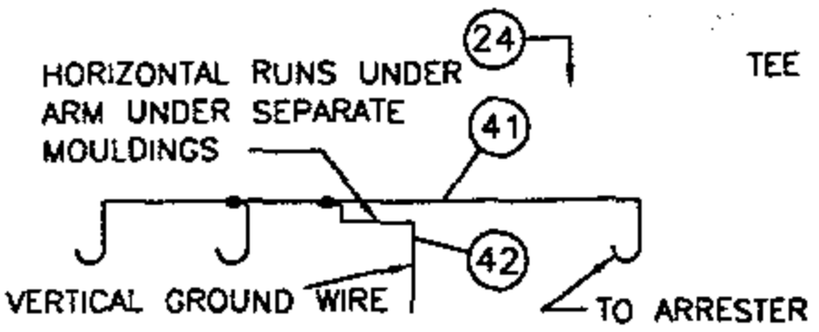

ARRESTER GROUND WIRE DETAIL

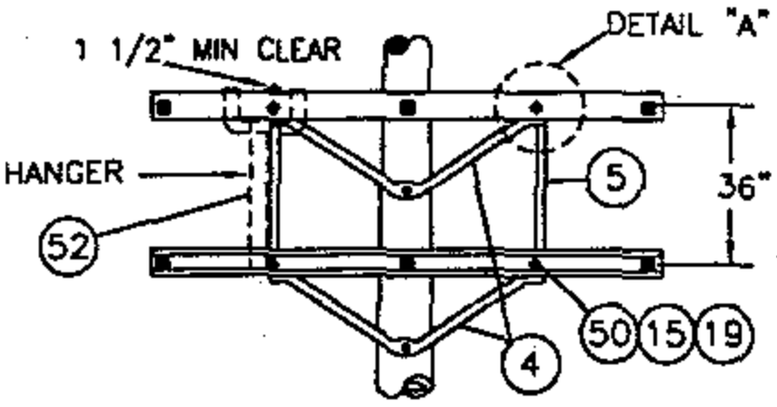

FRAMING DETAIL
FOR 2-12KV STEP VOLTAGE REGULATORS

1399.401 SUPERSEDES 1348.1 1-1-96	SDG&E ELECTRIC STANDARDS STEP-VOLTAGE REGULATOR STATION, OPEN DELTA, 12KV	DATE 1-1-96 APPD PA 1/29/96

TABLE OF CONTENTS

NOTES:

A. CAUTION: WHEN CONNECTING A STATION, REGULATORS MUST BE ON NEUTRAL. CLOSE CUTOUT TO SL BUSHING BEFORE CLOSING BYPASS DISCONNECT ON THAT POLE. WHEN DISCONNECTING A STATION, PUT REGULATORS ON NEUTRAL, AND OPEN BYPASS DISCONNECT BEFORE OPENING CUTOUT TO SL BUSHING. THIS AVOIDS A SERIOUS OVERLOAD CONDITION.

B. ON NEW CONSTRUCTION, USE AN EXTRA HEAVY CLASS ONE POLE WITH 10" MIN TOP DIA.

(C) USE TWO GROUND RODS FOR THE ARRESTERS AND TANKS. ALL GROUND RODS SHOULD BE SPACED A MINIMUM OF SIX FEET APART.

(D) UNIT GROUND COMPLETE, ORDER 603136.

F. BOND ALL CUTOUTS IN HEAVY CONTAMINATION DISTRICT AS IDENTIFIED ON STANDARDS PAGE 287.

G. BOND DEAD-END HARDWARE

(H) INTERCONNECT ARRESTER GROUND LEAD DISCONNECTS WITH #6 BARE COPPER AND GROUND IT WITH #2 BARE COPPER NEAR CENTER ARRESTER.

(I) CONTROLS WILL BE MOUNTED BY KEARNY MAINTENANCE.

J. INSTALL DOUBLE COIL SPRING WASHER ON END OF BOLT WHICH ATTACHES TO LARGEST METALLIC OBJECT, SUCH AS A BRACKET OR BRACE.

(K) REGULATOR TANKS SHALL BE PERMANENTLY GROUNDED.

ITEM			DESCRIPTION	QUANTITY	STOCK NO. OR CONSTR STD
PTF	LTI	OCD			
1			CROSSARM 3 3/4" X 5 3/4" X 10' - 0"	3	380
2			CROSSARM 3 3/4" X 5 3/4" X 8' - 0"	4	380
3			BRACE, FLAT CROSSARM 28"	2	164192
4			BRACE, ANGLE CROSSARM 5' - 0"	5	164128
5			BRACE, VERTICAL 36"	2	164256
6			BOLT, MACH 3/4" X __"	2	100 SECTION
7			BOLT, MACH 5/8" X __"	4	100 SECTION
8			BOLT, MACH 5/8" X 5"	2	155488
9			BOLT, MACH 1/2" X 7"	16	153120
10			BOLT, MACH 1/2" X 5"	2	153024
11			BOLT, MACH 3/8" X 5"	2	154368
12			BOLT, SPACE 5/8" X __"	7	100 SECTION
13			WASHER, 3" SQ FLAT	4	799104
14			WASHER, 2 1/4" SQ FLAT	28	799040
15			WASHER, 5/8" ROUND	4	800320
16			WASHER, 1/2" ROUND	20	800192
17			WASHER, 3/8" ROUND	2	800288
18			WASHER, 3/4" SPRING DBL COIL	2	798496
19			WASHER, 5/8" SPRING DBL COIL	21	798560
20			WASHER, 1/2" SPRING DBL COIL	20	798464
21			WASHER, 3/8" SPRING DBL COIL	2	798528
22			SIGN, HIGH VOLTAGE	2	647648
23			NAILS, ROOFING #8 GALV	16	492224
24			STEPS, POLE	19	692992
25			STRIP, COVER 1 1/8" X 3 5/8" X 8' - 0" (2X4S4S)	1	699328
	26		SWITCH BYPASS	2	706944
	27		ARRESTER, LIGHTNING (12KV)	3	113248
	28		CUTOUT, 12KV 100 AMP WITH LOAD BUSTER HOOKS	2	1200 SECTION
	29		BLADE, DISCONNECT CUTOUT	2	1200 SECTION
	30		REGULATOR, STEP VOLTAGE 1Ø, COMPLETE WITH HANGERS	2	1300 SECTION
	31		INSULATOR, PIN TYPE (CLASS AS REQ'D)	3	700 SECTION
		32	INSULATOR, SUSPENSION	8	700 SECTION
33			PIN, INSULATOR (AS REQUIRED BY ITEM 31)	2	532___
34			BRACKET, INSULATOR (AS REQUIRED BY ITEM 31)	1	100 SECTION
		35	CLEVIS, DEAD END CLOSED	4	235712
		36	CLAMPS, DEAD END	4	700 SECTION
	37		CONNECTOR, COMPRESSION (#2 TO #6)	2	257792
	38		CONNECTOR, COMPRESSION (#6 TO #6)	2	257952
	39		CONNECTORS, WIRE	6	700 SECTION
	40		WIRE, BARE STRANDED COPPER #4	(2.5#) 20'	813760
	41		WIRE, BARE STRANDED COPPER #6	(2.5#) 30'	813536
	42		WIRE, BARE STRANDED COPPER #2	(9.2#) 45'	813664
	43		WIRE, #8 ANNEALED SOLID COPPER	(.75#) 15'	812928
	44		WIRE, #4 SOLID WP COPPER	(5.0#) 36'	812480
	45		ROD, GROUND (C)(D)	2	603072
	46		CLAMP, GROUND ROD (D)	2	230016
	47		MOULDING, HARDWOOD #1 (D)	50'	487200
	48		STAPLES, GALV 3" X 1 1/16" X 1/4" (D)	35	678560
	49		STAPLES, FENCE GALV 1 1/4" (D)	30	678528
50			BOLT, MACH 5/8" X 7"	2	155552
51			CONNECTOR, COMPRESSION (#2 TO #2)	1	257760
	52		HANGER, TRANSFORMER T-2	2	402944

FOR FIELD MAINTENANCE ONLY

TABLE OF CONTENTS

DATE 1-1-96 APPD PLA/DSG	SDG&E ELECTRIC STANDARDS STEP VOLTAGE REGULATOR STATION, OPEN DELTA, 12KV	1399.402 SUPERSEDES 1348.2 1-1-96

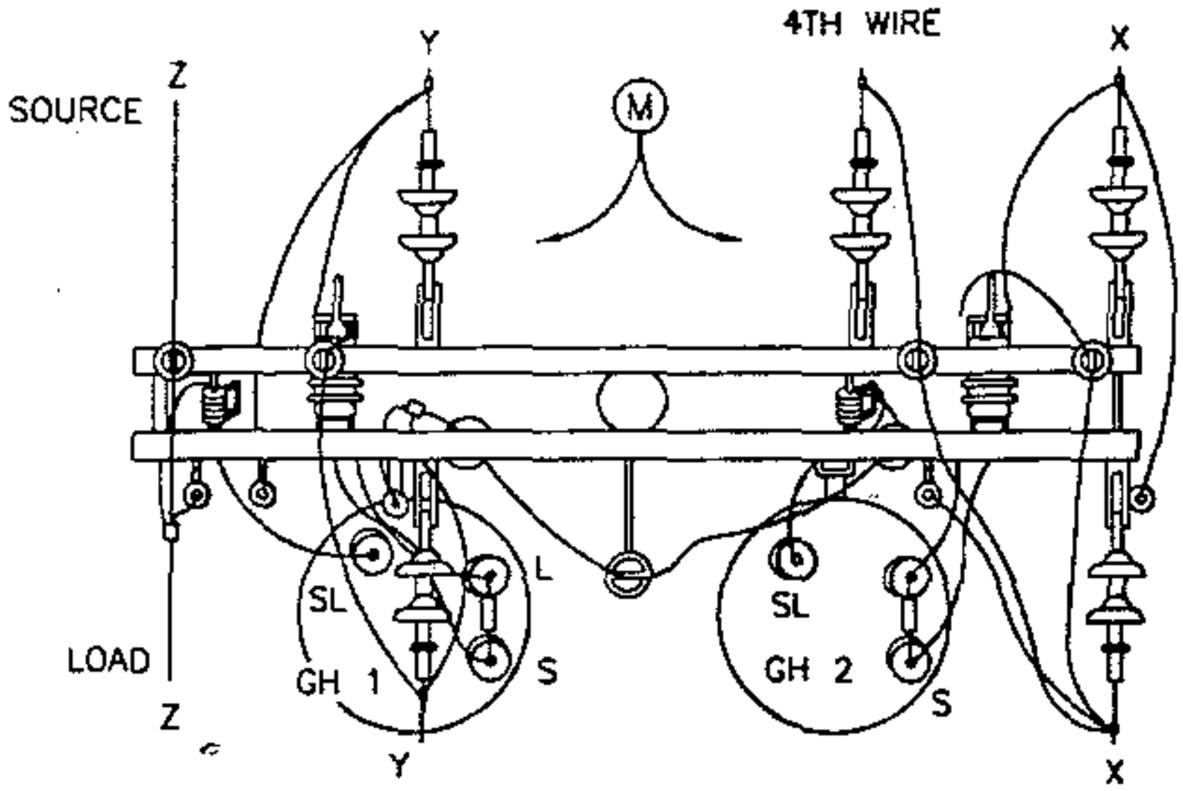

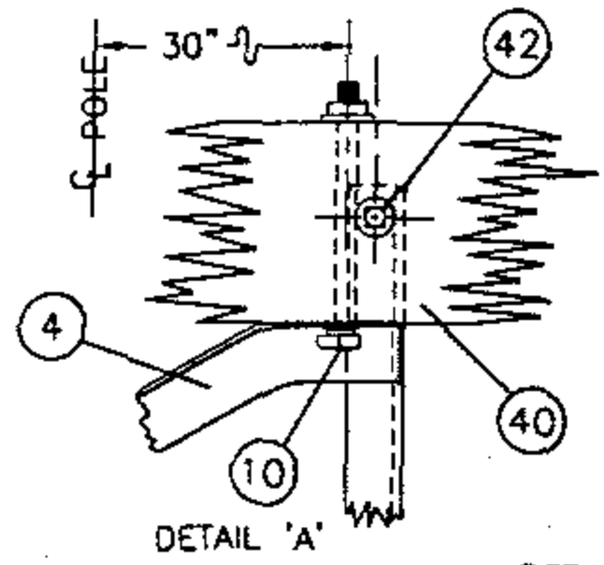

DETAIL 'A'

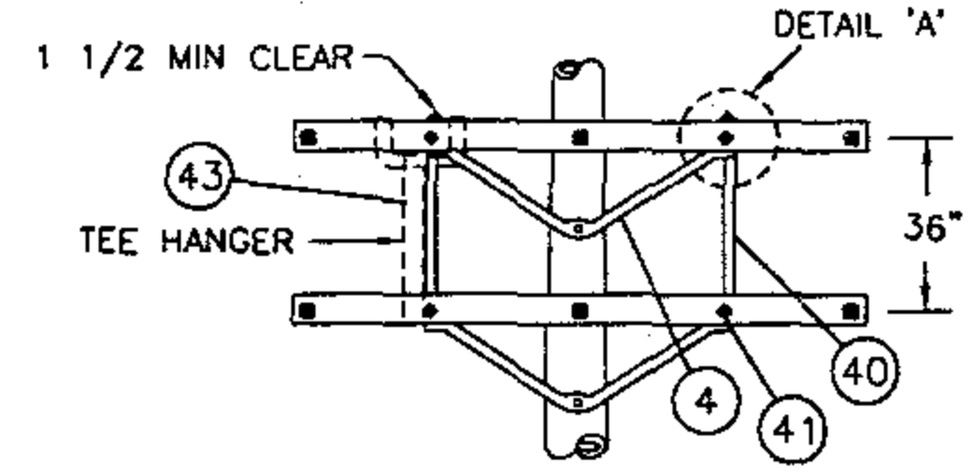

FRAMING DETAIL
FOR 2-12KV STEP-VOLTAGE REGULATORS

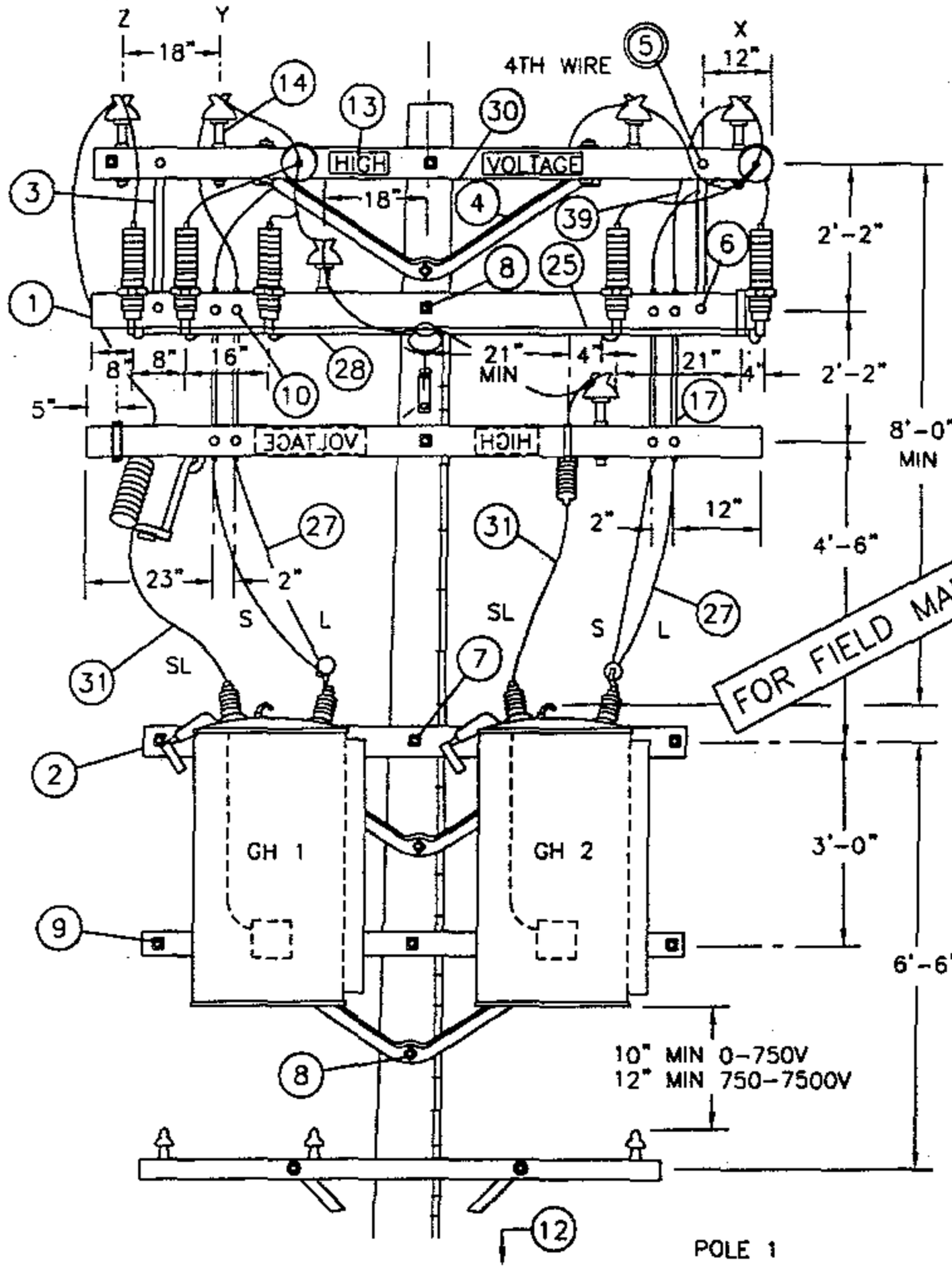

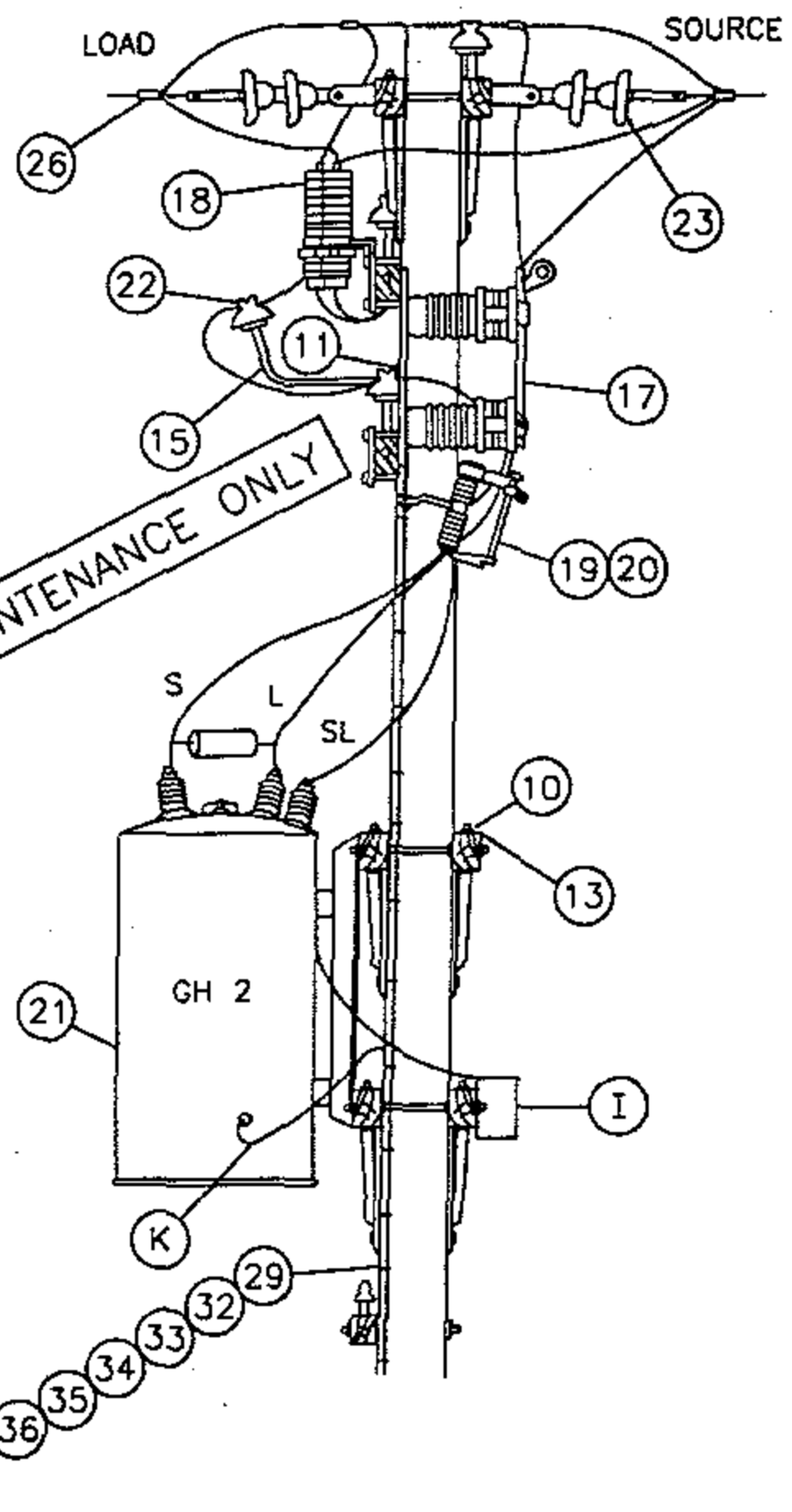

DATE 1-1-96 APPD PA/BSG	SDG&E ELECTRIC STANDARDS STEP-VOLTAGE REGULATOR STATION, CLOSED DELTA, 12KV, TWO POLES	1399.403 SUPERSEDES 1349.1 1-1-96

TABLE OF CONTENTS

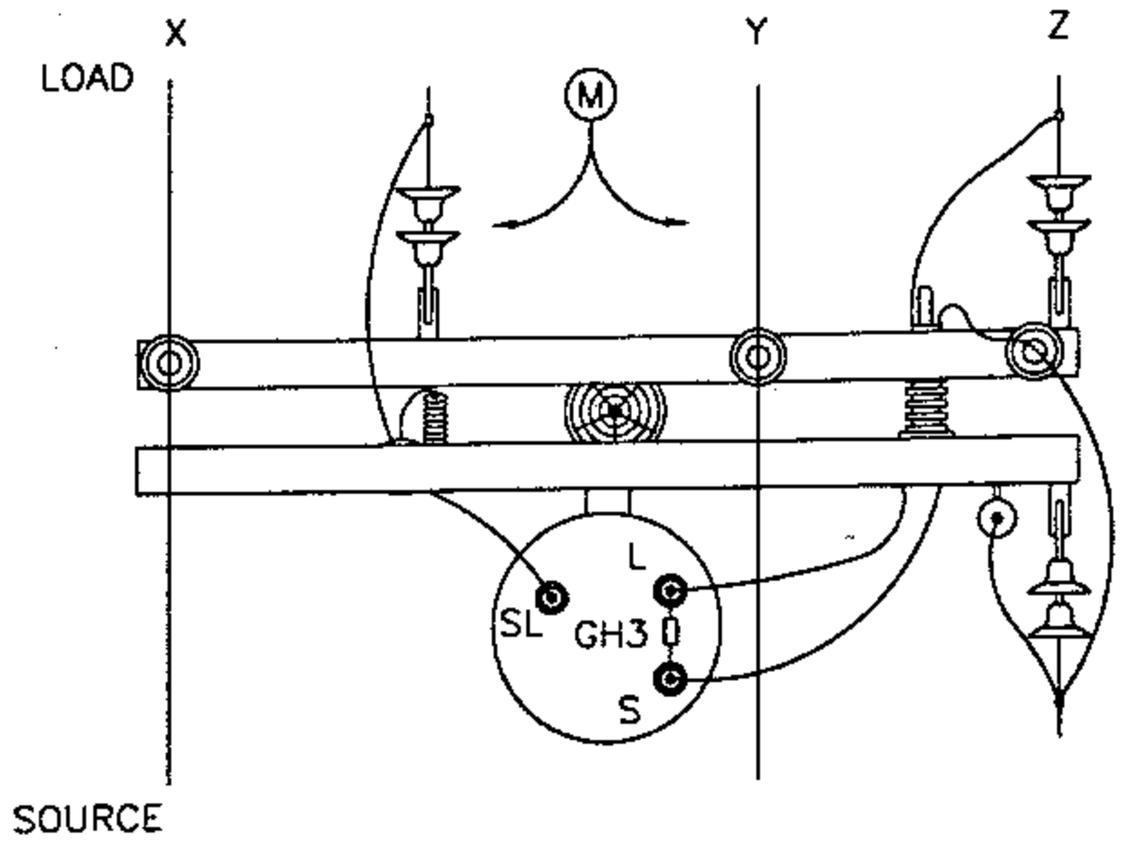

SCHEMATIC DIAGRAM OF A 12KV CLOSED DELTA REGULATOR STATION

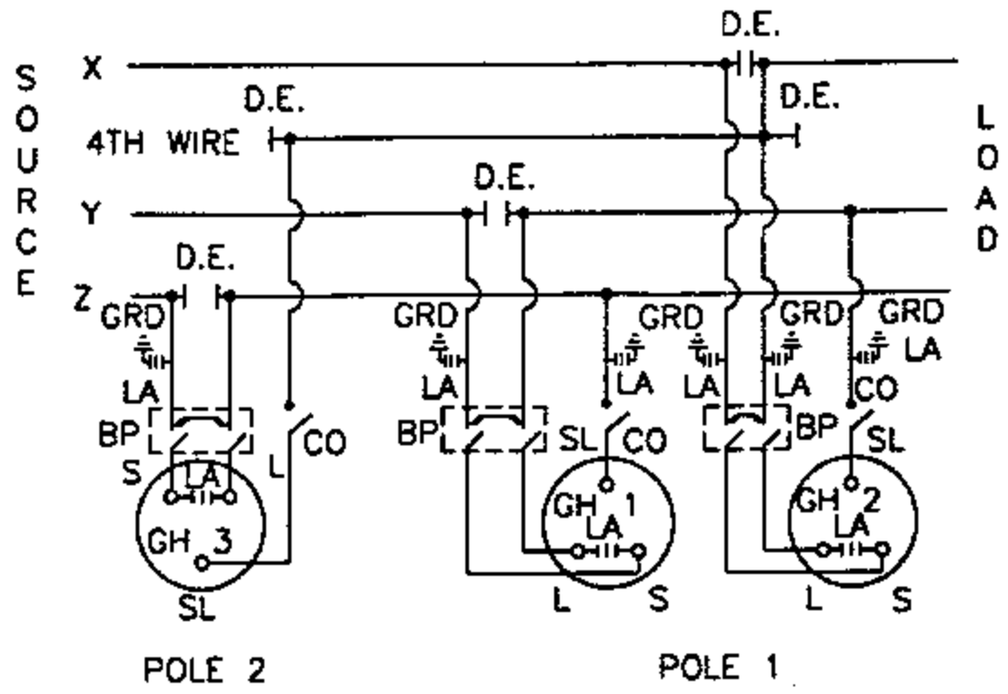

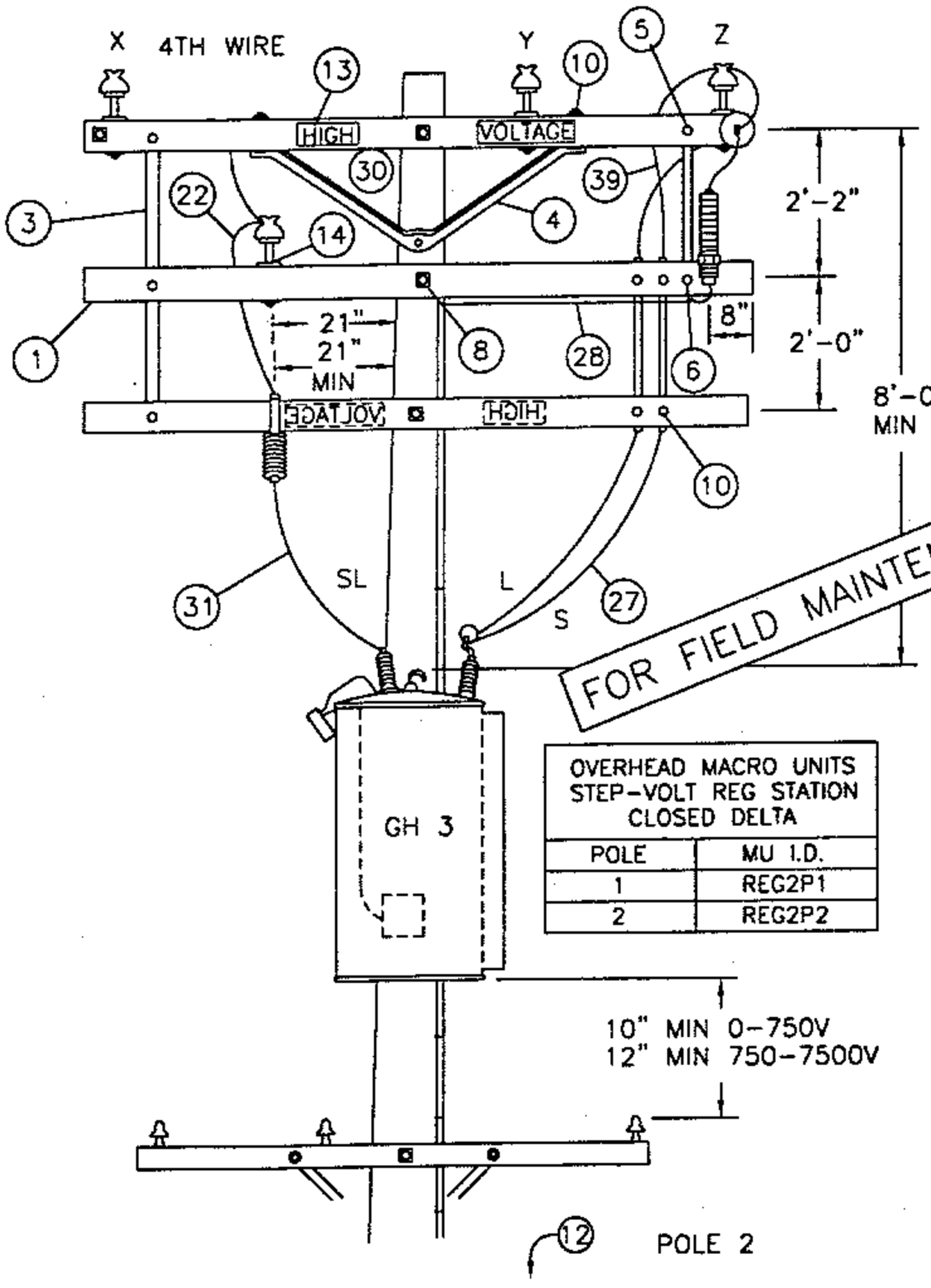

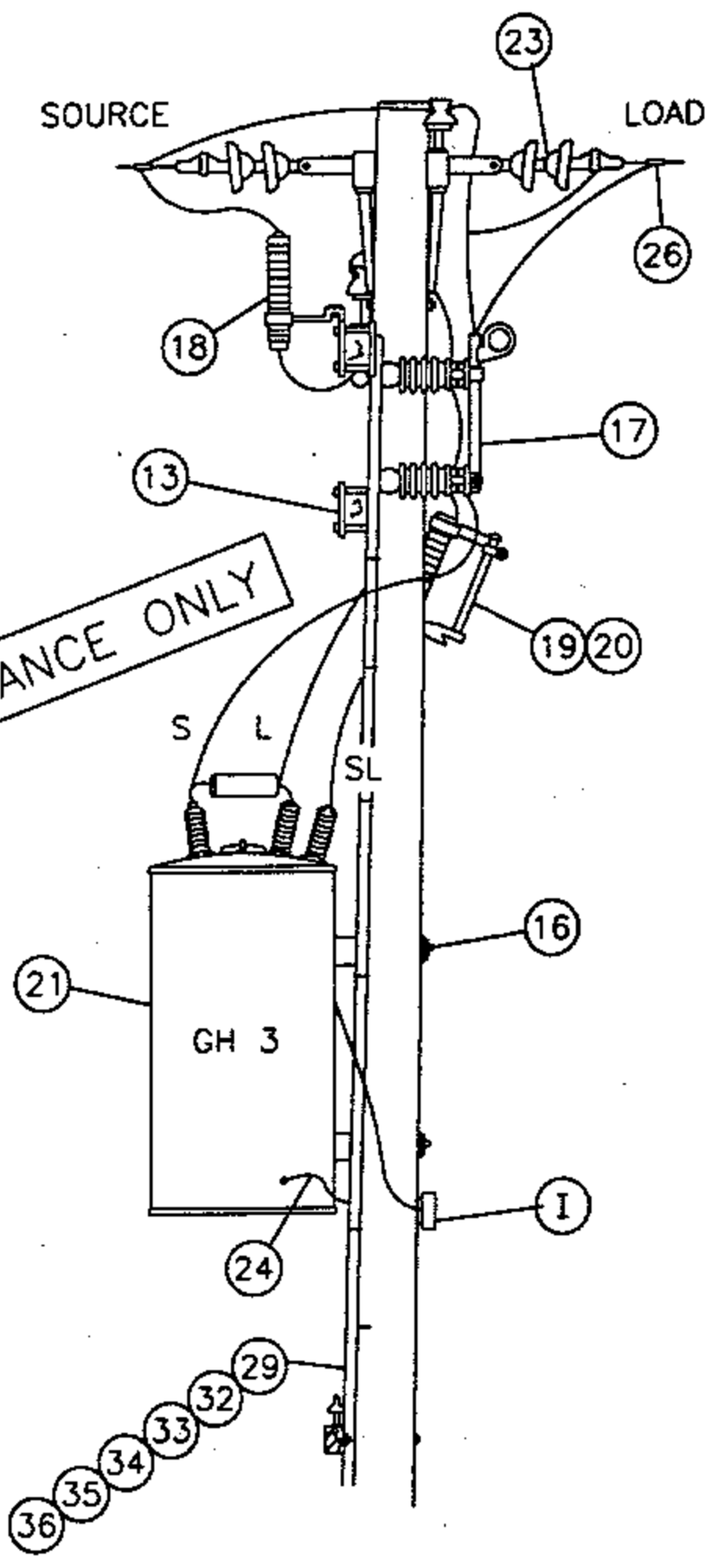

FOR FIELD MAINTENANCE ONLY

OVERHEAD MACRO UNITS STEP-VOLT REG STATION CLOSED DELTA	
POLE	MU I.D.
1	REG2P1
2	REG2P2

TABLE OF CONTENTS

1399.404 SUPERSEDES 1349.2 1-1-96	SDG&E ELECTRIC STANDARDS STEP-VOLTAGE REGULATOR STATION, CLOSED DELTA, 12KV, TWO POLES	DATE 1-1-96 APPD PBA 1/25/96

NOTES:

A. CAUTION: WHEN CONNECTING A STATION, REGULATORS MUST BE ON NEUTRAL. CLOSE CUTOUT TO SL BUSHING BEFORE CLOSING BYPASS DISCONNECT ON THAT POLE. WHEN DISCONNECTING A STATION, PUT REGULATORS ON NEUTRAL, AND OPEN BYPASS DISCONNECT BEFORE OPENING CUTOUT TO SL BUSHING. THIS AVOIDS A SERIOUS OVERVOLTAGE CONDITION.

B. USE EXTRA HEAVY CLASS ONE POLE WITH 10" MIN TOP DIA FOR POLE #1, AND A CLASS ONE FOR POLE #2.

(C) USE TWO GROUND RODS FOR THE ARRESTERS AND TANKS. ALL GROUND RODS SHOULD BE SPACED A MINIMUM OF SIX FEET APART.

(D) UNIT GROUND COMPLETE, ORDER 603136.

F. BOND ALL CUTOUTS IN HEAVY CONTAMINATION DISTRICT AS IDENTIFIED ON STANDARDS PAGE 287.

G. BOND DEAD-END HARDWARE.

(H) INTERCONNECT ARRESTER GROUND LEAD DISCONNECTS WITH #6 BARE COPPER AND GROUND IT WITH #2 BARE COPPER NEAR CENTER ARRESTER.

(I) CONTROLS WILL BE MOUNTED BY KEARNY MAINTENANCE.

J. INSTALL DOUBLE COIL SPRING WASHER ON END OF BOLT WHICH ATTACHES TO LARGEST METALLIC OBJECT, SUCH AS A BRACKET OR BRACE.

(K) REGULATOR TANKS SHALL BE PERMANENTLY GROUNDED.

(M) THIS CONSTRUCTION TO BE USED WHEN CENTER PHASE WIRE IS TO THE RIGHT OF THE POLE WHEN LOOKING TOWARD THE LOAD.

ITEM	DESCRIPTION	QUANTITY		STOCK NO. OR
		POLE 1	POLE 2	CONSTR. STD.
1	CROSSARM, 3 3/4" X 5 3/4" X 10' - 0"	3	3	380
2	CROSSARM, 3 3/4" X 5 3/4" X 8' - 0"	4	–	380
3	BRACE, FLAT CROSSARM 28"	2	3	164192
4	BRACE, ANGLE CROSSARM 5'-0"	5	1	164128
5	BOLT, MACHINE, 3/8" X 5", 1 RD. WASH., 1 DBL. COIL SPR. WASH.	2	2	392
6	BOLT, MACHINE, 1/2" X 5", 1 RD. WASH., 1 DBL. COIL SPR. WASH	2	3	392
7	BOLT, MACHINE, 3/4" X --, 1 SQ. CURV. WASH., 1 DBL. COIL SPR. WASH.	2	–	392
8	BOLT, MACHINE, 5/8" X --, 2 FLAT WASH., 1 DBL. COIL SPR. WASH.	4	2	392
9	BOLT, SPACE, 5/8" X --, 4 WASH & 4 NUTS, 2 DBL. COIL SPR. WASH.	7	3	392
10	BOLT, MACHINE, 1/2" X 7", 1 RD. WASH., 1 DBL. COIL SPR. WASH.	18	6	392
11	SCREW, LAG, 5/8" X 5"	2	–	621600
12	STEPS, POLE	19	19	692992
13	SIGN, HIGH VOLTAGE & NAILS, GALV.	3	3	647648, 492224
14	PIN, INSULATOR (AS REQUIRED BY ITEM 22)	3	1	532---
15	BRACKET, INSULATOR (AS REQUIRED BY ITEM 22)	1	–	1661--
16	COVER, BOLT, PLASTIC	–	2	285696
17	SWITCH, BYPASS	2	1	706944
18	ARRESTER, LIGHTNING (12KV)	5	1	113248
19	CUTOUT, 12KV 100 AMP WITH LOAD BUSTER HOOKS	2	1	297888
20	BLADE, DISCONNECT CUTOUT	2	1	1200 SECTION
21	REGULATOR, STEP VOLTAGE 1Ø	2	1	1300 SECTION
22	INSULATOR, PIN TYPE (CLASS AS REQUIRED)	3	1	700 SECTION
23	INSULATOR, SUSPENSION	10	6	700 SECTION
24	CONNECTOR, COMPRESSION (#2 TO #6)	1	2	257792
25	CONNECTOR, COMPRESSION (#6 TO #6)	3	–	257952
26	CONNECTORS, WIRE	9	4	700 SECTION
27	WIRE, 2/0 WP COPPER	(12.4#) 24'	(6.2#) 12'	808944
28	WIRE, BARE STRANDED COPPER #6	(1.8#) 24'	(1.8#) 22'	813536
29	WIRE, BARE STRANDED COPPER #2	(9.2#) 45'	(9.8#) 45'	813664
30	WIRE, #8 ANNEALED SOLID COPPER	(.25#) 5'	(.25#) 5'	812928
31	WIRE, #4 SOLID WP COPPER	(1.8#) 10'	(.75#) 4'	812480
32	ROD, GROUND (C)(D)	2	2	603072
33	CLAMP, GROUND ROD (D)	2	2	230016
34	MOULDING, HARDWOOD 1" (D)	45'	48'	487200
35	STAPLES, GALV. 3" X 1 1/16" X 1/4" (D)	32	35	678560
36	STAPLES, FENCE GALV. 1 1/4" (D)	28	30	678528
37	CLEVIS, DEAD END CLOSED	5	3	235712
38	CLAMPS, DEAD END	5	3	700 SECTION
39	WIRE, BARE STRANDED COPPER #1/0	(3.3#) 10'	(3.3#) 10'	813568
40	BRACE, VERTICAL, 36"	2	–	164256
41	BOLT, MACHINE, 5/8" X 7", 1 RD. WASH., 1 DBL. COIL SPR. WASH.	2	–	100 SECTION
42	BOLT, MACHINE, 5/8" X 5", 1 RD. WASH., 1 DBL. COIL SPR. WASH.	2	–	100 SECTION
43	HANGER, TRANSFORMER T-2	2	–	402944

FOR FIELD MAINTENANCE ONLY

TABLE OF CONTENTS

DATE 1-1-96
APPD PA/BDG

SDG&E ELECTRIC STANDARDS

STEP-VOLTAGE REGULATOR STATION, CLOSED DELTA 12KV TWO POLES

1399.405
SUPERSEDES
1349.3 1-1-96

TABLE OF CONTENTS

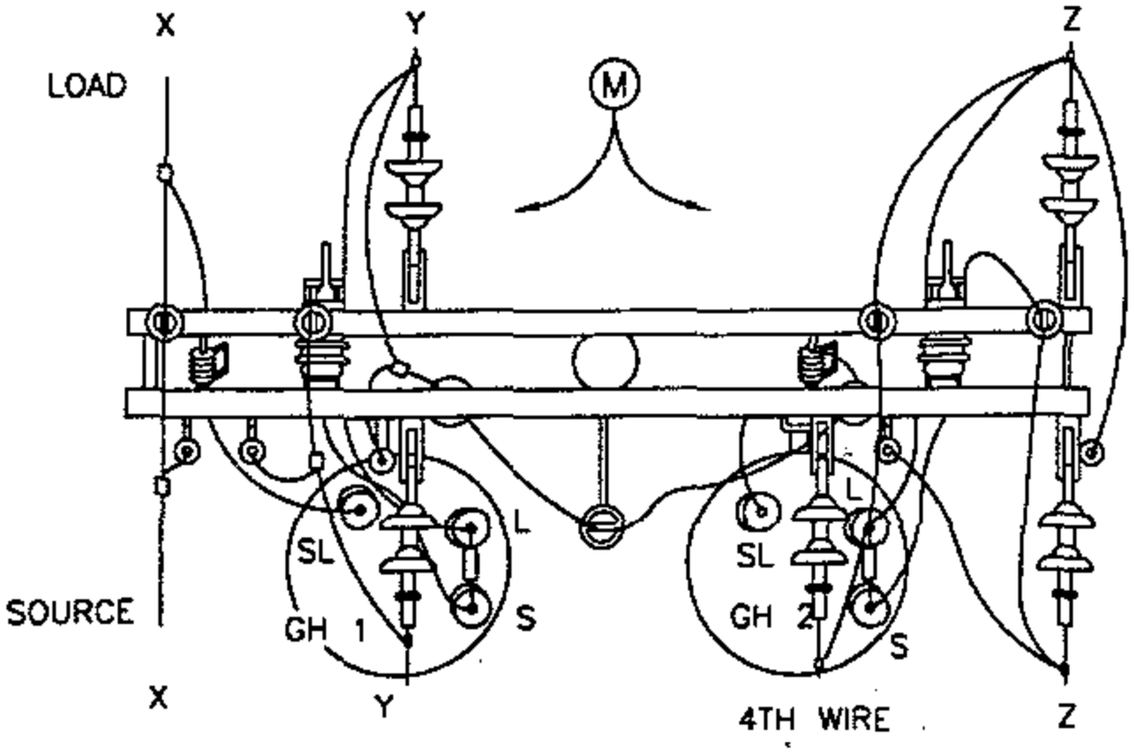

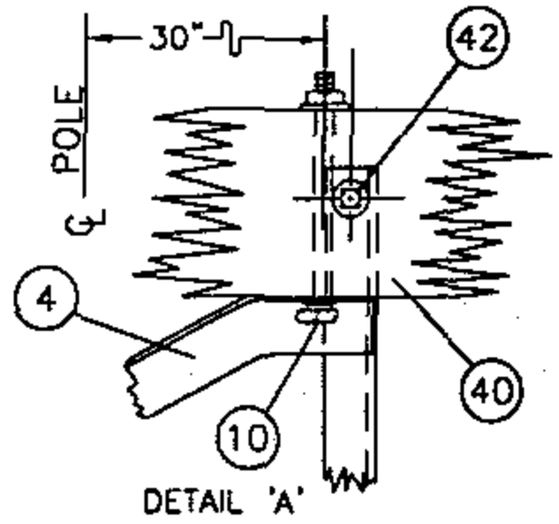

DETAIL 'A'

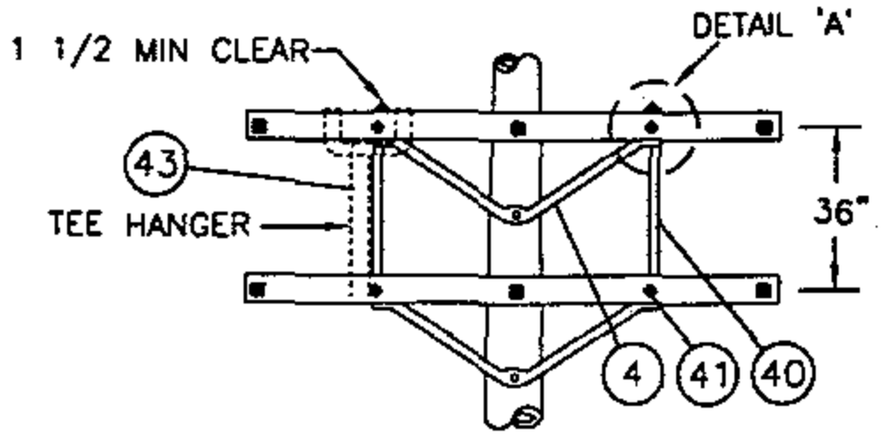

FRAMING DETAIL
FOR 2-12KV STEP-VOLTAGE REGULATORS

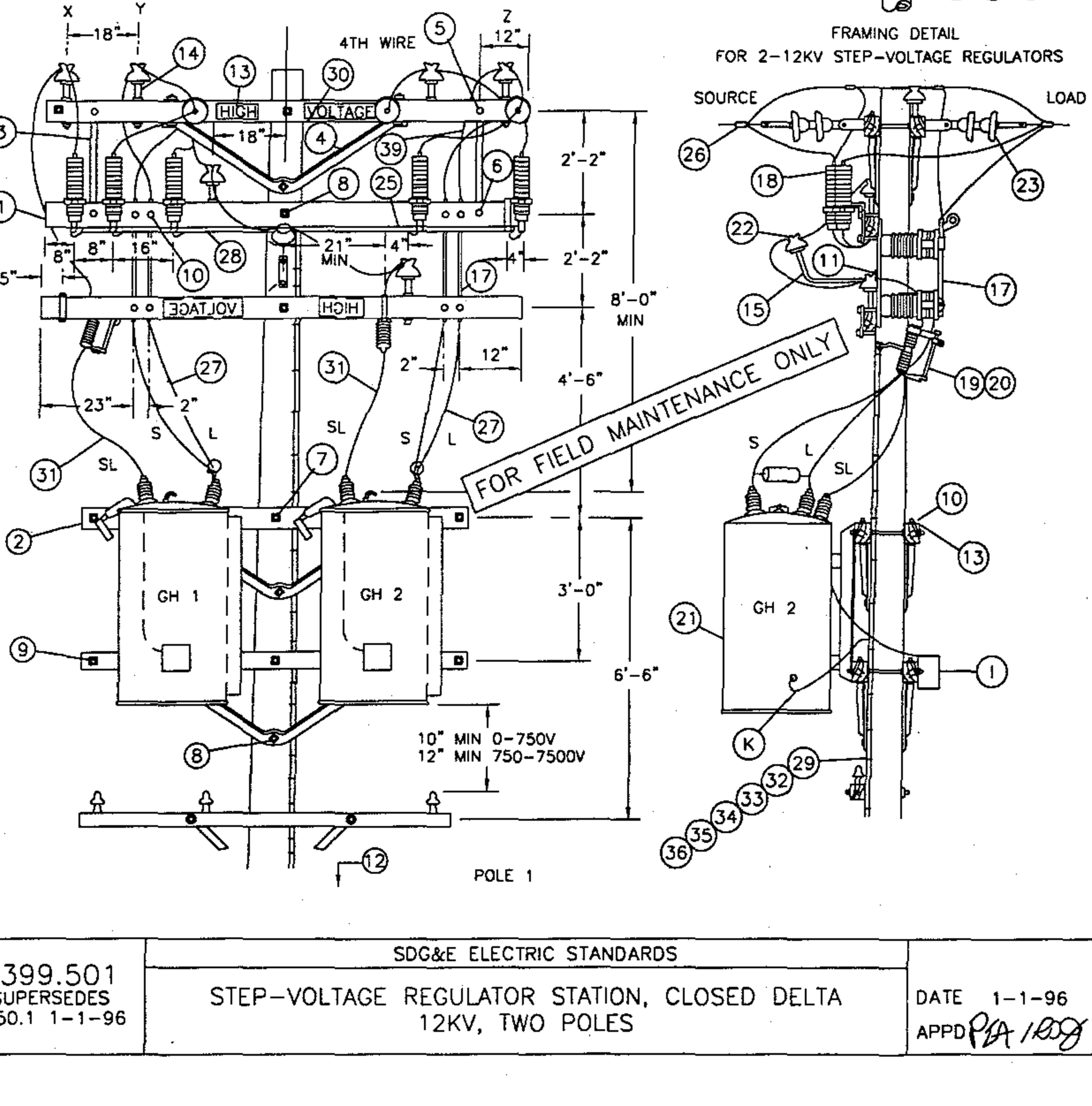

POLE 1

1399.501 SUPERSEDES 1350.1 1-1-96	SDG&E ELECTRIC STANDARDS STEP-VOLTAGE REGULATOR STATION, CLOSED DELTA 12KV, TWO POLES	DATE 1-1-96 APPD PA 1/09

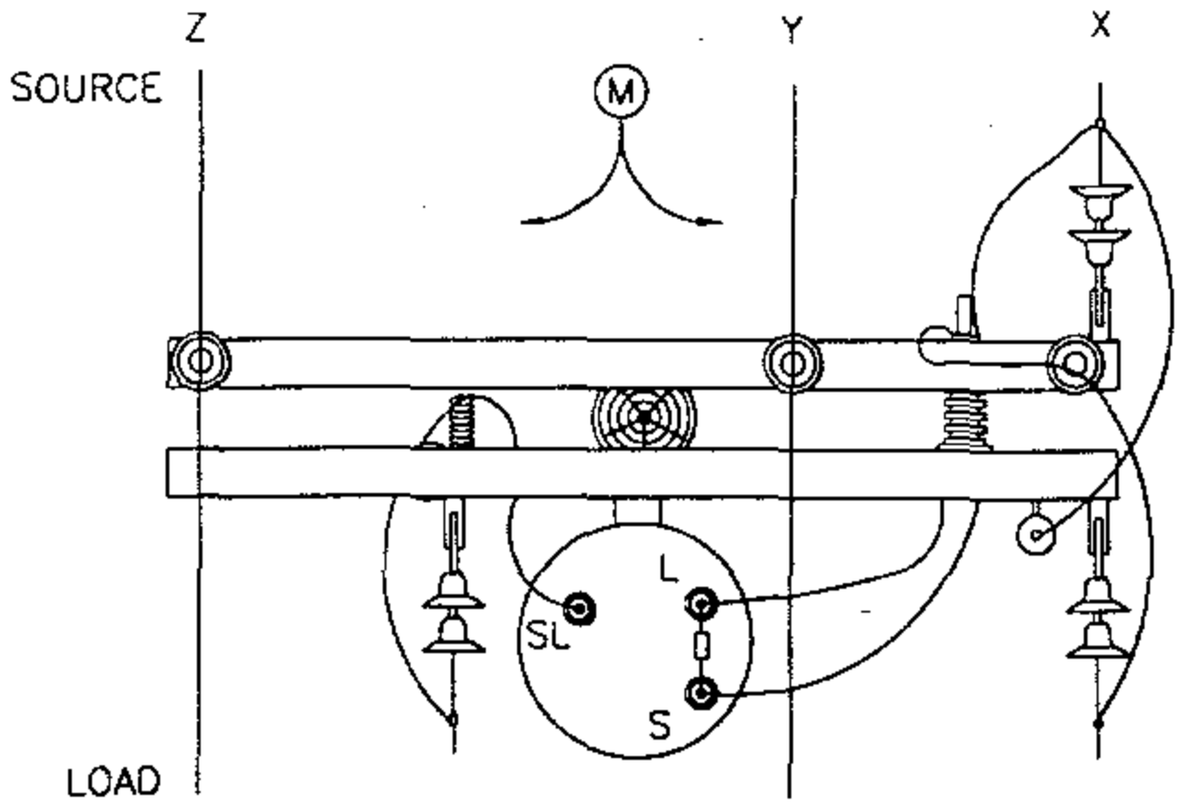

SCHEMATIC DIAGRAM OF A 12KV CLOSED DELTA REGULATOR STATION

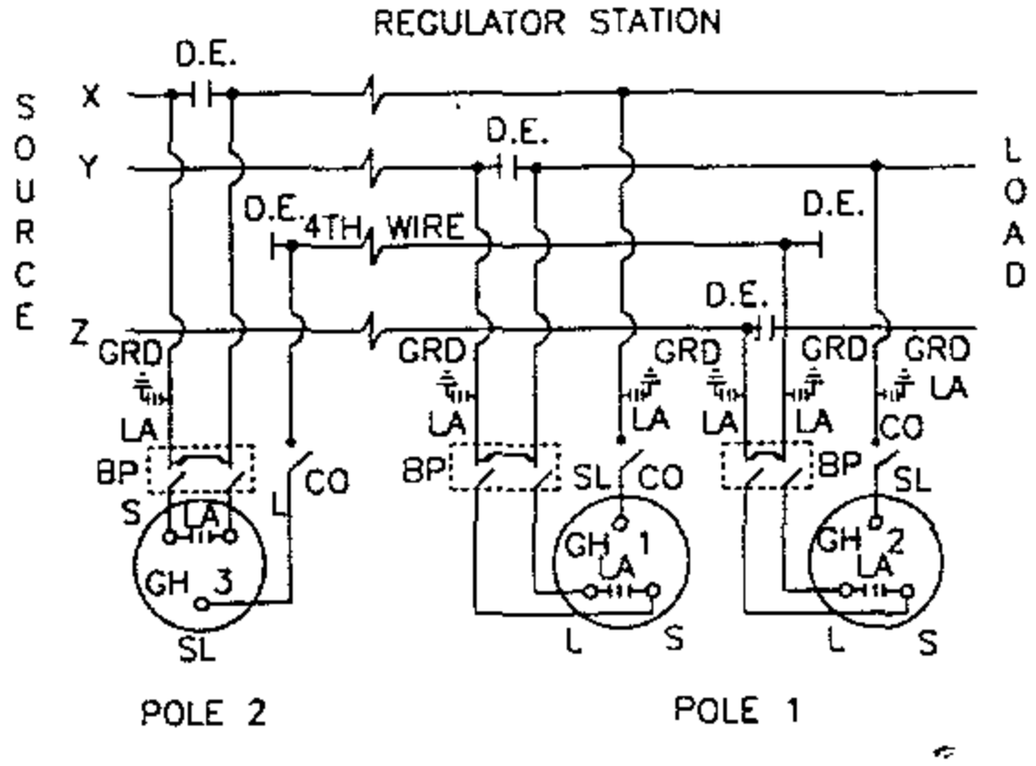

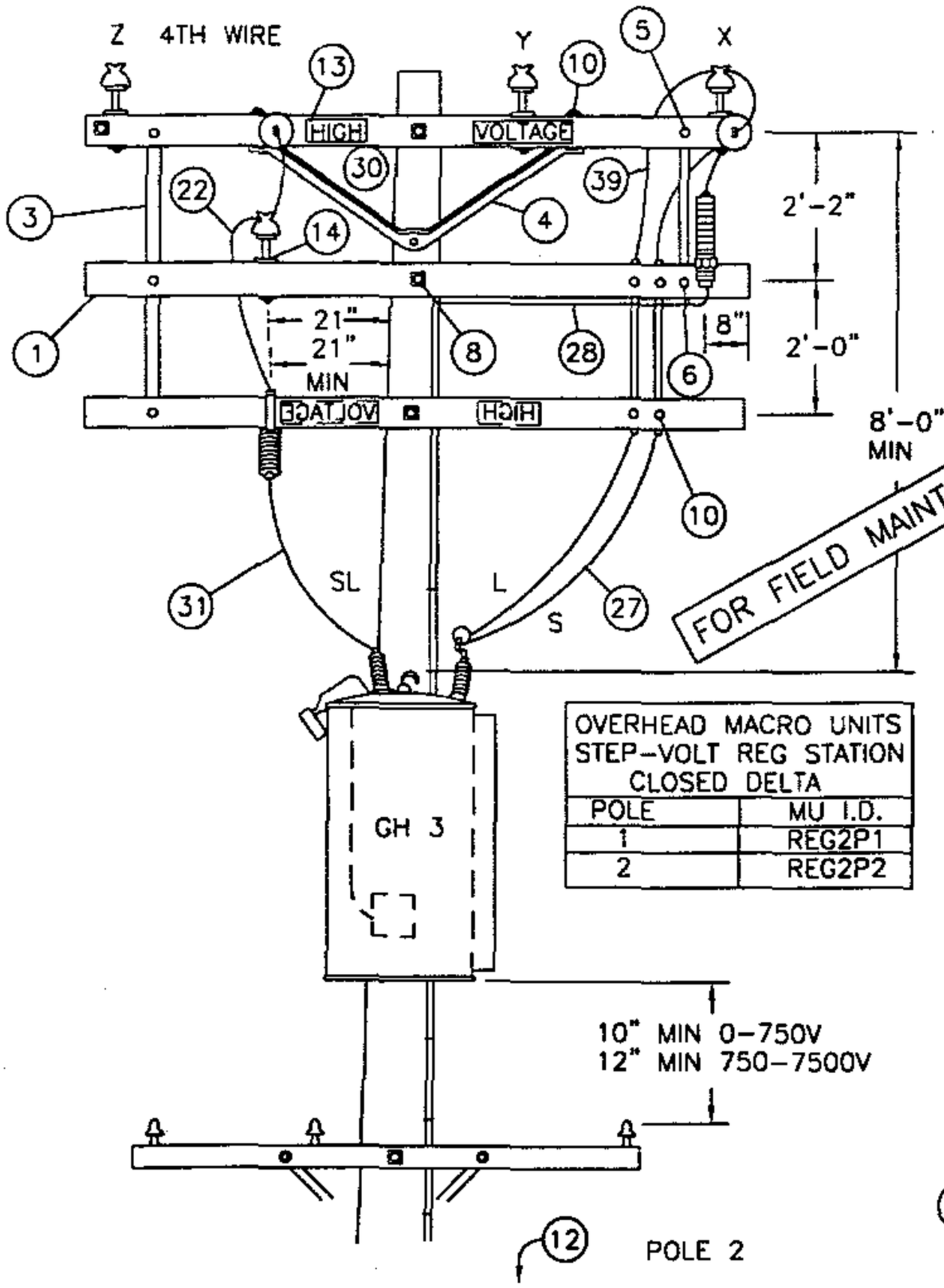

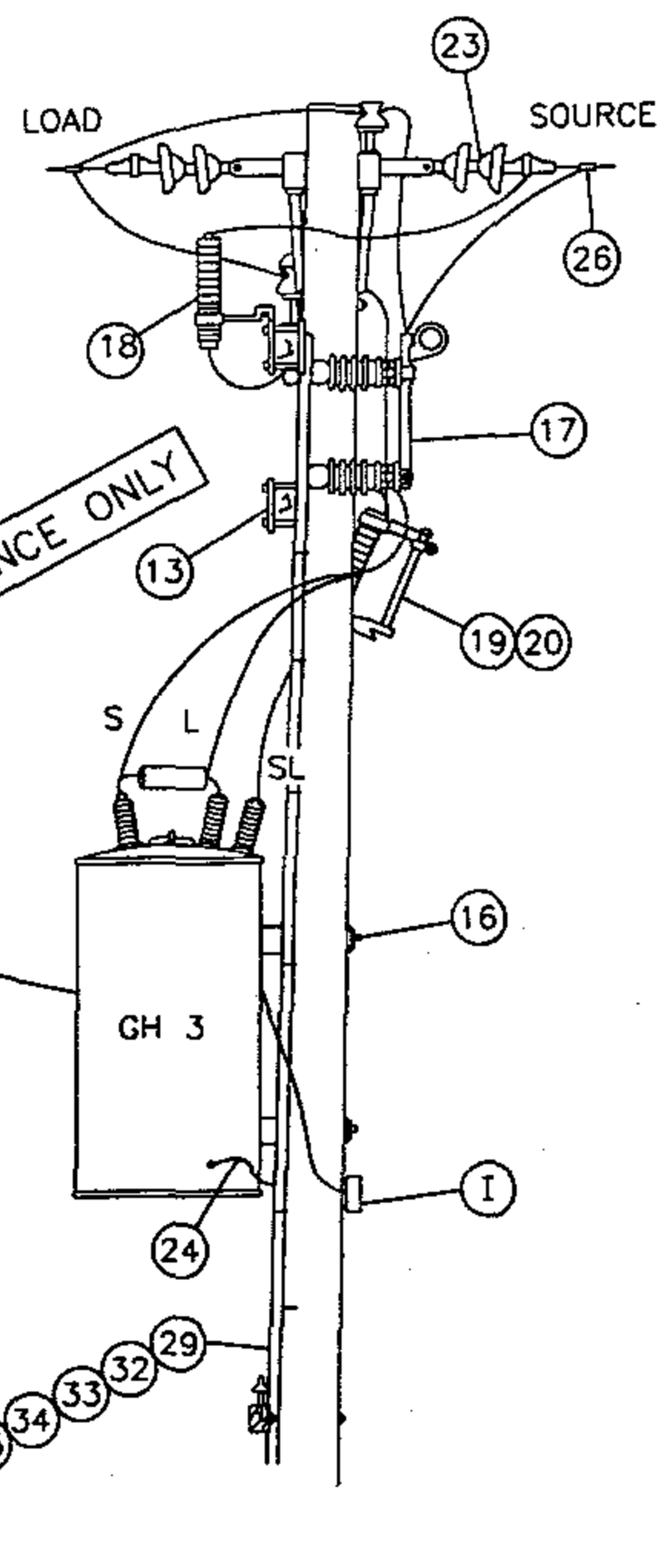

OVERHEAD MACRO UNITS STEP-VOLT REG STATION CLOSED DELTA	
POLE	MU I.D.
1	REG2P1
2	REG2P2

DATE 1-1-96 APPD PA / BSG	SDG&E ELECTRIC STANDARDS STEP-VOLTAGE REGULATOR STATION, CLOSED DELTA, 12KV, TWO POLES	1399.502 SUPERSEDES 1350.2 1-1-96

NOTES:

A. CAUTION: WHEN CONNECTING A STATION, REGULATORS MUST BE ON NEUTRAL. CLOSE CUTOUT TO SL BUSHING BEFORE CLOSING BYPASS DISCONNECT ON THAT POLE. WHEN DISCONNECTING A STATION, PUT REGULATORS ON NEUTRAL, AND OPEN BYPASS DISCONNECT BEFORE OPENING CUTOUT TO SL BUSHING. THIS AVOIDS A SERIOUS OVERVOLTAGE CONDITION.

B. USE EXTRA HEAVY CLASS ONE POLE WITH 10" MIN TOP DIA FOR POLE #1, AND A CLASS ONE FOR POLE #2.

(C) USE TWO GROUND RODS FOR THE ARRESTERS AND TANKS. ALL GROUND RODS SHOULD BE SPACED A MINIMUM OF SIX FEET APART.

(D) UNIT GROUND COMPLETE, ORDER 603136.

F. BOND ALL CUTOUTS IN HEAVY CONTAMINATION DISTRICT AS IDENTIFIED ON STANDARDS PAGE 287.

G. BOND DEAD-END HARDWARE.

(H) INTERCONNECT ARRESTER GROUND LEAD DISCONNECTS WITH #6 BARE COPPER AND GROUND IT WITH #2 BARE COPPER NEAR CENTER ARRESTER.

(I) CONTROLS WILL BE MOUNTED BY KEARNY MAINTENANCE.

J. INSTALL DOUBLE COIL SPRING WASHER ON END OF BOLT WHICH ATTACHES TO LARGEST METALLIC OBJECT, SUCH AS A BRACKET OR BRACE.

(K) REGULATOR TANKS SHALL BE PERMANENTLY GROUNDED.

(M) THIS CONSTRUCTION TO BE USED WHEN CENTER PHASE WIRE IS TO THE LEFT OF THE POLE WHEN LOOKING TOWARD THE LOAD.

ITEM	DESCRIPTION	QUANTITY		STOCK NO. OR CONSTR. STD
		POLE 1	POLE 2	
1	CROSSARM 3 3/4" X 5 3/4" X 10' - 0"	3	3	380
2	CROSSARM, 3 3/4" X 5 3/4" X 8'-0"	4	–	380
3	BRACE, FLAT CROSSARM 28"	2	3	164192
4	BRACE, ANGLE CROSSARM 5'-0"	5	1	164128
5	BOLT, MACHINE, 3/8" X 5", 1 RD. WASH., 1 DBL. COIL SPR. WASH.	2	2	392
6	BOLT, MACHINE, 1/2" X 5", 1 RD. WASH., 1 DBL. COIL SPR. WASH.	2	3	392
7	BOLT, MACHINE, 3/4" X --, 1 SQ. CURV. WASH., 1 DBL. COIL SPR. WASH.	2	–	392
8	BOLT, MACHINE, 5/8" X --, 2 FLAT WASH., 1 DBL. COIL SPR. WASH.	4	2	392
9	BOLT, SPACE, 5/8" X --, 4 WASH. & 4 NUTS, 2 DBL. COIL SPR. WASH.	7	3	392
10	BOLT, MACHINE, 1/2" X 7", 1 RD. WASH., 1 DBL. COIL SPR. WASH.	18	6	392
11	SCREW, LAG, 5/8" X 5"	2	–	621600
12	STEPS, POLE	19	19	692992
13	SIGN, HIGH VOLTAGE & 8 NAILS, GALV.	3	3	647648, 492224
14	PIN, INSULATOR (AS REQUIRED BY ITEM 22)	3	1	532---
15	BRACKET, INSULATOR (AS REQUIRED BY ITEM 22)	1	–	1661--
16	COVER, BOLT, PLASTIC	–	2	285696
17	SWITCH, BYPASS	2	1	706944
18	ARRESTER, LIGHTNING (12KV)	5	1	113248
19	CUTOUT, 12KV 100 AMP WITH LOAD BUSTER HOOKS	2	1	297888
20	BLADE, DISCONNECT CUTOUT	2	1	1200 SECTION
21	REGULATOR, STEP VOLTAGE 1Ø	2	1	1300 SECTION
22	INSULATOR, PIN TYPE (CLASS AS REQUIRED)	3	1	700 SECTION
23	INSULATOR, SUSPENSION	10	6	700 SECTION
24	CONNECTOR, COMPRESSION (#2 TO #6)	1	2	257792
25	CONNECTOR, COMPRESSION (#6 TO #6)	3	–	257952
26	CONNECTORS, WIRE	9	4	700 SECTION
27	WIRE, 2/0 WP COPPER	(12.4#) 24'	(6.2#) 12'	808944
28	WIRE, BARE STRANDED COPPER #6	(1.8#) 24'	(1.8#) 22'	813536
29	WIRE, BARE STRANDED COPPER #2	(9.2#) 45'	(9.8#) 45'	813664
30	WIRE, #8 ANNEALED SOLID COPPER	(.25#) 5'	(.25#) 5'	812928
31	WIRE, #4 SOLID WP COPPER	(1.8#) 10'	(.75#) 4'	812480
32	ROD, GROUND	2	2	603072
33	CLAMP, GROUND ROD (C)(D)	2	2	230016
34	MOULDING, HARDWOOD 1" (D)	45'	48'	487200
35	STAPLES, GALV. 3" X 1 1/16" X 1/4" (D)	32	35	678560
36	STAPLES, FENCE GALV. 1 1/4" (D)	28	30	678528
37	CLEVIS, DEAD END CLOSED (D)	5	3	235712
38	CLAMPS, DEAD END	5	3	700 SECTION
39	WIRE, BARE STRANDED COPPER #1/0	(3.3#) 10'	(3.3#) 10'	813568
40	BRACE, VERTICAL, 36"	2	–	164256
41	BOLT, MACHINE, 5/8" X 7", 1 RD. WASH., 1 DBL. COIL SPR. WASH.	2	–	392
42	BOLT, MACHINE, 5/8" X 5", 1 RD. WASH., 1 DBL. COIL SPR. WASH	2	–	392
43	HANGER, TRANSFORMER T-2	2	–	402944

FOR FIELD MAINTENANCE ONLY

TABLE OF CONTENTS

1399.503 SUPERSEDES 1350.3 1-1-96	SDG&E ELECTRIC STANDARDS STEP-VOLTAGE REGULATOR STATION, CLOSED DELTA 12KV TWO POLES	DATE 1-1-96 APPD PA 1/1/96

SCOPE: THIS STANDARD SHOWS THE PREFERRED METHOD OF CONSTRUCTION FOR A FIXED CAPACITOR WHEN A NEW POLE IS REQUIRED.

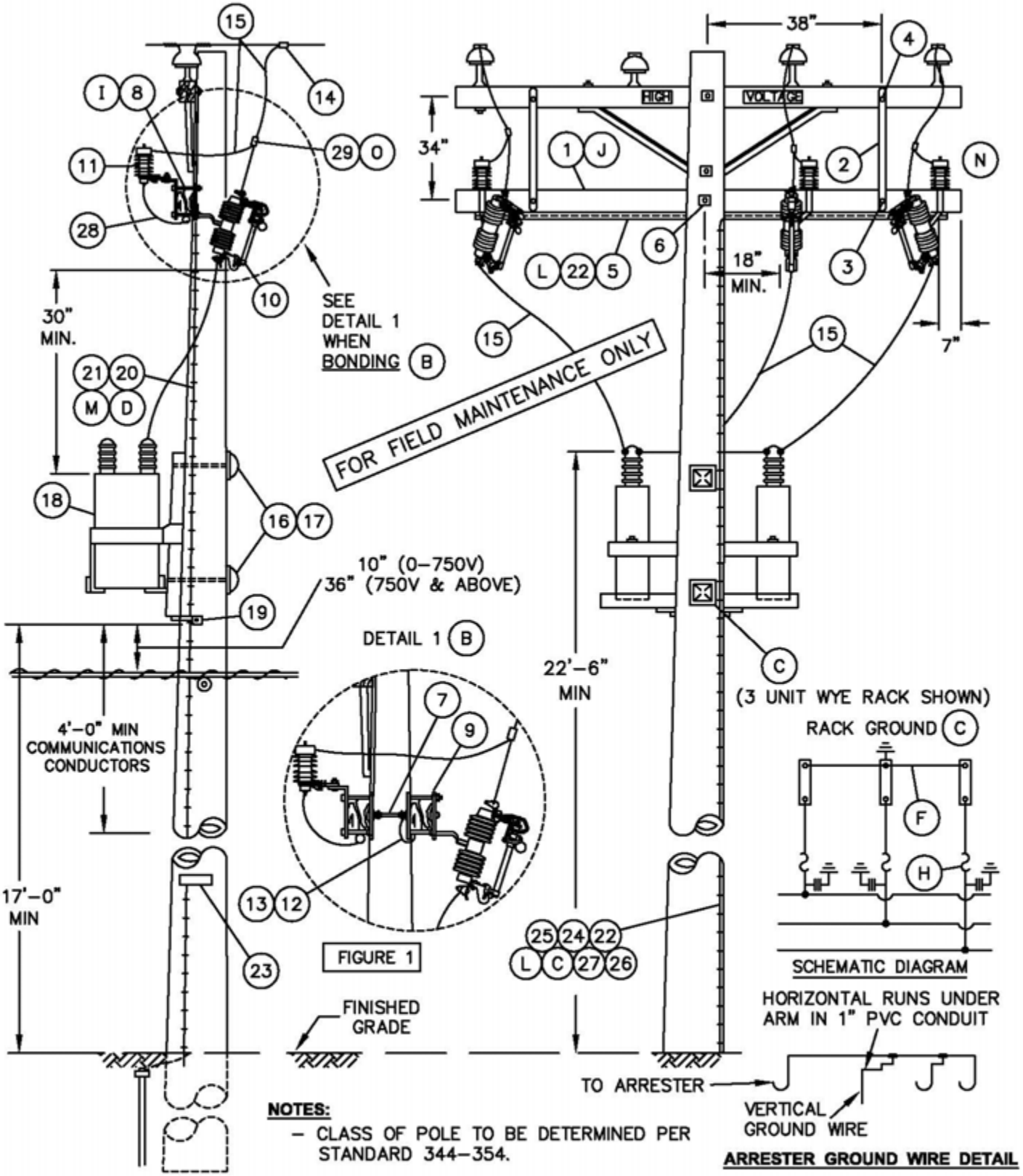

NOTES:

– CLASS OF POLE TO BE DETERMINED PER STANDARD 344–354.

© 1998 - 2005 San Diego Gas & Electric Company. All rights reserved. Removal of this copyright notice without permission is not permitted under law.

1399.504 4299.507 SUPERSEDES 1323.1 (10–15–05)	SDG&E ELECTRIC STANDARDS FIXED CAPACITOR INSTALLATION, 4KV WYE GROUNDED RACK	DATE 10–15–05 APPD PBA / JJ

TABLE OF CONTENTS

SCOPE: THIS STANDARD SHOWS AN ALTERNATE METHOD OF INSTALLING A FIXED CAPACITOR ON AN EXISTING POLE OF PROPER CLASS BUT WITH INSUFFICIENT HEIGHT TO PERMIT THE CONSTRUCTION AS SHOWN ON PAGE 1323.1 FIGURE 1.

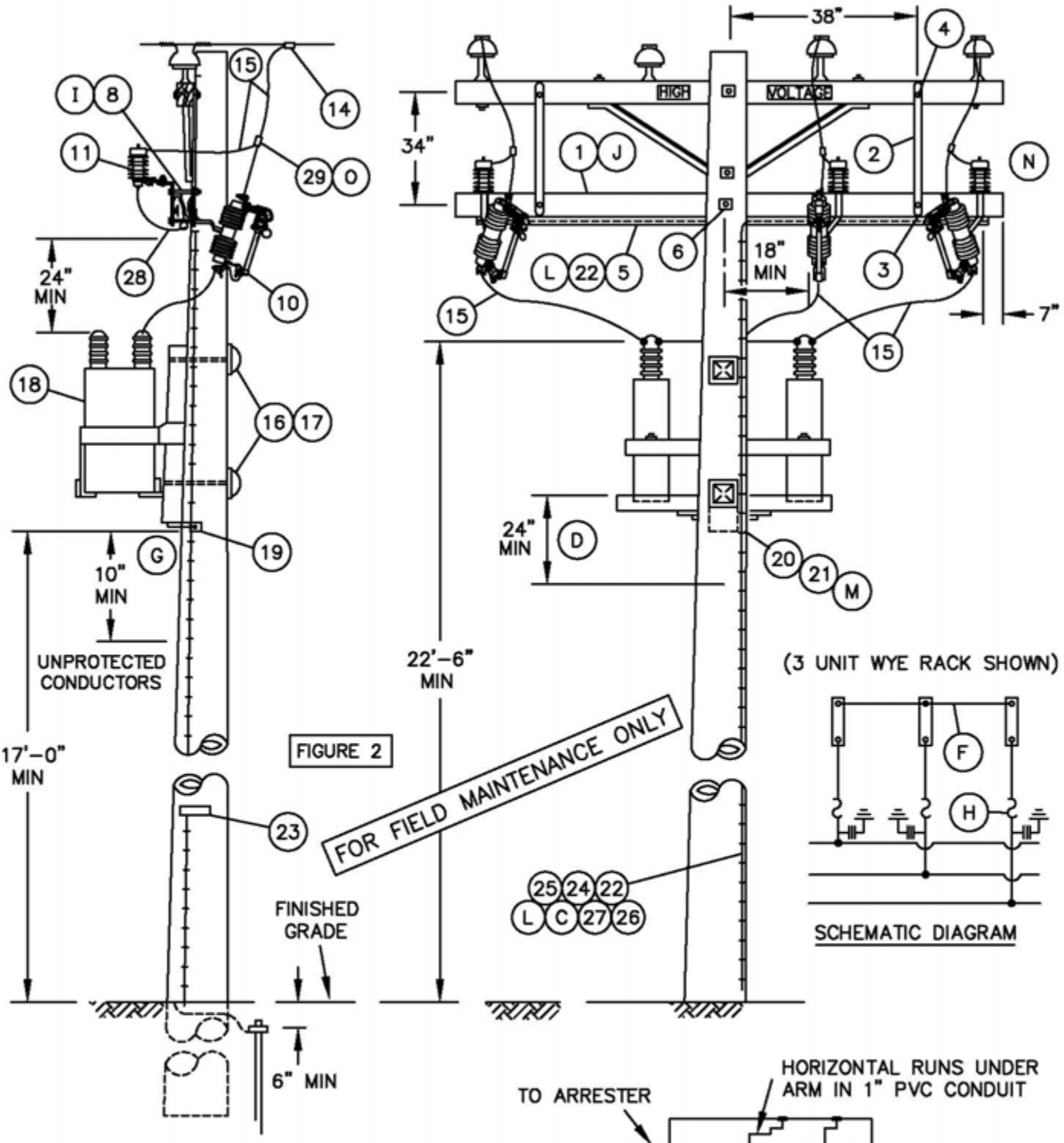

NOTES:

– CLASS OF POLE TO BE DETERMINED PER STANDARD 344–354.

© 1998 - 2005 San Diego Gas & Electric Company. All rights reserved. Removal of this copyright notice without permission is not permitted under law.

DATE 10–3–2012 APPD TQ/MJC	SDG&E ELECTRIC STANDARDS FIXED CAPACITOR INSTALLATION, 4KV WYE UNGROUNDED RACK –– ALTERNATE	1399.505 4299.508 SUPERSEDES 1323.2 (10–15–05)

TABLE OF CONTENTS

BILL OF MATERIAL:

ITEM	DESCRIPTION	QUANTITY (B) UNBONDED	QUANTITY (B) BONDED	STOCK NO. OR CONSTR STANDARD	ASSEMBLY UNIT
1	CROSSARM, 3 3/4" X 5 3/4" X 10' – 0" (B)	1	2	294128	–
2	BRACE, FLAT, CROSSARM, 36" (J)	2	2	164224	–
3	BOLT, MACH, GALV, 3/8" X 4 1/2", 1 ROUND & 1 LOCK WASHER (J)	2	2	STD 392	–
4	BOLT, MACH, GALV, 1/2" X 5", 1 ROUND & 1 DBL COIL SPR WASH (J)	2	2	STD 392	–
5	CONDUIT, PVC, TYPE 2, SCHEDULE 40, 1" AND	10'	10'	251200	–
	STRAPS, PIPE, GALV. 1" WITH 1 3/4" ROOFING NAILS	AS REQ'D		697792	–
6	BOLT, MACH, GALV, 5/8" X (LENGTH AS REQ'D), 2 SQUARE & 1 DBL COIL SPRING WASHER	1	1	STD 392	–
7	BOLT, SPACE, GALV, 5/8" X (LENGTH AS REQ'D), 2 ROUND 4 SQUARE, 2 DOUBLE COIL SPRING WASHERS & 2 NUTS	–	2	STD 392	–
8	BRACKET, DOUBLE CUTOUT/ARRESTER, FOR CROSSARM MOUNTING.	3	–	165442	–
9	BRACKET, ARRESTER OR CUTOUT	–	6	166070	–
10	CUTOUT, 12KV, 100A, WITH LOADBUSTER HOOKS	3	3	STD 1212	–
11	ARRESTER, LIGHTNING (SEE STD. 1247 FOR 4KV APPLICATION) 4 KV	3	3	113216	–
	OR 12 KV	3	3	113248	–
12	WIRE, #8 BARE SOLID ANNEALED COPPER (B) FT	–	15	812928	–
	LB	–	1		
13	STAPLES, WIRE, GALV, 1 1/4" (B)	AS REQ'D		678528	–
14	CONNECTOR, WIRE COMPRESSION, CU OR AL (SIZE AS REQ'D)	AS REQ'D		783–786	–
15	WIRE, #4 BARE STRANDED COPPER FT	100		813760	–
	LB	13			
16	BOLT, MACH, GALV, 3/4" X (LENGTH AS REQ'D), 1 SQ CURV RIBBED & 1 DBL COIL SPRING WASHER	2	2	STD 392	–
17	COVER, BOLT PLASTIC &	2	2	285696	–
	6 – 1 3/4" NAILS, GALV	–	–	492192	–
18	CAPACITOR RACK – COMPLETE WITH CAPACITORS 4KV 65 KVAR (3 ● 200 KVAR)	1	1	564759	–
	4KV 130 KVAR (3 ● 400 KVAR)	1	1	564776	–
	12KV 600 KVAR (3 ● 200 KVAR)	1	1	564763	–
	12KV 1200 KVAR (3 ● 400 KVAR)	1	1	564764	–
19	SCREW, LAG, GALV, 4"	2	2	621568	–
20	CONDUIT, PVC, TYPE 2, SCHEDULE 40, 1/2" (D)	10'	10'	251168	–
21	STRAPS, PIPE, GALV, 1/2", AND	AS REQ'D		697728	–
	2– 1 3/4" ROOFING NAILS, GALV.	–	–	492192	–
22	#4 CU SOLID GROUND WIRE, PVC COVERED	50'	50'	812490	GNDPVC
23	TAG, STATION NUMBER	1	1	200 SECT.	–
24	GROUND ROD, 5/8" X 8', COPPERWELD	1	1	603072	GNDPVC
25	COPPER BONDED GROUND CONNECTOR	1	1	259010	–
26	GROUND ENHANCING POWER SOLUTION (GEM)	AS REQ'D		424390	–
27	GALVANIZED STAPLES FOR PVC COVERED GROUND WIRE	AS REQ'D		678562	–
28	FLEXIBLE ARRESTER GROUND STRAP	AS REQ'D		698754	–
29	HOT LINE CLAMP	3	3	227680	–

FOR FIELD MAINTENANCE ONLY

TABLE OF CONTENTS

© 1998 - 2005 San Diego Gas & Electric Company. All rights reserved. Removal of this copyright notice without permission is not permitted under law.

Indicates Latest Revision | Completely Revised | New Page | Information Removed

1399.506
4299.509
SUPERSEDES
1323.3 (10–15–05)

SDG&E ELECTRIC STANDARDS

FIXED CAPACITOR INSTALLATION, 4KV WYE

DATE 10–15–05
APPD PBA / JJ

OVERHEAD MACRO UNITS 12KV/4KV CAPACITOR STATIONS		
FIXED – GROUNDED (FIG. 1)		
KV	KVAR	MU I.D.
12	600	C6FP
12	1200	C12FP
FIXED–UNGROUNDED (FIG. 2)		
4	65	C4FA
4	130	C4F3P
12	600	C6FA
12	1200	C12FA

FOR FIELD MAINTENANCE ONLY

INSTALLATION:

A. CAPACITORS MUST BE INSTALLED ON POLES ACCESSIBLE BY BUCKET TRUCK.

(B) BOND CUTOUTS IN HEAVY CONTAMINATION DISTRICTS AS SHOWN ON STANDARD 287. IN AREAS WHERE BONDING IS REQUIRED, TO AVOID BONDWIRE AND LIGHTNING ARRESTER GROUNDWIRE ON THE SAME CROSSARM, USE TWO CROSSARMS; ONE FOR CUTOUTS AND ONE FOR LIGHTNING ARRESTERS.

(C) CONNECT CAPACITOR RACK GROUND LEAD TO LIGHTNING ARRESTER GROUND (FIGURE 1 ONLY).

(D) RUN 1/2" SCHEDULE 40 PVC CONDUIT WITH LIGHTNING ARRESTER GROUND FROM LIGHTNING ARRESTER ARM TO A MINIMUM OF 2 FEET BELOW CAPACITOR RACK, THEN CONTINUE DOWN THE POLE USING PVC COVERED GROUND WIRE.

(F) DO NOT TIE CAPACITOR BANK NEUTRAL TO 12KV CIRCUIT NEUTRAL. IT IS TO REMAIN FLOATING.

(G) TEN INCHES FROM 0–750V CONDUCTORS BELOW, 12 INCHES FOR CONDUCTORS OF 750–7500V, 18 INCHES FOR CONDUCTORS OF 7500–22,500V PER G.O. 95 RULE 58.1–D.

(H) FUSE STATION ACCORDING TO CAPACITOR FUSING TABLE, STANDARD 1309.

(I) DRILL THROUGH CROSSARM 1" UP FROM LOWER EDGE SO THAT LOWER CROSSARM MOUNTING BRACKET BOLT DOES NOT INTERFERE WITH PVC CONDUIT.

(J) WHEN LA/CO CROSSARM AND CAPACITORS CANNOT BE INSTALLED ON THE SAME SIDE OF THE POLE AS AN EXISTING LINEARM, DELETE ITEMS 2, 3, & 4. INSTEAD, FIELD DRILL LA/CO CROSSARM FOR 2–36" FLATBRACES. SECURE BRACES TO POLE WITH A LAG SCREW. (SEE STD. 380.1, ITEM 1

REFERENCE:

(L) FOR GROUNDING REQUIREMENTS AND APPLICATION – SEE STANDARD 1002.

(M) PVC CONDUIT IS NOT PERMITTED IN THE CLIMBING SPACE PER G. O. 95, RULE 22.2B.

(N) SECTIONALIZING CUTOUT INSTALLATION MAY VARY WITH POSITION OF NEUTRAL CONDUCTOR – SEE STANDARD 1240.

(O) FOR HOT LINE CLAMP CONNECTION, SEE STANDARD 788.

© 1998 - 2005 San Diego Gas & Electric Company. All rights reserved. Removal of this copyright notice without permission is not permitted under law.

TABLE OF CONTENTS

SCOPE: THIS CONSTRUCTION SHALL BE USED FOR ALL 12KV CAPACITOR STATIONS WITH TWO OIL SWITCHES.

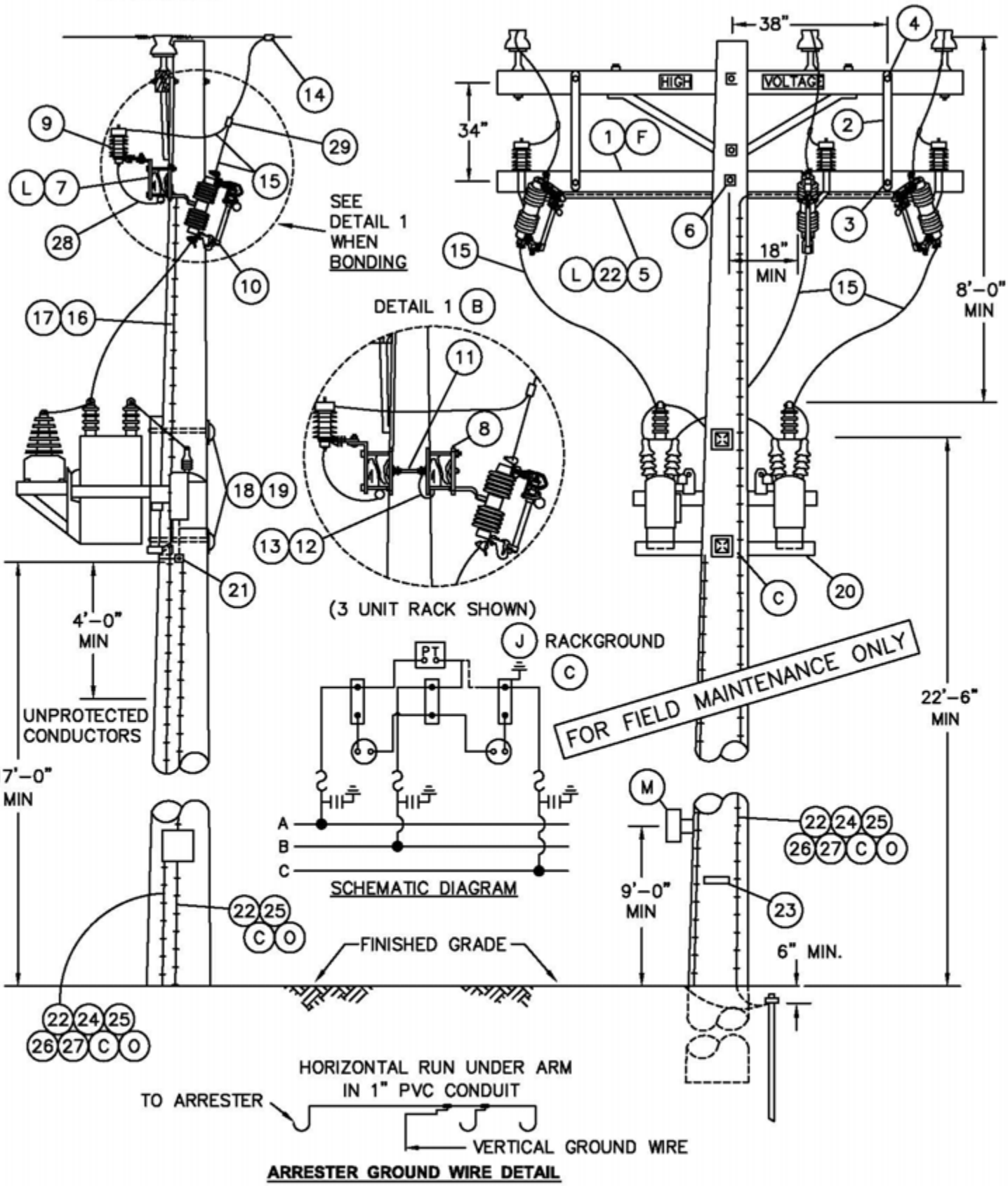

ARRESTER GROUND WIRE DETAIL

© 1998 - 2005 San Diego Gas & Electric Company. All rights reserved. Removal of this copyright notice without permission is not permitted under law.

1399.508 SUPERSEDES 1325.1 (10-15-05)	SDG&E ELECTRIC STANDARDS 12 & 12.47KV SWITCHED CAPACITOR INSTALLATION 2 OIL SWITCHES IN CAPACITOR NEUTRAL	DATE 10-15-05 APPD PA / JJ

TABLE OF CONTENTS

NOTE:

– CLASS OF POLE TO BE DETERMINED PER STANDARD 344–354.

BILL OF MATERIAL:

FOR FIELD MAINTENANCE ONLY

ITEM	DESCRIPTION		QUANTITY (B) UNBONDED	QUANTITY (B) BONDED	STOCK NO. OR CONSTR STANDARD	ASSEMBLY UNIT
1	CROSSARM, 3 3/4" X 5 3/4" X 10' – 0" (B)		1	2	294128	–
2	BRACE, FLAT, CROSSARM, 36" (F)		2	2	164224	–
3	BOLT, MACH, GALV, 3/8" X 4 1/2", 1 ROUND & 1 LOCK WASHER (F)		2	2	STD 392	–
4	BOLT, MACH, GALV, 1/2" X 5", 1 ROUND & 1 DBL COIL SPR WASH (F)		2	2	STD 392	–
5	CONDUIT, PVC, TYPE 2, SCHEDULE 40, 1" AND STRAPS PIPE, GALV, 1" WITH 2– 1 3/4" ROOFING NAILS.		10'	10'	251200	–
			AS REQ'D		697792	–
6	BOLT, MACH, GALV, 5/8" X (LENGTH AS REQ'D), 2 SQUARE & 1 DBL COIL SPRING WASHER		1	1	STD 392	–
7	BRACKET, DOUBLE CUTOUT/ARRESTER, FOR CROSSARM MOUNTING.		3	–	165442	–
8	BRACKET, ARRESTER, OR CUTOUT		–	6	166070	–
9	ARRESTER, LIGHTNING, 12KV		3	3	113248	–
10	CUTOUT, 12KV, 100A, WITH LOADBUSTER HOOKS		3	3	STD 1212	–
11	BOLT, SPACE, GALV, 5/8" X (LENGTH AS REQ'D), 2 ROUND, 4 SQUARE, 2 DOUBLE COIL SPRING WASHERS & 2 NUTS		–	2	STD 392	–
12	WIRE, #8 BARE SOLID ANNEALED COPPER (B)	FT	–	15	812928	–
		LB	–	1		
13	STAPLES, WIRE, GALV, 1 1/4" (B)		AS REQ'D		678528	–
14	CONNECTOR, WIRE COMPRESSION, CU OR AL (SIZE AS REQ'D)		AS REQ'D		783–786	–
15	WIRE, #4 BARE STRANDED COPPER	FT	110	110	813760	–
		LB	14	14		
16	CONDUIT, PVC, TYPE 2, SCHEDULE 40, 1/2"		10'	10'	251168	–
17	STRAPS, PIPE, GALV, 1/2" WITH 2– 1 3/4" ROOFING NAILS.		AS REQ'D		697728	–
18	BOLT, MACH, GALV, 3/4" X (LENGTH AS REQ'D), 1 SQ CURV RIBBED & 1 DBL COIL SPRING WASHER		2	2	STD 392	–
19	COVER, BOLT PLASTIC & 6– 1 3/4" NAILS, GALV, ROOFING.		2	2	285696	–
			–	–	492192	–
20	SWITCHED CAPACITOR RACK, COMPLETE WITH CAPACITORS, SWITCHES AND POTENTIAL TRANSFORMER	600 KVAR (3 ⊖ 200 KVAR)	1	1	564761	–
		1200 KVAR (3 ⊖ 400 KVAR)	1	1	564770	–
21	SCREW, LAG, GALV, 4"		2	2	621568	–
22	#4 CU SOLID GROUND WIRE, PVC COVERED		50'	50'	812490	GNDPVC
23	TAG, STATION NUMBER		1	1	STD. 208	–
24	GROUND ROD, 5/8" X 8', COPPERWELD		1	1	603072	GNDPVC
25	COPPER BONDED GROUND CONNECTOR		1	1	259010	–
26	GROUND ENHANCING POWER SOLUTION (GEM)		AS REQ'D		424390	–
27	GALVANIZED STAPLES FOR PVC COVERED GROUND WIRE		AS REQ'D		678562	–
28	FLEXIBLE ARRESTER GROUND STRAP		AS REQ'D		698754	–
29	HOT LINE CLAMP		3	3	227680	–

© 1998 - 2005 San Diego Gas & Electric Company. All rights reserved. Removal of this copyright notice without permission is not permitted under law.

DATE 10–15–05 APPD PBA / JJ	SDG&E ELECTRIC STANDARDS 12 & 12.47KV SWITCHED CAPACITOR INSTALLATION 2 OIL SWITCHES IN CAPACITOR NEUTRAL	1399.509 SUPERSEDES 1325.2 (10–15–05)

TABLE OF CONTENTS

OVERHEAD MACRO UNITS 12KV – SWITCHED NEUTRAL CAPACITOR		
KVAR	CONTROL	MU I.D.
600	VOLT/TIME, DIGITAL, PROGRAMMABLE	C6SCT
1200	VOLT/TIME, DIGITAL, PROGRAMMABLE	C12SCT

FOR FIELD MAINTENANCE ONLY

INSTALLATION:

(A) CAUTION: OPEN OIL SWITCHES BEFORE OPENING CUTOUTS.

(B) BOND CUTOUTS IN HEAVY CONTAMINATION DISTRICTS AS SHOWN ON STANDARD 287. IN AREAS WHERE BONDING IS REQUIRED, TO AVOID BONDWIRE AND LIGHTNING ARRESTER GROUNDWIRE ON THE SAME CROSSARM, USE TWO CROSSARMS; ONE FOR CUTOUTS AND ONE FOR LIGHTNING ARRESTERS.

(C) CONNECT CAPACITOR RACK GROUND LEAD TO LIGHTNING ARRESTER GROUND. A SECOND GROUND WIRE IS REQUIRED FOR THE CONTROL PANEL TO BE CONNECTED ON THE SAME GROUND ROD. COIL LOOSE END OF THE CONTROL PANEL GROUND WIRE AND STAPLE TO POLE (TO BE WORKED BY SERVICE CREW).

D. DO NOT TIE CAPACITOR BANK NEUTRAL TO 12KV CIRCUIT NEUTRAL. IT IS TO REMAIN FLOATING.

(F) WHEN LA/CO CROSSARM AND CAPACITORS CANNOT BE INSTALLED ON THE SAME SIDE OF THE POLE AS AN EXISTING LINEARM, DELETE ITEMS 2, 3, & 4. INSTEAD, FIELD DRILL LA/CO CROSSARM FOR 2–36" FLAT BRACES, SECURE BRACES TO POLE WITH A LAG SCREW. (SEE STD. 380.1, ITEM 1 FOR DRILLING MEASUREMENTS).

G. RACKS THAT CONTAIN POTENTIAL TRANSFORMERS (PT'S) WITH METAL TANKS ARE TO BE INSULATED FROM RACK BEFORE REINSTALLATION.

H. CAPACITORS MUST BE INSTALLED ON POLES ACCESSIBLE BY BUCKET TRUCK.

(J) PT CAN BE CONNECTED TO CENTER PHASE OR OUTSIDE PHASE DEPENDING ON FIELD CONDITION.

K. THE PT FOR THIS INSTALLATION IS CONNECTED PHASE–TO–PHASE.

(L) DRILL THROUGH CROSSARM 1" UP FROM LOWER EDGE SO THAT LOWER CROSSARM MOUNTING BRACKET BOLT DOES NOT INTERFERE WITH PVC CONDUIT.

REFERENCE:

(M) SHOWN FOR ILLUSTRATIVE PURPOSES ONLY. SEE STANDARD 1330 FOR CONTROL INSTALLATION AND MATERIAL.

(N) PVC CONDUIT IS NOT PERMITTED IN THE CLIMBING SPACE PER G.O. 95 RULE 22.2C.

(O) FOR GROUNDING REQUIREMENTS AND APPLICATION, SEE STANDARD 1002.

©1998 - 2005 San Diego Gas & Electric Company. All rights reserved. Removal of this copyright notice without permission is not permitted under law.

TABLE OF CONTENTS

SCOPE: THIS STANDARD SHOWS TYPES OF CONTROLS, MATERIAL AND INSTALLATION OF A CAPACITOR CONTROL UNIT. THIS IS TO BE USED ON ALL SWITCHED CAPACITOR STATIONS.

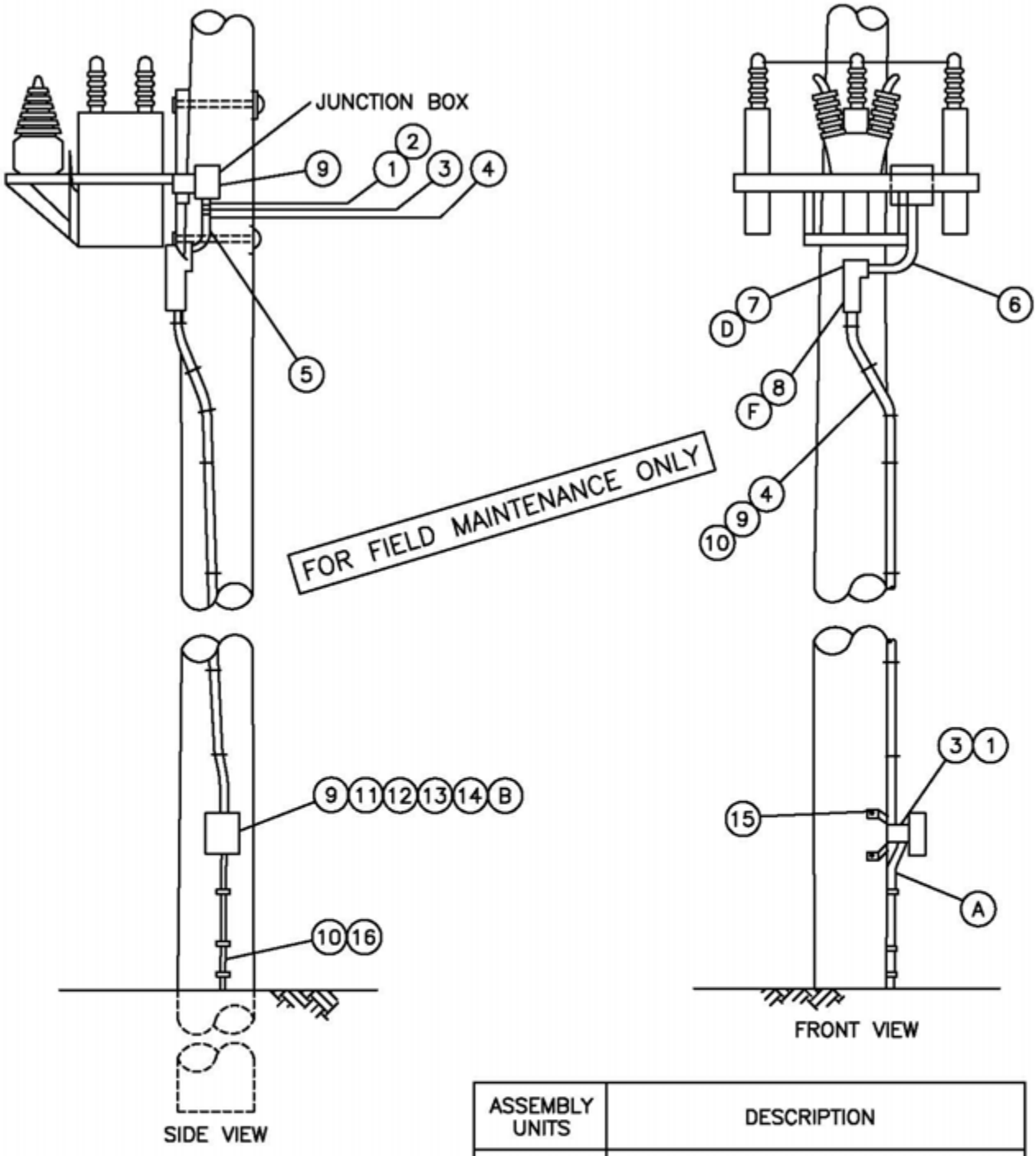

ASSEMBLY UNITS	DESCRIPTION
C/CTIM	CONTROL–DIGITAL, PROGRAMMABLE

NOTE:

- SEE PAGE 1330.4 FOR BILL OF MATERIAL
- MATERIALS ORDERED ARE BASED ON A 50' POLE.

©1998 - 2010 San Diego Gas & Electric Company. All rights reserved. Removal of this copyright notice without permission is not permitted under law.

DATE 1–1–2000 APPD PBA/VCR	SDG&E ELECTRIC STANDARDS CAPACITOR CONTROL MATERIAL AND INSTALLATION	1399.511 SUPERSEDES 1330.1 (1–1–2000)

TABLE OF CONTENTS

TABLE OF CONTENTS

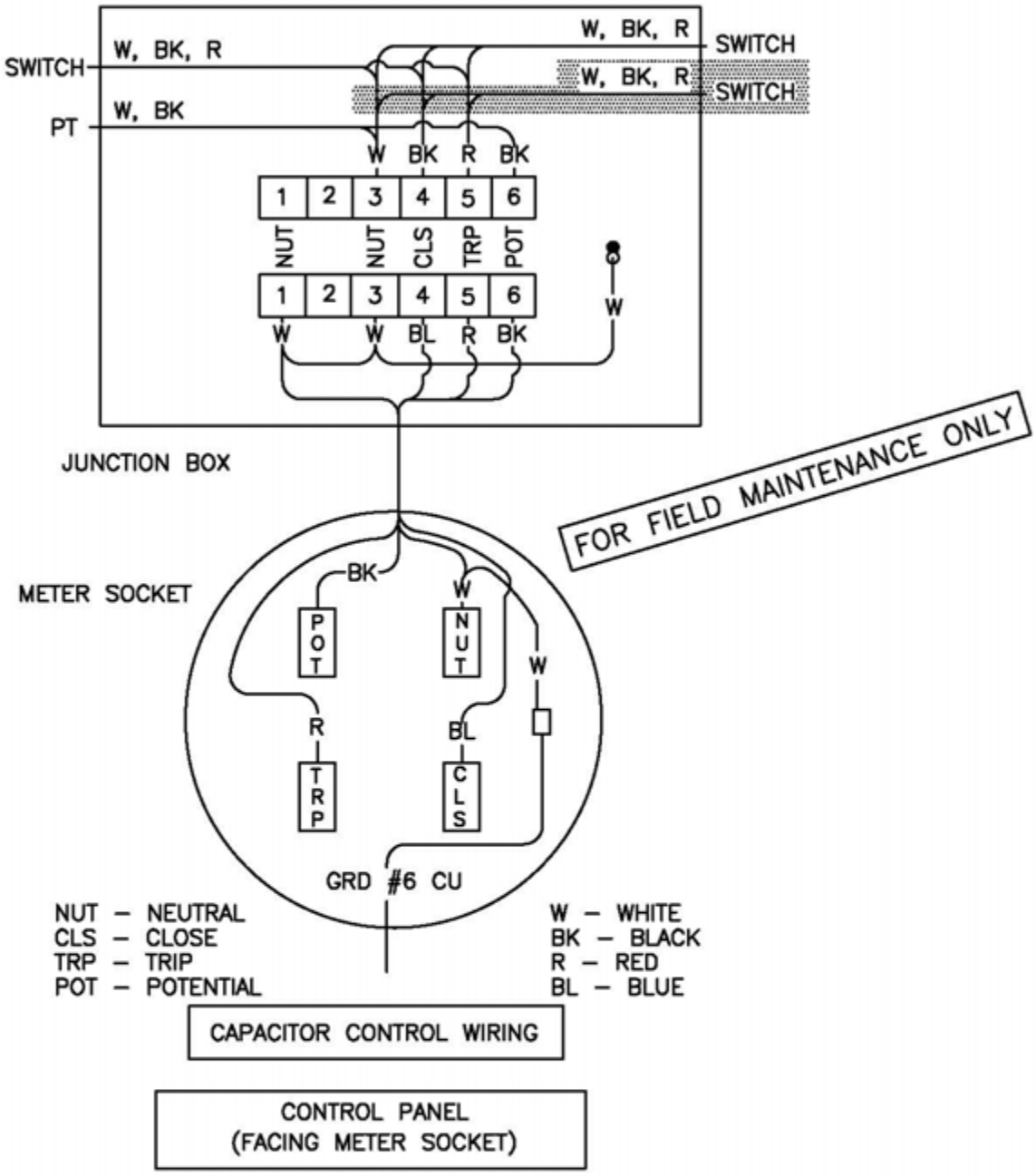

© 1998 - 2012 San Diego Gas & Electric Company. All rights reserved. Removal of this copyright notice without permission is not permitted under law.

1399.512 SUPERSEDES 1330.2 (4–3–09)	SDG&E ELECTRIC STANDARDS CAPACITOR CONTROL MATERIAL AND INSTALLATION VOLTAGE WITH TIME BIAS (TYPE 'TB')	DATE 4–3–09 APPD PA / BV

BILL OF MATERIAL: (FOR CONTROL PORTION OF SWITCHED CAPACITOR JOBS)

ITEM	DESCRIPTION	QUANTITY	STOCK NUMBER
1	TERMINAL ADAPTER, PVC 1"	2	102756
2	LOCKNUT, GALV. 1"	1	468896
3	REDUCER, PVC 1" X 3/4"	2	573410
4	CONDUIT, PVC 3/4" SCHEDULE 40	25'	251328
5	COUPLING, PVC 3/4"	1	280416
6	ELBOW 90° , PVC 3/4"	1	322166
7	ACCESS FITTING BODY TYPE "T" PVC 3/4" (D)	1	147792
8	ACCESS FITTING BODY TYPE "LB" PVC 3/4" (F)	1	146384
9	WIRE TW #12 WHITE	30'	808704
	WIRE TW #12 BLACK	30'	808096
	WIRE TW #12 BLUE	30'	808416
	WIRE TW #12 RED	30'	808576
10	STRAPS, PIPE GALV 3/4", 6 D NAILS, GALV	AS REQ'D	697888/490656
11	METER SOCKET	1	161898
12	RING, STAINLESS STEEL, METER SEALING	1	599034
13A	DIGITAL, PROGRAMMABLE CONTROL (C)	1	706176
13B	FISHER PIERCE 2416 CONTROL REPLACEMENT BATTERY KIT (G)(H)	–	126800
14	PADLOCK, MASTER 7	1	514912
15	SCREW, LAG 1/4" X 2"	4	621888
16	CONDUIT, PVC 3/4" SCHEDULE 80	9	251520

FOR FIELD MAINTENANCE ONLY

INSTALLATION:

(A) ATTACH GROUND WIRE (ALREADY PROVIDED) TO GROUND TERMINAL OF METER SOCKET.

(B) INSTALL CONTROL 90° FROM FRONT SIDE OF CAPACITOR RACK.

(C) CONTROLS TO BE CONFIGURED/PROGRAMED PER THE DISTRIBUTION CAPACITOR INSTRUCTION, SETTING AND SURVEY INFORMATION MANUALS.

(D) FOR USE WHEN CURRENT SENSOR IS REQUIRED.

(E) NEW INSTALLATIONS MUST BE AUTHORIZED BY PLANNING ENGINEER.

(F) FOR USE WITHOUT CURRENT SENSOR.

(G) REPLACEMENT KIT INCLUDES: ONE 6 VOLT RECHARGEABLE LEAD ACID BATTERY, 2–30 INCH WIRES WITH CONNECTORS ON BOTH ENDS, DOUBLE SIDED ADHESIVE TAPE.

(H) IF BATTERY IS INSTALLED ON CIRCUIT BOARD BEHIND CONTROL PANEL, INSTALL NEW BATTERY ON RIGHT HAND SIDE OF CONTROL DOOR. DO NOT ATTEMPT TO REMOVE OLD BATTERY FROM CIRCUIT BOARD BECAUSE BOARD MAY BE DAMAGED.

REFERENCE:

I. SEE STANDARD 1325 FOR A TWO OIL SWITCH INSTALLATION WITH CONTROL UNIT.

J. SEE FMO STANDARD 1399.208 FOR A SWITCH CAPACITOR USING A CURRENT SENSOR AND CONTROL UNIT.

K. SEE ELECTRIC STANDARD PRACTICE 302 FOR PROPER OPERATION OF CAPACITOR STATION AND CONTROL TESTING.

L. PVC CONDUIT IS NOT PERMITTED IN THE CLIMBING SPACE–SEE G.O. 95 RULE 22.2(C).

© 1998 - 2005 San Diego Gas & Electric Company. All rights reserved. Removal of this copyright notice without permission is not permitted under law.

TABLE OF CONTENTS

1400-1500 CABLE POLES, LIGHTING

1400-1500 CABLE POLES, LIGHTING

PAGE	SUBJECT
1499.001	CABLE POLE INSTALLATION INFORMATION
1499.002-.008	CABLE POLE RISER INSTALLATION, CABLE-IN-CONDUIT
1499.009	CABLE POLE RISER INSTALLATION, MODIFICATION FROM SINGLE TO DOUBLE RISER FOR EXISTING CABLE POLES
1499.010-.012	CABLE POLE TERMINAL MOUNTING INFORMATION (PORCELAIN TERMINALS) (FOR CONTAMINATION DISTRICT 1)
1499.101-.104	0-750 UNDERGROUND SERVICE AND RISERS
1499.201-.202	4KV CABLE POLE CONSTRUCTION
1499.203-.206	12.47KV AND BELOW 3 PHASE CABLE POLE 1/C PER PHASE UPSWEEP BRACKET CONSTRUCTION
1499.207-.212	BRACKET MOUNTED TERMINALS, 12.47KV AND BELOW SINGLE-PHASE ARMLESS TANGENT CONSTRUCTION, NON-PORCELAIN TERMINALS "4 WAY AND 'T' CORNERS", 12 AND 12.47KV
1499.301-.304	12KV ARMLESS CABLE POLE CONSTRUCTION
1499.305-.306	12.47KV AND BELOW CABLE POLE, UPSWEEP BRACKET, THREE-PHASE, 1/C PER PHASE, LINEARM MOUNTED DISCONNECTS
1499.307-.309	CROSS ARM CABLE POLE 3 PHASE, 1/C PER PHASE DEADEND CONSTRUCTION, 12.47KV AND BELOW
1499.310-.314	12.47KV AND BELOW CABLE POLE UPSWEEP BRACKET
1499.401-.403	12.47KV AND BELOW DEAD END CABLE POLE ARM, 3 PHASE, 1/C PER PHASE, HOOKSTICK SWITCHED
1499.404-.413	12.47KV AND BELOW DEAD END CABLE POLE THREE-PHASE, 1/C PER PHASE, GANG OPERATED SWITCHED NON-PORCELAIN TERMINALS
1499.501-.503	CABLE POLE, STEEL, LIGHT DUTY
1499.504-.506	12.47KV AND BELOW DEAD END CABLE POLE, 6 OR 7 OH CONDUCTORS, 1 OR 2 TERMINALS PER CONDUCTOR, HOOKSTICK SWITCHED
1499.601-.605	12.47KV DEAD END CABLE POLE, THREE-PHASE WITH NEUTRAL, HORIZONTAL SCADA-MATE SWITCH
1499.801-.902	METERING
1599.102	LIGHTING INSTALLATION
1599.201	MERCURY VAPOR CONVENTIONAL LUMINAIRES
1599.203-.204	HIGH PRESSURE SODIUM VAPOR LUMINAIRE AND REPLACEMENT BALLAST
1599.210	LOW PRESSURE SODIUM VAPOR LUMINAIRE AND REPLACEMENT BALLAST
1599.501	SERIES CONTROLLED R.O. STREET LIGHT TRANSFORMER INSTALLATIONS
1599.502	SERIES CONTROLLED, REGULATED OUTPUT STREET LIGHT TRANSFORMER INSTALLATION, REMOTE CONTROL OUTDOOR CIRCUIT, SWITCH CAPACITOR, 4KV
1599.503	PHOTOELECTRIC CONTROLLED, REGULATED OUTPUT, STREET LIGHT TRANSFORMER INSTALLATION, 4KV
1599.601-.602	PHOTOELECTRIC CONTROLLED R.O. STREET LIGHT TRANSFORMERS INSTALLATION, 12KV

MAIN TABLE OF CONTENTS

© 1998 - 2019 San Diego Gas & Electric Company. All rights reserved. Removal of this copyright notice without permission is not permitted under law.

REV	CHANGE	BY	DSGN	APPV	DATE	REV	CHANGE	BY	DSGN	APPV	DATE
C						F					
B	COMPLETELY REVISED	JK	JS	CZH	10/15/2019	E					
A	ORIGINAL ISSUE	JK	JS	CZH	6/13/2019	D					

Indicates Latest Revision | X Completely Revised | New Page | Information Removed

SDG&E ELECTRIC OVERHEAD FIELD MAINTENANCE ONLY STANDARDS

LEGACY OVERHEAD FIELD MAINTENANCE
TABLE OF CONTENTS
CABLE POLES, LIGHTING

SCOPE: THIS STANDARD: 1) SHOWS THE STANDARD CABLE POLE RISER POSITIONS FOR SDG&E, TELCO, AND CATV COMPANIES. IT IS FOR RISER PLACEMENT ONLY (SEE SECTION 1400/4200 FOR SPECIFIC CONSTRUCTION DETAILS).

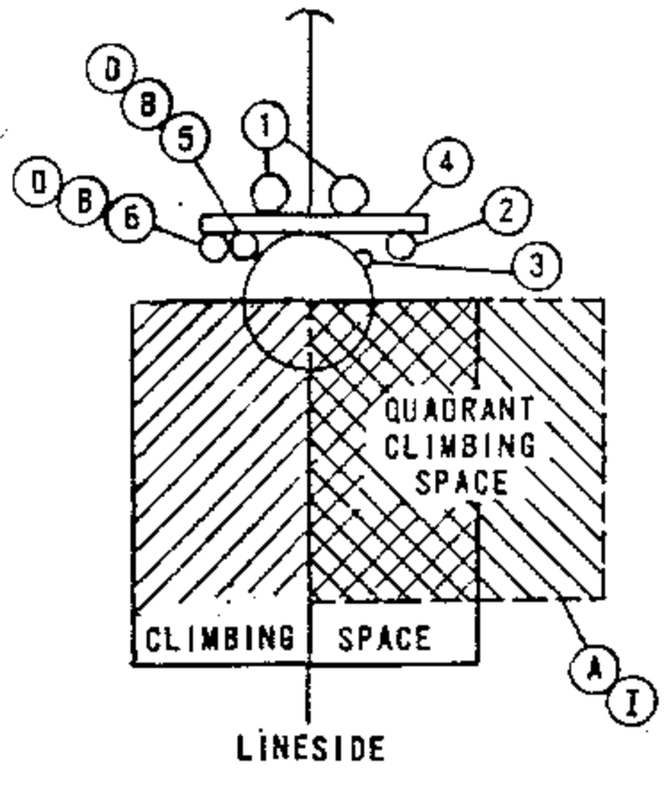

FIGURE 1

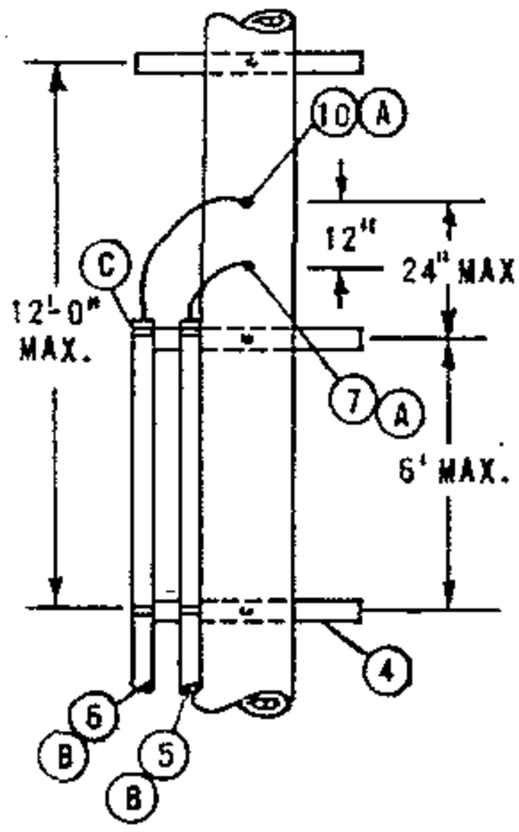

FIGURE 2

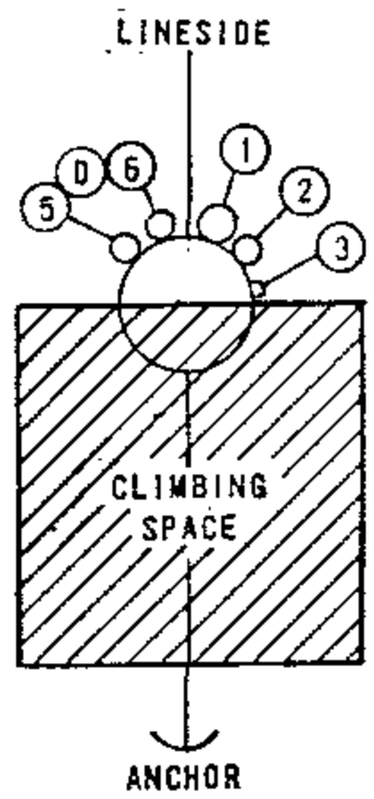

FIGURE 3

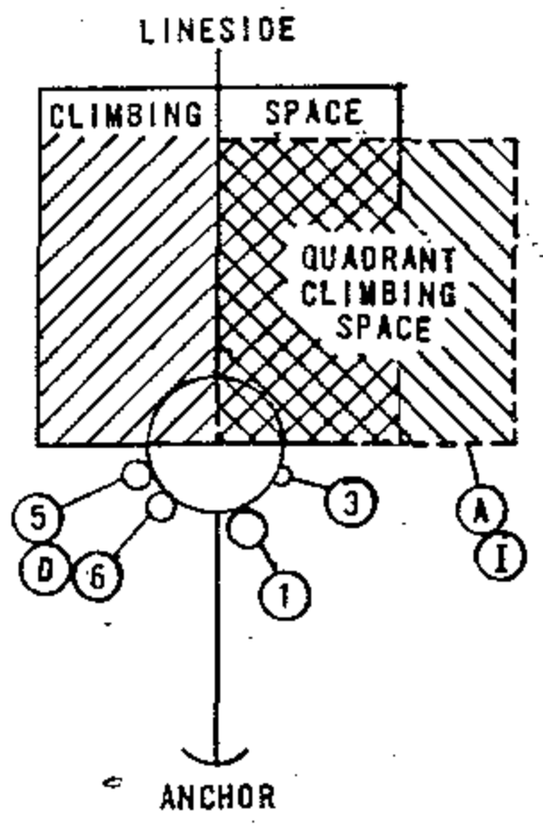

FIGURE 4

DEAD END CONSTRUCTION

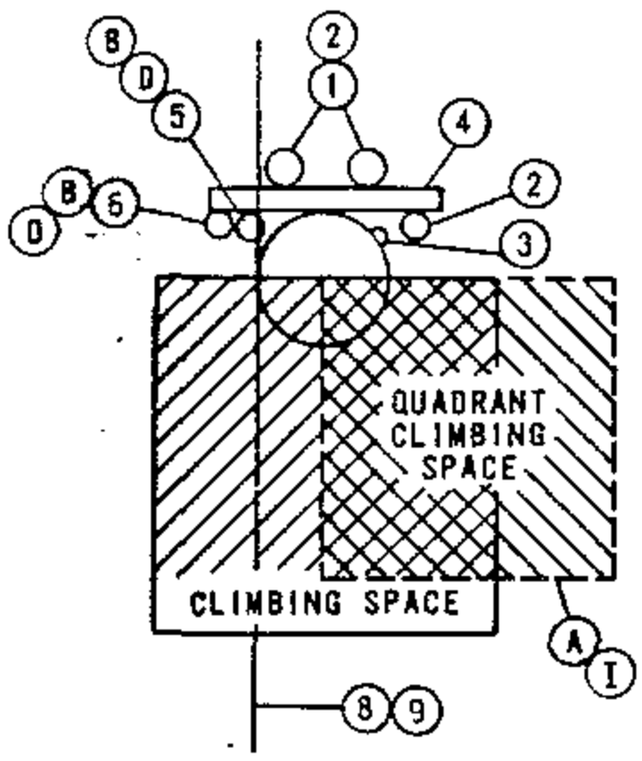

FIGURE 5

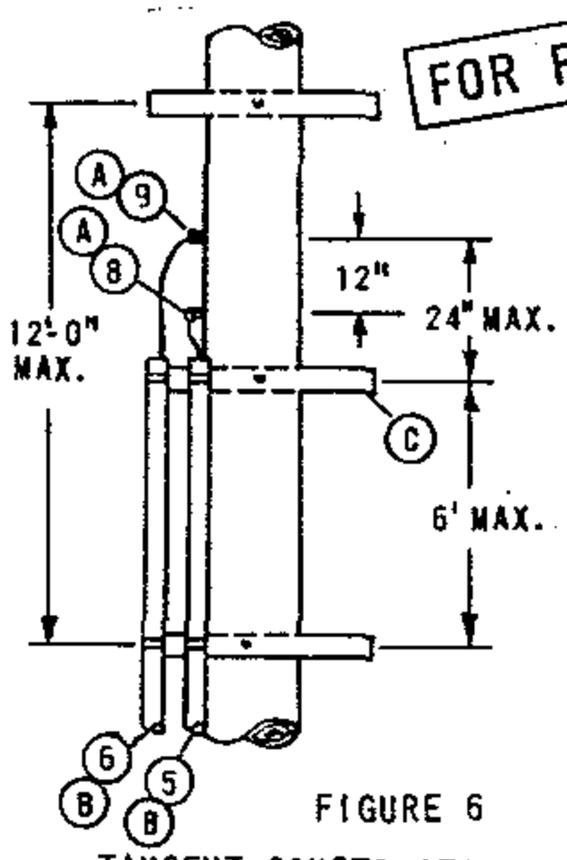

FIGURE 6

FOR FIELD MAINTENANCE ONLY

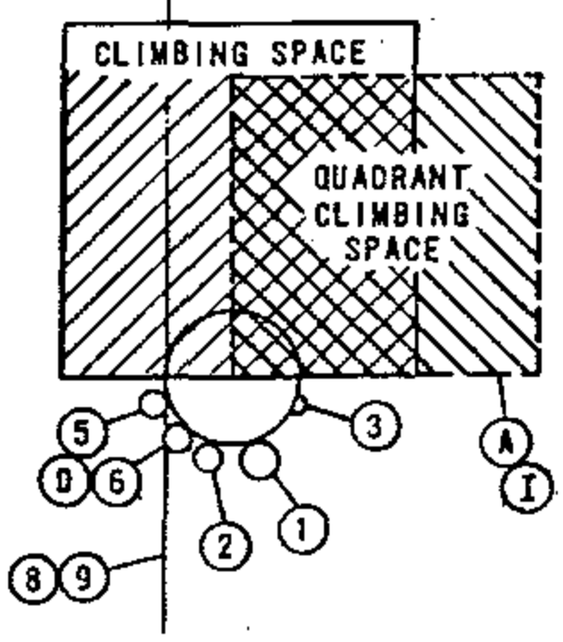

FIGURE 7

TANGENT CONSTRUCTION

INSTALLATION:

(A) QUADRANT CLIMBING SPACE PROVIDED THROUGH CATV AND TELCO AERIAL ATTACHMENT LEVELS ONLY.

(B) C.A.T.V. AND TELCO TO ATTACH CONDUIT TO BACK SIDE OF RISER LADDER ARMS.

(C) C.A.T.V. OR TELCO TO PLACE RISER LADDER ARM TO HOLD TOP OF OWN CONDUIT.

(D) C.A.T.V. AND TELCO TO ALWAYS BE IN SAME QUADRANT.

F. CONDUIT RISER AT BASE OF POLE NOT TO INFRINGE ON CURB OR SIDEWALK POSITIONS.

REFERENCES:

G. PVC RISERS ARE NOT PERMITTED WITHIN THE CLIMBING SPACE PER G.O. 95 RULE 22.2C.

H. G.O. 95 RULE 91.3-A1C REQUIRES POLE STEPS ON ALL JOINTLY USED CABLE POLES (SEE STANDARD 363).

I. SEE SECTION 200 FOR ALLOWABLE G.O. 95 CLIMBING SPACE OBSTRUCTIONS.

J. NO CATV OR TELCO JUMPERS ALLOWED IN QUADRANT CLIMBING SPACE PER G.O. 95 RULE 84.7.

ITEM	DESCRIPTION	ITEM	DESCRIPTION
1	SDG&E PRIMARY RISER	6	C.A.T.V. RISER POSITION
2	SDG&E SECONDARY RISER	7	TELCO DEAD END ATTACHMENT
3	SDG&E ELECTRIC GROUND	8	TELCO TANGENT (THRU) POSITION
4	RISER LADDER ARM	9	C.A.T.V. TANGENT (THRU) POSITION
5	TELCO RISER POSITION	10	C.A.T.V. DEAD END ATTACHMENT

DATE 11-16-81
APPD JEY

SDG&E ELECTRIC STANDARDS

JOINT CABLE POLE RISERS USING WOODEN LADDER ARMS

OH 1499.001
~~UG 4299.001~~
SUPERSEDES
1402.1 (11-16-81)

TABLE OF CONTENTS

SCOPE: THIS STANDARD SHOWS THE CONSTRUCTION FOR SINGLE-PHASE PRIMARY AND SECONDARY CABLE-IN-CONDUIT (CIC) INSTALLATIONS.

CABLE AND CONDUIT TABLE

RISER EXTENSION	CABLE POLE RISER	PRIMARY IN CONDUIT (PID)	SECONDARY IN CONDUIT (SIDA)
3"	3" (D)	1	1- (2-3/0, 1-1/0 & SMALLER)
4"	3"	2	1- (2-350 KCMIL, 1-1/0) (B)
5"	3"	(H)	2- (2-3/0, 1-1/0 ONLY) (C)

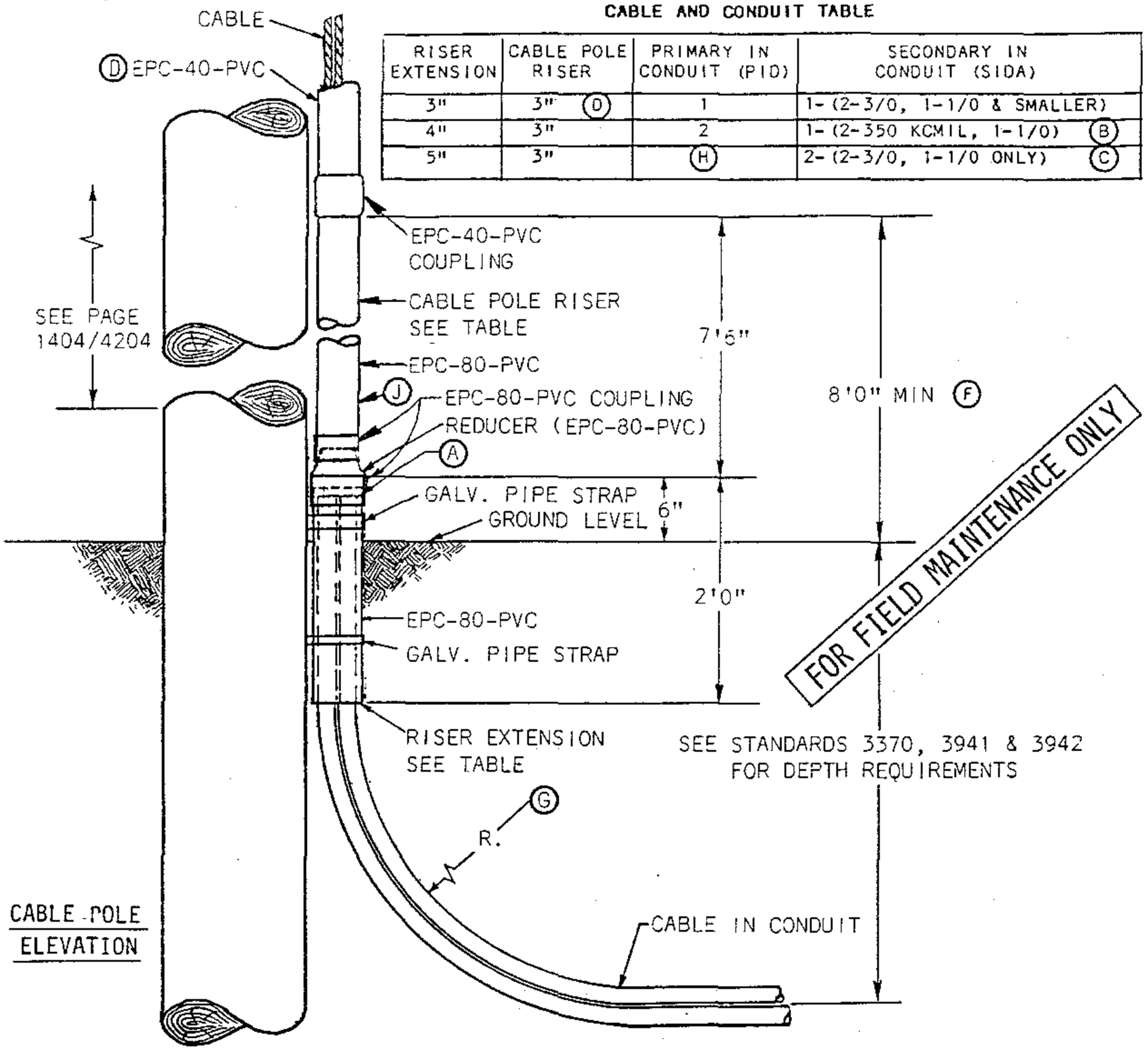

NOTES: NO MORE THAN TWO CIC CONDUITS FOR A RIGID CONDUIT RISER IS ALLOWED.

INSTALLATION:

(A) CUT CONDUIT FROM CABLE-IN-CONDUIT 4 INCHES ABOVE GROUND LEVEL.

(B) THE 350 KCMIL CABLE-IN-CONDUIT (SIDA) SHALL NOT BE USED FOR SERVICES. IF A SERVICE REQUIRES 350 CABLE, USA CABLE AND RIGID CONDUIT MUST BE USED.

(C) FOR 2 RUNS OF SIDA IN ONE RISER, DERATE AMPACITY 20%.

(D) FOR 3/0 AND SMALLER SIDA, REDUCE THE TOP PORTION OF THE RISER ABOVE THE 8 FOOT LEVEL TO 2 INCH CONDUIT.

REFERENCE:

(F) RISERS OF PLASTIC PIPE SHALL BE EPC-80-PVC (SCHEDULE 80) WITH A MINIMUM NOMINAL PIPE SIZE OF 3 INCHES FROM THE GROUND LINE TO A LEVEL NOT LESS THAN 8 FEET ABOVE THE GROUND LINE PER G.O. 95, RULE 54.6-E.

(G) SEE PAGE 3380.2 FOR CABLE-IN-CONDUIT MINIMUM BENDING RADIUS.

(H) SEE PAGES 1403.2/4203.2 THRU 1403.7/4203.7 FOR THREE-PHASE PRIMARY CABLE IN CONDUIT INSTALLATION WHICH REQUIRES 'U' SHAPED MOULDING.

(I) SEE PAGE 1404.2/4204.2 FOR CABLE POLE RISER BILL OF MATERIAL.

(J) SEE PAGES 1405.1/4205.1 THRU 1405.3/4205.3 FOR MULTIPLE RISER INSTALLATION.

OH 1499.002 ~~UG 4299.002~~ SUPERCEDES 4203.1 (3-2-84)	SDG&E ELECTRIC STANDARDS CABLE POLE RISER INSTALLATION CABLE-IN-CONDUIT	DATE 1-1-87 APPD JLB 12/12/86

TABLE OF CONTENTS

SCOPE: THIS STANDARD SHOWS THE MATERIALS AND PROCEDURES FOR TERMINATING THREE PREASSEMBLED CABLE-IN-CONDUIT ON RISER POLE.

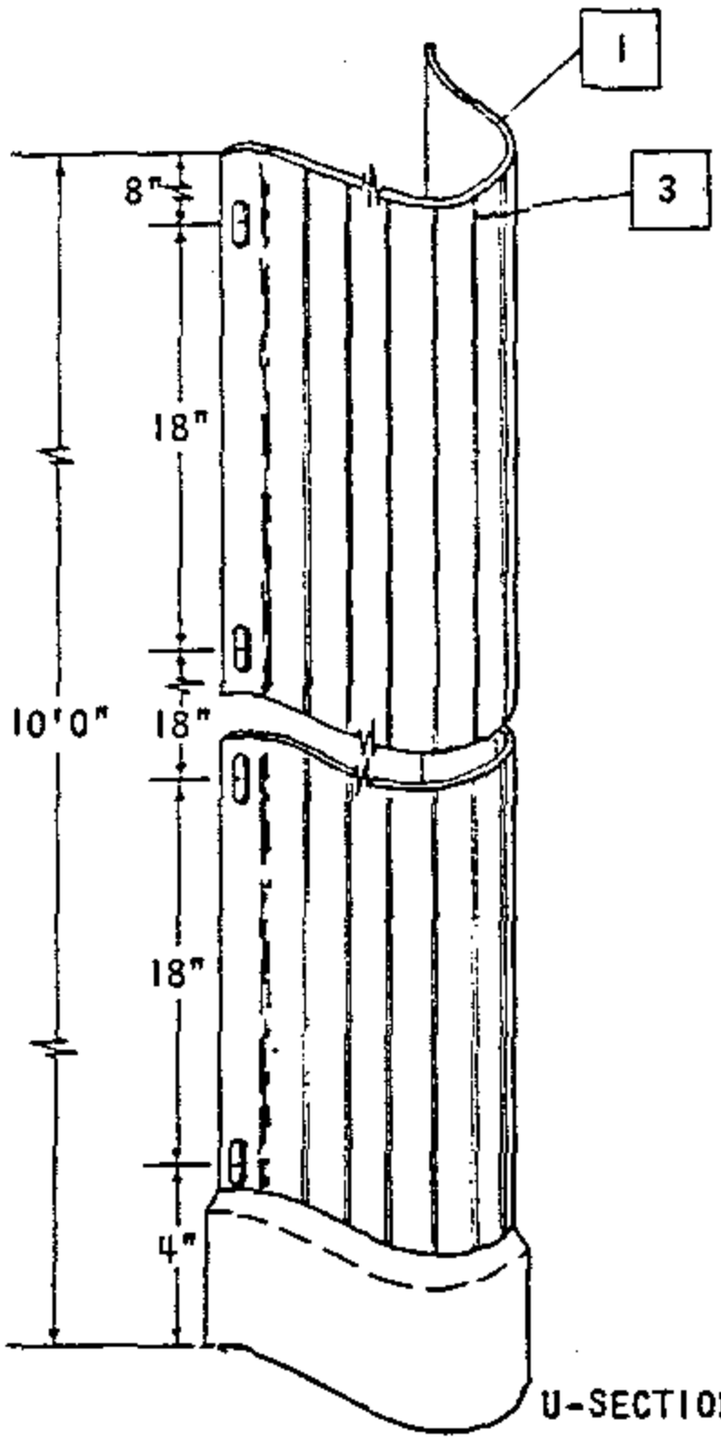

U-SECTION

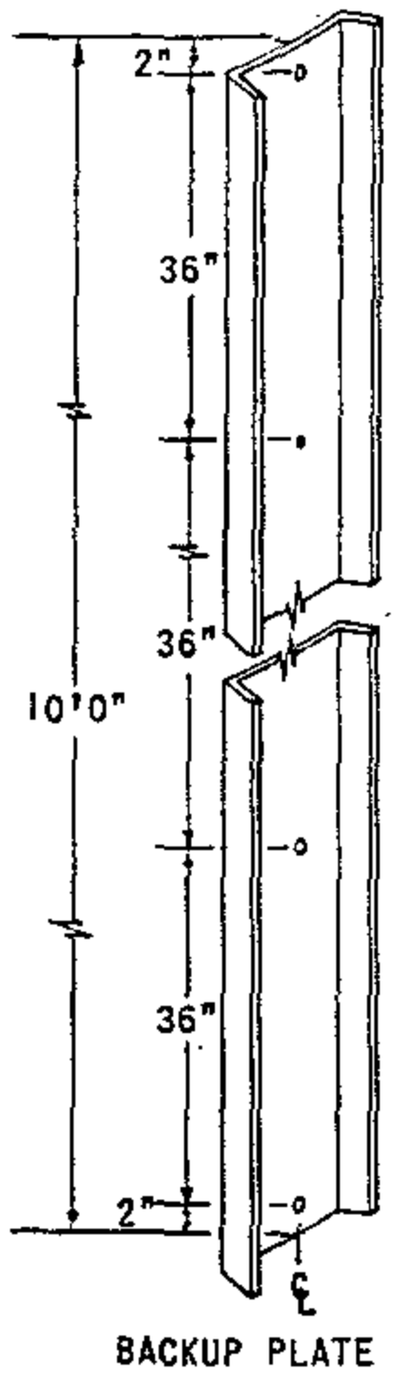

BACKUP PLATE

FOR FIELD MAINTENANCE ONLY

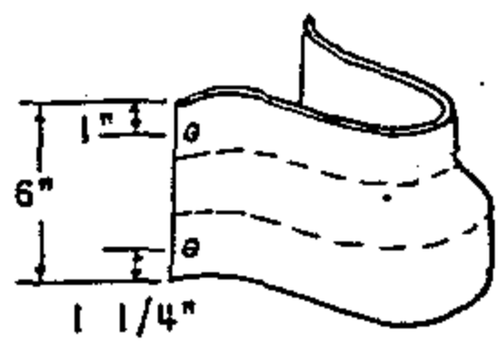

REDUCER BOOT

NOTE: DIMENSIONS A, B, & C HAVE A TOLERANCE OF ± .13".

BILL OF MATERIAL:

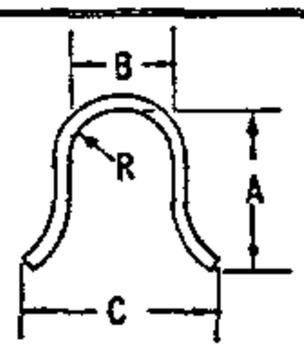

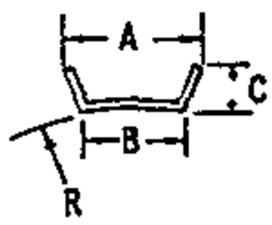

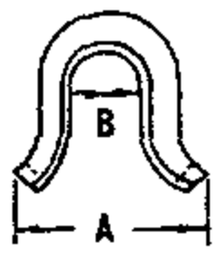

	U-SECTION MOLDING			BACKUP PLATE		REDUCER BOOT		
SIZE	3"	3"	4"	3"	4"	3" TO 4"		
SCHEDULE	80	30	40	N/A	N/A	N/A		
LENGTH	10'0"	10'0"	10'0"	10'0"	10'0"	6"		
M & S NO.	600064	600032	600096	542992	542994	160608		
A	3 3/8"	3 3/8"	4 1/8"	3 1/4"	4 1/4"	8 1/4"		
B	3"	3"	4"	2 5/8"	3 5/8"	2 5/8"		
C	6 1/4"	6 1/4"	7 1/4"	7/8"	1"	--		
R	1 7/16"	1 19/32"	2"	5"	5"	--		
WALL THICKNESS	.300"	.150"	.237"	.063"	.063"	.150"		
TOLERANCE	-.0" +.036"	-.0" +.020"	-.0" +.020"	±.015"	±.015"	-.0" +.015"		

SDG&E ELECTRIC STANDARDS

DATE 1-1-87
APPD J.Y.S/R.D.S.

3Ø CABLE POLE RISER INSTALLATION CABLE-IN-CONDUIT

~~OH 1499.003~~
~~UG 4299.003~~
SUPERCEDES 4203.2 (1-4-80)

TABLE OF CONTENTS

SEQUENCE FOR INSPECTION

SEQ	DESCRIPTION/DIMENSIONS			TOLERANCE
1	WALL THICKNESS			
	U-Sections	3"	Sch. 80 .300	-.0" + .036"
		3"	Sch. 30 .150"	-.0" + .020"
		4"	Sch. 40 .237"	-.0" + .020"

Above wall thicknesses are in accordance with G.O. 95 Rule 54.6D2.

2 GENERAL APPEARANCE ALL SURFACES

U-Sections, Backup Plates and Reducer Boot — Free from warpage, cuts, blemishes and protrusions.

FOR FIELD MAINTENANCE ONLY

3 SCRIBE MARK

Scribe mark indicating minimum overlap distance should be visible 1" from the plain end of the U-Section.

BILL OF MATERIAL:

ITEM	*QUANTITY REQUIRED	DESCRIPTION	USE BELOW 8 FT.	USE ABOVE 8 FT.	STOCK NO. OR CONST. STDS.
1	3'	Riser, U-Section 4"x10' Sch. 40	yes	no	600096
2	1	Riser, U-Section 3"x10' Sch. 80	yes	no**	600064
3	2	Riser, U-Section 3"x10' Sch. 40	no	yes	600032
4	1	Boot, Reducer 4" to 3"	yes	no	160608
5	3	Plate, Backup 3"x10'	yes	yes	542992
6	3'	Plate, Backup 4"x10'	yes	no	542994
7	1	Screw, Lag, Sq. Head 1/2'x4" (E)	no	yes	621568
8	42	Screw, Lag, Sq. Head 1/4"x 2 1/2" (E)	yes	yes	621856
9	42	Washer, Std. Flat Round 1/4" (E)	yes	yes	799520
10	46	6d Galvanized Nails (E)	yes	yes	—
11	3	Grip, Cable 5 1/4"x12"	no	yes	394336

(E) Exempt Material

* This quantity is a typical 40' riser installation, if pole height varies from this distance adjust appropriate material accordingly.

** Only excess portion of 1 - 10 ft. 3" Sch. 80 U-Section is allowed above the 8 ft. level.

OH 1499.004 ~~UG 4299.004~~ SUPERCEDES 4203.3 (11-16-81)	SDG&E ELECTRIC STANDARDS 30 CABLE POLE RISER INSTALLATION CABLE-IN-CONDUIT	DATE 1-1-87 APPD JLG/RDT

TABLE OF CONTENTS

INSTALLATION INSTRUCTIONS

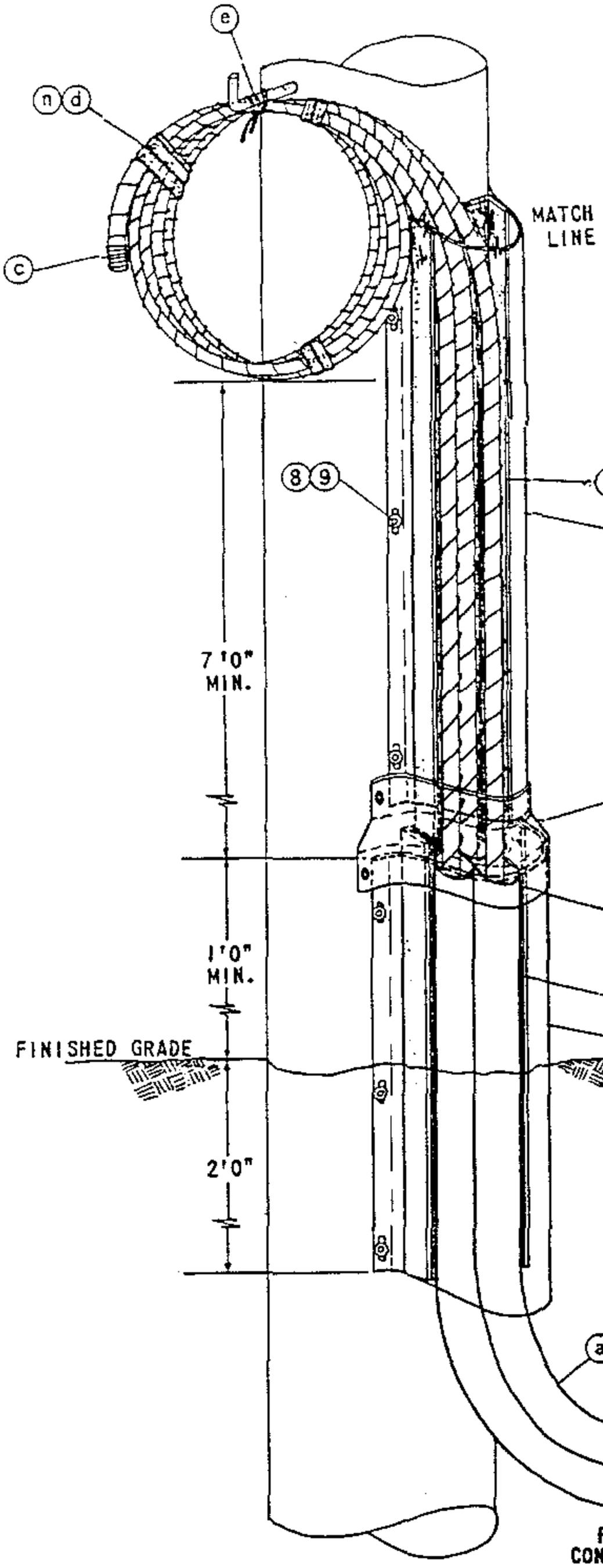

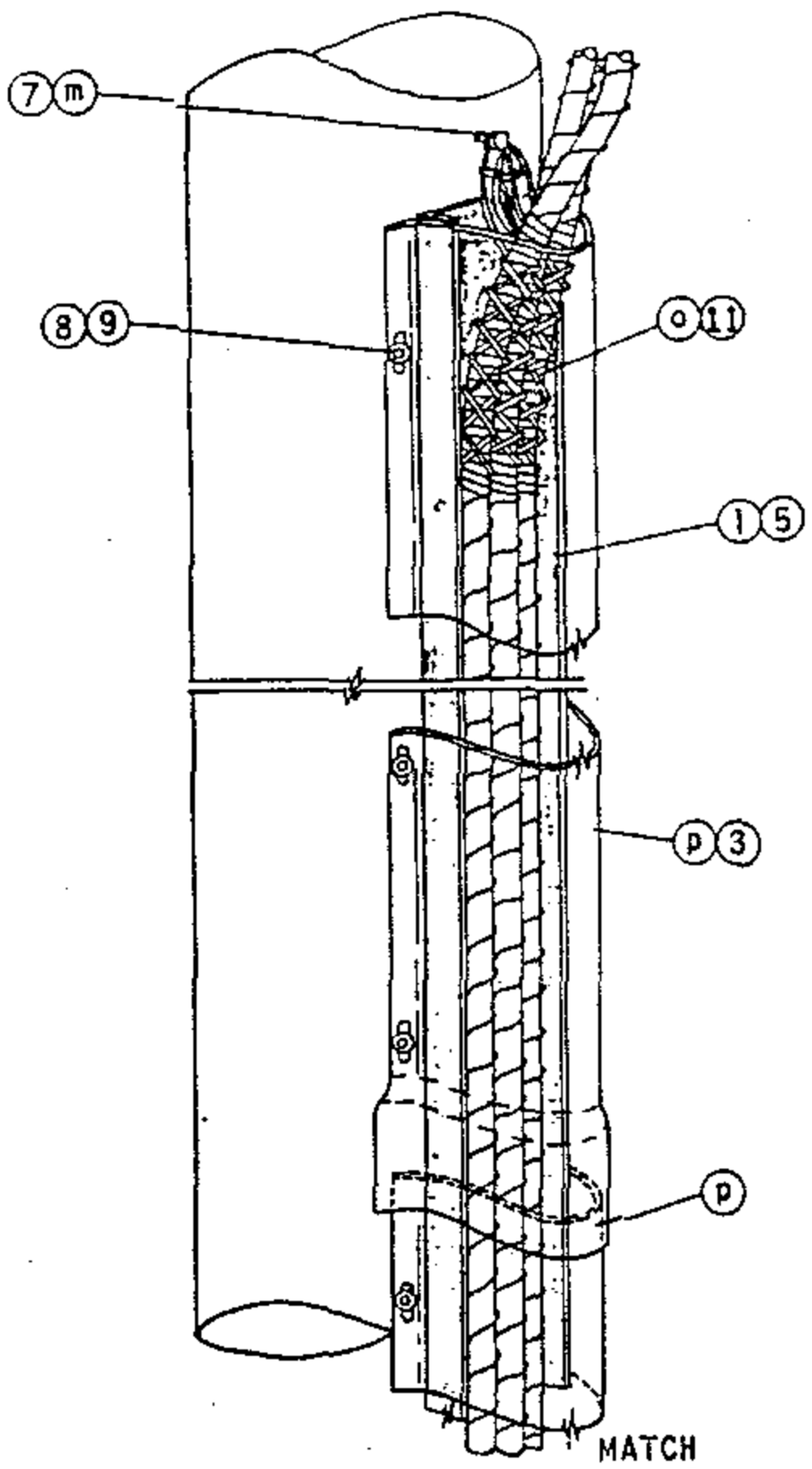

NOTE: Care must be taken not to spike conductors with linemans hooks while performing installation, ascending or descending a riser pole.

FOR FIELD MAINTENANCE ONLY

TABLE OF CONTENTS

DATE 1-1-87 APPD JLS 1/12	SDG&E ELECTRIC STANDARDS 3Ø CABLE POLE RISER INSTALLATION CABLE-IN-CONDUIT	OH ~~1499.005~~ ~~UG 4299.005~~ SUPERCEDES 4203.4 (1-23-80)

FOR FIELD MAINTENANCE ONLY

U-SECTION MOLDING LOCATION

Verify that the quadrant selected by Designer/Planner for the cable pole riser meets the following requirements. If the following requirements cannot be met, contact the Designer or Planner who requested the installation:

Clearances

The U-section molding shall not enter climbing space per G.O. 95 Rule 22.2D. See O.H. Standard page 251 for allowable working and climbing space requirements.

Location of U-section molding in relation to TELCO and CATV (per Overhead Standards page 1402).

U-SECTION MOLDING INSTALLATION

Material Installation Sequence

Note: If installation can be completed sequencially, steps c, d and n, can be eliminated.

(a) Terminate PID at cable pole by forming a 36" minimum radius bend with the cable-in-conduit at the base of the pole. Provide sufficient cable-in-conduit needed to terminate cable with drip loop at terminal level before cutting cable-in-conduit from cable reel.

(b) Cut and remove excess pvc conduit from the PID run so the remaining conduit terminates 1' above finished grade. When removing excess pvc conduit, carefully slide excess conduit away from primary conductors.

(c) To prevent moisture from entering exposed conductors, always seal exposed ends of conductors with "Aquaseal" and pvc tape.

(d) Individually coil each primary conductor making sure coil is not less than 2' in diameter. Secure each coil in several places with a gray gas wrap tape to prevent conductors from uncoiling.

(e) Secure coils to the bottom of the pole step with rope to prevent conductors from damage when the pole is climbed. If pole steps are not available, install lag screws (M&S 621856) in place of pole steps. Bottom of each coil must be 8' above existing grade to prevent vandalism.

(f) Install a 3' section of 4" backup plate with 2' extended below finished grade and 1' extended above finished grade. Temporarily push conductors to one side of the riser quadrant and secure 4" backup plate to pole with 6d galvanized nails at each end and in the middle. Because holes are not provided nails must be driven through backup plate.

ⓖ Install a 3' section of 4" U-section molding over the previously installed backup plate (step f) encasing the conduits. Nail 4" U-section molding to pole every 18" using lag screws and washers, (items 8 and 9 from bill of materials).

ⓗ Install a 10' section of 3" backup plate behind primary conductors and mate to previously installed backup plate. Temporarily push conductors to one side of the riser quadrant to prevent damage to conductors. Use 6d galvanized nails to attach backup plate to pole starting and ending at each end.

ⓘ Install a 10' section of 3" U-section molding schedule 80, over previously installed backup plate (step h) encasing primary conductors. To permit thermal expansion, do not drive lag screws tight and leave approximately 1/4" gap between the 3" and 4" U-section moldings. Secure U-section molding to pole every 18" with lag screw and washers (item 8 and 9 from bill of materials).

ⓙ Install reducer boot over 3" and 4" U-section molding using 6d galvanized nails. Make sure reducer boot fits securely over each section.

FOR FIELD MAINTENANCE ONLY

ⓚ When the contractor provides trench, the area around the riser bend at base of pole must be backfilled and compacted to 90% and a distance equal to the depth of the trench by the crew to prevent damage to conductors.

ⓛ Install remaining backup plate from termination point in (step h) to elevation of pole where U-section molding will terminate. Refer to Overhead Standards page 1406 for elevation of U-section molding termination. Nail backup plate to pole with 6d galvanized nails every 18".

ⓜ Install lag screw (item 7 from bill of materials) 2" beyond termination of U-section molding for cable grip support.

TABLE OF CONTENTS

ⓝ Remove each conductor coil from pole step, and remove binding tape. Uncoil each conductor carefully to prevent bending conductor.

ⓞ Install one cable grip approximately 2' from the end of each conductor, (item 11 from bill of materials). Hoist each conductor and hang cable grip on lag screw installed by (step m) . Adjust cable grips to determine optimum support positions, tie cables temporarily to pole and slide cable grip below final position. Tape over concentric neutral at final position where grip will seat with half lapped layers of glass tape (720256) and vinyl plastic (720580) over glass tape to assure positive grip. Position cable grip over taped area and attach cable grip to lag screw installed in (step m).

ⓟ Install required amount of 3" U-section schedule 30 sections needed to cover backup plate and encase conductors to the termination point of the riser installation. Install belled end of U-section molding over a plain end of previously installed U-section molding. Line up edge of belled end with scribe mark 1" from plain end to ensure that sufficient spacing is provided between U-sections for thermal expansion. Nail U-section molding to pole with lag screws and washers (item 8 and 9 from bill of materials) every 36". Lag screws should be snug but not tight, this is also to allow thermal expansion of U-section. Additional lag screws may be needed at 18" intervals if U-section molding separates more than 1/16" away from pole.

DATE 1-1-87 APPD JLB/RDT	SDG&E ELECTRIC STANDARDS 3Ø CABLE POLE RISER INSTALLATION CABLE-IN-CONDUIT	OH 1499.007 ~~UG 4299.007~~ SUPERCEDES 4203.6 (6-14-83)

MAINTENANCE REQUIREMENTS

Inspection

The U-section molding installation shall be inspected periodically for the following:

Warpage of U-Section Exposing Conductors

For Separation of U-Section Molding From Pole More than 1/16"

Cracks or Damage in U-Sections Which Expose Conductors

FOR FIELD MAINTENANCE ONLY

TABLE OF CONTENTS

OH 1499.008- ~~UG 4299.008~~ SUPERCEDES 4203.7 (12-23-	SDG&E ELECTRIC STANDARDS 3Ø CABLE POLE RISER INSTALLATION CABLE-IN-CONDUIT	DATE 1-1-87 APPD JLB RDT

SCOPE: THIS STANDARD SHOWS THE CONSTRUCTION USED WHEN MODIFYING AN EXISTING SINGLE RISER CABLE POLE WHERE A SECOND RISER IS ADDED.

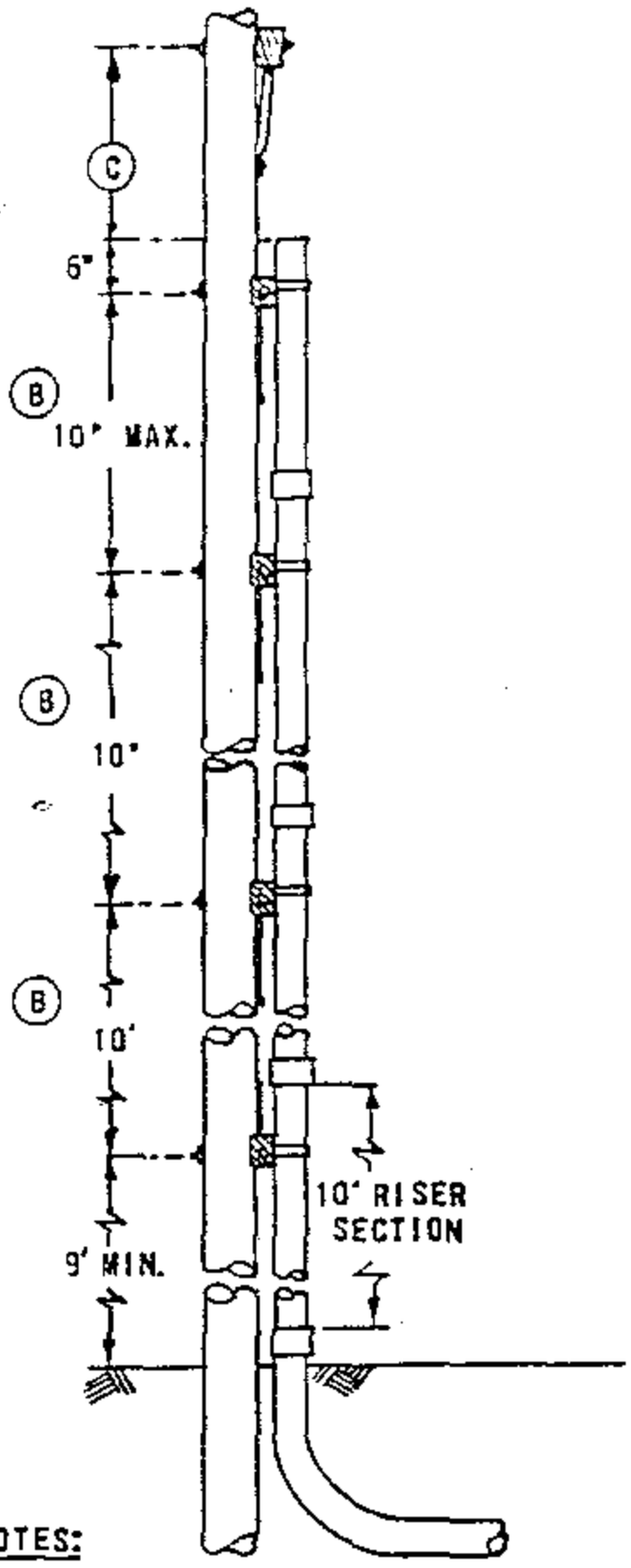

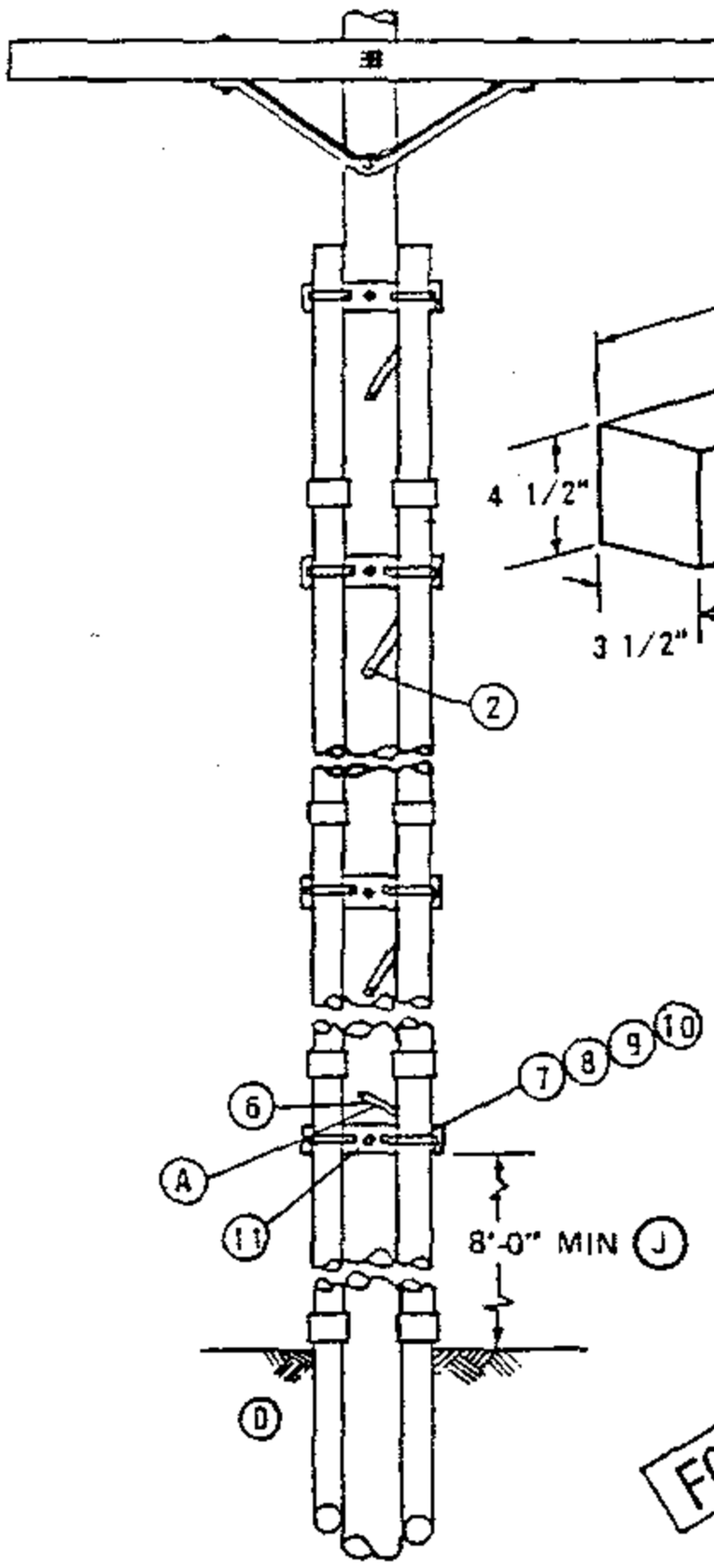

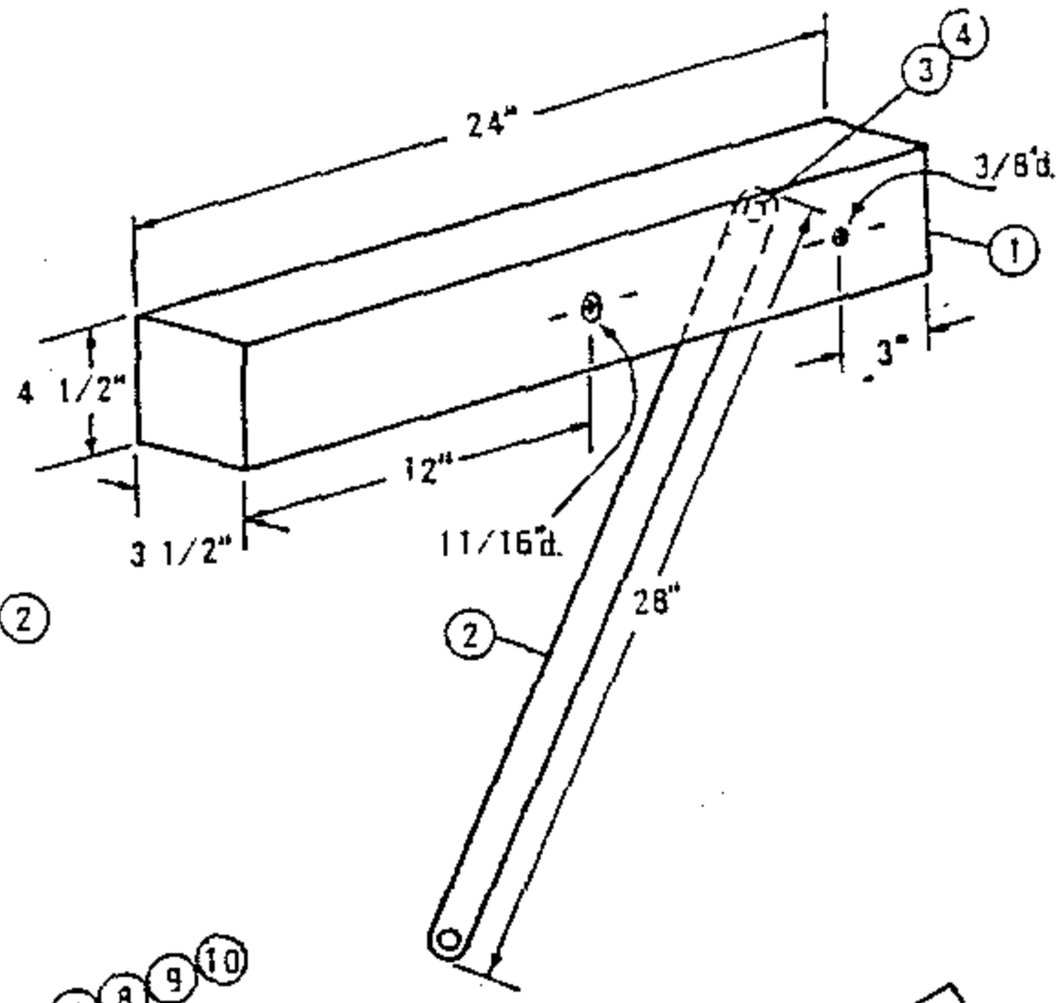

FOR FIELD MAINTENANCE ONLY

NOTES:

- THIS CONSTRUCTION IS RESTRICTED TO A MAXIMUM OF TWO SDG&E RISERS, (PRIMARY OR SECONDARY).
- WHENEVER POSSIBLE RISERS SHOULD BE INSTALLED ON THE SIDE OF THE POLE OPPOSITE TRAFFIC FLOW.
- SPARE DUCT SHALL BE CAPPED JUST ABOVE GROUND LEVEL TO PREVENT MOISTURE ENTRY AND NOT TO BE CONSIDERED AS A RISER.

BILL OF MATERIAL:

ITEM		DESCRIPTION	QUANTITY	STOCK NO. OR CONST. STDS.	ITEM		DESCRIPTION	QUANITY	STOCK NO. OR CONST. STDS.
P T & F	1	CROSSARM, 3-1/2" x 4-1/2" x 2'-0"	AS REQ'D.	380.05 IT.1	P T & F	8	STRAP, PIPE, 2 HOLE, GALV., 4"	AS REQ'D.	697952 (E)
	2	BRACE, FLAT 28"	AS REQ'D.	164192		9	STRAP, PIPE, 2 HOLE, GALV., 5"	AS REQ'D.	697984 (E)
	3	BOLT, WASHER HEAD 3/8" X 4 1/2"	AS REQ'D.	158528 (E)		10	NAILS, FLATHEAD, STEEL GALV. 16D	AS REQ'D.	491424 (E)
	4	WASHER, 3/8" SPRING LOCK	AS REQ'D.	796832 (E)		11	BOLT, MACH. GALV., 5/8" X (LENGTH AS REQ'D), 2-SQ. WASH 1-OBL COIL WASH	AS REQ'D.	PG. 392.1 392.2 (E)
	5								
	6	SCREW, LAG 1/2" X 4"	AS REQ'D.	621568 (E)					
	7	STRAP, PIPE, 2 HOLE, GALV., 3"	AS REQ'D.	697920 (E)					

INSTALLATION:

(A) LADDER ARMS TO BE INSTALLED BY U.G. CREWS. MOUNT LOWEST ARM NO LOWER THAN 9 FEET AND INSTALL THE FLAT BRACE ABOVE THE FIRST ARM AS SHOWN.
(B) INSTALL AT LEAST ONE BRACKET FOR EACH JOINT OF CONDUIT.
(C) 48 INCHES MINIMUM FOR 350 OR LARGER UG CABLE, 30 INCHES MINIMUM FOR 2/0 AND SMALLER CABLE. THIS DIMENSION APPLIES TO THE TRIPLE TERMINATOR BRACKET AS WELL AS CROSSARMS.
(D) EXCAVATION MIGHT BE REQUIRED AROUND EXISTING RISER TO FACILITATE THE INSTALLATION OF LADDER ARMS.
(E) EXEMPT MATERIAL.

REFERENCE:

F. SEE PAGE 1402.1/4202.1 FOR POSITION OF RISERS INVOLVING MORE THAN ONE UTILITY.
G. POLES ARE TO BE STEPPED PER STANDARD 363.
H. SEE PAGE 1404.1 FOR INSTALLATION OF ONE CABLE RISER.
I. PVC RISERS ARE NOT PERMITTED WITHIN THE CLIMBING SPACE PER G.O. 95 RULE 22.2C.
(J) RISERS OF PLASTIC PIPE SHALL BE EPC-80-PVC SCHEDULE 80, WITH A MINIMUM NORMAL PIPE SIZE OF 2-1/2 INCHES, FROM THE GROUND LINE TO A LEVEL NOT LESS THAN 8 FEET ABOVE THE GROUND LINE PER G.O. 95 RULE 54-6-E.

DATE 1-1-87
APPD J.LB / RDT

SDG&E ELECTRIC STANDARDS

3Ø CABLE POLE RISER INSTALLATION MODIFICATION FROM SINGLE TO DOUBLE RISER FOR EXISTING CABLE POLES

OH 1499.009
~~UG 4299.009~~
SUPERCEDES 4205.1
(6-14-83)

TABLE OF CONTENTS

SCOPE: THIS STANDARD SHOWS VARIOUS METHODS OF CABLE TERMINATION BRACKETS USED TO CONNECT UNDERGROUND CABLES TO OVERHEAD CONDUCTORS.

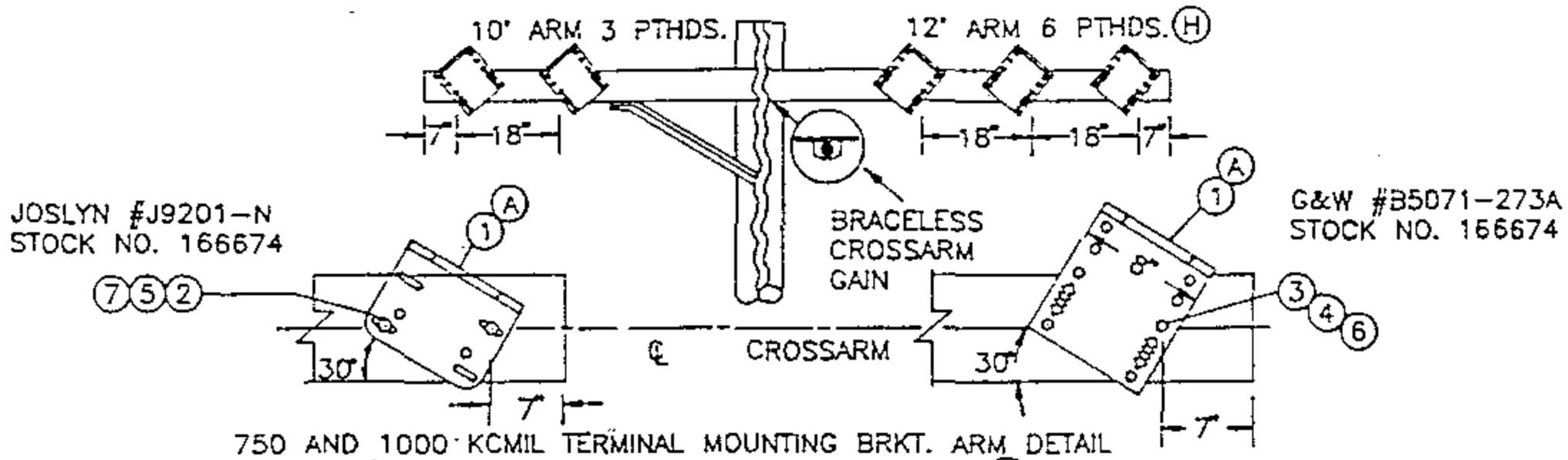

750 AND 1000 KCMIL TERMINAL MOUNTING BRKT. ARM DETAIL
(REQUIRED FOR CONTAMINATION DISTRICT 1) (G)

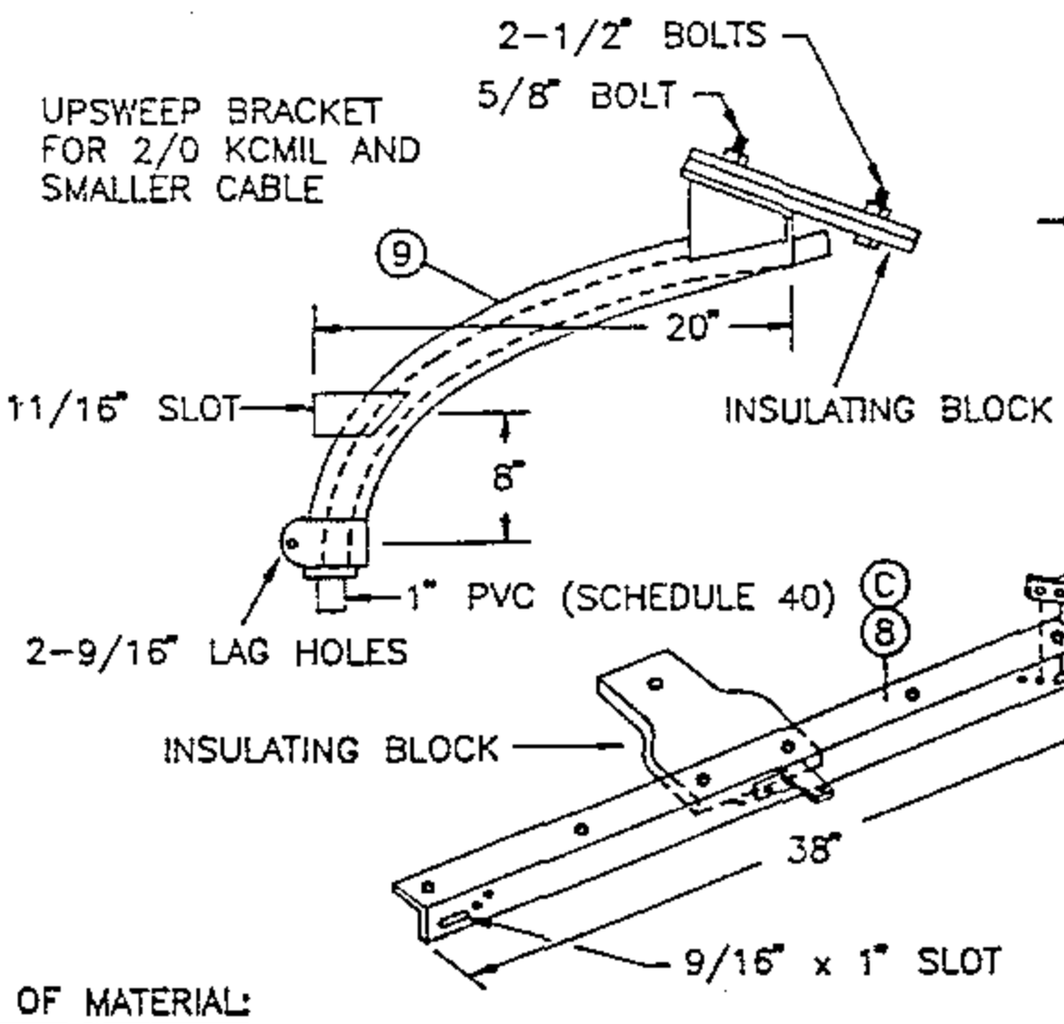

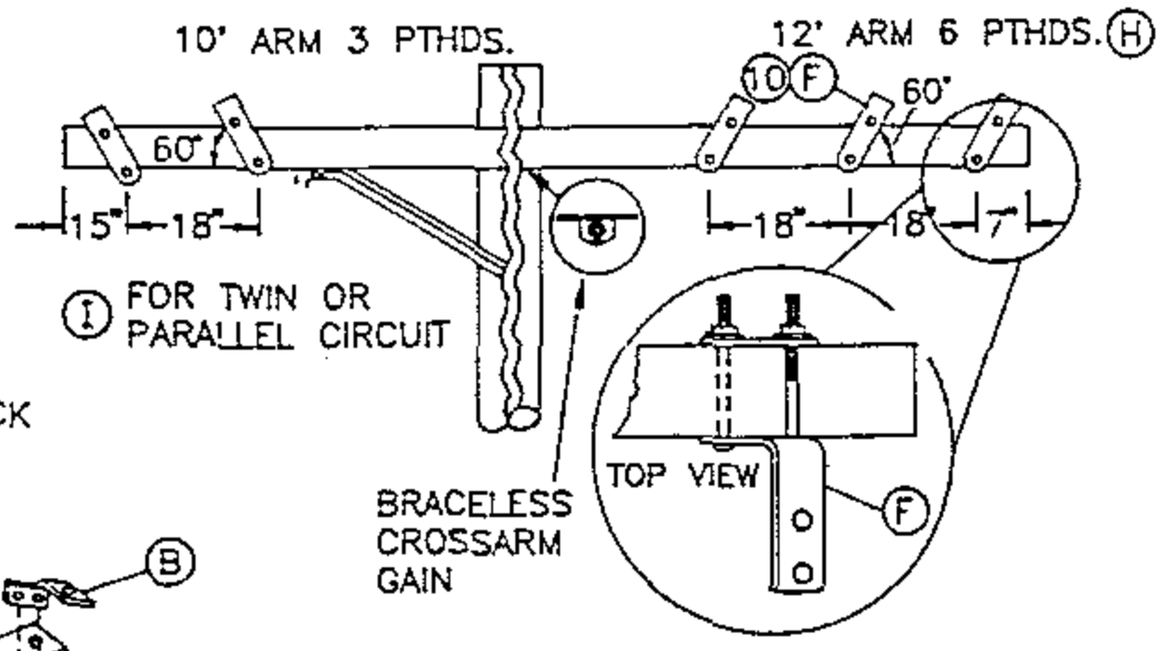

350 KCMIL TERMINAL MOUNTING BRKT. ARM DETAIL
(REQUIRED FOR CONTAMINATION DISTRICT 1)

FOR FIELD MAINTENANCE ONLY

BILL OF MATERIAL:

ITEM	DESCRIPTION	QUANTITY	STOCK NO. OR CONSTR STD	ASSEMBLY UNITS
1	BRACKET, POTHEAD MOUNTING	3 OR 6	166674	P-X-BK
2	BOLT, MACHINE, GALV. 1/2" x 5" (E)	2	153024	-
3	BOLT, MACHINE, GALV. 3/8" x 5" (E)	2	154368	-
4	WASHER, 3/8" ROUND (E)	4	800288	-
5	WASHER, 1/2" ROUND (E)	4	800192	-
6	WASHER, 3/8" DBL COIL (E)	2	798528	-
7	WASHER, 1/2" DBL COIL (E)	2	798464	-
8	BRACKET TRIPLE TERMINAL (C)	1	166676	(OVERHEAD) TTB
9	BRACKET GALV. TERMINAL UPSWEEP	1	166856	(OVERHEAD) USB
10	BRACKET, CROSSARM TERMINAL	3 OR 6	166060	-

INSTALLATION:

(A) HOLES IN ARM FOR POTHEAD MOUNTING BRACKETS ARE DRILLED BY OVERHEAD CREWS.
(B) THREE OF THESE BRACKETS ARE SUPPLIED WITH THE TRIPLE TERMINAL BRACKET (ITEM 8).
(C) THIS CONSTRUCTION TO BE USED ONLY FOR CABLE SIZES 2/0 AND BELOW.
(E) EXEMPT MATERIAL.
(F) TURN TOP OF BRACKET OUTWARD TO OBTAIN APPROX. 60° ANGLE.

REFERENCE:

(G) FOR CONSTRUCTION IN CONTAMINATION DISTRICTS 2 AND 3, SEE STANDARD 1407.2/4207.2.
(H) SEE STANDARD 1407.2/4207.2 FOR TERMINAL AND LIGHTNING ARRESTER DETAIL.
(I) SEE STANDARD 1442.1/4242.1 FOR 3-350 KCMIL POTHEADS ON A 10 FOOT CROSSARM.

OH 1499.010 ~~UG 4299.010~~ SUPERCEDES 1407.1 (1-1-93)	SDG&E ELECTRIC STANDARDS CABLE POLE TERMINAL MOUNTING INFORMATION (PORCELAIN TERMINATIONS) (FOR CONTAMINATION DISTRICT 1)	DATE 1-1-93 APPD JLB/LDG

TABLE OF CONTENTS

12' ARM 6 PTHS AND 6 ARRESTORS

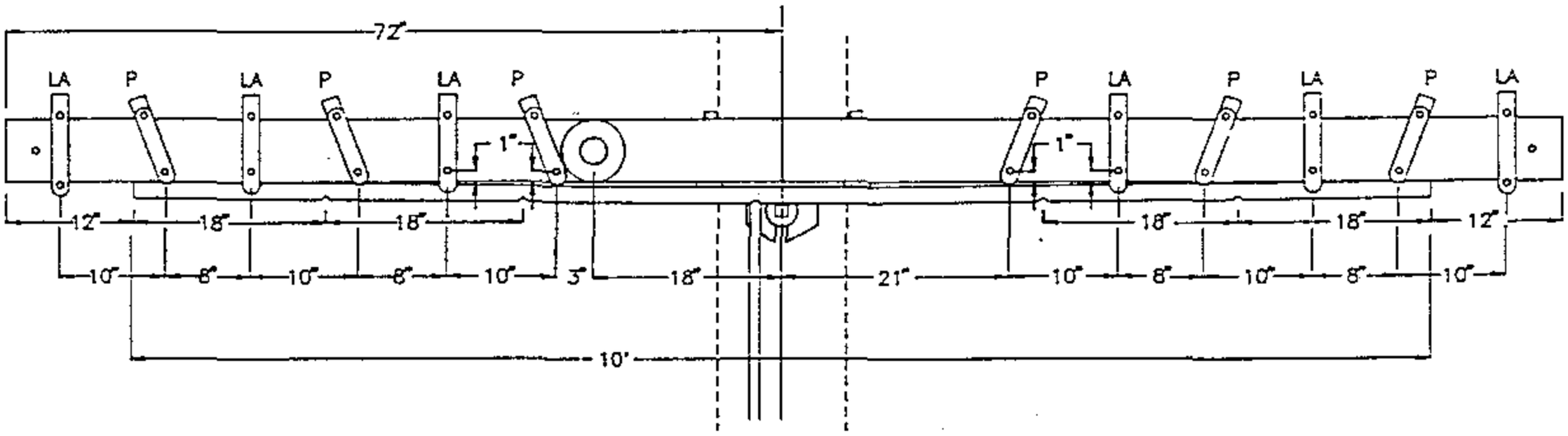

350 KCMIL TERMINAL AND LIGHTNING ARRESTER BRACKETS MOUNTING DETAIL

P=POTHEAD BRACKET

LA=LIGHTNING ARRESTER BRACKET

FOR FIELD MAINTENANCE ONLY

TABLE OF CONTENTS

12' ARM 6 PTHS AND 6 ARRESTORS

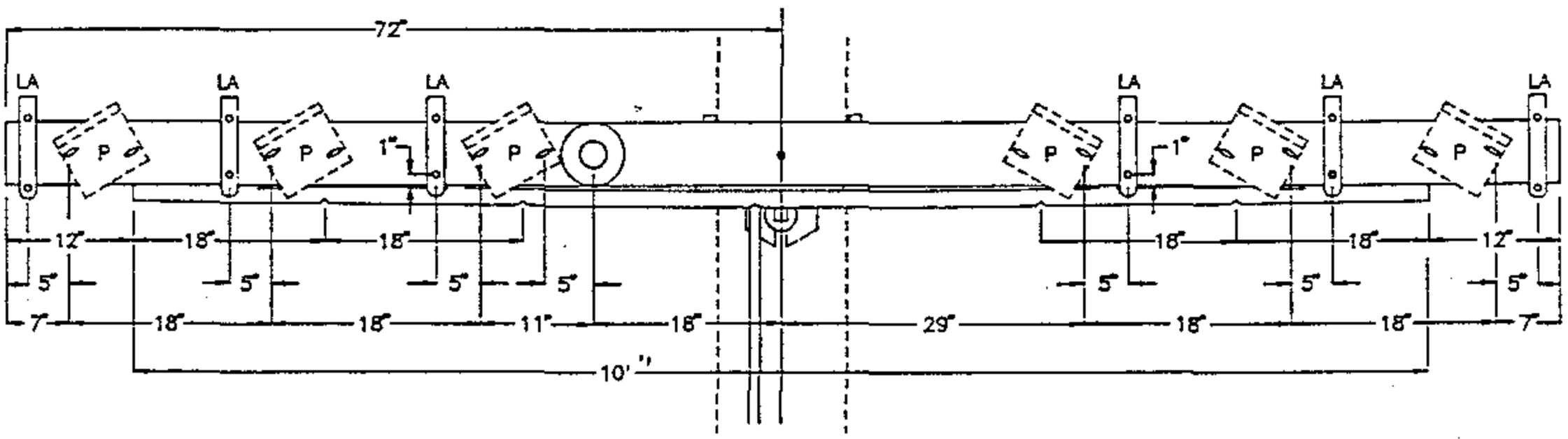

750 AND 1000 KCMIL TERMINAL AND LIGHTNING ARRESTER BRACKETS MOUNTING DETAIL

DATE 1-1-93 APPD JLB/RDJ	SDG&E ELECTRIC STANDARDS CABLE POLE TERMINAL MOUNTING INFORMATION (PORCELAIN TERMINATIONS) (FOR CONTAMINATION DISTRICT 1)	OH 1499.011 ~~UG 4299.011~~ SUPERCEDES 1407.2 (1-1-93)

SCOPE: THIS STANDARD SHOWS VARIOUS METHODS OF INSTALLING CABLE TERMINATING MOUNTING BRACKETS FOR NON–PORCELAIN TERMINALS.

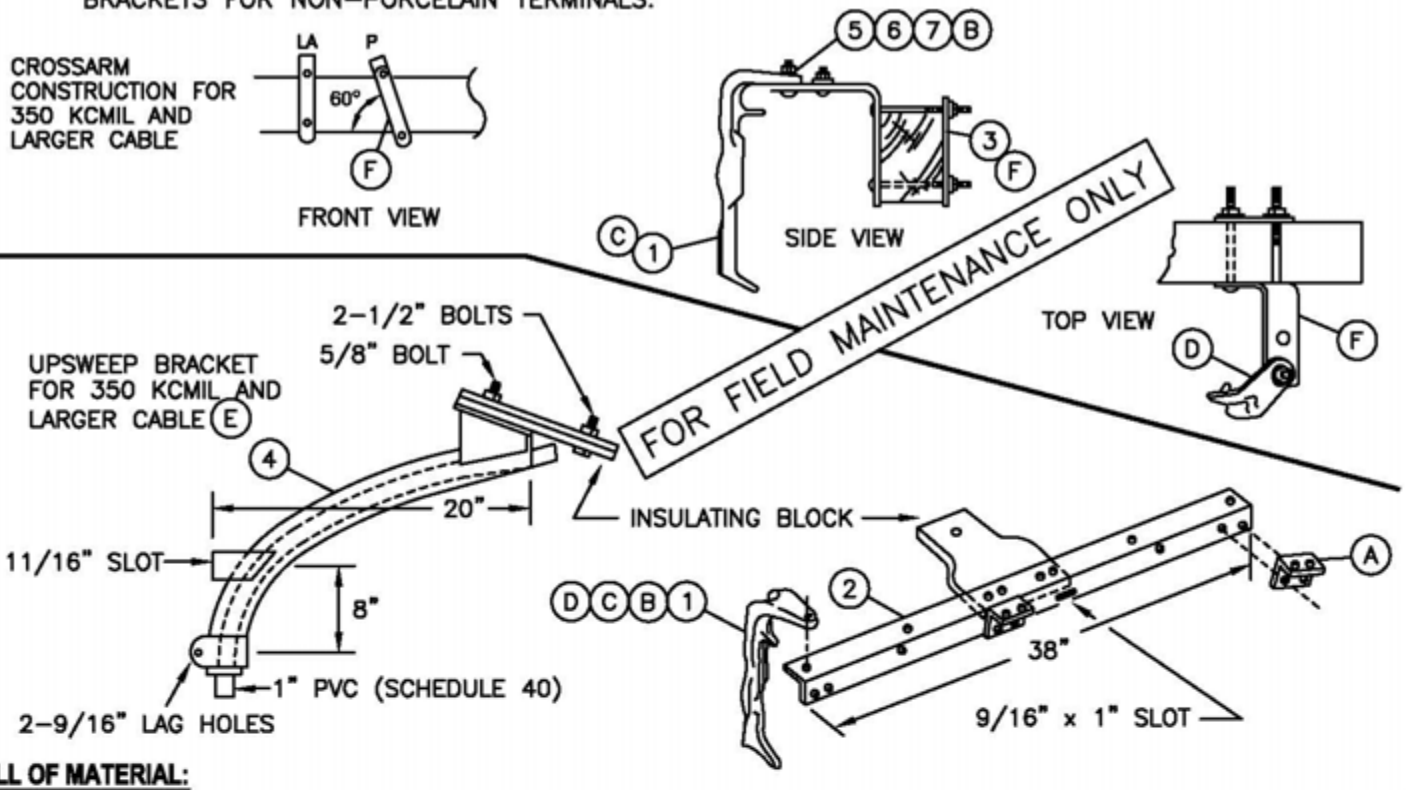

BILL OF MATERIAL:

ITEM	DESCRIPTION	QUANTITY	CONST STD OR PAGE NO	STOCK NUMBER	ASSEMBLY UNITS
1	BRACKET, MOUNTING CS 820	3 OR 6	4111	166064	NP–BKT
2	BRACKET, TRIPLE TERMINAL (E)	1	–	166676	(OVERHEAD) TTB
3	BRACKET, CROSSARM TERMINAL	3 OR 6	–	166060	(OVERHEAD) 2/0BKT
4	BRACKET, TERMINAL UPSWEEP, GALV (E)	1	–	166856	(OVERHEAD) USB
5	BOLT, MACHINE, GALV 1/2" x 2"	3 OR 6	392.1	152832	
6	WASHER, ROUND 1/2"	3 OR 6	392.2	800192	
7	WASHER, SPRING LOCK 1/2"	3 OR 6	392.2	796768	

NOTES:

– PORCELAIN TERMINALS (POTHEADS) ARE REQUIRED IN SUBSTATIONS (ALL DISTRICTS). SEE NOTE (I).

INSTALLATION:

(A) THREE BRACKETS ARE SUPPLIED WITH THE TRIPLE TERMINAL BRACKET.

(B) CS 820 MOUNTING BRACKETS SHALL BE BOLTED TO THE TOP OF THE TRIPLE TERMINAL BRACKET OR CROSSARM TERMINAL BRACKET.

(C) FOLLOW MANUFACTURES INSTRUCTIONS FOR SECURING CABLE TO MOUNTING BRACKET.

(D) MOUNTING BRACKET CS 820 TO BE POSITIONED TO CONFIRM WITH THE LAY OF THE CABLE.

(E) THESE ITEMS FIELD MAINTENANCE ONLY.

(F) TURN TOP OF BRACKET OUTWARD TO OBTAIN APPROX 60 ANGLE.

REFERENCE:

H. SEE STD. 4111 FOR OUTDOOR CABLE TERMINALS, FOR POLYETHYLENE CABLES.

(I) SEE STD. PG. 1499.010/4299.010 FOR PORCELAIN MOUNTING BRACKETS.

© 1998 - 2010 San Diego Gas & Electric Company. All rights reserved. Removal of this copyright notice without permission is not permitted under law.

OH 1499.012 UG 4299.012 SUPERSEDES 1407 (1–1–94)	SDG&E ELECTRIC STANDARDS CABLE POLE TERMINAL MOUNTING INFORMATION (NON–PORCELAIN TERMINALS)	DATE 1–1–94 APPD JLG/RDS

TABLE OF CONTENTS

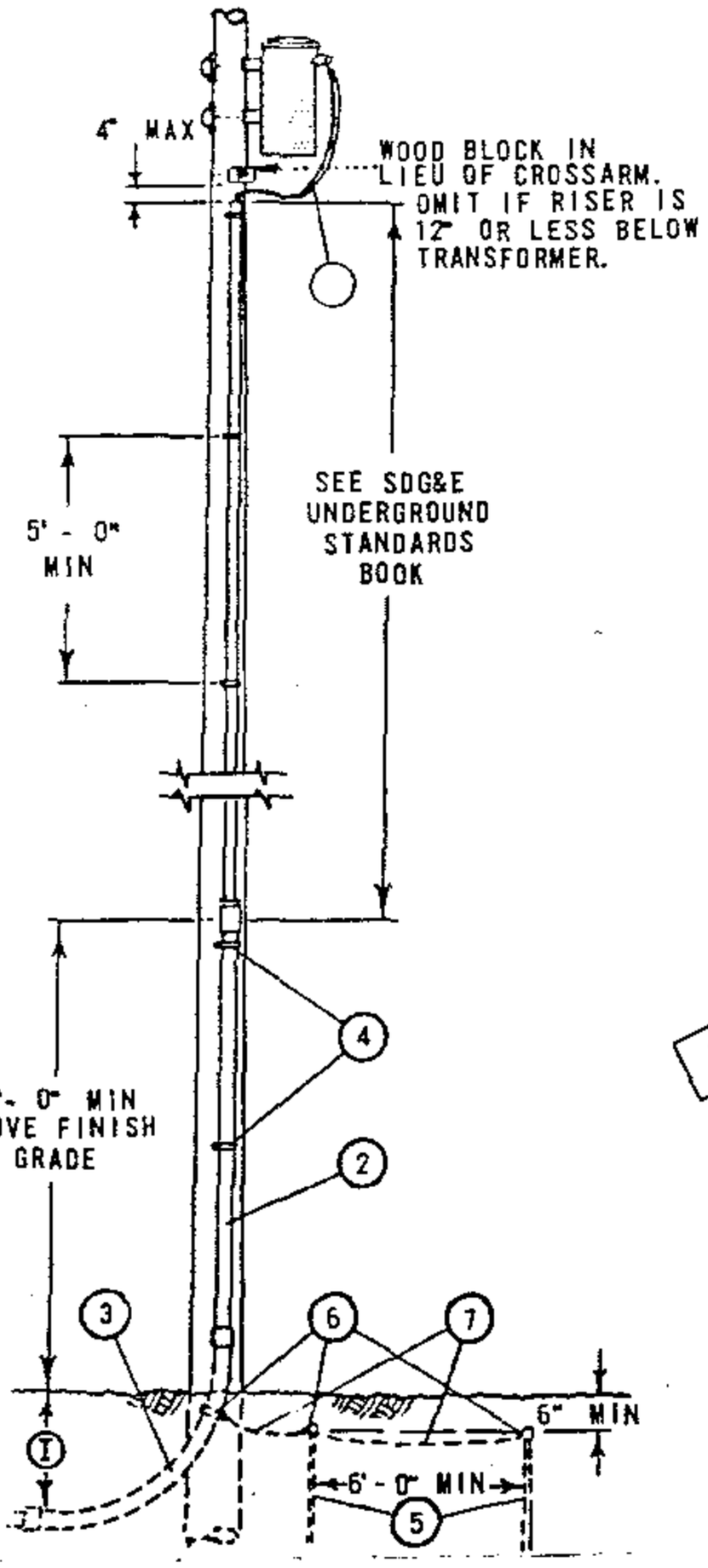

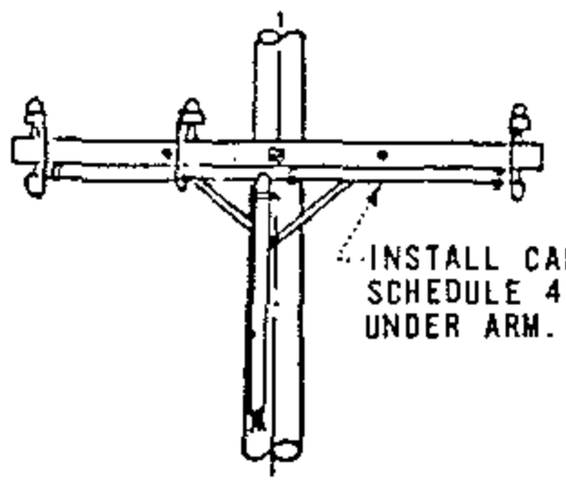

CROSSARM CONSTRUCTION

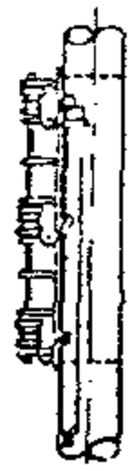

RACK CONSTRUCTION

FOR FIELD MAINTENANCE ONLY

NOTES:

(A) SEE PAGE 7404 /4204 FOR RISER CONSTRUCTION.

(B) CUSTOMER'S SERVICE ENTRANCE CONDUCTORS SHALL RUN CONTINUOUSLY WITHOUT SPLICES FROM SERVICE EQUIPMENT TO SECONDARY OR TRANSFORMER TERMINALS AND SHALL BE OF A LENGTH SUFFICIENT TO FORM DRIP LOOPS AT THE TOP OF THE RISER. CONTRACTOR SHALL IDENTIFY SERVICE ENTRANCE CONDUCTORS WITH CODING OR TAGGING FOR PURPOSE OF PARALLELING PHASES AND NEUTRALS. MAXIMUM SIZE OF EACH CONDUCTOR, SINGLE OR PARALLELED RUNS, SHALL NOT EXCEED 500 KCM.

(C) WHEN ITEMS 2 AND 3 ARE SCHEDULE 80 PVC OMIT ITEMS 5, 6, AND 7. (SEE SDG&E UNDERGROUND STANDARDS BOOK)

(D) OMIT ITEMS 5, 6, AND 7 WHERE CUSTOMER'S UNDERGROUND CONDUIT RUN IS AN APPROVED METALLIC CONDUIT.

(F) OMIT ITEM 5, AND 7 WHERE #6 BARE COPPER BONDING WIRE IS INSTALLED BETWEEN ITEMS 3 AND CUSTOMER'S SERVICE, ENTRANCE EQUIPMENT.

(G) USE TWO ROD GROUND SPACED A MINIMUM OF 6 FEET APART.

H. APPROVED METALLIC CONDUIT OR #6 BARE COPPER BONDING WIRE SHALL BE GROUNDED AT THE SERVICE ENTRANCE IN ACCORDANCE WITH REQUIREMENTS OF THE LOCAL INSPECTION AUTHORITY.

(I) 18" MIN DEPTH ON PRIVATE AND PUBLIC PROPERTY OTHER THAN STREETS AND ALLEYS. 24" MIN DEPTH ACROSS STREETS AND ALLEYS. 24" MIN TO BE MAINTAINED CONTINUOUSLY WHERE DUCTS TRAVERSE BOTH STREETS (AND ALLEYS) AND PRIVATE PROPERTY. 24" MIN DEPTH FOR NON-METALLIC CONDUITS.

MATERIAL FURNISHED AND INSTALLED BY CUSTOMER

ITEM	DESCRIPTION (A)	
1	CUSTOMER'S SERVICE ENTRANCE CONDUCTORS	(B)
2	CONDUIT, GALV. IRON RIGID RISER	(C)
3	CONDUIT, GALV IRON BEND, 90°, 36" RADIUS	(C)
4	STRAP, PIPE GALV, 2-10D GALV NAILS	
5	RODS, 5/8" X 8' - 0" COPPERCLAD STEEL GROUND	(D) (F) (G)
6	CLAMPS, APPROVED TYPE GROUNDING	(D)
7	WIRE, #6 BARE STRANDED COPPER	(D) (F)

OH 1499.101
~~UG 4299.101~~
SUPERSEDES
1415 (11-16-81)

SDG&E ELECTRIC STANDARDS

0-750V CUSTOMER OWNED UNDERGROUND SERVICE FROM AN OVERHEAD LINE, ONE DUCT

DATE 11-16-81
APPD JEY

TABLE OF CONTENTS

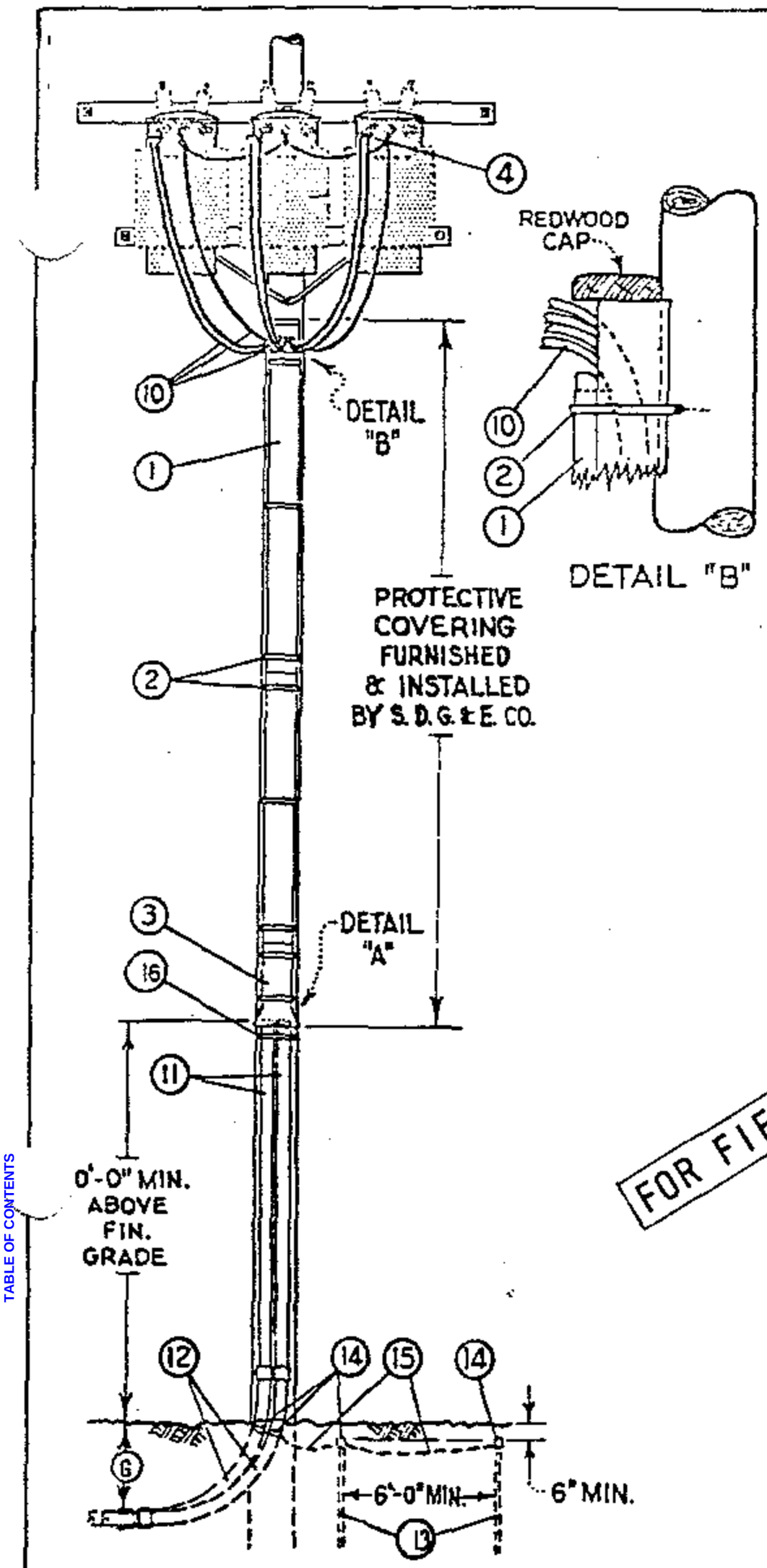

MATERIAL FURNISHED AND INSTALLED BY SDG&E			
ITEM	DESCRIPTION	QUANT.	STOCK NO. OR CONSTR STD
1	REDWOOD BOX MOULDING, SIZE AS REQUIRED	16'	PG 143
2	MOULDING STRAPS, SIZE AS REQ'D	6	PG 143
3	REDWOOD MOULDING BASE FOR 5¼"X6⅜", INSIDE DIMENSIONS, RDWD. BOX MOULDING	AS REQ'D	PG 143
4	MULTIPLE TAP CONNECTORS, 2 LUG	AS REQ'D	PG 793
7	BOX NAILS, GALV., 10D	½#	491392
8	BOX NAILS, GALV., 16D	½#	491424

QUANTITIES SHOWN ARE BASED ON A 45' POLE AND TRANSFORMER SECONDARIES CONNECTED 120-208Y. WYE.

MATERIAL FURNISHED AND INSTALLED BY CUSTOMER (A)		
10	CUSTOMER'S SERVICE ENTRANCE CONDUCTORS (B)	SEE SDG&E UNDERGROUND STANDARD BOOK
11	G.I. RIGID CONDUIT RISERS	
12	G.I. RIGID CONDUIT BENDS, 90°, 36" RADIUS	
13	5/8"DIAM. X 8'-0" COPPERCLAD STEEL GRND. RODS (C)(D)(E)	
14	APPROVED TYPE GROUNDING CLAMPS (C)	
15	#6 BARE STRANDED COPPER GROUND WIRE (C)(D)	
16	HEAVY PLUMBERS TAPE, HOT-DIP GALVANIZED	

FOR FIELD MAINTENANCE ONLY

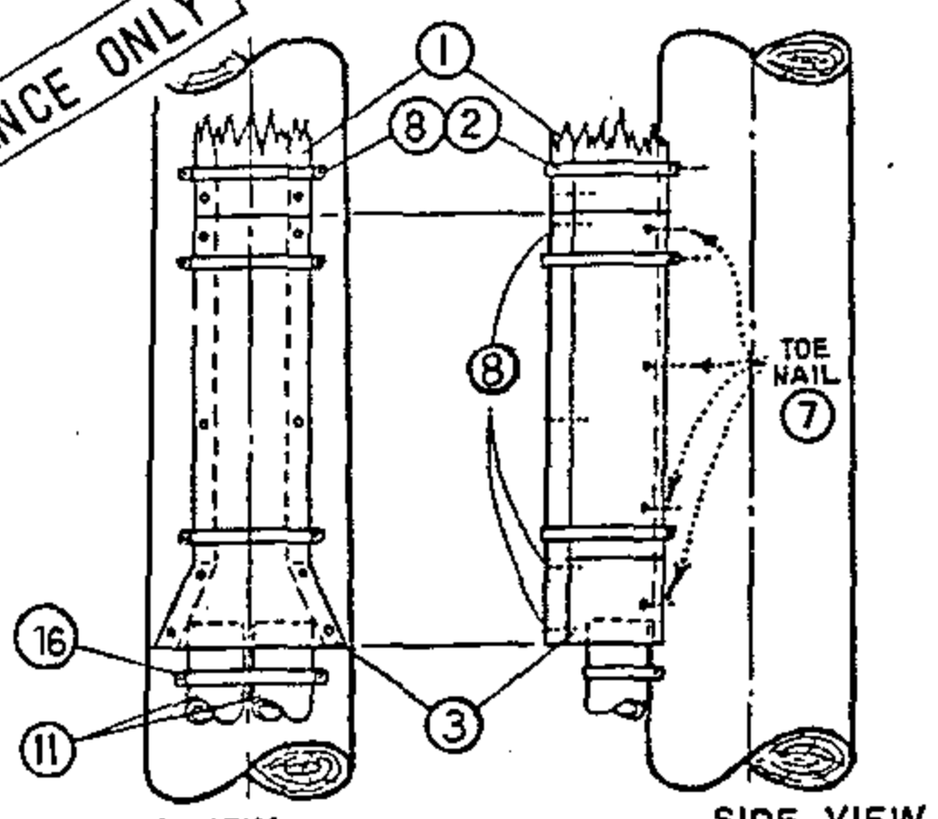

DETAIL "A"

REQUIRED FOR 2-3½" OR 4" DIAM. G.I. RISERS

NOTES:

(A) SEE SDG&E UNDERGROUND STANDARDS BOOK FOR CABLE CONDUIT SIZING INFORMATION.

(B) CUSTOMER'S SERVICE ENTRANCE CONDUCTORS SHALL RUN CONTINUOUSLY WITHOUT SPLICES FROM SERVICE EQUIPMENT TO TRANSFORMER TERMINALS AND SHALL BE OF A LENGTH SUFFICIENT TO FORM DRIP LOOPS AT THE TOP OF THE RISER. CONTRACTOR SHALL IDENTIFY SERVICE ENTRANCE CONDUCTORS WITH CODING OR TAGGING FOR PURPOSE OF PARALLELING PHASES AND NEUTRALS. MAXIMUM SIZE OF EACH CONDUCTOR, SINGLE OR PARELLELED RUNS, SHALL NOT EXCEED 500 KCM

(C) OMIT ITEMS 13, 14, AND 15 WHERE CUSTOMER'S UNDERGROUND CONDUIT RUN IS AN APPROVED METALLIC CONDUIT.

(D) OMIT ITEM NUMBERS 13 AND 15 WHERE #6 BARE COPPER BONDING WIRE IS INSTALLED BETWEEN ITEM 12 AND CUSTOMER'S SERVICE ENTRANCE EQUIPMENT.

(E) USE TWO ROD GROUND.

F. APPROVED METALLIC CONDUIT OR #6 BARE COPPER BONDING WIRE SHALL BE GROUNDED AT THE SERVICE ENTRANCE IN ACCORDANCE WITH REQUIREMENTS OF THE LOCAL INSPECTION AUTHORITY.

(G) 18" MIN DEPTH ON PRIVATE AND PUBLIC PROPERTY OTHER THAN STREETS AND ALLEYS. 24" MIN DEPTH ACROSS STREETS AND ALLEYS. 24" MIN TO BE MAINTAINED CONTINUOUSLY WHERE DUCTS TRAVERSE BOTH STREETS (AND ALLEYS) AND PRIVATE PROPERTY. 24" MIN DEPTH FOR NON-METALLIC CONDUITS.

DATE 11-16-81 APPD JEY	SDG&E ELECTRIC STANDARDS 0-750V CUSTOMER OWNED UNDERGROUND SERVICE FROM AN OVERHEAD LINE, TWO DUCTS	1499.102 SUPERSEDES 1417 (11-16-81)

TABLE OF CONTENTS

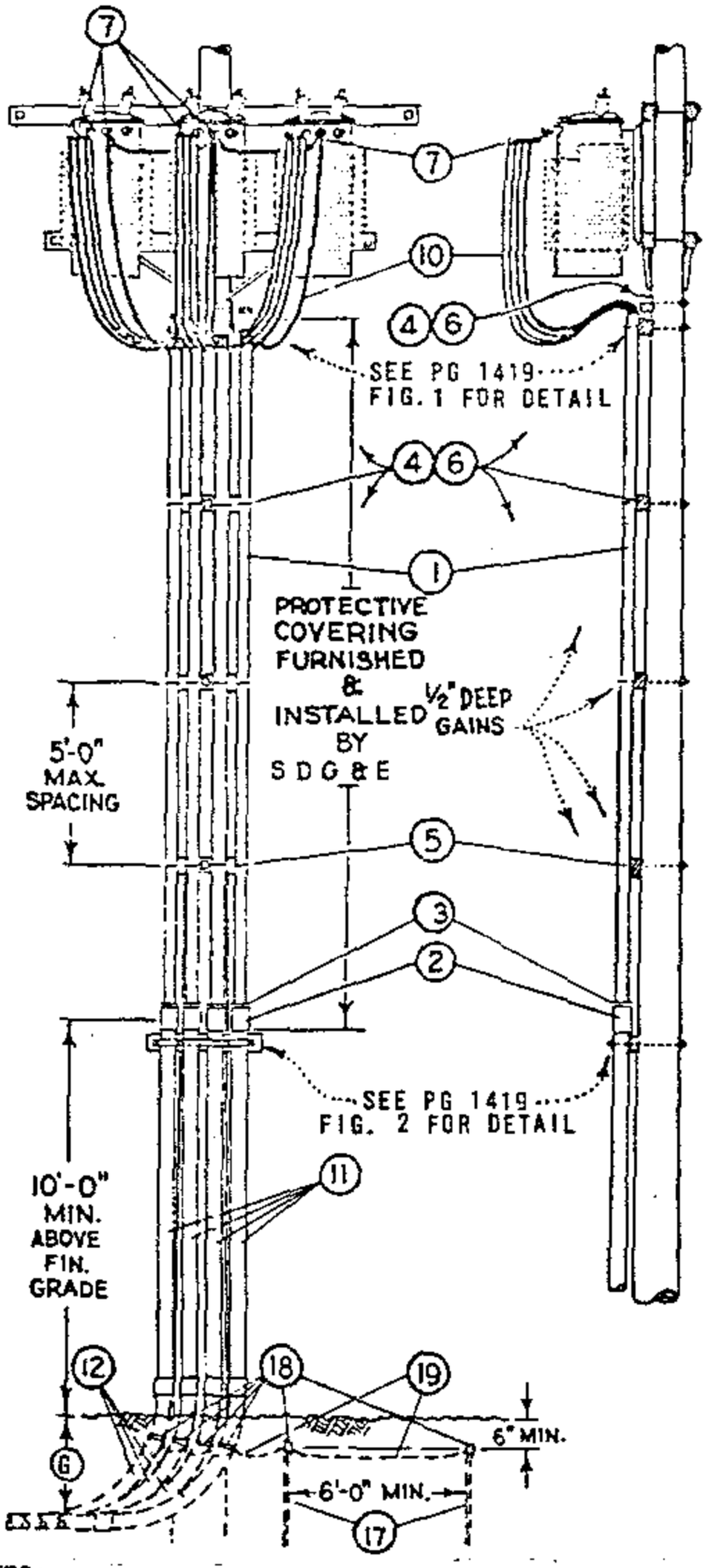

MATERIAL FURNISHED AND INSTALLED BY SDG&E					
ITEM	DESCRIPTION	QUANTITY NO. OF RISERS 3	QUANTITY NO. OF RISERS 4	STOCK NO. OR CONSTR STD 3"	STOCK NO. OR CONSTR STD 4"
⊙1	3" OR 4" DIAM. PLASTIC CONDUIT, PVC TYPE II, SCHEDULE 40, 20' LENGTHS	60'	80'	251552	251584
⊹2	COUPLINGS, PLASTIC, SIZE AS REQUIRED	3	4	280448	280480
⊙3	BUSHINGS, PLASTIC, 4"OR 3½"X3" DIAM. FOR REDUCING CUSTOMER'S CONDUIT RISERS, WHERE REQUIRED	3	4	3 1/2" X 3" 181024, 4" X 3" - 181056	
4	RISER SUPPORT BLOCKS, 3½"x4½"x2'-0"	5	5	PG 1419 IT. 4	
5	"J" BOLT, 1 SQ WASHER	12	16	PGS 139, 140	
6	MACH. BOLT, GALV., ⅝"x16"-20", 2 SQ. WASHERS & 1 NUT	5	5	PGS 139, 140	
7	MULTIPLE TAP CONNECTORS, SPECIFY NUMBER OF LUGS	6	6	PG 793	

⊙ QUANTITIES SHOWN ARE BASED ON A 45' POLE AND TRANSFORMER SECONDARIES CONNECTED 120/208 V WYE.

⊹ UNTHREADED FOR SLIP FIT OVER RIGID CONDUIT RISER.

MATERIAL FURNISHED AND INSTALLED BY CUSTOMER		
ITEM	DESCRIPTION (A)	STOCK NO.
10	CUSTOMER'S SERVICE ENTRANCE CONDUCTORS (B)	SEE SDG&E UNDERGROUND STANDARD BOOK
11	G.I. RIGID CONDUIT RISERS	
12	G. I. RIGID CONDUIT BENDS, 90°, 36" RADIUS	
13	SPACER BLOCK	
14	STRAP, GALV	
15	FOUR ½"X 9" MACH. BOLTS, GALV., 1 RD. WASHER	
16	ONE ⅝"X 20" MACH. BOLT, GALV., 2 - 2" SQ. WASHERS	
17	⅝"X 8'-0" COPPERCLAD STEEL GROUND RODS (C) (D) (E)	
18	APPROVED TYPE GROUNDING CLAMPS (C)	
19	#6 BARE STRANDED COPPER GROUND WIRE (C) (D)	

FOR FIELD MAINTENANCE ONLY

NOTES:

(A) SEE UNDERGROUND STANDARDS BOOK FOR CABLE CONDUIT SIZING INFORMATION.

(B) CUSTORMER'S SERVICE ENTRANCE CONDUCTORS SHALL RUN CONTINUOUSLY WITHOUT SPLICES FROM SERVICE EQUIPMENT TO TRANSFORMER TERMINALS AND SHALL BE OF A LENGTH SUFFICIENT TO FORM DRIP LOOPS AT THE TOP OF THE RISER. CONTRACTOR SHALL IDENTIFY SERVICE ENTRANCE CONDUCTORS WITH CODING OR TAGGING FOR PURPOSE OF PARALLELING PHASES AND NEUTRALS. MAXIMUM SIZE OF EACH CONDUCTOR, SINGLE OR PARALLELED RUNS, SHALL NOT EXCEED 500 KCM.

(C) OMIT ITEM 17, 18, AND 19 WHERE CUSTOMER'S UNDERGROUND CONDUIT RUN IS AN APPROVED METALLIC CONDUIT.

(D) OMIT ITEM 17, AND 19 WHERE #6 BARE COPPER BONDING WIRE IS INSTALLED BETWEEN ITEM 12 AND CUSTOMER'S SERVICE ENTRANCE IN ACCORDANCE WITH REQUIREMENTS OF THE LOCAL INSPECTION AUTHORITY.

(E) USE TWO ROD GROUND.

F. APPROVED METALLIC CONDUIT OR #6 BARE COPPER BONDING WIRE SHALL BE GROUNDED AT THE SERVICE ENTRANCE IN ACCORDANCE WITH REQUIREMENTS OF THE LOCAL INSPECTION AUTHORITY.

(G) 18" MIN DEPTH ON PRIVATE AND PUBLIC PROPERTY OTHER THAN STREETS OR ALLEYS. 24" MIN DEPTH ACROSS STREETS AND ALLEYS. 24" MIN TO BE MAINTAINED CONTINUOUSLY WHERE DUCTS TRAVERSE BOTH STREETS (AND ALLEYS) AND PRIVATE PROPERTY. 24" MIN DEPTH FOR NON-METALLIC CONDUITS.

TABLE OF CONTENTS

1499.103 SUPERSEDES 1418 (11-16-81)	SDG&E ELECTRIC STANDARDS 0-750V CUSTOMER OWNED UNDERGROUND SERVICE FROM AN OVERHEAD LINE, THREE AND FOUR DUCTS	DATE 11-16-81 APPD JED

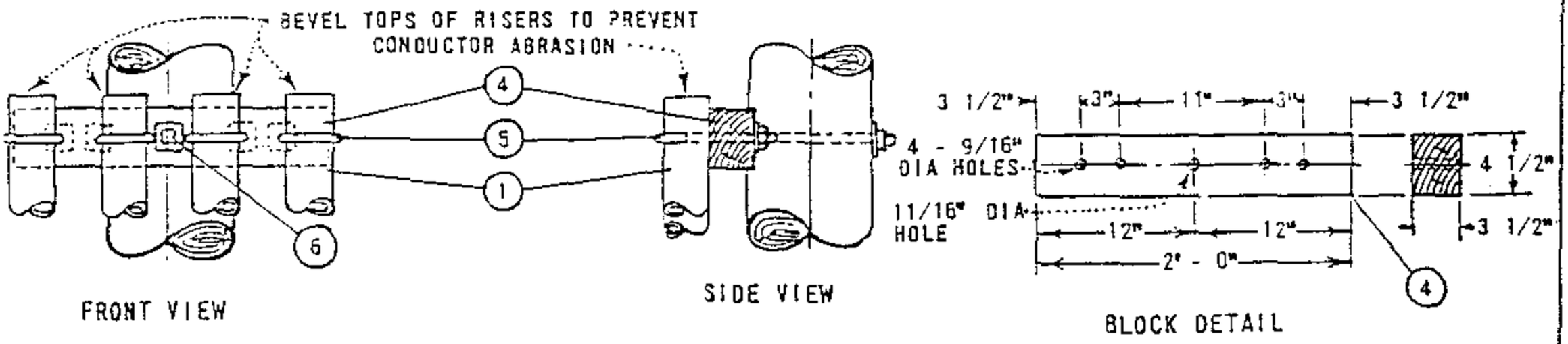

FIGURE 1
PLASTIC PIPE RISER SUPPORT DETAILS

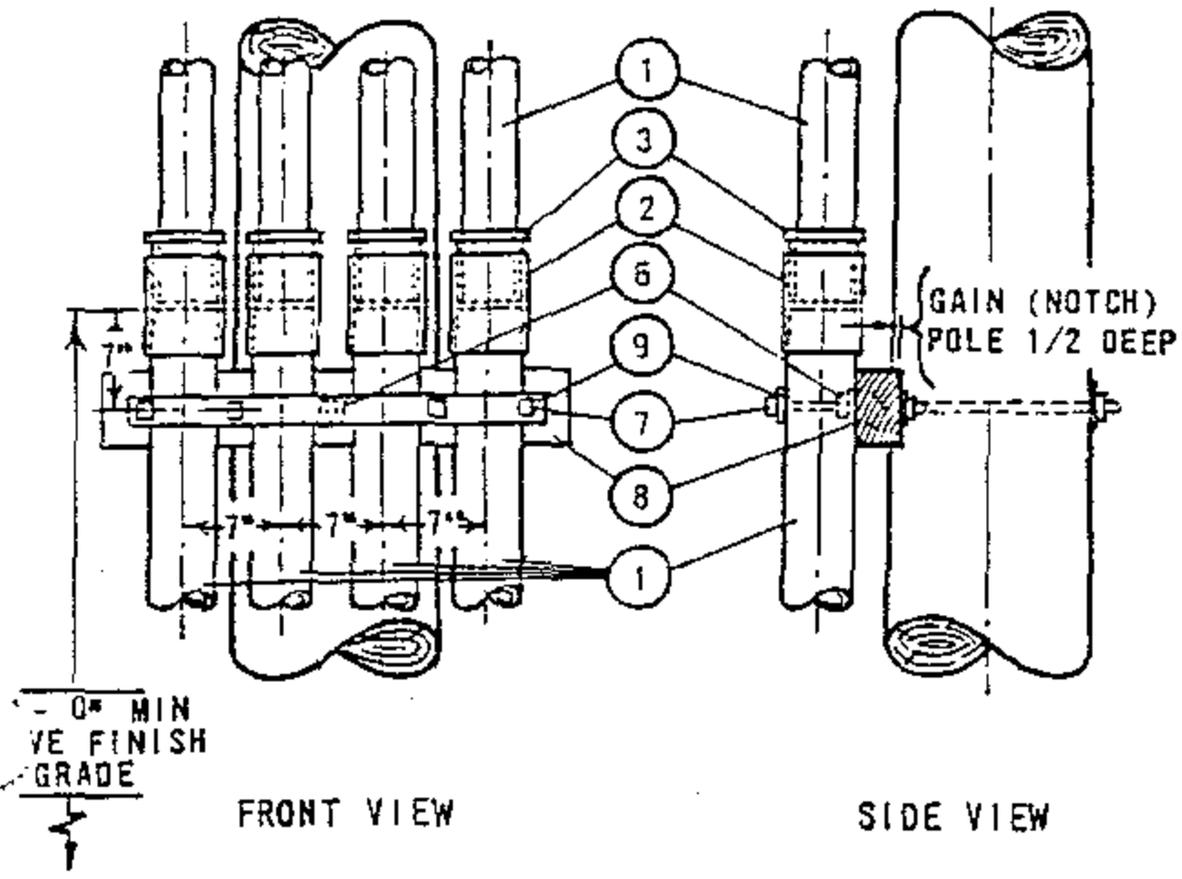

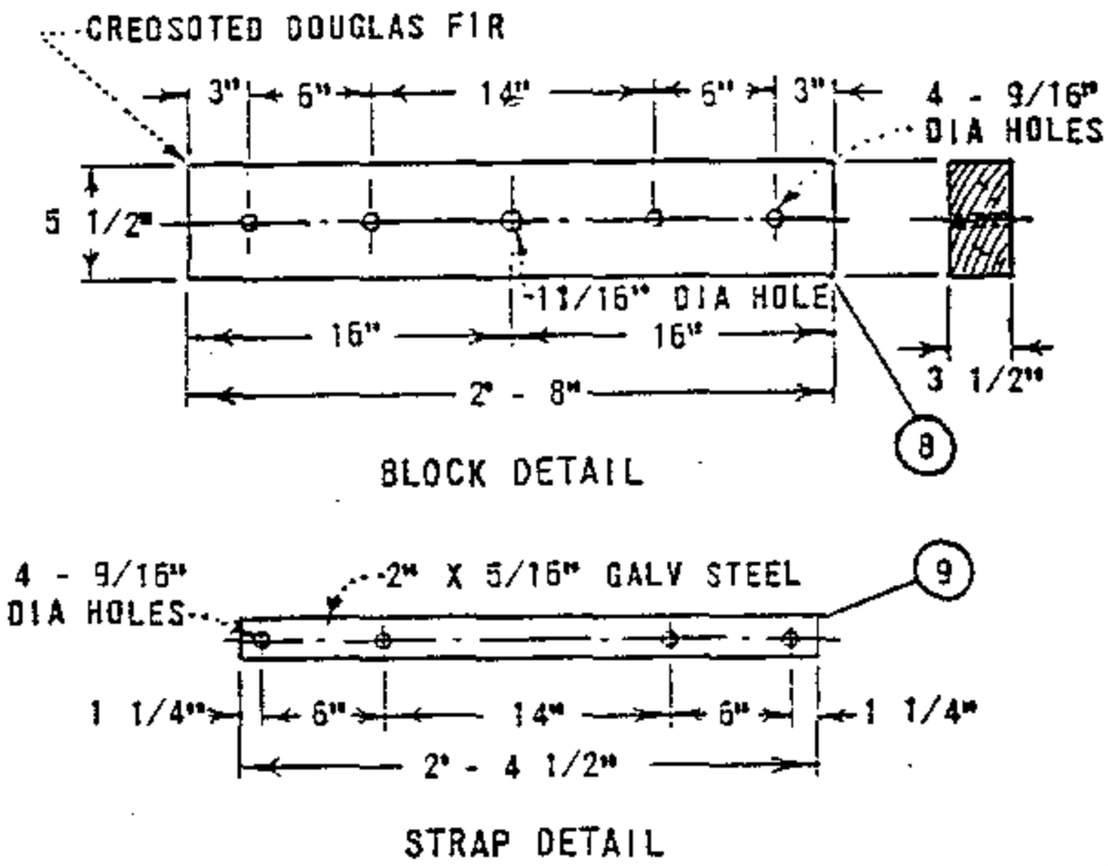

FIGURE 2
GALVANIZED PIPE RISER SUPPORT DETAIL

FOR FIELD MAINTENANCE ONLY

NOTES:

A. SEE UNDERGROUND STANDARDS BOOK FOR CABLE, CONDUIT SIZING INFORMATION.

(E) EXEMPT MATERIALS.

ITEM	DESCRIPTION	QUANTITY NUMBER OF RISERS 3"	QUANTITY NUMBER OF RISERS 4"	STOCK NO. OR CONSTR STD
1	CONDUIT, PVC SIZE AS REQUIRED	AS REQ'D		3" - 251552, 4" - 251584
2	COUPLINGS, PLASTIC SIZE AS REQ'D	AS REQ'D		3" - 280448, 4" - 280480
3	BUSHINGS, PLASTIC REDUCER 3 1/2" OR 4" X 3"	3	4	3½" - 181024, 4" - 573408
4	BLOCKS, RISER SUPPORT (SEE FIGURE 1)	1	1	-
5	BOLT, 'J' 1 SQ WASH.	3	4	PGS 140, 144
6	BOLT, MACH 5/8" X __"; 2 - 2" SQ WASH. (E)	1	1	PGS 139, 140
7	BOLT MACH 1/2" X 9", 1 RD WASH. (E)	3	4	153184, 800192
8	BLOCK, SPACER (SEE FIGURE 2)	1	1	-
	STRAP, GALV STEEL (SEE FIGURE 2)	1	1	-

SDG&E ELECTRIC STANDARDS

DATE 1-1-87
APPD JLS/RDL

0-750 VOLT THREE AND FOUR DUCT RISER SUPPORTS

OH 1499.104
~~UG 4299.104~~
SUPERCEDES 4219
(5-22-75)

TABLE OF CONTENTS

TABLE OF CONTENTS

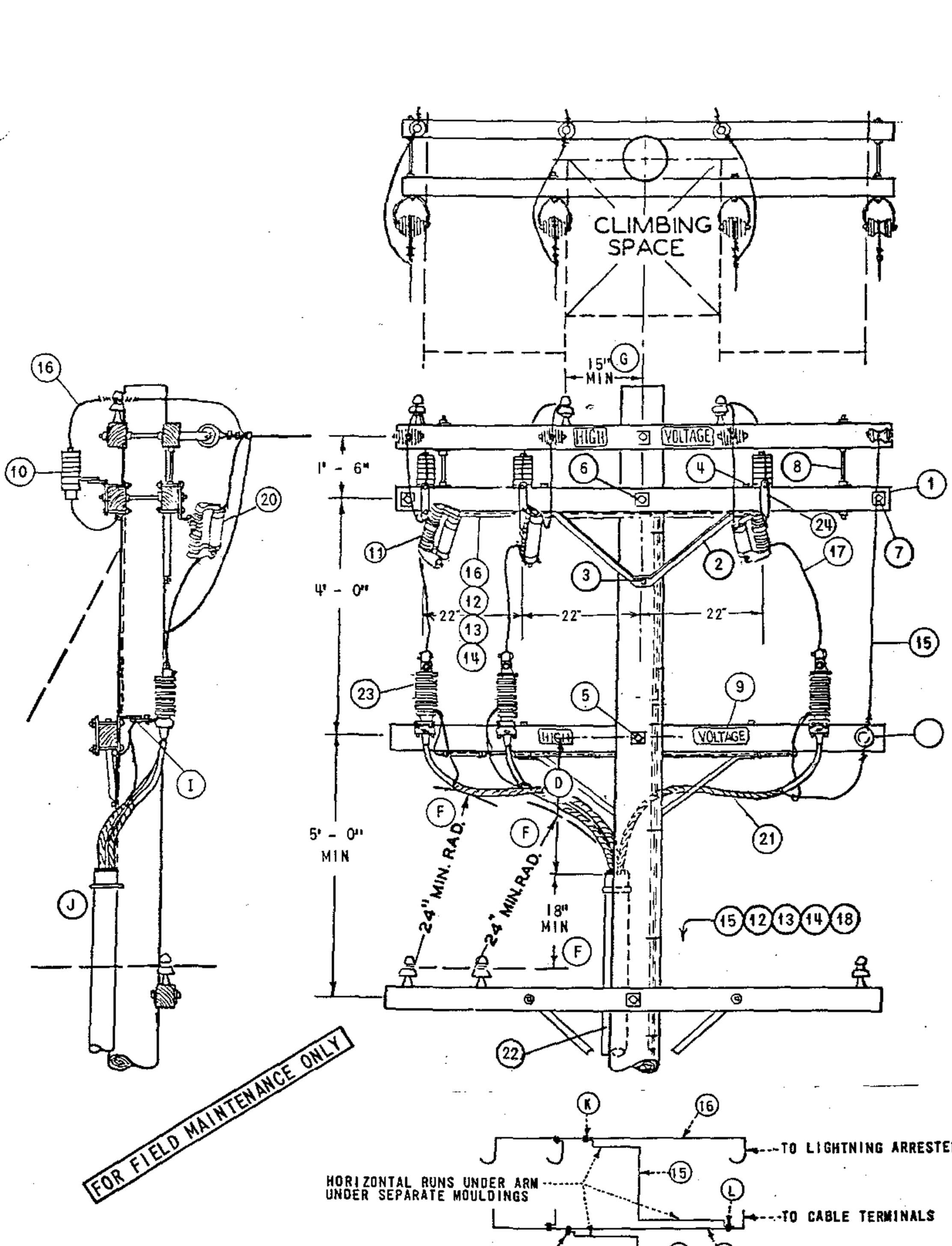

GROUND WIRE DETAIL (B)

DATE 8-27-82 APPD DRH	SDG&E ELECTRIC STANDARDS CROSSARM MOUNTED TERMINALS 4KV 4 WIRE WYE	OH 1499.201 ~~UG 4299.201~~ SUPERSEDES 1428.1 (11-16-81)

NOTES:

(A) UNIT GROUND COMPLETE ORDER 603120 WITH GRAY MOULDING, 603136 WITH PLAIN MOULDING

(B) INTERCONNECT ARRESTER GROUND LEAD DISCONNECTS WITH #6 BARE COPPER AND GROUND IT WITH #2 BARE COPPER NEAR CENTER ARRESTER.

(C) USE TWO GROUND RODS SPACED A MINIMUM OF 6' APART.

(D) 3 FOOT MINIMUM DIMENSION, 4 FOOT DIMENSION PREFERRED FOR 750 KCM AND LARGER 15KV CABLE.

(E) EXEMPT MATERIAL.

(F) G.O. 95 MINIMUM DIMENSION.

(G) G.O. 95 MINIMUM DIMENSION FOR 4KV. USE 18" MIN IF BUILT WITH 15KV CABLE.

(H) USE #2 BARE STRANDED COPPER OR LARGER AS REQUIRED.

(I) CONNECT NEUTRAL, TERMINAL AND SHIELDED CABLE GROUNDS TO LIGHTNING ARRESTER GROUND.

(J) INSTALL RISER ON FACE OF POLE OPPOSITE CLIMBING SPACE AND IN A POSITION NEAREST THE END OF ARM ON WHICH THE TWO 4KV PHASES ARE LOCATED.

(K) CONNECT #2 BARE STRANDED COPPER CONDUCTOR TO #6 BARE STRANDED COPPER CONDUCTOR AT POINT NEAR CENTER LIGHTNING ARRESTER.

(L) CONNECT #2 BARE STRANDED COPPER CONDUCTOR TO REQUIRED CONDUCTOR AT POINT NEAR CENTER TERMINAL AND END TERMINAL.

FOR FIELD MAINTENANCE ONLY

TABLE OF CONTENTS

ITEM		DESCRIPTION	QUANTITY	STOCK NO. OR CONSTR STDS
PTF	1	CROSSARM, 3 3/4" X 5 3/4" X 10' - 0"	3	300 SECTION
	2	BRACE, ANGLE CROSSARM 4' - 0"	2	164032
	3	SCREW, LAG GALV, 5/8" X 5" (E)	2	621600
	4	BOLT, MACH GALV, 1/2" X 7", 1 RD WASH. & 1 DBL COIL WASH. (E)	4	PGS 139, 140
	5	BOLT, MACH GALV, 5/8" X 14", 2 - 3" SQ WASH. & 1 DBL COIL WASH. (E)	1	PGS 139, 140
	6	BOLT, MACH GALV, 5/8" X 20", 2 - 3" SQ WASH. & 1 DBL COIL WASH. (E)	1	PGS 139, 140
	7	BOLT, SPACE GALV, 5/8" X 20", 4 SQ WASH. & 4 DBL COIL WASH. (E)	2	PGS 139, 140
	8	BOLT, SPACE GALV, 5/8" X 28", 4 SQ WASH. & 4 DBL COIL WASH. (E)	2	PGS 139, 140
	9	SIGN, HIGH VOLTAGE & 8 ROOFING NAILS (E)	1	647648, 492224
UCD	10	ARRESTER, LIGHTNING 3KV	3	113216
	11	CUTOUT, FOR CURRENT-LIMITING FUSE	3	1200 SECTION
	12	STAPLES, FENCE GALV, 1 1/4" (A) (E)	25	678528
	13	MOULDING, HARDWOOD 1" (A)	55'	487200
	14	STAPLES, MOULDING GALV, 3" X 1 1/16" X 1/4" (A) (E)	25	678560
	15	WIRE, #2 BARE STRANDED COPPER (B)	44'	813664
	16	WIRE, #6 BARE STRANDED COPPER (B)	18'	813536
	17	WIRE, COPPER, SIZED PER U.G. CABLE AMPACITY.	8'	81
	18	ROD & CLAMP, GROUND (A) (C)	2	603072, 230016
	19	INSULATOR, 4KV WIRE HOLDER	1	413792
	20	FUSE, CURRENT-LIMITING SIZE AS SPECIFIED ON WORK ORDER	3	1200 SECTION
	21	CABLE, POLYETHYLENE, CONCENTRIC NEUTRAL PRIMARY	AS REQ'D	SEE UG. STDS
	22	RISER CONSTRUCTION	AS REQ'D	1400/4200 SECTION
	23	TERMINAL CABLE	3	UG BOOK
	24	BRACKET, CUTOUT /ARRESTER CROSSARM MOUNTING (E)	3	166070
	25			

OH 1499.202
~~UG 4299.202~~
SUPERSEDES
1428.2 (11-16-81)

SDG&E ELECTRIC STANDARDS

CROSSARM MOUNTED TERMINALS 4KV 4 WIRE WYE

DATE 8-27-82
APPD

SCOPE: THIS STANDARD SHOWS TANGENT LINE (FIG.1) AND DEAD-END CONSTRUCTION (FIG.2) FOR 12.47 KV AND BELOW, 3Ø CABLE POLE WITH UPSWEEP BRACKET MOUNTED TERMINALS FOR #2/0 AND SMALLER UG CABLE.

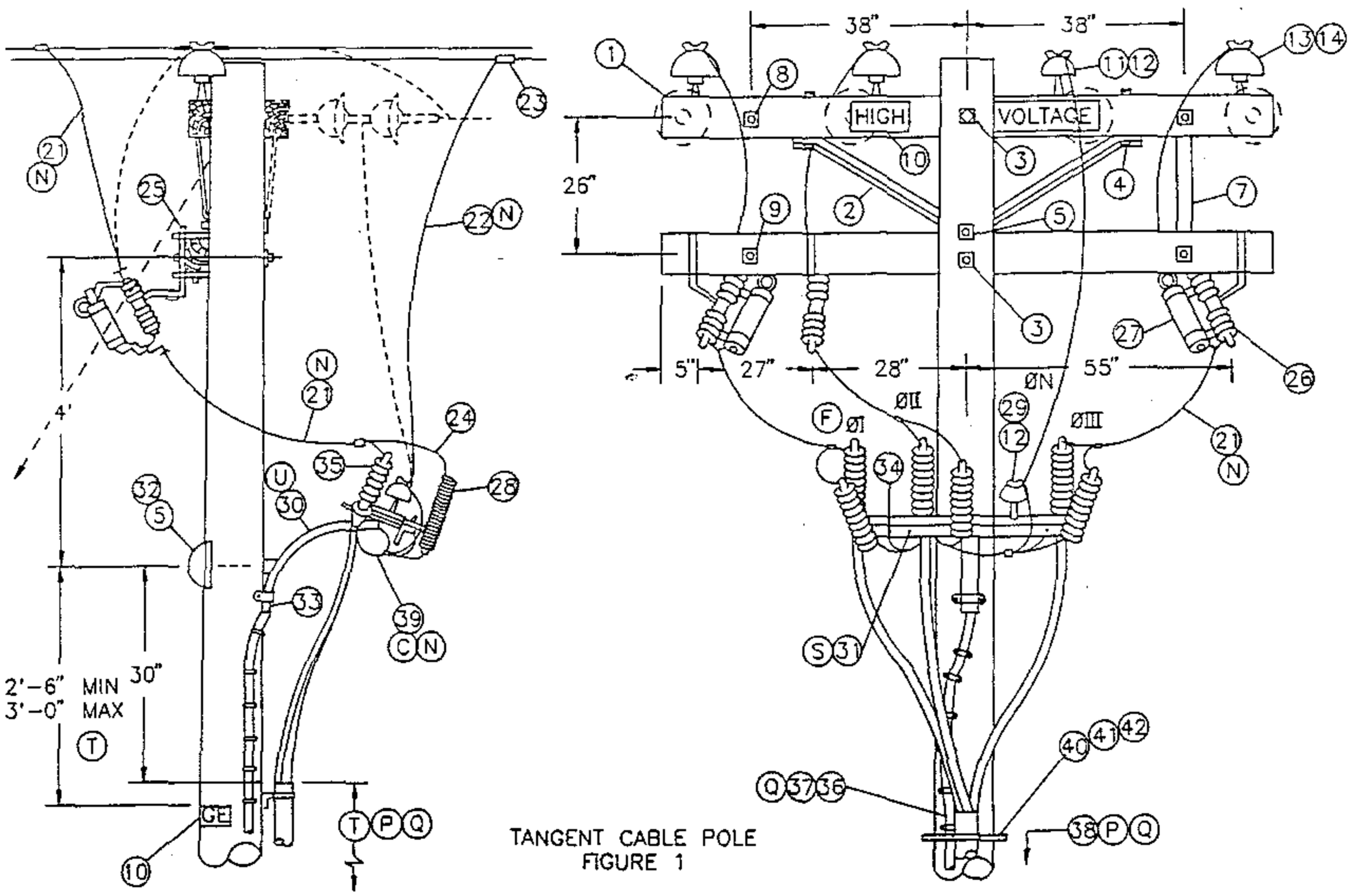

TANGENT CABLE POLE
FIGURE 1

NOTE:

- TANGENT CABLE POLE (FIG.1) OR DEAD-END CABLE POLE (DOTTED LINE) IS TO BE USED WHEN FURTHER LINE EXTENSION IS EXPECTED.
- DO NOT USE THIS UPSWEEP BRACKET CONSTRUCTION FOR 4KV, 3Ø CABLE POLE. INSTEAD, USE STANDARD 1439/4239.

FOR FIELD MAINTENANCE ONLY

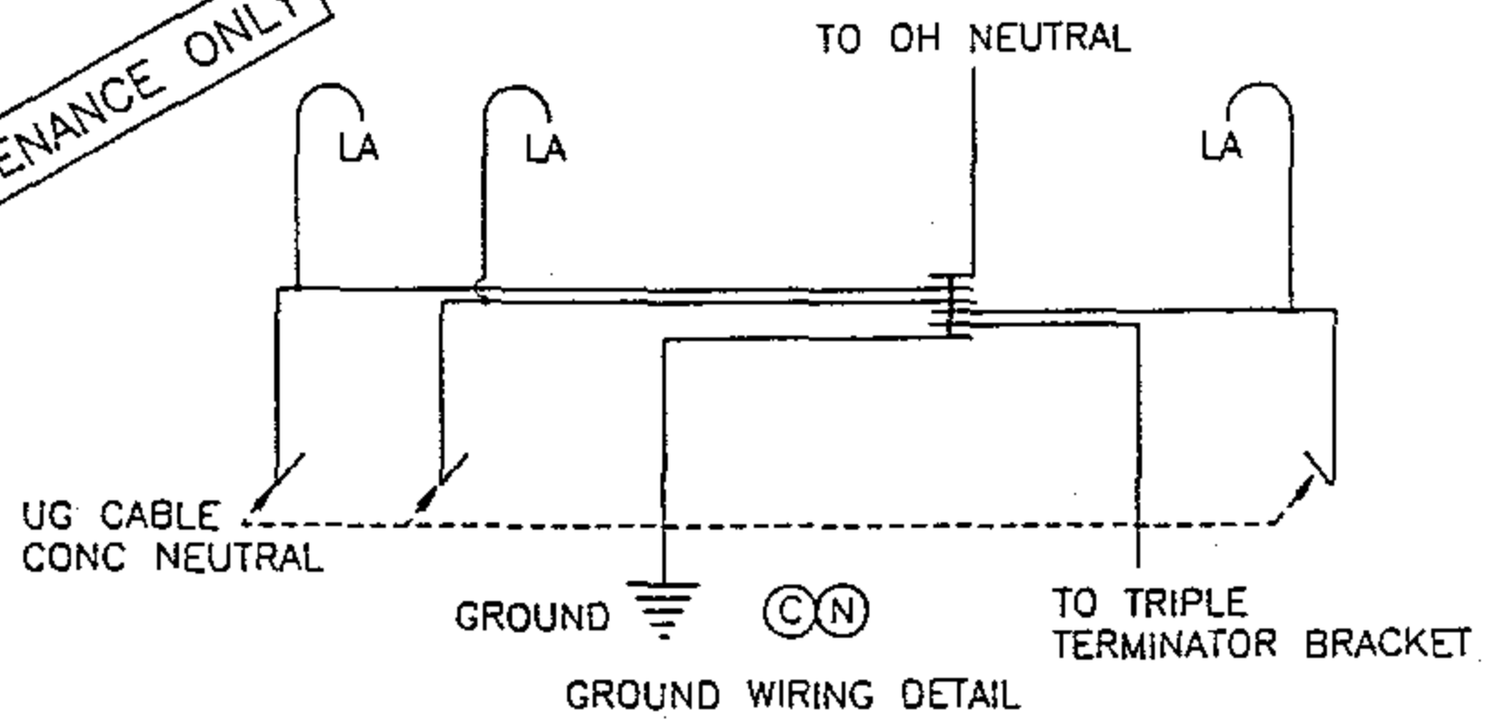

GROUND WIRING DETAIL

DATE 1-1-93 APPD JLB/BDJ	SDG&E ELECTRIC STANDARDS 12.47KV AND BELOW 3Ø CABLE POLE 1/C PER Ø, UPSWEEP BRACKET CONSTRUCTION	OH 1499.203 ~~UG 4299.203~~ SUPERCEDES 1429.1 (1-1-93)

TABLE OF CONTENTS

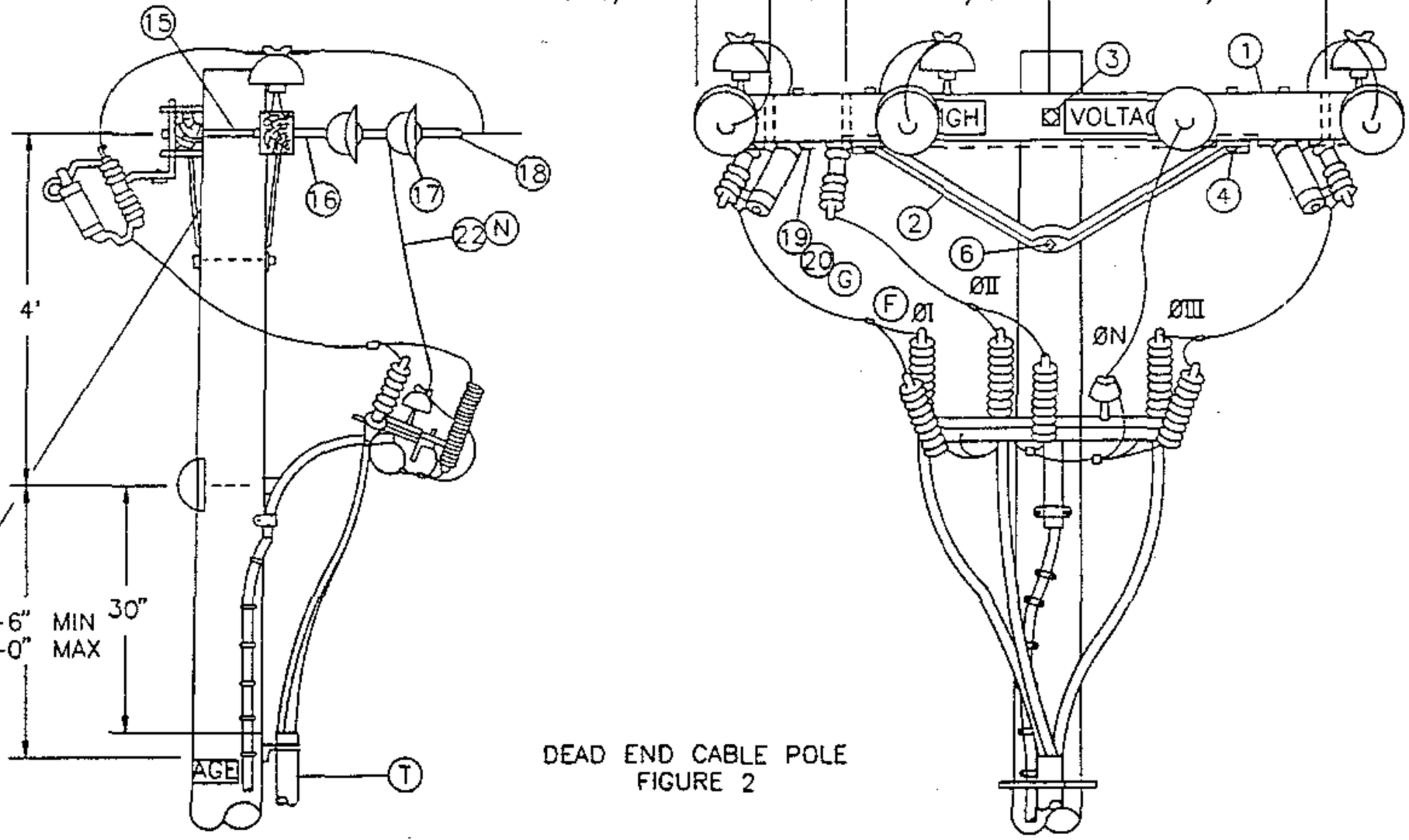

DEAD END CABLE POLE
FIGURE 2

NOTE:

- DEAD END CABLE POLE (FIG.2) IS TO BE USED ONLY WHEN NO FURTHER LINE EXTENSION OR NO RECONDUCTORING IS EXPECTED.

FOR FIELD MAINTENANCE ONLY

TABLE OF CONTENTS

OH 1499.204 ~~UG 4299.204~~ SUPERCEDES 1429.2 (1-1-93)	SDG&E ELECTRIC STANDARDS 12.47KV AND BELOW 3Ø CABLE POLE 1/C PER Ø UPSWEEP BRACKET CONSTRUCTION	DATE 1-1-93 APPD JVG/DDJ

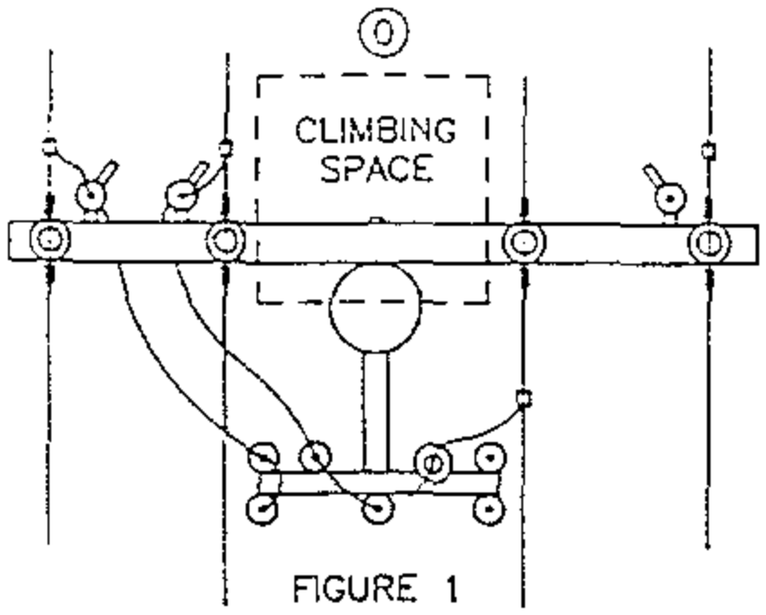

FIGURE 1

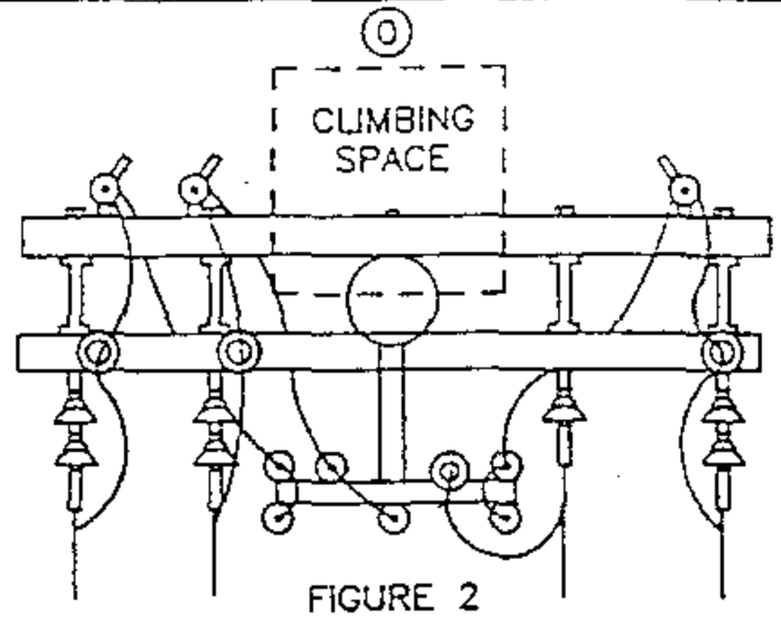

FIGURE 2

CLIMBING SPACE

FOR FIELD MAINTENANCE ONLY

BILL OF MATERIAL:

ITEM	DESCRIPTION	QUANTITY FIG.1	QUANTITY FIG.2	CONST STD OR PAGE NO	STOCK NUMBER
1	CROSSARM, 3-3/4" X 5-3/4" X 10'-0"	2	2	–	294128
2	BRACE, ANGLE, CROSSARM, 5'	1	2	–	164128
3	BOLT, MACH, GALV, 5/8" X (LENGTH AS REQ'D), 2 SQUARE & 1 DOUBLE COIL SPRING WASHER (E)	2	1	392	–
4	BOLT, MACH, GALV, 1/2" X 7", 1 ROUND & 1 DOUBLE COIL SPRING WASHER (E)	2	4	392	–
5	BOLT, MACH, GALV, 5/8" X (LENGTH AS REQ'D), 1 SQUARE & 1 DOUBLE COIL SPRING WASHER (E)	2	1	392	–
6	BOLT, MACH, GALV, 5/8" X (LENGTH AS REQ'D), 1 DOUBLE COIL SPRING WASHER (E)	–	1	392	–
7	BRACE, FLAT, CROSSARM, 28" (E)	2	–	–	164192
8	BOLT, MACH, GALV, 3/8" X (LENGTH AS REQ'D), 1 ROUND & 1 SPRING WASHER (E)	2	–	392	–
9	BOLT, MACH, GALV, 1/2" X (LENGTH AS REQ'D), 1 ROUND & 1 DOUBLE COIL SPRING WASHER (E)	2	–	392	–
10	SIGN, HIGH VOLTAGE AND (E)	3	3	–	647648
	9 ROOFING NAILS, GALV (E)	AS REQ'D		–	492224
11	PIN, INSULATOR, STRAIGHT, 12KV, 1" LEAD THREAD (D) (E)	1	–	–	532704
12	INSULATOR, LINE, 12KV, NEUTRAL (D) (E)	2	1	–	429216
13	PIN, INSULATOR, STRAIGHT, 12KV, 1" OR (E)	3	3	–	532704
	1-3/8" LEAD THREAD (E)	3	3	–	532448
14	INSULATOR, LINE, 12KV, 1" OR 1-3/8" PIN (E)	3	3	750	–
15	BOLT, SPACE, 5/8" X (LENGTH AS REQ'D) 3 SQ, 2 RD, 2 DOUBLE COIL SPRING WASHERS & 1 NUT (D) (E)	–	4	392	–
16	CLEVIS, DEAD END, 5/8" BOLT, STEEL (D) (E)	–	4	–	235712
17	INSULATOR, SUSPENSION, 12KV, CLEVIS (D)	–	7	750	–
18	CLAMP, STRAIGHT LINE, D.E. (D) (E)	–	4	741	–
19	WIRE, #8, BARE SOLID ANNEALED COPPER	10'	10'	–	812928
20	STAPLES, FENCE, GALV, 1-1/4" (E)	AS REQ'D		–	678528
21	WIRE, BARE STRANDED COPPER (OH JUMPER) (N)	21'	25'	715-716	–
22	WIRE, BARE STRANDED CU OR AL (OH NEUT JUMPER) (N)	9'	7'	711-716	–
23	CONNECTOR, WIRE COMPRESSION (SIZE AS REQ'D) (D) (E)	AS REQ'D		785-787	–

CABLE SIZE	UG MACRO UNIT PORCELAIN	
	W/O LADDER ARMS	W/LADDER ARMS
3C-#2 AL	CP-3#2	CP3#2L
3C-#2/0	CP#2/0	CP2/0L

TABLE OF CONTENTS

DATE 1-1-93
APPD JVB/LDG

SDG&E ELECTRIC STANDARDS

12.47KV AND BELOW 3Ø CABLE POLE 1/C PER Ø
UPSWEEP BRACKET CONSTRUCTION

OH 1499.205
~~UG 4299.205~~
SUPERCEDES
1429.3 (1-1-93)

BILL OF MATERIAL: (CONTINUED)

ITEM	DESCRIPTION	QUANTITY FIG. 1	QUANTITY FIG. 2	CONSTR. STD OR PAGE NO.	STOCK NUMBER
24	WIRE, #6, BARE STRANDED COPPER	9'	9'	–	813536
25	BRACKET, CUTOUT/ARRESTER, FOR CROSSARM MOUNTING (E)	3	3	–	166070
26	CUTOUT BODY FOR CURRENT LIMITING FUSE	3	3	–	297952
27	FUSE, CURRENT-LIMITING, SIZE AS REQ'D	3	3	1206	–
28	ARRESTER, LIGHTNING	3	3	1247	–
29	PIN, SHORT SHANK, 1" LEAD THREAD (D) (E)	1	1	–	534426
30	BRACKET, GALV, TERMINAL, UPSWEEP	1	1	–	166856
31	BRACKET, TRIPLE TERMINATOR (S)	1	1	–	166676
32	COVER, BOLT, PLASTIC & (E)	1	1	–	285696
	6 – 10D NAILS, GALV (E)	–	–	–	491392
33	SCREW, LAG, GALV, 1/2" X 4" (E)	2	2	–	621568
34	BOLT, MACH, GALV, 5/8" X 1 1/2", 1 ROUND AND 1 LOCK WASHER (E)	1	1	392	–
35	TERMINALS AND UNDERGROUND CABLE	3	3	4111	–
36	WIRE, #4, BARE STRANDED COPPER	50'	45'	–	813760
37	UNIT GROUND, COMPLETE (Q)	1	1	–	603136
38	RISER CONSTRUCTION	–	–	1400/4200	–
39	WIRE, COPPER BARE STRANDED (CABLE POLE NEUTRAL) (N)	5'	5'	715/716	–
40	BRACKET, LADDER ARM (E)	AS REQ'D		1404/4204	167184
41	NUT, CLAMPING CHANNEL, W/SPRING, 1/2" (E)	AS REQ'D		1404/4204	503488
42	CHANNEL, DOUBLE GALV, 24" (E)	AS REQ'D		1404/4204	216700

INSTALLATION:

A. NEW CABLE POLES SHALL HAVE A STANDARD DEPTH OF 9'. IN MOST CASES THIS WILL REQUIRE A 5' TALLER POLE.

B. THIS CONSTRUCTION TO BE USED WITH 2/0 AND SMALLER UNDERGROUND CABLE.

(C) CONNECT OVERHEAD NEUTRAL, TRIPLE TERMINAL BRACKET, AND CONCENTRIC CABLE NEUTRAL CONDUCTOR TO LIGHTNING ARRESTER GROUND.

(D) REDUCE QUANTITIES AS REQUIRED WHEN NOT USING NEUTRAL.

(E) EXEMPT MATERIAL.

(F) OMIT PHASE II AND PHASE N FOR SINGLE PHASE 12KV CABLE POLE; OMIT PHASE I AND PHASE II FOR SINGLE PHASE 6.9 KV CABLE POLE.

(G) INTERCONNECT CUTOUTS AND DEADEND BONDS PER G.O. 95 RULE 52.7D. BONDING SHOULD BE DONE IN ACCORDANCE WITH RULE 53.4.

(N)

UG CABLE SIZE AWG OR KCMIL, AL	OH JUMPER COND SIZE, AWG OR KCMIL, CU	OH NEUT JUMPER SIZE CU	OH NEUT JUMPER SIZE AL	OH NEUT JUMPER SIZE	CABLE POLE NEUT SIZE (CU) UNDER POTHEAD ARM OR TRIPLE TERM BRKT
2	4	6	2	–	#6 PER PHASE
2/0	4	6	2	–	#6 PER PHASE
350	4/0	1/0	3/0	–	#2 PER PHASE
750	500	4/0	336.4	OR SAME SIZE AS O.H. NEUT CONDUCTOR	1/0 PER PHASE
1000	500	4/0	336.4		1/0 PER PHASE

REFERENCE:

(O) ALLOWABLE WORKING AND CLIMBING SPACE – SEE STANDARD 251.

(P) POLE STEPPING – SEE STANDARD 363/4205.

(Q) GROUNDING METHODS – SEE PAGE 1002.5.

R. SEE STANDARD SECTION 1200/4300 FOR FUSING.

S. RISER POSITIONS – SEE STANDARD 1402/4202.

(T) MINIMUM VERTICAL SEPARATION AS PER G.O. 95 – SEE STANDARD 1406/4206.

(U) SEE STANDARD 1407/4207 FOR PORCELAIN AND NON-PORCELAIN TERMINAL MOUNTING BRACKET INSTALLATIONS AND MATERIALS.

FOR FIELD MAINTENANCE ONLY

TABLE OF CONTENTS

OH 1499.206 ~~UG 4299.206~~ SUPERCEDES 1429.4 (1-1-93)	SDG&E ELECTRIC STANDARDS 12.47KV AND BELOW 3 PHASE, CABLE POLE, 1/C PER PHASE, UPSWEEP BRACKET CONSTRUCTION	DATE 1-1-93 APPD JLG/DDJ

SCOPE: THIS STANDARD SHOWS ARMLESS TANGENT CONSTRUCTION FOR 12.47KV AND BELOW SINGLE-PHASE CABLE POLE WITH BRACKET MOUNTED TERMINALS FOR #2 UG CABLE USING NON-PORCELAIN TERMINALS.

FOR FIELD MAINTENANCE ONLY

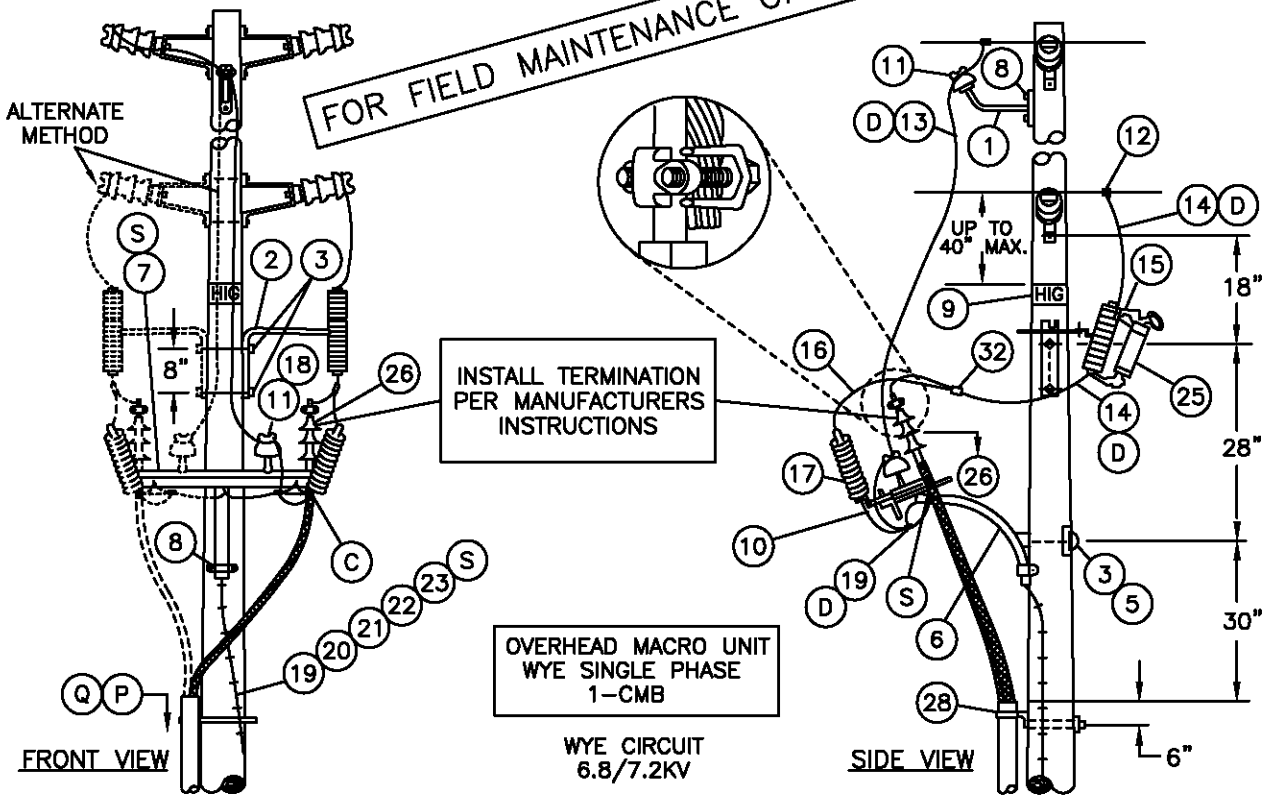

OVERHEAD MACRO UNIT
WYE SINGLE PHASE
1-CMB

WYE CIRCUIT
6.8/7.2KV

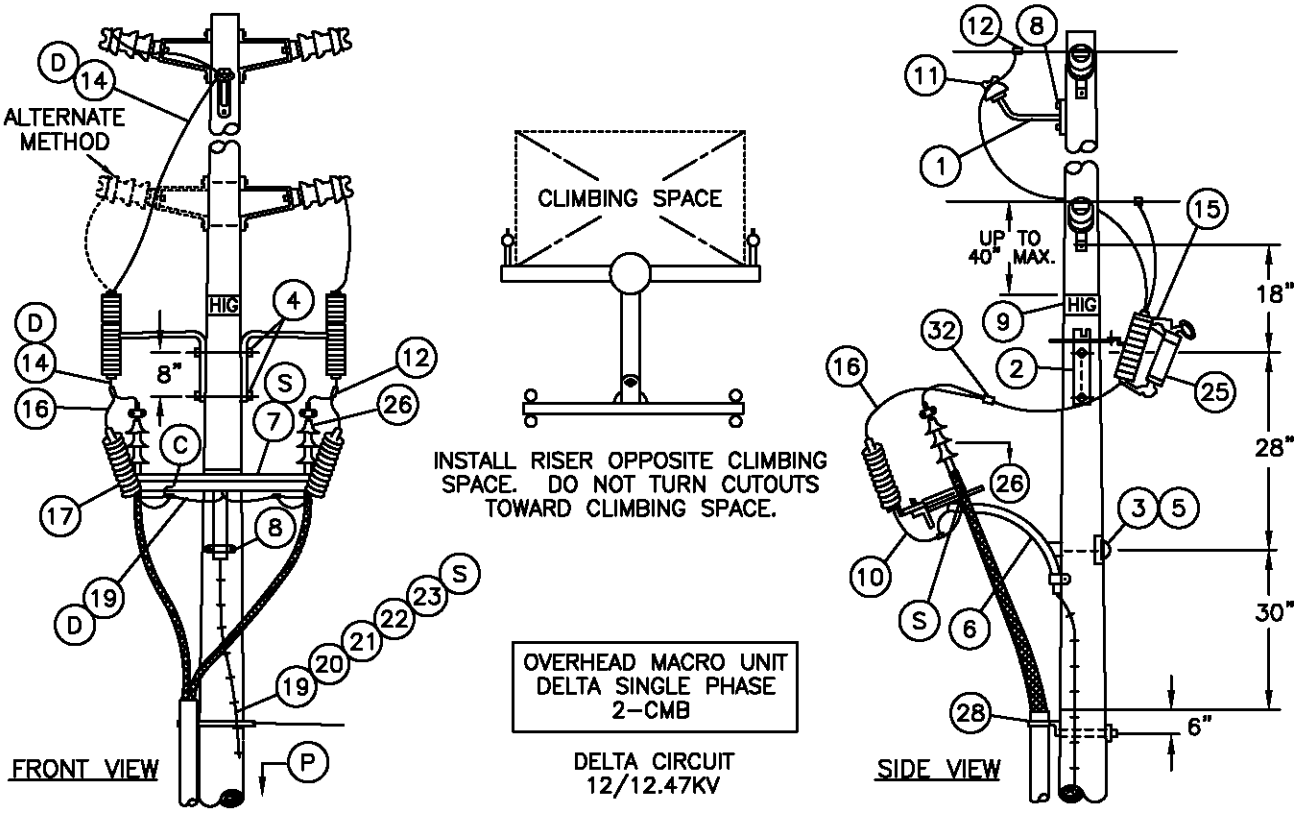

OVERHEAD MACRO UNIT
DELTA SINGLE PHASE
2-CMB

DELTA CIRCUIT
12/12.47KV

OH 1499.207 UG 4299.207 SUPERSEDES 4221.1 (10-20-05)	SDG&E ELECTRIC STANDARDS BRACKET MOUNTED TERMINALS, 12.47KV AND BELOW, SINGLE-PHASE ARMLESS TANGENT CONSTRUCTION, NON-PORCELAIN TERMINALS	DATE 10-20-05 APPD PA / JJ

TABLE OF CONTENTS

BILL OF MATERIAL:

ITEM	DESCRIPTION	QUANTITY 6.9–	QUANTITY 12KV	CONST STD OR PAGE NO	STOCK NUMBER	ASSEMBLY UNIT
1	BRACKET, INSULATOR, 1" OR 1–3/8" LEAD THREAD	1	1	–	166144 166176	–
2	BRACKET, CUTOUT MOUNTING	1	2	–	166448	–
3	BOLT, MACH., GALV., 5/8" X (LENGTH AS REQ'D), 1 SQ. WASH 1 RD. WASH., 1 DBL. COIL SPRING WASH.	3	1	1392.1 &.2	–	–
4	BOLT, MACH., GALV., 5/8" X (LENGTH AS REQ'D), 2 RD. WASH, 1 DBL. COIL SPR. WASH.	–	2	1392.1 &.2	–	–
5	COVER, BOLT, PLASTIC, & 6–10D NAILS, GALV.	1	1	–	285696 491392	–
6	BRACKET, GALV., TERMINAL UPSWEEP, WITH PVC LINER	1	1	–	166856	–
7	BRACKET, TRIPLE TERMINAL	1	1	–	166676	–
8	SCREW, LAG, 1/2" X 4", GALV.	4	4	–	621568	–
9	SIGN, HIGH VOLTAGE, 8 GALV. ROOFING NAILS	2	2	–	647648 492192	–
10	FLEXIBLE ARRESTER GROUND STRAP	AS REQ'D		–	698754	–
11	INSULATOR, 12KV, PIN TYPE, (CLASS AS REQ'D)	2	1	750.3	–	–
12	CONNECTOR, WIRE COMPRESSION, (SIZE AND TYPE AS REQ'D)	3	4	783–796	–	–
13	WIRE, BARE STRANDED COPPER (OH NEUTRAL JUMPER) Ⓓ	9'	–	711	–	–
14	WIRE, BARE STRANDED COPPER (OH JUMPER) Ⓓ	6'	15'	715	–	–
15	CUTOUT BODY, FOR CURRENT–LIMITING FUSE	1	2	1212	297952	–
16	WIRE, BARE STRANDED COPPER, #6	2'	4'	–	813536	–
17	ARRESTER, LIGHTNING	1	2	1247.1 &.2	–	–
18	PIN, SHORT SHANK, 1" LEAD THREAD	1	–	–	532426	–
19	#4 CU SOLID GROUND WIRE, PVC COVERED	50'	50'	–	812490	GNDPVC
20	GROUND ROD, 5/8" X 8', COPPERWELD	1	1	–	603072	
21	COPPER BONDED GROUND CONNECTOR	1	1	–	259010	–
22	GROUND ENHANCING POWER SOLUTION (GEM)	AS REQ'D		–	424390	–
23	GALVANIZED STAPLES FOR PVC COVERED GROUND WIRE	AS REQ'D		–	678562	–
24						–
25	FUSE, CURRENT LIMITING, (SIZE AS SPECIFIED ON W.O.)	1	2	1207/4308	–	–
26	TERMINALS, UNDERGROUND CABLE Ⓢ	1	2	4111	–	–
27	WIRE, BARE STRANDED COPPER, (UNDER TRIPLE TERM BRKT) Ⓓ	–	3'	715	–	–
28	RISER CONSTRUCTION	AS REQ'D		1400/4200	–	–
29	BRACKET, LADDER ARM	AS REQ'D		1404/4204	167184	–
30	NUT, CLAMPING CHANNEL, W/SPRING, 1/2"	AS REQ'D		1404/4204	503488	–
31	CHANNEL, DOUBLE GALV. 24"	AS REQ'D		1404/4204	216700	–
32	HOT LINE CLAMP	2		788	227680	–

FOR FIELD MAINTENANCE ONLY

CABLE SIZE		UG MACRO UNIT PORCELAIN W/O LADDER ARMS	UG MACRO UNIT PORCELAIN W/LADDER ARMS
1C#2AL	3"BEND	CP–1#2	CP1#2L
2C#2AL	3"BEND	CP–2#2	CP2#2L
1C#2AL	2"BEND	C1#2–S	C1#2LS

DATE 6–30–06
APPD PSA / JJ

SDG&E ELECTRIC STANDARDS

BRACKET MOUNTED TERMINALS, 12.47KV AND BELOW, SINGLE–PHASE ARMLESS TANGENT CONSTRUCTION, NON–PORCELAIN TERMINALS

OH 1499.208
UG 4299.208
SUPERSEDES
4221.2 (6–30–06)

TABLE OF CONTENTS

INSTALLATION:

A. NEW CABLE POLES SHALL HAVE A STANDARD DEPTH OF 9'. IN MOST CASES THIS WILL REQUIRE A 5' TALLER POLE.

B. USE THIS CONSTRUCTION FOR #2 CABLE.

(C) CONNECT ONE STRAND OF CONCENTRIC NEUTRAL TO SPLIT BOLT GROUND LUG.

(D)

UG CABLE SIZE AWG OR KCMIL, AL	OH JUMPER COND SIZE, AWG OR KCMIL, CU	OH NEUT JUMPER SIZE			CABLE POLE NEUT SIZE (CU) UNDER POTHEAD ARM OR TRIPLE TERM BRKT
		CU	AL		
2	4	6	2	–	#6 PER PHASE

REFERENCE:

(O) POLE STEPPING – SEE STANDARD 363/4205.

P. POLE TOP CONSTRUCTION – SEE SECTION 400.

(Q) GROUNDING METHODS – SEE PAGE 1002.5.

R. SEE STANDARD SECTION 1200/4300 FOR FUSING.

(S) SEE STANDARD 1407/4207 FOR NON–PORCELAIN TERMINAL MOUNTING BRACKET INSTRUCTIONS AND MATERIALS.

FOR FIELD MAINTENANCE ONLY

TABLE OF CONTENTS

REVISION	SDG&E ELECTRIC STANDARDS	OH 1499.209
DATE 1–1–93	BRACKET MOUNTED TERMINALS, 12.47KV AND BELOW, SINGLE–PHASE ARMLESS TANGENT CONSTRUCTION, NON–PORCELAIN TERMINALS	UG 4299.209
APPD JJG/RDJ		SUPERSEDES 4221.3 (1–1–93)

SCOPE: THIS STANDARD SHOWS ARMLESS DEADEND CONSTRUCTION FOR 12.47KV AND BELOW SINGLE-PHASE CABLE POLE WITH BRACKET MOUNTED TERMINALS FOR #2 UG CABLE USING NON-PORCELAIN TERMINALS.

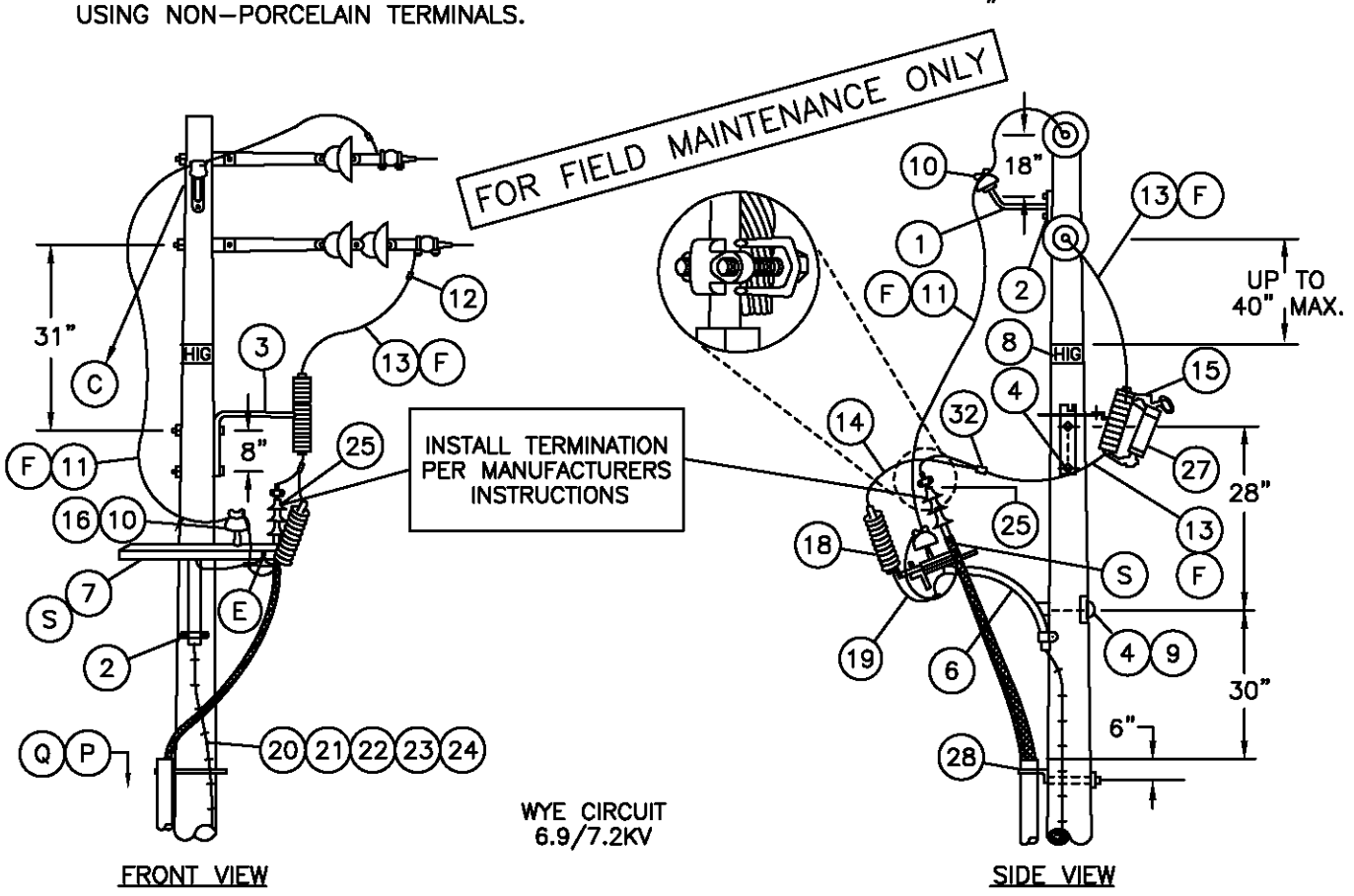

WYE CIRCUIT
6.9/7.2KV

FRONT VIEW

SIDE VIEW

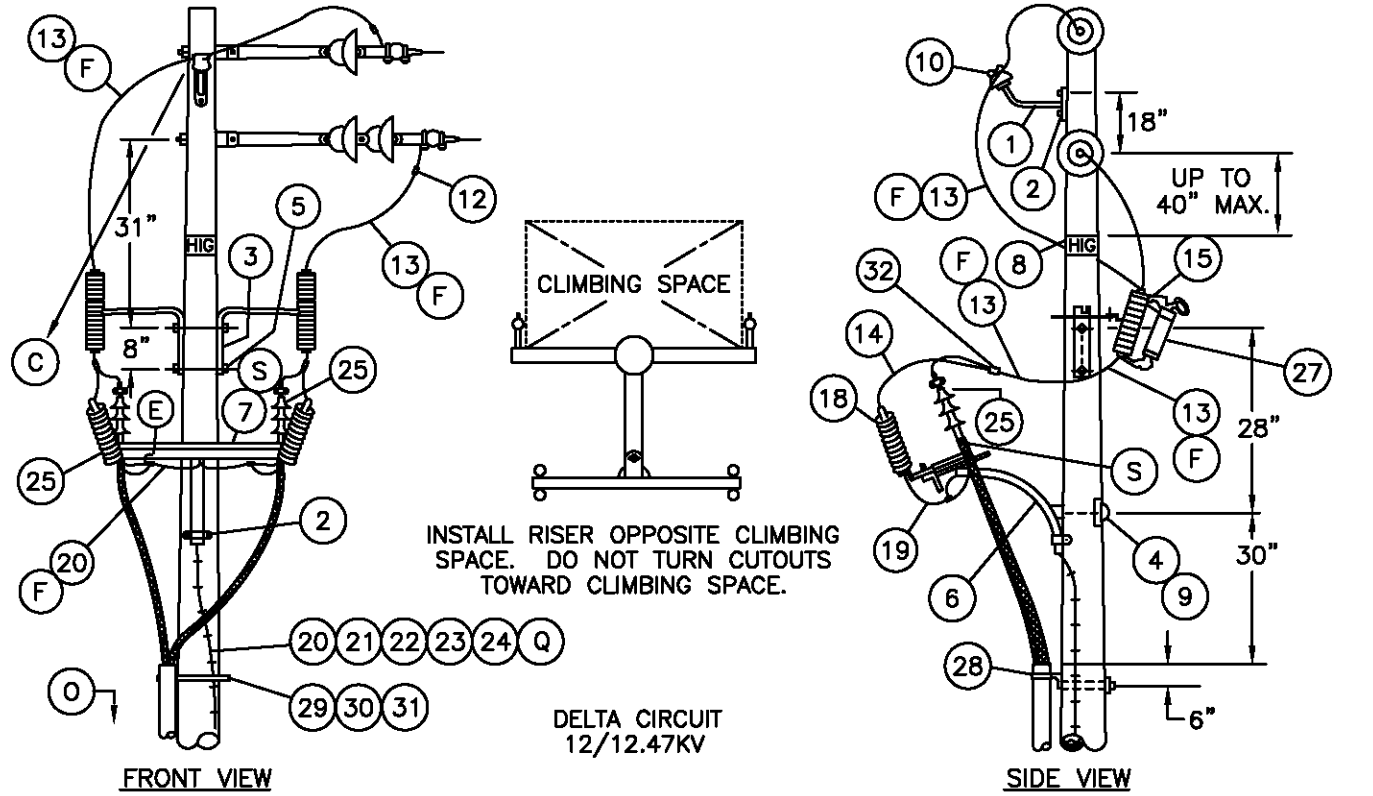

DELTA CIRCUIT
12/12.47KV

FRONT VIEW

SIDE VIEW

OH 1499.210 UG 4299.210 SUPERSEDES 4223.1 (10-20-05)	SDG&E ELECTRIC STANDARDS BRACKET MOUNTED TERMINALS, 12.47KV AND BELOW, SINGLE-PHASE ARMLESS DEADEND CONSTRUCTION, NON-PORCELAIN TERMINALS	DATE 10-20-05 APPD PA / JJ

TABLE OF CONTENTS

BILL OF MATERIAL:

ITEM	DESCRIPTION	QUANTITY 7.2–	QUANTITY 12KV	CONST STD OR PAGE NO	STOCK NUMBER	ASSEMBLY UNIT
1	BRACKET, INSULATOR, 1" OR 1–3/8" LEAD THREAD	1	1	–	166144 166176	–
2	SCREW, LAG, GALV, 1/2" X 4"	4	4	–	621568	–
3	BRACKET, CUTOUT MOUNTING	1	2	–	166448	–
4	BOLT, MACH, GALV, 5/8" X (LENGTH AS REQ'D), 1 SQ WASH, 1 RD WASH, 1 DBL COIL SPRING WASH	3	1	392.1 &.2	–	–
5	BOLT, MACH, GALV, 5/8" X (LENGTH AS REQ'D), 2 RD WASH, 1 DBL COIL SPRING WASH	–	2	392.1 &.2	–	–
6	BRACKET, GALV, TERMINAL UPSWEEP, WITH PVC LINER	1	1	–	166856	–
7	BRACKET, TRIPLE TERMINAL	1	1	–	166676	–
8	SIGN, HIGH VOLTAGE, 8 ROOFING NAILS, GALV	2	2	–	647648 492192	–
9	COVER, BOLT, PLASTIC, & 6–10D NAILS, GALV.	1	1	–	285696 491392	–
10	INSULATOR, 12KV, PIN TYPE, (CLASS AS REQ'D)	2	1	750.3	–	–
11	WIRE, BARE STRANDED CU OR AL (OH NEUTRAL JUMPER) Ⓕ	12'	–	715	–	–
12	CONNECTOR, WIRE, COMPRESSION, (SIZE AS REQ'D)	AS REQ'D		783–786	–	–
13	WIRE, BARE STRANDED COPPER (OH JUMPER) Ⓕ	6'	16'	715	–	–
14	WIRE, #6, BARE STRANDED COPPER	2'	4'	–	813536	–
15	CUTOUT, FOR CURRENT–LIMITING FUSE	1	2	1212	297952	–
16	PIN, SHORT SHANK, 1" LEAD THREAD	1	–	–	532426	–
17						–
18	ARRESTER, LIGHTNING	1	2	1247.1	–	–
19	FLEXIBLE ARRESTER GROUND STRAP	AS REQ'D		–	698754	–
20	#4 CU SOLID GROUND WIRE, PVC COVERED	50'	50'	–	812490	GNDPVC
21	GROUND ROD, 5/8" X 8', COPPERWELD	1	1	–	603072	
22	COPPER BONDED GROUND CONNECTOR	1	1	–	259010	–
23	GROUND ENHANCING POWER SOLUTION (GEM)	AS REQ'D		–	424390	–
24	GALVANIZED STAPLES FOR PVC COVERED GROUND WIRE	AS REQ'D		–	678562	–
25	TERMINAL AND UNDERGROUND CABLE	1	2	4111	–	–
26	WIRE, BARE STRANDED CU (UNDER TRIPLE TERM BRKT)	–	3'	715	–	–
27	FUSE, CURRENT–LIMITING, (SIZE AS SPECIFIED ON W.O.)	1	2	1207/4308	–	–
28	RISER CONSTRUCTION	–	–	1400/4200	–	–
29	BRACKET, LADDER ARM	AS REQ'D		1404/4204	167184	–
30	NUT, CLAMPING CHANNEL, W/SPRING, 1/2"	AS REQ'D		1404/4204	503488	–
31	CHANNEL, DOUBLE GALV. 24"	AS REQ'D		1404/4204	216700	–
32	HOT LINE CLAMP	2		788	227680	–

FOR FIELD MAINTENANCE ONLY

CABLE SIZE		UG MACRO UNIT PORCELAIN W/O LADDER ARMS	UG MACRO UNIT PORCELAIN W/LADDER ARMS
1C#2AL	3"BEND	CP–1#2	CP1#2L
2C#2AL	3"BEND	CP–2#2	CP2#2L
1C#2AL	2"BEND	C1#2–5	C1#2LS

TABLE OF CONTENTS

DATE 6–30–06
APPD PSA / JJ

SDG&E ELECTRIC STANDARDS

BRACKET MOUNTED TERMINALS, 12.47KV AND BELOW, SINGLE–PHASE ARMLESS DEADEND CONSTRUCTION, NON–PORCELAIN TERMINALS

OH 1499.211
UG 4299.211
SUPERSEDES
4223.2 (6–30–06)

INSTALLATION:

A. NEW CABLE POLES SHALL HAVE A STANDARD DEPTH OF 9'. IN MOST CASES THIS WILL REQUIRE A 5' TALLER POLE.

B. THIS CONSTRUCTION TO BE USED WITH #2 CABLE.

(C) DO NOT ATTACH GUY HOOK TO TOP DEAD-END THRU BOLT.

D. THIS CONSTRUCTION IS LIMITED TO CUL-DE-SAC APPLICATION WHERE NO FUTURE O.H. IS ANTICIPATED.

(E) CONNECT ONE STRAND OF CONCENTRIC NEUTRAL TO SPLIT BOLT GROUNDING LUG.

(F)

UG CABLE SIZE AWG OR KCMIL, AL	OH JUMPER COND SIZE, AWG OR KCMIL, CU	OH NEUT JUMPER SIZE			CABLE POLE NEUT SIZE (CU) UNDER POTHEAD ARM OR TRIPLE TERM BRKT
		CU	AL		
2	4	6	2	–	#6 PER PHASE

REFERENCE:

(O) POLE STEPPING – SEE STANDARD 363/4205.

P. POLE TOP CONSTRUCTION – SEE SECTION 400.

(Q) GROUNDING METHODS – SEE PAGE 1002.5.

R. SEE STANDARD SECTION 1200/4300 FOR FUSING.

(S) SEE STANDARD 1407/4207 FOR NON-PORCELAIN TERMINAL MOUNTING BRACKET INSTRUCTIONS AND MATERIALS.

FOR FIELD MAINTENANCE ONLY

TABLE OF CONTENTS

OH 1499.212 UG 4299.212 SUPERSEDES 4223.3 (1-1-93)	SDG&E ELECTRIC STANDARDS BRACKET MOUNTED TERMINALS, 12.47KV AND BELOW, SINGLE-PHASE ARMLESS DEADEND CONSTRUCTION, NON-PORCELAIN TERMINALS	DATE 1-1-93 APPD JJB/RDJ

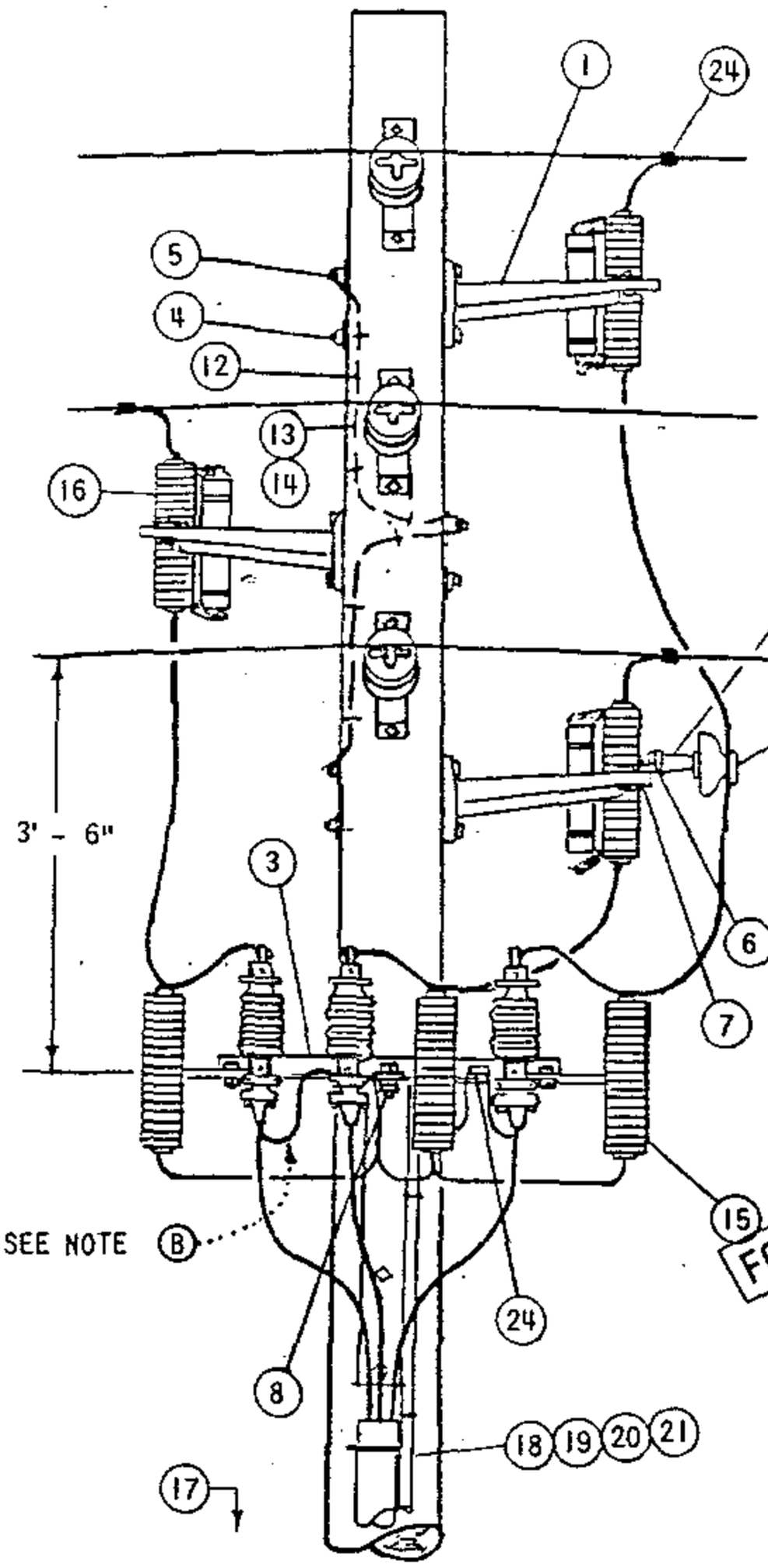

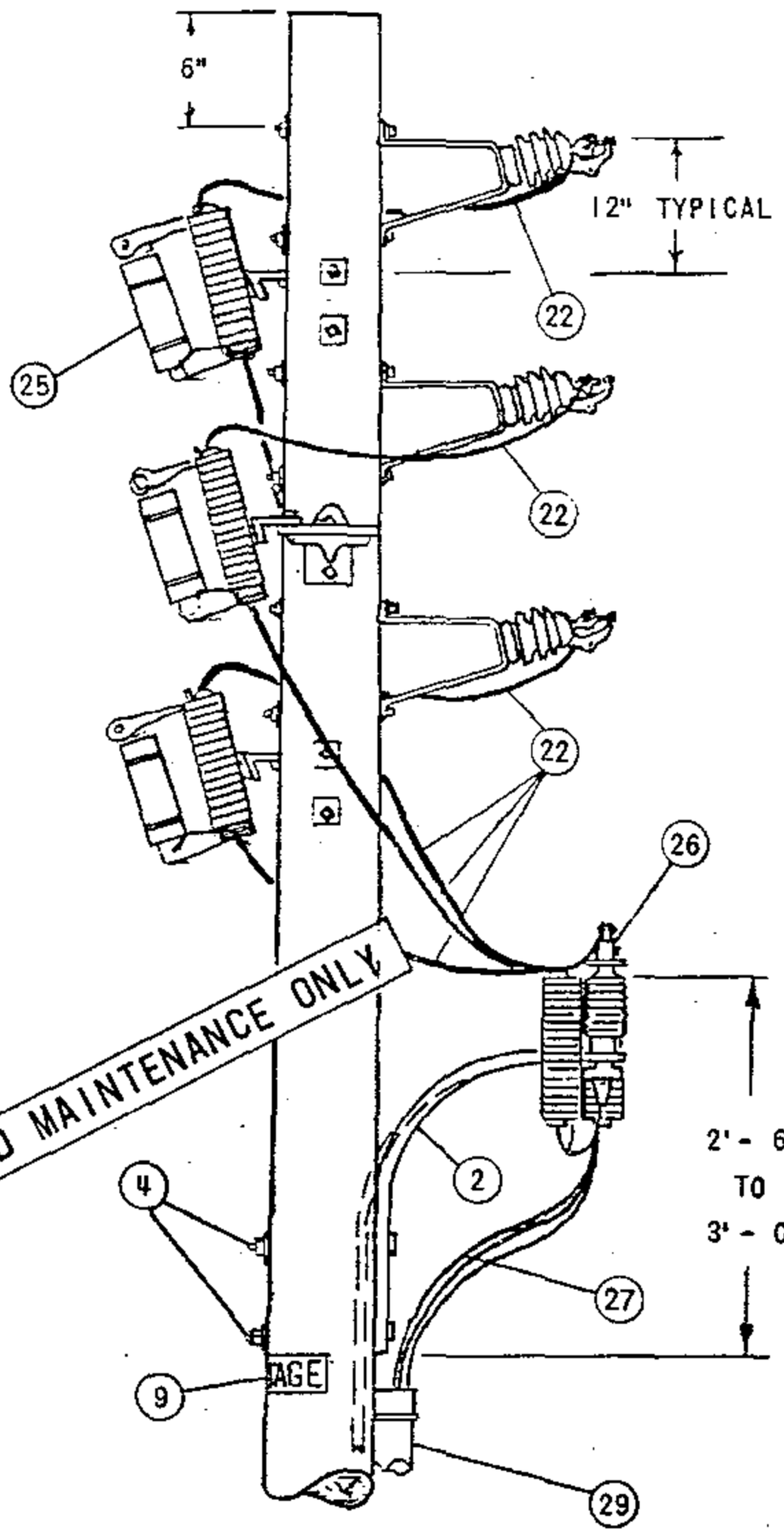

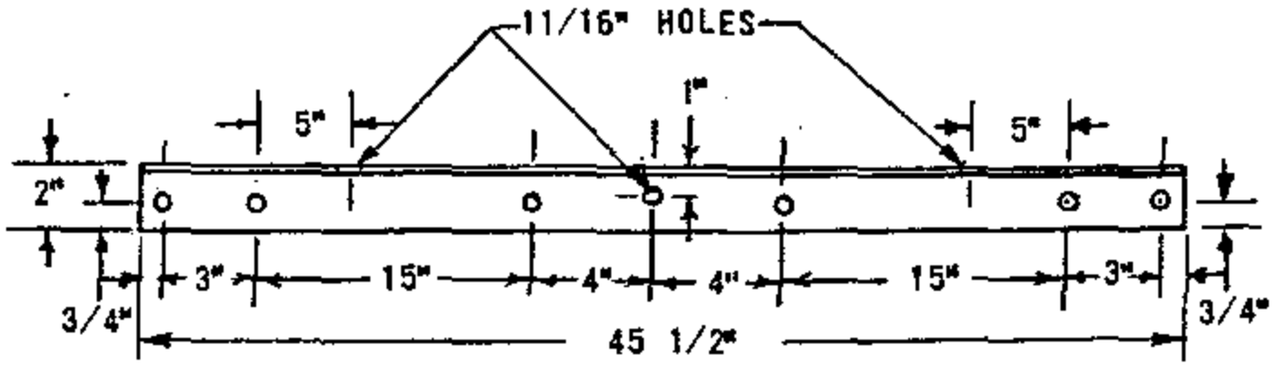

ALL HOLES 9/16" EXCEPT AS NOTED

FABRICATE FROM 2" X 2" X 3/16" STEEL ANGLE
HOT DIP GALVANIZE AFTER FABRICATION

ARMLESS TERMINAL MOUNTING BRACKET

DATE 8-27-82 APPD ORH	SDG&E ELECTRIC STANDARDS BRACKET MOUNTED TERMINALS, 12KV 3 WIRE ARMLESS TANGENT CONSTRUCTION	OH 1499.301 ~~UG 4299.301~~ SUPERSEDES 1437.1(11-16-81)

TABLE OF CONTENTS

NOTES:

(A) UNIT GROUND, COMPLETE, ORDER 603120 WITH GRAY MOULDING, 603135 WITH PLAIN MOULDING.

(B) THE FIBERGLASS UPSWEEP TERMINAL BRACKET IS TO BE USED FOR UNDERGROUND CONDUCTORS 4/0 OR SMALLER. DO NOT USE FOR 500 KCM AND LARGER CONDUCTORS.

(C) USE TWO-ROD GROUND SPACED A MINIMUM OF 6 FEET APART.

D. CONNECT ONE STRAND OF CONCENTRIC NEUTRAL TO TERMINAL BOLT WITH DOUBLE NUT.

(E) EXEMPT MATERIAL

FOR FIELD MAINTENANCE ONLY

ITEM		DESCRIPTION	QUANTITY	STOCK NO. OR CONSTR STD
INSTALLED BY OH CREWS	1	BRACKET, GALV., 4-HOLE, MOUNTING	3	166240
	2	BRACKET, FIBERGLASS, TERMINAL, UPSWEEP SEE NOTE (F)	1	166864
	3	BRACKET, ARMLESS, TERMINAL MOUNTING, SEE DETAIL PAGE 1437.1	1	166672
PTF	4	MACH. BOLT, GALV., 5/8" X LENGTH AS REQ'D., 1-SQ. CURV. WASH., 1-DBL. COIL SPR. WASH. & 1-NUT (E)	5	PGS 139, 140
	5	MACH. BOLT, GALV., 5/8" X LENGTH AS REQ'D., 1-SQ., CURV. WASH., 1-DBL. COIL SPR.WASH., 2-FLAT RD. WASH. & 2-NUTS (E)	3	PGS 139, 140
	6	MACH. BOLT, GALV., 5/8" X 1 1/2", 1-LOCK WASH. (E)	1	PGS 139, 140
	7	MACH. BOLT, GALV., 1/2" X 1 1/2", 1-LOCK WASH.& 1-NUT (E)	1	PGS 139, 140
	8	MACH. BOLT, GALV., 5/8" X 2 1/2", 1-LOCK, 2-RD. WASH. & 2-NUTS (E)	1	PGS 139, 140
	9	HIGH VOLTAGE SIGN & 8-ROOFING NAILS, GALV. (E)	2	647648, 492224
	10	BRACKET, INSULATOR, MOUNTING ANGLE	1	166208
	11	PIN, INSULATOR, 12KV, 1" OR 1 3/8" LEAD THREAD	1	529248-529216
	12	WIRE, BOND, BARE SOLID ANNEALED, #8	6'	812928
	13	HARDWOOD MOULDING, 1" (OTHER THAN TOP CIRCUIT ON POLE)	6'	487200
	14	MOULDING STAPLES, GALV., 3" X 1 1/16" X 1/4" (OTHER THAN TOP CIRCUIT ON POLE)	6	678560
UCD	15	LIGHTNING ARRESTER, 12KV	3	113248
	16	CUTOUT, FOR CURRENT-LIMITING FUSE	3	1200 SECTION
	17	GROUND ROD & CLAMP (A) (C)	2	603072-230016 (E)
	18	HARDWOOD MOULDING, 1" (A)	36'	487200
	19	STAPLES,MOULDING, GALV., 3" X 1 1/16" X 1/4" (A) (E)	24	678560
	20	STAPLES, FENCE, GALV., 1 1/4" (A) (E)	1/3#	678528
	21	WIRE, BARE STRANDED COPPER, #2 (B)	50'	813664
	22	WIRE, BARE STRANDED, COPPER, (SIZE AS REQ'D)	25'	
	23	INSULATOR, 12KV, PIN TYPE (CLASS AS REQ'D)	1	429056-429152
	24	CONNECTOR, WIRE, COMPRESSION (SIZE AS REQ'D)	4	
	25	FUSE, CURRENT-LIMITING SIZE AS SPECIFIED ON WORK ORDER	3	1200 SECTION
UG CREWS	26	CABLE TERMINAL	3	SEE UG STDS
	27	CABLE, PRIMARY	AS REQ'D	SEE UG STDS
	28			
	29	RISER CONSTRUCTION	AS REQ'D	1400/4200 SECTION

TABLE OF CONTENTS

OH 1499.302
~~UG 4299.302~~
SUPERSEDES
1437.2 (11-16-81)

SDG&E ELECTRIC STANDARDS

BRACKET MOUNTED TERMINALS,
12KV 3 WIRE ARMLESS TANGENT CONSTRUCTION

DATE 8-27-82
APPD

TABLE OF CONTENTS

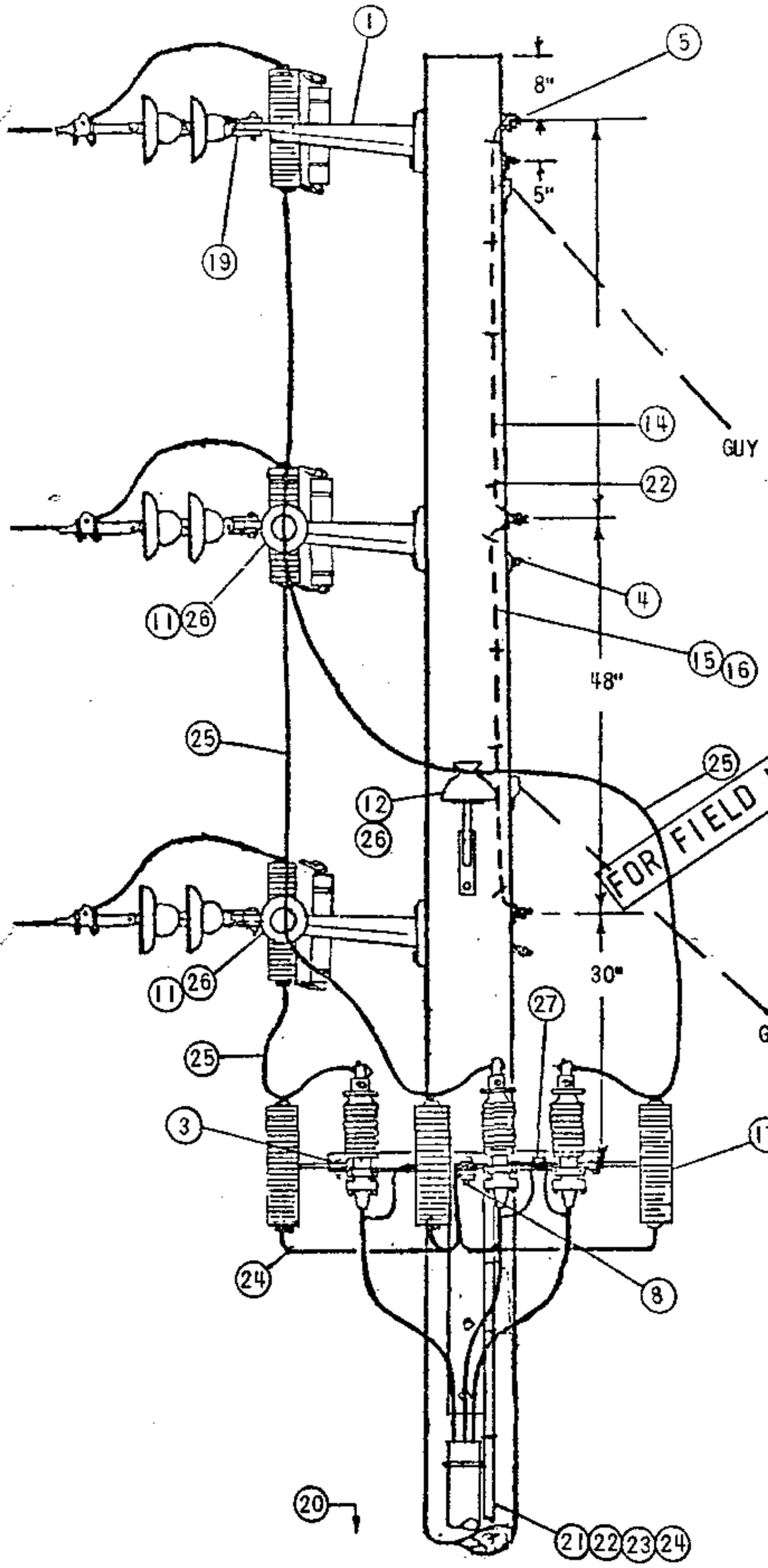

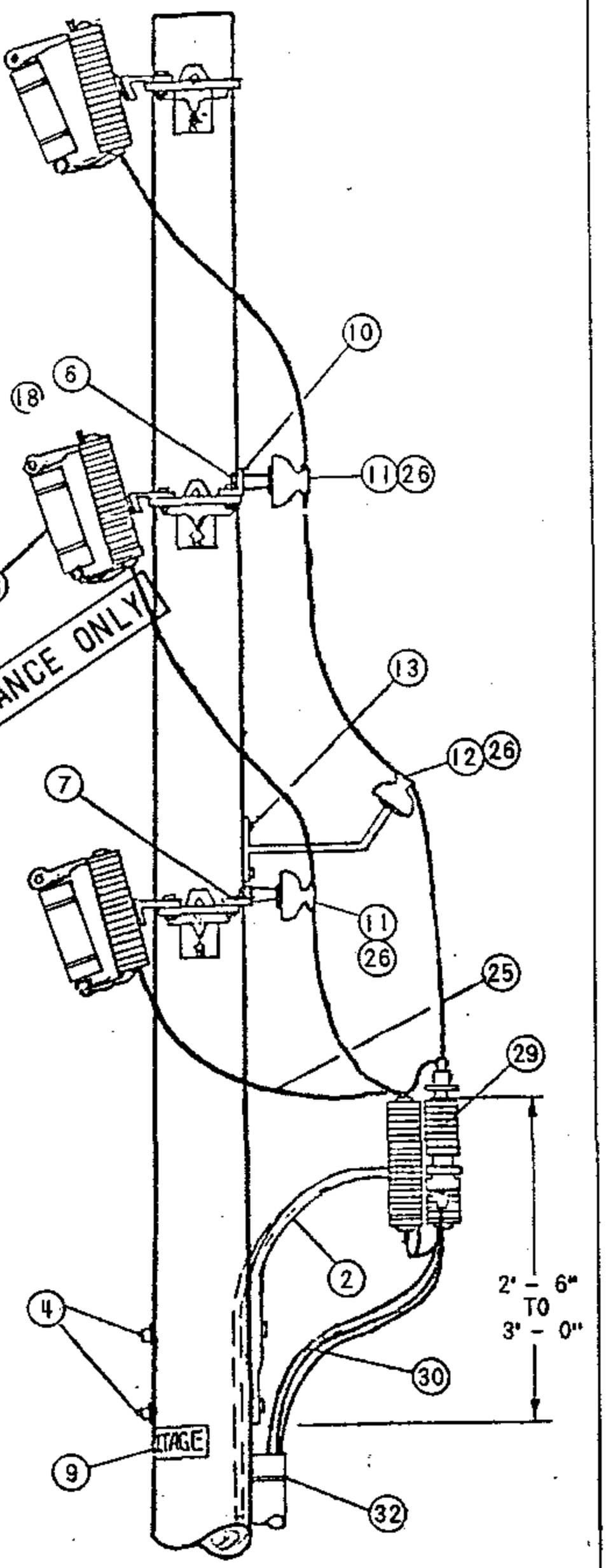

(DEAD ENDS OMITTED FOR CLARITY)

DATE 8-27-82 APPD LDR #	SDG&E ELECTRIC STANDARDS BRACKET MOUNTED TERMINALS, 12KV 3 WIRE, ARMLESS DEAD END CONSTRUCTION	OH 1499.303 ~~UG 4299.303~~ SUPERSEDES 1438.1(11-16-81)

NOTES:

(A) UNIT GROUND COMPLETE ORDER 603120 WITH GRAY MOULDING, 603136 WITH PLAIN MOULDING.

B. UNTWIST SUFFICIENT LENGTH OF #2 STRANDED WIRE TO CONNECT EACH ARRESTER AND POTHEAD (TERMINAL) GROUND WITH A SINGLE STRAND.

(C) USE TWO-ROD GROUND SPACED A MINIMUM OF 6 FEET APART.

D. THIS CONFIGURATION NOT TO BE USED WHERE A FUTURE EXTENSION IS ANTICIPATED

(E) EXEMPT MATERIALS.

F. THIS INSTALLATION DOES NOT INCLUDE GUYING MATERIAL

(G) THE FIBERGLASS UPSWEEP TERMINAL BRACKET IS TO BE USED FOR UNDERGROUND CONDUCTORS 4/0 OR SMALLER. DO NOT USE FOR 500 KCM AND LARGER CONDUCTORS

FOR FIELD MAINTENANCE ONLY

	ITEM	DESCRIPTION	QUANT	STOCK NO. OR CONSTR STDS
OH CREWS P T & F	1	BRACKET, GALV., 4-HOLE, MOUNTING SEE NOTE (G)	3	166240
	2	BRACKET, FIBERGLASS, TERMINAL, UPSWEEP	1	166864
	3	BRACKET, ARMLESS, TERMINAL MOUNTING (SEE DETAIL PG. 1437.1)	1	166672
	4	MACH. BOLT, GALV., 5/8" X LENGTH AS REQ'D., 1-SQ. CURV. WASH., 1-DBL. COIL SPR. WASH. & 1-NUT (E)	5	PGS 139, 140
	5	MACH. BOLT, GALV., 5/8" X LENGTH AS REQ'D,, 1-SQ. CURV. WASH., 1-DBL. COIL SPR. WASH., 2-FLAT RD. WASH. & 2-NUTS (E)	3	PGS 139, 140
	6	MACH. BOLT, GALV., 5/8" X 1 1/2" (E)	2	PGS 139, 140
	7	MACH. BOLT, GALV., 1/2" X 1 1/2" (E)	2	PGS 139, 140
	8	MACH. BOLT, GALV., 5/8" X 2 1/2", 1-LOCK, 2-rd. WASH. & 2-NUTS (E)	1	PGS 139, 140
	9	HIGH VOLTAGE SIGN & 8-ROOFING NAILS, GALV. (E)	2	647648, 492192
	10	BRACKET, INSULATOR, MOUNTING ANGLE	2	PG 151
	11	PIN, INSULATOR, 12KV, 1" OR 1 3/8" LEAD THREAD	2	529248-529216
	12	BRACKET, INSULATOR, 1" OR 1 3/8" LEAD THREAD	1	166144-166176
	13	SCREW, LAG, GALV., 1/2" X 4" (E)	2	621568
	14	WIRE, BOND, BARE SOLID ANNEALED, #8	10'	812928
	15	HARDWOOD MOULDING, 1", (OTHER THAN TOP CIRCUIT ON POLE)	10'	487200
	16	MOULDING STAPLES, GALV., 3" X 1 1/16" X 1/4" (OTHER THAN TOP CIRCUIT ON POLE) (E)	6	678560
OH CREWS U C & D	17	LIGHTNING ARRESTER, 12KV	3	113248
	18	CUTOUT, FOR CURRENT-LIMITING FUSE	3	1200 SECTION
	19	CLEVIS	3	235776
	20	GROUND ROD & CLAMP (C)	2	603072, 230016 (A)(E)
	21	HARDWOOD MOULDING, 1"	36'	487200 (A)
	22	STAPLES, MOULDING, GALV., 3" X 1 1/16" X 1/4" (E)	24	678560 (A)
	23	STAPLES, FENCE, GALV., 1 1/4" (E)	32	678528 (A)
	24	WIRE, BARE STRANDED, COPPER, #2	50'	813664
	25	WIRE, BARE STRANDED, COPPER, (SIZE AS REQ'D)	25'	PGS 715-717
	26	INSULATOR, 12KV, PIN TYPE, (CLASS 55-5 OR 56-1)	3	429056-429152
	27	CONNECTOR, WIRE, COMPRESSION, (SIZE AS REQ'D)	1	PGS 783-787
	28	FUSE, CURRENT-LIMITING AS SPECIFIED ON WORK ORDER	3	1200 SECTION
UG CREWS	29	CABLE TERMINAL	3	SEE UG STDS
	30	CABLE, PRIMARY	AS REQ'D	SEE UG STDS
	31			
	32	RISER CONSTRUCTION	AS REQ'D	1400/4200 SECTION

TABLE OF CONTENTS

OH 1499.304
~~UG 4299.304~~
SUPERSEDES
1438.2 (11-16-81)

SDG&E ELECTRIC STANDARDS

BRACKET MOUNTED TERMINALS, 12KV 3 WIRE, ARMLESS DEAD END CONSTRUCTION

DATE 8-27-82
APPD WRH

TABLE OF CONTENTS

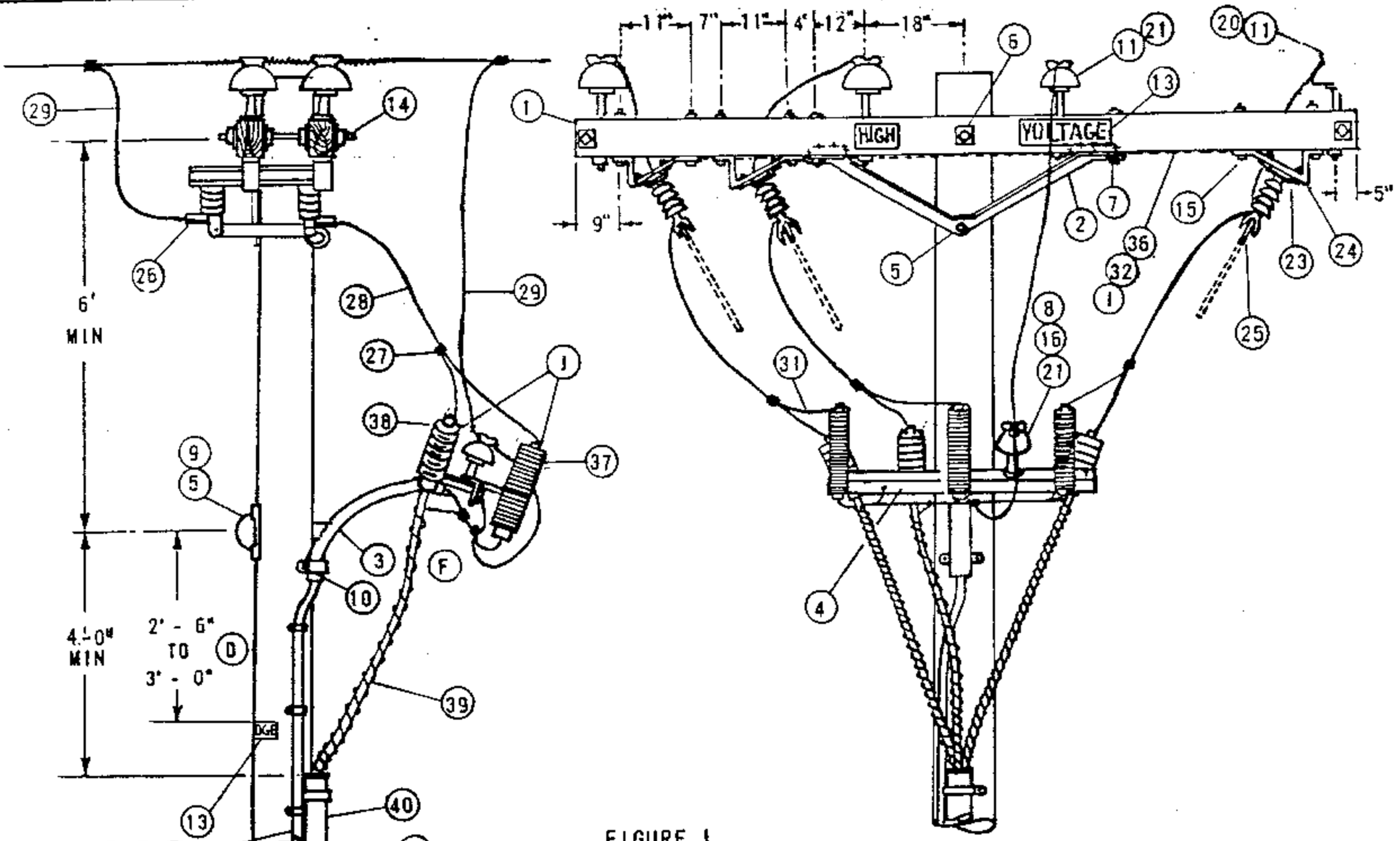

FIGURE 1
TANGENT CABLE POLE

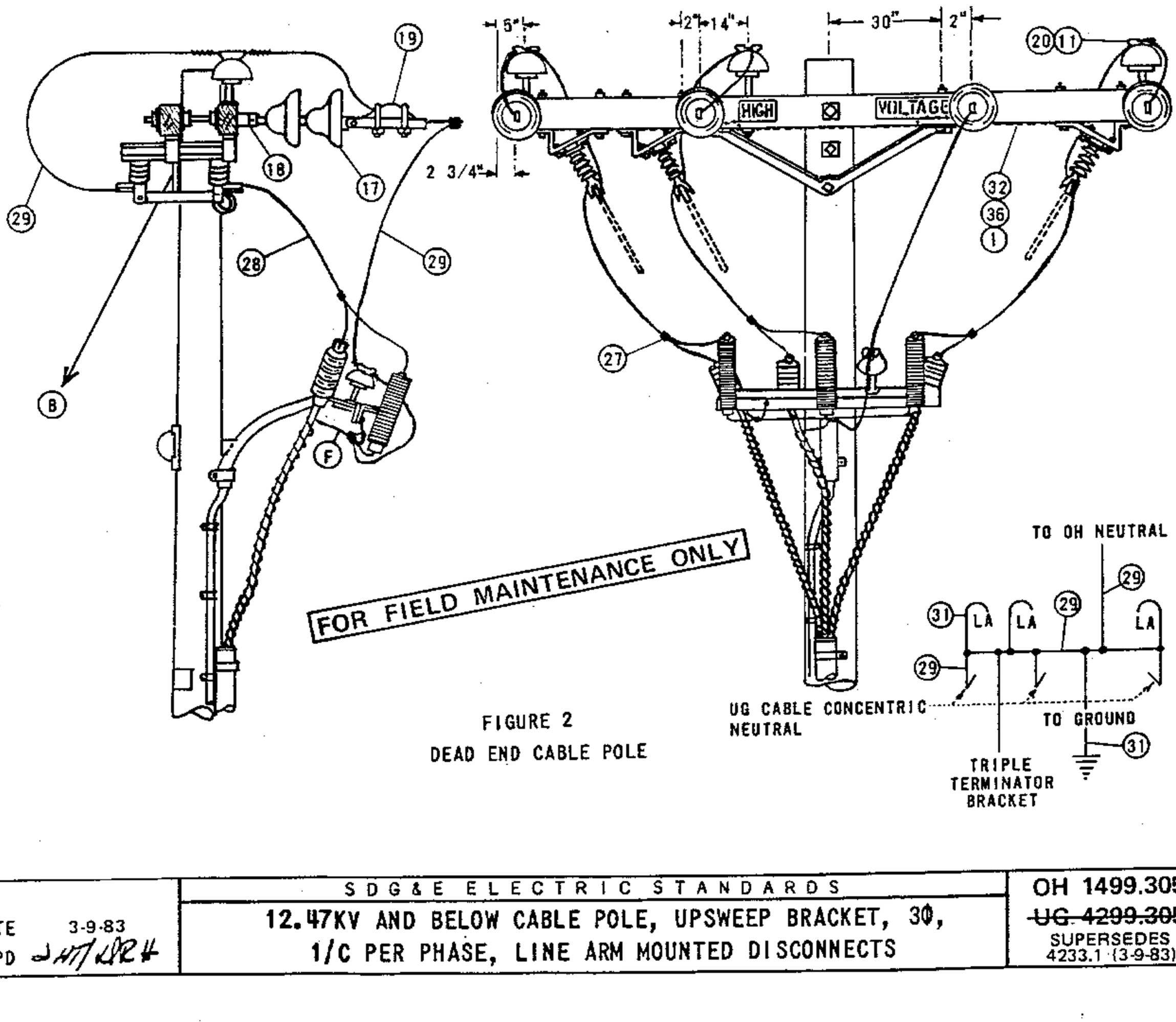

FIGURE 2
DEAD END CABLE POLE

DATE 3-9-83 APPD	SDG&E ELECTRIC STANDARDS 12.47KV AND BELOW CABLE POLE, UPSWEEP BRACKET, 3Φ, 1/C PER PHASE, LINE ARM MOUNTED DISCONNECTS	OH 1499.305 ~~UG 4299.305~~ SUPERSEDES 4233.1 (3-9-83)

FIGURE 1

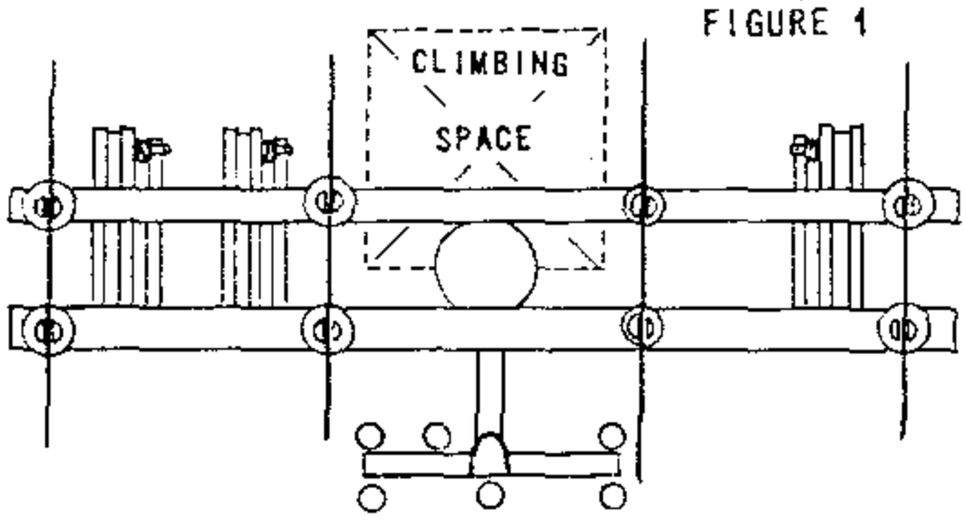

FIGURE 2

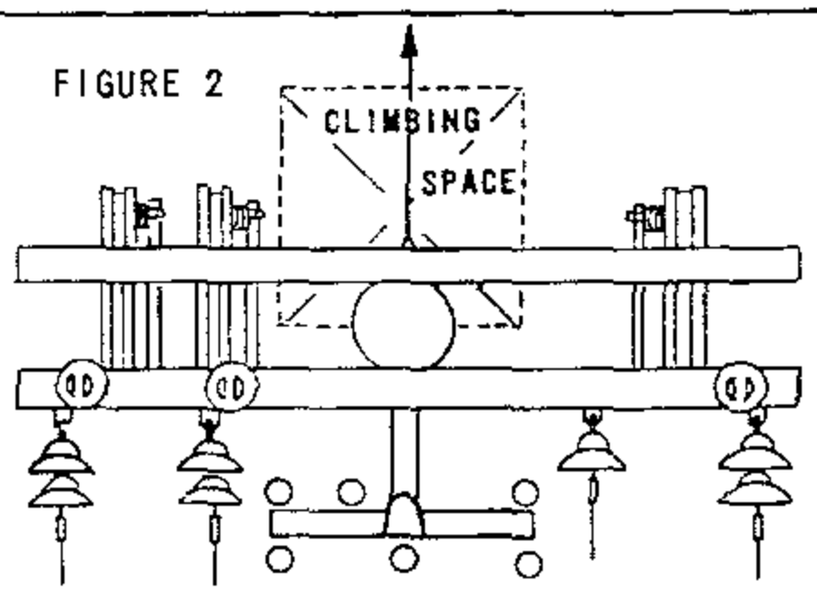

NOTES:

A. SEE PAGE 1406/4206 FOR G.O. 95 MINIMUM VERTICAL SEPARATION BETWEEN TOP OF RISER PROTECTION AND NEXT LOWER CONDUCTOR LEVEL.

(B) SEE PAGE 251 FOR ALLOWABLE CLIMBING SPACE OBSTRUCTIONS.

(C) USE TWO GROUND RODS SPACED A MINIMUM OF-6' APART.

(D) G.O. 95 DIMENSION.

(E) EXEMPT MATERIAL.

(F) INTERCONNECT TRIPLE TERMINAL BRACKET, LIGHTNING ARRESTER GROUND, CONCENTRIC NEUTRAL, AND OVERHEAD NEUTRAL.

(G) REDUCE QUANTITIES AS REQUIRED WHEN NOT USING NEUTRAL.

H. THIS CONSTRUCTION TO BE USED WITH 350 KCMIL AND LARGER UNDERGROUND CABLE.

(I) INTERCONNECT SWITCH AND DEAD END BONDS PER G.O. 95 RULE 52.7 D

(J) ARRESTER AND CABLE TERMINAL POSITIONS MAY BE INTERCHANGED AT THE DISCRETION OF DISTRICT OPERATIONS PERSONNEL.

FOR FIELD MAINTENANCE ONLY

ITEM		DESCRIPTION	QUANTITY FIG 1	QUANTITY FIG 2	STOCK NO. OR CONSTR STDS
	1	CROSSARM, 3 3/4" X 5 3/4" X 12'-0"	2	2	300 SECTION
	2	BRACE, ANGLE, CROSSARM, 5'	2	2	164128
	3	BRACKET, GALV, TERMINAL UPSWEEP, WITH PVC LINER, COMPLETE	1	1	166856
	4	BRACKET, TRIPLE TERMINAL	1	1	166676
	5	BOLT, MACH, GALV, 5/8" X (LENGTH AS REQ'D), 1 SQ WASH., 1 DBL COIL WASH. (E)	1	1	100 SECTION
	6	BOLT, MACH, GALV, 5/8" X (LENGTH AS REQ'D), 2-SQ WASH., 1 DBL COIL WASH. (E)	1	1	100 SECTION
P	7	BOLT, MACH, GALV, 1/2" X 7", 1 RD WASH., 1 DBL COIL WASH (E)	4	4	100 SECTION
T	8	BOLT, MACH, GALV, 5/8" X (LENGTH AS REQ'D), 1 LOCK WASH (G) (E)	1	1	100 SECTION
F	9	COVER, BOLT, PLASTIC, & 6-10D NAILS (E)	1	1	285696
	10	SCREW, LAG, GALV, 4" (E)	2	2	621568
	11	PIN INSULATOR STRAIGHT 12KV (AS REQ'D BY ITEM 21) (G)	8	3	532704, 532448
	12	STEPS, POLE (E)	16	16	692992
	13	SIGN, HIGH VOLTAGE, & 8 ROOFING NAILS	3	3	647648, 492224
	14	BOLT, SPACE, GALV, 5/8" X (LENGTH AS REQ'D) 4-SQ WASH., 2 DBL COIL WASH, (G) (E)	2	4	100 SECTION
	15	BOLT, MACH, GALV, 1/2" X 8", 1 RD WASH., 1 DBL COIL WASH (E)	12	12	100 SECTION
	16	PIN, TRANSFORMER ADAPTER, 1" LEAD THREAD (G)	1	1	529248
	17	INSULATOR, SUSPENSION, 12KV, CLEVIS (G)	-	7	700 SECTION
O	18	CLEVIS, DEAD END, 5/8" BOLT STEEL (G) (E)	-	4	235712
C	19	CLAMP, STRAIGHT LINE, O.E. (G)	-	4	700 SECTION
D	20	INSULATOR, LINE, 12KV	6	3	700 SECTION
	21	INSULATOR, 12KV, NEUTRAL (G) (E)	3	1	429216
	22				
	23	BOLT MACH, GALV, 1/2" X 3" 1-LOCK WASH (E)	12	12	100 SECTION
	24	BRACKET, DISCONNECT ANGLE MOUNTING, 1/4" X 3" MILD STEEL	6	6	166542
	25	SWITCH, HOOKSTICK DISCONNECT, 14.4KV, 400 A, 600 A,	3	3	1200 SECTION
	26	TERMINAL, COMPRESSION	6	6	700 SECTION
	27	CONNECTOR WIRE COMPRESSION (SIZE AS REQ'D) (E)	13	9	700 SECTION
	28	WIRE, COPPER W.P., SIZE PER UG CABLE AMPACITY	15'	15'	700 SECTION
	29	WIRE, BARE STRANDED COPPER, SIZE PER UG CABLE AMPACITY	22'	31'	700 SECTION
	30				
U	31	WIRE, #6, BARE STRANDED COPPER	40'	40'	813536
C	32	STAPLES, FENCE, GALV, 1 1/4" (E)	40	40	678528
D	33				
	34				
	35	UNIT GROUND, COMPLETE (WITH GRAY MLDG, WITH PLAIN MLDG) (C)	1	1	603120, 603136
	36	WIRE, #8, BARE SOLID ANNEALED COPPER	1 LB	1 LB	812928
	37	ARRESTER, LIGHTNING	3	3	1200 SECTION
	38	TERMINALS UG CABLE	3	3	SEE UG STDS
	39	CABLE PRIMARY	AS REQ'D		SEE UG STDS
	40	RISER CONSTRUCTION	AS REQ'D		1400/4200 SECTION

OH 1499.306
~~UG-4299.306~~
SUPERSEDES
4233.2 (3-9-83)

SDG&E ELECTRIC STANDARDS

12.47KV AND BELOW CABLE POLE, UPSWEEP BRACKET, 3Φ, 1/C PER PHASE, LINE ARM MOUNTED DISCONNECTS

DATE 3-9-83
APPD WT/KR

TABLE OF CONTENTS

SCOPE: THIS STANDARD SHOWS DEADEND CONSTRUCTION FOR 12.47KV AND BELOW, 3 PHASE CABLE POLE WITH CROSSARM MOUNTED TERMINALS FOR #2/0 AND SMALLER U.G. CABLE. THIS CONSTRUCTION IS TO BE USED IN CONTAMINATION DISTRICT 1 ONLY.

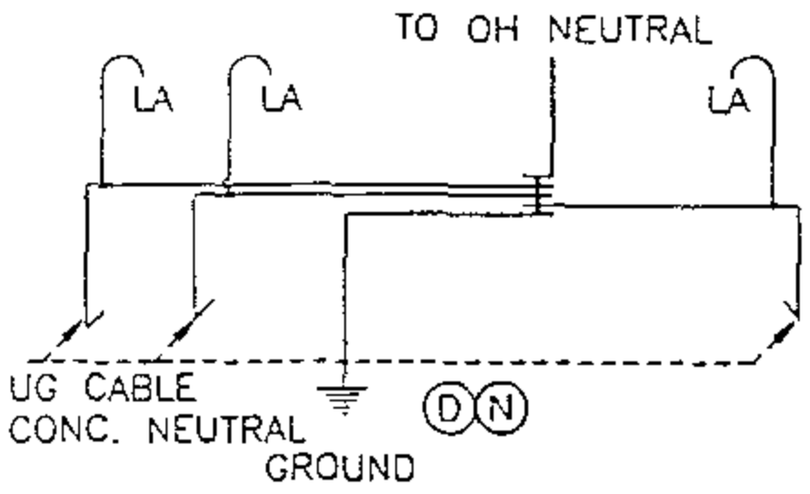

GROUND WIRING DETAIL

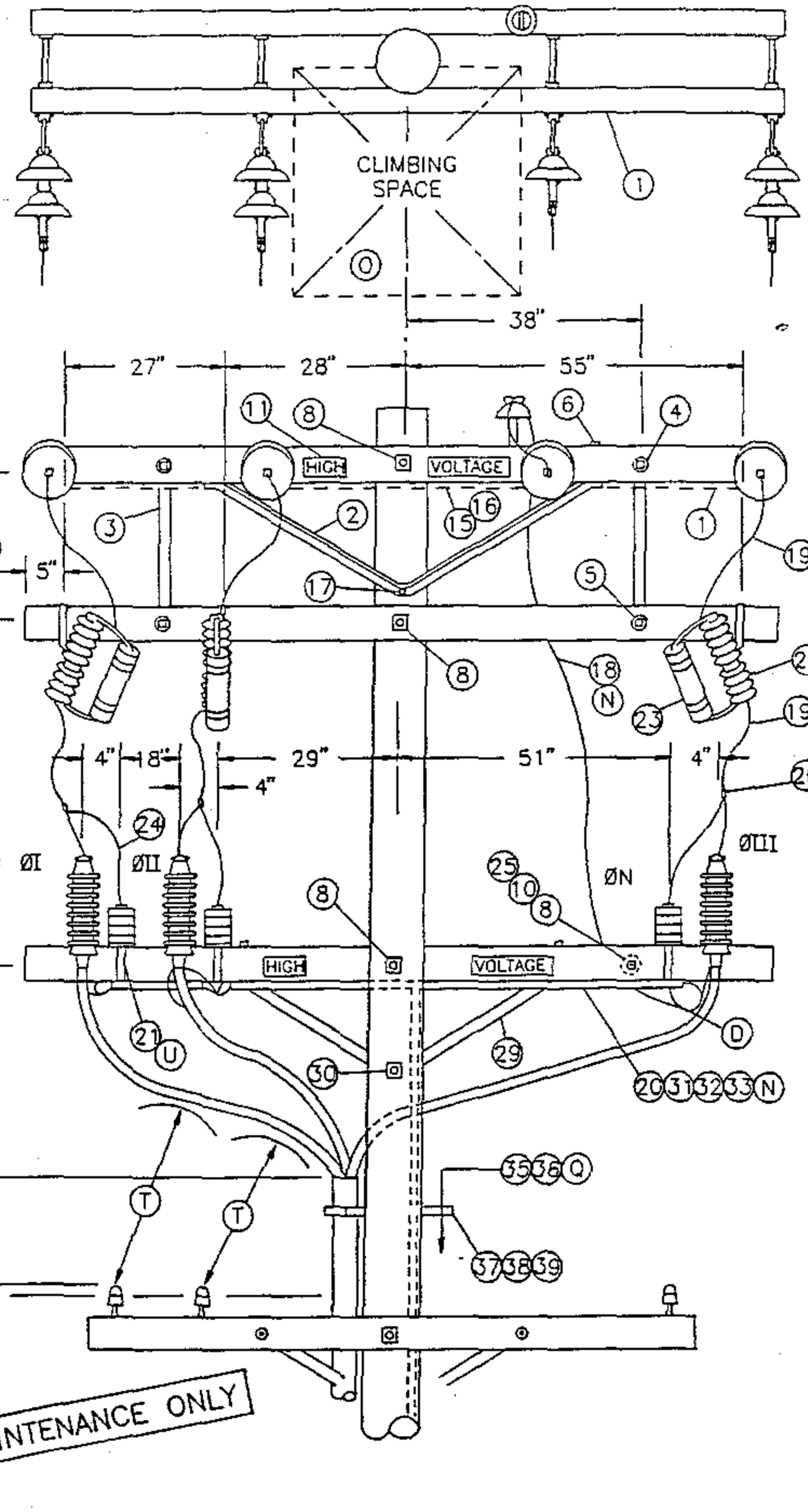

FOR FIELD MAINTENANCE ONLY

DATE 1-1-93 APPD JLB/BDJ	SDG&E ELECTRIC STANDARDS CROSSARM CABLE POLE, 3Ø, 1/C PER PHASE DEADEND CONSTRUCTION, 12.47KV AND BELOW	OH 1499.307 ~~UG 4299.307~~ SUPERCEDES 1439.1 (1-1-93)

TABLE OF CONTENTS

BILL OF MATERIAL:

ITEM	DESCRIPTION	QUANTITY	CONST STD OR PAGE NO	STOCK NUMBER
1	CROSSARM, 3-3/4" X 5-3/4" X 10' - 0"	4	-	294128
2	BRACE, ANGLE, CROSSARM, 5' - 0"	2	-	164128
3	BRACE, FLAT, CROSSARM, 28" (E)	2	-	164192
4	BOLT, WASHERHEAD, GALV, 3/8" X 4-1/2", 1 ROUND & 1 SPRING WASHER (E)	2	392	-
5	BOLT, MACH, GALV, 1/2-1 X 5", 1 ROUND & 1 DOUBLE COIL, SPRING WASHER (E)	2	392	-
6	BOLT, MACH, GALV, 1/2" X 7", 1 ROUND & 1 DOUBLE COIL SPRING WASHER (E)	6	392	-
7	BOLT, SPACE, GALV, 5/8" X (LENGTH AS REQ'D), 2 ROUND, 4 SQUARE & 2 DOUBLE COIL SPRING WASHERS (B) (E)	4	392	-
8	BOLT, MACH, GALV, 5/8" X (LENGTH AS REQ'D), 2 SQUARE & 1 DOUBLE COIL SPRING WASHER (B) (E)	4	392	-
9	PIN, INSULATOR, STRAIGHT, 12KV, 1" (B) (E)	1	-	532704
10	INSULATOR, LINE, 12KV NEUTRAL (B) (E)	2	-	429216
11	SIGN, HIGH VOLTAGE & (E)	4	-	647648
	9 ROOFING NAILS, GALV (E)	-	-	492224
12	CLEVIS, DEAD END, 5/8" BOLT STEEL (B) (E)	4	-	235712
13	INSULATOR, SUSPENSION, 12KV, CLEVIS (B)	7	750	-
14	CLAMP, STRAIGHT LINE, D.E. (B)	4	741	-
15	WIRE, #8, BARE SOLID ANNEALED COPPER	10'	-	812928
16	STAPLES, FENCE, GALV, 1-1/4" (E)	AS REQ'D	-	678528
17	BOLT, MACH, GALV, 5/3" X (LENGTH AS REQ'D) & 1 DOUBLE COIL SPRING WASHER (E)	1	392	-
18	WIRE, COPPER, BARE STRANDED OR ACSR/AW BARE (OH NEUTRAL JUMPER) (B) (N)	10'	711-715	-
19	WIRE, COPPER, BARE STRANDED (OH JUMPERS) (N)	18'	715	-
20	CONNECTOR, WIRE, COMPRESSION (SIZE AS REQ'D) (E)	AS REQ'D	783-787	-
21	BRACKET, CUTOUT/ARRESTER, FOR CROSSARM MOUNTING (E)	6	-	166070
22	CUTOUT, FOR CURRENT-LIMITING FUSE	3	1212	-
23	FUSE, CURRENT-LIMITING (SIZE AS SPECIFIED ON WORK ORDER)	3	1207	-
24	WIRE, BARE STRANDED COPPER, #6	14'	-	813536
25	PIN, TRANSFORMER ADAPTER, 1" LEAD THREAD (B) (E)	1	-	529248
26	ARRESTER, LIGHTNING	3	1247	-
27	BRACKET, CROSSARM, TERM (FOR #2 & #2/0 AL CABLE ONLY) (E)	3	-	166060
28	TERMINALS, UNDERGROUND CABLE	3	4111	-
29	BRACE, ANGLE, CROSSARM, 4' - 0"	1	-	164032
30	BOLT, MACH, GALV, 5/8" X (LENGTH AS REQ'D), 1 SQUARE & 1 DOUBLE COIL SPRING WASHER (E)	1	392	-
31	WIRE, BARE STRANDED COPPER (UNDER POTHEAD ARM) (N) (CABLE POLE NEUTRAL)	10'	715	-
32	CONDUIT, PVC TYPE 2, SCHEDULE 40, 1" (E)	10'	-	251200
33	STRAPS, PIPE, GALV, 1" & (E)	AS REQ'D	-	697792
	2 - 6D NAILS, GALV (E)		-	491552
34	RISER CONSTRUCTION	AS REQ'D	1400/4200	-
35	WIRE, #4, BARE STRANDED COPPER	45'	-	813760
36	UNIT GROUND, COMPLETE (S)	1		603136
37	BRACKET, LADDER ARM (E)	AS REQ'D	1404/4204	167184
38	NUT, CLAMPING CHANNEL, W/SPRING, 1/2" (E)	AS REQ'D	1404/4204	503488
39	CHANNEL, DOUBLE GALV, 24" (E)	AS REQ'D	1404/4204	216700

FOR FIELD MAINTENANCE ONLY

CABLE SIZE	UG MACRO UNIT	
	PORCELAIN	
	W/LADDER ARMS	W/O LADDER ARMS
3C #2/0 AL	CP2/0L	CP#2/0
3C-3#2 AL	CP3#2L	CP-3#2

TABLE OF CONTENTS

OH 1499.308 ~~UG 4299.308~~ SUPERCEDES 1439.2 (1-1-93)	SDG&E ELECTRIC STANDARDS CROSSARM CABLE POLE, 3Ø, 1/c PER PHASE DEADEND CONSTRUCTION, 12.47KV AND BELOW	DATE 1-1-93 APPD JLB/BSJ

INSTALLATION:

A. NEW CABLE POLES SHALL HAVE A STANDARD DEPTH OF 9'. IN MOST CASES THIS WILL REQUIRE A 5' TALLER POLE.

(B) REDUCE QUANTITIES AS REQUIRED WHEN NOT USING NEUTRAL.

C. USE THIS CONSTRUCTION FOR 2/0 AND SMALLER UNDERGROUND CABLE.

(D) INTERCONNECT OVERHEAD NEUTRAL, TERMINAL BASE, AND CONCENTRIC CABLE NEUTRAL CONDUCTOR TO LIGHTNING ARRESTER GROUND.

(E) EXEMPT MATERIAL.

(F) OMIT Ø II AND Ø N FOR SINGLE Ø 12KV CABLE POLE, OMIT Ø I AND ØII FOR SINGLE Ø 6.9KV CABLE POLE.

(N)

UG CABLE SIZE AWG OR KCMIL, AL	OH JUMPER COND SIZE, AWG OR KCMIL, CU	OH NEUT JUMPER SIZE			CABLE POLE NEUT SIZE (CU) UNDER POTHEAD ARM OR TRIPLE TERM BRKT
		CU	AL		
2	4	6	2	–	#6 PER PHASE
2/0	4	6	2	–	#6 PER PHASE
350	4/0	1/0	3/0	–	#2 PER PHASE
750	500	4/0	336.4	OR SAME SIZE AS O.H. NEUT CONDUCTOR	1/0 PER PHASE
1000	500	4/0	336.4		1/0 PER PHASE

TABLE OF CONTENTS

REFERENCE:

(O) ALLOWABLE WORKING AND CLIMBING SPACE – SEE STD. 251.

(P) POLE STEPPING – SEE STD. 363/4205.

(Q) GROUNDING METHODS – SEE PAGE 1002.5.

R. SEE STANDARD SECTION 1200/4300 FOR FUSING.

(S) RISER POSITIONS – SEE STANDARD 1402/4202.

(T) MINIMUM VERTICAL SEPARATION AS PER G.O. 95 – SEE STD. 1406/4206.

(U) SEE STANDARD 1407/4207 FOR PORCELAIN TERMINAL MOUNTING BRACKET INSTRUCTIONS AND MATERIALS.

FOR FIELD MAINTENANCE ONLY

DATE 1-1-93 APPD JLG/EDG	SDG&E ELECTRIC STANDARDS CROSSARM CABLE POLE, 3Ø, 1/C PER PHASE DEADEND CONSTRUCTION, 12.47KV AND BELOW	OH 1499.309 ~~UG 4299.309~~ SUPERCEDES 1439.3 (1-1-93)

SCOPE: THIS STANDARD SHOWS THREE–PHASE CABLE POLE CONSTRUCTION USING NON–PORCELAIN TERMINALS FOR 350 KCMIL AND LARGER UG CABLE. (H)

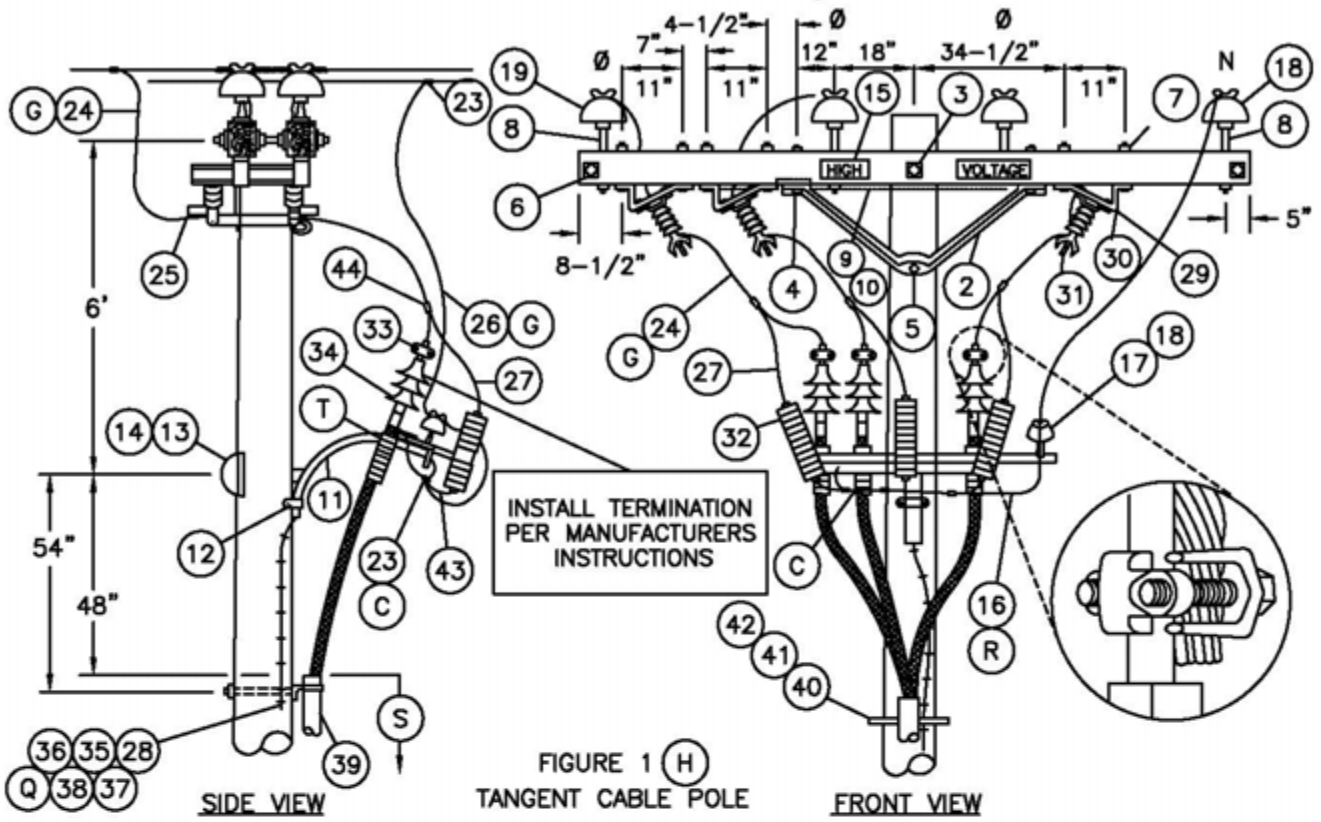

FIGURE 1 (H)
TANGENT CABLE POLE

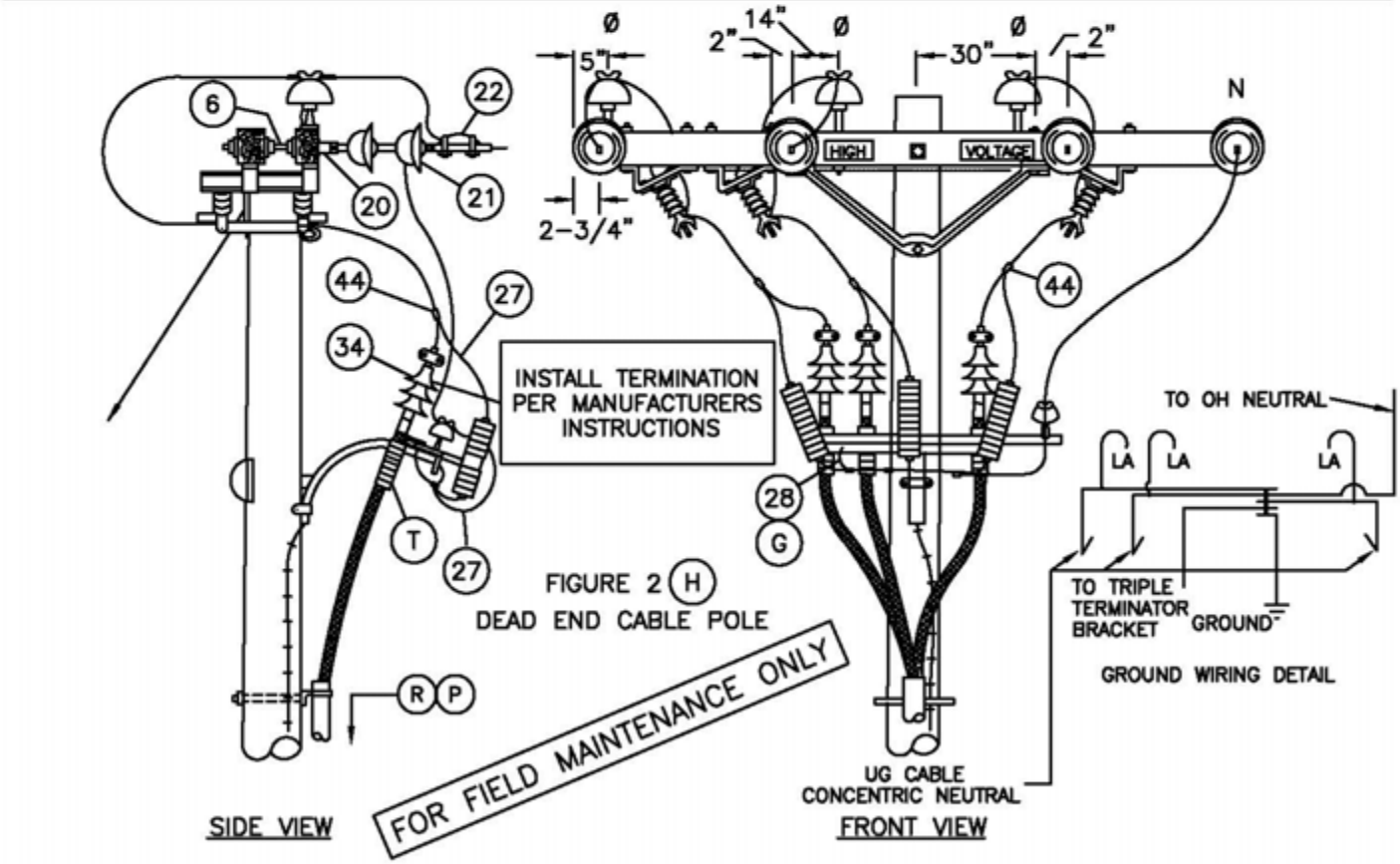

FIGURE 2 (H)
DEAD END CABLE POLE

© 1998 - 2010 San Diego Gas & Electric Company. All rights reserved. Removal of this copyright notice without permission is not permitted under law.

DATE 10–20–05 APPD PBA / JJ	SDG&E ELECTRIC STANDARDS 12.47KV AND BELOW CABLE POLE, UPSWEEP BRACKET, THREE–PHASE 1/C PER PHASE, LINE ARM MOUNTED DISCONNECTS, NON–PORCELAIN TERMINALS	OH 1499.310 UG 4299.310 SUPERSEDES 1432.1 (10–20–05)

TABLE OF CONTENTS

TABLE OF CONTENTS

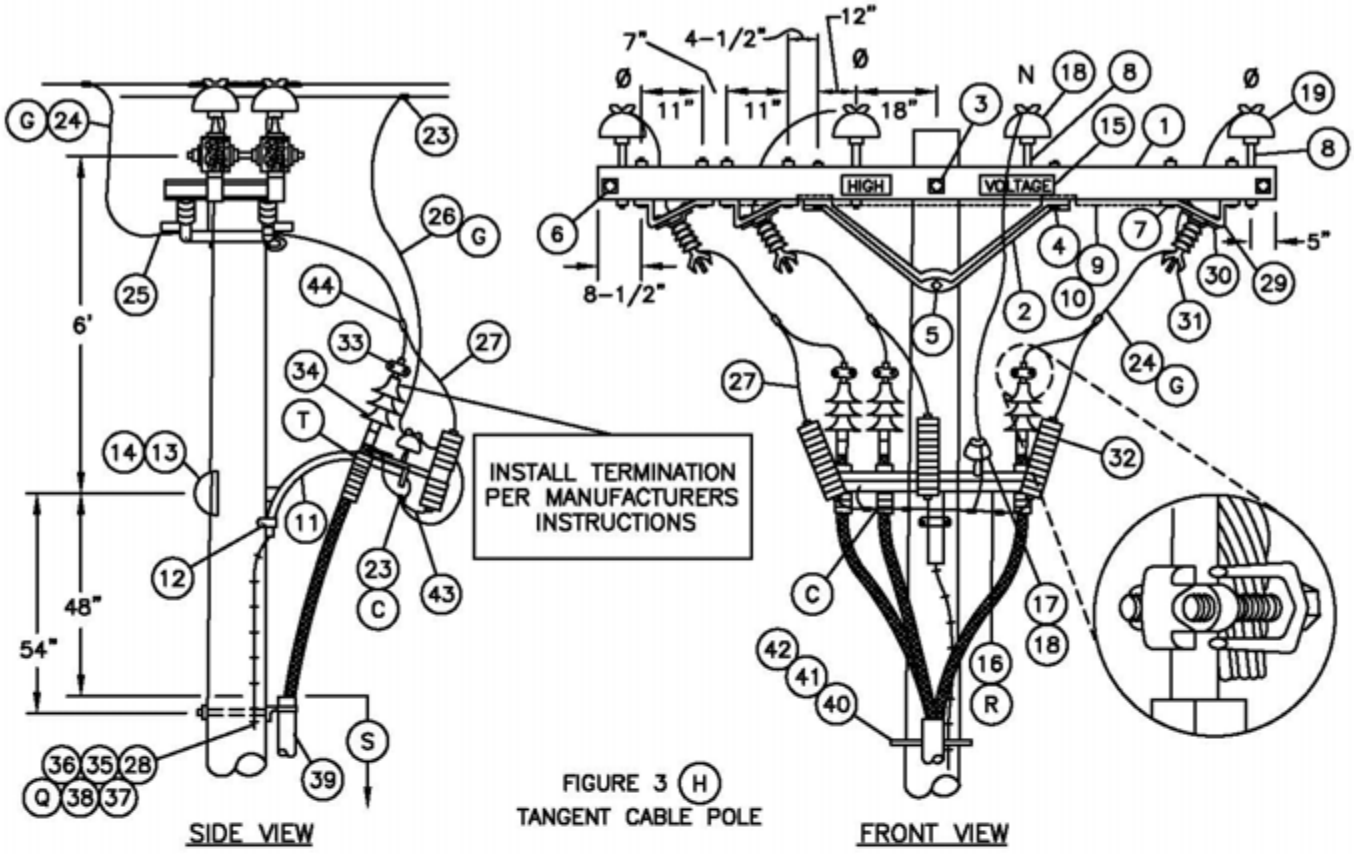

FIGURE 3 (H)
TANGENT CABLE POLE

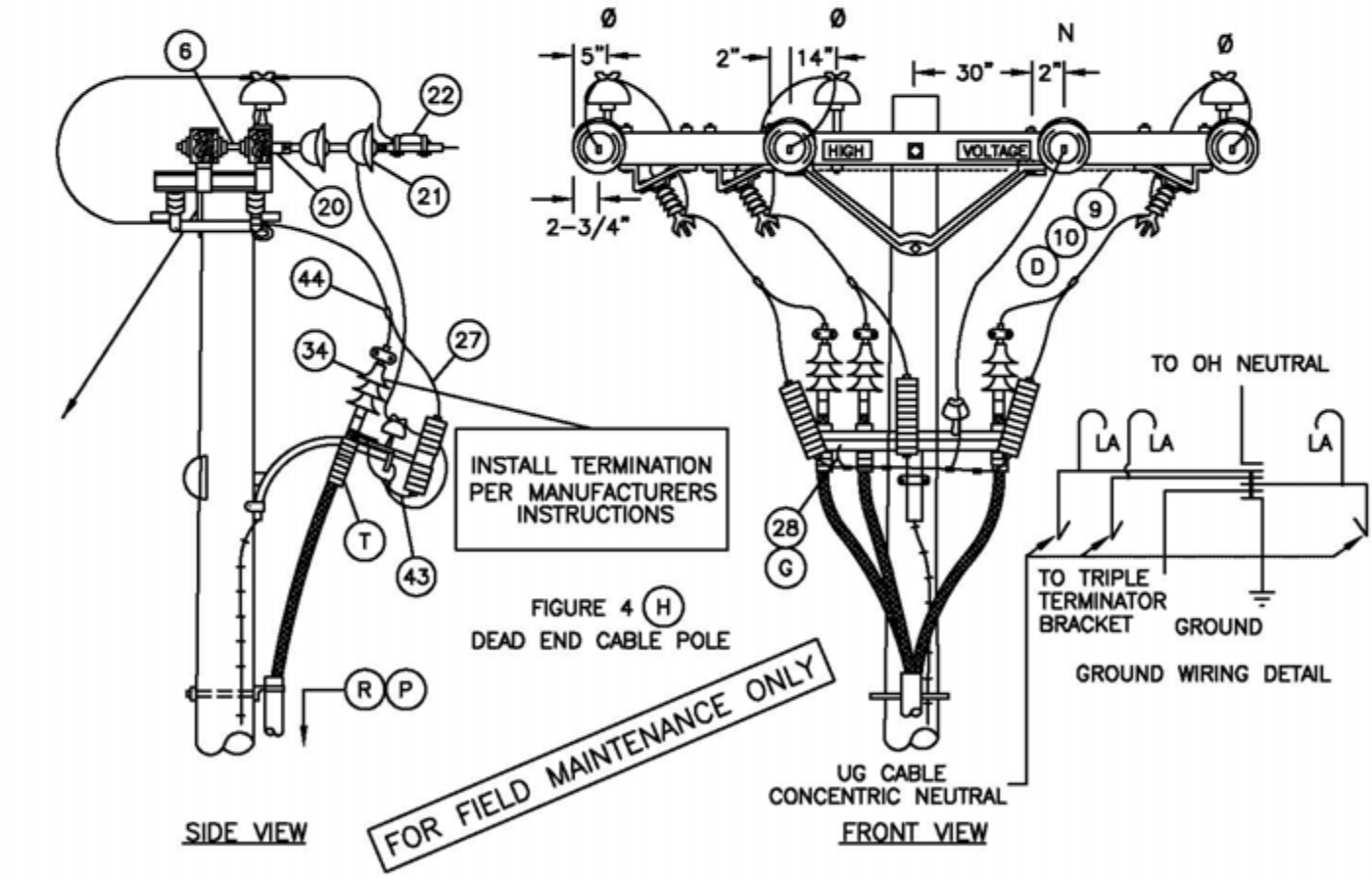

FIGURE 4 (H)
DEAD END CABLE POLE

© 1998 - 2005 San Diego Gas & Electric Company. All rights reserved. Removal of this copyright notice without permission is not permitted under law.

DATE 10-20-05 APPD PBA / JJ	SDG&E ELECTRIC STANDARDS 12.47KV AND BELOW CABLE POLE, UPSWEEP BRACKET, THREE-PHASE 1/C PER PHASE, LINE ARM MOUNTED DISCONNECTS, NON-PORCELAIN TERMINALS	OH 1499.311 UG 4299.311 SUPERSEDES 1432.2 (10-20-05)

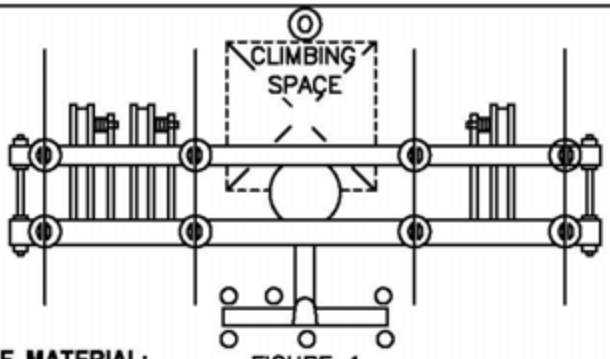

FIGURE 1

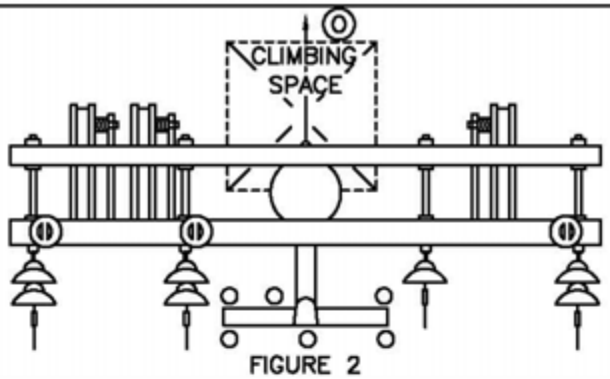

FIGURE 2

BILL OF MATERIAL:

ITEM	DESCRIPTION	QUANTITY FIG 1	QUANTITY FIG 2	CONSTR STANDARD	STOCK NUMBER
1	CROSSARM, 3-3/4" X 5-3/4" X 12'-0" (F)	2	2		294160
2	BRACE, ANGLE, CROSSARM, 5'	2	2	–	164128
3	BOLT, MACH., GALV, 5/8" X (LENGTH AS REQ'D), 2 SQUARE AND 1 DOUBLE COIL SPRING WASHERS	1	1	392	–
4	BOLT, MACH, GALV, 1/2" X 7", 1 RD, 1 DBL COIL SPR WASH	4	4	392	–
5	BOLT, MACH, GALV, 5/8" X (LENGTH AS REQ'D), AND 1 DOUBLE COIL SPRING WASHER	1	1	392	–
6	BOLT, SPACE, GALV, 5/8" X (LENGTH AS REQ'D), 4 SQUARE, 2 ROUND AND 2 DOUBLE COIL SPRING WASHERS (E)	2	4	392	–
7	BOLT, MACH, GALV, 1/2" X 8", 1 ROUND AND 1 DOUBLE COIL SPRING WASHER	12	12	392	–
8	PIN, INSULATOR, STRAIGHT, 12KV, 1" OR (E)	8	3	–	532704
	1-3/8" (E)	8	3	–	532448
9	WIRE, #8, BARE SOLID ANNEALED COPPER	15'	15'	–	812928
10	STAPLES, FENCE, GALV, 1-1/4"	AS REQ'D		–	678528
11	BRACKET, GALV, TERMINAL UPSWEEP (Q)	1	1	–	166856
12	SCREW, LAG, GALV, 4"	2	2	–	621568
13	BOLT, MACH, GALV, 5/8" X (LENGTH AS REQ'D), 1 SQUARE AND 1 DOUBLE COIL SPRING WASHER	1	1	392	–
14	COVER, BOLT, PLASTIC, AND 6 – 10D NAILS, GALV	1	1	–	285696 / 491392
15	SIGN, HIGH VOLTAGE, AND 9 ROOFING NAILS, GALV	2	2	–	647648 / 492224
16	BRACKET, TRIPLE TERMINATOR	1	1	–	166676
17	PIN, SHORT SHANK, 1" LEAD THREAD (E)	1	1	–	532426
18	INSULATOR, 12KV, NEUTRAL (E)	3	1	–	429216
19	INSULATOR, LINE, 12KV, 1" OR 1-3/8" PIN	6	3	750	–
20	CLEVIS, DEAD END, 5/8" BOLT, STEEL (E)	–	4	–	235712
21	INSULATOR, SUSPENSION, 12KV, CLEVIS (E)	–	7	750	–
22	CLAMP, STRAIGHT LINE, D.E. (E)	–	4	741	–

FOR FIELD MAINTENANCE ONLY

TABLE OF CONTENTS

OH 1499.312 UG 4299.312 SUPERSEDES 1432.2 (1-1-98)	SDG&E ELECTRIC STANDARDS 12.47KV AND BELOW CABLE POLE, UPSWEEP BRACKET, THREE-PHASE 1/C PER PHASE, LINE ARM MOUNTED DISCONNECTS, NON-PORCELAIN TERMINALS	DATE 1-1-98 APPD PSA / CMC

BILL OF MATERIAL: (CONT'D)

ITEM	DESCRIPTION	QUANTITY FIG 1	QUANTITY FIG 2	CONSTR STANDARD	STOCK NUMBER	ASSEMBLY UNIT
23	CONNECTOR, WIRE COMPRESSION, (SIZE AS REQ'D)	AS REQ'D		783–786	–	–
24	WIRE, BARE STRANDED COPPER, (OH JUMPER) (G)	21'	30'	715	–	–
25	TERMINAL, COMPRESSION (SIZE AS REQ'D)	6	6	794–795	–	–
26	WIRE, BARE STRANDED COPPER, (OH NEUT JUMPER) (G)	9'	9'	715	–	–
27	WIRE, #6, BARE STRANDED COPPER	12'	12'	–	813536	–
28	#4 CU SOLID GROUND WIRE, PVC COVERED	50'	50'	–	812490	GNDPVC
29	BRACKET, DISCONNECT, ANGLE MOUNTING	6	6	–	166542	–
30	BOLT, MACH, GALV, 3/8" X 3", 2 RD WASH & 1 LOCK WASH	6	6	392	–	–
31	SWITCH, HOOKSTICK DISCONNECT, 14.4KV, 600 A OR 1200 A	3	3	1222	–	–
32	ARRESTER, LIGHTNING	3	3	1247	–	–
33	CONNECTOR, TWO BOLT, BRONZE (SIZE AS REQ'D)	3	3	4111	–	–
34	TERMINALS, UNDERGROUND CABLE (T)	3	3	4111	–	–
35	GROUND ROD, 5/8" X 8', COPPERWELD	1	1	–	603072	GNDPVC
36	COPPER BONDED GROUND CONNECTOR	1	1	–	259010	–
37	GROUND ENHANCING POWER SOLUTION (GEM)	AS REQ'D		–	424390	–
38	GALVANIZED STAPLES FOR PVC COVERED GROUND WIRE	AS REQ'D		–	678562	–
39	RISER CONSTRUCTION	AS REQ'D		1400/4200	–	–
40	BRACKET, LADDER ARM	AS REQ'D		1404/4204	167184	–
41	NUT, CLAMPING CHANNEL, W/SPRING, 1/2"	AS REQ'D		1404/4204	503488	–
42	CHANNEL, DOUBLE GALV., 24"	AS REQ'D		1404/4204	216700	–
43	FLEXIBLE ARRESTER GROUND STRAP	AS REQ'D		–	698754	–
44	HOT LINE CLAMP	3	3	788	227680	–

FOR FIELD MAINTENANCE ONLY

OVERHEAD MACRO UNIT
3NS–B

INSTALLATION:

A. NEW CABLE POLES SHALL HAVE A STANDARD DEPTH OF 9'. IN MOST CASES, THIS WILL REQUIRE A 5' TALLER POLE.

B. THIS CONSTRUCTION TO BE USED WITH 350 KCMIL AND LARGER UNDERGROUND CABLE.

(C) INTERCONNECT OVERHEAD NEUTRAL, TRIPLE TERMINAL BRACKET AND CONCENTRIC CABLE NEUTRAL TO LIGHTNING ARRESTER GROUND.

(D) INTERCONNECT SWITCH AND DEAD END BONDS PER G.O. 95 RULE 52.7 D.

(E) REDUCE QUANTITIES AS REQUIRED WHEN NOT USING NEUTRAL.

(F) WHEN ADDING THIS CONSTRUCTION TO AN EXISTING POLE WITH A 10' LINE ARM, AND SUFFICIENT POLE HEIGHT EXISTS, INSTALL 10' SWITCH ARMS AND ASSOCIATED HARDWARE BELOW THE LINE ARM TO AVOID CHANGING LINE ARM FROM 10' TO 12' (SEE O.H. STANDARD 1222. FIG. 1–B).

	SDG&E ELECTRIC STANDARDS	
DATE 10–20–05 APPD PA / JJ	12.47KV AND BELOW CABLE POLE, UPSWEEP BRACKET, THREE–PHASE 1/C PER PHASE, LINE ARM MOUNTED DISCONNECTS, NON–PORCELAIN TERMINALS	OH 1499.313 UG 4299.313 SUPERSEDES 1432.4 (10–20–05)

TABLE OF CONTENTS

INSTALLATION: (CON'T)

(G)

UG CABLE SIZE AWG OR KCMIL, AL	OH JUMPER COND SIZE, AWG OR KCMIL, CU	OH NEUT JUMPER SIZE			CABLE POLE NEUT SIZE (CU) UNDER POTHEAD ARM OR TRIPLE TERM BRKT
		CU	AL		
350	4/0	1/0	3/0	–	#2 PER PHASE
750	500	4/0	336.4	OR SAME SIZE AS O.H. NEUT CONDUCTOR	1/0 PER PHASE
1000	500	4/0	336.4		1/0 PER PHASE
BECAUSE THE PROPER SIZE CONNECTOR IS NOT ALWAYS AVAILABLE, THE JUMPER FROM THE OVERHEAD LINE CONDUCTOR TO THE HOOKSTICK SWITCH CAN BE THE SAME SIZE AS, OR LARGER THAN THAT OF THE OVERHEAD CONDUCTOR.					

(H) – USE FIGURE ONE AND TWO FOR ALL **NEW** CONSTRUCTION AND WHEN ADDING TO EXISTING CONSTRUCTION WITH NEUTRAL ON OUTSIDE PIN POSITION. SEE DESIGN MANUAL PAGE 5124.2.

– USE FIGURE THREE AND FOUR ON EXISTING CONSTRUCTION WITH NEUTRAL ON INSIDE PIN POSITION.

REFERENCE:

(O) ALLOWABLE WORKING AND CLIMBING SPACE – SEE STD. 251

(P) POLE STEPPING – SEE STD. 363.

(Q) GROUNDING METHODS – SEE PAGE 1002.5.

(R) RISER POSITIONS – SEE STANDARD 1402/4202.

(S) MINIMUM VERTICAL SEPARATION AS PER G.O. 95 SEE STD. 1406/4206.

(T) SEE STANDARD 1407/4207 FOR NON PORCELAIN TERMINAL MOUNTING INSTRUCTIONS AND MATERIALS.

FOR FIELD MAINTENANCE ONLY

TABLE OF CONTENTS

OH 1499.314 UG 4299.314 SUPERSEDES 1432.5 (10-20-05)	SDG&E ELECTRIC STANDARDS 12.47KV AND BELOW CABLE POLE, UPSWEEP BRACKET, THREE-PHASE 1/C PER PHASE, LINE ARM MOUNTED DISCONNECTS, NON-PORCELAIN TERMINALS	DATE 9-20-05 APPD PSA / JJ

SCOPE: THIS STANDARD SHOWS CABLE POLE CONSTRUCTION USING PORCELAIN TERMINATIONS FOR 750 AND LARGER UNDERGROUND CABLE. (SEE STANDARD 1407/4207 FOR 350 KCMIL TERMINAL MOUNTING INFORMATION).

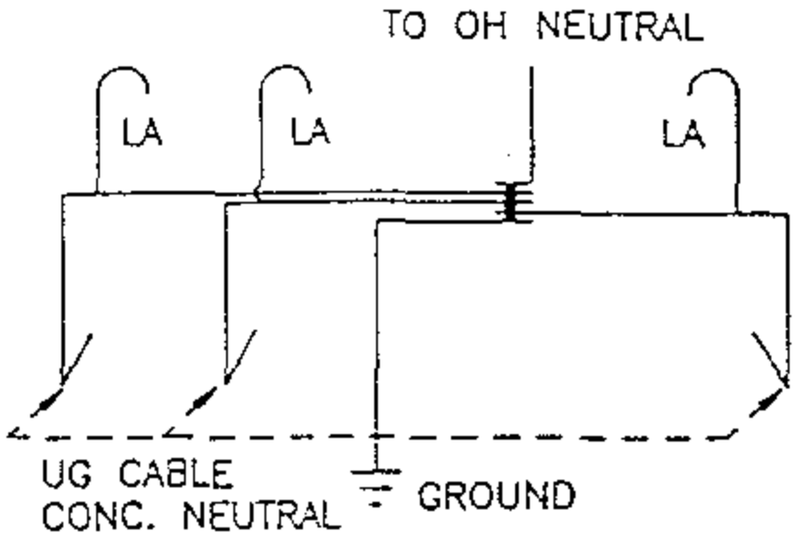

GROUND WIRING DETAIL

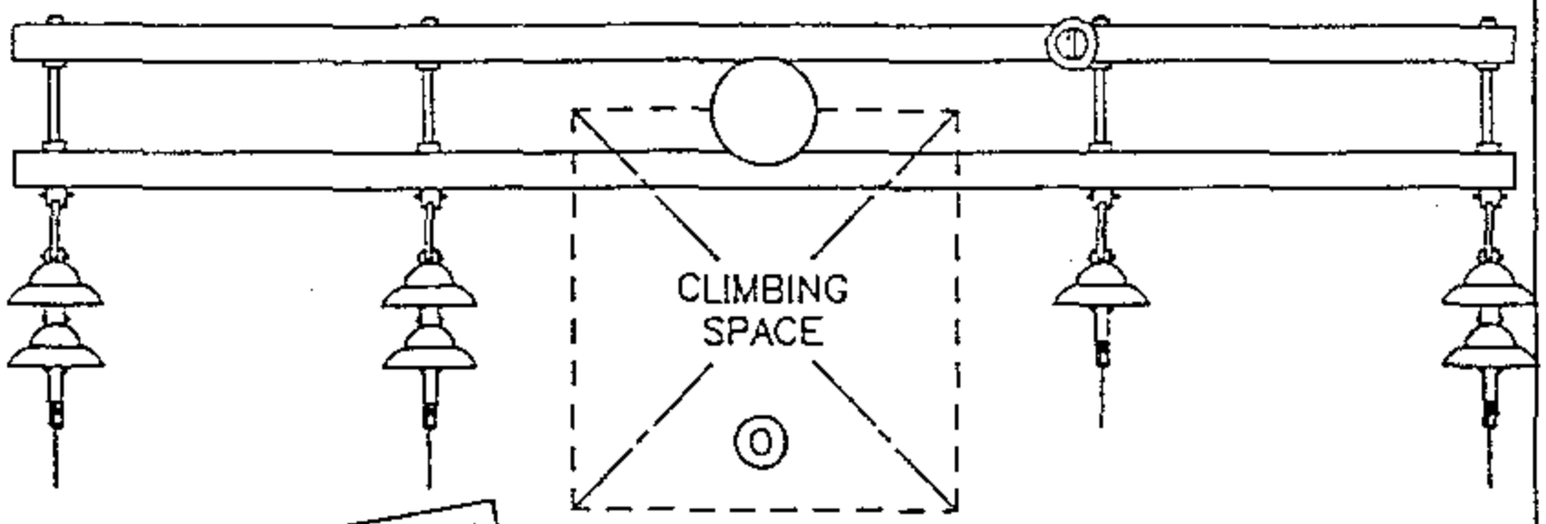

FOR FIELD MAINTENANCE ONLY

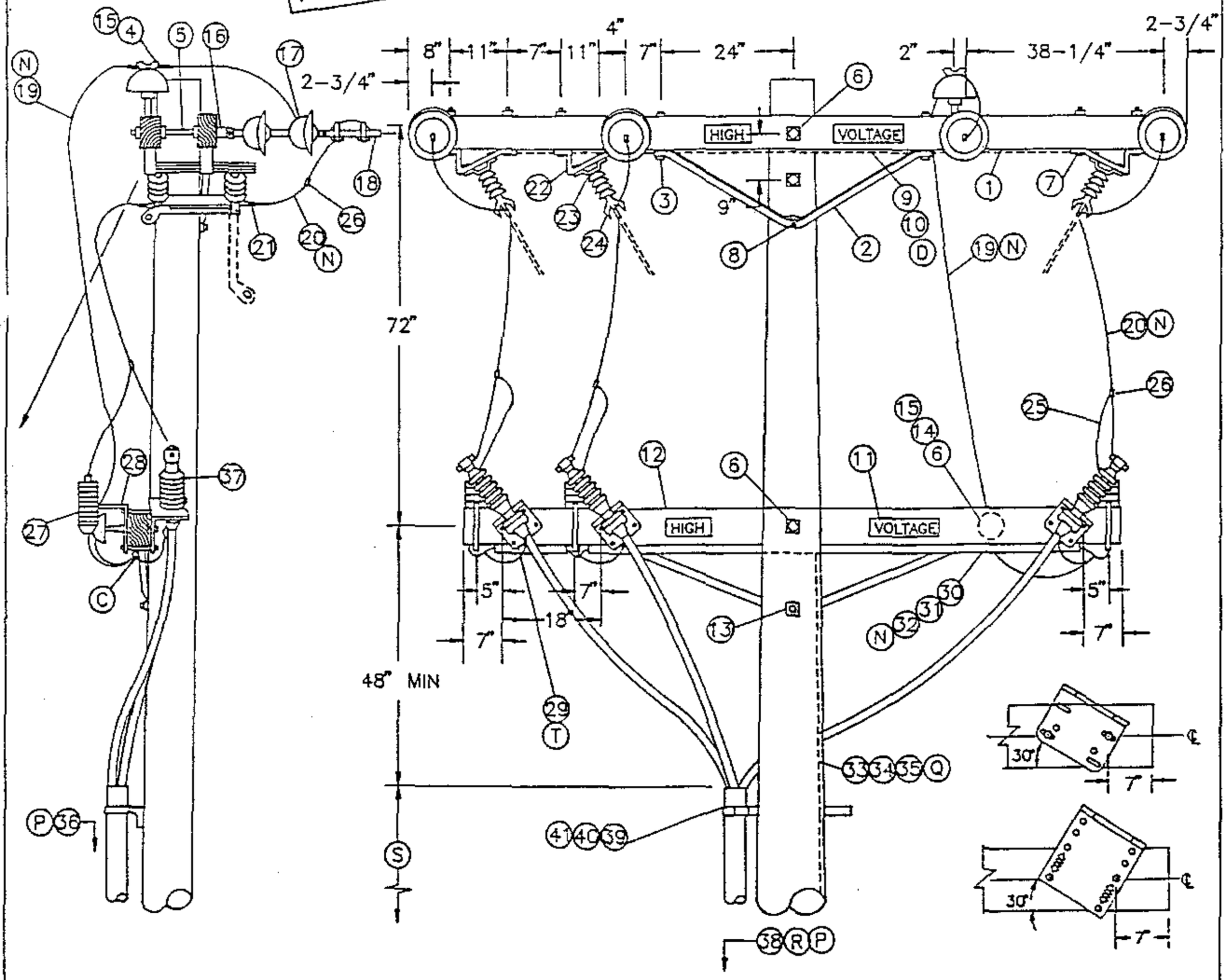

TABLE OF CONTENTS

DATE 1-1-93 APPD JLG/EDJ	SDG&E ELECTRIC STANDARDS 12.47 KV AND BELOW DEAD END CABLE POLE ARM, 3Ø, 1/C PER Ø, HOOKSTICK SWITCHED	OH 1499.401 ~~UG 4299.401~~ SUPERCEDES 1441.1 (1-1-93)

BILL OF MATERIAL:

ITEM	DESCRIPTION	QUANTITY	CONSTR STANDARD	STOCK NUMBER
1	CROSSARM, 3-3/4" X 5-3/4" X 12'- 0" (G)	2	–	294160
2	BRACE, ANGLE, CROSSARM, 4'- 0"	3	–	164032
3	BOLT, MACH, GALV, 1/2" X 7", 1 ROUND AND 1 DOUBLE COIL SPRING WASHER (E)	6	392	–
4	PIN, INSULATOR, STRAIGHT, 12KV, 1" LEAD THREAD (F)(E)	1	–	532704
5	BOLT, SPACE, GALV, 5/8" X (LENGTH AS REQ'D), 3 SQUARE, 2 ROUND AND 2 DOUBLE COIL SPRING WASHERS (F)(E)	4	392	–
6	BOLT, MACH, GALV, 5/8" X (LENGTH AS REQ'D), 2 SQUARE AND 1 DOUBLE COIL SPRING WASHERS (F)(E)	3	392	–
7	BOLT, MACH, GALV, 1/2" X 8", 1 ROUND AND 1 DOUBLE COIL SPRING WASHER (E)	12	392	–
8	BOLT, MACH, GALV, 5/8" X (LENGTH AS REQ'D) AND 1 DOUBLE COIL SPRING WASHER (E)	1	392	–
9	WIRE, #8, BARE SOLID ANNEALED COPPER	15'	–	812928
10	STAPLES, FENCE, GALV, 1-1/4" (E)	AS REQ'D	–	678528
11	SIGN, HIGH VOLTAGE AND 9 ROOFING NAILS, GALV (E)	4	–	647648 492224
12	CROSSARM, 3-3/4" X 5-3/4 X 10'- 0"	1	–	294128
13	BOLT, MACH, GALV, 5/8" X (LENGTH AS REQ'D), 1 SQUARE AND 1 DOUBLE COIL SPRING WASHER (E)	1	392	–
14	PIN, TRANSFORMER LEAD ADAPTER, 1" (F)(E)	1	–	529248
15	INSULATOR, 12KV, NEUTRAL (F)(E)	2	–	429216
16	CLEVIS, DEAD END, 5/8" BOLT STEEL (F)(E)	4	–	235712
17	INSULATOR, SUSPENSION, 12KV, CLEVIS (F)	7	750	–
18	CLAMP, STRAIGHT LINE, D.E. (F)	4	741	–
19	WIRE, BARE STRANDED CU OR AL (OH NEUT JUMPER) (N)(F)	12'	711-715	–
20	WIRE, BARE STRANDED COPPER (OH JUMPER) (N)	25'	715	–
21	TERMINAL, COMPRESSION (E)	6	794-795	–
22	BRACKET, DISCONNECT, ANGLE MOUNTING	6	–	166542
23	BOLT, MACH, GALV, 3/8" X 3", 2 ROUND & 1 LOCK WASHER (E)	6	392	–
24	SWITCH, HOOKSTICK DISCONNECT, 14.4KV, 600 A OR 1200 A	3	1222	–
25	WIRE, #6, BARE STRANDED COPPER	12'	–	813536
26	CONNECTOR, WIRE, COMPRESSION (SIZE AS REQ'D) (E)	AS REQ'D	783-787	–
27	ARRESTER, LIGHTNING (N)	3	–	113248
28	BRACKET, CUTOUT/ARRESTER (E)	3	–	166070
29	BRACKET, TERMINAL MOUNTING	3	–	166674
30	CONDUIT, PVC TYPE 2, SCHEDULE 40, 1" (E)	10'	–	251200
31	STRAPS, PIPE, GALV, 1" AND 2 – 6D NAILS , GALV (E)	AS REQ'D	–	697792 491552
32	WIRE, BARE STRANDED COPPER (CP NEUT-UNDER POTHEAD ARM) (N)	15'	715	–
33	WIRE, #4, BARE STRANDED COPPER	45'	–	813760
34	STAPLES, FENCE, GALV, 1-1/4" (E)	AS REQ'D	–	678528
35	UNIT GROUND, COMPLETE (Q)	1	–	603136
36	TAGS, SWITCH NUMBER (E)	2	–	720704
37	TERMINALS, UNDERGROUND CABLE	3	4111	–
38	RISER CONSTRUCTION	AS REQ'D	1400/4200	–
39	BRACKET, LADDER ARM (E)	AS REQ'D	1404/4204	167184
40	NUT, CLAMPING CHANNEL, W/SPRING, 1/2" (E)	AS REQ'D	1404/4204	503488
41	CHANNEL, DOUBLE GALV, 24" (E)	AS REQ'D	1404/4204	216700

FOR FIELD MAINTENANCE ONLY

CABLE SIZE	UG MACRO UNIT
	W/LADDER ARMS
3C-#350	CP350L
3C-#750	CP750L
3C-#1000	CP-1KL

TABLE OF CONTENTS

OH 1499.402 ~~UG 4299.402~~ SUPERCEDES 1441.2 (1-1-93)	SDG&E ELECTRIC STANDARDS 12.47KV AND BELOW DEAD END CABLE POLE ARM, 3ϕ, 1/C PER ϕ, HOTSTICK SWITCHED	DATE 1-1-93 APPD JLB/BDG

INSTALLATION:

A. NEW CABLE POLES SHALL HAVE A STANDARD SETTING DEPTH OF 9'. IN MOST CASES THIS WILL REQUIRE A 5' TALLER POLE.

B. THIS CONSTRUCTION TO BE USED WITH 350 KCMIL AND LARGER UNDERGROUND CABLE.

(C) INTERCONNECT OVERHEAD NEUTRAL, TERMINAL BASE, AND CONCENTRIC CABLE NEUTRAL CONDUCTOR TO LIGHTNING ARRESTER GROUND.

(D) INTERCONNECT SWITCH AND DEADEND BONDS PER G.O. 95 RULE 52.7D. BONDING SHOULD BE DONE IN ACCORDANCE WITH RULE 53.4.

(E) EXEMPT MATERIAL.

(F) REDUCE QUANTITIES AS REQUIRED WHEN NOT USING NEUTRAL.

(G) WHEN ADDING THIS CONSTRUCTION TO AN EXISTING POLE WITH A 10' LINE ARM. AND SUFFICIENT POLE HEIGHT EXISTS, INSTALL 10' SWITCH ARMS AND ASSOCIATED HARDWARE BELOW THE LINE ARM TO AVOID CHANGING LINE ARM FROM 10' TO 12' (SEE O.H. STANDARD 1222, FIG. 1-B).

(N)

UG CABLE SIZE AWG OR KCMIL, AL	OH JUMPER COND SIZE, AWG OR KCMIL, CU	OH NEUT JUMPER SIZE			CABLE POLE NEUT SIZE (CU) UNDER POTHEAD ARM OR TRIPLE TERM BRKT
		CU	AL		
2	4	6	2	–	#6 PER PHASE
2/0	4	6	2	–	#6 PER PHASE
350	4/0	1/0	3/0	–	#2 PER PHASE
750	500	4/0	336.4	OR SAME SIZE AS O.H. NEUT CONDUCTOR	1/0 PER PHASE
1000	500	4/0	336.4		1/0 PER PHASE

TABLE OF CONTENTS

REFERENCE:

(O) ALLOWABLE WORKING AND CLIMBING SPACE – SEE STANDARD 251.

(P) POLE STEPPING – SEE STANDARD 363.

(Q) GROUNDING METHODS – SEE STANDARD 1002.

(R) RISER POSITIONS – SEE STANDARD 1402/4202.

(S) MINIMUM VERTICAL SEPARATION AS PER G.O. 95 – SEE STANDARD 1406/4206.

(T) SEE STANDARD 1407/4207 FOR PORCELAIN AND NON PORCELAIN TERMINAL MOUNTING BRACKET INSTRUCTIONS AND MATERIALS.

FOR FIELD MAINTENANCE ONLY

DATE 1-1-93 APPD JLG/EDG	SDG&E ELECTRIC STANDARDS 12.47KV AND BELOW DEAD END CABLE POLE ARM, 3Ø, 1/C PER Ø, HOOKSTICK SWITCHED	OH 1499.403 ~~UG 4299.403~~ SUPERCEDES 1441.3 (1-1-93)

SCOPE: THIS STANDARD SHOWS A DEADEND CONSTRUCTION FOR 12.47 KV AND BELOW, THREE-PHASE CABLE POLE USING NON-PORCELAIN TERMINALS WITH A MEMCO GANG OPERATED SWITCH FOR 350 KCMIL AND LARGER U.G. CABLE.

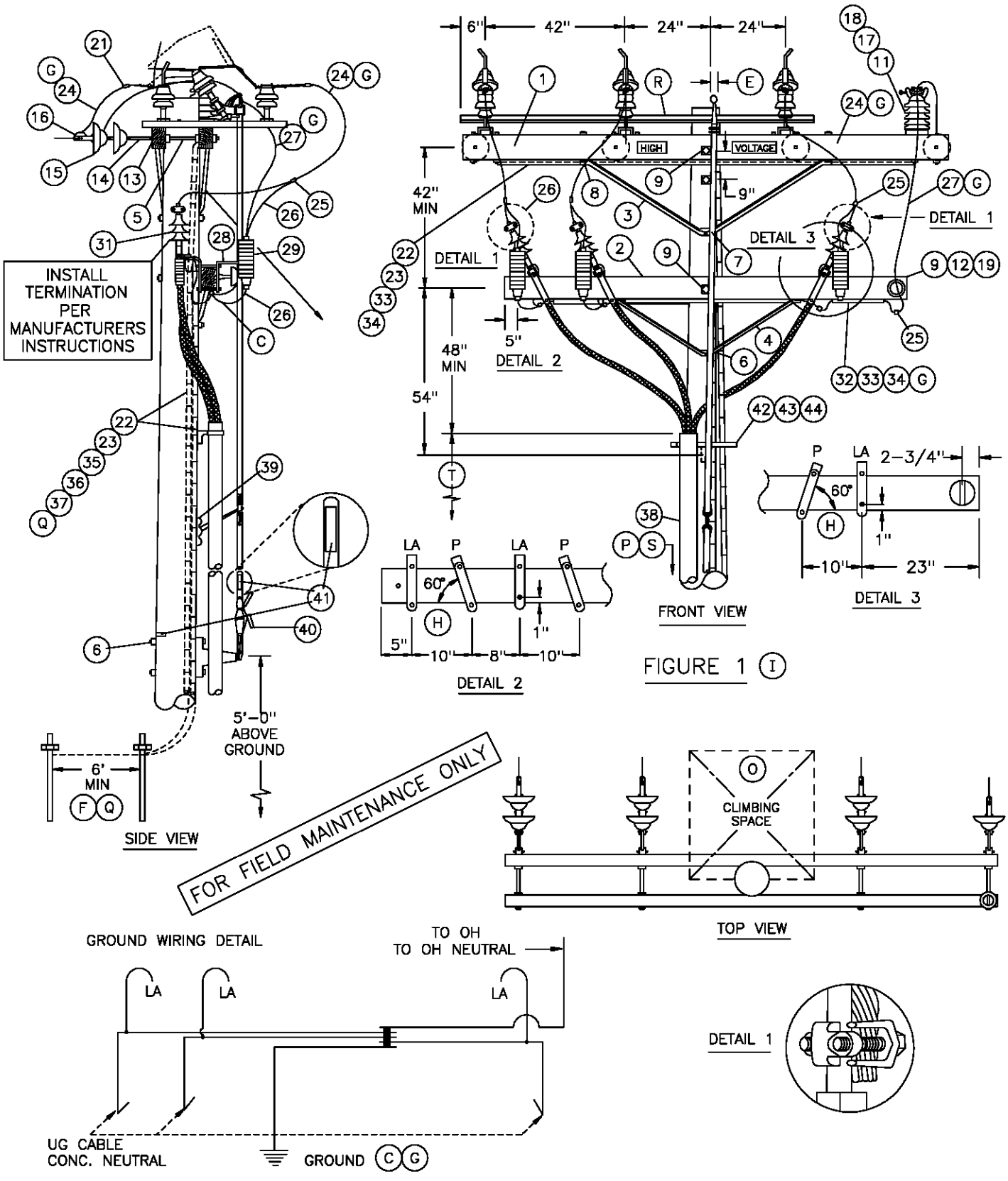

FIGURE 1 (I)

OH 1499.404 ~~UG 4299.404~~ SUPERSEDES 1443.1 (9-1-00)	SDG&E ELECTRIC STANDARDS 12.47KV AND BELOW DEAD END CABLE POLE THREE-PHASE, 1/C PER PHASE, GANG OPERATED SWITCHED, NON-PORCELAIN TERMINALS	DATE 1-1-96 APPD PBA / CMC

TABLE OF CONTENTS

TABLE OF CONTENTS

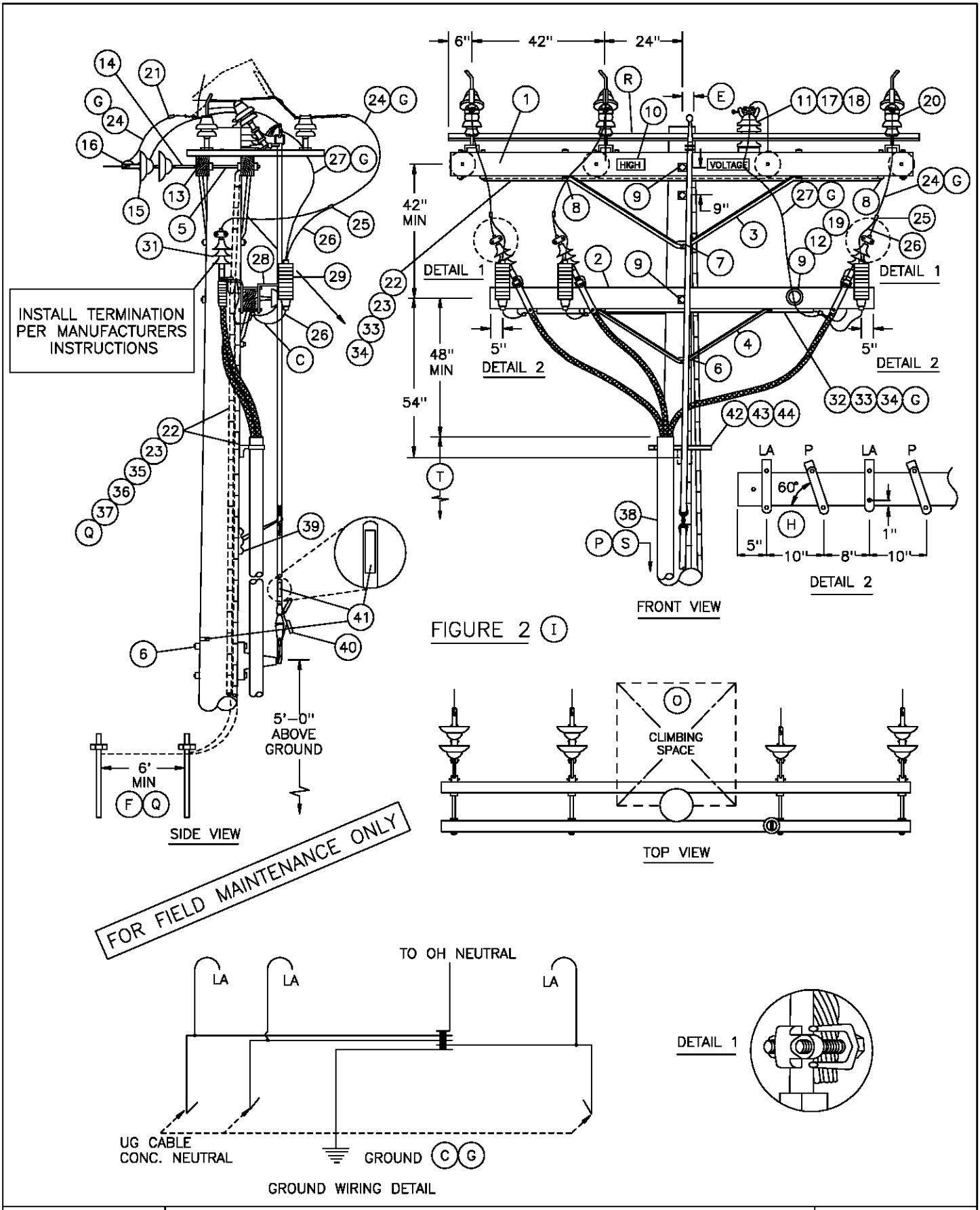

DATE 1-1-96 APPD PSA / CMC	SDG&E ELECTRIC STANDARDS 12.47KV AND BELOW DEAD END CABLE POLE THREE-PHASE, 1/C PER PHASE, GANG OPERATED SWITCHED, NON-PORCELAIN TERMINALS	OH 1499.405 ~~UG 4299.405~~ SUPERSEDES 1443.2 (9-1-00)

BILL OF MATERIAL:

ITEM	DESCRIPTION	QUANTITY	CONST STD OR PAGE NO	STOCK NUMBER
1	CROSSARM, 3–3/4" X 5–3/4" X 12'–0"	2	380.2	–
2	CROSSARM, 3–3/4" X 5–3/4" X 10'–0"	1	380.2	–
3	BRACE, 6', ANGLE, GALV	2	–	164160
4	BRACE, 4', ANGLE, GALV	1	–	164032
5	BOLT, SPACE, GALV, 5/8" X (LENGTH AS REQ'D), 3 SQ WASH & 2 DBL COIL SPRING WASH (D)	4	392.1 &.2	–
6	BOLT, MACH, GALV, 5/8" X (LENGTH AS REQ'D), 1 SQ WASH & 1 DBL COIL SPRING WASH	3	392.1 &.2	–
7	BOLT, MACH, GALV, 5/8" X (LENGTH AS REQ'D) & 1 DBL COIL SPRING WASH	1	392.1 &.2	–
8	BOLT, MACH, GALV, 1/2" X 7", 1 RD WASH & 1 DBL COIL SPRING WASH	18	392.1 &.2	–
9	BOLT, MACH, GALV, 5/8" X (LENGTH AS REQ'D), 2 SQ WASH & 1 DBL COIL SPRING WASH	3	392.1 &.2	–
10	SIGN, HIGH VOLTAGE & 9 ROOFING NAILS, GALV	2	–	647648 492224
11	STUD, 7–1/2" X 5/8" & 1 DBL COIL SPRING WASH (D)	1	–	701760 798560
12	PIN, TRANSFORMER ADAPTER, 1", LEAD THREAD (D)	1	–	529248
13	CLEVIS, DEAD END, 5/8", BOLT STEEL (OPEN TYPE) (D)	4	–	235618
14	LINK , EXTENSION, 1/2" X 2" X 12" (D)	4	–	466240
15	INSULATOR, SUSPENSION, 12KV, CLEVIS (D)	7	750.3	–
16	CLAMP, STRAIGHT LINE, D.E. (D)	4	741–743	–
17	INSULATOR, VERTICAL POST (D)	1	–	428608
18	CLAMP, POST INSULATOR (D)	1	–	227824
19	INSULATOR, LINE, 12KV NEUTRAL (D)	1	–	429216
20	SWITCH, TPST TILTING INSULATOR, 600 AMP	1	–	709254
21	TERMINAL, COMPRESSION	6	794–795	–
22	WIRE, #4, BARE STRANDED, COPPER	110'	–	813760
23	STAPLES, FENCE, GALV, 1–1/4"	AS REQ'D	–	678528
24	WIRE, BARE STRANDED COPPER (OH JUMPERS) (D)	20'	715	–
25	CONNECTOR, WIRE, COMPRESSION (SIZE AS REQ'D)	AS REQ'D	783–787	–
26	WIRE, #6, BARE STRANDED COPPER	12'	–	813536
27	WIRE, BARE STRANDED CU OR ACSR/AW BARE (OH NEUT JUMPER) (D)(G)	10'	711–715	–

FOR FIELD MAINTENANCE ONLY

OVERHEAD MACRO UNIT
3NGMXP

UG MACRO UNIT	
CABLE SIZE	ON LADDER ARMS
3C–#350	NP350L
3C–#750C	NP750L
3C–#1000	N1000L

TABLE OF CONTENTS

OH 1499.406 ~~UG 4299.406~~ SUPERSEDES 1443.3 (9–1–00)	SDG&E ELECTRIC STANDARDS 12.4KV AND BELOW DEAD END CABLE POLE THREE–PHASE, 1/C PER PHASE, GANG OPERATED SWITCHED, NON–PORCELAIN TERMINALS	DATE 1–1–98 APPD PSA / CMC

BILL OF MATERIAL: (CONTINUED)

ITEM	DESCRIPTION	QUANTITY	CONSTR STANDARD	STOCK NUMBER
28	BRACKET, CUTOUT/ARRESTER, FOR CROSSARM MOUNTING	3	–	166070
29	ARRESTER, LIGHTNING	3	1247	–
30				
31	TERMINALS & UNDERGROUND CABLE (U)	3	4111	–
32	WIRE, BARE STRANDED COPPER (UNDER POTHEAD ARM) (G)	20'	715	–
33	CONDUIT, PVC, TYPE 2, SCHEDULE 40, 1–1/2"	21'	–	251232
34	STRAPS, PIPE, GALV, 1–1/2" & 6–D NAILS	AS REQ'D	–	697664 491552
35	MOULDING, OAK HARDWOOD, 1" X 8' LONG	11'	–	487200
36	STAPLES, MOULDING, GALV, 3" X 1–1/16" X 1/4"	AS REQ'D	–	678560
37	ROD & CLAMP, GROUND	2 2	–	230016 603072
38	RISER CONSTRUCTION	AS REQ'D	1400/4200	–
39	SCREW, LAG, 1/2" X 4"	2	–	621568
40	PADLOCK, MEDECO	1	–	514862
41	TAGS, SWITCH NUMBER	2	204/3104	–
42	BRACKET, LADDER ARM	AS REQ'D	1404/4204	167184
43	NUT, CLAMPING CHANNEL, W/SPRING, 1/2"	AS REQ'D	1404/4204	503488
44	CHANNEL, DOUBLE GALV, 24"	AS REQ'D	1404/4204	216700

FOR FIELD MAINTENANCE ONLY

INSTALLATION:

A. NEW CABLE POLES SHALL HAVE A STANDARD SETTING DEPTH OF 9'. IN MOST CASES, THIS WILL REQUIRE A 5' TALLER POLE.

B. THIS CONSTRUCTION TO BE USED WITH 350 KCMIL AND LARGER UNDERGROUND CABLE.

(C) INTERCONNECT OVERHEAD NEUTRAL, TERMINAL BASE, AND CONCENTRIC CABLE NEUTRAL CONDUCTOR TO LIGHTNING ARRESTER GROUND.

(D) REDUCE QUANTITIES AS REQUIRED WHEN NOT USING NEUTRAL.

(E) OFFSET AS REQUIRED TO CLEAR ANCHOR GUY.

(F) SWITCH GROUND AND LIGHTNING ARRESTER GROUND TO BE CONNECTED ON THE SAME GROUND ROD.

(G)

UG CABLE SIZE AWG OR KCMIL, AL	OH JUMPER COND SIZE, AWG OR KCMIL, CU	OH NEUT JUMPER SIZE			CABLE POLE NEUT SIZE (CU) UNDER POTHEAD ARM OR TRIPLE TERM BRKT
		CU	AL		
350	4/0	1/0	3/0	–	#2 PER PHASE
750	500	4/0	336.4	OR SAME SIZE AS O.H. NEUT CONDUCTOR	1/0 PER PHASE
1000	500	4/0	336.4		1/0 PER PHASE

(H) TURN TOP OF BRACKET OUTWARD TO OBTAIN APPROX. 60° ANGLE.

	Indicates Latest Revision	Completely Revised	New Page	Information Removed

SDG&E ELECTRIC STANDARDS

DATE 1–1–93
APPD JLB/RDJ

12.4KV AND BELOW DEAD END CABLE POLE
THREE–PHASE, 1/C PER PHASE,
GANG OPERATED SWITCHED, NON–PORCELAIN TERMINALS

OH 1499.407
~~UG 4299.407~~
SUPERSEDES
1443.4 (9–1–00)

TABLE OF CONTENTS

INSTALLATION: (CON'T)

(I) – USE FIGURE ONE FOR ALL **NEW** CONSTRUCTION AND WHEN ADDING TO EXISTING CONSTRUCTION WITH NEUTRAL ON OUTSIDE PIN POSITION.

– USE FIGURE TWO ON EXISTING CONSTRUCTION WITH NEUTRAL ON INSIDE PIN POSITION.

REFERENCE:

(O) ALLOWABLE WORKING AND CLIMBING SPACE – SEE STD. 251.

(P) POLE STEPPING – SEE STD. 363.

(Q) GROUNDING METHODS – SEE PAGE 1002.5.

(R) GANG OPERATED SWITCH MOUNTING INSTRUCTIONS – SEE STD. SECTION 1200.

(S) RISER POSITION – SEE STANDARD 1402/4202.

(T) MINIMUM VERTICAL SEPARATION AS PER G.O. 95 – SEE STD. 1406/4206.

(U) SEE STANDARD 1407/4207 FOR NON–PORCELAIN TERMINAL MOUNTING BRACKET INSTRUCTIONS AND MATERIALS.

FOR FIELD MAINTENANCE ONLY

TABLE OF CONTENTS

	Indicates Latest Revision		Completely Revised		New Page		Information Removed

OH 1499.408 ~~UC 4299.408~~ SUPERSEDES 1443.5 (9–1–00)	SDG&E ELECTRIC STANDARDS 12.4KV AND BELOW DEAD END CABLE POLE THREE–PHASE, 1/C PER PHASE, GANG OPERATED SWITCHED, NON–PORCELAIN TERMINALS	DATE 1–1–93 APPD JLG/RDJ

SCOPE: THIS STANDARD SHOWS A DEADEND CONSTRUCTION FOR 12.47 KV AND BELOW, THREE-PHASE CABLE POLE USING NON-PORCELAIN TERMINALS WITH A MEMCO GANG OPERATED SWITCH FOR 350 KCMIL AND LARGER U.G. CABLE.

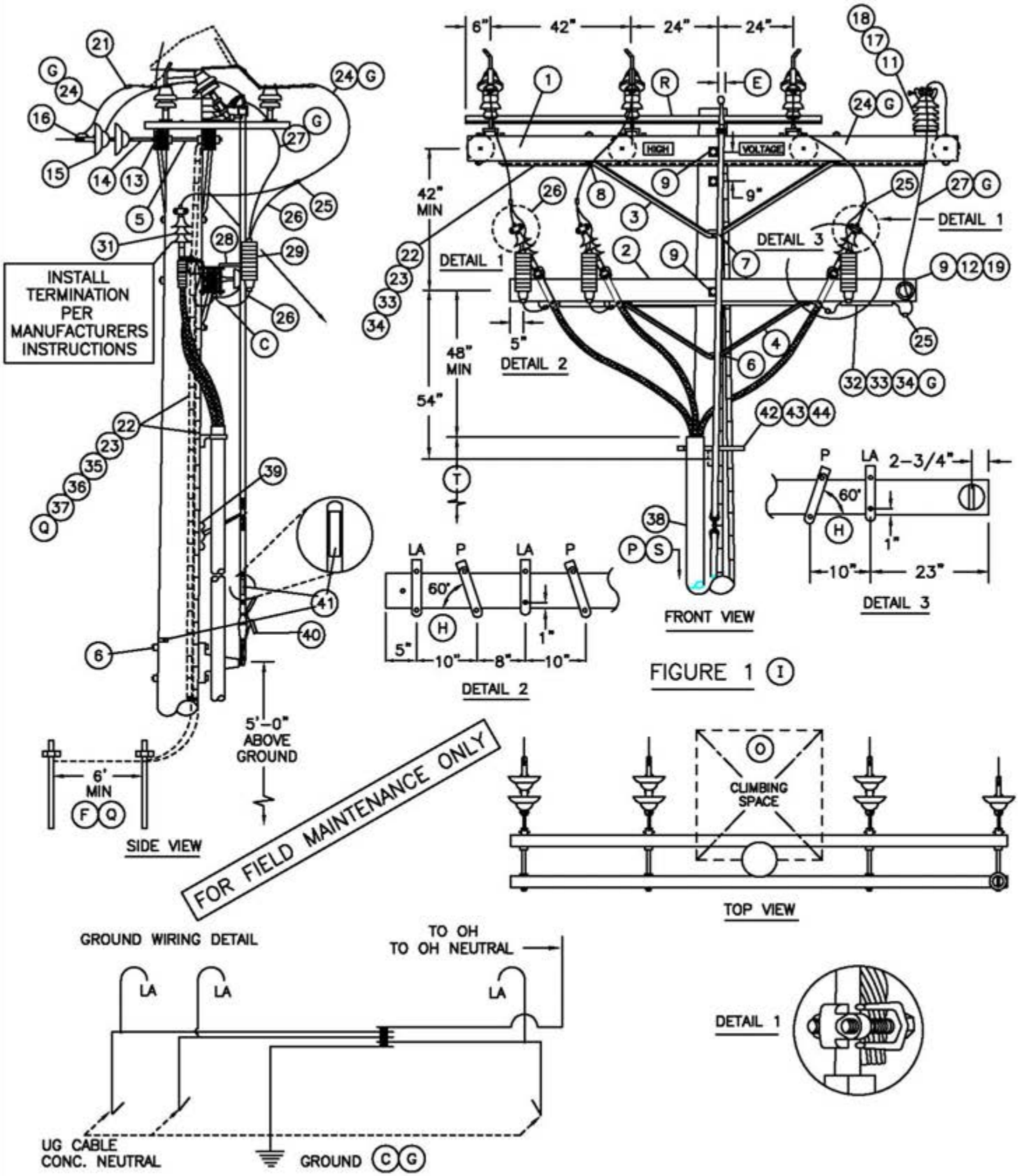

FIGURE 1 (I)

© 1998 - 2006 San Diego Gas & Electric Company. All rights reserved. Removal of this copyright notice without permission is not permitted under law.

DATE 1-1-96 APPD PSA / CMC	SDG&E ELECTRIC STANDARDS 12.47KV AND BELOW DEAD END CABLE POLE THREE-PHASE, 1/C PER PHASE, GANG OPERATED SWITCHED, NON-PORCELAIN TERMINALS	OH 1499.409 UG 4299.404

TABLE OF CONTENTS

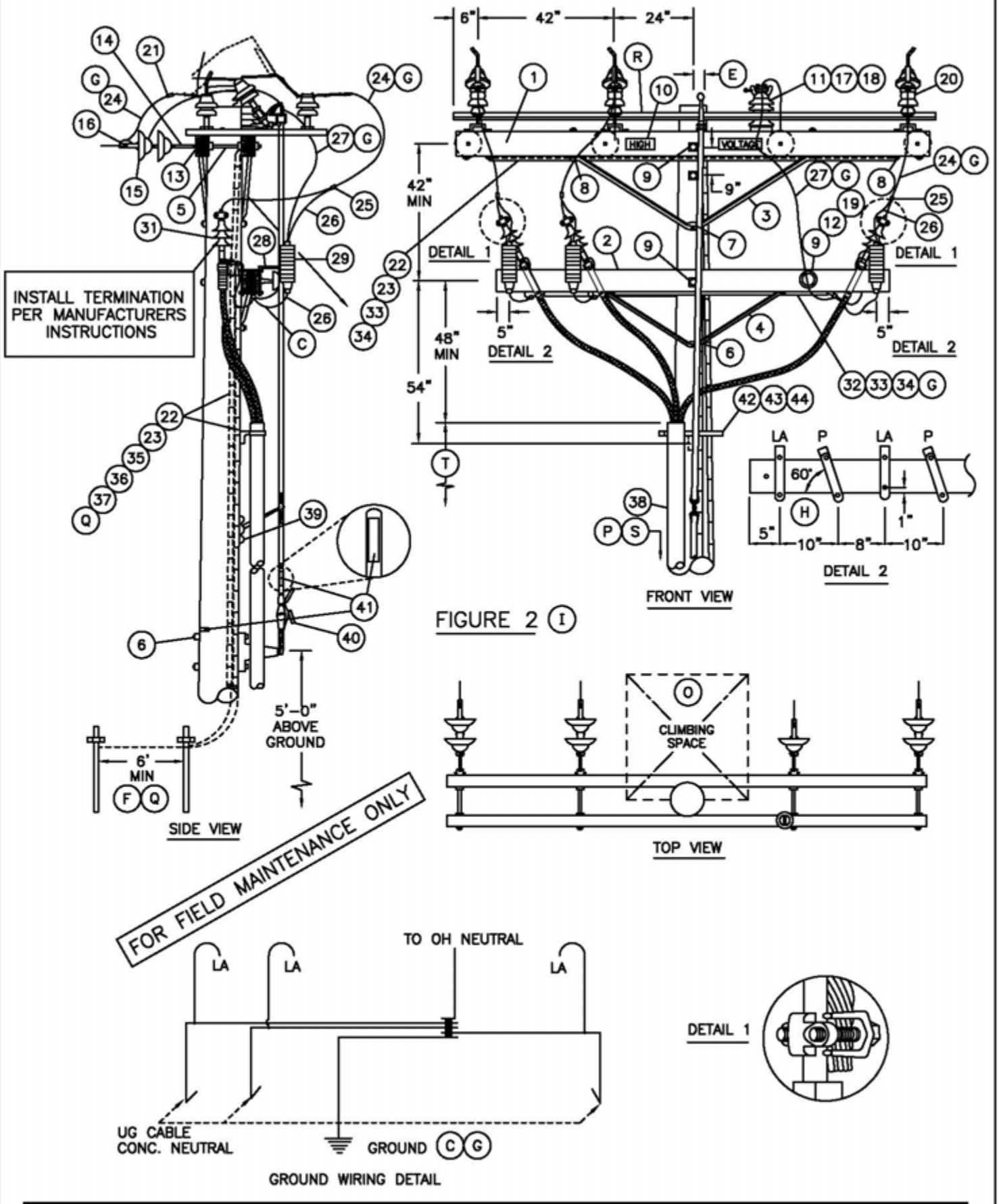

FIGURE 2 (I)

TABLE OF CONTENTS

© 1998 - 2006 San Diego Gas & Electric Company. All rights reserved. Removal of this copyright notice without permission is not permitted under law.

OH 1499.410 UG 4299.405	SDG&E ELECTRIC STANDARDS 12.47KV AND BELOW DEAD END CABLE POLE THREE-PHASE, 1/C PER PHASE, GANG OPERATED SWITCHED, NON-PORCELAIN TERMINALS	DATE 1-1-96 APPD PSA / CMK

BILL OF MATERIAL:

ITEM	DESCRIPTION	QUANTITY	CONST STD OR PAGE NO	STOCK NUMBER
1	CROSSARM, 3–3/4" X 5–3/4" X 12'–0"	2	380.2	–
2	CROSSARM, 3–3/4" X 5–3/4" X 10'–0"	1	380.2	–
3	BRACE, 6', ANGLE, GALV	2	–	164160
4	BRACE, 4', ANGLE, GALV	1	–	164032
5	BOLT, SPACE, GALV, 5/8" X (LENGTH AS REQ'D), 3 SQ WASH & 2 DBL COIL SPRING WASH (D)	4	392.1 &.2	–
6	BOLT, MACH, GALV, 5/8" X (LENGTH AS REQ'D), 1 SQ WASH & 1 DBL COIL SPRING WASH	3	392.1 &.2	–
7	BOLT, MACH, GALV, 5/8" X (LENGTH AS REQ'D) & 1 DBL COIL SPRING WASH	1	392.1 &.2	–
8	BOLT, MACH, GALV, 1/2" X 7", 1 RD WASH & 1 DBL COIL SPRING WASH	18	392.1 &.2	–
9	BOLT, MACH, GALV, 5/8" X (LENGTH AS REQ'D), 2 SQ WASH & 1 DBL COIL SPRING WASH	3	392.1 &.2	–
10	SIGN, HIGH VOLTAGE & 9 ROOFING NAILS, GALV	2	–	647648 492224
11	STUD, 7–1/2" X 5/8" & 1 DBL COIL SPRING WASH (D)	1	–	701760 798560
12	PIN, TRANSFORMER ADAPTER, 1", LEAD THREAD (D)	1	–	529248
13	CLEVIS, DEAD END, 5/8", BOLT STEEL (OPEN TYPE) (D)	4	–	235618
14	LINK , EXTENSION, 1/2" X 2" X 12" (D)	4	–	466240
15	INSULATOR, SUSPENSION, 12KV, CLEVIS (D)	7	750.3	–
16	CLAMP, STRAIGHT LINE, D.E. (D)	4	741–743	–
17	INSULATOR, VERTICAL POST (D)	1	–	428608
18	CLAMP, POST INSULATOR (D)	1	–	227824
19	INSULATOR, LINE, 12KV NEUTRAL (D)	1	–	429216
20	SWITCH, TPST TILTING INSULATOR, 600 AMP	1	–	709254
21	TERMINAL, COMPRESSION	6	794–795	–
22	WIRE, #4, BARE STRANDED, COPPER	110'	–	813760
23	STAPLES, FENCE, GALV, 1–1/4"	AS REQ'D	–	678528
24	WIRE, BARE STRANDED COPPER (OH JUMPERS) (D)	20'	715	–
25	CONNECTOR, WIRE, COMPRESSION (SIZE AS REQ'D)	AS REQ'D	783–787	–
26	WIRE, #6, BARE STRANDED COPPER	12'	–	813536
27	WIRE, BARE STRANDED CU OR ACSR/AW BARE (OH NEUT JUMPER) (D)(G)	10'	711–715	–

FOR FIELD MAINTENANCE ONLY

OVERHEAD MACRO UNIT
3NGMXP

UG MACRO UNIT	
CABLE SIZE	ON LADDER ARMS
3C–#350	NP350L
3C–#750C	NP750L
3C–#1000	N1000L

© 1998 - 2006 San Diego Gas & Electric Company. All rights reserved. Removal of this copyright notice without permission is not permitted under law.

DATE 1–1–98
APPD PSA / CMC

SDG&E ELECTRIC STANDARDS

12.4KV AND BELOW DEAD END CABLE POLE THREE–PHASE, 1/C PER PHASE, GANG OPERATED SWITCHED, NON–PORCELAIN TERMINALS

OH 1499.411
UG 4299.406

TABLE OF CONTENTS

BILL OF MATERIAL: (CONTINUED)

ITEM	DESCRIPTION	QUANTITY	CONSTR STANDARD	STOCK NUMBER
28	BRACKET, CUTOUT/ARRESTER, FOR CROSSARM MOUNTING	3	–	166070
29	ARRESTER, LIGHTNING	3	1247	–
30				
31	TERMINALS & UNDERGROUND CABLE (U)	3	4111	–
32	WIRE, BARE STRANDED COPPER (UNDER POTHEAD ARM) (G)	20'	715	–
33	CONDUIT, PVC, TYPE 2, SCHEDULE 40, 1-1/2"	21'	–	251232
34	STRAPS, PIPE, GALV, 1-1/2" & 6-D NAILS	AS REQ'D	–	697664 491552
35	MOULDING, OAK HARDWOOD, 1" X 8' LONG	11'	–	487200
36	STAPLES, MOULDING, GALV, 3" X 1-1/16" X 1/4"	AS REQ'D	–	678560
37	ROD & CLAMP, GROUND	2 | 2	–	230016 603072
38	RISER CONSTRUCTION	AS REQ'D	1400/4200	–
39	SCREW, LAG, 1/2" X 4"	2	–	621568
40	PADLOCK, MEDECO	1	–	514862
41	TAGS, SWITCH NUMBER	2	204/3104	–
42	BRACKET, LADDER ARM	AS REQ'D	1404/4204	167184
43	NUT, CLAMPING CHANNEL, W/SPRING, 1/2"	AS REQ'D	1404/4204	503488
44	CHANNEL, DOUBLE GALV, 24"	AS REQ'D	1404/4204	216700

FOR FIELD MAINTENANCE ONLY

INSTALLATION:

A. NEW CABLE POLES SHALL HAVE A STANDARD SETTING DEPTH OF 9'. IN MOST CASES, THIS WILL REQUIRE A 5' TALLER POLE.

B. THIS CONSTRUCTION TO BE USED WITH 350 KCMIL AND LARGER UNDERGROUND CABLE.

(C) INTERCONNECT OVERHEAD NEUTRAL, TERMINAL BASE, AND CONCENTRIC CABLE NEUTRAL CONDUCTOR TO LIGHTNING ARRESTER GROUND.

(D) REDUCE QUANTITIES AS REQUIRED WHEN NOT USING NEUTRAL.

(E) OFFSET AS REQUIRED TO CLEAR ANCHOR GUY.

(F) SWITCH GROUND AND LIGHTNING ARRESTER GROUND TO BE CONNECTED ON THE SAME GROUND ROD.

(G)

UG CABLE SIZE AWG OR KCMIL, AL	OH JUMPER COND SIZE, AWG OR KCMIL, CU	OH NEUT JUMPER SIZE			CABLE POLE NEUT SIZE (CU) UNDER POTHEAD ARM OR TRIPLE TERM BRKT
		CU	AL		
350	4/0	1/0	3/0	–	#2 PER PHASE
750	500	4/0	336.4	OR SAME SIZE AS O.H. NEUT CONDUCTOR	1/0 PER PHASE
1000	500	4/0	336.4		1/0 PER PHASE

(H) TURN TOP OF BRACKET OUTWARD TO OBTAIN APPROX. 60° ANGLE.

© 1998 - 2006 San Diego Gas & Electric Company. All rights reserved. Removal of this copyright notice without permission is not permitted under law.

	SDG&E ELECTRIC STANDARDS	
OH 1499.412 UG 4299.407	12.4KV AND BELOW DEAD END CABLE POLE THREE-PHASE, 1/C PER PHASE, GANG OPERATED SWITCHED, NON-PORCELAIN TERMINALS	DATE 1-1-93 APPD JLG/DSJ

TABLE OF CONTENTS

INSTALLATION: (CON'T)

(I) – USE FIGURE ONE FOR ALL **NEW** CONSTRUCTION AND WHEN ADDING TO EXISTING CONSTRUCTION WITH NEUTRAL ON OUTSIDE PIN POSITION.

– USE FIGURE TWO ON EXISTING CONSTRUCTION WITH NEUTRAL ON INSIDE PIN POSITION.

REFERENCE:

(O) ALLOWABLE WORKING AND CLIMBING SPACE – SEE STD. 251.

(P) POLE STEPPING – SEE STD. 363.

(Q) GROUNDING METHODS – SEE PAGE 1002.5.

(R) GANG OPERATED SWITCH MOUNTING INSTRUCTIONS – SEE STD. SECTION 1200.

(S) RISER POSITION – SEE STANDARD 1402/4202.

(T) MINIMUM VERTICAL SEPARATION AS PER G.O. 95 – SEE STD. 1406/4206.

(U) SEE STANDARD 1407/4207 FOR NON–PORCELAIN TERMINAL MOUNTING BRACKET INSTRUCTIONS AND MATERIALS.

FOR FIELD MAINTENANCE ONLY

TABLE OF CONTENTS

© 1998 - 2006 San Diego Gas & Electric Company. All rights reserved. Removal of this copyright notice without permission is not permitted under law.

REVISION	SDG&E ELECTRIC STANDARDS	
DATE 1–1–93 APPD JLG/RDS	12.4KV AND BELOW DEAD END CABLE POLE THREE–PHASE, 1/C PER PHASE, GANG OPERATED SWITCHED, NON–PORCELAIN TERMINALS	OH 1499.413 UG 4299.408

TABLE OF CONTENTS

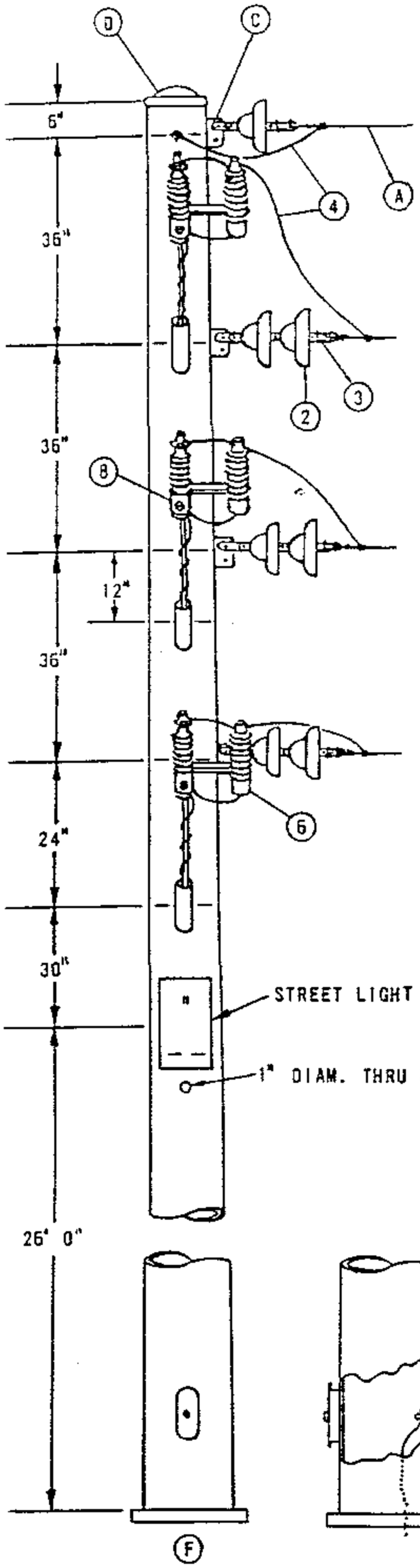

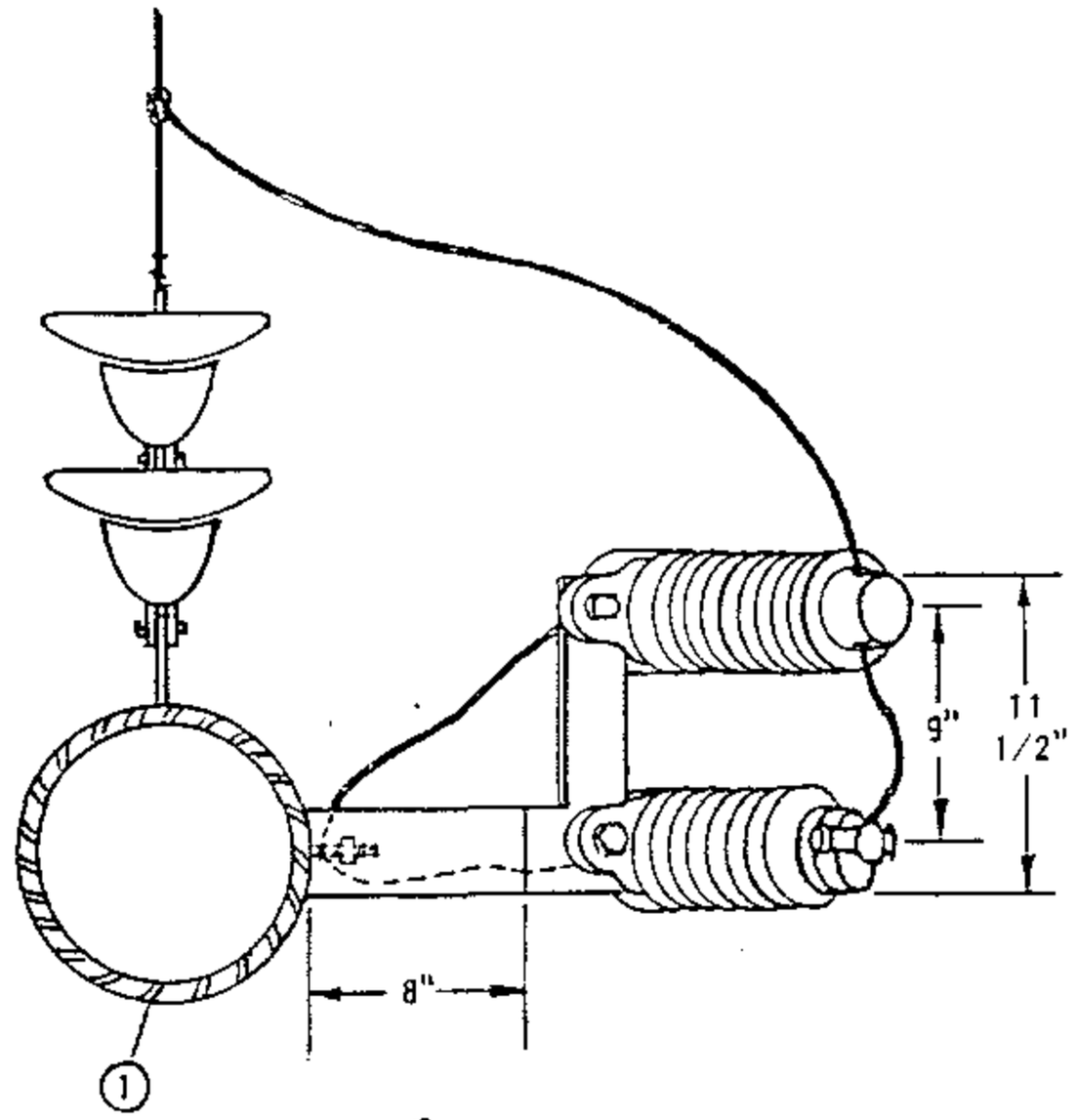

FOR FIELD MAINTENANCE ONLY

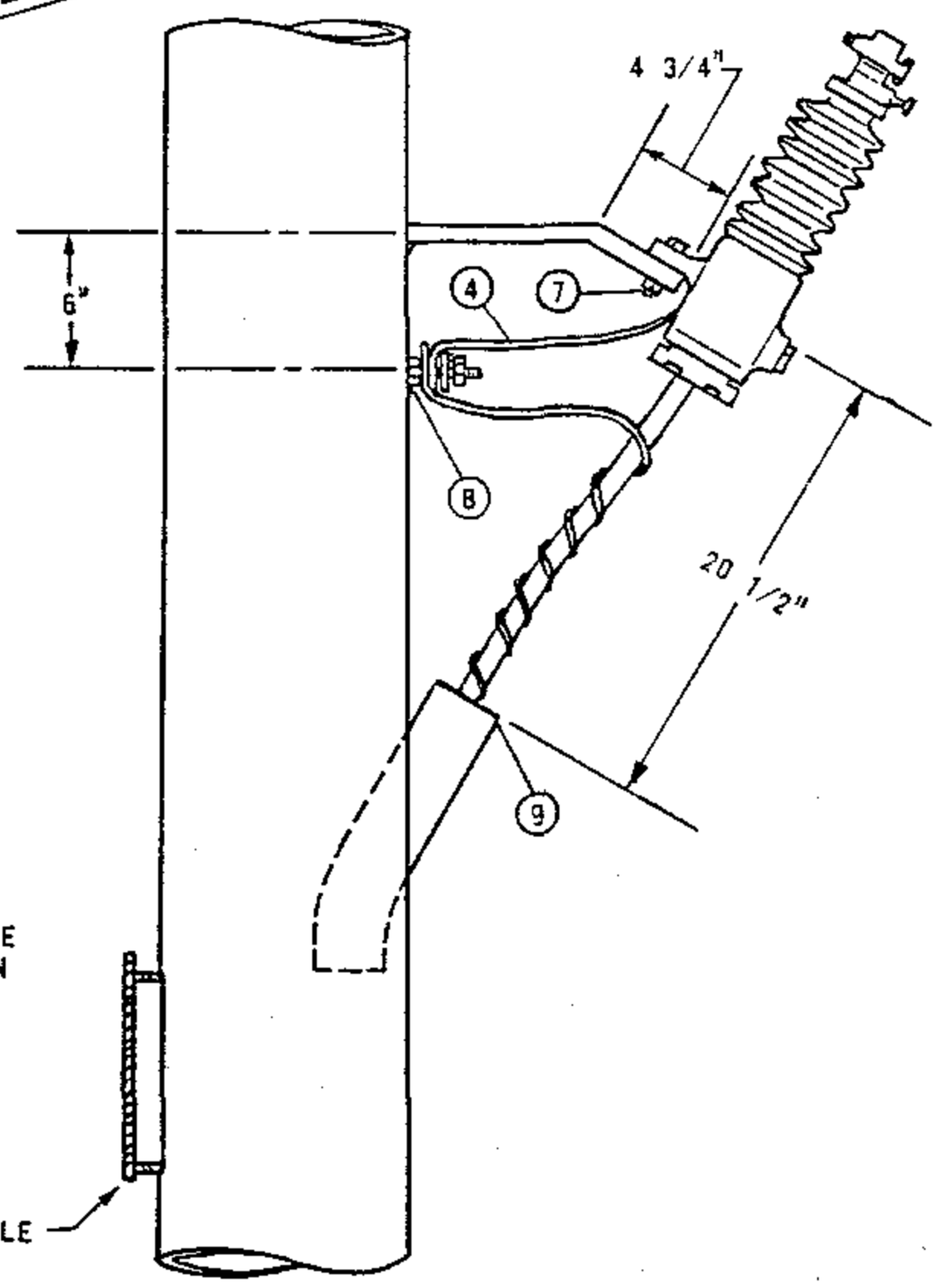

DATE 1-1-92 APPD	SDG&E ELECTRIC STANDARDS CABLE POLE, STEEL, LIGHT DUTY	OH 1499.501 ~~UG 4299.501~~

FOR FIELD MAINTENANCE ONLY

NOTES:

(A) THIS POLE IS DESIGNED FOR A MAXIMUM LOADED TENSION OF 850# PER CONDUCTOR, AND A MAXIMUM SPAN LENGTH OF 250'.

(B) LIGHTNING ARRESTER GROUND, AND CONCENTRIC CABLE NEUTRAL ARE CONNECTED TO STUD AS SHOWN. BASE OF TERMINAL GROUNDED THROUGH MOUNTING BRACKET.

(C) DEAD END TO BE ATTACHED TO TOP HOLE OF DEAD END ATTACHMENT PLATE.

(D) TOP IS REMOVABLE.

(E) EXEMPT MATERIAL.

(F) SEE STANDARDS PAGES 1454/4241 FOR FOUNDATION CONSTRUCTION.

G. SECTIONALIZING TO BE DONE ON ADJACENT POLE.

H. THIS POLE IS NONCLIMBABLE.

(I) TO BE USED FOR STREET LIGHT SECONDARY FROM UG SYSTEM.

J. NO OVERHEAD ATTACHMENT THAN THOSE SHOWN MAY BE MADE TO THIS POLE.

ITEM PTF	ITEM UCD	MATERIAL	QUANTITY	STOCK NO. OR CONSTR. STD.
1		POLE, LIGHT DUTY, STEEL CABLE, NONCLIMBABLE	1	552418
2		INSULATOR, SUSPENSION	7	700 SECTION
3		CLAMP, DEAD END	4	700 SECTION
	4	WIRE, #2 WP COPPER	10'	812608
	5	WIRE, #6 BS COPPER	8'	813536
	6	ARRESTER, LIGHTNING	3	1200 SECTION
	7	BOLT, MACH., GALV., 5/8" X 2", 1 LOCK WASHER. (E)	6	100 SECTION
	8	TERMINAL, UNDERGROUND CABLE	3	SEE U.G. STDS.
	9	GRIP, CABLE	3	394048

SDG&E ELECTRIC STANDARDS

OH 1499.502
~~UG 4299.502~~

CABLE POLE, STEEL, LIGHT DUTY

DATE 1-1-92
APPD

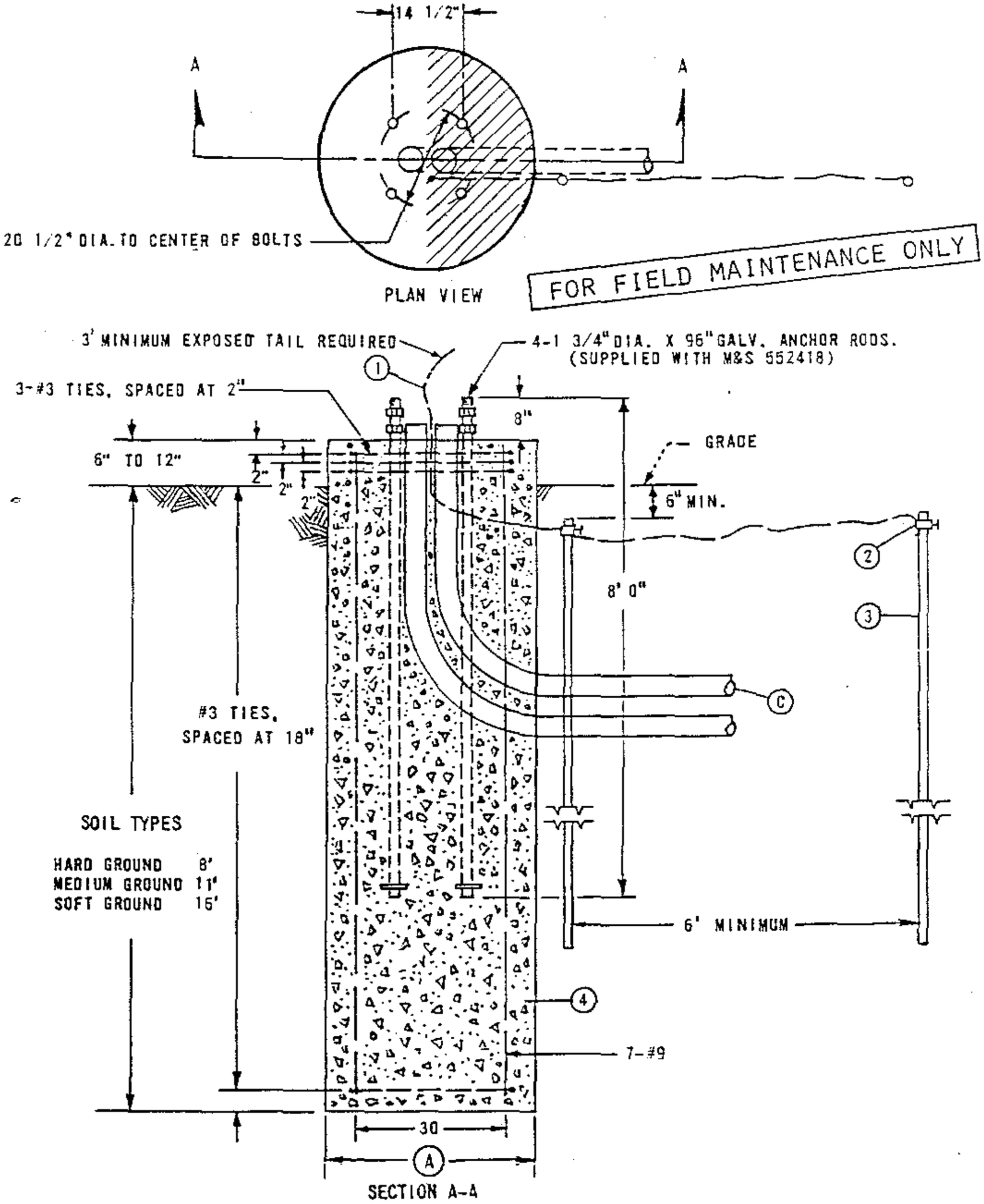

NOTES:

(A) WHEN DIRECTION OF PULL OF THE OVERHEAD CONDUCTORS IS IN SHADED AREA IN THE PLAN VIEW, FOUNDATION DIAMETER SHALL BE 48". WHEN IN THE UNSHADED AREA THE FOUNDATION DIAMETER MAY BE REDUCED TO 42". DIAMETER REQUIRED ON WORK ORDER.

B CONTACT CIVIL ENGINEERING FOR CONFIRMATION OF SOIL TYPES BEFORE DECIDING FOUNDATION DIMENSIONS.

(C) TWO DUCTS TO BE INSTALLED IN FOUNDATION. THREE DUCTS ARE REQUIRED IF STREET LIGHT IS TO BE INSTALLED ON POLE.

(E) EXEMPT MATERIAL.

ITEM	DESCRIPTION	QUANTITY	STOCK NO.	VOLUME OF CONCRETE (IN CUBIC YARDS)		
				DEPTH (IN FEET)	DIAMETER (IN INCHES) 42	48
1	WIRE, #2 BARE STRANDED COPPER	15'	813664			
2	CLAMPS, GROUND (E)	2	230016			
3	RODS, GROUND	2	603072	8	2.85	3.72
4	CONCRETE	(SEE TABLE)	—	11	3.92	5.12
				16	5.70	7.45

SDG&E ELECTRIC STANDARDS

DATE 1-1-92
APPD JJB/BDG

FOUNDATION, STEEL CABLE POLE, LIGHT DUTY

OH 1499.503
~~UG 4299.503~~

TABLE OF CONTENTS

SCOPE: THIS STANDARD SHOWS 6 OR 7 CONDUCTOR DEAD END CABLE POLE WITH HOOKSTICK SWITCHES FOR 750 KCMIL AND LARGER U.G. CABLE. (SEE STANDARD 1407/4207 FOR 350 KCMIL TERMINAL MOUNTING INFORMATION).

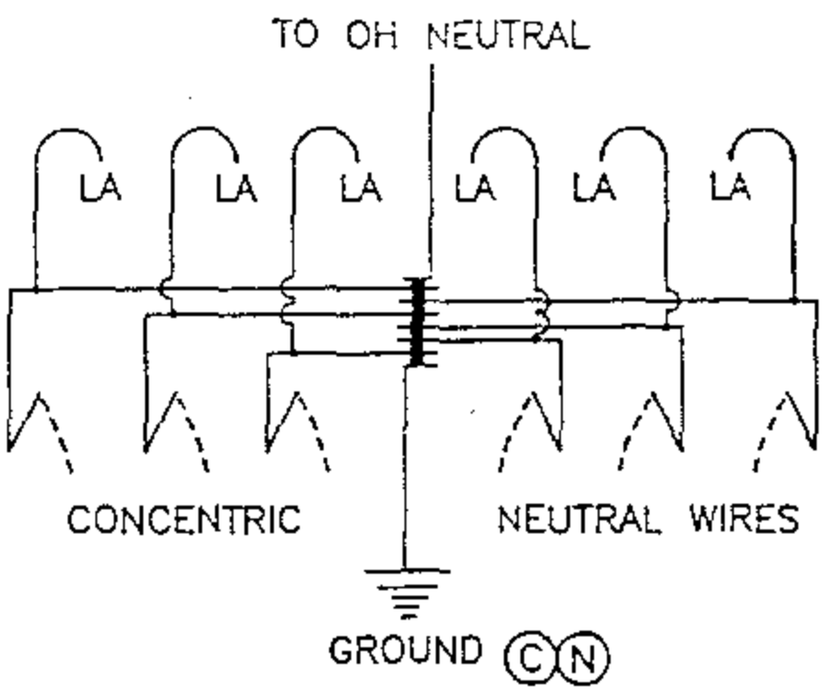

GROUND WIRING DETAIL

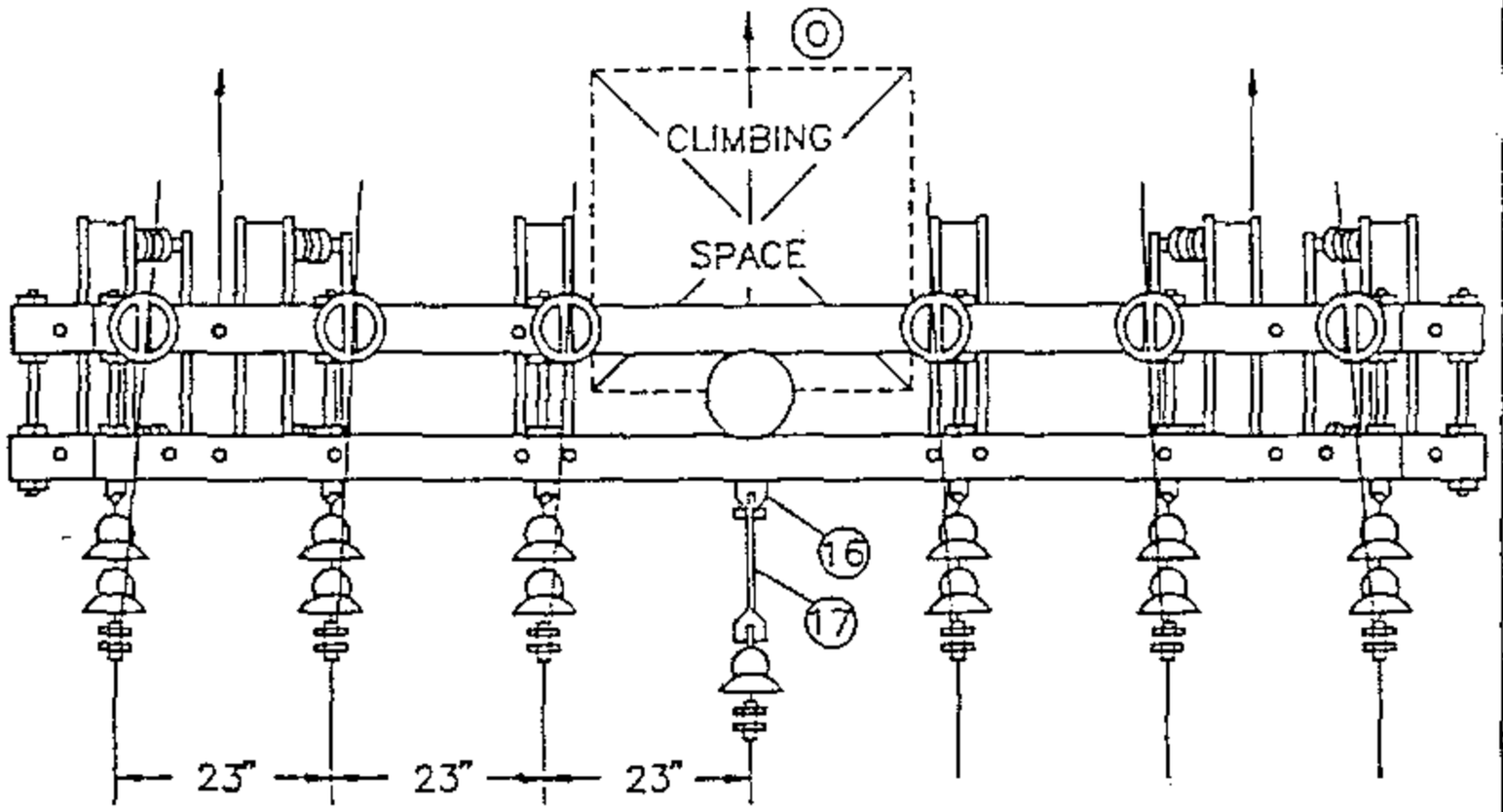

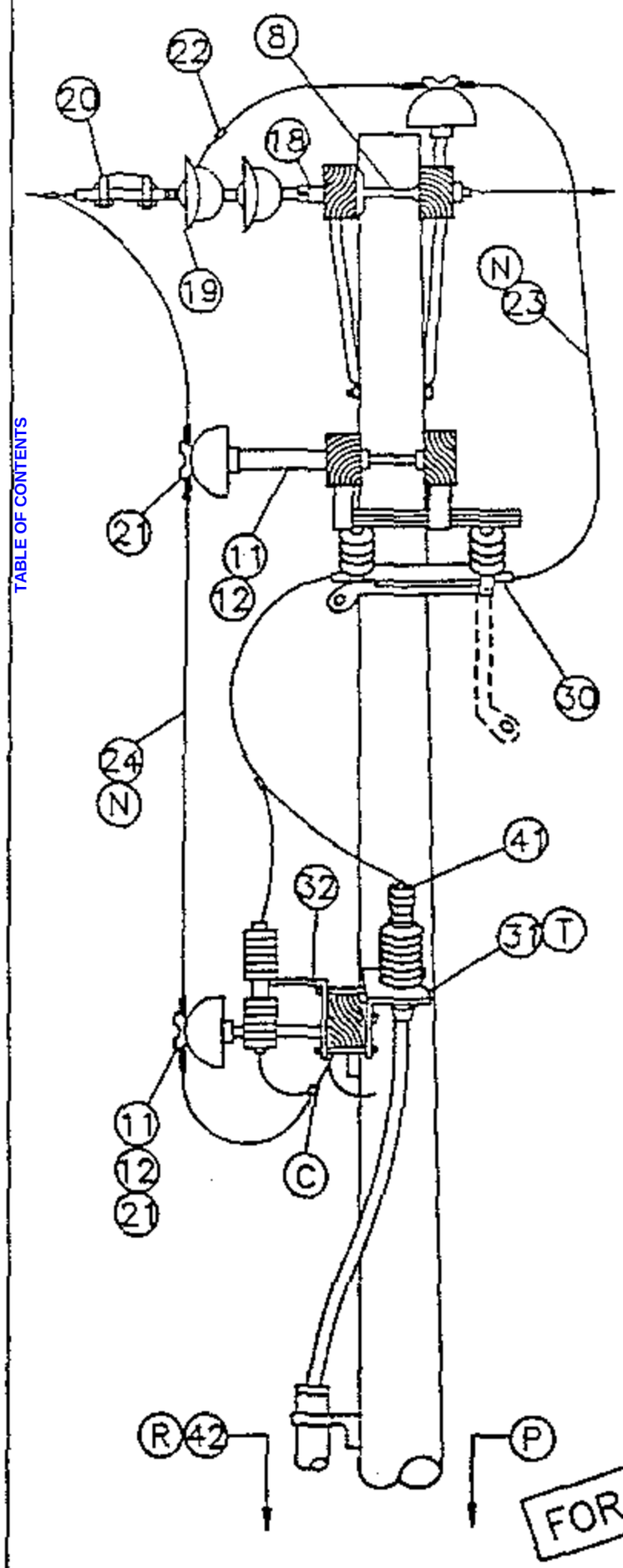

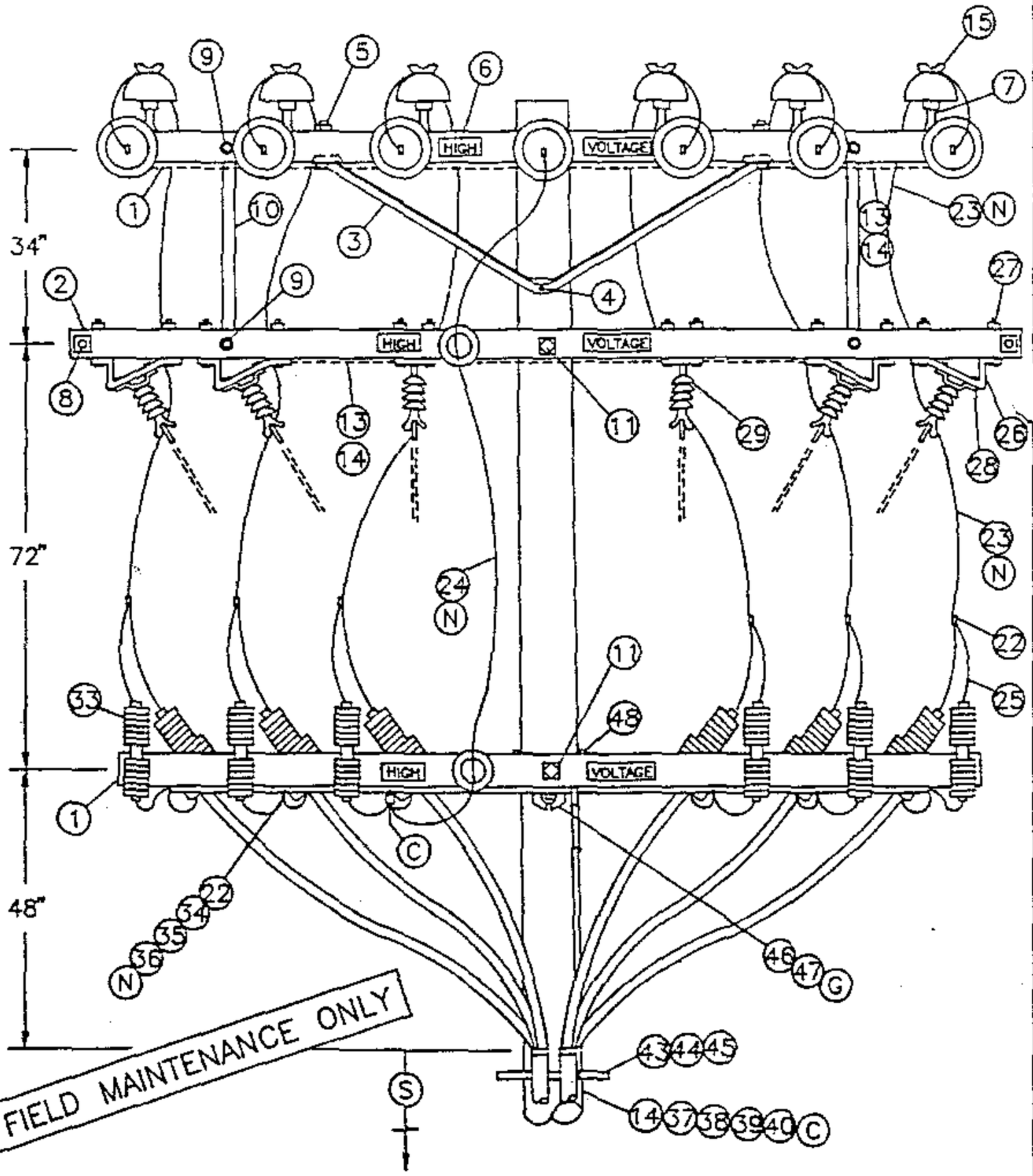

FOR FIELD MAINTENANCE ONLY

TABLE OF CONTENTS

OH 1499.504 ~~UG-4299.504~~ SUPERCEDES 1451.1 (1-1-93)	SDG&E ELECTRIC STANDARDS 12.47KV AND BELOW DEAD END CABLE POLE, 6 OR 7 OH CONDUCTORS, 1 OR 2 TERMINALS PER CONDUCTOR, HOOKSTICK SWITCHED	DATE 1-1-93 APPD JWB/DGJ

BILL OF MATERIAL:

ITEM	DESCRIPTION		QUANTITY	CONST STD OR PG NO	STOCK NUMBER
1	CROSSARM, 3-3/4" X 5-3/4" X 12'-0"		3	–	294160
2	CROSSARM, 3-3/4" X 5-3/4" X 13'-6"		2	–	294368
3	BRACE, ANGLE, CROSSARM, 6"		3	–	164160
4	BOLT, MACH, GALV, 5/8" X (LENGTH AS REQ'D), 1 DBL COIL WASH	(E)	1	392.1&.2	–
5	BOLT, MACH, GALV, 1/2" X 7", 1 RD & 1 DBL COIL WASH	(E)	4	392.1&.2	–
6	SIGN, HIGH VOLTAGE & 8 ROOFING NAILS	(E)	6	–	647648 492224
7	PIN, INSULATOR, STRAIGHT, 12KV, 1" OR 1 3/8"	(E)	6	–	532704 532448
8	BOLT, SPACE, 5/8" X (LENGTH AS REQ'D), 3 SQ WASH & 2 DBL COIL WASH	(E)	8	392.1&.2	–
9	BOLT, MACH, GALV, 5/8" X (LENGTH AS REQ'D), 1 RD WASH & 1 DBL COIL WASH	(E)	8	392.1&.2	–
10	BRACE, VERTICAL, 36"	(E)	4	–	164224
11	BOLT, MACH, GALV, 5/8" X (LENGTH AS REQ'D), 2 SQ FLAT WASH & 1 DBL COIL WASH	(E)	5	392.1&.2	–
12	PIN, TRANSFORMER ADAPTER, 1" LEAD THREAD	(D) (E)	2	–	529248
13	WIRE, #8, BARE SOLID ANNEALED COPPER		2 LB	–	812928
14	STAPLES, FENCE, GALV, 1-1/4"	(D) (E)	AS REQ'D	–	678528
15	INSULATOR, LINE, 12KV, 1" OR 1-3/8" PIN		6	750	–
16	CLEVIS, DEAD END, 3/4" BOLT, STEEL (OPEN TYPE)	(D) (E)	1	–	235618
17	LINK, EXTENSION, 1/2" X 1-1/2" X 12"	(D)	1	–	466240
18	CLEVIS, DEAD END, 5/8" BOLT, STEEL (CLOSED TYPE)	(E)	6	–	235712
19	INSULATOR, SUSPENSION, 12KV	(D)	13	750	–
20	CLAMP, STRAIGHT LINE, D.E.	(D)	7	742-743	–
21	INSULATOR, LINE, 12KV, NEUTRAL	(D) (E)	2	–	429216
22	CONNECTOR, WIRE, (SIZE & TYPE AS REQ'D)	(E)	AS REQ'D	783-787	–
23	WIRE, BARE STRANDED COPPER, (OH JUMPER)	(N)	72'	715-716	–
24	WIRE, BARE STRANDED CU OR AL, (OH NEUT JUMPER)	(N)	12'	711-716	–
25	WIRE, #6, BARE STRANDED COPPER		25'	–	813536
26	BRACKET, DISCONNECT, ANGLE MOUNTING, 1/4" X 3"		8	–	166542
27	BOLT, MACH, GALV, 1/2" X 8", 1 RD & 1 DBL COIL WASH	(D)	24	392.1&.2	–
28	BOLT, MACH, GALV, 3/8" X 3"	(E)	8	392.1&.2	–
29	SWITCH, DISCONNECT, 14.4KV, 600 A OR 1200 A		6	1205	–
30	COMPRESSION TERMINALS, CU, 2 HOLE (SIZE AS REQ'D)		12	794-795	–
31	BRACKET, POTHEAD MOUNTING		6	1400/4200	–
32	BRACKET, CUTOUT/ARRESTER, FOR CROSSARM MOUNTING	(E)	6	–	166070
33	ARRESTER, LIGHTNING		6	1247	–
34	CONDUIT, PVC, SCHEDULE 40, 1-1/2"	(E)	10'	–	251232
35	STRAPS, PIPE, GALV, 1" & 60 NAILS, GALV	(E)	AS REQ'D	–	697792 491552
36	WIRE, BARE STRANDED CU, (C.P. NEUTRAL SIZE)	(N)	35'	715-716	–
37	WIRE, #4, BARE STRANDED COPPER		45'	–	813760
38	STAPLES, MOULDING, GALV, 3" X 1-1/16" X 1/4"	(D) (E)	AS REQ'D	–	678560
39	UNIT GROUND, COMPLETE	(Q)	1	–	603136
40	CLAMP, 5/8", GROUND ROD	(E)	2	–	230016
41	TERMINALS, UNDERGROUND CABLE		6	4111	–
42	RISER CONSTRUCTION		AS REQ'D	1400/4200	–
43	BRACKET, LADDER ARM	(E)	AS REQ'D	1404/4204	167184
44	NUT, CLAMPING CHANNEL, W/SPRING, 1/2"	(E)	AS REQ'D	1404/4204	503488
45	CHANNEL, DOUBLE GALV, 24"	(E)	AS REQ'D	1404/4204	216700
46	BOLT, MACH, GALV, 5/8" X (LENGTH AS REQ'D), 1 SQUARE, 1 ROUND & 1 DOUBLE COIL SPRING WASHER	(E)	1	392	–
47	GAIN, CROSSARM, BRACELESS	(G)	1	–	369598
48	BOLT, MACH, GALV, 5/8" X 7", 1 ROUND & 1 DOUBLE COIL SPRING WASHER	(E)	2	392	–

FOR FIELD MAINTENANCE ONLY

CABLE SIZE	UG MACRO UNIT PORCELAIN
	W/LADDER ARMS
3C-#750 AL TWO RUNS	2R750L
3C-#1000 AL TWO RUNS	2R-1KL

TABLE OF CONTENTS

	SDG&E ELECTRIC STANDARDS	
DATE 1-1-93 APPD JLB/RDJ	12.47KV AND BELOW DEAD END CABLE POLE, 6 OR 7 OH CONDUCTORS 1 OR 2 TERMINALS PER CONDUCTOR, HOOKSTICK SWITCHED	OH 1499.505 ~~UG 4299.505~~ SUPERCEDES 1451.2 (1-1-93)

INSTALLATION:

A. NEW CABLE POLES SHALL HAVE A STANDARD DEPTH OF 9'. IN MOST CASES THIS WILL REQUIRE A 5' TALLER POLE.

B. THIS CONSTRUCTION TO BE USED WITH 350 KCMIL AND LARGER UNDERGROUND CABLE.

(C) INTERCONNECT OVERHEAD NEUTRAL, TERMINAL BASE, AND CONCENTRIC CABLE NEUTRAL CONDUCTOR TO LIGHTNING ARRESTER GROUND.

(D) REDUCE QUANTITIES AS REQUIRED WHEN NOT USING NEUTRAL .

(E) EXEMPT MATERIAL.

(F) INSTRUCTIONS TO INSTALL POTHEAD MOUNTING BRACKETS AND LIGHTNING ARRESTER BRACKETS.

(G) DO NOT CUT GAINS IN THE POLE WHEN INSTALLING THE VERTICALLY MOUNTED SECTIONALIZING SWITCH ARMS. THE GAIN HARDWARE USED HERE MAKE CUT GAINS UNNECESSARY.

(N)

UG CABLE SIZE AWG OR KCMIL, AL	OH JUMPER COND SIZE, AWG OR KCMIL, CU	OH NEUTRAL JUMPER SIZE CU OR AL	CABLE POLE NEUT SIZE (CU) UNDER POTHEAD ARM OR TRIPLE TERM BRKT
350	4/0	SAME SIZE	#2 PER PHASE
750	500	AS O.H. NEUT	1/0 PER PHASE
1000	500	CONDUCTOR	1/0 PER PHASE

REFERENCE:

(O) ALLOWABLE WORKING AND CLIMBING SPACE – SEE STD. 251.

(P) POLE STEPPING – SEE STD. 363.

(Q) GROUNDING METHODS – SEE PAGE 1002.5.

(R) RISER POSITIONS – SEE STANDARD 1402/4202.

(S) MINIMUM VERTICAL SEPARATION AS PER G.O. 95 – SEE STD. 1406/4206.

(T) SEE STANDARD 1407/4207 FOR PORCELAIN AND NON PORCELAIN TERMINAL MOUNTING BRACKET INSTRUCTIONS AND MATERIALS.

FOR FIELD MAINTENANCE ONLY

TABLE OF CONTENTS

OH 1499.506 ~~UG 4299.506~~ SUPERCEDES 1451.3 (1-1-93)	SDG&E ELECTRIC STANDARDS 12.47KV AND BELOW DEAD END CABLE POLE, 6 OR 7 OH CONDUCTORS 1 OR 2 TERMINALS PER CONDUCTOR, HOOKSTICK SWITCHED	DATE 1-1-93 APPD JLB/LDJ

SCOPE: THIS STANDARD SHOWS A DEADEND CONSTRUCTION FOR 12.47 KV, THREE–PHASE CABLE POLE, WITH NEUTRAL, AND A HORIZONTAL MOUNTED SCADA–MATE SWITCH. (B)

NOTE: THIS INSTALLATION REQUIRES TRUCK ACCESS. CONTACT TELECOMMUNICATIONS BEFORE DESIGN BEGINS TO DETERMINE COMMUNICATIONS REQUIREMENT.

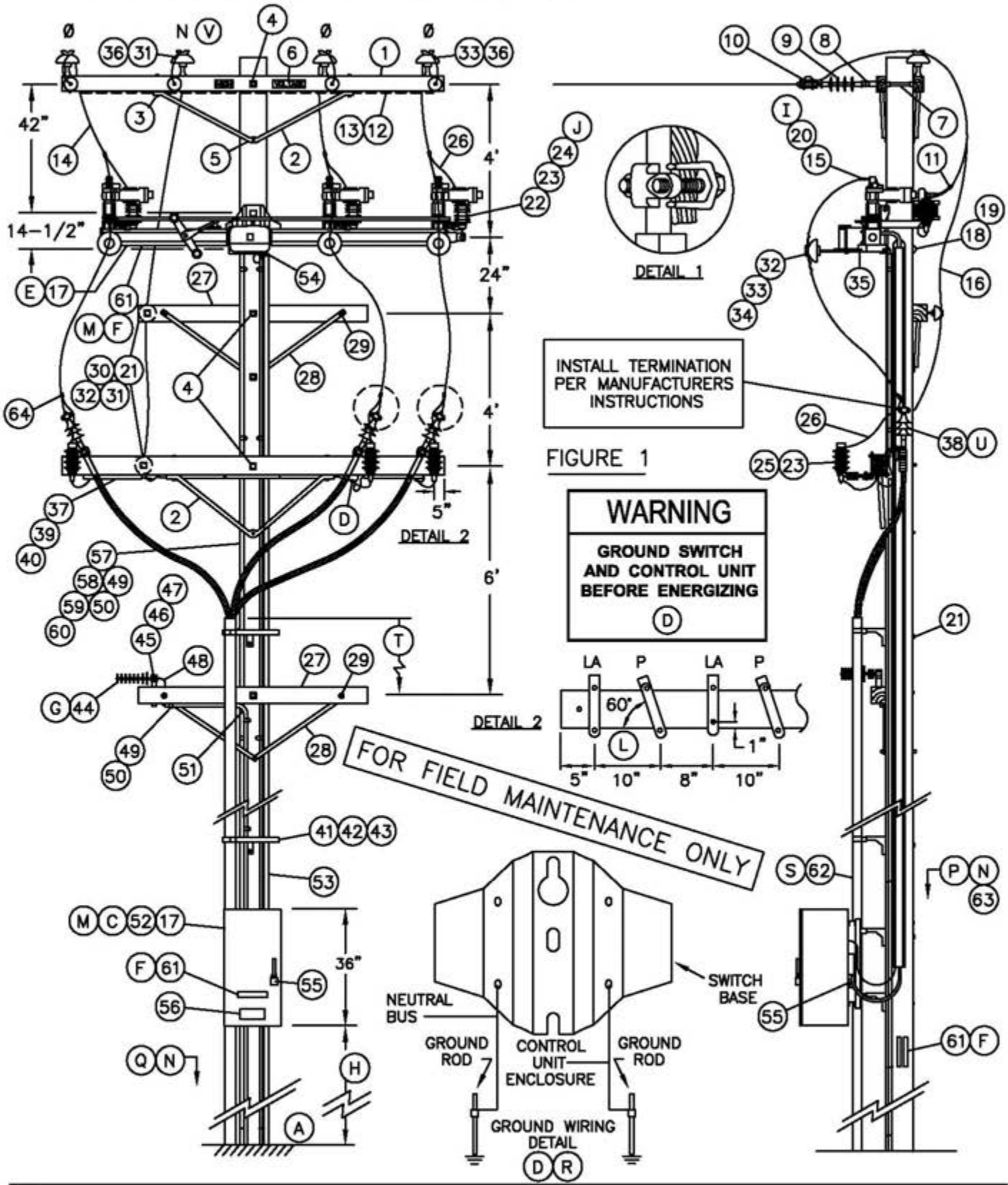

FIGURE 1

© 1998 - 2010 San Diego Gas & Electric Company. All rights reserved. Removal of this copyright notice without permission is not permitted under law.

1499.601 4299.601 SUPERSEDES 1445.1 (10–20–05)	SDG&E ELECTRIC STANDARDS 12.47 KV DEAD END CABLE POLE, THREE–PHASE WITH NEUTRAL, HORIZONTAL SCADA–MATE SWITCH	DATE 10–20–05 APPD PA / JJ

TABLE OF CONTENTS

TABLE OF CONTENTS

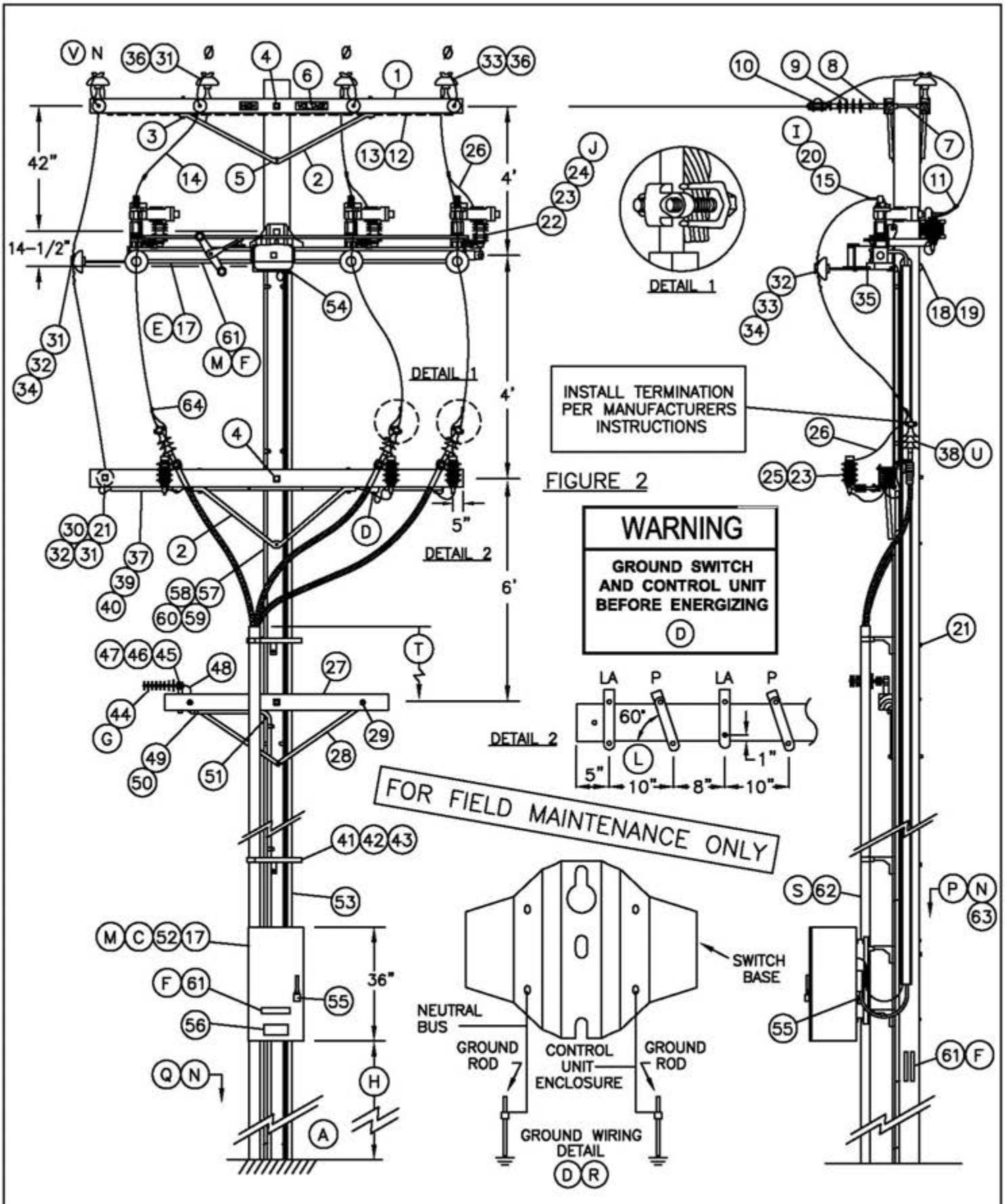

©1998 - 2010 San Diego Gas & Electric Company. All rights reserved. Removal of this copyright notice without permission is not permitted under law.

DATE 10-20-05 APPD PA / JJ	SDG&E ELECTRIC STANDARDS 12.47 KV DEAD END CABLE POLE, THREE-PHASE WITH NEUTRAL, HORIZONTAL SCADA-MATE SWITCH	1499.602 4299.602 SUPERSEDES 1445.2 (10-20-05)

BILL OF MATERIAL:

ITEM	DESCRIPTION		QUANTITY	CONSTR. STD	STOCK NUMBER	ASSEMBLY UNITS
1	CROSSARM, 3-3/4" X 5-3/4" X 10'-0"		3	–	294128	4–
2	BRACE, ANGLE, LINEARM=5'-0", PH ARM=4'-0"	4'	1	391	164032	4HUB
		5'	2	391	164128	5HUB
3	BOLT, MACH, GALV, 1/2" X 7", 1 ROUND AND 1 DOUBLE COIL SPRING WASHER		6	392	–	–
4	BOLT, MACH, GALV, 5/8" X (LENGTH AS REQ'D), 2 SQUARE AND 1 DOUBLE COIL SPRING WASHER		4	392	–	–
5	BOLT, MACH, GALV, 5/8" X (LENGTH AS REQ'D) AND 1 DOUBLE COIL SPRING WASHER		1	392	–	–
6	SIGN, HIGH VOLTAGE, AND		2	–	647648	HV
	9 ROOFING NAILS, GALV		–	–	492224	
7	BOLT, SPACE, GALV, 5/8" X (LENGTH AS REQ'D), 3 SQUARE, 2 ROUND, 2 DOUBLE COIL SPRING WASHERS AND 1 NUT		4	392	–	–
8	CLEVIS, DEAD END, 5/8" BOLT STEEL (CLOSED TYPE)		4	–	235712	–
9	INSULATOR, SUSPENSION, 12KV, CLEVIS		4	750	431650	4DE
10	CLAMP, STRAIGHT LINE, D.E.		4	741–743	–	–
11	CONNECTOR, WIRE COMPRESSION (SIZE AS REQ'D)		AS REQ'D	783–786	–	–
12	WIRE, #8 BARE SOLID ANNEALED COPPER		12'	–	812928	BOND8
13	STAPLE, FENCE, GALV, 1-1/4"		AS REQ'D	–	678528	
14	WIRE, BARE STRANDED COPPER (OH JUMPERS) (K)		45'	715	–	–
15	TERMINAL, COMPRESSION LUG (I)		6	794–795	–	–
16	WIRE, BARE STRANDED CU OR ACSR/AW BARE (OH NEUT JUMPER) (K)		14'	711–715	–	–
17	SWITCH, SCADA-MATE, 14.4 KV, POLE MOUNTED, INCLUDING 35' CONTROL CABLE, CONTROL UNIT AND RTU (E)		1	–	704690	AUTOSW (F)
18	BOLT, MACH, GALV, 5/8" X (LENGTH AS REQ'D), 1 SQUARE CURVED RIBBED AND 1 DOUBLE COIL SPRING WASHER		2	392	–	–
19	COVER, BOLT, PLASTIC &		2		285696	–
	6 – 10D NAILS, GALV		AS REQ'D		491392	–
20	BOLT, STAINLESS STEEL, 1/2" X 1-1/2" WITH 2 FLAT & 2 BELLEVILLE WASHERS & SILICONE BRONZE NUT (I)		12	392	148672	–
21	BOLT, MACH, GALV, 5/8" X (LENGTH AS REQ'D), 2 SQUARE & 1 DBL COIL SPRING WASHER		AS REQ'D	392	–	–
22	BOLT, MACH, GALV, 1/2 X 2-1/2", 1 ROUND AND 1 LOCK WASHER		3	392	–	–
23	ARRESTER, LIGHTNING (J)		6	–	113248	LA12C
24	SERVICE POST CONNECTOR		3	–	262560	–
25	BRACKET, CUTOUT/ARRESTER, FOR CROSSARM MOUNTING		3	–	166070	LA/B-C
26	WIRE, #6, BARE STRANDED COPPER	FT	18'	715	813536	BS6C
		LB	2			
27	CROSSARM, 3-1/2" X 4-1/2" X 6'-0"		2	380.2	294112	2S
28	BRACE, FLAT, CROSSARM, 28"		4	–	164192	
29	BOLT, MACH, GALV, 3/8" X 4-1/2" & 1 ROUND WASHER		4	392.2	–	–
30	PIN, TRANSFORMER LEAD ADAPTER, 1"		2	–	529248	PS/01
31	INSULATOR, 12KV NEUTRAL		3	–	429216	55-3C
32	WIRE, TIE		AS REQ'D	760–764	–	–
33	INSULATOR, 12KV, 55-5		6	750	429056	55-5C
34	INSULATOR STANDOFF BRACKET, 1" X 30"		3 OR 4	394	166144	KBKT30
35	"L" BRACKET , 2-1/2" X 2-1/2", GALV		3	–	166208	–
36	INSULATOR PIN, 12KV, 1"		4	396	532704	PS1
37	WIRE, BARE STRANDED COPPER (UNDER POTHEAD ARM) (K)		12'	715	–	–

FOR FIELD MAINTENANCE ONLY

TABLE OF CONTENTS

© 1998 - 2010 San Diego Gas & Electric Company. All rights reserved. Removal of this copyright notice without permission is not permitted under law.

1499.603 4299.603 SUPERSEDES 1445.3 (10-20-05)	SDG&E ELECTRIC STANDARDS 12.47 KV DEAD END CABLE POLE, THREE-PHASE WITH NEUTRAL, HORIZONTAL SCADA-MATE SWITCH	DATE 7-9-03 APPD PBALMPB

BILL OF MATERIAL: (CON'T)

ITEM	DESCRIPTION		QUANTITY	CONSTR. STD	STOCK NUMBER	ASSEMBLY UNITS
38	TERMINALS AND UNDERGROUND CABLE (U)		3	4111	–	–
39	CONDUIT, PVC, TYPE 2, SCHEDULE 40, 1–1/2"		10'	–	251232	P11/2C
40	STRAPS, PIPE, GALV, 1–1/2", & 2 – 6D NAILS, GALV		AS REQ'D	–	697664	–
			AS REQ'D	–	491552	
41	BRACKET, LADDER ARM		AS REQ'D	1404/4204	167184	RSRARM
42	NUT, CLAMPING CHANNEL, W/SPRING, 1/2"		AS REQ'D	1404/4204	503488	
43	CHANNEL, DOUBLE GALV, 24"		AS REQ'D	1404/4204	216700	
44	ANTENNA, SCADA, COMMUNICATION, BROADBAND AND CONNECTORS (G)		1	–	109570	ANT
45	NIPPLE, PIPE 2" X 7", ALUM.		1	–	–	ANTXMB
46	BOLT, MACH, GALV. 1/2" X 9"		1	–	153184	
47	CENTERING WASHER, GALV.		2	–	795520	
48	CABLE, FLEXIBLE 1/2" COAXIAL SCADA ANTENNA		AS REQ'D	–	191906	ANTCAB
49	CONDUIT, PVC, SCHEDULE 40, 1/2"		150'	–	251168	P1/2–C
50	STRAPS, PIPE GALV, 1/2", & 6D NAILS, GALV		AS REQ'D	–	697728	–
			AS REQ'D	–	490656	–
51	ELBOW, PVC, 1/2"		1	–	–	–
52	TRANSCEIVER, 12V DC		1	–	749500	SOTRAN
53	U–GUARD, 2" X 10', POLYETHYLENE		3	–	249940	2UMOLD
54	GRIP, CONTROL CABLE		1	–	394018	–
55	PADLOCK, SCHLAGE ELECTRIC SERIES		2	–	514848	–
56	DECAL "SCADA" "INFORM S.C.O. UPON ENTRY"		1	207	301934	–
57	WIRE, #2 BARE STRANDED COPPER	FT	100'	–	813664	BS2R
		LB	20#			
58	STAPLES, FENCE, GALV, 1–1/4"		AS REQ'D	–	678528	–
	STAPLES, MOULDING, GALV, 3" X 1–1/16" X 1/4"		AS REQ'D	–	678560	–
59	GROUND ROD, 5/8" X 8' (D)(R)		2	1002	603072	ROD8
60	COPPER BONDED GROUND CONNECTOR		2	1002	259010	–
61	TAG, SWITCH NUMBER (F)		5	204	–	–
62	RISER CONSTRUCTION (S)		AS REQ'D	1400/4200	–	–
63	VISIBILITY STRIP (N)		4	208	304064	VSTRIP
64	HOT LINE CLAMP		3	788	227680	–

FOR FIELD MAINTENANCE ONLY

OH MACRO UNITS		
FIG.	NEUTRAL POSITION	MU
1	INSIDE	SMCPNI
2	OUTSIDE	SMCPNO

UG MACRO UNITS	
CABLE SIZE	W/LADDER ARMS
3C–#350	NP350L
3C–#750C	NP750L
3C–#1000	N1000L

INSTALLATION:

(A) NEW CABLE POLES SHALL HAVE A STANDARD SETTING DEPTH OF 9'. IN MOST CASES, THIS WILL REQUIRE A 5' TALLER POLE.

(B) THIS CONSTRUCTION TO BE USED WITH 350 KCMIL AND LARGER UNDERGROUND CABLE.

(C) SCADA SWITCH CONTROL IS SELF POWERED FROM POLE TOP SWITCH UNIT. NO LOCAL SECONDARY IS REQUIRED. FAULT INDICATION IS INTEGRATED WITH THE SWITCH CONTROL – NO EXTERNAL FAULT INDICATORS ARE REQUIRED.

© 1998 - 2010 San Diego Gas & Electric Company. All rights reserved. Removal of this copyright notice without permission is not permitted under law.

TABLE OF CONTENTS

DATE 10–20–05 APPD PBA / JJ	SDG&E ELECTRIC STANDARDS 12.47 KV DEAD END CABLE POLE, THREE–PHASE WITH NEUTRAL, HORIZONTAL SCADA–MATE SWITCH	1499.604 4299.604 SUPERSEDES 1445.4 (10–20–05)

TABLE OF CONTENTS

(D) **NOTE:** BEFORE ENERGIZING SWITCH, CONNECT GROUND LEADS TO THE GROUNDING POINT PROVIDED ON SWITCH MOUNTING BRACKET. INTERCONNECT OVERHEAD NEUTRAL, TERMINAL BASE AND CONCENTRIC CABLE CONDUCTOR TO LIGHTNING ARRESTER GROUND. INSTALL TWO SEPARATE GROUND RUNS FROM BASE OF SWITCH TO BASE OF POLE, UNDER SEPARATE COVERS, IN ADJACENT POLE QUADRANTS. CONNECT EACH RUN TO A SEPARATE SET OF GROUND RODS. CONNECT CONTROL UNIT ENCLOSURE GROUND WIRE TO ONE OF THE GROUND RUNS AND POTHEAD UNDERARM NEUTRAL BUS TO THE OTHER. – SEE GROUND WIRING DETAIL.

(E) WHEN MOUNTING SCADA SWITCH TO POLE, DISCARD POLE BAND. **DO NOT INSTALL POLE BAND.**

(F) SCADA SWITCH ASSEMBLY UNIT WILL GENERATE TWO SWITCH NUMBERS–ONE FOR THE SF6 INTER–RUPTER AND ANOTHER FOR THE MANUAL OPERATED DISCONNECT. THE VISUAL BREAK, MANUALLY OPERATED DISCONNECT WILL ALWAYS BE A LINE SWITCH, NORMALLY CLOSED AND ASSIGNED THE LOWER OF THE SWITCH ASSIGNMENT NUMBERS. A TAG FOR THE MANUALLY OPERATED DISCONNECT WILL BE INSTALLED AT THE BASE OF THE POLE AND ON THE UNDERSIDE OF THE SWITCH BASE NEAR THE OPERATING LEVER. THE SF6 INTERRUPTER CAN BE EITHER A LINE SWITCH OR A TIE SWITCH. TAGS FOR THE SF6 INTERRUPTER WILL BE INSTALLED IN THREE LOCATIONS; AT THE BASE OF THE POLE, OUTSIDE OF THE CONTROL CABINET DOOR AND ANOTHER ON THE INSIDE OF THE DOOR. AN INTERRUPTER OPEN/CLOSED INDICATOR IS LOCATED ON ONE END OF THE SWITCH ARM.

(G) PLANNER TO SPECIFY QUADRANT OF POLE FOR ANTENNA MOUNT WITH DATA FROM STANDARDS. POINTS LIST TO BE COMPLETED BY PLANNER AND SENT TO SENIOR ENGINEER, DISTRIBUTION OPERATIONS. SEE ELECTRIC STANDARDS TEAM FOR POINTS LIST FORMS.

(H) RTU TO BE MOUNTED AT 10' FROM GROUND LEVEL TO BOTTOM OF RTU CABINET WHEN NOT SUBJECT TO TRAFFIC CONTACT. IF VULNERABLE TO VEHICLE DAMAGE, MOUNT RTU AT 13' – 6" FROM GROUND LEVEL TO BOTTOM OF RTU CABINET. CONSIDER LARGE VEHICLES PARKING PARALLEL TO CURB.

(I) IF ATTACHING 1/0 OR 4/0 COPPER JUMPERS TO SCADA–MATE SWITCH, USE TWO BRONZE CABLE TAP LUGS (S/N 471296) IN PLACE OF BOLTS AND COMPRESSION LUG.

(J) INSTALL LIGHTNING ARRESTERS ON THE VOLTAGE SENSOR SIDE OF SCADA–MATE SWITCH IN THE PARTIAL ARRESTER PROTECTION AREA. INSTALL LIGHTNING ARRESTERS ON BOTH SIDES OF SCADA–MATE SWITCH IN THE GENERAL ARRESTER PROTECTION AREA. REFER TO STANDARD PAGE 1247.2 FOR LIGHTNING ARRESTER APPLICATION MAP. LIGHTNING ARRESTERS ARE TO BE GROUNDED THROUGH THE SWITCH BASE.

(K)

UG CABLE SIZE AWG OR KCMIL, AL	OH JUMPER COND SIZE, AWG OR KCMIL, CU	OH NEUT JUMPER SIZE			CABLE POLE NEUT SIZE (CU) UNDER POTHEAD ARM OR TRIPLE TERM BRKT
		CU	AL		
350	4/0	1/0	3/0	–	#2 PER PHASE
750	500	4/0	336.4	OR SAME SIZE AS O.H. NEUT CONDUCTOR	1/0 PER PHASE
1000	500	4/0	336.4		1/0 PER PHASE

(L) TURN TOP OF BRACKET OUTWARD TO OBTAIN APPROXIMATELY 60° ANGLE.

(M) CONTROL AND ANTENNA CONNECTIONS TO BE MADE BY SCADA PROJECT CREW. LINE CREW MOUNTS SWITCH TO POLE AND LEAVES CONTROL CABLE ON SITE.

REFERENCE:

(N) REFLECTOR STRIPS ARE REQUIRED ON ALL SECTIONALIZING/TIELINE SWITCHES – SEE STANDARD 208.

O. FOR OPERATION OF SCADA–MATE SWITCH – SEE STANDARD PRACTICE 311.

(P) ALLOWABLE WORKING AND CLIMBING SPACE – SEE STANDARD 251.

(Q) POLE STEPPING – SEE O.H. STANDARD 363.

(R) GROUNDING METHODS – SEE O.H. STANDARD 1002.

FOR FIELD MAINTENANCE ONLY

(S) RISER POSITION – SEE STANDARD 1402/4202.

(T) MINIMUM VERTICAL SEPARATION AS PER G.O. 95 – SEE STANDARD 1406/4206.

(U) SEE STANDARD 1407/4207 FOR NON–PORCELAIN TERMINAL MOUNTING BRACKET INSTRUCTIONS AND MATERIALS.

(V) ON ALL NEW CONSTRUCTION AND WHEN ADDING TO EXISTING CONSTRUCTION, NEUTRAL TO BE INSTALLED IN OUTSIDE PIN POSITION PER DESIGN MANUAL PAGE 5124.2.

© 1998 - 2010 San Diego Gas & Electric Company. All rights reserved. Removal of this copyright notice without permission is not permitted under law.

DATE 9–13–05 APPD PSA / JJ	SDG&E ELECTRIC STANDARDS 12.47 KV DEAD END CABLE POLE, THREE–PHASE WITH NEUTRAL, HORIZONTAL SCADA–MATE SWITCH	1499.605 4299.605 SUPERSEDES 1445.5 (10–20–05)

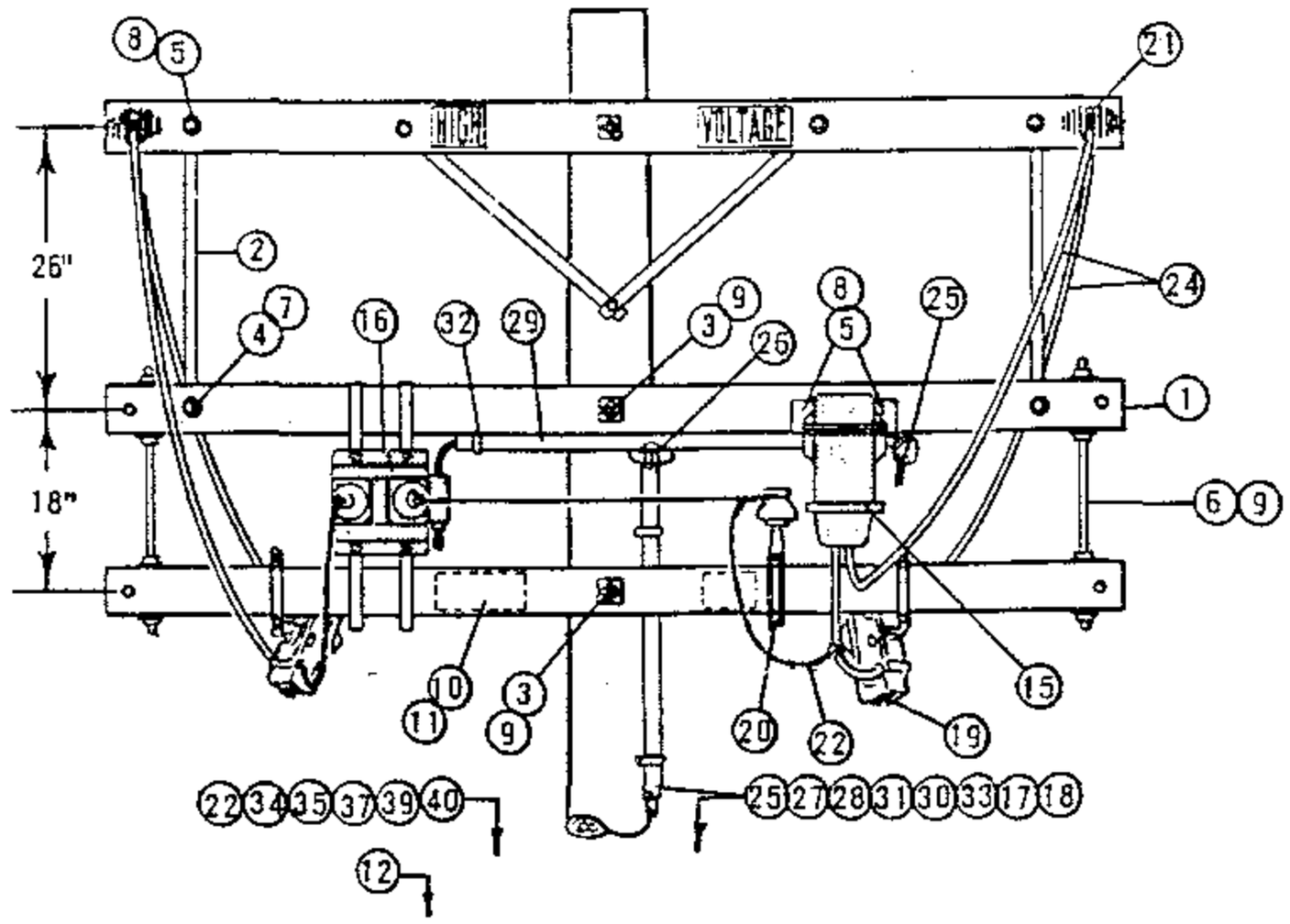

ELEVATION - LOAD SIDE

FOR FIELD MAINTENANCE ONLY

TABLE OF CONTENTS

NOTE:

(A) NOT REQUIRED WHERE METER BOX HAS HUB.

ITEM PTF	ITEM MI	DESCRIPTION	QUANTITY	STOCK NO. OR CONSTR STD
1		CROSSARM, 3 1/2" X 4 1/2" X 8' - 0"	2	PG 111 IT. 2
2		BRACE, FLAT CROSSARM 28"	2	164192
3		BOLT, MACH 5/8" X 14"	2	154880
4		BOLT, MACH 1/2" X 5"	2	153024
5		BOLT, MACH 3/8" X 4 1/2"	4	154368
6		BOLT, SPACE 5/8" X 24"	2	156640
7		WASHER, 1/2" ROUND	2	800192
8		WASHER, 3/8" ROUND	4	800288
9		WASHER, 3" SQ FLAT	12	799072.
10		SIGN, HIGH VOLTAGE	1	647648
11		NAILS, ROOFING #8 GALV	8	492224
12		POLE STEP	16	692992
13				
14				
	15	TRANSFORMER, CURRENT, WEST. TYPE WO 5KV, 5A	1	-
	16	TRANSFORMER, POTENTIAL, WEST. PTO, 2400/120V, HANGERS & BOLTS	1	-
	17	METER, SINGLE PHASE POWER	1	-
	18	CABINET, METER, TEST SWITCH, LAG SCREWS	1	161312
	19	CUTOUT, 5KV	2	PG 1211
	20	BRACKET, INSULATOR STAND OFF	1	166208
	21	CONNECTORS, SPLIT BOLT	7	PG 787
	22	WIRE, #6 BARE STRANDED COPPER	20'	813536
	23			

ITEM PTF	ITEM MI	DESCRIPTION	QUANTITY	STOCK NO. OR CONSTR STD
	24	WIRE, WP STRANDED (SAME SIZE AS PRIMARY)	24'	700 SECTION
	25	WIRE, #12 TYPE TW CODED COPPER, 3 CONDUCTORS, 41' EACH	123'	-
	26	BODY, CONDUIT, 3/4" PVC TYPE "T", BLANK COVER	1	147664
	27	BODY, CONDUIT, 3/4" PVC TYPE LB, BLANK COVER (A)	1	146384
	28	CONDUIT, 3/4" PVC SCH 80	31'	251520
	29	CONDUIT, 1" PVC SCH 40	4'	251200
	30	CONDUIT, 2" PVC SCH 40	20'	251296
	31	STRAP, PIPE 3/4" & 2-10D GALV NAILS	7	697888.491392
	32	STRAP, PIPE 1" & 2-8D GALV. NAILS	3	697792.491584
	33	STRAP, PIPE 2" & 2-10D GALV NAILS	12	697856.491392
	34	ROD, AND CLAMP, GROUND	1	630072.230016
	35	MOULDING, HARDWOOD	3'	487200
	36			
	37	STAPLES, MOULDING 3" X 1 1/16" X 1/4"	2	678560
	38			
	39	NAILS, 20D, GALV	4	491456
	40	STAPLES, FENCE 1 1/4" GALV	6	678528
	41			
	42			

DATE 2-28-83
APPD JWT / HRH

SDG&E ELECTRIC STANDARDS

POLETOP METERING, 2.4KV SINGLE PHASE

1499.801
SUPERSEDES
1481 (2-28-83)

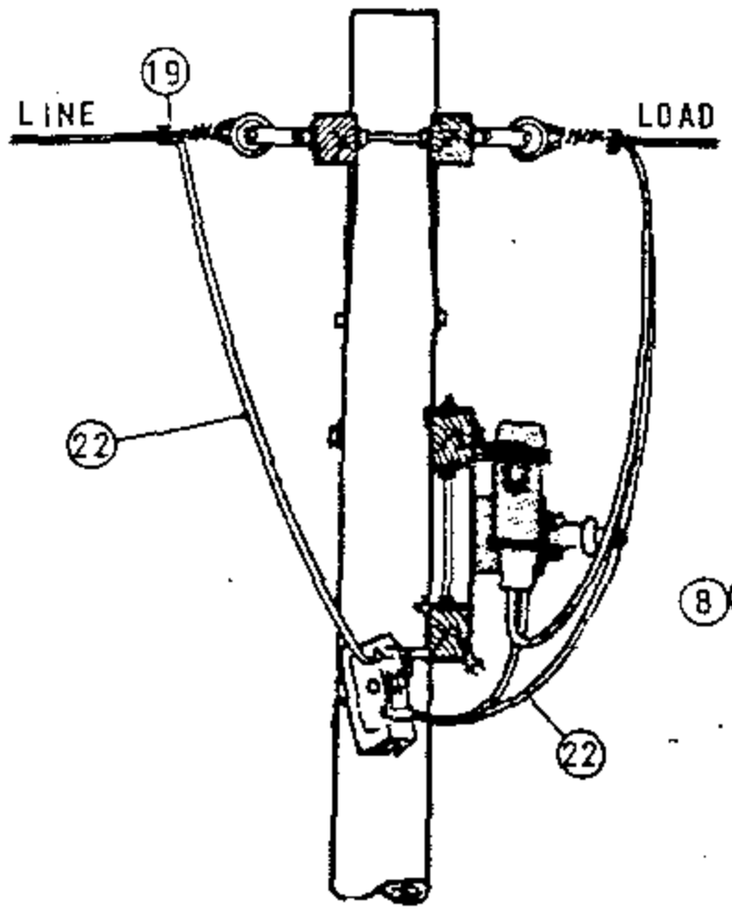

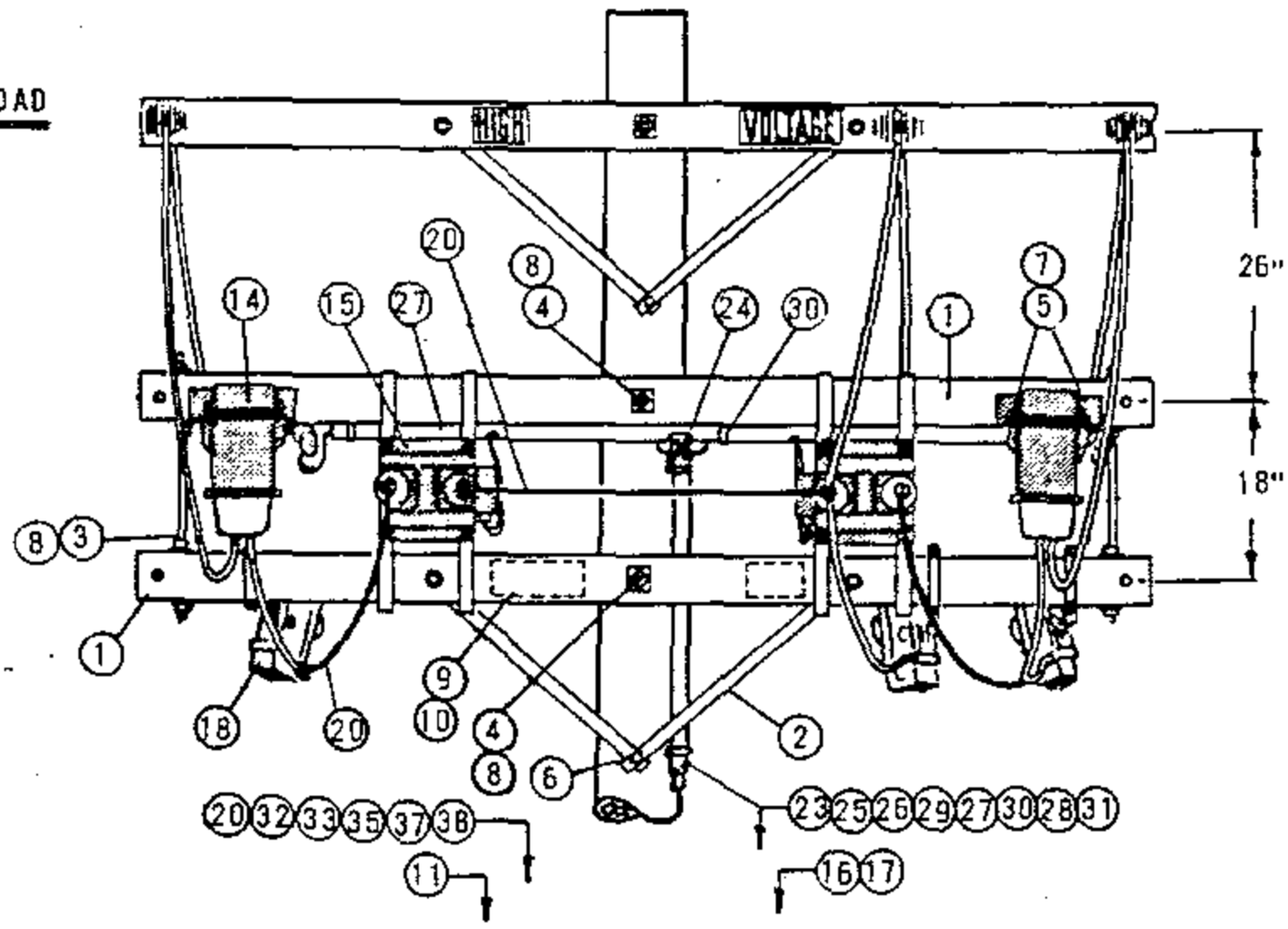

ELEVATION - LOAD SIDE

FOR FIELD MAINTENANCE ONLY

TABLE OF CONTENTS

NOTE:

(A) NOT REQUIRED WHERE METER BOX HAS HUB.

ITEM PTF	ITEM MI	DESCRIPTION	QUANTITY	STOCK NO. OR CONSTR STD
1		CROSSARM, 3 1/2" X 4 1/2" X 8' - 0"	2	PG 111 IT. 6
2		BRACE, FLAT CROSSARM 28"	2	164192
3		BOLT, SPACE 5/8" X __"	2	PG 139
4		BOLT, MACH 5/8" X __"	2	PG 139
5		BOLT, MACH 3/8" X 4 1/2"	4	154368
6		SCREW, LAG 1/2" X 4"	1	621568
7		WASHER, 3/8" ROUND	4	800288
8		WASHER, 3" SQUARE FLAT	12	799072
9		SIGN, HIGH VOLTAGE	1	647648
10		NAILS, ROOFING #8 GALV	8	492224
11		POLE STEPS	16	692992
12				
13				
	14	TRANSFORMER, CURRENT WEST. TYPE CTO 5KV 5A, HANGERS & BOLTS	2	-
	15	TRANSFORMER, POTENTIAL WEST TYPE PTO 2400/120V, HANGER & BOLTS	2	-
	16	METER, THREE PHASE POWER	1	-
	17	CABINET, METER TEST SWITCH; LAG SCREWS FOR MOUNTING	1	161312
	18	CUTOUT, 5KV	2	PG 1211
	19	CONNECTORS, SPLIT BOLT	9	PG 787
	20	WIRE, #6 BR STRANDED COPPER	18'	813536

ITEM PTF	ITEM MI	DESCRIPTION	QUANTITY	STOCK NO. OR CONSTR STD
	21			
	22	WIRE, WP STRANDED COPPER, 5KV (SAME SIZE AS PRIMARY)	34'	700 SECTION
	23	WIRE, #12 TYPE TW CODED CU 5 CONDUCTORS 46" EACH	230"	-
	24	BODY, CONDUIT, 3/4" PVC TYPE "T", BLANK COVER	1	147664
	25	BODY, CONDUIT 3/4" PVC TYPE LB, BLANK COVER (A)	1	146384
	26	CONDUIT, 3/4" PVC SCH 80	31'	251520
	27	CONDUIT, 1" PVC SCH 40	5'	251200
	28	CONDUIT, 2" PVC SCH 40	20'	251296
	29	STRAP, 3/4" PIPE & 2-10D NAILS	7	697888, 491392
	30	STRAP, 1" PIPE & 2-8D NAILS	3	697792, 491584
	31	STRAP, 2" PIPE & 2-10D NAILS	12	697856, 491392
	32	ROD & CLAMP, GROUND	1	630072, 230016
	33	MOULDING, HARDWOOD	3'	487200
	34			
	35	STAPLES, MOULDING	2	678560
	36			
	37	NAILS, 20D GALV	4	491456
	38	STAPLES, FENCE 1 1/4" GALV	6	678528

1499.802 SUPERSEDES 1482 (2-28-82)	SDG&E ELECTRIC STANDARDS POLETOP METERING, 2.4KV OPEN DELTA	DATE 2-28-83 APPD

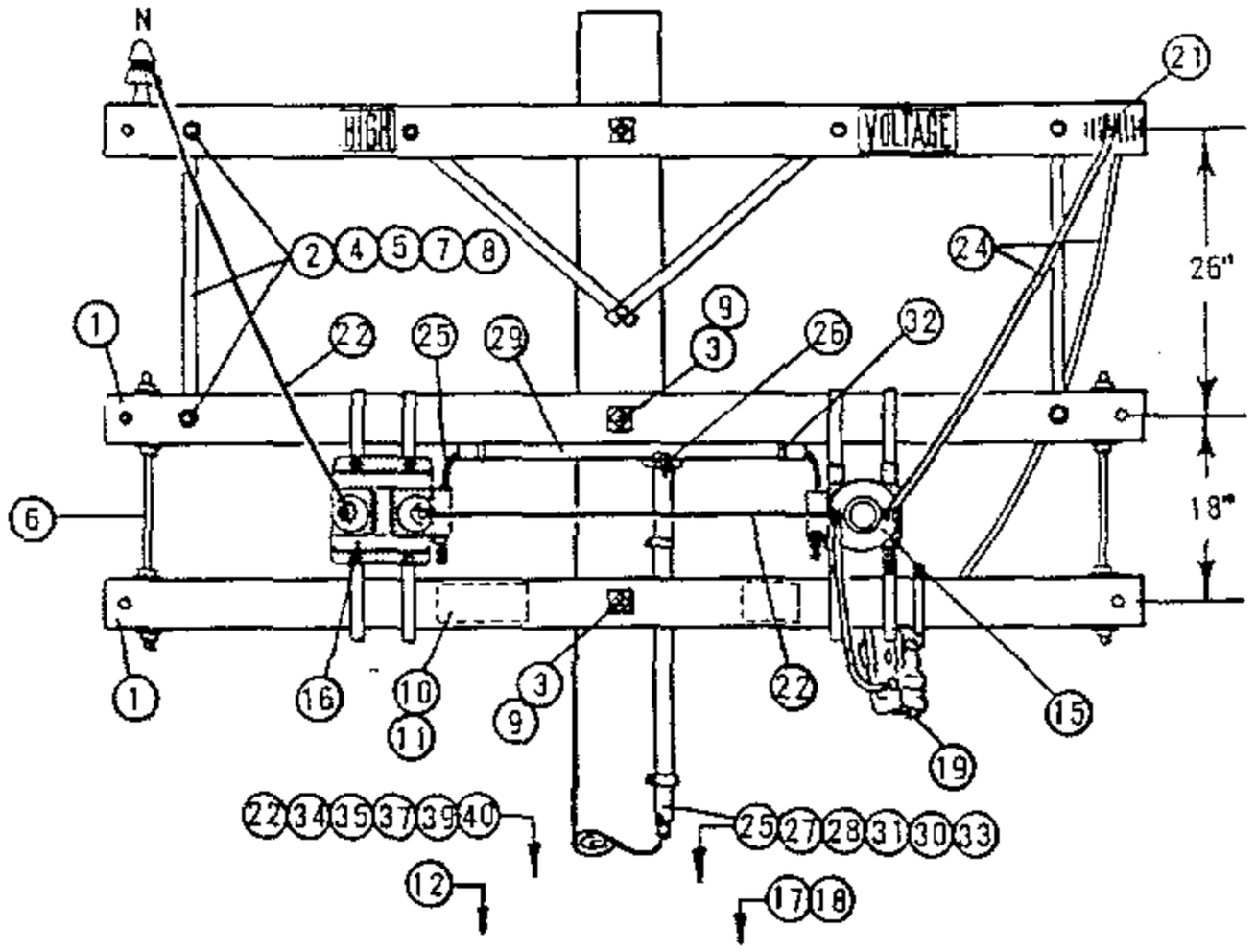

ELEVATION - LOAD SIDE

FOR FIELD MAINTENANCE ONLY

NOTE:

(A) NOT REQUIRED WHERE METER BOX HAS HUB.

ITEM PTF	ITEM MI	DESCRIPTION	QUANTITY	STOCK NO. OR CONSTR STD
1		CROSSARM, 3 1/2" X 4 1/2" X 8' - 0"	2	PG 111 IT. 2
2		BRACE, FLAT CROSSARM 28"	2	164192
3		BOLT, MACH 5/8" X 14"	2	154880
4		BOLT, MACH 1/2" X 5"	2	153024
5		BOLT, MACH 3/8" X 4 1/2"	4	154368
6		BOLT, SPACE 5/8" X 24"	2	156640
7		WASHER, 1/2" ROUND	2	800192
8		WASHER, 3/8" ROUND	4	800288
9		WASHER, 3" SQ FLAT	12	799072
10		SIGN, HIGH VOLTAGE	1	647648
11		NAILS, ROOFING #8 GALV	8	492224
12		POLE STEP	16	692992
13				
14				
	15	TRANSFORMER, CURRENT, WEST. TYPE WO 5KV, 5A	1	-
	16	TRANSFORMER, POTENTIAL, WEST. PTO, 2400/120V, HANGERS & BOLTS	1	-
	17	METER, SINGLE PHASE POWER	1	-
	18	CABINET, METER, TEST SWITCH, LAG SCREWS	1	161312
	19	CUTOUT, 5KV	2	PG 1211
	20			
	21	CONNECTORS, SPLIT BOLT	7	PG 787
	22	WIRE, #6 BARE STRANDED COPPER	20'	813536
	23		10'	194304

ITEM PTF	ITEM MI	DESCRIPTION	QUANTITY	STOCK NO. OR CONSTR STD
	24	WIRE, WP STRANDED (SAME SIZE AS PRIMARY)	24'	700 SECTION
	25	WIRE, #12 TYPE TW CODED COPPER, 3 CONDUCTORS, 41" EACH	123"	-
	26	BODY, CONDUIT, 3/4" PVC TYPE "T", BLANK COVER	1	147664
	27	BODY, CONDUIT, 3/4" PVC TYPE LB, BLANK COVER (A)	1	146384
	28	CONDUIT, 3/4" PVC SCH 80	31'	251520
	29	CONDUIT, 1" PVC SCH 40	4'	251200
	30	CONDUIT, 2" PVC SCH 40	20'	251296
	31	STRAP, PIPE 3/4" & 2-10D GALV NAILS	7	697888,491392
	32	STRAP, PIPE 1" & 2-8D GALV. NAILS	3	697792,491584
	33	STRAP, PIPE 2" & 2-10D GALV NAILS	12	697856,491392
	34	ROD, AND CLAMP, GROUND	1	630072,230016
	35	MOULDING, HARDWOOD	3'	487200
	36			486976,487008
	37	STAPLES, MOULDING 3" X 1 1/16"X1/4"	2	678560
	38			
	39	NAILS, 20D, GALV	4	491456
	40	STAPLES, FENCE 1 1/4" GALV	5	678528
	41			
	42			

SDG&E ELECTRIC STANDARDS

DATE 2-28-83
APPD JHT/HRH

POLETOP METERING, 4KV SINGLE PHASE

1499.803
SUPERSEDES
1483 (2-28-83)

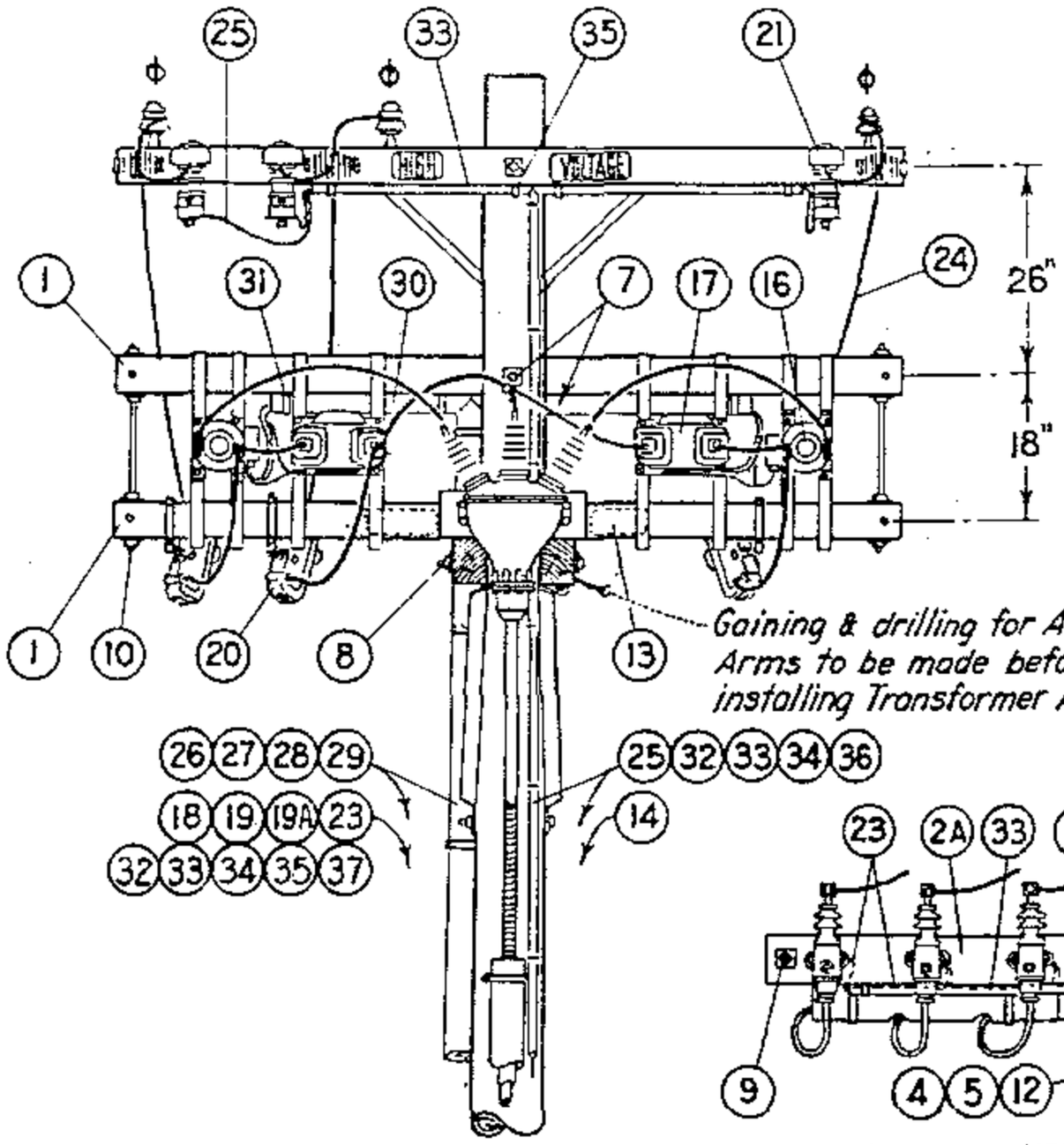

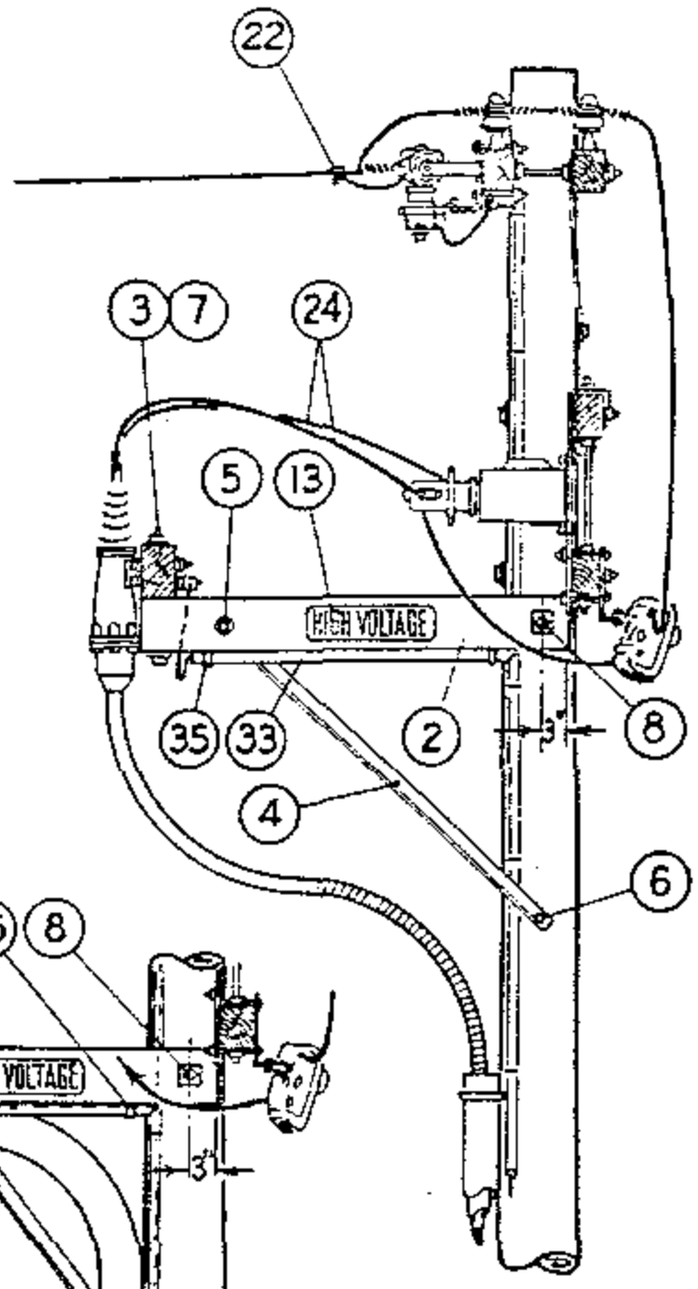

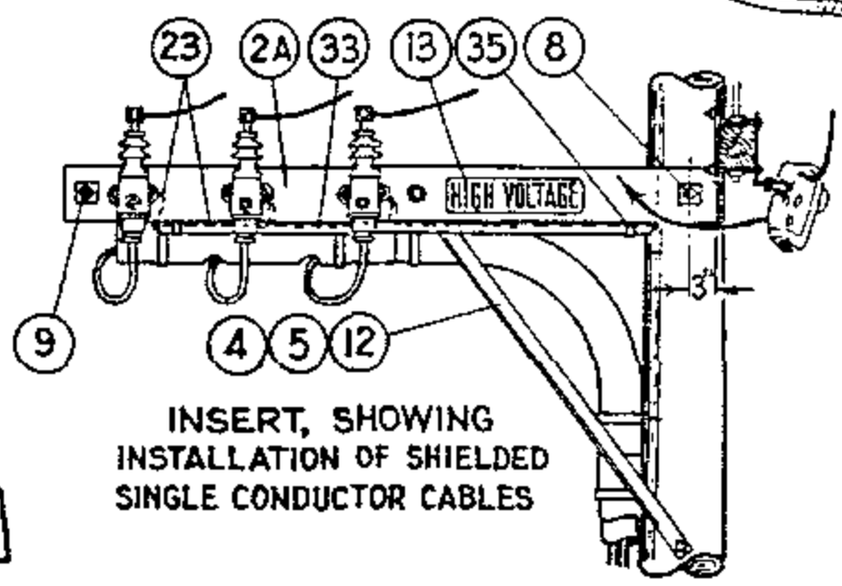

INSERT, SHOWING
INSTALLATION OF SHIELDED
SINGLE CONDUCTOR CABLES

FOR FIELD MAINTENANCE ONLY

UNDERGROUND SERVICE

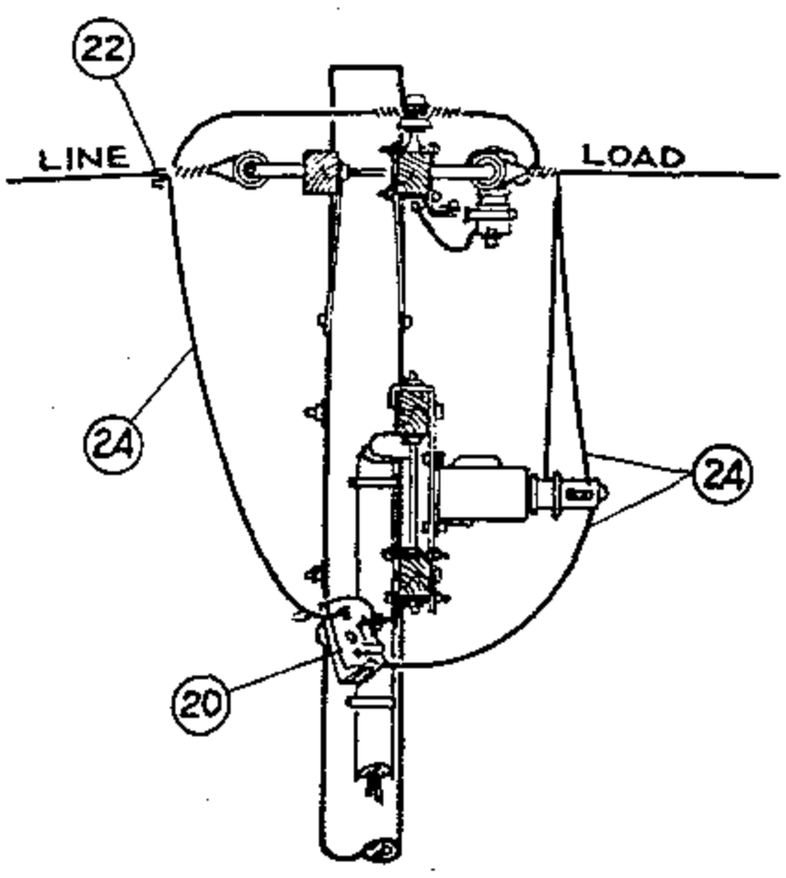

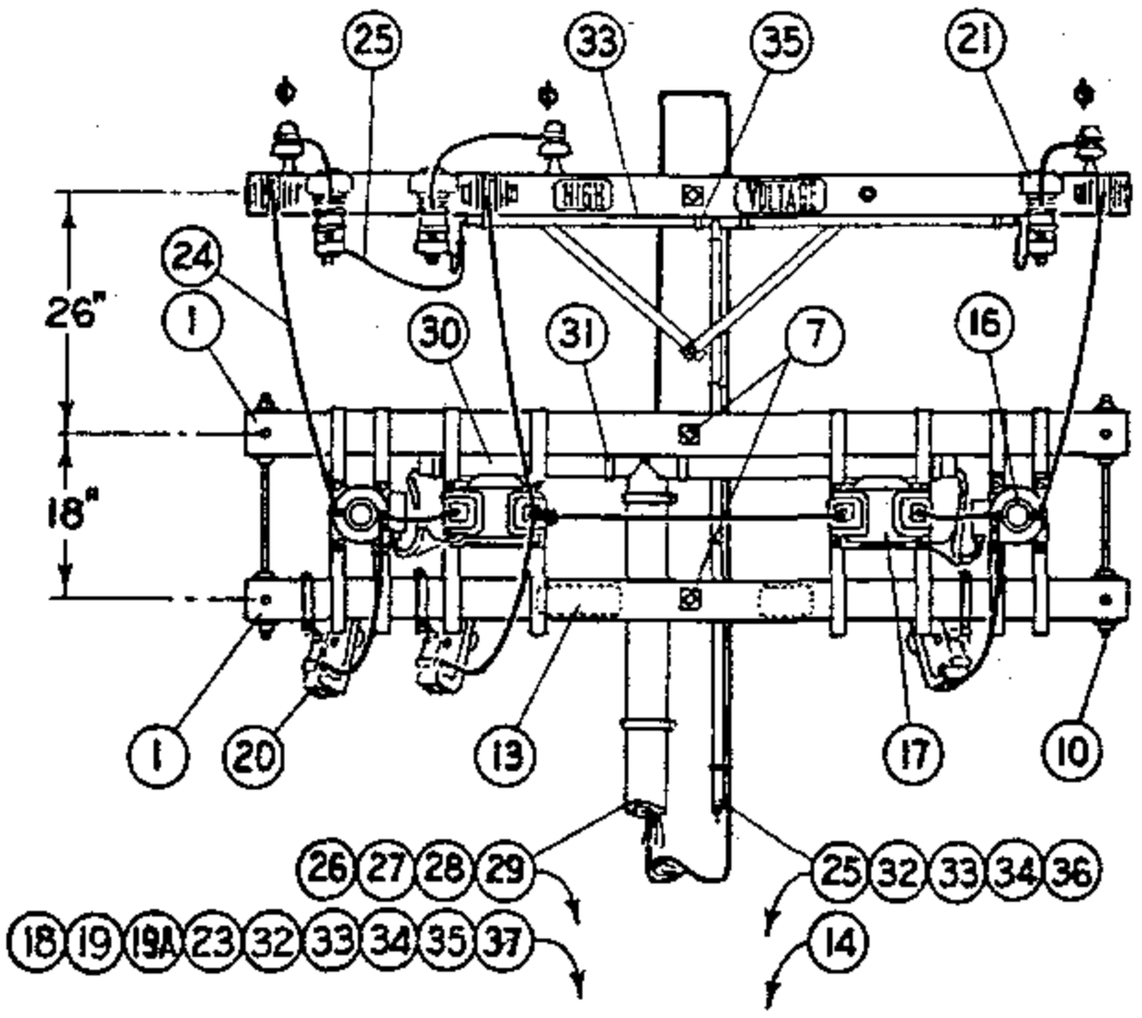

OVERHEAD SERVICE

1499.804 SUPERSEDES 1484.1 (2-28-83)	SDG&E ELECTRIC STANDARDS POLETOP METERING INSTALLATION, 4KV, 3 PHASE, 3 WIRE UG & OH SERVICES	DATE 2-28-83 APPD ~~WT~~/KRH

TABLE OF CONTENTS

FOR FIELD MAINTENANCE ONLY

NOTES:

(A) USE ONLY ONE GROUND ROD FOR LIGHTNING ARRESTER GROUND AND ONE GROUND ROD FOR METER GROUND WHERE A RESISTANCE OF LESS THAN 25 OHMS CAN BE OBTAINED WITH EACH ROD.

(B) DOUBLE METER CABINETS ARE REQUIRED FOR RKVAH METERING INSTALLATIONS.

(C) UNTWIST SUFFICIENT LENGTH OF #2 STRANDED WIRE TO CONNECT EACH ARRESTER AND POTHEAD GROUND WITH A SINGLE STRAND.

	ITEM	DESCRIPTION	QUANTITY U.G. SERVICE P.I.L.C.	QUANTITY U.G. SERVICE RUBBER LIKE	QUANTITY O.H. SERV.	STOCK NO. OR CONSTR STDS
P. T. & F.	1	3 1/2" x 4 1/2" x 8'-0" Crossarm, 6 Pin	2	2	2	PG 111 IT. 2
	2	3 3/4" x 5 3/4" x 4'-0" Pothead Alley Arm	2	–	–	PG 112 IT. 3
	2A	3 3/4" x 5 3/4" x 6'-0" (10 Pin arm, cut in half)	–	2	–	PG 111 IT. 4
	3	3 3/4" x 5 3/4" x 18" Wood Block, Pothead Support	1	–	–	–
	4	Pothead Alley Arm Brace, 4'-0"	2	1	–	163808
	5	Mach. Bolt, Galv. 5/8" x 5", 1 rd. Washer & 1 Nut	2	1	–	PGS 139, 140
	6	Mach. Bolt, Galv., 5/8" x 10"	1	–	–	PGS 139, 154816
	7	Mach. Bolt, Galv. 5/8" x 14", 2 Sq. Washers & 1 Nut	4	2	2	PGS 139, 140
	8	Mach. Bolt, Galv. 5/8" x 18", 2 Sq. Washers & 1 Nut	1	1	–	PGS 139, 140
	9	Space Bolt, Galv. 5/8" x 20", 4 Sq. Washers & 4 Nuts	–	1	–	PGS 139, 140
	10	Space Bolts, Galv. 5/8" x 26", 4 Sq. Washers & 4 Nuts	2	2	2	PGS 139, 140
	11					
	12	Lag Screw, Galv. 5/8" x 5"	–	1	–	621600
	13	High Voltage Sign & Galv. Roofing Nails	3	3	1	647648, 492224
	14	Pole Steps	16	16	16	692992
	15					
M. I.	16	Current Transformer, 5 Kv, Hangers & Bolts	2	2	2	–
	17	Potential Transformers, 4800/120V, Hangers & Bolts	2	2	2	–
	18	Meter Three Phase Power	1	1	1	–
	19	Meter Cabinet; Single, 15" x 30" x 10 1/2"; Double, 30" x 30" x 10 1/2"; Lag Screws for Mounting (B)	1	1	1	SINGLE 161312, DOUBLE 161184
	19A	Test Switch	1	1	1	710880-711008
	20	Cutout, Expulsion Fuse	3	3	3	PG 1211
	21	Lightning Arrester, 3 Kv.	3	3	3	113216
	22	Wire Connectors	5	5	8	PGS 783, 786
	23	#6 Bare Stranded Copper Wire, Meter Ground	14'	14'	14'	813536
	24	Bare Stranded Copper Wire, Size as Required	35'	35'	50'	PGS 715, 716, 717
	25	#2 Bare Stranded Copper Wire, L.A. Pothead Ground (C)	52'	52'	52'	813664
	26	#12 Type TW Coded Wire, 5 Conductors, 40' Each	200'	200'	200'	–
	27	Redwood Moulding	26'	26'	26'	PG 143 IT 1
	28	Moulding Straps, Galv.	13	13	13	697024
	29	3/4" Conduit, Rigid Iron; Pipe Strap & 2-8d Nails, Galv.	10'	10'	10'	251008, 696704
	30	2" Fibre Conduit	5'	5'	5'	251618
	31	2" Fibre Conduit Strap & 2-8d Nails, Galv.	4	4	4	PG 143, 491584
	32	Ground Rod and Clamp, incl. Conduit Ground Clamp	(A) 4	(A) 4	(A) 4	603072, 230016
	33	Hardwood Moulding	52'	54'	49'	487200
	34	Moulding Staples, Galv., 3" x 1 1/8" x 1/4"	24	22	22	678560
	35	3/4" Pipe Straps, Galv. & 2 8d Nails, Galv.	8	9	6	697888, 491584
	36	1/4" Fence Staples, Galv.	14	12	12	678528
	37	3/4" Type "LB" Condulet	1	1	1	146144
	38					

DATE 2-28-83
APPD JWT/ARH

SDG&E ELECTRIC STANDARDS

POLETOP METERING INSTALLATION, 4KV, 3 PHASE, 3 WIRE UG & OH SERVICES

1499.805
SUPERSEDES
1484.2 (2-28-83)

TABLE OF CONTENTS

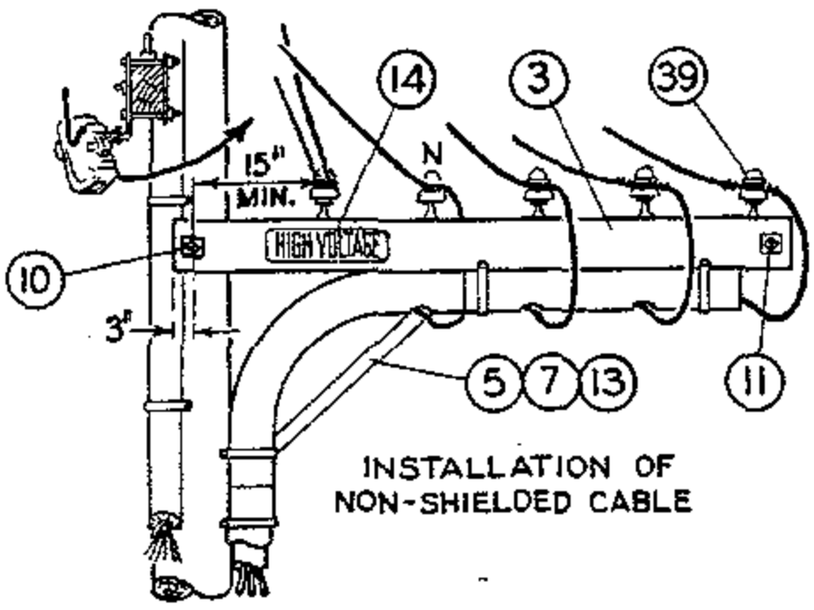

INSTALLATION OF NON-SHIELDED CABLE

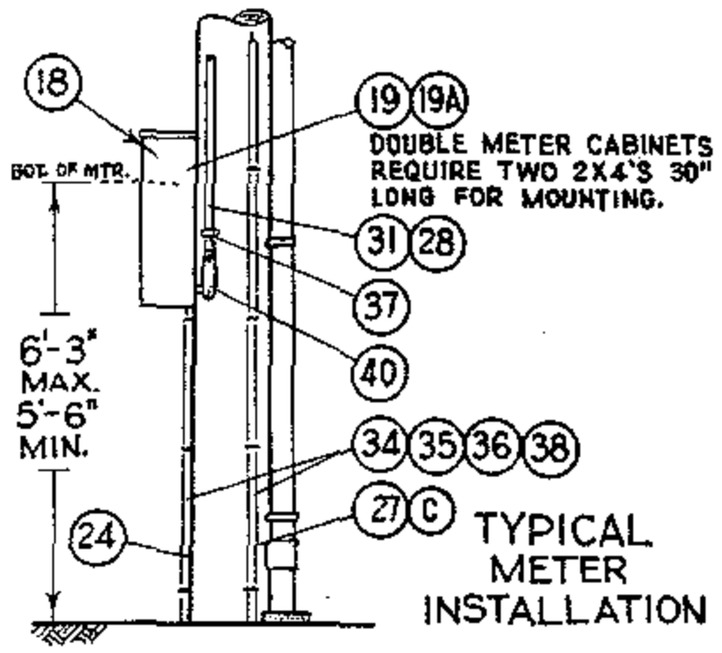

TYPICAL METER INSTALLATION

FOR FIELD MAINTENANCE ONLY

NOTES:

(A) USE ONLY ONE GROUND ROD FOR LIGHTNING ARRESTER GROUND AND ONE GROUND ROD FOR METER GROUND WHERE A RESISTANCE OF LESS THAN 25 OHMS CAN BE OBTAINED WITH EACH ROD.

(B) DOUBLE METER CABINETS ARE REQUIRED FOR RKVAH METERING INSTALLATIONS.

(C) UNTWIST SUFFICIENT LENGTH OF #2 STRANDED WIRE TO CONNECT EACH ARRESTER AND POTHEAD GROUND WITH A SINGLE STRAND.

	ITEM	DESCRIPTION	QUANTITY U.G. SERVICE P.I.L.C.	QUANTITY U.G. SERVICE SHIELD.	QUANTITY U.G. SERVICE NON SHIELD.	QUANTITY O.H. SERV.	STOCK NO. OR CONSTR STDS
P. T. & F.	1	3 3/4" x 5 3/4" x 10'- 0" Standard Arm	2	2	2	2	PG 119 IT. 2
	2	3 3/4" x 5 3/4" x 4'- 0" Pothead Alley Arm	2	–	–	–	PG 112 IT. 3
	3	3 3/4" x 5 3/4" x 12'- 0" (12Kv. Arm, Cut in Half	–	1	1	–	PG 119 IT. 4
	4	3 3/4" x 5 3/4" x 18" Wood Block, Pothead Support	1	–	–	–	–
	5	Pothead Alley Arm Brace, 4'- 0"	2	1	1	–	163808
	6						
	7	Machine Bolt, Galv., 5/8" x 5", 1 Round Washer & Nut	2	1	1	–	PGS 139, 140
	8	Machine Bolt, Galv., 5/8" x 10"	1	–	–	–	PGS 139, 140
	9	Machine Bolt, Galv., 5/8" x 14", 2 Square Washers & Nut	4	2	2	2	PGS 139, 140
	10	Machine Bolt, Galv., 5/8" x 18", 2 Square Washers & Nut	1	1	1	–	PGS 139, 140
	11	Space Bolt, Galv., 5/8" x 20", 4 Square Washers & 4 Nuts	–	1	1	–	PGS 139, 140
	12	Space Bolt, Galv., 5/8" x 28", 4 Square Washers & 4 Nuts	2	2	2	2	PGS 139, 140
	13	Lag Screw, Galv., 5/8" x 5"	–	1	1	–	621600
	14	High Voltage Sign & Galv. Roofing Nails	3	3	3	1	647648, 492224
	15	Pole Steps	16	16	16	17	692992
M. I.	16	Current Transformer, 5Kv., Hangers & Bolts	3	3	3	3	–
	17	Potential Transformer, 2400/120V, Hangers & Bolts	3	3	3	3	–
	18	Meter, Three Phase, Maximum Demand and/or Rkvah Recording	1	1	1	1	–
	19	Meter Cabinet; Single, 15" x 30" x 10 1/2"; Double, 30" x 30" x 10 1/2", Four Lag Screws for Mounting (B)	1	1	1	1	SINGLE 161312, DOUBLE 161184
	19A	Test Switch	1	1	1	1	710880 - 711008
	20	Cutout, Expulsion Fuse	3	3	3	3	PG 1211
	21	Lightning Arrester, 3Kv.	3	3	3	3	113216
	22	Standoff Bracket	–	–	–	2	165144
	23	Wire Connectors	6	6	6	13	PGS 783, 786
	24	#6 Bare Stranded Copper Wire, Meter Ground	14'	14'	14'	14'	813536
	25	Bare Stranded Copper Wire, Same Size as Line Neutral	14'	14'	14'	14'	PGS 715-717
	26	Bare Stranded Copper Wire, Size as Required	47'	52'	33'	33'	PGS 715-717
	27	#2 Bare Stranded Copper Wire, L. A. & Pothead Ground (C)	52'	52'	52'	52'	813664
	28	#12 Type TW Coded Wire, 7 Conductors, 40' Each	280'	280'	280'	280'	–
	29	Redwood Moulding	20'	20'	20'	20'	PG 143 IT 1
	30	Moulding Strap, Galv.	11	11	11	11	697024
	31	3/4" Conduit, Rigid Iron; Pipe Straps & 8d Nails; Galv.	10'	10'	10'	10'	251008, 696704, 491584
	32	2" Fibre Conduit	8'	8'	8'	8'	251616
	33	2" Fibre Conduit Straps & 2 8d Nails; Galv.	6	6	4	4	PG 143, 491584
	34	Ground Rod & Clamp, Including Conduit Ground Clamp	(A) 4	(A) 4	(A) 4	(A) 4	603072, 230016
	35	Hardwood Moulding, 1"	52'	55'	49'	49'	487200
	36	Moulding Staples, Galv., 3" x 1 1/8" x 1/4"	25	25	25	25	678560
	37	3/4" Pipe Straps, Galv. & 2 8d Nails, Galv.	8	9	6	6	697888, 491584
	38	1 1/4" Fence Staples, Galv.	14	12	12	12	678528
	39	Insulator, 4Kv. and Steel Pin	2	2	5	2	PG 750, 532608
	40	3/4" Type "LB" Condulet	1	1	1	1	146144
	41						
	42						

DATE 2-28-83
APPD JHF/KRH

SDG&E ELECTRIC STANDARDS

POLETOP METERING INSTALLATION, 4KV, 3 PHASE, 4 WIRE UG & OH SERVICES

1499.807
SUPERSEDES
1485.2 (2-28-83)

TABLE OF CONTENTS

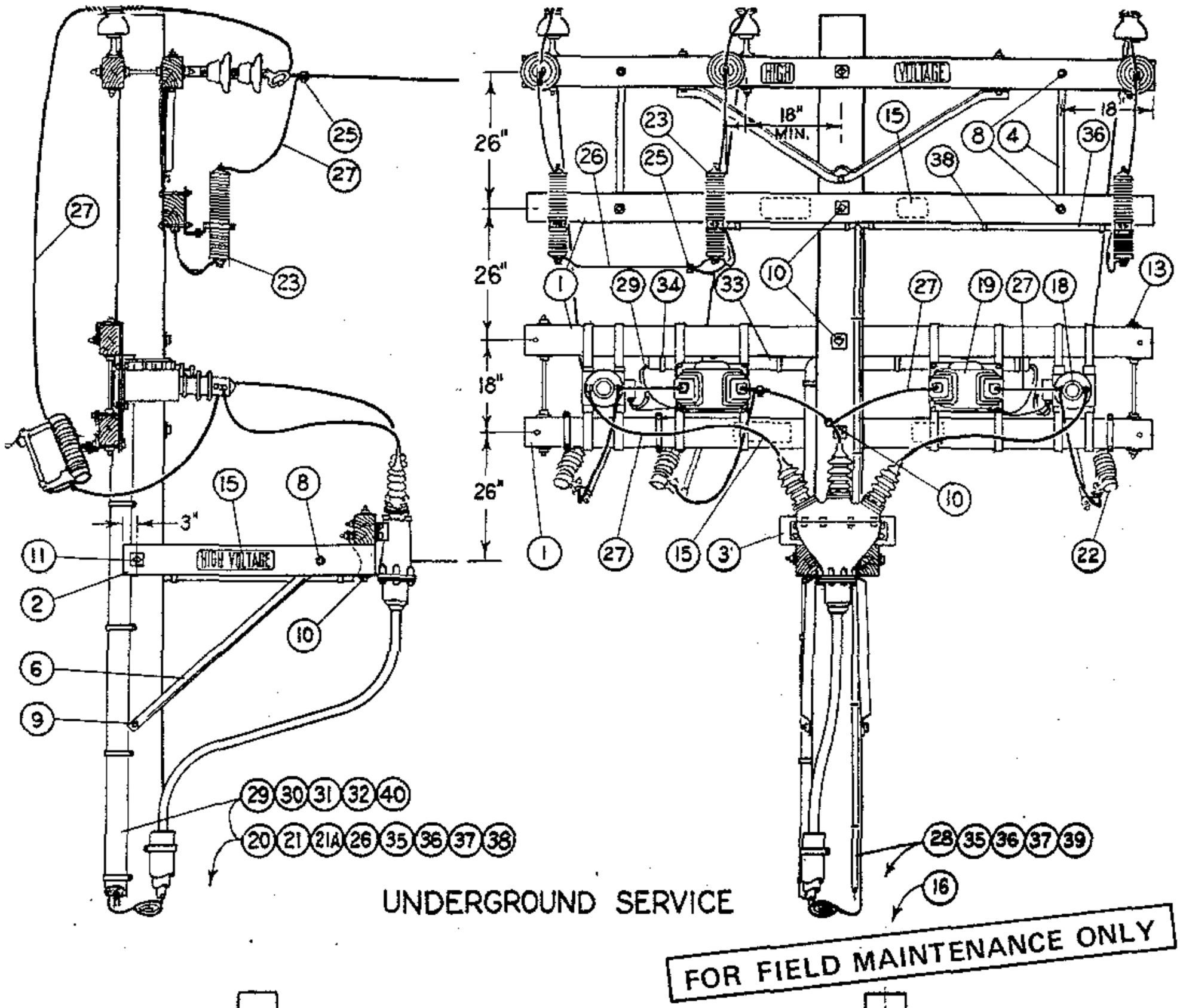

UNDERGROUND SERVICE

FOR FIELD MAINTENANCE ONLY

OVERHEAD SERVICE

1499.808 SUPERSEDES 1486.1 (2-28-83)	SDG&E ELECTRIC STANDARDS POLETOP METERING INSTALLATION, 12KV, 3 PHASE, 3 WIRE U.G. & O.H. SERVICES	DATE 2-28-83 APPD JMT/ARH

TABLE OF CONTENTS

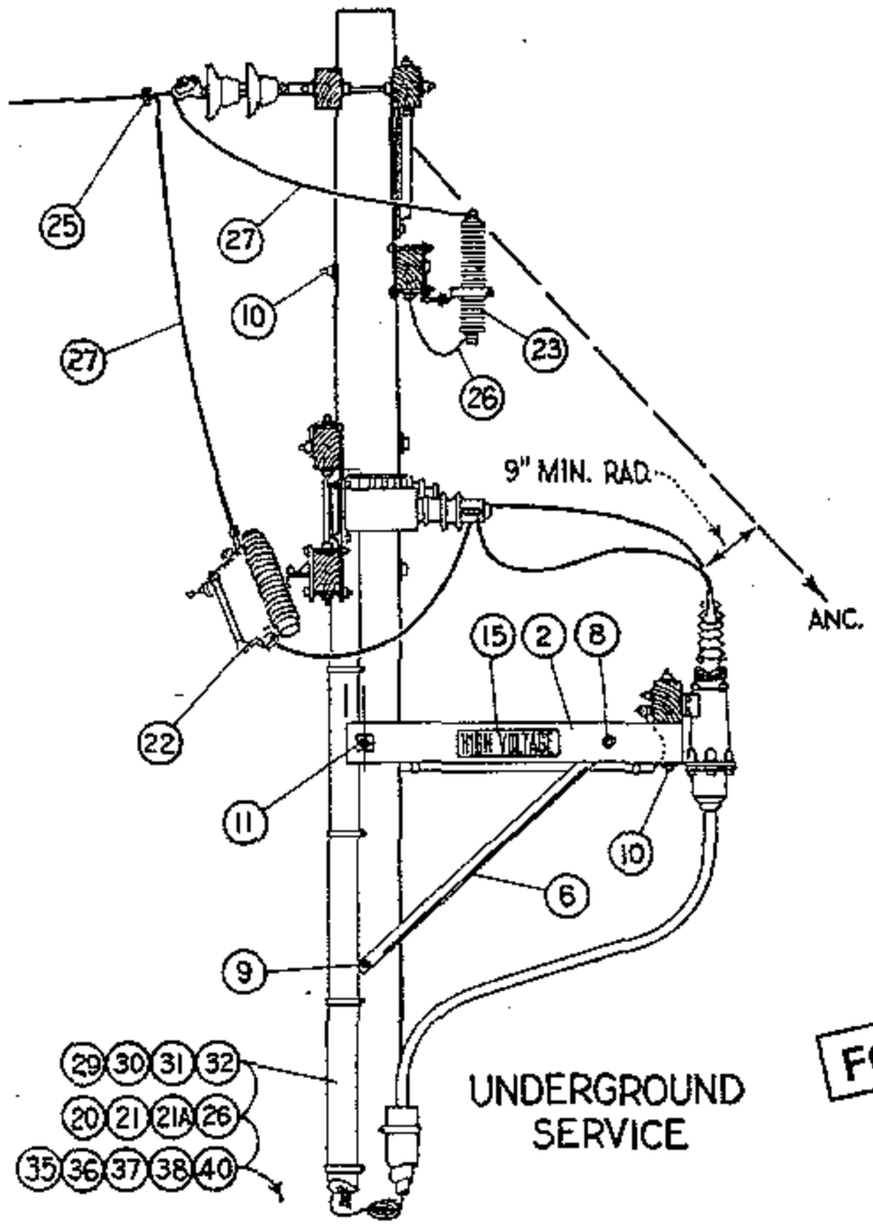

UNDERGROUND SERVICE

FOR FIELD MAINTENANCE ONLY

NOTES:

Ⓐ USE ONLY ONE GROUND ROD FOR LIGHTNING ARRESTER GROUND AND ONE GROUND ROD FOR METER GROUND WHERE RESISTANCE OF LESS THAN 25 OHMS CAN BE OBTAINED WITH EACH ROD.

Ⓑ DOUBLE METER CABINETS ARE REQUIRED FOR RKVAH METERING INSTALLATIONS.

	ITEM	DESCRIPTION	QUANTITY U.G. SERV.	QUANTITY O.H. SERV.	STOCK NO. OR CONSTR STDS
P. T. & F.	1	3 3/4" x 5 3/4" x 10'-0" Standard Arm	3	3	PG 119 IT. 2
	2	3 3/4" x 5 3/4" x 4'-0" Pothead Alley Arm	2	–	PG 112 IT. 3
	3	3 3/4" x 5 3/4" x 22" Wood Block, Pothead Support	1	–	–
	4	Flat Crossarm Brace, 36"	2	2	164224
	5				
	6	Pothead Alley Arm Brace, 4'-0"	2	–	163808
	7				
	8	Mach. Bolt, Galv., 5/8" x 5", 1 rd Washer, & 1 Nut	9	4	PGS 139, 140
	9	Mach. Bolt, Galv., 5/8" x 10"	1	–	PGS 139, 140
	10	Mach. Bolt, Galv., 5/8" x 14", 2 Sq. Washers & 1 Nut	5	3	PGS 139, 140
	11	Mach. Bolt, Galv., 5/8" x 18", 2 Sq. Washers & 1 Nut	1	–	PGS 139, 140
	12				
	13	Space Bolt, Galv., 5/8" x 26", 4 Sq. Washers & 4 Nuts	2	2	PGS 139, 140
	14				PGS 1212, 1213
	15	High Voltage Sign & Galv. Roofing Nails	2	2	647648, 492224
	16	Pole Steps	14	15	692992
	17				
M. I.	18	Current Transformer, 15 KV, Hangers & Bolts	2	2	–
	19	Potential Transformer, 12000/120 v, Hangers & Bolts	2	2	–
	20	Meter, Three Phase Power	1	1	–
	21	Meter Cabinet; Single, 15" x 30" x 10 1/2"; Double, 30" x 30" x 10 1/2"; Lag Screws for Mounting Ⓑ	1	1	SINGLE 161312, DOUBLE 161184
	21A	Test Switch	1	1	710680-711008
	22	Cutout, Expulsion Fuse	3	3	PGS 1212, 1213
	23	Lightning Arrester, 12 Kv.	3	3	113216
	24				
	25	Wire Connectors	5	8	PGS 783, 786
	26	#6 Bare Stranded Copper Wire - Meter Grnd. & L.A. Lateral	27'	27'	813536
	27	Bare Stranded Copper Wire, Size as Required	55'	65'	PGS 715-717
	28	#2 Bare Stranded Copper, Lightning Arrester Ground	54'	45'	813664
	29	#12 Type T W Coded Copper Wire, 5 Conductors # 34'	170'	170'	–
	30	Redwood Moulding, C-54.1 #1	16'	16'	PG 143 IT. 1
	31	Moulding Strap, Galv., C-54.1 #1A	8	8	697024
	32	3/4" Conduit, Rigid Iron; Pipe Strap & 2-8d Nails, Galv.	10'	10'	251008, 696704, 491584
	33	2" Fibre Conduit	6'	6'	251616
	34	2" Pipe Straps & 2-8d Nails, Galv.	4	4	697856, 491584
	35	Ground Rod & Clamp	Ⓐ 4	Ⓐ 4	603072, 230016
	36	Hardwood Moulding, 1"	49'	45'	487200
	37	Moulding Staples, Galv., 3" x 1 1/8" x 1/4"	30	30	678560
	38	3/4" Pipe Strap & 2-8d Nails, Galv.	10	8	697888, 491584
	39	1 1/4" Fence Staples, Galv.	12	12	678528
	40	3/4" Type "LB" Condulet	1	1	146144

SDG&E ELECTRIC STANDARDS

DATE 2-28-83
APPD ONT/KAR #

POLETOP METERING INSTALLATION, 12KV, 3 PHASE, 3 WIRE U.G. & O.H. SERVICES

1499.809
SUPERSEDES
1486.2 (2-28-83)

TABLE OF CONTENTS

TABLE OF CONTENTS

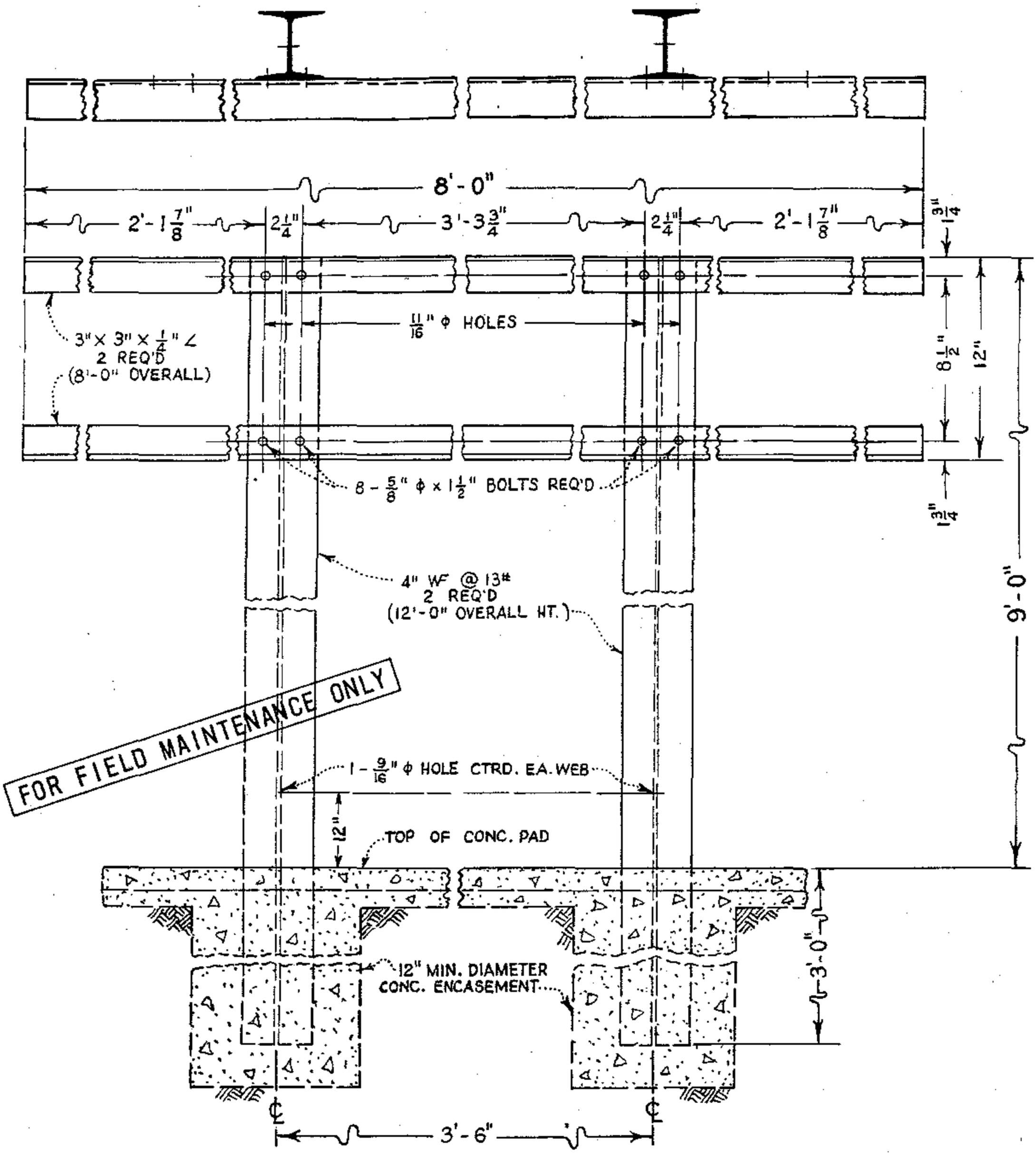

ALL STEEL TO BE HOT-DIP GALV. AFTER FABRICATION.

1499.810 SUPERSEDES 1489 (1-6-82)	SDG&E ELECTRIC STANDARDS METERING RACK, CUSTOMER OWNED, CONSTRUCTION DETAILS	DATE 2-28-83 APPD

TABLE OF CONTENTS

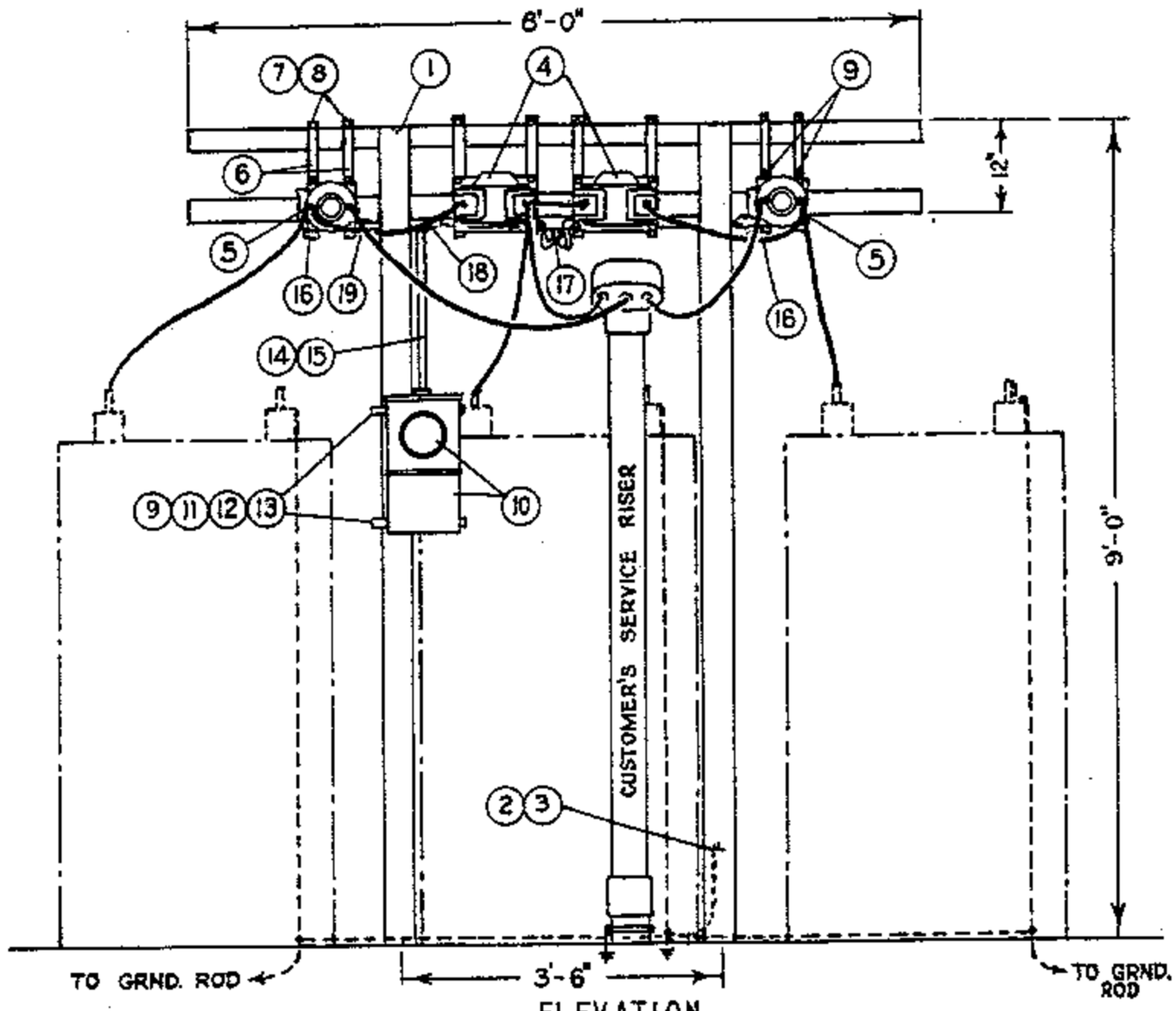

ELEVATION

3 WIRE, 3ϕ SERVICE

FOR FIELD MAINTENANCE ONLY

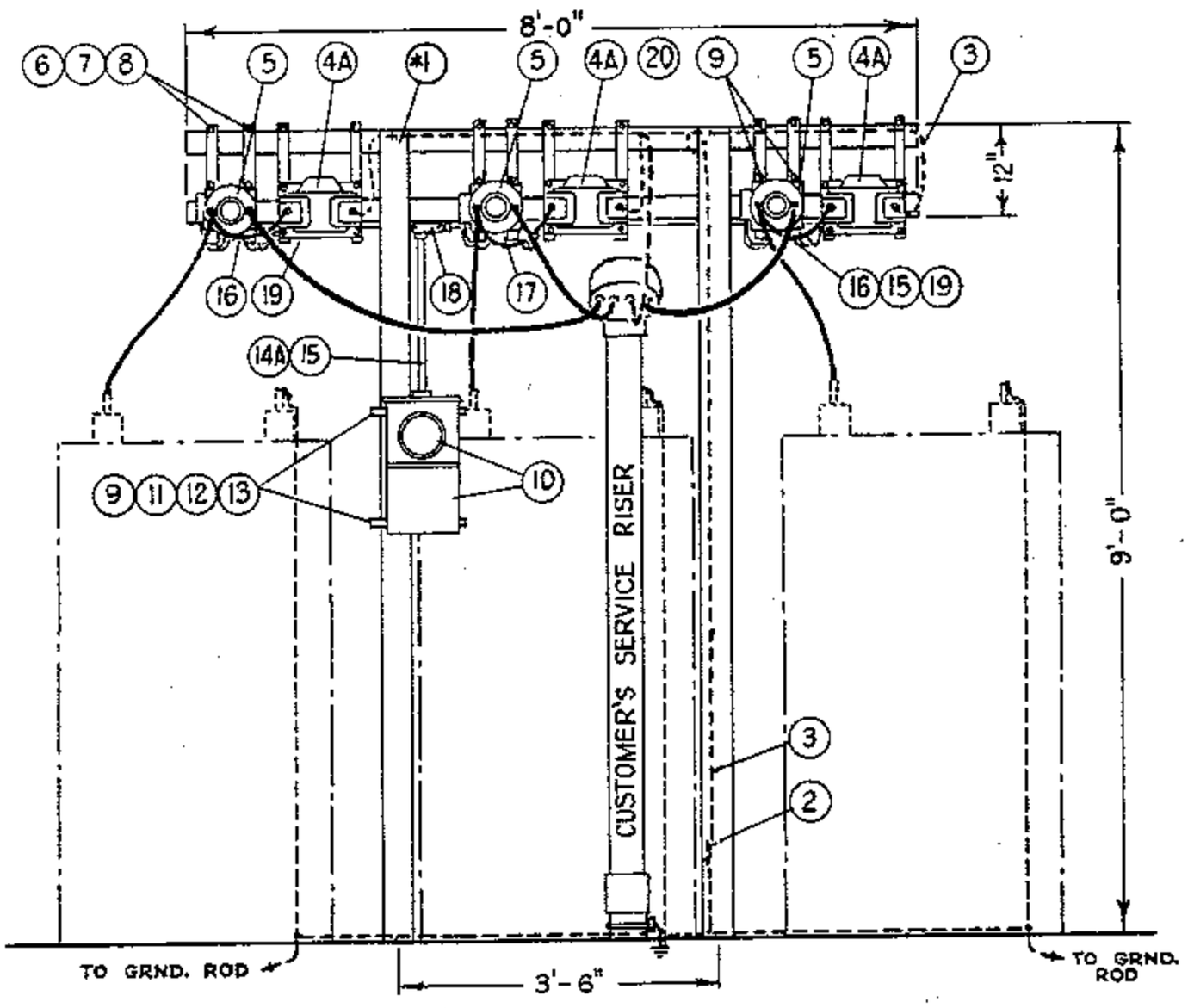

ELEVATION

4 WIRE, 3ϕ SERVICE

DATE 11-16-81 APPD JES	SDG&E ELECTRIC STANDARDS 4KV METERING INSTALLATION ON RACK, FOR 3 WIRE AND 4 WIRE, 3ϕ SERVICES	1499.901 SUPERSEDES 1490.1(11-16-81)

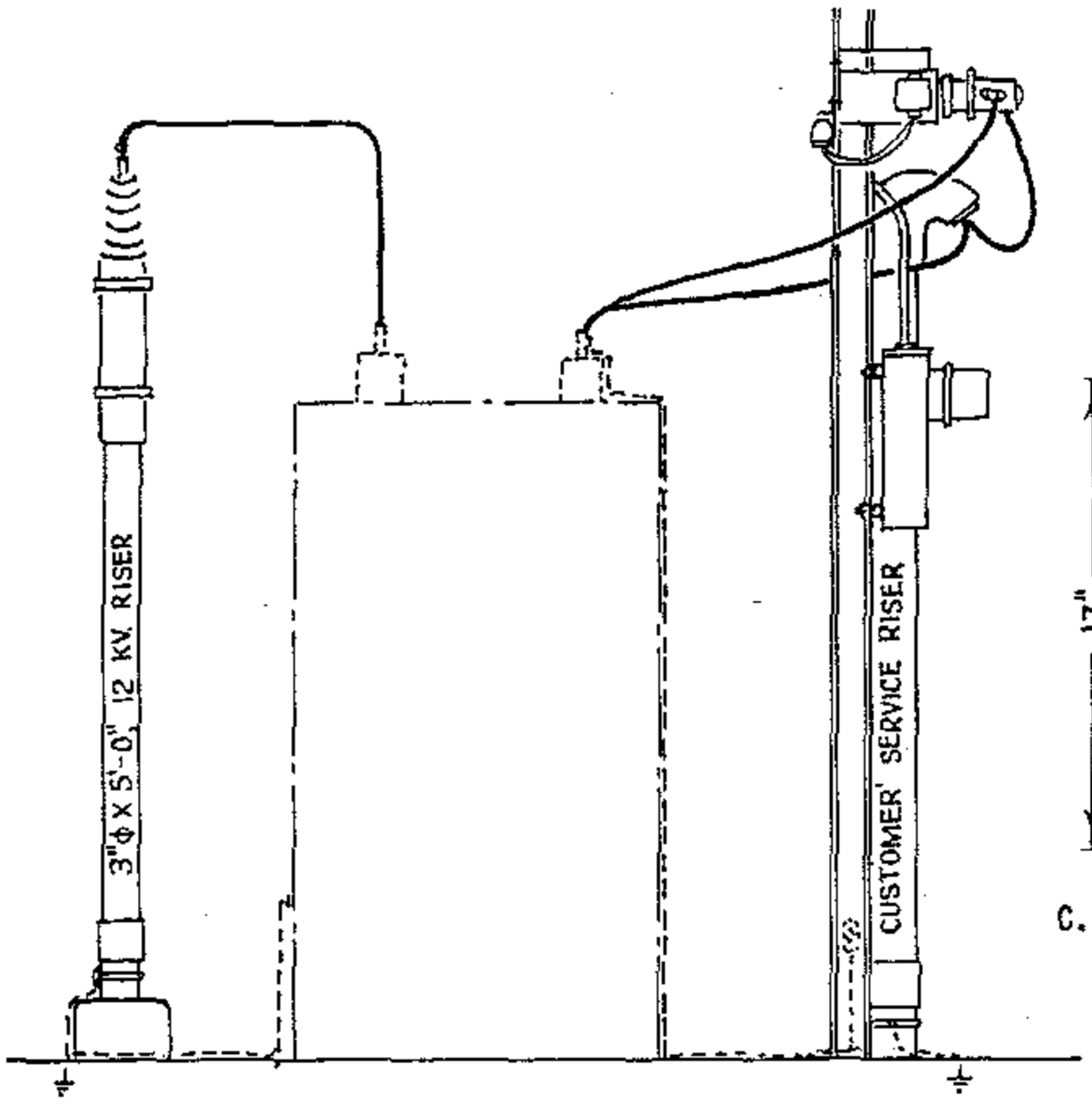

ELEVATION

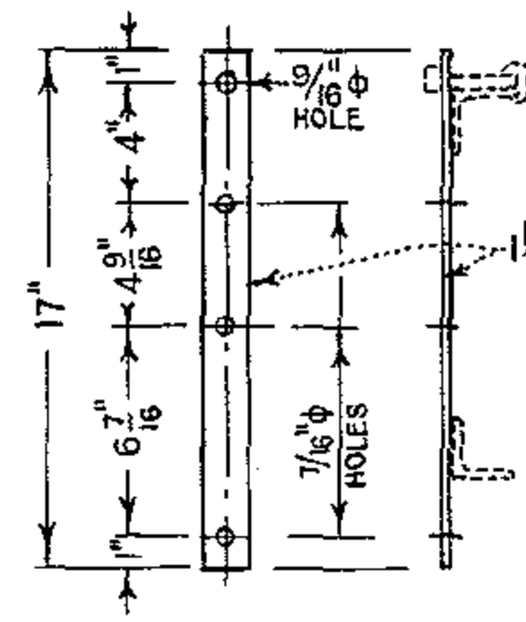

C.T. & P.T. MTG STRAPS
ITEM 6

FOR FIELD MAINTENANCE ONLY

NOTE:

(A) TO BE FURNISHED AND INSTALLED BY CUSTOMER.

ITEM		DESCRIPTION	QUANTITY 3 Wire	QUANTITY 4 Wire	STOCK NO. OR CONSTR STDS
	1	Galv. Steel Metering Rack	(A) 1	(A) 1	PG 1479
	2	Ground Connector, 1 bolt, single groove	1	1	230016
	3	Ground Wire. Bare Strd. copper	5'	20'	PGS 715-716
	4	Potential Transformer, 4800/120V, Base Mounted	2	-	-
	4A	Potential Transformer, 2400/120V, Base Mounted	-	3	-
	5	Current Transformer, 5 Kv. Base Mounted	2	3	-
	6	P.T. & C.T. Straps, Galv., per detail	8	12	-
	7	Mach. Bolts, Galv., 1/2" x 4", 2 washers & 1 nut	8	12	PG 139, 140
	8	Nut Seats, Delta-Star	8	12	-
	9	Mach. Bolts, Galv., 3/8" diam. X 1", 1 washer & 1 nut	20	24	PGS 139, 140
	10	Meter & Meter Socket Box	1	1	-
	11	Unistrut, type P-4000, galv.	30"	30"	-
	12	Beam Grip, Delta-Star	4	4	392384
	13	Cap Screw, Galv., 1/2" diam. x 13/16"	4	4	620320
	14	5 - 1c #12 type TW Coded Wire	40"	-	-
	14A	7 - 1c #12 type TW Coded Wire	-	64'	-
	15	3/4" Conduit, Galv., Rigid Iron	6'	8'	251008
	16	3/4" Condulet, Galv., Type "E" with 4 hole comp. cover	2	2	145568, 145376
	17	3/4" Condulet, Galv., Type "C" with 4 hole comp. cover	1	1	145088, 145376
	18	3/4" Condulet, Galv., Type "TR" with blank cover	1	1	-
	19	Galv. steel conduit clamp	4	4	227104
	20	Wire Connectors	-	2	PGS 783, 786

E.M.

1499.902
SUPERSEDES
1490.2 (11-16-81)

SDG&E ELECTRIC STANDARDS

4KV METERING INSTALLATION ON RACK, FOR 3 WIRE AND 4 WIRE, 3ϕ SERVICES

DATE 11-16-81
APPD JEG

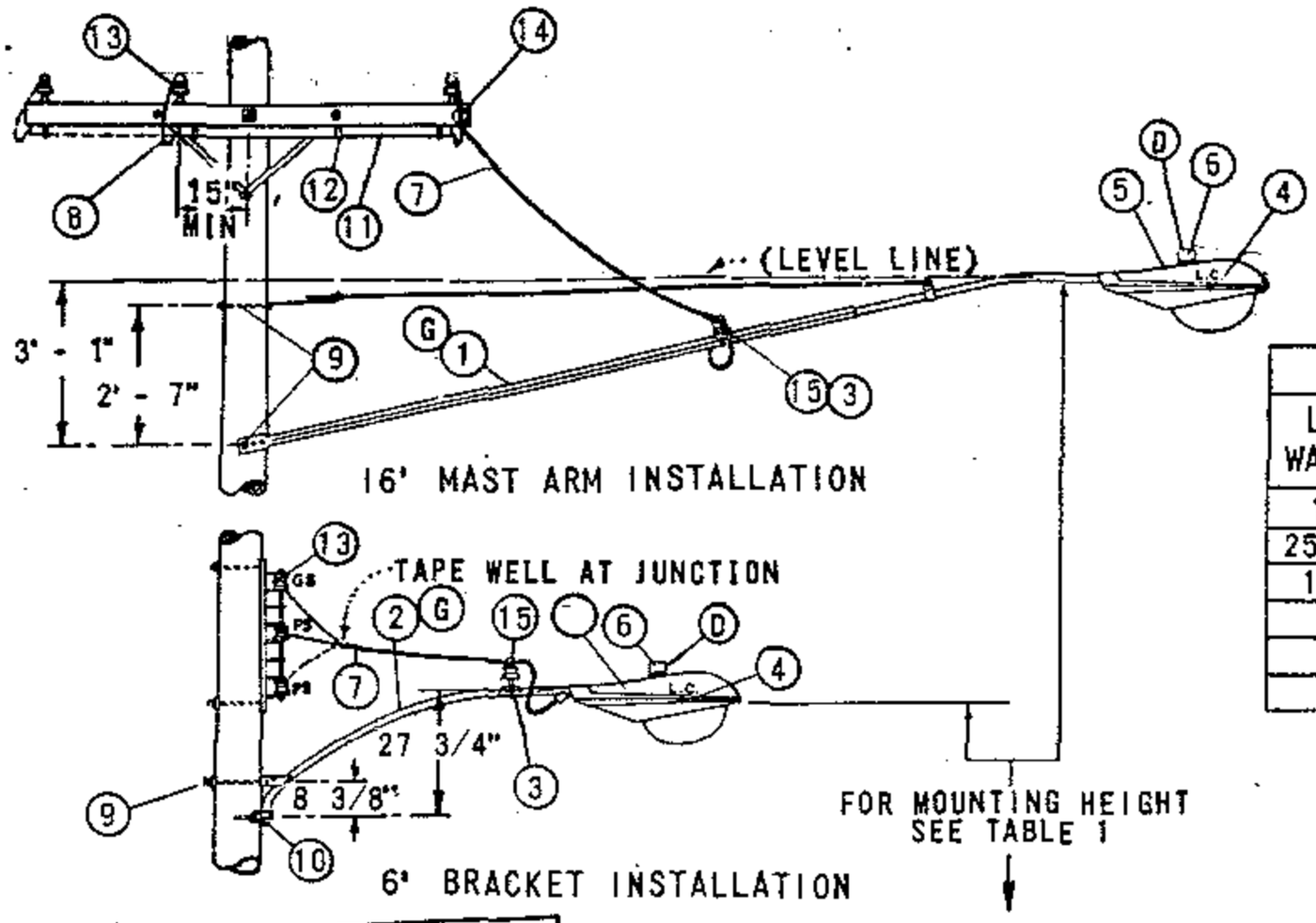

TABLE 1		
LAMP WATTAGE	MERCURY VAPOR MOUNTING HEIGHT	
175	25' - 28'	
250-400	30' - 32'	
1000	35' - 37'	

FOR FIELD MAINTENANCE ONLY

TABLE 2 (F)

WATTS	LUMEN	MERCURY VAPOR STREET LIGHTING CODE						
		REGULATOR BALLAST		REACTOR BALLAST				
		BRACKET 6'	MAST ARM 16'	BRACKET 6'	MAST ARM 16'			
175	7000	6AG	16AG	6AR	16AR			
250	10000	6BG	16BG	6BR	16BR			
400	20000	6CG	16CG	-	-			
1000	55000	6DG	16DG					

NOTES:

(A) REQUIRED FOR SECONDARY LINE ARM CONSTRUCTION ONLY.

B. SEE STANDARDS PAGE 1509 FOR CLEARANCES.

(C) 30" STREET LIGHTING BRACKET, STOCK NUMBER 167200 MAY BE SUBSTITUTED.

(D) APPERTURE OF PHOTOELECTRIC CELL MUST BE SET TO FACE NORTH.

(E) EXEMPT MATERIALS.

(F) TABLE 2 IS PROVIDED FOR IDENTIFICATION OF LIGHTING INSTALLATIONS ON MAPS AND WORK ORDERS.

(G) A MAXIMUM OF ONE HALF OF MOUNTING BRACKET MAY BE INSTALLED IN CLIMBING SPACE.

ITEM		DESCRIPTION	QUANTITY BALLAST REGULATOR 6AG, 6BG, 6CG, 6DG	QUANTITY BALLAST REGULATOR 16AG, 16BG, 16CG, 16DG	QUANTITY BALLAST REACTOR 6AR, 6BR	QUANTITY BALLAST REACTOR 16AR, 16BR	STOCK NO. OR CONSTR STDS
	1	ARM, UPSWEEP MAST, 1 1/4" DIA, 16' - 0"	-	1	-	1	110880
	2	BRACKET, UPSWEEP, 1 1/4" DIA, 6' - 0" (C)	1	-	1	-	167264
	3	PIN, INSULATOR CLAMP (SUPPLIED WITH MAST ARM)	1	1	1	1	-
	4	LAMP	1	1	1	1	PG. 1510
	5	LUMINAIRE	1	1	1	1	PG. 1520, 1521
	6	CONTROL, PHOTOELECTRIC, TWISTLOCK BASE 105 TO 280 VOLT	1	1	1	1	273888
S	7	WIRE, #8, 600V, FLEXIBLE R.C. DUPLEX	AS REQ'D				811776
L	8	WIRE, #12, TYPE THW, 600V, INSULATED COPPER (A)	25'	25'	25'	25'	810272
S	9	BOLT, MACH, GALV, 5/8" X 10", 2 SQ WASH. & 1 NUT (E)	1	2	1	2	PGS 139, 140
S	10	SCREW, LAG, GALV, 1/2" X 4" (E)	2	-	2	-	621568
	11	CONDUIT, PLASTIC, PVC, TYPE II, SCHEDULE 40 3/4" (A) (E)	7' - 4"	7' - 4"	7' - 4"	7' - 4"	251328
	12	STRAP, PIPE, GALV, 2-10D NAILS, GALV, 3/4" (A) (E)	3	3	4	4	PG 143
	13	CONNECTOR, WIRE (E)	2	2	2	2	PGS 783-787
	14	CLEVIS, SECONDARY DEAD END (A)	1	1	1	1	235488
	15	INSULATOR, PIN TYPE, TOP TIE, 4KV (CLASS 55-1) WHITE (E)	1	1	1	1	429024

DATE 11-5-82
APPD JWF/RH

SDG&E ELECTRIC STANDARDS

LIGHTING INSTALLATION

1599.102
SUPERSEDES
1519 (11-5-82)

TABLE OF CONTENTS

SCOPE: THIS STANDARD SHOWS MERCURY VAPOR LUMINAIRES USED TO PROVIDE ROADWAY AND DUSK TO DAWN LIGHTING, AND REPLACEMENT REFRACTORS.

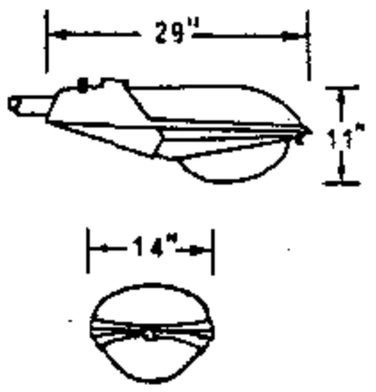

GENERAL ELECTRIC
M-250A POWR/DOOR

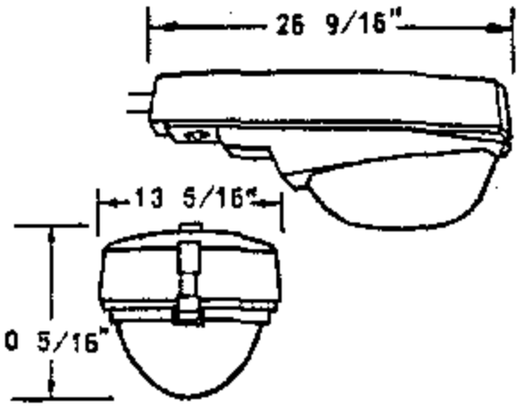

MCGRAW EDISON
UNIDOR 250

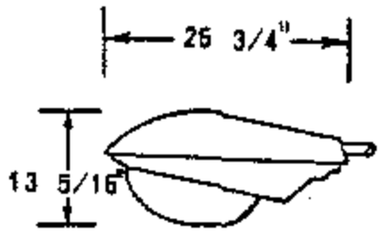

WESTINGHOUSE
OV-15

FIGURE 1

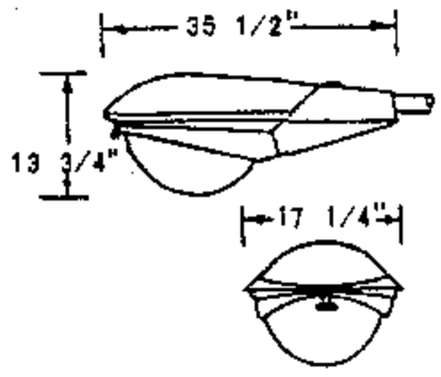

GENERAL ELECTRIC
M-400A POWR/DOOR

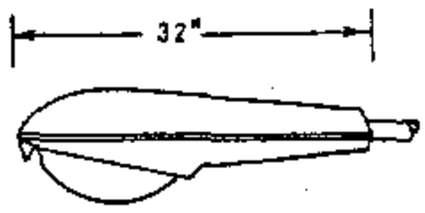

WESTINGHOUSE
OV-25

FOR FIELD MAINTENANCE ONLY

FIGURE 2

BILL OF MATERIAL:

FIG. NO.	STOCK NUMBER	LAMP SIZE WATTS	BALLAST TYPE	BALLAST SOURCE VOLTAGE	MANUFACTURER AND CATALOG NUMBER							
					GENERAL ELECTRIC		MCGRAW EDISON		WESTINGHOUSE		UNICORN ELECTRIC	
					TYPE	CAT. NO.	TYPE	CAT. NO.	TYPE	CAT. NO.	TYPE	CAT. NO.
1	473920	175	REGULATOR	120/240 (A)	M-250A POWR/DOOR	C727G002 (B)	UNIDOR 250	UU1104-120R	OV-15	811A208G04		
	474048		REACTOR NPF	240		C727G014 (B)		UU-1154R		811A208G20		
	473910		SERIES	6.6 AMPS	M-250-R2	M2AR17CXSIGMS31036					–	UCM-A66-175
2	474208	400	REGULATOR	120/240 (A)	M-400A POWR/DOOR	C723G001 (B)			OV-25	658A303G04		
	473912		SERIES	6.6 AMPS	M-250-R2	M4AR40CXSIGMN32043					–	UCM-A66-400

REPLACEMENT REFRACTORS FOR MERCURY VAPOR LUMINAIRES						
CONVENTIONAL LUMINAIRES		LAMP TYPE	LAMP WATTAGE	REPLACEMENT REFRACTOR		
MANUFACTURER	TYPE			TYPE	CATALOG NUMBER	STOCK NUMBER
GENERAL ELECTRIC	M-250A (C)	MV	175,250	GLASS	35-130583-01	579284
GENERAL ELECTRIC	M-400A (C)	MV	400	GLASS	35-231137-01	579296
				LEXAN	35-130015-02	579312
AMERICAN ELECTRIC	23 SERIES (C)	MV	175,250	GLASS	23-002	579284
AMERICAN ELECTRIC	25 SERIES (C)	MV	400	GLASS	25-003	578928 (F)
				LEXAN	25-003-6	– (F)
AMERICAN ELECTRIC	327 SERIES	MV	1000	GLASS	27-003	578936 (F)
WESTINGHOUSE	OV-15	MV	175,250	GLASS	464-D067-H01	578976 (F)
WESTINGHOUSE	OV-25 (C)	MV	400	GLASS	464-D336-H02	579040
				LEXAN	6716-D13-H01	579056 (F)

INSTALLATION:

(A) FACTORY WIRED FOR 120 VOLTS, DO NOT WIRE FOR 240 VOLTS ON NEW INSTALLATIONS.

(B) ASTRODOME UNITS ARE EQUIPPED WITH BUILT-IN PHOTOELECTRIC CELL. FOR REPLACEMENT SEE PAGE 1512/4412.

(C) A GLASS OR A LEXAN REFRACTOR MAY BE USED ON THESE LUMINAIRES.

D. LEXAN REFRACTORS TO BE USED IN HIGH VANDALISM AREAS ONLY.

(F) ITEM IS NO LONGER PURCHASED.

TABLE OF CONTENTS

OH 1599.201 ~~UG-4499.201~~ SUPERSEDES 1520.1 (11-5-82)	SDG&E ELECTRIC STANDARDS MERCURY VAPOR CONVENTIONAL LUMINAIRES AND REPLACEMENT REFRACTORS	DATE 1-1-89 APPD PEA/DTE

SCOPE: THIS STANDARD SHOWS HIGH PRESSURE SODIUM VAPOR LUMINAIRES USED TO PROVIDE ROADWAY AND DUSK TO DAWN LIGHTING, REPLACEMENT BALLAST AND REFRACTORS.

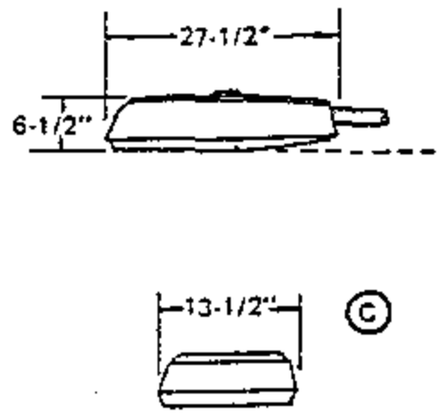

GENERAL ELECTRIC
M150 CUTOFF POWER/DOOR

FIGURE 1

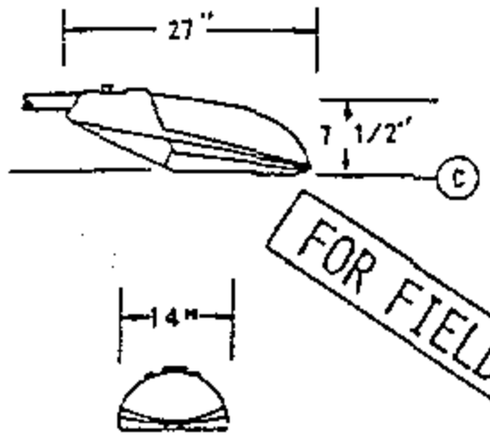

GENERAL ELECTRIC
M-250A CUTOFF POWER/DOOR

FIGURE 2

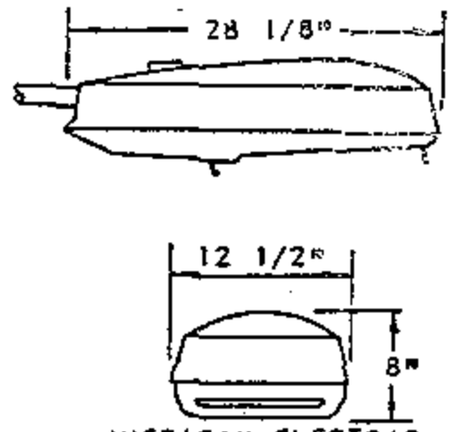

AMERICAN ELECTRIC
SERIES 213 CUTOFF
POWER/PAD

FIGURE 3

FOR FIELD MAINTENANCE ONLY

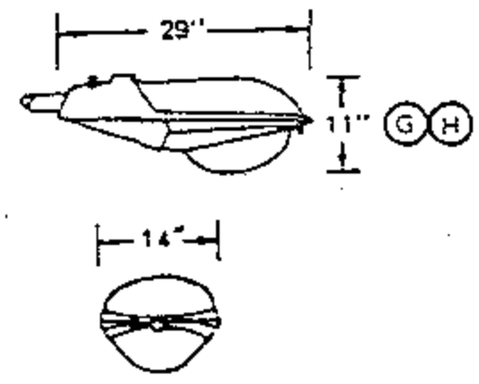

GENERAL ELECTRIC
M-250A POWER/DOOR

FIGURE 4

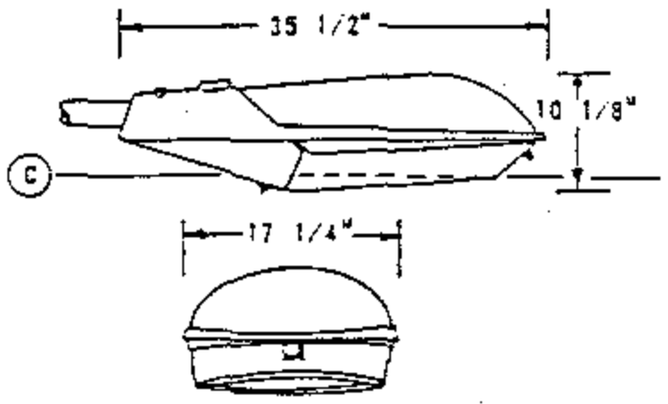

GENERAL ELECTRIC
M-400A CUTOFF
POWER/DOOR

FIGURE 5

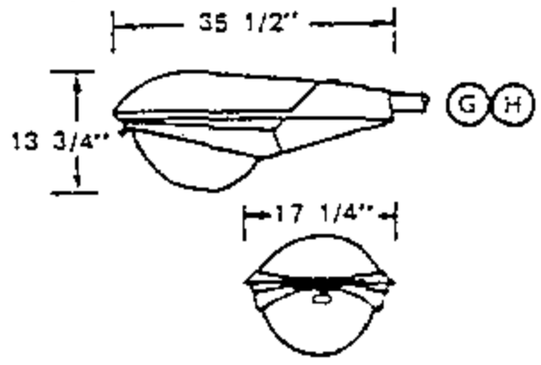

GENERAL ELECTRIC
M-400A POWER/DOOR

FIGURE 6

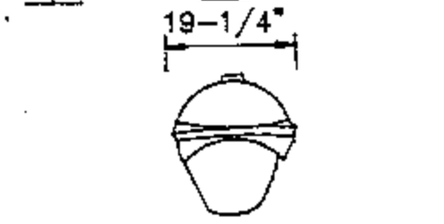

GENERAL ELECTRIC
M-1000

FIGURE 7

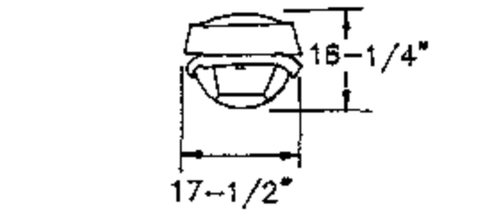

AMERICAN ELECTRIC
SERIES 327

FIGURE 8

TABLE 1 (D)
HIGH PRESSURE SODIUM VAPOR (HPSV) LUMINAIRES - COMPLETE ASSEMBLY (EXCLUDING LAMP)

FIG. NO.	MANUFACTURER		LAMP SIZE	BALLAST		STOCK
	GENERAL ELECTRIC	AMER. ELECT.	WATTS	TYPE	SOURCE VOLTAGE	NUMBER
1, 2 & 3	M 150 CUTOFF M 250A CUTOFF	SERIES 213	70	REACTOR	120	473382
	M 150 CUTOFF M 250A CUTOFF	SERIES 213	100		120	473376
	M 150 CUTOFF M 250A CUTOFF	SERIES 213	150		120	473344
4	M 250A	-	100	REACTOR	120	473924
5 & 6	M 400A	-	200	REGULATOR	120	473360
	M 400A CUTOFF	-	250	AUTO REGULATOR	120	473312
			400	REGULATOR	120	473280
6	M 400A	-	250	AUTO REGULATOR	120	473928
7 & 8	M 1000	SERIES 327	1000	AUTO REGULATOR	120	473248

SDG&E ELECTRIC STANDARDS

DATE 1-1-94
APPD PSA/RDG

HIGH PRESSURE SODIUM VAPOR LUMINAIRE, REPLACEMENT BALLAST AND REFRACTORS

OH 1599.203
~~UG 4499.203~~

TABLE OF CONTENTS

BILL OF MATERIAL: Ⓓ

TABLE 1. - HIGH PRESSURE SODIUM VAPOR (HPSV) LUMINAIRES - COMPLETE ASSEMBLY (EXCLUDING LAMP)

FIG. NO.	MANUFACTURER		LAMP SIZE WATTS	BALLAST		STOCK NUMBER
	GENERAL ELECTRIC	AMERICAN ELECTRIC		TYPE	SOURCE VOLTAGE	
1, 2, & 3	M 150 CUTOFF M 250A CUTOUT	SERIES 213	70	REACTOR	120	473382
	M 150 CUTOFF M 250A CUTOFF	SERIES 213	100		120	473376
	M 150 CUTOFF M 250A CUTOFF	SERIES 213	150		120	473344
4	M 250A	–	100	REACTOR	120	473924
5 & 6	M 400A	–	200	REGULATOR	120	473360
	M 400A CUTOFF		250	AUTO REGULATOR	120	473312
			400	REGULATOR	120	473280
6	M 400A	–	250	AUTO REGULATOR	120	473928
7 & 8	M 1000	SERIES 113	1000	AUTO REGULATOR	120	473248
9 & 10	M 250R2 CUTOFF	SERIES 113	70	REACTOR–NPF	120	473400
	M 250R2 CUTOFF	SERIES 113	100		120	473402
	M 250R2 CUTOFF	SERIES 113	150		120	473404
11	M 400R2 CUTOFF	–	200	HIGH REACTANCE–NPF	120	473406
	M 400R2 CUTOFF	–	250		120	473408
	M 400R2 CUTOFF	–	400	CWA	120	473410

FOR FIELD MAINTENANCE ONLY

TABLE OF CONTENTS

©1998 - 2007 San Diego Gas & Electric Company. All rights reserved. Removal of this copyright notice without permission is not permitted under law.

DATE 1–1–94 APPD PEA / DTE	SDG&E ELECTRIC STANDARDS HIGH PRESSURE SODIUM VAPOR LUMINAIRES, REPLACEMENT BALLAST AND REFRACTORS	OH 1599.203B UG 4499.203B

TABLE 2

REPLACEMENT BALLAST FOR (HPSV) LUMINAIRES						
FIG. NO.	BALLAST		LAMP SIZE WATTS	MANUFACTURER		STOCK NUMBER
	TYPE	SOURCE VOLTAGE		MANUFACTURER	TYPE POWER/DOOR	
1, 2, 3 & 4	REACTOR	120	70	GE	M 150	121044 (B)
				GE	M 250A	121140 (B)
				AMERICAN ELECTRIC	SERIES 213	121172 (B)
		120	100	GE	M 150	121076 (B)
				GE	M 250A	121142
				AMERICAN ELECTRIC	SERIES 213	121174 (B)
		120	150	GE	M 150/ M250A2	121108
				GE	M 250A	121144
				AMERICAN ELECTRIC	SERIES 213	121176 (B)
5 & 6	REACTOR	120	150	GE	M 400A	121146
	REGULATOR	120	200	GE	M 400A	121204 (B)
				AMERICAN ELECTRIC	SERIES 25	121178 (B)
	AUTO REGULATOR	120	250	GE	M 400A/ M400A2	121148
				AMERICAN ELECTRIC	SERIES 25	121180 (B)
	REGULATOR	120	400	GE	M 400A/ M400A2	121150
				AMERICAN ELECTRIC	SERIES 25	121182 (B)
9 & 10	REACTOR	120	70	GE	M 250R2	121346 (B)
				AMERICAN ELECTRIC	SERIES 113	121358 (B)
		120	100	GE	M 250R2	121348 (B)
				AMERICAN ELECTRIC	SERIES 113	121360 (B)
		120	150	GE	M 250R2	121350 (B)
				AMERICAN ELECTRIC	SERIES 113	121362 (B)
11	REGULATOR	120	200	GE	M 400R2	121352 (B)
				AMERICAN ELECTRIC	SERIES 125	121364 (B)
	AUTO REGULATOR	120	250	GE	M 400R2	121354 (B)
				AMERICAN ELECTRIC	SERIES 125	121366 (B)
	REGULATOR	120	400	GE	M 400R2	121356 (B)
				AMERICAN ELECTRIC	SERIES 125	121368 (B)

TABLE 3

REPLACEMENT REFRACTORS FOR HPSV LUMINAIRES					
CONVENTIONAL LUMINAIRES		LAMP TYPE	LAMP WATTAGE	REPLACEMENT REFRACTOR	
MANUFACTURER	TYPE			TYPE	STOCK NUMBER
GENERAL ELECTRIC	M-250A (I)	HPSV	100, 150	LEXAN	579248
GENERAL ELECTRIC	M-250A-CUTOFF	HPSV	70, 100, 150	GLASS	579282
GENERAL ELECTRIC	M-250R2	HPSV	70, 100, 150	GLASS	579104 (B)
GENERAL ELECTRIC	M-400A-CUTOFF	HPSV	250, 400	GLASS	578706
GENERAL ELECTRIC	M-400R2	HPSV	200, 250, 400	GLASS	578102
GENERAL ELECTRIC	M-1000	HPSV	1000	GLASS	578704 (B)
AMERICAN ELECTRIC	23 SERIES (I)	HPSV	100, 150	LEXAN	579248
AMERICAN ELECTRIC	25 SERIES CUTOFF	HPSV	250, 400	GLASS	- (B)
AMERICAN ELECTRIC	327 SERIES	HPSV	1000	GLASS	578936 (B)

INSTALLATION:

A. ALL LUMINAIRES ARE TO BE WIRED FOR 120 VOLTS ONLY. APPLICATION OF 240 VOLTS TO THESE UNITS WILL CAUSE SEVERE BALLAST DAMAGE.

(B) ITEM IS NO LONGER PURCHASED.

(C) CUTOFF LUMINAIRES SHALL BE INSTALLED WITH THE OPTICAL ASSEMBLY (GLASSWARE) HORIZONTAL.

(D) ITEMS IN TABLE 1 ARE FOR COMPLETE LUMINAIRE UNITS AND ARE NO LONGER PURCHASED.

BILL OF MATERIAL: **TABLE 4**

REPLACEMENT STARTERS FOR HPSV LUMINAIRES				
MANUFACTURER		LAMP SIZE WATTS	SOURCE VOLTAGE	STOCK NUMBER
MANUFACTURER	TYPE			
AMERICAN ELECTRIC	SERIES 113	35-400	120	679130
GENERAL ELECTRIC	M 250R2	50-150	120	679132
GENERAL ELECTRIC	M 400R2	250-400	120	679134

(F) STOCK NUMBERS IN TABLE 2 ARE FOR BALLAST ONLY AND MAY BE PURCHASED FOR PURPOSE OF REPLACEMENT.

(G) ASTRODOME UNITS ARE EQUIPPED WITH BUILT-IN PHOTOELECTRIC CELL.

(H) USE LEVELING PAD FOR PROPER ADJUSTMENT OF LUMINAIRE.

(I) A GLASS OR A LEXAN REFRACTOR MAY BE USED ON THESE LUMINAIRES (LEXAN REFRACTORS TO BE USED IN HIGH VANDALISM AREAS ONLY).

FOR FIELD MAINTENANCE ONLY

REFERENCE:

J. SEE STANDARD 1512/4412 FOR PHOTOELECTRIC CONTROL.

K. SEE STANDARD 1514/4414 FOR IDENTIFICATION DECAL.

© 1998 - 2007 San Diego Gas & Electric Company. All rights reserved. Removal of this copyright notice without permission is not permitted under law.

SDG&E ELECTRIC STANDARDS

OH 1599.204
UG 4499.204

HIGH PRESSURE SODIUM VAPOR LUMINAIRE, REPLACEMENT BALLAST AND REFRACTORS

DATE 1-1-89
APPD PEA / DTE

TABLE OF CONTENTS

SCOPE: THIS STANDARD SHOWS LOW PRESSURE SODIUM VAPOR (LPSV) LUMINAIRES USED TO PROVIDE ROADWAY AND DUSK TO DAWN LIGHTING, AND REPLACEMENT BALLAST.

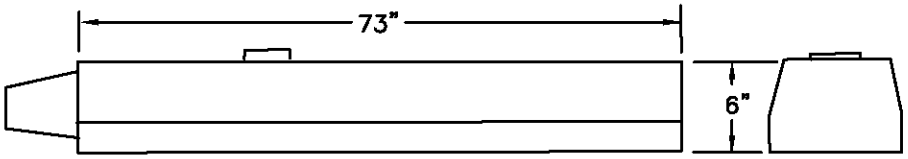

PACIFIC LIGHTING
SPAULDING

FIGURE 1

FOR FIELD MAINTENANCE ONLY

BILL OF MATERIAL: **TABLE 1 :** (C)

LOW PRESSURE SODIUM VAPOR (LPSV) LUMINAIRES - COMPLETE ASSEMBLY EXCLUDING LAMP					
FIG. NO.	MANUFACTURER	LAMP SIZE WATTS	BALLAST		STOCK NUMBER
			TYPE	SOURCE VOLTAGE	
1	SPAULDING/PACIFIC LIGHTING	35/55 (B)	HPF REACTOR	120	473800
		90			473802
		135			473804
		180			473806

BILL OF MATERIAL: **TABLE 2 :** (C)

REPLACEMENT BALLAST FOR LPSV LUMINAIRES					
FIG. NO.	BALLAST		LAMP SIZE WATTS	MANUFACTURER	STOCK NUMBER
	TYPE	VOLTAGE			
1	HPF REACTOR	120	35/55	SPAULDING/ PACIFIC LIGHTING	121310
			90		121308
			135 & 180		121306

INSTALLATION:

A. ALL LUMINAIRES ARE TO BE WIRED FOR 120 VOLTS ONLY. APPLICATION OF 240 VOLTS TO THESE UNITS WILL CAUSE SEVERE BALLAST DAMAGE.

(B) THIS LUMINAIRE WILL ACCEPT BOTH 35 WATT AND 55 WATT LAMPS.

(C) MANUFACTURERS IN THIS TABLE ARE NO LONGER PURCHASED.

REFERENCE:

D. SEE STANDARD 1512/4412 FOR PHOTOELECTRIC CONTROL.

E. SEE STANDARD 1514/4414 FOR IDENTIFICATION DECAL.

©1998 - 2007 San Diego Gas & Electric Company. All rights reserved. Removal of this copyright notice without permission is not permitted under law.

DATE 3-2-06 APPD PEA / DTE	SDG&E ELECTRIC STANDARDS LOW PRESSURE SODIUM VAPOR LUMINAIRE AND REPLACEMENT BALLAST	OH 1599.210 UG 4499.210

TABLE OF CONTENTS

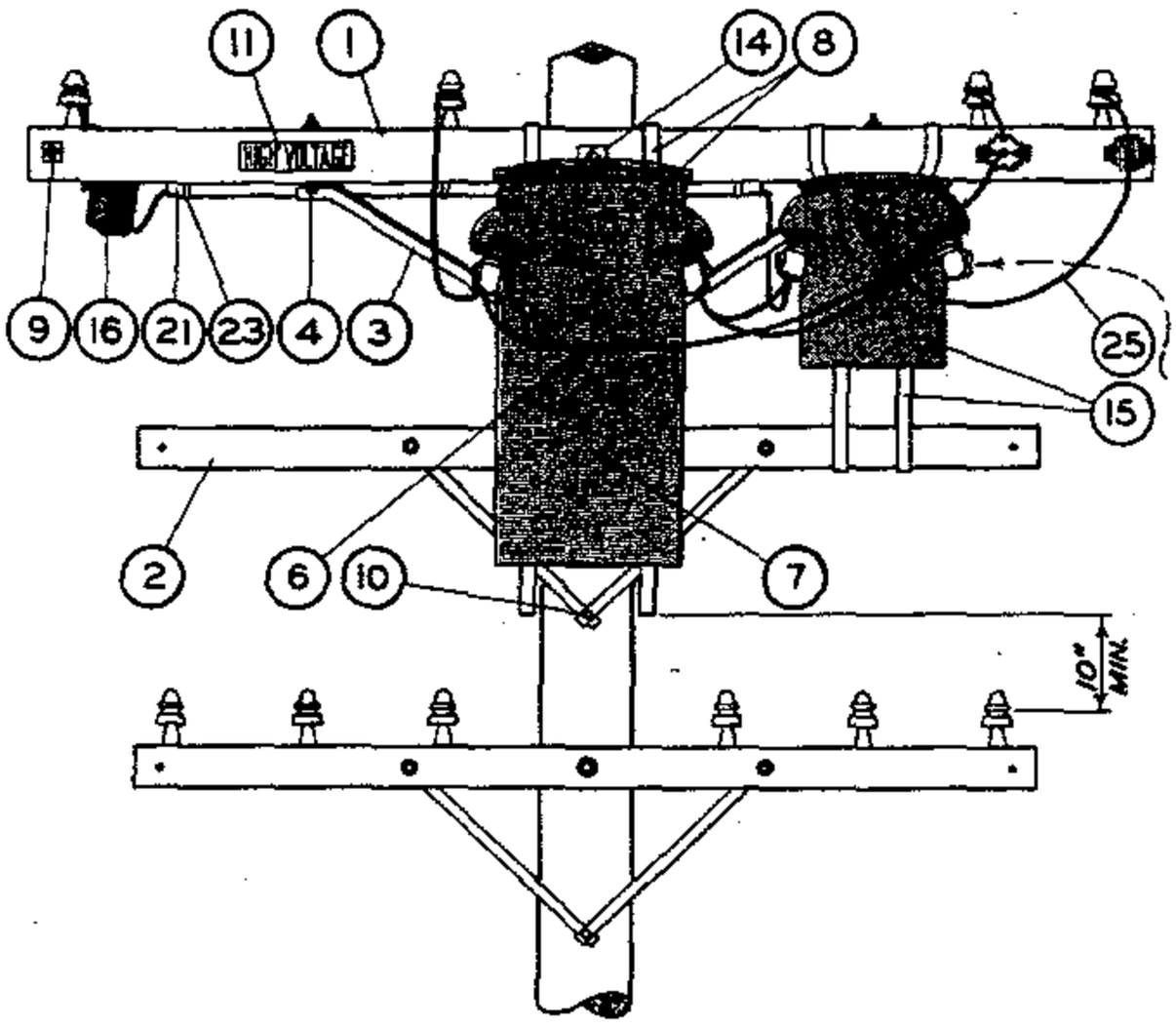

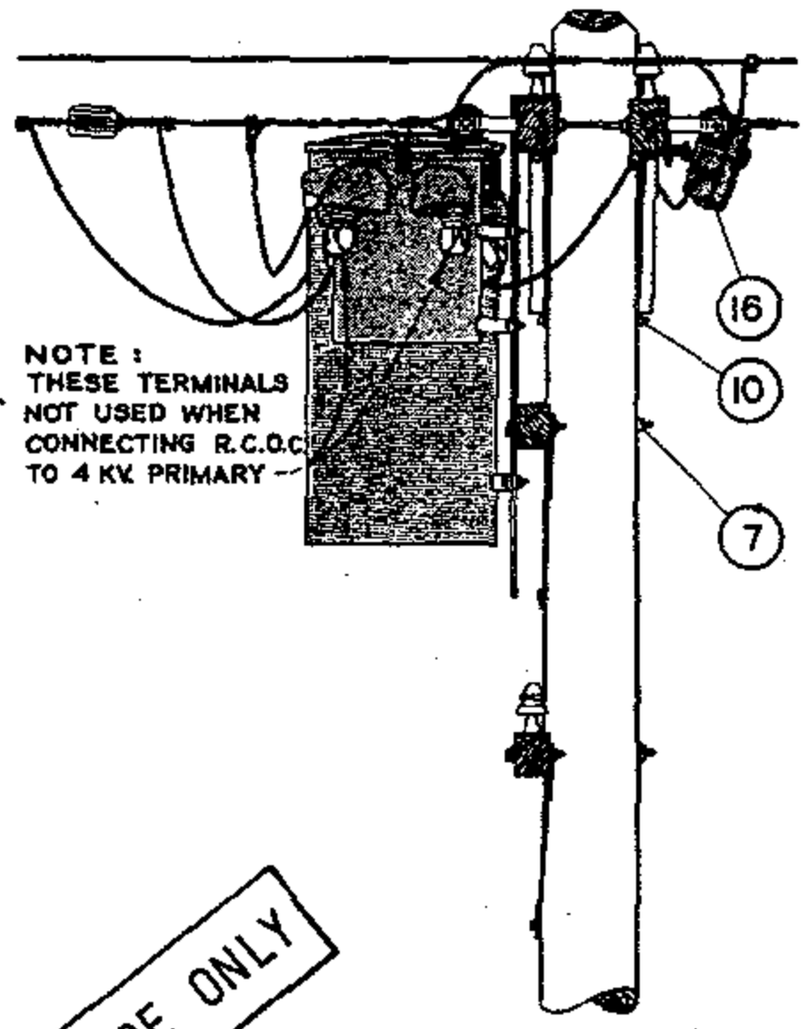

THIS PAGE FOR FIELD MAINTENANCE USE ONLY

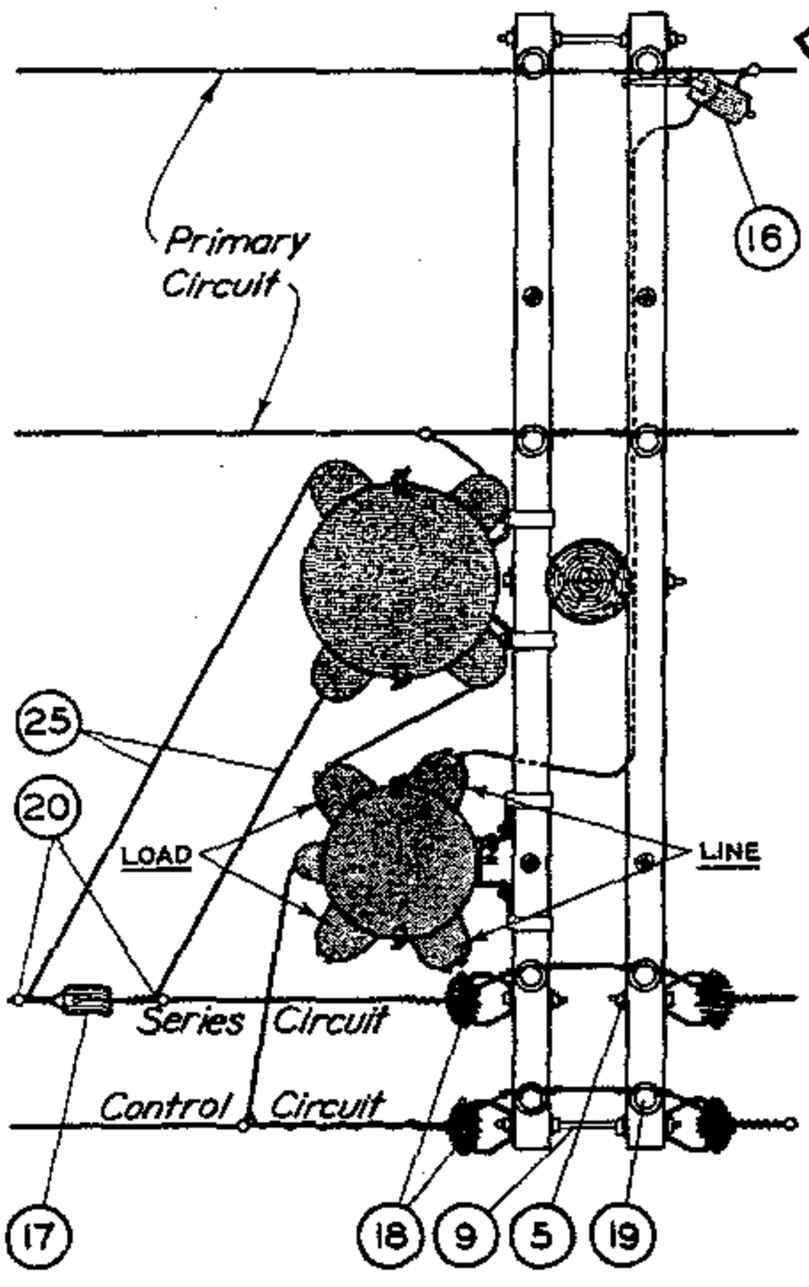

ITEM	DESCRIPTION	QUANTITY	CONSTR STDS STOCK NO OR
1	3-3/4"x 5-3/4"x 10'-0" Crossarm - 8 pin	2	PG 111 IT. 3
2	3-1/2"x 4-1/2"x 8'-0" Kick Arm	1	PG 111 IT. 2
3	Angle Crossarm Brace - 4' or 5'	2	164032 OR 164128
4	Mach. Bolt, Galv. 1/2"x 7" - 1 rd. washer & 1 nut	4	PGS 139, 140
5	Mach. Bolt, Galv. 5/8"x 5" - 1 rd. washer & 1 nut	2	PGS 139, 140
6	Mach. Bolt, Galv. 5/8"x 10" - 1 nut	1	PGS 139, 140
7	Mach. Bolt, Galv. 5/8"x 14" - 2 sq. washers & 1 nut	1	PGS 139, 140
8	Mach. Bolt, Galv. 5/8"x 18" - 2-3"x 4" washers & 1 nut	1	PGS 139, 140
9	Space Bolt, Galv. 5/8"x 18" - 4 washers & 4 nuts	2	PGS 139, 140
10	Lag Screw, Galv. 1/2"x 4"	1	621568
11	High Voltage Sign & Nails #8, Roofing	1	647648, 492224
12	Pole Step	16	692992
13			
14	R.O. Transformer & Hangers	1	PGS 1121.00-1121.12
15	R.C.O.C. Switch	1	274560
16	G.E. Expulsion Fuse Cutout	1	PG 1211
17	Insulator, Strain #506	1	430880
18	Insulator, 4 Kv. D.E.	4	235520
19	Insulator, D.G.D.P.	4	428960
20	#6 Wire Connector Split Bolt	6	269056
21	PVC Conduit, 1" diam.	5'	251200
23	1-1/4" Pipe Strap with 2 - 8d Nails	3	697696, 491552
25	#6 R.C. Strand. Copper Wire - 5 Kv.	42'	814112

SDG&E ELECTRIC STANDARDS

SERIES CONTROLLED R.O. STREET LIGHT TRANSFORMER AND R.C.O.C. SWITCH, LINE ARM POSITION, 4KV

DATE 4-30-82
APPD LRH

1599.501
SUPERSEDES
1556 (4-30-82)

TABLE OF CONTENTS

SCOPE: THIS STANDARD SHOWS 4KV CONSTANT CURRENT SERIES LIGHTING TRANSFORMER INSTALLATION AND SHALL ONLY BE USED WHEN AN EXISTING TRANSFORMER INSTALLATION MUST BE RELOCATED OR REBUILT TO MAINTAIN SERVICE TO AN EXISTING SERIES STREET LIGHTING SYSTEM.

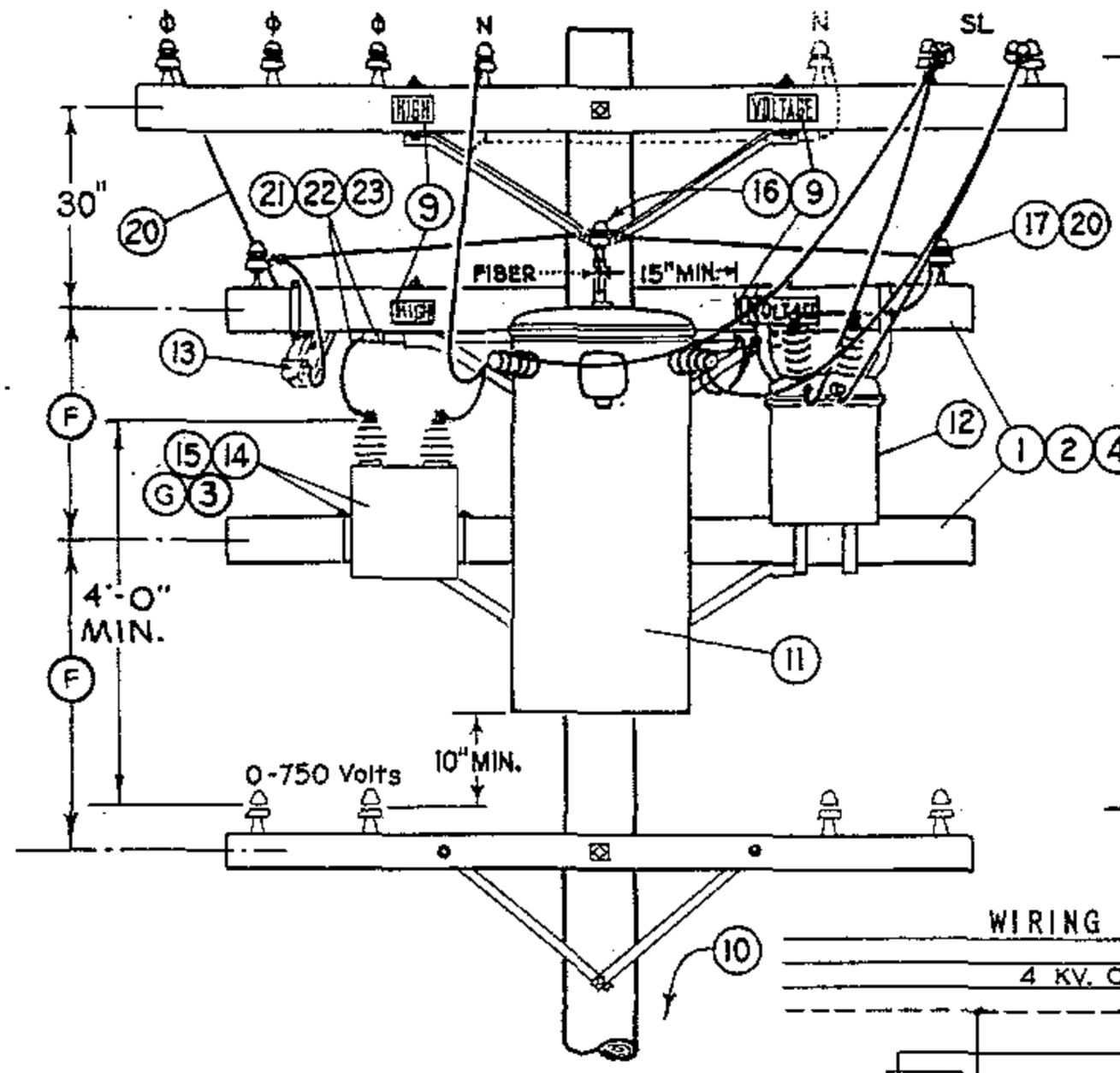

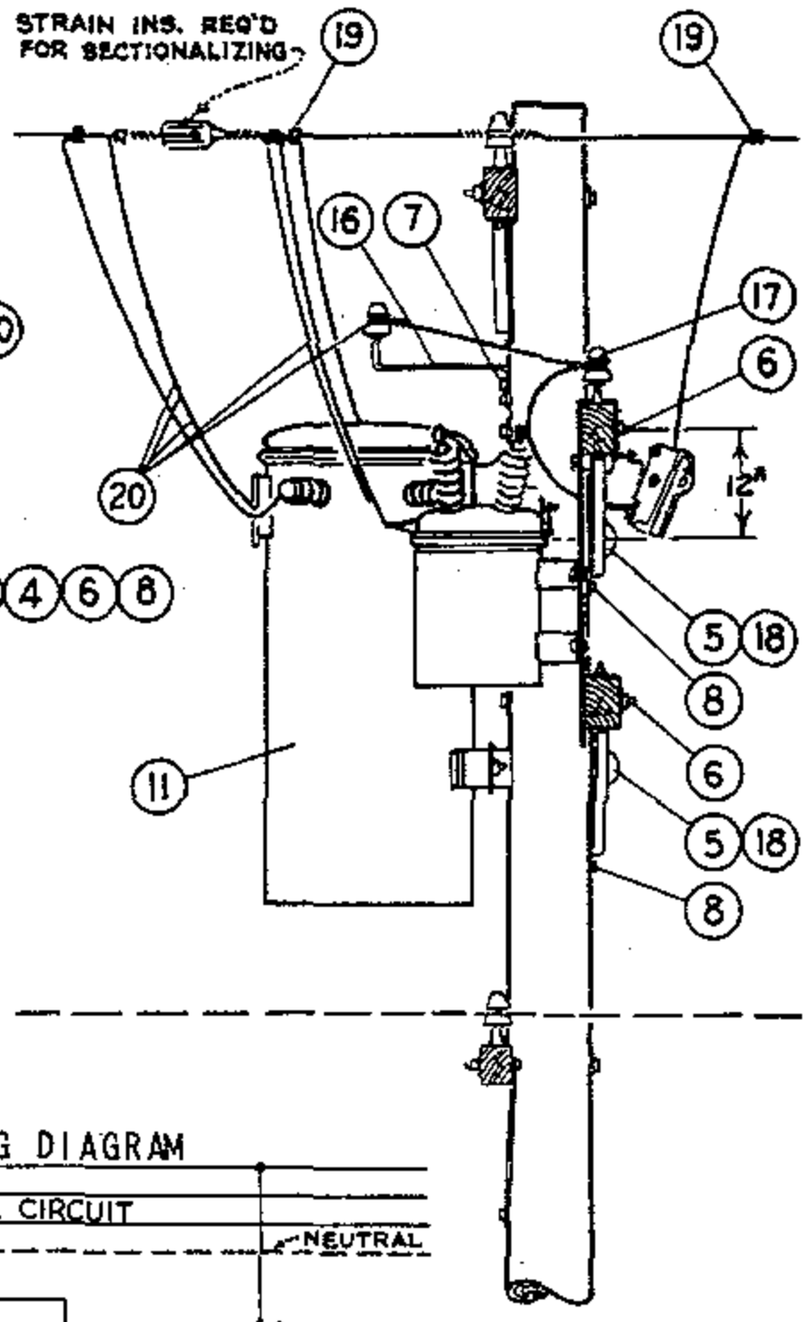

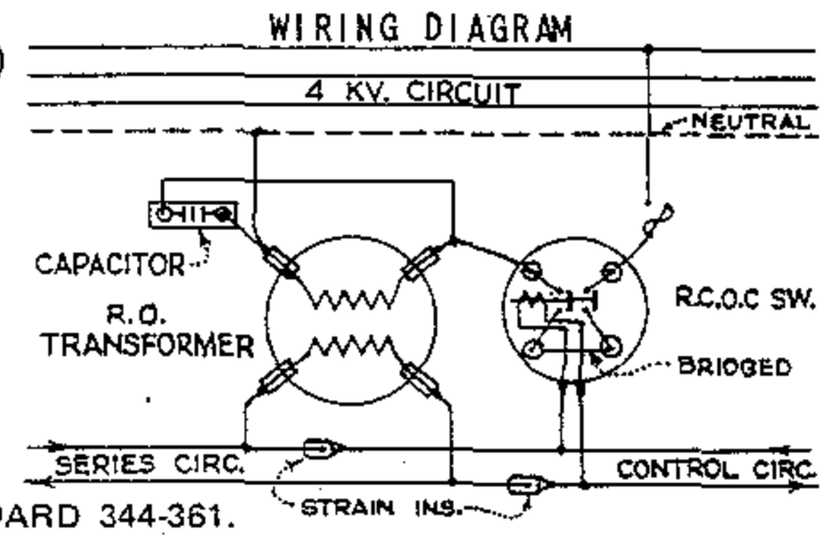

NOTES:

- CLASS OF POLE SHOULD BE DETERMINED PER STANDARD 344-361.

BILL OF MATERIAL:

ITEM		DESCRIPTION	QUANT.	CONST STD OR PAGE NO	STOCK NO.
P. T. & F.	1	3¾" x 5¾" x 8'-0" Transformer Arm	2	PAGE 380.5 IT.4	294960
	2	Angle Crossarm Brace, 4'-0"	2		164032
	3	Mach. Bolt, Galv., ⅜" x 1½", 2 rd. washers & 1 nut (E)	2	STDS 392	
	4	Mach. Bolt, Galv., ½" x 7", 1 rd. washer & 1 nut (E)	4	STDS 392	
	5	Mach. Bolt, Galv., ⅝" X 12", 1 sq. curv. wash. & 1 nut (E)	2	STDS 392	
	6	Mach. Bolt, Galv., ⅝" X 14", 2 sq. washers & 1 nut (E)	2	STDS 392	
	7	Lag Screw, Galv., ½" X 4" (E)	1		621568
	8	Lag Screw, Galv., ⅝" X 5" (E)	2		621600
	9	High Voltage Sign & 9 galv. roofing nails (E)	1		647648, 492224
	10	POLE STEPS (SEE STANDARD 363) (E)	-		692992
L. T. I.	11	R.O. Transformer with 2 pole bolt Adapter Plates & bolts	1	PG 1121	
	12	R.C.O.C. Switch, paired hangers, adapter plates where req'd	1		274656 (A) (B)
	13	Expulsion Fuse Indicating Cutout, 5 kv., 50 A. (D)	1	SECTION 1200	
	14	Capacitor, 2.4 kv., 15 or 25 kvar. (A)	1		207392 OR 207168
	15	Mounting Strap and 1-½"Φ x 3¾" x 5¾" "U" bolt (A) (C)	2		158432
	16	Stand-Off Bracket with Insulator	1		166144, 429216 (E)
	17	Insulator and 1" steel pin (E)	2	PG 750	532608
	18	Cover Thru Bolt Plastic & Nails, Galv. (E)	2		285696, 492192
	19	Wire Connector (E)	7	STDS. 783 – 787	
	20	#6 D.B.W.P. Copper Wire	55'		812512
	21	#6 R.C. Strand. Copper Wire, 5 kv.	7'		194304
	22	1" PVC Conduit (E)	4'		251200
	23	1¼" Pipe Strap and 2-6d nails, galv. (E)	3		697696, 491552

INSTALLATION:

(A) NO LONGER PURCHASED.
(B) KEARNY MAINTENANCE WILL SUPPLY.
(C) SALVAGE FROM EXISTING INSTALLATIONS, MIRAMAR SALVAGE YARD HAS LIMITED SUPPLY.
(D) CAN BE SUBSTITUTED WITH 12KV 100A CUTOUT.
(E) EXEMPT MATERIAL.
(F) SPACE KICK ARM & BRACE TO CLEAR LOWER TRANSFORMERS THRU BOLT COVER.
(G) IF CAPACITOR FAILS OR STATION IS RELOCATED, DO NOT REPLACE CAPACITOR.

1599.502
SUPERCEDES
1555.1 (1–1–92)

SDG&E ELECTRIC STANDARDS

SERIES CONTROLLED REGULATED OUTPUT STREET LIGHT TRANSFORMER INSTALLATION REMOTE CONTROL OUTDOOR CIRCUIT SWITCH CAPACITOR 4KV

DATE 1-1-87
APPD AK/RDS

TABLE OF CONTENTS

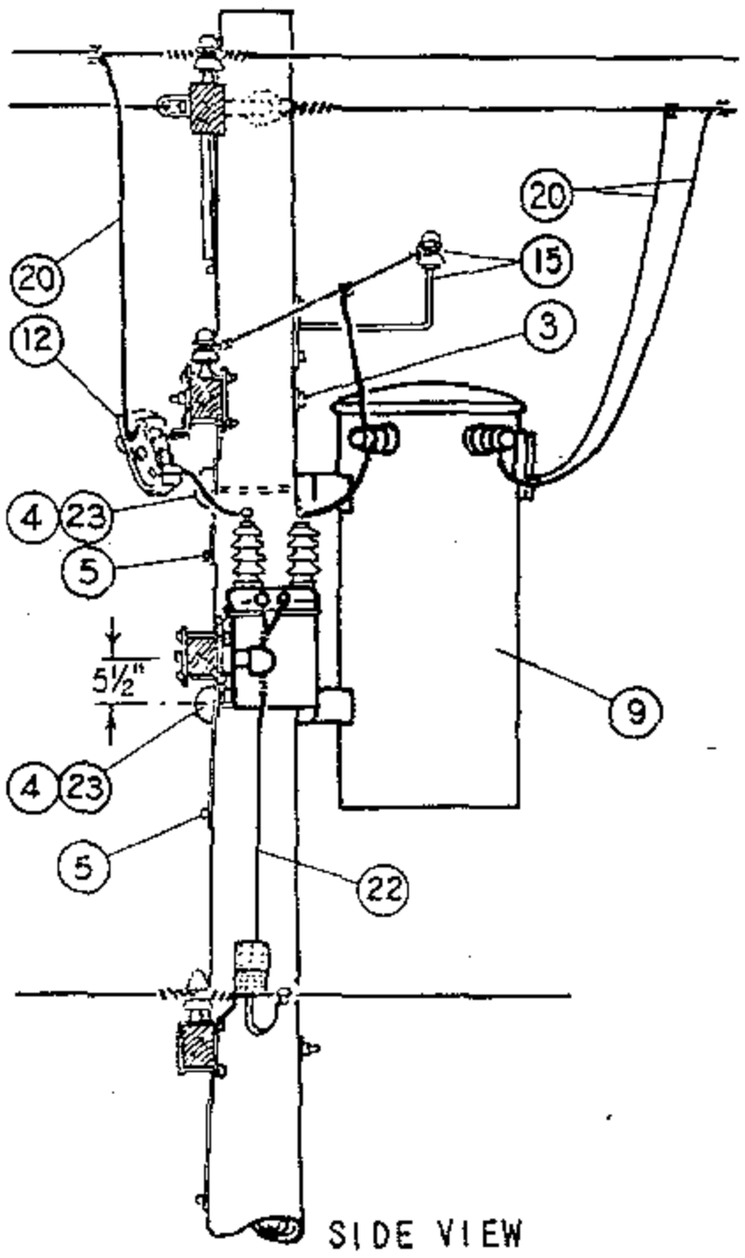

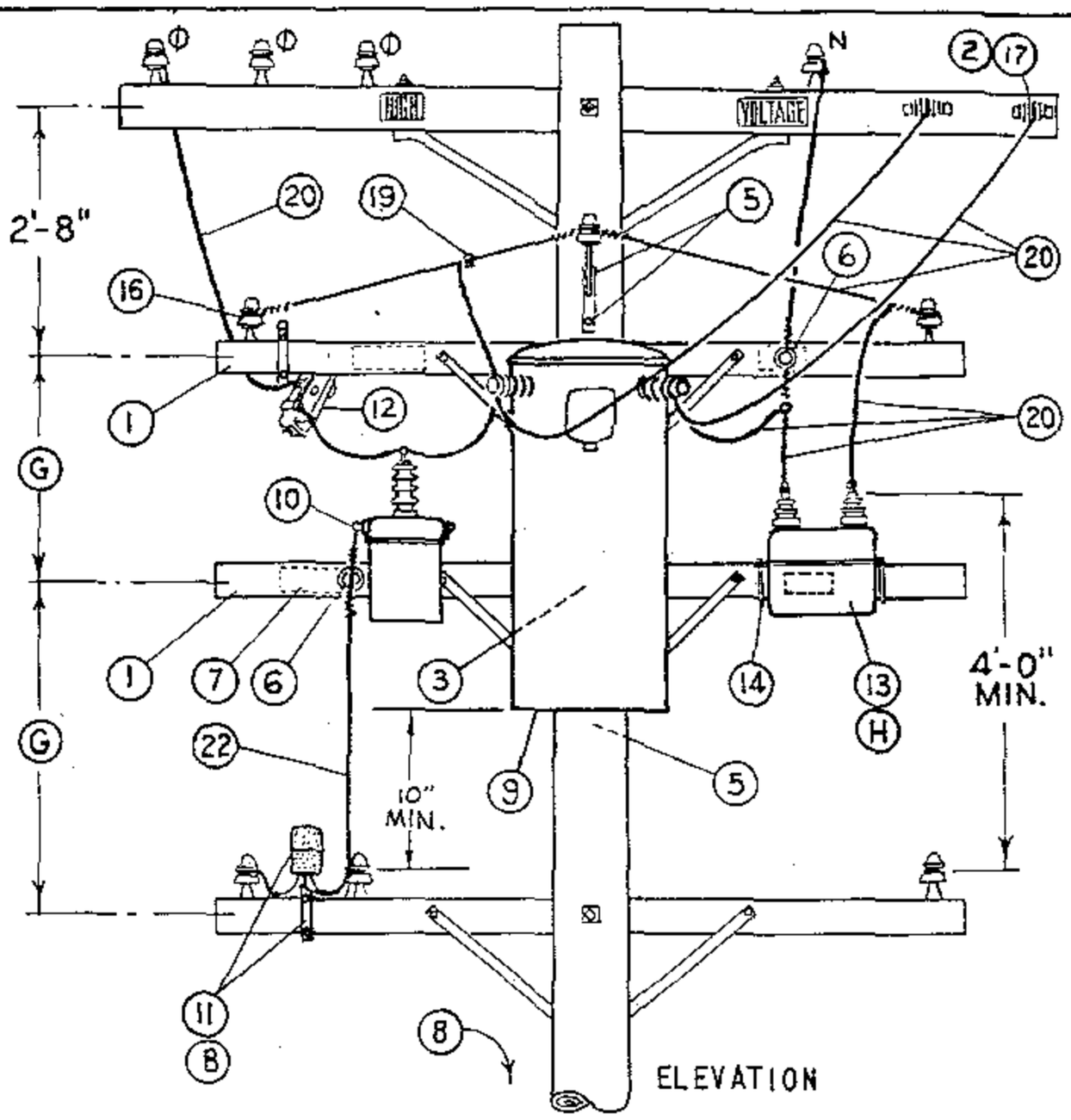

NOTES:

- CLASS OF POLE SHOULD BE DETERMINED PER STANDARD 344-361.

INSTALLATION:

A. ROTATE COVER OF OIL SWITCH 180°, WHERE NECESSARY, TO POSITION MANUAL OPERATING LEVER ADJACENT TO CLIMBING SPACE.

(B) FACE PHOTO CELL TO THE NORTH.

(C) NO LONGER PURCHASED. SALVAGE FROM EXISTING INSTALLATION OR OBTAIN FROM KEARNY MAINTENANCE.

(D) NO LONGER PURCHASED. SALVAGE FROM EXISTING INSTALLATION OR OBTAIN FROM MIRAMAR SALVAGE YARD.

(E) EXEMPT MATERIAL.

(F) CAN BE SUBSTITUTED WITH 12KV 100A CUTOUT.

(G) SPACE KICK ARM & BRACE TO CLEAR LOWER TRANSFORMER THRU BOLT COVER.

(H) IF CAPACITOR FAILS OR STATION IS RELOCATED, DO NOT REPLACE CAPACITOR.

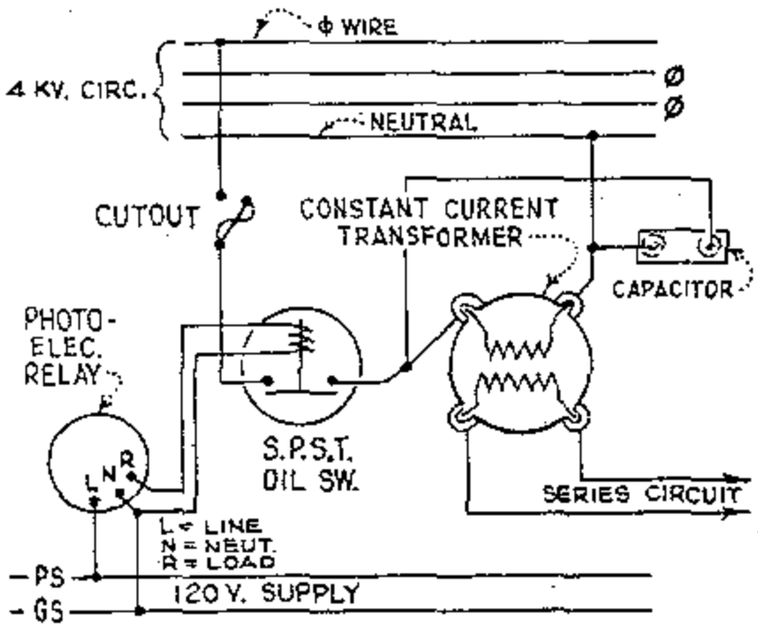

WIRING DIAGRAM

C.C. TRNSFMR. KW	CAPACITOR KVAR
7½ (D)	15
10 (D)	15
15 (D)	15
25	25

ITEM		DESCRIPTION		QUANTITY	STOCK NO. OR CONSTR STDS
P. T. & F.	1	3½" x 4½" x 8'-0" Crossarm		2	PG. 380.03 IT.1
	2	Mach. Bolt, Galv., 5/8" x 6", 1 sq. washer & 1 nut	(E)	2	STD 139, 140
	3	Mach. Bolt, Galv., 5/8" x 16", 2 sq. washers & 1 nut	(E)	2	STD 139, 140
	4	Mach. Bolt, Galv., ¾" x 12", 1 sq. curved washers & 1 nut	(E)	2	STD 139, 140
	5	Lag Screw, Galv., ½" x 4"	(E)	4	621568
	6	Pin, Transformer, Lead 1" Leadthread	(E)	2	529248
	7	High Voltage Sign & 8 galv. roofing nails	(E)	2	647744, 492224
	8	Pole Steps	(E)	15	692992
S. L. & S.	9	C. C. Transformer, 2.4 kv., incl. 2 pole bolt adapter plates		1	PG-1121.12
	10	South Bend Controller Co. Oil Switch, S.P.S.T., 75 A., 2.4 kv. type SPR-1-120 spec. 6210 with #6222 X-arm Mtg. Bracket		1	274528 (C)
	11	Photoelectric Relay, 1000 W. min., 120 V.		1	273888 166432
	12	Cutout, 5 kv., 50 A.	(F)	1	Section 1200
	13	Capacitor, Size per Table, 2.4 kv., 2-⅜" x 1" Mtg. Bolts & Washers	(H)	1	207328, 207168
	14	Capacitor Mounting Strap & "U" Bolt	(D)	2	597___ 158432
	15	Stand-Off Bracket with Insulator		1	166144
	16	Insulator and 1" steel pin	(E)	2	532608
	17	D.E., 4 kv.	(E)	2	235520
	18				
	19	Wire Connector		9	STD 783-787
	20	#6 B. Strand. Copper Wire		50'	813536
	21				
	22	2-C #16, 600 V. Type "S" Neoprene Jacketed Super Service Cord		5'	814400
	23	Cover Thru Bolt Plastics & 4 - 10d Nails, galv.	(E)	2	285696, 492192

DATE 11-5-82
APPD

SDG&E ELECTRIC STANDARDS

PHOTOELECTRIC CONTROLLED REGULATED OUTPUT STREET LIGHT TRANSFORMER INSTALLATION, 4KV

1599.503
SUPERCEDES
1555.2 (1-1-92)

TABLE OF CONTENTS

SCOPE : THIS STANDARD SHOWS A CONSTANT CURRENT SERIES LIGHTING R.D. TRANSFORMER INSTALLATION. IT IS TO BE USED ON EXISTING INSTALLATIONS.

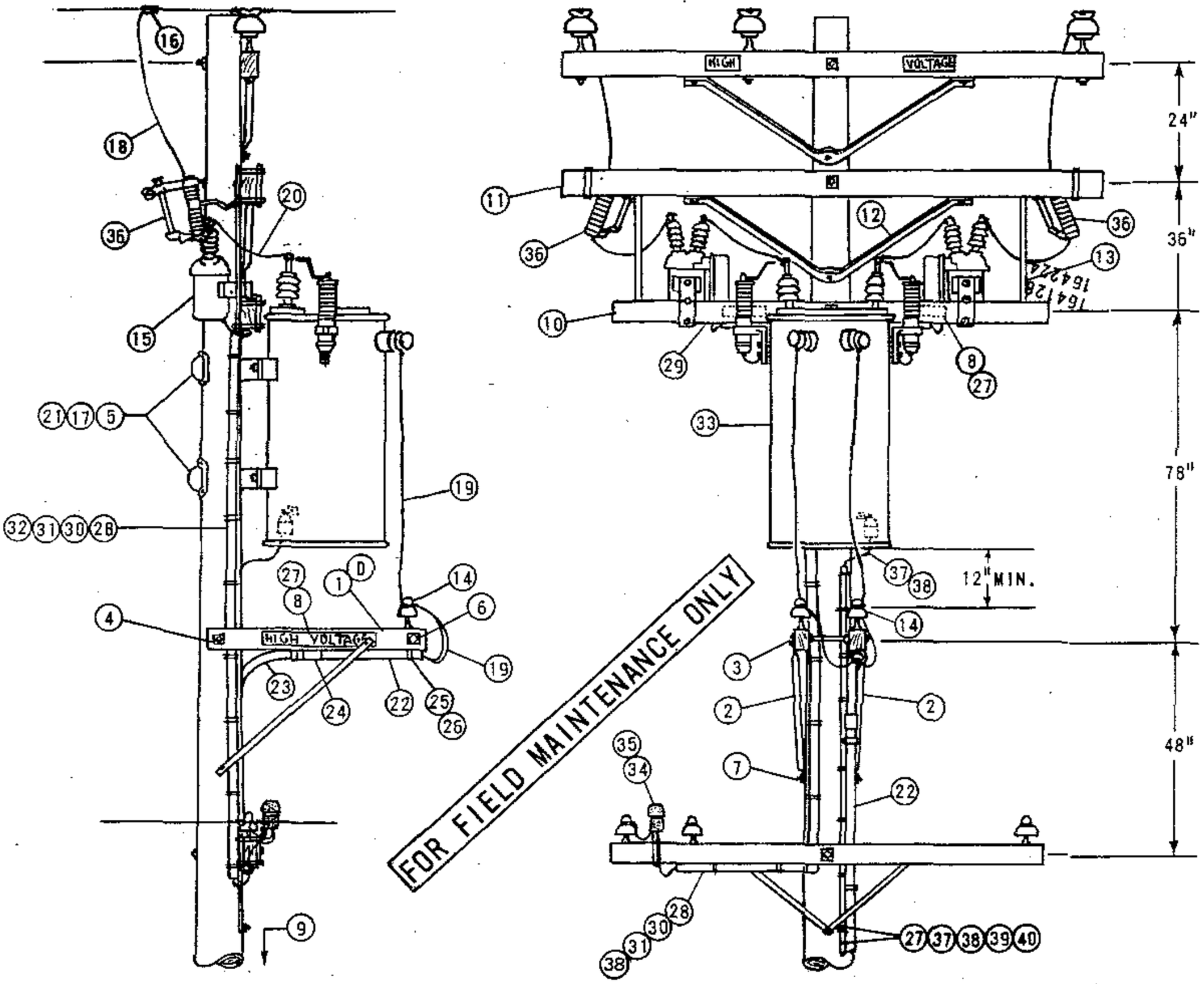

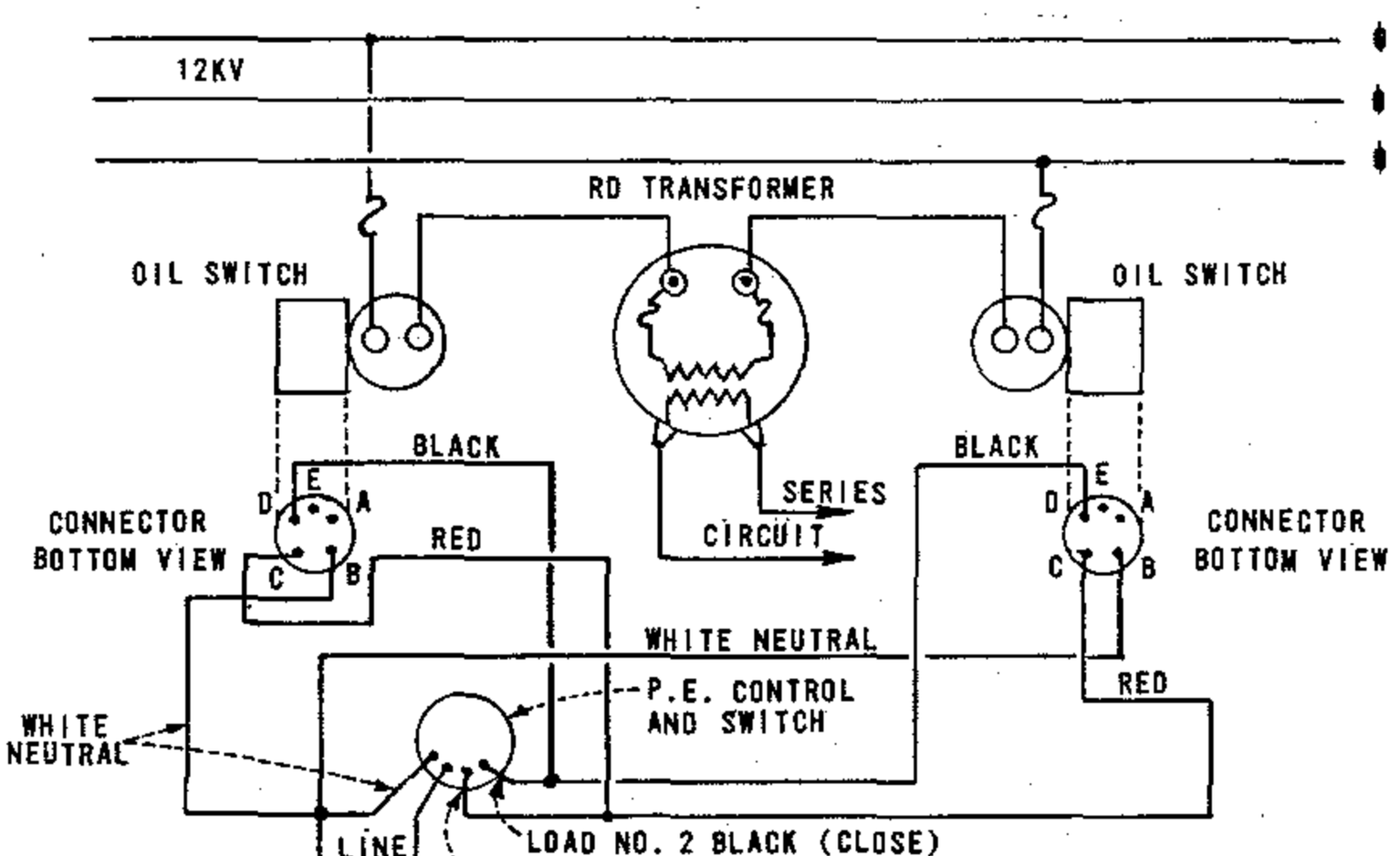

WIRING DIAGRAM

1599.601 SUPERSEDES 1562.1 (4-30-82)	SDG&E ELECTRIC STANDARDS P.E. CONTROLLED R.D. STREET LIGHT TRANSFORMER INSTALLATION, 12KV	DATE 4-30-82 APPD

BILL OF MATERIAL :

ITEM PTF	ITEM SL&SS	DESCRIPTION		QUANTITY	STOCK NO. OR CONSTR. STDS.
1		CROSSARM, 3 1/2" X 4 1/2" X 4'-0"	(D)	1	STD 380.05 IT. 3
2		BRACE, ALLEY ARM, 4'-0"		2	163808
3		BOLT, MACH. GALV., 5/8" X 5", 1 RD. WASHER & 1 NUT	(E)	1	STD 139, 140
4		BOLT, MACH. GALV., 5/8" X 18", 2 SQ. WASHERS & 1 NUT	(E)	1	STD 139, 140
5		BOLT, MACH. GALV., 3/4" X 12", 1 SQ. CURVED WASHER & 1 NUT		2	STD 139, 140
6		BOLT, SPACE, GALV., 5/8" X 20", 4 SQ. WASHERS & 4 NUTS	(E)	1	STD 139, 140
7		SCREW, LAG, GALV., 5/8" X 5"	(E)	1	621600
8		SIGN, HIGH VOLTAGE & NAILS, GALV ROOFING	(E)	3	647648,
9		STEPS, POLE	(E)	15	692992
10		CROSSARM, 3 3/4" X 5 3/4" X 8'		1	STD 380.01
11		CROSSARM, 3 3/4" X 5 3/4" X 10'		1	STD 380.1
12		BRACE, 5'-0"		1	
13		BRACE, STRUT, 36"		2	
	14	INSULATOR, 4KV	(E)	2	700 SECTION
	15	SWITCH, OIL, NR, 15KV, 200 AMP		2	705568
	16	CONNECTORS, COMPRESSION	(E)	2	700 SECTION
	17	NAILS, GALV. 10d	(E)	6	491392
	18	WIRE, COPPER #6/3 STRAND		10'	813536
	19	CABLE, 1/C #6, 5KV XLP		60'	194304
	20	WIRE, COPPER, #4 SOLID W.P.		10'	812480
	21	COVER, PVC THRU BOLT	(E)	2	285696
	22	PIPE, PLASTIC 1 1/2" DIAM., PVC TYPE II, SCHEDULE 80, 20' LENGTHS	(E)	1	251456
	23	PIPE, 1 1/2" DIAM. PLASTIC, 90° ELBOW, PVC TYPE II, SCHEDULE 80		1	322464
	24	COUPLING, 1 1/2" DIAM. PLASTIC PIPE, PVC	(E)	3	280512
	25	STRAP, PIPE 1 1/2" DIAM., GALV.	(E)	AS REQ'D.	697664
	26	NAILS, 10d GALV.	(E)	AS REQ'D.	491392
	27	CLAMP, GROUND ROD	(E)	2	230016
	28	CONDUIT, PVC, TYPE II, SCHEDULE 80, 1"	(E)	25'	251424
	29	PLUG, DISCONNECT CONDUCTOR, 5 TERMINAL	(F)	2	544838
	30	WIRE, COPPER, #12 TW, STRANDED WP, WHITE	(F)	25'	810016
	31	WIRE, COPPER, #12 TW, STRANDED WP, RED	(F)	25'	809920
	32	WIRE, COPPER, #12 TW, STRANDED WP, BLACK	(F)	25'	809504
	33	TRANSFORMER, R.D., 12KV, 25KVA		1	763426
	34	MOUNTING BRACKET		1	166432
	35	PHOTO ELECTRIC RELAY, 120 V., 1000 W MIN.		1	273920
	36	CUTOUT, 12KV 100A		2	297888
	37	WIRE, COPPER #6 B. STRD.		50'	813644
	38	UNIT, GROUND (LTN'G ARR.) PLAIN/GREY		1	603136, 603120
	39	STAPLE, FENCE 1 1/4"	(E)	AS REQ'D	678520
	40	STAPLE, MOULDING 3" x 1 1/16" x 1/4"	(E)	AS REQ'D	678560

FOR FIELD MAINTENANCE ONLY

TABLE OF CONTENTS

INSTALLATION :

A. CLASS OF POLES SHOULD BE DETERMINED PER STDS 344-361.

B. APERTURE OF PHOTOELECTRIC CELL MUST BE SET TO FACE NORTH.

C. 12KV/6.6A CONSTANT CURRENT TRANSFORMER HAS INTERNAL FUSES.

(D) WHEN THERE IS NO SECONDARY ON A POLE, A 6 PIN COMBINATION ARM FOR THE TWO WIRE SERIES AND THE SECONDARY MAY BE USED. THE 4' ALLEY ARMS WILL NOT BE NEEDED. IDENTIFY THE SECONDARY WITH 0-750 VOLT SIGNS.

(E) EXEMPT MATERIAL.

(F) 5 TERMINAL PLUGS AND WIRE TO BE FABRICATED BY KEARNY MAINTENANCE.

G.

H.

REFERENCE :

I. G.O. 95 RULE 58.2 REQUIRES PRIMARY CONSTANT CURRENT SERIES LIGHTING CIRCUITS BE TREATED AS MORE THAN 750 VOLTS.

J. S D G & E RULE DOES NOT ALLOW FOR CONSTANT CURRENT SERIES LIGHTING CIRCUITS OVER 750 VOLTS TO BE PLACED ON THE SAME ARM WITH 12KV.

	S D G & E ELECTRIC STANDARDS	
DATE 4-30-82 APPD	P.E. CONTROLLED R.D. STREET LIGHT TRANSFORMER INSTALLATION, 12KV	~~1599.602~~ SUPERSEDES 1562.2 (4-30-82)