2023
OVERHEAD CONSTRUCTION STANDARDS

Historical Record: 5/19/2023
External Version

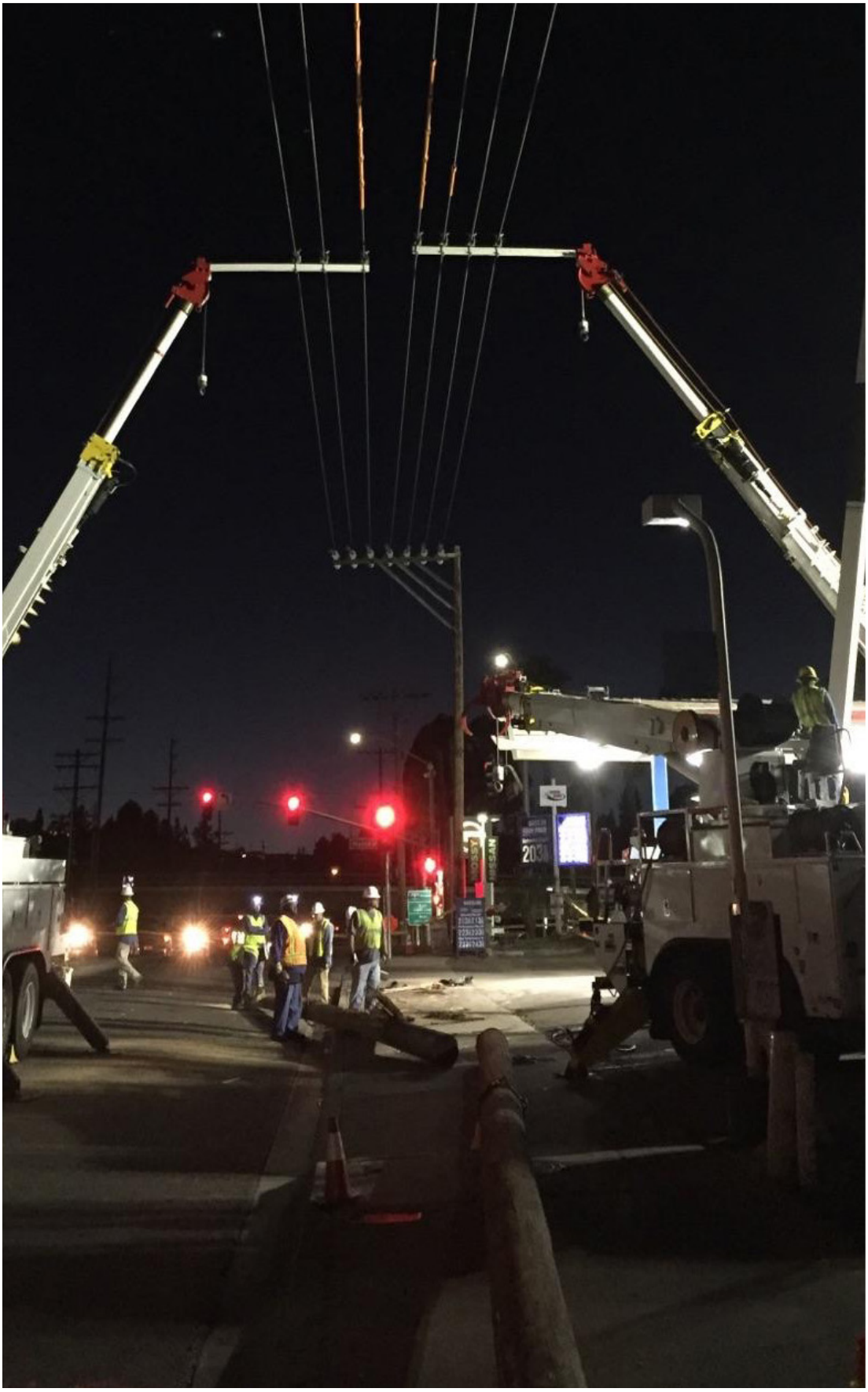

SDGE™

GENERAL INFORMATION	100
PRACTICES	200
POLES, ARMS & HARDWARE	300
DISTRIBUTION POLE TOPS	400
TELECOMMUNICATIONS, SCADA & FIBER OPTICS	500
SECONDARIES, SERVICES	600
CONDUCTOR DATA & ACCESSORIES	700
SAG	800
GUYING	900
GROUNDING, BONDING	1000
TRANSFORMERS, BOOSTERS	1100
SECTIONALIZING, ARRESTERS	1200
CAPACITORS, REGULATORS	1300
CABLE POLES	1400
LIGHTING	1500
WILDLIFE PROTECTION	1600
SPACER CABLE SYSTEM	1700
ENGINEERED STEEL POLES	1800
MISCELLANEOUS EQUIPMENT	1900
COVERED CONDUCTOR	2000
DISCLAIMER & CONTACTS	
SUMMARY OF CHANGES	
REFERENCE	

ATTENTION:

THESE STANDARDS WERE DEVELOPED FOR MAINTAINING SAFETY AND RELIABILITY OF THE ELECTRIC DISTRIBUTION AND SERVICE SYSTEMS.

THE INTENT OF THIS STANDARD IS TO GUIDE ENGINEERS, DESIGNERS/PLANNERS AND CONSTRUCTION PERSONNEL AND PROVIDE TYPICAL CONSTRUCTION METHODS FOR ELECTRIC DISTRIBUTION. NOT ALL ARRANGEMENTS ARE DEPICTED AND IT IS THE USER'S RESPONSIBILITY TO APPLY THESE STANDARDS APPROPRIATELY. ALL USERS MUST USE GOOD JUDGMENT. STANDARDS ARE UPDATED AS NEEDED. CONSULT EDE FOR LATEST VERSION. SDG&E STANDARDS MUST BE APPLIED. PRE-CONSTRUCTION APPROVAL OF A "DEVIATION REQUEST" IS REQUIRED FOR ANY EXCEPTION TO THESE STANDARDS. ANY ALTERATIONS, MODIFICATIONS OR IMPROVEMENTS TO THIS AND ALL STANDARDS MUST BE REVIEWED, APPROVED AND DOCUMENTED BY EDE-CONSTRUCTION STANDARDS AND DISTRICT C&O'S.

THE CPUC'S GENERAL ORDER 95 RULES/REQUIREMENTS ARE NOT INTENDED FOR USE AS COMPLETE CONSTRUCTION SPECIFICATIONS BUT EMPLOY ONLY THE MINUMUM REQUIREMENTS WHICH ARE MOST IMPORTANT FROM THE STANDPOINT OF **SAFETY AND RELIABILITY.** SDG&E MAY IMPOSE STRICTER RULES AND REQUIREMENT IN THE INTREST MAINTANANING SAFETY AND RELIABILTY OF OUR ELECTRICAL SYSTEM.

CONSTRUCTION SHALL BE ACCORDING TO ACCEPTED GOOD PRACTICE FOR GIVEN LOCAL CONDITIONS IN ALL SITUATIONS NOT SPECIFIED IN THE STANDARD.

SDG&E WILL NOT ACCEPT ANY SYSTEM DESIGN OR INSTALLATION WHICH DOES NOT CONFORM TO THESE STANDARDS

DEVIATIONS CANNOT BE GRANTED WHICH CONFLICT WITH THE CPUC GENERAL ORDERS OR OTHER GOVERNING AGENCIES. THESE MAY INCLUDE SEPARATION FROM ENERGIZED FACILITIES AND WORKING CLEARANCES.

BASED ON UNUSUAL OR UNSAFE SITE CONDITIONS SDG&E MAY IN THE INTEREST OF SAFETY OR RELIABILITY REQUIRE CONSTRUCTION MEASURES BEYOND THOSE SPECIFICALLY STATED IN THIS MANUAL.

EXCEPT FOR A REQUIREMENT TO IMMEDIATELY ADOPT NEWLY PUBLISHED STANDARDS, THE APPLICATION OF NEWLY PUBLISHED STANDARDS IS REQUIRED FOR ALL WORK UP TO THE 30% PROJECT DESIGN APPROVAL LEVEL. ALL DESIGN AND CONSTRUCTION WORK AFTER 30% PROJECT DESIGN APPROVAL MAY USE CONSTRUCTION STANDARDS THAT IMMEDIATELY PRECEDE THE NEWLY UPDATED STANDARD, UNLESS THE IMMEDIATE ADOPTION OF NEWLY PUBLISHED STANDARDS IS MANDATED.

USE OF "BLOCK STOCK" MUST BE COORDINATED WITH INVENTORY & LOGISTICS AND IS GENERALLY ONLY APPLIED AS A "LAST RESORT" AFTER CONSULTATION AND AGREEMENT WITH STAKEHOLDERS AND AN ALTERNATE SOLUTION, SUPPLIER, MATERIAL OR METHOD IS DEEMED ACCEPTABLE AND AVAILABLE.

MAIN TABLE OF CONTENTS

IF YOU HAVE ANY QUESTIONS REGARDING THE CONTENT OF THESE MANUALS PLEASE EMAIL CONSTRUCTIONSTANDARDSADMINISTRATORS@SEMPRAUTILITIES.COM OR CONTACT:

MANUAL	CONTACT	EMAIL ADDRESS	PHONE
Electric Distribution Design Manual	Martha Lachmayr	mlachmayr@sdge.com	(858) 654-8245
Overhead Construction Standards	Mike Forchette	mforchette@sdge.com	(619) 244-7495
Service Standards & Guide	Israel Juarez	ijuarez@sdge.com	(858) 636-3941
Electric Vehicle Supply Equipment Standards	Israel Juarez	ijuarez@sdge.com	(858) 636-3941
Underground Construction Standards	Eddie Alcobia	ealcobia@sdge.com	(619) 574-4988
Electric Standard Practices	Joey Kucharyski	jkucharyski@sdge.com	(760) 566-5919
Tool Catalog	Roy Guilao	rguilao@sdge.com	(760) 672-6211

PRINTED COPIES:

FOR PRINTED VERSIONS, WITH BINDER AND TAPS, OF THE **OVERHEAD CONSTRUCTION STANDARDS** PLEASE CONTACT CONSTRUCTIONSTANDARDSADMINISTRATORS@SEMPRAUTILITIES.COM. THESE WILL BE PROVIDED AT THE COST OF YOUR DEPARTMENT. PLEASE INCLUDE IN THE EMAIL:

- NAME, COST CENTER #, I/O #, MAIL STOP #

SUMMARY OF CHANGES

DATE	STANDARD PAGES	FILE NAME
01/30/18	NEW FORMAT RELEASE	OHCS2018v0130.pdf
03/01/18	103, 340.1, 340.2, 340.3, 631, 701, 711.1, 711.2, 712.1, 712.2, 713, 714, 715, 716, 717, 718, 720.1, 720.2, 720.3, 720.4, 720.5, 720.6, 720.7, 720.8, 720.9, 720.10, 720.11, 755.1, 755.2, 970.1, 970.2, 1207.1, 1207.2, 1218.1, 1231.1, 1231.2, 1231.3, 1231.4, 1272.2, 1272.3, 1272.4, 1272.5, 1272.6, 1272.7, 1272.8, 1272.9, 1272.10, 1272.11, 1320.1, 1320.2, 1320.3, 1320.4, 1320.5, 1320.6, 1320.7, 1320.8, 1320.9, 1325.1, 1325.2, 1325.3, 1325.4, 1325.5, 1325.6, 1325.7, 1325.8, 1325.9, 1356.1, 1356.2, 1356.3, 1356.4, 1356.5, 1452.1, 1452.2, 1452.3, 1452.4, 1452.5, 1452.6, 1452.6, 1452.7, 1452.8, 1452.9, 1452.10	OHCS2018v0301.pdf
04/16/18	303.1, 303.2, 303.3, 303.4, 303.5, 303.6, (379.1 - 379.54 New Format), 546.1, 546.2, 546.3, 601, 701, 711.1, 711.2, 712.1, 712.2, 713.1, 714.1, 715.1, 716.1, 717.1, 718.1, 755.1, 755.2, 760.1, 760.2, 760.3, 762, 763.1, 763.2, 764.1, 764.2, 1002.1, 1002.2, 1002.3, 1002.4, 1002.5, 1002.6, 1145, 1146.1, 1146.2, 1146.3, 1146.4, 1147.1, 1147.2, 1147.3, 1148.1, 1148.2, 1148.3, 1188.1, 1188.2, 1188.3, 1212.1, 1212.2, 1212.3, 1273.1, 1273.2, 1273.3, 1273.4, 1273.5, 1273.6, 1273.7, 1325.1, 1325.2, 1325.3, 1325.4, 1325.5, 1325.6, 1325.7, 1325.8, 1325.9, 1432.1, 1432.2, 1432.3, 1432.4, 1432.5, 1442.1, 1442.2, 1442.3, 1442.4, 1620.1, 1620.2, 1620.3, 1620.4, 1620.5, 1620.6, 1620.7, 1620.8, 1640.1, 1640.2	OHCS2018v0416.pdf
05/15/18	101.1, (379.1 -379.54 New Format Removed), 540.1, 540.2, 540.3, 540.4, 581.1, 581.2, 593.1, 593.2, 593.3, 793.1, 901, 967, 968.1, 968.2, 1180.1, 1180.2, 1180.3, 1180.4, 1271.1, 1271.2, 1271.3, 1271.4, 1271.5, 1271.6, 1271.7, 1352.1, 1352.2, 1352.3, 1352.4, 1355.1, 1355.2, 1355.3, 1355.4	OHCS2018v0515.pdf
06/11/18	301.1, 331.1, 331.2, 331.3, 435.1, 435.2, 435.3, 435.4, 576.1, 576.2, 576.3, 1194.1, 1194.2, 1194.3, 1320.1, 1320.2, 1320.3, 1320.4, 1320.5, 1320.6, 1320.7, 1320.8, 1320.9	OHCS2018v0611.pdf
08/01/18	102.1-102.9, 220, 221, 223, 224.1-224.4, 389.1, 389.2, 392.1-392.4, 401.1, 430.1-430.4, 431.1-431.3, 432.1-432.4, 433.1-433.2, 435.1-435.4, 437.1, 440.1-440.3, 473.1-473.2, 565.1, 565.2, 601, 604(Removed), 720.1-720.11, 750.1-750.5, 941.1, 941.2, 1004.1, 1004.2, 1240.4-1240.6, 1620.1-1620.8,1701.1, 1702.1, 1703.1-1703.2, 1704.1-1704.2, 1705.1-1705.2, 1706.1-1706.2, 1707.1-1707.2, 1708.1-1708.2, 1709.1, 1710.1, 801, 805.1-805.9, 806.1-806.33,807.1-807.33, 808.1-808.33, 809.1-809.129, 810.1-810.359, 811.1-811.360,812.1-812.360, 813.1-813.362, 814.1-814.145, 815.1-815.241, 816.1-816.21, 817.1-817.21, 818.1-818.21, 819.1-819.33, 820.1-820.33, 821.1-821.215, 822.1-822.215, 823.1-823.198, 824.1	OHCS2018v0801.pdf
08/24/18	392.1-392.4, 394.1, 592.1-592.3, 594.1-594.3, 577.1-577.3, 1002.1-1002.6, 1311.1	OHCS2018v0824.pdf
08/30/18	Special Release- 1272.1-1272.11, 1325.1-1325.9, 720.1-720.11	OHCS2018v0830.pdf
09/21/18	105.1-105.3, 401.1, 430.1-430.4, 432.1-432.4, 590.1-590.3, 591.1-591.4, 601, (635.4 moved to FMO), 750.1-750.5	OHCS2018v0921.pdf
10/19/18	301.1, 303.1-303.6, 720.7, 764.1-764.2, 1004.1-1004.2, 1272.1-1272.10, 1274.1-1274.9, 1352.4 COMPLETE REFORMATTING AND NUMBER CONSOLIDATION OF SECTION 1100	OHCS2018v1019.pdf
11/16/18	101.1, 103.1,392.1-392.5, 711.1-711.2, 712.1-712.3, 713, 714, 715, 716, 717, 718, 927.1-927.3	OHCS2018v1116.pdf
12/21/18	1003.1-1003.2 COMPLETE REFORMATTING AND NUMBER CONSOLIDATION OF SECTION 600	OHCS2018v1221.pdf
01/24/19	COMPLETE REFORMATTING AND NUMBER CONSOLIDATION OF SECTION 1600 COMPLETE REFORMATTING AND NUMBER CONSOLIDATION OF SECTION 1700	OHCS2019v0124.pdf

MAIN TABLE OF CONTENTS

ARCHIVED BOOKS AVAILABLE ON THE INTERNAL VERSION

SUMMARY OF CHANGES

02/22/19	432.1-432.4, 701.1, 783.1-783.16, 794.1, COMPLETE REFORMATTING AND NUMBER CONSOLIDATION OF SECTION 200, COMPLETE REFORMATTING AND NUMBER CONSOLIDATION OF SECTION 900, COMPLETE REFORMATTING AND NUMBER CONSOLIDATION OF SECTION 1200, COMPLETE REFORMATTING AND NUMBER CONSOLIDATION OF SECTION 1300, COMPLETE REFORMATTING AND NUMBER CONSOLIDATION OF SECTION 1400, COMPLETE REFORMATTING AND NUMBER CONSOLIDATION OF SECTION 1500	OHCS2019v0222.pdf
03/20/19	379, 430,1201, (1208 TO FMO), 1212, 1276, 1401, (1432 TO FMO) COMPLETE REFORMATTING AND NUMBER CONSOLIDATION OF SECTION 300 COMPLETE REFORMATTING AND NUMBER CONSOLIDATION OF SECTION 500	OHCS2019v0320.pdf
04/22/19	201, 207, 211, 213, 217, 220, 225, 229, 251, 262, 281, 285, 287, 396, 577, 760, 784, 1004, 1109, 1207, 1222, 1230, 1231, 1518, 1519, 1620, 1630, (433 TEMPORARILY REMOVED), COMPLETE REFORMATTING AND NUMBER CONSOLIDATION OF SECTION 700	OHCS2019v0422.pdf
05/23/19	301, 303, 310, 311, 1309	OHCS2019v0523.pdf
06/13/19	310, 374, 711, 1004, 1640	OHCS2019v0613.pdf
07/11/19	1700, 1703, 1704, (1705 to FMO), 1706, 1707, 1708, 1710	OHCS2019v0711.pdf
07/15/19	501, (530 to FMO), 577, 750, 784, 1207	OHCS2019v0715.pdf
08/20/19	229, 301, (388 to FMO), 560, 1444	OHCS2019v0820.pdf
09/20/19	251, 396, 540, 760, 908, 1274, 1401, 1800	OHCS2019v0920.pdf
10/25/19	220, 310, 390, 709, 755, 788, 901, 930, 1206, 1271, 1570, 1571	OHCS2019v1025.pdf
11/19/19	220, 281, 396, 435, 576, 711, 784, 950, 1121, 1156, 1194, 1240, 1273, 1435, 1530, 1615	OHCS2019v1119.pdf
12/20/19	909, 1247	OHCS2019v1220.pdf
01/24/20	COVER PAGE, 208, 325, 330, 501, 546, 550, 579, 580, 591, 635, 731, 739, 1174, 1231, 1650, 1651, 1652, 1653, 1654, 1655	OHCS2020v0124.pdf
02/19/20	510, 1242, 1274	OHCS2020v0219.pdf
03/20/20	200, 207, 211, 217, 225, 228, 229, 262, 264, 281, 401, 474, 501, 560, 576, 783, 1002,1116, 1207	OHCS2020v0320.pdf
04/24/20	331, 379, 433, 701, 750, 760, 784, 785, 1201, 1208, 1212, 1272, 1352, 1401, 1442, 1444, 1447, 1561, 1566, 1571, 2000	OHCS2020v0424.pdf
05/22/20	372, 378, 397, 614, 651, 929, 1168, 1230, 1251, INTERNAL SERVER UPGRADE	OHCS2020v0522.pdf
06/19/20	784, 1341	OHCS2020v0619.pdf
07/24/20	251, 320, 1116, 1501, (1511 to FMO), 1651, 1653	OHCS2020v0724.pdf
08/21/20	363, 474, 750, 789, 927, 928	OHCS2020v0821.pdf
09/25/20	540, 1122, 1630	OHCS2020v0925.pdf
10/23/20	501, 543, 1116, 1188, 1190, 1206, 1207, 1212, 1275, 1272, 1452, 2001, 2004, 2007, 2010, 2015, 2025, 2030, 2035, 2036, 2040	OHCS2020v1023.pdf
10/28/20	105	OHCS2020v1028.pdf
11/20/20	320, 390, 396, 577, 612, 720, 739, 745, 789, 975, 1000, 1274, 1440	OHCS2020v1120.pdf
12/18/20	540, 601, 602, 635, 1231, 1325, 1442	OHCS2020v1218.pdf
01/22/21	COVER PAGE, DISCLAIMER, 204, 211, 287	OHCS2021v0122.pdf
02/19/21	207, 210, 501, 530, 783, 789, 1101, (1194 TO FMO), 1115, 1121, 1141, 1402, 1403, 1435	OHCS2021v0219.pdf
03/19/21	251, 971, 1341, 1352, 2001, 2004, 2005, 2007, 2010, 2015, 2025, 2030, 2035, 2036, 2040	OHCS2021v0319.pdf
04/23/21	301, 320, 354, 388, 750	OHCS2021v0423.pdf
05/21/21	433, 1501, 1572	OHCS2021v0521.pdf
06/25/21	310	OHCS2021v0625.pdf
07/23/21	635, 739	OHCS2021v0723.pdf
08/20/21	206, 287, 303, 320, 432, 545, 546, 550, 612, 720, 908, 1101, 1184, (1192 to FMO), 1218, 1320, 1451, 1704,	OHCS2021v0820.pdf
09/24/21	379, 435, 758, 1222, 1404, 1406, 1414, 1418, 1440, 1444, 1509, 1640	OHCS2021v0924.pdf
10/22/21	201, 208, 213, 220, 320, 430, 543, 1212, 1274, 1620, 1650, 1651	OHCS2021v1022.pdf
11/19/21	927, 1121, 1131, 1141, 1860, 1920	OHCS2021v1119.pdf

MAIN TABLE OF CONTENTS

ARCHIVED BOOKS AVAILABLE ON THE INTERNAL VERSION

SUMMARY OF CHANGES

12/17/21	229, 262, 301, 315, 331, 354, 435, 474, 540, 711, 720, 739, 750, 784, 793, 1201, 1208, (1230 to FMO), 1231, 1242, 1247, 1271, 1301, 1309, 1311, 1320, 1404, 1801, 1821, 1822, 1830, 1831, 1832, 1840, 1850, 2035	OHCS2021v1217.pdf
01/21/22	Cover Page	OHCS2022v0121.pdf
02/25/22	401, 501, 1201, 1207, 1210, (1215 to FMO), 1314, 1401, 1402, 1406, 1501, 1510, 1512, 1514, 1570, 1571, 1573, 1630, 2025	OHCS2022v0225.pdf
03/25/22	101, 103, 105, 390, 801, 1002, 1414, 1812, 1820, 1920	OHCS2022v0325.pdf
04/22/22	102, 530, 1003, 1418, 1701, 1704, 1805, 1901	OHCS2022v0422.pdf
05/20/22	201, 290, 1001, 1206, 1301, (1316 to FMO), 1403, 1435, 1702	OHCS2022v0520.pdf
06/24/22	1610, 1615, 1821	OHCS2022v0624.pdf
07/22/22	331, 545, 575, 720, 739, 1406, 1444, 1451, 1830, 2004	OHCS2022v0722.pdf
08/17/22	432, 437, 576, 801, 1101, 1104, 1208, 1247, 1831	OHCS2022v0817.pdf
09/23/22	303, 1105, 1109, 1218, 1570, 1601, 1810, 2035, Disclaimer	OHCS2022v0923.pdf
10/14/22	1101, 1111, 1115, 1116, 1811	OHCS2022v1014.pdf
11/22/22	301, 379, 389, 397, 440, 590, 612, 701, 789, 941, 971, 1101, 1122, (1190 to FMO), 1206, 1440, 1601, (1660 to FMO), 1860	OHCS2022v1122.pdf
12/22/22	540, 635, 1125, 1222, 1274, 1832	OHCS2022v1222.pdf
01/20/23	Cover Page, Disclaimer, 211, 1184	OHCS2023v0120.pdf
02/07/23	(1440 reverted to previous version)	OHCS2023v0207.pdf
02/24/23	208, 961, 2036	OHCS2023v0224.pdf
03/24/23	390, 602, 907, 1101, (1156 to FMO), 1231, 1444, 1571, 1822	OHCS2023v0324.pdf
04/21/23	346, 546, 581, 701, 739, 745, 783, 787, 901, (974 to FMO), 1170, 1201, (1243 to FMO), 1352, 2005	OHCS2023v0421.pdf
05/19/23	201, 204, 207, 216, 285, 287, 325, 430, 530, 579, 580, 590, 635, 760, 785, 962, 1121, 1222, 1601, 1610, (1650, 1651, 1652, 1653 to FMO), 2004	OHCS2023v0519.pdf

MAIN TABLE OF CONTENTS

ARCHIVED BOOKS AVAILABLE ON THE INTERNAL VERSION

OVERHEAD CONSTRUCTION STANDARDS

100 GENERAL INFORMATION
Construction standards request form, Deviation Request

200 PRACTICES
Pole Marking, GFMS Operating and Facility maps, Working Space, G.O. Requirements, more

300 POLES, ARMS & HARDWARE
Pole Information, Loading Districts, Pole Bracing, Crossarms, Conductor Loading, Double and Triple Crossarms

400 DISTRIBUTION POLE TOPS
Crossarm and Buckarm Construction, Flying Tap, Alley Arms and Pole Top extensions

500 TELECOMMUNICATIONS, SCADA
Telecommunications Cable, SCADA Switch, SCADA Repeater, Load Monitor

600 SECONDARIES, SERVICES
0-750V Cable Construction, Mid-Span Services, Secondary and Service Cable Connections, Cathodic Protection Station with Overhead Electric Power Supply

700 CONDUCTOR DATA & ACCESSORIES
Wire Tables, Sleeves, Grips, Tree Guards, Connectors, Hot Line Clamps, Insulators, Suspension Clamps

800 SAG
Maximum Safe Span Lengths, Horizontal Conductor Spacing, Slack Span Construction

900 GUYING
Guying Proximity, Clearance, Anchor Installation, Rock Anchor Installation, Steel Guy Pole, Sidewalk Down guy Marker

1000 GROUNDING, BONDING
Grounding General Information, Bonding General Information

1100 TRANSFORMERS, BOOSTER
Loading Guide, Fusing, Connections, Prefixes, Transformer Application, Secondary Lead Wire, Grounding Bank Installation

1200 SECTIONALIZING, ARRESTERS
Primary Sectionalizing Fuses, 12kV Expulsion Fuse Marking, Electronic Sectionalizers, Hook Stick and Gang Operated Switches, OH Fault Indicator Installation

1300 CAPACITORS, REGULATORS
Capacitor Marking Instructions, Capacitor Fusing Table, Secondary Capacitor, Capacitor Controls, Step Voltage Regulator Installation

MAIN TABLE OF CONTENTS

1400 CABLE POLES
Joint Cable Pole Riser Positions, Pole Quadrant and Riser Identification, General Information, Primary Cable Pole Construction Line and Buck, 12.47kV and Below Cable Poles

1500 LIGHTING
Switching Times, G.O. Minimum Clearances, Replacement Refractors, Photoelectric Controls, 12kV Street Light Transformer Installation. Multiple Street Light Controller Installation.

1600 WILDLIFE PROTECTION
Critical area maps, cover-up devices, Avian safe construction, Nest Platforms

1700 SPACER CABLE SYSTEM
Cable and Messenger, Dead-End Transition, Tangent Construction, Steep Grade Line Angles, Steep Grade Messenger Dead-End Line Angles, Line Angles, Tangent Single-Phase Transformer, Three-Phase Transformer

1800 ENGINEERED STEEL CABLE POLES
External Riser Detail, Internal Riser Foundation, Double Horizontal/Vertical Flute Riser, Terminations, Double Horizontal/Vertical Termination, Hardware, Universal Equipment Plate.

1900 MISCELLANEOUS EQUIPMENT
Energy Storage Interconnection

MAIN TABLE OF CONTENTS

MAIN TABLE OF CONTENTS

PAGE	SUBJECT
101	TABLE OF CONTENTS
102	PEDESTRIAN PATH OF TRAVEL AND ACCESSIBILITY
103	GENERAL INFORMATION
105	DEVIATION REQUEST

REV	CHANGE	DRWN	BY	CHKD	APVD	DATE
C	REVISED TO 3D FORMAT	ARC	JIK	-	-	03/09/2022
B	UPDATED TABLE OF CONTENTS	-	GW	JS	CZH	11/15/2018
A	UPDATES TO 103	-	GW	JS	MDJ	10/25/2016

SDGE
A Sempra Energy utility®

© 1998 - 2022 San Diego Gas and Electric Company. All rights reserved. Removal of this copyright notice without permission is not permitted under law.

SDG&E ELECTRIC OVERHEAD CONSTRUCTION STANDARDS

GENERAL INFORMATION
TABLE OF CONTENTS

SCALE: NOT TO SCALE

DRAWING NO: OH101.1

SHEET: 1 OF 1

X Indicates Latest Revision | Completely Revised | New Page | Information Removed

TABLE OF CONTENTS

SCOPE: TO PROVIDE GUIDELINES FOR ACCOMMODATING THE NEEDS OF ALL PEDESTRIANS INCLUDING THOSE WITH MOBILITY, VISUAL OR HEARING DISABILITIES, AT WORKSITES THAT ENCROACH UPON A SIDEWALK, WALKWAY OR CROSSWALK.

DEFINITIONS:

- **ALTERNATE CIRCULATION PATH:** A TEMPORARY ROUTE OR DETOUR PROVIDED AS A SUBSTITUTE FOR THE NORMAL PEDESTRIAN ACCESS ROUTE.
- **BARRICADE:** AN OBSTRUCTION TO DETER THE PASSAGE OF PERSONS OR VEHICLES.
- **CONTRAST:** LIGHT-VERSUS-DARK COMPARISON BETWEEN TWO SURFACES, AN OBJECT AND ITS IMMEDIATE SURROUNDINGS, OR, AN OBJECT AND ITS PERCEIVED BACKGROUND. IT IS NEITHER AN EXPRESSION OF, NOR NECESSARILY ACHIEVED BY, COLOR DIFFERENCES.
- **CROSS-SLOPE:** THE SLOPE OR GRADE OF A SURFACE PERPENDICULAR TO THE RUNNING GRADE.
- **CROSSWALK:** THAT PART OF A ROADWAY WHERE MOTORISTS ARE REQUIRED TO YIELD TO PEDESTRIANS CROSSING, AS DEFINED BY STATE AND LOCAL REGULATIONS, WHETHER MARKED OR UNMARKED.
- **CURB LINE:** A LINE THAT REPRESENTS THE EXTENSION OF THE FACE OF THE CURB AND MARKS THE TRANSITION BETWEEN THE PUBLIC SIDEWALK AND THE GUTTER OR ROADWAY AT A CURB RAMP OR FLUSH LANDING.
- **CURB RAMP:** A SHORT SECTION OF THE PEDESTRIAN ACCESS ROUTE, WITH A RUNNING GRADE GREATER THAN 1:20 (5%) JOINING THE STREET ELEVATION TO THE PUBLIC SIDEWALK ELEVATION THROUGH A CUT IN THE CURB FACE.
- **DETECTABLE WARNING:** A SPECIFIED SURFACE TREATMENT FOR IMPROVED SURFACES THAT CAN BE DETECTED BY MOST PEDESTRIANS WHO USE A LONG CANE FOR NAVIGATION.
- **DRIVEWAY:** A PRIVATE VEHICULAR WAY GIVING ACCESS FROM A PUBLIC RIGHT-OF-WAY TO ADJACENT PROPERTY.
- **FIXTURE:** A FIXED ELEMENT IN THE PUBLIC RIGHT-OF-WAY THAT IS NOT INTENDED FOR PUBLIC USE AND DOES NOT REQUIRE CLEAR GROUND SPACE FOR APPROACH OR USE, SUCH AS A STREET LIGHTING POLE, FIRE HYDRANT OR SIGNAL CONTROLLER CABINET.
- **FLUSH:** WHEN TWO PORTIONS OF PUBLIC SIDEWALK AND/OR ROADWAY JOIN, WITHOUT VERTICAL SEPARATION OR LIP.
- **GRADE:** THE RATE OF ASCENT OR DESCENT OF A SURFACE WITH RESPECT TO A LEVEL PLANE, EXPRESSED AS A PERCENT; THE CHANGE IN ELEVATION PER UNIT OF HORIZONTAL LENGTH.
- **HANDRAIL:** A FIXED CONTINUOUS ELEMENT AT A SPECIFIED HEIGHT PROVIDED FOR PEDESTRIAN USE WHERE THERE IS A CHANGE OF ELEVATION, SUCH AS RAMPS, STAIRS, AND LANDINGS.
- **IMPROVED SURFACE:** AN AREA THAT, BY THE ADDITION OF MATERIALS OR ITS TREATMENT, PROVIDES A FIRM, STABLE AND SLIP-RESISTANT BASE FOR PEDESTRIAN MOVEMENT. EXAMPLES OF SUCH MATERIALS INCLUDE ASPHALT CONCRETE PAVING, PORTLAND-CEMENT CONCRETE PAVING, STONE, CERAMICS, WOOD, METAL, FIBERGLASS OR OTHER GENERALLY FIRM AND STABLE MATERIAL. SURFACES THAT HAVE ONLY FIRMLY PACKED EARTH, GRAVEL BASE, GRAVEL, VEGETATION, WOOD CHIPS, SHELLS OR OTHER MALLEABLE MATERIAL ARE NOT CONSIDERED, FOR THE PURPOSE OF THIS DEFINITION, TO BE IMPROVED SURFACES.
- **LANDING:** A LEVEL AREA WITH A CROSS-SLOPE OF LESS THAN 1:48 (2%) IN ANY DIRECTION ALONG A PUBLIC SIDEWALK, TRANSITION RAMP, CURB RAMP OR RAMP, USED FOR MANEUVERING OR WAITING.
- **MUTCD:** MANUAL OF UNIFORM TRAFFIC CONTROL DEVICES, CURRENT EDITION, AS APPROVED BY THE STATE OF CALIFORNIA-DEPARTMENT OF TRANSPORTATION.
- **PEDESTRIAN:** A PERSON TRAVELING THE PUBLIC RIGHT-OF-WAY BY MEANS OF A WHEELCHAIR, ELECTRIC SCOOTER, LEGS, CRUTCHES OR OTHER WALKING DEVICES OR MOBILITY AIDS.
- **PEDESTRIAN ACCESS ROUTE (PAR):** A CORRIDOR OF ACCESSIBLE TRAVEL THROUGH THE PUBLIC RIGHT-OF-WAY THAT HAS, AMONG OTHER PROPERTIES, A SPECIFIED MINIMUM WIDTH AND CROSS-SLOPE.
- **PEDESTRIAN CONTROL PLAN:** AN ON-SITE, TEXT, OR GRAPHIC DESIGN, LAYOUT, OR PLAN THAT PROVIDES FOR THE PROPER USAGE OF ALL PEDESTRIAN ACCESS ROUTES THROUGH OR AROUND A WORKSITE, INCLUDING TEMPORARY PATHS OF TRAVEL, CURB RAMPS, BARRICADES, SIGNS, AND OTHER DEVICES PLACED ON A STREET, SIDEWALK OR WALKWAY. THE PEDESTRIAN CONTROL PLAN MAY DEPICT AN AREA OR WORK ZONE TO BE USED FOR THE FACILITATION OF PEDESTRIAN TRAFFIC THROUGH A TEMPORARY TRAFFIC CONTROL ZONE, AND MAY BE USED IN CONJUNCTION WITH A TRAFFIC CONTROL PLAN.
- **PROJECT AREA:** THE ENTIRE WIDTH OF THE PUBLIC RIGHT-OF-WAY THROUGHOUT THE LENGTH UPON WHICH WORK IS PROPOSED OR UNDERTAKEN. PROJECT AREA MAY CONSIST OF A SINGLE ROUTE OR MULTIPLE ROUTES.
- **PUBLIC RIGHT-OF-WAY:** LAND, PROPERTY, OR INTEREST THEREIN, USUALLY IN A CORRIDOR, ACQUIRED FOR OR DEVOTED TO TRANSPORTATION PURPOSES AND SUBJECT TO THE CONTROL OF A PUBLIC AGENCY.
- **RAILING:** A BARRIER LOCATED NEAR THE OPEN SIDES OF ELEVATED WALKING SURFACES TO MINIMIZE THE POSSIBILITY OF AN ACCIDENTAL FALL OR SLIP FROM THE WALKING SURFACE TO THE LOWER LEVEL.
- **RUNNING GRADE:** THE GRADE THAT IS PARALLEL TO THE DIRECTION OF TRAVEL.
- **SIDEWALK:** THAT PORTION OF A PUBLIC RIGHT-OF-WAY BETWEEN THE BACK OF THE CURB LINE OR LATERAL LINE OF A ROADWAY AND THE ADJACENT PROPERTY LINE, THAT IS DEFINED BY AN IMPROVED SURFACE AND INTENDED FOR USE BY PEDESTRIANS.
- **SIDEWALK/STREET TRANSITION:** THE TRANSITION BETWEEN THE PUBLIC SIDEWALK AND A MARKED CROSSWALK OR INTENDED STREET CROSSING, MEDIAN REFUGE, ISLAND, OR OTHER LOCATION WHERE A PEDESTRIAN ACCESS ROUTE CROSSES OR ENTERS THE ROADWAY OR A DRIVEWAY.
- **SIGN:** ANY PEDESTRIAN OR TRAFFIC CONTROL DEVICE THAT COMMUNICATES INFORMATION TO PEDESTRIANS OR ROAD USERS THROUGH A WORD OR SYMBOL LEGEND. SIGNS DO NOT INCLUDE TRAFFIC CONTROL SIGNALS, PAVEMENT MARKINGS, DELINEATORS, OR CHANNELIZATION DEVICES.
- **WORKSITE OR ZONE:** AN AREA OF A PUBLIC RIGHT-OF-WAY WITH CONSTRUCTION, MAINTENANCE OR UTILITY WORK ACTIVITIES. IT MAY CONSIST OF A SINGLE ROUTE OR MULTIPLE ROUTES, AND INCLUDES THE ENTIRE WIDTH OF THE PUBLIC RIGHT-OF-WAY THROUGHOUT THE LENGTH UPON WHICH WORK IS PROPOSED OR UNDERTAKEN.

INSTALLATION: NONE

BILL OF MATERIALS: NONE

NOTES:

POLICY:

I. ALL WORKSITES THAT ENCROACH UPON A SIDEWALK, WALKWAY OR CROSSWALK SHALL ACCOMMODATE THE NEEDS OF ALL PEDESTRIANS. SPECIAL CONSIDERATION SHALL BE GIVEN TO ACCESSIBILITY FOR PERSONS WITH DISABILITIES, INCLUDING THOSE WHO USE WHEELCHAIRS OR OTHER MOBILITY DEVICES, WHO ARE BLIND OR VISUALLY IMPAIRED OR WHO ARE DEAF OR HARD OF HEARING.

II. PEDESTRIAN SAFETY AND ACCESSIBILITY CONSIDERATIONS, INCLUDING CONSIDERATION OF NECESSARY EQUIPMENT TO CREATE A SAFE AND ACCESSIBLE PATH OF TRAVEL AROUND THE WORKSITE, SHALL BE INCLUDED DURING WORKSITE PLANNING ASSESSMENTS.

III. PEDESTRIANS SHALL HAVE A SMOOTH, CLEARLY DELINEATED PATH OF TRAVEL THROUGH OR AROUND A WORK AREA UNTIL A PROJECT IS COMPLETED AND SHALL BE PROTECTED FROM POTENTIAL INJURY CAUSED BY ELECTRIC CONSTRUCTION WORK.

RESPONSIBILITIES:

IV. CONSTRUCTION AND OPERATIONS AND MAINTENANCE AND OPERATIONS DISTRICTS ARE RESPONSIBLE FOR COMPLIANCE AND IMPLEMENTATION OF THIS STANDARD AND ITS ASSOCIATED STANDARDS AND/OR ELECTRIC STANDARD PRACTICES AS THEY RELATE TO PEDESTRIAN PATH OF TRAVEL AND ACCESSIBILITY.

V. EMPLOYEES ARE RESPONSIBLE FOR ADHERENCE TO STANDARDS, GUIDELINES, ELECTRIC STANDARD PRACTICES, AND POLICIES AND PROCEDURES WHILE PERFORMING ALL DUTIES.

GENERAL DESCRIPTION OF REQUIREMENTS:

VI. THIS STANDARD IS DESIGNED TO ENSURE THE PROVISION OF ONE OR MORE TEMPORARY, ACCESSIBLE PATHS OF TRAVEL AROUND THE WORKSITE, FOR ALL DISRUPTED SURFACES WITHIN THE SCOPE OF THE PROJECT. THIS PROCEDURE APPLIES TO ALL WORKSITES WHERE THE WORK AREA ENCROACHES UPON A DESIGNATED PUBLIC RIGHT-OF-WAY PEDESTRIAN PATH OF TRAVEL (SIDEWALK, WALKWAY OR CROSSWALK AREA).

REV	CHANGE	DRWN	BY	CHKD	APVD	DATE
D	REVISED TO 3D FORMAT	ARC	JIK	-	-	4/12/2022
C	FORMATTING	EDM	JIK	-	-	12/7/2020
B	EDITORIAL CHANGES	-	AW	JS	CZH	7/17/2018

SDG&E

A Sempra Energy utility®

© 1998 - 2022 San Diego Gas and Electric Company. All rights reserved. Removal of this copyright notice without permission is not permitted under law.

SDG&E ELECTRIC OVERHEAD AND UNDERGROUND CONSTRUCTION STANDARDS

PEDESTRIAN PATH OF TRAVEL AND ACCESSIBILITY

SCALE: NOT TO SCALE

DRAWING NO: OH102.1 UG3002.1

SHEET: 1 OF 4

X Indicates Latest Revision | Completely Revised | New Page | Information Removed

TABLE OF CONTENTS

NOTES (CONT'D):

VII. EMPLOYEES WORKING ON A SIDEWALK THAT ARE UNABLE TO PROVIDE A SUITABLE AND PROTECTED 48-INCH WIDE PEDESTRIAN PATH OF TRAVEL ON THE SIDEWALK, SHALL ENSURE A SAFE AND ACCESSIBLE PATH OF TRAVEL FOR PEDESTRIANS AROUND THE WORKSITE, OR CLOSE THE SIDEWALK TO ALL TRAFFIC AND DIRECT ALL PEDESTRIANS TO AN ALTERNATE CIRCULATION PATH.

VIII. IMPROVEMENTS WITHIN A WORKSITE IN THE PUBLIC RIGHT-OF-WAY THAT ARE REMOVED OR DISTURBED DURING THE COMPANY'S ACTIVITIES AT THE SITE, SHALL BE REPLACED WITH CONSTRUCTION THAT MEETS THE ACCESSIBILITY REQUIREMENTS AS DESCRIBED IN THESE GUIDELINES.

PEDESTRIAN CONTROL PLANS FOR TEMPORARY MAINTENANCE AND CONSTRUCTION PROJECTS:

(IX) EVERY WORKSITE OR ZONE WHERE THE NORMAL PEDESTRIAN PATH OF TRAVEL IS INTERRUPTED, BLOCKED, LOCATED DIRECTLY ADJACENT TO A WORK AREA OR OTHERWISE IMPACTED BY THE WORK, SHALL HAVE AT LEAST ONE, AND POTENTIALLY SEVERAL, TEMPORARY AND ACCESSIBLE PATHS OF TRAVEL PROVIDED. WHERE THE AUTHORITY HAVING JURISDICTION DICTATES SPECIFIC REQUIREMENTS, THE COMPANY SHALL PERFORM ITS CONSTRUCTION IN COMPLIANCE WITH THAT AUTHORITY. IN SITUATIONS WHERE THE AUTHORITY HAVING JURISDICTION HAS SPECIFIED REQUIREMENTS WHICH PROVIDE LESS ACCESS THAN THE REQUIREMENTS IN THIS SECTION, THE COMPANY SHALL USE THE REQUIREMENTS IN THIS SECTION WHICH PROVIDE MORE ACCESS, UNLESS THE AUTHORITY HAVING JURISDICTION EXPLICITLY CONTRADICTS OUR REQUIREMENTS.

a. **PEDESTRIAN CONTROL PLAN:** AN APPROPRIATELY DETAILED PEDESTRIAN CONTROL PLAN SHALL BE FORMULATED AND IMPLEMENTED PRIOR TO ANY WORK BEING UNDERTAKEN AT THE WORKSITE.

b. **MAJOR CONSIDERATIONS:** THE MAJOR CONSIDERATIONS IN PLANNING FOR PEDESTRIAN ACCESS IN TEMPORARY PEDESTRIAN CONTROL ZONES WITHIN THE PUBLIC RIGHT-OF-WAY ARE AS FOLLOWS:

PEDESTRIANS SHALL NOT BE LED INTO CONFLICTS WITH WORKSITE VEHICLES, EQUIPMENT, EXCAVATIONS OR OTHER OPERATIONS.

PEDESTRIANS SHALL NOT BE LED INTO CONFLICTS WITH VEHICULAR TRAFFIC.

PEDESTRIANS SHALL BE PROVIDED WITH A CONVENIENT, SAFE, AND ACCESSIBLE PATH OF TRAVEL THAT REPLICATES, AS NEARLY AS POSSIBLE, THE MOST DESIRABLE CHARACTERISTICS OF EXISTING SIDEWALKS OR WALKWAYS IN THE AREA.

PEDESTRIANS SHALL BE INFORMED OF CHANGES IN THE TRAVEL PATH IN A MANNER THAT IS READILY UNDERSTANDABLE.

c. **EXCEPTIONS**: THE FOLLOWING TYPES OF TEMPORARY MAINTENANCE AND CONSTRUCTION WORK AND WORKSITES ARE EXCLUDED:

WORKSITES THAT ARE TO BE USED SHORT TERM, DEFINED AS BEING FOUR HOURS OR LESS.

WORKSITES THAT ARE REQUIRED FOR THE RESOLUTION OF PROBLEMS CAUSED BY AN EMERGENCY, NATURAL DISASTER, SUBSTANTIAL ACCIDENT OR SIMILAR UNUSUAL OR EXTREME CONDITIONS WHERE PROTECTION OF THE HEALTH AND SAFETY OF THE PUBLIC SUPERSEDES ANY OTHER CONSIDERATIONS. SUCH CONDITIONS SHALL NOT EXCEED A DURATION OF ONE WEEK.

(X) THIS ITEM IS EXEMPT.

(XI) **ALTERNATE CIRCULATION PATHS:**

AN ALTERNATE CIRCULATION PATH SHALL BE PROVIDED WHENEVER THE NORMAL PEDESTRIAN ACCESS ROUTE IN THE PUBLIC RIGHT-OF-WAY IS BLOCKED OR ALTERED BY CONSTRUCTION, ALTERATION, MAINTENANCE OR OTHER TEMPORARY CONDITIONS.

a. **LOCATION:** WHERE FEASIBLE, THE ALTERNATE CIRCULATION PATH SHALL PARALLEL THE DISRUPTED PEDESTRIAN ACCESS ROUTE ON THE SAME SIDE OF THE STREET. SIDEWALK CLOSURES TO ALL PEDESTRIAN TRAFFIC SHOULD ONLY OCCUR WHERE A SAFE PASSAGE FOR ALL PEDESTRIANS AROUND THE WORKSITE CANNOT BE ESTABLISHED.

b. **ALTERNATE CIRCULATION PATH PROTECTION:** THE ALTERNATE CIRCULATION PATH SHALL NOT HAVE ABRUPT CHANGES IN GRADE, ELEVATION OR TERRAIN. THE ALTERNATE CIRCULATION PATH SHALL HAVE NO PROTRUSIONS UP TO A HEIGHT OF 80 INCHES, INCLUDING SCAFFOLDING AND SCAFFOLDING BRACES. WHEN OVERHEAD WORK IS CONDUCTED, THE PEDESTRIAN PASSAGE AREA BELOW SHALL BE PROTECTED OR REROUTED. WHERE THE ALTERNATE CIRCULATION PATH IS ADJACENT TO HAZARDOUS CONDITIONS, THE PATH SHALL BE PROTECTED WITH A BARRICADE, CONSISTENT WITH THE REQUIREMENTS DESCRIBED IN THIS STANDARD. MOVEMENT BY WORK VEHICLES AND EQUIPMENT ACROSS AN ALTERNATE CIRCULATION PATH SHOULD BE AVOIDED WHENEVER POSSIBLE. IF VEHICLES AND EQUIPMENT NEED TO TRAVEL ACROSS AN ALTERNATE CIRCULATION PATH, EMPLOYEES SHALL USE FLAGGERS OR EQUAL METHODS TO DIRECT VEHICULAR TRAFFIC.

c. **TEMPORARY FACILITIES:** TEMPORARY FACILITIES IN THE PUBLIC RIGHT-OF-WAY, INCLUDING TEMPORARY WALKING SURFACES, CURB RAMPS, AND SIMILAR FEATURES, SHALL CONFORM TO THE ACCESSIBILITY REQUIREMENTS FOR NEW OR REPLACEMENT CONSTRUCTION, EXCEPT AS DESCRIBED IN THIS SECTION.(XVI)(XVII)(XVIII)(XIX)

d. **PROHIBITED REDUCTION IN ACCESSIBILITY:** TEMPORARY FACILITIES SHALL NOT HAVE AN EFFECT THAT DECREASES THE ACCESSIBILITY OF AN EXISTING PUBLIC RIGHT-OF-WAY OR SITE ARRIVAL POINTS TO BUILDINGS OR FACILITIES ADJACENT TO THE ALTERED PORTION OF THE PUBLIC RIGHT-OF-WAY. HOWEVER, WHERE ACCESSIBLE PEDESTRIAN FACILITIES DO NOT EXIST OR ARE DEFICIENT, TEMPORARY FACILITIES ARE NOT REQUIRED TO BE PROVIDED IN EXCESS OF THE DEGREE OF ACCESSIBILITY PRESENT PRIOR TO THE BEGINNING OF THE WORK.

e. **WORKSITE CONDITIONS:** TOOLS, EQUIPMENT OR MATERIALS MAY NOT BE STORED WITHIN THE ALTERNATE CIRCULATION PATH. HEAVY EQUIPMENT WITH PROTRUDING PARTS SHALL NOT BE LOCATED IN OR PROJECTED INTO THE PATH OF TRAVEL. DEBRIS SHOULD BE REMOVED FROM ALL TEMPORARY PATHS OF TRAVEL, AND SUCH AREAS SHALL BE PROPERLY DRAINED.

(XII) **DESIGN REQUIREMENTS FOR SIDEWALKS AND PEDESTRIAN PATHS OF TRAVEL:**

a. **SURFACES:** EACH PART OF THE UNALTERED PATH OF TRAVEL OR THE ALTERNATE CIRCULATION PATH SHALL BE AN "IMPROVED SURFACE" THAT IS FIRM, STABLE, AND SLIP-RESISTANT. SEE DEFINITIONS.

b. **CLEAR WIDTH:** EACH PART OF THE UNALTERED PATH OF TRAVEL OR THE ALTERNATE CIRCULATION PATH SHALL BE AT LEAST FOUR FEET (48 INCHES) WIDE.

EXCEPTION 1: THE CLEAR WIDTH NEED NOT BE WIDER THAN THE EXISTING CLEAR WIDTH OF THE IMPROVED SURFACE OF THE SIDEWALK OR WALKWAY.

EXCEPTION 2: THE CLEAR WIDTH MAY BE REDUCED TO 36 INCHES FOR A DISTANCE OF 48 INCHES.

EXCEPTION 3: THE CLEAR WIDTH MAY BE REDUCED TO 36 INCHES IF UNUSUAL SITE CONSTRAINTS (SUCH AS PERMANENT FENCES OR REDUCED RIGHT-OF-WAY WIDTH) PRECLUDE AN EFFECTIVE METHOD FOR PROVIDING THE FULL WIDTH, BUT IN NO CASE SHALL THE DISTANCE OF SUCH REDUCTION BE MORE THAN 20 FEET.

c. SLOPES AND CROSS-SLOPES OF THE ALTERNATE CIRCULATION PATH SHALL NOT EXCEED 5% OR 2%, RESPECTIVELY.

d. **CHANGES IN LEVEL**: CHANGES IN LEVEL IN THE UNALTERED PATH OF TRAVEL OR THE ALTERNATE CIRCULATION PATH SHALL NOT EXCEED 1/2-INCH VERTICAL. A 1/4-INCH VERTICAL CHANGE IN LEVEL MAY BE MADE WITHOUT PROVISIONS FOR BEVELING THE LIP OF THE CHANGE. CHANGES BETWEEN 1/4-INCH AND 1/2-INCH MUST BE BEVELED AT A 1:2 RATIO.

e. **PEDESTRIAN TRAFFIC PLATES:** WORKSITE TRENCHES OR EXCAVATIONS MAY BE BRIDGED WITH STURDY PLYWOOD OR METAL PLATES AS LONG AS THE SURFACE IS CONTINUOUS AND STABLE, WITH NO GAPS OR CHANGES IN LEVEL, INCLUDING LIP EDGES FACING THE PATH OF TRAVEL, GREATER THAN 1/2-INCH. A 1/4-INCH VERTICAL CHANGE IN LEVEL MAY BE MADE WITHOUT PROVISIONS FOR BEVELING THE LIP OF THE CHANGE. CHANGES BETWEEN 1/4-INCH AND 1/2-INCH MUST BE BEVELED AT A 1:2 RATIO. TRENCH PLATES SHALL BE USED WITH AN APPROPRIATE AMOUNT OF COLD MIX PACK OR SIMILAR MATERIALS TO PROVIDE A SMOOTH TRANSITION FROM THE SIDEWALK OR STREET TO THE PLATE. IF PLATES HAVE THE POTENTIAL TO MOVE AND CAUSE A HAZARD, THEY MAY BE RECESSED INTO THE WALKWAY. OTHER METHODS SUCH AS EXPANSION BOLTS MAY ALSO BE USED TO PREVENT PLATE MOVEMENT. BEVELED EDGES OR FEATHERED/COMPACTED ASPHALT OR CONCRETE SHALL BE PROVIDED AT A BEVEL OF ONE VERTICAL TO TWO HORIZONTAL. IF METAL TRENCH PLATES IN THE PATH OF TRAVEL HAVE "LIFT HOLES" TO ALLOW A CHAIN WITH A HOOK TO MOVE THE PLATES, SUCH HOLES SHALL BE PLUGGED WITH MATERIAL SUCH AS WOOD OR PLASTIC PLUGS TO FILL IN THE LIFT HOLES AND AVOID CREATING A TRIPPING HAZARD.

REV	CHANGE	DRWN	BY	CHKD	APVD	DATE
D	REVISED TO 3D FORMAT	ARC	JIK	-	-	4/12/2022
C	FORMATTING	EDM	JIK	-	-	12/7/2020
B	EDITORIAL CHANGES	-	AW	JS	CZH	7/17/2018

SDG&E

A Sempra Energy utility

© 1998 - 2022 San Diego San Diego Gas and Electric Company. All rights reserved. Removal of this copyright notice without permission is not permitted under law.

SDG&E ELECTRIC OVERHEAD AND UNDERGROUND CONSTRUCTION STANDARDS

SCALE: NOT TO SCALE

PEDESTRIAN PATH OF TRAVEL AND ACCESSIBILITY

DRAWING NO: OH102.2 UG3002.2

X Indicates Latest Revision | Completely Revised | New Page | Information Removed

TABLE OF CONTENTS

NOTES (CONT'D):

(XIII) **DESIGN REQUIREMENTS FOR TEMPORARY CURB RAMPS:**

a. TEMPORARY CURB RAMPS SHALL BE USED WHEN PEDESTRIANS ARE DIVERTED OFF THE SIDEWALK OR WALKWAY INTO THE STREET ADJACENT TO THE WORKSITE. CURB RAMPS SHALL PROVIDE ALL PEDESTRIANS ADEQUATE TRANSITION FROM THE SIDEWALK INTO THE STREET AND BACK ONTO THE SIDEWALK.

b. TEMPORARY CURB RAMPS SHALL BE A MINIMUM OF 48 INCHES WIDE. CURB RAMPS SHALL HAVE A MAXIMUM RUNNING SLOPE OF 1:12 (ONE FOOT RUN FOR EVERY INCH OF THE CURB) OR 8.33%. ALL CURB RAMPS MUST HAVE SMOOTH ON AND OFF TRANSITIONS AT THE TOP AND BOTTOM. CURB RAMPS SHALL BE LOCATED SO THAT THEY DO NOT PROJECT INTO VEHICULAR TRAFFIC LANES OR CAUSE PEDESTRIANS TO ENTER OR EXIT INTO TRAFFIC LANES. RAISED CURB RAMPS SHALL HAVE "CURBING" AT LEAST TWO-INCH HIGH AROUND ANY OPEN SIDES TO PREVENT AGAINST FALLING HAZARDS. TEMPORARY CURB RAMPS DO NOT REQUIRE THE USE OF DETECTABLE WARNINGS.

c. TEMPORARY CURB RAMPS MAY BE ANY OF THE THREE FOLLOWING TYPES:

PREFABRICATED METAL RAMPS AND LANDINGS: STANDARD METAL CURB RAMPS PROVIDED BY THE COMPANY, INCLUDING A FIVE-FOOT BY FIVE-FOOT LANDING WITH ADJUSTABLE "FEET" AND WITH A TWO-INCH HIGH CURB AT THE BACK AND SIDE, A FOUR-FOOT WIDE ADJUSTABLE SLOPING RAMP SECTION, WITH ADJUSTABLE BOTTOM TRANSITION PLATE AND A TWO-INCH HIGH CURB AT EACH SIDE, AND METAL RAILINGS AT THE SIDE OF THE LANDING AND SLOPING RAMP. (a)

SITE CONSTRUCTED RAMPS: CURB RAMPS CONSTRUCTED FROM ONE-INCH OR THICKER PLYWOOD, WITH TWO-INCH HIGH WOOD CURBING, AND WITH THE BOTTOM BEVELED TO CONFORM TO THE STREET SURFACE. (b)

EXISTING DRIVEWAYS MAY BE UTILIZED FOR CURB RAMPS UNDER THE FOLLOWING CONDITIONS:

THE DRIVEWAY SLOPE DOES NOT EXCEED 1:10 (10%)

A 1.5-INCH WIDE X ONE-INCH HIGH X FOUR-FOOT LONG METAL OR WOOD WEDGE IS POSITIONED AT THE BOTTOM OF THE DRIVEWAY RAMP,

FOR COMMERCIAL DRIVEWAYS WIDE ENOUGH TO PROVIDE FOR SAFE IN AND OUT VEHICULAR TRAFFIC, A FOUR-FOOT PORTION OF THE DRIVEWAY IS BARRICADED FROM VEHICULAR USE.

FOR RESIDENTIAL DRIVEWAYS, EITHER A FOUR-FOOT PORTION OF THE DRIVEWAY IS BARRICADED FROM VEHICULAR USE AND THE DRIVEWAY CLOSED TO ALL VEHICULAR USE, OR THE VEHICULAR TRAFFIC ACROSS THE DRIVEWAY IS CONTINUOUSLY MONITORED BY WORKERS.

(XIV) **DESIGN REQUIREMENTS FOR BARRICADES:**

a. BARRICADES SHALL BE PROVIDED AT THE FOLLOWING LOCATIONS:

BETWEEN THE EXISTING PEDESTRIAN ACCESS ROUTE, IF UNALTERED, AND ANY ADJACENT WORKSITE OR ZONE,

BETWEEN AN ALTERNATE CIRCULATION PATH AND ANY ADJACENT WORKSITE OR ZONE,

BETWEEN AN ALTERNATE CIRCULATION PATH AND THE VEHICULAR WAY, IF THE ALTERNATE CIRCULATION PATH IS DIVERTED INTO THE STREET,

BETWEEN AN ALTERNATE CIRCULATION PATH AND ANY PROTRUDING OBJECTS, DROP-OFFS OR OTHER HAZARDS TO PEDESTRIANS.

b. **VEHICULAR BARRICADES:** BARRICADES SUCH AS K-RAILS OR SIMILAR SOLID RAILINGS SHALL BE USED TO SEPARATE VEHICULAR TRAFFIC AND THE ALTERNATE PEDESTRIAN ROUTE IN AREAS WHERE THE VOLUME AND SPEED OF VEHICULAR TRAFFIC IS HIGH. SUCH BARRICADES SHALL HAVE SUFFICIENT STRENGTH AND LOW DEFLECTION CHARACTERISTICS TO KEEP VEHICLES FROM INTRUDING INTO THE ALTERNATE PEDESTRIAN ROUTE OR WORKSITES. SHORT, NON-CONTINUOUS SEGMENTS SHOULD BE AVOIDED, AS THEY INCREASE THE POTENTIAL FOR INJURY TO BOTH VEHICLE OCCUPANTS AND PEDESTRIANS, AND PRESENT BLUNT LEADING ENDS. WHEN USING SUCH BARRICADES, ADJACENT SEGMENTS SHOULD BE CONTINUOUS AND PROPERLY JOINED.

c. **PEDESTRIAN BARRICADES:** A BARRICADE AT THE EXISTING PEDESTRIAN ACCESS ROUTE OR THE ALTERNATE CIRCULATION PATH SHALL BE CONTINUOUS, STABLE AND NON-FLEXIBLE. A BARRICADE CAN BE ANY MATERIAL THAT PROTECTS PEDESTRIANS WITHOUT MATERIALLY IMPAIRING THE PEDESTRIAN PATH OF TRAVEL. IT SHALL HAVE A SOLID TOE RAIL WITH ITS TOP EDGE AT SIX INCHES MINIMUM IN HEIGHT AND ITS BOTTOM EDGE NO HIGHER THAN 1.5 INCHES OFF THE ADJACENT SURFACE. IT SHALL HAVE A CONTINUOUS TOP RAILING MOUNTED AT A HEIGHT OF 36 TO 42 INCHES. BASES SHALL BE USED AT EACH END OF EACH BARRICADE AND TAPED OR TIED AT THE TOP TO PROVIDE PROPER SUPPORT AND STABILITY.

CAUTION:

* TAPE ALONE WOULD NOT PROVIDE AN ADEQUATE BARRICADE AND SHOULD NOT BE USED TO DELINEATE THE ALTERNATE CIRCULATION PATH.

** CONES OR UNCONNECTED "A-FRAMES" OR CONNECTED A-FRAMES WITHOUT A HANDRAIL AND TOE RAIL SHOULD NOT BE USED TO DIRECT PEDESTRIAN TRAFFIC. NO BARRIER SUPPORT MEMBER SHALL PROTRUDE MORE THAN FOUR INCHES BEYOND THE TOP RAIL INTO THE ALTERNATE CIRCULATION PATH.

EXCEPTION 1: BARRICADES SHALL NOT BE REQUIRED WHERE THE WORKSITE OR ALTERNATE CIRCULATION PATH IS ENCLOSED WITH A SOLID FENCE OR WALL.

EXCEPTION 2: BARRICADES SHALL NOT BE REQUIRED WHEN THE WORKSITE OR ZONE REQUIRES ONLY THE USE OF HAND TOOLS AND NO HOLES OR EXCAVATIONS AS LONG AS WORKERS ARE PRESENT TO MONITOR AND ASSIST ANY PEDESTRIAN TRAFFIC.

(XV) **WARNINGS AND SIGNAGE:**

WHEN AN ALTERNATE CIRCULATION PATH OR A BARRICADE IS CREATED IN THE PUBLIC RIGHT-OF-WAY, A WARNING AND/OR APPROPRIATE SIGNAGE SHALL BE PROVIDED.

a. WARNINGS SHALL BE LOCATED AT BOTH THE NEAR-SIDE AND THE FAR-SIDE OF THE INTERSECTION PRECEDING A TEMPORARY AND COMPLETELY BLOCKED PEDESTRIAN ACCESS ROUTE. SIGNAGE LOCATED AT THE INTERSECTION PRECEDING THE BLOCKED WAY SHALL BE PROVIDED.

b. SIGNS SHALL BE PLACED AT INTERSECTIONS SO PEDESTRIANS ARE NOT CONFRONTED WITH MID-BLOCK WORKSITES THAT COULD CAUSE THEM TO SKIRT THE WORK ZONE OR MAKE A MID-BLOCK CROSSING. AMPLE ADVANCE NOTIFICATION OF SIDEWALK CLOSURES IS IMPORTANT. DETOUR SIGNS ARE REQUIRED TO DIRECT ALL PEDESTRIANS TO USE THE ALTERNATE CIRCULATION PATH, IF PROVIDED. IF CONSTRUCTION TEMPORARILY AFFECTS TRAFFIC SIGNALS, ALTERNATIVE VISUAL SIGNALS ARE REQUIRED. (c)

(XVI) **NEW OR REPLACEMENT CONSTRUCTION:**

WHERE THE REQUIRED SCOPE OF WORK AT A WORKSITE OR ZONE REQUIRES THE REMOVAL OF EXISTING FACILITIES, INCLUDING SIDEWALKS, WALKWAYS, DRIVEWAY APPROACHES, CURB RAMPS, AND SIMILAR ELEMENTS WITHIN THE PUBLIC RIGHT-OF-WAY OR WHERE LOCAL PERMITTING PROCESSES REQUIRE IT, NEW OR REPLACEMENT FACILITIES SHALL BE CONSTRUCTED BY THE COMPANY AFTER THE COMPLETION OF ALL WORK WITHIN THE WORKSITE OR ZONE. WHERE THE AUTHORITY HAVING JURISDICTION DICTATES SPECIFIC REQUIREMENTS, THE COMPANY SHALL PERFORM ITS CONSTRUCTION IN COMPLIANCE WITH THAT AUTHORITY. IN SITUATIONS WHERE THE AUTHORITY HAVING JURISDICTION HAS SPECIFIED REQUIREMENTS WHICH PROVIDE LESS ACCESS THAN THE REQUIREMENTS IN THIS SECTION, THE COMPANY SHALL USE THE REQUIREMENTS IN THIS SECTION WHICH PROVIDE MORE ACCESS, UNLESS THE AUTHORITY HAVING JURISDICTION EXPLICITLY CONTRADICTS OUR REQUIREMENTS.

(XVII) **PUBLIC SIDEWALKS:**

WHERE REPLACED OR NEWLY CONSTRUCTED, PUBLIC SIDEWALKS SHALL COMPLY WITH THIS SECTION.

a. **PEDESTRIAN ACCESS ROUTE:** WHERE PUBLIC SIDEWALKS ARE PROVIDED, THEY SHALL CONTAIN A PEDESTRIAN ACCESS ROUTE.

b. **CLEAR WIDTH:** THE MINIMUM CLEAR WIDTH OF A PEDESTRIAN ACCESS ROUTE SHALL BE 48 INCHES, EXCLUSIVE OF THE WIDTH OF THE CURB.

REV	CHANGE	DRWN	BY	CHKD	APVD	DATE
D	REVISED TO 3D FORMAT	ARC	JIK	-	-	4/12/2022
C	FORMATTING	EDM	JIK	-	-	12/7/2020
B	EDITORIAL CHANGES	-	AW	JS	CZH	7/17/2018

SDG&E — A Sempra Energy utility

© 1998 - 2022 San Diego Gas and Electric Company. All rights reserved. Removal of this copyright notice without permission is not permitted under law.

SDG&E ELECTRIC OVERHEAD AND UNDERGROUND CONSTRUCTION STANDARDS

SCALE: NOT TO SCALE

PEDESTRIAN PATH OF TRAVEL AND ACCESSIBILITY

DRAWING NO: OH102.3 UG3002.3

X Indicates Latest Revision | Completely Revised | New Page | Information Removed

TABLE OF CONTENTS

NOTES (CONT'D):

EXCEPTION 1: THE CLEAR WIDTH MAY BE REDUCED TO 36 INCHES IF UNUSUAL SITE CONSTRAINTS (SUCH AS PERMANENT FENCES OR REDUCED RIGHT-OF-WAY WIDTH) PRECLUDE AN EFFECTIVE METHOD FOR PROVIDING THE FULL WIDTH. BUT IN NO CASE SHALL THE DISTANCE OF SUCH REDUCTION BE MORE THAN 20 FEET.

c. **CROSS-SLOPE:** THE CROSS-SLOPE OF THE PEDESTRIAN ACCESS ROUTE SHALL NOT EXCEED 1:48 (2%).

d. **RUNNING GRADE:** THE RUNNING GRADE OF THE PEDESTRIAN ACCESS ROUTE SHALL NOT EXCEED 1:20 (5%), EXCEPT THAT STEEPER GRADES CONSISTENT WITH GRADES ESTABLISHED FOR THE ADJACENT ROADWAY MAY BE PROVIDED.

e. **SURFACES:** THE SURFACES OF THE PEDESTRIAN ACCESS ROUTE SHALL BE SMOOTH, FIRM, AND SLIP-RESISTANT.

f. **CHANGES IN LEVEL:** CHANGES IN LEVEL IN THE PEDESTRIAN ACCESS ROUTE SHALL NOT EXCEED 1/2-INCH VERTICAL. A 1/4-INCH VERTICAL CHANGE IN LEVEL MAY BE MADE WITHOUT PROVISIONS FOR BEVELING THE LIP OF THE CHANGE. CHANGES BETWEEN 1/4-INCH AND 1/2-INCH MUST BE BEVELED AT A 1:2 RATIO.

g. **WALL MOUNTED OBJECTS:** OBJECTS WITH LEADING EDGES MORE THAN 27 INCHES FROM THE GROUND AND NOT MORE THAN 80 INCHES ABOVE THE GROUND SHALL PROTRUDE NO MORE THAN FOUR INCHES HORIZONTALLY INTO THE PUBLIC SIDEWALK.

h. **POST-MOUNTED OBJECTS:** FREE STANDING OBJECTS MOUNTED ON POSTS OR PYLONS SHALL OVERHANG A MAXIMUM OF FOUR INCHES WHEN LOCATED MORE THAN 27 INCHES FROM THE GROUND AND LESS THAN 80 INCHES ABOVE THE GROUND. WHERE A SIGN OR OTHER OBSTRUCTION IS MOUNTED BETWEEN POSTS OR PYLONS AND THE CLEAR DISTANCE BETWEEN THE POSTS OR PYLONS IS GREATER THAN 12 INCHES, THERE SHALL BE A BAR OR SIMILARLY DETECTABLE ELEMENT 15 INCHES ABOVE THE GROUND CONNECTING THE TWO POSTS OR PYLONS. SUCH BAR OR OTHER ELEMENT SHALL PROVIDE VISUAL CONTRAST WITH THE GROUND SURFACE.

i. **REDUCED VERTICAL CLEARANCE:** RAILINGS OR OTHER BARRIERS SHALL BE PROVIDED WHERE THE VERTICAL CLEARANCE IS LESS THAN 80 INCHES HIGH. THE LEADING EDGE OF SUCH RAILING OR BARRIER SHALL BE LOCATED NO MORE THAN 27 INCHES ABOVE THE GROUND.

j. **PASSING SPACE:** PATHS OF TRAVEL THAT EXCEED 200 FEET ALONG THE PEDESTRIAN ACCESS ROUTE THAT ARE LESS THAN FIVE FEET IN CLEAR WIDTH SHALL PROVIDE PASSING SPACES FIVE FEET WIDE FOR A DISTANCE OF FIVE FEET TO ALLOW PEDESTRIANS IN WHEELCHAIRS ADEQUATE SPACE TO PASS.

(XVIII) **CURB RAMPS:**

WHERE REPLACED OR NEWLY CONSTRUCTED, CURB RAMPS SHALL COMPLY WITH THIS SECTION.

a. **WHERE REQUIRED:** A CURB RAMP OR FLUSH LANDING SHALL BE PROVIDED WHEREVER THE PEDESTRIAN ACCESS ROUTE CROSSES A SIDEWALK/STREET TRANSITION, INCLUDING INTERSECTIONS, MID-BLOCK CROSSWALKS, MEDIANS AND ISLANDS TRAVERSED BY CROSSWALKS, ALLEYS, ACCESSIBLE PARKING AISLES, PASSENGER LOADING ZONES, AND LOCATIONS WHERE THE PUBLIC SIDEWALK ENDS AND PEDESTRIAN TRAVEL CONTINUES IN THE ROADWAY. SIDEWALK/STREET TRANSITIONS SHALL HAVE DETECTABLE WARNINGS COMPLYING WITH THE SECTION BELOW.

b. **RUNNING SLOPE:** THE RUNNING SLOPE OF THE MAIN PORTION OF THE CURB RAMP SHALL BE 1:12 (8.33%) MAXIMUM.

c. **CROSS-SLOPE:** THE CROSS-SLOPE OF THE MAIN PORTION OF THE CURB RAMP SHALL BE 2% MAXIMUM.

d. **LANDING:** A LANDING MEASURING 48 INCHES, MINIMUM, BY 48 INCHES, MINIMUM, SHALL BE PROVIDED AT THE TOP OF THE CURB RAMP AND SHALL BE PERMITTED TO OVERLAP OTHER LANDINGS AND CLEAR SPACES. RUNNING AND CROSS-SLOPES OF THE LANDING SHALL BE 2% MAXIMUM.

e. **FLARED SIDES:** FLARED SIDES WITH A MAXIMUM SLOPE OF 1:10 (10%). MEASURED ALONG THE CURB LINE, SHALL BE PROVIDED WHERE A CIRCULATION PATH CROSSES THE CURB RAMP.

f. **CLEAR WIDTH:** THE CLEAR WIDTH OF THE MAIN PORTION OF THE CURB RAMP, EXCLUDING FLARED SIDES, SHALL BE 48 INCHES, MINIMUM.

g. **DETECTABLE WARNINGS:** DETECTABLE WARNING SURFACES SHALL BE PROVIDED FOR THE FULL WIDTH OF THE MAIN PORTION OF THE CURB RAMP AND FOR A DEPTH OF 24 INCHES MINIMUM, WITH THE FRONT EDGE LOCATED APPROXIMATELY SIX INCHES BEHIND THE CURB LINE. THE DETECTABLE WARNING SURFACE SHALL BE A PREFABRICATED, VITRIFIED POLYMER COMPOSITE, EMBEDDED TYPE MATERIAL. THE DETECTABLE WARNING SURFACE SHALL HAVE IN-LINE, SQUARE GRID PATTERN TRUNCATED DOMES 0.2-INCH HIGH, WITH 0.9-INCH MINIMUM AND 1.4-INCH MAXIMUM BASE DIAMETER, TAPERING UP TO A TOP DIAMETER OF 0.4-INCH, MINIMUM AND 0.5-INCH, MAXIMUM, WITH A CENTER TO CENTER SPACING OF APPROXIMATELY 2.3 INCHES MEASURED DIAGONALLY, AND WITH SAFETY FIELD DOTS 30 PER SQUARE INCH BETWEEN TRUNCATED DOMES. DETECTABLE WARNINGS SHALL BE SAFETY YELLOW CONFORMING TO FEDERAL COLOR NO. 33538.

h. **GROOVED BORDER:** A 12-INCH WIDE GROOVED BORDER WITH 1/4-INCH GROOVES APPROXIMATELY 3/4-INCH ON CENTER SHALL BE PROVIDED AT THE TOP OF THE MAIN SLOPE AND AT THE SIDE OF EACH SIDE SLOPE.

i. **SURFACES:** SURFACES OF CURB RAMPS AND LANDINGS SHALL COMPLY WITH THE PEDESTRIAN CONTROL PLANS FOR TEMPORARY MAINTENANCE AND CONSTRUCTION PROJECTS SECTION OF THIS STANDARD. GRATINGS, ACCESS COVERS, AND OTHER APPURTENANCES SHALL NOT BE LOCATED ON CURB RAMPS, LANDINGS, AND GUTTER AREAS DIRECTLY IN FRONT OF CURB RAMPS. (IX)(XI)(XII)(XIII)(XIV)(XV)

j. **CHANGES IN LEVEL:** VERTICAL CHANGES IN LEVEL SHALL NOT BE PERMITTED ON CURB RAMPS, LANDINGS OR GUTTER AREAS DIRECTLY IN FRONT OF CURB RAMPS.

k. **GUTTER SLOPE:** THE COUNTER SLOPE OF THE GUTTER AREA OR STREET AT THE FOOT OF A CURB RAMP OR LANDING SHALL BE 1:20 (5%) MAXIMUM, MEASURED FOR A DISTANCE OF 8 INCHES FROM THE CURB LINE.

(XIX) **DRIVEWAY APPROACHES OR RAMPS:**

a. **WHERE REQUIRED:** WHERE THE PEDESTRIAN ACCESS ROUTE CROSSES A VEHICULAR ENTRANCE TO AN ADJACENT PROPERTY, A DRIVEWAY APPROACH SHALL BE PROVIDED THAT MEETS THE REQUIREMENTS OF THIS SECTION.

b. **PEDESTRIAN ACCESS ROUTE WIDTH:** EACH DRIVEWAY APPROACH SHALL INCLUDE A LEVEL AREA WITH A CROSS-SLOPE OF NO MORE THAN 2% FOR A CLEAR WIDTH OF FOUR FEET (48 INCHES).

EXCEPTION 1: THE CLEAR WIDTH MAY BE REDUCED TO 36 INCHES IF UNUSUAL SITE CONSTRAINTS (SUCH AS PERMANENT FENCES OR REDUCED RIGHT-OF-WAY WIDTH) PRECLUDE AN EFFECTIVE METHOD FOR PROVIDING THE FULL WIDTH, BUT IN NO CASE SHALL THE DISTANCE OF SUCH REDUCTION BE MORE THAN 20 FEET.

c. **DRIVEWAY LIP:** EACH DRIVEWAY RAMP SHALL HAVE A ONE-INCH VERTICAL LIP AT THE STREET.

REFERENCE:

(a) REFER TO ESP138, ATTACHMENT "C".
(b) REFER TO ESP138, ATTACHMENT "D".
(c) FOR TYPICAL TRAFFIC CONTROL DEVICE USAGE AND TECHNIQUES FOR PEDESTRIAN MOVEMENT THROUGH WORK ZONES, SEE ESP138, ATTACHMENTS "E" & "G".

REV	CHANGE	DRWN	BY	CHKD	APVD	DATE
D	REVISED TO 3D FORMAT	ARC	JIK	-	-	4/12/2022
C	FORMATTING	EDM	JIK	-	-	12/7/2020
B	EDITORIAL CHANGES	-	AW	JS	CZH	7/17/2018

SDG&E A Sempra Energy utility

© 1998 - 2022 San Diego San Diego Gas and Electric Company. All rights reserved. Removal of this copyright notice without permission is not permitted under law.

SDG&E ELECTRIC OVERHEAD AND UNDERGROUND CONSTRUCTION STANDARDS

PEDESTRIAN PATH OF TRAVEL AND ACCESSIBILITY

SCALE: NOT TO SCALE

DRAWING NO: OH102.4 UG3002.4

X Indicates Latest Revision | Completely Revised | New Page | Information Removed

SCOPE: THIS PAGE DESCRIBES GENERAL INFORMATION CONCERNING THE FORMAT FOR STANDARD PAGES.

INSTALLATION: NONE

BILL OF MATERIALS: NONE

NOTES:

PAGE FORMAT

I. NOTE CALL-OUT:
   a. AN UNCIRCLED LETTERED NOTE (E.G., A) REFERS TO THE ENTIRE PAGE. REFERENCE TO THAT NOTE DOES NOT NORMALLY APPEAR ELSEWHERE ON THAT PAGE.
   b. CIRCLED LETTERED NOTE (E.G., (A)) REFERS TO A SPECIFIC PORTION OF THE PAGE. THE CIRCLED LETTER WILL BE REPLACED ELSEWHERE ON THAT PAGE.

II. THE FOLLOWING NOTES FOUND IN THE TITLE BLOCK (AT THE BOTTOM OF PAGE), ARE METHODS OF INDICATING PAGE CHANGES AND/OR ADDITIONS.
   a. [X] "INDICATES LATEST REVISION" (OLD VERSIONS) OR "INDICATES LATEST REVISION" (NEW VERSIONS)
      SHADING OR ORANGE FONT INDICATES THE MOST RECENT CHANGES AND/OR ADDITIONS ON A PAGE.
   b. [X] "COMPLETELY REVISED"
      THIS NOTE IS USED TO INDICATE THE PAGE HAS HAD MAJOR CHANGES.
   c. [X] "NEW PAGE"
      THIS NOTE IS USED TO INDICATE THE PAGE IS NEW.
   d. [X] "INFORMATION REMOVED"
      THIS NOTE INDICATES INFORMATION HAS BEEN DELETED.

III. PAGE NUMBERS WITH A DECIMAL INDICATE THAT THE STANDARD TAKES MORE THAN ONE PAGE.

IV. ALL STANDARD PAGES WILL BE MARKED WITH THE ABBREVIATION FOR THE MANUAL THEY EXIST IN. IF THE STANDARD EXISTS IN MORE THAN ONE MANUAL ALL ABBREVIATIONS AND STANDARD NUMBERS WILL BE INDICATED.

V. STANDARD PAGES WHICH APPEAR IN THE SERVICES STANDARDS & GUIDE MANUAL WILL BE INDICATED IN THE REFERENCE SECTION.

REFERENCE: NONE

TABLE OF CONTENTS

REV	CHANGE	DRWN	BY	CHKD	APVD	DATE
D	REVISED TO 3D FORMAT	ARC	JIK	-	-	03/09/2022
C	UPDATED STANDARDS	-	GW	JS	CZH	11/15/2018
B	NOTES UPDATE	-	GW	JS	MDJ	03/01/2018

SDGE — A Sempra Energy utility

© 1998 - 2022 San Diego San Diego Gas and Electric Company. All rights reserved. Removal of this copyright notice without permission is not permitted under law.

SDG&E ELECTRIC OVERHEAD AND UNDERGROUND CONSTRUCTION STANDARDS

STANDARD PAGE FORMAT

SCALE: NOT TO SCALE

DRAWING NO: OH103.1 UG3003.1

SHEET: 1 OF 1

[X] Indicates Latest Revision [ ] Completely Revised [ ] New Page [ ] Information Removed

SCOPE: THIS STANDARD EXPLAINS HOW TO SUBMIT A REQUEST FOR A CONSTRUCTION STANDARDS DEVIATION, AN ELECTRIC DESIGN MANUAL DEVIATION, A REQUEST FOR CLARIFICATION OR UPDATES TO A CONSTRUCTION STANDARD, ELECTRIC STANDARD PRACTICE, ELECTRIC DESIGN MANUAL OR SERVICE STANDARDS & GUIDE.

ATTENTION:

* THE PROCESS INCLUDES ELECTRONIC FORMS BACKED BY A DATA REPOSITORY WHICH WILL SIMPLIFY THE PROCESS OF SUBMISSION, DOCUMENTATION AND PRIORITIZATION OF REQUESTS.

** INCOMPLETE INFORMATION WILL RESULT IN DELAYED RESPONSE TIME.

INSTALLATION:

A. FORMS FOR EACH TYPE OF REQUEST CAN BE FOUND AT THIS SITE.

B. ACCESS IS GRANTED TO APPROVED USERS WITH VALID SDG&E ID'S.

C. FROM THE DASHBOARD, SELECT THE APPROPRIATE REQUEST TYPE AND FILL OUT THE REQUIRED FIELDS.

D. THEN CLICK ON THE BUTTON TO SEND TO SUPERVISOR OR DESIGNATED APPROVER FROM THE REQUESTING DEPARTMENT.

E. EMAIL NOTIFICATIONS ARE SENT TO THE SUPERVISOR OR DESIGNATED APPROVER AND THE REQUESTER.

F. ONCE THE SUPERVISOR OR DESIGNATED APPROVER COMPLETES THEIR COMMENTS AND APPROVAL, THE REQUESTS ENTERS THE ELECTRIC DISTRIBUTION ENGINEERING (EDE) QUEUE FOR REVIEW BY THE APPROPRIATE TEAM.

G. THE REQUEST MAY BE SENT TO ADDITIONAL REVIEWERS AND NON-EDE APPROVERS AT EDE'S DISCRETION.

H. THE REQUESTER IS NOTIFIED VIA EMAIL ANY TIME THE REQUEST IS EDITED AND WHEN REQUEST IS EITHER APPROVED OR DENIED.

BILL OF MATERIALS: NONE

NOTES:

DEVIATION REQUESTS

I. FOR NON-STANDARD INSTALLATIONS NOT SHOWN IN THE OVERHEAD/UNDERGROUND CONSTRUCTION STANDARDS.

II. TO BE SUBMITTED BY PLANNERS AND ENGINEERS.

III. PRIOR TO REVIEW BY THE ELECTRIC DISTRIBUTION ENGINEERING TEAM, THE REQUEST MUST BE APPROVED BY THE REQUESTER'S SDG&E SUPERVISOR OR DESIGNATED SDG&E EMPLOYEE.

IV. REQUEST MAY REQUIRE FURTHER REVIEW BY CIVIL & STRUCTURAL ENGINEERING OR OTHER DEPARTMENTS IF DEEMED NECESSARY BY THE REVIEWING EDE TEAM.

V. REQUESTS MAY BE REVIEWED AND APPROVED BY THE DISTRICT CONSTRUCTION SUPERVISOR, GENERAL FOREMAN, OR CONSTRUCTION PROJECT COORDINATOR.

VI. DEVIATIONS SHOULD BE THE EXCEPTION AND NOT THE RULE AND SHOULD BE CONSIDERED ONLY AS A LAST ALTERNATIVE.

VII. RESPONSE WILL BE PROVIDED PER THE REQUEST PRIORITY AND DUE DATE, AND MAY EXTEND DEPENDING ON TIME REQUIRED FOR STUDY, MEETINGS, ETC. REQUEST WILL BE RETURNED EITHER APPROVED OR DENIED WITH COMMENTS AND EXPLANATIONS GIVEN.

CONSTRUCTION STANDARDS, DESIGN MANUAL, SERVICE STANDARDS & GUIDE AND DESIGN UNIT REQUESTS

VIII. FOR REQUESTING CLARIFICATION, ADDITIONS, REVISIONS OR CORRECTIONS.

IX. THIS INSTRUCTION APPLIES TO ALL PERSONS INVOLVED IN THE USE OR DEVELOPMENT OF CONSTRUCTION STANDARDS, DESIGN MANUAL, SERVICE STANDARDS & GUIDE AND DESIGN UNITS.

XI. PRIOR TO REVIEW BY THE ELECTRIC DISTRIBUTION ENGINEERING TEAM, THE REQUEST MUST BE APPROVED BY THE REQUESTER'S SDG&E SUPERVISOR OR DESIGNATED SDG&E EMPLOYEE.

XII. UPON RECEIPT OF REQUEST BY EDE, REQUESTOR WILL BE NOTIFIED OF ACTION TO BE TAKEN WITH A SPECIFIED MAXIMUM TIME FRAME, DEPENDING ON REQUEST PRIORITY.

REFERENCE:

a. ELECTRIC DISTRIBUTION ENGINEERING **WEBSITE**.

TABLE OF CONTENTS

REV	CHANGE	DRWN	BY	CHKD	APVD	DATE
D	REVISED TO 3D FORMAT	ARC	JIK	-	-	03/09/2022
C	COMPLETELY REVISED	EDM	JIK	JES	CZH	10/21/2020
B	EDITORIAL CHANGES	-	GW	JS	CZH	09/21/2018

SDG&E ELECTRIC OVERHEAD AND UNDERGROUND CONSTRUCTION STANDARDS

CONSTRUCTION STANDARDS / DEVIATION REQUEST FORM AND PROCEDURE

SCALE: NOT TO SCALE

DRAWING NO: OH105.1 UG3005.1

SHEET: 1 OF 1

X Indicates Latest Revision | Completely Revised | New Page | Information Removed

© 1998 - 2022 San Diego Gas and Electric Company. All rights reserved. Removal of this copyright notice without permission is not permitted under law.

MAIN TABLE OF CONTENTS

PAGE	SUBJECT
204	DISTRIBUTION SWITCH NUMBERING
206	OVERHEAD HIGH VOLTAGE SIGN INSTALLATION REQUIREMENTS
207	SCADA SITE IDENTIFICATION DECAL
208	POLE MARKING
209	COMMUNICATION INFRASTRUCTURE PROVIDER (CIP) ATTACHMENT OWNERSHIP IDENTIFICATION
210	TRANSFORMER COMPANY NUMBER
211	DISTRIBUTION STRUCTURE NUMBERING
213	GIS OH MAP SYMBOL TABLE
216	POLE POSITIONS
217	POLE MARKING INSTALLATION OF DELINEATORS
218	VEHICLE IMPACT CUSHION MITIGATION
220	VERTICAL SEPARATION AND CLEARANCES OF CIRCUITS, CROSSARMS AND WIRES
225	G.O. 95 REQUIREMENTS
228	HIGH VOLTAGE CONDUCTOR CLEARANCES FOR NON-UTILITY WORKERS AND EQUIPMENT
229	HORIZONTAL & VERTICAL CLEARANCES OF SUPPLY CONDUCTOR
251	CLIMBING AND WORKING SPACE
262	CLEARANCE OF SUPPLY SERVICE DROPS & ATTACHMENTS
264	TRANSFORMER STATION CLEARANCES
281	POSITIONS OF CIRCUITS ON CROSSARMS
285	MAGNETIC FIELD REDUCTION POLICY
287	CONTAMINATION DISTRICTS
290	PRIMARY NEUTRAL CONDUCTORS

REV	CHANGE	DRWN	BY	CHKD	APVD	DATE
J	CONVERTED TO 3D FORMAT	AMP	JIK	-	-	05/01/2023
I	EDITORIAL CHANGES	EDM	MRF	GLW	KRG	04/22/2022
H	EDITORIAL CHANGES	EDM	JIK	JES	CZH	10/01/2021

© 1998 - 2023 San Diego Gas and Electric Company. All rights reserved. Removal of this copyright notice without permission is not permitted under law.

SDG&E ELECTRIC OVERHEAD CONSTRUCTION STANDARDS

PRACTICES SECTION
TABLE OF CONTENTS

SCALE: NOT TO SCALE

DRAWING NO:	SHEET:
OH201.1	1 OF 1

X Indicates Latest Revision | Completely Revised | New Page | Information Removed

SCOPE: THIS STANDARD EXPLAINS THE METHOD OF OVERHEAD DISTRIBUTION SWITCH NUMBERING.

INSTALLATION: NONE

BILL OF MATERIALS: NONE

NOTES:

I. EACH SWITCH IS IDENTIFIED BY A UNIQUE NUMBER THAT INDICATES THE CIRCUIT(S) ON WHICH IT OPERATES.

TYPES OF SWITCH NUMBERS: LINE AND TIE

(II) LINE SWITCH NUMBERS ARE BROKEN UP INTO TWO PARTS, CIRCUIT AND NUMBER.

TABLE 1

EXAMPLE LINE SWITCH NUMBERS	
CIRCUIT	**NUMBER**
375	40-L

a. CIRCUIT DESCRIBES THE VOLTAGE AND CIRCUIT NUMBER TO WHICH THE LINE SWITCH IS CONNECTED. IF THE CIRCUIT CONTAINS ONLY NUMERIC CHARACTERS, THEN THE CIRCUIT VOLTAGE IS 12KV. IF IT CONTAINS ALPHABETIC CHARACTERS (E.G. CD10), THEN THE CIRCUIT VOLTAGE IS 4 OR 2.4KV.

b. NUMBER COINTAINS ONLY NUMERIC CHARACTERS, OR, NUMERIC CHARACTERS FOLLOWED BY AN "L". THE "L" INDICATES THAT THIS IS A LOADBREAK SWITCH. THE NUMERIC PORTION IS ARBITRARY AND ECH NUMBER SHALL NOT BE ASSIGNED TO MORE THAN ONE SWITCH FOR EACH CIRCUIT.

EXAMPLES:

c. 375-40-L INDICATED A LINE SWITCH ON 12KV CIRCUIT 375 WITH AN ARBITRARY NUMBER 40, AND LOADBREAK CAPABILITY.

d. GAI-2 INDICATES A LINE SWITCH ON 4KV R 2.4KV CIRCUIT GA 1 WITH AN ARBITRARY NUMBER 2, AND NO LOADBREAK CAPABILITY.

(III) TIE SWITCH NUMBERS ARE BROKEN UP INTO THREE PARTS, CIRCUIT, ALPHA/NUMERIC, AND CIRCUIT.

TABLE 2

EXAMPLE TIE SWITCH NUMBERS		
CIRCUIT	**ALPHA/NUMBER**	**CIRCUIT**
375	T1	376

a. CIRCUIT DESCRIBES THE VOLTAGE AND CIRCUIT NUMBERS THE TIE SWITCH CONNECTS AS STATED ABOVE.

b. ALPHA/NUMERIC ALWAYS CONTAINS THE ALPHA CHARACTER "T" AND IS FOLLOWED BY A NUMBER (1, 2, 3, ETC.) WHICH IS CONSECUTIVELY ASSIGNED FOR TIE SWITCHES BETWEEN THE SAME TWO CIRCUITS. EACH ALPHA/NUMERIC IDENTIFICATION SHALL NOT BE ASSIGNED TO MORE THAN ONE TIE SWITCH BETWEEN THE SAME TWO CIRCUITS. TIE SWITCHES WITH THE NUMBER FOLLOWED BY AN "L" HAVE LOADBREAK CAPABILITY.

EXAMPLES:

c. 85-TI-380 INDICATES THE FIRST TIE SWITCH BETWEEN CIRCUITS 85 & 380.

d. 86-T2-87-L INDICATES THE ONLY TIE SWITCH INSTALLED BEFORE 4-1-77, BETWEEN CIRCUITS 88 & 89. IF INSTALLED AFTER

e. 88-T-89 INDICATES THE ONLY TIE SWITCH INSTALLED BEFORE 4-1-77, BETWEEN CIRCUITS 88 & 89. IF INSTALLED AFTER 4-1-77, THIS TIE SWITCH SHALL BE NUMBERED 88-T1-89.

IV. WHERE SWITCHES IN PARALLEL ARE INSTALLED AS LINE OR TIE SWITCHES, EACH SWITCH WILL BE ASSIGNED AN INDIVIDUAL NUMBER.(II)(III)

V. SWITCH NUMBERS WILL NOT BE ASSIGNED TO NORMALLY OPEN, BRIDGED, OR FUSED CUTOUTS, UNLESS THEY ARE USED FOR TIE PURPOSES.

REFERENCE: NONE

TABLE OF CONTENTS

REV	CHANGE	DRWN	BY	CHKD	APVD	DATE
D	3D CONVERSION	NV5	JIK	-	-	05/01/2023
C	FORMATTING	EDM	JIK	-	-	1/13/2021
B	DRAWING UPDATE	-	PEI	-	-	2/8/2019

SDGE

SDG&E ELECTRIC OVERHEAD AND UNDERGROUND CONSTRUCTION STANDARDS

DISTRIBUTION SWITCH NUMBERING

SCALE: NOT TO SCALE

DRAWING NO: OH204.1 UG3104.1

SHEET: 1 OF 1

© 1998 - 2023 San Diego Gas and Electric Company. All rights reserved. Removal of this copyright notice without permission is not permitted under law.

X Indicates Latest Revision | Completely Revised | New Page | Information Removed

SCOPE: THIS STANDARD EXPLAINS AND ILLUSTRATES THE REQUIREMENTS AND OPTIONS FOR THE INSTALLATION OF HIGH VOLTAGE SIGNS ON WOOD, CONCRETE, FIBERGLASS, AND STEEL POLES FOR NEW CONSTRUCTION AND MAINTENANCE.

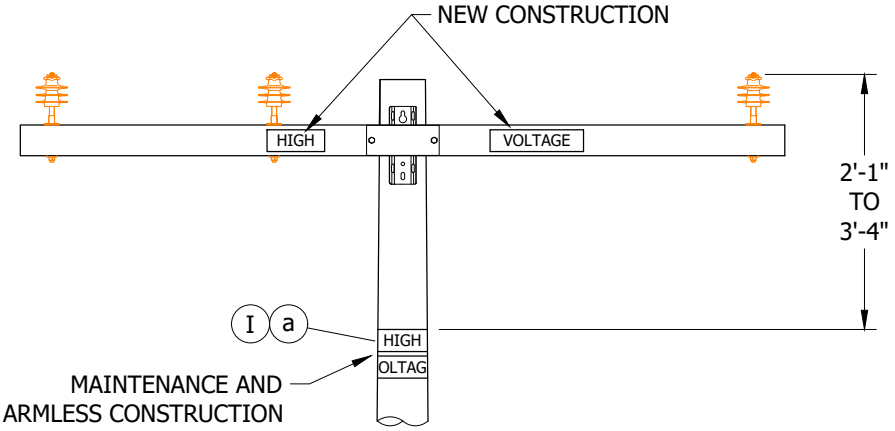

FIGURE 1
EXAMPLES OF HIGH VOLTAGE SIGNS ON NEW CONSTRUCTION AND MAINTENANCE OR ARMLESS CONSTRUCTION

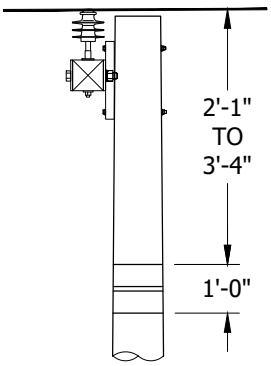

FIGURE 2
EXAMPLE OF 12" X 36" HIGH VOLTAGE SIGN ON MAINTENANCE OR ARMLESS CONSTRUCTION

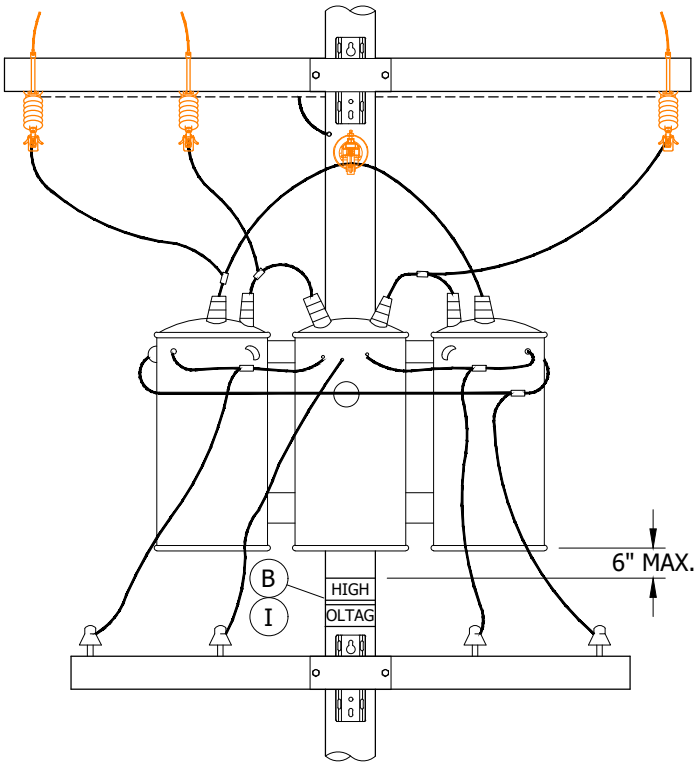

FIGURE 3
EXAMPLE OF HIGH VOLTAGE SIGN UNDER EQUIPMENT

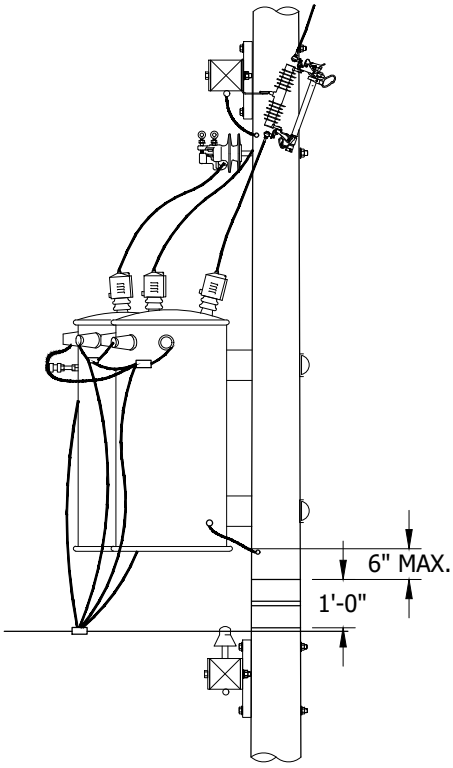

FIGURE 4
EXAMPLE OF 12" X 36" HIGH VOLTAGE SIGN UNDER EQUIPMENT

TABLE OF CONTENTS

© 1998 - 2021 San Diego Gas & Electric Company. All rights reserved. Removal of this copyright notice without permission is not permitted under law.

REV	CHANGE	DR	BY	DSN	APV	DATE	REV	CHANGE	DR	BY	DSN	APV	DATE
C	FIGURE UPDATE	EDM	JIK	JES	CZH	07/29/2021	F						
B	DRAWING UPDATE	PEI	-	-	-	02/08/2019	E						
A	EDITORIAL CHANGES	-	JC	IL	ML	04/02/2015	D						

X Indicates Latest Revision | Completely Revised | New Page | Information Removed

SDG&E ELECTRIC OVERHEAD CONSTRUCTION STANDARDS

SHEET 1 OF 2

OVERHEAD HIGH VOLTAGE SIGN INSTALLATION REQUIREMENTS

OH206.1

INSTALLATION:

A. "HIGH VOLTAGE" SIGNS ARE INSTALLED TO IDENTIFY HIGH VOLTAGE CONDUCTORS. THESE SIGNS ARE MADE OF YELLOW PLASTIC WITH THREE-INCH HIGH LETTERING AND ARE TO BE ATTACHED TO THE FACE AND BACK OF ALL CROSSARMS SUPPORTING CONDUCTORS OF MORE THAN 750V.

(B) IN LIEU OF THE CROSSARM, ON POLES SUPPORTING HIGH VOLTAGE EQUIPMENT (E.G. TRANSFORMER, CAPACITOR, ETC.), A "HIGH VOLTAGE" SIGN MAY BE ATTACHED SO THAT IT APPROXIMATELY ENCIRCLES THE POLE, IS ABOVE ALL COMMUNICATION AND SUPPLY LINE CONDUCTORS ENERGIZED AT 0-750V, AND IS LOCATED NO MORE THAN SIX INCHES BELOW THE EQUIPMENT (SEE FIGURE 2).

BILL OF MATERIALS: NONE

NOTES:

(I) CORRECTIVE MAINTENANCE: BROKEN, DETERIORATED OR MISSING CROSSARM "HIGH VOLTAGE" SIGNS MAY BE REPLACED ON THE POLE. THIS IS TO ENSURE THAT A SINGLE Q.E.W. MAINTAINS THE MINIMUM APPROACH DISTANCE FOR 12KV. THE SIGN SHALL BE PLACED NO MORE THAN 40 INCHES BELOW THE LOWEST CONDUCTOR OF THE LOWEST CIRCUIT (SEE FIGURE 1).

REFERENCE:

(a) FOR "HIGH VOLTAGE" SIGN, SEE OH208 AND G.O. 95 RULE 51.6.

TABLE OF CONTENTS

© 1998 - 2021 San Diego Gas & Electric Company. All rights reserved. Removal of this copyright notice without permission is not permitted under law.

REV	CHANGE	DR	BY	DSN	APV	DATE	REV	CHANGE	DR	BY	DSN	APV	DATE
C	FIGURE UPDATE	EDM	JIK	JES	CZH	07/29/2021	F						
B	DRAWING UPDATE	PEI	-	-	-	02/08/2019	E						
A	EDITORIAL CHANGES	-	JC	IL	ML	04/02/2015	D						

SCOPE: THIS STANDARD SHOWS THE DECAL USED TO IDENTIFY ALL SCADA SITES.

TABLE 1

DECAL IDENTIFICATION CHART	
ITEM	**STOCK NUMBER**
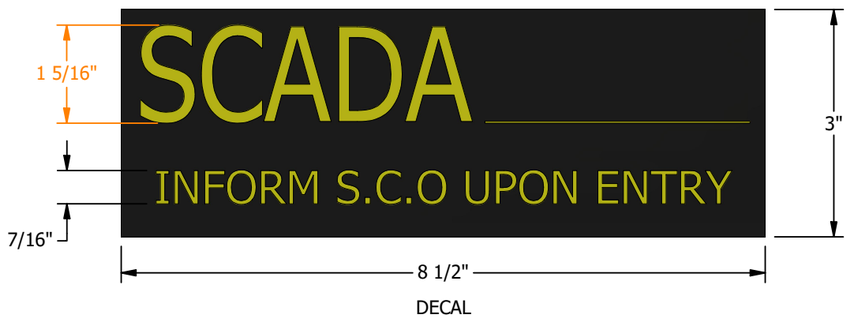 DECAL	S301934

INSTALLATION:

A. CLEAN THE SURFACE. REMOVE ANY DIRT OR OIL. DO NOT APPLY OVER OTHER TAGS OR DECALS.

B. USE THE LINE ON THE DECAL TO ASSURE PROPER ALIGNMENT OF THE SCADA SITE NUMBER.

c. PLACE BELOW THE STRUCTURE/EQUIPMENT IDENTIFICATION NUMBER ON PAD MOUNTED UNITS.

BILL OF MATERIALS: NONE

NOTES:

I. DECAL IS BLACK WITH YELLOW LETTERING.

REFERENCE:

a. FOR IDENTIFICATION DECALS, SEE OH208 AND UG3218.

b. FOR PLACEMENT ON TRANSFORMER VAULT, SEE UG4643.

TABLE OF CONTENTS

REV	CHANGE	DRWN	BY	CHKD	APVD	DATE
D	REVISED TO 3D FORMAT	EDM	JIK	-	-	05/01/2023
C	FORMATTING	EDM	JIK	-	-	02/04/2021
B	EDITORIAL CHANGES	-	JIK	JES	CZH	02/10/2020

SDGE

SDG&E ELECTRIC OVERHEAD AND UNDERGROUND CONSTRUCTION STANDARDS

SCADA SITE IDENTIFICATION DECAL

SCALE: NOT TO SCALE

DRAWING NO: OH207.1 UG3238.1

SHEET: 1 OF 1

© 1998 - 2023 San Diego Gas and Electric Company. All rights reserved. Removal of this copyright notice without permission is not permitted under law.

X Indicates Latest Revision | Completely Revised | New Page | Information Removed

SCOPE: THIS STANDARD ILLUSTRATES AND DESCRIBES POLE MARKING REQUIREMENTS, MATERIALS AND METHODS.

TABLE 1

VARIOUS POLE MARKING TAGS					
SIGN/TAG	**EXAMPLE**		**QTY**	**STOCK #**	**DU #**
POLE IDENTIFICATION /WARNING ALUMINUM	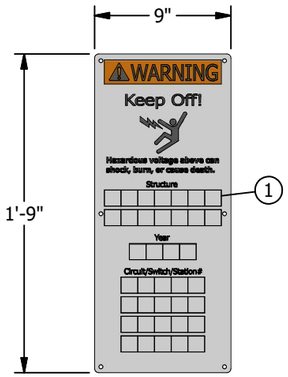	(E)(N)	AS REQ'D	S648036 (X)	-
DEFECTIVE POLE YELLOW	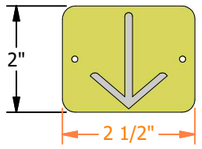	(F)(N)	AS REQ'D	S716502	-
REJECTED POLE RED	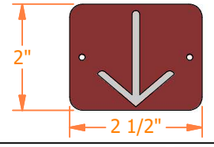	(F)(N)(c)(d)	AS REQ'D	S716500	-
DO NOT WASH		(G)(N)	1 IF REQ'D	S648024	NOWASH
PRIMARY NEUTRAL "PN" NAIL		(H)(N)	AS REQ'D	S648000	PN
PRIMARY NEUTRAL "PN" DECAL			AS REQ'D	S648004 (X)	PN/D

VARIOUS POLE MARKING TAGS					
SIGN/TAG	**EXAMPLE**		**QTY**	**STOCK #**	**DU #**
HIGH VOLTAGE POLYMER ADHESIVE STICKER	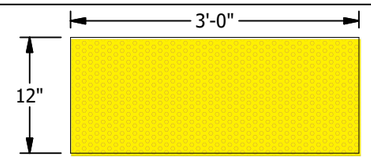	(R)	AS REQ'D	S301908	-
HIGH VOLTAGE VINYL ADHESIVE STICKER	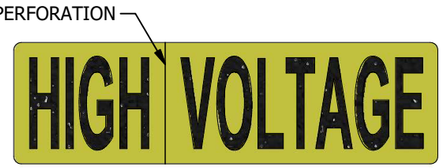	(J)	AS REQ'D	S647650	-
HIGH VOLTAGE RUBBER STICKER	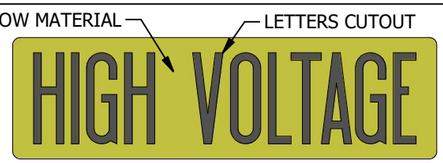		AS REQ'D	S647612 (X)	-
HIGH VOLTAGE PLASTIC		(J)(N)(P)	AS REQ'D	S647648	HV
WARNING BURIED FIBER OPTIC CABLE DECAL		(K)	AS REQ'D	S301898	-
WARNING CUSTOMER GENERATOR		(L)(N)(P)	AS REQ'D	S716752	CO-GEN

TABLE OF CONTENTS

REV	CHANGE	DRWN	BY	CHKD	APVD	DATE
E	NOTES UPDATE	ARC	MRF	GLW	KRG	02/16/2023
D	NOTES UPDATE	EDM	MRF	GLW	CZH	10/01/2021
C	TABLE UPDATE	-	MRF	JES	CZH	01/14/2020

SDG&E ELECTRIC OVERHEAD CONSTRUCTION STANDARDS

POLE MARKING

SCALE: NOT TO SCALE

DRAWING NO: OH208.1

SHEET: 1 OF 3

© 1998 - 2023 San Diego Gas and Electric Company. All rights reserved. Removal of this copyright notice without permission is not permitted under law.

X Indicates Latest Revision | Completely Revised | New Page | Information Removed

TABLE OF CONTENTS

TABLE 1 (CONT'D)

VARIOUS POLE MARKING TAGS				
SIGN/TAG	**EXAMPLE**	**QTY**	**STOCK #**	**DU #**
DELINEATOR /REFLECTOR STRIP (NON-SELF ADHESIVE)	 (M)(N)(P)	AS REQ'D	S304064	VSTRIP
DELINEATOR/ REFLECTOR STRIP (SELF ADHESIVE)	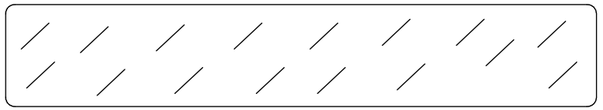 (M)	AS REQ'D	S304060	-
DO NOT DRILL	 (Q)	AS REQ'D	S301896	-

TABLE 2

STOCK NUMBER TABLE OF REFLECTIVE LETTER/NUMBER DECALS							
DECAL	**STOCK NUMBER**		**DECAL**	**STOCK NUMBER**		**DECAL**	**STOCK NUMBER**
A	S302100		R	S302117		9	S302009
B	S302101		S	S302118		0	S302000
C	S302102		T	S302119		-	S302010
D	S302103		U	S302120		12KV	S302011
E	S302104		V	S302121		4KV	S302012
F	S302105		W	S302122		69KV	S302013
G	S302106		X	S302123		KVA	S302014
H	S302107		Y	S302124		KVAR	S302015
I	S302108		Z	S302125		RUN	S302016
J	S302109		1	S302001		CIR	S302017
K	S302110		2	S302002		SWI	S302018
L	S302111		3	S302003		CF	S302019
M	S302112		4	S302004		SW	S302020
N	S302113		5	S302005		SR	S302021
O	S302114		6	S302006		7 POSITION HOLDER	S413682
P	S302115		7	S302007		11 POSITION HOLDER	S413684
Q	S302116		8	S302008		-	-

INSTALLATION:

A. ALL NEW AND REPLACEMENT POLES SHALL BE TAGGED WITH A POLE NUMBER AND A YEAR, AS WELL AS OTHER APPLICABLE TAGS SUCH AS STATION NUMBER, SWITCH NUMBER, FUSE SIZE, ETC.

B. LOCATION: WHENEVER POSSIBLE, ALL MARKING DEVICES SHALL BE PLACED ON STREET OR ALLEY SIDE OF POLE.
EXCEPTIONS:
1. TAGS SHALL BE PLACED ABOVE FOREIGN COMPANY TAGS THAT ARE ON AN SDG&E POLE.
2. TAGS SHALL BE PLACED BELOW FOREIGN COMPANY TAGS THAT ARE ON A FOREIGN POLE.
3. FOR GANG OPERATED SWITCHES, SWITCH NUMBER SHALL BE PLACED ON OPERATING ROD AND ON POLE.

C. FOREIGN MARKING: FOREIGN STENCILING AND MARKING SHALL NOT BE ERASED NOR MARRED.

D. POLE REPLACEMENT AND REMOVAL: REPLACEMENT POLES SHALL RECEIVE NEW TAGS. BEFORE OLD POLES ARE CREDITED INTO STOCK, EXISTING NUMBER TAGS AND NAILS SHALL BE REMOVED.

(E) "POLE IDENTIFICATION" SIGN SHALL BE INSTALLED LEVEL. TOP OF SIGN SHALL BE APPROXIMATELY SEVEN FEET FROM GROUND LEVEL.

(F) "DEFECTIVE/REJECTED POLE" SIGN SHALL BE INSTALLED ON POLES RECOMMENDED FOR REINFORCEMENT OR REPLACEMENT BECAUSE OF DETERIORATION OR MECHANICAL DAMAGE. THE SIGN SHALL BE CENTERED ABOVE ANY EXISTING POLE TAGS.

(G) "DO NOT WASH" SIGN SHALL BE INSTALLED TO ALERT WASHING CREWS NOT TO WASH INSULATORS BECAUSE THE POLE IS EITHER INVOLVED IN A TRIAL INSTALLATION OR THE PRIMARY VOLTAGE PORCELAIN INSULATORS DO NOT NEED TO BE WASHED.
1. SIGN MUST BE VISIBLE TO TRAFFIC APPROACHING FROM EITHER SIDE OF POLE. IF THIS IS NOT POSSIBLE DUE TO LARGE POLE CIRCUMFERENCE, THE SIGN SHALL BE SPLIT INTO TWO SECTIONS AND SEPARATED ENOUGH TO MEET THE REQUIREMENT.
2. SIGN SHALL BE INSTALLED NO LOWER THAN 15 FEET ABOVE GROUND, BELOW THE LOWEST UTILITY, FACING THE ROAD AND OUT OF THE AREA SUSCEPTIBLE TO CLIMBING DAMAGE.

(H) "PN" SIGNS SHALL BE ATTACHED TO THE FACE AND BACK OF ALL CROSSARMS NEAR PRIMARY NEUTRAL CONDUCTORS IF INSULATORS ARE NOT BEING USED TO DISTINGUISH THEM FROM PHASE CONDUCTORS.(a)

(J) "HIGH VOLTAGE" SIGNS SHALL BE INSTALLED TO IDENTIFY CONDUCTORS OF MORE THAN 750V.(b)

(K) "WARNING FIBER OPTIC" SIGN SHALL BE PLACED ON ALL RISERS CONTAINING SDG&E FIBER OPTIC CABLE.

(L) "WARNING CUSTOMER GENERATOR" SIGN IS REQUIRED ON POLES (INCLUDING CABLE AND TRANSFORMER) WITH EQUIPMENT INTERCONNECTED AND DEDICATED TO A CUSTOMER GENERATOR. THIS ORANGE AND BLACK PLASTIC SIGN IS TO ALERT PERSONNEL THAT A POTENTIAL HAZARD EXISTS. IT SHALL BE ATTACHED APPROXIMATELY SEVEN FEET ABOVE GROUND LEVEL OR IMMEDIATELY ABOVE POLE TAGS.

(M) "DELINEATORS" ARE REQUIRED ON SDG&E AND JOINT POLES THAT PRESENT A HAZARD TO TRAFFIC. THEY WILL ALSO BE USED AS REFLECTOR STRIPS ON POLES WITH ENERGIZED SECTIONALIZING/TIELINE SWITCHES AND SERVICE RESTORERS. THESE STRIPS ARE TO AID IN IDENTIFYING SUCH POLES AT NIGHT. STRIPS ARE TO BE ATTACHED AROUND THE ENTIRE CIRCUMFERENCE OF THE POLE (360 DEGREES) AT HEIGHT WHERE IDENTIFICATION CAN BE MADE FROM INSIDE A VEHICLE, BUT NOT LESS THAN EIGHT FEET FROM GROUND. EXISTING POLES WILL BE RETROFITTED WITH DELINEATORS AND/OR REFLECTOR STRIPS DURING MAINTENANCE BY CREWS, TROUBLESHOOTERS OR MAINTENANCE INSPECTION PERSONNEL.(f)

(N) USE NAIL OR SCREW FOR INSTALLATION. NAIL ON SIGN FOR APPLICATION TO WOOD POLE OR CROSSARM. SCREW ON SIGN FOR APPLICATIONS TO STEEL (WEATHERING AND GALVANIZED) AND FIBERGLASS POLES.(2)(3)

(O) SELF-ADHESIVE SIGN. USE IN APPLICATIONS WHEN ATTACHING TO FIBERGLASS CROSSARMS.

(P) TO AVOID BREAKAGE OR BUCKLING OF SIGN WHEN IT EXPANDS, DO NOT DRIVE NAILS NOR ATTACH SCREWS TIGHT AGAINST SIGN.

(Q) ON ENGINEERED TRANSMISSION OR DISTRIBUTION POLES THAT CONTAIN INTERNAL ENERGIZED CONDUCTORS, A "NO DRILL" SIGN SHALL BE ATTACHED TO THE FACE OF THE POLE ON EACH OF THE FOUR QUADRANTS. THE FIRST "NO DRILL" SIGN SHALL BE PLACED ONE INCH BELOW "POLE IDENTIFICATION" SIGN. ALL OTHER "NO DRILL" SIGNS SHALL BE PLACED AT EYE LEVEL FROM GROUND LINE IN THE OTHER THREE QUADRANTS.

(R) DESIGNED TO BE INSTALLED ON WOOD (NAIL AND ADHERE), STEEL (SCREW OR NAIL, AND ADHERE), AND FIBERGLASS (SCREW AND ADHERE).

REV	CHANGE	DRWN	BY	CHKD	APVD	DATE
E	NOTES UPDATE	ARC	MRF	GLW	KRG	02/16/2023
D	NOTES UPDATE	EDM	MRF	GLW	CZH	10/01/2021
C	TABLE UPDATE	-	MRF	JES	CZH	01/14/2020

SDG&E ELECTRIC OVERHEAD CONSTRUCTION STANDARDS

POLE MARKING

SCALE: NOT TO SCALE

DRAWING NO: OH208.2

SHEET: 2 OF 3

© 1998 - 2023 San Diego Gas and Electric Company. All rights reserved. Removal of this copyright notice without permission is not permitted under law.

X Indicates Latest Revision | Completely Revised | New Page | Information Removed

BILL OF MATERIALS:

ITEM	DESCRIPTION	QUANTITY	STANDARD PAGE	STOCK NUMBER	DESIGN UNIT
1	TAG, REFLECTIVE DECAL, 1" X 1", YELLOW ON BLACK BACKGROUND	AS REQ'D	-	SEE TABLE 2	-
2	SCREW, SELF- TAPPING, #5, 12-24 (THREADS	AS REQ'D	-	S618086 (X)	-
3	NAIL, ROOFING, 1-3/4", #11, 1/2" HEAD	AS REQ'D	-	S492192	TNL

NOTES:

I. ONLY SIGNS, TAGS, OR MARKERS DESCRIBED IN THIS STANDARD, COMMUNICATION OWNERSHIP IDENTIFICATION TAGS, AND POLE INSPECTION TAGS MAY BE ATTACHED TO SDG&E POLES. (g)

II. POLE/EQUIPMENT NUMBERS:

WORK ORDER SKETCHES, TEXT AND MATERIALS WILL SPECIFY NUMBERS TO BE AFFIXED TO POLES AND SWITCH RODS.

POLE/EQUIPMENT NUMBERS HAVE THREE ELEMENTS TO THEIR IDENTIFICATION; A PREFIX, A SIX-DIGIT NUMBER AND A SUFFIX (WHEN APPLICABLE).

PREFIXES:

"L" = ORNAMENTAL STREET LIGHT POLE

"P" = DISTRIBUTION POLE (PRIMARY OR SECONDARY)

"Z" = TRANSMISSION POLE OR SUBSTRUCTURE

"S" = STUB POLE

SUFFIXES:

"J" = TELCO OWNED, SDG&E ATTACHED

"K" = NON-STANDARD LIGHTING ON A FOREIGN OWNED POLE

"N" = NON-STANDARD LIGHTING ON AN SDG&E OWNED POLE

"NE" = NON-ECONOMIC EXTENSION

(X) THIS ITEM IS EXEMPT.

REFERENCE:

(a) FOR "PN" SIGN INSTALLATION, SEE OH430 AND OH432.

(b) SEE OH206: OVERHEAD HIGH VOLTAGE SIGN INSTALLATION REQUIREMENTS.

(c) SEE EMPLOYEE SAFETY HAND BOOK 3409 C.

(d) SEE CAL/OSHA TITLE 8, DIVISION 1, CHAPTER 4, SUBCHAPTER 5, GROUP 1, ARTICLE 3, 2320.7.

(e) FOR MARKING AND GUARDING, SEE G.O. 95 RULE 51.

(f) SEE OH217: POLE MARKING INSTALLATION OF DELINEATORS.

(g) SEE OH209: COMMUNICATION INFRASTRUCTURE PROVIDED (CIP) ATTACHMENT OWNERSHIP IDENTIFICATION

TABLE OF CONTENTS

REV	CHANGE	DRWN	BY	CHKD	APVD	DATE
E	NOTES UPDATE	ARC	MRF	GLW	KRG	02/16/2023
D	NOTES UPDATE	EDM	MRF	GLW	CZH	10/01/2021
C	TABLE UPDATE	-	MRF	JES	CZH	01/14/2020

SDGE

SDG&E ELECTRIC OVERHEAD CONSTRUCTION STANDARDS

POLE MARKING

SCALE: NOT TO SCALE

DRAWING NO: OH208.3

SHEET: 3 OF 3

© 1998 - 2023 San Diego Gas and Electric Company. All rights reserved. Removal of this copyright notice without permission is not permitted under law.

X Indicates Latest Revision | Completely Revised | New Page | Information Removed

SCOPE: THIS STANDARD SHOWS OWNERSHIP IDENTIFICATION TAG REQUIREMENTS FOR COMMUNICATION ATTACHMENTS TO SDG&E OWNED POLES.

COMMUNICATION INFRASTRUCTURE PROVIDER (CIP) IDENTIFICATION TAGS WILL BE USED TO IDENTIFY OWNERSHIP OF COMMUNICATION ATTACHMENTS TO POLES OWNED BY SDG&E. THESE TAGS SHALL COMPLY WITH G.O. 95 RULE 91.5.

GO 95 RULE 91.5 MARKING

EACH COMMUNICATION CABLE AND CONDUCTOR AS DEFINED BY RULES 20.4, 20.6(A), 20.9, 84.1, 87.4(C), AND 89.1 THAT IS ATTACHED TO A JOINT-USE POLE SHALL BE MARKED AS TO OWNERSHIP. THE MARKER SHALL (1) IDENTIFY THE OWNER OF THE CABLE AND/OR CONDUCTOR; (2) PROVIDE A 24 HOUR CONTACT NUMBER FOR EMERGENCIES OR INFORMATION; (3) BE MADE OF WEATHER AND CORROSION RESISTANT MATERIAL; AND (4) BE CLEARLY VISIBLE TO WORKERS WHO CLIMB THE POLE OR ASCEND BY MECHANICAL MEANS. THIS MARKING REQUIREMENT APPLIES ONLY TO (A) NEW CONSTRUCTION, (B) RECONSTRUCTION OF FACILITIES, AND (C) EXISTING AERIAL COMMUNICATION CABLES AND CONDUCTORS THAT A TECHNICIAN WORKS ON WHEN THE TECHNICIAN ASCENDS THE JOINT-USE POLE FOR REGULAR MAINTENANCE.

OLD CODES SHOWN AS REFERENCE ONLY

CODE	COMPANY NAME
A1	TIME WARNER (WAS AMERICAN TELEVISION AND SOUTHWESTERN CABLE)
A2	ORION CABLE (WAS ADC CABLE)
A3	AT&T MOBILITY - (AKA CINGULAR WIRELESS)
C1	COX COMMUNICATIONS (WAS COX CABLE)
C2	CLEARLINX NETWORKS (AKA EXENET)
C3	CRICKET COMMUNICATIONS
C4	CAMP PENDLETON
D1	TIME WARNER (WAS ADELPHIA)
D2	COX COMMUNICATIONS (WAS TIMES MIRROR)
E1	ELECTRIC - LIGHT WAVE
E2	CITY OF ENCINITAS
F1	NORTH COUNTY FIRE PROTECTION DISTRICT
F2	FREEDOM COMMUNICATIONS
G1	GTE (AKA VERIZON)
G2	GREEN OAKS RANCH
I1	INSITE SOLUTIONS (NEW PATH)
J2	USA CABLE (WAS JULIAN CABLE VISION)
L1	ICG TELECOMM (WAS LINKATEL)
L2	LA CELLULAR TEL. CO
L3	LEVEL 3

CODE	COMPANY NAME
M1	VENTURE COMMUNICATIONS (FORMERLY M & B COMMUNICATIONS)
M2	MPOWER
N1	NEXTLINK (AKA XO COMMUNICATIONS)
N2	NEXTG NETWORKS
P1	SBC (WAS PACIFIC BELL)
R1	RICOCHET NETWORKS
S2	COX COMMUNICATIONS ORANGE COUNTY (WAS RANCHO MISSION VIEJO/SANTA MARGARITA)
S3	SDG&E TELECOMMUNICATIONS (NON-FIBER OPTIC)
S4	SDG&E TELECOMMUNICATIONS (FIBER OPTIC)
S6	SPRINT PCS
S7	SUNESYS
T4	USA CABLE (WAS TELE-CABLE SERVICE - BORREGO)
T5	TELEPORT COMMUNICATIONS GROUP
T6	TIMES WARNER ASX
T7	T-MOBILE
U1	ULTRONICS, INC. (WAS CHULA VISTA CABLE/NATIONAL CITY CABLE)
V1	MEDIACOM CALIF. (WAS VALLEY CENTER CABLE)
V2	AIRTOUCH CELLULAR (AKA VERIZON WIRELESS)
W1	MCI (WAS WESTERN UNION)

INSTALLATION:
NONE

BILL OF MATERIALS:
NONE

NOTES:
I. ADDED JANUARY 12, 2012 BY DECISION NO. 1201032
II. AVOID INSTALLING TAGS IN THE CLIMBING SPACE.

REFERENCE:
NONE

© 1998 - 2019 San Diego Gas & Electric Company. All rights reserved. Removal of this copyright notice without permission is not permitted under law.

REV	CHANGE	BY	DSGN	APPV	DATE	REV	CHANGE	BY	DSGN	APPV	DATE
C						F					
B	DRAWING UPDATE	PEI	-	-	02/08/2019	E					
A	EDITORIAL CHANGES	GW	IL	MDJ	08/12/2015	D					

X Indicates Latest Revision | Completely Revised | New Page | Information Removed

SHEET 1 OF 1

SDG&E ELECTRIC OVERHEAD CONSTRUCTION STANDARDS

COMMUNICATION INFRASTRUCTURE PROVIDER (CIP) ATTACHMENT OWNERSHIP IDENTIFICATION

OH209.1

TABLE OF CONTENTS

SCOPE: THIS STANDARD SHOWS THE LABEL TO IDENTIFY THE TRANSFORMER COMPANY NUMBER.



FIGURE 1
ACTUAL SIZE

INSTALLATION:

A. FOR SINGLE-PHASE PAD UNITS, THE LABEL WILL BE PLACED ON THE INSIDE OF THE DOOR NEAR THE KVA SIZE STENCIL.

B. FOR THREE-PHASE PAD UNITS, THE LABEL WILL BE PLACED ON THE INSIDE OF THE DOOR ON THE LOW VOLTAGE SIDE OF THE TRANSFORMER.

C. FOR SINGLE-PHASE POLE UNITS, THE LABEL WILL BE PLACED BELOW THE KVA MARKING.

D. FOR SINGLE-PHASE SUBSURFACE UNITS, THE LABEL WILL BE PLACED ON THE SIDE BETWEEN THE HANGERS.

BILL OF MATERIALS: NONE

NOTES:

THE GENERAL LOCATION FOR THESE LABELS

I. STARTING IN DECEMBER OF 1992, THE METAL COMPANY NUMBER TAG ON NEW TRANSFORMERS WAS REPLACED BY A 2" X 5" SELF-ADHESIVE LABEL. THIS LABEL CONTAINS A 6 DIGIT READABLE COMPANY NUMBER AS WELL AS A BARCODE OF THE COMPANY NUMBER. THIS LABEL IS USED ON PAD MOUNTED AND POLE MOUNTED TRANSFORMERS IN PLACE OF THE HANDWRITTEN COMPANY NUMBER ON THE INSIDE OF THE DOOR.

II. AT PRESENT, THE COMPANY NUMBER IS AT THE 310,000 RANGE. DO NOT CONFUSE THIS NUMBER WITH THE 6 DIGIT STOCK NUMBER ON ANOTHER LABEL PUT ON BY THE MANUFACTURER. THE STOCK NUMBER IS IN THE 700,000 RANGE.

REFERENCE: NONE

TABLE OF CONTENTS

© 1998 - 2021 San Diego Gas & Electric Company. All rights reserved. Removal of this copyright notice without permission is not permitted under law.

REV	CHANGE	DR	BY	DSN	APV	DATE	REV	CHANGE	DR	BY	DSN	APV	DATE
C							F						
B	FORMATTING	EDM	JIK	-	-	2/4/2021	E						
A	EDITIORIAL CHANGES	-	JS	TR	MDJ	6/7/2016	D						

X Indicates Latest Revision | Completely Revised | New Page | Information Removed

SDG&E ELECTRIC OVERHEAD AND UNDERGROUND CONSTRUCTION STANDARDS

TRANSFORMER COMPANY NUMBER

OH210.1
UG3225.1

SCOPE: THIS STANDARD EXPLAINS THE NUMBERING OF SDG&E ELECTRIC FACILITIES.

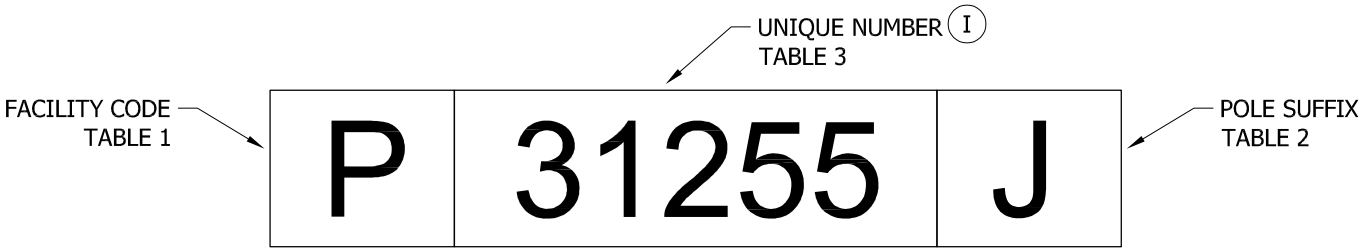

FIGURE 1
SAMPLE POLE ID NUMBER

TABLE 1

FACILITY CODES	
CODE	**DESCRIPTION**
CG	CUSTOMER GENERATION
D	PAD
E	ENCLOSURE
H	HANDHOLE
L	UG SYSTEM STREET LIGHT
M	MANHOLE
P	DISTRIBUTION POLE
U	VAULT
W	PAD WITH FULL SIZE PRIMARY HANDHOLE
Z	TRANSMISSION POLE OR STRUCTURE

TABLE 2

POLE SUFFIXES	
SUFFIX	**DESCRIPTION**
J	TELCO OWNED, SDGE ATTACHED
K	STREET LIGHTING (NON-STANDARD, FOREIGN UTILITY OWNED POLE)
N	STREET LIGHTING (NON-STANDARD, SDGE OWNED POLE)
NE	NON-ECONOMIC EXTENSION

TABLE 3

FACILITY CODE	
P (Ia)	**NON-P (Ib)**
30,000-39,999	10,000-999,999
130,000-139,999	
230,000-239,999	
330,000-339,999	
430,000-439,999	
530,000-539,999	
630,000-639,999	
730,000-739,999	
830,000-839,999	
930,000-939,999	

TABLE OF CONTENTS

INSTALLATION: NONE

BILL OF MATERIALS: NONE

NOTES:

UNIQUE NUMBER:

(I) A 5 OR 6 CHARACTER NUMBER ASSIGNED SEQUENTIALLY OUT OF A SEPARATE POOL OF NUMBERS FOR EACH STRUCTURE TYPE (OR FACILITY CODE).

(a) POLE NUMBERS ARE ASSIGNED OUT OF THE "30,000 SERIES" POOL OF NUMBERS. PRIOR TO DFIS CONVERSION, THIS SERIES OR POOL OF NUMBERS HAD REMAINED UNTOUCHED, AND WAS COMPOSED OF THE SERIES OF NUMBER POOLS IN TABLE 3.

(b) ALL STRUCTURES (OTHER THAN POLE) ARE ASSIGNED NUMBERS OUT OF A POOL UNIQUE TO EACH FACILITY CODE, BUT OF A DIFFERENT FORMAT THAN THE POLE SERIES.

REFERENCE:

a. REFER TO OH208.
b. REFER TO UG3211.
c. REFER TO G.O. 95.

© 1998 - 2023 San Diego Gas & Electric Company. All rights reserved. Removal of this copyright notice without permission is not permitted under law.

REV	CHANGE	DR	BY	DSN	APV	DATE	REV	CHANGE	DR	BY	DSN	APV	DATE
C	FORMATTING	EDM	JIK	-	-	1/13/2021	F						
B	EDITORIAL CHANGES	-	JIK	JES	CZH	2/10/2020	E						
A	EDITORIAL CHANGES	-	JS	GW/TR	MDJ	9/8/2016	D	EDITORIAL CHANGES	PS	ADW	GLW	KRG	01/11/2023

Indicates Latest Revision | Completely Revised | New Page X | Information Removed

SDG&E ELECTRIC OVERHEAD AND UNDERGROUND CONSTRUCTION STANDARDS

DISTRIBUTION STRUCTURE NUMBERING

OH211.1
UG3111.1

SCOPE: THIS STANDARD SHOWS VARIOUS GIS MAP SYMBOLS.

TABLE 1

GIS MAP SYMBOLS

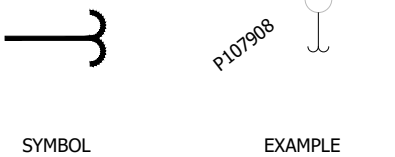 SYMBOL EXAMPLE ANCHOR	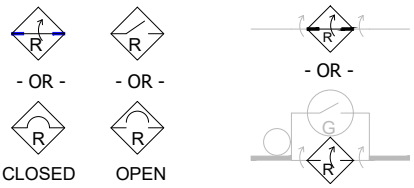 SYMBOL EXAMPLE SERVICE RESTORER	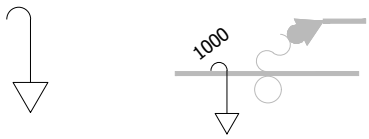 SYMBOL EXAMPLE FAULT INDICATOR
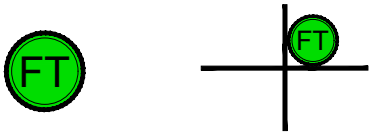 SYMBOL EXAMPLE FLYING TAP	 SYMBOL EXAMPLE ELECTRONIC SECTIONALIZER	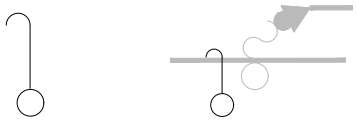 SYMBOL EXAMPLE FAULT INDICATOR W/ TIME RESET
 SYMBOL EXAMPLE OPEN POINT	 SYMBOL EXAMPLE BRIDGED FUSE	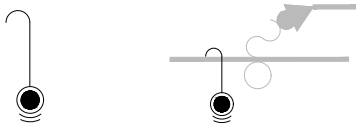 SYMBOL EXAMPLE WIRELESS FAULT INDICATOR
 SYMBOL EXAMPLE TERMINAL	 SYMBOL EXAMPLE CURRENT LIMITING FUSE	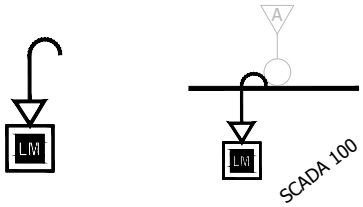 SYMBOL EXAMPLE LOAD MONITOR
 SYMBOL EXAMPLE CUSTOMER GENERATION	 SYMBOL EXAMPLE EXPULSION FUSE	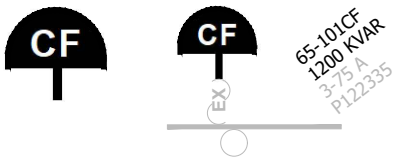 SYMBOL EXAMPLE FIXED CAPACITOR

TABLE OF CONTENTS

© 1998 - 2021 San Diego Gas & Electric Company. All rights reserved. Removal of this copyright notice without permission is not permitted under law.

REV	CHANGE	DR	BY	DSN	APV	DATE	REV	CHANGE	DR	BY	DSN	APV	DATE
C	TABLE UPDATE	EDM	RSL	JES	CZH	10/11/2021	F						
B	DRAWING UPDATE	PEI	-	-	-	04/22/2019	E						
A	ORIGINAL ISSUE	-	GW	IL	MDJ	10/25/2016	D						

TABLE 1 (CONT'D)

GIS MAP SYMBOLS

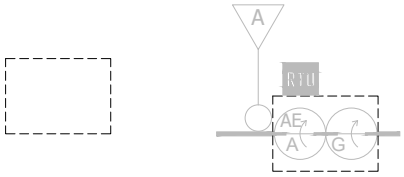 SYMBOL EXAMPLE DEVICE CONTAINER	 SYMBOL EXAMPLE UNKNOWN FUSE	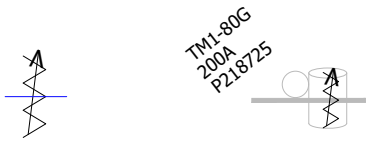 SYMBOL EXAMPLE SINGLE-PHASE VOLTAGE REGULATOR W/O BYPASS
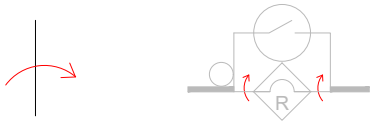 SYMBOL EXAMPLE LINE DISCONNECT SWITCH	 SYMBOL EXAMPLE SERIES REACTOR	 SYMBOL EXAMPLE STREETLIGHT
 SYMBOL EXAMPLE SIREN	 SYMBOL EXAMPLE THREE-PHASE BOOST/BUCK	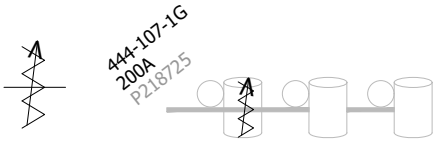 SYMBOL EXAMPLE THREE-PHASE VOLTAGE REGULATOR W/O BYPASS
 SYMBOL EXAMPLE SINGLE BOOST/BUCK	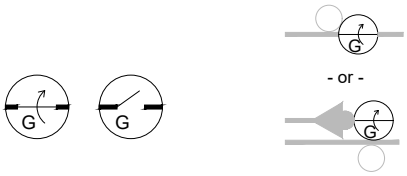 SYMBOL EXAMPLE GANG OPERATED SWITCH	 SYMBOL EXAMPLE SINGLE-PHASE VOLTAGE REGULATOR W/ BYPASS
 SYMBOL EXAMPLE SINGLE-PHASE TRANSFORMER	 SYMBOL EXAMPLE SINGLE-PHASE VOLTAGE REGULATOR CAN	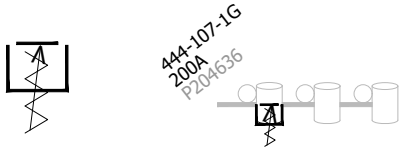 SYMBOL EXAMPLE THREE-PHASE VOLTAGE REGULATOR W/ BYPASS

TABLE OF CONTENTS

© 1998 - 2021 San Diego Gas & Electric Company. All rights reserved. Removal of this copyright notice without permission is not permitted under law.

REV	CHANGE	DR	BY	DSN	APV	DATE	REV	CHANGE	DR	BY	DSN	APV	DATE
C	TABLE UPDATE	EDM	RSL	JES	CZH	10/11/2021	F						
B	DRAWING UPDATE	PEI	-	-	-	04/22/2019	E						
A	ORIGINAL ISSUE	-	GW	IL	MDJ	10/25/2016	D						

X Indicates Latest Revision | Completely Revised | New Page | Information Removed

SDG&E ELECTRIC OVERHEAD CONSTRUCTION STANDARDS

GIS OH MAP SYMBOL TABLE

OH213.2

TABLE 1 (CONT'D)

GIS MAP SYMBOLS

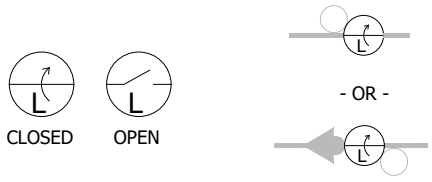 SYMBOL EXAMPLE LOAD BREAK GANG-OPERATED SWITCH	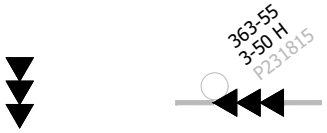 SYMBOL EXAMPLE THREE-PHASE TRANSFORMER	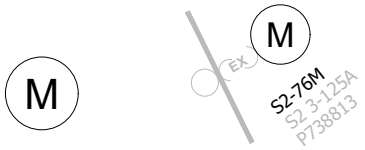 SYMBOL EXAMPLE PRIMARY METER
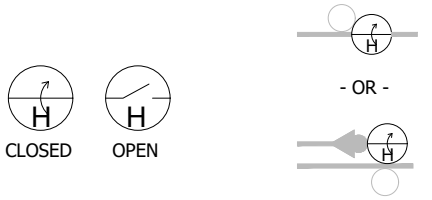 SYMBOL EXAMPLE HOOKSTICK SWITCH	 SYMBOL EXAMPLE SINGLE-PHASE STEP UP/DOWN	 SYMBOL OH STREELIGHT
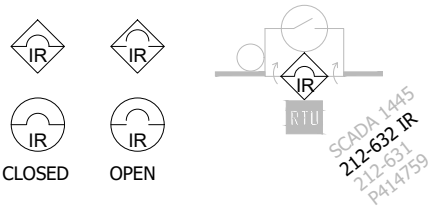 SYMBOL EXAMPLE INTELLIRUPTER PULSE CLOSER	 SYMBOL EXAMPLE THREE-PHASE STEP UP/DOWN	 SYMBOL OH SECONDARY SERVICE
 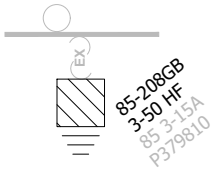 SYMBOL EXAMPLE GROUNDING BANK	  SYMBOL EXAMPLE WILDLIFE	 SYMBOL OH SECONDARY
 - or - *CM - SWITCHED, IN MANUAL MODE 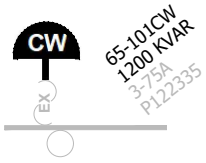 SYMBOL EXAMPLE SWITCHED CAPACITOR		

TABLE OF CONTENTS

© 1998 - 2021 San Diego Gas & Electric Company. All rights reserved. Removal of this copyright notice without permission is not permitted under law.

REV	CHANGE	DR	BY	DSN	APV	DATE	REV	CHANGE	DR	BY	DSN	APV	DATE
C	TABLE UPDATE	EDM	RSL	JES	CZH	10/11/2021	F						
B	DRAWING UPDATE	PEI	-	-	-	04/22/2019	E						
A	ORIGINAL ISSUE	-	GW	IL	MDJ	10/25/2016	D						

TABLE 1 (CONT'D)

GIS MAP SYMBOLS

 T SUBSTATION TRANSITION	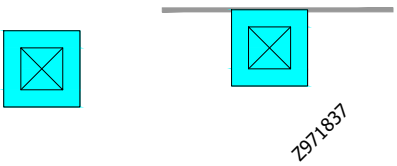 T TOWER	 T TRANSITION
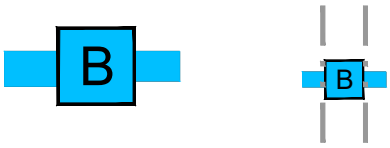 BRIDGE	 T WOOD POLE	 T MULTI WOOD POLE
 DIST MULTI POLE	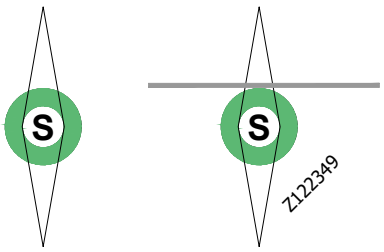 T STEEL POLE	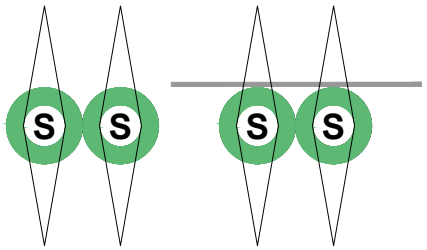 T MULTI STEEL POLE
 DIST POLE		

TABLE OF CONTENTS

© 1998 - 2021 San Diego Gas & Electric Company. All rights reserved. Removal of this copyright notice without permission is not permitted under law.

REV	CHANGE	DR	BY	DSN	APV	DATE	REV	CHANGE	DR	BY	DSN	APV	DATE
C	TABLE UPDATE	EDM	RSL	JES	CZH	10/11/2021	F						
B	DRAWING UPDATE	PEI	-	-	-	04/22/2019	E						
A	ORIGINAL ISSUE	-	GW	IL	MDJ	10/25/2016	D						

TABLE 1 (CONT'D)

GIS MAP SYMBOLS

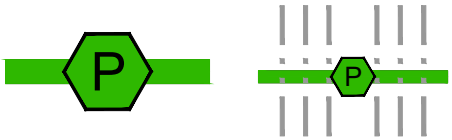 SYMBOL EXAMPLE T PORTAL	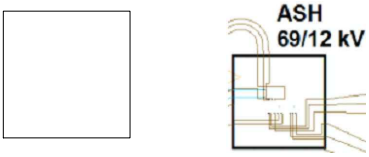 SYMBOL EXAMPLE SUBSTATION	 SYMBOL EXAMPLE PUSH BRACE
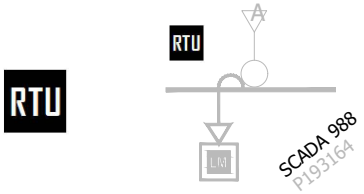 SYMBOL EXAMPLE TC SCADA RTU	 SYMBOL EXAMPLE STUB POLE	 SYMBOL EXAMPLE PRIMARY OH CONDUCTOR
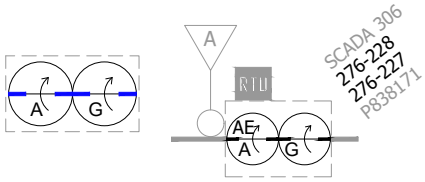 SYMBOL EXAMPLE SCADA MATE	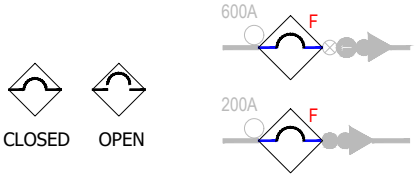 SYMBOL EXAMPLE 600A/200A MVI	
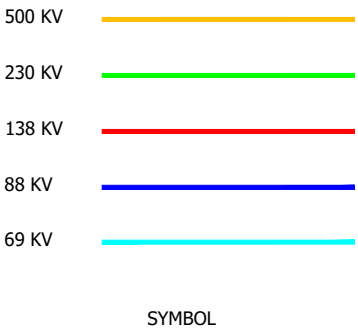 SYMBOL OH TRANSMISSION LINES		

TABLE OF CONTENTS

© 1998 - 2021 San Diego Gas & Electric Company. All rights reserved. Removal of this copyright notice without permission is not permitted under law.

REV	CHANGE	DR	BY	DSN	APV	DATE	REV	CHANGE	DR	BY	DSN	APV	DATE
C	TABLE UPDATE	EDM	RSL	JES	CZH	10/11/2021	F						
B	DRAWING UPDATE	PEI	-	-	-	04/22/2019	E						
A	ORIGINAL ISSUE	-	GW	IL	MDJ	10/25/2016	D						

TABLE 1 (CONT'D)

GIS MAP SYMBOLS

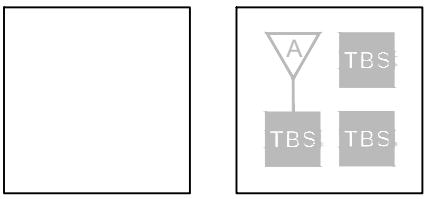

SYMBOL EXAMPLE

TC SITE

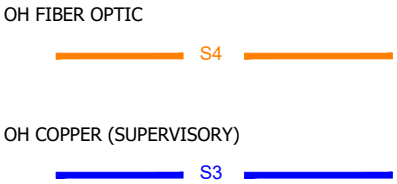

SYMBOL EXAMPLE

TC OH CABLE

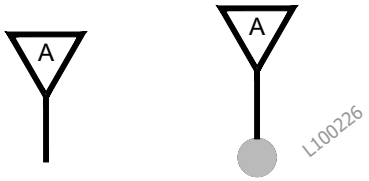

SYMBOL EXAMPLE

TC ANTENNA

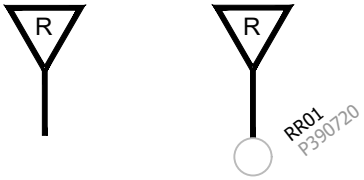

SYMBOL EXAMPLE

TC REPEATER



SYMBOL EXAMPLE

TC BASE STATION

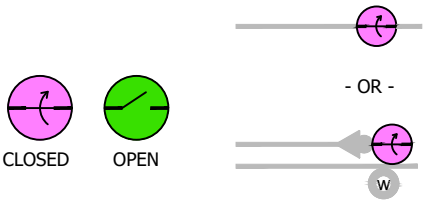

SYMBOL EXAMPLE

T SWTICH

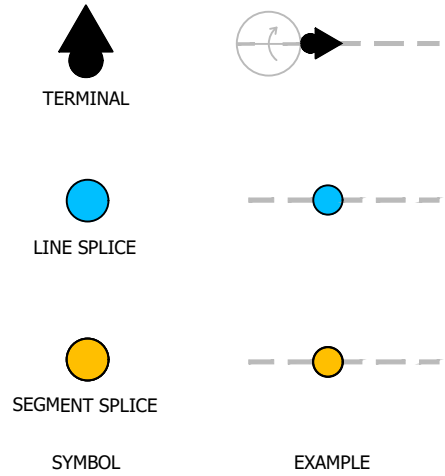

SYMBOL EXAMPLE

T CONNECTION POINTS

INSTALLATION: NONE

BILL OF MATERIALS: NONE

NOTES: NONE

REFERENCE: NONE

© 1998 - 2021 San Diego Gas & Electric Company. All rights reserved. Removal of this copyright notice without permission is not permitted under law.

REV	CHANGE	DR	BY	DSN	APV	DATE	REV	CHANGE	DR	BY	DSN	APV	DATE
C	TABLE UPDATE	EDM	RSL	JES	CZH	10/11/2021	F						
B	DRAWING UPDATE	PEI	-	-	-	04/22/2019	E						
A	ORIGINAL ISSUE	-	GW	IL	MDJ	10/25/2016	D						

X Indicates Latest Revision | Completely Revised | New Page | Information Removed

SDG&E ELECTRIC OVERHEAD CONSTRUCTION STANDARDS

GIS OH MAP SYMBOL TABLE

SHEET 6 OF 6

OH213.6

TABLE OF CONTENTS

SCOPE: THIS STANDARD SHOWS VARIOUS EXAMPLES OF POLE POSITIONING.

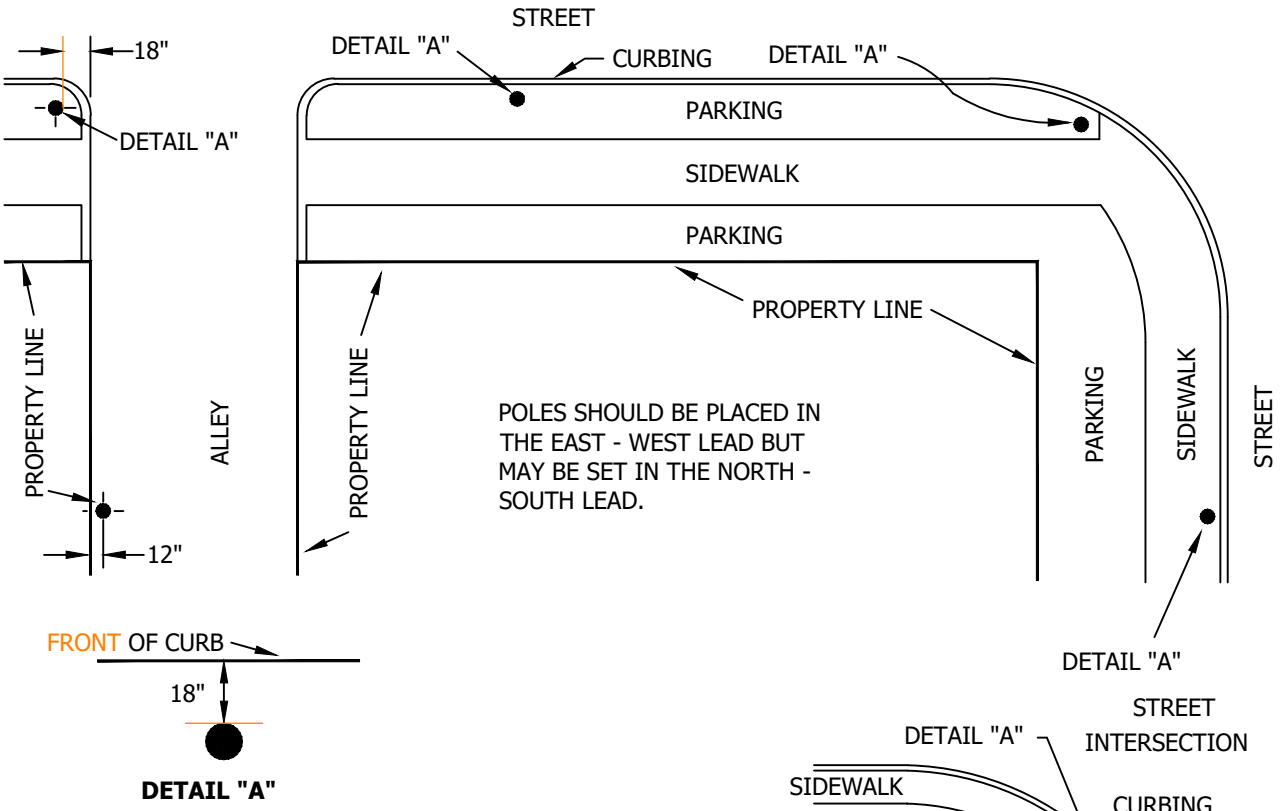

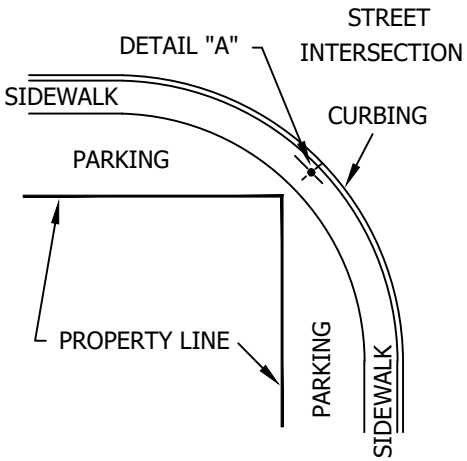

LONG RADIUS CURB RETURNS

SKETCH TO THE RIGHT SHOWS THE SETTING POSITION FOR POLES AT STREET INTERSECTIONS WHERE THERE ARE LONG RADIUS CURB RETURNS. SETTING POLES IN THIS POSITION IS SUBJECT TO APPROVAL BY THE GOV'T AGENCIES INVOLVED. ADIBE BY OBSERVING AMERICAN DISABILITY ACT FOR POLE PLACEMENT.

INSTALLATION: NONE

BILL OF MATERIALS: NONE

NOTES:

I. A POLE THAT HAS BEEN HIT BY A VEHICLE SHOULD HAVE ITS LOCATION REVIEWED AND ANALYZED TO DETERMINE IF RELOCATING IT WOULD BE FEASIBLE AND WOULD LESSEN THE POSSIBILITY OF ITS BEING HIT IN THE FUTURE.

REFERENCE:

a. SEE STANDARD PAGE 303.1 FOR ADDITIONAL POLE POSITION INFORMATION.
b. SEE SDG&E DISTRIBUTION DESIGN MANUAL 5121.1

© 1998 - 2023 San Diego Gas & Electric Company. All rights reserved. Removal of this copyright notice without permission is not permitted under law.

REV	CHANGE	DR	BY	DSN	APV	DATE	REV	CHANGE	DR	BY	DSN	APV	DATE
C	EDITORIAL CHANGES	GLC	MRF	MRF	KRG	05/08/2023	F						
B	DRAWING UPDATE	-	PEI	-	-	02/08/2019	E						
A	EDITORIAL CHANGES	-	JS	IL	MDJ	06/15/2016	D						

X Indicates Latest Revision | Completely Revised | New Page | Information Removed

SDG&E ELECTRIC OVERHEAD CONSTRUCTION STANDARDS

SHEET 1 OF 1

POLE POSITIONS

OH216.1

TABLE OF CONTENTS

SCOPE: THIS STANDARD SHOWS VARIOUS EXAMPLES OF POLE DELINEATOR INSTALLATION.

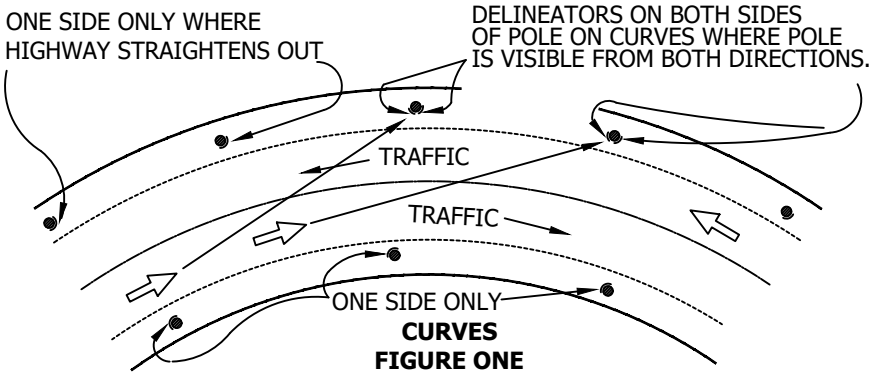

CURVES
FIGURE ONE

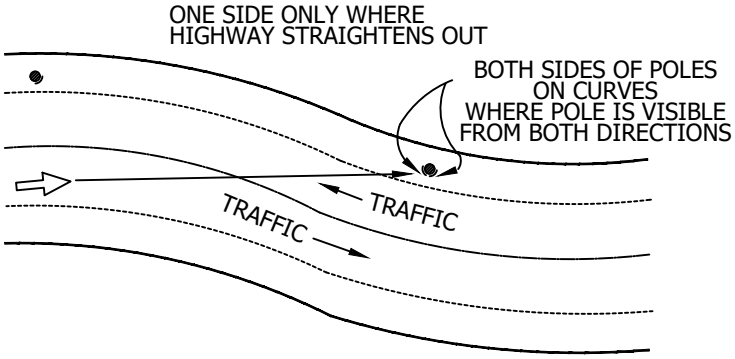

"S" TURNS AND JOGS
FIGURE TWO

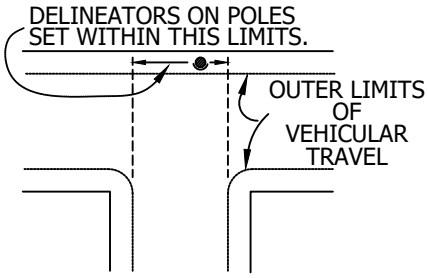

DEAD END
STREETS AND ROADS
FIGURE THREE

ATTENTION:

DELINEATORS ARE REQUIRED ON ALL POLES ON STATE HIGHWAYS WITH THE FOLLOWING EXCEPTION: DELINEATORS ARE NOT REQUIRED ON POLES THAT DO NOT PRESENT A POSSIBLE TRAFFIC HAZARD (SEE EXAMPLES BELOW) AND MAY BE EXEMPTED UPON APPROVAL OF A WRITTEN REQUEST SUBMITTED WITH THE REQUEST FOR THE ENCROACHMENT PERMIT TO THE DIVISION OF HIGHWAYS, STATE OF CALIFORNIA. (SEE CALIFORNIA STATE TRAFFIC MANUAL SECTION)

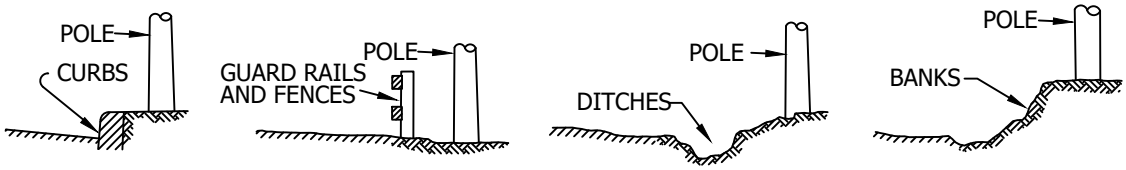

POLES NOT REQUIRING DELINEATORS

© 1998 - 2020 San Diego Gas & Electric Company. All rights reserved. Removal of this copyright notice without permission is not permitted under law.

REV	CHANGE	BY	DSGN	APPV	DATE	REV	CHANGE	BY	DSGN	APPV	DATE
C						F					
B	DRAWING UPDATE	JIK	JES	CZH	02/10/2020	E					
A	EDITORIAL CHANGES	JS	IL	MDJ	06/15/2016	D					

Indicates Latest Revision | Completely Revised | New Page [X] | Information Removed

SHEET 1 OF 2

SDG&E ELECTRIC OVERHEAD CONSTRUCTION STANDARDS

POLE MARKING INSTALLATION OF DELINEATORS

OH217.1

TABLE OF CONTENTS

SKETCH SHOWING METHOD OF MARKING POLES WITH DELINEATORS.

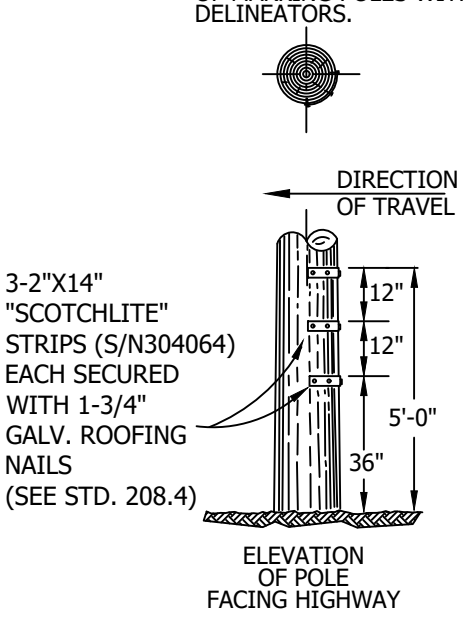

ELEVATION OF POLE FACING HIGHWAY

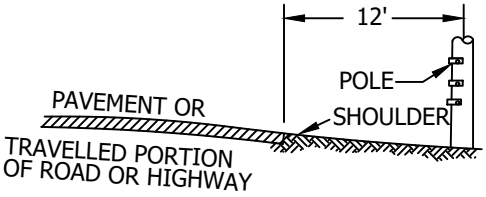

DELINEATORS ARE REQUIRED WHERE POLE IS:
1. WITHIN 12' OF TRAVELED ROADWAY, OR;
2. IN AN ALLEY.

INSTALLATION: NONE

BILL OF MATERIALS: NONE

NOTES: NONE

REFERENCE: NONE

TABLE OF CONTENTS

© 1998 - 2020 San Diego Gas & Electric Company. All rights reserved. Removal of this copyright notice without permission is not permitted under law.

REV	CHANGE	BY	DSGN	APPV	DATE	REV	CHANGE	BY	DSGN	APPV	DATE
C						F					
B	DRAWING UPDATE	JIK	JES	CZH	02/10/2020	E					
A	EDITORIAL CHANGES	JS	IL	MDJ	06/15/2016	D					

X Indicates Latest Revision | Completely Revised | New Page | Information Removed

SDG&E ELECTRIC OVERHEAD CONSTRUCTION STANDARDS

SHEET 2 OF 2

POLE MARKING INSTALLATION OF DELINEATORS

OH217.2

SCOPE: THIS STANDARD SHOWS THE INSTALLATION OF A POLE CRASH DEFLECTOR.

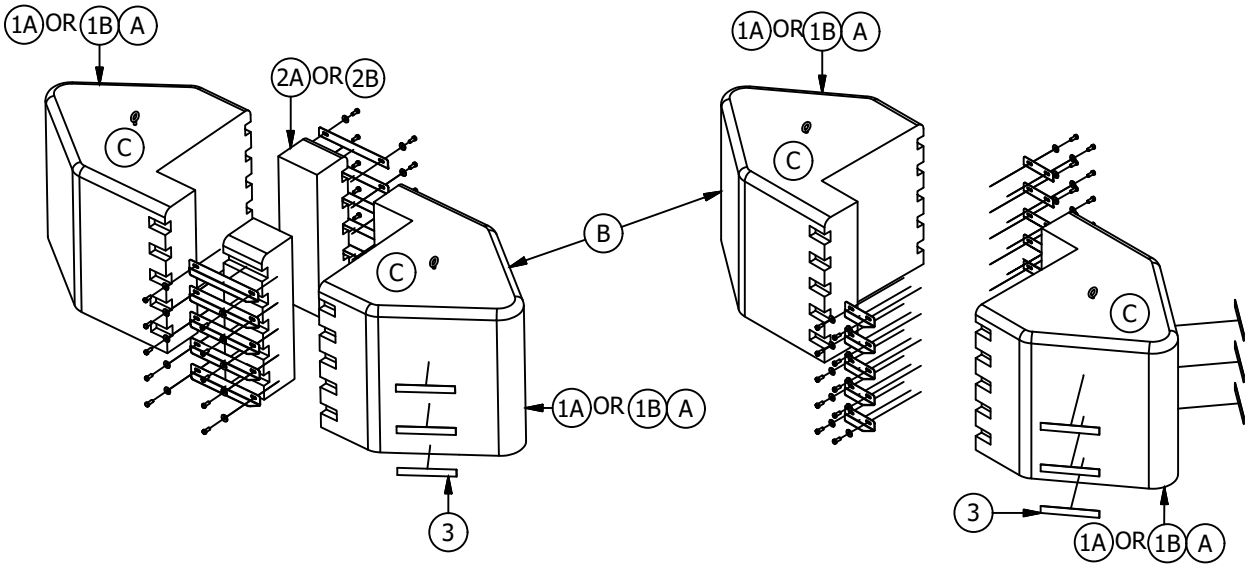

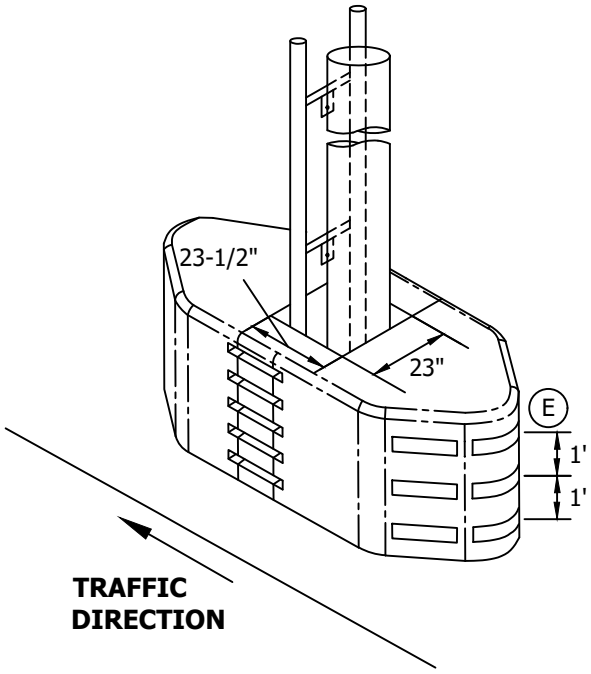

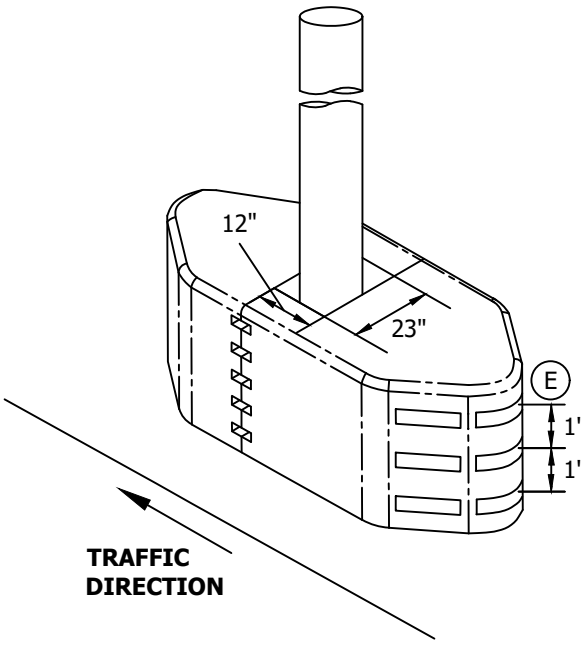

© 1998 - 2019 San Diego Gas & Electric Company. All rights reserved. Removal of this copyright notice without permission is not permitted under law.

REV	CHANGE	BY	DSGN	APPV	DATE	REV	CHANGE	BY	DSGN	APPV	DATE
C						F					
B	DRAWING UPDATE	PEI	-	-	02/08/2019	E					
A	ORIGINAL ISSUE	JH	IL	MDJ	02/24/2016	D					

X Indicates Latest Revision | Completely Revised | New Page | Information Removed

SDG&E ELECTRIC OVERHEAD CONSTRUCTION STANDARDS

SHEET 1 OF 2

VEHICLE IMPACT CUSHION MITIGATION

OH218.1

TABLE OF CONTENTS

INSTALLATION:

(A) TO BE INSTALLED ON LEVEL GROUND.

(B) EACH CRASH CUSHION WEIGHS 240-POUNDS SO LIFTING OF THE CRASH CUSHION SHALL NOT BE DONE MANUALLY.

C. ALWAYS LIFT CRASH CUSHION BY THE LIFTING EYE.

D. A RATCHET STRAP CAN BE USED TO PULL THE TWO CUSHIONS TOGETHER TO ASSIST IN THE ALIGNMENT AND INSTALLATION OF THE CONNECTORS AND BOLTS.

(E) DELINEATOR/REFLECTIVE STRIPS SHALL BE APPLIED TO THE CRASH CUSHION ON THE SIDE FACING THE DIRECTION OF ONCOMING TRAFFIC. A ROW, CONSISTING OF THREE DELINEATOR STRIPS, WILL BE PLACED AT THE TOP OF THE CRASH CUSHION FOLLOWED BY TWO MORE ROWS APPROXIMATELY ONE FOOT APART. (a)

BILL OF MATERIALS:

ITEM		DESCRIPTION	QUANTITY	STOCK NUMBER	A.U.
1	A	CRASH CUSHION, UV POLYETHYLENE SHELL, ENERGY ABSORBING PLASTIC, BLACK	2	S291220	CC300B
	B	CRASH CUSHION, UV POLYETHYLENE SHELL, ENERGY ABSORBING PLASTIC, YELLOW	2	S291222	CC300Y
2	A	EXTENSION FOR CRASH CUSHION, PACKER PIECE, BLACK, UV POLYETHYLENE	2	S291224	CC600B
	B	EXTENSION FOR CRASH CUSHION, PACKER PIECE, YELLOW, UV POLYETHYLENE	2	S291226	CC600Y
3		DELINEATOR/REFLECTOR, ADHESIVE STRIPS FOR FIBERGLASS AND STEEL	9	S304000	-

NOTES:

I. ATTACHMENT HEIGHT OF SIGNAGE IS STILL MEASURED FROM GROUND LEVEL. (a)

II. CRASH CUSHION MUST BE TREATED AS A WALKABLE SURFACE, MUST MAINTAIN G.O. 95 CLEARANCE FOR POLE STEP. (b)

REFERENCES:

(a) SIGNAGE INSTALLATION, SEE STANDARD 208.

(b) POLE STEPS CLEARANCES, SEE STANDARD 363.1.

TABLE OF CONTENTS

© 1998 - 2019 San Diego Gas & Electric Company. All rights reserved. Removal of this copyright notice without permission is not permitted under law.

REV	CHANGE	BY	DSGN	APPV	DATE	REV	CHANGE	BY	DSGN	APPV	DATE
C						F					
B	DRAWING UPDATE	PEI	-	-	02/08/2019	E					
A	ORIGINAL ISSUE	JH	IL	MDJ	02/24/2016	D					

X Indicates Latest Revision | Completely Revised | New Page | Information Removed

SCOPE: THIS STANDARD SHOWS CLEARANCES BETWEEN CONDUCTORS.

ATTENTION:

* FOR SDG&E WORKING CLEARANCES SEE THE ELECTRIC DISTRIBUTION DESIGN MANUAL SECTION 5122.1-b.

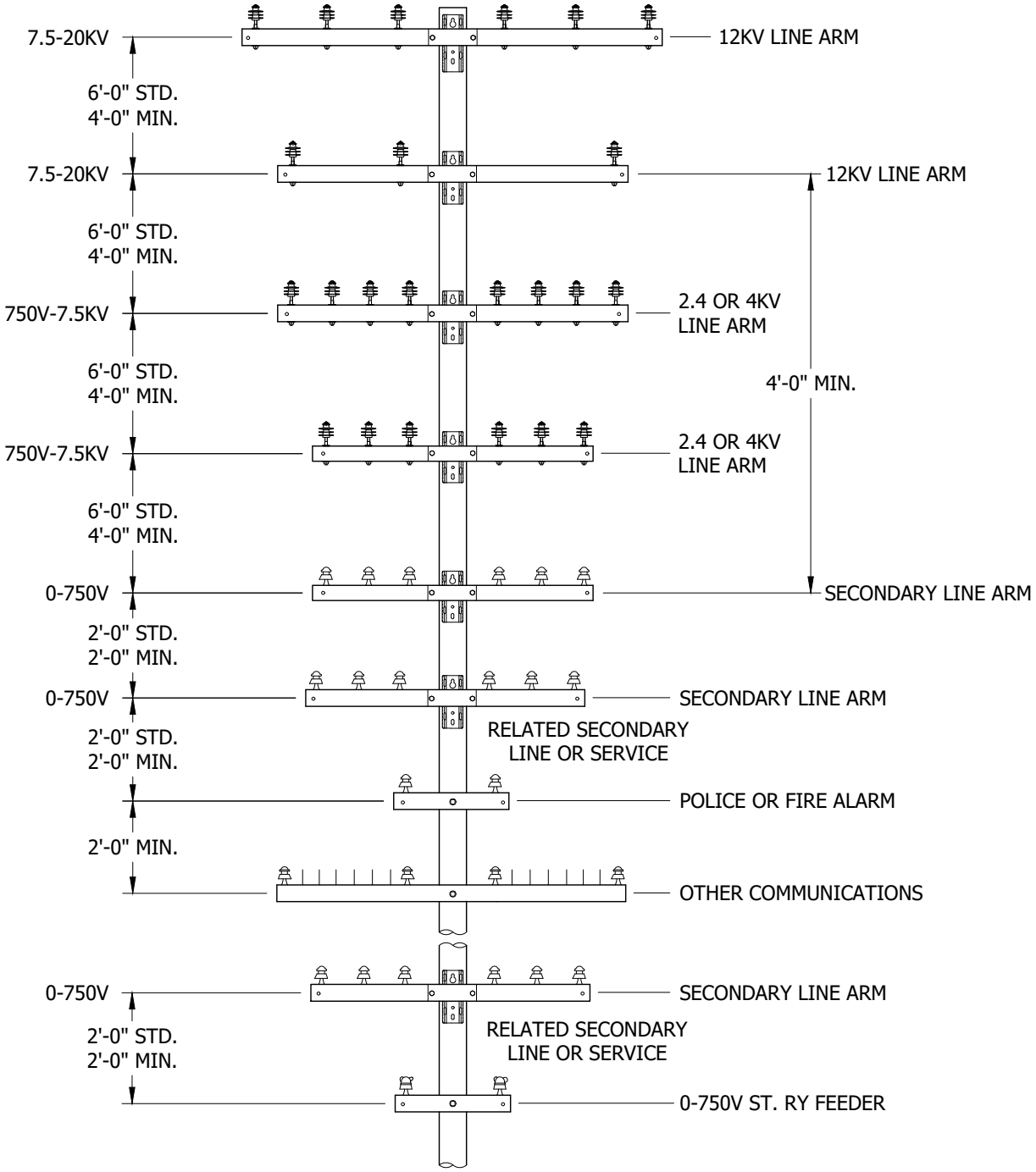

FIGURE 1
LINE ARMS

© 1998 - 2021 San Diego Gas & Electric Company. All rights reserved. Removal of this copyright notice without permission is not permitted under law.

REV	CHANGE	DR	BY	DSN	APV	DATE	REV	CHANGE	DR	BY	DSN	APV	DATE
C	DRAWING UPDATE	-	JC	JS	CZH	04/22/2019	F	DRAWING UPDATE	EDM	JIK	JES	CZH	10/01/2021
B	EDITORIAL CHANGES	-	GW	JS	CZH	07/09/2018	E	EDITORIAL CHANGES	-	JC	GLW	CZH	11/12/2019
A	REVISION	-	-	PIA	ROJ	01/01/1994	D	DRAWING UPDATE	-	GLW	JES	CZH	10/20/2019

X Indicates Latest Revision | Completely Revised | New Page | Information Removed

SDG&E ELECTRIC OVERHEAD CONSTRUCTION STANDARDS

SHEET 1 OF 10

VERTICAL SEPARATION OF CROSSARMS ON THE SAME POLE

OH220.1

TABLE OF CONTENTS

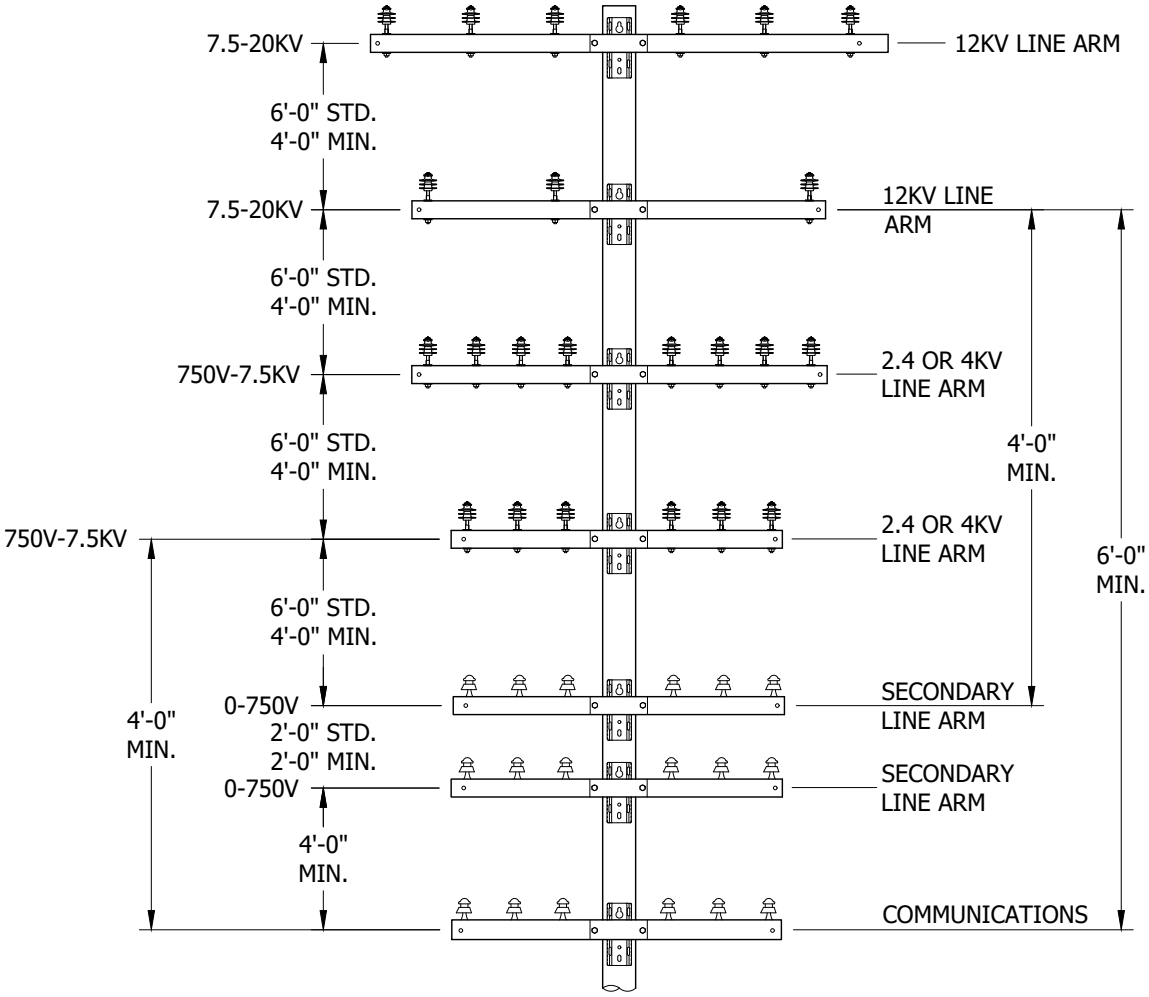

FIGURE 2 (C)
LINE ARMS

© 1998 - 2021 San Diego Gas & Electric Company. All rights reserved. Removal of this copyright notice without permission is not permitted under law.

REV	CHANGE	DR	BY	DSN	APV	DATE	REV	CHANGE	DR	BY	DSN	APV	DATE
C	DRAWING UPDATE	-	JC	JS	CZH	04/22/2019	F	DRAWING UPDATE	EDM	JIK	JES	CZH	10/01/2021
B	EDITORIAL CHANGES	-	GW	JS	CZH	07/09/2018	E	EDITORIAL CHANGES	-	JC	GLW	CZH	11/12/2019
A	REVISION	-	-	PIA	ROJ	01/01/1994	D	DRAWING UPDATE	-	GLW	JES	CZH	10/20/2019

X Indicates Latest Revision | Completely Revised | New Page | Information Removed

SDG&E ELECTRIC OVERHEAD CONSTRUCTION STANDARDS

SHEET
2 OF 10

VERTICAL SEPARATION OF DIFFERENT CIRCUITS ON THE SAME POLE - CROSSARM CONSTRUCTION

OH220.2

TABLE OF CONTENTS

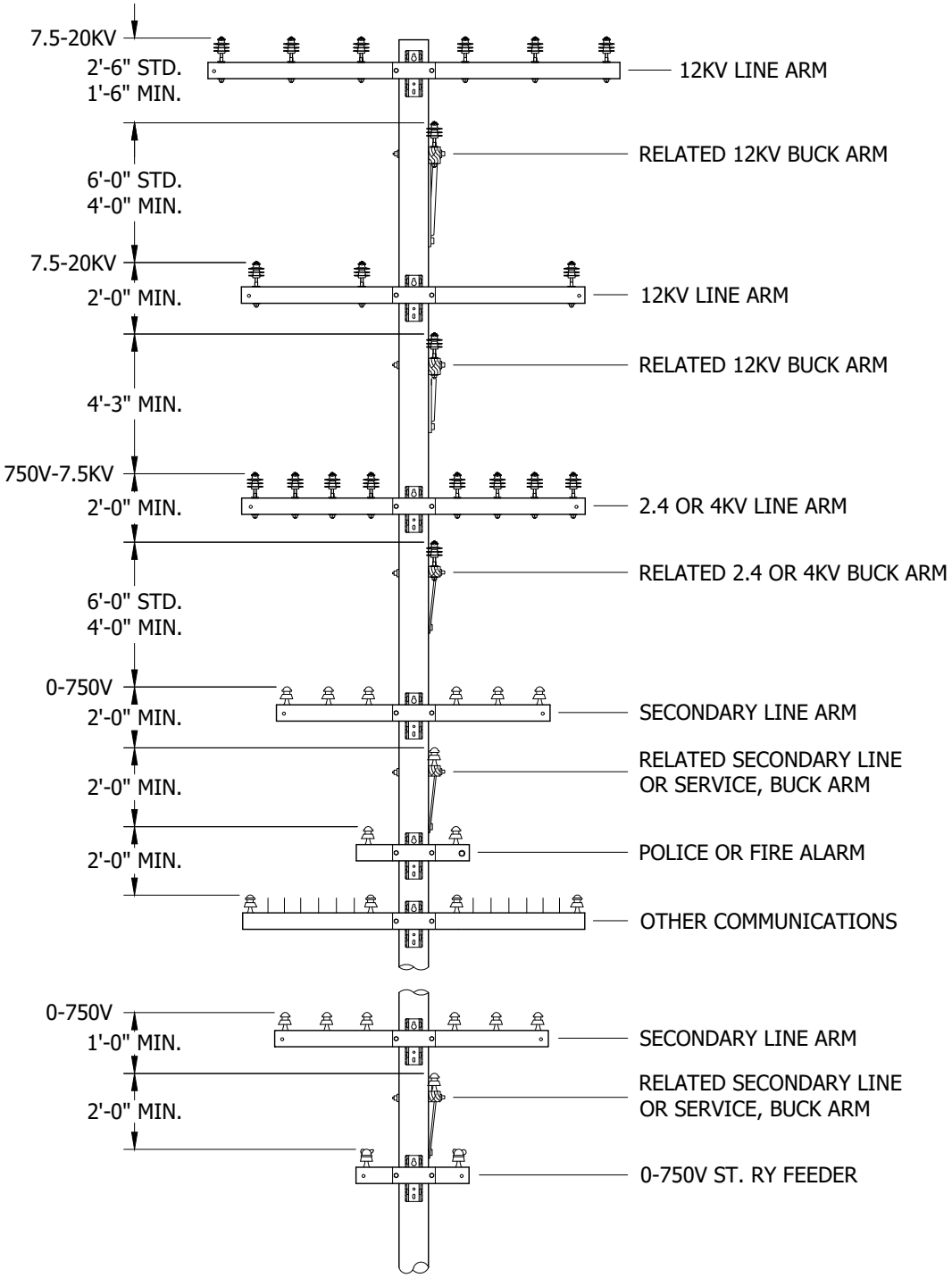

FIGURE 3 (C)
BUCK ARMS

© 1998 - 2021 San Diego Gas & Electric Company. All rights reserved. Removal of this copyright notice without permission is not permitted under law.

REV	CHANGE	DR	BY	DSN	APV	DATE	REV	CHANGE	DR	BY	DSN	APV	DATE
C	DRAWING UPDATE	-	JC	JS	CZH	04/22/2019	F	DRAWING UPDATE	EDM	JIK	JES	CZH	10/01/2021
B	EDITORIAL CHANGES	-	GW	JS	CZH	07/09/2018	E	EDITORIAL CHANGES	-	JC	GLW	CZH	11/12/2019
A	REVISION	-	-	PIA	ROJ	01/01/1994	D	DRAWING UPDATE	-	GLW	JES	CZH	10/20/2019

X Indicates Latest Revision | Completely Revised | New Page | Information Removed

SDG&E ELECTRIC OVERHEAD CONSTRUCTION STANDARDS

SHEET 3 OF 10

VERTICAL SEPARATION OF DIFFERENT CIRCUITS ON THE SAME POLE - CROSSARM CONSTRUCTION

OH220.3

TABLE OF CONTENTS

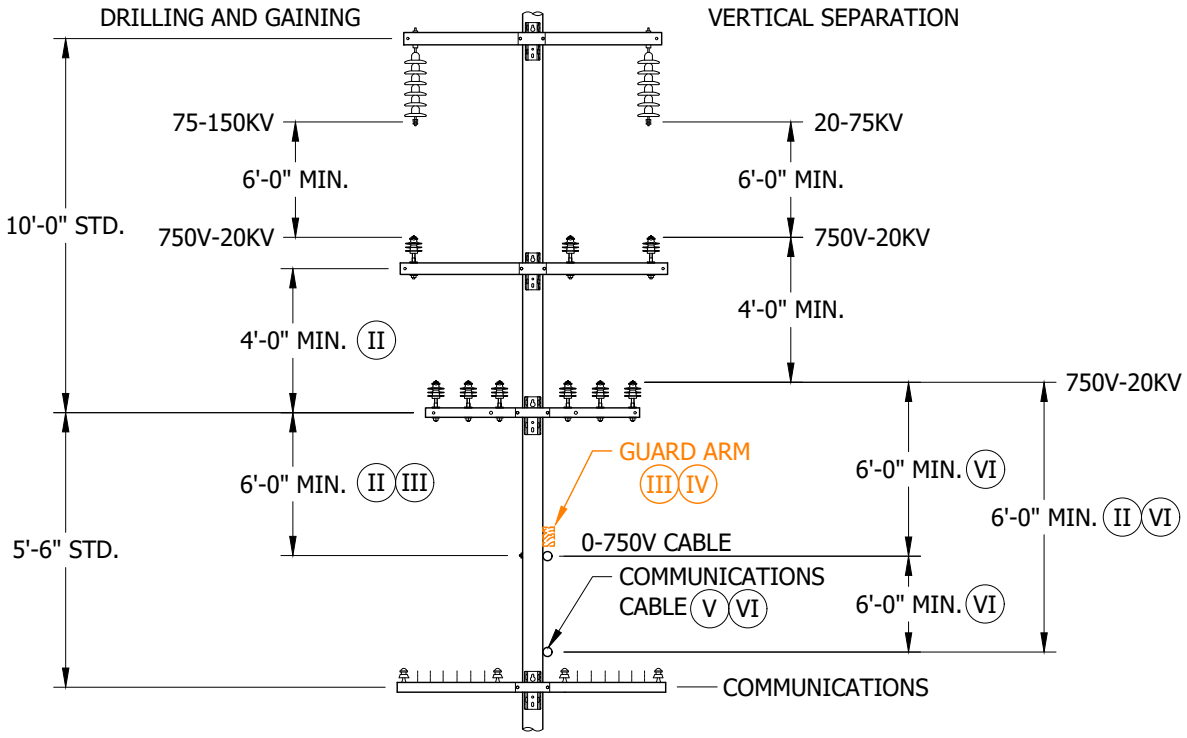

FIGURE 4

INSTALLATION: NONE

BILL OF MATERIALS: NONE

NOTES:

I. DIFFERENCES DUE TO SAG OF DIFFERENT SIZE CONDUCTORS MUST BE COMPENSATED FOR AT POINTS OF SUPPORT.

(II) THIS CLEARANCE MAY INCREASE TO SIX FEET FOR BUCKET TRUCK ACCESS. (a)

(III) INSTALLATION OF GUARD ARMS PERMITS A REDUCTION OF 2 FEET. (b)

(IV) VERTICAL SEPARATION MAY BE REDUCED 2 FEET IF OPEN WIRE IS 0-750V.

(V) 6-FOOT MINIMUM CLEARANCE IS REQUIRED TO POWER CONDUCTORS IN EXCESS OF 750V.

(VI) GUARD ARMS MAY BE USED TO REDUCE REQUIRED CLEARANCE BY 2 FEET FOR CABLES OF 0-750V. (b)

VII. MINIMUM CLEARANCES SHOWN ARE THOSE SPECIFIED IN G.O. 95, RULE 38, TABLE 2, CASES 8 TO 14 INCLUSIVE. THESE ARE MINIMUM CONDUCTOR SEPARATIONS WHICH MUST BE MAINTAINED AT THE POINT OF CONDUCTOR CROSSINGS. (d)

VIII. CLEARANCES, AS SHOWN, BETWEEN RELATED CONDUCTORS ON LINE AND BUCK ARMS SHALL NOT BE APPLIED CONSECUTIVELY BOTH ABOVE AND BELOW THE SAME CONDUCTOR.

IX. FOR CLIMBING AND WORKING SPACE REQUIREMENTS, SEE OTHER PAGES IN PRACTICES SECTION.

XI. FOR VERTICAL SEPARATION REQUIREMENTS ON VERTICAL CONSTRUCTION, SEE OTHER PAGES IN PRACTICES SECTION.

REFERENCE:

(a) SEE DM5122.

(b) SEE G.O. 95 RULE 54.10-C.

(c) SEE ELECTRIC DISTRIBUTION DM5122.1-b FOR SDG&E WORKING CLEARANCES.

(d) SEE G.O. 95, RULE 38, TABLE 2, CASES 8 TO 14.

© 1998 - 2021 San Diego Gas & Electric Company. All rights reserved. Removal of this copyright notice without permission is not permitted under law.

REV	CHANGE	DR	BY	DSN	APV	DATE	REV	CHANGE	DR	BY	DSN	APV	DATE
C	DRAWING UPDATE	-	JC	JS	CZH	04/22/2019	F	DRAWING UPDATE	EDM	JIK	JES	CZH	10/01/2021
B	EDITORIAL CHANGES	-	GW	JS	CZH	07/09/2018	E	EDITORIAL CHANGES	-	JC	GLW	CZH	11/12/2019
A	REVISION	-	-	PIA	ROJ	01/01/1994	D	DRAWING UPDATE	-	GLW	JES	CZH	10/20/2019

X Indicates Latest Revision | Completely Revised | New Page | Information Removed

TABLE OF CONTENTS

SCOPE: THIS STANDARD PROVIDES THE MINIMUM VERTICAL GROUND CLEARANCE.

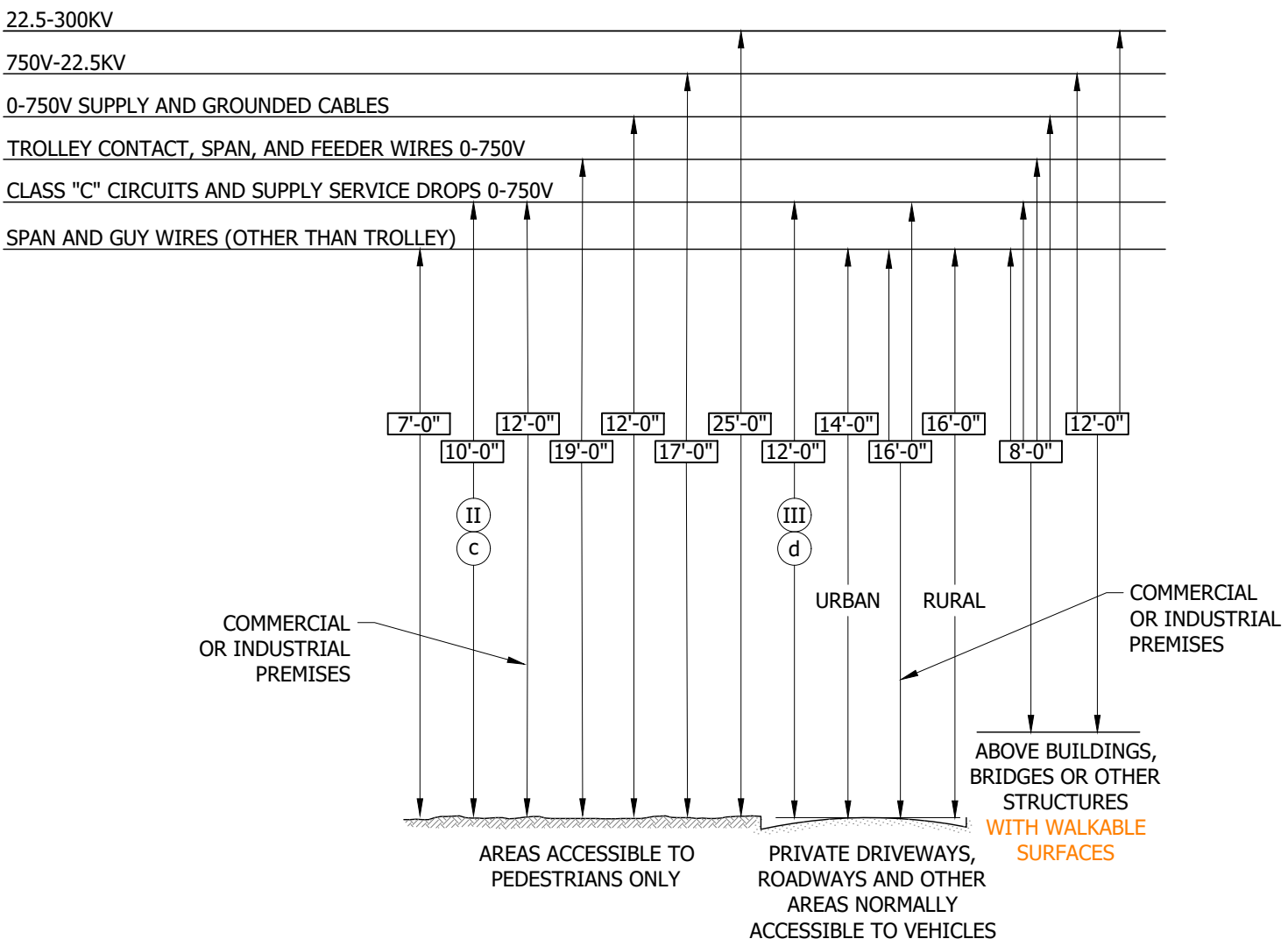

FIGURE 1
CLEARANCE OF WIRES ABOVE SURFACES (I)(a)

TABLE OF CONTENTS

© 1998 - 2021 San Diego Gas & Electric Company. All rights reserved. Removal of this copyright notice without permission is not permitted under law.

REV	CHANGE	DR	BY	DSN	APV	DATE	REV	CHANGE	DR	BY	DSN	APV	DATE
C	DRAWING UPDATE	-	JC	JS	CZH	04/22/2019	F	DRAWING UPDATE	EDM	JIK	JES	CZH	10/01/2021
B	EDITORIAL CHANGES	-	GW	JS	CZH	07/09/2018	E	EDITORIAL CHANGES	-	JC	GLW	CZH	11/12/2019
A	REVISION	-	-	PIA	ROJ	01/01/1994	D	DRAWING UPDATE	-	GLW	JES	CZH	10/20/2019

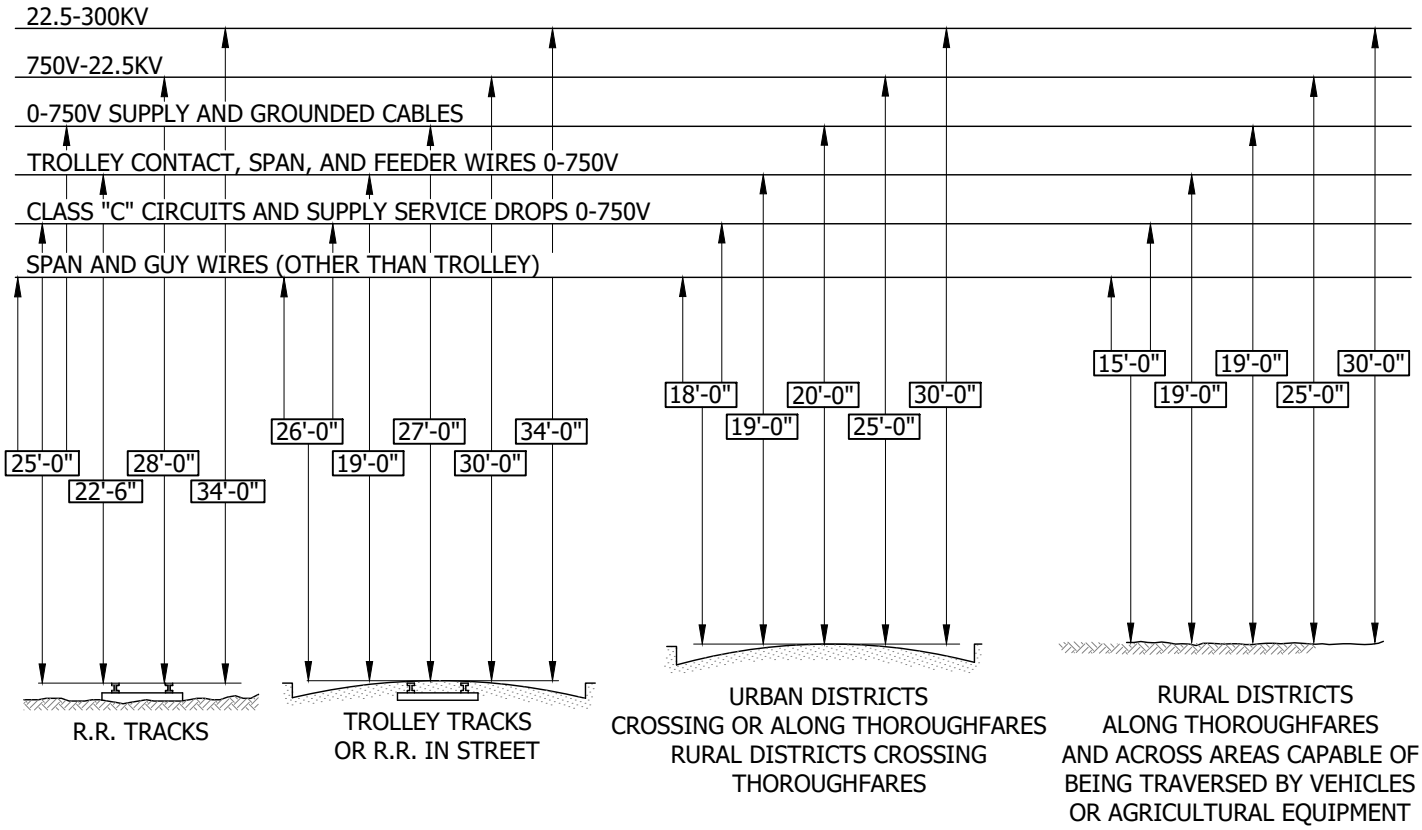

FIGURE 2
CLEARANCE OF WIRES ABOVE SURFACES (I)(a)

INSTALLATION: NONE

BILL OF MATERIALS: NONE

NOTES:

(I) REQUIRED MINIMUM CLEARANCE FOR A GIVEN SPAN IS SPECIFIC TO THE LOCATION WHERE THE CLEARANCE IS MEASURED. WHEN A GIVEN SPAN PASSES OVER A VARIETY OF CONDITIONS (GROUND, WATER, BUILDING, ETC.), CLEARANCE AT ANY POINT WILL BE DETERMINED BY THE EXISTING CONDITIONS WHERE THE CLEARANCE IS MEASURED.

(II) MAY BE REDUCED TO 8'-6". (c)

(III) RESIDENTIAL MAY BE REDUCED TO 10 FEET. (d)

REFERENCE:

(a) SEE G.O. 95 RULE 37.

(b) URBAN AND RURAL DISTRICTS AS DEFINED IN G.O. 95, RULE 21.2.

(c) SEE G.O. 95 RULE 54.8-B3.

(d) SEE G.O. 95 RULE 54.8-B2b.

© 1998 - 2021 San Diego Gas & Electric Company. All rights reserved. Removal of this copyright notice without permission is not permitted under law.

REV	CHANGE	DR	BY	DSN	APV	DATE	REV	CHANGE	DR	BY	DSN	APV	DATE
C	DRAWING UPDATE	-	JC	JS	CZH	04/22/2019	F	DRAWING UPDATE	EDM	JIK	JES	CZH	10/01/2021
B	EDITORIAL CHANGES	-	GW	JS	CZH	07/09/2018	E	EDITORIAL CHANGES	-	JC	GLW	CZH	11/12/2019
A	REVISION	-	-	PIA	ROJ	01/01/1994	D	DRAWING UPDATE	-	GLW	JES	CZH	10/20/2019

SCOPE: THIS STANDARD PROVIDES THE MINIMUM VERTICAL CLEARANCE BETWEEN CONDUCTORS.

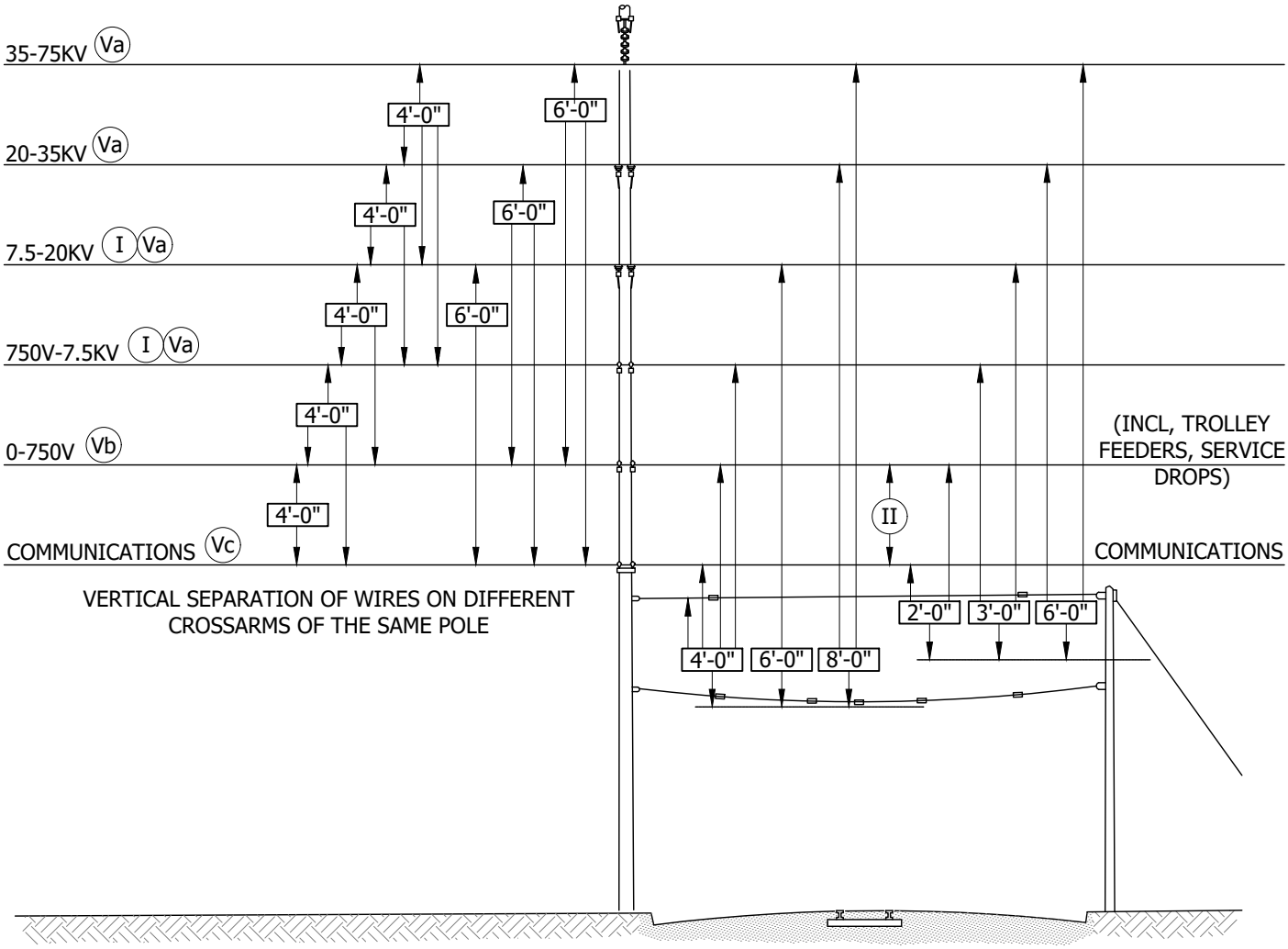

FIGURE 1
CLEARANCE OF WIRES AT SUPPORTS, IN MIDSPANS (a)
AND AT POINT OF CROSSING

TABLE OF CONTENTS

© 1998 - 2021 San Diego Gas & Electric Company. All rights reserved. Removal of this copyright notice without permission is not permitted under law.

REV	CHANGE	DR	BY	DSN	APV	DATE	REV	CHANGE	DR	BY	DSN	APV	DATE
C	DRAWING UPDATE	-	JC	JS	CZH	04/22/2019	F	DRAWING UPDATE	EDM	JIK	JES	CZH	10/01/2021
B	EDITORIAL CHANGES	-	GW	JS	CZH	07/09/2018	E	EDITORIAL CHANGES	-	JC	GLW	CZH	11/12/2019
A	REVISION	-	-	PIA	ROJ	01/01/1994	D	DRAWING UPDATE	-	GLW	JES	CZH	10/20/2019

X Indicates Latest Revision | Completely Revised | New Page | Information Removed

SDG&E ELECTRIC OVERHEAD CONSTRUCTION STANDARDS

VERTICAL CLEARANCE BETWEEN WIRES

OH220.7

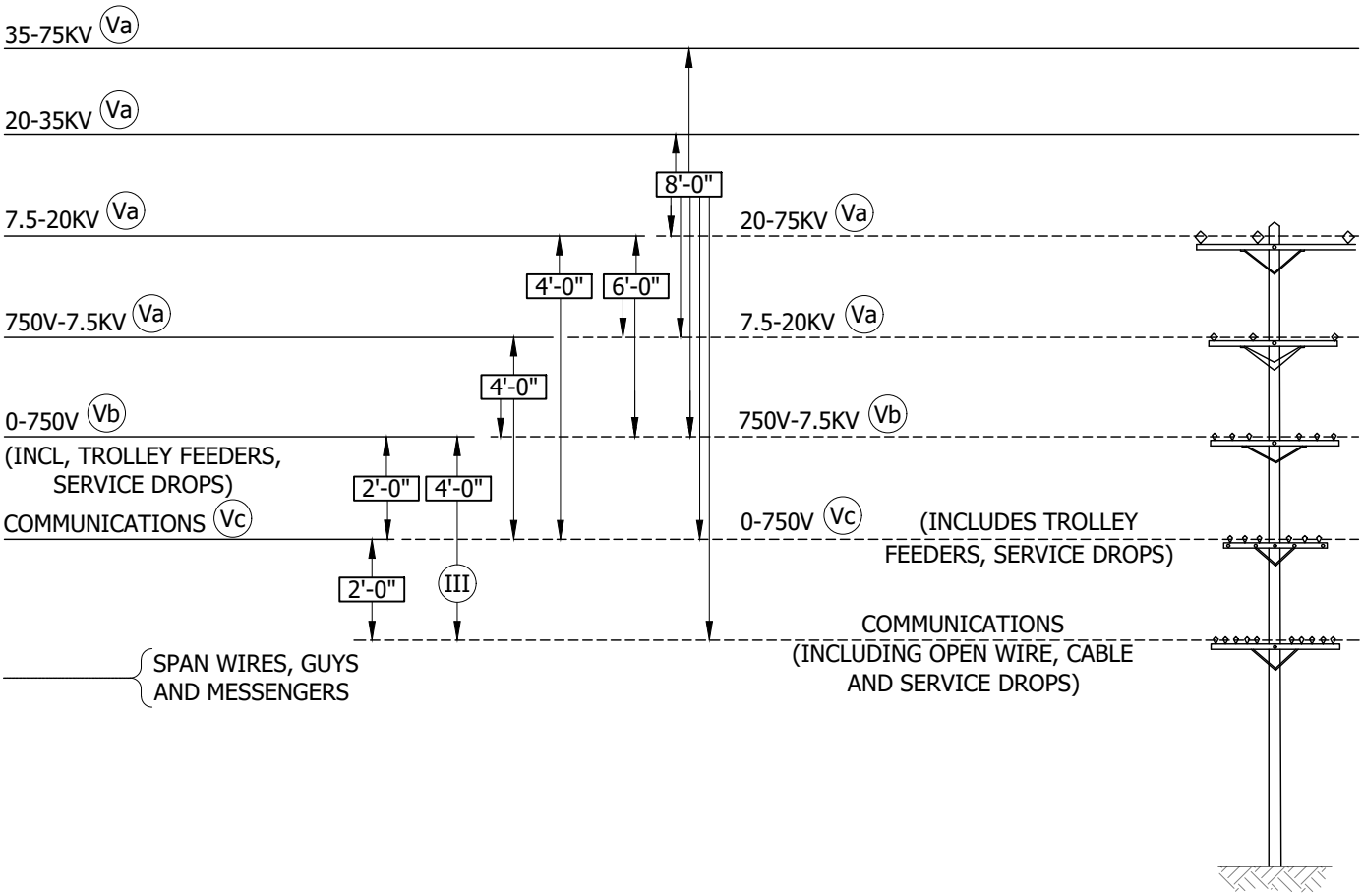

FIGURE 2
CLEARANCE OF WIRES AT SUPPORTS, IN MIDSPANS (a) AND AT POINT OF CROSSING

INSTALLATION: NONE

BILL OF MATERIALS: NONE

NOTES:

(I) CONDITIONS FOR USING REDUCED CLEARANCES:

a. CONDUCTORS ARE OF ONE OWNERSHIP.

b. NOT APPLICABLE TO NEW CONSTRUCTION, INVOLVING NEW POLES, BUCK ARM CONSTRUCTION, TRANSFORMERS OR CAPACITORS.

c. NOT MORE THAN ONE REDUCED CLEARANCE IS USED ON ANY ONE POLE.

(II) THE MIDSPAN VERTICAL CLEARANCE MAY BE REDUCED TO 36 INCHES WITH AERIAL CABLE FOR SSC SUPPLY CONDUCTORS ONLY.

(III) CLEARANCE OF SUPPLY SERVICE DROPS AT CROSSINGS IN SPANS MAY BE REDUCED TO 24-INCH MIN. ABOVE OR BELOW OPEN WIRE COMMUNICATION LINE CONDUCTORS AND 24 INCHES ABOVE AND 48 INCHES BELOW COMMUNICATION CABLE ON MESSENGERS, PROVIDED THE CROSSING IS 6 FEET OR MORE FROM ANY POLE WHICH DOES NOT SUPPORT BOTH COMMUNICATIONS AND SUPPLY CONDUCTORS.

© 1998 - 2021 San Diego Gas & Electric Company. All rights reserved. Removal of this copyright notice without permission is not permitted under law.

REV	CHANGE	DR	BY	DSN	APV	DATE	REV	CHANGE	DR	BY	DSN	APV	DATE
C	DRAWING UPDATE	-	JC	JS	CZH	04/22/2019	F	DRAWING UPDATE	EDM	JIK	JES	CZH	10/01/2021
B	EDITORIAL CHANGES	-	GW	JS	CZH	07/09/2018	E	EDITORIAL CHANGES	-	JC	GLW	CZH	11/12/2019
A	REVISION	-	-	PIA	ROJ	01/01/1994	D	DRAWING UPDATE	-	GLW	JES	CZH	10/20/2019

X Indicates Latest Revision | Completely Revised | New Page | Information Removed

NOTES (CONT'D):

IV. SEE TRANSMISSION ENGINEERING FOR SEPARATIONS AND CLEARANCES ABOVE 75KV.

V. BASIC MINIMUM SEPARATION BETWEEN CONDUCTOR LEVELS OF SAME VOLTAGE CLASSIFICATION:

(a) 4 FEET

(b) 2 FEET

(c) 1 FOOT

REFERENCE:

(a) SEE G.O. 95, RULE 38, TABLE 2.

TABLE OF CONTENTS

© 1998 - 2021 San Diego Gas & Electric Company. All rights reserved. Removal of this copyright notice without permission is not permitted under law.

REV	CHANGE	DR	BY	DSN	APV	DATE	REV	CHANGE	DR	BY	DSN	APV	DATE
C	DRAWING UPDATE	-	JC	JS	CZH	04/22/2019	F	DRAWING UPDATE	EDM	JIK	JES	CZH	10/01/2021
B	EDITORIAL CHANGES	-	GW	JS	CZH	07/09/2018	E	EDITORIAL CHANGES	-	JC	GLW	CZH	11/12/2019
A	REVISION	-	-	PIA	ROJ	01/01/1994	D	DRAWING UPDATE	-	GLW	JES	CZH	10/20/2019

X Indicates Latest Revision | Completely Revised | New Page | Information Removed

SDG&E ELECTRIC OVERHEAD CONSTRUCTION STANDARDS

VERTICAL CLEARANCE BETWEEN WIRES

OH220.9

SCOPE: THIS STANDARD PROVIDES THE MINIMUM CLEARANCES OF WIRES ABOVE WATER. (a)

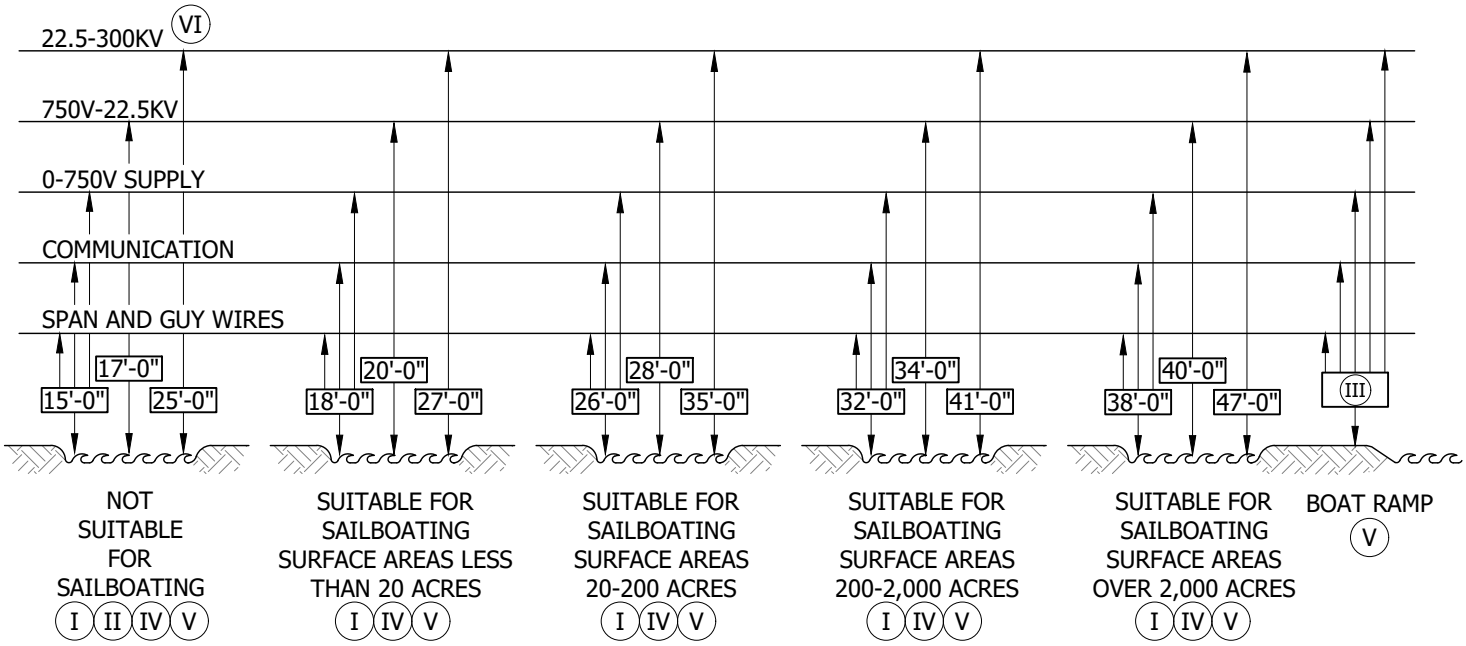

FIGURE 1
CLEARANCE OF WIRES ABOVE WATER

INSTALLATION: NONE

BILL OF MATERIALS: NONE

NOTES:

(I) WHERE A FEDERAL AGENCY OR SUBSTITUTE AGENCY HAS ISSUED A CROSSING PERMIT, CLEARANCES OF THAT PERMIT SHALL GOVERN.

(II) OR WHERE SAILBOATING IS PROHIBITED AND WHERE OTHER BOATING ACTIVITIES ARE ALLOWED.

(III) FOR WATER AREAS SERVING AS BOAT LAUNCHING FACILITIES AND ADJACENT AREAS THAT ARE POSTED, DESIGNATED OR SPECIFICALLY PREPARED FOR THE RIGGING OF SAILBOATS OR OTHER WATERCRAFT, CLEARANCES ABOVE ADJOINING GROUND SHALL BE 5 FEET GREATER THAN THE ABOVE CLEARANCES.

(IV) FOR CONTROLLED IMPOUNDMENTS (LAKES, PONDS AND RESERVOIRS) THE SURFACE AREAS AND CORRESPONDING CLEARANCES SHALL BE BASED UPON THE DESIGN HIGH WATER LEVEL. FOR OTHER WATERS, THE SURFACE AREA SHALL BE THAT ENCLOSED BY ITS ANNUAL FLOOD LEVEL. THE CLEARANCE OVER RIVERS, STREAMS AND CANALS SHALL BE BASED UPON THE LARGEST SURFACES AREAS OF ONE-MILE LONG SEGMENT WHICH INCLUDES THE CROSSING. THE CLEARANCE OVER A CANAL, RIVER OR STREAM NORMALLY USED TO PROVIDE ACCESS FOR SAILBOATS TO A LARGER BODY OF WATER SHALL BE THE SAME AS THAT REQUIRED FOR THE LARGER BODY OF WATER.

(V) WATER AREAS ARE LAKES, PONDS, RESERVOIRS, TIDAL WATERS, RIVERS, STREAMS AND CANALS WITHOUT SURFACE OBSTRUCTIONS.

(VI) THIS CLEARANCE SHALL BE INCREASED 0.3 INCH PER KV IN EXCESS OF 300KV.

EXAMPLE: VOLTAGE LEVEL = 500KV
DIFFERENCE (500KV - 300KV) = 200KV
200KV X 0.3" = 60 INCHES OR 5'-0"
ADD 5'-0" TO THE APPROPRIATE 22.5 - 300KV CLEARANCE

REFERENCE:

(a) SEE G.O. 95 RULE 37.

© 1998 - 2021 San Diego Gas & Electric Company. All rights reserved. Removal of this copyright notice without permission is not permitted under law.

REV	CHANGE	DR	BY	DSN	APV	DATE	REV	CHANGE	DR	BY	DSN	APV	DATE
C							F						
B	DRAWING UPDATE	EDM	JIK	JES	CZH								
A	REVISION	-	-	-	PIA/DTE	01/01/1989	D						

Indicates Latest Revision | Completely Revised | X New Page | Information Removed

SDG&E ELECTRIC OVERHEAD CONSTRUCTION STANDARDS

SHEET 10 OF 10

VERTICAL CLEARANCE OF WIRES ABOVE WATER

OH220.10

TABLE OF CONTENTS

SCOPE: THIS STANDARD IS PROVIDED FOR REFERENCE IN DETERMINING MINIMUM REQUIREMENTS OF G.O. 95. IN SOME CASES, SDG&E STANDARD PRACTICES ARE MORE RESTRICTIVE AND SHALL BE USED.

COMMUNICATIONS AND SUPPLY

		G.O. 95 RULE NO.
A. SERVICE DROPS, GROUND CLEARANCE, MINIMUM PERMITTED VERTICAL:		54.8B3
1. ON RESIDENTIAL PREMISES ACCESSIBLE ONLY TO PEDESTRIANS----------	10 FT.	84.8C3B
2. ON RESIDENTIAL PREMISES ACCESSIBLE ONLY TO PEDESTRIANS, WHERE NO POINT OF ATTACHMENT PERMITS A 10-FOOT GROUND CLEARANCE (0-300 VOLTS ONLY)----------	8 1/2 FT.	54.8B3 84.8C3B
3. ON RESIDENTIAL PREMISES OVER PRIVATE DRIVEWAYS OR LANES AND OTHER PRIVATE PROPERTY AREAS ACCESSIBLE TO VEHICLES----------	12 FT.	54.8B2B 84.8C2B
4. ON RESIDENTIAL PREMISES, OVER DRIVEWAYS OR LANES AND PROPERTY ACCESSIBLE TO VEHICLES, WHERE NO POINT OF ATTACHMENT PERMITS 12-FOOT GROUND CLEARANCE (0-300 VOLTS ONLY)----------	10 FT.	54.8B2B 84.8C2B
5. ON COMMERCIAL AND INDUSTRIAL PREMISES ACCESSIBLE ONLY TO PEDESTRIANS----------	12 FT.	54.8B3 84.8C3A
6. ON COMMERCIAL AND INDUSTRIAL PREMISES OVER DRIVEWAYS OR LANES AND PROPERTY ACCESSIBLE TO VEHICLES----------	16 FT.	54.8B2A 84.8C2A
7. CROSSING AND ABOVE PUBLIC THOROUGHFARES MORE THAN 12 FT. OUT FROM CURB OR EDGE OF TRAVELED WAY, AND AT CENTER OF ROAD----------	18 FT.	54.8B1 84.8C1
8. CROSSINGS AND ABOVE PUBLIC THOROUGHFARES AT EDGE OF CURB OR EDGE OF TRAVELED WAY ----------	16 FT.	54.8B1 84.8C1
B. SERVICE DROPS, SEPARATION, MINIMUM PERMITTED RADIAL:		
1. COMMUNICATIONS AND SUPPLY SERVICE DROPS MORE THAN 15 FEET FROM FROM ATTACHMENT TO CUSTOMER'S FACILITIES----------	24 IN.	84.8D4 54.8C4
2. COMMUNICATIONS AND SUPPLY SERVICE DROPS 15 FEET OR LESS FROM ATTACHMENT TO CUSTOMER'S FACILITIES----------	12 IN.	84.8D4 54.8C4
C. SERVICE DROP, CONDUCTORS:		
1. SERVICE DROP CONDUCTORS MUST BE COVERED WITH THE EQUIVALENT OF STANDARD DOUBLE-BRAID WEATHERPROOFING OR OF A DESIGN AUTHORIZED FOR USE BY THE PUC		49.4C7 84.8A
D. SERVICE DROP, CLEARANCE FROM BUILDINGS:		54.8B4
1. VERTICAL CLEARANCE REQUIRED OVER BUILDING		84.8C4
2. SUPPLY SERVICE DROPS, MINIMUM PERMITTED HORIZONTAL CLEARANCE FROM DOORS, WINDOWS AND OTHER POINTS WHERE HUMAN CONTACT MIGHT BE EXPECTED----------	3 FT.	54.8B4 84.8C4
3. TELECOMMUNICATIONS SERVICE DROPS MUST NOT INTERFERE WITH FREE USE OF EXITS, WINDOWS, DOORS AND OTHER POINTS OF INGRESS OR EGRESS.----------		84.8C4

TABLE OF CONTENTS

© 1998 - 2020 San Diego Gas & Electric Company. All rights reserved. Removal of this copyright notice without permission is not permitted under law.

REV	CHANGE	BY	DSGN	APPV	DATE	REV	CHANGE	BY	DSGN	APPV	DATE
C						F					
B	EDITORIAL CHANGES	JIK	JES	CZH	02/10/2020	E					
A	ORIGINAL ISSUE	-	PTA	CAK	01/01/1998	D					

X Indicates Latest Revision | Completely Revised | New Page | Information Removed

TABLE OF CONTENTS

E. SUPPLY CONDUCTORS (0-7500V0, COMMUNICATIONS CONDUCTORS AND SERVICE DROPS:

		G.O. 95 RULE NO.
PASSING POLE MUST CLEAR CENTERLINE BY----------	3 FT.	32.3
COMMUNICATIONS CABLES AND MESSENGERS THAT ARE SUITABLY INSULATED AND PROTECTED FROM ABRASION, THAT PASS NONCLIMBABLE STREET LIGHTING POLES, ARE EXEMPT.☐		54.4D2,3 54.8D 84.4D4 84.8E

F. RADIAL SEPARATION, MINIMUM (COMMUNICATIONS OR 0-750 V SUPPLY:

		TABLE 2 CASE NO.
INCIDENTAL POLE WIRING ON SAME CROSSARM----------	3 IN.	17
GUYS PASSING CONDUCTORS SUPPORTED ON SAME POLE----------	3 IN.	19

G. CLEARANCES, VERTICAL, MINIMUM: (RULE 37, TABLE 1)

	GUYS	SUPPLY SERV. DROPS COMMUNICATIONS	SUPPLY 0-750V	TABLE 1 CASE NO.
1. ABOVE RAILROAD TRACKS----------	25 FT.	25 FT.	25 FT.	1
2. ABOVE THOROUGHFARES----------	18	18	20	3
3. ACROSS AGRICULTURAL AREAS----------	15	15	19	4
4. ABOVE AREAS ACCESSIBLE TO PEDESTRIANS ONLY--	8	10	12	5
5. ABOVE WATER SURFACES----------				11 & 12

H. CONDUCTOR CLEARANCES, RADIAL, BETWEEN CONDUCTORS NOT SUPPORTED ON SAME POLES: (RULE 38, TABLE 2)

		TABLE 2 CASE NO.
1. BETWEEN COMMUNICATION CONDUCTORS----------	24 IN.	3C
2. BETWEEN COMMUNICATION AND 0-7500 V SUPPLY CONDUCTORS----------	48 IN.	3D, E
3. BETWEEN 0-750 V SUPPLY CONDUCTORS----------	24 IN.	4D
4. BETWEEN 750-7500 V SUPPLY CONDUCTORS----------	48 IN.	4E, 5D, E

I. CONDUCTOR CLEARANCES, VERTICAL, BETWEEN COMMUNICATIONS LEVEL AND SUPPY LEVEL NEXT ABOVE ON SAME POLE: (RULE 38, TABLE 2, CASE 8)

		G.O. 95 RULE NO.
1. COMMUNICATIONS CIRCUITS, PROTECTED BY GUARD ARM, BELOW 0-750 V LEVEL ------	4 FT.	87.4C3
NOTE: MAY BE REDUCED TO 36 INCHES VERTICALLY AT MIDSPAN		TABLE 2 CASE 8 & 9
2. COMMUNICATIONS CIRCUITS, ALL OTHER CONDITIONS, BELOW ANY VOLTAGE SUPPLY LEVEL ----------	6 FT.	87.4C3

J. TREE TRIMMING:

TREE TRIMMING REQUIRED.	35

K. OVERHEAD GUYS, GROUND CLEARANCE, MINIMUM PERMITTED VERTICAL: (RULE 37, TABLE 1)

		56.4A1
1. OVER ENTRANCE TO OR EXIT FROM COMMERCIAL OR INDUSTRIAL PREMISES----------	16 FT.	86.4A1
2. OVER ENTRANCE TO OR EXIT FROM PRIVATE RESIDENTIAL PREMISES----------	14 FT.	56.4A2 86.4A1

© 1998 - 2020 San Diego Gas & Electric Company. All rights reserved. Removal of this copyright notice without permission is not permitted under law.

REV	CHANGE	BY	DSGN	APPV	DATE	REV	CHANGE	BY	DSGN	APPV	DATE
C						F					
B	EDITORIAL CHANGES	JIK	JES	CZH	02/10/2020	E					
A	ORIGINAL ISSUE	-	PTA	CAK	01/01/1998	D					

		TABLE 2 CASE 8 & 9
L. STREET LIGHTING EQUIPMENT, TRAFFIC SIGNALS & ANTENNAS NOT PART OF THE OH SYSTEM:		58.5B3B
1. RADIAL CLEARANCE FROM WIRE ON SAME POLE STREET LIGHTING EQUIP---	1 FT.	92.1F5
2. RADIAL CLEARANCE FROM PASSING SECONDARY CONDUCTOR		
STREET LIGHTING EQUIP----------	3 FT.	TABLE 1 CASE 10
TRAFFIC SIGNALS----------	3 FT.	TABLE 1 CASE 10
ANTENNAS NOT PART OF THE OH SYSTEM----------	3 FT.	TABLE 1 CASE 10
3. RADIAL CLEARANCE FROM PASSING PRIMARY CONDUCTOR		
STREET LIGHTING EQUIP----------	6 FT.	TABLE 1 CASE 10
TRAFFIC SIGNALS----------	6 FT.	TABLE 1 CASE 10
ANTENNAS NOT PART OF THE OH SYSTEM----------	6 FT.	TABLE 1 CASE 10

M. RISERS AND RUNS:	
1. GROUND WIRES OF SUPPLY CIRCUITS MUST BE PROTECTED BY SUITABLE COVERING IN GOOD REPAIR THROUGH THEIR LENGTH.	54.6B
2. LATERAL RUNS OF SUPPLY CIRCUITS MUST BE COVERED.	54.6C4
3. VERTICAL RUNS OR RISERS OF SUPPLY CIRCUITS MUST HAVE CROSSARM OR WOOD BLOCK WITHIN 4 INCHES OF UPPER TERMINAL OR TERMINAL FITTINGS. THIS WOOD BLOCK MAY BE OMITTED IF THE VERTICAL RUNS OR RISERS ARE ENCLOSED IN PLASTIC PIPE.	54.6F
4. RISERS AND VERTICAL RUNS SHALL BE COVERED BY SUITABLE PROTECTIVE COVERING OR FIBRE CONDUIT IF WITHIN 8 FEET VERTICALLY OF COMMUNICATION OR SUPPLY LEVEL.	54.6E
5. PLASTIC PIPE (PVC) SHALL BE INSTALLED ONLY OUTSIDE THE CLIMBING SPACE.	22.2
6. RISERS SHALL BE ENCASED.	54.6E 87.7D

	G.O. 95 RULE NO.
N. GENERAL REQUIREMENTS:	
1. UNAUTHORIZED ATTACHMENT OF EQUIPMENT FOREIGN TO THE PURPOSES OF OVERHEAD ELECTRIC LINE CONSTRUCTION IS NOT PERMITTED.	34
2. ABANDONED LINES OR PORTIONS THEREOF MUST BE REMOVED.	31.6
3. STRENGTH OF POLE QUESTIONABLE.	49.1A
4. CLIMBING SPACE IS NOT TO BE OBSTRUCTED.	54.7 84.7
5. OVERHEAD LINES SHALL BE MAINTAINED IN GOOD REPAIR AND IN ACCORDANCE WITH ACCEPTED GOOD PRACTICE.	12.2 13 31.1 31.2
6. BOXES OR ENCLOSURES CONTAINING ACCESSIBLE LIVE PARTS, AND LOCATED WITHIN 8 FEET OR LESS OF GROUND SHALL BE LOCKED OR SEALED.	58.6C

TABLE OF CONTENTS

© 1998 - 2020 San Diego Gas & Electric Company. All rights reserved. Removal of this copyright notice without permission is not permitted under law.

REV	CHANGE	BY	DSGN	APPV	DATE	REV	CHANGE	BY	DSGN	APPV	DATE
C						F					
B	EDITORIAL CHANGES	JIK	JES	CZH	02/10/2020	E					
A	ORIGINAL ISSUE	-	PTA	MF	03/15/2006	D					

		G.O. 95 RULE NO.
N. GENERAL REQUIREMENTS (CONT'D):		
7. GUYS SHALL BE MAINTAINED TAUT.		56.2 86.2
8. TWO GUYS ARE ALLOWED WITHIN A 4 FOOT VERTICAL SECTION OF CLIMBING SPACE PROVIDED THEY ARE SEPARATED AT THE POLE BY A VERTICAL DISTANCE OF NOT MORE THAN 18 INCHES.		54.7A3, 54.9F, 54.10F3, 54.11G, 84.7
9. ALL ANCHOR GUYS ARE REQUIRED TO HAVE A SECURELY ATTACHED MARKER.		56.9 86.9
10. UNCOVERED VERTICAL TELEPHONE RUNS ON POLES ARE REQUIRED TO BE SUPPORTED EVERY TWO FEET.		84.6D
11. TERMINAL LEAD WIRES ARE REQUIRED TO BE ORDERLY ARRANGED ON POLE.		31.1
O. LINES AND CROSSARMS:		
LINES AND CROSSARMS CARRYING CONDUCTORS OF MORE THAN 750 V SHALL BE MARKED "HIGH VOLTAGE", AND HIGH VOLTAGE SIGNS SHALL BE LEGIBLE AND CLEARLY DISTINGUISHABLE.		51.6
P. POLE STEPS, MINIMUM HEIGHT OF LOWEST STEP ON POLE:		
1. SUPPORTING SUPPLY CONDUCTORS ----------	7 1/2 FT.	51.7
2. SUPPORTING ONLY COMMUNICATIONS CONDUCTORS-----	6 1/2 FT.	91.3
3. JOINT POLES WITH VERTICAL RUNS OR RISERS SHALL BE STEPPED.		91.3A
Q. SETTING OF POLES - CHECK SETTING DEPTH OF WOOD POLE:		
1. TABLE 6 INDICATES MINIMUM DEPTHS IN FIRM SOIL OR SOLID ROCK.		49.1C
2. WHERE SOIL NOT FIRM, SHOULD HAVE DEEPER SETTING OR USE SPECIAL METHODS OF SETTING.		49.1C
3. UNGUYED POLE SUBJECT TO HEAVY STRAIN, ON CORNER OR CURVE, SHOULD BE SET AT GREATER DEPTH.		49.1C

INSTALLATION: NONE

BILL OF MATERIALS: NONE

NOTES: NONE

REFERENCE: NONE

TABLE OF CONTENTS

© 1998 - 2020 San Diego Gas & Electric Company. All rights reserved. Removal of this copyright notice without permission is not permitted under law.

REV	CHANGE	BY	DSGN	APPV	DATE	REV	CHANGE	BY	DSGN	APPV	DATE
C						F					
B	EDITORIAL CHANGES	JIK	JES	CZH	02/10/2020	E					
A	ORIGINAL ISSUE	-	PTA	CAK	01/01/1998	D					

X Indicates Latest Revision | Completely Revised | New Page | Information Removed

SCOPE: THESE CLEARANCES APPLY TO ALL PERSONS WHO ARE NOT QUALIFIED ELECTRICAL WORKERS AUTHORIZED BY SDG&E TO WORK ON SDG&E OWNED HIGH VOLTAGE (600V-50KV) CONDUCTORS.

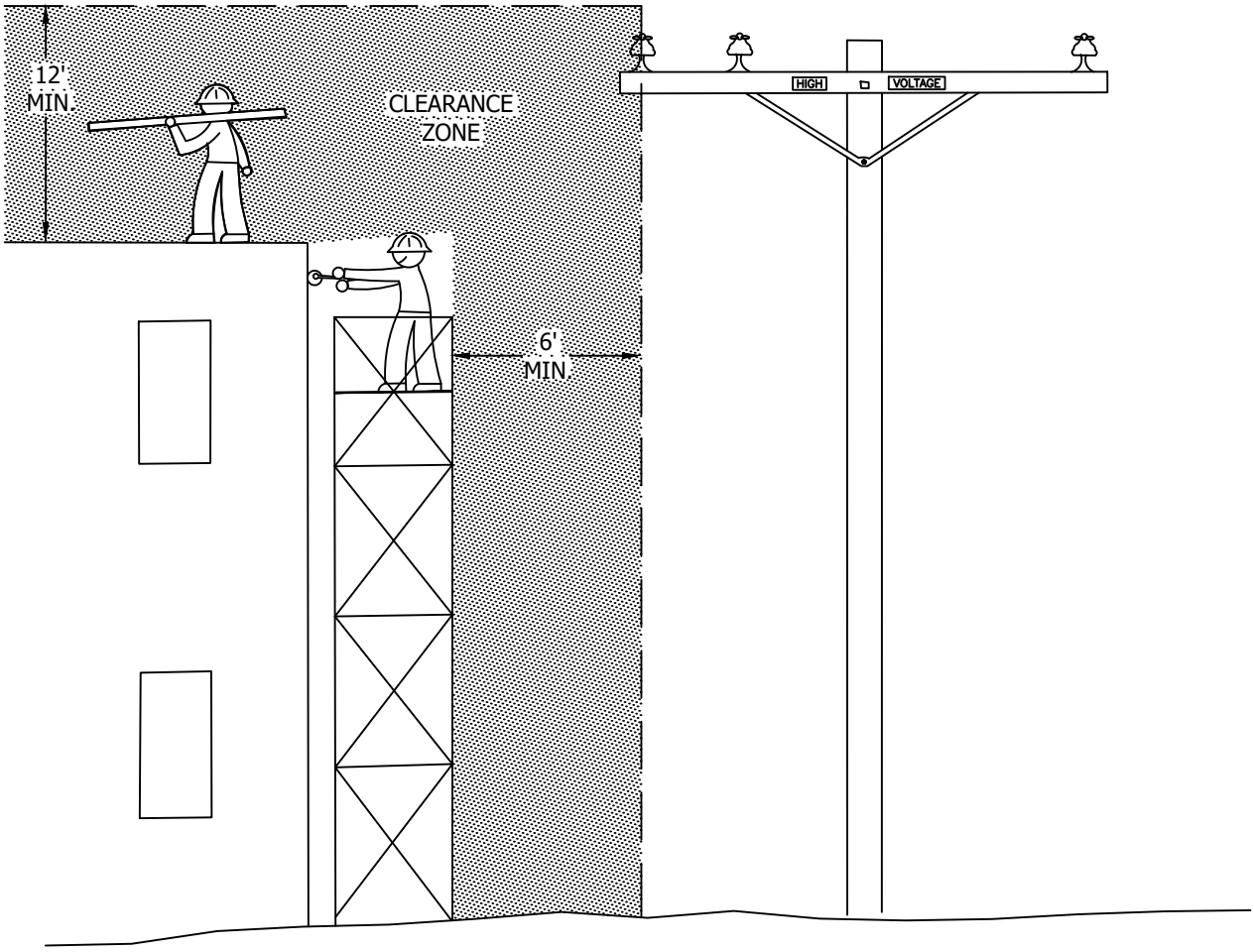

INSTALLATION: NONE

BILL OF MATERIALS: NONE

NOTES:

I. WORKERS OR OBJECTS NOT SUPPORTED BY BOOM TYPE EQUIPMENT MUST MAINTAIN 6 FEET HORIZONTAL & 12' VERTICAL FROM HIGH VOLTAGE (600V-50KV) CONDUCTORS.

II. CAL-OSHA ELECTRICAL SAFETY ORDER 2948 MAKES THE CUSTOMER RESPONSIBLE FOR NOTIFYING SDG&E IF ADJUSTMENTS NEED TO BE MADE IN THE ELECTRICAL SYSTEM TO COMPLY WITH TITLE 8. CUSTOMER SHOULD CONTACT APPROPRIATE SDG&E CUSTOMER PROJECT PLANNER FOR AVAILABLE OPTIONS.

REFERENCE:

a. CALIF. ADMIN. CODE TITLE 8 INDUSTRIAL RELATIONS ELECTRICAL SAFETY ORDERS - 2946 & 2948 & FED-OSHA 1926. 1408

© 1998 - 2020 San Diego Gas & Electric Company. All rights reserved. Removal of this copyright notice without permission is not permitted under law.

REV	CHANGE	BY	DSGN	APPV	DATE	REV	CHANGE	BY	DSGN	APPV	DATE
C						F					
B	EDITORIAL CHANGES	JIK	JES	CZH	02/10/2020	E					
A	ORIGINAL ISSUE	GW	IL	MDJ	10/25/2016	D					

X Indicates Latest Revision | Completely Revised | New Page | Information Removed

SHEET 1 OF 2

SDG&E ELECTRIC OVERHEAD CONSTRUCTION STANDARDS

HIGH VOLTAGE CONDUCTOR CLEARANCE
FOR NON-UTILITY WORKERS AND EQUIPMENT

OH228.1

TABLE OF CONTENTS

SCOPE: THESE CLEARANCES APPLY TO ALL PERSONS WHO ARE NOT QUALIFIED ELECTRICAL WORKERSAUTHORIZED BY SDG&E TO WORK ON SDG&E OWNED HIGH VOLTAGE (600V-50KV) CONDUCTORS.

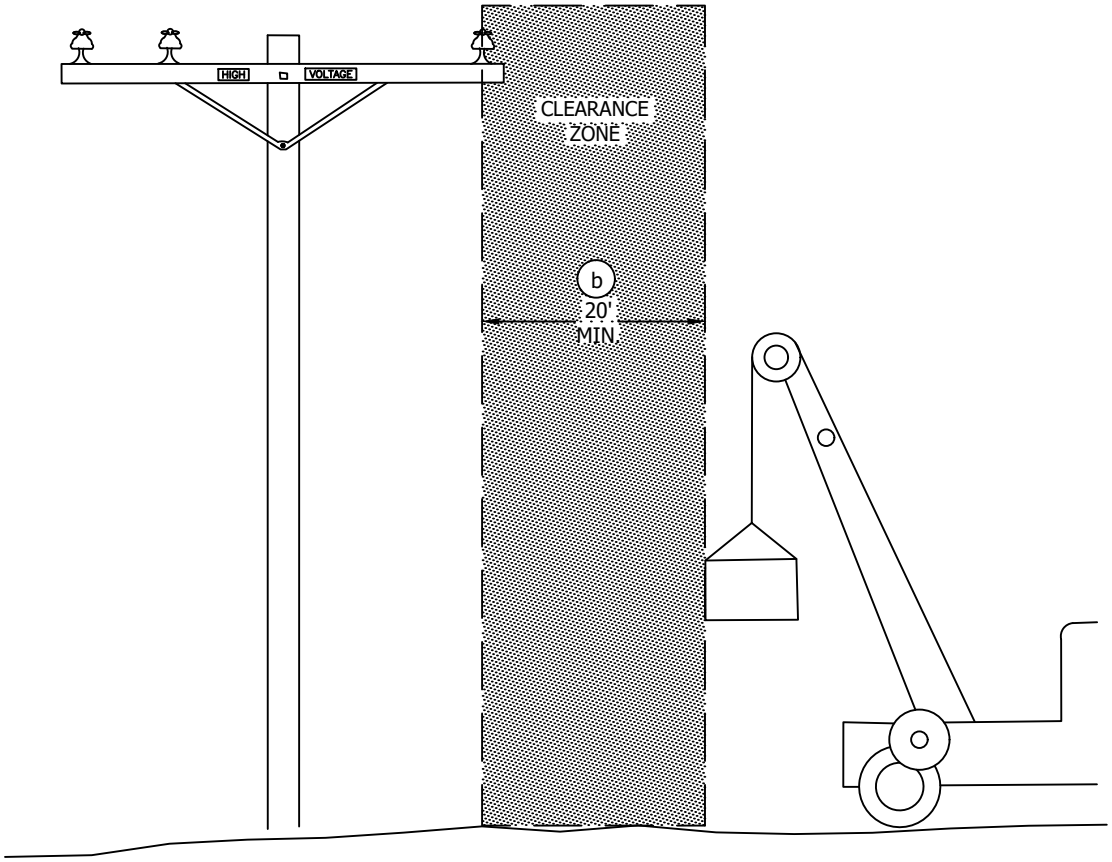

INSTALLATION: NONE

BILL OF MATERIALS: NONE

NOTES:

I. BOOM TYPE LIFTING OR HOISTING EQUIPMENT, INCLUDING LOAD, MUST MAINTAIN 20 FEET HORIZONTAL FROM HIGH VOLTAGE (600V-50KV) CONDUCTORS.

II. CAL-OSHA ELECTRICAL SAFETY ORDER 2948 MAKES THE CUSTOMER RESPONSIBLE FOR NOTIFYING SDG&E IF ADJUSTMENTS NEED TO BE MADE IN THE ELECTRICAL SYSTEM TO COMPLY WITH TITLE 8. CUSTOMER SHOULD CONTACT APPROPRIATE SDG&E CUSTOMER PROJECT PLANNER FOR AVAILABLE OPTIONS.

REFERENCE:

a. CALIF. ADMIN. CODE TITLE 8 INDUSTRIAL RELATIONS ELECTRICAL SAFETY ORDERS - 2946 & 2948 & FED-OSHA 1926. 1408

(b) TO REDUCE MINIMUM DISTANCE TO 10', REFER TO FED-OSHA STANDARD 1926.1408 "CRANES & DERRICKS IN CONSTRUCTION".

© 1998 - 2020 San Diego Gas & Electric Company. All rights reserved. Removal of this copyright notice without permission is not permitted under law.

REV	CHANGE	BY	DSGN	APPV	DATE	REV	CHANGE	BY	DSGN	APPV	DATE
C						F					
B	EDITORIAL CHANGES	JIK	JES	CZH	02/10/2020	E					
A	ORIGINAL ISSUE	GW	IL	MDJ	10/25/2016	D					

X Indicates Latest Revision | Completely Revised | New Page | Information Removed

SHEET 2 OF 2

SDG&E ELECTRIC OVERHEAD CONSTRUCTION STANDARDS

HIGH VOLTAGE CONDUCTOR CLEARANCE FOR NON-UTILITY WORKERS AND EQUIPMENT

OH228.2

TABLE OF CONTENTS

SCOPE: THIS STANDARD DESCRIBES HORIZONTAL AND VERTICAL CLEARANCES OF SUPPLY CONDUCTORS FROM BUILDINGS, BRIDGES AND OTHER STRUCTURES.

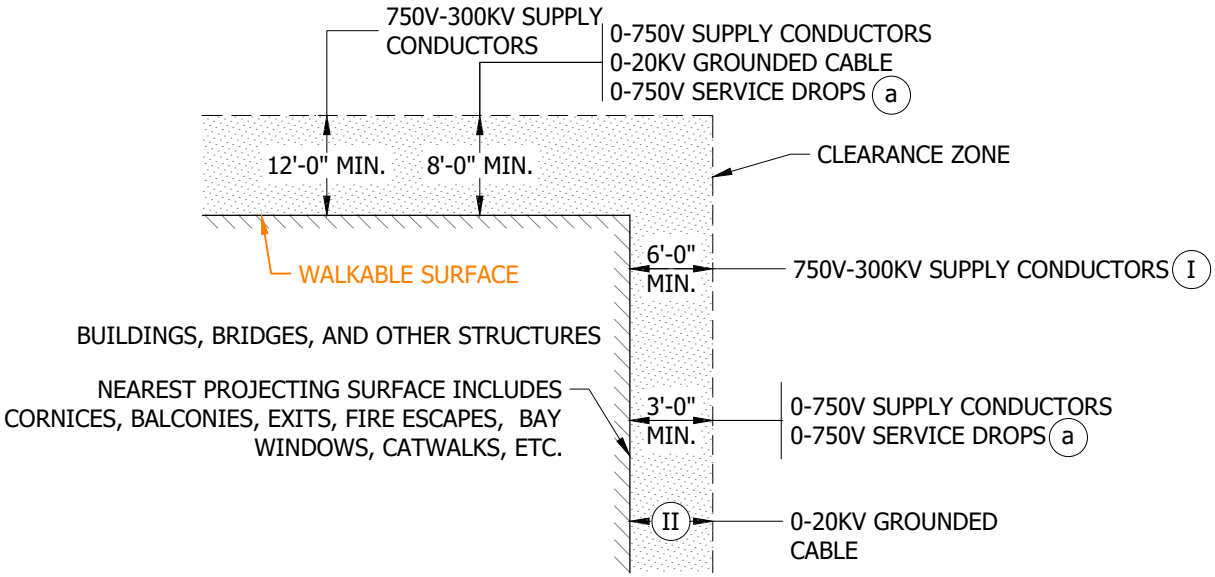

FIGURE 1
NEAR BUILDINGS, BRIDGES, AND OTHER STRUCTURES

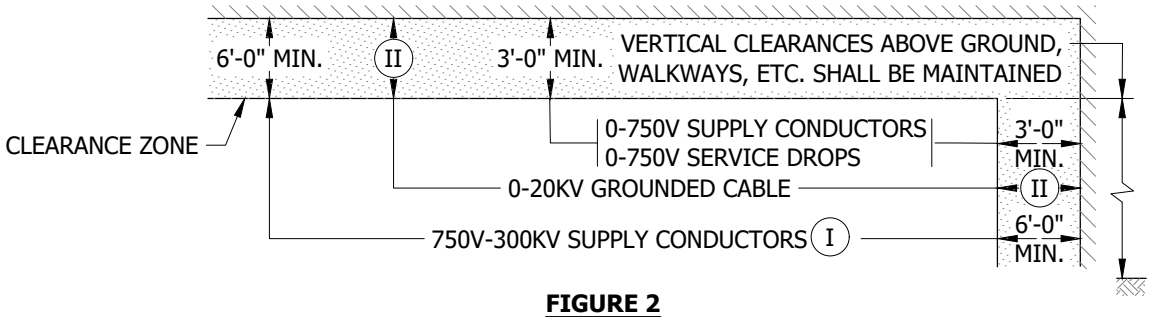

FIGURE 2
UNDER OR THRU BRIDGES, VIADUCTS OR SIMILAR STRUCTURES

INSTALLATION: NONE

BILL OF MATERIALS: NONE

NOTES:

(I) HORIZONTAL CLEARANCE OF 750V-7.5KV CONDUCTORS FROM BUILDING WALLS MAY BE REDUCED TO FOUR FEET WHERE CONDUCTORS ARE IN EXCESS OF THIRTY FIVE FEET ABOVE GROUND. REDUCED CLEARANCE DOES NOT APPLY TO BRIDGES, FIRE ESCAPES, WINDOWS, BALCONIES OR STRUCTURES WHERE HUMAN CONTACT MAY BE EXPECTED.

(II) NO LIMIT REQUIRED BUT THE GREATEST PRACTICABLE CLEARANCE SHOULD BE MAINTAINED. PROVIDE MECHANICAL (PHYSICAL) CLEARANCE FOR CABLE PROTECTION.

REFERENCE:

(a) SEE UG262.3-4 FOR 0-300V SERVICE DROP CLEARANCES.

b. SEE G.O. 95 RULE 54.4I FOR SIGN REQUIREMENTS ON BRIDGES, VIADUCTS ETC., WHEN ATTACHING CONDUCTORS 750V-22.5KV BENEATH OR THRU SAME.

c. DATA TAKEN FROM G.O. 95 TABLE I, CASE 6 AND 7 AND RULE 54.4H AND I.

© 1998 - 2021 San Diego Gas & Electric Company. All rights reserved. Removal of this copyright notice without permission is not permitted under law.

REV	CHANGE	DR	BY	DSN	APV	DATE	REV	CHANGE	DR	BY	DSN	APV	DATE
C	DRAWING UPDATE	PEI	-	-	-	04/22/2019	F	EDITORIAL CHANGES	EDM	GLW	JES	CZH	12/12/2021
B	UPDATED TITLE BLOCK	-	PS	IL	MDJ	05/18/2016	E	EDITORIAL CHANGES	-	JIK	JES	CZH	02/10/2020
A	ORIGINAL ISSUE	-	-	PTA	RDG	01/01/1988	D	EDITORIAL CHANGES	-	JC	JES	CZH	06/13/2019

TABLE OF CONTENTS

SCOPE: THIS STANDARD DESCRIBES MINIMUM CLEARANCES OF WIRES FROM ILLUMINATED AND NON-ILLUMINATED SIGNS.

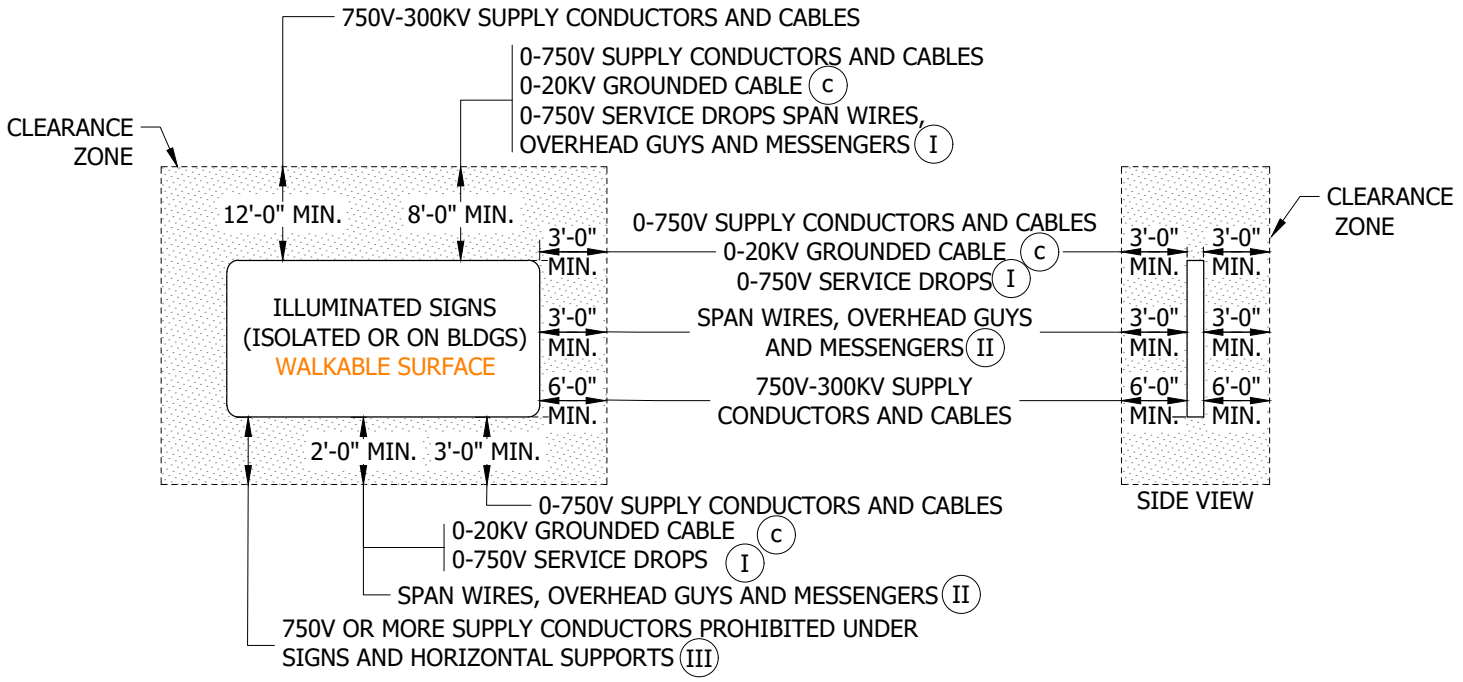

FIGURE 1
CLEARANCES FROM WALKABLE ILLUMINATED SIGNS

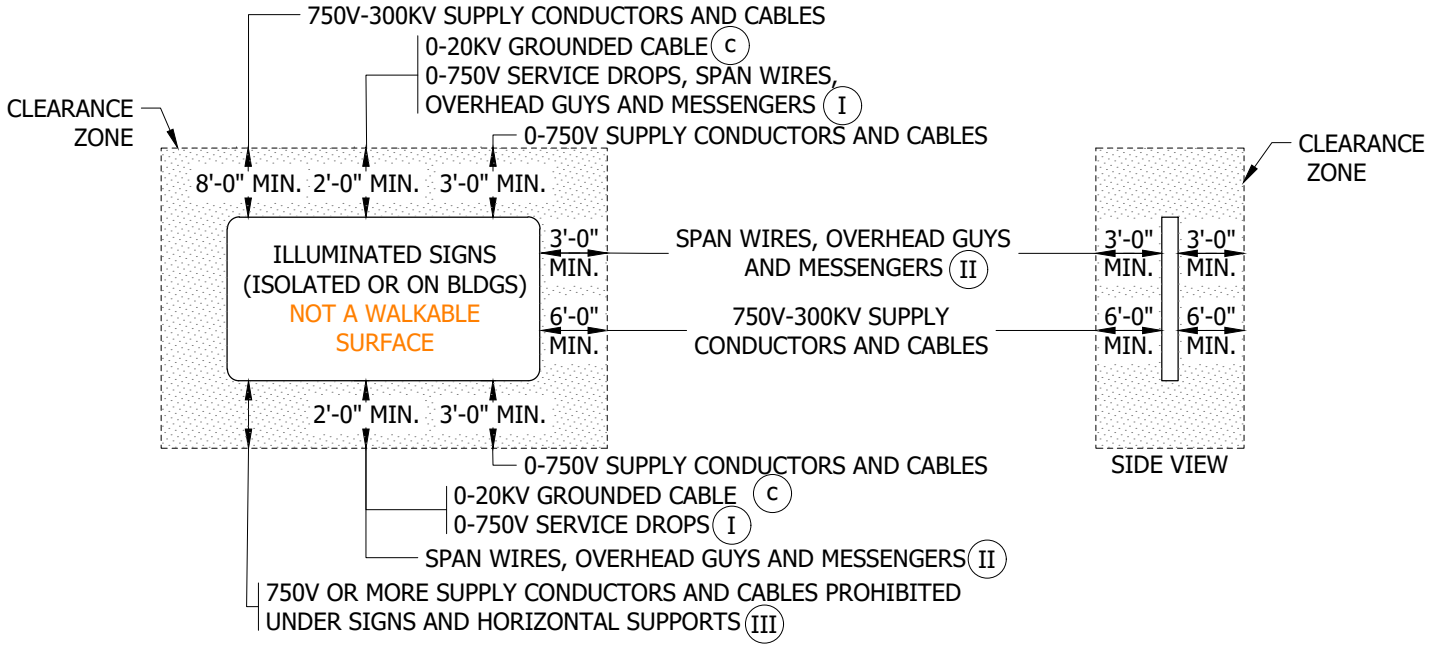

FIGURE 2
CLEARANCES FROM NON-WALKABLE ILLUMINATED SIGNS

© 1998 - 2021 San Diego Gas & Electric Company. All rights reserved. Removal of this copyright notice without permission is not permitted under law.

REV	CHANGE	DR	BY	DSN	APV	DATE	REV	CHANGE	DR	BY	DSN	APV	DATE
C	DRAWING UPDATE	PEI	-	-	-	04/22/2019	F	EDITORIAL CHANGES	EDM	GLW	JES	CZH	12/12/2021
B	UPDATED TITLE BLOCK	-	PS	IL	MDJ	05/18/2016	E	EDITORIAL CHANGES	-	JIK	JES	CZH	02/10/2020
A	ORIGINAL ISSUE	-	-	PTA	RDG	01/01/1988	D	EDITORIAL CHANGES	-	JC	JES	CZH	06/13/2019

TABLE OF CONTENTS

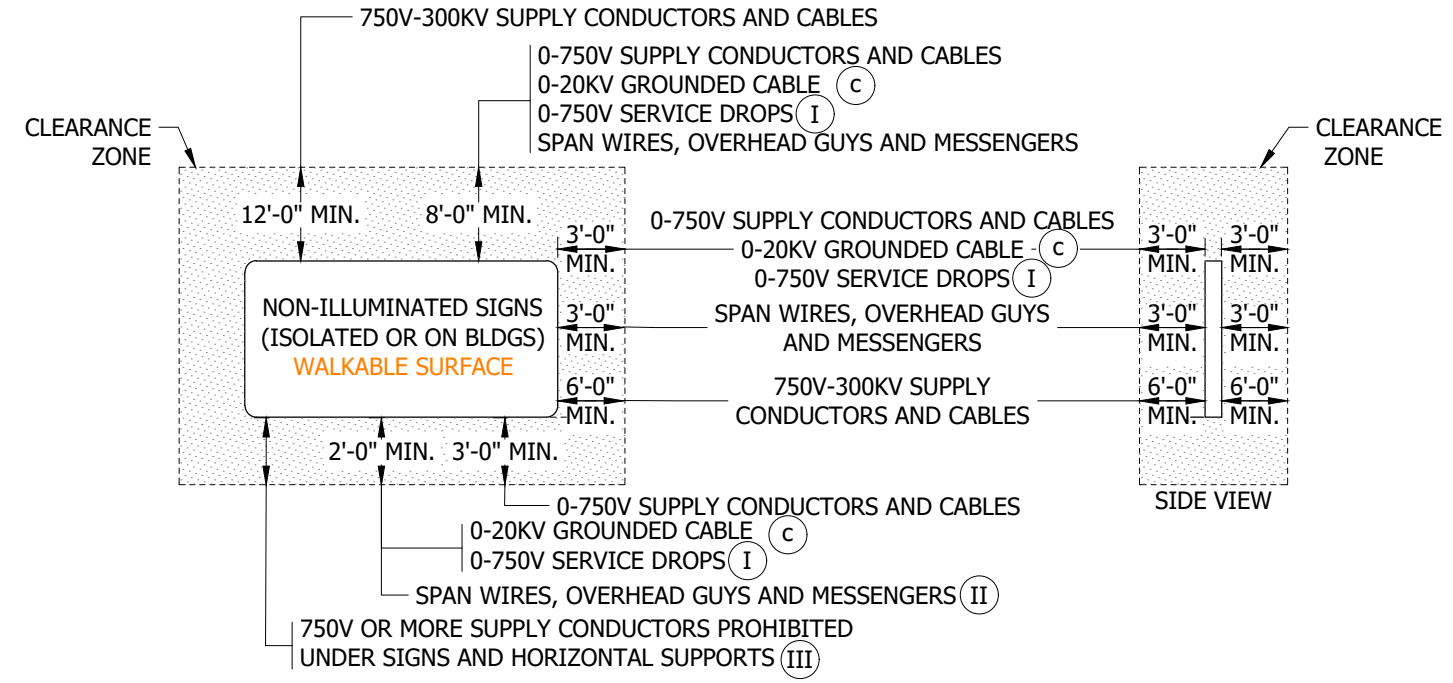

FIGURE 3

CLEARANCES FROM WALKABLE NON-ILLUMINATED SIGNS

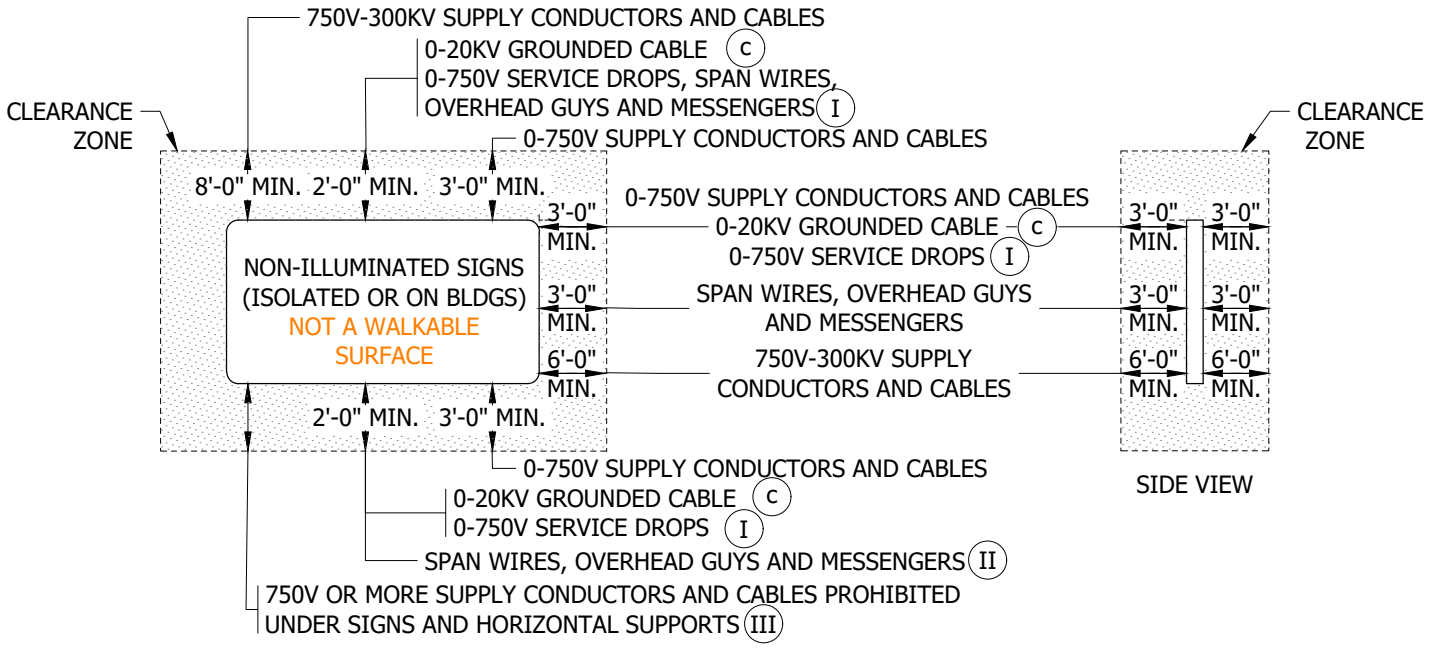

FIGURE 4

CLEARANCES FROM NON-WALKABLE NON-ILLUMINATED SIGNS

© 1998 - 2021 San Diego Gas & Electric Company. All rights reserved. Removal of this copyright notice without permission is not permitted under law.

REV	CHANGE	DR	BY	DSN	APV	DATE	REV	CHANGE	DR	BY	DSN	APV	DATE
C	DRAWING UPDATE	PEI	-	-	-	04/22/2019	F	EDITORIAL CHANGES	EDM	GLW	JES	CZH	12/12/2021
B	UPDATED TITLE BLOCK	-	PS	IL	MDJ	05/18/2016	E	EDITORIAL CHANGES	-	JIK	JES	CZH	02/10/2020
A	ORIGINAL ISSUE	-	-	PTA	RDG	01/01/1988	D	EDITORIAL CHANGES	-	JC	JES	CZH	06/13/2019

X Indicates Latest Revision | Completely Revised | New Page | Information Removed

SDG&E ELECTRIC OVERHEAD CONSTRUCTION STANDARDS

HORIZONTAL AND VERTICAL CLEARANCES OF SUPPLY CONDUCTORS FROM ILLUMINATED AND NON-ILLUMINATED SIGNS

OH229.3

TABLE OF CONTENTS

INSTALLATION: NONE

BILL OF MATERIALS: NONE

NOTES:

(I) THESE CLEARANCES DO NOT APPLY TO SERVICE DROPS ATTACHED TO AND SERVING THESE SIGNS.

(II) MAY BE REDUCED TO SIX INCHES MINIMUM IF ILLUMINATED SIGN IS GROUNDED.

(III) CLEARANCES SPECIFIED MAY VARY NO MORE THAN 10% DUE TO TEMPERATURE OR WIND LOADING.

(IV) WHEN CONDUCTORS OF MORE THAN 750V ARE AT A LEVEL OF EIGHT FEET OR MORE BELOW THE LEVEL OF THE LOWEST PORTION OF THE SIGN BUT NOT VERTICALLY UNDER THE SIGN, NO HORIZONTAL CLEARANCE IS REQUIRED BETWEEN THE VERTICAL PLANES THROUGH THE CONDUCTOR NEAREST THE SIGN AND THE VERTICAL PROJECTION OF THE EXTREMITIES OF THE SIGN. (a)

REFERENCE:

(a) SEE G.O. 95, RULE 39.

b. DATA TAKEN FROM G.O. 95 TABLE 2-A.

(c) SEE G.O. 95 RULES 57.4-A2 & 57.8.

TABLE OF CONTENTS

© 1998 - 2021 San Diego Gas & Electric Company. All rights reserved. Removal of this copyright notice without permission is not permitted under law.

REV	CHANGE	DR	BY	DSN	APV	DATE	REV	CHANGE	DR	BY	DSN	APV	DATE
C	DRAWING UPDATE	PEI	-	-	-	04/22/2019	F	EDITORIAL CHANGES	EDM	GLW	JES	CZH	12/12/2021
B	UPDATED TITLE BLOCK	-	PS	IL	MDJ	05/18/2016	E	EDITORIAL CHANGES	-	JIK	JES	CZH	02/10/2020
A	ORIGINAL ISSUE	-	-	PTA	RDG	01/01/1988	D	EDITORIAL CHANGES	-	JC	JES	CZH	06/13/2019

X Indicates Latest Revision | Completely Revised | New Page | Information Removed

SDG&E ELECTRIC OVERHEAD CONSTRUCTION STANDARDS

HORIZONTAL AND VERTICAL CLEARANCES OF SUPPLY CONDUCTORS FROM ILLUMINATED AND NON-ILLUMINATED SIGNS

OH229.4

SCOPE: THIS STANDARD DESCRIBES MINIMUM HORIZONTAL AND VERTICAL CLEARANCES OF ENERGIZED CONDUCTORS NEAR RAILROAD TRACKS.

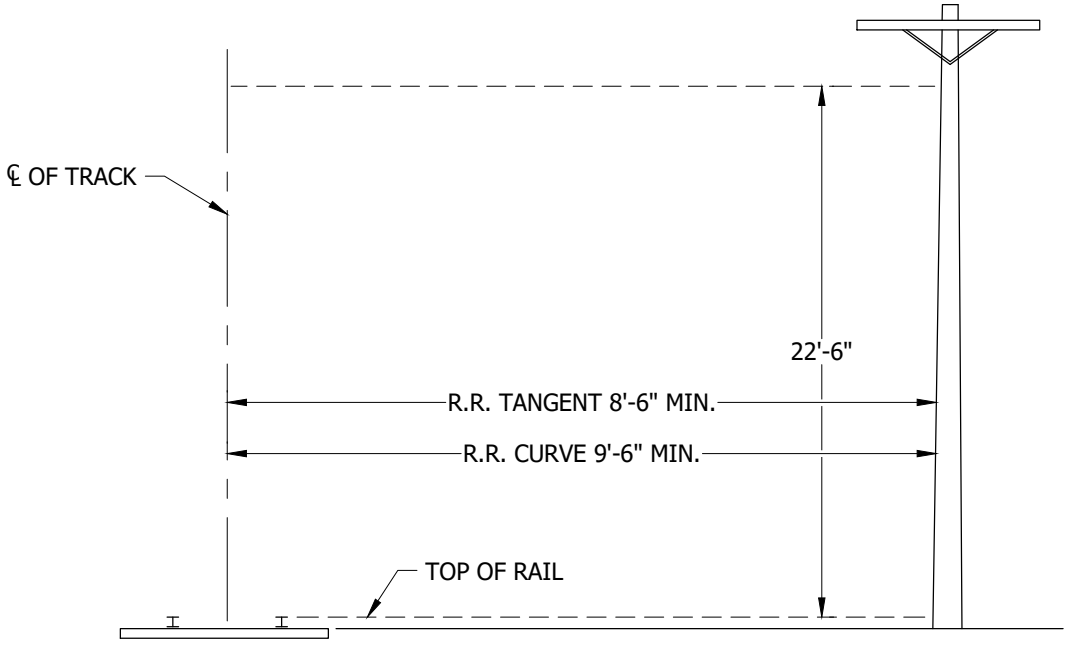

FIGURE 1

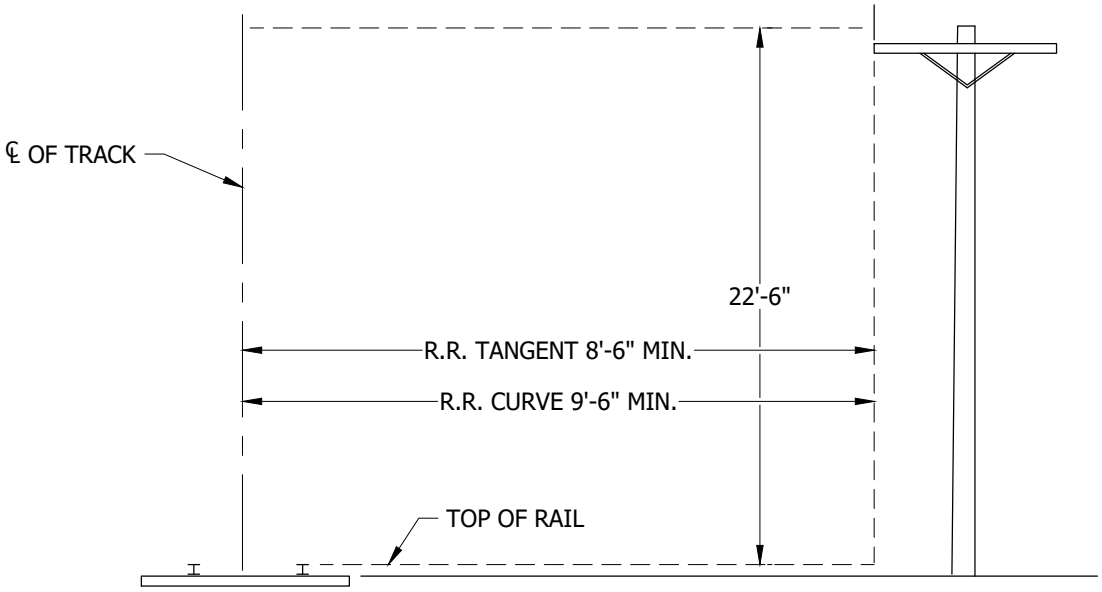

FIGURE 2

INSTALLATION: NONE

BILL OF MATERIALS: NONE

NOTES: NONE

REFERENCE:

a. SEE OH220 FOR VERTICAL CLEARANCES.

© 1998 - 2021 San Diego Gas & Electric Company. All rights reserved. Removal of this copyright notice without permission is not permitted under law.

REV	CHANGE	DR	BY	DSN	APV	DATE	REV	CHANGE	DR	BY	DSN	APV	DATE
C	DRAWING UPDATE	PEI	-	-	-	04/22/2019	F	EDITORIAL CHANGES	EDM	GLW	JES	CZH	12/12/2021
B	UPDATED TITLE BLOCK	-	PS	IL	MDJ	05/18/2016	E	EDITORIAL CHANGES	-	JIK	JES	CZH	02/10/2020
A	ORIGINAL ISSUE	-	-	PTA	RDG	01/01/1988	D	EDITORIAL CHANGES	-	JC	JES	CZH	06/13/2019

SCOPE: THIS STANDARD DESCRIBES MINIMUM CLEARANCE AND SEPARATION REQUIREMENTS OF ENERGIZED OVERHEAD CONDUCTORS FROM CONTAINERS OF FLAMMABLE OR EXPLOSIVE MIXTURES.

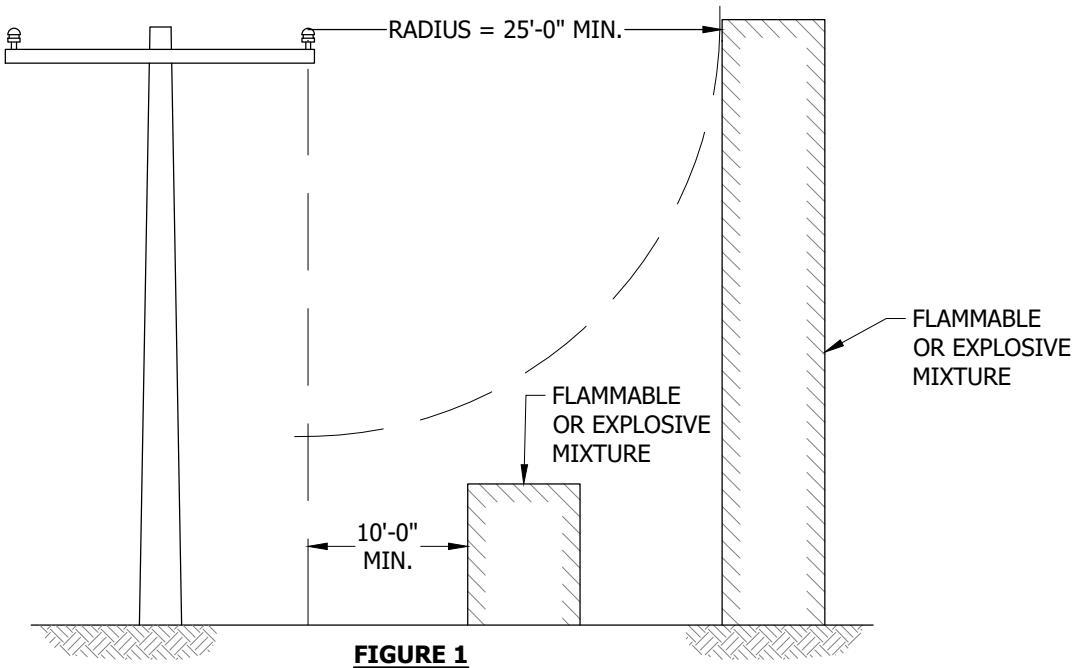

FIGURE 1
ELEVATION

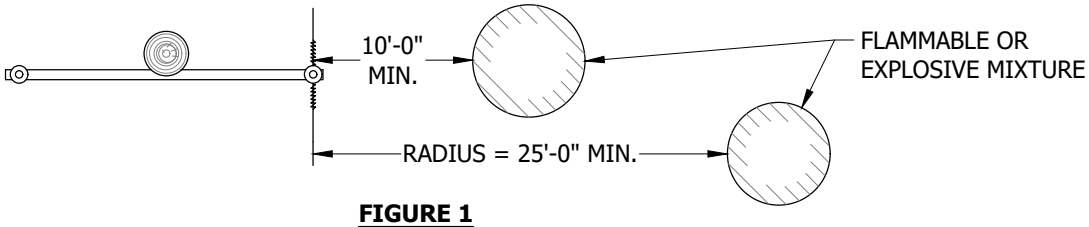

FIGURE 1
PLAN VIEW

INSTALLATION: NONE

BILL OF MATERIALS: NONE

NOTES:

I. ALL ENERGIZED OVERHEAD FACILITIES OF ANY VOLTAGE CLASSIFICATION SHALL HAVE A MINIMUM CLEARANCE OF 10 FEET MEASURED HORIZONTALLY AND A RADIUS OF 25 FEET FROM ANY EXPOSED TANK, VENT OR FILL TUBE CONTAINING FLAMMABLE OR EXPLOSIVE MIXTURES.

II. THIS STANDARD DOES NOT APPLY TO FACILITIES INSTALLED PRIOR TO NOVEMBER 15, 1983.(b)

REFERENCE:

a. TITLE 8 (OSHA) ARTICLE 34.

(b) SEE G.O. 95 RULE 12.3.

© 1998 - 2021 San Diego Gas & Electric Company. All rights reserved. Removal of this copyright notice without permission is not permitted under law.

REV	CHANGE	DR	BY	DSN	APV	DATE	REV	CHANGE	DR	BY	DSN	APV	DATE
C	DRAWING UPDATE	PEI	-	-	-	04/22/2019	F	EDITORIAL CHANGES	EDM	GLW	JES	CZH	12/12/2021
B	UPDATED TITLE BLOCK	-	PS	IL	MDJ	05/18/2016	E	EDITORIAL CHANGES	-	JIK	JES	CZH	02/10/2020
A	ORIGINAL ISSUE	-	-	PTA	RDG	01/01/1988	D	EDITORIAL CHANGES	-	JC	JES	CZH	06/13/2019

X Indicates Latest Revision | Completely Revised | New Page | Information Removed

SDG&E ELECTRIC OVERHEAD CONSTRUCTION STANDARDS

CLEARANCE OF OVERHEAD FACILITIES FROM TANKS CONTAINING FLAMMABLE OR EXPLOSIVE MIXTURE

OH229.6

TABLE OF CONTENTS

SCOPE: THIS STANDARD SHOWS AND EXPLAINS CLIMBING AND WORKING SPACE.

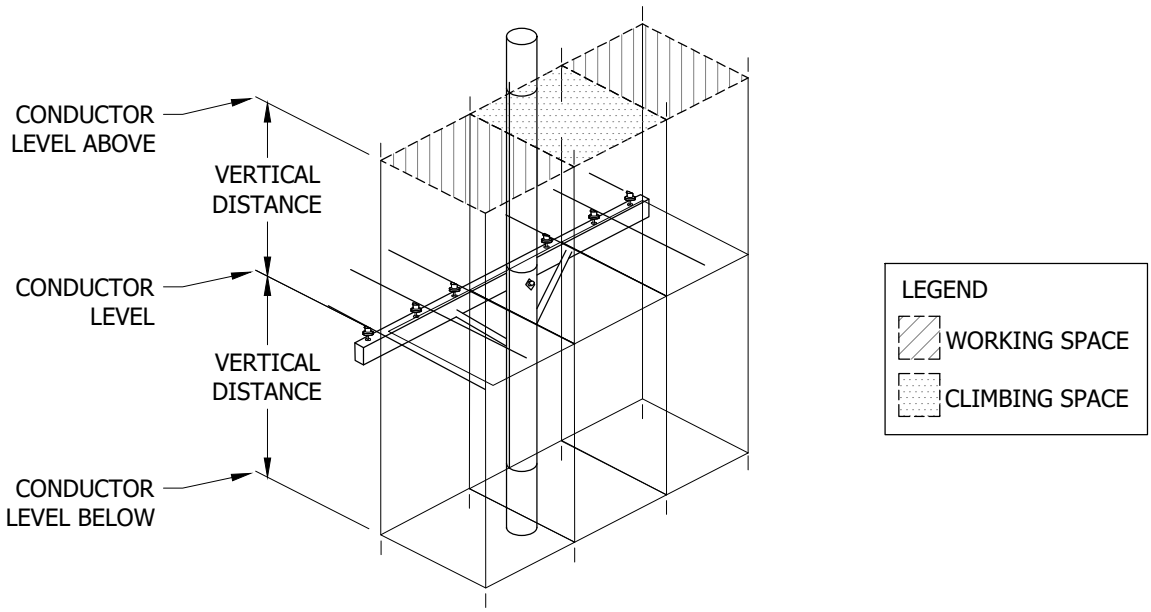

FIGURE 1

TABLE OF CONTENTS

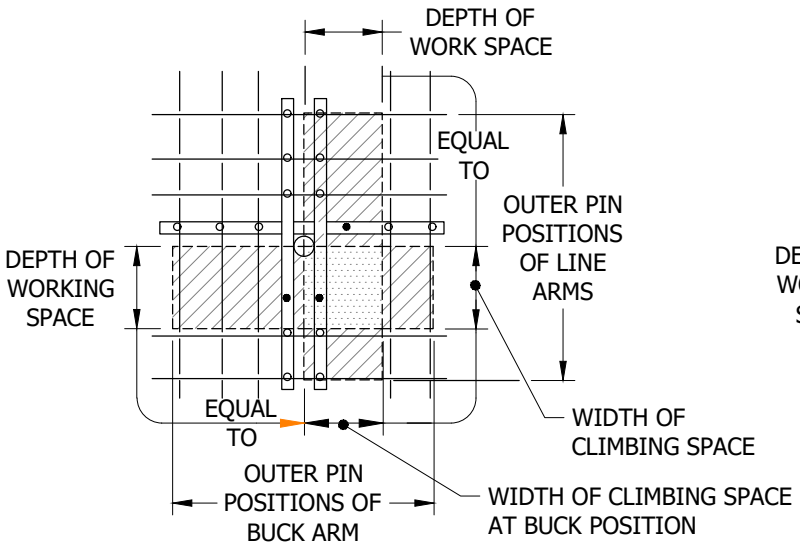

FIGURE 2
WORKING SPACE AS RELATED TO QUADRANT POSITION CLIMBING SPACE DOUBLE LINE AND SINGLE BUCK

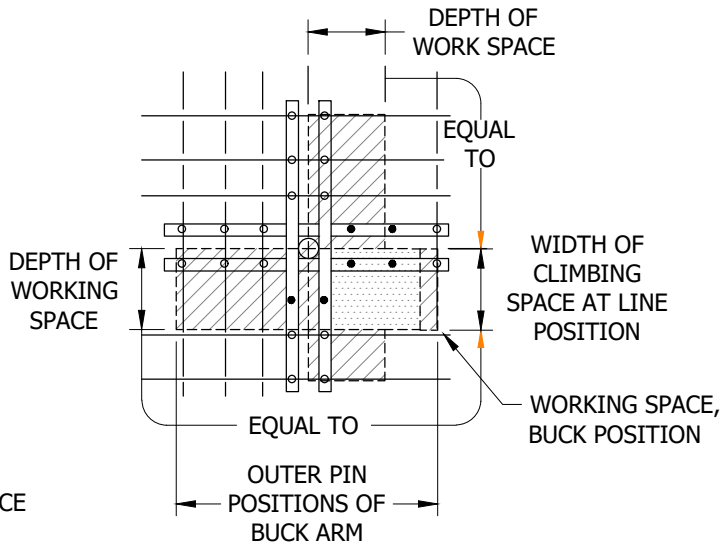

FIGURE 3
WORKING SPACE AS RELATED TO QUADRANT POSITION CLIMBING SPACE DOUBLE LINE AND DOUBLE BUCK

© 1998 - 2021 San Diego Gas & Electric Company. All rights reserved. Removal of this copyright notice without permission is not permitted under law.

REV	CHANGE	DR	BY	DSN	APV	DATE	REV	CHANGE	DR	BY	DSN	APV	DATE
C	EDITORIAL CHANGES	-	GLW	JES	CZH	9/18/2019	F						
B	DRAWING UPDATE	-	PEI	-	-	4/22/2019	E	EDITORIAL CHANGES	EDM	JIK	JES	CZH	3/5/2021
A	ORIGINAL ISSUE	-	-	PTA	CAK	1/1/1998	D	EDITORIAL CHANGES	-	JAC	GLW	CZH	7/14/2020

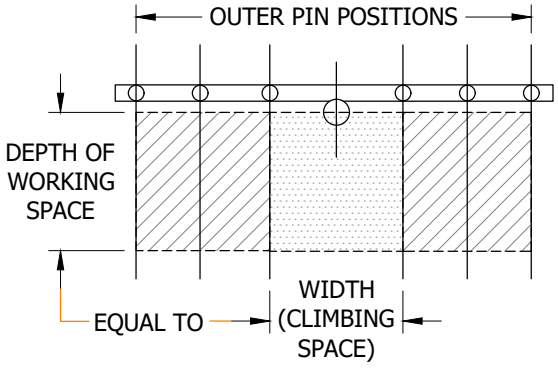

FIGURE 4
WORKING SPACE AS RELATED TO POLE POSITION CLIMBING SPACE SINGLE LINE ARM

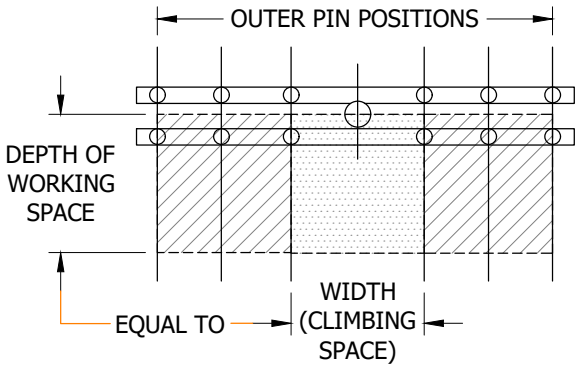

FIGURE 5
WORKING SPACE AS RELATED TO POLE POSITION CLIMBING SPACE DOUBLE LINE ARM

DEFINITIONS:

- **ALLOWABLE CLIMBING SPACE OBSTRUCTIONS FOR CROSSARM CONSTRUCTION**: (b)
  1. CROSSARMS AND BRACES.
  2. 2 GUYS PERMITTED IN ANY ONE 4-FOOT VERTICAL SECTION OF CLIMBING SPACE HAVING A VERTICAL SEPARATION OF 18 INCHES OR LESS. (c)
  3. SUITABLY PROTECTED VERTICAL RISERS OR RUNS COVERED ONLY BY WOOD, GROUND WIRES COVERED BY WOOD, GROUND WIRES COVERED BY PLASTIC, OR OTHER NON-CONDUCTIVE MATERIAL NO GREATER THAN ONE-HALF INCH IN DIAMETER. SUCH RISERS, RUNS, AND GROUNDS ARE ALLOWABLE PROVIDED THAT NOT MORE THAN ONE IS INSTALLED IN ANY 4-FOOT SECTION OF CLIMBING SPACE. (d) (e) (f)
  4. ONE HALF DIAMETER OF INSULATORS AND THEIR ATTACHING BRACKETS SUPPORTING LINE CONDUCTORS.
  5. ONE HALF DIAMETER OF STREET LIGHT BRACKETS AND ASSOCIATED STREET LIGHT BRACKET STRUTS.
  6. ONE HALF DIAMETER OF SWITCH OPERATING RODS.
  7. BANDS LIMITED TO 6 INCHES IN WIDTH WITH NO MORE THAN ONE BAND PERMITTED IN ANY ONE 24-INCH VERTICAL SECTION OF CLIMBING SPACE.
- **ALLOWABLE WORKING SPACE OBSTRUCTIONS:** (g)
  1. TAPS FROM CONDUCTORS ON LINE ARMS TO CONDUCTORS ON RELATED BUCK ARMS.
  2. 0-750V SERVICE DROPS FROM LINE ARMS.
  3. CUTOUTS AND THEIR LEADS.
  4. LIGHTNING ARRESTERS AND THEIR LEADS.
  5. SWITCHES AND THEIR LEADS.
  6. TRANSFORMERS AND CAPACITOR LEAD WIRES.
  7. TERMINAL FITTINGS OF RISERS AND RUNS AND THEIR TAPS MAY EXTEND INTO WORKING SPACE PROVIDED THESE FITTINGS ARE THE ONLY OBSTRUCTION IN THE WORKING SPACE, AT THEIR LEVEL ON THE SAME SIDE OF THE CLIMBING SPACE.
  8. STREET LIGHTS AND THEIR ASSOCIATED HARDWARE.
- **DIMENSIONS OF WORKING SPACE:** THE VERTICAL DIMENSIONS OF WORKING SPACE ABOVE AND BELOW ANY CONDUCTOR LEVEL SHALL BE EQUAL TO THE VERTICAL DISTANCES BETWEEN CONDUCTORS FOR VOLTAGES INVOLVED. THE WIDTH OF THE WORKING SPACE WHERE CROSSARMS ARE INVOLVED SHALL BE THE DISTANCE BETWEEN OUTSIDE PIN POSITIONS. THE DEPTH OF THE WORKING SPACE WHERE CROSSARMS ARE INVOLVED SHALL BE EQUAL TO THE WIDTH OF THE CLIMBING SPACE AND SHALL BE MEASURED HORIZONTALLY FROM THE CENTERLINE OF THE POLE. (a)

© 1998 - 2021 San Diego Gas & Electric Company. All rights reserved. Removal of this copyright notice without permission is not permitted under law.

REV	CHANGE	DR	BY	DSN	APV	DATE	REV	CHANGE	DR	BY	DSN	APV	DATE
C	EDITORIAL CHANGES	-	GLW	JES	CZH	9/18/2019	F						
B	DRAWING UPDATE	-	PEI	-	-	4/22/2019	E	EDITORIAL CHANGES	EDM	JIK	JES	CZH	3/5/2021
A	ORIGINAL ISSUE	-	-	PTA	CAK	1/1/1998	D	EDITORIAL CHANGES	-	JAC	GLW	CZH	7/14/2020

INSTALLATION: NONE

BILL OF MATERIALS: NONE

NOTES:

I. TERMINALS OR TERMINAL FITTINGS OF RISERS OR RUNS, PVC, AND GUYS CONTACTING METAL PINS ARE NOT PERMITTED WITHIN THE CLIMBING SPACE. (b)

II. CLIMBING SPACE SHALL BE MAINTAINED IN THE SAME POSITION FOR A DISTANCE OF 4 FEET VERTICAL BOTH ABOVE AND BELOW EACH CONDUCTOR LEVEL THROUGH WHICH IT PASSES AND MAY BE SHIFTED NOT MORE THAN ONE QUARTER OF THE DISTANCE AROUND THE POLE WHERE THE VERTICAL DISTANCE BETWEEN CONDUCTOR LEVELS IS 4 FEET OR MORE AND LESS THAN 8 FEET CLIMBING SPACE SHALL EXTEND UP TO A SINGLE LEVEL OF POLE-TOP CIRCUITRY BUT NOT THROUGH AND ABOVE SUCH LEVEL.

III. ELECTRIC SUPPLY AND COMMUNICATION ATTACHMENTS SHALL NOT INTERFERE WITH THE EFFECTIVE USE OF FALL-PROTECTION EQUIPMENT. (h)

REFERENCE:

(a) REFER TO OH220.
(b) REFER TO G.O. 95 RULE 54.7-A3.
(c) REFER TO G.O. 95 RULE 52.7D.
(d) REFER TO G.O. 95 RULE 22.8-B.
(e) REFER TO G.O. 95 RULE 22.8-A1.
(f) REFER TO G.O. 95 RULE 22.8-A3.
(g) REFER TO G.O. 95 RULE 54.7-B2.
(h) REFER TO G.O. 95 RULE 91.6.

TABLE OF CONTENTS

© 1998 - 2021 San Diego Gas & Electric Company. All rights reserved. Removal of this copyright notice without permission is not permitted under law.

REV	CHANGE	DR	BY	DSN	APV	DATE	REV	CHANGE	DR	BY	DSN	APV	DATE
C	EDITORIAL CHANGES	-	GLW	JES	CZH	9/18/2019	F						
B	DRAWING UPDATE	-	PEI	-	-	4/22/2019	E	EDITORIAL CHANGES	EDM	JIK	JES	CZH	3/5/2021
A	ORIGINAL ISSUE	-	-	PTA	CAK	1/1/1998	D	EDITORIAL CHANGES	-	JAC	GLW	CZH	7/14/2020

SCOPE: THIS STANDARD SHOWS AND EXPLAINS CLIMBING SPACE FOR HORIZONTAL INSULATOR CONSTRUCTION.

INSTALLATION: NONE

BILL OF MATERIALS: NONE

NOTES:

BONDED CIRCUITS - ANYWHERE ON POLE:

I. WORKMAN SHALL NOT GO ABOVE LOWEST CONDUCTOR LEVEL UNLESS:

a. CONDUCTORS ARE MOVED OUT FROM POLE BY ACCEPTED "HOTLINE" TECHNIQUES OR;

(b) ONE OR BOTH CIRCUITS ARE DE-ENERGIZED, BOND WIRES AND DE-ENERGIZED CIRCUIT ARE GROUNDED, AND CLIMBING SPACE IS PROVIDED AS SHOWN IN FIGURES 1 & 2.

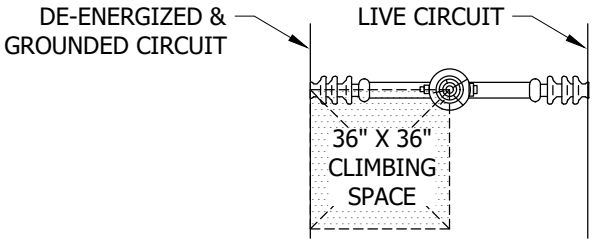

FIGURE 1 (Ib)
TWIN CIRCUITS
ONE CIRCUIT DE-ENERGIZED & GROUNDED

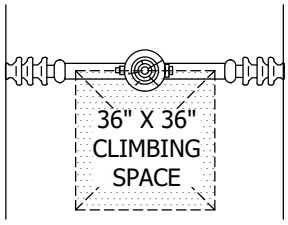

FIGURE 2 (Ib)
TWIN CIRCUITS
BOTH CIRCUITS DE-ENERGIZED & GROUNDED
OR SINGLE CIRCUIT

II. CLIMBING SPACE IS TO EXTEND FROM 4-FOOT BELOW LOWEST CONDUCTOR TO 4-FOOT ABOVE TOP CONDUCTOR IF NOT AT TOP OF POLE.

UNBONDED CIRCUITS - AT TOP OF POLE:

III. WORKMAN SHALL NOT GO ABOVE LOWEST CONDUCTOR OF CIRCUIT SUPPORTED AT TOP OF POLE UNLESS:

a. CONDUCTORS ARE MOVED OUT FROM POLE BY ACCEPTED "HOTLINE" TECHNIQUES OR;

(b) ONE OR BOTH CIRCUITS ARE DE-ENERGIZED, BOND WIRES AND DE-ENERGIZED CIRCUIT ARE GROUNDED, AND CLIMBING SPACE IS PROVIDED AS SHOWN IN FIGURES 3 & 4.

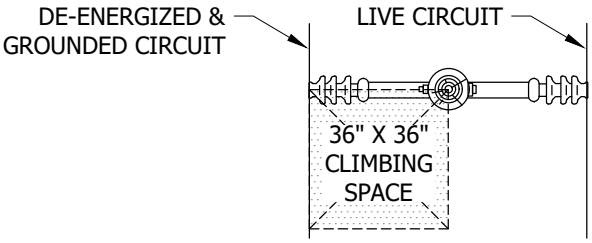

FIGURE 3 (IIIb)
TWIN CIRCUITS
ONE CIRCUIT DE-ENERGIZED & GROUNDED

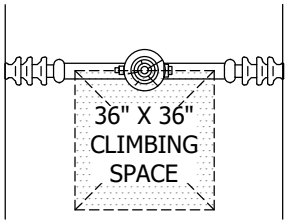

FIGURE 4 (IIIb)
FOR 750V-46KV EXCEPT FOR DEADENDS
TWIN CIRCUITS
BOTH CIRCUITS DE-ENERGIZED & GROUNDED
OR SINGLE CIRCUIT

IV. CLIMBING SPACE IS TO EXTEND FROM 4-FOOT BELOW LOWEST CONDUCTOR TO CONDUCTOR AT TOP OF POLE.

© 1998 - 2021 San Diego Gas & Electric Company. All rights reserved. Removal of this copyright notice without permission is not permitted under law.

REV	CHANGE	DR	BY	DSN	APV	DATE	REV	CHANGE	DR	BY	DSN	APV	DATE
C	EDITORIAL CHANGES	-	GLW	JES	CZH	9/18/2019	F						
B	DRAWING UPDATE	-	PEI	-	-	4/22/2019	E	EDITORIAL CHANGES	EDM	JIK	JES	CZH	3/5/2021
A	ORIGINAL ISSUE	-	-	PTA	CAK	1/1/1998	D	EDITORIAL CHANGES	-	JAC	GLW	CZH	7/14/2020

TABLE OF CONTENTS

NOTES (CONT'D):

UNBONDED CIRCUITS - BELOW POLE TOP:

V. CLIMBING SPACE IS TO EXTEND FROM 4-FOOT BELOW LOWEST CONDUCTOR TO 4-FOOT ABOVE THE TOP OF CONDUCTOR AND SHALL HAVE DIMENSIONS AS SHOWN IN FIGURE 5.

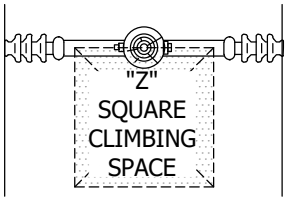

FIGURE 5

TABLE 1

UNBONDED CIRCUIT CLIMBING SPACES	
CONDUCTOR VOLTAGE (V)	**Z (IN)**
750-46K	36
46K-75K	48
OVER 75K	48+1/2 PER KV OVER 75KV

VI. TWO POST INSULATORS OR INSULATOR BRACKETS ATTACHED TO POLE WITH A COMMON BOLT OR BOLTS ARE CONSIDERED TO BE BONDED.

REFERENCE:

a. SEE G.O. 95 RULE 54.11 F.1-4 FOR CLIMBING SPACE REQUIREMENTS.

TABLE OF CONTENTS

© 1998 - 2021 San Diego Gas & Electric Company. All rights reserved. Removal of this copyright notice without permission is not permitted under law.

REV	CHANGE	DR	BY	DSN	APV	DATE	REV	CHANGE	DR	BY	DSN	APV	DATE
C	EDITORIAL CHANGES	-	GLW	JES	CZH	9/18/2019	F						
B	DRAWING UPDATE	-	PEI	-	-	4/22/2019	E	EDITORIAL CHANGES	EDM	JIK	JES	CZH	3/5/2021
A	ORIGINAL ISSUE	-	-	PTA	CAK	1/1/1998	D	EDITORIAL CHANGES	-	JAC	GLW	CZH	7/14/2020

SCOPE: THIS STANDARD SHOWS CLIMBING AND WORKING SPACE FOR VARIOUS ARM CONSTRUCTION.

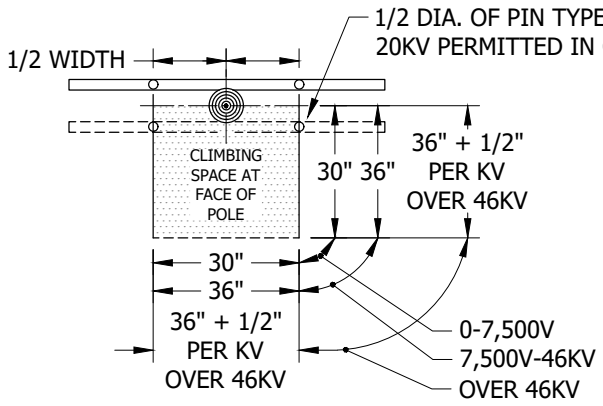

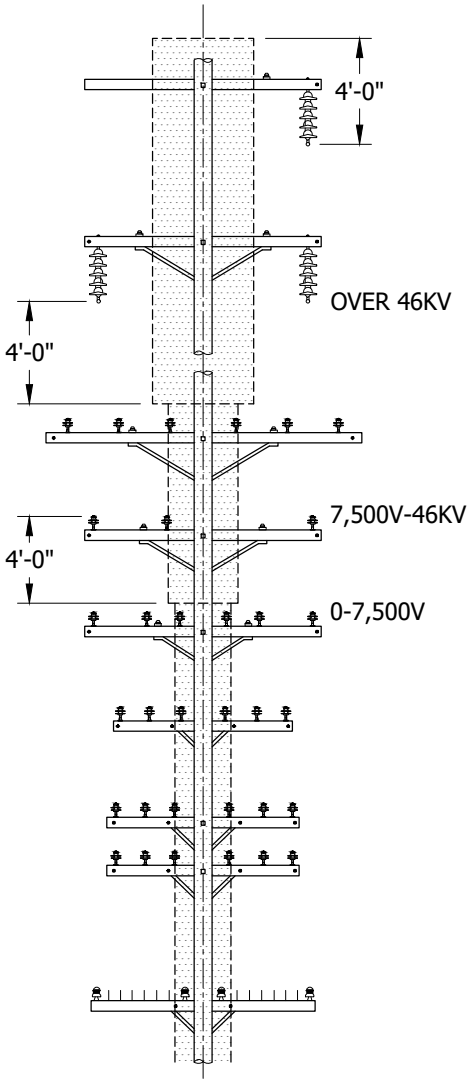

FIGURE 1
LINE ARMS ONLY

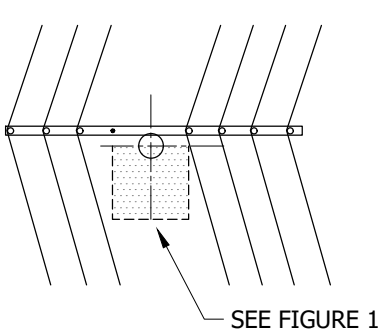

CONFIGURATION 1
SINGLE ARM

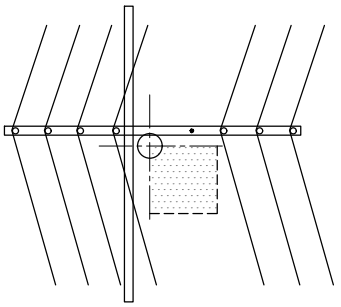

CONFIGURATION 2
SINGLE ARM

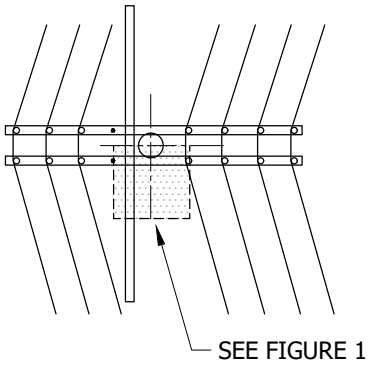

CONFIGURATION 3 (a)
DOUBLE ARM
CLIMBING SPACE AT FACE OF POLE WITH LINE ARMS ONLY

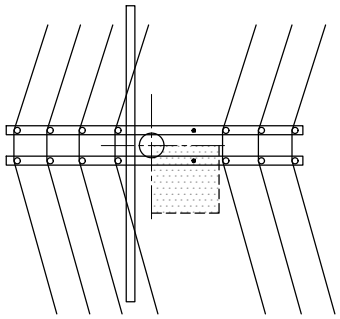

CONFIGURATION 4
DOUBLE ARM
CLIMBING SPACE IN QUADRANT WITH BUCK ARM CONSTRUCTION
(SEE SHEET 8 FOR DETAILS)

FIGURE 2
CLIMBING SPACE IN ANGLE CONSTRUCTION

TABLE OF CONTENTS

© 1998 - 2021 San Diego Gas & Electric Company. All rights reserved. Removal of this copyright notice without permission is not permitted under law.

REV	CHANGE	DR	BY	DSN	APV	DATE	REV	CHANGE	DR	BY	DSN	APV	DATE
C	EDITORIAL CHANGES	-	GLW	JES	CZH	9/18/2019	F						
B	DRAWING UPDATE	-	PEI	-	-	4/22/2019	E	EDITORIAL CHANGES	EDM	JIK	JES	CZH	3/5/2021
A	ORIGINAL ISSUE	-	-	PTA	CAK	1/1/1998	D	EDITORIAL CHANGES	-	JAC	GLW	CZH	7/14/2020

X Indicates Latest Revision | Completely Revised | New Page | Information Removed

SDG&E ELECTRIC OVERHEAD CONSTRUCTION STANDARDS

SHEET 6 OF 16

CLIMBING AND WORKING SPACE

OH251.6

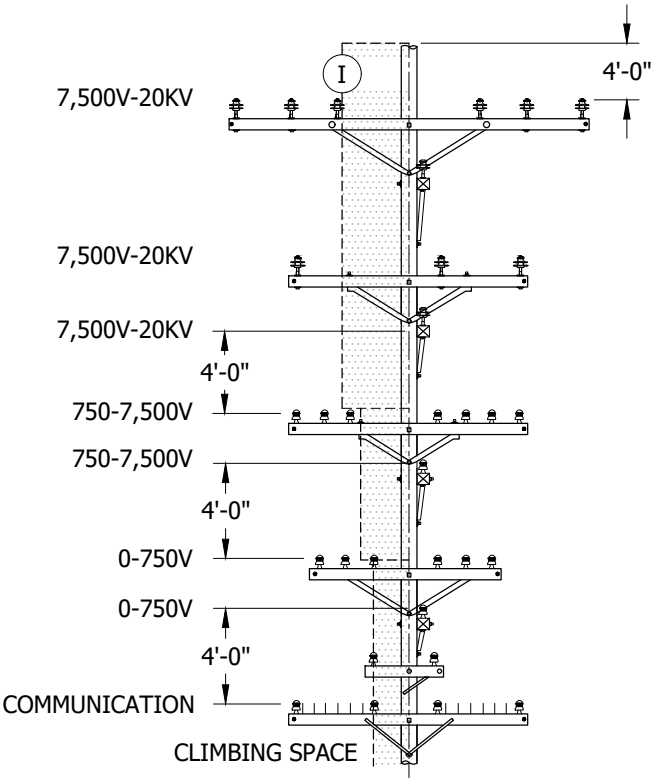

FIGURE 3 (b)
LINE ARM AND RELATED BUCK ARM

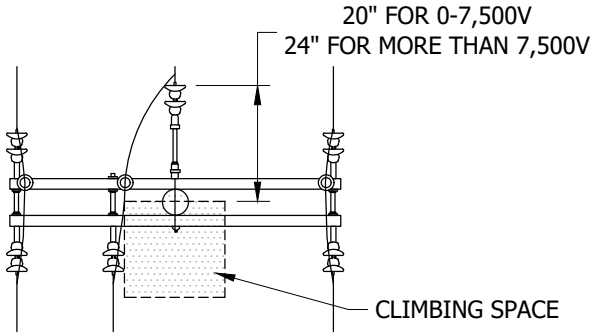

FIGURE 4
CLIMBING SPACE AT FACE OF POLE

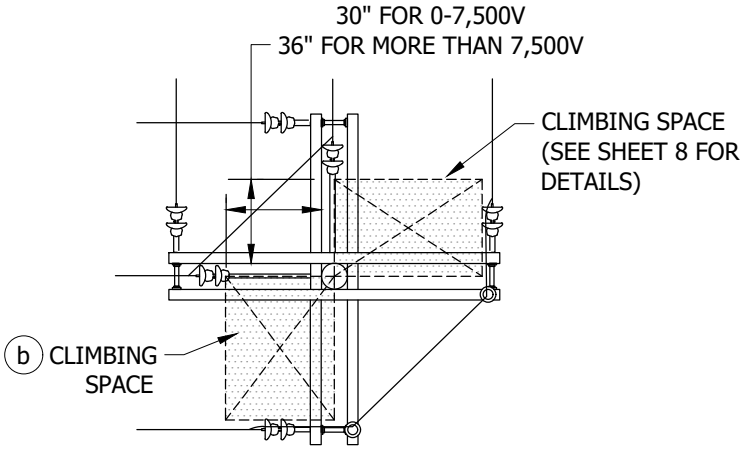

FIGURE 5 (II)
CLIMBING SPACE IN A QUADRANT WITH BUCK ARMS
DEADENDING IN HORIZONTAL CONFIGURATION

INSTALLATION: NONE

BILL OF MATERIALS: NONE

NOTES:

(I) WITH LINE ARM AND RELATED BUCK ARM CONSTRUCTION PER G.O. 95 RULE 54.7A2, WHERE CIRCUITRY IS IN HORIZONTAL CONFIGURATION AT THE TOP OF THE POLE, CLIMBING SPACE HAS TO BE PROVIDED ONLY UP TO AND NOT THROUGH THE TOP LEVEL. (c)

(II) HALF THE DIAMETER OF 0-750V DEADEND INSULATORS IS PERMITTED IN THE CLIMBING SPACE.

REFERENCE:

(a) SEE OH433 FOR DETAILS.

(b) SEE OH254 FOR DETAILS.

(c) REFER TO G.O. 95 RULE 54.7A2.

© 1998 - 2021 San Diego Gas & Electric Company. All rights reserved. Removal of this copyright notice without permission is not permitted under law.

REV	CHANGE	DR	BY	DSN	APV	DATE	REV	CHANGE	DR	BY	DSN	APV	DATE
C	EDITORIAL CHANGES	-	GLW	JES	CZH	9/18/2019	F						
B	DRAWING UPDATE	-	PEI	-	-	4/22/2019	E	EDITORIAL CHANGES	EDM	JIK	JES	CZH	3/5/2021
A	ORIGINAL ISSUE	-	-	PTA	CAK	1/1/1998	D	EDITORIAL CHANGES	-	JAC	GLW	CZH	7/14/2020

X Indicates Latest Revision | Completely Revised | New Page | Information Removed

SDG&E ELECTRIC OVERHEAD CONSTRUCTION STANDARDS

SHEET 7 OF 16

CLIMBING AND WORKING SPACE

OH251.7

TABLE OF CONTENTS

SCOPE: THIS STANDARD SHOWS CLIMBING SPACE FOR BUCK ARM CONSTRUCTION.

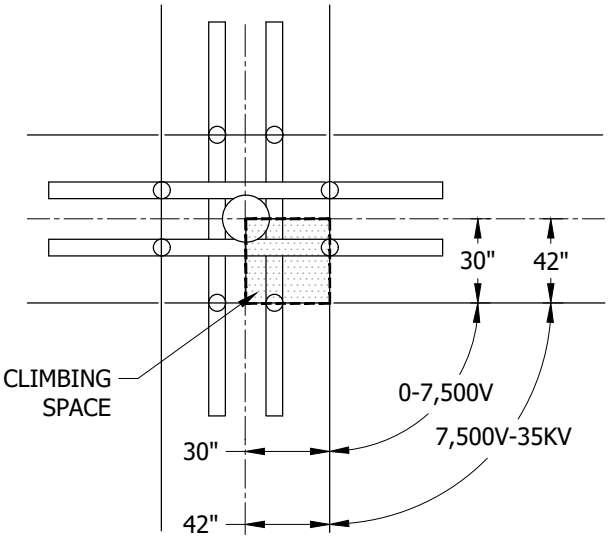

FIGURE 1

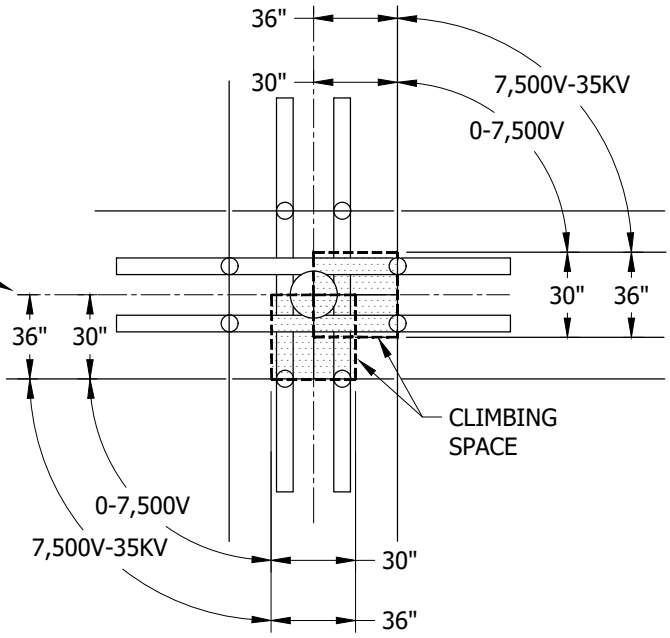

FIGURE 2

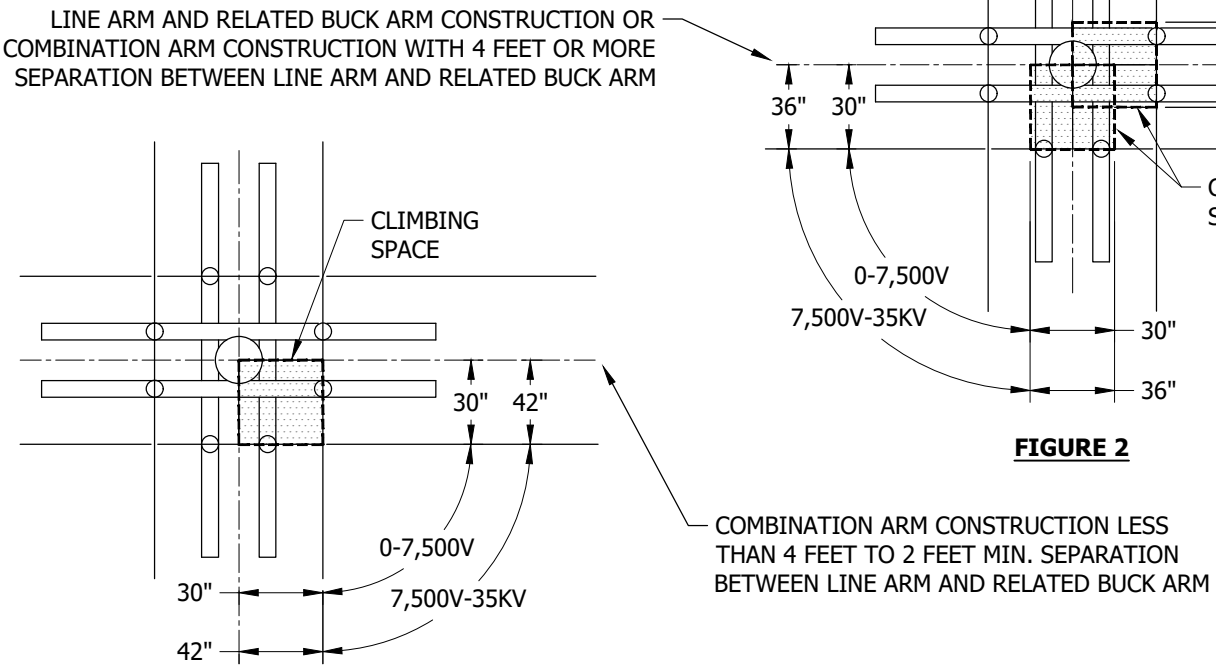

FIGURE 3

INSTALLATION: NONE

BILL OF MATERIALS: NONE

NOTES: NONE

REFERENCE: NONE

© 1998 - 2021 San Diego Gas & Electric Company. All rights reserved. Removal of this copyright notice without permission is not permitted under law.

REV	CHANGE	DR	BY	DSN	APV	DATE	REV	CHANGE	DR	BY	DSN	APV	DATE
C	EDITORIAL CHANGES	-	GLW	JES	CZH	9/18/2019	F						
B	DRAWING UPDATE	-	PEI	-	-	4/22/2019	E	EDITORIAL CHANGES	EDM	JIK	JES	CZH	3/5/2021
A	ORIGINAL ISSUE	-	-	PTA	CAK	1/1/1998	D	EDITORIAL CHANGES	-	JAC	GLW	CZH	7/14/2020

X Indicates Latest Revision | Completely Revised | New Page | Information Removed

TABLE OF CONTENTS

SCOPE: THIS STANDARD SHOWS THE CLIMBING SPACES AS THEY RELATE TO DEADENDING IN VERTICAL CONFIGURATION-750V AND ABOVE.

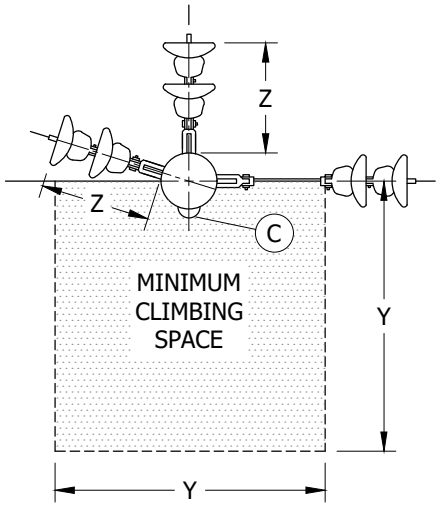

FIGURE 1

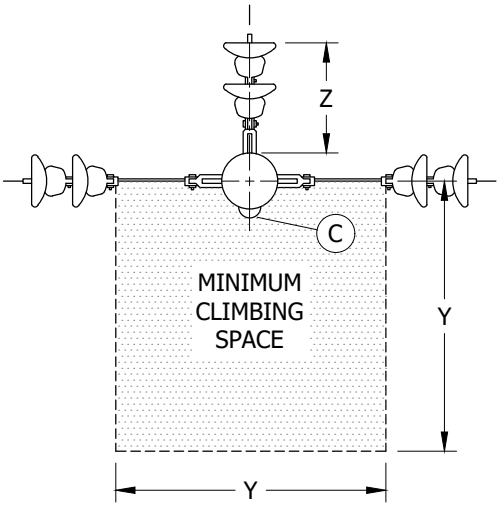

FIGURE 2

TABLE 1

DEADEND VERTICAL CONFIGURATION CLIMBING SPACE		
CONDUCTOR VOLTAGE (V)	**Z (IN)**	**Y (IN)**
750 - 7,500	15	30
7,500 - 46,000	18	36
OVER 46,000	18	36 + 1/2 PER KV OVER 46KV

INSTALLATION: NONE

BILL OF MATERIALS: NONE

NOTES: NONE

REFERENCE:

a. WHEN CONDUCTORS ARE DEADENDED IN VERTICAL CONFIGURATION, THE ENERGIZED PORTION OF THE CONDUCTORS SHALL HAVE CLEARANCES OF NOT LESS THAN 15 INCHES FROM THE POLE SURFACE FOR VOLTAGES BETWEEN 750V AND 7,500V AND 18 INCHES FROM SURFACE OF POLE FOR VOLTAGES IN EXCESS OF 7,500V. SEE G.O. 95 RULE 54.4 - D6b.

b. NOT MORE THAN TWO CONDUCTORS OF A CIRCUIT OF 750-7,500V SHALL BE ATTACHED DIRECTLY TO A POLE IN VERTICAL CONFIGURATION WITHOUT THE USE OF X-ARMS. SEE G.O.95 RULE 54.4 - C4B.

(C) BOLT COVER REQUIRED WHEN MACHINE BOLT SUPPORTING AN ENERGIZED CONDUCTOR PROJECTS INTO CLIMBING SPACE UNLESS CIRCUIT IS LOCATED AT TOP LEVEL OF POLE AND GREATER THAN 7,500V. SEE G.O. 95 RULE 54.7 A.

© 1998 - 2021 San Diego Gas & Electric Company. All rights reserved. Removal of this copyright notice without permission is not permitted under law.

REV	CHANGE	DR	BY	DSN	APV	DATE	REV	CHANGE	DR	BY	DSN	APV	DATE
C	EDITORIAL CHANGES	-	GLW	JES	CZH	9/18/2019	F						
B	DRAWING UPDATE	-	PEI	-	-	4/22/2019	E	EDITORIAL CHANGES	EDM	JIK	JES	CZH	3/5/2021
A	ORIGINAL ISSUE	-	-	PTA	CAK	1/1/1998	D	EDITORIAL CHANGES	-	JAC	GLW	CZH	7/14/2020

TABLE OF CONTENTS

SCOPE: THIS STANDARD SHOWS THE CLIMBING SPACES FOR DIFFERENT AERIAL CABLE CONSTRUCTION AND APPLIES TO NEW OR EXISTING 0-750V AERIAL CABLE CONSTRUCTION.

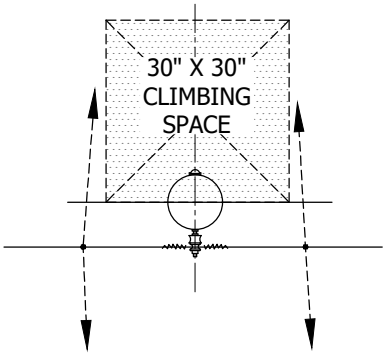

FIGURE 1
TANGENT

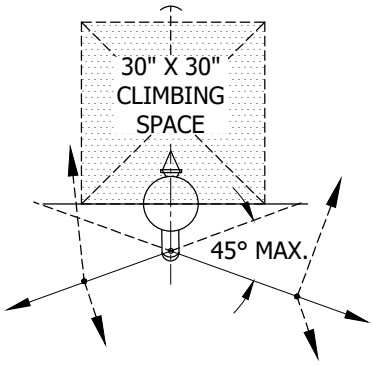

FIGURE 2
ANGLE

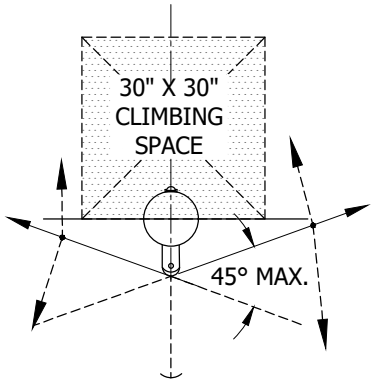

FIGURE 3
ANGLE

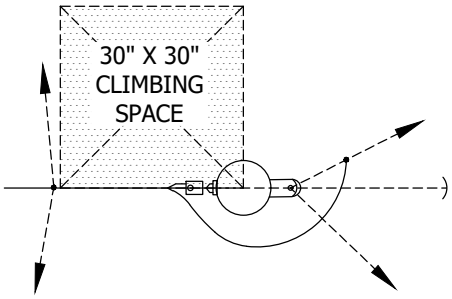

FIGURE 4
ONE-WAY DEADEND

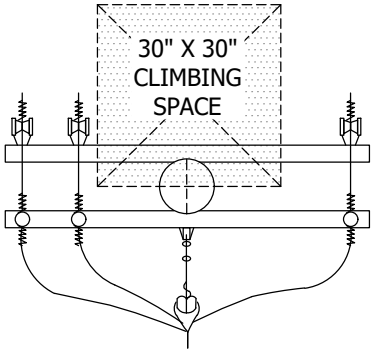

FIGURE 5
OPEN WIRE TO CABLE

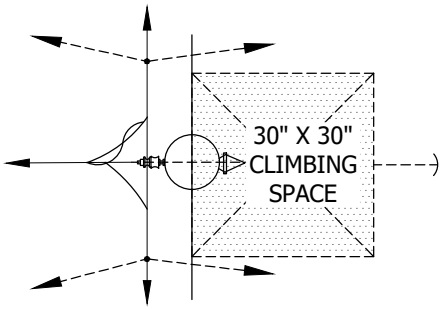

FIGURE 6
THREE-WAY CORNER

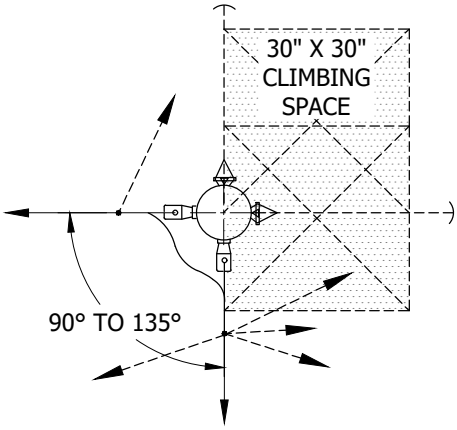

FIGURE 7
TWO-WAY DEADEND

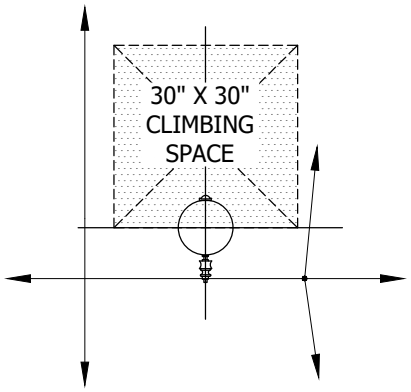

FIGURE 8
FOUR-WAY CORNER

TABLE OF CONTENTS

© 1998 - 2021 San Diego Gas & Electric Company. All rights reserved. Removal of this copyright notice without permission is not permitted under law.

REV	CHANGE	DR	BY	DSN	APV	DATE	REV	CHANGE	DR	BY	DSN	APV	DATE
C	EDITORIAL CHANGES	-	GLW	JES	CZH	9/18/2019	F						
B	DRAWING UPDATE	-	PEI	-	-	4/22/2019	E	EDITORIAL CHANGES	EDM	JIK	JES	CZH	3/5/2021
A	ORIGINAL ISSUE	-	-	PTA	CAK	1/1/1998	D	EDITORIAL CHANGES	-	JAC	GLW	CZH	7/14/2020

INSTALLATION: NONE

BILL OF MATERIALS: NONE

NOTES: NONE

REFERENCE:

a. 6-FOOT MINIMUM CLEARANCE REQUIRED BETWEEN BARE NEUTRAL MULTICONDUCTOR CABLE AND NEXT UNPROTECTED CONDUCTOR LEVEL ABOVE OR BELOW. SEE G.O. 95 RULE 54.10 -E.CONDUCTORS OF 0-750V ATTACHED AT MORE THAN 15 INCHES FROM THE CENTERLINE OF POLE MAY BE REDUCED TO NOT LESS THAN 4 FEET BELOW THE BARE NEUTRAL MULTI-CONDUCTOR CABLE AND NO GUARD ARM IS REQUIRED. SEE G.O. 95 RULE 54.10 - E2.

b. ONLY ONE OF THE FOLLOWING IS PERMITTED IN ANY 4-FOOT VERTICAL SECTION IN THE CLIMBING SPACE OF CABLE SECONDARY CONSTRUCTION (SEE G.O. 95 RULE 54.10F3.):

   1. SUITABLY PROTECTED VERTICAL RUN OR RISER.
   2. 2 GUYS.
   3. SUITABLY PROTECTED GROUND WIRE.

c. TERMINALS OR TERMINAL FITTINGS OF RISERS OR RUNS AND PVC CONDUITS ARE NOT ALLOWED IN THE CLIMBING SPACES. SEE G.O. 95 RULE 54.10 F3, 22.2.

d. SEE OH SECTION 600 FOR SECONDARIES AND SERVICES CONSTRUCTION DETAILS.

TABLE OF CONTENTS

© 1998 - 2021 San Diego Gas & Electric Company. All rights reserved. Removal of this copyright notice without permission is not permitted under law.

REV	CHANGE	DR	BY	DSN	APV	DATE	REV	CHANGE	DR	BY	DSN	APV	DATE
C	EDITORIAL CHANGES	-	GLW	JES	CZH	9/18/2019	F						
B	DRAWING UPDATE	-	PEI	-	-	4/22/2019	E	EDITORIAL CHANGES	EDM	JIK	JES	CZH	3/5/2021
A	ORIGINAL ISSUE	-	-	PTA	CAK	1/1/1998	D	EDITORIAL CHANGES	-	JAC	GLW	CZH	7/14/2020

SCOPE: THIS STANDARD SHOWS THE CLIMBING SPACES FOR DIFFERENT SECONDARY RACK CONSTRUCTION AND APPLIES TO THE REWORK AND REARRANGEMENT OF EXISTING LOW VOLTAGE RACK CONSTRUCTION.

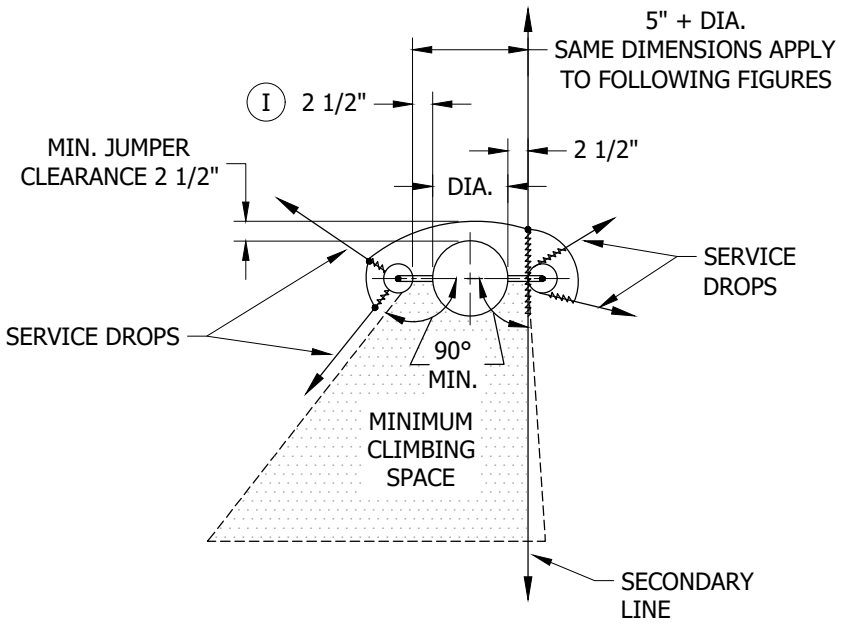

FIGURE 1
TANGENT CONSTRUCTION

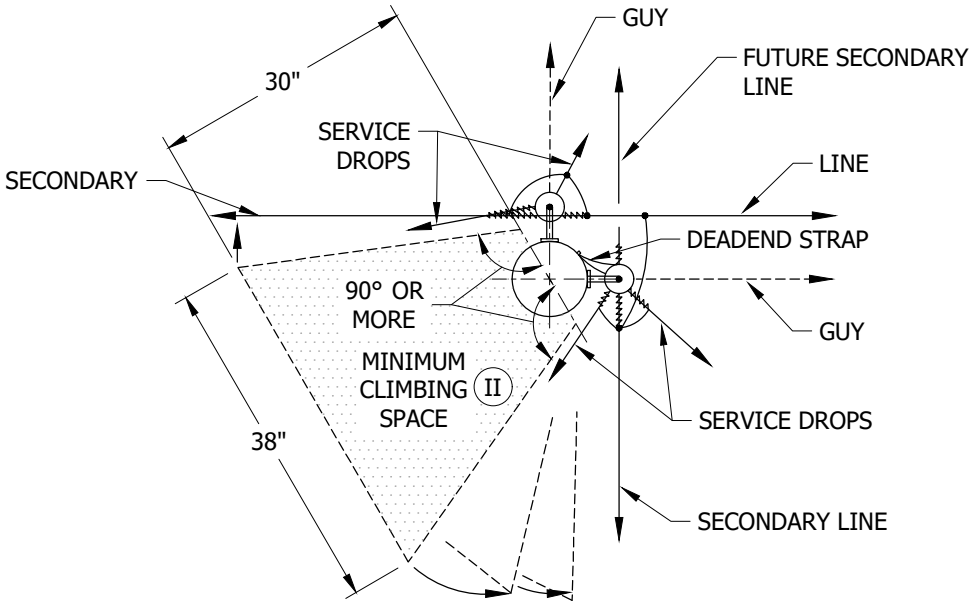

FIGURE 2
TEE TAP (OR 4-WAY) CONSTRUCTION

© 1998 - 2021 San Diego Gas & Electric Company. All rights reserved. Removal of this copyright notice without permission is not permitted under law.

REV	CHANGE	DR	BY	DSN	APV	DATE	REV	CHANGE	DR	BY	DSN	APV	DATE
C	EDITORIAL CHANGES	-	GLW	JES	CZH	9/18/2019	F						
B	DRAWING UPDATE	-	PEI	-	-	4/22/2019	E	EDITORIAL CHANGES	EDM	JIK	JES	CZH	3/5/2021
A	ORIGINAL ISSUE	-	-	PTA	CAK	1/1/1998	D	EDITORIAL CHANGES	-	JAC	GLW	CZH	7/14/2020

X Indicates Latest Revision | Completely Revised | New Page | Information Removed

SDG&E ELECTRIC OVERHEAD CONSTRUCTION STANDARDS

SHEET 12 OF 16

CLIMBING AND WORKING SPACE

OH251.12

TABLE OF CONTENTS

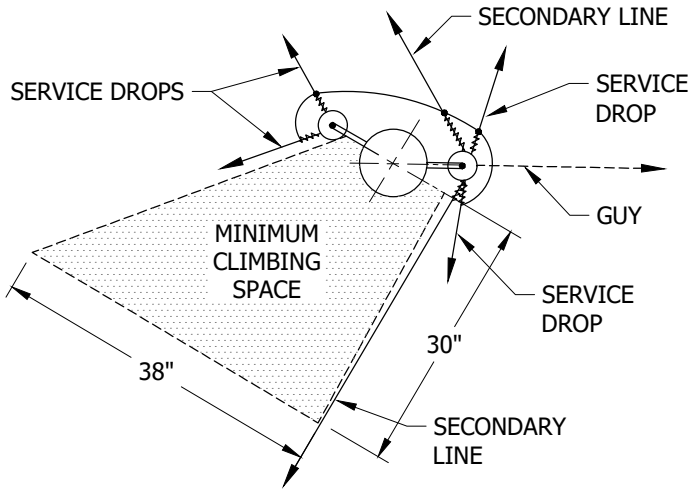

FIGURE 3
POLE ON INSIDE OF TURN

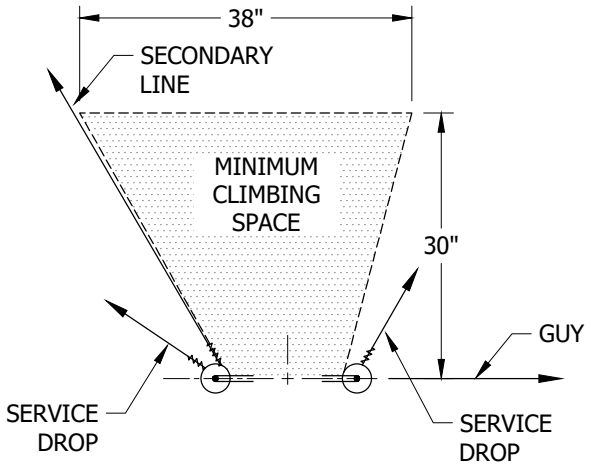

FIGURE 4
POLE ON OUTSIDE OF TURN

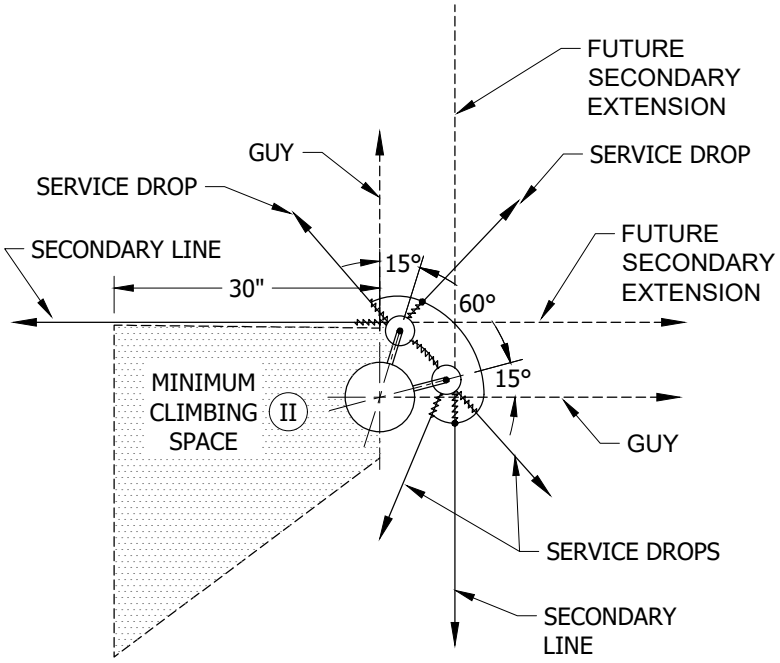

FIGURE 5
POLE ON INSIDE OF TURN

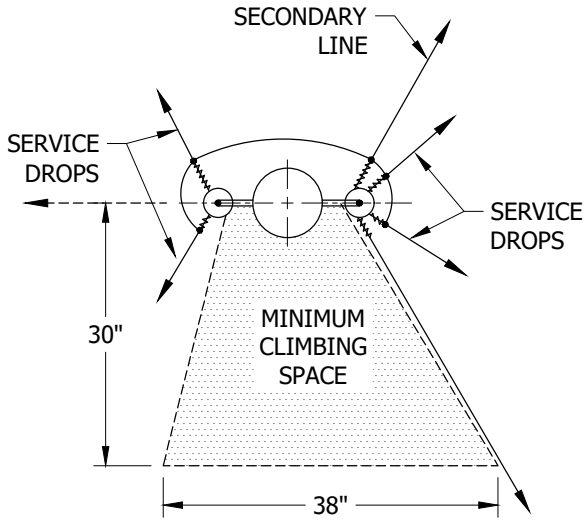

FIGURE 6
POLE ON OUTSIDE OF TURN

TABLE OF CONTENTS

© 1998 - 2021 San Diego Gas & Electric Company. All rights reserved. Removal of this copyright notice without permission is not permitted under law.

REV	CHANGE	DR	BY	DSN	APV	DATE	REV	CHANGE	DR	BY	DSN	APV	DATE
C	EDITORIAL CHANGES	-	GLW	JES	CZH	9/18/2019	F						
B	DRAWING UPDATE	-	PEI	-	-	4/22/2019	E	EDITORIAL CHANGES	EDM	JIK	JES	CZH	3/5/2021
A	ORIGINAL ISSUE	-	-	PTA	CAK	1/1/1998	D	EDITORIAL CHANGES	-	JAC	GLW	CZH	7/14/2020

X Indicates Latest Revision | Completely Revised | New Page | Information Removed

SDG&E ELECTRIC OVERHEAD CONSTRUCTION STANDARDS

SHEET 13 OF 16

CLIMBING AND WORKING SPACE

OH251.13

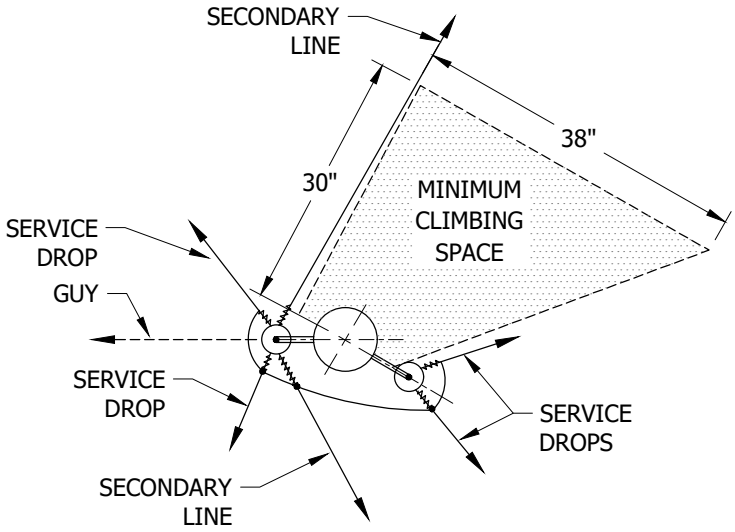

FIGURE 7
POLE ON OUTSIDE OF TURN

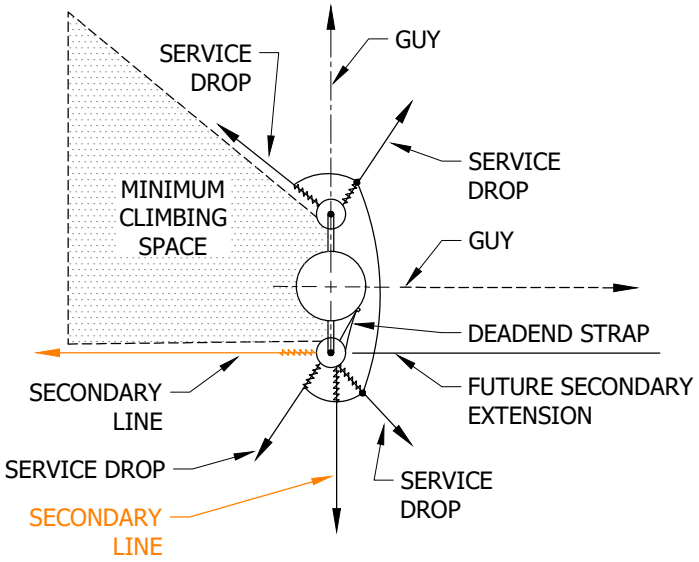

FIGURE 8
POLE ON OUTSIDE OF TURN
CORNER CONSTRUCTION

INSTALLATION: NONE

BILL OF MATERIALS: NONE

NOTES:

(I) MINIMUM CONDUCTOR CLEARANCE FROM SURFACE OF POLE (EXCLUDING TIE WIRES).

(II) CLIMBING SPACE IN QUADRANT MAY BE TURNED TO ACCOMMODATE INSTALLATION TO SERVICE DROPS.

REFERENCE:

a. 6-FOOT MINIMUM CLEARANCE SHALL BE MAINTAINED BETWEEN THE TOP SECONDARY RACK CONDUCTOR AND THE NEXT CONDUCTOR LEVEL ABOVE. A 6-FOOT MINIMUM VERTICAL CLEARANCE SHALL BE MAINTAINED BETWEEN THE BOTTOM SECONDARY RACK CONDUCTOR AND COMMUNICATIONS CABLE BELOW. SEE G.O. 95 RULE 54.9 E.

1. THESE VERTICAL CLEARANCES MAY BE REDUCED TO NOT LESS THAN 4 FEET BY INSTALLATION OF GUARD ARMS. WHERE GUARD ARMS ARE USED BELOW 750V-22.5KV CIRCUITS, NO MORE THAN ONE SECONDARY RACK SHALL BE ATTACHED TO A POLE. SEE G.O. 95 RULE 54.9 E1.

b. CLIMBING SPACE SHALL BE MAINTAINED FOR A VERTICAL DISTANCE OF 4 FEET ABOVE TOP SECONDARY CONDUCTOR, AND NOT LESS THAN 4 FEET BELOW THE BOTTOM SECONDARY CONDUCTOR AND RELATED TO CLIMBING SPACE OF OTHER CONDUCTORS AND/OR CABLES ABOVE OR BELOW. SEE G.O. 95 RULE 54.10 F.

c. NO OBSTRUCTIONS OTHER THAN ONE-HALF THE DIAMETER OF INSULATORS AND RACK ARE PERMITTED IN THE CLIMBING SPACE. SEE G.O. 95 RULE 54.7 A AND 54.9 F.

TABLE OF CONTENTS

© 1998 - 2021 San Diego Gas & Electric Company. All rights reserved. Removal of this copyright notice without permission is not permitted under law.

REV	CHANGE	DR	BY	DSN	APV	DATE	REV	CHANGE	DR	BY	DSN	APV	DATE
C	EDITORIAL CHANGES	-	GLW	JES	CZH	9/18/2019	F						
B	DRAWING UPDATE	-	PEI	-	-	4/22/2019	E	EDITORIAL CHANGES	EDM	JIK	JES	CZH	3/5/2021
A	ORIGINAL ISSUE	-	-	PTA	CAK	1/1/1998	D	EDITORIAL CHANGES	-	JAC	GLW	CZH	7/14/2020

SCOPE: THIS STANDARD SHOWS CLIMBING SPACE ON POLES WITH TRANSFORMERS OR SIMILAR APPARATUS USING 0-750V AERIAL CABLE.

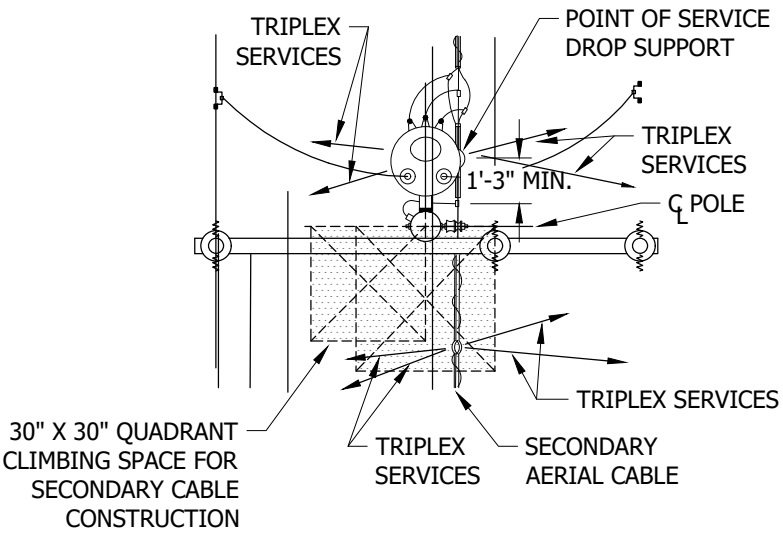

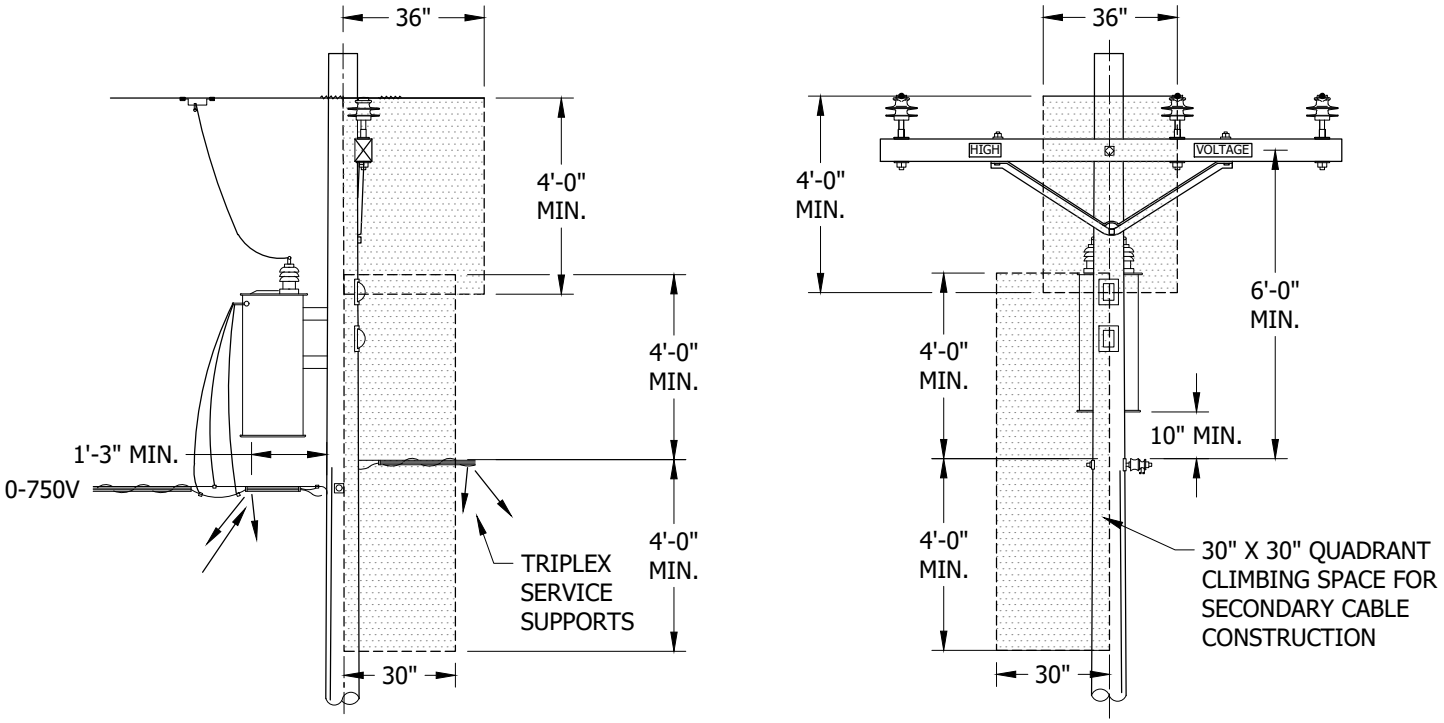

FIGURE 1

© 1998 - 2021 San Diego Gas & Electric Company. All rights reserved. Removal of this copyright notice without permission is not permitted under law.

REV	CHANGE	DR	BY	DSN	APV	DATE	REV	CHANGE	DR	BY	DSN	APV	DATE
C	EDITORIAL CHANGES	-	GLW	JES	CZH	9/18/2019	F						
B	DRAWING UPDATE	-	PEI	-	-	4/22/2019	E	EDITORIAL CHANGES	EDM	JIK	JES	CZH	3/5/2021
A	ORIGINAL ISSUE	-	-	PTA	CAK	1/1/1998	D	EDITORIAL CHANGES	-	JAC	GLW	CZH	7/14/2020

X Indicates Latest Revision | Completely Revised | New Page | Information Removed

SDG&E ELECTRIC OVERHEAD CONSTRUCTION STANDARDS

SHEET 15 OF 16

CLIMBING AND WORKING SPACE

OH251.15

TABLE OF CONTENTS

INSTALLATION: NONE

BILL OF MATERIALS: NONE

NOTES:

I. ONLY ONE OF THE FOLLOWING IS PERMITTED IN ANY 4-FOOT VERTICAL SECTION OF CABLED SECONDARY CLIMBING SPACE: (a)

a. 2 GUYS

b. A SUITABLY PROTECTED VERTICAL RISER OR RUN

c. A SUITABLY PROTECTED GROUND WIRE

REFERENCE:

(a) SEE G.O. 95 RULE 54.10, 54.10-F3.

b. SEE TRANSFORMERS, BOOSTERS, REGULATORS, SERVICE RESTORERS AND CAPACITORS STANDARDS FOR CONSTRUCTION DETAILS OF THESE STATIONS.

TABLE OF CONTENTS

© 1998 - 2021 San Diego Gas & Electric Company. All rights reserved. Removal of this copyright notice without permission is not permitted under law.

REV	CHANGE	DR	BY	DSN	APV	DATE	REV	CHANGE	DR	BY	DSN	APV	DATE
C	EDITORIAL CHANGES	-	GLW	JES	CZH	9/18/2019	F						
B	DRAWING UPDATE	-	PEI	-	-	4/22/2019	E	EDITORIAL CHANGES	EDM	JIK	JES	CZH	3/5/2021
A	ORIGINAL ISSUE	-	-	PTA	CAK	1/1/1998	D	EDITORIAL CHANGES	-	JAC	GLW	CZH	7/14/2020

X Indicates Latest Revision | Completely Revised | New Page | Information Removed

SDG&E ELECTRIC OVERHEAD CONSTRUCTION STANDARDS

SHEET 16 OF 16

CLIMBING AND WORKING SPACE

OH251.16

SCOPE: THIS STANDARD SHOWS MINIMUM CLEARANCES OF SUPPLY SERVICE DROPS OVER THOROUGHFARES, FROM BUILDINGS, AT POINTS OF ATTACHMENTS TO BUILDINGS, AND THE METHOD OF ATTACHMENT.

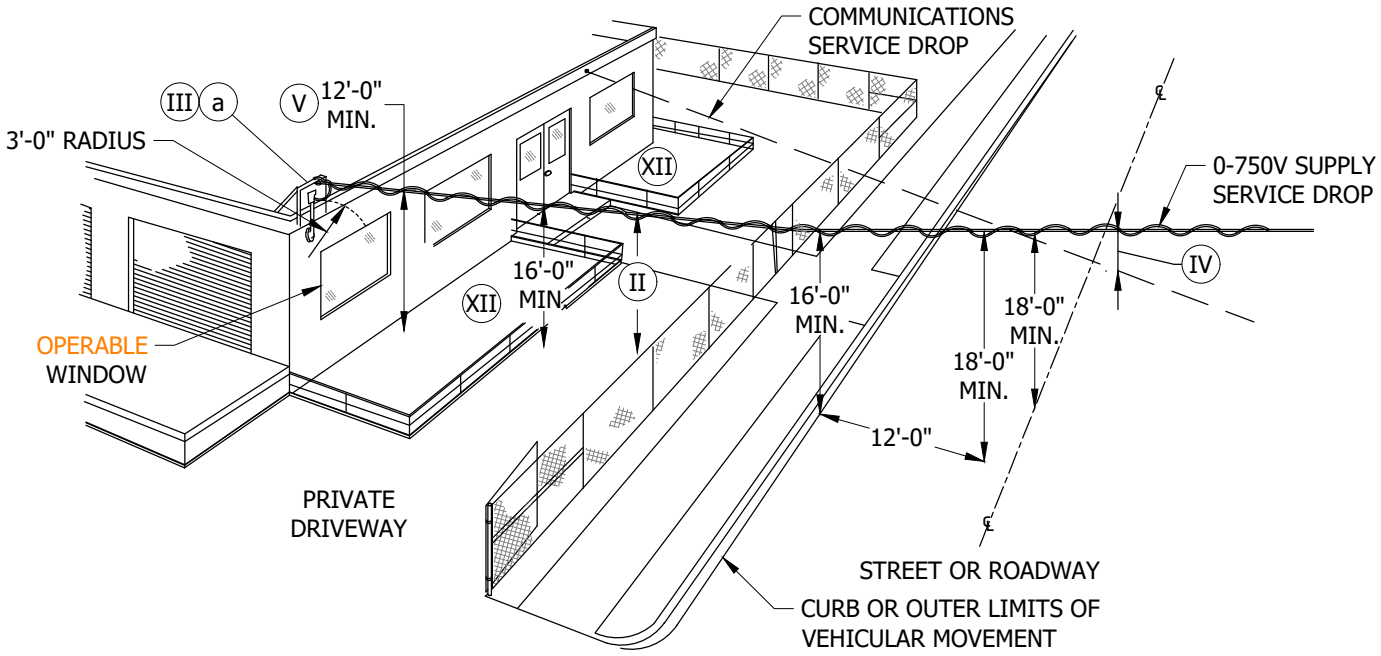

FIGURE 1
INDUSTRIAL OR COMMERCIAL

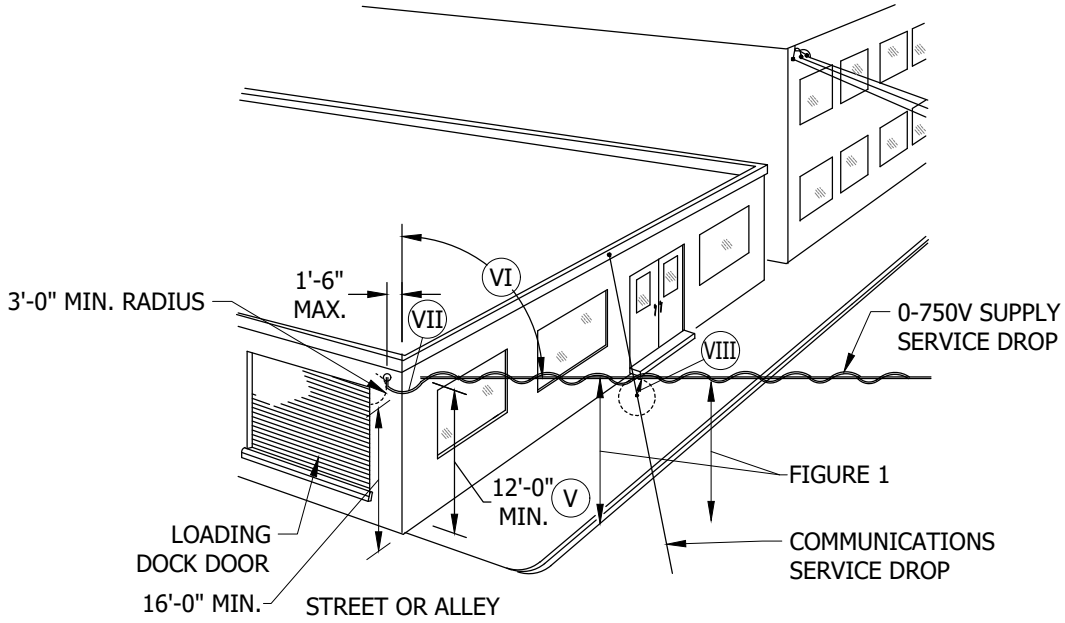

FIGURE 2
INDUSTRIAL OR COMMERCIAL IX

© 1998 - 2021 San Diego Gas & Electric Company. All rights reserved. Removal of this copyright notice without permission is not permitted under law.

REV	CHANGE	DR	BY	DSN	APV	DATE	REV	CHANGE	DR	BY	DSN	APV	DATE
C	UPDATED TITLEBLOCK	-	PS	IL	MDJ	05/18/2016	F						
B	UPDATED TITLEBLOCK	-	PS	IL	MDJ	05/10/2016	E	EDITORIAL CHANGES	EDM	GLW	JES	CZH	12/12/2021
A	ORIGINAL ISSUE	-	-	PTA	RDJ	02/25/1974	D	EDITORIAL CHANGES	-	JIK	JES	CZH	02/10/2020

X Indicates Latest Revision | Completely Revised | New Page | Information Removed

SDG&E ELECTRIC OVERHEAD CONSTRUCTION STANDARDS

CLEARANCE OF SUPPLY SERVICE DROPS OVER THROUGHFARES,ETC., AT POINT OF ATTACHMENT TO BUILDINGS

OH262.1

TABLE OF CONTENTS

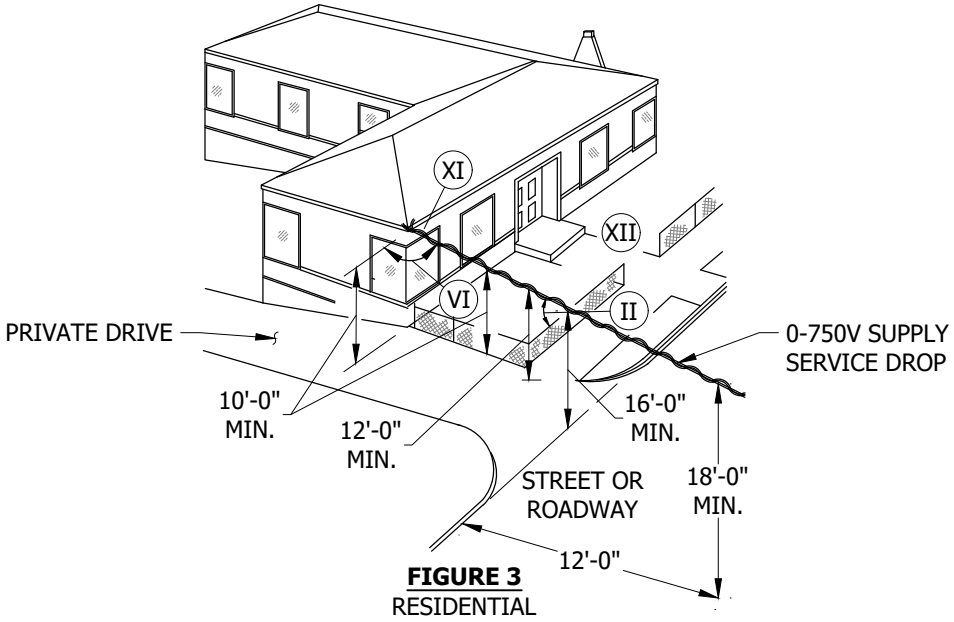

FIGURE 3
RESIDENTIAL

INSTALLATION: NONE

BILL OF MATERIALS: NONE

NOTES:

I. SURFACES NOT ENGINEERED, CONSTRUCTED, AND NOT NORMALLY INTENDED TO SUPPORT HUMANS, SUCH AS - BUT NOT LIMITED TO, HANDRAILS, FENCES, WALLS, PARAPET WALLS, CORNICES, ALUMINUM OR LATH PATIO COVERS AND DECORATIVE APPENDAGES, ARE CONSIDERED NON-WALKABLE. HOWEVER, SUCH SURFACE WHEN USED FOR DUAL PURPOSE AS IN THE CASE OF A WIDE SURFACE USED AS A PLATFORM TO WORK ON LIGHTS, SIGNS, ETC., MUST BE CONSIDERED A WALKABLE SURFACE. ALL CLEARANCES OF THIS TYPE MUST BE MEASURED FROM THE WALKABLE SURFACE.

(II) **TABLE 1**

SERVICE DROP CLEARANCE REQUIREMENTS	
SURFACE TYPE	**DISTANCE (FT)**
NON-WALKABLE	2
WALKABLE	8

(III) LOCATION OF WEATHERHEAD AND POINT OF SERVICE ATTACHMENT MUST BE BACK OF BUILDING FACE INCLUDING EAVES, CORNICES AND OTHER PROJECTIONS.

(IV) 24-INCH MINIMUM RADIALLY WHERE MORE THAN 15 FEET FROM POINT OF ATTACHMENT OF EITHER SERVICE.

(V) CLEARANCE MAY BE REDUCED FOR INSULATED SERVICES (SSC) TO NOT LESS THAT 10 FEET. CLEARANCE IS MEASURED FROM THE LOWEST POINT, WHICH INCLUDES THE DRIP LOOP, TO FINISH GRADE.

(VI) HORIZONTAL ANGLE SERVICE MAKES WITH BUILDING MUST NOT BE LESS THAN 30 DEGREES.

(VII) OPEN WIRE RUNS TO SERVICES NOT TO EXCEED 3 FEET.

(VIII) 12 INCHES MINIMUM RADIALLY WHERE 15 FEET OR LESS FROM POINT OF ATTACHMENT OF EITHER SERVICE.

(IX) ALL SERVICES SHALL TERMINATE AT ONE LOCATION ON THE BUILDING.

(XI) 12 INCHES MINIMUM RADIAL CLEAR ABOVE WINDOWS ETC.

(XII) AREA ACCESSIBLE TO PEDESTRIANS ONLY.

REFERENCE:

(a) EXCEPTION PERMITTED ON 0-300V SERVICES, SEE PAGE 3.

© 1998 - 2021 San Diego Gas & Electric Company. All rights reserved. Removal of this copyright notice without permission is not permitted under law.

REV	CHANGE	DR	BY	DSN	APV	DATE	REV	CHANGE	DR	BY	DSN	APV	DATE
C	UPDATED TITLEBLOCK	-	PS	IL	MDJ	05/18/2016	F						
B	UPDATED TITLEBLOCK	-	PS	IL	MDJ	05/10/2016	E	EDITORIAL CHANGES	EDM	GLW	JES	CZH	12/12/2021
A	ORIGINAL ISSUE	-	-	PTA	RDJ	02/25/1974	D	EDITORIAL CHANGES	-	JIK	JES	CZH	02/10/2020

TABLE OF CONTENTS

SCOPE: THIS STANDARD SHOWS AND EXPLAINS CLEARANCE FROM SUPPLY SERVICE DROPS 0-750V FROM BUILDING.

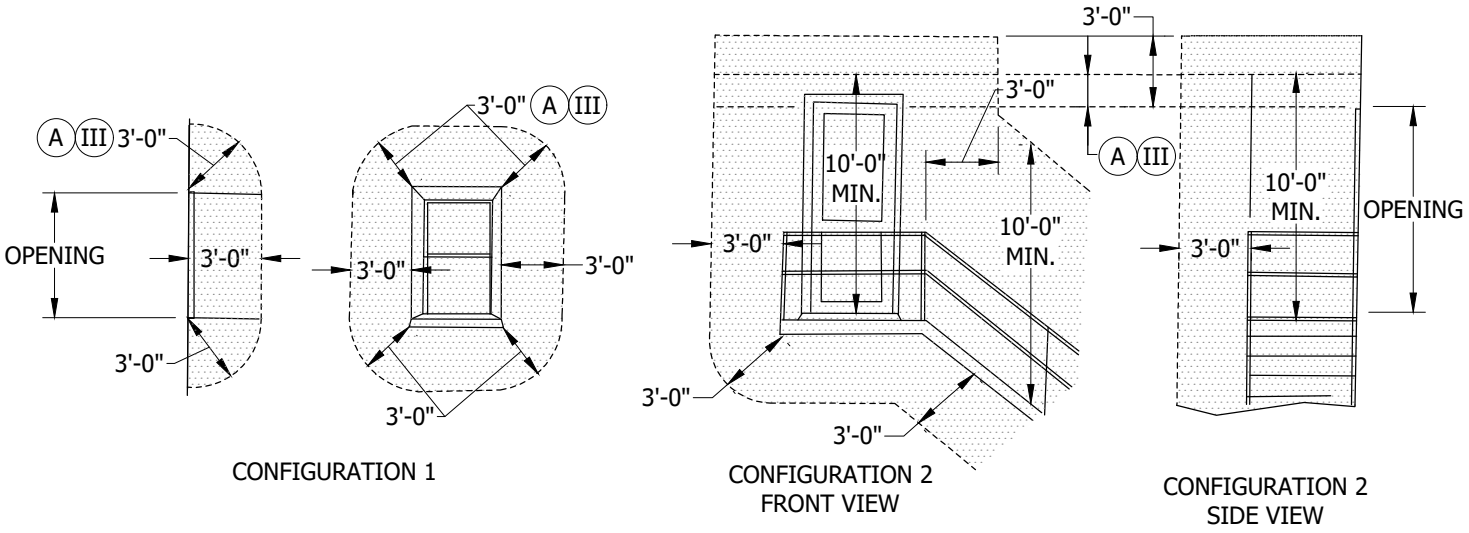

FIGURE 1
CLEARANCE OF 0-750V SERVICES FROM DOORS, (II)
EXITS, WINDOWS, FIRE ESCAPES, ETC.

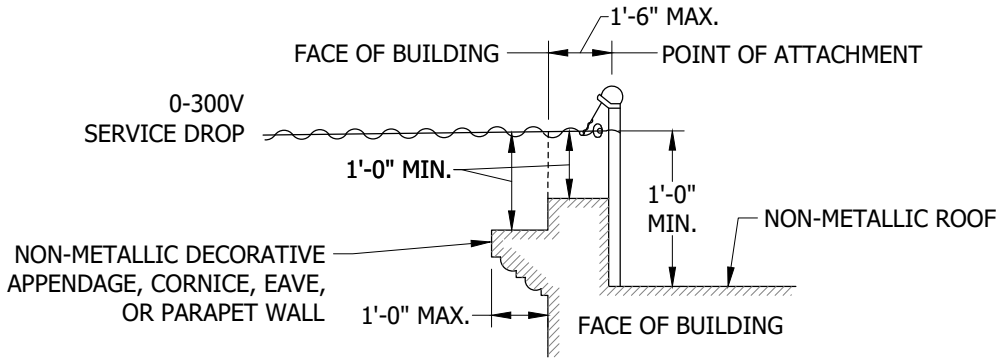

FIGURE 2
REDUCED CLEARANCES PERMITTED ON 0-300V SERVICES
ON INDUSTRIAL OR COMMERCIAL BUILDINGS

TABLE OF CONTENTS

© 1998 - 2021 San Diego Gas & Electric Company. All rights reserved. Removal of this copyright notice without permission is not permitted under law.

REV	CHANGE	DR	BY	DSN	APV	DATE	REV	CHANGE	DR	BY	DSN	APV	DATE
C	UPDATED TITLEBLOCK	-	PS	IL	MDJ	05/18/2016	F						
B	UPDATED TITLEBLOCK	-	PS	IL	MDJ	05/10/2016	E	EDITORIAL CHANGES	EDM	GLW	JES	CZH	12/12/2021
A	ORIGINAL ISSUE	-	-	PTA	RDJ	02/25/1974	D	EDITORIAL CHANGES	-	JIK	JES	CZH	02/10/2020

INSTALLATION:

(A) WHERE INSULATED ABRASION RESISTANT CONDUCTORS (SELF SUPPORTING CABLE) ARE USED, CLEARANCE MAY BE REDUCED TO 12 INCHES.

(B) NO LIMIT SPECIFIED BUT THE GREATEST PRACTICABLE CLEARANCE SHOULD BE OBTAINED.

(C) WHERE PERMITTED BY LOCAL INSPECTION AUTHORITY.

TABLE 1

MINIMUM CLEARANCE FOR 0-300V SERVICE DROPS ABOVE RESIDENTIAL BUILDINGS

TYPE OF ROOF		DISTANCE FROM BUILDING SERVED (FT)	DISTANCE FROM OTHER BUILDINGS ON PREMISE SERVED (FT)	DISTANCE FROM BUILDINGS ON OTHER PREMISE (FT)
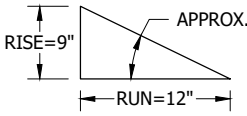	METAL ROOF LESS THAN 37°	8 (A)	8	8
	METAL ROOF 37° OR MORE	2 (A)	2 (C)	8
	NON-METALLIC ROOF LESS THAN 37°	(B)	2 (C)	8
	NON-METALLIC ROOF 37° OR MORE	(B)	2 (C)	2 (C)

NOTES:

I. A VERTICAL CLEARANCE OF 8 FEET SHALL BE OBTAINED FOR SERVICE DROPS OF 0-750V ABOVE BUILDINGS AND STRUCTURES ON INDUSTRIAL OR COMMERCIAL PREMISES. A CLEARANCE OF 8 FEET IS ALSO REQUIRED FOR SERVICE DROPS OF 300-750V ABOVE BUILDINGS AND STRUCTURES ON RESIDENTIAL PREMISES.

(II) NO SUPPLY SERVICE WIRES PERMITTED WITHIN SHADED ZONE.

(III) 12 INCHES FOR 0-300V SERVICES ON RESIDENTIAL PREMISES ONLY.

REFERENCE: NONE

TABLE OF CONTENTS

© 1998 - 2021 San Diego Gas & Electric Company. All rights reserved. Removal of this copyright notice without permission is not permitted under law.

REV	CHANGE	DR	BY	DSN	APV	DATE	REV	CHANGE	DR	BY	DSN	APV	DATE
C	UPDATED TITLEBLOCK	-	PS	IL	MDJ	05/18/2016	F						
B	UPDATED TITLEBLOCK	-	PS	IL	MDJ	05/10/2016	E	EDITORIAL CHANGES	EDM	GLW	JES	CZH	12/12/2021
A	ORIGINAL ISSUE	-	-	PTA	RDJ	02/25/1974	D	EDITORIAL CHANGES	-	JIK	JES	CZH	02/10/2020

X Indicates Latest Revision | Completely Revised | New Page | Information Removed

SDG&E ELECTRIC OVERHEAD CONSTRUCTION STANDARDS

CLEARANCE OF SUPPLY SERVICE DROPS 0-750V FROM BUILDINGS

OH262.4

SCOPE: THIS STANDARD SHOWS SUPPLY SERVICE DROP ATTACHMENTS AND CLEARANCE METHODS OF ATTACHMENT.

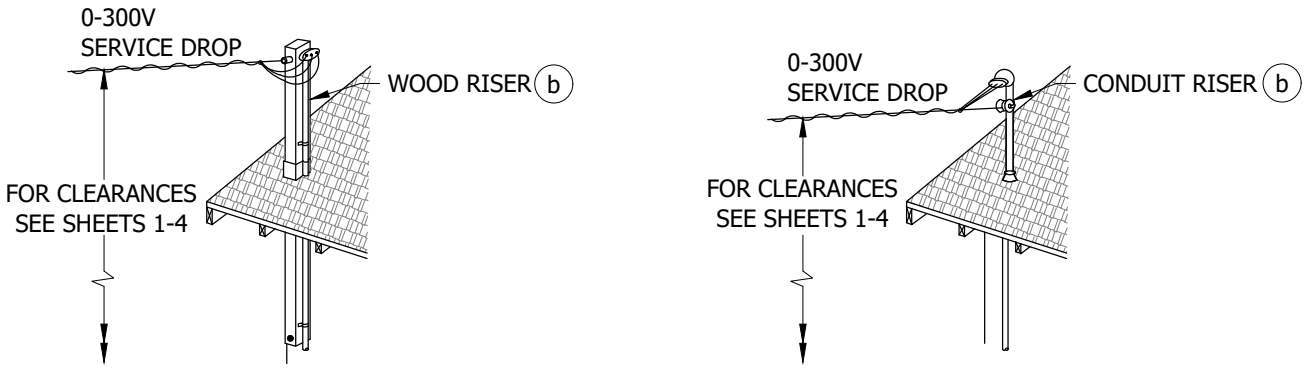

FIGURE 1
CLEARANCE STRUCTURES ON ROOFS

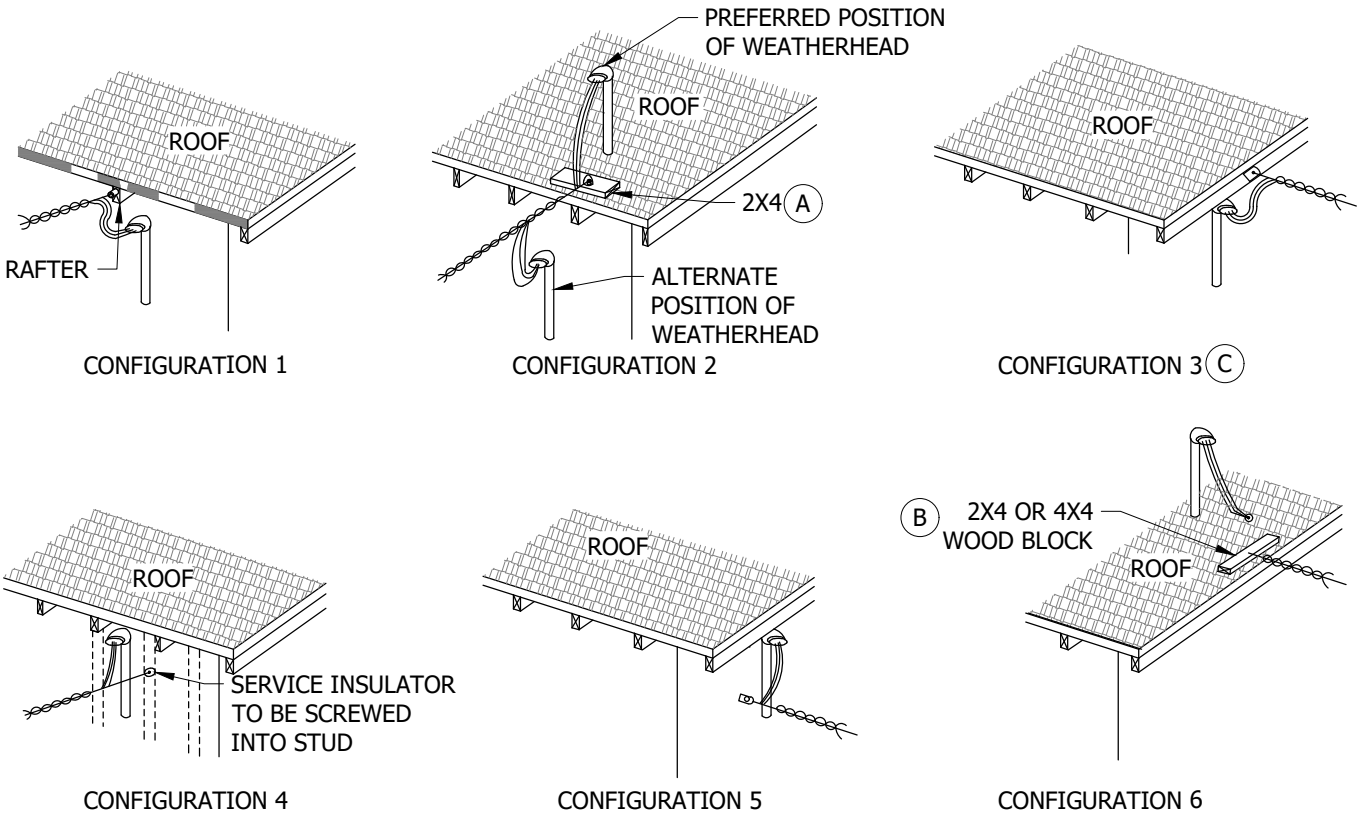

FIGURE 2
METHODS OF ATTACHING SERVICE DROPS TO BUILDING

© 1998 - 2021 San Diego Gas & Electric Company. All rights reserved. Removal of this copyright notice without permission is not permitted under law.

REV	CHANGE	DR	BY	DSN	APV	DATE	REV	CHANGE	DR	BY	DSN	APV	DATE
C	UPDATED TITLEBLOCK	-	PS	IL	MDJ	05/18/2016	F						
B	UPDATED TITLEBLOCK	-	PS	IL	MDJ	05/10/2016	E	EDITORIAL CHANGES	EDM	GLW	JES	CZH	12/12/2021
A	ORIGINAL ISSUE	-	-	PTA	RDJ	02/25/1974	D	EDITORIAL CHANGES	-	JIK	JES	CZH	02/10/2020

X Indicates Latest Revision | Completely Revised | New Page | Information Removed

SDG&E ELECTRIC OVERHEAD CONSTRUCTION STANDARDS

SUPPLY SERVICE DROP ATTACHMENTS
CLEARANCE-METHODS OF ATTACHMENTS

OH262.5

TABLE OF CONTENTS

INSTALLATION:

(A) WOOD BLOCK LAGGED OR BOLTED TO RAFTERS. NAILING IS NOT ACCEPTABLE.

(B) WOOD BLOCK LAGGED OR BOLTED TO ROOF. NAILING IN NOT ACCEPTABLE.(c)

(C) DRIP LOOPS SHALL BE FORMED AND CONNECTIONS SHALL BE MADE BELOW THE SERVICE ENTRANCE HEAD TO PREVENT THE ENTRANCE OF MOISTURE INTO THE SERVICE CONDUIT.

BILL OF MATERIALS: NONE

NOTES: NONE

REFERENCE:

a. SEE "SECONDARIES, SERVICES SECTION" FOR PREFERRED METHODS OF ATTACHING SERVICE DROPS.

(b) SEE OH641.

(c) PER RULE IV C.

TABLE OF CONTENTS

© 1998 - 2021 San Diego Gas & Electric Company. All rights reserved. Removal of this copyright notice without permission is not permitted under law.

REV	CHANGE	DR	BY	DSN	APV	DATE	REV	CHANGE	DR	BY	DSN	APV	DATE
C	UPDATED TITLEBLOCK	-	PS	IL	MDJ	05/18/2016	F						
B	UPDATED TITLEBLOCK	-	PS	IL	MDJ	05/10/2016	E	EDITORIAL CHANGES	EDM	GLW	JES	CZH	12/12/2021
A	ORIGINAL ISSUE	-	-	PTA	RDJ	02/25/1974	D	EDITORIAL CHANGES	-	JIK	JES	CZH	02/10/2020

SCOPE: THIS STANDARD SHOWS CLEARANCE OF SUPPLY SERVICE DROPS FROM OTHER SUPPLY CONDUCTORS AND OPEN WIRE COMMUNICATIONS.

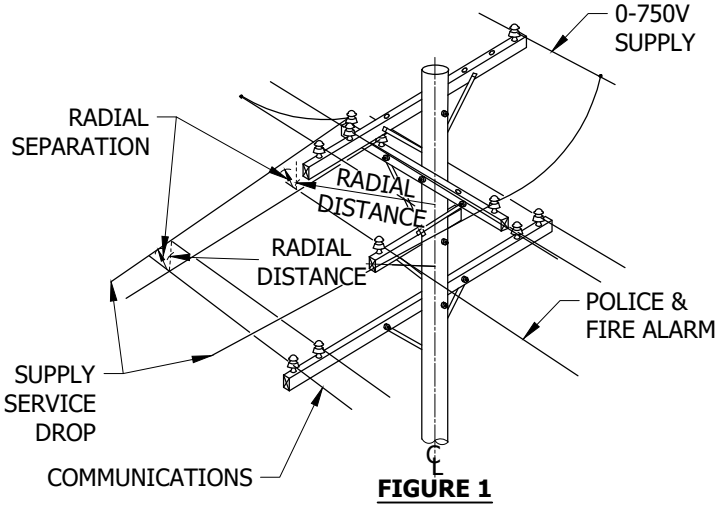

FIGURE 1

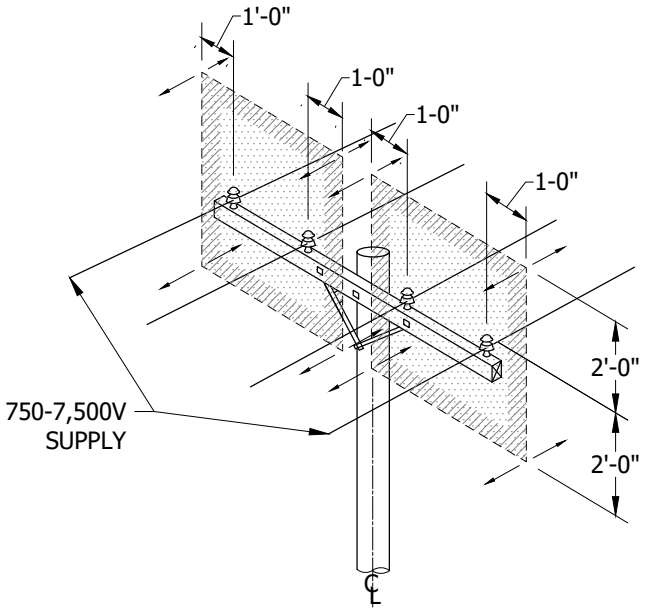

FIGURE 2
750-7,500V SUPPLY CONDUCTORS (VII)

TABLE 1

MINIMUM RADIAL CLEARANCE BETWEEN SUPPLY SERVICE DROPS & OPEN WIRE COMMUNICATIONS		
RADIAL DISTANCE (FT)	RADIAL SEPARATION (IN)	
	POLICE & FIRE ALARM	OTHER COMMUNICATIONS
0 - 5 INCLUSIVE	6	12
5 - 10 INCLUSIVE	9	18
10 - 15 INCLUSIVE	15	24
15 - 20 INCLUSIVE	21	24
MORE THAN 20	24	24

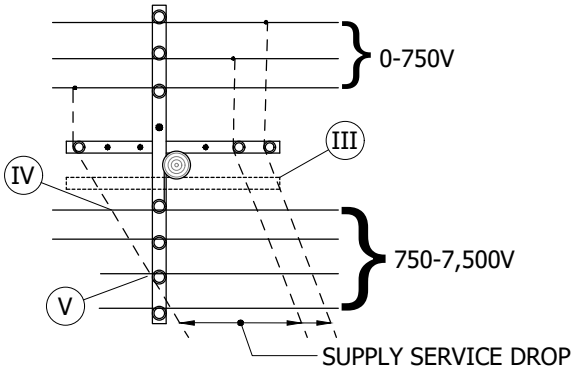

FIGURE 3
COMBINATION ARMS

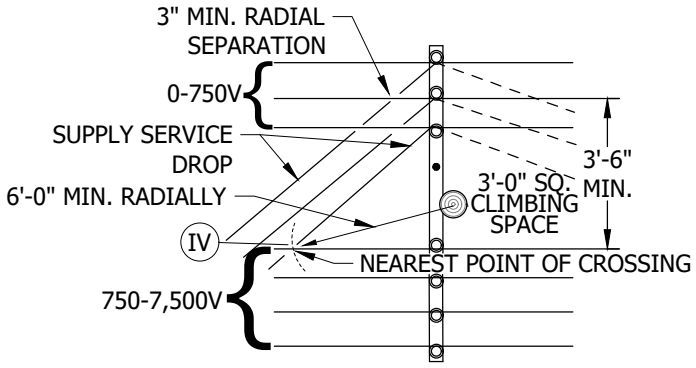

FIGURE 4
COMBINATION ARMS

TABLE OF CONTENTS

© 1998 - 2021 San Diego Gas & Electric Company. All rights reserved. Removal of this copyright notice without permission is not permitted under law.

REV	CHANGE	DR	BY	DSN	APV	DATE	REV	CHANGE	DR	BY	DSN	APV	DATE
C	UPDATED TITLEBLOCK	-	PS	IL	MDJ	05/18/2016	F						
B	UPDATED TITLEBLOCK	-	PS	IL	MDJ	05/10/2016	E	EDITORIAL CHANGES	EDM	GLW	JES	CZH	12/12/2021
A	ORIGINAL ISSUE	-	-	PTA	RDJ	02/25/1974	D	EDITORIAL CHANGES	-	JIK	JES	CZH	02/10/2020

INSTALLATION: NONE

BILL OF MATERIALS: NONE

NOTES:

I. CLEARANCE FROM CONDUCTORS ON COMBINATION ARMS BASED ON 2-FOOT MINIMUM RELATED LINE AND BUCK ARM SEPARATION.

II. CLEARANCES SHOWN IN FIGURE 3 ALSO APPLY TO SERVICE DROPS FROM COMBINATION BUCK ARMS.

(III) SINGLE BUCK ARMS INSTALLED ON THE 750-7,500V SIDE SHALL BE TREATED THE SAME AS DOUBLE BUCK ARM CONSTRUCTION AND THE POLE PIN POSITION ON THE 750-7,500V END OF THE LINE ARM LEFT VACANT.

(IV) 2-FOOT MINIMUM VERTICAL CLEARANCE AT ALL POINTS OF CROSSING.

(V) NO CROSSING PERMITTED WITHIN THIRD-PIN POSITION.

VI. NO SERVICE DROPS PERMITTED IN CLIMBING SPACE.

(VII) NO SUPPLY SERVICE DROPS ALLOWED WITHIN SHADED ZONE.

REFERENCE: NONE

TABLE OF CONTENTS

© 1998 - 2021 San Diego Gas & Electric Company. All rights reserved. Removal of this copyright notice without permission is not permitted under law.

REV	CHANGE	DR	BY	DSN	APV	DATE	REV	CHANGE	DR	BY	DSN	APV	DATE
C	UPDATED TITLEBLOCK	-	PS	IL	MDJ	05/18/2016	F						
B	UPDATED TITLEBLOCK	-	PS	IL	MDJ	05/10/2016	E	EDITORIAL CHANGES	EDM	GLW	JES	CZH	12/12/2021
A	ORIGINAL ISSUE	-	-	PTA	RDJ	02/25/1974	D	EDITORIAL CHANGES	-	JIK	JES	CZH	02/10/2020

X Indicates Latest Revision | Completely Revised | New Page | Information Removed

SDG&E ELECTRIC OVERHEAD CONSTRUCTION STANDARDS

CLEARANCE OF SUPPLY SERVICE DROPS FROM OTHER SUPPLY CONDUCTORS AND OPEN WIRE COMMUNICATIONS

OH262.8

SCOPE: THIS STANDARD SHOWS CLEARANCE OF SUPPLY SERVICE DROPS ON CLEARANCE ARMS.

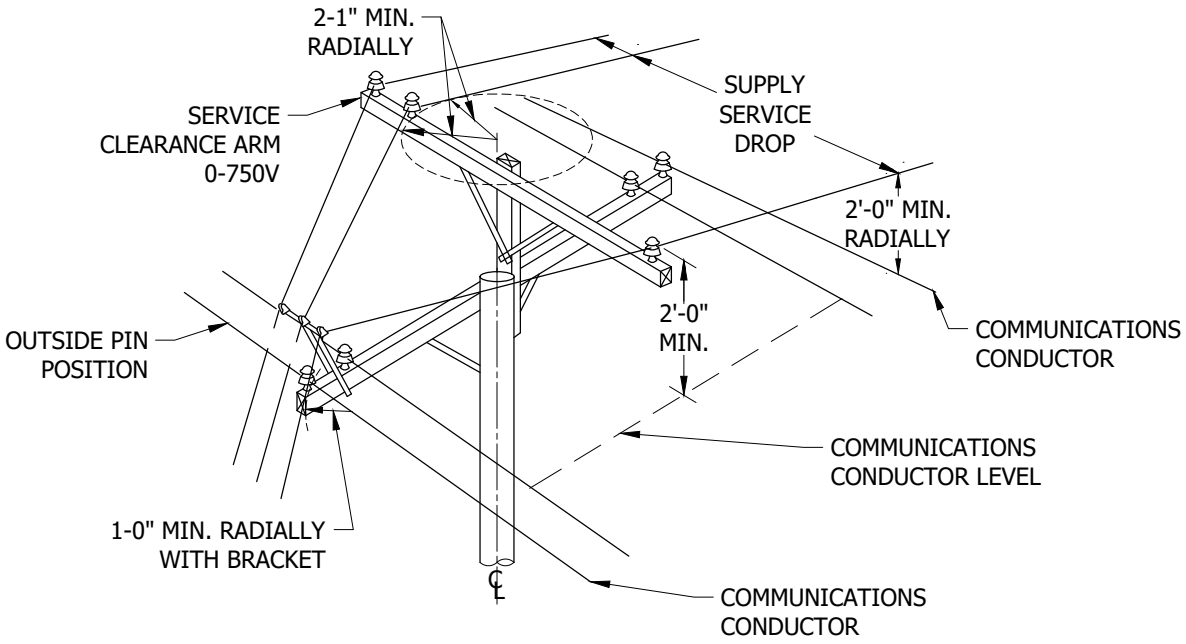

FIGURE 1

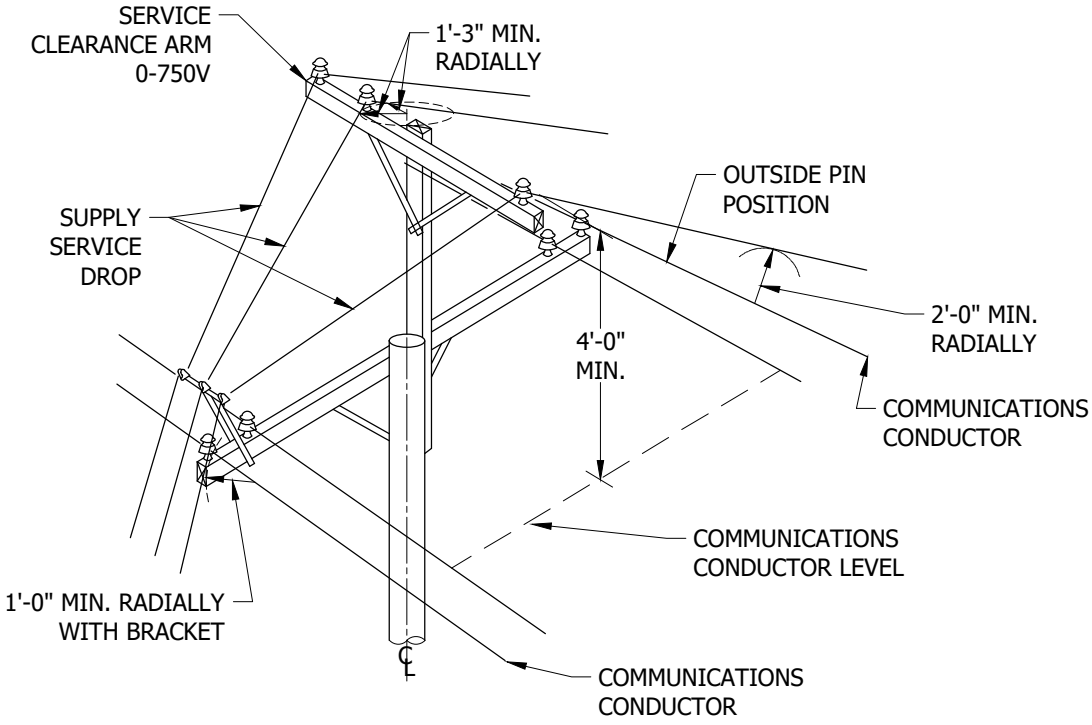

FIGURE 2

© 1998 - 2021 San Diego Gas & Electric Company. All rights reserved. Removal of this copyright notice without permission is not permitted under law.

REV	CHANGE	DR	BY	DSN	APV	DATE	REV	CHANGE	DR	BY	DSN	APV	DATE
C	UPDATED TITLEBLOCK	-	PS	IL	MDJ	05/18/2016	F						
B	UPDATED TITLEBLOCK	-	PS	IL	MDJ	05/10/2016	E	EDITORIAL CHANGES	EDM	GLW	JES	CZH	12/12/2021
A	ORIGINAL ISSUE	-	-	PTA	RDJ	02/25/1974	D	EDITORIAL CHANGES	-	JIK	JES	CZH	02/10/2020

X Indicates Latest Revision | Completely Revised | New Page | Information Removed

SDG&E ELECTRIC OVERHEAD CONSTRUCTION STANDARDS

CLEARANCE OF SUPPLY SERVICE DROPS ON CLEARANCE ARMS

OH262.9

TABLE OF CONTENTS

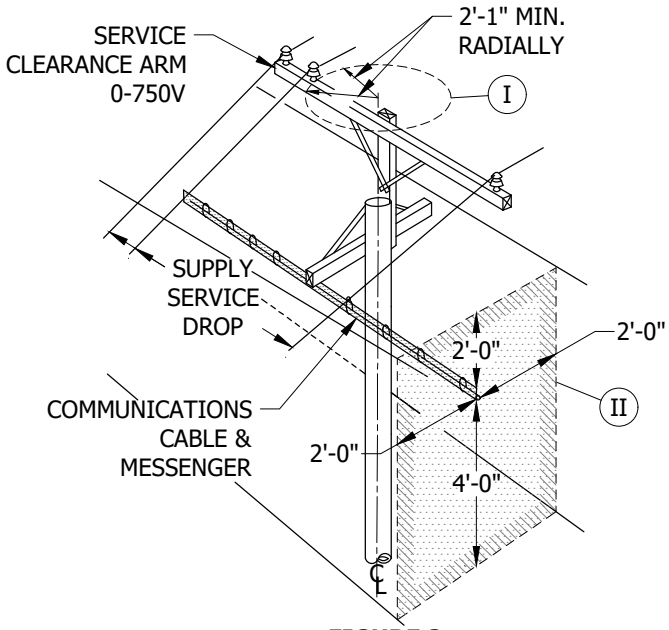

FIGURE 3

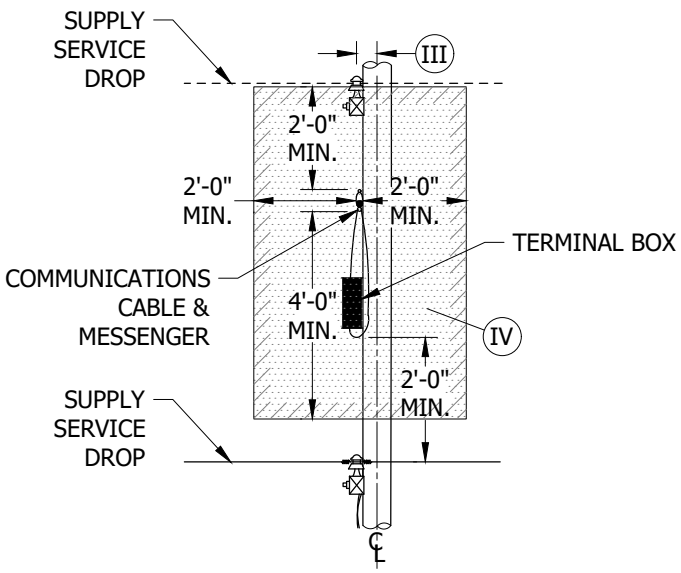

FIGURE 4

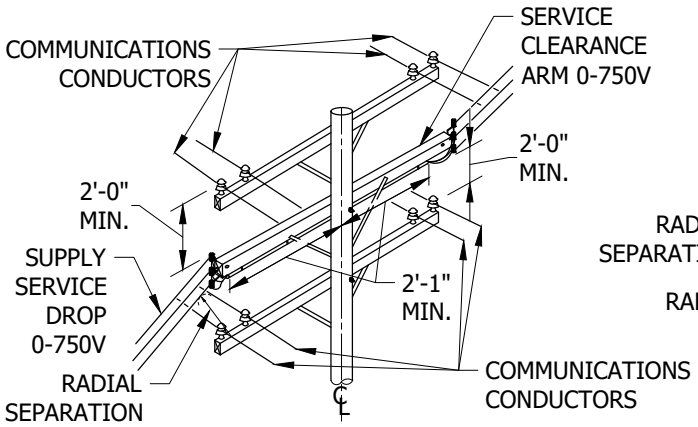

FIGURE 5

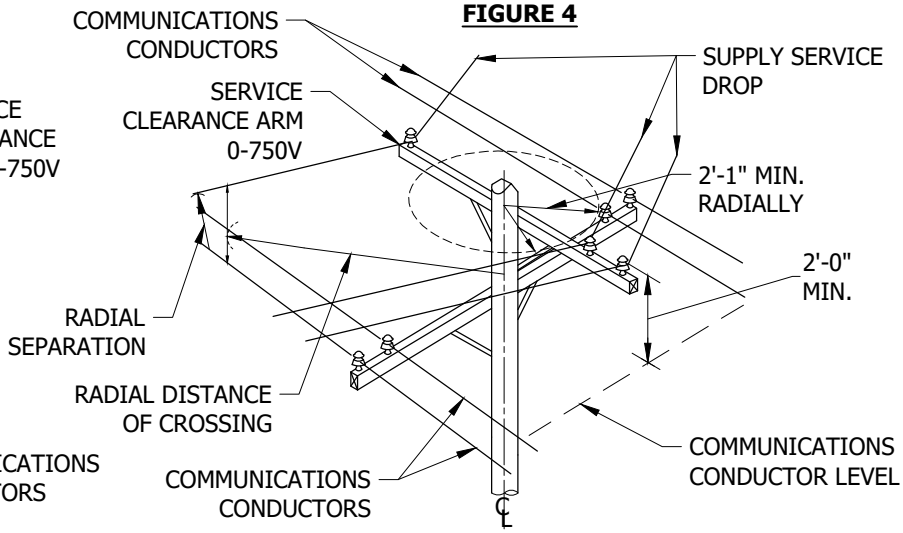

FIGURE 6

TABLE 1

MINIMUM RADIAL CLEARANCE BETWEEN SUPPLY SERVICE DROPS & OPEN WIRE COMMUNICATIONS		
RADIAL DISTANCE (FT)	RADIAL SEPARATION (IN)	
	POLICE & FIRE ALARM	OTHER COMMUNICATIONS
0 - 5 INCLUSIVE	6	12
5 - 10 INCLUSIVE	9	18
10 - 15 INCLUSIVE	15	24
15 - 20 INCLUSIVE	21	24
MORE THAN 20	24	24

© 1998 - 2021 San Diego Gas & Electric Company. All rights reserved. Removal of this copyright notice without permission is not permitted under law.

REV	CHANGE	DR	BY	DSN	APV	DATE	REV	CHANGE	DR	BY	DSN	APV	DATE
C	UPDATED TITLEBLOCK	-	PS	IL	MDJ	05/18/2016	F						
B	UPDATED TITLEBLOCK	-	PS	IL	MDJ	05/10/2016	E	EDITORIAL CHANGES	EDM	GLW	JES	CZH	12/12/2021
A	ORIGINAL ISSUE	-	-	PTA	RDJ	02/25/1974	D	EDITORIAL CHANGES	-	JIK	JES	CZH	02/10/2020

INSTALLATION: NONE

BILL OF MATERIALS: NONE

NOTES:

(I) MAY BE REDUCED TO 15 INCHES MINIMUM WHERE CONDUCTOR LEVEL IS 4 FEET OR MORE ABOVE MESSENGER.

(II) NO SUPPLY SERVICE DROP ALLOWED WITHIN SHADED AREA.

(III) CONDUCTORS MUST BE 25 INCHES MINIMUM RADIALLY FROM CENTERLINE OF POLE WHERE CONDUCTOR LEVEL IS LESS THAN 4 FEET ABOVE MESSENGER.

(IV) NO SUPPLY SERVICE DROPS ALLOWED WITHIN THE ZONE. SUPPLY CONDUCTOR LEVEL MUST BE 2 FEET MINIMUM BELOW ALL COMMUNICATIONS DRIP LOOPS.

REFERENCE: NONE

TABLE OF CONTENTS

© 1998 - 2021 San Diego Gas & Electric Company. All rights reserved. Removal of this copyright notice without permission is not permitted under law.

REV	CHANGE	DR	BY	DSN	APV	DATE	REV	CHANGE	DR	BY	DSN	APV	DATE
C	UPDATED TITLEBLOCK	-	PS	IL	MDJ	05/18/2016	F						
B	UPDATED TITLEBLOCK	-	PS	IL	MDJ	05/10/2016	E	EDITORIAL CHANGES	EDM	GLW	JES	CZH	12/12/2021
A	ORIGINAL ISSUE	-	-	PTA	RDJ	02/25/1974	D	EDITORIAL CHANGES	-	JIK	JES	CZH	02/10/2020

X Indicates Latest Revision | Completely Revised | New Page | Information Removed

SDG&E ELECTRIC OVERHEAD CONSTRUCTION STANDARDS

CLEARANCE OF SUPPLY SERVICE DROPS ON CLEARANCE ARMS

OH262.11

SCOPE: THIS STANDARD SHOWS CLEARANCE REQUIREMENTS BETWEEN COMMUNICATIONS AND EQUIPMENT FOR TRANSFORMER INSTALLATIONS.

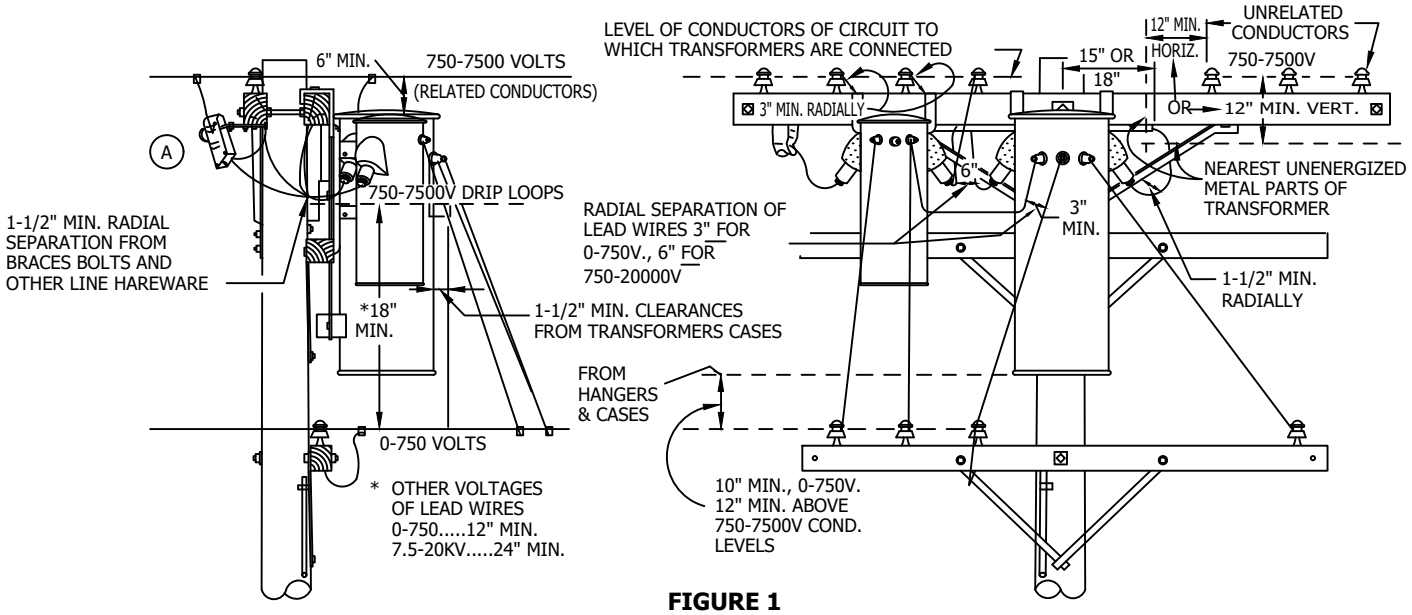

FIGURE 1

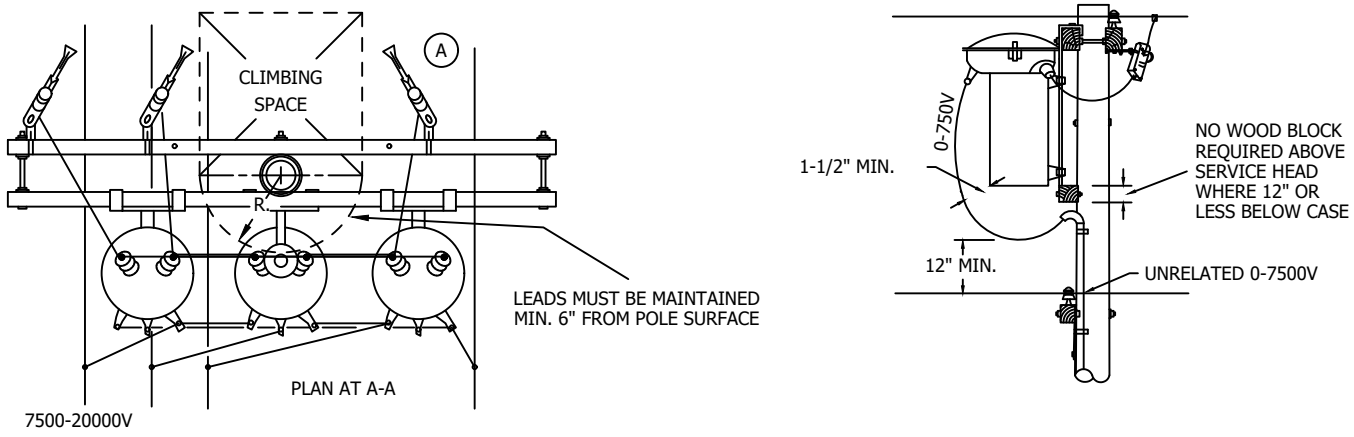

FIGURE 2

© 1998 - 2020 San Diego Gas & Electric Company. All rights reserved. Removal of this copyright notice without permission is not permitted under law.

REV	CHANGE	BY	DSGN	APPV	DATE	REV	CHANGE	BY	DSGN	APPV	DATE
C						F					
B	DRAWING UPDATE	JIK	JES	CZH	02/10/2020	E					
A	ORIGINAL ISSUE	PTA	PTA	CAK	01/01/1998	D					

Indicates Latest Revision | Completely Revised | New Page X | Information Removed

SDG&E ELECTRIC OVERHEAD CONSTRUCTION STANDARDS

SHEET 1 OF 2

TRANSFORMER STATION CLEARANCES

OH264.1

TABLE OF CONTENTS

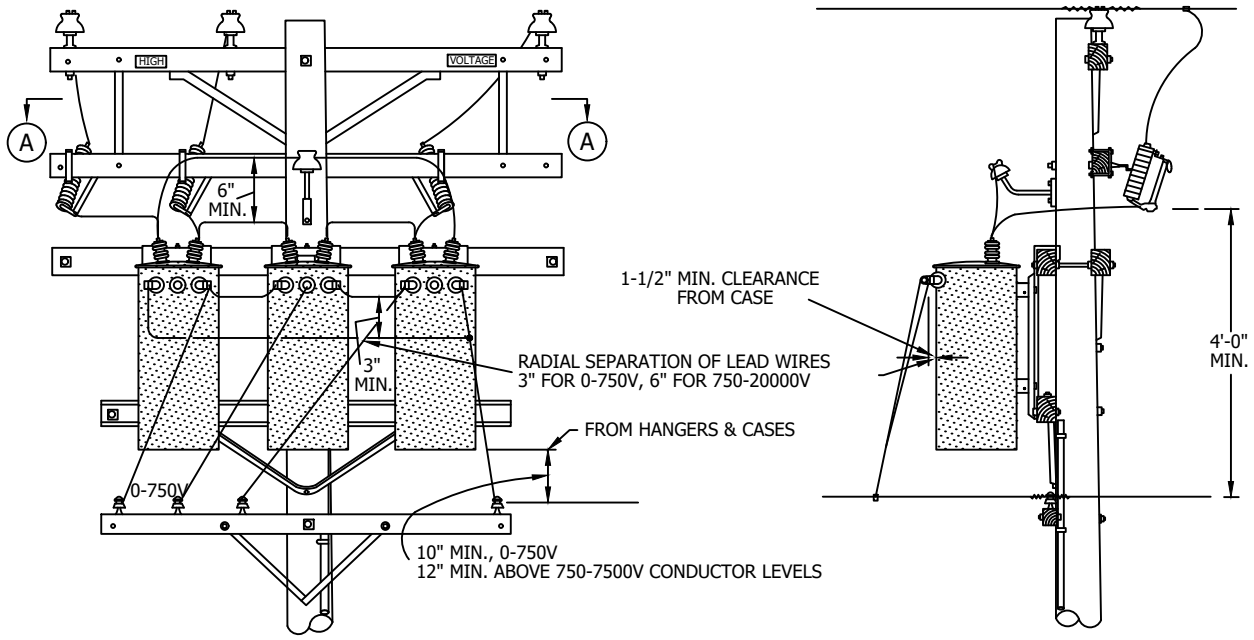

FIGURE 3

TABLE OF CONTENTS

INSTALLATION:

(A) INSTALL CUTOUTS OUTSIDE THE CLIMBING SPACE.

BILL OF MATERIALS: NONE

NOTES:

I. ALL TRANSFORMER CASES AND HANGERS MUST CLEAR CROSSARM BRACES AND THRU-BOLTS BY 1 1/2" CREEPAGE AND 1" AIR GAP DISTANCE.

REFERENCE: NONE

© 1998 - 2020 San Diego Gas & Electric Company. All rights reserved. Removal of this copyright notice without permission is not permitted under law.

REV	CHANGE	BY	DSGN	APPV	DATE	REV	CHANGE	BY	DSGN	APPV	DATE
C						F					
B	DRAWING UPDATE	JIK	JES	CZH	02/10/2020	E					
A	ORIGINAL ISSUE	PTA	PTA	CAK	01/01/1998	D					

Indicates Latest Revision | Completely Revised | New Page [X] | Information Removed

SDG&E ELECTRIC OVERHEAD CONSTRUCTION STANDARDS

TRANSFORMER STATION CLEARANCES

OH264.2

SCOPE: THIS STANDARD DEFINES POSITIONS OF CIRCUITS ON CROSSARMS WITH RESPECT TO THOROUGHFARES, PRIVATE PROPERTY AND SUBSTATION POLES.

CIRCUIT POSITIONS ON STREET, ROADS, AND ALLEYS: CIRCUIT CONDUCTORS SHALL BE INSTALLED IN PRESCRIBED POSITIONS ON STREET AND PROPERTY ENDS OF CROSSARMS AS INDICATED ON PAGE 281.2, EXCEPT WHERE A LEAD CROSSES FROM A STANDARD POLE POSITION ON A STREET OR ROAD TO THE OPPOSITE SIDE TO AVOID TREES OR OTHER OBSTRUCTIONS.

CIRCUIT POSITIONS ON PRIVATE PROPERTY: WHERE A LEAD IS EXTENDED ONTO PRIVATE PROPERTY, CIRCUIT CONDUCTORS SHALL BE INSTALLED TO CONFORM WITH CIRCUIT POSITIONS OCCUPIED ON CROSSARMS OF CORRESPONDING STREET, ROAD AND ALLEY LEADS. SEE SKETCHES ON PAGE 281.2.

RECONDUCTORING OR ADDING CONDUCTORS: PHASE WIRES, STREET LIGHTING CIRCUITS AND SECONDARY CONDUCTORS SHOULD BE SHIFTED TO CORRECT POSITIONS AS INDICATED ON PAGE 281.2 WHEN RECONDUCTORING OR ADDING CONDUCTORS.

DISTRIBUTION AND 69KV CIRCUITS AT SUBSTATION POLES: DISTRIBUTION CIRCUITS SHALL TERMINATE PHASE WIRES IN STANDARD POSITIONS, A-B-C FROM EAST TO WEST AND NORTH TO SOUTH ON SUBSTATION POLES.

LONG 69KV TRANSMISSION CIRCUITS SHALL HAVE TRANSPOSITION BARRELS COMPLETE TO RETURN THE PHASE WIRES TO STANDARD POSITIONS, A-B-C FROM TOP TO BOTTOM OR EAST TO WEST AND NORTH TO SOUTH ON SUBSTATION POLES, SEE MAINTENANCE REFERENCE BOOK, PAGES D-66.1 AND D-66.2 FOR 69KV TRANSPOSITIONS.

SHORT 69KV TRANSMISSION CIRCUITS WITHOUT TRANSPOSITIONS SHALL TERMINATE PHASE WIRES IN STANDARD POSITIONS, A-B-C TOP TO BOTTOM OR EAST TO WEST AND NORTH TO SOUTH ON SUBSTATION POLES.

INSTALLATION: NONE

BILL OF MATERIALS: NONE

NOTES: NONE

REFERENCES: NONE

TABLE OF CONTENTS

© 1998 - 2020 San Diego Gas & Electric Company. All rights reserved. Removal of this copyright notice without permission is not permitted under law.

REV	CHANGE	BY	DSGN	APPV	DATE	REV	CHANGE	BY	DSGN	APPV	DATE
C						F					
B	EDITORIAL CHANGES	JIK	JES	CZH	02/10/2020	E					
A	ORIGINAL ISSUE	PTA	PTA	RDJ	03/07/1974	D					

X Indicates Latest Revision | Completely Revised | New Page | Information Removed

SHEET 1 OF 3

SDG&E ELECTRIC OVERHEAD CONSTRUCTION STANDARDS

POSITIONS OF CIRCUITS ON CROSSARMS WITH RESPECT TO THOROUGHFARES, PRIVATE PROPERTY AND SUBSTATION POLES

OH281.1

SCOPE: THIS STANDARD SHOWS POSITION OF CIRCUITS ON CROSSARMS AND RACKS.

POSITIONS OF CIRCUITS ON CROSSARMS

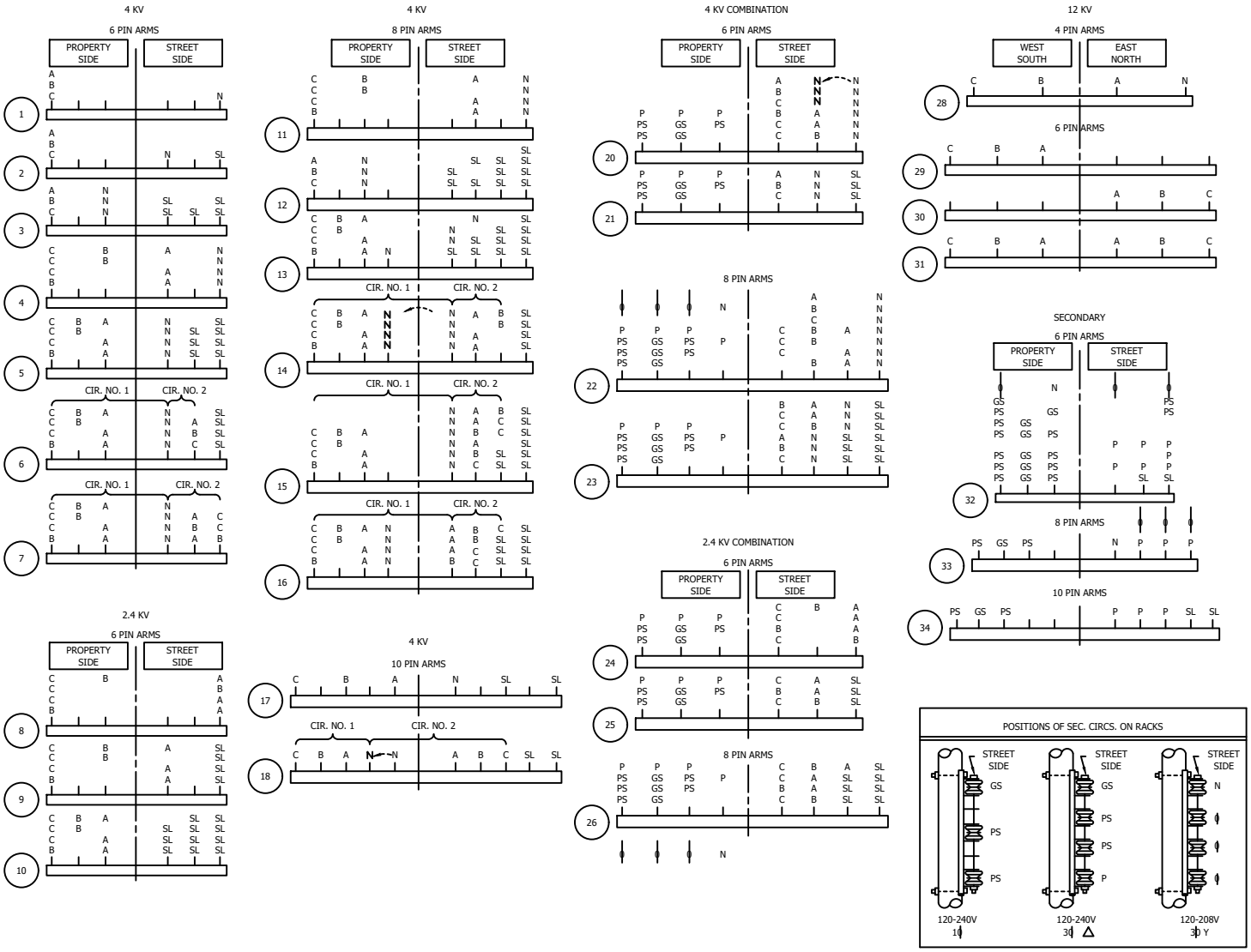

© 1998 - 2020 San Diego Gas & Electric Company. All rights reserved. Removal of this copyright notice without permission is not permitted under law.

REV	CHANGE	BY	DSGN	APPV	DATE	REV	CHANGE	BY	DSGN	APPV	DATE
C						F					
B	EDITORIAL CHANGES	JIK	JES	CZH	02/10/2020	E					
A	ORIGINAL ISSUE	PTA	PTA	RDG	01/01/1993	D					

X Indicates Latest Revision | Completely Revised | New Page | Information Removed

TABLE OF CONTENTS

CIRCUIT POSITIONS ON PRIVATE PROPERTY LEADS

POLES ON WEST AND SOUTH SIDES OF STREETS

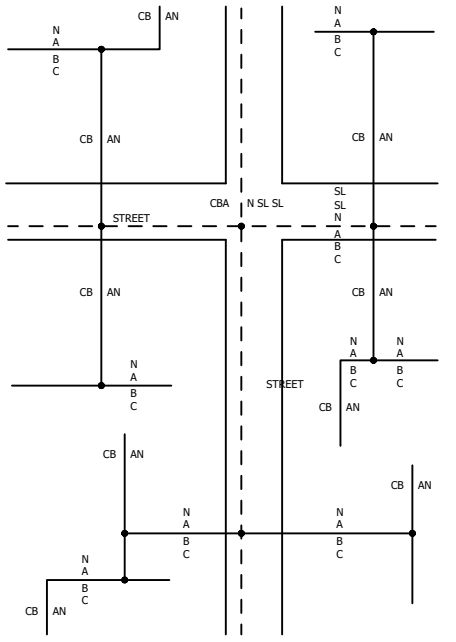

POLES ON EAST AND SOUTH SIDES OF STREETS

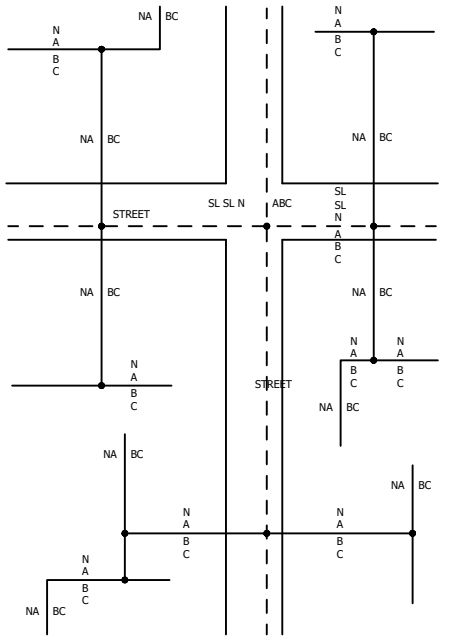

POLES ON WEST AND NORTH SIDES OF STREETS

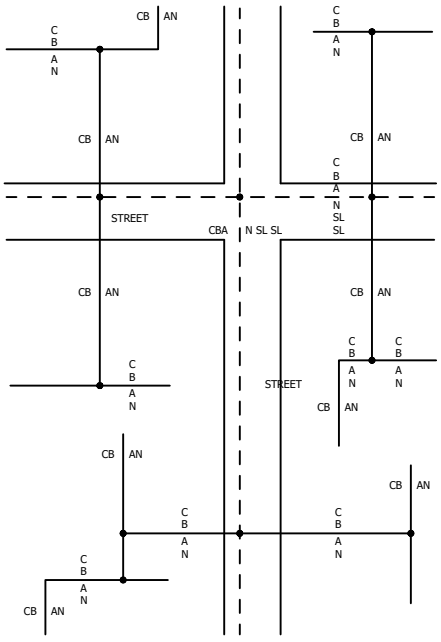

INSTALLATION: NONE

BILL OF MATERIALS: NONE

NOTES: NONE

REFERENCES: NONE

TABLE OF CONTENTS

© 1998 - 2020 San Diego Gas & Electric Company. All rights reserved. Removal of this copyright notice without permission is not permitted under law.

REV	CHANGE	BY	DSGN	APPV	DATE	REV	CHANGE	BY	DSGN	APPV	DATE
C						F					
B						E					
A	EDITORIAL CHANGES	JIK	JES	CZH	02/10/2020	D					

Indicates Latest Revision | Completely Revised X | New Page | Information Removed

SHEET 3 OF 3

SDG&E ELECTRIC OVERHEAD CONSTRUCTION STANDARDS

POSITIONS OF CIRCUITS ON CROSSARMS AND RACKS

OH281.3

SCOPE: THIS STANDARD IS PROVIDED IN REFERENCE TO THE ORDERS OF THE CPUC'S 1993 DECISION 93-11-013 AND 2006 DECISION 06-01-042 THAT ESTABLISHES EMF POLICY IN CALIFORNIA.

1993 CPUC DECISION 93-11-013

THE CPUC'S 1993 EMF DECISION 93-11-013 ORDERED UTILITIES TO IMPLEMENT NO-COST AND LOW-COST MAGNETIC FIELD REDUCTION MEASURES WHEN DESIGNING NEW PROJECTS OR UPGRADING EXISTING FACILITIES.

UNTIL RESEARCH AND THE SCIENTIFIC COMMUNITY PROVIDE GREATER DIRECTION, SDG&E WILL CONTINUE ITS EFFORTS TO INFORM THE PUBLIC AND SUPPORT ONGOING RESEARCH THROUGH THE FOLLOWING MEASURES:

- MAINTAIN AN EMF CENTER STAFFED WITH INFORMED REPRESENTATIVES AVAILABLE TO TALK WITH CUSTOMERS ABOUT EMF ISSUES, AND PROVIDE FREE MAGNETIC FIELD MEASUREMENTS ON REQUEST.
- PROVIDE OBJECTIVE EMF HEALTH LITERATURE TO THE PUBLIC.
- SUPPORT, FUND AND MONITOR EMF RESEARCH AND PARTICIPATE IN DISCUSSION FORUMS AND REGULATORY PROCEEDINGS TO REMAIN CURRENT ON ALL EMF-RELATED ISUES.
- IMPLEMENT LOW-COST AND NO-COST MEASURES, WHERE APPROPRIATE, TO REDUCE MAGNETIC FIELDS ASSOCIATED WITH NEW AND UPGRADED CONSTRUCTION PROJECTS, IN ACCORDANCE WITH THE RULES OF THE CPUC DECISION.

2006 CPUC DECISION 06-01-042

THE CPUC UPDATED ITS EMF POLICY IN DECISION 06-01-042, REAFFIRMING THE NO-COST/LOW-COST POLICY AND REQUIRING THE UTILITIES TO UPDATE THEIR DESIGN GUIDELINES TO REFLECT KEY ELEMENTS OF THE UPDATED EMF POLICY.

IN ADDITION TO THIS REFERENCE STANDARD, REFER TO DESIGN MANUAL PAGE 5124.2 AND SDGE'S EMF DESIGN GUIDELINES FOR ELECTRICAL FACILITIES FOR EMF REDUCTION PRACTICES AND CRITERIA.

ANY EMF INQUIRIES SHOULD BE DIRECTED TO SDG&E'S EMF SERVICES AT 800-411-7343.

INSTALLATION: NONE

BILL OF MATERIALS: NONE

NOTES: NONE

REFERENCE: NONE

TABLE OF CONTENTS

REV	CHANGE	DRWN	BY	CHKD	APVD	DATE
C	CONVERTED TO 3D FORMAT	AMP	JIK	-	-	05/01/2023
B	DRAWING UPDATE	PEI	-	-	-	04/22/2019
A	EDITORIAL CHANGES	IL	PS	PS	MDJ	06/15/2016

© 1998 - 2023 San Diego Gas and Electric Company. All rights reserved. Removal of this copyright notice without permission is not permitted under law.

SCOPE: THIS STANDARD SHOWS A MAP OF CONTAMINATION DISTRICTS.

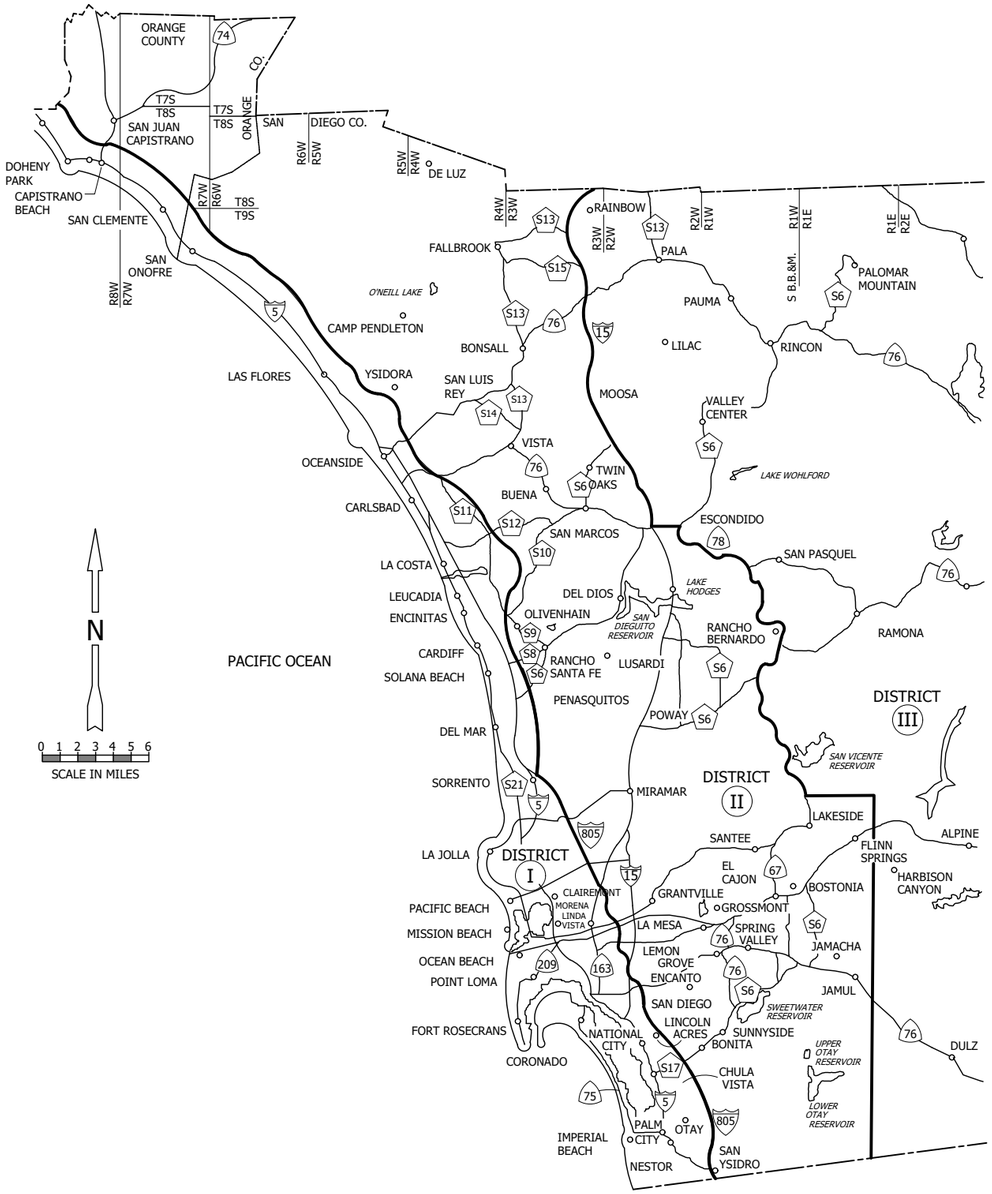

FIGURE 1

INSTALLATION: NONE

BILL OF MATERIALS: NONE

NOTES:

(I) HEAVY CONTAMINATION AREA (INCLUDES BAYS AND LAGOONS THAT EXTEND BEYOND HIGHWAY 5).

(II) MEDIUM CONTAMINATION AREA.

(III) LIGHT CONTAMINATION AREA, EXTENDING TO EAST BOUNDARY.

REFERENCE: NONE

TABLE OF CONTENTS

REV	CHANGE	DRWN	BY	CHKD	APVD	DATE
E	CONVERTED TO 3D FORMAT	AMP	JIK	-	-	05/01/2023
D	NOTES UPDATE	EDM	EJA	GLW	CZH	08/03/2021
C	FORMATTING	EDM	JIK	-	-	01/13/2021

© 1998 - 2023 San Diego Gas and Electric Company. All rights reserved. Removal of this copyright notice without permission is not permitted under law.

SDG&E ELECTRIC OVERHEAD AND UNDERGROUND CONSTRUCTION STANDARDS

CONTAMINATION DISTRICTS

SCALE: NOT TO SCALE

DRAWING NO: OH287.1 UG3140.1

SHEET: 1 OF 1

X Indicates Latest Revision | Completely Revised | New Page | Information Removed

SCOPE: THIS STANDARD DESCRIBES COPPER AND ALUMINUM PRIMARY NEUTRAL CONDUCTORS FOR VARIOUS SIZES IN THE OVERHEAD SYSTEM.

INSTALLATION: NONE

BILL OF MATERIALS: NONE

NOTES:

I. PRIMARY NEUTRAL CONDUCTOR AND PHASE CONDUCTORS AT ANY GIVEN VOLTAGE LEVEL SHALL BE THE SAME SIZE AND TYPE IN THE FOLLOWING CASES:

a. SINGLE-PHASE LINE TO NEUTRAL

b. NEW INSTALLATIONS WITH PHASE CONDUCTORS SMALLER THAN 636 KCMIL

c. SPAN OVER 500 FEET

d. LOCATIONS WITH SPECIAL PROBLEMS DUE TO UNEQUAL SAGS (WIND, AESTHETICS)

e. TWIN CIRCUIT

II. ALL OTHER AND EXISTING INSTALLATIONS SHALL HAVE THE FOLLOWING MINIMUM NEUTRAL SIZES:

TABLE 1

ALUMINUM CONDUCTOR (AWG OR KCMIL)	
PHASE	**NEUTRAL**
4	4
2	2
1/0	2
3/0	1/0
4/0	1/0
336.4	3/0
394.5	3/0
397.5	4/0
636	336.4
1033.5	636

TABLE 2

COPPER CONDUCTOR (AWG OR KCMIL)	
PHASE	**NEUTRAL**
6	6
4	6
2	4
1/0	2
2/0	2
4/0	1/0
250	2/0
400	250
500	250
750	400
1000	500

III. DO NOT MIX CONDUCTOR TYPES AT ANY GIVEN LEVEL.

IV. NEUTRAL CONDUCTOR SHALL BE SAGGED TO THE SAME LEVEL AS PHASE CONDUCTORS.

V. NEUTRAL CONDUCTOR REQUIRES PRIMARY INSULATOR. (a)

REFERENCE:

(a) SEE G.O. 95 RULE 33.1.

TABLE OF CONTENTS

© 1998 - 2022 San Diego Gas & Electric Company. All rights reserved. Removal of this copyright notice without permission is not permitted under law.

REV	CHANGE	DR	BY	DSN	APV	DATE	REV	CHANGE	DR	BY	DSN	APV	DATE
C	NOTES UPDATE	EDM	MRF	GLW	KRG	04/22/2022	F						
B	DRAWING UPDATE	PEI	-	-	-	02/08/2019	E						
A	EDITORIAL CHANGES	-	GW	JS	MDJ	10/25/2016	D						

MAIN TABLE OF CONTENTS

PAGE	SUBJECT
303	POLE INFORMATION
310	STEEL DISTRIBUTION POLES
311	POLE PLUGS
315	STEEL AND FIBERGLASS POLE CAPS
320	FIBERGLASS DISTRIBUTION POLES DRILLING DIMENSIONS AND DETAILS
325	WARNING SPHERES
330	AVIATION MARKER WARNING SPHERE
331	OVERHEAD CROSSING MARKERS
340	LOADING DISTRICTS
346	SAMPLE WIND AND VERTICAL LOADING CALCULATIONS
349	VERTICAL LOADING DUE TO GUY
350	HEIGHT OF ATTACHMENT CORRECTION FACTORS AND EQUIPMENT
352	MOMENTS DUE TO EQUIPMENT
354	POLE LOADING FOR WOOD, FIBERGLASS, AND STEEL
363	INSTALLATION OF PERMANENT POLE STEPS
371	POLE BRACING
372	TEMPORARY POLE SUPPORT FOR TRENCHING OPERATIONS
373	REINFORCING POLES
374	REINFORCING WOOD POLES WITH STEEL TRUSSES
376	UNGUYED STUB
377	PUSH BRACE
378	EXTENSION LADDER SUPPORT BRACKET
379	FIBERGLASS CROSSARMS
380	WOOD CROSSARM
381	CONDUCTOR DESIGN - VERTICAL LOADING

© 1998 - 2022 San Diego Gas & Electric Company. All rights reserved. Removal of this copyright notice without permission is not permitted under law.

REV	CHANGE	DR	BY	DSN	APV	DATE	REV	CHANGE	DR	BY	DSN	APV	DATE
F	EDITORIAL CHANGES	EDM	GLW	JES	CZH	07/09/2020	I	EDITORIAL CHANGES	EDM	RSL	GLW	KRG	11/09/2022
E	388 MOVED TO FMO	-	SL	JS	CZH	07/10/2019	H	ADDED OH315	EDM	JIK	JES	CZH	12/12/2021
D	EDITORIAL CHANGES	-	JAC	JES	CZH	05/23/2019	G	ADDED OH388	EDM	MRF	GLW	CZH	04/12/2021

X Indicates Latest Revision | Completely Revised | New Page | Information Removed

SDG&E ELECTRIC OVERHEAD CONSTRUCTION STANDARDS

POLES, ARMS & HARDWARE
TABLE OF CONTENTS

PAGE	SUBJECT
382	MAXIMUM CONDUCTOR LOADING ON CROSSARMS - VERTICAL LOADING
383	MAXIMUM CONDUCTOR LOADING ON CROSSARMS - HORIZONTAL LOADING
384	DOUBLE AND TRIPLE CROSSARMS WITH DOUBLE ARMING BRACKET
385	STEEL CROSSARMS
388	STEEL CROSSARM GAINS
389	GUY STRAIN INSULATORS
390	HARDWARE
396	INSULATORS PINS AND SPACERS
397	EQUIPMENT MOUNTING BRACKETS

© 1998 - 2022 San Diego Gas & Electric Company. All rights reserved. Removal of this copyright notice without permission is not permitted under law.

REV	CHANGE	DR	BY	DSN	APV	DATE	REV	CHANGE	DR	BY	DSN	APV	DATE
F	EDITORIAL CHANGES	EDM	GLW	JES	CZH	07/09/2020	I	EDITORIAL CHANGES	EDM	RSL	GLW	KRG	11/09/2022
E	388 MOVED TO FMO	-	SL	JS	CZH	07/10/2019	H	ADDED OH315	EDM	JIK	JES	CZH	12/12/2021
D	EDITORIAL CHANGES	-	JAC	JES	CZH	05/23/2019	G	ADDED OH388	EDM	MRF	GLW	CZH	04/12/2021

TABLE OF CONTENTS

SCOPE: THIS STANDARD DESCRIBES CONSTRUCTION AND CLEARANCE REQUIREMENTS FOR SPACING, STAKING, AND SETTING OF WOOD, STEEL AND FIBERGLASS POLES.

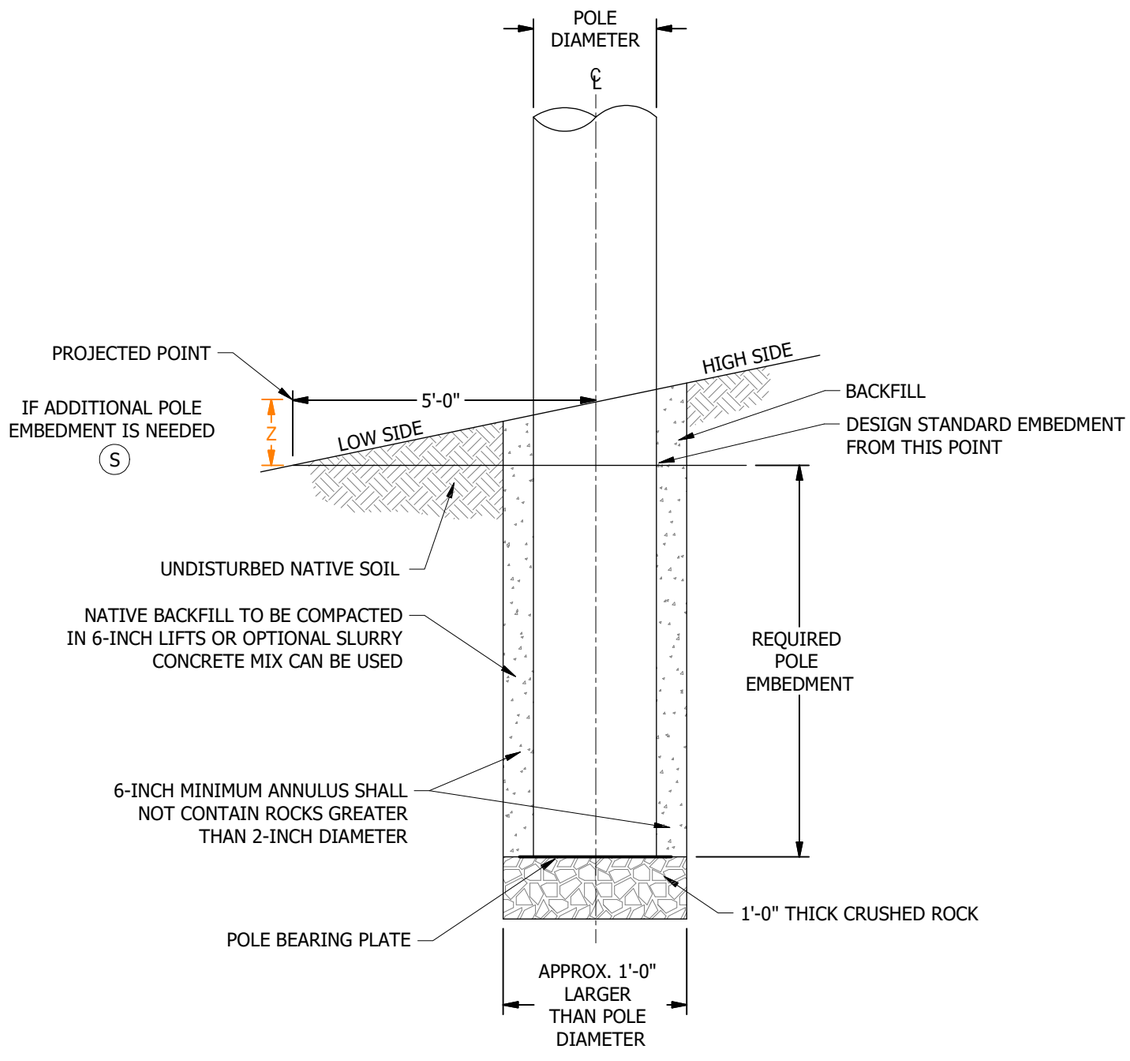

FIGURE 1
SETTING POLE ON SLOPE

INSTALLATION:

A. **WOOD POLES:**
STANDARD POLES ARE BUTT-TREATED WESTERN RED CEDAR AND FULL-LENGTH PENTACHLOROPHENOL TREATED DOUGLAS FIRTHRU-BORED AT GROUNDLINE FOR IMPROVED PRESERVATIVE TREATMENT.

B. **STEEL POLES:**
STANDARD POLES ARE HOT-DIP GALVANIZED EXTERNALLY AND INTERNALLY FOR THEIR ENTIRE LENGTH OR ARE WEATHERIZINGSTEEL. THE POLE BUTT IS EPOXY COATED. MULTI-PIECE POLES REQUIRE JACKING.

C. **FIBERGLASS POLES:**
ENGINEERED COMPOSITE (FIBER REINFORCED POLYMER, FRP) POLES ARE RESIN-BASED SPUN FIBER TUBULAR STRUCTURES THAT MAY REQUIRE FIELD ASSEMBLY AND ARE SUPPLIED IN MODULAR SECTIONS. DESIGN APPLICATIONS INCLUDE WETLANDS,IRRIGATION OR DRAINAGE AREAS, "BACKLOT",DIFFICULT ACCESS AND HIGH ELEVATION LOCATIONS. MATERIAL IS HIGH-STRENGTH, LIGHT-WEIGHT, AND FLAME-RESISTANT WITH LOW CONDUCTANCE PROPERTIES.

D. **POSITION OF STAKE SET FOR POLES:**
1. ALL STAKES ARE SET BY SURVEYORS, FIELD SUPERVISORS, DESIGNERS OR CUSTOMER EXTENSION PLANNERS IN THE CENTER OFTHE PROPOSED POLE, STUB, OR ANCHOR LOCATIONS. OFFSET OR REFERENCE POINT STAKES ARE ALSO SET WHERE SUCH STAKES WILL HELP LOCATE SETTING POINT.
2. STAKES SET IN STREETS WITH PARKING STRIPS BEHIND CURB, OR WHERE NO SIDEWALK EXISTS, ARE SET WITH STREET FACE OF POLE 18 INCHES FROM FACE OF CURB. WHERE COMBINATION CURB AND SIDEWALKS ARE PROPOSED OR EXIST, STAKES SHOULD BE SET ON PROPERTY SIDE OF SIDEWALK PROVIDED THERE IS AT LEAST 5 FEET FROM BACK OF SIDEWALK TO PROPERTY LINE. IF INSUFFICIENT ROOM EXISTS FOR THE POLE TO BE SET BEHIND SIDEWALK, THEN THE POLE SHOULD BE SET IN THE SIDEWALK WITH STREET FACE 3 INCHES FROM BACK OF CURB MAINTAINING 48 INCHES OF CLEAR SIDEWALK. REPLACEMENT POLES ARE TO BE SET IN EXISTING POLE POSITION.
3. STAKES SET IN ALLEYS ARE SET 12 INCHES OUT FROM THE PROPERTY LINE. AT INTERSECTIONS OF ALLEYS AND STREETS, STAKES ARE SET IN STREET POSITION AND 12 INCHES BACK FROM THE EXTENDED PROPERTY LINE OF ALLEY. (a)

E. **USAGE OF SPIKES VERSUS STAKES:**
SINCE STAKES MAY BE HAZARDOUS TO THE PUBLIC, USE A 20-PENNY SPIKE IN PLACE OF A WOODEN STAKE TO MARK POLES WHICH ARE TO BE SET IN AREAS SUBJECT TO PEDESTRIAN TRAFFIC. POSITIONING AND NUMBERING INSTRUCTIONS APPLY TO SPIKES AS WELL AS STAKES.

F. **NUMBERING OF STAKES:**
STAKES ARE NUMBERED CONSECUTIVELY BEGINNING WITH "1", WHICH IS THE FIRST NEW POLE IN ANY SURVEYED EXTENSION. STAKES FOR POLES HAVE THE LETTER "P" PRECEDING THE NUMBER AS P1, P2, ETC. ANCHOR STAKES CARRY THE LETTER "A".

G. **LENGTH OF POLES:**
POLES SHALL BE OF ADEQUATE LENGTH TO PROVIDE AT LEAST THE MINIMUM CONDUCTOR CLEARANCES ABOVE GROUND AND FROM OTHER CONDUCTORS OR STRUCTURES PER G.O. 95. (f) (q)

H. WHEN A NEW POLE OR POLE REPLACEMENT IS REQUIRED THAT IS BUCKET TRUCK ACCESSIBLE, THE DESIGN MUST MAINTAIN SUFFICIENT CLEARANCE TO ACCOMODATE THE USE OF BUCKET TRUCK AND THE RUBBER GLOVE WORK METHOD. SUFFICIENT CLEARANCE WILL BE A MINIMUM OF SIX FEET BETWEEN TWO PRIMARY LEVELS, PRIMARY AND SECONDARY LEVEL, PRIMARY LINE AND BUCK, OR PRIMARY AND COMMUNICATION LEVEL. LOCATIONS THAT ARE NOT BUCKET TRUCK ACCESSIBLE MAY REMAIN LESS THAN 6FT. (K)

J. CARE SHOULD BE EXERCISED WHEN USING MINIMUM CLEARANCES ALONG ROADS AND OVER AREAS WHERE AGRICULTURAL EQUIPMENT IS USED. SPECIAL CARE SHOULD BE TAKEN OVER EXISTING OR PROPOSED ORCHARDS TO PROVIDE CLEARANCE FOR PICKING.

REV	CHANGE	DRWN	BY	CHKD	APVD	DATE
H	NOTES UPDATE	EDM	MRF	GLW	KRG	09/06/2022
G	NOTES UPDATE	EDM	MRF	GLW	CZH	07/29/2021
F	EDITORIAL CHANGES	-	JES	JES	CZH	05/23/2019

SDGE — A Sempra Energy utility

SDG&E ELECTRIC OVERHEAD CONSTRUCTION STANDARDS

POLE INFORMATION

SCALE: NOT TO SCALE

DRAWING NO: OH303.1

SHEET: 1 OF 3

© 1998 - 2022 San Diego Gas and Electric Company. All rights reserved. Removal of this copyright notice without permission is not permitted under law.

X Indicates Latest Revision | Completely Revised | New Page | Information Removed

TABLE OF CONTENTS

INSTALLATION (CONT'D):

(K) **ADDITIONAL POLE HEIGHT FOR BUCKET TRUCK WORKING CLEARANCE:**

THERE WILL BE A MINIMUM OF SIX FEET BETWEEN CONDUCTOR LEVELS TO ACCOMMODATE THE USE OF BUCKET TRUCKS AND THE RUBBER GLOVING WORK METHOD. EXISTING CONDUCTOR LEVELS MAY REMAIN LESS THAN 6FT IF THIS ACCOMMODATION WOULD REQUIRE A NEW POLE INSTALLATION. EXISTING CONFIGURATIONS, OR LOCATIONS THAT ARE NOT BUCKET TRUCK ACCESSIBLE, MAY REMAIN LESS THAN 6FT.

L. TABLE 1 GIVES THE MINIMUM DEPTH OF 10 PERCENT PLUS TWO FEET FOR SETTING POLES IN FIRM SOIL AND 10 PERCENT PLUS ONE FOOT FOR SOLID ROCK.

M. WHERE UNGUYED POLES ARE SET SUBJECT TO HEAVY STRAINS, OR AT CORNERS OR CURVES, A GREATER DEPTH CAN BE USED. FOR DEPTHS IN SOFT OR LOOSE SOIL CONSULT WITH ENGINEERING PRIOR TO INSTALLATION.

N. PRIMARY RISER OR CABLE POLE SETTING DEPTH SHALL BE PER TABLE 1 OR 9 FEET, WHICHEVER IS GREATER.

O. SECONDARY RISER OR CABLE POLE SHALL BE PER TABLE 1 OR 2 TIMES TRENCH DEPTH, WHICHEVER IS GREATER.

(P) COMPACTED NATIVE SOIL IS THE PREFERRED MATERIAL FOR BACKFILLING DIRECT EMBEDDED DISTRIBUTION POLES. SOIL SHOULD BE FREE OF GRASSES, WEEDS AND OTHER ORGANIC MATERIALS. ROCKS SHALL BE LESS THAN 2 INCHES IN DIAMETER. NATIVE SOIL WITH OR WITHOUT 2 SACK DRY CONCRETE MIX BACKFILL SHOULD BE PLACED IN 6-INCH LIFTS MAXIMUM AFTER COMPACTION. EACH LAYER SHOULD BE TAMPED UNTIL THE COMPACTED SOIL HAS REACHED A DENSITY NO LESS THAN THAT OF THE SURROUNDING SOIL. PNEUMATIC OR HYDRAULIC TAMPING IS PREFERRED OVER MANUAL TAMPING TO ENSURE COMPACTION REQUIREMENTS ARE MET. AFTER COMPACTION, THE TOP SURFACE SHALL BE 8 INCHES HIGHER THAN THE SURROUNDING SOIL AND SLOPED AWAY FROM POLE FOR PROPER DRAINAGE.

Q. DO NOT ALLOW GRADING WITHIN A FIVE-FOOT RADIUS OF AN SDG&E POLE. ANY GRADING OUTSIDE OF THE FIVE-FOOT RADIUS WILL CONFORM TO A SLOPE OF NO GREATER THAN ONE-TO-ONE. THIS DOES NOT APPLY TO TEMPORARY TRENCHING. (h)

R. IN ALL CASES, THE POSSIBLE FUTURE EXTENSION OF THE LINE AND THE MAXIMUM NUMBER OF CIRCUITS TO BE INSTALLED SHALL BE GIVEN CONSIDERATION AND ADEQUATE POLE LENGTH PROVIDED.

TABLE 1

POLE SETTING DEPTH ON LEVEL TERRAIN		
LENGTH OF POLE OVERALL "L" (FT)	**POLE SET IN FIRM SOIL**	**POLE SET IN SOLID ROCK**
25	4'-6"	3'-6"
30	5'-0"	4'-0"
35	5'-6"	4'-6"
40	6'-0"	5'-0"
45	6'-6"	5'-6"
50	7'-0"	6'-0"
55	7'-6"	6'-6"
60	8'-0"	7'-0"
65	8'-6"	7'-6"
70	9'-0"	8'-0"
75	9'-6"	8'-6"
80	10'-0"	9'-0"
85	10'-6"	9'-6"
90	11'-0"	10'-0"
95	11'-6"	10'-6"
100	12'-0"	11'-0"
110	13'-0"	12'-0"

(S) WHEN PLACING A POLE ON SLOPING GROUND, IF LOADING IS NOT CONTROLLED BY UPLIFT FORCES, POLE SETTING DEPTH SHALL BE DETERMINED BY FOLLOWING THE GUIDELINES BELOW.

1. MEASURE PERPENDICULAR FROM THE POLE CENTERLINE AT GROUNDLINE, TO A DISTANCE OF 5 FEET IN THE DOWNHILL SLOPE DIRECTION AT A LEVEL PLANE. SEE "PROJECTED POINT" ON FIGURE 1.
2. IF THE VERTICAL MEASUREMENT, Z, FROM THE PROJECTED POINT TO EXISTING GRADE IS LESS THAN 1-FOOT, SETTING DEPTH SHALL BE AS DEFINED IN TABLE 1.
3. IF THE VERTICAL MEASUREMENT, Z, IS GREATER THAN 1-FOOT, THEN A REVISED POLE SETTING DEPTH SHALL BE DETERMINED BY ADDING THE VERTICAL MEASUREMENT, Z, TO THE LEVEL TERRAIN POLE SETTING DEPTH (AS DEFINED IN TABLE 1).

T. WHEN AN EMBEDMENT DEEPER THAN THE STANDARD EMBEDMENTS IN TABLE 1 IS REQUIRED DUE TO SLOPE, OR IS SPECIFIED BY THE ENGINEER OF RECORD, THE FOLLOWING LIMITATIONS MUST BE FOLLOWED:

1. FOR EMBEDMENTS EXCEEDING 0.10 X L + 5'-0", THE CORROCOTE SHOULD BE EXTENDED AT LEAST 1 FOOT ABOVE GRADE LEVEL. (i)
2. ADDITIONAL GROUND NUTS ARE TO BE INSTALLED IN FIELD SO THAT GROUNDING WIRES ARE VISIBLE FOR INSPECTION PURPOSES.
3. THE SLIP JOINT (BOTTOM EDGE) MUST BE A MINIMUM OF 2 FEET ABOVE GRADE FOR DESIGN SPLICE DIMENSION. TO ACCOMMODATE TOLERANCES FOR MAXIMUM SLIP JOINT OVERLAP DURING INSTALLATION, THE SLIP JOINT MUST CLEAR 1'-6" ABOVE GRADE.
4. IF NEEDED, FIELD DRILL HOLE TO ENSURE INITIAL CLIMBING STEP LOCATION MEETS MINIMUM REQUIREMENTS. (e)
5. FOR ONE-PIECE POLES, THE NAMEPLATE ID MUST NOT BE BURIED UNLESS IT IS COORDINATED TO PROVIDE A REPLACEMENT NAMEPLATE ID ABOVE GRADE WITH IDENTICAL INFORMATION FROM THE ORIGINAL NAMEPLATE ID. FOR TWO-PIECE POLES, THE NAMEPLATE ID ON THE BOTTOM SECTION MAY BE BURIED IF NECESSARY. IF THE NAMEPLATE ID ON THE TOP SECTION OF THE POLE IS NOT VISIBLE FROM GROUND, COORDINATE WITH THE FIELD TO HAVE AN ADDITIONAL NAMEPLATE ID PLACED ON THE STEEL POLE.
6. IF THE ABOVE ITEMS CANNOT BE MET USING A STANDARD DISTRIBUTION POLE, A DEVIATION REQUEST IS REQUIRED IF A CUSTOM ORDER POLE IS NEEDED.
7. THE DEEPER EMBEDMENT SHOULD BE INDICATED ON THE PROJECT DOCUMENTATION.
8. CONSIDERATIONS FOR CONSTRUCTABILITY OF DEEPER EMBEDMENTS SHOULD BE COORDINATED WITH THE PROJECT MANAGER (E.G. HELO-SET SITES, CUSTOM FIELD MODIFICATIONS NEEDED, ETC.).

BILL OF MATERIALS: NONE

NOTES:

I. **POLE SPACING:**

a. IN URBAN AREAS, POLE SPACING IS USUALLY DICTATED BY PROPERTY LINES, STREET OR ALLEY CORNERS, OR SERVICE REQUIREMENTS. IN RESIDENTIAL AREAS, POLES SHOULD BE PLACED AT EVERY THIRD LOT LINE, UNLESS LOTS ARE UNUSUALLY WIDE, AND AT CORNERS. IN COMMERCIAL OR INDUSTRIAL AREAS, THE POINT OF SERVICE AND LOCATION OF LARGE TRANSFORMER BANKS WILL INDICATE POLE LOCATIONS. MAXIMUM SPANS IN URBAN AREAS SHALL NOT EXCEED 300 FEET UNLESS SPECIFIED BY THE OVERHEAD CONSTRUCTION STANDARDS GROUP.

b. IN RURAL AREAS, POLE SPACING SHOULD BE 300 FEET OR GREATER, WHERE PROFILE AND CONDUCTOR SPACING PERMIT. WHERE POSSIBLE, POLES SHOULD BE SPACED SO AS TO FALL AT STREET OR ALLEY INTERSECTIONS OR ON PROPERTY LINES WHERE THESE ARE DEFINED BY FENCES, ETC.

II. **RAILROAD AND COMMUNICATIONS CROSSINGS:**

GRADE "A" CROSSINGS SHALL BE MADE AS SHORT AND AS NEAR PERPENDICULAR AS PRACTICAL. APPROVAL OF THE OVERHEAD CONSTRUCTION STANDARDS GROUP SHALL BE OBTAINED FOR SPANS EXCEEDING RAILROAD RIGHT-OF-WAY BY MORE THAN 40 FEET.

REV	CHANGE	DRWN	BY	CHKD	APVD	DATE
H	NOTES UPDATE	EDM	MRF	GLW	KRG	09/06/2022
G	NOTES UPDATE	EDM	MRF	GLW	CZH	07/29/2021
F	EDITORIAL CHANGES	-	JES	JES	CZH	05/23/2019

SDGE — A Sempra Energy utility

SDG&E ELECTRIC OVERHEAD CONSTRUCTION STANDARDS

POLE INFORMATION

SCALE: NOT TO SCALE

DRAWING NO: OH303.2

SHEET: 2 OF 3

© 1998 - 2022 San Diego Gas and Electric Company. All rights reserved. Removal of this copyright notice without permission is not permitted under law.

X Indicates Latest Revision | Completely Revised | New Page | Information Removed

NOTES (CONT'D):

III. **SIDE OF STREET:**

POLES SHOULD BE SET ON THE SOUTH AND WEST SIDES OF STREETS, ALLEYS, OR HIGHWAYS. IT MAY BE NECESSARY TO OCCUPY THE NORTH OR EAST SIDES OF STREETS OR HIGHWAYS DUE TO INTERFERENCE WITH EXISTING TELEPHONE LINES, TREES, OR OTHER OBSTRUCTIONS.

IV. **FIRE HYDRANTS, TRAFFIC SIGNALS, AND SIGNS:**

POLES MUST CLEAR FIRE HYDRANTS BY NOT LESS THAN 4 FEET. THIS IS A SURFACE MEASUREMENT. THEY SHALL BE SET SO THEY WILL NOT OBSTRUCT VISIBILITY OF TRAFFIC SIGNS OR SIGNALS.

V. **TREES:**

POLES SHOULD BE LOCATED SO AS NOT TO INJURE ROOT SYSTEMS OF EXISTING TREES.

VI. **CLASS OF POLES TO BE USED:**

THE BENDING MOMENT ON A POLE AT THE GROUNDLINE AND TOTAL VERTICAL LOADING ARE THE GOVERNING FACTORS DETERMINING THE CLASS OF POLE TO BE SELECTED FOR THE SEVERAL GRADES OF CONSTRUCTION SPECIFIED BY G.O. 95. (j)(k)(l)(m)(n)(o)

POLE LOADING CALCULATIONS USING LOAD DISTRICT SPECIFICATIONS DEFINED IN TRANSMISSION STANDARD 12100 ARE REQUIRED FOR ALL NEW AND REPLACEMENT POLE INSTALLATIONS. (p)

REFERENCE:

(a) FOR POLE POSITIONS, SEE OH216.
b. FOR POLE PLACEMENT REQUIREMENTS, SEE DM5121.
c. FOR POLE SELECTION CRITERIA, SEE DM5122.
d. SEE TE-0105: ELECTRIC TRANSMISSION ENGINEERING & DESIGN SPECIFICATIONS.
(e) FOR STEEL DISTRIBUTION POLE DRILLING DIMENSIONS AND DETAILS, SEE OH310.
(f) FOR SEPARATION OF CIRCUITS AND GROUND CLEARANCES, SEE OH220.
g. FOR INSTALLATION OF PERMANENT STEPS, SEE OH363.
(h) FOR TEMPORARY POLE SUPPORT FOR TRENCHING OPERATIONS, SEE OH372.
(i) FOR REQUESTING EXTENSION OF CORROCOTE, SEE EDE DECEMBER 2020 NEWSLETTER.
(j) FOR LOADING DISTRICTS, SEE OH340.
(k) FOR SAMPLE WIND AND VERTICAL LOADING CALCULATIONS, SEE OH346.
(l) FOR VERTICAL LOADING DUE TO GUY, SEE OH349.
(m) FOR HEIGHT OF ATTACHMENT CORRECTION FACTORS AND EQUIPMENT, SEE OH350.
(n) FOR MOMENTS DUE TO EQUIPMENT, SEE OH352.
(o) FOR POLE LOADING FOR WOOD, FIBERGLASS, AND STEEL, SEE OH354.
(p) SEE TRANSMISSION STANDARD 12100: DIRECT BURIED POLE SELECTION & LOADING CRITERIA.
(q) SEE G.O. 95.

TABLE OF CONTENTS

REV	CHANGE	DRWN	BY	CHKD	APVD	DATE
H	NOTES UPDATE	EDM	MRF	GLW	KRG	09/06/2022
G	NOTES UPDATE	EDM	MRF	GLW	CZH	07/29/2021
F	EDITORIAL CHANGES	-	JES	JES	CZH	05/23/2019

SDGE
A Sempra Energy utility

SDG&E ELECTRIC OVERHEAD CONSTRUCTION STANDARDS

POLE INFORMATION

SCALE: NOT TO SCALE

DRAWING NO: OH303.3

SHEET: 3 OF 3

© 1998 - 2022 San Diego Gas and Electric Company. All rights reserved. Removal of this copyright notice without permission is not permitted under law.

X Indicates Latest Revision | Completely Revised | New Page | Information Removed

SCOPE: REQUIREMENTS FOR THE FABRICATION, ASSEMBLY, AND INSTALLATION OF GALVANIZED AND WEATHERING TUBULAR AND MULTI-SIDED DISTRIBUTION STEEL POLES ARE PROVIDED IN THIS STANDARD. DETAIL LOCATIONS AND DIMENSIONS FOR POLE HOLES AND CONNECTIONS ARE PROVIDED HEREIN.

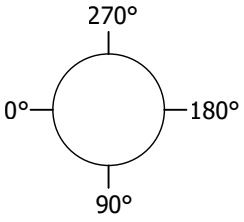

FIGURE 1
VIEW A-A

FIGURE 1
FINISHING DETAILS AT 90° AND 270° QUADRANTS

TABLE OF CONTENTS

© 1998 - 2021 San Diego Gas & Electric Company. All rights reserved. Removal of this copyright notice without permission is not permitted under law.

REV	CHANGE	DR	BY	DSN	APV	DATE	REV	CHANGE	DR	BY	DSN	APV	DATE
C	EDITORIAL CHANGES	-	JIK	JES	CZH	5/23/2019	F	EDITORIAL CHANGES	EDM	GLW	JES	CZH	06/21/2021
B	EDITORIAL CHANGES	-	GW	JS	MDJ	10/25/2017	E	EDITORIAL CHANGES	-	GLW	JES	CZH	9/30/2019
A	EDITORIAL CHANGES	-	JC	IL	JS/MDJ	5/4/2015	D	NOTES UPDATE	-	JC	JS	CZH	6/13/2019

X Indicates Latest Revision | Completely Revised | New Page | Information Removed

SDG&E ELECTRIC OVERHEAD CONSTRUCTION STANDARDS

STEEL DISTRIBUTION POLES
DRILLING DIMENSIONS AND DETAILS

OH310.1

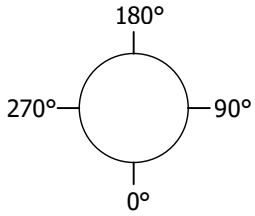

FIGURE 2
VIEW A-A

FIGURE 2
FINISHING DETAILS AT 0° AND 180° QUADRANTS J3

© 1998 - 2021 San Diego Gas & Electric Company. All rights reserved. Removal of this copyright notice without permission is not permitted under law.

REV	CHANGE	DR	BY	DSN	APV	DATE	REV	CHANGE	DR	BY	DSN	APV	DATE
C	EDITORIAL CHANGES	-	JIK	JES	CZH	5/23/2019	F	EDITORIAL CHANGES	EDM	GLW	JES	CZH	06/21/2021
B	EDITORIAL CHANGES	-	GW	JS	MDJ	10/25/2017	E	EDITORIAL CHANGES	-	GLW	JES	CZH	9/30/2019
A	EDITORIAL CHANGES	-	JC	IL	JS/MDJ	5/4/2015	D	NOTES UPDATE	-	JC	JS	CZH	6/13/2019

X Indicates Latest Revision | Completely Revised | New Page | Information Removed

TABLE OF CONTENTS

INSTALLATION:

A. **POLE IDENTIFICATION AND TAG INFORMATION:**

VERIFY TOP AND BOTTOM SECTIONS ARE CORRECT FOR 2-SECTION POLE APPLICATIONS.

B. **FOUNDATION:** (k)

CARE NEEDED TO MINIMIZE DAMAGE TO CORROCOTE; REPAIR AS NEEDED.

C. **FIELD DRILLING:**

DISTRIBUTION STEEL POLES MAY BE RECEIVED WITH OR WITHOUT PRE-DRILLED HOLES OR "KNOCK-OUTS". ALL UNUSED HOLES ARE TO BE PLUGGED WITH A POLYMER PLUG. DUE TO THE NUMEROUS POSSIBLE LOCATIONS FOR TRANSFORMER, CAPACITOR OR OTHER EQUIPMENT MOUNTING HOLES, FIELD DRILLING OF HOLES MAY BE NECESSARY. FIELD DRILLING TO MOUNT EQUIPMENT, CROSSARMS, BRACES, ETC. IS PERMITTED WITH THE FOLLOWING RESTRICTIONS: NO TWO HOLES ARE ALLOWED CLOSER TO EACH OTHER THAN THREE INCHES VERTICALLY, NOR LESS THAN 90 DEGREES RADIALLY AROUND THE POLE AT THE SAME LEVEL. FOR MULTI-SIDED POLES, NO HOLES SHALL BE LOCATED ON POINTS.

D. **SLIP-JOINT ASSEMBLY:**

POLES WILL BE EITHER 1-PIECE OR 2-PIECE STRUCTURES.

POLE ASSEMBLY METHOD:

1. SELECT TOP AND BOTTOM POLE SECTIONS AFTER CHECKING I.D. TAG ON TOP AND BOTTOM POLE SECTIONS TO ENSURE MATCHING SECTIONS.
2. PLACE MATCHING POLE SECTION ON WOOD BLOCKS ON LEVEL GROUND.
3. ALIGN WELD SEAMS ON TOP AND BOTTOM SECTIONS TO ENSURE ALIGNMENT OF SEAM, STEP HOLES AND JACKING NUTS.
4. ENSURE SLIP-JOINT SURFACES ARE FREE OF DIRT AND DEBRIS. SOAPY WATER MAY BE USED AS LUBRICANT BETWEEN SURFACES.
5. ATTACH SOFT CORDAGE YALE SLING TO TOP AND BOTTOM POLE SECTIONS AND JOIN USING TWO 1 1/2 TON (MIN.) HARRINGTON HOISTS.
6. JOIN SECTIONS UNTIL LOWER SECTION IS VISIBLE IN "PEEP-HOLE" OF TOP SECTION, OR WITHIN MIN./MAX. SPLICE SECTION.
7. JACKING RIGGING MUST REMAIN IN PLACE, OR A 3/4-INCH STEEL "THROUGH-BOLT" MUST BE INSERTED THROUGH BOTH SECTIONS, UNTIL THE POLE IS SECURELY PLACED IN THE POLE HOLE.

E. **POLE CAP:**

POLES ARE RECEIVED WITH A STEEL CAP. A NEW POLYMER CAP (S203268) MUST BE INSTALLED TO PREVENT THE ENTRY OF RAIN OR PERCHING OF BIRDS IF POLE CAP IS MISSING.

F. **HARDWARE:**

ALL CROSSARMS, BRACES AND HARDWARE THAT ARE USED FOR WOOD POLES CAN BE USED FOR STEEL POLES. WHEN PLACING A SQUARE WASHER UP AGAINST A STEEL POLE, A SQUARE CURVED WASHER SHALL BE USED ON TUBULAR POLES; A SQUARE FLAT WASHER SHALL BE USED ON MULTI-SIDED POLES. (c)

G. **MARKINGS:**

WHEN MARKING STEEL POLES, USE HILTI POWDER ACTUATED FASTENING NAILS OR SELF-TAPPING SCREWS (S618086 (X)). FOR GALVANIZED POLES, USE THE SELF-ADHESIVE "HIGH VOLTAGE" SIGN (S647650). (d)

H. **GROUNDING:**

THE STEEL POLE PROVIDES THE GROUND PATH BETWEEN THE EQUIPMENT/LIGHTNING ARRESTER GROUND CONNECTION AND THE GROUND ROD CONNECTION. FACTORY-WELDED GROUNDING NUTS ARE TO BE USED FOR CONNECTING THE GROUND HARDWARE TO THE POLE. A BLIND-NUT (S503460) SHALL BE USED TO ATTACH THE BRONZE SPLIT-BOLT GROUND STUD CONNECTOR (S262560) TO THE POLE IF A FACTORY-WELDED GROUND NUT IS NOT AVAILABLE. (e)

TABLE OF CONTENTS

© 1998 - 2021 San Diego Gas & Electric Company. All rights reserved. Removal of this copyright notice without permission is not permitted under law.

REV	CHANGE	DR	BY	DSN	APV	DATE	REV	CHANGE	DR	BY	DSN	APV	DATE
C	EDITORIAL CHANGES	-	JIK	JES	CZH	5/23/2019	F	EDITORIAL CHANGES	EDM	GLW	JES	CZH	06/21/2021
B	EDITORIAL CHANGES	-	GW	JS	MDJ	10/25/2017	E	EDITORIAL CHANGES	-	GLW	JES	CZH	9/30/2019
A	EDITORIAL CHANGES	-	JC	IL	JS/MDJ	5/4/2015	D	NOTES UPDATE	-	JC	JS	CZH	6/13/2019

Indicates Latest Revision | Completely Revised | New Page X | Information Removed

SDG&E ELECTRIC OVERHEAD CONSTRUCTION STANDARDS

STEEL DISTRIBUTION POLES
DRILLING DIMENSIONS AND DETAILS

OH310.3

INSTALLATION (CONT'D):

J. **STEPS:**

1. REMOVABLE POLE STEPS ARE AVAILABLE. THESE STEPS ARE FULLY RATED AND CAN REMAIN ON THE POLE AS A PERMANENT STEP. PRE-DRILLED STEP HOLES ARE PROVIDED FROM GROUNDLINE UP TO 6 FEET BELOW THE PRIMARY LINEARM LEVEL ON A 15-INCH SPACING WITH WORKING STEP LOCATIONS AT APPROXIMATELY 4 1/2 FEET BELOW EACH CONDUCTOR LEVEL. STEP POLE FROM THE TOP DOWN TO 10 FEET ABOVE GROUNDLINE. (f)

(2) CLIMBING STEPS SHALL EXTEND CONTINUOUSLY FROM 1'-3" ABOVE GROUND LINE TO 4 FEET FROM TOP OF THE POLE. (NOT SHOWN FOR CLARITY) (VII)(VIII)(IX)(f)

(3) CLIMBING STEPS ALTERNATE BETWEEN 0 DEGREES AND 180 DEGREES QUADRANTS (SHOWN IN FIGURE 1 FOR CLARITY)(VII)(VIII)(IX)(f)

K. **PLUGS:**

IF A HOLE IS NOT PLUGGED AT COMPLETION OF INSTALLATION, A PLUG MUST BE INSTALLED TO PREVENT INSECTS AND SMALL ANIMALS FROM POSSIBLY BUILDING A HIVE OR NEST INSIDE THE POLE. (i)

(L) **STORAGE DETAIL:**

STORING OF STEEL POLES SHALL MEET TE-100, PARAGRAPH 8 REQUIREMENTS. REFER TO FIGURE 3 FOR DETAILS ON THE POLE RACK.

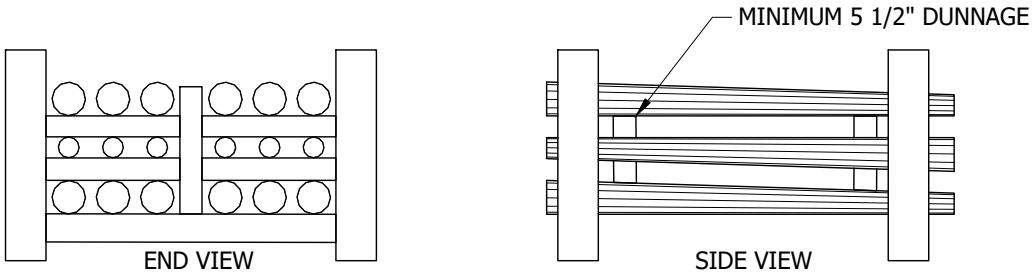

FIGURE 3
POLE STORAGE (L)

BILL OF MATERIALS: NONE

NOTES:

I. STEEL POLE WORKSPACE:

A SIX-FOOT CLEARANCE BETWEEN COMMUNICATION CONDUCTOR AND 0-750V MUST BE MAINTAINED ON ALL DISTRIBUTION STEEL POLES. A SIX-FOOT CLEARANCE BETWEEN 0-750V CABLE AND PRIMARY MUST BE MAINTAINED ON ALL DISTRIBUTION STEEL POLES.THE REDUCTION TO FOUR-FOOT CLEARANCE WITH GUARD-ARM IS NOT ALLOWED. (j)

II. POLE I.D. ON TOP SECTION OF 2-PIECE POLE IS 1-FOOT AS MEASURED FROM BOTTOM OF POLE SECTION. NAME PLATE TO BE IN 90 DEGREES QUADRANT.

III. ALL HOLES ARE FACTORY-DRILLED OR CUT.

(IV) GROUND NUTS INSTALLED AT 135 DEGREES AND 225 DEGREES. GROUNDING NUTS SHALL NOT CONFLICT WITH STEPS, POINTS OR EQUIPMENT.

(V) GROUND NUTS INSTALLED AT 45 DEGREES AND 315 DEGREES. GROUNDING NUTS SHALL NOT CONFLICT WITH STEPS, POINTS OR EQUIPMENT.

(VI) STEEL POLE MANUFACTURER TO DRILL A 5/8-INCH THROUGH-HOLE, WELD A 1/2-INCH STAINLESS STEEL NUT OVER THE HOLE AND INSTALL BOLTS AND WASHERS AT ALL GROUND NUT LOCATIONS. FOR 2-PIECE POLE, ONLY ADD AN ADDITIONAL GROUND NUT AT 10% X L + 4'-0" ABOVE BUTT OF POLE.

(VII) POLE STEPS ARE 180 DEGREES APART WHERE POLE DIAMETER IS LESS THAN OR EQUAL TO 12 INCHES AND 120 DEGREES APART WHERE POLE DIAMETER IS GREATER THAN 12 INCHES.

(VIII) 15-INCH MAXIMUM AND 6-INCH MINIMUM VERTICAL DISTANCE BETWEEN CLIMBING STEP AND SECONDARY CROSSARMS OR WORKING STEPS TO BE MAINTAINED BY SHIFTING LOCATION OF CLIMBING STEPS ABOVE AND BELOW SECONDARY CROSSARMS OR WORKING STEPS. APPROVED BASIC POLE HOLE PATTERN AVAILABLE ON REQUEST.

© 1998 - 2021 San Diego Gas & Electric Company. All rights reserved. Removal of this copyright notice without permission is not permitted under law.

REV	CHANGE	DR	BY	DSN	APV	DATE	REV	CHANGE	DR	BY	DSN	APV	DATE
C	EDITORIAL CHANGES	-	JIK	JES	CZH	5/23/2019	F	EDITORIAL CHANGES	EDM	GLW	JES	CZH	06/21/2021
B	EDITORIAL CHANGES	-	GW	JS	MDJ	10/25/2017	E	EDITORIAL CHANGES	-	GLW	JES	CZH	9/30/2019
A	EDITORIAL CHANGES	-	JC	IL	JS/MDJ	5/4/2015	D	NOTES UPDATE	-	JC	JS	CZH	6/13/2019

NOTES (CONT'D):

(IX) 3-INCH MINIMUM VERTICAL DISTANCE TO BE MAINTAINED BETWEEN CLIMBING STEP AND GROUND NUT OR GUY BY SHIFTING VERTICAL LOCATION OF GROUND NUT OR GUY. CLIMBING STEPS ARE NOT TO BE SHIFTED.

(X) THIS ITEM IS EXEMPT.

XI. HEAVIER DUTY H-CLASS TUBULAR OR MULTI-SIDED STEEL POLES MAY BE AVAILABLE BY SPECIAL ORDER. CONTACT EDE FOR MORE INFORMATION.

XII. **CONFORMANCE FOR MANUFACTURING:**

a. POLE REQUIREMENTS SHALL BE IN ACCORDANCE WITH TE-0042 TECHNICAL SPECIFICATION FOR WELDED TUBULAR STEEL TRANSMISSION AND DISTRIBUTION POLE STRUCTURES.

b. ALL POLE DIMENSIONS SHALL CONFORM TO THIS STANDARD AS WELL AS TE-0042.

c. TOLERANCES SHALL BE PLUS OR MINUS AS FOLLOWS; HOLE DIAMETERS 1/32-INCH, HOLE LOCATIONS 1/16-INCH, POLE LENGTH PLUS: 1-INCH, MINUS: 0 INCHES.

d. POLE AND POLE HOLE ALIGNMENT MAY NOT DEVIATE FROM STRAIGHT MORE THAN 1/8-INCH IN 10 FEET.

XIII. **MARKING:**

a. LIFTING BALANCE POINT SHALL BE CLEARLY MARKED ON EACH SECTION. AN ENGRAVED METAL PLATE SHALL BE PERMANENTLY ATTACHED TO THE 90 DEGREE FACE, OR GAIN SIDE, 13 FEET FROM BASE OF POLE, ON A NON-COATED POLE SURFACE.

(b) THE NAME PLATE SHALL CONTAIN THE FOLLOWING INFORMATION: MANUFACTURER, HEIGHT AND CLASS, TYPE, DATE OF MANUFACTURER, SALES ORDER NUMBER AND SERIAL NUMBER. THE SERIAL NUMBER SHALL BEGIN WITH A LETTER FOR SITE I.D., FOLLOWED BY A PART NUMBER AND FABRICATION SEQUENCE NUMBER.

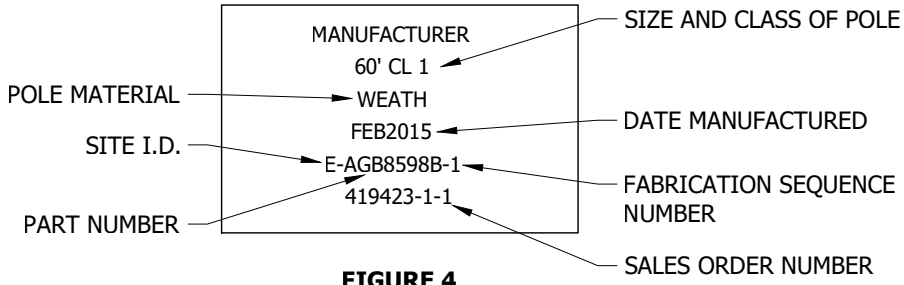

FIGURE 4
SAMPLE NAME PLATE (XIIIb)

(c) ON 2-PIECE POLE, AN ENGRAVED METAL PLATE SHALL ALSO BE PERMANENTLY ATTACHED TO THE 90 DEGREE FACE OF THE TOP SECTION AT 1-FOOT ABOVE THE BOTTOM OF THE SPLICE.

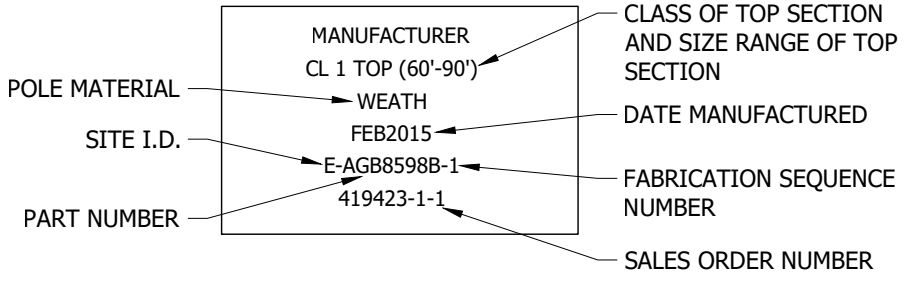

FIGURE 5
SAMPLE TOP SECTION NAME PLATE (XIIIc)

d. THE LETTERING ON THE NAME PLATE SHALL BE 1/2-INCH TALL AND 0.03-INCH DEEP.

© 1998 - 2021 San Diego Gas & Electric Company. All rights reserved. Removal of this copyright notice without permission is not permitted under law.

REV	CHANGE	DR	BY	DSN	APV	DATE	REV	CHANGE	DR	BY	DSN	APV	DATE
C	EDITORIAL CHANGES	-	JIK	JES	CZH	5/23/2019	F	EDITORIAL CHANGES	EDM	GLW	JES	CZH	06/21/2021
B	EDITORIAL CHANGES	-	GW	JS	MDJ	10/25/2017	E	EDITORIAL CHANGES	-	GLW	JES	CZH	9/30/2019
A	EDITORIAL CHANGES	-	JC	IL	JS/MDJ	5/4/2015	D	NOTES UPDATE	-	JC	JS	CZH	6/13/2019

TABLE OF CONTENTS

NOTES (CONT'D):

XIV. **CAPS AND COATING:**

a. POLES WILL BE SHIPPED WITH A STEEL CAP (WELDED FOR WEATHERED POLES, BOLTED FOR GALVANIZED POLES). IF A POLE CAP IS MISSING, A POLYMER CAP MUST BE INSTALLED TO PREVENT RAIN FROM ACCUMULATING INSIDE THE POLES AND TO DETER BIRDS FROM PERCHING ON THE POLE TOPS.

b. TWO COATS OF 20 MIL POLYURETHANE COATING SHALL BE APPLIED ON THE OUTSIDE OF THE BOTTOM 10% X L + 6'-0" OF THE POLE. THE TWO COATS SHALL BE APPLIED WITHIN A RECOAT WINDOW AS PER MANUFACTURER SPECIFICATION. THIS COATING SHALL BE "CORROCOTE 2 CLASSIC" OR CHEMTHANE II OR AN APPROVED EQUIVALENT PRODUCT. IT SHALL CONSIST OF 100% SOLIDS AND CONTAIN NO HAZARDOUS MATERIALS. (CORROCOTE IS THE PREFERRED COATING)

c. THE THICKNESS OF THE OUTSIDE POLYURETHANE COATING SHALL BE 35 MIL MINIMUM AND 40 MIL NOMINAL.

d. ONE 20 MIL COAT OF THE SAME POLYURETHANE COATING SHALL BE APPLIED TO THE INSIDE BOTTOM 1-FOOT OF THE POLE AS WELL.

e. A 3 MIL UV PROTECTION COATING SHALL BE APPLIED OVER THE TOP OF THE POLYURETHANE COATING. THE UV TOP COAT SHALL BE ACRYLITHANE OR TNEMEC SERIES 73 OR AN APPROVED EQUIVALENT PRODUCT.

(f) THE BEARING PLATE SHALL BE THE SAME GRADE OF STEEL AS THE POLE AND SHALL BE WELDED TO THE BASE OF THE POLE WITH A CONTINUOUS, FULL CIRCUMFERENCE WELD. THE BEARING PLATE MAY NOT OVERHANG THE POLE BY MORE THAN 1/4-INCH ON ANY SIDE OR TANGENT ANGLE.

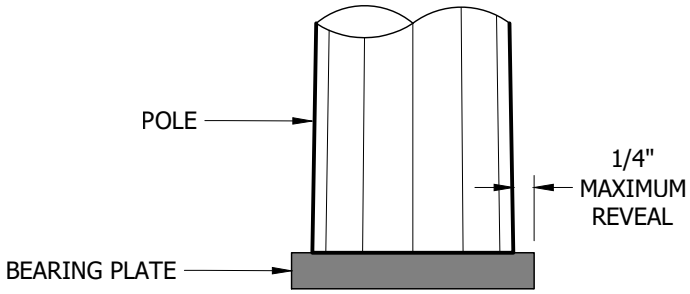

FIGURE 6
BEARING PLATE OVERHANG (XIVf)

(g) THE BEARING PLATE SHALL HAVE AN OPENING.

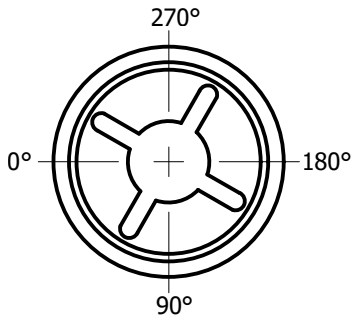

FIGURE 7
TYPICAL BEARING PLATE OPENING (XIVg)

© 1998 - 2021 San Diego Gas & Electric Company. All rights reserved. Removal of this copyright notice without permission is not permitted under law.

REV	CHANGE	DR	BY	DSN	APV	DATE	REV	CHANGE	DR	BY	DSN	APV	DATE
C	EDITORIAL CHANGES	-	JIK	JES	CZH	5/23/2019	F	EDITORIAL CHANGES	EDM	GLW	JES	CZH	06/21/2021
B	EDITORIAL CHANGES	-	GW	JS	MDJ	10/25/2017	E	EDITORIAL CHANGES	-	GLW	JES	CZH	9/30/2019
A	EDITORIAL CHANGES	-	JC	IL	JS/MDJ	5/4/2015	D	NOTES UPDATE	-	JC	JS	CZH	6/13/2019

NOTES (CONT'D):

XV. **SHIPPING:**

a. ALL POLES SHALL BE LOADED AND TRANSPORTED IN ACCORDANCE WITH ALL APPLICABLE FEDERAL AND STATE LAWS, RULES AND REGULATIONS.

b. POLES MAY BE SHIPPED BY EITHER TRUCK OR RAIL, UNLESS SPECIFICALLY DIRECTED BY SDG&E. IF POLES ARE SHIPPED BY RAIL, THEY SHALL BE LOADED ON FLAT CARS OF POLE GONDOLAS UNLESS SDG&E APPROVES THE USE OF ANOTHER TYPE OF CAR. CARS SHALL BE LOADED IN ACCORDANCE WITH THE LATEST ISSUE OF THE II ASSOCIATION OF AMERICAN RAILROADS II GOVERNING THE LOADING OF COMMODITIES ON OPEN TOP CARS.

c. POLES SHALL BE LOADED IN A MANNER THAT ALLOWS FOR SAFE AND ACCESSIBLE REMOVAL, AND PREVENTS DAMAGE DURING SHIPMENT. IN ADDITION, THERE SHALL BE A MINIMUM CLEARANCE OF 5 1/2-INCH BETWEEN ROWS OF POLES. THIS MINIMUM SEPARATION MAY BE ACHIEVED THROUGH THE USE OF WOOD DUNNAGE OR OTHER SUITABLE MATERIALS.

XVI. **PRODUCT DESIGN:**

a. THE POLES SHALL PRESENT THE MOST PLEASING APPEARANCE POSSIBLE CONSISTENT WITH THE STRENGTH, COST AND SERVICEABILITY REQUIREMENTS. THE HOLES SHALL BE SYMMETRICAL ABOUT THE TRANSVERSE AND LONGITUDINAL AXES, WITH A GRADUAL AND CONSTANT TAPER. PRIOR TO SHIPMENT, ALL HOLES AND GROUNDING INSERTS SHALL BE PLUGGED WITH A SUITABLE PRODUCT INTENDED TO LAST THE LIFE OF THE POLE, BUT EASILY REMOVABLE IF SO DESIRED.

b. ALL MATERIAL SHALL CONFORM TO THE CHEMICAL AND MECHANICAL PROPERTIES AS TESTED IN ACCORDANCE WITH THE APPROPRIATE ASTM OR OTHER INDUSTRY RECOGNIZED AND APPROVED EQUIVALENT SPECIFICATIONS.

c. TWO WELDED STAINLESS STEEL NUTS (1/2-INCH DIAMETER, #13 THREADS), ASTM A276 TYPE 316, SHALL BE INSTALLED AT 10% X L + 1'-0" AND 10% X L + 2'-6" FROM THE BOTTOM OF THE POLE. TWO WELDED STAINLESS STEEL NUTS SHALL ALSO BE INSTALLED AT 4 FEET FROM THE TOP OF THE POLE. REFER TO LATEST APPROVED FABRICATION DRAWINGS FOR ALL CUT AND WELD DETAILS.

d. THE NUTS SHALL BE WELDED AS PER AWS SPECIFICATIONS AND A HOLE SHALL BE LASER CUT/DRILLED IN THE POLE BEHIND THE NUT. A NYLON THREADED PLUG SHALL BE INSERTED INTO THE NUTS PRIOR TO THE APPLICATION OF THE COATINGS.

XVII. **FABRICATION:**

a. FABRICATION SHALL BE PERFORMED IN ACCORDANCE WITH THE POLE DETAIL DRAWINGS. MATERIAL SUBSTITUTIONS OR DEVIATIONS FROM THE APPROVED DRAWINGS SHALL NOT BE MADE WITHOUT WRITTEN APPROVAL FROM SDG&E.

b. DRILLING SHALL BE DONE IN SUCH A MANNER AS TO PRODUCE CYLINDRICAL HOLES. THE HOLES SHALL NOT VARY IN ROUNDNESS.

c. ALL HOLES SHALL BE FILLED WITH UV RESISTANT REMOVABLE POLYMER PLUGS.

XVIII. **INSPECTION:**

a. INSPECTION BY SDG&E WILL BE DONE UPON DELIVERY. SDG&E MAY INSPECT ORDERED PRODUCTS BEFORE SHIPMENT.

b. ALL POLES NOT IN ACCORDANCE WITH THESE SPECIFICATIONS SHALL BE SUBJECT TO REJECTION PRIOR TO INSTALLATION. SUPPLIER SHALL PROVIDE CREDIT OR REPLACEMENTS FOR POLES REJECTED AFTER DELIVERY.

REFERENCE:

a. FOR STEEL POLE APPLICATION GUIDELINES, SEE DM5122.

b. FOR STEEL POLE FABRICATION, SEE TE-0042.

(c) FOR HARDWARE, SEE OH392.

(d) FOR STEEL POLE MARKING, SEE OH208.

(e) FOR STEEL POLE GROUNDING, SEE OH1002.

(f) FOR STEEL POLE STEPPING, SEE OH363.

(g) FOR BENDING MOMENTS, SEE OH354.

(h) FOR STRUCTURAL POLE LOADING CALCULATION REQUIREMENTS, SEE 12100: DIRECT BURIED POLE SELECTION & LOADING CRITERIA.

TABLE OF CONTENTS

© 1998 - 2021 San Diego Gas & Electric Company. All rights reserved. Removal of this copyright notice without permission is not permitted under law.

REV	CHANGE	DR	BY	DSN	APV	DATE	REV	CHANGE	DR	BY	DSN	APV	DATE
C	EDITORIAL CHANGES	-	JIK	JES	CZH	5/23/2019	F	EDITORIAL CHANGES	EDM	GLW	JES	CZH	06/21/2021
B	EDITORIAL CHANGES	-	GW	JS	MDJ	10/25/2017	E	EDITORIAL CHANGES	-	GLW	JES	CZH	9/30/2019
A	EDITORIAL CHANGES	-	JC	IL	JS/MDJ	5/4/2015	D	NOTES UPDATE	-	JC	JS	CZH	6/13/2019

REFERENCE (CONT'D):

(i) FOR HOLE PLUGS, SEE OH311.

(j) GO 95 RULE 92.1-F (REDUCED CLEARANCE WITH GUARD ARM) DOES NOT APPLY.

(k) FOR BACKFILLING PROCEDURES, SEE OH303.

TABLE OF CONTENTS

© 1998 - 2021 San Diego Gas & Electric Company. All rights reserved. Removal of this copyright notice without permission is not permitted under law.

REV	CHANGE	DR	BY	DSN	APV	DATE	REV	CHANGE	DR	BY	DSN	APV	DATE
C	EDITORIAL CHANGES	-	JIK	JES	CZH	5/23/2019	F	EDITORIAL CHANGES	EDM	GLW	JES	CZH	06/21/2021
B	EDITORIAL CHANGES	-	GW	JS	MDJ	10/25/2017	E	EDITORIAL CHANGES	-	GLW	JES	CZH	9/30/2019
A	EDITORIAL CHANGES	-	JC	IL	JS/MDJ	5/4/2015	D	NOTES UPDATE	-	JC	JS	CZH	6/13/2019

X Indicates Latest Revision | Completely Revised | New Page | Information Removed

SDG&E ELECTRIC OVERHEAD CONSTRUCTION STANDARDS

STEEL DISTRIBUTION POLES
DRILLING DIMENSIONS AND DETAILS

OH310.8

SCOPE: THIS STANDARD SHOWS THE USE AND INSTALLATION OF POLE PLUGS.

INSTALLATION:

A. POLE PLUGS ARE REQUIRED ON ALL EXISTING HOLES THAT ARE VACANT IN ORDER TO PREVENT INSECT INFESTATION AND/OR REDUCE WHISTLING DUE TO THE WIND.

B. PLUGS CAN BE INSTALLED WITH STANDARD HOTLINE TOOLS IF REQUIRED.

C. PLUGS CAN BE INSTALLED WITH A POLE WALL THICKNESS OF 1/4" OR LESS.

D. VACANT STEP BOLT HOLES ARE TYPICALLY 1-1/8" DIA.

E. TYPICALLY PLUG DIAMETERS WITH ONE STAR ARE USED ON DIRECT BURIED POLES, AND TWO STARS ARE USED ON ENGINEERED STEEL POLES.

F. DO NOT INSTALL HOLE PLUGS IN VENT HOLES ON THE LOWEST PORTIONS OF CROSSARMS.

G. SELECT THE APPROPRIATE POLE PLUG FOR THE HOLE SIZE. INSERT INTO THE HOLE AND APPLY SLIGHT THUMB PRESSURE UNTIL THE PLUG IS COMPLETELY SEATED IN THE HOLE WITH THE RIM SLIGHTLY OVERLAPPING THE POLE FACE.

H. FOR GALVANIZED STEEL POLES, GRAY PLUGS WILL BE USED. FOR WEATHERING STEEL POLES, BLACK PLUGS WILL BE USED

BILL OF MATERIALS:

ITEM	DESCRIPTION	QUANTITY	STANDARD PAGE	STOCK NUMBER	ASSEMBLY UNIT
1	PLUG, HOLE, DIA 9/16" - 5/8" BLACK	AS REQ'D		S547480	
2	PLUG, HOLE, DIA 9/16" - 5/8" GRAY	AS REQ'D		S547482	
3	PLUG, HOLE, DIA 11/16" - 3/4" BLACK	AS REQ'D		S547484	
4	PLUG, HOLE, DIA 11/16" - 3/4" GRAY	AS REQ'D		S547486	
5	PLUG, HOLE, DIA 13/16" BLACK	AS REQ'D		S547488	
6	PLUG, HOLE, DIA 13/16" GRAY	AS REQ'D		S547490	
7	PLUG, HOLE, DIA 7/8" - 15/16" BLACK	AS REQ'D		S547492	
8	PLUG, HOLE, DIA 7/8" - 15/16" GRAY	AS REQ'D		S547494	
9	PLUG, HOLE, DIA 1" - 1-1/16" BLACK	AS REQ'D		S547496	
10	PLUG, HOLE, DIA 1" - 1-1/16" GRAY	AS REQ'D		S547498	
11	PLUG, HOLE, DIA 1-1/8" BLACK	AS REQ'D		S547500	
12	PLUG, HOLE, DIA 1-1/8" GRAY	AS REQ'D		S547502	

NOTES: NONE

REFERENCE: NONE

TABLE OF CONTENTS

© 1998 - 2019 San Diego Gas & Electric Company. All rights reserved. Removal of this copyright notice without permission is not permitted under law.

REV	CHANGE	BY	DSGN	APPV	DATE	REV	CHANGE	BY	DSGN	APPV	DATE
C						F					
B						E					
A	ORIGINAL ISSUE	JAC	JES	CZH	5/23/2019	D					

X Indicates Latest Revision | Completely Revised | New Page | Information Removed

SDG&E ELECTRIC OVERHEAD CONSTRUCTION STANDARDS

SHEET 1 OF 1

POLE PLUGS

OH311.1

SCOPE: THIS STANDARD LISTS POLE CAPS AND THEIR SIZES FOR USE ON TAPERED STEEL AND FIBERGLASS POLES.

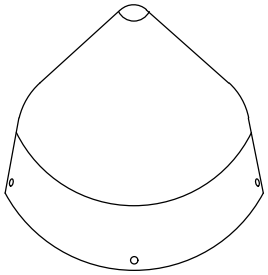

FIGURE 1
ISOMETRIC VIEW

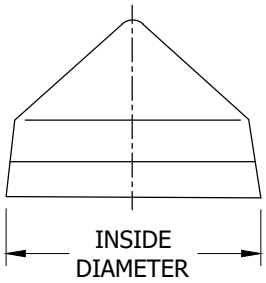

FIGURE 1
SIDE VIEW

INSTALLATION:

A. POLE CAP REQUIRES SELF TAPPING SCREWS TO SECURE TO POLE TOP. THERE ARE FOUR PREDRILLED HOLES ON EACH CAP TO FACILITATE INSTALLATION OF TWO SCREWS.

BILL OF MATERIALS:

ITEM	DESCRIPTION	INSIDE DIAMETER (IN)	QUANTITY	STANDARD PAGE	STOCK NUMBER	DESIGN UNITS
1	CAP, POLE, CONICAL	7.5	1	--	S203240	TBD
		8.5	1	--	S203242	TBD
		9.5	1	--	S203244	TBD
		10.5	1	--	TBD	TBD
		11.75	1	--	S203246	TBD
		12.75	1	--	S203248	TBD

NOTES:

I. POLE CAPS ARE TO BE USED ON STEEL AND FIBERGLASS POLES.

REFERENCE: NONE

TABLE OF CONTENTS

© 1998 - 2021 San Diego Gas & Electric Company. All rights reserved. Removal of this copyright notice without permission is not permitted under law.

REV	CHANGE	DR	BY	DSN	APV	DATE	REV	CHANGE	DR	BY	DSN	APV	DATE
C							F						
B							E						
A	ORIGINAL ISSUE	EDM	JIK	JES	CZH	12/12/2021	D						

Indicates Latest Revision | Completely Revised [X] | New Page | Information Removed

SDG&E ELECTRIC OVERHEAD CONSTRUCTION STANDARDS

STEEL AND FIBERGLASS POLE CAPS

OH315.1

SCOPE: THIS STANDARD INCLUDES DRILLING DIMENSIONS, INSTALLATION, AND DETAIL NOTES FOR TUBULAR FIBERGLASS DISTRIBUTION POLES.

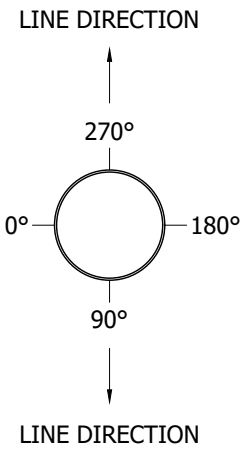

FIGURE 1
TOP POLE VIEW

FIGURE 1
FINISHING DETAILS AT 90 DEGREES AND 270 DEGREES QUADRANTS

© 1998 - 2021 San Diego Gas & Electric Company. All rights reserved. Removal of this copyright notice without permission is not permitted under law.

REV	CHANGE	DR	BY	DSN	APV	DATE	REV	CHANGE	DR	BY	DSN	APV	DATE
C	BILL OF MATERIALS UPDATE	EDM	JES	JES	CZH	10/12/2020	F	TABLE 1A & NOTES UPDATE	ARC	JES	JES	CZH	10/01/2021
B	COMPLETLEY REVISED	EDM	GLW	JES	CZH	07/09/2020	E	NOTES UPDATE	EDM	MRF	JES	CZH	08/13/2021
A	ORIGINAL ISSUE	-	JBH	IL	MDJ	04/15/2016	D	BILL OF MATERIALS UPDATE	EDM	JES	JES	CZH	04/06/2021

X Indicates Latest Revision | Completely Revised | New Page | Information Removed

SDG&E ELECTRIC OVERHEAD CONSTRUCTION STANDARDS

SHEET 1 OF 15

FIBERGLASS DISTRIBUTION POLES DRILLING DIMENSIONS AND DETAILS

OH320.1

TABLE OF CONTENTS

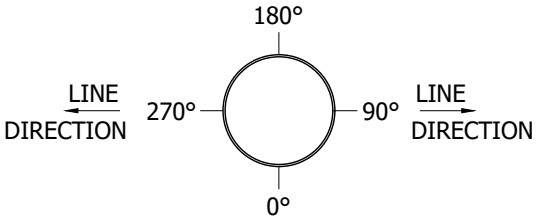

FIGURE 2
TOP POLE VIEW

FIGURE 2
FINISHING DETAILS AT 0 DEGREES AND 180 DEGREES QUADRANTS

© 1998 - 2021 San Diego Gas & Electric Company. All rights reserved. Removal of this copyright notice without permission is not permitted under law.

REV	CHANGE	DR	BY	DSN	APV	DATE	REV	CHANGE	DR	BY	DSN	APV	DATE
C	BILL OF MATERIALS UPDATE	EDM	JES	JES	CZH	10/12/2020	F	TABLE 1A & NOTES UPDATE	ARC	JES	JES	CZH	10/01/2021
B	COMPLETLEY REVISED	EDM	GLW	JES	CZH	07/09/2020	E	NOTES UPDATE	EDM	MRF	JES	CZH	08/13/2021
A	ORIGINAL ISSUE	-	JBH	IL	MDJ	04/15/2016	D	BILL OF MATERIALS UPDATE	EDM	JES	JES	CZH	04/06/2021

X Indicates Latest Revision | Completely Revised | New Page | Information Removed

SDG&E ELECTRIC OVERHEAD CONSTRUCTION STANDARDS

FIBERGLASS DISTRIBUTION POLES DRILLING DIMENSIONS AND DETAILS

OH320.2

TABLE OF CONTENTS

POLE MODULE IDENTIFICATION

EXAMPLE
WITH DESCRIPTIONS

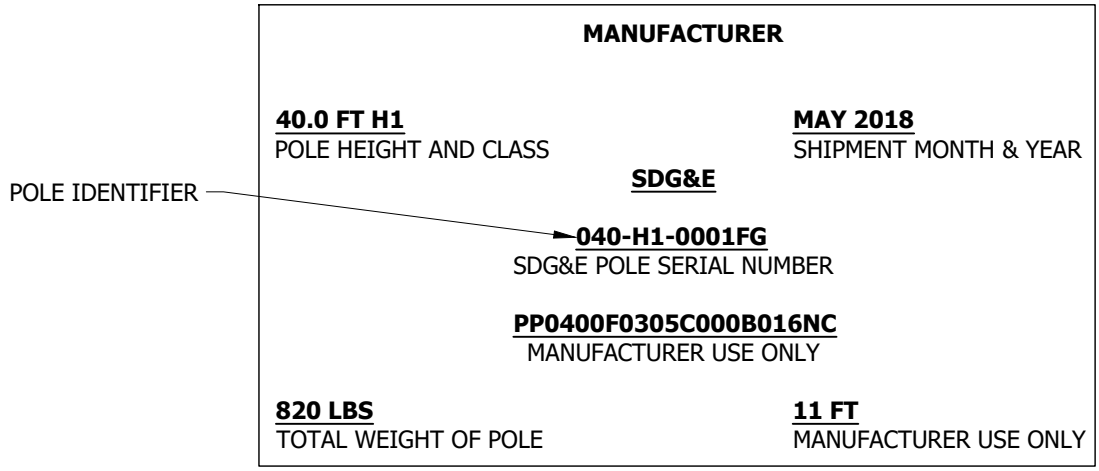

FIGURE 3 (V)
NAMEPLATE



FIGURE 4 (V)
MODULE ID TAG

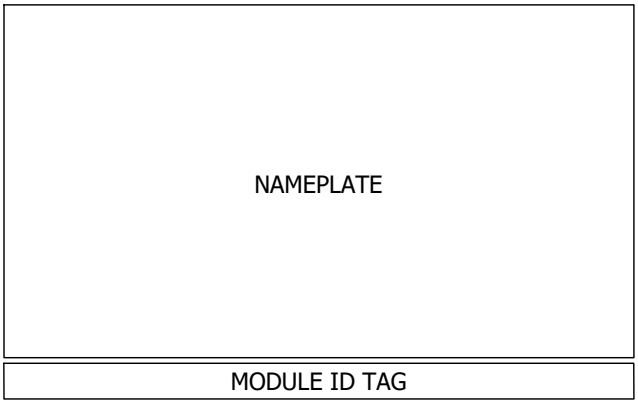

FIGURE 5 (V)
RELATIVE POSITIONING OF NAMEPLATE AND MODULE ID TAG ON EACH SECTION

TABLE OF CONTENTS

© 1998 - 2021 San Diego Gas & Electric Company. All rights reserved. Removal of this copyright notice without permission is not permitted under law.

REV	CHANGE	DR	BY	DSN	APV	DATE	REV	CHANGE	DR	BY	DSN	APV	DATE
C	BILL OF MATERIALS UPDATE	EDM	JES	JES	CZH	10/12/2020	F	TABLE 1A & NOTES UPDATE	ARC	JES	JES	CZH	10/01/2021
B	COMPLETLEY REVISED	EDM	GLW	JES	CZH	07/09/2020	E	NOTES UPDATE	EDM	MRF	JES	CZH	08/13/2021
A	ORIGINAL ISSUE	-	JBH	IL	MDJ	04/15/2016	D	BILL OF MATERIALS UPDATE	EDM	JES	JES	CZH	04/06/2021

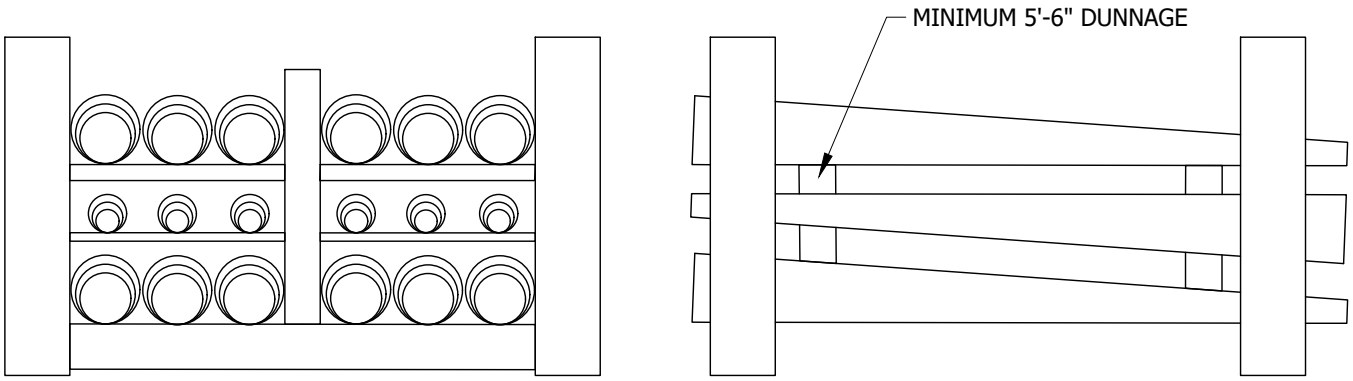

FIGURE 6
POLE STORAGE



FIGURE 7
NESTING FOR TRANSPORTATION (B)



FIGURE 8
ALIGNING SECTIONS (J)





FIGURE 9
LIGHT DUTY POLE SECURING JOINT (J)

© 1998 - 2021 San Diego Gas & Electric Company. All rights reserved. Removal of this copyright notice without permission is not permitted under law.

REV	CHANGE	DR	BY	DSN	APV	DATE	REV	CHANGE	DR	BY	DSN	APV	DATE
C	BILL OF MATERIALS UPDATE	EDM	JES	JES	CZH	10/12/2020	F	TABLE 1A & NOTES UPDATE	ARC	JES	JES	CZH	10/01/2021
B	COMPLETLEY REVISED	EDM	GLW	JES	CZH	07/09/2020	E	NOTES UPDATE	EDM	MRF	JES	CZH	08/13/2021
A	ORIGINAL ISSUE	-	JBH	IL	MDJ	04/15/2016	D	BILL OF MATERIALS UPDATE	EDM	JES	JES	CZH	04/06/2021

TABLE OF CONTENTS





FIGURE 10
JACKING LUG INSTALLATION



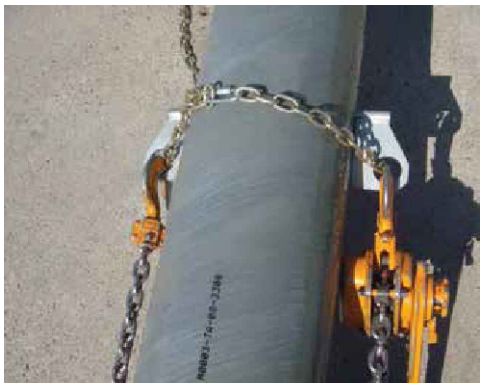

FIGURE 11
JACKING LUG SAFETY STRAP/CHAIN INSTALLATION



FIGURE 12
COME-ALONG INSTALLATION

TABLE OF CONTENTS

© 1998 - 2021 San Diego Gas & Electric Company. All rights reserved. Removal of this copyright notice without permission is not permitted under law.

REV	CHANGE	DR	BY	DSN	APV	DATE	REV	CHANGE	DR	BY	DSN	APV	DATE
C	BILL OF MATERIALS UPDATE	EDM	JES	JES	CZH	10/12/2020	F	TABLE 1A & NOTES UPDATE	ARC	JES	JES	CZH	10/01/2021
B	COMPLETLEY REVISED	EDM	GLW	JES	CZH	07/09/2020	E	NOTES UPDATE	EDM	MRF	JES	CZH	08/13/2021
A	ORIGINAL ISSUE	-	JBH	IL	MDJ	04/15/2016	D	BILL OF MATERIALS UPDATE	EDM	JES	JES	CZH	04/06/2021

HEAVY DUTY POLES
SECURING SPLICE CONNECTION (L)





FIGURE 13
DRILL LOCATION







FIGURE 14
BLIND NUT INSTALLATION







FIGURE 15
BOLT AND WASHER INSTALLATION

TABLE OF CONTENTS

© 1998 - 2021 San Diego Gas & Electric Company. All rights reserved. Removal of this copyright notice without permission is not permitted under law.

REV	CHANGE	DR	BY	DSN	APV	DATE	REV	CHANGE	DR	BY	DSN	APV	DATE
C	BILL OF MATERIALS UPDATE	EDM	JES	JES	CZH	10/12/2020	F	TABLE 1A & NOTES UPDATE	ARC	JES	JES	CZH	10/01/2021
B	COMPLETLEY REVISED	EDM	GLW	JES	CZH	07/09/2020	E	NOTES UPDATE	EDM	MRF	JES	CZH	08/13/2021
A	ORIGINAL ISSUE	-	JBH	IL	MDJ	04/15/2016	D	BILL OF MATERIALS UPDATE	EDM	JES	JES	CZH	04/06/2021

X Indicates Latest Revision | Completely Revised | New Page | Information Removed

SHEET
6 OF 15

SDG&E ELECTRIC OVERHEAD CONSTRUCTION STANDARDS

FIBERGLASS DISTRIBUTION POLES DRILLING DIMENSIONS AND DETAILS

OH320.6





FIGURE 16 (P)
POLE CAPS

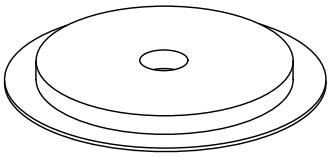

LIGHT DUTY POLE

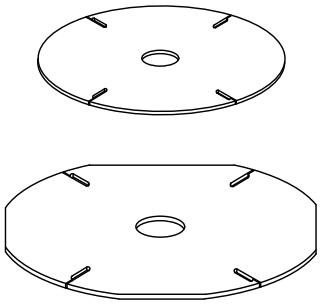

HEAVY DUTY POLES

FIGURE 17 (Q)
BASE PLATES



LIGHT DUTY POLE



J-BOLTS ON OUTSIDE
OF MODULE



J-BOLTS ON INSIDE
OF MODULE

HEAVY DUTY POLES

FIGURE 18
BASE PLATE INSTALLATION (Q)

© 1998 - 2021 San Diego Gas & Electric Company. All rights reserved. Removal of this copyright notice without permission is not permitted under law.

REV	CHANGE	DR	BY	DSN	APV	DATE	REV	CHANGE	DR	BY	DSN	APV	DATE
C	BILL OF MATERIALS UPDATE	EDM	JES	JES	CZH	10/12/2020	F	TABLE 1A & NOTES UPDATE	ARC	JES	JES	CZH	10/01/2021
B	COMPLETLEY REVISED	EDM	GLW	JES	CZH	07/09/2020	E	NOTES UPDATE	EDM	MRF	JES	CZH	08/13/2021
A	ORIGINAL ISSUE	-	JBH	IL	MDJ	04/15/2016	D	BILL OF MATERIALS UPDATE	EDM	JES	JES	CZH	04/06/2021

TABLE OF CONTENTS

ATTENTION:

* PLS-CADD MODEL REQUIRED FOR ALL FIBERGLASS POLE DESIGNS.

** MAXIMUM ALLOWABLE POLE TIP DEFLECTION IS LIMITED TO 7% OF POLE HEIGHT (AGH).

*** ALL POLES REQUIRE GUYING UNDER EXTRA HEAVY LOAD CASE.

TABLE 1A

FIBERGLASS POLES (HEAVY DUTY) - BROWN

LENGTH	WOOD EQUIVALENT CLASS	AGH	STOCK NUMBER BROWN (XI)	DESIGN UNITS	RS POLE LIST	LENGTH				WEIGHT	TIP DIA.	BASE DIA.	MAX. ALLOW TIP LOAD
						TOP SECTION	SECOND SECTION	THIRD SECTION	FOURTH SECTION	TOTAL			
FT		FT				FT	FT	FT	FT	LBS	IN	IN	LBS
30	H1-H6	24.5	S550000	30F1HB	PP0300F0304C	13.85	18.94	--	--	485	11.95	18.27	2,850
35	H1-H3	29.5	S550002	35F1HB	PP0350F0204C	3.72	17.39	18.94	--	566	11.66	18.27	1,875
40	H1-H3	34.0	S550004	40F1HB	PP0400F0305C	8.21	18.94	18.99	--	775	13.32	21.28	1,875
45	CL3-CL1	38.5	S550008	45F1CB	PP0450F0204C	13.72	17.39	18.94	--	663	9.23	18.27	1,125
	H1	38.5	S550010	45F1HB	PP0450F0305C	13.21	18.94	18.99	--	837	12.1	21.28	1,350
	H3-H4	38.5	S550012	45F3HB	PP0450F0507C	14.05	34.88	--	--	1,174	17.81	27.92	2,175
	H2-H6	38.5	S550034	45FH2B	PP0450F0406C	13.4	34.9	--	--	1,024	15.063	24.8125	2,850
50	CL3 (S)	43.0	S550016	50F3CB	PP0500F0104C	2.75	17.67	17.39	18.94	724	9.46	18.27	750
	CL3-CL1	43.0	S550014	50F1CB	PP0492F0305F	17.39	18.94	18.99	--	884	11.09	21.28	1,125
	H1-H2	43.0	S549942	50F1HB	PP0500F0205C	3.09	17.39	18.94	18.99	919	11.81	21.28	1,600
	H1-H3	43.0	S550036	50FH2B	PP0500F0406C	18.4	34.9	--	--	1,101	13.813	24.8125	1,875
55	CL4-CL3 (S)	47.5	S550018	55F4CB	PP0550F0104C	7.75	17.67	17.39	18.94	776	8.91	18.27	750
	CL3-CL1 (S)	47.5	S550020	55F1CB	PP0550F0205C	8.09	17.39	18.94	18.99	971	10.6	21.28	1,125
	H1-H3	47.5	S550038	55FH1B	PP0550F0306C	7.4	18.9	34.9	--	1,214	13.563	24.8125	1,875
	H4-H6	47.5	S550022	55F4HB	PP0550F0407C	8.41	18.99	34.88	--	1,403	16.23	27.92	2,850
60	C1-H3	52.0	S550040	60FC1B	PP0600F0306C	12.4	18.9	34.9	--	1,278	12.313	24.8125	1,875
	H4-H6	52.0	S550026	60F4HB	PP0600F0407C	13.41	18.99	34.88	--	1,480	15.03	27.92	2,850
65	H1-H3	56.5	S550030	65F1HB	PP0650F0407C	13.41	18.99	34.88	--	1,480	15.03	27.92	1,875
	H4-H6	56.5	S550042	65FH4B	PP0650F0306C	17.4	18.9	34.9	--	1,338	11.125	24.8125	2,850
70	H2-H6	61.0	S550032	70F2HB	PP0700F0509C	8.5	34.88	35.74	--	2,269	19.18	34.47	2,850

TABLE OF CONTENTS

© 1998 - 2021 San Diego Gas & Electric Company. All rights reserved. Removal of this copyright notice without permission is not permitted under law.

REV	CHANGE	DR	BY	DSN	APV	DATE	REV	CHANGE	DR	BY	DSN	APV	DATE
C	BILL OF MATERIALS UPDATE	EDM	JES	JES	CZH	10/12/2020	F	TABLE 1A & NOTES UPDATE	ARC	JES	JES	CZH	10/01/2021
B	COMPLETLEY REVISED	EDM	GLW	JES	CZH	07/09/2020	E	NOTES UPDATE	EDM	MRF	JES	CZH	08/13/2021
A	ORIGINAL ISSUE	-	JBH	IL	MDJ	04/15/2016	D	BILL OF MATERIALS UPDATE	EDM	JES	JES	CZH	04/06/2021

TABLE 1B

FIBERGLASS POLES (HEAVY DUTY) - GRAY													
LENGTH	WOOD EQUIVALENT CLASS	AGH	STOCK NUMBER GRAY (I)	DESIGN UNITS	RS POLE LIST	LENGTH				WEIGHT	TIP DIA.	BASE DIA.	MAX. ALLOW TIP LOAD
						TOP SECTION	SECOND SECTION	THIRD SECTION	FOURTH SECTION	TOTAL			
FT		FT				FT	FT	FT	FT	LBS	IN	IN	LBS
30	H1-H6	24.5	S549876	30F1HG	PP0300F0304C	13.85	18.94	--	--	485	11.95	18.27	2,850
40	H1-H3	34.0	S549880	40F1HG	PP0400F0305C	8.21	18.94	18.99	--	775	13.32	21.28	1,875
45	CL5-CL4 (S)	38.5	S549882	45F4CG	PP0450F0103C	13.9	17.67	17.39	--	535	8.22	15.31	600
	CL3-CL1	38.5	S549884	45F1CG	PP0450F0204C	13.72	17.39	18.94	--	663	9.23	18.27	1,125
	H1	38.5	S549886	45F1HG	PP0450F0305C	13.21	18.94	18.99	--	837	12.1	21.28	1,350
	H3-H4	38.5	S549888	45F3HG	PP0450F0507C	14.05	34.88	--	--	1174	17.81	27.92	2,175
50	CL3 (S)	43.0	S549900	50F3CG	PP0500F0104C	2.75	17.67	17.39	18.94	724	9.46	18.27	750
	CL3-CL1	42.3	S549892	50F1CG	PP0492F0305F	17.39	18.94	18.99	--	884	11.09	21.28	1,125
	H1-H2	43.0	S549890	50F1HG	PP0500F0205C	3.09	17.39	18.94	18.99	919	11.81	21.28	1,600
55	CL4-CL3 (S)	47.5	S549902	55F3CG	PP0550F0104C	7.75	17.67	17.39	18.94	776	8.91	18.27	750
	H4-H6	47.5	S549906	55F4HG	PP0550F0407C	8.41	18.99	34.88	--	1403	16.23	27.92	2,850
60	H4-H6	52.0	S549910	60F4HG	PP0600F0407C	13.41	18.99	34.88	--	1480	15.03	27.92	2,850
65	H1-H3	56.5	S549894	65F1HG	PP0650F0407C	13.41	18.99	34.88	--	1480	15.03	27.92	1,875

INSTALLATION:

A. PERMISSIBLE AREAS FOR USE

1. RESTRICTED VEHICLE ACCESS.
2. AREAS OF ENVIRONMENTAL AND/OR ARCHAEOLOGICAL CONCERN.
3. AREAS OF EXPECTED SEVERE OR ACCELERATED POLE DEGRADATION DUE TO ANIMALS, INSECTS, FUNGUS OR MOISTURE.
4. OTHER ENVIRONMENTAL CONDITIONS MAY INCLUDE HIGH WATER TABLE, HIGH CONTAMINATION OR DUST.
5. AREAS WHERE OTHER POLE TYPE LOAD WEIGHTS EXCEED HELICOPTER AND/OR CRANE CAPABILITIES.
6. AREAS OF AESTHETIC CONCERN.
7. AREAS WHERE POLE DEFACEMENT (GRAFFITI/TAPE/NAILS/STAPLES) IS OF CONCERN.

(B) TRANSPORTATION (FIGURE 7)

1. SECTIONAL COMPOSITE POLES SHALL BE LEFT NESTED FOR TRANSPORTATION AND ASSEMBLED AT THE WORK LOCATION.
2. IF A POLE IS DRAGGED DUE TO DIFFICULT TERRAIN, THE BUTT SHALL BE PROTECTED TO AVOID EXCESSIVE DAMAGE.

C. VISUAL INSPECTION (II)

1. PRIOR TO ASSEMBLY, POLE SECTIONS SHALL BE VISUALLY INSPECTED FOR ANY DAMAGE WHICH MAY HAVE OCCURRED DURING TRANSPORTATION.

TABLE OF CONTENTS

© 1998 - 2021 San Diego Gas & Electric Company. All rights reserved. Removal of this copyright notice without permission is not permitted under law.

REV	CHANGE	DR	BY	DSN	APV	DATE	REV	CHANGE	DR	BY	DSN	APV	DATE
C	BILL OF MATERIALS UPDATE	EDM	JES	JES	CZH	10/12/2020	F	TABLE 1A & NOTES UPDATE	ARC	JES	JES	CZH	10/01/2021
B	COMPLETLEY REVISED	EDM	GLW	JES	CZH	07/09/2020	E	NOTES UPDATE	EDM	MRF	JES	CZH	08/13/2021
A	ORIGINAL ISSUE	-	JBH	IL	MDJ	04/15/2016	D	BILL OF MATERIALS UPDATE	EDM	JES	JES	CZH	04/06/2021

INSTALLATION (CONT'D):

D. HARDWARE INCLUDED WITH POLE - LIGHT DUTY

1. INSTALLED BY MANUFACTURER PRIOR TO SHIPPING:
   IDENTIFICATION TAG (ON BOTTOM SECTION)
2. INSTALLED BY CONTRACTOR:
   POLE CAP (P)
   DOUBLE ARMING THROUGH BOLTS (FOR UPPER JOINTS)
   HOT DIP GALVANIZED BOX BOLTS (FOR BOTTOM JOINT)
   BASE PLATE (Q)
   HOLE PLUGS: 13/16" & 1" (U)

E. HARDWARE INCLUDED WITH POLE - HEAVY DUTY

1. INSTALLED BY MANUFACTURER PRIOR TO SHIPPING:
   NAMEPLATE (ONE PER MODULE/SECTION)
   MODULE ID TAGS (ONE PER MODULE/SECTION)
   NO DRILL ZONE TAGS (ONE PER SPLICE)
   HOLE PLUGS: 11/16", 13/16" & 1 1/8" (U)
2. INSTALLED BY CONTRACTOR:
   POLE CAP (P)
   JOINT ASSEMBLY KITS
   BASE PLATE (Q)
   J-BOLT KIT - FOR INSTALLATION OF BASE PLATE

(F) ADDITIONAL HARDWARE (c)

1. MINIMUM 4" X 4" CURVED SQUARE WASHERS TO BE UTILIZED FOR ALL BOLTED CONNECTIONS.
2. SELF-TAPPING SCREWS IN PRE-DRILLED HOLES TO BE UTILIZED FOR ATTACHING POLE CAPS, BUTT PLATES AND SIGNAGE. (III) (i)
3. ALL BOLTS TO BE HAND TIGHTENED, THEN TURNED THE FOLLOWING AMOUNT WITH A WRENCH:
   LIGHT DUTY: 1/2 TO 3/4 TURN
   HEAVY DUTY: 1 1/2 TURNS

G. POLE ASSEMBLY

1. POLES MAY BE ASSEMBLED EITHER HORIZONTALLY AND THEN TILTED UP, OR VERTICALLY, AIDED BY AN EXISTING POLE OR FROM A POLE GIN AND BLOCKS USING A SINGLE RIGGING POINT ABOVE THE CENTER OF GRAVITY.
2. FOR HORIZONTAL ASSEMBLY, ALL JOINTS, CAP, BASE PLATE AND GROUNDING EQUIPMENT (e) SHALL BE SECURED PRIOR TO RAISING THE POLE.
3. FOR VERTICAL ASSEMBLY, BASE PLATE SHALL BE SECURED AND PROVISIONS FOR GROUNDING MADE PRIOR TO SETTING BASE SECTION. (e) LEVEL AND PLUMB OF BASE SECTION IS CRITICAL AT THIS POINT. (VI)

H. SPLICE ALIGNMENT

1. ALIGNMENT MARKS ARE ALL LOCATED ON ONE AXIS OF POLE.
   LIGHT DUTY POLES: ALIGNMENT MARKS ARE A BRIGHT ORANGE LINE. (FIGURE 8)
   HEAVY DUTY POLES: ALIGNMENT MARKS ARE EITHER A SINGLE BLACK SOLID LINE OR A STRING OF TEXT CONTAINING MODULE WEIGHT AND SERIAL NUMBER. (FIGURE 11)
2. LINE DIRECTION CAN BE DETERMINED BY LOCATION OF NAMEPLATES. (FIGURES 1 & 2)

TABLE OF CONTENTS

© 1998 - 2021 San Diego Gas & Electric Company. All rights reserved. Removal of this copyright notice without permission is not permitted under law.

REV	CHANGE	DR	BY	DSN	APV	DATE	REV	CHANGE	DR	BY	DSN	APV	DATE
C	BILL OF MATERIALS UPDATE	EDM	JES	JES	CZH	10/12/2020	F	TABLE 1A & NOTES UPDATE	ARC	JES	JES	CZH	10/01/2021
B	COMPLETLEY REVISED	EDM	GLW	JES	CZH	07/09/2020	E	NOTES UPDATE	EDM	MRF	JES	CZH	08/13/2021
A	ORIGINAL ISSUE	-	JBH	IL	MDJ	04/15/2016	D	BILL OF MATERIALS UPDATE	EDM	JES	JES	CZH	04/06/2021

X Indicates Latest Revision | Completely Revised | New Page | Information Removed

SDG&E ELECTRIC OVERHEAD CONSTRUCTION STANDARDS

FIBERGLASS DISTRIBUTION POLES DRILLING DIMENSIONS AND DETAILS

INSTALLATION (CONT'D):

(J) SPLICE CONNECTIONS - LIGHT DUTY POLE (FIGURES 8 & 9)

1. HAND PRESS SECTIONS TOGETHER UNTIL THEY STOP AGAINST THE LOWER FLANGE AND THE JOINT BOLT HOLES ARE ALIGNED. FOR TOP SPLICES, PUT A DOUBLE ARMING BOLT THROUGH AND CONNECT WITH CURVED WASHERS AND DOUBLE NUTS ON EACH SIDE. FOR BOTTOM SPLICE, INSTALL BOX BOLTS ON EACH SIDE. (F)

(K) SPLICE JACKING - HEAVY DUTY POLES (FIGURES 10 - 12)

1. REQUIRED FOR BOTH HORIZONTAL AND VERTICAL ASSEMBLY
2. FOUR JACKING LUGS SHALL BE INSTALLED INTO THE PRE-DRILLED JACKING LUG HOLES; TWO ABOVE SPLICE AND TWO BELOW SPLICE (AT 180° APART). EACH LUG SHALL BE INSERTED FULLY, FLUSH WITH THE POLE, AND ORIENTED WITH THE LUG HOLE TOWARDS THE DIRECTION OF PULL (FIGURE 10).
3. SAFETY STRAP OR CHAIN SHALL BE WRAPPED AROUND THE MODULE AND THROUGH THE HOLES IN THE JACKING LUGS, THEN MADE SNUG AS POSSIBLE. SOME SLACK IN CHAIN IS DESIRABLE (FIGURE 11).
4. TWO 3-TON COME-ALONGS SHALL BE SECURELY ATTACHED TO THE JACKING LUGS (FIGURE 12) THEN WINCHED SIMULTANEOUSLY UNTIL SPLICE BUTT HAS PASSED THE DOTTED MINIMUM OVERLAP LINE. WINCHING SHALL CONTINUE UNTIL THE JOINT IS SNUG AND THERE ARE NO GAPS AROUND THE BASE OF THE UPPER MODULE. IT IS NOT NECESSARY FOR THE SPLICE BUTT TO PASS THE SOLID QC GAUGE LINE.
5. WHILE AVOIDING EXCESSIVE FORCE DURING WINCHING, CARE SHALL BE TAKEN TO MAINTAIN ALIGNMENT. IF NECESSARY, A RUBBER MALLET MAY BE USED ON THE SPLICE BUTT TO RELIEVE BUILT UP PRESSURE. (II)

(L) SECURING SPLICE CONNECTION - HEAVY DUTY POLES (FIGURES 13 - 15)

1. ONCE MODULES ARE SUFFICIENTLY SNUG PAST THE MINIMUM OVERLAP LINE, COME-ALONGS AND JACKING LUGS SHALL BE REMOVED, JACKING LUG HOLES PLUGGED WITH SUPPLIED HOLE PLUGS (IN JOINT ASSEMBLY KIT) AND THE JOINT SECURED USING THE FOLLOWING STEPS FOR EACH SLOT LOCATION (2 PER SPLICE):

   A 1 1/8" HOLE SHALL BE DRILLED THROUGH THE INNER MODULE AT THE BASE END OF THE SLOT. THE HOLE IS SIZED TO ACCOMMODATE INSERTION OF BLIND NUT. DRILL LOCATION IS CLEARLY MARKED (FIGURE 13).

   BLIND NUT SHALL BE INSERTED INTO HOLE AND CENTERED USING PULL BACK CABLE (FIGURE 14).

   BOLT SHALL BE HAND-TIGHTENED, THEN TIGHTENED WITH WRENCH OR SOCKET (F)(II) WHILE ENSURING BLIND NUT REMAINS PERPENDICULAR TO POLE CENTERLINE UTILIZING NUT RETENTION CABLE. (FIGURE 15)

   ONCE BOLT IS SECURE, NUT RETENTION CABLE SHALL BE TRIMMED.

M. INTENTIONALLY LEFT BLANK

(N) STEPS

1. FIBERGLASS POLES SHALL BE PERMANENTLY STEPPED FROM TEN FEET ABOVE GROUNDLINE TO TOP STEP LOCATION. REMOVABLE POLE STEPS ARE AVAILABLE, ARE FULLY RATED AND CAN REMAIN ON POLE AS PERMANENT. PRE-DRILLED STEP HOLES ARE PROVIDED FROM GROUNDLINE TO SIX FEET BELOW PRIMARY LINEARM LEVEL ON A 15-18 INCH SPACING WITH WORKING STEP LOCATIONS 4-5 FEET BELOW EACH CONDUCTOR LEVEL. (IV)

O. POLE BANDING

1. IF CROSSARMS OR ATTACHMENTS ARE REQUIRED IN NO DRILL ZONES, POLE BANDING SHALL BE UTILIZED. (k)

(P) POLE CAP SHALL BE ATTACHED USING FOUR SELF-TAPPING SCREWS. (FIGURE 16) (j)

TABLE OF CONTENTS

© 1998 - 2021 San Diego Gas & Electric Company. All rights reserved. Removal of this copyright notice without permission is not permitted under law.

REV	CHANGE	DR	BY	DSN	APV	DATE	REV	CHANGE	DR	BY	DSN	APV	DATE
C	BILL OF MATERIALS UPDATE	EDM	JES	JES	CZH	10/12/2020	F	TABLE 1A & NOTES UPDATE	ARC	JES	JES	CZH	10/01/2021
B	COMPLETLEY REVISED	EDM	GLW	JES	CZH	07/09/2020	E	NOTES UPDATE	EDM	MRF	JES	CZH	08/13/2021
A	ORIGINAL ISSUE	-	JBH	IL	MDJ	04/15/2016	D	BILL OF MATERIALS UPDATE	EDM	JES	JES	CZH	04/06/2021

INSTALLATION (CONT'D):

(Q) BASE PLATE (FIGURES 17 & 18) (VIII)

1. LIGHT DUTY POLE: BASE PLATE SHALL BE INSERTED INTO POLE BASE AND ATTACHED WITH SELF-TAPPING SCREWS AFTER PREDRILLING.
2. HEAVY DUTY POLES: J-BOLTS SHALL BE INSERTED INTO THE SLOTS/HOLES OF THE BOTTOM MODULE ON EITHER THE INSIDE OR OUTSIDE OF THE MODULE. ALL THE BOLTS SHALL THEN BE THREADED THROUGH THE BASE PLATE, ATTACHED WITH WASHERS AND NUTS WHICH SHALL THEN BE HAND-TIGHTENED. ONCE THE BASE PLATE IS SECURED AND PROPERLY CENTERED, THE NUTS SHALL BE TIGHTENED WITH A WRENCH OR SOCKET. (F)

R. POLE LIFTING

1. NYLON SLINGS SHOULD BE USED FOR LIFTING IN LIEU OF CHAINS, CABLES OR OTHER METAL HARDWARE. PLACING A THROUGH BOLT OR THREADED ROD ABOVE THE SLING WILL REDUCE SLIPPAGE. ASSEMBLED POLES MAY BE HANDLED WITH A CRANE OR LINE TRUCK. CARE SHOULD BE EXERCISED WHEN USING CLAWS SO AS NOT TO SQUEEZE OR SCRAPE POLE. IF CONTACT WITH SHARP, HARD OR ABRASIVE TOOLS AND EQUIPMENT CANNOT BE AVOIDED, A BUFFER MATERIAL (E.G. CARPET, RUBBER) SHALL BE USED. (II)

(S) GUYING: SOME POLES MAY REQUIRE GUYING UNDER ALL LOAD CASES. VERIFY WITH PLS-CADD DESIGN. (a)(k)(m)(n)

(T) FIELD DRILLING AND CUTTING

1. FIBERGLASS POLES ARE RECEIVED WITH PRE-DRILLED HOLES FOR STANDARD APPLICATIONS. FIELD DRILLING FOR CROSSARMS, ADDITIONAL GUYING AND VARIOUS EQUIPMENT MOUNTINGS MAY SOMETIMES BE NECESSARY AND IS PERMITTED WITH THE FOLLOWING RESTRICTIONS:

   FACE MASK, GLOVES, EYE PROTECTION WITH SIDE SHIELDS SHALL BE WORN

   CARBIDE TIP BLADES AND DRILL BITS SHALL BE UTILIZED

   DUST CONTROL MEASURES SHALL BE EMPLOYED

2. FOR LIGHT DUTY POLES

   MAXIMUM HOLE DIAMETER OF 1-INCH

   MINIMUM DISTANCE OF 4 INCHES REQUIRED BETWEEN POLE TOP AND HOLE CENTER

   MINIMUM CENTER-TO-CENTER DISTANCE BETWEEN HOLES MUST BE AT LEAST 4 INCHES (IN SAME AND OPPOSING PLANES)

   NO DRILLING WITHIN 3.5 INCHES ABOVE AND 4 INCHES BELOW UPPER SPLICES

   NO DRILLING WITHIN 3.5 INCHES ABOVE AND 8 INCHES BELOW BOTTOM SPLICE

3. FOR HEAVY DUTY POLES

   MAXIMUM HOLE DIAMETER OF 1.25 INCHES

   NO DRILLING WITHIN 3 INCHES OF POLE TOP

   NO DRILLING WITHIN 5 INCHES ABOVE AND 3 INCHES BELOW SPLICES

   NO DRILLING WITHIN 8'-3" OF GROUND LINE

   MINIMUM CENTER-TO-CENTER DISTANCE BETWEEN HOLES MUST BE AT LEAST SIX TIMES DIAMETER OF LARGER HOLE

   MINIMUM DISTANCE FROM HOLE CENTER TO MODULE EDGE MUST BE FIVE TIMES DIAMETER OF HOLE

(U) HOLE PLUGS (j)

1. ALL PREDRILLED HOLES ARE PROVIDED WITH HOLE PLUGS. WHEN A HOLE IS NO LONGER BEING USED, A PLUG MUST BE INSTALLED TO PREVENT INSECTS AND SMALL ANIMALS FROM POSSIBLY BUILDING A HIVE OR NEST INSIDE THE POLE.

BILL OF MATERIALS: NONE

NOTES:

I. TALLER AND HEAVIER DUTY H-CLASS FIBERGLASS POLES MAY BE AVAILABLE BY SPECIAL ORDER. CONTACT EDE FOR MORE INFORMATION. GRAY POLES ARE NON-STANDARD AND SHOULD NOT BE RE-ORDERED AFTER DEPLETION.

© 1998 - 2021 San Diego Gas & Electric Company. All rights reserved. Removal of this copyright notice without permission is not permitted under law.

REV	CHANGE	DR	BY	DSN	APV	DATE	REV	CHANGE	DR	BY	DSN	APV	DATE
C	BILL OF MATERIALS UPDATE	EDM	JES	JES	CZH	10/12/2020	F	TABLE 1A & NOTES UPDATE	ARC	JES	JES	CZH	10/01/2021
B	COMPLETLEY REVISED	EDM	GLW	JES	CZH	07/09/2020	E	NOTES UPDATE	EDM	MRF	JES	CZH	08/13/2021
A	ORIGINAL ISSUE	-	JBH	IL	MDJ	04/15/2016	D	BILL OF MATERIALS UPDATE	EDM	JES	JES	CZH	04/06/2021

X Indicates Latest Revision | Completely Revised | New Page | Information Removed

SDG&E ELECTRIC OVERHEAD CONSTRUCTION STANDARDS

FIBERGLASS DISTRIBUTION POLES DRILLING DIMENSIONS AND DETAILS

OH320.12

TABLE OF CONTENTS

NOTES (CONT'D):

(II) IF DAMAGE HAS OCCURRED TO THE POLE, CONTACT STANDARDS AND WORK METHODS FOR EVALUATION BEFORE PROCEEDING. DAMAGE MAY INCLUDE, BUT IS NOT LIMITED TO, SURFACE GOUGING, DE-LAMINATION, CRACKS OR ANYTHING WHERE FIBERGLASS IS EXPOSED AND LOOSE FIBERS ARE VISIBLE. CAUSES MAY INCLUDE FORCEFUL IMPACT WITH THE GROUND OR OTHER HARD OBJECTS, BOLT OVER-TIGHTENING, EXCESSIVE USE OF JACKING FORCE OR INSERTION OF HARDWARE AT IMPROPER ANGLES.

(III) LAG BOLTS, NAILS, STAPLES AND HARDWARE WITH TEETH, CLEATS OR SHARP EDGES SHALL NOT BE USED.

(IV) POLE STEP LOCATIONS (f)

a. POLE STEPS SHALL BE ORIENTED 180 DEGREES APART WHERE ARC DISTANCE BETWEEN STEPS IS LESS THAN OR EQUAL TO 20". WHERE ARC DISTANCE BETWEEN STEPS IS GREATER THAN 20", RADIAL ORIENTATION SHALL BE SHIFTED TO 120 DEGREES, AND WHEN APPLICABLE, TO 90 DEGREES.

b. SIX INCH MINIMUM VERTICAL DISTANCE TO BE MAINTAINED BETWEEN CLIMBING STEPS AND CROSSARMS.

c. SIX INCH MINIMUM VERTICAL DISTANCE TO BE MAINTAINED BETWEEN CLIMBING STEPS AND WORKING STEPS.

d. THREE INCH MINIMUM VERTICAL DISTANCE TO BE MAINTAINED BETWEEN CLIMBING STEP AND GUYS BY SHIFTING VERTICAL LOCATION OF GUY. CLIMBING STEPS ARE NOT TO BE SHIFTED.

e. MAXIMUM AND MINIMUM VERTICAL DISTANCES BETWEEN CLIMBING STEPS AND CROSSARMS OR WORKING STEPS HAVE BEEN MAINTAINED BY SLIGHT SHIFTS TO LOCATION OF CLIMBING STEPS.

(V) MARKING (FIGURES 3 - 5)

a. ENGRAVED METAL NAMEPLATES (FIGURE 3) ARE PERMANENTLY ATTACHED TO THE 90-DEGREE FACE, OR GAIN SIDE OF THE POLE AT APPROXIMATELY 10% PLUS SEVEN FEET ABOVE THE BOTTOM OF THE POLE AND ONE FOOT ABOVE THE BOTTOM OF EACH SPLICE. EXCEPTION FOR LIGHT DUTY POLE: NAMEPLATE IS ATTACHED ONLY TO BOTTOM SECTION.

b. THE SDG&E POLE SERIAL NUMBER (HEAVY DUTY POLES ONLY) UNIQUELY IDENTIFIES EACH POLE THAT IS MANUFACTURED. EACH MODULE FOR A POLE HAS THE IDENTICAL SDG&E POLE SERIAL NUMBER STAMPED INTO THE NAMEPLATE. DUE TO SLIGHT DISCREPANCIES WHICH OCCUR DURING POLE MACHINING, THIS NUMBER HAS BEEN DESIGNATED AS A WAY TO ENSURE THE CORRECT PIECES ARE INSTALLED TOGETHER FOR PROPER FIT.

SDG&E POLE SERIAL NUMBER EXAMPLE: **040-H1-0001FG**

040 - POLE HEIGHT

H1 - EQUIVALENT POLE CLASS

0001 - FABRICATION SEQUENCE NUMBER

FG - INDICATES FIBERGLASS

c. ENGRAVED METAL MODULE ID TAGS (HEAVY DUTY POLES ONLY) ARE LOCATED DIRECTLY BELOW EACH NAMEPLATE (FIGURES 4 & 5) AND CONTAIN THE FOLLOWING INFORMATION:

MODULE PART CODE - FOR USE IN MODULE IDENTIFICATION

MODULE SERIAL NUMBER (NOT FOR CONSTRUCTION USE)

d. MODULE/SECTION LIFTING BALANCE POINT IS CLEARLY MARKED.

(VI) EACH SECTION HAS A SLIGHT TAPER. THEREFORE WHEN SETTING THE BASE PLUMB. A GOOD STANDARD PRACTICE IS TO USE A LEVEL ACROSS THE TOP IN BOTH AXES RATHER THAN ALONG THE SIDE.

(VII) FIBERGLASS CROSSARMS ARE PREFERRED FOR USE ON COMPOSITE POLES AND INCLUDE A MANUFACTURER SUPPLIED MOUNTING BRACKET. STEEL CROSSARMS ARE NOT TO BE USED.

(VIII) TO AVOID DAMAGING BASE PLATE, IT SHALL BE INSTALLED AFTER POLE HAS BEEN LIFTED FOR SETTING.

IX. LIGHT DUTY POLE. FIELD DRILLING OF MISSING HOLE LOCATIONS AND ENLARGEMENT OF STEP HOLES TO 1 1/8" DIAMETER IS PERMITTED. (T)

TABLE OF CONTENTS

© 1998 - 2021 San Diego Gas & Electric Company. All rights reserved. Removal of this copyright notice without permission is not permitted under law.

REV	CHANGE	DR	BY	DSN	APV	DATE	REV	CHANGE	DR	BY	DSN	APV	DATE
C	BILL OF MATERIALS UPDATE	EDM	JES	JES	CZH	10/12/2020	F	TABLE 1A & NOTES UPDATE	ARC	JES	JES	CZH	10/01/2021
B	COMPLETLEY REVISED	EDM	GLW	JES	CZH	07/09/2020	E	NOTES UPDATE	EDM	MRF	JES	CZH	08/13/2021
A	ORIGINAL ISSUE	-	JBH	IL	MDJ	04/15/2016	D	BILL OF MATERIALS UPDATE	EDM	JES	JES	CZH	04/06/2021

NOTES (CONT'D):

XI. PRODUCT DESIGN

a. POLES SHALL PRESENT THE MOST PLEASING APPEARANCE POSSIBLE CONSISTENT WITH STRENGTH,COST AND SERVICEABILITY REQUIREMENTS. POLE COLOR SHALL BE BROWN UNLESS OTHERWISE APPROVED BY EDE.

b. HOLE PATTERN SHALL BE SYMMETRICAL ABOUT THE TRANSVERSE AND LONGITUDINAL AXES WITH A GRADUAL AND CONSTANT TAPER.

c. PRIOR TO SHIPMENT, ALL HOLES SHALL BE PLUGGED WITH A SUITABLE PRODUCT INTENDED TO LAST THE LIFE OF THE POLE BUT EASILY REMOVABLE.

d. ALL MATERIAL SHALL CONFORM TO CHEMICAL AND MECHANICAL PROPERTIES AS TESTED IN ACCORDANCE WITH APPROPRIATE INDUSTRY RECOGNIZED AND APPROVED EQUIVALENT SPECIFICATIONS.

XII. CONFORMANCE FOR MANUFACTURING

a. POLE REQUIREMENTS SHALL BE IN ACCORDANCE WITH ALL APPLICABLE A.S.T.M. AND A.N.S.I. STANDARDS.

b. ALL POLE DIMENSIONS SHALL CONFORM TO THIS STANDARD AS WELL AS TO THE STRUCTURAL DESIGN.

XIII. FABRICATION

a. FABRICATION SHALL BE PERFORMED IN ACCORDANCE WITH POLE DETAIL DRAWINGS.

b. MATERIAL SUBSTITUTIONS OR DEVIATIONS FROM THE APPROVED DRAWINGS SHALL NOT BE MADE WITHOUT WRITTEN APPROVAL FROM SDGE.

c. HOLES SHALL BE CYLINDRICAL (I.E. SHALL NOT VARY IN ROUNDNESS).

XIV. SHIPPING

a. ALL POLES SHALL BE LOADED AND TRANSPORTED IN ACCORDANCE WITH ALL APPLICABLE FEDERAL AND STATE LAWS, RULES AND REGULATIONS.

b. POLES MAY BE SHIPPED BY EITHER TRUCK OR RAIL, UNLESS SPECIFICALLY DIRECTED BY SDGE. IF POLES ARE SHIPPED BY RAIL, THEY SHALL BE LOADED ON FLAT CARS OF POLE GONDOLAS (UNLESS SDG&E APPROVES ANOTHER TYPE) INACCORDANCE WITH THE LATEST ISSUE OF THE II ASSOCIATION OF AMERICAN RAILROADS II GOVERNING THE LOADING OF COMMODITIES ON OPEN TOP CARS.

c. POLES SHALL BE LOADED IN A MANNER THAT ALLOWS FOR SAFE AND ACCESSIBLE REMOVAL AND PREVENTS DAMAGE DURING SHIPMENT. THERE SHALL BE A MINIMUM CLEARANCE OF 5.5" BETWEEN ROWS OF POLES. THIS MINIMUM SEPARATION MAY BE ACHIEVED THROUGH THE USE OF WOOD DUNNAGE OR OTHER SUITABLE MATERIAL.

XV. INSPECTION

a. INSPECTION BY SDGE WILL BE DONE UPON DELIVERY.

b. ALL POLES NOT IN ACCORDANCE WITH THESE SPECIFICATIONS SHALL BE SUBJECT TO REJECTION PRIOR TO INSTALLATION. SUPPLIER SHALL PROVIDE CREDIT OR REPLACEMENTS FOR POLES REJECTED AFTER DELIVERY.

TABLE OF CONTENTS

REFERENCE:

(a) REFER TO OH379; FIBERGLASS CROSSARMS.

(b) REFER TO OH104-105; CONSTRUCTION STANDARDS/DEVIATION REQUEST FORM AND PROCEDURE.

(c) REFER TO OH390; HARDWARE.

d. REFER TO OH354; PHYSICAL PROPERTIES FOR WOOD AND STEEL POLES.

(e) REFER TO OH1002; GENERAL GROUNDING INFORMATION.

(f) REFER TO OH363; POLE STEPPING.

g. REFER TO G.O. 95 RULE 91.3; POLES, TOWERS AND STRUCTURE STEPPING.

h. FOR BACKFILLING INFORMATION, REFER TO OH303; POLE INFORMATION.

(i) REFER TO OH208; POLE MARKING.

© 1998 - 2021 San Diego Gas & Electric Company. All rights reserved. Removal of this copyright notice without permission is not permitted under law.

REV	CHANGE	DR	BY	DSN	APV	DATE	REV	CHANGE	DR	BY	DSN	APV	DATE
C	BILL OF MATERIALS UPDATE	EDM	JES	JES	CZH	10/12/2020	F	TABLE 1A & NOTES UPDATE	ARC	JES	JES	CZH	10/01/2021
B	COMPLETLEY REVISED	EDM	GLW	JES	CZH	07/09/2020	E	NOTES UPDATE	EDM	MRF	JES	CZH	08/13/2021
A	ORIGINAL ISSUE	-	JBH	IL	MDJ	04/15/2016	D	BILL OF MATERIALS UPDATE	EDM	JES	JES	CZH	04/06/2021

X Indicates Latest Revision | Completely Revised | New Page | Information Removed

SDG&E ELECTRIC OVERHEAD CONSTRUCTION STANDARDS

FIBERGLASS DISTRIBUTION POLES DRILLING DIMENSIONS AND DETAILS

OH320.14

REFERENCE (CONT'D):

(j) REFER TO OH315; POLE CAPS/HOLE PLUGS.

(k) REFER TO OH925; POLE BANDING.

l. REFER TO DRAWING 12100; DIRECT BURIED POLE SELECTION & LOADING CRITERIA.

(m) REFER TO OH927; GUY ASSEMBLY DETAILS.

(n) REFER TO OH928; GUY ASSEMBLY DETAILS FOR FIBERGLASS GUY STRAIN INSULATOR.

TABLE OF CONTENTS

© 1998 - 2021 San Diego Gas & Electric Company. All rights reserved. Removal of this copyright notice without permission is not permitted under law.

REV	CHANGE	DR	BY	DSN	APV	DATE	REV	CHANGE	DR	BY	DSN	APV	DATE
C	BILL OF MATERIALS UPDATE	EDM	JES	JES	CZH	10/12/2020	F	TABLE 1A & NOTES UPDATE	ARC	JES	JES	CZH	10/01/2021
B	COMPLETLEY REVISED	EDM	GLW	JES	CZH	07/09/2020	E	NOTES UPDATE	EDM	MRF	JES	CZH	08/13/2021
A	ORIGINAL ISSUE	-	JBH	IL	MDJ	04/15/2016	D	BILL OF MATERIALS UPDATE	EDM	JES	JES	CZH	04/06/2021

X Indicates Latest Revision | Completely Revised | New Page | Information Removed

SHEET 15 OF 15

SDG&E ELECTRIC OVERHEAD CONSTRUCTION STANDARDS

FIBERGLASS DISTRIBUTION POLES DRILLING DIMENSIONS AND DETAILS

OH320.15

SCOPE: THIS STANDARD SHOWS WARNING SPHERES USED IN AUTHORIZED BOAT LAUNCHING AREAS WHERE OVERHEAD LINES EXIST. THE SPHERES ARE INSTALLED TO CALL THE PUBLIC'S ATTENTION TO THE LINES IN ORDER TO PREVENT BOAT MASTS FROM BEING RAISED OR CARRIED BENEATH THE LINES IN A MANNER WHICH IS LIKELY TO CAUSE CONTACT WITH THE LINES.

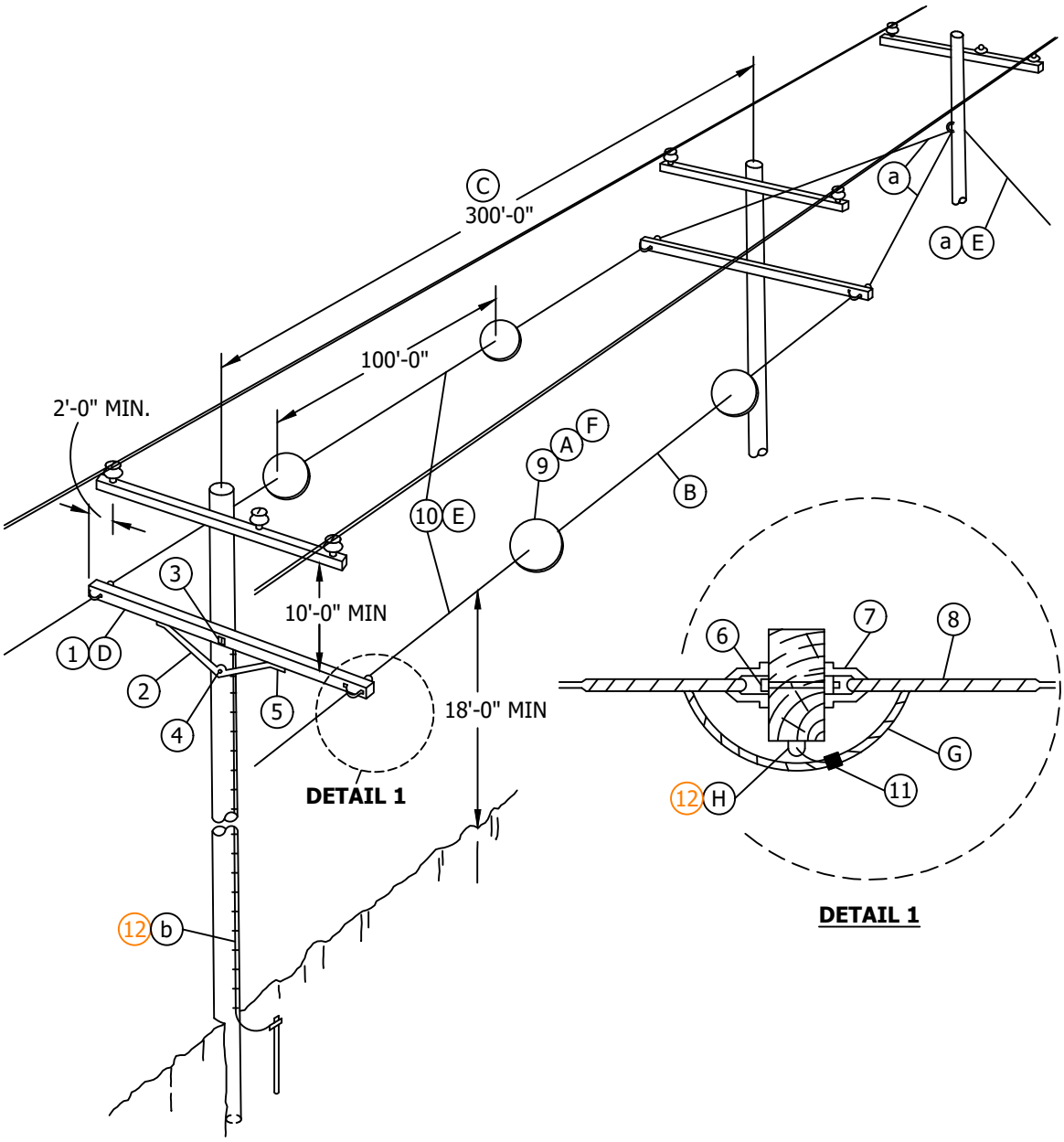

TABLE OF CONTENTS

© 1998 - 2023 San Diego Gas & Electric Company. All rights reserved. Removal of this copyright notice without permission is not permitted under law.

REV	CHANGE	DR	BY	DSN	APV	DATE	REV	CHANGE	DR	BY	DSN	APV	DATE
C	TABLE UPDATE	-	JIK	JES	CZH	01/14/2020	F						
B	DRAWING UPDATE	-	PEI	-	-	03/18/2019	E						
A	ORIGINAL ISSUE	-	-	PTA	JJ	11/29/2005	D	BILL OF MATERIALS UPDATE	GLC	RSL	MRF	KRG	04/21/2023

X Indicates Latest Revision | Completely Revised | New Page | Information Removed

SDG&E ELECTRIC OVERHEAD CONSTRUCTION STANDARDS

SHEET 1 OF 2

BOAT LAUNCHING AREA WARNING SPHERE

OH325.1

INSTALLATION:

(A) WARNING SPHERE WILL HAVE "HIGH VOLTAGE" SIGNS PAINTED ON FOUR EQUALLY SPACED LOCATIONS. LETTERS ARE TO BE A MINIMUM OF 3 INCHES HIGH AND PAINTED BRIGHT YELLOW.

(B) USE 10M ALUMOWELD GUY STRAND WIRE FOR LOCATIONS THAT NEED SPECIAL ATTENTION.

(C) IN SPANS EXCEEDING 300 FEET, USE ONE ADDITIONAL SPHERE PER GUY, PER 100 FEET OF ADDITIONAL SPAN LENGTH.

(D) LENGTH OF CROSSARM MAY BE REDUCED FOR VERTICAL OR ARMLESS CONSTRUCTION BUT UNDER NO CIRCUMSTANCES WILL THE CROSSARM BE LESS THAN 10 FEET LONG.

(E) ANCHOR GUYS AND MESSENGER GUYS FOR THE WARNING SPHERES SHALL NOT BE SECTIONALIZED AT ANY POINT.

(F) WHEN A ROAD CROSSES UNDER A GUY STRUCTURE, 2 ADDITIONAL WARNING SPHERES WILL BE CENTERED OVER THE ROAD, ONE SPHERE ON EACH GUY WIRE.

(G) LOOP GUY WIRE UNDER ARM SO THAT IT IS ELECTRICALLY CONTINUOUS THROUGHOUT IT'S LENGTH.

(H) CONNECT GROUND WIRE TO THE WARNING SPHERE MESSENGER GUY WIRE.

BILL OF MATERIALS:

ITEM	DESCRIPTION		QUANTITY	STANDARD PAGE	STOCK NUMBER	DESIGN UNITS
1	CROSSARM, 3-3/4" x 5-3/4" x 15'-0" (D)		1		S293712	6L-
2	BRACE, ANGLE CROSSARM, 6' - 0"		1		S164160	6HUB
3	BOLT, MACH, GALV, 5/8" x (LENGTH AS REQ'D), 2 SQ WASHERS & 1 DOUBLE COIL SPRING WASHER		1	392	-	-
4	BOLT, MACH, GALV, 5/8" x (LENGTH AS REQ'D), 1 SQ WASHER & 1 DOUBLE COIL SPRING WASHER		1	392	-	-
5	BOLT, MACH, GALV, 1/2" x 7", 1 RD & 1 DBL COIL SPRING WASHER		2	392	-	-
6	BOLT, MACH, GALV, 5/8" x (LENGTH AS REQ'D) & 1 LOCK WASHER		2	392	-	-
7	EYELET, 5/8"		4		S338176	THMBLE
8	GRIP, FACTORY GUY, 3/8" GALVANIZED (B)		4		S393248	GR3/8
9	WARNING SPHERE		AS REQ'D		S665216	SPHERE
10	WIRE, GUY, 3/8" GALVANIZED (B)		AS REQ'D		S811296	3/8
11	CONNECTORS, TWO BOLT PARALLEL		2		S261856	-
12	GROUNDING, #4 PVC GROUND WIRE, RODS & CONNECTORS	STEEL POLE	1	1002	-	GNDPSP
		WOOD/FG POLE				GNDPVC

NOTES:

I. ON NEW CONSTRUCTION, CROSSARMS SHOULD BE KEPT TO SINGLE ARM CONSTRUCTION.

II. MATERIALS ORDERED FOR GROUND WIRE AND GROUND MOULDING ARE BASED ON A 45' POLE.

REFERENCE:

(a) GUYING REQUIREMENTS FOR SUPPORTING THE SPHERES ARE THE SAME AS IF THEY WERE LINE CONDUCTORS. SEE SECTION 900 FOR GUYING REQUIREMENTS.

(b) EVERY OTHER POLE SHALL BE GROUNDED. SEE SECTION 1000 FOR GROUNDING REQUIREMENTS.

c. SEE DESIGN MANUAL PAGE 5126.

TABLE OF CONTENTS

© 1998 - 2023 San Diego Gas & Electric Company. All rights reserved. Removal of this copyright notice without permission is not permitted under law.

REV	CHANGE	DR	BY	DSN	APV	DATE	REV	CHANGE	DR	BY	DSN	APV	DATE
C	TABLE UPDATE	-	JIK	JES	CZH	01/14/2020	F						
B	DRAWING UPDATE	-	PEI	-	-	03/18/2019	E						
A	ORIGINAL ISSUE	-	-	PTA	JJ	11/29/2005	D	BILL OF MATERIALS UPDATE	GLC	RSL	MRF	KRG	04/21/2023

X Indicates Latest Revision | Completely Revised | New Page | Information Removed

SDG&E ELECTRIC OVERHEAD CONSTRUCTION STANDARDS

BOAT LAUNCHING AREA WARNING SPHERE

OH325.2

SCOPE: THIS STANDARD SHOWS THE INSTALLATION OF AVIATION MARKER WARNING SPHERES, INCLUDING REQUIRED MATERIALS.

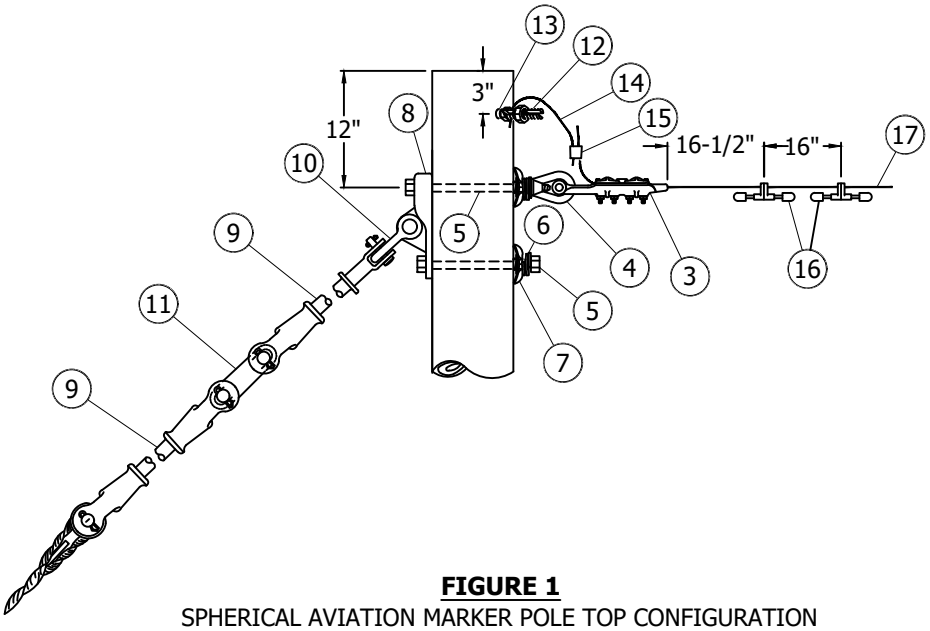

FIGURE 1
SPHERICAL AVIATION MARKER POLE TOP CONFIGURATION

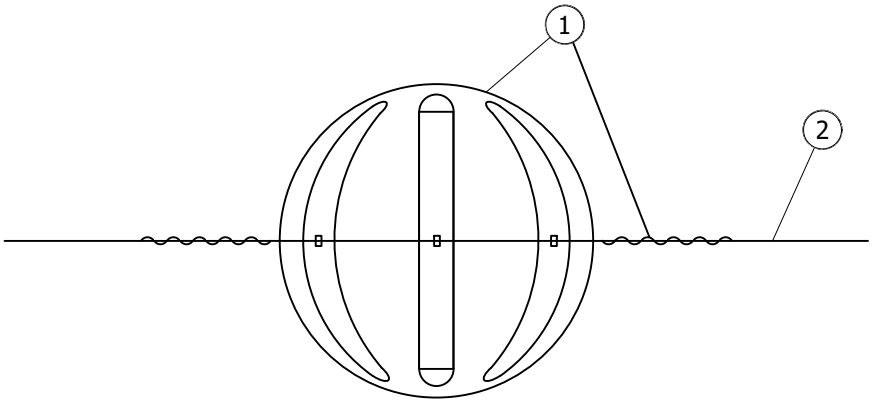

FIGURE 2
SPHERICAL AVIATION MARKER, 36 INCH DIAMETER, 17 POUNDS



FIGURE 3
PREFORM DETAIL

© 1998 - 2020 San Diego Gas & Electric Company. All rights reserved. Removal of this copyright notice without permission is not permitted under law.

REV	CHANGE	BY	DSGN	APPV	DATE	REV	CHANGE	BY	DSGN	APPV	DATE
C	TABLE UPDATE	JAC	JES	CZH	1/14/2020	F					
B	TABLE UPDATES	JS	JS	MDJ	5/16/2017	E					
A	ORIGINAL ISSUE	JS	JS	MDJ	3/25/2017	D					

X Indicates Latest Revision | Completely Revised | New Page | Information Removed

SDG&E ELECTRIC OVERHEAD CONSTRUCTION STANDARD

AVIATION MARKER WARNING SPHERE

OH330.1

TABLE OF CONTENTS

INSTALLATION: NONE

BILL OF MATERIALS:

ITEM	DESCRIPTION	QUANTITY	STANDARD PAGE	STOCK NUMBER	DESIGN UNITS
1	AVIATION MARKER WARNING SPHERE WITH 10M PREFORM GRIP AND ASSEMBLY - ORANGE	AS REQ'D	330	S665218	ASPHRO
	AVIATION MARKER WARNING SPHERE WITH 10M PREFORM GRIP AND ASSEMBLY - YELLOW	AS REQ'D	330	S665220	ASPHRY
	AVIATION MARKER WARNING SPHERE WITH 10M PREFORM GRIP AND ASSEMBLY - WHITE	AS REQ'D	330	S665222	ASPHRW
2	GUY WIRE - ALUMOWELD - 10M	AS REQ'D	961	S811024	10M
3	DEADEND STRAIN CLAMP - ALUMINUM ALLOY	1	742	S230672	DE10M
4	EYENUT - 3/4"	1	-	S504020	EXEMPT
5	MACHINE BOLT - 3/4"x12"	AS REQ'D	392	S153408	EXEMPT
6	DOUBLE COIL SPRING WASHER - 3/4"	2	392	S798496	EXEMPT
7	SQUARE CURVED RIB WASHER - 3/4"	2	392	S797760	EXEMPT
8	PLATE - POLE EYE - GALVANIZED	1	928	S542944	EYE-PL
9	INSULATOR - GUY STRAIN - FIBERGLASS - 10' PIN-TO-PIN	2	928	S430882	FG-GUY
10	SHACKLE - ANCHOR - GALV. - 5/8" PIN	1	744	S636432 (X)	30KSHK
11	LINK - CHAIN - 1/2" X 2-3/8" - GALVANIZED	1	1240	S465750 (X)	DELINK
12	CONNECTOR - SPLIT BOLT - BRONZE - 1/2" X 13	1	530	S262560	SPCONN
13	BLIND NUT, 1/2"	AS REQ'D	1002	S503460 (X)	-
14	#4 CU SOLID GROUND WIRE - PVC COVERED	AS REQ'D	1002	S812490	4POLY
15	WEDGE CONNECTOR	1	784	S269836 (X)	WCR6ST
16	DAMPER - STOCKBRIDGE - STATIC WIRE - 10M	2	789	S300300	DMP10M

TABLE OF CONTENTS

NOTES:

I. IF ADDITIONAL 10M PREFORM GRIP ASSEMBLIES ARE REQUIRED THEY CAN BE ORDERED WITH A STOCK NUMBER OF S409420 AND AU OF ARD10M.

(X) THIS ITEM IS EXEMPT.

REFERENCE: NONE

© 1998 - 2020 San Diego Gas & Electric Company. All rights reserved. Removal of this copyright notice without permission is not permitted under law.

REV	CHANGE	BY	DSGN	APPV	DATE	REV	CHANGE	BY	DSGN	APPV	DATE
C	TABLE UPDATE	JAC	JES	CZH	1/14/2020	F					
B	TABLE UPDATES	JS	JS	MDJ	5/16/2017	E					
A	ORIGINAL ISSUE	JS	JS	MDJ	3/25/2017	D					

SCOPE: THIS STANDARD SHOWS THE INSTALLATION OF OVERHEAD CROSSING MARKERS ON ALL POLE TYPES.

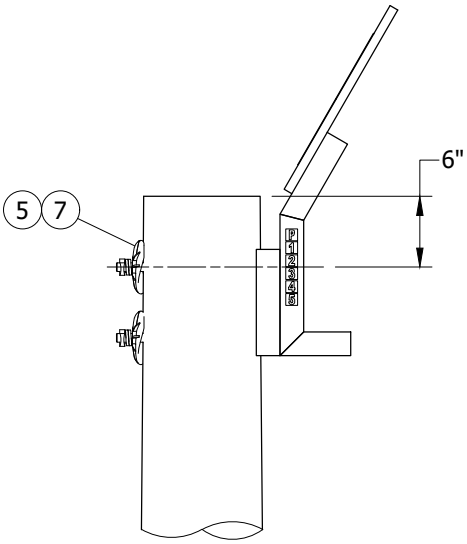

FIGURE 1
WOOD AND STEEL POLE CONFIGURATION ONLY
SIDE VIEW

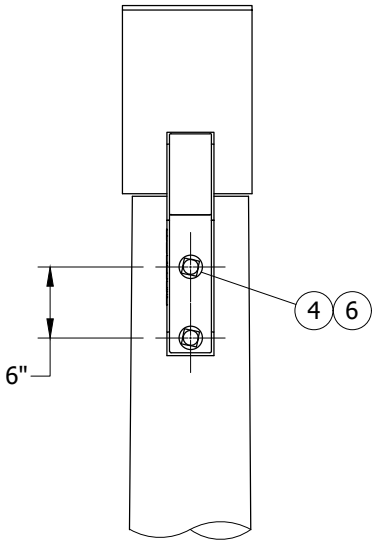

FIGURE 1
WOOD AND STEEL POLE CONFIGURATION ONLY
FRONT VIEW

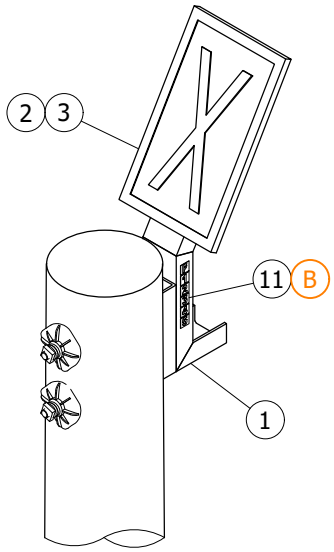

FIGURE 1
WOOD AND STEEL POLE CONFIGURATION ONLY
ISOMETRIC VIEW

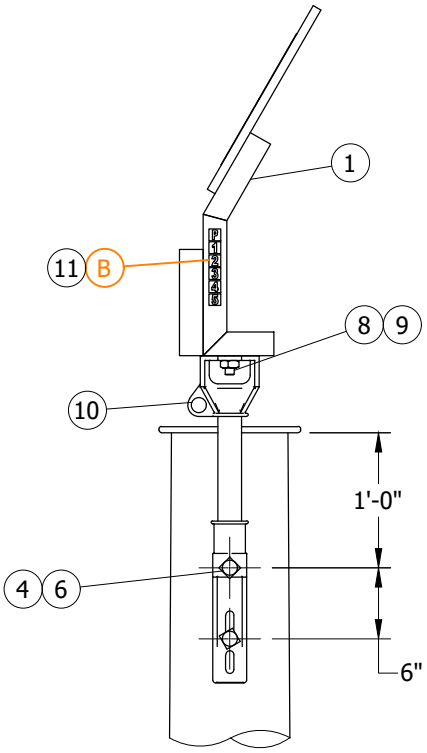

FIGURE 2
CONFIGURATION FOR ALL POLE TYPES
SIDE VIEW

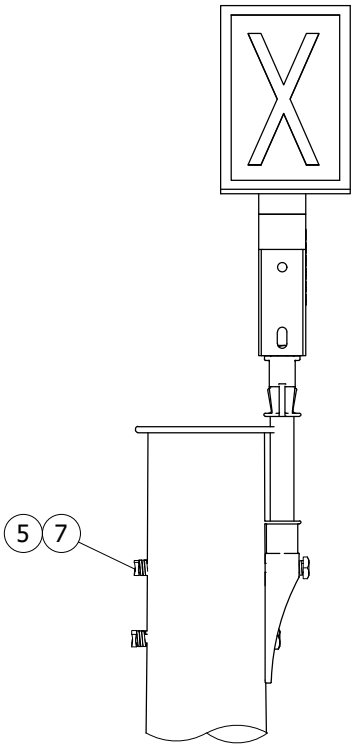

FIGURE 2
CONFIGURATION FOR ALL POLE TYPES
FRONT VIEW

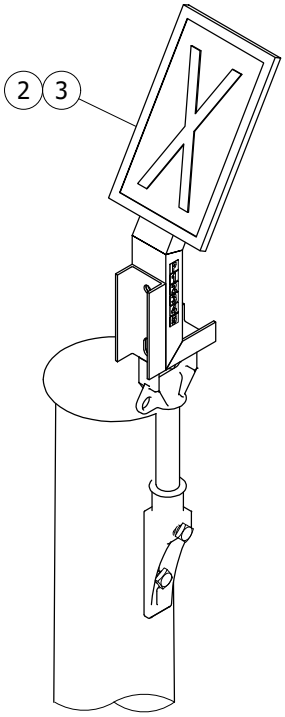

FIGURE 2
CONFIGURATION FOR ALL POLE TYPES
ISOMETRIC VIEW

TABLE OF CONTENTS

© 1998 - 2022 San Diego Gas & Electric Company. All rights reserved. Removal of this copyright notice without permission is not permitted under law.

REV	CHANGE	DR	BY	DSN	APV	DATE	REV	CHANGE	DR	BY	DSN	APV	DATE
C	TABLE UPDATE	EDM	RSL	JES	CZH	12/12/2021	F						
B	EDITORIAL CHANGES	EDM	JIK	JES	CZH	04/13/2020	E						
A	ORIGINAL ISSUE	-	JBH	JS	CZH	06/05/2018	D	DRAWING UPDATE	EDM	MRF	GLW	KRG	07/15/2022

X Indicates Latest Revision | Completely Revised | New Page | Information Removed

SDG&E ELECTRIC OVERHEAD CONSTRUCTION STANDARDS

OVERHEAD CROSSING MARKERS

OH331.1

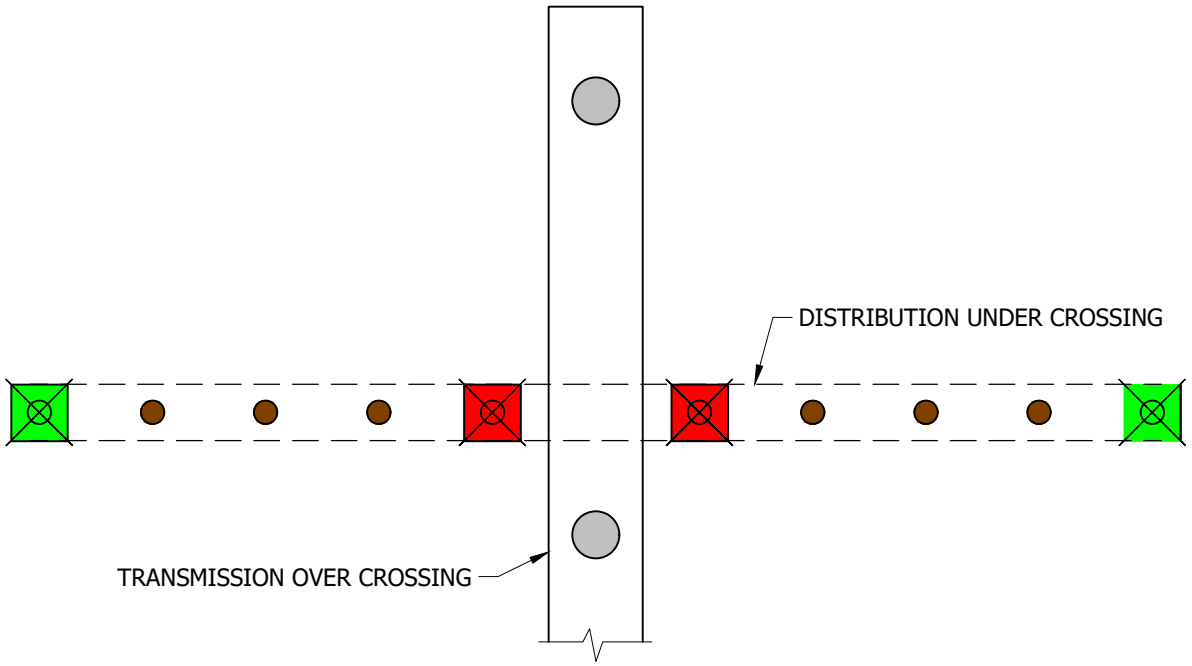

FIGURE 3
SIGNAGE SCHEMATIC
AERIAL VIEW

INSTALLATION:

A. CROSSING MARKERS TO BE PLACED ON POLE TOP. A WARNING (RED) CROSSING MARKER SHALL BE PLACED ONE SPAN LENGTH AWAY FROM WHERE A CIRCUIT/TL CROSSES OVER THE TOP OF ANOTHER CIRCUIT/TL AN INDICATION (GREEN) CROSSING MARKER SHALL PRECEDE A WARNING CROSSING MARKER BY FOUR SPANS. SEE FIGURE 3.

(B) POLE ID NUMBER SHALL BE NOTED VERTICALLY ON BOTH SIDES OF THE CROSSING MARKER FRAME.

BILL OF MATERIALS:

ITEM	DESCRIPTION	QUANTITY	STANDARD PAGE	STOCK NUMBER	DESIGN UNITS
1	SIGNAGE, CROSSING MARKER FRAME, BTI INCORPORATED	1	--	S164634	X-FRM
2	SIGNAGE, CROSSING MARKER, FLO-GREEN	1	--	S648162	XMARKG
3	SIGNAGE, CROSSING MARKER, FLO-RED	1	--	S648172	XMARKR
4	BOLT, MACHINE, 5/8" DIAMETER, SIZE AS NEEDED	2	390	--	--
5	WASHER, LOCK, SPRING, 5/8"	2		S796866 (X)	--
6	WASHER FLAT, 5/8" DIAMETER, GALVANIZED	AS REQ'D		S800320	5/8R
7	WASHER, SQUARE, CURVED, 3"	2		S797792	--
8	BOLT, 3/4" DIAMETER, 10 THREAD X 3" LONG, (SUPPLIED BY BTI)	1	--	--	--
9	NUT, 3/4" DIAMETER, HEX, STEEL, GALVANIZED (FOR SIGN)	1	--	S506840	--
10	RIDGE PIN, FIBERGLASS, 18"	1	--	S529218	RDGP18
11	TAG, REFLECTIVE DECAL, 1" X 1", YELLOW ON BLACK BACKGROUND, POLE NUMBER	AS REQ'D	208	--	--

© 1998 - 2022 San Diego Gas & Electric Company. All rights reserved. Removal of this copyright notice without permission is not permitted under law.

REV	CHANGE	DR	BY	DSN	APV	DATE	REV	CHANGE	DR	BY	DSN	APV	DATE
C	TABLE UPDATE	EDM	RSL	JES	CZH	12/12/2021	F						
B	EDITORIAL CHANGES	EDM	JIK	JES	CZH	04/13/2020	E						
A	ORIGINAL ISSUE	-	JBH	JS	CZH	06/05/2018	D	DRAWING UPDATE	EDM	MRF	GLW	KRG	07/15/2022

X Indicates Latest Revision | Completely Revised | New Page | Information Removed

NOTES:

I. CIRCUITS THAT ARE ROUTINELY PATROLLED BY AIRCRAFT SHALL HAVE CROSSING MARKERS INSTALLED AT CROSSING TO PROVIDE WARNING FOR UPCOMING CONSTRUCTIONS OF OVERHEAD TRANSMISSION LINES.

II. CROSSINGS IDENTIFIED FOR MARKER INSTALLATION SHOULD BE DOCUMENTED AND A NOTIFICATION SHOULD BE SENT TO THE AVIATION SERVICE DEPARTMENT AND THE RESPECTIVE DISTRICT CONSTRUCTION MANAGER.

(X) THIS ITEM IS EXEMPT.

REFERENCE:

a. FOR POLE MARKING, SEE OH208.

TABLE OF CONTENTS

© 1998 - 2022 San Diego Gas & Electric Company. All rights reserved. Removal of this copyright notice without permission is not permitted under law.

REV	CHANGE	DR	BY	DSN	APV	DATE	REV	CHANGE	DR	BY	DSN	APV	DATE
C	TABLE UPDATE	EDM	RSL	JES	CZH	12/12/2021	F						
B	EDITORIAL CHANGES	EDM	JIK	JES	CZH	04/13/2020	E						
A	ORIGINAL ISSUE	-	JBH	JS	CZH	06/05/2018	D	DRAWING UPDATE	EDM	MRF	GLW	KRG	07/15/2022

X Indicates Latest Revision | Completely Revised | New Page | Information Removed

SDG&E ELECTRIC OVERHEAD CONSTRUCTION STANDARDS

OVERHEAD CROSSING MARKERS

OH331.3

SCOPE: THIS STANDARD DESCRIBES LOADING DISTRICTS WHICH AFFECT CONSTRUCTION OF OVERHEAD FACILITIES ACCORDING TO ELEVATION OR OTHER CONDITIONS.

1) THE FOLLOWING LOADING DISTRICTS ARE TO BE CONSIDERED IN DETERMINING THE STRENGTH REQUIRED OF POLES, TOWERS, STRUCTURES, AND ALL PARTS THEREOF, TO ACHIEVE THE REQUIRED OVERALL STRENGTH OF FACILITIES AND CLEARANCE OF CONDUCTORS.

A) LIGHT LOADING (G.O. 95 Rule 43.2, NOT SUBJECT TO PARAGRAPH D)

THIS APPLIES TO ALL PARTS OF THE SDG&E SERVICE TERRITORY:
FOR ELEVATIONS BETWEEN 0-3,000 FEET, THE FOLLOWING ASSUMPTIONS APPLY:

a. FOR CONDUCTOR SURFACES THE HORIZONTAL WIND PRESSURE = 8 LBS PER SQUARE FOOT,
b. FOR FLAT SURFACE THE HORIZONTAL WIND PRESSURE = 13 POUNDS PER SQUARE FOOT,
c. AMBIENT TEMPERATURE = 25°F AT THE TIME OF MAXIMUM WIND LOADING, TO CALCULATE HARDWARE, POLE, AND CONDUCTOR TENSION REQUIREMENTS.
d. NO ICE LOADING IS TO BE CONSIDERED

B) HEAVY LOADING (G.O. 95 RULE 43.1, NOT SUBJECT TO PARAGRAPH D)

THIS APPLIES TO ALL PARTS OF THE SDG&E SERVICE TERRITORY:
FOR ELEVATIONS FROM 3,001 FEET TO 5,000 FT, THE FOLLOWING ASSUMPTIONS APPLY:

a. FOR CONDUCTOR SURFACES THE HORIZONTAL WIND PRESSURE = 6 LBS PER SQUARE FOOT,
b. FOR FLAT SURFACE THE HORIZONTAL WIND PRESSURE = 10 POUNDS PER SQUARE FOOT,
c. THE AMBIENT TEMPERATURE = 0°F AT THE TIME OF MAXIMUM WIND LOADING, TO CALCULATE HARDWARE, POLE, AND CONDUCTOR TENSION REQUIREMENTS.
d. A RADIAL THICKNESS OF 1/2 INCH OF ICE LOADING IS TO BE CONSIDERED ON ALL CONDUCTORS

C) EXTRA HEAVY LOADING (SDG&E STANDARD EXCEEDING G.O. 95 MINIMUMS NOT SUBJECT TO PARAGRAPH D)

THIS APPLIES TO ALL PARTS OF THE SDG&E SERVICE TERRITORY:
FOR ELEVATIONS ABOVE 5,000 FT, THE FOLLOWING ASSUMPTIONS APPLY:

a. FOR CONDUCTOR SURFACES THE HORIZONTAL WIND PRESSURE = 12 POUNDS PER SQUARE FOOT,
b. FOR FLAT SURFACE THE HORIZONTAL WIND PRESSURE = 19 POUNDS PER SQUARE FOOT,
c. THE AMBIENT TEMPERATURE = 0°F AT THE TIME OF MAXIMUM WIND LOADING, TO CALCULATE HARDWARE, POLE, AND CONDUCTOR TENSION REQUIREMENTS.
d. A RADIAL THICKNESS OF 1 INCH OF ICE LOADING IS TO BE CONSIDERED ON ALL CONDUCTORS

D) EXTREME WIND LOADING (SDG&E STANDARD, EXCEEDING G.O. 95 MINIMUM DERIVED FROM NESC 250C)

THIS APPLIES TO ALL PARTS OF SDG&E SERVICE TERRITORY AS AN OVERLAY, WHERE:
OH FACILITIES:

a. RESIDE IN THE "SDG&E TIER 2 & TIER 3" AS INDICATED IN LAND SERVICES - GEOGRAPHIC INFORMATION SYSTEM (LS-GIS), REGARDLESS OF ELEVATION,
b. NOTE: POLES INSTALLED WITHIN THE SDG&E TIER 3 SHALL MEET OR EXCEED THE NESC-250C REQUIREMENT OF 85 MPH (18.5 PSF WIND PRESSURE). THE TIER 3 IS INCORPORATED WITHIN THE "SDG&E TIER 2 & TIER 3" IN LS-GIS.Z
c. OR, RESIDE IN THE DESERT AREAS OF BORREGO SPRINGS AND ANZA-BORREGO STATE PARK (INCLUDES CIRCUITS 170, 171, 172, AND 221) THAT ARE KNOWN TO BE SUBJECT TO MICROBURSTS OR OTHER WEATHER EVENTS THAT CAUSE LOCALIZED HIGH SPEED WIND EVENTS. NOTE: WEATHERING STEEL POLES SHALL BE INSTALLED FOR ALL NEW AND REPLACEMENT POLE CONSTRUCTION ON CIRCUITS 170, 171, 172 AND 221.

THE FOLLOWING ASSUMPTIONS APPLY:

a. FOR CONDUCTOR SURFACES THE HORIZONTAL WIND PRESSURE = 18.5 LBS PER SQUARE FOOT,
b. FOR FLAT SURFACE THE HORIZONTAL WIND PRESSURE = 30 POUNDS PER SQUARE FOOT,
c. THE AMBIENT TEMPERATURE = 60°F AT THE TIME OF MAXIMUM WIND LOADING, TO CALCULATE HARDWARE, POLE, AND CONDUCTOR TENSION REQUIREMENTS.
d. NO ICE LOADING IS TO BE CONSIDERED.

TABLE OF CONTENTS

© 1998 - 2019 San Diego Gas & Electric Company. All rights reserved. Removal of this copyright notice without permission is not permitted under law.

REV	CHANGE	BY	DSGN	APPV	DATE	REV	CHANGE	BY	DSGN	APPV	DATE
C	DRAWING UPDATE	PEI	-	-	03/18/2019	F					
B	EDITORIAL CHANGES	GW	JS	MDJ	03/01/2018	E					
A	ORIGINAL ISSUE	JC	IL	JS/MDJ	06/19/2015	D					

2) LOADING CONDITIONS AS SPECIFIED IN 1) A), B) AND C) MUST BE CALCULATED FOR ALL OH FACILITIES IN SDG&E SERVICE TERRITORY, AND MUST ALSO BE COMPARED TO THE LOADING CONDITION AS SPECIFIED IN 1) D) WHEN THE OH FACILITY FALLS WITHIN THE AREAS AS SPECIFIED IN 1) D). THE MOST STRINGENT CONDITION SHALL PREVAIL IN DETERMINING THE STRENGTH REQUIRED OF POLES, TOWERS, STRUCTURES, AND ALL PARTS THEREOF TO ACHIEVE THE REQUIRED OVERALL STRENGTH OF FACILITIES AND CLEARANCE OF CONDUCTORS. IN ALL CASES FACILITIES WILL MEET OR EXCEED G.O. 95.

3) THE FOLLOWING TABLES SUMMARIZE THE CONDITIONS AS STATED IN SECTION 1) AND THE SAFETY FACTORS OF EQUIPMENT BY LOADING DISTRICT:

LOADING DISTRICT		LOADING CONDITIONS					
		RADIAL ICE (IN)	AMBIENT TEMP (°F)	WIND			ELEVATION
				SPEED (MPH)	FORCE ON CONDUCTOR (LBS/FT^2)	FORCE ON EQUIPMENT (LBS/FT^2)	
G.O. 95	LIGHT	0.0	25	56	8.0	13	0-3,000 FT
	HEAVY	0.5	0	48	6.0	10	3,001 - 5,000 FT
SDG&E	EXTRA HEAVY	1.0	0	68	12.0	19	ABOVE 5,000 FT
	EXTREME WIND	0.0	60	85	18.5	30	N/A - REFER TO SDG&E LS-GIS

TABLE 1 - LOADING CONDITIONS OF EQUIPMENT AND POLES BY LOADING DISTRICT

ITEM	EQUIPMENT OF LINE		LOADING DISTRICTS			
			G.O. 95		SDG&E	
			LIGHT	HEAVY	EXTRA HEAVY	EXTREME WIND
1	CONDUCTORS, SPLICES, AND CONDUCTOR FASTENING		2	2	2	2
2	PINS		2	2	2	2
3	POLE LINE HARDWARE		2	2	2	2
4	LINE INSULATORS (MECHANICAL)		3	3	3	3
5	GUY INSULATORS (MECHANICAL)	PORCELAIN	2	2	2	2
6		FIBERGLASS	3	3	3	3
7	GUYS		2	2	2	2
8	MESSENGERS & SPAN WIRES		2	2	2	2
9	POLES	WOOD	4	4	4	4
10		STEEL	1.5	1.5	1.5	1.5
11		COMPOSITE *	1.5	1.5	1.5	1.5
12	CROSSARMS	WOOD	2	2	2	2
13		STEEL	1.5	1.5	1.5	1.5
14		COMPOSITE *	2	2	2	2

TABLE 2 - SAFETY FACTORS FOR EQUIPMENT & LINES FOR GRADE A CONSTRUCTION

© 1998 - 2019 San Diego Gas & Electric Company. All rights reserved. Removal of this copyright notice without permission is not permitted under law.

REV	CHANGE	BY	DSGN	APPV	DATE	REV	CHANGE	BY	DSGN	APPV	DATE
C	DRAWING UPDATE	PEI	-	-	03/18/2019	F					
B	EDITORIAL CHANGES	GW	JS	MDJ	03/01/2018	E					
A	ORIGINAL ISSUE	JC	IL	JS/MDJ	06/19/2015	D					

TABLE OF CONTENTS

INSTALLATION: NONE

BILL OF MATERIALS: NONE

NOTES:

I. "*" - INCLUDES FIBERGLASS OR OTHER COMPOSITE TYPE OF MATERIAL.

II. TABLE 2 ASSUMES GRADE A CONSTRUCTION. THIS ASSUMPTION SHALL BE MADE FOR ALL NEW INSTALLATIONS UNLESS IT CAN BE POSITIVELY DETERMINED NO JOINT POLE USERS WILL ATTACH.

III. "MECHANICAL" - IMPLIES LINE TENSION APPLICATION, SUCH AS DEAD-END INSULATORS.

IV. ELECTRIC TRANSMISSION & DISTRIBUTION ENGINEERING STANDARD 12100 "DIRECT BURIED POLE SELECTION AND LOADING CRITERIA" SUPERSEDE INFORMATION CONTAINED IN OVERHEAD CONSTRUCTION STANDARD 354.

REFERENCE:

a. TO DETERMINE THE ELEVATION FOR THE VARIOUS LOADING DISTRICTS, SEE SAN DIEGO COUNTY TOPO-MAPS OR SDG&E LS-GIS.

b. SEE STANDARD 346 FOR POLE CLASS SELECTION DUE TO WIND LOADING OF CONDUCTORS.

c. SEE STANDARD 347 FOR POLE CLASS SELECTION DUE TO WIND LOADING OF EQUIPMENT.

d. SEE STANDARD 351 FOR WIND LOADING FOR VARIOUS CONDUCTORS AND EQUIPMENT AS APPLIED IN DIFFERENT LOADING DISTRICTS.

e. STRUCTURAL POLE LOADING CALCULATION REQUIREMENTS, SEE ELECTRIC STANDARD PRACTICE (ESP) 015.

TABLE OF CONTENTS

© 1998 - 2019 San Diego Gas & Electric Company. All rights reserved. Removal of this copyright notice without permission is not permitted under law.

REV	CHANGE	BY	DSGN	APPV	DATE	REV	CHANGE	BY	DSGN	APPV	DATE
C	DRAWING UPDATES	PEI	-	-	03/18/2019	F					
B	EDITORIAL CHANGES	GW	JS	MDJ	03/01/2018	E					
A	ORIGINAL ISSUE	JC	IL	JS/MDJ	06/19/2015	D					

X Indicates Latest Revision | Completely Revised | New Page | Information Removed

SCOPE: THIS STANDARD DESCRIBES POLE CLASS SELECTION DUE TO WIND LOADING OF CONDUCTORS.

INSTALLATION: NONE

BILL OF MATERIALS: NONE

NOTES:

I. **PROCEDURE:** COMPUTE BENDING "M" DUE TO WIND LOADING FOR EACH CONDUCTOR LEVEL AND SUM TO OBTAIN THE TOTAL MOMENT "M".

USE THE FORMULA: M = N x H x S x P

WHERE

N = NUMBER OF WIRES AT A LEVEL

H = HEIGHT OF LEVEL ABOVE GROUND

S = SPAN LENGTH AVERAGE

P = WIND LOADING

COMPARE THE VALUE OBTAINED FOR "M" TO THE USABLE VALUES ON OH354, AND SELECT THE REQUIRED POLE CLASS. (a)

EXAMPLE 1:

GIVEN:

40-FOOT POLE

GRADE A CONSTRUCTION

3 CONDUCTOR LEVELS

PRIMARY CONDUCTORS (LEVEL 1) 4-636 ACSR

N = 4 WIRES S = 200 FEET

H = 34 FEET P = .651 LBS/FT

M1 = N x H x S x P = 4 x 34 x 200 x .651 = 17,707 FT-LBS.

SECONDARY CONDUCTORS (LEVEL 2) 1-3/0 AERIAL CABLE

N = 1 WIRES S = 200 FEET

H = 26.5 FEET P = .790 LBS/FT

M2 = 1 x 26.5 x 200 x .790 = 4,187 FT-LBS.

TELEPHONE CONDUCTORS (LEVEL 3) 50 PAIR 24 AWG

N = 1 WIRES S = 200 FEET

H = 22.5 FEET P = .724 LBS/FT

M3 = 1 x 22.5 x 200 x .724 = 3,258 FT-LBS.

COMPARE THIS VALUE TO THE USABLE STRENGTH FOR WIND LOADING OF WOOD (SF=4) OH354.1, OR, OF STEEL (SF=1.5) OH354, TABLE 2. A 40-FOOT CLASS 1 WOOD POLE WITH A WIND LOADING USABLE STRENGTH OF 33,331 FT-LBS. OR A 40-FOOT CLASS 3 STEEL POLE WITH A WIND LOADING USABLE STRENGTH OF 62,810 FT-LBS. CAN BE USED. (a)

II. **EQUIPMENT IN "LINE" POSITION**:

USE WIND LOADINGS TO DETERMINE THE ADDITIONAL WIND LOADING ON A POLE DUE TO THE EQUIPMENT.

EXAMPLE 2:

GIVEN:

50 KVA TRANSFORMER (STEEL TANK)

UPPER MOUNTING LUG AT 31 FEET ABOVE GROUND

LIGHT LOADING

TABLE OF CONTENTS

© 1998 - 2023 San Diego Gas & Electric Company. All rights reserved. Removal of this copyright notice without permission is not permitted under law.

REV	CHANGE	DR	BY	DSN	APV	DATE	REV	CHANGE	DR	BY	DSN	APV	DATE
C	NOTES UPDATE	EDM	RSL	JAS	KRG	03/29/2023	F						
B	DRAWING UPDATE	PEI	-	-	-	03/18/2019	E						
A	ORIGINAL ISSUE	-	-	-	PTA/JJ	11/12/2005	D						

Indicates Latest Revision | Completely Revised | New Page X | Information Removed

SDG&E ELECTRIC OVERHEAD CONSTRUCTION STANDARDS

WIND LOADING OF CONDUCTOR

OH346.1

NOTES (CONT'D):

II. **EQUIPMENT IN "LINE" POSITION (CONT'D)**:

EQUIPMENT WIND LOADING TRANSFORMER = 80 LBS. BENDING MOMENT TRANSFORMER DUE TO WIND LOADING = 31 x 80 = 2,480 FT-LBS THIS VALUE IS THEN ADDED DIRECTLY TO THE CONDUCTOR WIND LOADING. IF THE CONDUCTOR WIND LOADING IS 25,152 FT-LBS (AS IN EXAMPLE 1) WE HAVE:

25,152 + 2,480 = 27,632 FT-LBS

THE VALUE 27,632 FT-LBS REPRESENTS THE TOTAL WIND LOADING FOR THE 40-FOOT POLE OF EXAMPLE 1 WITH A 50 KVA TRANSFORMER MOUNTED AT 31 FEET IN THE "LINE" POSITION.

COMPARE THIS VALUE TO THE USEABLE STRENGTH FOR WIND LOADING (SF = 4) OH354, TABLE 1 OR, (SF=1.5) OH354.3. A 40-FOOT CLASS 1 POLE WITH A WIND LOADING USEABLE STRENGTH OF 33,331 FT-LBS SHALL BE USED. (a)

III. **EQUIPMENT IN "BUCK" POSITION:**

ADDITIONAL MOMENT IS CAUSED BY ECCENTRIC MOUNTING OF EQUIPMENT. WIND LOADING FOR EQUIPMENT MOUNTED IN THE "BUCK" POSITION IS COMPUTED AS THAT IN THE "LINE" POSITION.

EXAMPLE 3:

GIVEN:

50 KVA TRANSFORMER (STEEL TANK)

BUCK POSITION

UPPER BRACKET AT 31 FEET ABOVE GROUND

LIGHT LOADING

EQUIPMENT WIND LOADING TRANSFORMER = 80 LBS.

BENDING MOMENT TRANSFORMER DUE TO WIND LOADING = 31 x 80 = 2,480 FT-LBS

FIND WEIGHT OF 50 KVA TRANSFORMER FROM OH350. (b)

WITH WEIGHT (750 LBS), FIND ECCENTRIC MOUNTING MOMENT ON OH352 TO BE 1,100 FT-LBS. (c)

NOW ADD MOMENT DUE TO WIND AND ECCENTRIC MOUNTING TO OBTAIN:

2,480 + 1,100 = 3,580 FT-LBS

THIS VALUE IS THEN ADDED DIRECTLY TO THE CONDUCTOR WIND LOADING. IF THE CONDUCTOR WIND LOADING IS 25,152 FT-LBS, AS IN EXAMPLE 1, WE HAVE:

25,152 + 3,580 = 28,732 FT-LBS

THE VALUE 28,732 FT-LBS REPRESENTS THE TOTAL WIND LOADING FOR THE 40-FOOT POLE OF EXAMPLE 1 WITH A 50 KVA TRANSFORMER MOUNTED AT 31 FEET IN THE "BUCK" POSITION.

COMPARE THIS VALUE TO THE USEABLE STRENGTH FOR WIND LOADING (SF=4) OH354, TABLE 1, OR (SF=1.5) OH354.3. A 40-FOOT CLASS 1 WOOD POLE WITH A WIND LOADING USABLE STRENGTH OF 33,331 FT-LBS OR, A 40-FOOT CLASS 3 STEEL POLE WITH A WIND LOADING USABLE STRENGTH OF 62,810 FT/LBS.SHALL BE USED.

REFERENCE:

(a) SEE OH354: POLE LOADING FOR WOOD, FIBERGLASS, AND STEEL.

(b) SEE OH350: HEIGHT OF ATTACHMENT CORRECTION FACTORS AND EQUIPMENT.

(c) SEE OH352: MOMENTS DUE TO EQUIPMENT.

TABLE OF CONTENTS

© 1998 - 2023 San Diego Gas & Electric Company. All rights reserved. Removal of this copyright notice without permission is not permitted under law.

REV	CHANGE	DR	BY	DSN	APV	DATE	REV	CHANGE	DR	BY	DSN	APV	DATE
C	NOTES UPDATE	EDM	RSL	JAS	KRG	03/29/2023	F						
B	DRAWING UPDATE	PEI	-	-	-	03/18/2019	E						
A	ORIGINAL ISSUE	-	-	-	PTA/JJ	11/12/2005	D						

SCOPE: THIS STANDARD DESCRIBES THE METHOD TO DETERMINE VERTICAL POLE LOADING FOR TANGENT AND DEADEND POLES.

INSTALLATION: NONE

BILL OF MATERIALS: NONE

NOTES:

I. **DUE TO GUY**:

EXAMPLE 1:

GIVEN:

40-FOOT POLE

GUY TENSION (T) = 7,000 LBS

HEIGHT OF ATTACHMENT = 34 FEET

ANCHOR LEAD = 30 FEET

USE OH349 TO DETERMINE VERTICAL LOAD PER 1,000 LBS GUY TENSION WITH LEAD TO HEIGHT RATIO OF .88 AND T = 7,000 = 7 x 1,000, WE HAVE:

VERTICAL LOAD = 7 x 765 = 5,355 LBS (a)

FIND THE HEIGHT OF ATTACHMENT CORRECTION FACTOR FROM OH350 FOR A 40-FOOT POLE AND A 34-FOOT ATTACHMENT TO BE .97. MULTIPLY THE CORRECTION FACTOR TIMES THE VERTICAL LOADING AS FOLLOWS TO OBTAIN THE CORRECTED VERTICAL LOAD:

.97 x 5,355 = 5,194 LBS (b)

COMPARE THIS VALUE TO THE USEABLE STRENGTH FOR VERTICAL POLE LOADING ON OH354. A 40-FOOT CLASS 3 WOOD POLE WITH A VERTICAL LOADING USABLE STRENGTH OF 7,768 LBS, OR, A 40-FOOT CLASS 3 STEEL POLE WITH A VERTICAL LOADING USABLE STRENGTH OF 20,885 LBS. CAN BE USED. (c)

II. **VERTICAL LOADING (REDUCED TENSION POLES)**:

IF THE POLE IS IN A REDUCED TENSION SPAN AND IS SUPPORTING EQUIPMENT, THE TOTAL VERTICAL LOAD DUE TO THE EQUIPMENT, CORRECTED FOR HEIGHT OF ATTACHMENT, SHOULD BE MULTIPLIED BY 4.0 FOR A WOOD POLE, OR 1.5 FOR A STEEL POLE BEFORE CLASS SELECTION FROM OH354 IS TRIED. (c)

EXAMPLE 2:

GIVEN:

40-FOOT POLE

GRADE A CONSTRUCTION

3 - 25KVA SINGLE-PHASE TRANSFORMERS

CROSSARM MOUNTED

HEIGHT OF ATTACHMENT = 29 FEET

FROM OH350 - WEIGHT OF 3-25KVA SINGLE-PHASE TRANSFORMER = 3 x 485 = 1,455 LBS (b)

FROM OH350 - CORRECTED VERTICAL LOADING = .71 x 1,455 = 1,033 LBS (b)

TOTAL VERTICAL LOAD = 4 x 1,033 = 4,132 LBS

COMPARE THIS VALUE TO THE USABLE STRENGTH FOR VERTICAL POLE LOADING ON OH354.1. A 40-FOOT CLASS 3 POLE WITH A VERTICAL LOADING USABLE STRENGTH OF 7,768 LBS, OR, A 40-FOOT CLASS 3 STEEL POLE WITH A VERTICAL LOADING USABLE STRENGTH OF 20,885 LBS. CAN BE USED. (c)

ATTENTION:

* IF THE HEIGHT OF ATTACHMENT IS AT THE TOP, NO CORRECTION FACTOR IS APPLIED AND THE POLE SELECTED FROM OH354.1 MUST MEET OR EXCEED 5,355 LBS OF USEABLE STRENGTH. (c)

TABLE OF CONTENTS

© 1998 - 2023 San Diego Gas & Electric Company. All rights reserved. Removal of this copyright notice without permission is not permitted under law.

REV	CHANGE	DR	BY	DSN	APV	DATE	REV	CHANGE	DR	BY	DSN	APV	DATE
C	NOTES UPDATE	EDM	RSL	JAS	KRG	03/29/2023	F						
B	DRAWING UPDATE	PEI	-	-	-	03/18/2019	E						
A	ORIGINAL ISSUE	-	-	-	PTA/JJ	11/12/2005	D						

III. **DUE TO GUY AND EQUIPMENT:**

EXAMPLE 3:

GIVEN:

40-FOOT POLE

GRADE A CONSTRUCTION

3-25KVA SINGLE-PHASE TRANSFORMERS

CROSSARM MOUNTED - HEIGHT OF ATTACHMENT = 29 FEET

FROM OH350 - WEIGHT OF 3-25KVA (b)

SINGLE-PHASE TRANSFORMERS = 3 x 485 = 1,455 LBS

FROM OH350 - CORRECTED VERTICAL (b)

LOADING = .71 x 1,455 = 1,033 LBS

THE TOTAL CORRECTED VERTICAL LOADING FOR A 40-FOOT POLE WITH THE GUY ATTACHMENT DESCRIBED IN EXAMPLE 1, THE THREE SINGLE-PHASE, CROSSARM MOUNTED TRANSFORMERS AND THE GIVEN HEIGHT OF ATTACHMENT IS:

5,194 + 1,033 = 6,227 LBS

COMPARE THIS VALUE TO THE USEABLE STRENGTH FOR VERTICAL LOADING OF A WOOD POLE (SF=4) OH354 OR OF A STEEL POLE (SF=1.5) OH354, TABLE 2. A 40-FOOT CLASS 3 WOOD POLE WITH A VERTICAL LOADING USEABLE STRENGTH OF 7,768 LBS, OR A 40-FOOT CLASS 3 STEEL POLE WITH A VERTICAL LOADING USEABLE STRENGTH OF 20,885 LBS. SHALL BE USED. (c)

REFERENCE:

(a) SEE OH349: VERTICAL LOADING DUE TO GUY.

(b) SEE OH350: HEIGHT OF ATTACHMENT CORRECTION FACTORS AND EQUIPMENT.

(c) SEE OH354: POLE LOADING FOR WOOD, FIBERGLASS, AND STEEL.

TABLE OF CONTENTS

© 1998 - 2023 San Diego Gas & Electric Company. All rights reserved. Removal of this copyright notice without permission is not permitted under law.

REV	CHANGE	DR	BY	DSN	APV	DATE	REV	CHANGE	DR	BY	DSN	APV	DATE
C	NOTES UPDATE	EDM	RSL	JAS	KRG	03/29/2023	F						
B	DRAWING UPDATE	PEI	-	-	-	03/18/2019	E						
A	ORIGINAL ISSUE	-	-	-	PTA/JJ	11/12/2005	D						

SCOPE: THIS STANDARD DESCRIBES THE METHOD OF DETERMINING VERTICAL POLE LOADING DUE TO GUY TENSION.

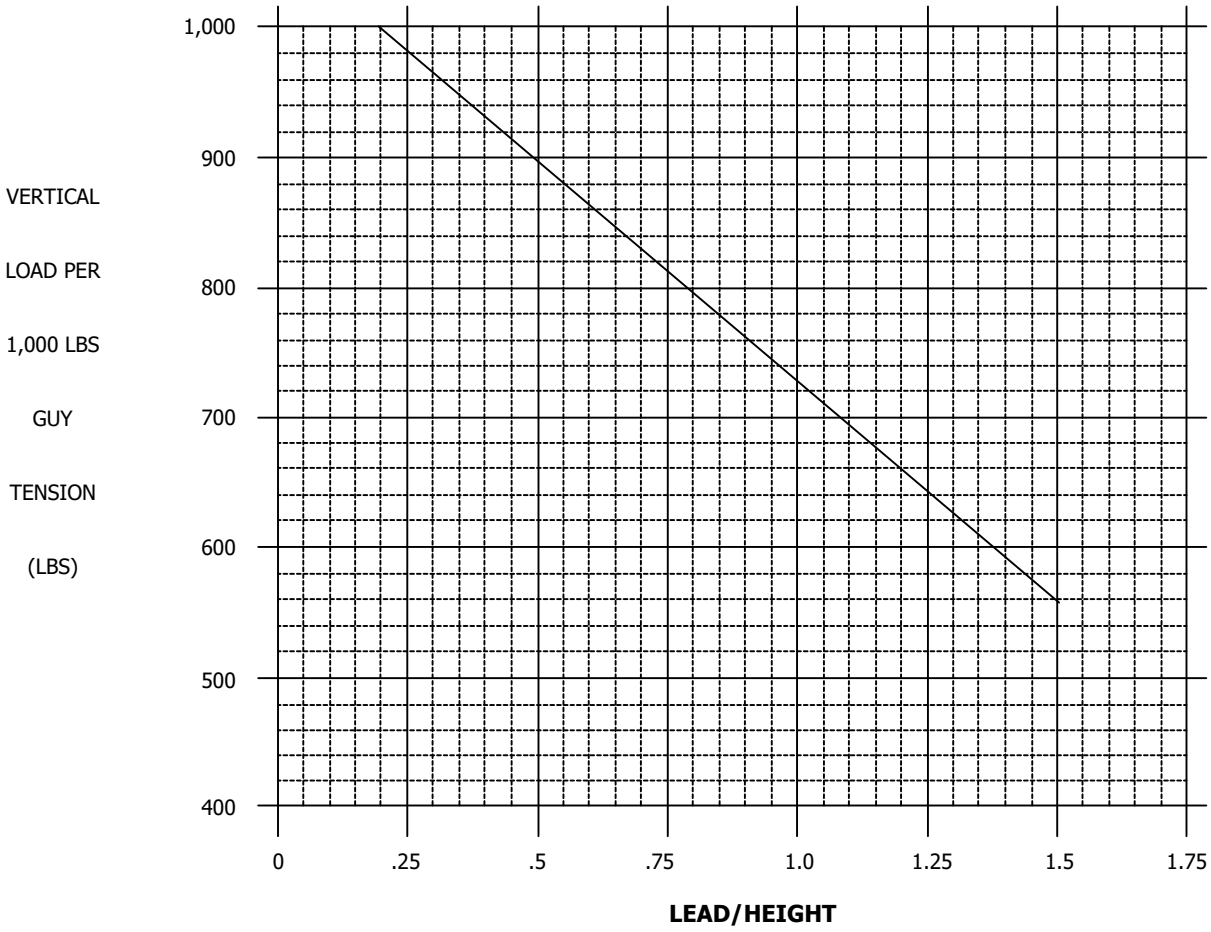

EXAMPLE 7: GIVEN - LEAD = 25 FEET
- HEIGHT = 30 FEET
- TOTAL GUY TENSION = 6,150 LBS = 6.15 x 1,000 LBS

$$\frac{\text{LEAD}}{\text{HEIGHT}} = \frac{25}{30} = .83$$

FROM .83 ON THE HORIZONTAL AXIS ABOVE, WE READ A VALUE OF 785 LBS ON THE VERTICAL AXIS. FOR EVERY 1,000 LBS OF GUY TENSION, WE HAVE 785 LBS OF VERTICAL LOADING.

6.15 x 785 = 4,828 LBS

4,828 LBS IS THE VERTICAL FORCE EXERTED ON THE GIVEN POLE DUE TO THE GUY.

INSTALLATION: NONE

BILL OF MATERIALS: NONE

NOTES:

I. THIS VALUE, 4,828 LBS, MAY BE CORRECTED FOR HEIGHT OF ATTACHMENT TO INCREASE ALLOWABLE POLE LOADING. SEE STANDARD 350.

REFERENCE: NONE

© 1998 - 2019 San Diego Gas & Electric Company. All rights reserved. Removal of this copyright notice without permission is not permitted under law.

REV	CHANGE	BY	DSGN	APPV	DATE	REV	CHANGE	BY	DSGN	APPV	DATE
C						F					
B	DRAWING UPDATE	PEI	-	-	03/18/2019	E					
A	ORIGINAL ISSUE	-	-	PTA/RDG	01/01/1987	D					

X Indicates Latest Revision | Completely Revised | New Page | Information Removed

SDG&E ELECTRIC OVERHEAD CONSTRUCTION STANDARDS

SHEET 1 OF 1

VERTICAL LOADING DUE TO GUY

OH349.1

TABLE OF CONTENTS

SCOPE: THIS STANDARD DESCRIBES THE METHOD OF OBTAINING CORRECTION FACTORS FOR EQUIPMENT OR GUYS MOUNTED LOWER THAN POLE TOP.

HEIGHT OF ATTACHMENT(FT)	POLE SIZE																
	25'	30'	35'	40'	45'	50'	55'	60'	65'	70'	75'	80'	85'	90'	95'	100'	110'
14	.47	.31	.22	.16	.13	.10	.08	.07	.06	.05	.04	.04	.03	.03	.03	.02	.02
16	.61	.41	.28	.22	.17	.14	.11	.09	.08	.07	.06	.05	.04	.04	.03	.03	.03
18	.77	.52	.36	.27	.21	.17	.14	.12	.10	.08	.07	.06	.05	.05	.04	.04	.03
20	.95	.64	.44	.34	.26	.21	.17	.14	.12	.10	.09	.08	.07	.06	.05	.05	.04
22		.77	.54	.41	.32	.26	.21	.17	.14	.12	.11	.09	.08	.07	.06	.06	.05
24		.92	.64	.48	.38	.30	.24	.21	.17	.15	.13	.11	.10	.09	.08	.07	.06
26			.75	.57	.44	.36	.29	.24	.20	.17	.15	.13	.11	.10	.09	.08	.07
28			.87	.66	.52	.41	.33	.28	.23	.20	.17	.15	.13	.12	.10	.09	.08
30				.76	.59	.48	.38	.32	.27	.23	.20	.17	.15	.14	.12	.11	.09
32				.86	.67	.54	.44	.36	.30	.26	.22	.20	.17	.15	.14	.12	.10
34				.97	.76	.61	.49	.41	.34	.30	.25	.22	.19	.17	.15	.14	.12
36					.85	.68	.55	.46	.39	.33	.28	.25	.22	.20	.17	.16	.13
38					.95	.76	.61	.51	.43	.37	.32	.28	.24	.22	.19	.17	.14
40						.85	.68	.57	.48	.41	.35	.31	.27	.24	.21	.19	.16
42						.93	.75	.63	.52	.45	.39	.34	.30	.27	.24	.21	.18
44							.82	.69	.58	.50	.42	.37	.33	.29	.26	.23	.19
46							.90	.75	.63	.54	.46	.41	.36	.32	.28	.26	.21
48							.98	.82	.68	.59	.51	.44	.39	.35	.31	.28	.23
50								.89	.74	.64	.55	.48	.42	.38	.33	.30	.25
52								.96	.80	.69	.59	.52	.46	.41	.36	.33	.27
54									.87	.75	.64	.56	.49	.44	.39	.35	.29
56									.93	.80	.69	.60	.53	.47	.42	.38	.31
58										.86	.74	.65	.57	.51	.45	.41	.34
60										.92	.79	.69	.61	.54	.48	.43	.36
62										.98	.84	.74	.65	.58	.51	.46	.38
64											.90	.79	.69	.62	.55	.49	.41
66											.96	.84	.73	.66	.58	.53	.44
68												.89	.78	.70	.62	.56	.46
70												.95	.83	.74	.65	.59	.49
72													.87	.78	.69	.63	.52
74													.92	.82	.73	.66	.55
76													.97	.87	.77	.70	.58
78														.92	.81	.73	.61
80														.96	.86	.77	.64
82															.90	.81	.67
84															.94	.85	.71
86															.99	.89	.74
88																.94	.77
90																.98	.81

EXAMPLE 8: GIVEN - 45 FOOT, CLASS 5 POLE
- HEIGHT OF GUY ATTACHMENT = 30 FEET
- VERTICAL LOADING DUE TO GUY= 3,500 LBS

FROM CHART (ABOVE) HEIGHT OF ATTACHMENT FACTOR = .59, .59 x 3,500 = 2,065 LBS, FROM TABLE 2, PAGE 354.1,

MAXIMUM LOAD OF 45 FOOT, CLASS 5 POLE IS 3,320 LBS, SINCE 2,065 IS LESS THAN 3,320, POLE IS STRONG ENOUGH

© 1998 - 2019 San Diego Gas & Electric Company. All rights reserved. Removal of this copyright notice without permission is not permitted under law.

REV	CHANGE	BY	DSGN	APPV	DATE	REV	CHANGE	BY	DSGN	APPV	DATE
C						F					
B	DRAWING UPDATE	PEI	-	-	03/18/2019	E					
A	ORIGINAL ISSUE	-	-	BV/MC	06/17/2009	D					

X Indicates Latest Revision | Completely Revised | New Page | Information Removed

SDG&E ELECTRIC OVERHEAD CONSTRUCTION STANDARDS

HEIGHT OF ATTACHMENT FACTORS AND EQUIPMENT WEIGHTS

OH350.1

TABLE OF CONTENTS

APPROXIMATE TRANSFORMER WEIGHTS						APPROXIMATE CAPACITOR WEIGHTS (WITH RACKS)				APPROXIMATE NOVA WEIGHT	
SIZE KVA	STEEL TANK WEIGHT (LBS)	CAST IRON TANK (LBS)	SIZE KVA	STEEL TANK WEIGHT (LBS)	CAST IRON TANK (LBS)	SWITCHED		FIXED		SIZE AMPS	WEIGHT (LBS)
						SIZE (KVAR)	WEIGHT (LBS)	SIZE (KVAR)	WEIGHT (LBS)		
5	-	300	75	1000	2350	600	470	600	300	630	400
7.5	-	375	100	1175	2500	1200	600	1200	430		
10	275	400	150	-	4600	APPROXIMATE 12 KV SINGLE PHASE VOLTAGE REGULATOR WEIGHTS				APPROXIMATE INTELLIRUPTER	
15	330	600	167	1500	-					SIZE AMPS	WEIGHT (LBS)
*25	485	1000	200	1600	-						
37.2	640	1100	250	1725	-	100		2000		630	920
50	750	1800	333	2500	-	200		2925			
*25	740	(AMORPHOUS STEEL CORE TRANSFORMER)									

INSTALLLATION: NONE

BILL OF MATERALS: NONE

NOTES: NONE

REFERENCE: NONE

TABLE OF CONTENTS

© 1998 - 2019 San Diego Gas & Electric Company. All rights reserved. Removal of this copyright notice without permission is not permitted under law.

REV	CHANGE	BY	DSGN	APPV	DATE	REV	CHANGE	BY	DSGN	APPV	DATE
C						F					
B	DRAWING UPDATE	PEI	-	-	03/18/2019	E					
A	ORIGINAL ISSUE	-	-	BV/MC	06/17/2009	D					

X Indicates Latest Revision | Completely Revised | New Page | Information Removed

SDG&E ELECTRIC OVERHEAD CONSTRUCTION STANDARDS

HEIGHT OF ATTACHMENT FACTORS AND EQUIPMENT WEIGHTS

OH350.2

SCOPE: THIS STANDARD DESCRIBES THE METHOD OF DETERMINING MOMENT DUE TO MOUNTED EQUIPMENT.

TOTAL EQUIPMENT WEIGHT-LBS

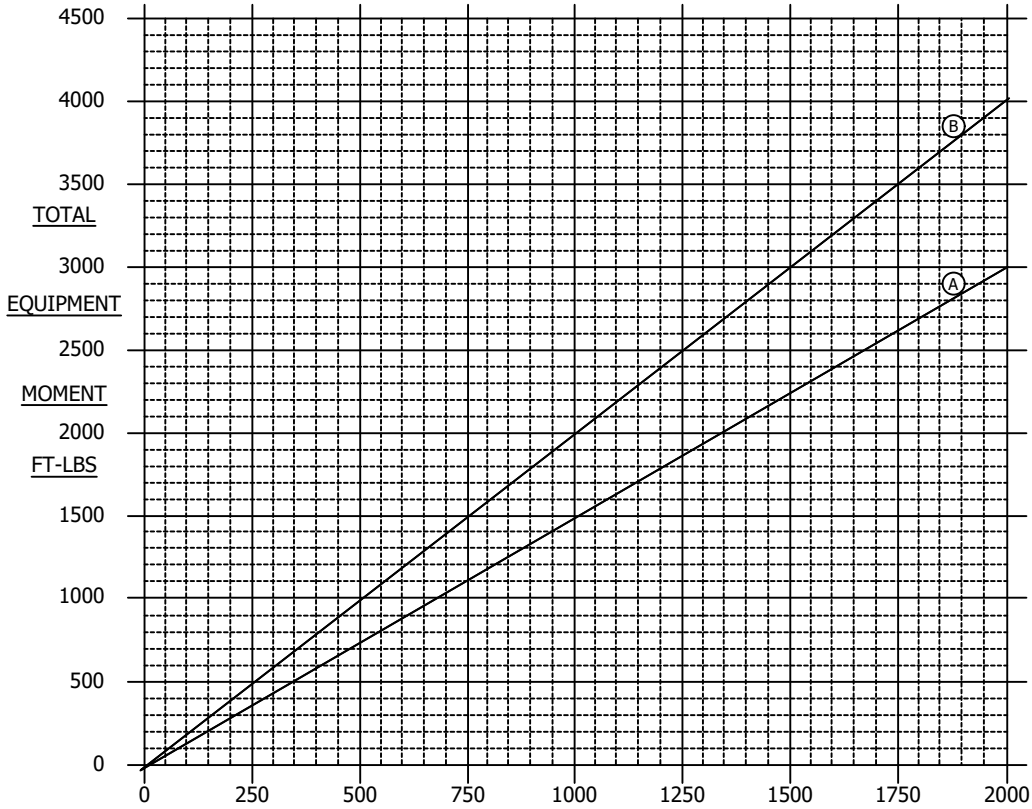

DEFINITIONS OF CURVES:

CURVE (A) - TRANSFORMER OR REGULATOR, POLE BOLTED OR CROSSARM MOUNTED CAPACITORS.

CURVE (B) - MULTIPLE TRANSFORMERS OR REGULATORS (CROSSARM OR BRACKET MOUNTED), CAPACITOR BANKS (RACK MOUNTED) AND SERVICE RESTORERS.

EXAMPLE 9: GIVEN - ONE 50 KVA (750 LBS - SEE STANDARD 350) TRANSFORMER, POLE BOLTED.
ENTERING LINE A WITH 750 LBS,WE SEE WE HAVE AN 1,100 FT/LB MOMENT.

EXAMPLE 10: GIVEN - THREE 75 KVA TRANSFORMERS (1,000 LBS EACH - SEE STANDARD 350), CROSSARM MOUNTED.
SINCE 3,000 LBS IS TOO HIGH FOR THE GRAPH, WE WILL USE 1,500 LBS (3,000/2) AND MULTIPLY THE ANSWER BY 2.

ENTERING LINE B WITH 1,500 LBS, WE SEE WE HAVE A 3,000 FT/LB MOMENT.
3,000 X 2 - 6,000 FT/LBS
6,000 FT/LBS IS THE MOMENT PRODUCED BY THE THREE CROSSARM MOUNTED, 75 KVA TRANSFORMERS.

INSTALLATION: NONE

BILL OF MATERIALS: NONE

NOTES: NONE

REFERENCE: NONE

© 1998 - 2019 San Diego Gas & Electric Company. All rights reserved. Removal of this copyright notice without permission is not permitted under law.

REV	CHANGE	BY	DSGN	APPV	DATE	REV	CHANGE	BY	DSGN	APPV	DATE
C						F					
B	DRAWING UPDATE	PEI	-	-	03/18/2019	E					
A	ORIGINAL ISSUE	-	-	BV/MC	06/17/2009	D					

X Indicates Latest Revision | Completely Revised | New Page | Information Removed

SDG&E ELECTRIC OVERHEAD CONSTRUCTION STANDARDS

VERTICAL LOADING DUE TO GUY

SHEET 1 OF 1

OH352.1

TABLE OF CONTENTS

SCOPE: THIS STANDARD LISTS PENTA/OIL TREATED DOUGLAS FIR, WESTERN RED CEDAR, TAPERED TUBULAR STEEL AND FIBERGLASS POLES WITH THEIR PHYSICAL PROPERTIES.

TABLE 1

NEW WOOD POLES (I)(a)

LENGTH ----- (FT)	CLASS	HEIGHT ----- (FT)	STOCK NUMBER	DESIGN UNITS	WEIGHT/LBS.		MINIMUM TOP DIA.	DIAMETER 6'-0" FROM BUTT (IN)		MAXIMUM ALLOWABLE TIP LOAD (LBS)
					WESTERN RED CEDAR	DOUGLAS FIR	(IN)	WESTERN RED CEDAR (B)	DOUGLAS FIR (A)	
25	3	20.5	--	25 3	415	553	7.3	10.3	9.4	3,000
	2		--	--	--	--	8.0	11.0	10.0	3,700
	1		--	25 1	536	810	8.6	11.8	10.7	4,500
30	3	25.0	S550620	30 3	548	756	7.3	11.1	10.2	3,000
	2		--	--	--	--	8.0	11.9	10.8	3,700
	1		S550601	30 1	716	1,048	8.6	12.7	11.6	4,500
35	3	29.5	S550621	35 3	694	945	7.3	11.9	10.8	3,000
	2		--	--	--	--	8.0	12.7	11.6	3,700
	1		S550602	35 1	911	1,282	8.6	13.5	12.4	4,500
40	3	34.0	S550622	40 3	849	1,147	7.3	12.6	11.5	3,000
	2		--	--	--	--	8.0	13.5	12.2	3,700
	1		S550603	40 1	1,119	1,543	8.6	14.3	13.1	4,500
45	3	38.5	S550623	45 3	1,026	1,363	7.3	13.2	11.9	3,000
	2		--	--	--	--	8.0	14.2	12.9	3,700
	1		S550604	45 1	1,339	1,818	8.6	15.1	13.7	4,500
50	3	43.0	S550624	50 3	1,205	1,575	7.3	13.9	12.4	3,000
	2		--	--	--	--	8.0	14.8	13.4	3,700
	1		S550605	50 1	1,584	2,115	8.6	15.8	14.3	4,500
55	3	47.5	S550625	55 3	1,395	1,800	7.3	14.3	12.9	3,000
	2		--	--	--	--	8.0	15.4	13.9	3,700
	1		S550606	55 1	1,835	2,448	8.6	16.4	14.8	4,500
60	3	52.0	--	--	--	--	7.3	14.8	13.4	(b)
	2		--	--	--	--	8.0	15.9	14.3	(b)
	1		S550607	60 1	2,095	2,826	8.6	17.0	15.3	(b)
65	3	56.5	--	--	--	--	7.3	15.3	13.8	(b)
	2		--	--	--	--	8.0	16.4	14.8	(b)
	1		S550608	65 1	2,359	3,285	8.6	17.5	15.8	(b)

TABLE OF CONTENTS

© 1998 - 2021 San Diego Gas & Electric Company. All rights reserved. Removal of this copyright notice without permission is not permitted under law.

REV	CHANGE	DR	BY	DSN	APV	DATE	REV	CHANGE	DR	BY	DSN	APV	DATE
C	TABLE UPDATE	-	GW	JS	MDJ	09/14/2017	F	BILL OF MATERIALS UPDATE	ARC	JES	JES	CZH	12/12/2021
B	EDITORIAL CHANGES	-	GW	JS	MDJ	11/16/2016	E	BILL OF MATERIALS UPDATE	EDM	JES	JES	CZH	08/13/2021
A	EDITORIAL CHANGES	-	JC	IL	JC/MDJ	06/23/2015	D	TABLE UPDATE	EDM	JG	JES	CZH	03/17/2021

TABLE 1 (CONT'D)

	A	B	C	D	E	F	G	H	I	J	K
1	NEW WOOD POLES (I)(a)										
2	LENGTH ---- (FT)	CLASS	HEIGHT ---- (FT)	STOCK NUMBER	DESIGN UNITS	WEIGHT/LBS		MINIMUM TOP DIA.	DIAMETER 6'-0" FROM BUTT (IN)		MAXIMUM ALLOWABLE TIP LOAD (LBS)
3						WESTERN RED CEDAR	DOUGLAS FIR	(IN)	WESTERN RED CEDAR (B)	DOUGLAS FIR (A)	
4	70	3	61.0	--	--	--	--	7.3	15.8	14.3	(b)
5		2		--	--	--	--	8.0	16.9	15.3	(b)
6		1		S550609	70 1	2,656	3,780	8.6	18.0	16.2	(b)
7	75	3	65.5	--	--	--	--	7.3	16.2	14.6	(b)
8		2		--	--	--	--	8.0	17.3	15.6	(b)
9		1		S550610	75 1	2,910	4,252	8.6	18.5	16.7	(b)
10	80	2	70.0	--	--	--	--	8.0	17.8	16.1	(b)
11		1		S550611	80 1	3,555	4,801	8.6	18.9	17.2	(b)
12	85	2	74.5	--	--	--	--	8.0	18.1	16.4	(b)
13		1		S550612	85 1	3,778	5,400	8.6	19.4	17.5	(b)
14	90	2	79.0	--	--	--	--	8.0	18.6	16.9	(b)
15		1		S550613	90 1	4,150	6,106	8.6	19.9	17.8	(b)
16	95	2	83.5	--	--	--	--	8.0	18.9	17.2	(b)
17		1		S550614	95 1	4,665	6,547	8.6	20.2	18.1	(b)
18	100	2	88.0	--	--	--	--	8.0	19.4	17.5	(b)
19		1		S550615	100 1	5,580	7,159	8.6	20.7	18.6	(b)
20		1H		S550617	100 H	--	7,402	9.2	22.0	19.7	(b)
21	110	2	97.0	--	--	--	--	8.0	20.1	18.1	(b)
22		1		S550616	110 1	--	8,361	8.6	21.5	19.3	(b)
23		1H		S550618	110 H	--	8,590	9.2	22.8	20.5	(b)

TABLE OF CONTENTS

© 1998 - 2021 San Diego Gas & Electric Company. All rights reserved. Removal of this copyright notice without permission is not permitted under law.

REV	CHANGE	DR	BY	DSN	APV	DATE	REV	CHANGE	DR	BY	DSN	APV	DATE
C	TABLE UPDATE	-	GW	JS	MDJ	09/14/2017	F	BILL OF MATERIALS UPDATE	ARC	JES	JES	CZH	12/12/2021
B	EDITORIAL CHANGES	-	GW	JS	MDJ	11/16/2016	E	BILL OF MATERIALS UPDATE	EDM	JES	JES	CZH	08/13/2021
A	EDITORIAL CHANGES	-	JC	IL	JC/MDJ	06/23/2015	D	TABLE UPDATE	EDM	JG	JES	CZH	03/17/2021

TABLE 2

GALVANIZED STEEL POLES (I)(a)

LENGTH (FT)	CLASS	HEIGHT (FT)	STOCK NUMBER	DESIGN UNITS	WEIGHT			SLIP JOINTS (D)	TOP SECTION LENGTH (FT)	BOTTOM SECTION LENGTH (FT)	POLE ID'S	BALANCE POINT ASSEMBLED (MEASURED FROM TOP	TIP DIA.	BASE DIA.	MAXIMUM MOMENT SUPPLIED BY MFG (C)
					TOP SECTION	BOTTOM SECTION	TOTAL	MIN. OVERLAP			BOTTOM SECTION (MEASURED FROM BOTTOM)				
					(LBS)	(LBS)	(LBS)	(IN)					(IN)	(IN)	(FT-KIP)
40	3	34.0	S549570	40 3S	--	--	492	--	40.00	--	10'-9"	22'-9"	5.25	12.77	66
	1		S549600	40 1S	--	--	733	--	40.00	--	10'-9"	22'-4"	6.5	13.41	102
	H2		S549632	40 H2S	--	--	977	--	40.00	--	10'-9"	22'-0"	8	14.92	148
45	3	38.5	S549572	45 3S	--	--	580	--	45.00	--	10'-9"	25'-10"	5.25	13.66	74
	1		S549602	45 1S	--	--	859	--	45.00	--	10'-9"	25'-4"	6.5	14.24	106
50	3	43.0	S549574	50 3S	--	--	679	--	50.00	--	10'-9"	28'-11"	5.25	14.65	84
	1		S549604	50 1S	--	--	994	--	50.00	--	10'-9"	28'-4"	6.5	15.1	119
	H2		S549648	50 H2S	--	--	1,314	--	50.00	--	12'-0"	27'-5"	8	16.66	184
	H4		S549652	50 H4S	--	--	1,636	--	50.00	--	10'-9"	27'-5"	10.85	19.85	257
55	1	47.5	S549606	55 1S	792	492	1,284	20.87	40.00	17.90	10'-9"	25'-4"	7.36	16.49	132
	H4		S549660	55 H4S	1,306	766	2,072	27.86	40.00	18.33	10'-9"	25'-2"	11.75	21.27	263
60	1	52.0	S549608	60 1S	855	493	1,348	20.87	45.00	17.90	10'-9"	25'-4"	6.5	16.49	145
	H1		--	60 H1S	1,027	579	1,606	21.14	45.00	18.00	10'-9"	25'-1"	7	16.58	179
	H2		S549664	60 H2S	1,136	632	1,768	23.06	45.00	18.10	13'-0"	24'-11"	8	17.95	212
65	H1	56.5	--	--	1,027	760	1,787	21.14	45.00	23.00	10'-9"	25'-1"	7	17.41	197
70	1	61.0	S549610	70 1S	855	813	1,668	20.87	45.00	27.90	11'-0"	25'-4"	6.5	18.21	180
75	1	65.5	--	--	855	984	1,839	20.87	45.00	32.90	12'-0"	25'-4"	6.5	19.07	195
80	1	70	--	--	855	1,164	2,019	20.87	45.00	37.90	12'-3"	25'-4"	6.5	19.93	211
85	1	74.5	--	--	855	1,351	2,206	20.87	45.00	42.90	13'-6"	25'-4"	6.5	20.79	227
90	1	79	--	--	855	1,547	2,402	20.87	45.00	47.90	13'-3"	25'-4"	6.5	21.65	244

TABLE OF CONTENTS

© 1998 - 2021 San Diego Gas & Electric Company. All rights reserved. Removal of this copyright notice without permission is not permitted under law.

REV	CHANGE	DR	BY	DSN	APV	DATE	REV	CHANGE	DR	BY	DSN	APV	DATE
C	TABLE UPDATE	-	GW	JS	MDJ	09/14/2017	F	BILL OF MATERIALS UPDATE	ARC	JES	JES	CZH	12/12/2021
B	EDITORIAL CHANGES	-	GW	JS	MDJ	11/16/2016	E	BILL OF MATERIALS UPDATE	EDM	JES	JES	CZH	08/13/2021
A	EDITORIAL CHANGES	-	JC	IL	JC/MDJ	06/23/2015	D	TABLE UPDATE	EDM	JG	JES	CZH	03/17/2021

TABLE 3

WEATHERING STEEL POLES (I)(a)

VALMONT — ROUND POLES

LENGTH (FT)	CLASS	HEIGHT (FT)	STOCK NUMBER	DESIGN UNITS	WEIGHT			SLIP JOINTS (D)	TOP SECTION LENGTH (FT)	BOTTOM SECTION LENGTH (FT)	POLE ID'S	BALANCE POINT ASSEMBLED (MEASURED FROM TOP)	TIP DIA.	BASE DIA.	MAXIMUM MOMENT SUPPLIED BY MFG (C)
					TOP SECTION	BOTTOM SECTION	TOTAL	MIN. OVERLAP			BOTTOM SECTION (MEASURED FROM BOTTOM)				
					(LBS)	(LBS)	(LBS)	(IN)					(IN)	(IN)	(FT-KIP)
25	1	20.5	S549622	SWS25	--	--	399	--	25.00	--	10'-6"	13'-6"	6.5	10.83	66
30	1	25.0	S549624	SWS30	--	--	502	--	30.00	--	10'-9"	16'-5"	6.5	11.68	76
35	1	29.5	S549626	SWS35	--	--	614	--	35.00	--	10'-9"	19'-1"	6.5	12.55	88
40	3	34.0	S550434	40 3SW	--	--	492	--	40.00	--	10'-9"	22'-9"	5.25	12.77	66
	1		S549954	40 1SW	--	--	733	--	40.00	--	10'-9"	22'-4"	6.5	13.41	102
	H2		S549680	40H2SW	--	--	977	--	40.00	--	10'-9"	22'-0"	8	14.92	148
	H4		S549682	40H4SW	--	--	1,108	--	40.00	--	10'-9"	21'-10"	9.4	16.6	185
45	3	38.5	S550436	45 3SW	--	--	580	--	45.00	--	10'-9"	25'-10"	5.25	13.66	74
	1		S549956	45 1SW	--	--	859	--	45.00	--	10'-9"	25'-4"	6.5	14.24	106
	H1		--	--	--	--	1,030	--	45.00	--	10'-9"	25'-1"	7	14.47	137
	H2		S549684	45H2SW	--	--	1,139	--	45.00	--	10'-9"	24'-11"	8	15.75	164
	H4		S549686	45H4SW	--	--	1,429	--	45.00	--	10'-9"	25'-2"	10.85	18.95	238
50	3	43.0	S550422	50 3SW	--	--	679	--	50.00	--	10'-9"	28'-11"	5.25	14.65	84
	1		S550420	50 1SW	--	--	994	--	50.00	--	10'-9"	28'-4"	6.5	15.1	119
	H2		S549688	50H2SW	--	--	1,314	--	50.00	--	10'-9"	27'-11"	8	16.66	184
	H4		S549690	50H4SW	--	--	1,636	--	50.00	--	10'-9"	27'-5"	10.85	19.85	257
55	3	47.5	S550428	55 3SW	539	349	888	20.13	40.00	17.90	10'-9"	25'-10"	6.13	16.22	90
	1		S550426	55 1SW	792	492	1,284	20.87	40.00	17.90	10'-9"	25'-4"	7.36	16.49	132
	H2		S549692	55H2SW	1,043	632	1,675	23.06	40.00	17.90	10'-9"	21'-10"	8.86	17.95	192
	H4		S549694	55H4SW	1,304	766	2,070	27.86	40.00	18.33	10'-9"	25'-2"	11.75	21.27	273
60	1	52.0	S550430	60 1SW	855	493	1,348	20.87	45.00	17.90	10'-9"	25'-4"	6.5	16.49	145
	H2		S549696	60H2SW	1,136	632	1,768	23.06	45.00	18.10	10'-9"	24'-11"	8	17.95	212
	H4		S594698	60H4SW	1,426	766	2,192	27.86	45.00	18.33	10'-9"	25'-2"	10.85	21.27	293
65	1	56.5	S550500	65 1SW	855	649	1,504	20.87	45.00	22.90	13'-6"	25'-4"	6.5	17.35	166
	H2		S550502	65H2SW	1,136	828	1,964	23.06	45.00	23.10	11'-0"	24'-11"	8	18.81	232
	H4		S551208	65H4SW	1,426	998	2,424	27.86	45.00	23.33	14'-6"	25'-2"	10.85	22.17	315
70	1	61.0	S550432	70 1SW	855	813	1,668	20.87	45.00	27.90	11'-0"	25'-4"	6.5	18.21	180
	H1		--	70H1SW	1,027	950	1,977	21.14	45.00	28.00	11'-0"	25'-1"	7	18.24	216
	H2		S549700	70H2SW	1,136	1,033	2,169	23.06	45.00	28.10	11'-3"	24'-11"	8	19.67	251
	H3		S550484	70H3SW	1,266	1,131	2,397	25.33	45.00	28.00	11'-3"	24'-9"	9.2	21.36	291
	H4		S551210	70H4SW	1,616	843	2,459	28.65	53.92	19.50	15'-0"	--	10.05	21.92	320

TABLE OF CONTENTS

© 1998 - 2021 San Diego Gas & Electric Company. All rights reserved. Removal of this copyright notice without permission is not permitted under law.

REV	CHANGE	DR	BY	DSN	APV	DATE	REV	CHANGE	DR	BY	DSN	APV	DATE
C	TABLE UPDATE	-	GW	JS	MDJ	09/14/2017	F	BILL OF MATERIALS UPDATE	ARC	JES	JES	CZH	12/12/2021
B	EDITORIAL CHANGES	-	GW	JS	MDJ	11/16/2016	E	BILL OF MATERIALS UPDATE	EDM	JES	JES	CZH	08/13/2021
A	EDITORIAL CHANGES	-	JC	IL	JC/MDJ	06/23/2015	D	TABLE UPDATE	EDM	JG	JES	CZH	03/17/2021

TABLE 3 (CONT'D)

WEATHERING STEEL POLES (I)(a)

VALMONT — ROUND POLES

LENGTH (FT)	CLASS	HEIGHT (FT)	STOCK NUMBER	DESIGN UNITS	WEIGHT TOP SECTION (LBS)	WEIGHT BOTTOM SECTION (LBS)	WEIGHT TOTAL (LBS)	SLIP JOINTS (D) MIN. OVERLAP (IN)	TOP SECTION LENGTH (FT)	BOTTOM SECTION LENGTH (FT)	POLE ID'S BOTTOM SECTION (MEASURED FROM BOTTOM)	BALANCE POINT ASSEMBLED (MEASURED FROM TOP)	TIP DIA. (IN)	BASE DIA. (IN)	MAXIMUM MOMENT SUPPLIED BY MFG (C) (FT-KIP)
75	1	65.5	S550504	75 1SW	916	795	1,711	--	45.00	32.90	--	--	6.5	19.07	195
	H1		TBD	TBD	951	1,067	2,018	--	45.00	33.00	--	--	7	19.07	235
	H2		TBD	TBD	1,054	1,160	2,214	--	45.00	33.10	--	--	8	20.53	269
	H4 (G)		TBD	TBD	1,695	1,078	2,773	28.84	45.00	33.00	14'-6"	--	10.04	22.79	351
80	1	70.0	S550506	80 1SW	1,084	795	1,879	--	45.00	37.90	--	--	6.5	19.93	210
	H1		TBD	TBD	951	1,261	2,212	--	45.00	38.00	--	--	7	19.90	253
	H2		TBD	TBD	1,054	1,368	2,422	--	45.00	38.10	--	--	8	21.39	289
	H4 (G)		TBD	TBD	1,695	1,326	3,021	28.84	45.00	38.00	15'-0"	--	10.04	23.67	378
85	1	74.5	S550508	85 1SW	1,259	795	2,054	--	45.00	42.90	--	--	6.5	20.79	226
	H1		TBD	TBD	951	1,462	2,413	--	45.00	43.00	--	--	7	20.73	271
	H2		TBD	TBD	1,054	1,585	2,639	--	45.00	43.10	--	--	8	22.25	309
	H4 (G)		TBD	TBD	1,695	1,582	3,277	28.84	45.00	43.00	15'-6"	--	10.04	24.54	406
90	1	79.0	S550510	90 1SW	1,441	795	2,236	--	45.00	47.90	--	--	6.5	21.65	243
	H1		TBD	TBD	951	1,672	2,623	--	45.00	48.00	--	--	7	21.56	290
	H2		TBD	TBD	1,214	1,854	3,068	--	48.10	45.00	--	--	8	21.59	351
	H4 (G)		TBD	TBD	1,695	1,849	3,544	28.84	53.92	39.50	16'-0"	--	10.04	25.42	429
95	1	83.5	S550512	95 1SW	1,512	921	2,433	--	50.00	47.90	--	--	6.5	22.51	260
	H1		TBD	TBD	1,098	1,754	2,852	--	50.00	48.10	--	--	7	22.39	310
	H2		TBD	TBD	1,214	2,109	3,323	--	48.10	50.00	--	--	8	22.43	377
	H4 (G)		TBD	TBD	1,695	2,124	3,819	28.84	53.92	44.50	16'-6"	--	10.04	26.29	450
SABRE (F)					**MULTI-SIDED POLES**										
45	1	38.5	S549742	451SB	--	--	967	--	45.00	--	13'-0"	24'-3 1/2"	8.0	12.875	106
50	1	43.0	S549744	501SBW	--	--	1,075	--	50.00	--	13'-0"	27'-2"	8.0	13.375	119
50	H2	43.0	S549798	50H2SBW	--	--	1,307	--	50.00	--	13'-0"	27'-2"	9.44	15.875	181
55	1	47.5	S549746	551SB	869	489	1,423	22.00	40.00	17.00	12'-6"	--	8.0	15.313	132
60	1	52.0	S549748	601SBW	870	648	1,583	22.00	40.00	22.00	13'-0"	--	8.0	16	145
60	H2	52.0	S549802	60H2SBW	989	721	1,780	24.00	40.00	22.25	13'-0"	--	9.44	17.438	216
TRINITY-MEYER					**MULTI-SIDED POLES**										
45	1	38.5	S549980	451TMW	--	--	1,070	--	45.00	--	13'-0"	24'-4 5/8"	8.69	13.91	106
50	1	43.0	S549982	501TMW	--	--	1,210	--	50.00	--	13'-0"	27'-3 1/8"	8.69	14.50	119
55	1	47.5	S549984	551TMW	790	620	1,410	22.00	35.00	22.00	13'-0"	--	8.69	14.63	132
60	1	52.0	S549986	601TMW	780	770	1,550	22.00	35.00	27.00	13'-0"	--	8.69	15.19	145

TABLE OF CONTENTS

© 1998 - 2021 San Diego Gas & Electric Company. All rights reserved. Removal of this copyright notice without permission is not permitted under law.

REV	CHANGE	DR	BY	DSN	APV	DATE	REV	CHANGE	DR	BY	DSN	APV	DATE
C	TABLE UPDATE	-	GW	JS	MDJ	09/14/2017	F	BILL OF MATERIALS UPDATE	ARC	JES	JES	CZH	12/12/2021
B	EDITORIAL CHANGES	-	GW	JS	MDJ	11/16/2016	E	BILL OF MATERIALS UPDATE	EDM	JES	JES	CZH	08/13/2021
A	EDITORIAL CHANGES	-	JC	IL	JC/MDJ	06/23/2015	D	TABLE UPDATE	EDM	JG	JES	CZH	03/17/2021

INSTALLATION:

(A) ULTIMATE FIBER STRESS 7,600 PSI FOR DOUGLAS FIR.

(B) ULTIMATE FIBER STRESS 6,000 PSI FOR WESTERN RED CEDAR.

(C) MOMENT IS BASED ON GROUNDLINE BEING AT 10% OF POLE HEIGHT PLUS TWO FEET.

(D) 2-PIECE STEEL POLES SHALL BE JACKED TO REFUSAL OR 24,000 LBS. A 3/4-INCH STEEL BOLT SHALL BE INSERTED THROUGH THE SPLICE JOINT AFTER JACKING.

E. MODULUS OF ELASTICITY 2,380 KSI FOR DOUGLAS FIR.

(F) POLE CAP AND BEARING PLATE SHALL BE INSTALLED ON POLE BEFORE POLE IS SET IN PLACE.

(G) MULTI-SIDED POLE.

H. FOR 2-PIECE STEEL POLES, SPLICE JOINT EDGE OF TOP SECTION SHALL BE NO LESS THAN ONE-FOOT ABOVE GROUNDLINE.

BILL OF MATERIALS: NONE

NOTES:

(I) EFFECTIVE UPON APPROVAL-ELECTRIC TRANSMISSION & DISTRIBUTION ENGINEERING STANDARD 12100 "DIRECT BURIED POLE SELECTION AND LOADING CRITERIA" WILL SUPERSEDE INFORMATION CONTAINED IN OH354.

REFERENCE:

(a) FOR STRUCTURAL POLE LOADING CALCULATION REQUIREMENTS, SEE ELECTRIC STANDARD PRACTICE (ESP) 015.

(b) FOR ALLOWABLE TIP LOAD CALCULATION, SEE LATEST VERSION OF ANSI O5.1.

c. FOR SPECIFICATION FOR FURNISHING AND DELIVERY OF TRANSMISSION AND DISTRIBUTION WOOD POLES - TE0010, SEE 4.2.4.2 FOR REDUCTION OF ULTIMATE FIBER STRESS FOR DOUGLAS FIR.

d. FOR DISTRIBUTION FIBERGLASS POLES, SEE OH320.

TABLE OF CONTENTS

© 1998 - 2021 San Diego Gas & Electric Company. All rights reserved. Removal of this copyright notice without permission is not permitted under law.

REV	CHANGE	DR	BY	DSN	APV	DATE	REV	CHANGE	DR	BY	DSN	APV	DATE
C	TABLE UPDATE	-	GW	JS	MDJ	09/14/2017	F	BILL OF MATERIALS UPDATE	ARC	JES	JES	CZH	12/12/2021
B	EDITORIAL CHANGES	-	GW	JS	MDJ	11/16/2016	E	BILL OF MATERIALS UPDATE	EDM	JES	JES	CZH	08/13/2021
A	EDITORIAL CHANGES	-	JC	IL	JC/MDJ	06/23/2015	D	TABLE UPDATE	EDM	JG	JES	CZH	03/17/2021

SCOPE: THIS STANDARD SHOWS THE INSTALLATION OF POLE STEPS IN ACCORDANCE WITH SDG&E REQUIREMENTS.

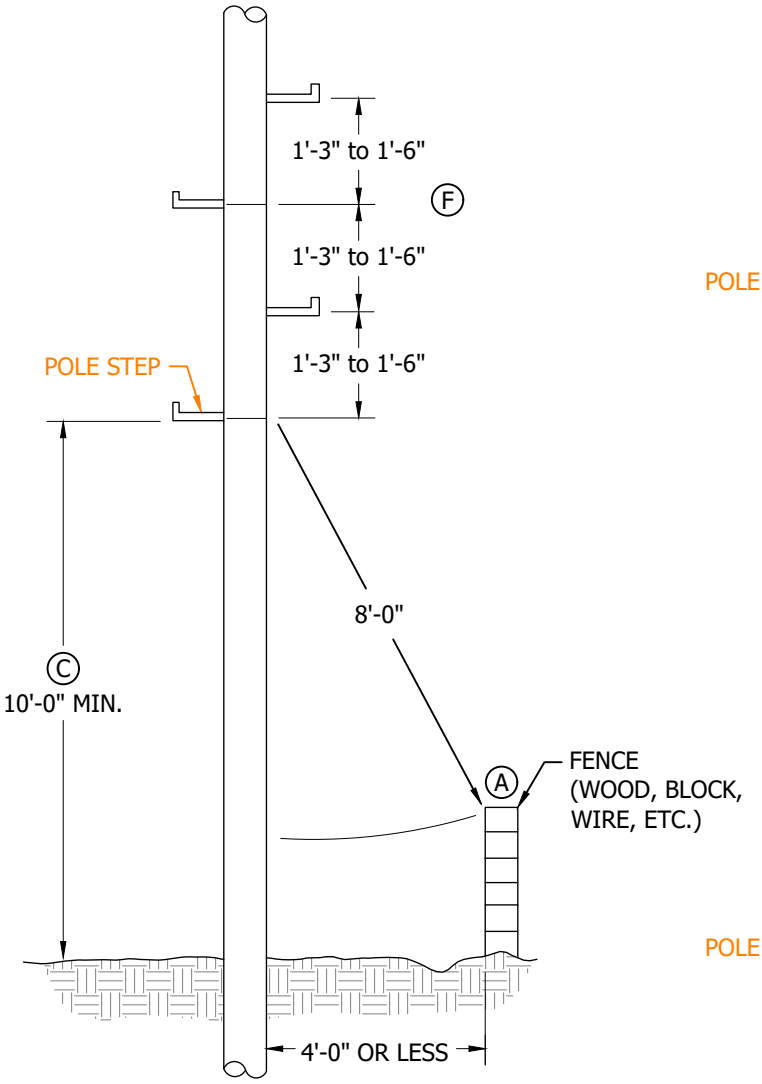

FIGURE 1

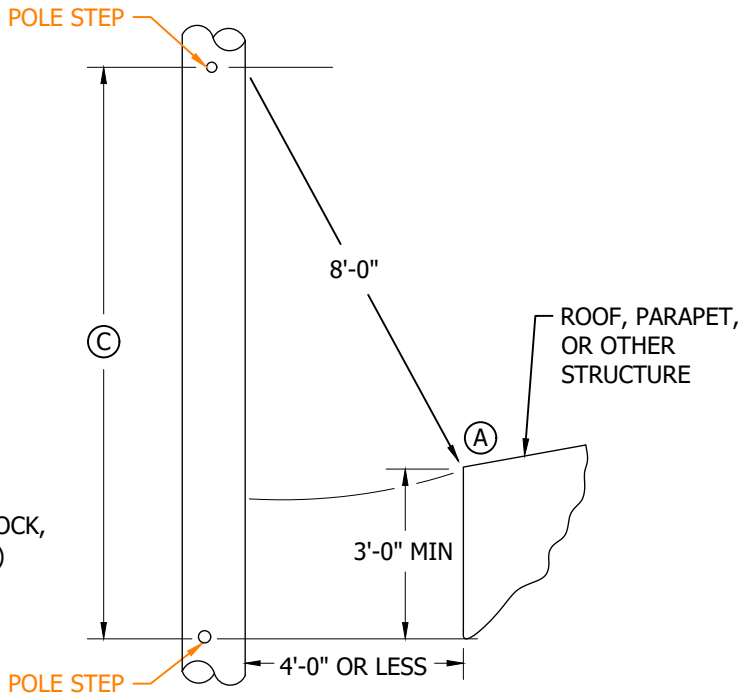

FIGURE 2
POLE-ROOF, PARAPET, STRUCTURE CONFLICT

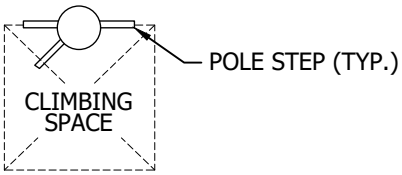

FIGURE 3
CLIMBING SPACE CONSIDERATIONS (B)

TABLE OF CONTENTS

© 1998 - 2020 San Diego Gas & Electric Company. All rights reserved. Removal of this copyright notice without permission is not permitted under law.

REV	CHANGE	DR	BY	DSN	APV	DATE	REV	CHANGE	DR	BY	DSN	APV	DATE
C	EDITORIAL CHANGES	-	JS	GW	MDJ	9/28/2016	F	DRAWING UPDATE	EDM	JAC	JES	CZH	7/1/2020
B	EDITORIAL CHANGES	-	JS	IL	MDJ	6/23/2016	E	NOTES UPDATE	-	JC	JS	MDJ	1/17/2018
A	UPDATE NOTES	-	JC	JE/IL	DW	12/16/2014	D	NOTES UPDATE	-	JS	JS	MDJ	6/26/2017

X Indicates Latest Revision | Completely Revised | New Page | Information Removed

SDG&E ELECTRIC OVERHEAD AND UNDERGROUND CONSTRUCTION STANDARDS

INSTALLATION OF PERMANENT POLE STEPS

OH363.1
UG4205.1

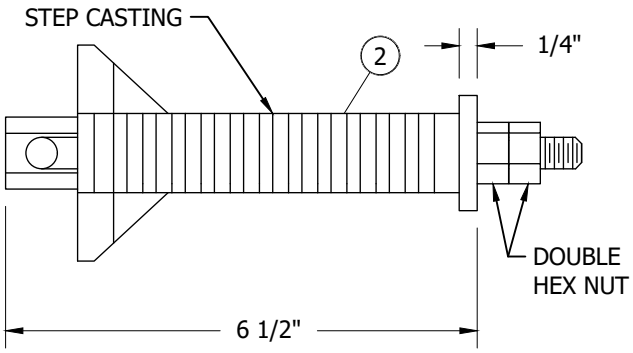

FIGURE 4
VALMONT POLE STEP (J) (III)
TOP VIEW

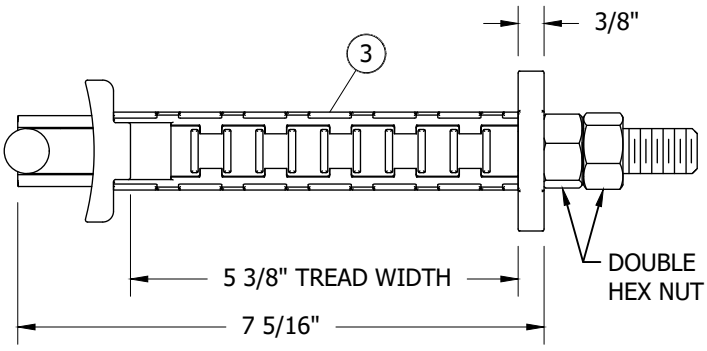

FIGURE 5
VAF POLE STEP (H)
TOP VIEW

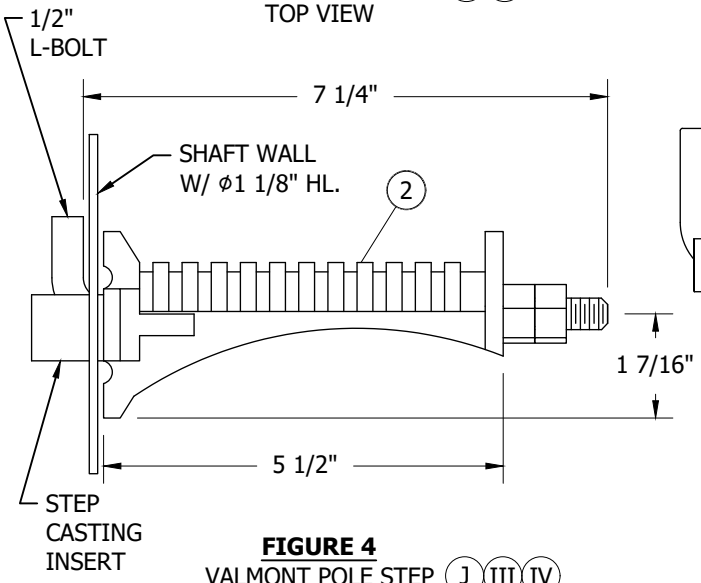

FIGURE 4
VALMONT POLE STEP (J) (III) (IV)
SIDE VIEW

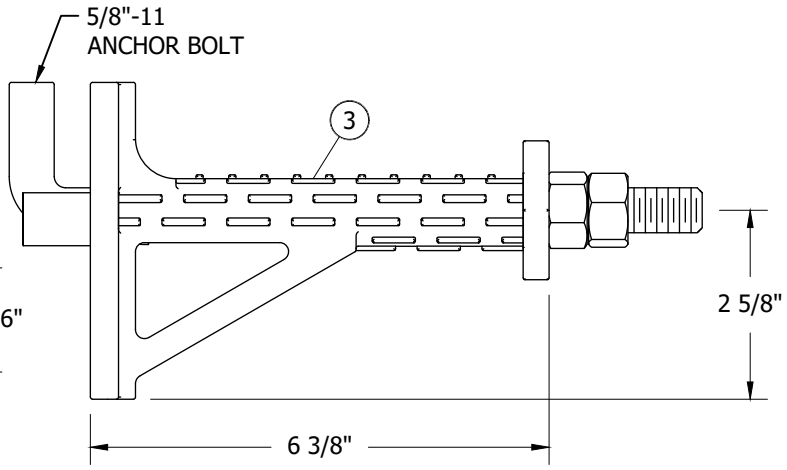

FIGURE 5
VAF POLE STEP (H) (IV)
SIDE VIEW

INSTALLATION:

(A) EIGHT FOOT MINIMUM RADIAL CLEARANCE IS REQUIRED FROM THE FIRST POLE STEP TO THE TOP OF ANY OBSTACLE WHEN THE POLE IS SET FOUR FEET OR LESS FROM THE OBSTACLE. IF THE POLE IS SET MORE THAN FOUR FEET AWAY FROM THE OBSTACLE, THIS REQUIREMENT DOES NOT APPLY.

(B) POLE STEPS SHOULD BE LOCATED NEAR THE EDGES OF THE CLIMBING SPACE BUT MUST BE LOCATED SO THEY ARE ALWAYS USABLE. FOR INSTANCE, IF VERTICAL RISERS WOULD INTERFERE WITH NORMALLY LOCATED POLE STEPS, INSTALL THE STEPS WITHIN THE CLIMBING SPACE AS SHOWN. APPLIES ONLY TO WOOD POLES.

(C) NO STEPS ALLOWED IN THIS AREA.

D. THE FOLLOWING WOOD POLES SHALL BE STEPPED:

1. POLES THAT ARE DIFFICULT TO CLIMB (E.G. SHELL ROT, LARGE CRACKS).
2. POLES THAT ARE FREQUENTLY CLIMBED BY TROUBLESHOOTER FOR MAINTENANCE OR OPERATING PURPOSES, OR, AS REQUESTED.

© 1998 - 2020 San Diego Gas & Electric Company. All rights reserved. Removal of this copyright notice without permission is not permitted under law.

REV	CHANGE	DR	BY	DSN	APV	DATE	REV	CHANGE	DR	BY	DSN	APV	DATE
C	EDITORIAL CHANGES	-	JS	GW	MDJ	9/28/2016	F	DRAWING UPDATE	EDM	JAC	JES	CZH	7/1/2020
B	EDITORIAL CHANGES	-	JS	IL	MDJ	6/23/2016	E	NOTES UPDATE	-	JC	JS	MDJ	1/17/2018
A	UPDATE NOTES	-	JC	JE/IL	DW	12/16/2014	D	NOTES UPDATE	-	JS	JS	MDJ	6/26/2017

Indicates Latest Revision | X Completely Revised | New Page | Information Removed

TABLE OF CONTENTS

INSTALLATION CONTINUED:

E. FIBERGLASS AND STEEL POLES THAT ARE INACCESSIBLE SHALL EITHER BE PERMANENTLY STEPPED OR HAVE PROVISIONS TO BE STEPPED CONSISTENT WITH SDG&E CONSTRUCTION STANDARDS. THE FIRST POLE STEP SHALL BE INSTALLED AT TEN FEET ABOVE THE GROUND LEVEL.

(F) POLE STEPS ON ALL POLES ARE TO BE SPACED A MINIMUM OF 15" TO 18", TEN FEET ABOVE GROUND LEVEL. THE FIRST TEN FEET OF THE POLE, STEPS ARE TO BE SPACED A MAX. OF 18".

G. TRANSMISSION POLES WITH DISTRIBUTION UNDER BUILD SHALL BE STEPPED TEN FEET FROM GROUND LEVEL AND MAY EXTEND UP TO AND ABOVE PRIMARY.

(H) POLESTEP INSTALLATION (VAF):

1. UNSCREW THE HEX NUTS AT THE END OF THE "J" BOLT TO THE END OF THE THREADS. DO NOT REMOVE THE HEX NUTS FROM THE BOLT.
2. PUSH "J" BOLT BACK INTO THE STEP TO ALLOW THE "ELBOW" TO EXTEND OUT PAST THE SLOT OPENING.
3. FEED "J" BOLT THROUGH THE PROPER STEP OPENING IN THE UTILITY POLE AND PLACE THE BACKING PLATE AGAINST THE OUTSIDE WALL OF THE POLE. MAKE SURE THE RADIUS SIDE OF THE PLATE FACES THE POLE.
4. USING THE HEX NUT, PULL THE "J" BOLT BACK OUT MAKING SURE THAT THE "ELBOW" SLIDES THROUGH THE SLOT AND FITS SNUG AGAINST THE INSIDE POLE WALL.
5. TIGHTEN FIRST HEX NUT AGAINST THE OUTSIDE OF THE STEP. DO NOT OVER TIGHTEN.
6. TIGHTEN SECOND HEX NUT TIGHTLY AGAINST THE FIRST HEX NUT.
7. VISUALLY CHECK STEP TO VERIFY IT IS INSTALLED PROPERLY.

(J) POLESTEP INSTALLATION (VALMONT):

1. INSERT L-BOLT THROUGH STEP CASTING WITH "L" ON THE INSERT SIDE OF THE CASTING.
2. INSERT "L" BOLT AND STEP CASTING INSERT INTO POLESTEP HOLE IN POLE WALL.
3. HAND TIGHTEN INSIDE HEX-NUT TO A SNUG FIT. A GENTLE WIGGLE ON THE STEP ASSEMBLY WILL ALLOW THIS.
4. USING A STANDARD WRENCH, TIGHTEN INSIDE NUT ONE TO ONE AND A HALF (1-1.5) TURNS PAST THE HAND SNUG CONDITION.
5. INSTALL SECOND HEX-NUT TO LOCK THE FIRST IN PLACE.
6. REMOVAL OF THE STEP ASSEMBLY FROM THE POLE IS ACCOMPLISHED BY REVERSING THE STEPS OUTLINED ABOVE.

BILL OF MATERIALS:

ITEM	DESCRIPTION	COLOR	QUANTITY	STANDARD PAGE	STOCK NUMBER	DESIGN UNITS
1	STEP, POLE, DRIVING TYPE (FOR WOOD POLE) (II)	--	--	--	S692992	STEP
2	STEP, POLE, VALMONT	--	--	--	S693000	--
3	STEP, POLE, VAF	BROWN	--	--	S692018	VAF-B
		SILVER	--	--	S693012	VAF-S

NOTES:

I. JOINT POLE WHERE ANOTHER PARTY OWNS THE POLE, G.O. 95 WILL BE MAINTAINED.

(II) NOT SHOWN IN FIGURES.

(III) STEP PARTS SHALL NOT BE ALTERED IN ANY MANNER. HANDLE STEP CASTINGS WITH CARE. DO NOT DROP, STRIKE OR IMPACT.

(IV) MAXIMUM ALLOWABLE LOAD OF 500LBS. A SAFETY FACTOR OF 2.5 IS INCLUDED IN THIS VALUE.

REFERENCE:

a. POLE STEPPING JOINT USE POLES, SEE G.O. 95 RULE 91.3A.

TABLE OF CONTENTS

© 1998 - 2020 San Diego Gas & Electric Company. All rights reserved. Removal of this copyright notice without permission is not permitted under law.

REV	CHANGE	DR	BY	DSN	APV	DATE	REV	CHANGE	DR	BY	DSN	APV	DATE
C	EDITORIAL CHANGES	-	JS	GW	MDJ	9/28/2016	F	DRAWING UPDATE	EDM	JAC	JES	CZH	7/1/2020
B	EDITORIAL CHANGES	-	JS	IL	MDJ	6/23/2016	E	NOTES UPDATE	-	JC	JS	MDJ	1/17/2018
A	UPDATE NOTES	-	JC	JE/IL	DW	12/16/2014	D	NOTES UPDATE	-	JS	JS	MDJ	6/26/2017

Indicates Latest Revision | Completely Revised | New Page X | Information Removed

SDG&E ELECTRIC OVERHEAD AND UNDERGROUND CONSTRUCTION STANDARDS

INSTALLATION OF PERMANENT POLE STEPS

OH363.3
UG4205.3

SCOPE: THIS STANDARD SHOWS TWO METHODS OF POLE BRACING USED ON INSTALLATIONS WHERE POLES ARE SUBJECTED TO SINKING AND LEANING.

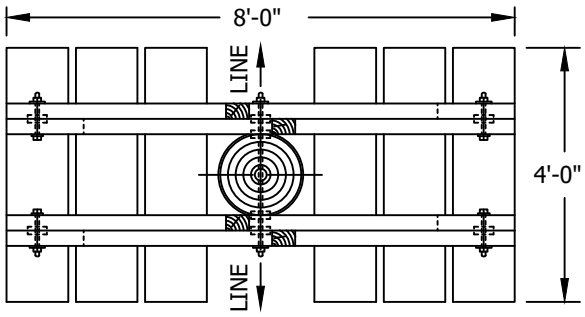

PLAN

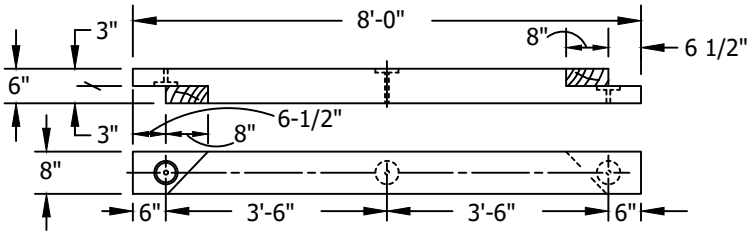

ITEM NO. 1

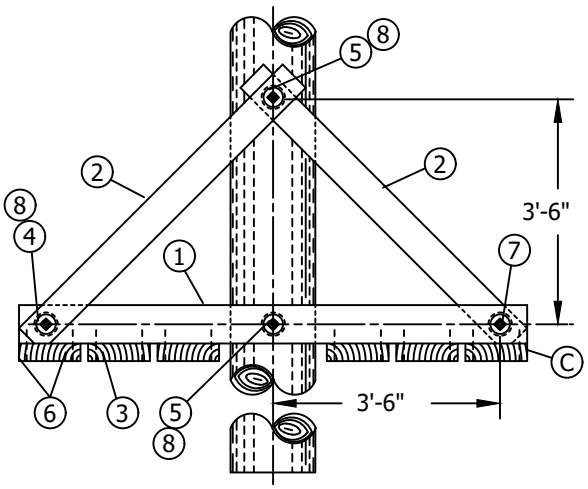

FRONT VIEW

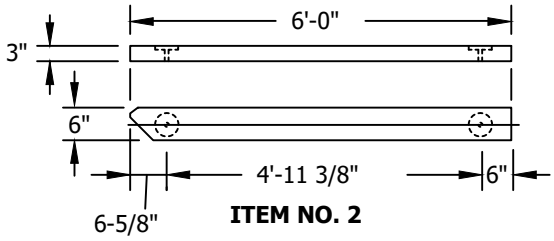

ITEM NO. 2

MUD SILL

ASSEMBLY UNIT
MUDSIL

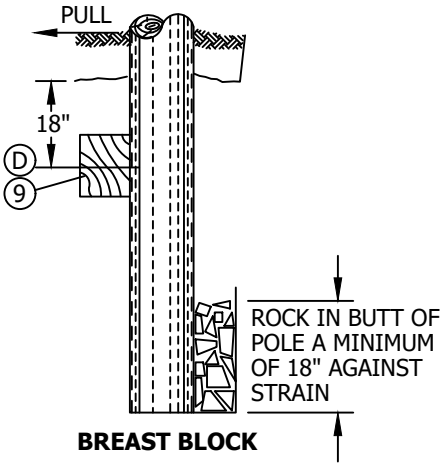

BREAST BLOCK

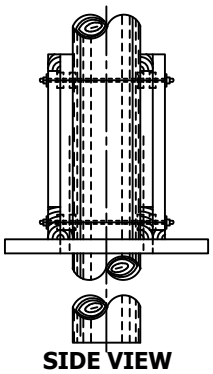

SIDE VIEW

INSTALLATION:

(A) STOCK NUMBER 472832 IS A GENERAL STOCK NUMBER FOR DIFFERENT SIZES OF REDWOOD. SPECIFY SIZES AND QUANTITY NEEDED ON SHOP ORDER.

(B) SPECIAL ORDER ITEM, NOTIFY CARPENTER SHOP IN ADVANCE.

(C) MUDSILL ASSEMBLY CAN BE CONSTRUCTED AT THE CARPENTER SHOP.

(D) DO NOT FASTEN BREAST BLOCK TO POLE.

TABLE OF CONTENTS

© 1998 - 2019 San Diego Gas & Electric Company. All rights reserved. Removal of this copyright notice without permission is not permitted under law.

REV	CHANGE	BY	DSGN	APPV	DATE	REV	CHANGE	BY	DSGN	APPV	DATE
C						F					
B	DRAWING UPDATE	PEI	-	-	03/18/2019	E					
A	ORIGINAL ISSUE	-	-	BV/MC	06/17/2009	D					

X Indicates Latest Revision | Completely Revised | New Page | Information Removed

SDG&E ELECTRIC OVERHEAD CONSTRUCTION STANDARDS

SHEET 1 OF 2

POLE BRACING
MUD SILL AND BREAST BLOCK

OH371.1

BILL OF MATERIALS:

ITEM	DESCRIPTION	QUANTITY	CONST. STDS.	STOCK NUMBER	ASSEMBLY UNITS
1	LUMBER, REDWOOD 6" X 8" X 8'-0" (B)	2	--	S472832 (A)	--
2	LUMBER, REDWOOD 3" X 6" X 6'-0" (B)	4	--		
3	LUMBER, REDWOOD 3" X 12" X 4'-0" (B)	6	--		
4	BOLT, MACH. GALV. 3/4" X 8"	4	STD. 392	--	--
5	BOLT, MACH. GALV. 3/4" X (LENGTH AS REQ'D)	2	STD. 392	--	--
6	NAILS, GALV. 30d	AS REQ'D	--	S491488	--
7	SPLIT RING, STEEL 1" X 4" TECO	10	STD. 392	S599584	SPLT-R
8	WASHER, MALLEABLE IRON	12	STD. 392	S799200	--
9	BREAST BLOCK, 5-3/4" X 7-3/4" X 4'	1	--	S141664	BBLK

NOTES: NONE

REFERENCE: NONE

TABLE OF CONTENTS

© 1998 - 2019 San Diego Gas & Electric Company. All rights reserved. Removal of this copyright notice without permission is not permitted under law.

REV	CHANGE	BY	DSGN	APPV	DATE	REV	CHANGE	BY	DSGN	APPV	DATE
C						F					
B	DRAWING UPDATE	PEI	-	-	03/18/2019	E					
A	ORIGINAL ISSUE	-	-	BV/MC	06/17/2009	D					

X Indicates Latest Revision | Completely Revised | New Page | Information Removed

SDG&E ELECTRIC OVERHEAD CONSTRUCTION STANDARDS

POLE BRACING
MUD SILL AND BREAST BLOCK

OH371.2

SCOPE: THIS STANDARD ILLUSTRATES METHODS OF INSTALLING TEMPORARY POLE SUPPORTS FOR TRENCHING OPERATIONS.

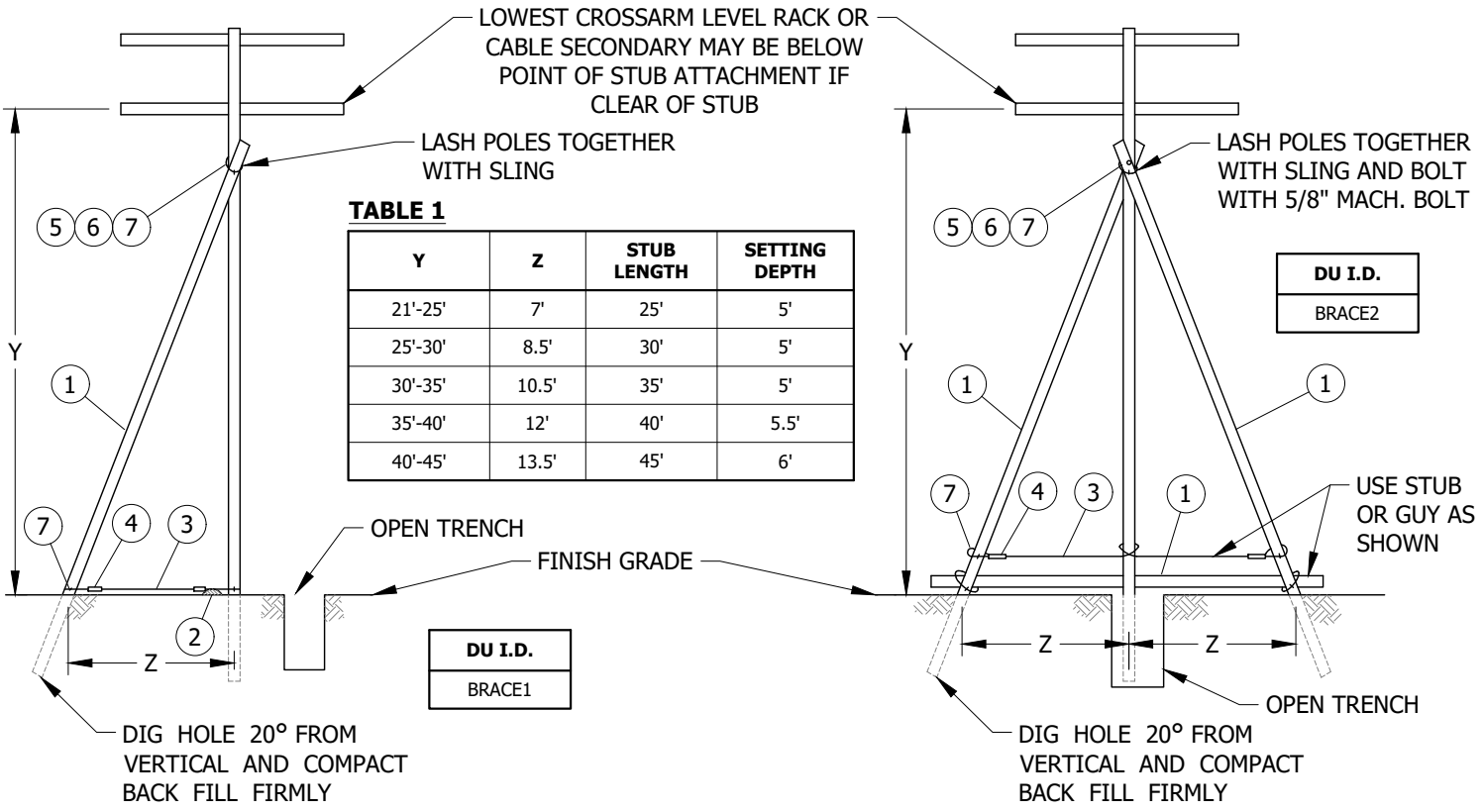

TABLE 1

Y	Z	STUB LENGTH	SETTING DEPTH
21'-25'	7'	25'	5'
25'-30'	8.5'	30'	5'
30'-35'	10.5'	35'	5'
35'-40'	12'	40'	5.5'
40'-45'	13.5'	45'	6'

DU I.D.
BRACE1

DU I.D.
BRACE2

METHOD 1 **METHOD 2**

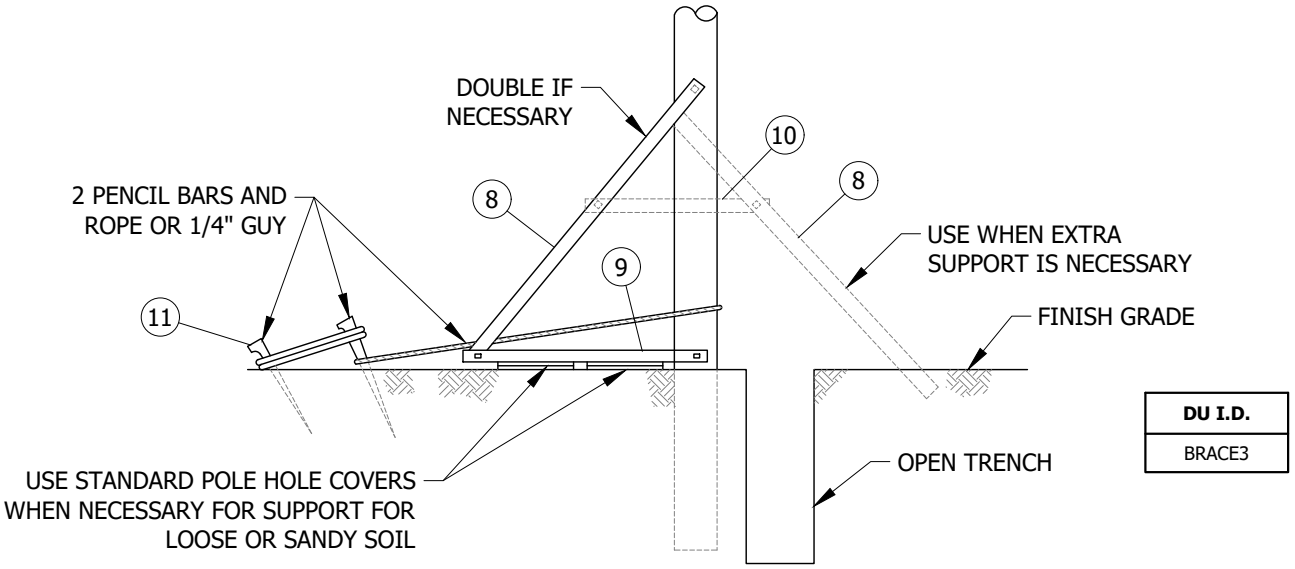

DU I.D.
BRACE3

METHOD 3

© 1998 - 2020 San Diego Gas & Electric Company. All rights reserved. Removal of this copyright notice without permission is not permitted under law.

REV	CHANGE	BY	DSGN	APPV	DATE	REV	CHANGE	BY	DSGN	APPV	DATE
C	TABLE UPDATE	JIK	JES	CZH	05/11/2020	F					
B	DRAWING UPDATE	PEI	-	-	03/18/2019	E					
A	ORIGINAL ISSUE	-	-	PTA/RDG	12/06/2006	D					

X Indicates Latest Revision | Completely Revised | New Page | Information Removed

SDG&E ELECTRIC OVERHEAD CONSTRUCTION STANDARDS

SHEET 1 OF 2

TEMPORARY POLE SUPPORT FOR TRENCHING OPERATIONS

OH372.1

TABLE OF CONTENTS

INSTALLATION: NONE

BILL OF MATERIALS:

ITEM	DESCRIPTION	QUANTITY	STANDARD PAGE	STOCK NUMBER	DESIGN UNITS
1	STUB, LENGTH AS REQUIRED	1, 2 OR 3	354	--	--
2	BREAST BLOCK 4' LONG	AS REQ'D	--	S141664	--
3	CABLE, GALV. GUY, 3/8"	AS REQ'D	--	S811296	--
4	CLAMP, GALV	AS REQ'D	--	S227296	--
5	WIRE ROPE SLING	1	--	--	--
6	CLAMP, 3/8"	1	--	S230114 (X)	--
7	STAPLES, FENCE, GALV. 3"	AS REQ'D	--	S678560	--
8	5 3/4" X 5 3/4" X 15'-0"	1, 2 OR 3	--	S293728	--
9	CROSSARM 5 3/4" X 5 3/4" X 10'-0"	2	--	S294144	--
10	CROSSARM 5 3/4" X 3 3/4" X 8'-0"	1	--	S294960	--
11	PENCIL POINT DRIVING BAR	2	--	S123808	--

NOTES:

I. SELECT ONE OF THE THREE METHODS SHOWN ON THIS STANDARD WHEN REQUIRED, FOR TEMPORARILY SUPPORTING POLES.

II. PRIOR APPROVAL SHALL BE OBTAINED FROM THE ELECTRIC DISTRIBUTION STANDARDS SECTION FOR OTHER VARIATIONS.

(X) THIS ITEM IS EXEMPT.

REFERENCE: NONE

TABLE OF CONTENTS

© 1998 - 2020 San Diego Gas & Electric Company. All rights reserved. Removal of this copyright notice without permission is not permitted under law.

REV	CHANGE	BY	DSGN	APPV	DATE	REV	CHANGE	BY	DSGN	APPV	DATE
C	TABLE UPDATE	JIK	JES	CZH	05/11/2020	F					
B	DRAWING UPDATE	PEI	-	-	03/18/2019	E					
A	ORIGINAL ISSUE	-	-	PTA/RDG	12/06/2006	D					

SCOPE: THIS STANDARD SHOWS A METHOD OF REINFORCING DETERIORATED WOOD POLES, USING FULL TREATED STUBS.

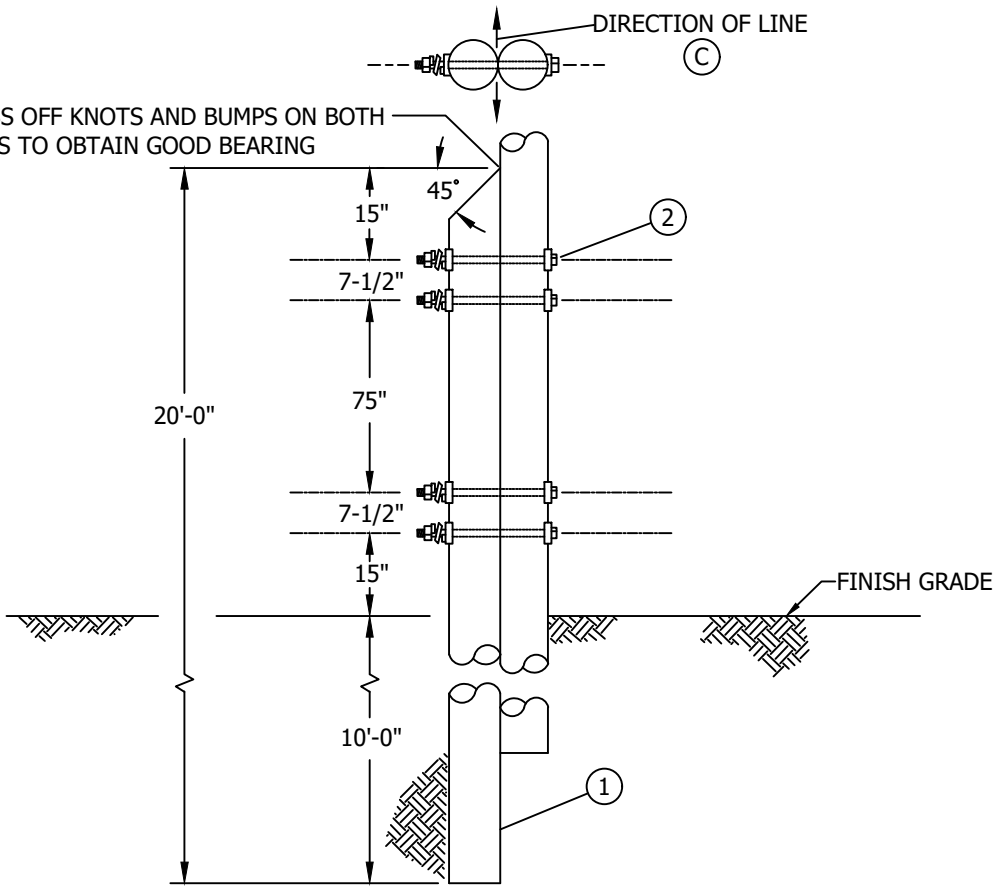

INSTALLATION:

A. FOR USE ONLY WHERE POLE REPLACEMENT IS IMPRACTICAL AND STUB CANNOT BE EASILY SEEN BY THE GENERAL PUBLIC.

(B) REINFORCING STUBS ARE TO HAVE THE SAME GROUNDLINE DIAMETER AS THE POLE OR LARGER. THEY SHALL BE FULL LENGTH TREATED AND TOPS CUT AT 45°.

(C) SET STUBS ACROSS LINE WHERE PRACTICAL.

BILL OF MATERIALS:

ITEM	DESCRIPTION	QUANTITY	STOCK NO. OR CONSTR STANDARD	ASSEMBLY UNITS
1	STUB, (20' CLASS 3 MIN.) FULL TREATED (B)	1	-	-
2	BOLT, MACH, GALV, 5/8" x (LENGTH AS REQ'D) 2-3 1/2" SQ. CURVED AND 1 DOUBLE COIL SPRING WASHER	4	STD 392	REIN-P

NOTES: NONE

REFERENCE: NONE

© 1998 - 2019 San Diego Gas & Electric Company. All rights reserved. Removal of this copyright notice without permission is not permitted under law.

REV	CHANGE	BY	DSGN	APPV	DATE	REV	CHANGE	BY	DSGN	APPV	DATE
C						F					
B	DRAWING UPDATE	PEI	-	-	03/18/2019	E					
A	ORIGINAL ISSUE	-	-	PTA/JJ	09/20/2005	D					

X Indicates Latest Revision | Completely Revised | New Page | Information Removed

SDG&E ELECTRIC OVERHEAD CONSTRUCTION STANDARDS

REINFORCING WOOD POLES

SHEET 1 OF 1

OH373.1

TABLE OF CONTENTS

SCOPE: THIS STANDARD SHOWS A METHOD OF REINFORCING DETERIORATED WOOD POLES USING A GALVANIZED STEEL TRUSS. SITUATIONS WHERE THE LOAD IS SIGNIFICANTLY INCREASED (I.E. RE-CONDUCTOR, ADDITION OF 3-PHASE BANKS, LARGE EQUIPMENT, ETC. OR THE INSTALLATION OF PRIMARY CABLE-POLES RISERS ARE INSTALLED) **SHALL NOT** BE CONSTRUCTED ON POLES WITH EXISTING GROUND LINE RETROFITS. POLE WITH EXISTING C-TRUSS, FIBER WRAP, GROUT ENCASED, ETC. MAY NOT HAVE SUFFICIENT CAPACITY REQUIRED FOR MAJOR CHANGES.

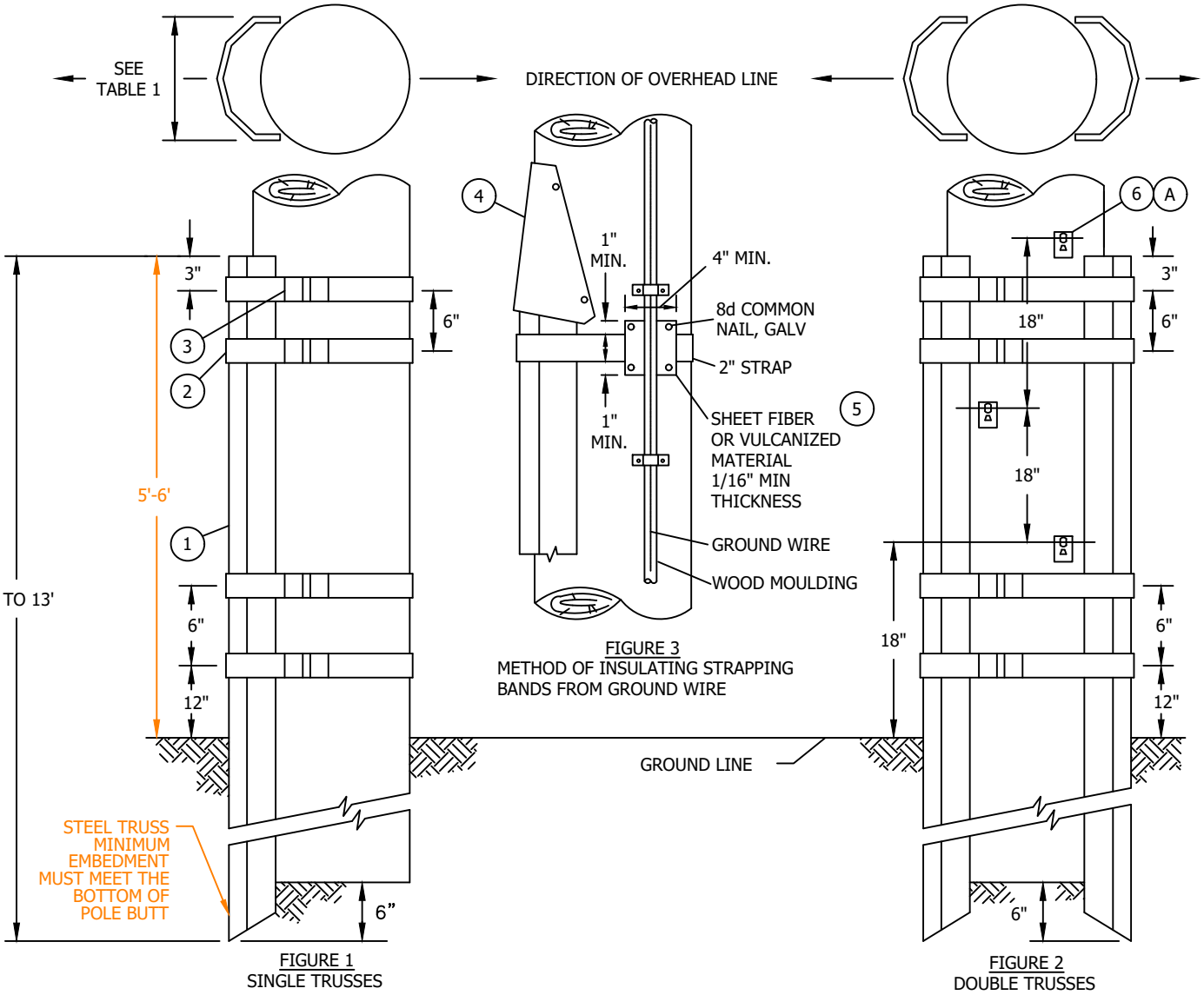

FIGURE 1
SINGLE TRUSSES

FIGURE 3
METHOD OF INSULATING STRAPPING BANDS FROM GROUND WIRE

FIGURE 2
DOUBLE TRUSSES

INSTALLATION:

(A) TEMPORARY POLE STEP LAG PLATES ARE TO BE INSTALLED WHEREVER DOUBLE STEEL TRUSSES ARE INSTALLED ON A POLE OR IF OTHER OBSTRUCTIONS SUCH AS RISERS, FENCING, ETC. WILL PREVENT SAFE CLIMBING ON POLES WITH SINGLE TRUSSES. IF POLE IS A CLASS THREE OR LARGER, INSTALL LAG PLATES ALTERNATIVELY AT 18 INCH INTERVALS ON SAME SIDE OF POLE (SEE PAGE 374.1, FIG. 2). IF POLE IS SMALLER THAN CLASS THREE, INSTALL LAG PLATES ALTERNATIVELY ON OPPOSITE SIDES OF POLE AT 18 INCH INTERVALS (SEE FIG. 4). INSTALL LOWEST LAG PLATE AT 18 INCHES ABOVE GROUND AND UPPER-MOST LAG PLATE NO GREATER THAN 18 INCHES BELOW THE TOP OF THE STEEL TRUSSES, INCLUDING THE PROTECTIVE COVER.

© 1998 - 2019 San Diego Gas & Electric Company. All rights reserved. Removal of this copyright notice without permission is not permitted under law.

REV	CHANGE	BY	DSGN	APPV	DATE	REV	CHANGE	BY	DSGN	APPV	DATE
C						F					
B	EDITORIAL CHANGES	GW	JS	CZH	6/13/2019	E					
A	NO CHANGES-REAFFIRMED	JC	IL	JS/MDJ	11/17/2015	D					

X Indicates Latest Revision | Completely Revised | New Page | Information Removed

SDG&E ELECTRIC OVERHEAD CONSTRUCTION STANDARDS

REINFORCING WOOD POLES WITH STEEL TRUSSES

OH374.1

TABLE OF CONTENTS

BILL OF MATERIALS:

ITEM	DESCRIPTION	QUANTITY	STOCK NO OR CONST STD	ASSEMBLY UNITS
1	GALV STEEL TRUSS, WIDTH: 5-3/4" - 13" LENGTH: AS NEEDED TO FOR MIN. EMBEDMENT TO MEET BOTTOM OF POLE BUTT	1 OR 2	--	--
2	STRAP, 2" x .055" GALV STEEL	4	--	--
3	SEAL, (2 PER BAND)	8	--	--
4	PROTECTIVE COVER	1 OR 2	--	--
5	VULCANIZED FIBERBOARD MATERIAL 5" x 11" x 1/16"	AS REQ'D	343780	--
6	TEMPORARY POLE STEP LAG PLATE	AS REQ'D	541212	TSPLT

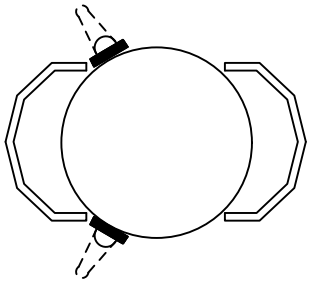

FIG. 4

NOTES:

I. PRESENTLY ALL TRUSSES ARE INSTALLED BY OUTSIDE CONTRACTORS IN ACCORDANCE WITH TE-0108 SPECIFICATION FOR INSPECTIONS, TREATMENT, AND REINFORCEMENT OF IN-SERVICE WOOD POLE STRUCTURES TREATMENT AND REINFORCEMENT PROGRAM.

REFERENCE:

MINIMUM REQUIREMENTS FOR POLE

TO BE SUITABLE FOR REINFORCING WITH STEEL TRUSSES, A POLE MUST MEET THE FOLLOWING:

a. MEET THE REQUIRED MINIMUM SHELL THICKNESS IN TE-0108. SEE TABLE 1.

b. TRUSS SELECTION MUST MEET THE POLE'S ORIGINAL CAPACITY IN ACCORDANCE WITH ANSI 05.1 GROUNDLINE STRESSES. SEE TABLE 2.

c. POLE MUST NOT HAVE GROUND WIRES OR RISERS LOCATED IN QUADRANTS THAT WILL PREVENT INSTALLING TRUSS WITH ITS STRONG AXIS PARALLEL TO THE GROUND/RISER.

d. THE AREA ABOVE THE TRUSS PLACEMENT MUST HAVE A REMAINING CAPACITY EQUAL OR GREATER THAN 80%.

TRUSS SIZE SELECTION

AFTER DETERMINING THAT A TRUSS IS NEEDED AND THE POLE MEETS THE ABOVE REQUIREMENTS, THE TRUSS SIZE IS SELECTED AS FOLLOWS:

e. (INSERT TABLE 2 FOR TRUSS SELECTION BASED ON SIZE AND CLASS OF POLE'S ORIGINAL GROUNDLINE MOMENT CAPACITY).

f. TRUSS LENGTH SELECTION MUST MEET BOTTOM OF POLE BUTT, AND EXTEND ABOVE GROUNDLINE AT MIN. 5.0 FT. IF USING TRUSS WIDTHS GREATER THAN 11", TRUSS LENGTH TO EXTEND 6.0 FT. ABOVE GROUND LINE.

TABLE 1

MINIMUM SHELL THICKNESS REQUIRED FOR STEEL REINFORCEMENT		
LOCATION	POLES 50 FEET OR SHORTER (IN.)	POLES 55 FEET OR TALLER (IN.)
AT GROUNDLINE (GL)	1	1-1/2
AT GL FOR SDWP AND PAC WOOD MANUFACTURED POLES	2	2
15 IN. TO 26 IN. ABOVE GL	2	3
54 IN. TO 66 IN. ABOVE GL	4	5

ATTENTION:

* SDWP - SAN DIEGO WOOD PRESERVE (MANUFACTURER)
* PAC - PACIFIC WOOD (MANUFACTURER)

TABLE OF CONTENTS

© 1998 - 2019 San Diego Gas & Electric Company. All rights reserved. Removal of this copyright notice without permission is not permitted under law.

REV	CHANGE	BY	DSGN	APPV	DATE	REV	CHANGE	BY	DSGN	APPV	DATE
C						F					
B	EDITORIAL CHANGES	GW	JS	CZH	6/13/2019	E					
A	NO CHANGES-REAFFIRMED	JC	IL	JS/MDJ	11/17/2015	D					

X Indicates Latest Revision | Completely Revised | New Page | Information Removed

SDG&E ELECTRIC OVERHEAD CONSTRUCTION STANDARDS

REINFORCING WOOD POLES WITH STEEL TRUSSES

OH374.2

TABLE 2

WOOD POLE CLASS	ORIGINAL POLE LENGTH (FT.)	REQUIRED GROUNDLINE MOMENT CAPACITY TO RESTORE TO 100% (FT. - LBS.)
CLASS 3	30	69,000
	35	83,000
	40	96,000
	45	110,000
	50	123,000
	55	137,000
	60	150,000
	65	164,000
CLASS 1	30	104,000
	35	124,000
	40	144,000
	45	164,000
	50	185,000
	55	205,000
	60	225,000
	65	245,000

ATTENTION:

* ORIGINAL GROUNDLINE MOMENT CAPACITY VALUES IN ACCORDANCE WITH ANSI 05.1 GROUNDING.

TABLE OF CONTENTS

STRAP INSTALLATION:

g. STRAPS ARE TO BE INSTALLED AS SHOWN IN FIGURE 1 AND 2. EACH STRAP SHALL HAVE TWO SEALS, AND EACH SEAL SHALL BE CRIMPED TWICE. THE BANDING FOR SINGLE 9" TRUSSES AND LARGER, INCLUDING DOUBLE TRUSSES, MUST BE DOUBLE WRAPPED AND SEALED WITH PROPER SEALS.

POLES WITH GROUND INSTALLATIONS:

h. WHERE A GROUND IS ATTACHED TO POLE, THE MOULDING SHALL BE LOOSENED AND THE STRAPPING BANDS PLACED UNDER THE MOULDING BETWEEN THE GROUND WIRE AND THE SURFACE OF THE POLE. A STRIP OF SHEET FIBER OR VULCANIZED MATERIAL, 1/16 INCH THICK, SHALL THEN BE PLACED BETWEEN THE GROUND WIRE AND THE STRAPPING BANDS, AND ATTACHED WITH 8d COMMON GALVANIZED NAILS AS SHOWN IN FIGURE 3. (THIS WILL PROVIDE INSULATION WITH 1-1/2 INCH MINIMUM CREEPAGE, AS REQUIRED BY G.O. 95). THE MOULDING SHALL THEN BE RE-ATTACHED TO POLE. WHERE A GROUND ATTACHED TO POLE, THE EARTH AT THE POLE SHALL BE DUG OUT TO EXPOSE THE BURIED GROUND WIRE AND CONNECTION TO THE GROUND ROD BEFORE THE STEEL TRUSS IS DRIVEN.

© 1998 - 2019 San Diego Gas & Electric Company. All rights reserved. Removal of this copyright notice without permission is not permitted under law.

REV	CHANGE	BY	DSGN	APPV	DATE	REV	CHANGE	BY	DSGN	APPV	DATE
C						F					
B	EDITORIAL CHANGES	GW	JS	CZH	6/13/2019	E					
A	NO CHANGES-REAFFIRMED	JC	IL	JS/MDJ	11/17/2015	D					

X Indicates Latest Revision | Completely Revised | New Page | Information Removed

SDG&E ELECTRIC OVERHEAD CONSTRUCTION STANDARDS

REINFORCING WOOD POLES WITH STEEL TRUSSES

OH374.3

SCOPE: THIS STANDARD DESCRIBES POLE SELECTION FOR UNGUYED STUBS AND IS MEANT TO BE AN EXAMPLE ONLY FOR ILLUSTRATING FORMULA.

EXAMPLE

PROBLEM: DETERMINE THE CLASS OF POLE OR GUY STUB TO BE SET FOR A GIVEN HORIZONTAL PULL.

ASSUME: NORMAL GROUND (MEDIUM TO HARD).
LENGTH OF GUY STUB IS 35 FEET.
HORIZONTAL PULL (P) = 500 LBS.
POINT OF ATTACHMENT OF HEAD GUY ABOVE GROUND LEVEL (H) = 29 FEET.

SOLUTION: BENDING MOMENT (M) = POINT OF ATTACHMENT OF HEAD GUY ABOVE GROUND LEVEL (H) TIMES HORIZONTAL PULL (P), OR M = H X P = 29 X 500 = 14,500 FT/LBS.

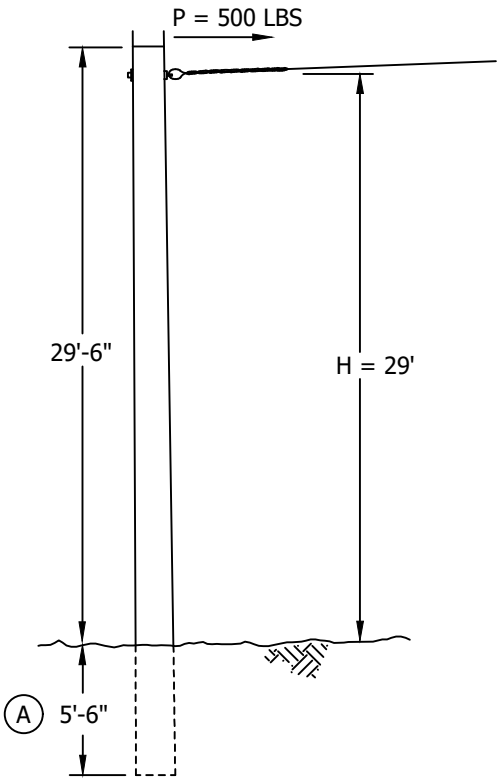

COMPARE THIS VALUE TO THE USEABLE STRENGTH FOR WIND LOADING (SF = 4) PAGE 354.1 OR 354.2. A 35 FOOT CLASS 4 POLE WITH A WIND LOADING USABLE STRENGTH OF 14,560 FT/LBS CAN BE USED.

CONCLUSION: SINCE SDG&E DOES NOT STOCK CLASS 4 POLES, A 35' CLASS - 3 POLE SHALL BE USED.

INSTALLATION:

(A) IN SOFT OR LOOSE SOIL SET STUB ADDITIONAL 3 FEET DEEPER.

BILL OF MATERIALS: NONE

NOTES: NONE

REFERENCE: NONE

© 1998 - 2019 San Diego Gas & Electric Company. All rights reserved. Removal of this copyright notice without permission is not permitted under law.

REV	CHANGE	BY	DSGN	APPV	DATE	REV	CHANGE	BY	DSGN	APPV	DATE
C						F					
B	DRAWING UPDATE	PEI	-	-	03/18/2019	E					
A	ORIGINAL ISSUE	-	-	PTA/CAK	01/01/1998	D					

X Indicates Latest Revision | Completely Revised | New Page | Information Removed

SDG&E ELECTRIC OVERHEAD CONSTRUCTION STANDARDS

SHEET 1 OF 1

UNGUYED STUB

OH376.1

TABLE OF CONTENTS

SCOPE: THIS STANDARD SHOWS THE METHOD OF INSTALLING A PUSH BRACE.

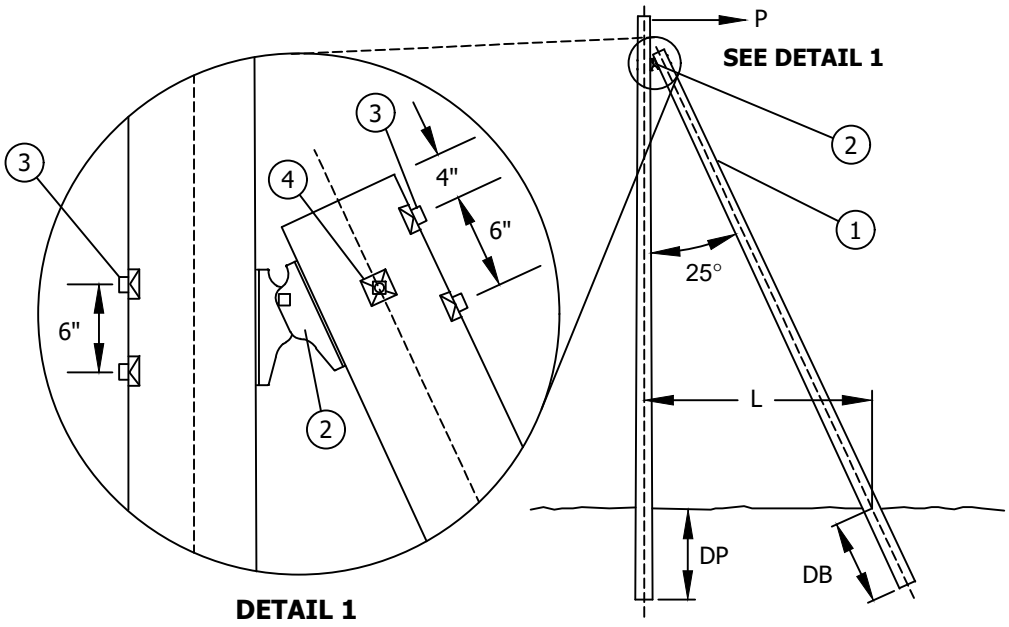

DETAIL 1

TABLE 1

LINE POLE LENGTH	BRACE LENGTH	L	APPROXIMATE DEPTH	
			DP	DB
35'	35'	12'	5' - 6"	5' - 0"
40'	40'	14'	6' - 0"	5' - 0"
45'	45'	15'	6' - 6"	5' - 6"
50'	50'	17'	7' - 0"	5' - 6"

TABLE 2

ALLOWABLE HORIZONTAL TENSION P (LBS)				
BRACE LENGTH	POLE CLASS	SOIL CONDITION		
		SOFT	MEDIUM	HARD
35'	1	940	1520	2080
	3	800	1280	1760
	5	660	1050	1440
40'	1	1000	1620	2230
	3	860	1370	1890
	5	720	1150	1570
45'	1	1070	1720	2380
	3	900	1450	1990
	5	760	1220	1670
50'	1	1130	1830	2530
	3	950	1530	2110
	5	810	1290	1750

© 1998 - 2019 San Diego Gas & Electric Company. All rights reserved. Removal of this copyright notice without permission is not permitted under law.

REV	CHANGE	BY	DSGN	APPV	DATE	REV	CHANGE	BY	DSGN	APPV	DATE
C						F					
B	DRAWING UPDATE	PEI	-	-	03/18/2019	E					
A	ORIGINAL ISSUE	-	-	PTA/RDG	01/01/1994	D					

X Indicates Latest Revision | Completely Revised | New Page | Information Removed

SDG&E ELECTRIC OVERHEAD CONSTRUCTION STANDARDS

PUSH BRACE

OH377.1

TABLE OF CONTENTS

INSTALLATION: NONE

BILL OF MATERIALS:

ITEM	DESCRIPTION	QUANTITY	STOCK NO. OR CONST STD	ASSEMBLY UNITS
1	POLE, LENGTH AND CLASS AS REQ'D (SEE TABLE I ABOVE)	1	STD 354	-
2	CONNECTOR, PUSH BRACE	1	262260	PP-BKT
3	MACH, GALV, 3/4" x (LENGTH AS REQ'D), 1 SQUARE CURVED AND 1 DOUBLE COIL SPRING WASHER	4	STD 392	-
4	BOLT, MACH, GALV, 5/8" x (LENGTH AS REQ'D) AND 2 SQ. CURVED, RIBBED WASHERS	1	STD 392	-

NOTES: NONE

REFERENCE: NONE

TABLE OF CONTENTS

© 1998 - 2019 San Diego Gas & Electric Company. All rights reserved. Removal of this copyright notice without permission is not permitted under law.

REV	CHANGE	BY	DSGN	APPV	DATE	REV	CHANGE	BY	DSGN	APPV	DATE
C						F					
B	DRAWING UPDATE	PEI	-	-	03/18/2019	E					
A	ORIGINAL ISSUE	-	-	PTA/RDG	01/01/1994	D					

X Indicates Latest Revision | Completely Revised | New Page | Information Removed

SCOPE: THIS STANDARD SHOWS THE ASSEMBLY DETAIL FOR A POLE-MOUNTED, LADDER SAFETY SUPPORT BRACKET.

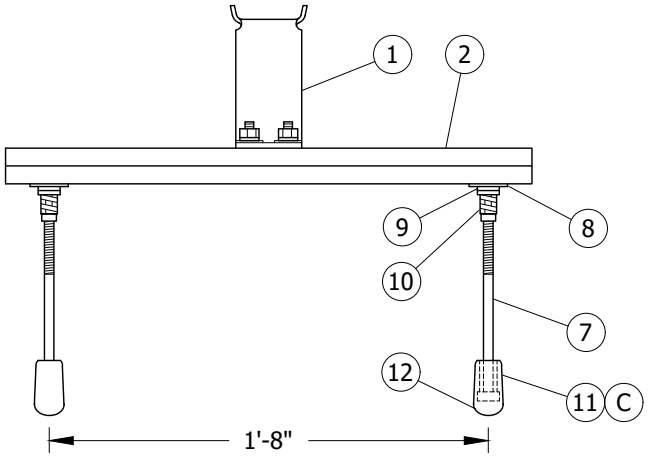

FIGURE 1
TOP VIEW

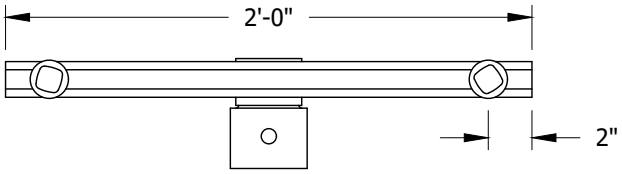

FIGURE 1
FRONT VIEW

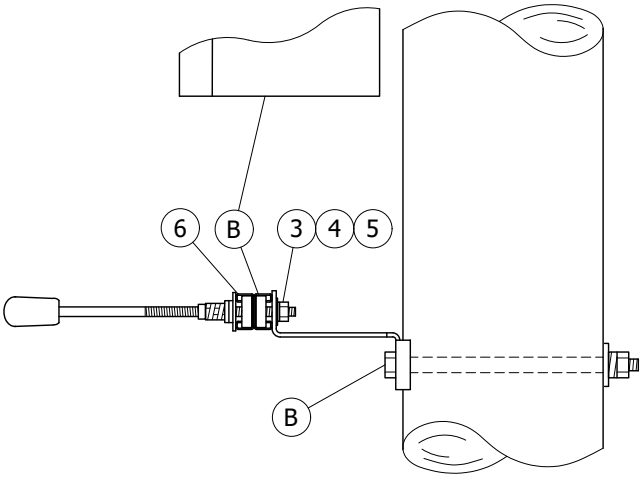

FIGURE 1
SIDE VIEW

ATTENTION:

* THIS LADDER SUPPORT BRACKET SHOULD BE ORDERED AS A COMPLETE ASSEMBLY. THE STOCK NUMBER FOR THIS ASSEMBLY IS S166884 AND INCLUDES ALL OF THE ITEMS LISTED BELOW.

DU ID: LSBRKT

INSTALLATION:

A. THIS LADDER SUPPORT BRACKET IS TO BE INSTALLED ON ALL NEW SCADA, SERVICE RESTORER, WIRELESS COMMUNICATIONS OR CAPACITOR LOCATIONS, OR ANY FACILITY LOCATION WHICH REQUIRES ACCESS TO AN EQUIPMENT CABINET WITH THE USE OF A LADDER.

(B) BOLT THE LADDER SUPPORT BRACKET TO THE POLE USING A 5/8" GALVANIZED THRU-BOLT AND ASSOCIATED HARDWARE SO THAT THE SUPPORT CHANNEL IS CENTERED 18" VERTICALLY BELOW THE BOTTOM EDGE OF THE CABINET.

(C) BEFORE SLIDING THE 1/2" SCHEDULE 80 PVC CONDUIT TO BUTT UP AGAINST THE HEAD OF THE BOLT, APPLY SEVERAL WRAPS OF THE 2" WIDE BLACK #88 TAPE TO THE BOLT SHANK TO ACT AS A SHIM.

TABLE OF CONTENTS

© 1998 - 2020 San Diego Gas & Electric Company. All rights reserved. Removal of this copyright notice without permission is not permitted under law.

REV	CHANGE	BY	DSGN	APPV	DATE	REV	CHANGE	BY	DSGN	APPV	DATE
C	TABLE CHANGE	JIK	JES	CZH	05/11/2020	F					
B	DRAWING UPDATE	PEI	-	-	03/18/2019	E					
A	ORIGINAL ISSUE	-	-	PTA/JJ	06/15/2007	D					

X Indicates Latest Revision | Completely Revised | New Page | Information Removed

SDG&E ELECTRIC OVERHEAD CONSTRUCTION STANDARDS

SHEET 1 OF 2

EXTENSION LADDER SUPPORT BRACKET

OH378.1

BILL OF MATERIALS:

ITEM	DESCRIPTION	QUANTITY	STANDARD PAGE	STOCK NUMBER	DESIGN UNITS
1	BRACKET, CONDUIT STANDOFF	1	-	S167186 (X)	-
2	CHANNEL, 1-5/8" X 1-5/8" X 24", BACK-TO-BACK	1	-	S216702 (X)	-
3	NUT, STUD, 1/2" X 1-3/8"	2	-	S507000	-
4	NUT, HEX S/S, 1/2"	2	-	S550536	-
5	WASHER, 1/2", SPRING, S/S	2	-	S796944	-
6	NUT, 1/2", CLAMPING	2	-	S503520	-
7	BOLT, MACHINE, 1/2" X 7", GALVANIZED	2	-	S153120	-
8	WASHER, 5/8", FLAT, ROUND	2	-	S800320	-
9	WASHER, 1/2", FLAT, ROUND	2	-	S799680	-
10	WASHER, 1/2", DOUBLE COIL SPRING	4	-	S798464	-
11	CONDUIT, 1/2" X 2", PVC, SCHEDULE 80	2	-	S251472	-
12	SEAL, CABLE END, COLD SHRINK	2	-	S627240 (X)	-

NOTES:

(X) THIS ITEM IS EXEMPT.

REFERENCE: NONE

TABLE OF CONTENTS

© 1998 - 2020 San Diego Gas & Electric Company. All rights reserved. Removal of this copyright notice without permission is not permitted under law.

REV	CHANGE	BY	DSGN	APPV	DATE	REV	CHANGE	BY	DSGN	APPV	DATE
C	TABLE CHANGE	JIK	JES	CZH	05/11/2020	F					
B	DRAWING UPDATE	PEI	-	-	03/18/2019	E					
A	ORIGINAL ISSUE	-	-	PTA/JJ	06/15/2007	D					

SCOPE: THIS STANDARD SHOWS ALL FIBERGLASS CROSSARMS AND GIVES THEIR ALLOWABLE LOADING VALUES FOR USE ON **STEEL** POLES.

ATTENTION:

* REFER TO PAGE 379.19 FOR ADDITIONAL INFORMATION.

** NOT TO BE USED TO SUPPORT BARE PRIMARY OR SECONDARY LINE WIRE ON STEEL POLES.

4-FT TANGENT FIBERGLASS CROSSARM - STEEL POLE

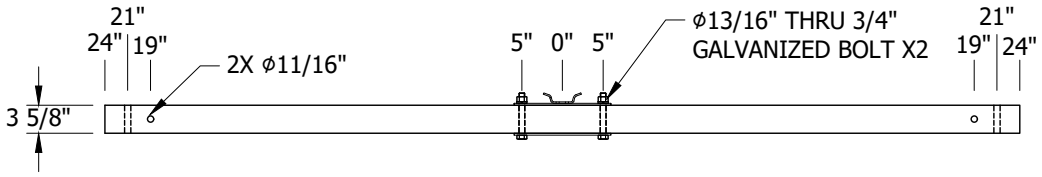

FIGURE 1
TOP VIEW

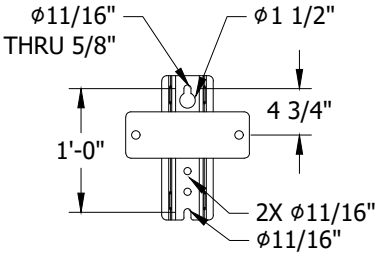

DETAIL 1
MOUNTING BRACKET
FRONT VIEW

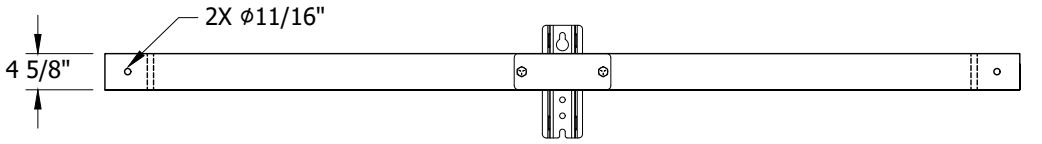

FIGURE 1
FRONT VIEW

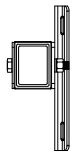

DETAIL 1
MOUNTING BRACKET
SIDE VIEW

TABLE 1A

STOCK NUMBER	DESIGN UNITS	ASSEMBLED WEIGHT (LBS)	THRU BOLT DIAMETER (IN)
S294330	2TF	27	5/8

TABLE 1B

ITEM	MAXIMUM ALLOWABLE LOAD/MOMENT AT POLE			DISTANCE FROM CENTER			ALLOWABLE VERTICAL LOAD PER POSITION (LBS)	ALLOWABLE HORIZONTAL LOAD PER POSITION (LBS)		ALLOWABLE TRANSVERSE LOAD PER POSITION (LBS)	
	VERTICAL LOAD/MOMENT (LBS/FT-LBS)	HORIZONTAL LOAD/MOMENT (LBS/FT-LBS)	TRANSVERSE LOAD (LBS)	19"		19"		1" OR 1 3/8" STRAIGHT PIN	ANGLE PIN	1" OR 1 3/8" STRAIGHT PIN	ANGLE PIN
	ALLOWABLE LOAD (I)										
1	--	--	--		CENTER	X	1,250	100	100	800	800
2	--	--	--	X		X	3,000	770	770	800	800

© 1998 - 2022 San Diego Gas & Electric Company. All rights reserved. Removal of this copyright notice without permission is not permitted under law.

REV	CHANGE	DR	BY	DSN	APV	DATE	REV	CHANGE	DR	BY	DSN	APV	DATE
C	COMPLETELY REVISED	-	LY	JS	CZH	03/18/2019	F	INSTALLATION UPDATE	EDM	MRF	GLW	KRG	10/21/2022
B	EDITORIAL CHANGES	-	JS	JS	MDJ	06/07/2017	E	DRAWING UPDATE	EDM	JES	JES	CZH	08/31/2021
A	COMPLETELY REVISED	-	JBH	JBH	MDJ	08/11/2016	D	TABLE UPDATE	EDM	RSL	JES	CZH	04/01/2020

TABLE OF CONTENTS

ATTENTION:

* REFER TO PAGE 379.19 FOR ADDITIONAL INFORMATION.

** NOT TO BE USED TO SUPPORT BARE PRIMARY OR SECONDARY LINE WIRE ON STEEL POLES.

4-FT DEADEND FIBERGLASS CROSSARM - STEEL POLE

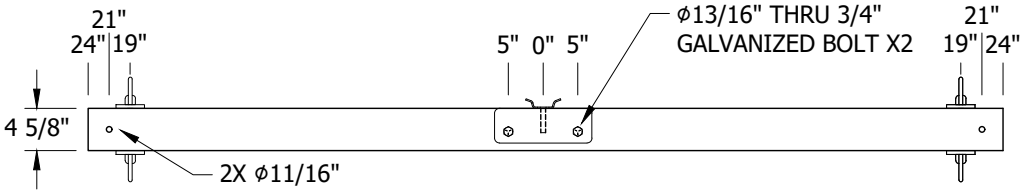

FIGURE 2
TOP VIEW

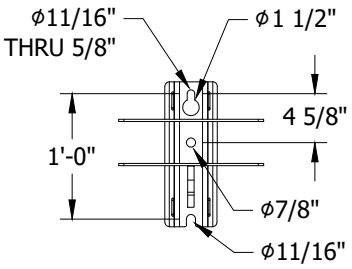

DETAIL 2
MOUNTING BRACKET
FRONT VIEW

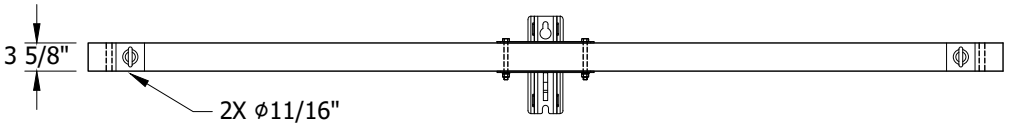

FIGURE 2
FRONT VIEW

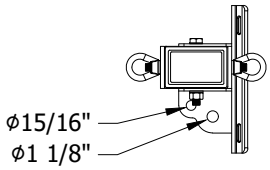

DETAIL 2
MOUNTING BRACKET
SIDE VIEW

TABLE 2A

STOCK NUMBER	DESIGN UNITS	ASSEMBLED WEIGHT (LBS)	THRU BOLT DIAMETER (IN)
S294332	2DF	40	5/8

TABLE 2B

ITEM	MAXIMUM ALLOWABLE LOAD/MOMENT AT POLE			DISTANCE FROM CENTER			ALLOWABLE VERTICAL LOAD PER POSITION (LBS)	ALLOWABLE HORIZONTAL LOAD PER POSITION (LBS)	ALLOWABLE TRANSVERSE LOAD PER POSITION (LBS)
	VERTICAL LOAD/MOMENT (LBS/FT-LBS)	HORIZONTAL LOAD/MOMENT (LBS/FT-LBS)	TRANSVERSE LOAD (LBS)	19"		19"			
1	--	--	--		CENTER	X	125	100	1,517
2	--	--	--	X		X	2,000	5,125	1,517

ALLOWABLE LOAD (I)

TABLE OF CONTENTS

© 1998 - 2022 San Diego Gas & Electric Company. All rights reserved. Removal of this copyright notice without permission is not permitted under law.

REV	CHANGE	DR	BY	DSN	APV	DATE	REV	CHANGE	DR	BY	DSN	APV	DATE
C	COMPLETELY REVISED	-	LY	JS	CZH	03/18/2019	F	INSTALLATION UPDATE	EDM	MRF	GLW	KRG	10/21/2022
B	EDITORIAL CHANGES	-	JS	JS	MDJ	06/07/2017	E	DRAWING UPDATE	EDM	JES	JES	CZH	08/31/2021
A	COMPLETELY REVISED	-	JBH	JBH	MDJ	08/11/2016	D	TABLE UPDATE	EDM	RSL	JES	CZH	04/01/2020

ATTENTION:

* REFER TO PAGE 379.19 FOR ADDITIONAL INFORMATION.

6-FT TANGENT FIBERGLASS CROSSARM - STEEL POLE

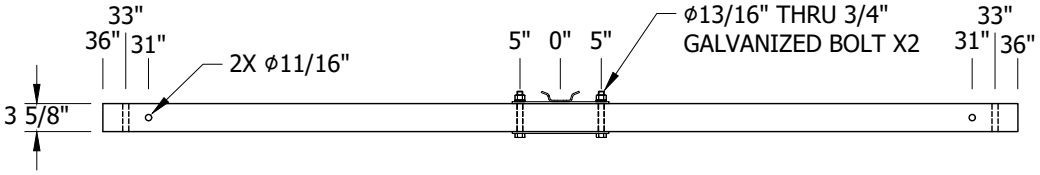

FIGURE 3
TOP VIEW

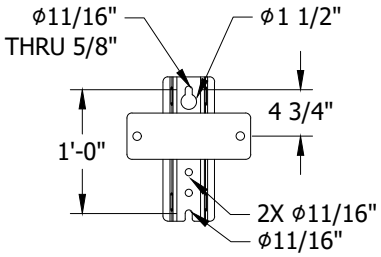

DETAIL 3
MOUNTING BRACKET
FRONT VIEW

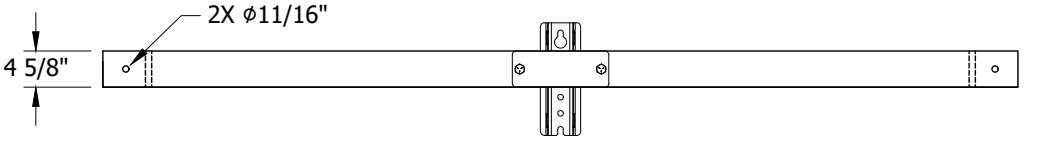

FIGURE 3
FRONT VIEW

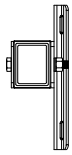

DETAIL 3
MOUNTING BRACKET
SIDE VIEW

TABLE 3A

STOCK NUMBER	DESIGN UNITS	ASSEMBLED WEIGHT (LBS)	THRU BOLT DIAMETER (IN)
S294354	6FT	35	5/8

TABLE 3B

ALLOWABLE LOAD (I)								
ITEM	DISTANCE FROM CENTER (X = WIRE POSITION ON ARM)			ALLOWABLE VERTICAL LOAD PER POSITION (LBS)	ALLOWABLE HORIZONTAL LOAD PER POSITION (LBS)		ALLOWABLE TRANSVERSE LOAD PER POSITION (LBS)	
	31"		31"		1" OR 1 3/8" STRAIGHT PIN	ANGLE PIN	1" OR 1 3/8" STRAIGHT PIN	ANGLE PIN
1		CENTER	X	875	100	100	800	800
2	X		X	2,500	770	770	800	800

© 1998 - 2022 San Diego Gas & Electric Company. All rights reserved. Removal of this copyright notice without permission is not permitted under law.

REV	CHANGE	DR	BY	DSN	APV	DATE	REV	CHANGE	DR	BY	DSN	APV	DATE
C	COMPLETELY REVISED	-	LY	JS	CZH	03/18/2019	F	INSTALLATION UPDATE	EDM	MRF	GLW	KRG	10/21/2022
B	EDITORIAL CHANGES	-	JS	JS	MDJ	06/07/2017	E	DRAWING UPDATE	EDM	JES	JES	CZH	08/31/2021
A	COMPLETELY REVISED	-	JBH	JBH	MDJ	08/11/2016	D	TABLE UPDATE	EDM	RSL	JES	CZH	04/01/2020

TABLE OF CONTENTS

ATTENTION:

* REFER TO PAGE 379.19 FOR ADDITIONAL INFORMATION.

6-FT DEADEND FIBERGLASS CROSSARM - STEEL POLE

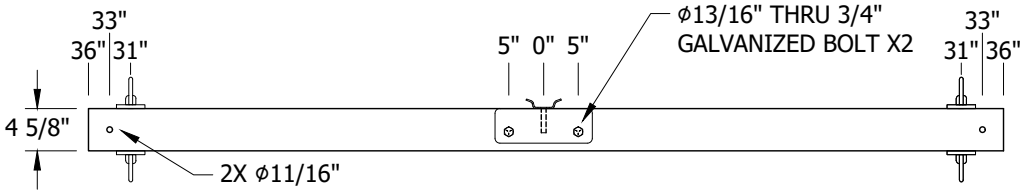

FIGURE 4
TOP VIEW

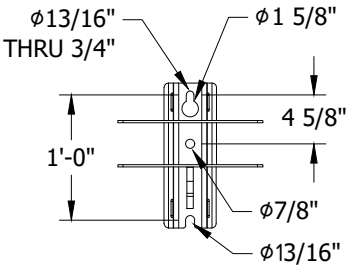

DETAIL 4
MOUNTING BRACKET
FRONT VIEW

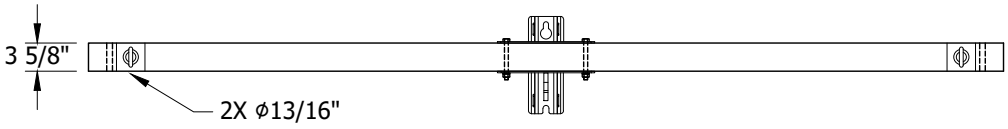

FIGURE 4
FRONT VIEW

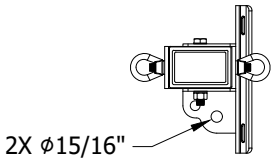

DETAIL 4
MOUNTING BRACKET
SIDE VIEW

TABLE 4A

STOCK NUMBER	DESIGN UNITS	ASSEMBLED WEIGHT (LBS)	THRU BOLT DIAMETER (IN)
S294334	6FD	57	3/4

TABLE 4B

ALLOWABLE LOAD (I)									
ITEM	MAXIMUM ALLOWABLE LOAD/MOMENT AT POLE			DISTANCE FROM CENTER			ALLOWABLE VERTICAL LOAD PER POSITION (LBS)	ALLOWABLE HORIZONTAL LOAD PER POSITION (LBS)	ALLOWABLE TRANSVERSE LOAD PER POSITION (LBS)
	VERTICAL LOAD/MOMENT (LBS/FT-LBS)	HORIZONTAL LOAD/MOMENT (LBS/FT-LBS)	TRANSVERSE LOAD (LBS)	31"		31"			
1	--	--	--		CENTER	X	125	100	1,575
2	--	--	--	X		X	2,625	3,236	1,575

© 1998 - 2022 San Diego Gas & Electric Company. All rights reserved. Removal of this copyright notice without permission is not permitted under law.

REV	CHANGE	DR	BY	DSN	APV	DATE	REV	CHANGE	DR	BY	DSN	APV	DATE
C	COMPLETELY REVISED	-	LY	JS	CZH	03/18/2019	F	INSTALLATION UPDATE	EDM	MRF	GLW	KRG	10/21/2022
B	EDITORIAL CHANGES	-	JS	JS	MDJ	06/07/2017	E	DRAWING UPDATE	EDM	JES	JES	CZH	08/31/2021
A	COMPLETELY REVISED	-	JBH	JBH	MDJ	08/11/2016	D	TABLE UPDATE	EDM	RSL	JES	CZH	04/01/2020

TABLE OF CONTENTS

ATTENTION:

* REFER TO PAGE 379.19 FOR ADDITIONAL INFORMATION.

** LIMIT OF TWO CONDUCTORS PER ARM WHEN USED ON 12KV SYSTEM.

8-FT TANGENT FIBERGLASS CROSSARM - STEEL POLE

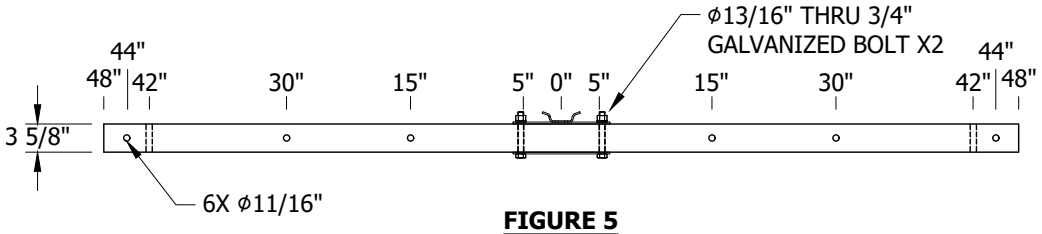

FIGURE 5
TOP VIEW

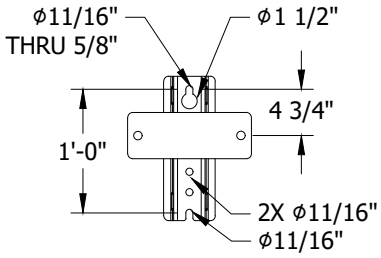

DETAIL 5
MOUNTING BRACKET
FRONT VIEW

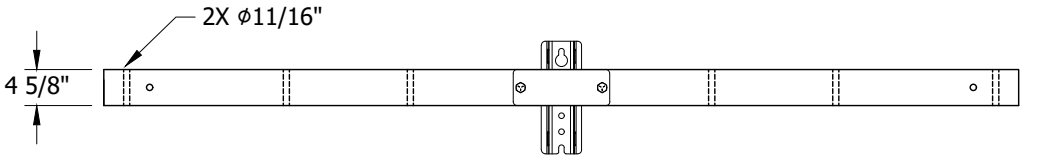

FIGURE 5
FRONT VIEW

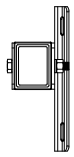

DETAIL 5
MOUNTING BRACKET
SIDE VIEW

TABLE 5A

STOCK NUMBER	DESIGN UNITS	ASSEMBLED WEIGHT (LBS)	THRU BOLT DIAMETER (IN)
S294356	8FT	41	5/8

TABLE 5B

ALLOWABLE LOAD (I)											
ITEM	DISTANCE FROM CENTER (X = WIRE POSITION ON ARM)							ALLOWABLE VERTICAL LOAD PER POSITION (LBS)	ALLOWABLE HORIZONTAL LOAD PER POSITION (LBS)		ALLOWABLE TRANSVERSE LOAD PER POSITION (LBS)	
	44"	30"	15"		15"	30"	44"		1" OR 1 3/8" STRAIGHT PIN	ANGLE PIN	1" OR 1 3/8" STRAIGHT PIN	ANGLE PIN
1			X	CENTER	X			3,000	770	770	1,150	1,150
2		X				X		3,000	770	770	1,150	1,150
3	X						X	2,000	770	770	1,150	1,150
4	X				X		X	1,590	623	623	1,150	1,150
5	X					X	X	1,225	550	550	1,150	1,150
6	X		X		X		X	1,590	623	623	1,150	1,150
7	X	X				X	X	1,225	550	550	1,150	1,150
8	X	X	X		X	X	X	1,000	550	550	1,150	1,150

© 1998 - 2022 San Diego Gas & Electric Company. All rights reserved. Removal of this copyright notice without permission is not permitted under law.

REV	CHANGE	DR	BY	DSN	APV	DATE	REV	CHANGE	DR	BY	DSN	APV	DATE
C	COMPLETELY REVISED	-	LY	JS	CZH	03/18/2019	F	INSTALLATION UPDATE	EDM	MRF	GLW	KRG	10/21/2022
B	EDITORIAL CHANGES	-	JS	JS	MDJ	06/07/2017	E	DRAWING UPDATE	EDM	JES	JES	CZH	08/31/2021
A	COMPLETELY REVISED	-	JBH	JBH	MDJ	08/11/2016	D	TABLE UPDATE	EDM	RSL	JES	CZH	04/01/2020

TABLE OF CONTENTS

ATTENTION:

* REFER TO PAGE 379.19 FOR ADDITIONAL INFORMATION.

8-FT DEADEND FIBERGLASS CROSSARM - STEEL POLE

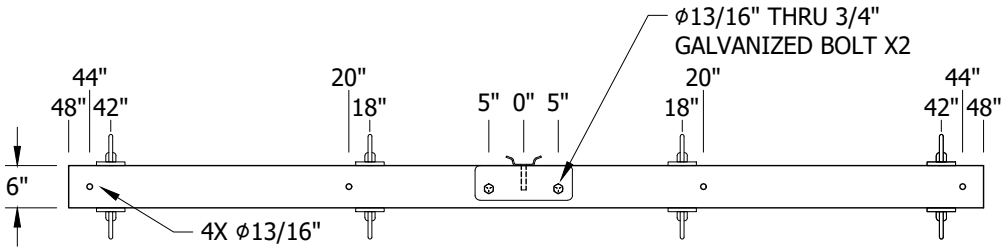

FIGURE 6
TOP VIEW

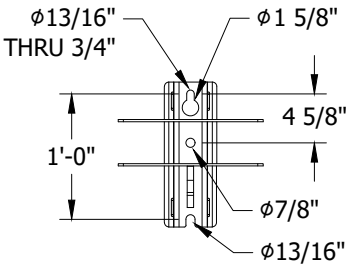

DETAIL 6
MOUNTING BRACKET
FRONT VIEW

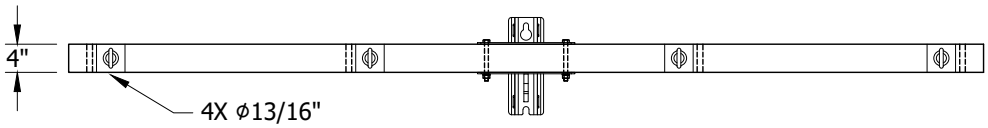

FIGURE 6
FRONT VIEW

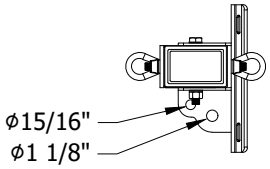

DETAIL 6
MOUNTING BRACKET
SIDE VIEW

TABLE 6A

STOCK NUMBER	DESIGN UNITS	ASSEMBLED WEIGHT (LBS)	THRU BOLT DIAMETER (IN)
S294336	8FD	99	3/4

TABLE 6B

ITEM	DISTANCE FROM CENTER (X = WIRE POSITION ON ARM)					ALLOWABLE VERTICAL LOAD PER POSITION (LBS)	ALLOWABLE HORIZONTAL LOAD PER POSITION (LBS)	ALLOWABLE TRANSVERSE LOAD PER POSITION (LBS)
	42"	18"		18"	42"			
	ALLOWABLE LOAD (I)							
1		X	CENTER	X		2,643	7,117	2,643
2	X				X	2,250	4,375	2,500
3		X		X	X	856	431	2,500
4	X			X	X	1,475	1,005	2,500
5	X	X		X	X	1,475	3,290	2,330

© 1998 - 2022 San Diego Gas & Electric Company. All rights reserved. Removal of this copyright notice without permission is not permitted under law.

REV	CHANGE	DR	BY	DSN	APV	DATE	REV	CHANGE	DR	BY	DSN	APV	DATE
C	COMPLETELY REVISED	-	LY	JS	CZH	03/18/2019	F	INSTALLATION UPDATE	EDM	MRF	GLW	KRG	10/21/2022
B	EDITORIAL CHANGES	-	JS	JS	MDJ	06/07/2017	E	DRAWING UPDATE	EDM	JES	JES	CZH	08/31/2021
A	COMPLETELY REVISED	-	JBH	JBH	MDJ	08/11/2016	D	TABLE UPDATE	EDM	RSL	JES	CZH	04/01/2020

ATTENTION:

* REFER TO PAGE 379.19 FOR ADDITIONAL INFORMATION.

10-FT TANGENT FIBERGLASS CROSSARM - STEEL POLE

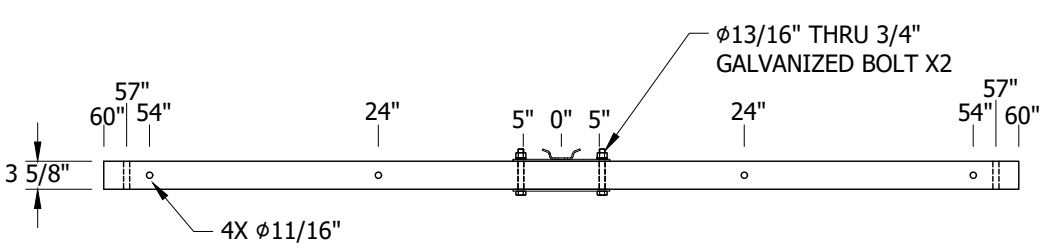

FIGURE 7
TOP VIEW

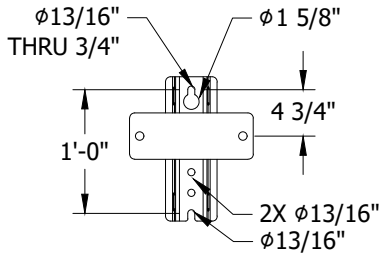

DETAIL 7
MOUNTING BRACKET
FRONT VIEW

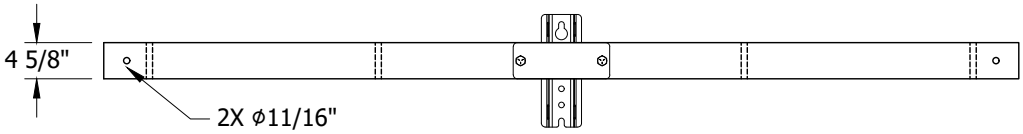

FIGURE 7
FRONT VIEW

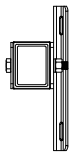

DETAIL 7
MOUNTING BRACKET
SIDE VIEW

TABLE 7A

STOCK NUMBER	DESIGN UNITS	ASSEMBLED WEIGHT (LBS)	THRU BOLT DIAMETER (IN)
S294378	4TF	48	3/4

TABLE 7B

ALLOWABLE LOAD (I)										
ITEM	DISTANCE FROM CENTER (X = WIRE POSITION ON ARM)					ALLOWABLE VERTICAL LOAD PER POSITION (LBS)	ALLOWABLE HORIZONTAL LOAD PER POSITION (LBS)		ALLOWABLE TRANSVERSE LOAD PER POSITION (LBS)	
	54"	24"		24"	54"		1" OR 1 3/8" STRAIGHT PIN	ANGLE PIN	1" OR 1 3/8" STRAIGHT PIN	ANGLE PIN
1		X	CENTER	X		3,000	1,821	1,420	1,250	1,250
2	X				X	1,771	770	770	1,250	1,250
3		X		X	X	890	560	560	1,250	1,250
4	X			X	X	1,423	560	560	1,250	1,250
5	X	X		X	X	1,423	560	560	1,250	1,250

TABLE OF CONTENTS

© 1998 - 2022 San Diego Gas & Electric Company. All rights reserved. Removal of this copyright notice without permission is not permitted under law.

REV	CHANGE	DR	BY	DSN	APV	DATE	REV	CHANGE	DR	BY	DSN	APV	DATE
C	COMPLETELY REVISED	-	LY	JS	CZH	03/18/2019	F	INSTALLATION UPDATE	EDM	MRF	GLW	KRG	10/21/2022
B	EDITORIAL CHANGES	-	JS	JS	MDJ	06/07/2017	E	DRAWING UPDATE	EDM	JES	JES	CZH	08/31/2021
A	COMPLETELY REVISED	-	JBH	JBH	MDJ	08/11/2016	D	TABLE UPDATE	EDM	RSL	JES	CZH	04/01/2020

ATTENTION:

* REFER TO PAGE 379.19 FOR ADDITIONAL INFORMATION.

10-FT DEADEND FIBERGLASS CROSSARM - STEEL POLE

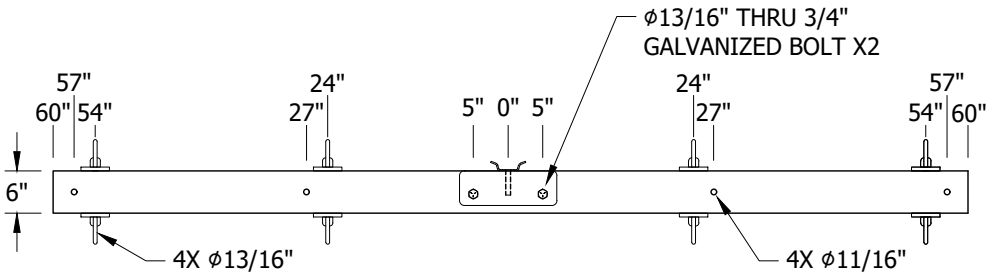

FIGURE 8
TOP VIEW

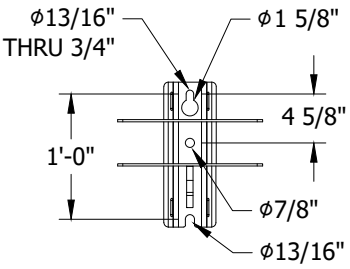

DETAIL 8
MOUNTING BRACKET
FRONT VIEW

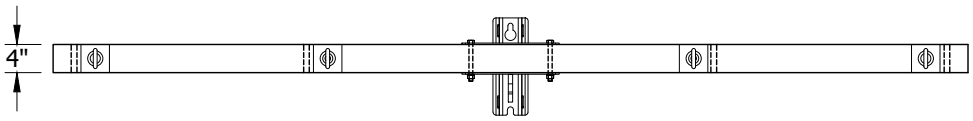

FIGURE 8
FRONT VIEW

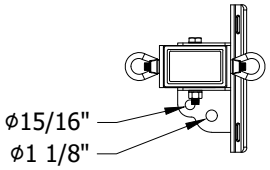

DETAIL 8
MOUNTING BRACKET
SIDE VIEW

TABLE 8A

STOCK NUMBER	DESIGN UNITS	ASSEMBLED WEIGHT (LBS)	THRU BOLT DIAMETER (IN)
S294380	4DF	112	3/4

TABLE 8B

ALLOWABLE LOAD (I)								
ITEM	DISTANCE FROM CENTER (X = WIRE POSITION ON ARM)					ALLOWABLE VERTICAL LOAD PER POSITION (LBS)	ALLOWABLE HORIZONTAL LOAD PER POSITION (LBS)	ALLOWABLE TRANSVERSE LOAD PER POSITION (LBS)
	54"	24"		24"	54"			
1		X	CENTER	X		2,433	7,000	2,500
2	X				X	1,650	3,660	2,500
3		X		X	X	647	335	2,500
4	X			X	X	1,160	754	2,500
5	X	X		X	X	1,140	2,530	2,330

© 1998 - 2022 San Diego Gas & Electric Company. All rights reserved. Removal of this copyright notice without permission is not permitted under law.

REV	CHANGE	DR	BY	DSN	APV	DATE	REV	CHANGE	DR	BY	DSN	APV	DATE
C	COMPLETELY REVISED	-	LY	JS	CZH	03/18/2019	F	INSTALLATION UPDATE	EDM	MRF	GLW	KRG	10/21/2022
B	EDITORIAL CHANGES	-	JS	JS	MDJ	06/07/2017	E	DRAWING UPDATE	EDM	JES	JES	CZH	08/31/2021
A	COMPLETELY REVISED	-	JBH	JBH	MDJ	08/11/2016	D	TABLE UPDATE	EDM	RSL	JES	CZH	04/01/2020

TABLE OF CONTENTS

ATTENTION:

* REFER TO PAGE 379.19 FOR ADDITIONAL INFORMATION.

10-FT STACKED DEADEND FIBERGLASS CROSSARM - STEEL POLE

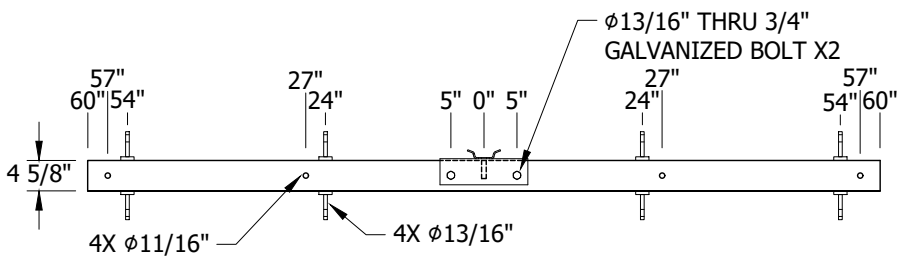

FIGURE 9
TOP VIEW (D)

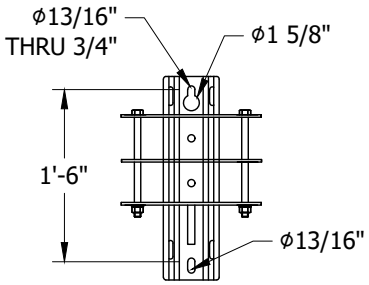

DETAIL 9
MOUNTING BRACKET
FRONT VIEW

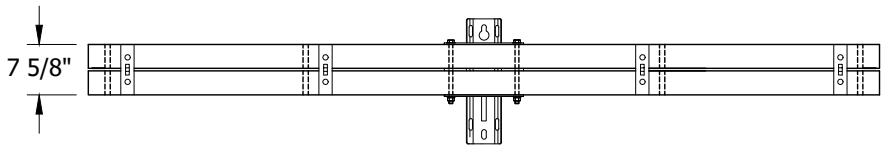

FIGURE 9 (D)
FRONT VIEW

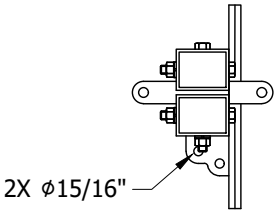

DETAIL 9
MOUNTING BRACKET
SIDE VIEW

TABLE 9A

STOCK NUMBER	DESIGN UNITS	ASSEMBLED WEIGHT (LBS)	THRU BOLT DIAMETER (IN)
S294382	10SDF	152	3/4

TABLE 9B

ALLOWABLE LOAD (I)								
ITEM	DISTANCE FROM CENTER (X = WIRE POSITION ON ARM)					ALLOWABLE VERTICAL LOAD PER POSITION (LBS)	ALLOWABLE HORIZONTAL LOAD PER POSITION (LBS)	ALLOWABLE TRANSVERSE LOAD PER POSITION (LBS)
	54"	24"		24"	54"			
1		X	CENTER	X		5,000	9,000	2,500
2	X				X	3,500	7,950	2,500
3		X		X	X	1,313	451	2,500
4	X			X	X	2,400	1,015	2,500
5	X	X		X	X	2,400	5,500	2,500

© 1998 - 2022 San Diego Gas & Electric Company. All rights reserved. Removal of this copyright notice without permission is not permitted under law.

REV	CHANGE	DR	BY	DSN	APV	DATE	REV	CHANGE	DR	BY	DSN	APV	DATE
C	COMPLETELY REVISED	-	LY	JS	CZH	03/18/2019	F	INSTALLATION UPDATE	EDM	MRF	GLW	KRG	10/21/2022
B	EDITORIAL CHANGES	-	JS	JS	MDJ	06/07/2017	E	DRAWING UPDATE	EDM	JES	JES	CZH	08/31/2021
A	COMPLETELY REVISED	-	JBH	JBH	MDJ	08/11/2016	D	TABLE UPDATE	EDM	RSL	JES	CZH	04/01/2020

ATTENTION:

* REFER TO PAGE 379.19 FOR ADDITIONAL INFORMATION.

10-FT FIBERGLASS ALLEY ARM - STEEL POLE

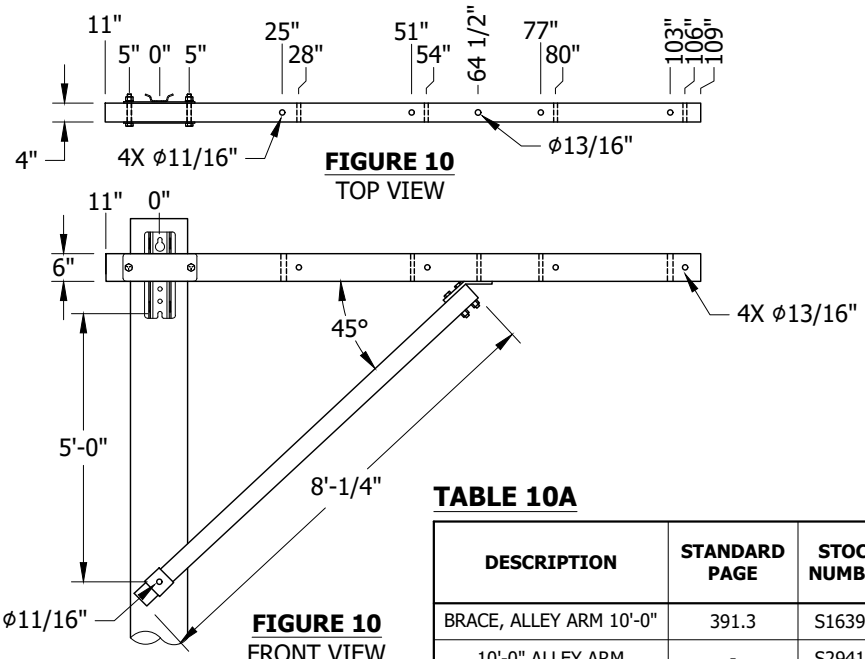

FIGURE 10
TOP VIEW

FIGURE 10
FRONT VIEW

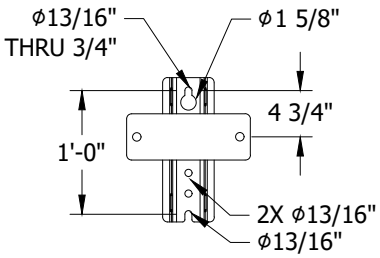

DETAIL 10
MOUNTING BRACKET

TABLE 10A

DESCRIPTION	STANDARD PAGE	STOCK NUMBER	DESIGN UNITS	WEIGHT (LBS)	ASSEMBLED WEIGHT (LBS)	THRU BOLT DIAMETER (IN)
BRACE, ALLEY ARM 10'-0"	391.3	S163946	10FGAB	21	-	-
10'-0" ALLEY ARM	-	S294102	10AA	112	107	3/4

TABLE 10B

ALLOWABLE LOAD (I)									
ITEM	TYPE	DISTANCE FROM CENTER OF BRACKET (X = WIRE POSITION ON ARM)				ALLOWABLE VERTICAL LOAD PER POSITION (LBS)	ALLOWABLE HORIZONTAL LOAD PER POSITION (LBS)		ALLOWABLE TRANSVERSE LOAD PER POSITION (LBS)	
		25"	51"	77"	103"		STRAIGHT PIN (1" & 1 3/8" COBB)	ANGLE PIN	STRAIGHT PIN (1" & 1 3/8" COBB)	ANGLE PIN
1	10FT TAN ALLEY	X	X			2,127	130	130	1,670	1,670
2		X		X		1,585	98	98	1,670	1,670
3		X			X	1,263	79	79	1,670	1,670
4			X	X		1,263	80	80	1,670	1,670
5			X		X	1,050	67	67	1,670	1,670
6				X	X	898	57	57	1,670	1,670
7		X	X	X		1,057	66	66	1,667	1,667
8		X	X		X	903	57	57	1,667	1,667
9		X		X	X	789	50	50	1,667	1,667
10			X	X	X	700	58	58	1,667	1,667
11		X	X	X	X	632	40	40	1,250	1,250
		28"	54"	80"	106"					
1	10FT DE ALLEY	X	X			2,114	126		2,114	
2		X		X		1,601	95		2,114	
3		X			X	1,273	77		2,114	
4			X	X		1,263	77		2,114	
5			X		X	1,050	64		2,114	
6				X	X	898	55		2,114	
7		X	X	X		1,064	64		2,114	
8		X	X		X	908	55		2,114	
9		X		X	X	792	48		2,114	
10			X	X	X	700	43		2,114	
11		X	X	X	X	634	38		1,837	

© 1998 - 2022 San Diego Gas & Electric Company. All rights reserved. Removal of this copyright notice without permission is not permitted under law.

REV	CHANGE	DR	BY	DSN	APV	DATE	REV	CHANGE	DR	BY	DSN	APV	DATE
C	COMPLETELY REVISED	-	LY	JS	CZH	03/18/2019	F	INSTALLATION UPDATE	EDM	MRF	GLW	KRG	10/21/2022
B	EDITORIAL CHANGES	-	JS	JS	MDJ	06/07/2017	E	DRAWING UPDATE	EDM	JES	JES	CZH	08/31/2021
A	COMPLETELY REVISED	-	JBH	JBH	MDJ	08/11/2016	D	TABLE UPDATE	EDM	RSL	JES	CZH	04/01/2020

TABLE OF CONTENTS

ATTENTION:

* REFER TO PAGE 379.19 FOR ADDITIONAL INFORMATION.

12-FT TANGENT FIBERGLASS CROSSARM - STEEL POLE

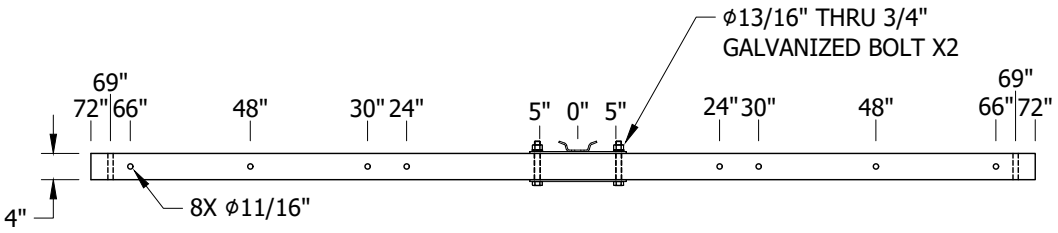

FIGURE 11
TOP VIEW

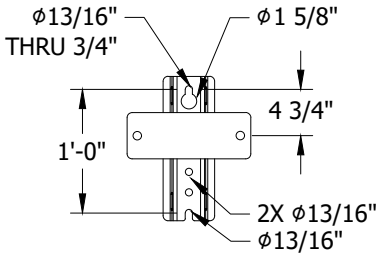

DETAIL 11
MOUNTING BRACKET
FRONT VIEW

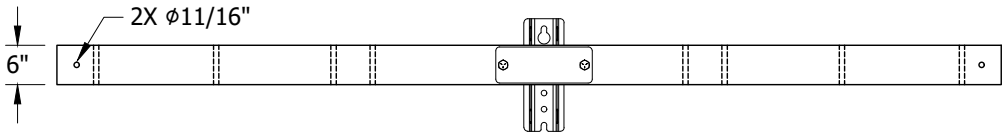

FIGURE 11
FRONT VIEW

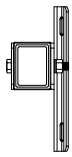

DETAIL 11
MOUNTING BRACKET
SIDE VIEW

TABLE 11A

STOCK NUMBER	DESIGN UNITS	ASSEMBLED WEIGHT (LBS)	THRU BOLT DIAMETER (IN)
S294374	6TF	95	3/4

TABLE 11B

ITEM	DISTANCE FROM CENTER (X = WIRE POSITION ON ARM)									ALLOWABLE VERTICAL LOAD PER POSITION (LBS)	ALLOWABLE HORIZONTAL LOAD PER POSITION (LBS)		ALLOWABLE TRANSVERSE LOAD PER POSITION (LBS)	
	66"	48"	30"	24"	CENTER	24"	30"	48"	66"	ALLOWABLE LOAD (I)	STRAIGHT PIN (1" & 1 3/8" COBB)	ANGLE PIN	STRAIGHT PIN (1" & 1 3/8" COBB)	ANGLE PIN
1				X		X				4,850	1,775	1,775	1,670	1,670
2			X				X			4,850	1,775	1,775	1,670	1,670
3		X						X		3,700	1,775	1,775	1,670	1,670
4	X								X	2,500	1,435	1,435	1,670	1,670
5	X			X					X	1,736	1,287	1,287	1,670	1,670
6	X		X						X	1,467	1,198	1,198	1,670	1,670
7	X	X							X	983	737	737	1,670	1,670
8	X			X		X			X	1,975	1,287	1,287	1,670	1,670
9	X		X				X		X	1,850	1,198	1,198	1,670	1,670
10	X	X						X	X	1,560	990	990	1,670	1,670
11	X	X		X		X		X	X	1,285	837	837	1,224	1,224
12	X	X	X				X	X	X	1,238	798	798	1,224	1,224

© 1998 - 2022 San Diego Gas & Electric Company. All rights reserved. Removal of this copyright notice without permission is not permitted under law.

REV	CHANGE	DR	BY	DSN	APV	DATE	REV	CHANGE	DR	BY	DSN	APV	DATE
C	COMPLETELY REVISED	-	LY	JS	CZH	03/18/2019	F	INSTALLATION UPDATE	EDM	MRF	GLW	KRG	10/21/2022
B	EDITORIAL CHANGES	-	JS	JS	MDJ	06/07/2017	E	DRAWING UPDATE	EDM	JES	JES	CZH	08/31/2021
A	COMPLETELY REVISED	-	JBH	JBH	MDJ	08/11/2016	D	TABLE UPDATE	EDM	RSL	JES	CZH	04/01/2020

TABLE OF CONTENTS

ATTENTION:

* REFER TO PAGE 379.19 FOR ADDITIONAL INFORMATION.

12-FT DEADEND FIBERGLASS CROSSARM - STEEL POLE

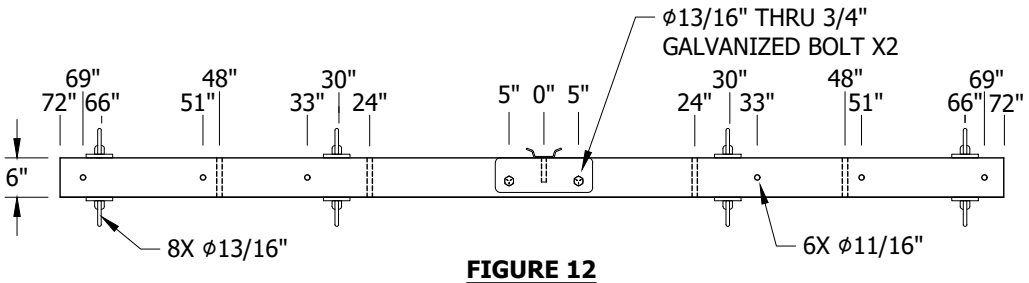

FIGURE 12
TOP VIEW

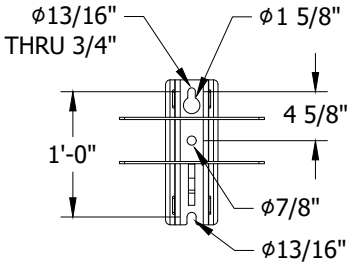

DETAIL 12
MOUNTING BRACKET
FRONT VIEW

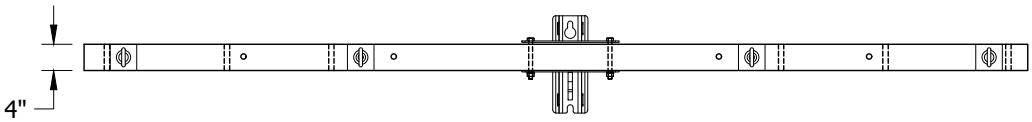

FIGURE 12
FRONT VIEW

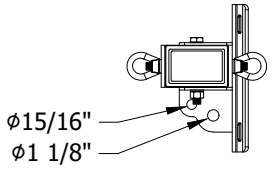

DETAIL 12
MOUNTING BRACKET
SIDE VIEW

TABLE 12A

STOCK NUMBER	DESIGN UNITS	ASSEMBLED WEIGHT (LBS)	THRU BOLT DIAMETER (IN)
S294372	6DF	126	3/4

TABLE 12B

ITEM	DISTANCE FROM CENTER (X = WIRE POSITION ON ARM)									ALLOWABLE VERTICAL LOAD PER POSITION (LBS)	ALLOWABLE HORIZONTAL LOAD PER POSITION (LBS)	ALLOWABLE TRANSVERSE LOAD PER POSITION (LBS)
	66"	48"	30"	24"	CENTER	24"	30"	48"	66"	ALLOWABLE LOAD (I)		
1				X		X				2,433	7,116	2,500
2			X				X			1,935	7,116	2,500
3		X						X		1,935	4,375	2,500
4	X								X	1,360	2,500	2,500
5	X			X					X	1,040	754	2,500
6	X		X						X	965	603	2,500
7	X	X							X	737	377	2,500
8	X			X		X			X	1,040	2,500	2,500
9	X		X				X		X	965	2,188	2,500
10	X	X						X	X	815	1,591	2,500
11	X	X		X		X		X	X	685	1,591	1,730
12	X	X	X				X	X	X	640	1,458	1,730

© 1998 - 2022 San Diego Gas & Electric Company. All rights reserved. Removal of this copyright notice without permission is not permitted under law.

REV	CHANGE	DR	BY	DSN	APV	DATE	REV	CHANGE	DR	BY	DSN	APV	DATE
C	COMPLETELY REVISED	-	LY	JS	CZH	03/18/2019	F	INSTALLATION UPDATE	EDM	MRF	GLW	KRG	10/21/2022
B	EDITORIAL CHANGES	-	JS	JS	MDJ	06/07/2017	E	DRAWING UPDATE	EDM	JES	JES	CZH	08/31/2021
A	COMPLETELY REVISED	-	JBH	JBH	MDJ	08/11/2016	D	TABLE UPDATE	EDM	RSL	JES	CZH	04/01/2020

TABLE OF CONTENTS

ATTENTION:

* REFER TO PAGE 379.19 FOR ADDITIONAL INFORMATION.

12-FT STACKED DEADEND FIBERGLASS CROSSARM - STEEL POLE

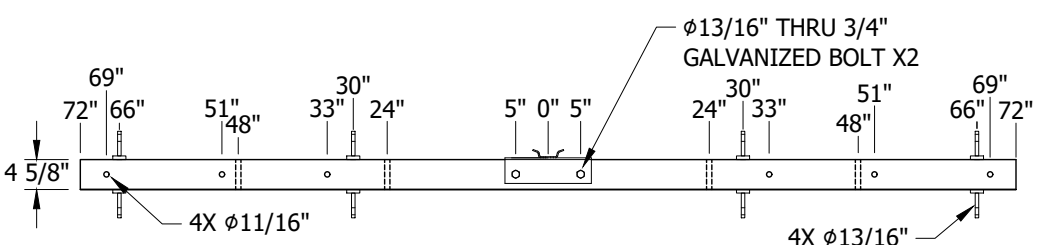

FIGURE 13 (D)
TOP VIEW

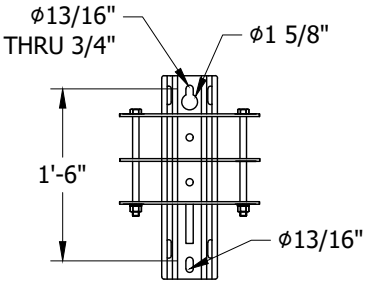

DETAIL 13
MOUNTING BRACKET
FRONT VIEW

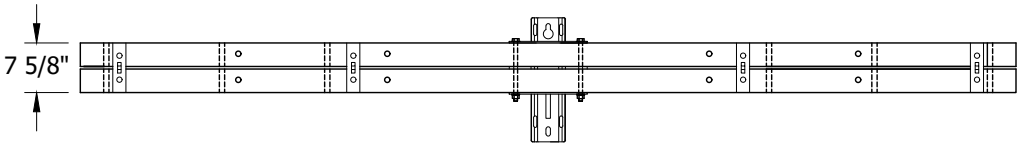

FIGURE 13 (D)
FRONT VIEW

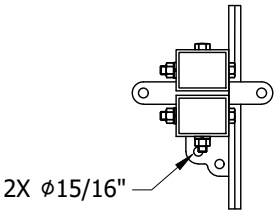

DETAIL 13
MOUNTING BRACKET
SIDE VIEW

TABLE 13A

STOCK NUMBER	DESIGN UNITS	ASSEMBLED WEIGHT (LBS)	THRU BOLT DIAMETER (IN)
S294386	12SDF	170	3/4

TABLE 13B

ITEM	DISTANCE FROM CENTER (X = WIRE POSITION ON ARM)									ALLOWABLE VERTICAL LOAD PER POSITION (LBS)	ALLOWABLE HORIZONTAL LOAD PER POSITION (LBS)	ALLOWABLE TRANSVERSE LOAD PER POSITION (LBS)
	66"	48"	30"	24"	CENTER	24"	30"	48"	66"	ALLOWABLE LOAD (I)		
1				X		X				5,000	9,000	2,500
2			X				X			4,717	9,000	2,500
3		X						X		2,948	9,000	2,500
4	X								X	2,150	5,428	2,500
5	X			X					X	1,572	1,015	2,500
6	X		X						X	1,474	812	2,500
7	X	X							X	1,241	507	2,500
8	X			X		X			X	1,572	4,642	2,500
9	X		X				X		X	1,474	4,321	2,500
10	X	X						X	X	1,239	3,408	2,500
11	X	X		X		X		X	X	1,025	3,081	1,990
12	X	X	X				X	X	X	983	2,936	1,990

© 1998 - 2022 San Diego Gas & Electric Company. All rights reserved. Removal of this copyright notice without permission is not permitted under law.

REV	CHANGE	DR	BY	DSN	APV	DATE	REV	CHANGE	DR	BY	DSN	APV	DATE
C	COMPLETELY REVISED	-	LY	JS	CZH	03/18/2019	F	INSTALLATION UPDATE	EDM	MRF	GLW	KRG	10/21/2022
B	EDITORIAL CHANGES	-	JS	JS	MDJ	06/07/2017	E	DRAWING UPDATE	EDM	JES	JES	CZH	08/31/2021
A	COMPLETELY REVISED	-	JBH	JBH	MDJ	08/11/2016	D	TABLE UPDATE	EDM	RSL	JES	CZH	04/01/2020

TABLE OF CONTENTS

ATTENTION:

* REFER TO PAGE 379.19 FOR ADDITIONAL INFORMATION.

12-FT FIBERGLASS ALLEY ARM - STEEL POLE

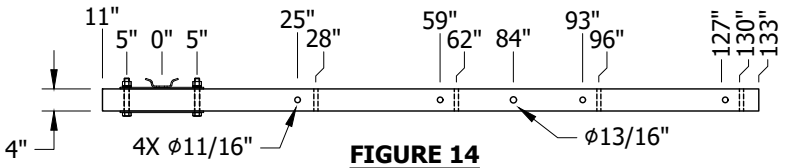

FIGURE 14
TOP VIEW

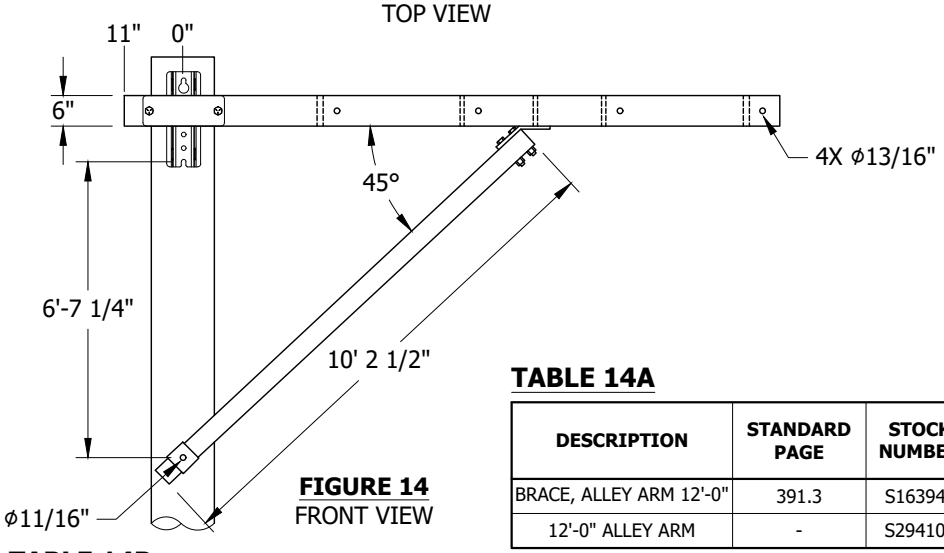

FIGURE 14
FRONT VIEW

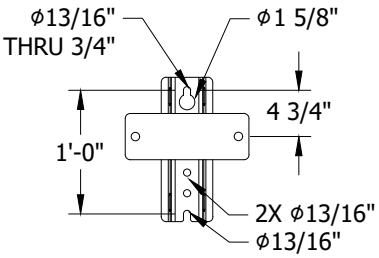

DETAIL 14
MOUNTING BRACKET

TABLE 14A

DESCRIPTION	STANDARD PAGE	STOCK NUMBER	DESIGN UNITS	WEIGHT (LBS)	ASSEMBLED WEIGHT (LBS)	THRU BOLT DIAMETER (IN)
BRACE, ALLEY ARM 12'-0"	391.3	S163948	12FGAB	25	-	-
12'-0" ALLEY ARM	-	S294104	12AA	126	123	3/4

TABLE 14B

ALLOWABLE LOAD (I)									
ITEM	TYPE	DISTANCE FROM CENTER OF BRACKET (X = WIRE POSITION ON ARM)				ALLOWABLE VERTICAL LOAD PER POSITION (LBS)	ALLOWABLE HORIZONTAL LOAD PER POSITION (LBS)		ALLOWABLE TRANSVERSE LOAD PER POSITION (LBS)	
		25"	59"	93"	127"		STRAIGHT PIN (1" & 1 3/8" COBB)	ANGLE PIN	STRAIGHT PIN (1" & 1 3/8" COBB)	ANGLE PIN
1	12FT TAN ALLEY	X	X			2,248	123	123	1,670	1,670
2		X		X		1,802	87	87	1,670	1,670
3		X			X	1,399	68	68	1,670	1,670
4			X	X		1,399	68	68	1,670	1,670
5			X		X	1,143	55	55	1,670	1,670
6				X	X	967	47	47	1,670	1,670
7		X	X	X		1,202	58	58	1,667	1,667
8		X	X		X	1,008	49	49	1,667	1,667
9		X		X	X	868	42	42	1,667	1,667
10			X	X	X	762	37	37	1,667	1,667
11		X	X	X	X	700	34	34	1,250	1,250
		28"	62"	96"	130"					
1	12FT DE ALLEY	X	X			1,925	114		2,114	
2		X		X		1,370	83		2,114	
3		X			X	1,064	65		2,114	
4			X	X		1,064	65		2,114	
5			X		X	869	54		2,114	
6				X	X	735	46		2,114	
7		X	X	X		913	55		2,114	
8		X	X		X	766	47		2,114	
9		X		X	X	660	41		2,114	
10			X	X	X	579	36		2,114	
11		X	X	X	X	532	33		1,837	

© 1998 - 2022 San Diego Gas & Electric Company. All rights reserved. Removal of this copyright notice without permission is not permitted under law.

REV	CHANGE	DR	BY	DSN	APV	DATE	REV	CHANGE	DR	BY	DSN	APV	DATE
C	COMPLETELY REVISED	-	LY	JS	CZH	03/18/2019	F	INSTALLATION UPDATE	EDM	MRF	GLW	KRG	10/21/2022
B	EDITORIAL CHANGES	-	JS	JS	MDJ	06/07/2017	E	DRAWING UPDATE	EDM	JES	JES	CZH	08/31/2021
A	COMPLETELY REVISED	-	JBH	JBH	MDJ	08/11/2016	D	TABLE UPDATE	EDM	RSL	JES	CZH	04/01/2020

ATTENTION:

* REFER TO PAGE 379.19 FOR ADDITIONAL INFORMATION.

15-FT TANGENT FIBERGLASS CROSSARM - STEEL POLE

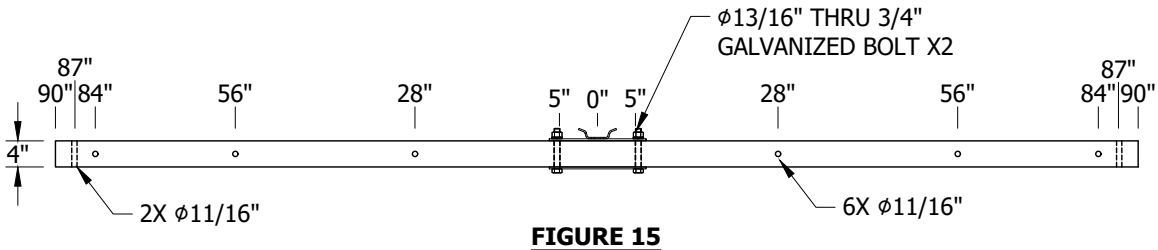

FIGURE 15
TOP VIEW

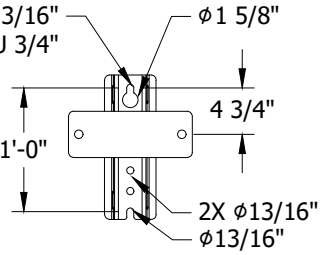

DETAIL 15
MOUNTING BRACKET
FRONT VIEW

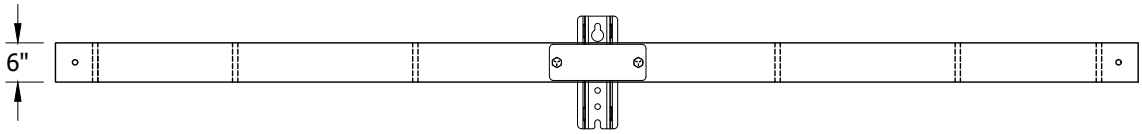

FIGURE 15
FRONT VIEW

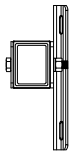

DETAIL 15
MOUNTING BRACKET
SIDE VIEW

TABLE 15A

STOCK NUMBER	DESIGN UNITS	ASSEMBLED WEIGHT (LBS)	THRU BOLT DIAMETER (IN)
S294370	6LTF	111	3/4

TABLE 15B

ITEM	ALLOWABLE LOAD (I)										
	DISTANCE FROM CENTER (X = WIRE POSITION ON ARM)							ALLOWABLE VERTICAL LOAD PER POSITION (LBS)	ALLOWABLE HORIZONTAL LOAD PER POSITION (LBS)		ALLOWABLE TRANSVERSE LOAD PER POSITION (LBS)	
	84"	56"	28"	CENTER	28"	56"	84"		1" OR 1 3/8" STRAIGHT PIN	ANGLE PIN	1" OR 1 3/8" STRAIGHT PIN	ANGLE PIN
1			X		X			4,850	1,775	1,775	1,670	1,670
2		X				X		3,750	1,685	1,685	1,670	1,670
3	X						X	1,785	1,300	1,300	1,670	1,670
4	X				X		X	1,375	1,010	1,010	1,670	1,670
5	X					X	X	765	621	621	1,670	1,670
6	X		X		X		X	1,590	1,010	1,010	1,670	1,670
7	X	X				X	X	1,250	792	792	1,670	1,670
8	X	X	X		X	X	X	1,060	673	673	1,224	1,224

© 1998 - 2022 San Diego Gas & Electric Company. All rights reserved. Removal of this copyright notice without permission is not permitted under law.

REV	CHANGE	DR	BY	DSN	APV	DATE	REV	CHANGE	DR	BY	DSN	APV	DATE
C	COMPLETELY REVISED	-	LY	JS	CZH	03/18/2019	F	INSTALLATION UPDATE	EDM	MRF	GLW	KRG	10/21/2022
B	EDITORIAL CHANGES	-	JS	JS	MDJ	06/07/2017	E	DRAWING UPDATE	EDM	JES	JES	CZH	08/31/2021
A	COMPLETELY REVISED	-	JBH	JBH	MDJ	08/11/2016	D	TABLE UPDATE	EDM	RSL	JES	CZH	04/01/2020

TABLE OF CONTENTS

ATTENTION:

* REFER TO PAGE 379.19 FOR ADDITIONAL INFORMATION.

15-FT DEADEND FIBERGLASS CROSSARM - STEEL POLE

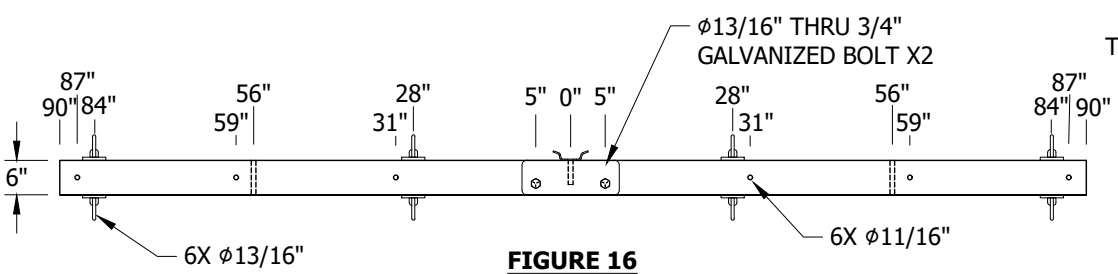

FIGURE 16
TOP VIEW

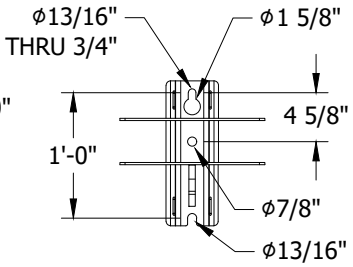

DETAIL 16
MOUNTING BRACKET
FRONT VIEW

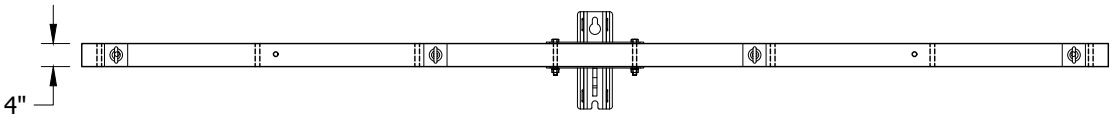

FIGURE 16
FRONT VIEW

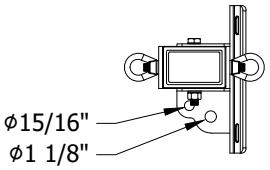

DETAIL 16
MOUNTING BRACKET
SIDE VIEW

TABLE 16A

STOCK NUMBER	DESIGN UNITS	ASSEMBLED WEIGHT (LBS)	THRU BOLT DIAMETER (IN)
S294376	6LDF	133	3/4

TABLE 16B

ITEM	ALLOWABLE LOAD (I) DISTANCE FROM CENTER (X = WIRE POSITION ON ARM)							ALLOWABLE VERTICAL LOAD PER POSITION (LBS)	ALLOWABLE HORIZONTAL LOAD PER POSITION (LBS)	ALLOWABLE TRANSVERSE LOAD PER POSITION (LBS)
	84"	56"	28"		28"	56"	84"			
1			X	CENTER	X			2,643	7,116	2,500
2		X				X		1,365	3,750	2,500
3	X						X	1,050	1,875	2,500
4	X				X		X	833	646	2,500
5	X					X	X	621	323	2,500
6	X		X		X		X	833	1,875	2,500
7	X	X				X	X	650	1,250	2,500
8	X	X	X		X	X	X	555	1,250	1,715

© 1998 - 2022 San Diego Gas & Electric Company. All rights reserved. Removal of this copyright notice without permission is not permitted under law.

REV	CHANGE	DR	BY	DSN	APV	DATE	REV	CHANGE	DR	BY	DSN	APV	DATE
C	COMPLETELY REVISED	-	LY	JS	CZH	03/18/2019	F	INSTALLATION UPDATE	EDM	MRF	GLW	KRG	10/21/2022
B	EDITORIAL CHANGES	-	JS	JS	MDJ	06/07/2017	E	DRAWING UPDATE	EDM	JES	JES	CZH	08/31/2021
A	COMPLETELY REVISED	-	JBH	JBH	MDJ	08/11/2016	D	TABLE UPDATE	EDM	RSL	JES	CZH	04/01/2020

ATTENTION:

* REFER TO PAGE 379.19 FOR ADDITIONAL INFORMATION.

15-FT STACKED DEADEND FIBERGLASS CROSSARM - STEEL POLE

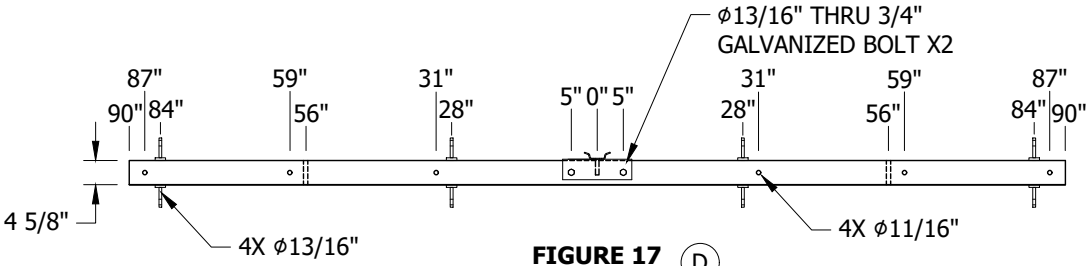

FIGURE 17 (D)
TOP VIEW

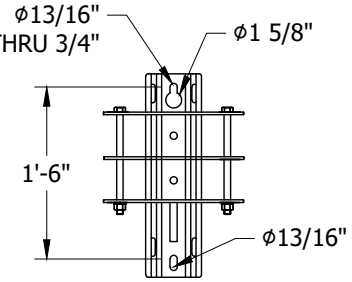

DETAIL 17
MOUNTING BRACKET
FRONT VIEW

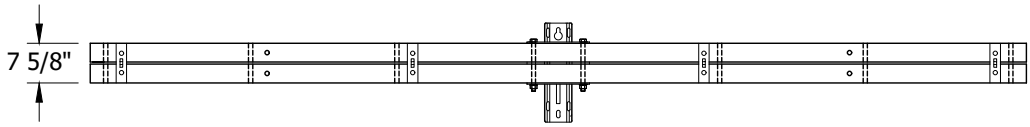

FIGURE 17 (D)
FRONT VIEW

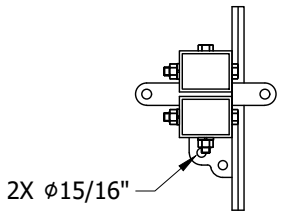

DETAIL 17
MOUNTING BRACKET
SIDE VIEW

TABLE OF CONTENTS

TABLE 17A

STOCK NUMBER	DESIGN UNITS	ASSEMBLED WEIGHT (LBS)	THRU BOLT DIAMETER (IN)
S294394	15SDF	195	3/4

TABLE 17B

ITEM	DISTANCE FROM CENTER (X = WIRE POSITION ON ARM)							ALLOWABLE VERTICAL LOAD PER POSITION (LBS)	ALLOWABLE HORIZONTAL LOAD PER POSITION (LBS)	ALLOWABLE TRANSVERSE LOAD PER POSITION (LBS)
	84"	56"	28"		28"	56"	84"			
	ALLOWABLE LOAD (I)									
1			X	CENTER	X			5,000	9,000	2,500
2		X				X		2,607	6,606	2,500
3	X						X	1,738	3,378	2,500
4	X				X		X	1,304	870	2,500
5	X					X	X	1,043	435	2,500
6	X		X		X		X	1,304	2,951	2,500
7	X	X				X	X	1,043	2,235	2,500
8	X	X	X		X	X	X	869	2,040	2,500

© 1998 - 2022 San Diego Gas & Electric Company. All rights reserved. Removal of this copyright notice without permission is not permitted under law.

REV	CHANGE	DR	BY	DSN	APV	DATE	REV	CHANGE	DR	BY	DSN	APV	DATE
C	COMPLETELY REVISED	-	LY	JS	CZH	03/18/2019	F	INSTALLATION UPDATE	EDM	MRF	GLW	KRG	10/21/2022
B	EDITORIAL CHANGES	-	JS	JS	MDJ	06/07/2017	E	DRAWING UPDATE	EDM	JES	JES	CZH	08/31/2021
A	COMPLETELY REVISED	-	JBH	JBH	MDJ	08/11/2016	D	TABLE UPDATE	EDM	RSL	JES	CZH	04/01/2020

ATTENTION:

* REFER TO PAGE 379.19 FOR ADDITIONAL INFORMATION.

15-FT FIBERGLASS ALLEY ARM W/ 2 BRACES - STEEL POLE

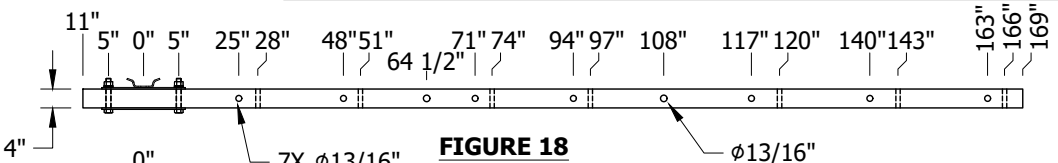

FIGURE 18
TOP VIEW

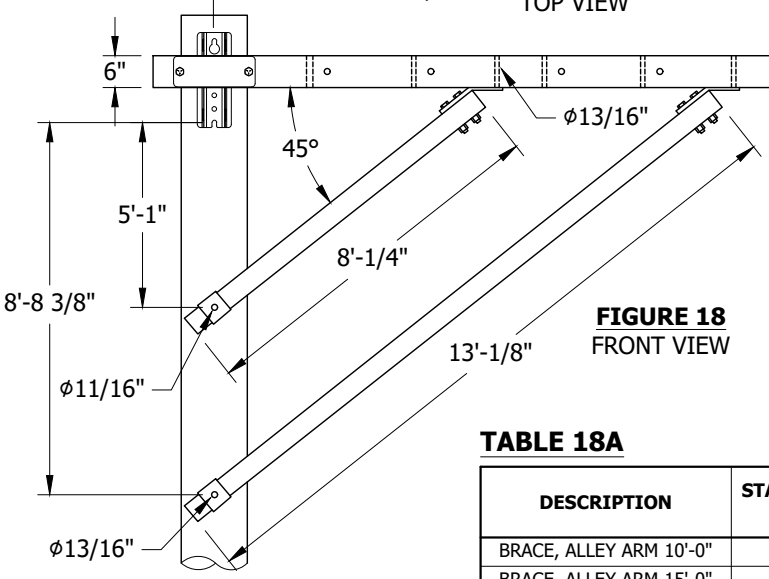

FIGURE 18
FRONT VIEW

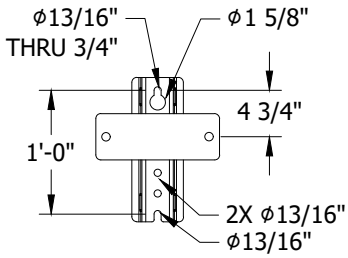

DETAIL 18
MOUNTING BRACKET

TABLE 18A

DESCRIPTION	STANDARD PAGE	STOCK NUMBER	DESIGN UNITS	WEIGHT (LBS)	ASSEMBLED WEIGHT (LBS)	THRU BOLT DIAMETER (IN)
BRACE, ALLEY ARM 10'-0"	391.3	S163946	10FGAB	21	-	-
BRACE, ALLEY ARM 15'-0"	391.3	S163950	15FGAB	31	-	-
15'-0" ALLEY ARM	-	S294106	15AA	133	171	3/4

TABLE 18B

ITEM	TYPE	ALLOWABLE LOAD (I) DISTANCE FROM CENTER OF BRACKET (X = WIRE POSITION ON ARM)							ALLOWABLE VERTICAL LOAD PER POSITION (LBS)	ALLOWABLE HORIZONTAL LOAD PER POSITION (LBS)		ALLOWABLE TRANSVERSE LOAD PER POSITION (LBS)	
										STRAIGHT PIN (1" & 1 3/8" COBB)	ANGLE PIN	STRAIGHT PIN (1" & 1 3/8" COBB)	ANGLE PIN
		25"	48"	71"	94"	117"	140"	163"					
1	15FT TAN ALLEY	X		X			X		1,582	44	44	1,667	1,667
2		X			X			X	1,230	37	37	1,667	1,667
3			X		X	X			1,442	40	40	1,667	1,667
4			X		X		X		1,324	37	37	1,667	1,667
5			X		X			X	1,224	34	34	1,667	1,667
6		X		X		X		X	975	27	27	1,250	1,250
7		X	X	X	X	X	X		754	21	21	833	833
8			X	X	X	X	X	X	590	16	16	833	833
9		X	X	X	X	X	X	X	560	16	16	714	714
		28"	51"	74"	97"	120"	143"	166"					
1	15FT DE ALLEY	X		X			X		1,524	42		2,114	
2		X			X			X	1,150	35		2,114	
3			X		X	X			1,393	38		2,114	
4			X		X		X		1,283	35		2,114	
5			X		X			X	1,150	33		2,114	
6		X		X		X		X	925	27		1,837	
7		X	X	X	X	X	X		728	20		1,224	
8			X	X	X	X	X	X	550	16		1,224	
9		X	X	X	X	X	X	X	550	15		1,049	

© 1998 - 2022 San Diego Gas & Electric Company. All rights reserved. Removal of this copyright notice without permission is not permitted under law.

REV	CHANGE	DR	BY	DSN	APV	DATE	REV	CHANGE	DR	BY	DSN	APV	DATE
C	COMPLETELY REVISED	-	LY	JS	CZH	03/18/2019	F	INSTALLATION UPDATE	EDM	MRF	GLW	KRG	10/21/2022
B	EDITORIAL CHANGES	-	JS	JS	MDJ	06/07/2017	E	DRAWING UPDATE	EDM	JES	JES	CZH	08/31/2021
A	COMPLETELY REVISED	-	JBH	JBH	MDJ	08/11/2016	D	TABLE UPDATE	EDM	RSL	JES	CZH	04/01/2020

TABLE OF CONTENTS

INSTALLATION:

A. WHEN ATTACHING HARDWARE TO CROSSARM, USE SPRING LOCK WASHER AND TORQUE NO MORE THAN WHAT IS NEEDED TO CLOSE THE GAP OF THE LOCK WASHER (APPROXIMATELY 25 FT-LBS, MAXIMUM). OVER TORQUING HARDWARE MAY DAMAGE CROSSARM.

B. FIELD DRILLING IS ALLOWED IN ACCORDANCE WITH MANUFACTURER'S SPECIFICATIONS. CHECK CROSSARM UTILIZATION AGAINST CAPACITY VALUES LISTED ASSUMING CONDUCTORS ARE LOCATED ON AN OUTER PRE-DRILLED PIN LOCATION.

C. A 4-INCH X 4-INCH STEEL SQUARE FLAT WASHER (S800070) IS REQUIRED ON TOP AND BOTTOM SURFACES OF CROSSARM FOR ALL PIN-TYPE INSULATOR INSTALLATIONS.

(D) FOR 10-FOOT, 12-FOOT AND 15-FOOT STACKED CROSSARMS, INSTALLATION OF UNUSED T-PLATE HARDWARE IN THE VACANT POSITION IS PREFERRED.

BILL OF MATERIALS: NONE

NOTES:

(I) ALL ALLOWABLE LOADING INCLUDES A SAFETY FACTOR = 2.0.

II. ALLOWABLE VERTICAL LOADS ACCOUNT FOR 300 LBS ON ONE OUTERMOST POST.

III. ALLOWABLE HORIZONTAL LOAD PER POSITION WITH BACKSPANS OR GUYS WITH EQUIVALENT HORIZONTAL LOADS PROVIDED AT ASYMMETRICALLY LOADED POSITION. ALLOWABLE LOADS REFERENCED TO 1-INCH AND 1 3/8-INCH STEEL PINS AND ANGLE PINS ARE BASED ON PIN BEARING CAPACITY ON ARM AND NOT TRANSVERSE OR HORIZONTAL LOAD ON PIN. (C)

IV. ENSURE THE FOLLOWING CALCULATION IS NOT VIOLATED WHEN COMPARING APPLIED LOADS TO ALLOWABLE PER PHASE.

$$\frac{\text{(APPLIED VERTICAL LOAD)}}{\text{(ALLOWABLE VERTICAL LOAD)}} + \frac{\text{(APPLIED TRANSVERSE LOAD)}}{\text{(ALLOWABLE TRANSVERSE LOAD)}} + \frac{\text{(APPLIED HORIZONTAL LOAD)}}{\text{(ALLOWABLE HORIZONTAL LOAD)}} \leq 1$$

V. ABOVE LOADS VALID FOR CONNECTION TO STEEL POLES ONLY.

VI. THE USE OF DOUBLE ARMS IS ALLOWABLE WHEN NECESSARY. FOR DOUBLE ARMS, LOADING IS TWICE THE VALUE LISTED IN THE "ALLOWABLE LOAD" TABLES.

VII. ALLEY ARM HORIZONTAL LOADS EXCEEDING PUBLISHED VALUES SHALL BE COUNTERED BY BACKSPANS OR GUY WIRES WITH EQUIVALENT HORIZONTAL CAPACITIES AT EACH PIN POSITION. UTILIZATION TO BE CHECKED AGAINST NOTE IV.

REFERENCE:

a. FOR CONDUCTOR SPACING, SEE OH819.

b. FOR BONDING, SEE OH1003.

(c) FOR INSULATOR PIN STRENGTHS (HORIZONTAL AND TRANSVERSE LOADS ARE LIMITED TO PIN CAPACITY FOR ALL TANGENT STRUCTURES), SEE OH396.

d. FOR LINE ANGLE, SEE OH433.

e. FOR AVIAN FRAMING, SEE OH1650-OH1655.

f. FOR GUYING DEADENDS AND ARM GUYS, SEE OH927.

TABLE OF CONTENTS

© 1998 - 2022 San Diego Gas & Electric Company. All rights reserved. Removal of this copyright notice without permission is not permitted under law.

REV	CHANGE	DR	BY	DSN	APV	DATE	REV	CHANGE	DR	BY	DSN	APV	DATE
C	COMPLETELY REVISED	-	LY	JS	CZH	03/18/2019	F	INSTALLATION UPDATE	EDM	MRF	GLW	KRG	10/21/2022
B	EDITORIAL CHANGES	-	JS	JS	MDJ	06/07/2017	E	DRAWING UPDATE	EDM	JES	JES	CZH	08/31/2021
A	COMPLETELY REVISED	-	JBH	JBH	MDJ	08/11/2016	D	TABLE UPDATE	EDM	RSL	JES	CZH	04/01/2020

SCOPE: THIS STANDARD SHOWS ALL FIBERGLASS CROSSARMS AND GIVES THEIR ALLOWABLE LOADING VALUES FOR USE ON **WOOD** POLES.

ATTENTION:

* REFER TO PAGE 379.38 FOR ADDITIONAL INFORMATION.

4-FT TANGENT FIBERGLASS CROSSARM - WOOD POLE

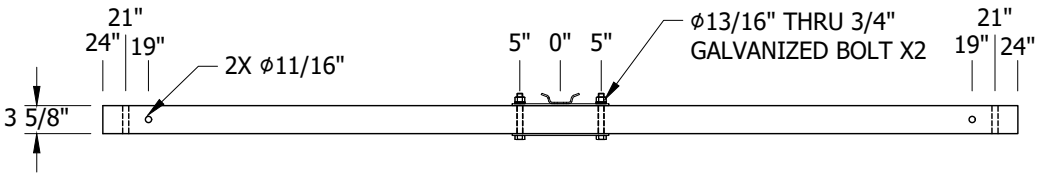

FIGURE 1
TOP VIEW

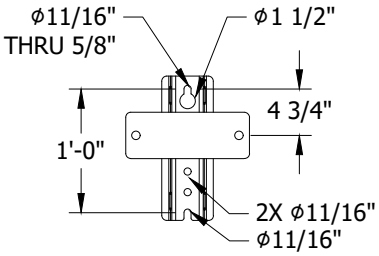

DETAIL 1
MOUNTING BRACKET
FRONT VIEW

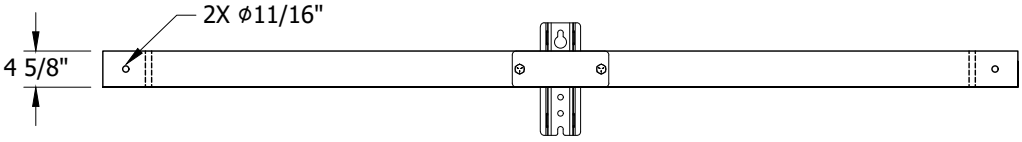

FIGURE 1
FRONT VIEW

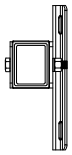

DETAIL 1
MOUNTING BRACKET
SIDE VIEW

TABLE 1A

STOCK NUMBER	DESIGN UNITS	ASSEMBLED WEIGHT (LBS)	THRU BOLT DIAMETER (IN)
S294330	2TF	27	5/8

TABLE 1B

ITEM	ALLOWABLE LOAD (I)										
	MAXIMUM ALLOWABLE LOAD/MOMENT AT POLE			DISTANCE FROM CENTER			ALLOWABLE VERTICAL LOAD PER POSITION (LBS)	ALLOWABLE HORIZONTAL LOAD PER POSITION (LBS)		ALLOWABLE TRANSVERSE LOAD PER POSITION (LBS)	
	VERTICAL LOAD/MOMENT (LBS/FT-LBS)	HORIZONTAL LOAD/MOMENT (LBS/FT-LBS)	TRANSVERSE LOAD (LBS)	19"		19"		1" OR 1 3/8" STRAIGHT PIN	ANGLE PIN	1" OR 1 3/8" STRAIGHT PIN	ANGLE PIN
1	--	--	--		CENTER	X	1,250	100	100	800	800
2	--	--	--	X		X	3,000	770	770	800	800

TABLE OF CONTENTS

© 1998 - 2022 San Diego Gas & Electric Company. All rights reserved. Removal of this copyright notice without permission is not permitted under law.

REV	CHANGE	DR	BY	DSN	APV	DATE	REV	CHANGE	DR	BY	DSN	APV	DATE
C	COMPLETELY REVISED	-	LY	JS	CZH	03/18/2019	F	INSTALLATION UPDATE	EDM	MRF	GLW	KRG	10/21/2022
B	EDITORIAL CHANGES	-	JS	JS	MDJ	06/07/2017	E	DRAWING UPDATE	EDM	JES	JES	CZH	08/31/2021
A	COMPLETELY REVISED	-	JBH	JBH	MDJ	08/11/2016	D	TABLE UPDATE	EDM	RSL	JES	CZH	04/01/2020

ATTENTION:

* REFER TO PAGE 379.38 FOR ADDITIONAL INFORMATION.

4-FT DEADEND FIBERGLASS CROSSARM - WOOD POLE

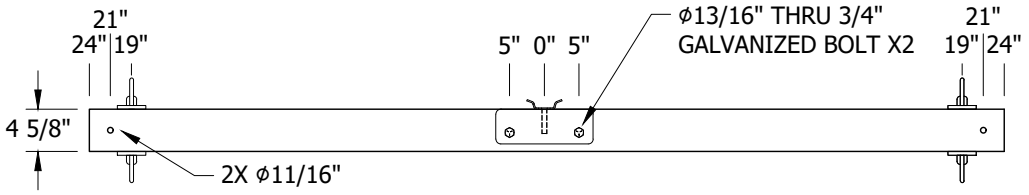

FIGURE 2
TOP VIEW

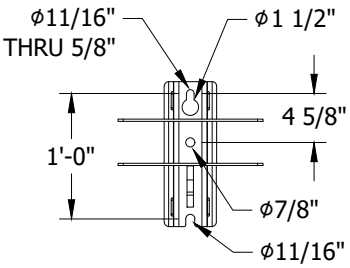

DETAIL 2
MOUNTING BRACKET
FRONT VIEW

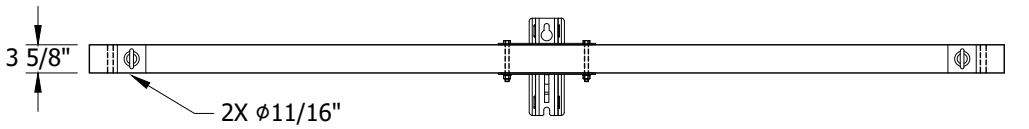

FIGURE 2
FRONT VIEW

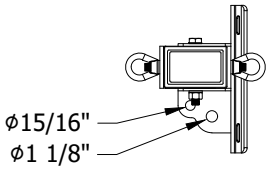

DETAIL 2
MOUNTING BRACKET
SIDE VIEW

TABLE OF CONTENTS

TABLE 2A

STOCK NUMBER	DESIGN UNITS	ASSEMBLED WEIGHT (LBS)	THRU BOLT DIAMETER (IN)
S294332	2DF	40	5/8

TABLE 2B

ITEM	MAXIMUM ALLOWABLE LOAD/MOMENT AT POLE			DISTANCE FROM CENTER			ALLOWABLE VERTICAL LOAD PER POSITION (LBS)	ALLOWABLE HORIZONTAL LOAD PER POSITION (LBS)	ALLOWABLE TRANSVERSE LOAD PER POSITION (LBS)
				ALLOWABLE LOAD (I)					
	VERTICAL LOAD/MOMENT (LBS/FT-LBS)	HORIZONTAL LOAD/MOMENT (LBS/FT-LBS)	TRANSVERSE LOAD (LBS)	19"		19"			
1	--	--	--		CENTER	X	125	100	1,517
2	--	--	--	X		X	2,000	5,125	1,517

© 1998 - 2022 San Diego Gas & Electric Company. All rights reserved. Removal of this copyright notice without permission is not permitted under law.

REV	CHANGE	DR	BY	DSN	APV	DATE	REV	CHANGE	DR	BY	DSN	APV	DATE
C	COMPLETELY REVISED	-	LY	JS	CZH	03/18/2019	F	INSTALLATION UPDATE	EDM	MRF	GLW	KRG	10/21/2022
B	EDITORIAL CHANGES	-	JS	JS	MDJ	06/07/2017	E	DRAWING UPDATE	EDM	JES	JES	CZH	08/31/2021
A	COMPLETELY REVISED	-	JBH	JBH	MDJ	08/11/2016	D	TABLE UPDATE	EDM	RSL	JES	CZH	04/01/2020

ATTENTION:

* REFER TO PAGE 379.38 FOR ADDITIONAL INFORMATION.

6-FT TANGENT FIBERGLASS CROSSARM - WOOD POLE

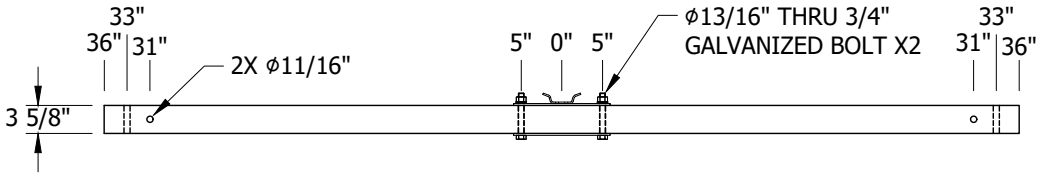

FIGURE 3
TOP VIEW

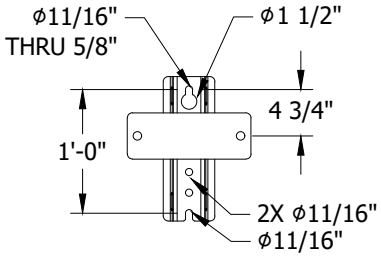

DETAIL 3
MOUNTING BRACKET
FRONT VIEW

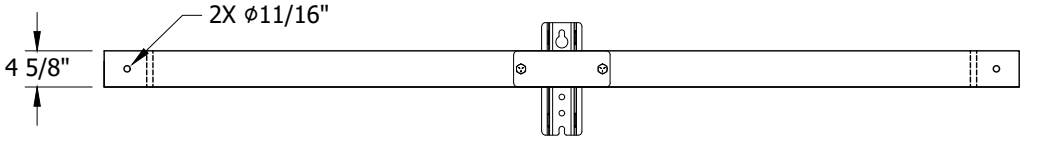

FIGURE 3
FRONT VIEW

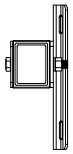

DETAIL 3
MOUNTING BRACKET
SIDE VIEW

TABLE OF CONTENTS

TABLE 3A

STOCK NUMBER	DESIGN UNITS	ASSEMBLED WEIGHT (LBS)	THRU BOLT DIAMETER (IN)
S294354	6FT	35	5/8

TABLE 3B

ALLOWABLE LOAD (I)								
ITEM	DISTANCE FROM CENTER (X = WIRE POSITION ON ARM)			ALLOWABLE VERTICAL LOAD PER POSITION (LBS)	ALLOWABLE HORIZONTAL LOAD PER POSITION (LBS)		ALLOWABLE TRANSVERSE LOAD PER POSITION (LBS)	
	31"		31"		1" OR 1 3/8" STRAIGHT PIN	ANGLE PIN	1" OR 1 3/8" STRAIGHT PIN	ANGLE PIN
1		CENTER	X	617	100	100	800	800
2	X		X	2,500	770	770	800	800

© 1998 - 2022 San Diego Gas & Electric Company. All rights reserved. Removal of this copyright notice without permission is not permitted under law.

REV	CHANGE	DR	BY	DSN	APV	DATE	REV	CHANGE	DR	BY	DSN	APV	DATE
C	COMPLETELY REVISED	-	LY	JS	CZH	03/18/2019	F	INSTALLATION UPDATE	EDM	MRF	GLW	KRG	10/21/2022
B	EDITORIAL CHANGES	-	JS	JS	MDJ	06/07/2017	E	DRAWING UPDATE	EDM	JES	JES	CZH	08/31/2021
A	COMPLETELY REVISED	-	JBH	JBH	MDJ	08/11/2016	D	TABLE UPDATE	EDM	RSL	JES	CZH	04/01/2020

ATTENTION:

* REFER TO PAGE 379.38 FOR ADDITIONAL INFORMATION.

6-FT DEADEND FIBERGLASS CROSSARM - WOOD POLE

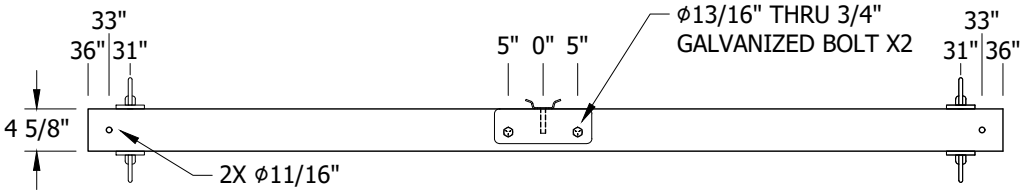

FIGURE 4
TOP VIEW

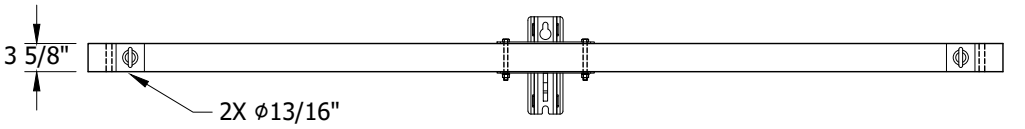

FIGURE 4
FRONT VIEW

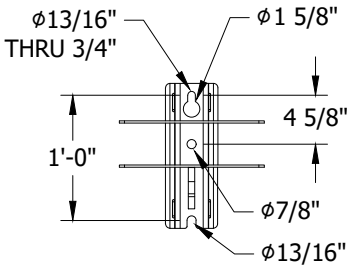

DETAIL 4
MOUNTING BRACKET
FRONT VIEW

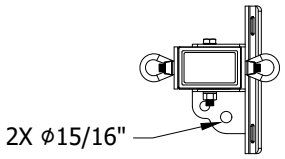

DETAIL 4
MOUNTING BRACKET
SIDE VIEW

TABLE 4A

STOCK NUMBER	DESIGN UNITS	ASSEMBLED WEIGHT (LBS)	THRU BOLT DIAMETER (IN)
S294334	6FD	57	3/4

TABLE 4B

ALLOWABLE LOAD (I)									
ITEM	MAXIMUM ALLOWABLE LOAD/MOMENT AT POLE			DISTANCE FROM CENTER			ALLOWABLE VERTICAL LOAD PER POSITION (LBS)	ALLOWABLE HORIZONTAL LOAD PER POSITION (LBS)	ALLOWABLE TRANSVERSE LOAD PER POSITION (LBS)
	VERTICAL LOAD/MOMENT (LBS/FT-LBS)	HORIZONTAL LOAD/MOMENT (LBS/FT-LBS)	TRANSVERSE LOAD (LBS)	31"		31"			
1	--	--	--		CENTER	X	125	100	1,575
2	--	--	--	X		X	2,625	3,236	1,575

TABLE OF CONTENTS

© 1998 - 2022 San Diego Gas & Electric Company. All rights reserved. Removal of this copyright notice without permission is not permitted under law.

REV	CHANGE	DR	BY	DSN	APV	DATE	REV	CHANGE	DR	BY	DSN	APV	DATE
C	COMPLETELY REVISED	-	LY	JS	CZH	03/18/2019	F	INSTALLATION UPDATE	EDM	MRF	GLW	KRG	10/21/2022
B	EDITORIAL CHANGES	-	JS	JS	MDJ	06/07/2017	E	DRAWING UPDATE	EDM	JES	JES	CZH	08/31/2021
A	COMPLETELY REVISED	-	JBH	JBH	MDJ	08/11/2016	D	TABLE UPDATE	EDM	RSL	JES	CZH	04/01/2020

ATTENTION:

* REFER TO PAGE 379.38 FOR ADDITIONAL INFORMATION.

** LIMIT OF TWO CONDUCTORS PER ARM WHEN USED ON 12KV SYSTEM.

8-FT TANGENT FIBERGLASS CROSSARM - WOOD POLE

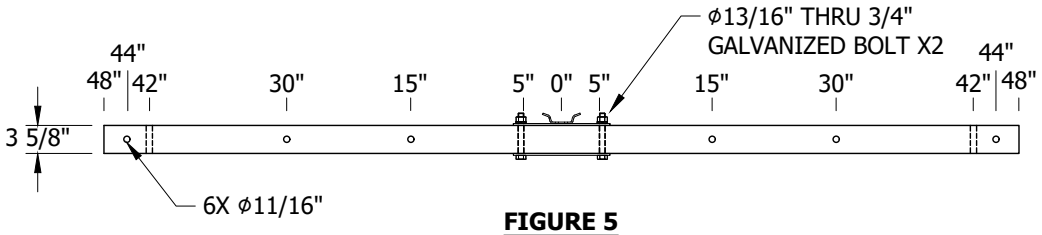

FIGURE 5
TOP VIEW

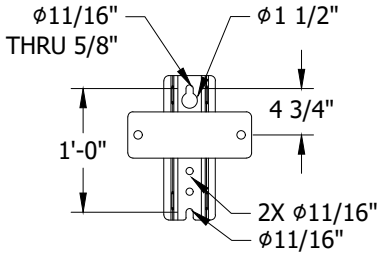

DETAIL 5
MOUNTING BRACKET
FRONT VIEW

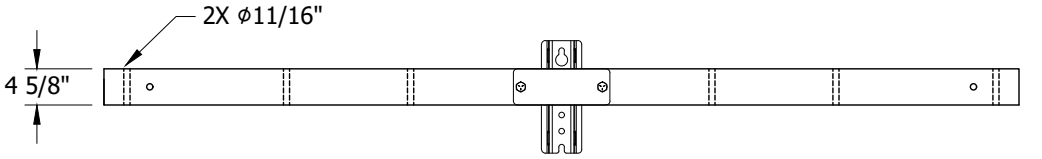

FIGURE 5
FRONT VIEW

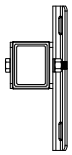

DETAIL 5
MOUNTING BRACKET
SIDE VIEW

TABLE 5A

STOCK NUMBER	DESIGN UNITS	ASSEMBLED WEIGHT (LBS)	THRU BOLT DIAMETER (IN)
S294356	8FT	41	5/8

TABLE 5B

ITEM	DISTANCE FROM CENTER (X = WIRE POSITION ON ARM)							ALLOWABLE VERTICAL LOAD PER POSITION (LBS)	ALLOWABLE HORIZONTAL LOAD PER POSITION (LBS)		ALLOWABLE TRANSVERSE LOAD PER POSITION (LBS)	
	44"	30"	15"		15"	30"	44"		1" OR 1 3/8" STRAIGHT PIN	ANGLE PIN	1" OR 1 3/8" STRAIGHT PIN	ANGLE PIN
	ALLOWABLE LOAD (I)											
1			X	CENTER	X			3,000	770	770	1,150	1,150
2		X				X		3,000	770	770	1,150	1,150
3	X						X	2,000	770	770	1,150	1,150
4	X				X		X	945	623	623	1,150	1,150
5	X					X	X	684	550	550	1,150	1,150
6	X		X		X		X	1,580	623	623	1,150	1,150
7	X	X				X	X	1,225	550	550	1,150	1,150
8	X	X	X		X	X	X	1,000	550	550	779	779

© 1998 - 2022 San Diego Gas & Electric Company. All rights reserved. Removal of this copyright notice without permission is not permitted under law.

REV	CHANGE	DR	BY	DSN	APV	DATE	REV	CHANGE	DR	BY	DSN	APV	DATE
C	COMPLETELY REVISED	-	LY	JS	CZH	03/18/2019	F	INSTALLATION UPDATE	EDM	MRF	GLW	KRG	10/21/2022
B	EDITORIAL CHANGES	-	JS	JS	MDJ	06/07/2017	E	DRAWING UPDATE	EDM	JES	JES	CZH	08/31/2021
A	COMPLETELY REVISED	-	JBH	JBH	MDJ	08/11/2016	D	TABLE UPDATE	EDM	RSL	JES	CZH	04/01/2020

TABLE OF CONTENTS

ATTENTION:

* REFER TO PAGE 379.38 FOR ADDITIONAL INFORMATION.

8-FT DEADEND FIBERGLASS CROSSARM - WOOD POLE

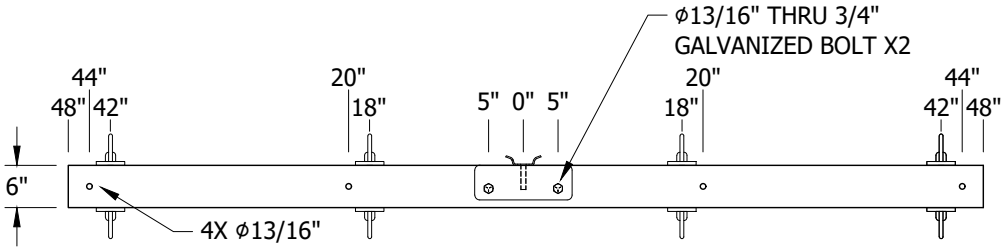

FIGURE 6
TOP VIEW

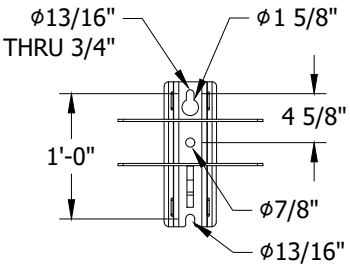

DETAIL 6
MOUNTING BRACKET
FRONT VIEW

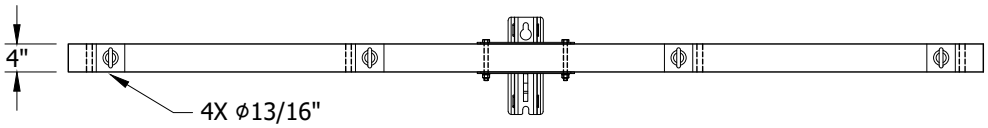

FIGURE 6
FRONT VIEW

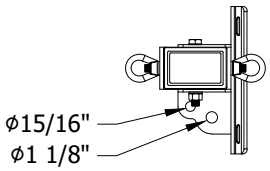

DETAIL 6
MOUNTING BRACKET
SIDE VIEW

TABLE 6A

STOCK NUMBER	DESIGN UNITS	ASSEMBLED WEIGHT (LBS)	THRU BOLT DIAMETER (IN)
S294336	8FD	99	3/4

TABLE 6B

ITEM	DISTANCE FROM CENTER (X = WIRE POSITION ON ARM)					ALLOWABLE VERTICAL LOAD PER POSITION (LBS)	ALLOWABLE HORIZONTAL LOAD PER POSITION (LBS)	ALLOWABLE TRANSVERSE LOAD PER POSITION (LBS)
	42"	18"		18"	42"			
	ALLOWABLE LOAD (I)							
1		X	CENTER	X		2,643	7,117	2,643
2	X				X	2,250	4,375	2,500
3		X		X	X	856	431	2,500
4	X			X	X	1,475	1,005	2,500
5	X	X		X	X	1,475	3,290	2,330

© 1998 - 2022 San Diego Gas & Electric Company. All rights reserved. Removal of this copyright notice without permission is not permitted under law.

REV	CHANGE	DR	BY	DSN	APV	DATE	REV	CHANGE	DR	BY	DSN	APV	DATE
C	COMPLETELY REVISED	-	LY	JS	CZH	03/18/2019	F	INSTALLATION UPDATE	EDM	MRF	GLW	KRG	10/21/2022
B	EDITORIAL CHANGES	-	JS	JS	MDJ	06/07/2017	E	DRAWING UPDATE	EDM	JES	JES	CZH	08/31/2021
A	COMPLETELY REVISED	-	JBH	JBH	MDJ	08/11/2016	D	TABLE UPDATE	EDM	RSL	JES	CZH	04/01/2020

TABLE OF CONTENTS

ATTENTION:

* REFER TO PAGE 379.38 FOR ADDITIONAL INFORMATION.

10-FT TANGENT FIBERGLASS CROSSARM - WOOD POLE

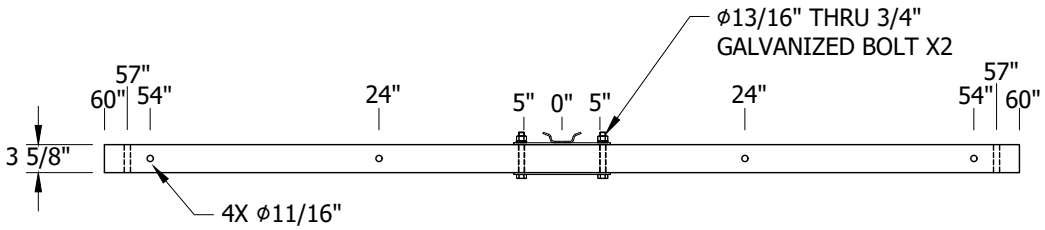

FIGURE 7
TOP VIEW

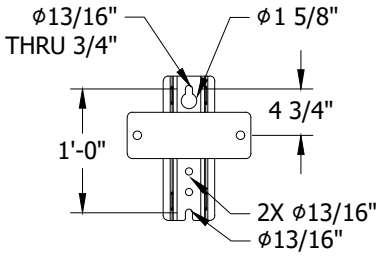

DETAIL 7
MOUNTING BRACKET
FRONT VIEW

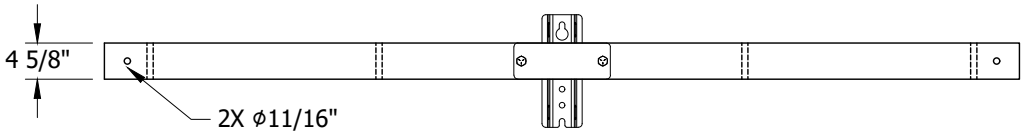

FIGURE 7
FRONT VIEW

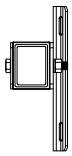

DETAIL 7
MOUNTING BRACKET
SIDE VIEW

TABLE 7A

STOCK NUMBER	DESIGN UNITS	ASSEMBLED WEIGHT (LBS)	THRU BOLT DIAMETER (IN)
S294378	4TF	48	3/4

TABLE 7B

ALLOWABLE LOAD (I)										
ITEM	DISTANCE FROM CENTER (X = WIRE POSITION ON ARM)					ALLOWABLE VERTICAL LOAD PER POSITION (LBS)	ALLOWABLE HORIZONTAL LOAD PER POSITION (LBS)		ALLOWABLE TRANSVERSE LOAD PER POSITION (LBS)	
	54"	24"		24"	54"		1" OR 1 3/8" STRAIGHT PIN	ANGLE PIN	1" OR 1 3/8" STRAIGHT PIN	ANGLE PIN
1		X	CENTER	X		3,000	1,821	1,420	1,250	1,250
2	X				X	1,771	770	770	1,250	1,250
3		X		X	X	500	560	560	1,250	1,250
4	X			X	X	1,094	560	560	1,250	1,250
5	X	X		X	X	1,423	560	560	1,250	1,250

© 1998 - 2022 San Diego Gas & Electric Company. All rights reserved. Removal of this copyright notice without permission is not permitted under law.

REV	CHANGE	DR	BY	DSN	APV	DATE	REV	CHANGE	DR	BY	DSN	APV	DATE
C	COMPLETELY REVISED	-	LY	JS	CZH	03/18/2019	F	INSTALLATION UPDATE	EDM	MRF	GLW	KRG	10/21/2022
B	EDITORIAL CHANGES	-	JS	JS	MDJ	06/07/2017	E	DRAWING UPDATE	EDM	JES	JES	CZH	08/31/2021
A	COMPLETELY REVISED	-	JBH	JBH	MDJ	08/11/2016	D	TABLE UPDATE	EDM	RSL	JES	CZH	04/01/2020

TABLE OF CONTENTS

ATTENTION:

* REFER TO PAGE 379.38 FOR ADDITIONAL INFORMATION.

10-FT DEADEND FIBERGLASS CROSSARM - WOOD POLE

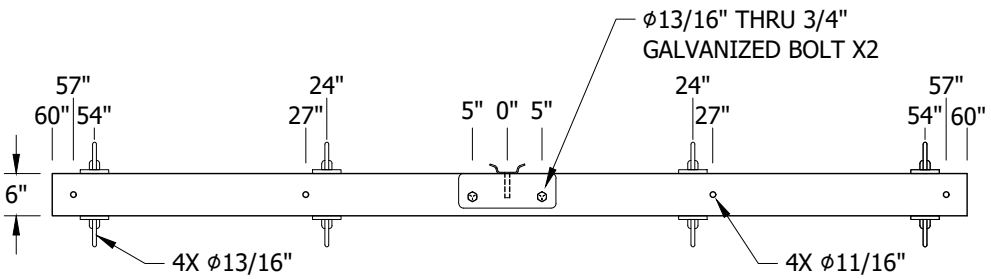

FIGURE 8
TOP VIEW

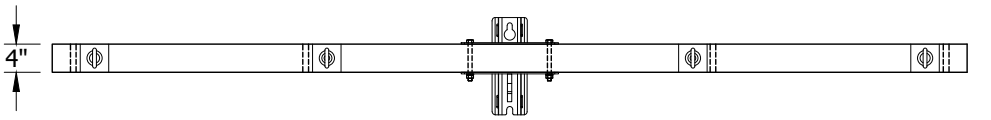

FIGURE 8
FRONT VIEW

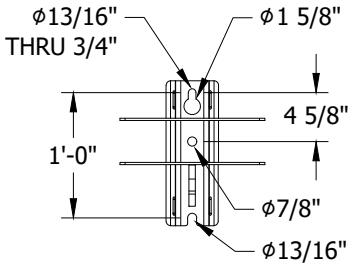

DETAIL 8
MOUNTING BRACKET
FRONT VIEW

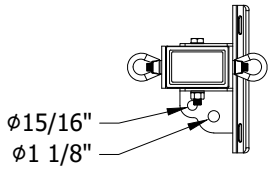

DETAIL 8
MOUNTING BRACKET
SIDE VIEW

TABLE 8A

STOCK NUMBER	DESIGN UNITS	ASSEMBLED WEIGHT (LBS)	THRU BOLT DIAMETER (IN)
S294380	4DF	112	3/4

TABLE 8B

ALLOWABLE LOAD (I)								
ITEM	DISTANCE FROM CENTER (X = WIRE POSITION ON ARM)					ALLOWABLE VERTICAL LOAD PER POSITION (LBS)	ALLOWABLE HORIZONTAL LOAD PER POSITION (LBS)	ALLOWABLE TRANSVERSE LOAD PER POSITION (LBS)
	54"	24"		24"	54"			
1		X	CENTER	X		2,433	4,375	2,500
2	X				X	1,650	3,660	2,500
3		X		X	X	544	335	2,289
4	X			X	X	1,160	754	1,717
5	X	X		X	X	1,140	2,188	1,717

© 1998 - 2022 San Diego Gas & Electric Company. All rights reserved. Removal of this copyright notice without permission is not permitted under law.

REV	CHANGE	DR	BY	DSN	APV	DATE	REV	CHANGE	DR	BY	DSN	APV	DATE
C	COMPLETELY REVISED	-	LY	JS	CZH	03/18/2019	F	INSTALLATION UPDATE	EDM	MRF	GLW	KRG	10/21/2022
B	EDITORIAL CHANGES	-	JS	JS	MDJ	06/07/2017	E	DRAWING UPDATE	EDM	JES	JES	CZH	08/31/2021
A	COMPLETELY REVISED	-	JBH	JBH	MDJ	08/11/2016	D	TABLE UPDATE	EDM	RSL	JES	CZH	04/01/2020

TABLE OF CONTENTS

ATTENTION:

* REFER TO PAGE 379.38 FOR ADDITIONAL INFORMATION.

10-FT STACKED DEADEND FIBERGLASS CROSSARM - WOOD POLE

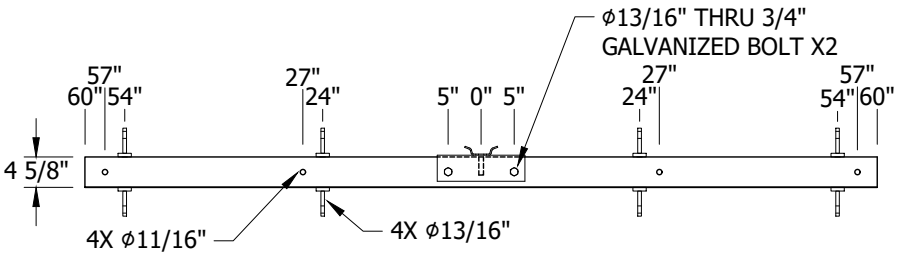

FIGURE 9
TOP VIEW (D)

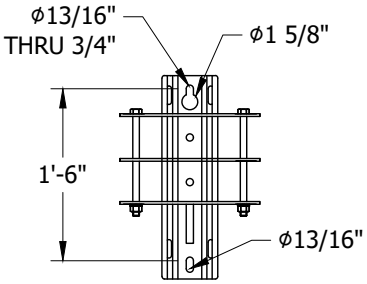

DETAIL 9
MOUNTING BRACKET
FRONT VIEW

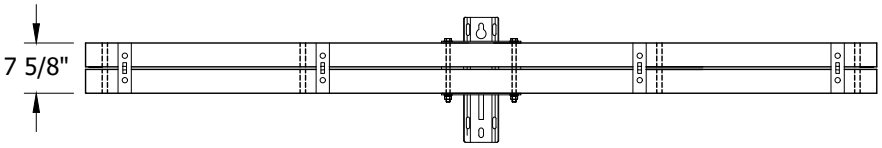

FIGURE 9 (D)
FRONT VIEW

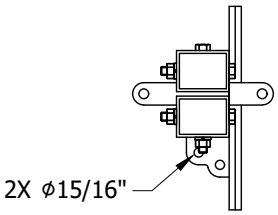

DETAIL 9
MOUNTING BRACKET
SIDE VIEW

TABLE OF CONTENTS

TABLE 9A

STOCK NUMBER	DESIGN UNITS	ASSEMBLED WEIGHT (LBS)	THRU BOLT DIAMETER (IN)
S294382	10SDF	152	3/4

TABLE 9B

ALLOWABLE LOAD (I)								
ITEM	DISTANCE FROM CENTER (X = WIRE POSITION ON ARM)					ALLOWABLE VERTICAL LOAD PER POSITION (LBS)	ALLOWABLE HORIZONTAL LOAD PER POSITION (LBS)	ALLOWABLE TRANSVERSE LOAD PER POSITION (LBS)
	54"	24"		24"	54"			
1		X	CENTER	X		5,000	5,625	2,500
2	X				X	3,500	5,625	2,500
3		X		X	X	748	451	2,289
4	X			X	X	1,572	1,015	2,289
5	X	X		X	X	2,400	2,813	1,717

© 1998 - 2022 San Diego Gas & Electric Company. All rights reserved. Removal of this copyright notice without permission is not permitted under law.

REV	CHANGE	DR	BY	DSN	APV	DATE	REV	CHANGE	DR	BY	DSN	APV	DATE
C	COMPLETELY REVISED	-	LY	JS	CZH	03/18/2019	F	INSTALLATION UPDATE	EDM	MRF	GLW	KRG	10/21/2022
B	EDITORIAL CHANGES	-	JS	JS	MDJ	06/07/2017	E	DRAWING UPDATE	EDM	JES	JES	CZH	08/31/2021
A	COMPLETELY REVISED	-	JBH	JBH	MDJ	08/11/2016	D	TABLE UPDATE	EDM	RSL	JES	CZH	04/01/2020

ATTENTION:

* REFER TO PAGE 379.38 FOR ADDITIONAL INFORMATION.

10-FT FIBERGLASS ALLEY ARM - WOOD POLE

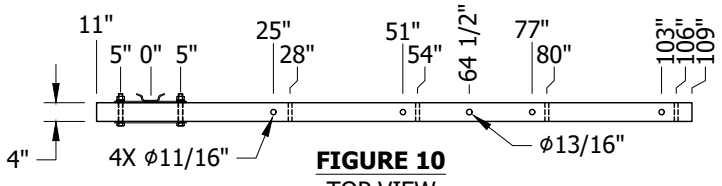

FIGURE 10
TOP VIEW

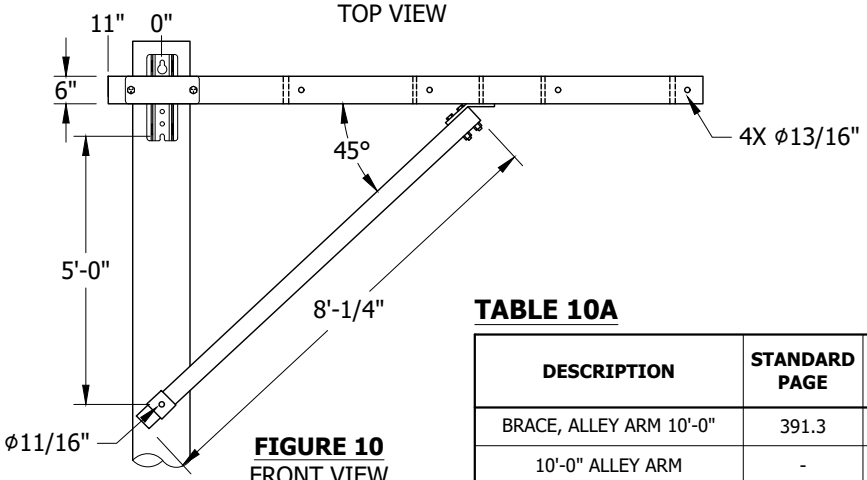

FIGURE 10
FRONT VIEW

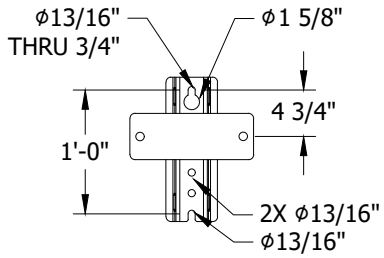

DETAIL 10
MOUNTING BRACKET

TABLE 10A

DESCRIPTION	STANDARD PAGE	STOCK NUMBER	DESIGN UNITS	WEIGHT (LBS)	ASSEMBLED WEIGHT (LBS)	THRU BOLT DIAMETER (IN)
BRACE, ALLEY ARM 10'-0"	391.3	S163946	10FGAB	21	-	-
10'-0" ALLEY ARM	-	S294102	10AA	112	107	3/4

TABLE 10B

ITEM	TYPE	DISTANCE FROM CENTER OF BRACKET (X = WIRE POSITION ON ARM)				ALLOWABLE VERTICAL LOAD PER POSITION (LBS)	ALLOWABLE HORIZONTAL LOAD PER POSITION (LBS)		ALLOWABLE TRANSVERSE LOAD PER POSITION (LBS)	
		25"	51"	77"	103"		STRAIGHT PIN (1" & 1 3/8" COBB)	ANGLE PIN	STRAIGHT PIN (1" & 1 3/8" COBB)	ANGLE PIN
						ALLOWABLE LOAD (I)				
1	10FT TAN ALLEY	X	X			1,597	130	130	1,670	1,670
2		X		X		1,190	98	98	1,670	1,670
3		X			X	948	79	79	1,670	1,670
4			X	X		948	80	80	1,670	1,670
5			X		X	788	67	67	1,670	1,670
6				X	X	674	57	57	1,670	1,670
7		X	X	X		793	66	66	1,667	1,667
8		X	X		X	678	57	57	1,667	1,667
9		X		X	X	592	50	50	1,667	1,667
10			X	X	X	525	58	58	1,667	1,667
11		X	X	X	X	474	40	40	1,250	1,250
		28"	54"	80"	106"					
1	10FT DE ALLEY	X	X			1,517	126		1,691	
2		X		X		1,152	95		1,691	
3		X			X	928	77		1,691	
4			X	X		928	77		1,691	
5			X		X	778	64		1,691	
6				X	X	669	55		1,691	
7		X	X	X		768	64		1,691	
8		X	X		X	662	55		1,691	
9		X		X	X	581	48		1,691	
10			X	X	X	518	43		1,691	
11		X	X	X	X	464	38		1,691	

© 1998 - 2022 San Diego Gas & Electric Company. All rights reserved. Removal of this copyright notice without permission is not permitted under law.

REV	CHANGE	DR	BY	DSN	APV	DATE	REV	CHANGE	DR	BY	DSN	APV	DATE
C	COMPLETELY REVISED	-	LY	JS	CZH	03/18/2019	F	INSTALLATION UPDATE	EDM	MRF	GLW	KRG	10/21/2022
B	EDITORIAL CHANGES	-	JS	JS	MDJ	06/07/2017	E	DRAWING UPDATE	EDM	JES	JES	CZH	08/31/2021
A	COMPLETELY REVISED	-	JBH	JBH	MDJ	08/11/2016	D	TABLE UPDATE	EDM	RSL	JES	CZH	04/01/2020

ATTENTION:

* REFER TO PAGE 379.38 FOR ADDITIONAL INFORMATION.

12-FT TANGENT FIBERGLASS CROSSARM - WOOD POLE

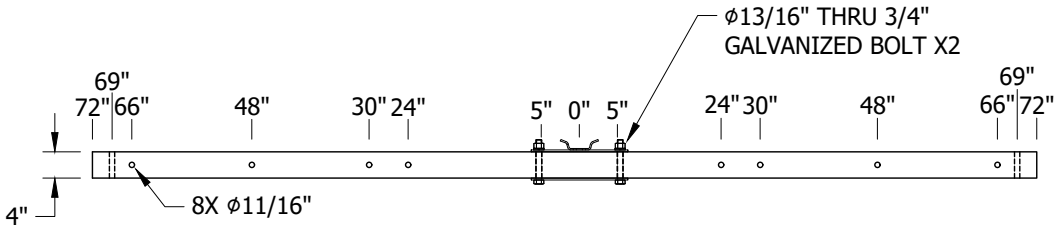

FIGURE 11
TOP VIEW

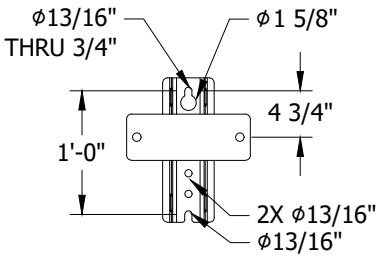

DETAIL 11
MOUNTING BRACKET
FRONT VIEW

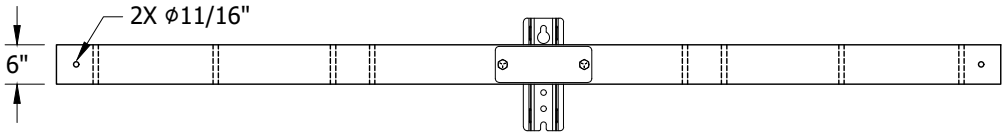

FIGURE 11
FRONT VIEW

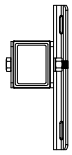

DETAIL 11
MOUNTING BRACKET
SIDE VIEW

TABLE 11A

STOCK NUMBER	DESIGN UNITS	ASSEMBLED WEIGHT (LBS)	THRU BOLT DIAMETER (IN)
S294374	6TF	95	3/4

TABLE 11B

ITEM	DISTANCE FROM CENTER (X = WIRE POSITION ON ARM)									ALLOWABLE VERTICAL LOAD PER POSITION (LBS)	ALLOWABLE HORIZONTAL LOAD PER POSITION (LBS)		ALLOWABLE TRANSVERSE LOAD PER POSITION (LBS)	
	66"	48"	30"	24"	CENTER	24"	30"	48"	66"	ALLOWABLE LOAD (I)	STRAIGHT PIN (1" & 1 3/8" COBB)	ANGLE PIN	STRAIGHT PIN (1" & 1 3/8" COBB)	ANGLE PIN
1				X		X				4,850	1,775	1,775	1,670	1,670
2			X				X			4,850	1,775	1,775	1,670	1,670
3		X						X		3,700	1,775	1,775	1,670	1,670
4	X								X	2,500	1,435	1,435	1,670	1,670
5	X			X					X	964	1,287	1,287	1,670	1,670
6	X		X						X	780	1,198	1,198	1,670	1,670
7	X	X							X	494	737	737	1,670	1,670
8	X			X		X			X	1,975	1,287	1,287	1,670	1,670
9	X		X				X		X	1,850	1,198	1,198	1,670	1,678
10	X	X						X	X	1,560	990	990	1,670	1,670
11	X	X		X		X		X	X	1,285	837	837	1,145	1,145
12	X	X	X				X	X	X	1,235	798	798	1,145	1,145

© 1998 - 2022 San Diego Gas & Electric Company. All rights reserved. Removal of this copyright notice without permission is not permitted under law.

REV	CHANGE	DR	BY	DSN	APV	DATE	REV	CHANGE	DR	BY	DSN	APV	DATE
C	COMPLETELY REVISED	-	LY	JS	CZH	03/18/2019	F	INSTALLATION UPDATE	EDM	MRF	GLW	KRG	10/21/2022
B	EDITORIAL CHANGES	-	JS	JS	MDJ	06/07/2017	E	DRAWING UPDATE	EDM	JES	JES	CZH	08/31/2021
A	COMPLETELY REVISED	-	JBH	JBH	MDJ	08/11/2016	D	TABLE UPDATE	EDM	RSL	JES	CZH	04/01/2020

TABLE OF CONTENTS

ATTENTION:

* REFER TO PAGE 379.38 FOR ADDITIONAL INFORMATION.

12-FT DEADEND FIBERGLASS CROSSARM - WOOD POLE

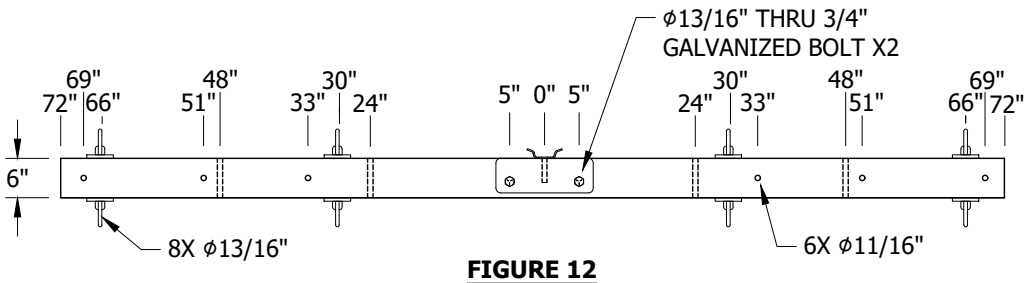

FIGURE 12
TOP VIEW

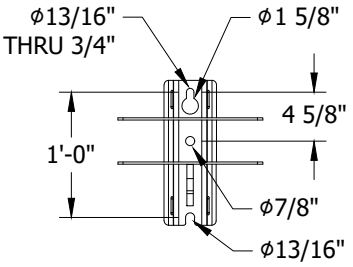

DETAIL 12
MOUNTING BRACKET
FRONT VIEW

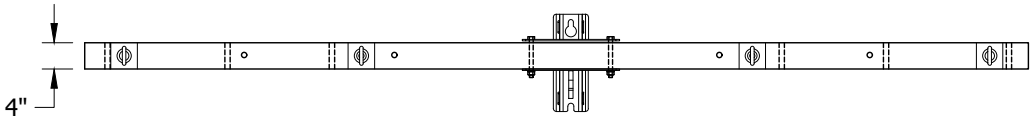

FIGURE 12
FRONT VIEW

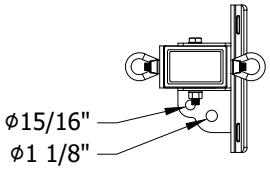

DETAIL 12
MOUNTING BRACKET
SIDE VIEW

TABLE 12A

STOCK NUMBER	DESIGN UNITS	ASSEMBLED WEIGHT (LBS)	THRU BOLT DIAMETER (IN)
S294372	6DF	126	3/4

TABLE 12B

ITEM	DISTANCE FROM CENTER (X = WIRE POSITION ON ARM)									ALLOWABLE VERTICAL LOAD PER POSITION (LBS)	ALLOWABLE HORIZONTAL LOAD PER POSITION (LBS)	ALLOWABLE TRANSVERSE LOAD PER POSITION (LBS)
	66"	48"	30"	24"		24"	30"	48"	66"	ALLOWABLE LOAD (I)		
1				X		X				2,433	4,375	2,500
2			X				X			1,935	4,375	2,500
3		X						X		1,935	4,375	2,500
4	X								X	1,360	2,500	2,500
5	X			X					X	1,075	754	2,289
6	X		X						X	871	603	2,289
7	X	X							X	553	377	2,289
8	X			X		X			X	1,040	2,188	1,717
9	X		X				X		X	965	2,188	1,717
10	X	X						X	X	815	1,591	1,717
11	X	X		X		X		X	X	685	1,458	1,145
12	X	X	X				X	X	X	640	1,458	1,145

© 1998 - 2022 San Diego Gas & Electric Company. All rights reserved. Removal of this copyright notice without permission is not permitted under law.

REV	CHANGE	DR	BY	DSN	APV	DATE	REV	CHANGE	DR	BY	DSN	APV	DATE
C	COMPLETELY REVISED	-	LY	JS	CZH	03/18/2019	F	INSTALLATION UPDATE	EDM	MRF	GLW	KRG	10/21/2022
B	EDITORIAL CHANGES	-	JS	JS	MDJ	06/07/2017	E	DRAWING UPDATE	EDM	JES	JES	CZH	08/31/2021
A	COMPLETELY REVISED	-	JBH	JBH	MDJ	08/11/2016	D	TABLE UPDATE	EDM	RSL	JES	CZH	04/01/2020

TABLE OF CONTENTS

ATTENTION:

* REFER TO PAGE 379.38 FOR ADDITIONAL INFORMATION.

12-FT STACKED DEADEND FIBERGLASS CROSSARM - WOOD POLE

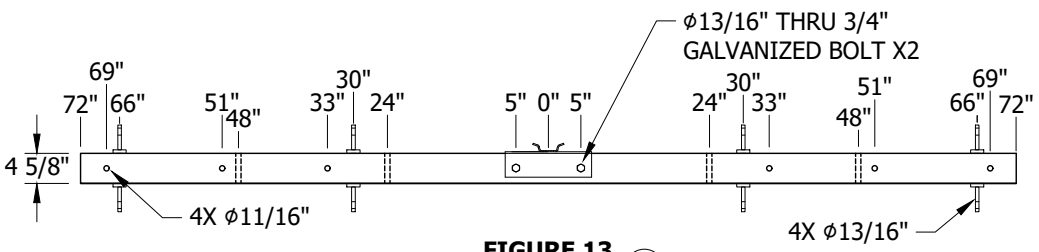

FIGURE 13 (D)
TOP VIEW

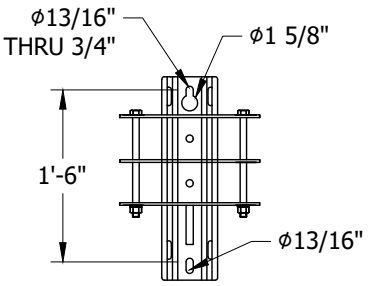

DETAIL 13
MOUNTING BRACKET
FRONT VIEW

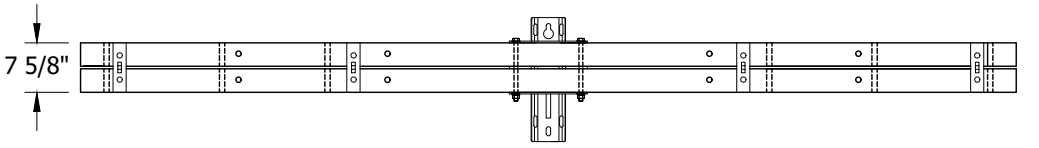

FIGURE 13 (D)
FRONT VIEW

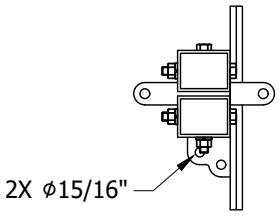

DETAIL 13
MOUNTING BRACKET
SIDE VIEW

TABLE 13A

STOCK NUMBER	DESIGN UNITS	ASSEMBLED WEIGHT (LBS)	THRU BOLT DIAMETER (IN)
S294386	12SDF	170	3/4

TABLE 13B

ITEM	DISTANCE FROM CENTER (X = WIRE POSITION ON ARM)									ALLOWABLE VERTICAL LOAD PER POSITION (LBS)	ALLOWABLE HORIZONTAL LOAD PER POSITION (LBS)	ALLOWABLE TRANSVERSE LOAD PER POSITION (LBS)
	66"	48"	30"	24"		24"	30"	48"	66"	ALLOWABLE LOAD (I)		
1				X	CENTER	X				5,000	5,625	2,500
2			X				X			4,717	5,625	2,500
3		X						X		2,948	5,625	2,500
4	X								X	2,150	5,428	2,500
5	X			X					X	1,450	1,015	2,289
6	X		X						X	1,194	812	2,289
7	X	X							X	770	507	2,289
8	X			X		X			X	1,572	2,813	1,717
9	X		X				X		X	1,474	2,813	1,717
10	X	X						X	X	1,239	2,813	1,717
11	X	X		X		X		X	X	1,025	1,875	1,145
12	X	X	X				X	X	X	983	1,875	1,145

© 1998 - 2022 San Diego Gas & Electric Company. All rights reserved. Removal of this copyright notice without permission is not permitted under law.

REV	CHANGE	DR	BY	DSN	APV	DATE	REV	CHANGE	DR	BY	DSN	APV	DATE
C	COMPLETELY REVISED	-	LY	JS	CZH	03/18/2019	F	INSTALLATION UPDATE	EDM	MRF	GLW	KRG	10/21/2022
B	EDITORIAL CHANGES	-	JS	JS	MDJ	06/07/2017	E	DRAWING UPDATE	EDM	JES	JES	CZH	08/31/2021
A	COMPLETELY REVISED	-	JBH	JBH	MDJ	08/11/2016	D	TABLE UPDATE	EDM	RSL	JES	CZH	04/01/2020

TABLE OF CONTENTS

ATTENTION:

* REFER TO PAGE 379.38 FOR ADDITIONAL INFORMATION.

12-FT FIBERGLASS ALLEY ARM - WOOD POLE

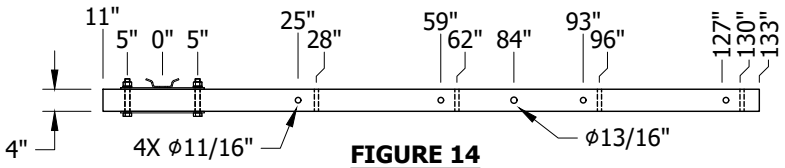

FIGURE 14
TOP VIEW

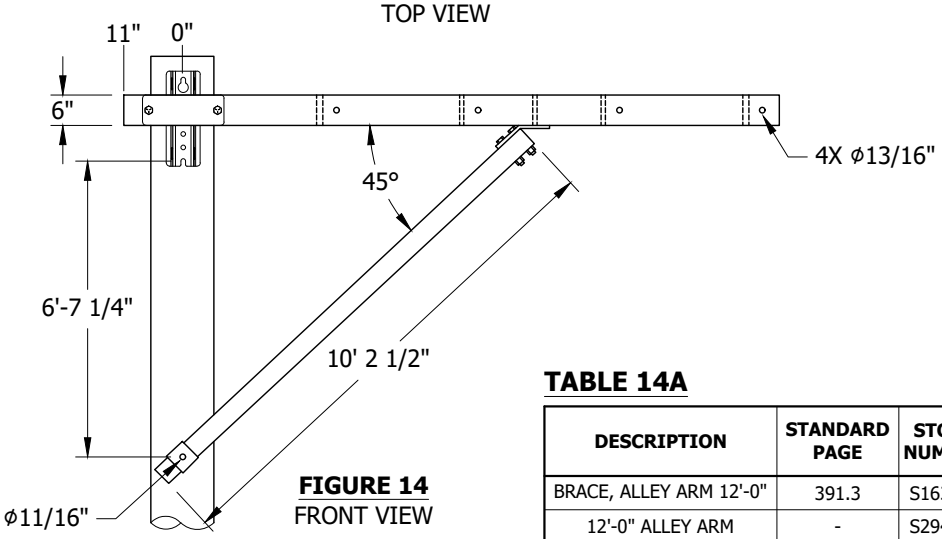

FIGURE 14
FRONT VIEW

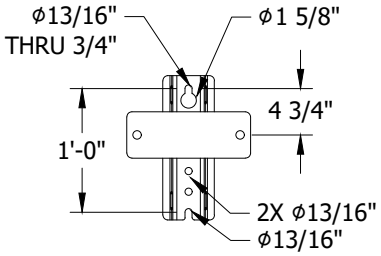

DETAIL 14
MOUNTING BRACKET

TABLE 14A

DESCRIPTION	STANDARD PAGE	STOCK NUMBER	DESIGN UNITS	WEIGHT (LBS)	ASSEMBLED WEIGHT (LBS)	THRU BOLT DIAMETER (IN)
BRACE, ALLEY ARM 12'-0"	391.3	S163948	12FGAB	25	-	-
12'-0" ALLEY ARM	-	S294104	12AA	126	123	3/4

TABLE 14B

ALLOWABLE LOAD (I)										
ITEM	TYPE	DISTANCE FROM CENTER OF BRACKET (X = WIRE POSITION ON ARM)				ALLOWABLE VERTICAL LOAD PER POSITION (LBS)	ALLOWABLE HORIZONTAL LOAD PER POSITION (LBS)		ALLOWABLE TRANSVERSE LOAD PER POSITION (LBS)	
		25"	59"	93"	127"		STRAIGHT PIN (1" & 1 3/8" COBB)	ANGLE PIN	STRAIGHT PIN (1" & 1 3/8" COBB)	ANGLE PIN
1	12FT TAN ALLEY	X	X			1,907	123	123	1,670	1,670
2		X		X		1,358	87	87	1,670	1,670
3		X			X	1,054	68	68	1,670	1,670
4			X	X		1,054	68	68	1,670	1,670
5			X		X	861	55	55	1,670	1,670
6				X	X	728	47	47	1,670	1,670
7		X	X	X		905	58	58	1,667	1,667
8		X	X		X	759	49	49	1,667	1,667
9		X		X	X	654	42	42	1,667	1,667
10			X	X	X	574	37	37	1,667	1,667
11		X	X	X	X	527	34	34	1,250	1,250
		28"	62"	96"	130"					
1	12FT DE ALLEY	X	X			1,824	114		1,691	
2		X		X		1,324	83		1,691	
3		X			X	1,039	65		1,691	
4			X	X		1,039	65		1,691	
5			X		X	855	54		1,691	
6				X	X	726	46		1,691	
7		X	X	X		883	55		1,691	
8		X	X		X	746	47		1,691	
9		X		X	X	646	41		1,691	
10			X	X	X	570	36		1,691	
11		X	X	X	X	520	33		1,691	

TABLE OF CONTENTS

© 1998 - 2022 San Diego Gas & Electric Company. All rights reserved. Removal of this copyright notice without permission is not permitted under law.

REV	CHANGE	DR	BY	DSN	APV	DATE	REV	CHANGE	DR	BY	DSN	APV	DATE
C	COMPLETELY REVISED	-	LY	JS	CZH	03/18/2019	F	INSTALLATION UPDATE	EDM	MRF	GLW	KRG	10/21/2022
B	EDITORIAL CHANGES	-	JS	JS	MDJ	06/07/2017	E	DRAWING UPDATE	EDM	JES	JES	CZH	08/31/2021
A	COMPLETELY REVISED	-	JBH	JBH	MDJ	08/11/2016	D	TABLE UPDATE	EDM	RSL	JES	CZH	04/01/2020

ATTENTION:

* REFER TO PAGE 379.38 FOR ADDITIONAL INFORMATION.

15-FT TANGENT FIBERGLASS CROSSARM - WOOD POLE

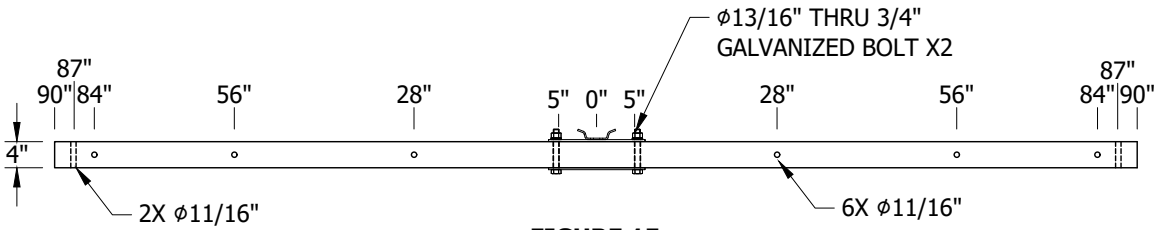

FIGURE 15
TOP VIEW

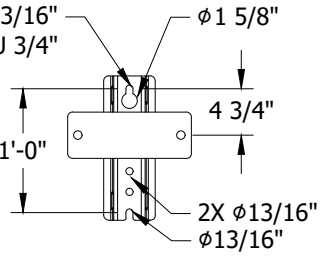

DETAIL 15
MOUNTING BRACKET
FRONT VIEW

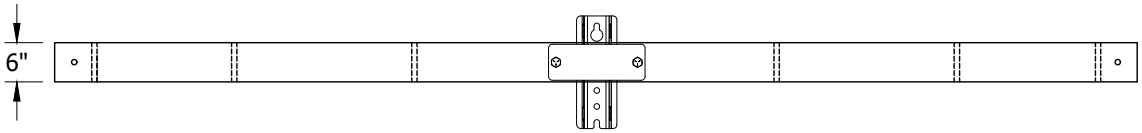

FIGURE 15
FRONT VIEW

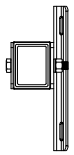

DETAIL 15
MOUNTING BRACKET
SIDE VIEW

TABLE 15A

STOCK NUMBER	DESIGN UNITS	ASSEMBLED WEIGHT (LBS)	THRU BOLT DIAMETER (IN)
S294370	6LTF	111	3/4

TABLE 15B

ITEM	DISTANCE FROM CENTER (X = WIRE POSITION ON ARM)							ALLOWABLE VERTICAL LOAD PER POSITION (LBS)	ALLOWABLE HORIZONTAL LOAD PER POSITION (LBS)		ALLOWABLE TRANSVERSE LOAD PER POSITION (LBS)	
	84"	56"	28"		28"	56"	84"		1" OR 1 3/8" STRAIGHT PIN	ANGLE PIN	1" OR 1 3/8" STRAIGHT PIN	ANGLE PIN
	ALLOWABLE LOAD (I)											
1			X	CENTER	X			4,850	1,775	1,775	1,670	1,670
2		X				X		3,180	1,685	1,685	1,670	1,670
3	X						X	1,785	1,300	1,300	1,670	1,670
4	X				X		X	809	1,010	1,010	1,670	1,670
5	X					X	X	412	621	621	1,670	1,670
6	X		X		X		X	1,590	1,010	1,010	1,670	1,670
7	X	X				X	X	1,250	792	792	1,670	1,670
8	X	X	X		X	X	X	1,060	673	673	1,145	1,145

TABLE OF CONTENTS

© 1998 - 2022 San Diego Gas & Electric Company. All rights reserved. Removal of this copyright notice without permission is not permitted under law.

REV	CHANGE	DR	BY	DSN	APV	DATE	REV	CHANGE	DR	BY	DSN	APV	DATE
C	COMPLETELY REVISED	-	LY	JS	CZH	03/18/2019	F	INSTALLATION UPDATE	EDM	MRF	GLW	KRG	10/21/2022
B	EDITORIAL CHANGES	-	JS	JS	MDJ	06/07/2017	E	DRAWING UPDATE	EDM	JES	JES	CZH	08/31/2021
A	COMPLETELY REVISED	-	JBH	JBH	MDJ	08/11/2016	D	TABLE UPDATE	EDM	RSL	JES	CZH	04/01/2020

ATTENTION:

* REFER TO PAGE 379.38 FOR ADDITIONAL INFORMATION.

15-FT DEADEND FIBERGLASS CROSSARM - WOOD POLE

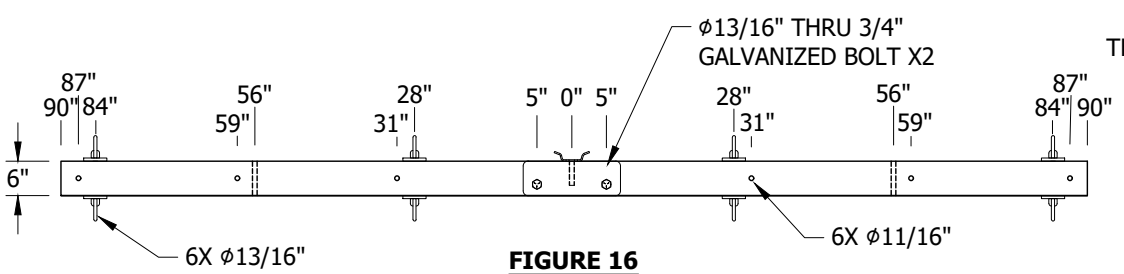

FIGURE 16
TOP VIEW

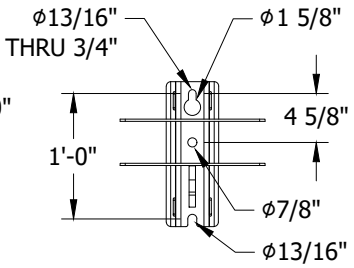

DETAIL 16
MOUNTING BRACKET
FRONT VIEW

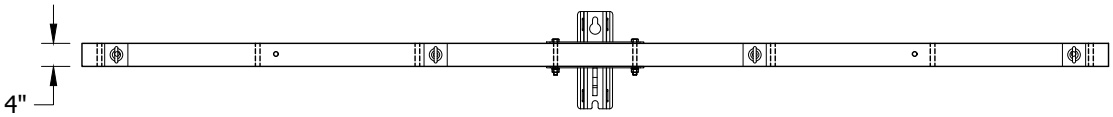

FIGURE 16
FRONT VIEW

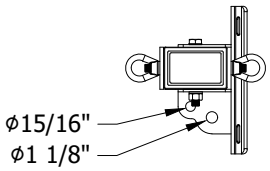

DETAIL 16
MOUNTING BRACKET
SIDE VIEW

TABLE OF CONTENTS

TABLE 16A

STOCK NUMBER	DESIGN UNITS	ASSEMBLED WEIGHT (LBS)	THRU BOLT DIAMETER (IN)
S294376	6LDF	133	3/4

TABLE 16B

ITEM	DISTANCE FROM CENTER OF BRACKET (X = WIRE POSITION ON ARM)							ALLOWABLE VERTICAL LOAD PER POSITION (LBS)	ALLOWABLE HORIZONTAL LOAD PER POSITION (LBS)	ALLOWABLE TRANSVERSE LOAD PER POSITION (LBS)
	84"	56"	28"		28"	56"	84"			
	ALLOWABLE LOAD (I)									
1			X	CENTER	X			2,643	4,375	2,500
2		X				X		1,365	3,750	2,500
3	X						X	1,050	1,875	2,500
4	X				X		X	833	646	2,289
5	X					X	X	621	323	2,289
6	X		X		X		X	833	1,875	1,717
7	X	X				X	X	650	1,250	1,717
8	X	X	X		X	X	X	555	1,250	1,145

© 1998 - 2022 San Diego Gas & Electric Company. All rights reserved. Removal of this copyright notice without permission is not permitted under law.

REV	CHANGE	DR	BY	DSN	APV	DATE	REV	CHANGE	DR	BY	DSN	APV	DATE
C	COMPLETELY REVISED	-	LY	JS	CZH	03/18/2019	F	INSTALLATION UPDATE	EDM	MRF	GLW	KRG	10/21/2022
B	EDITORIAL CHANGES	-	JS	JS	MDJ	06/07/2017	E	DRAWING UPDATE	EDM	JES	JES	CZH	08/31/2021
A	COMPLETELY REVISED	-	JBH	JBH	MDJ	08/11/2016	D	TABLE UPDATE	EDM	RSL	JES	CZH	04/01/2020

ATTENTION:

* REFER TO PAGE 379.38 FOR ADDITIONAL INFORMATION.

15-FT STACKED DEADEND FIBERGLASS CROSSARM - WOOD POLE

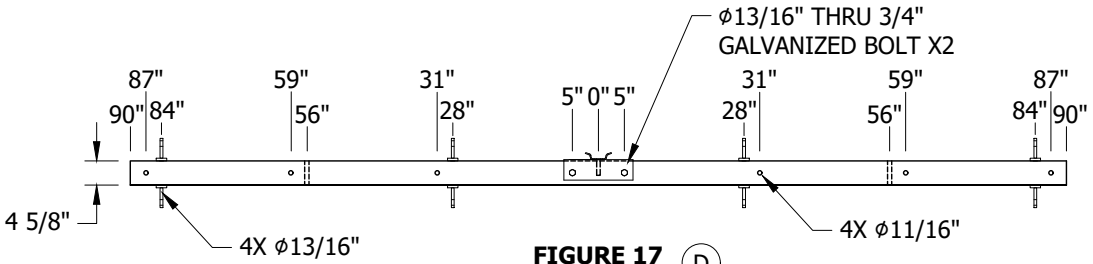

FIGURE 17 (D)
TOP VIEW

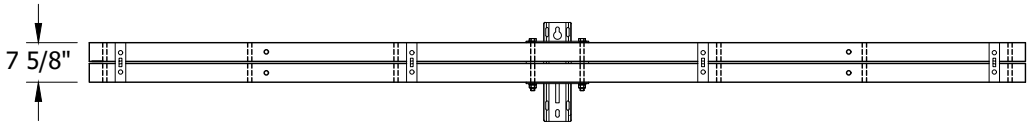

FIGURE 17 (D)
FRONT VIEW

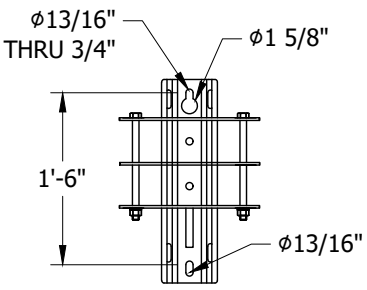

DETAIL 17
MOUNTING BRACKET
FRONT VIEW

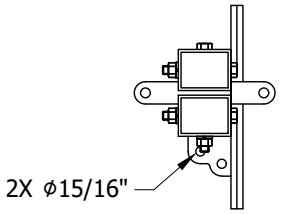

DETAIL 17
MOUNTING BRACKET
SIDE VIEW

TABLE 17A

STOCK NUMBER	DESIGN UNITS	ASSEMBLED WEIGHT (LBS)	THRU BOLT DIAMETER (IN)
S294394	15SDF	195	3/4

TABLE 17B

ITEM	DISTANCE FROM CENTER OF BRACKET (X = WIRE POSITION ON ARM)							ALLOWABLE VERTICAL LOAD PER POSITION (LBS)	ALLOWABLE HORIZONTAL LOAD PER POSITION (LBS)	ALLOWABLE TRANSVERSE LOAD PER POSITION (LBS)
	84"	56"	28"		28"	56"	84"			
	ALLOWABLE LOAD (I)									
1			X		X			5,000	5,625	2,500
2		X				X		2,607	5,625	2,500
3	X						X	1,738	3,378	2,500
4	X				X		X	1,131	870	2,289
5	X					X	X	587	435	2,289
6	X		X		X		X	1,304	2,813	1,717
7	X	X				X	X	1,043	2,235	1,717
8	X	X	X		X	X	X	869	1,875	1,145

© 1998 - 2022 San Diego Gas & Electric Company. All rights reserved. Removal of this copyright notice without permission is not permitted under law.

REV	CHANGE	DR	BY	DSN	APV	DATE	REV	CHANGE	DR	BY	DSN	APV	DATE
C	COMPLETELY REVISED	-	LY	JS	CZH	03/18/2019	F	INSTALLATION UPDATE	EDM	MRF	GLW	KRG	10/21/2022
B	EDITORIAL CHANGES	-	JS	JS	MDJ	06/07/2017	E	DRAWING UPDATE	EDM	JES	JES	CZH	08/31/2021
A	COMPLETELY REVISED	-	JBH	JBH	MDJ	08/11/2016	D	TABLE UPDATE	EDM	RSL	JES	CZH	04/01/2020

TABLE OF CONTENTS

ATTENTION:

* REFER TO PAGE 379.38 FOR ADDITIONAL INFORMATION.

15-FT FIBERGLASS ALLEY ARM W/ 2 BRACES - WOOD POLE

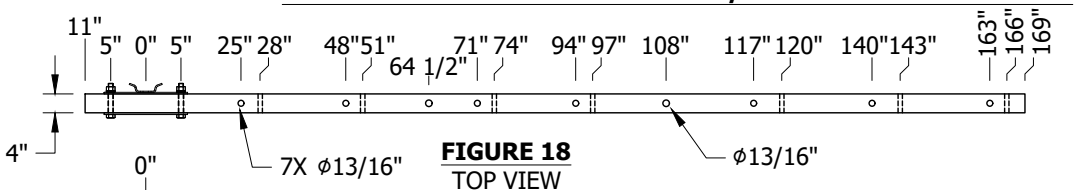

FIGURE 18
TOP VIEW

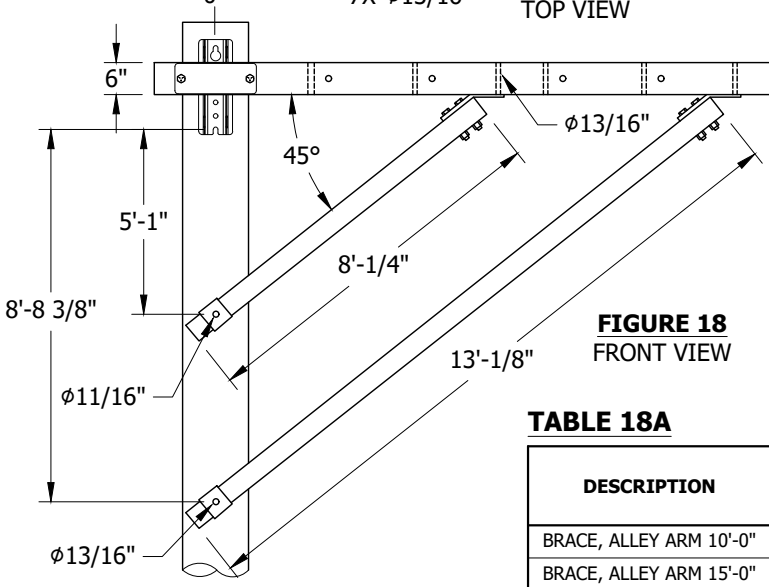

FIGURE 18
FRONT VIEW

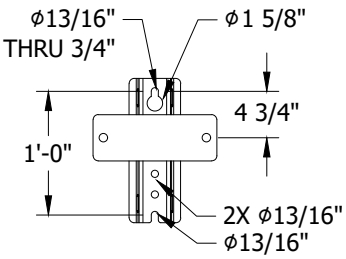

DETAIL 18
MOUNTING BRACKET

TABLE 18A

DESCRIPTION	STANDARD PAGE	STOCK NUMBER	DESIGN UNITS	WEIGHT (LBS)	ASSEMBLED WEIGHT (LBS)	THRU BOLT DIAMETER (IN)
BRACE, ALLEY ARM 10'-0"	391.3	S163946	10FGAB	21	-	-
BRACE, ALLEY ARM 15'-0"	391.3	S163950	15FGAB	31	-	-
15'-0" ALLEY ARM	-	S294106	15AA	133	171	3/4

TABLE 18B

ITEM	TYPE	DISTANCE FROM CENTER OF BRACKET (X = WIRE POSITION ON ARM)							ALLOWABLE VERTICAL LOAD PER POSITION (LBS)	ALLOWABLE HORIZONTAL LOAD PER POSITION (LBS)		ALLOWABLE TRANSVERSE LOAD PER POSITION (LBS)	
										STRAIGHT PIN (1" & 1 3/8" COBB)	ANGLE PIN	STRAIGHT PIN (1" & 1 3/8" COBB)	ANGLE PIN
		ALLOWABLE LOAD (I)											
		25"	48"	71"	94"	117"	140"	163"					
1	15FT TAN ALLEY	X		X			X		1,220	44	44	1,667	1,667
2		X			X			X	760	37	37	1,667	1,667
3			X		X	X			1,300	40	40	1,667	1,667
4			X		X		X		970	37	37	1,667	1,667
5			X		X			X	755	34	34	1,667	1,667
6		X		X		X		X	610	27	27	1,250	1,250
7		X	X	X	X	X	X		630	21	21	833	833
8			X	X	X	X	X	X	360	16	16	833	833
9		X	X	X	X	X	X	X	370	16	16	714	714
		28"	51"	74"	97"	120"	143"	166"					
1	15FT DE ALLEY	X		X			X		1,160	42		1,691	
2		X			X			X	720	35		1,691	
3			X		X	X			1,180	38		1,691	
4			X		X		X		890	35		1,691	
5			X		X			X	710	33		1,691	
6		X		X		X		X	575	27		1,691	
7		X	X	X	X	X	X		580	20		1,145	
8			X	X	X	X	X	X	340	16		1,145	
9		X	X	X	X	X	X	X	350	15		981	

© 1998 - 2022 San Diego Gas & Electric Company. All rights reserved. Removal of this copyright notice without permission is not permitted under law.

REV	CHANGE	DR	BY	DSN	APV	DATE	REV	CHANGE	DR	BY	DSN	APV	DATE
C	COMPLETELY REVISED	-	LY	JS	CZH	03/18/2019	F	INSTALLATION UPDATE	EDM	MRF	GLW	KRG	10/21/2022
B	EDITORIAL CHANGES	-	JS	JS	MDJ	06/07/2017	E	DRAWING UPDATE	EDM	JES	JES	CZH	08/31/2021
A	COMPLETELY REVISED	-	JBH	JBH	MDJ	08/11/2016	D	TABLE UPDATE	EDM	RSL	JES	CZH	04/01/2020

TABLE OF CONTENTS

INSTALLATION:

A. WHEN ATTACHING HARDWARE TO CROSSARM, USE SPRING LOCK WASHER AND TORQUE NO MORE THAN WHAT IS NEEDED TO CLOSE THE GAP OF THE LOCK WASHER (APPROXIMATELY 25 FT-LBS, MAXIMUM). OVER TORQUING HARDWARE MAY DAMAGE CROSSARM.

B. FIELD DRILLING IS ALLOWED IN ACCORDANCE WITH MANUFACTURER'S SPECIFICATIONS. CHECK CROSSARM UTILIZATION AGAINST CAPACITY VALUES LISTED ASSUMING CONDUCTORS ARE LOCATED ON AN OUTER PRE-DRILLED PIN LOCATION.

C. A 4-INCH X 4-INCH STEEL SQUARE FLAT WASHER (S800070) IS REQUIRED ON TOP AND BOTTOM SURFACES OF CROSSARM FOR ALL PIN-TYPE INSULATOR INSTALLATIONS.

(D) FOR 10-FOOT, 12-FOOT AND 15-FOOT STACKED CROSSARMS, INSTALLATION OF UNUSED T-PLATE HARDWARE IN THE VACANT POSITION IS PREFERRED.

BILL OF MATERIALS: NONE

NOTES:

(I) ALL ALLOWABLE LOADING INCLUDES A SAFETY FACTOR = 2.0.

II. ALLOWABLE VERTICAL LOADS ACCOUNT FOR 300 LBS ON ONE OUTERMOST POST.

III. ALLOWABLE HORIZONTAL LOAD PER POSITION WITH BACKSPANS OR GUYS WITH EQUIVALENT HORIZONTAL LOADS PROVIDED AT ASYMMETRICALLY LOADED POSITION. ALLOWABLE LOADS REFERENCED TO 1-INCH AND 1 3/8-INCH STEEL PINS AND ANGLE PINS ARE BASED ON PIN BEARING CAPACITY ON ARM AND NOT TRANSVERSE OR HORIZONTAL LOAD ON PIN. (C)

IV. ENSURE THE FOLLOWING CALCULATION IS NOT VIOLATED WHEN COMPARING APPLIED LOADS TO ALLOWABLE PER PHASE.

$$\frac{\text{(APPLIED VERTICAL LOAD)}}{\text{(ALLOWABLE VERTICAL LOAD)}} + \frac{\text{(APPLIED TRANSVERSE LOAD)}}{\text{(ALLOWABLE TRANSVERSE LOAD)}} + \frac{\text{(APPLIED HORIZONTAL LOAD)}}{\text{(ALLOWABLE HORIZONTAL LOAD)}} \leq 1$$

V. ABOVE LOADS VALID FOR CONNECTION TO WOOD POLES ONLY.

VI. THE USE OF DOUBLE ARMS IS ALLOWABLE WHEN NECESSARY. FOR DOUBLE ARMS, LOADING IS TWICE THE VALUE LISTED IN THE "ALLOWABLE LOAD" TABLES.

VII. ALLEY ARM HORIZONTAL LOADS EXCEEDING PUBLISHED VALUES SHALL BE COUNTERED BY BACKSPANS OR GUY WIRES WITH EQUIVALENT HORIZONTAL CAPACITIES AT EACH PIN POSITION. UTILIZATION TO BE CHECKED AGAINST NOTE IV.

REFERENCE:

a. FOR CONDUCTOR SPACING, SEE OH819.

b. FOR BONDING, SEE OH1003.

(c) FOR INSULATOR PIN STRENGTHS (HORIZONTAL AND TRANSVERSE LOADS ARE LIMITED TO PIN CAPACITY FOR ALL TANGENT STRUCTURES), SEE OH396.

d. FOR LINE ANGLE, SEE OH433.

e. FOR AVIAN FRAMING, SEE OH1650-OH1655.

f. FOR GUYING DEADENDS AND ARM GUYS, SEE OH927.

TABLE OF CONTENTS

© 1998 - 2022 San Diego Gas & Electric Company. All rights reserved. Removal of this copyright notice without permission is not permitted under law.

REV	CHANGE	DR	BY	DSN	APV	DATE	REV	CHANGE	DR	BY	DSN	APV	DATE
C	COMPLETELY REVISED	-	LY	JS	CZH	03/18/2019	F	INSTALLATION UPDATE	EDM	MRF	GLW	KRG	10/21/2022
B	EDITORIAL CHANGES	-	JS	JS	MDJ	06/07/2017	E	DRAWING UPDATE	EDM	JES	JES	CZH	08/31/2021
A	COMPLETELY REVISED	-	JBH	JBH	MDJ	08/11/2016	D	TABLE UPDATE	EDM	RSL	JES	CZH	04/01/2020

SCOPE: THIS STANDARD SHOWS VARIOUS TYPES OF CROSSARMS FOR USE IN DISTRIBUTION 4KV & SECONDARY SYSTEMS.

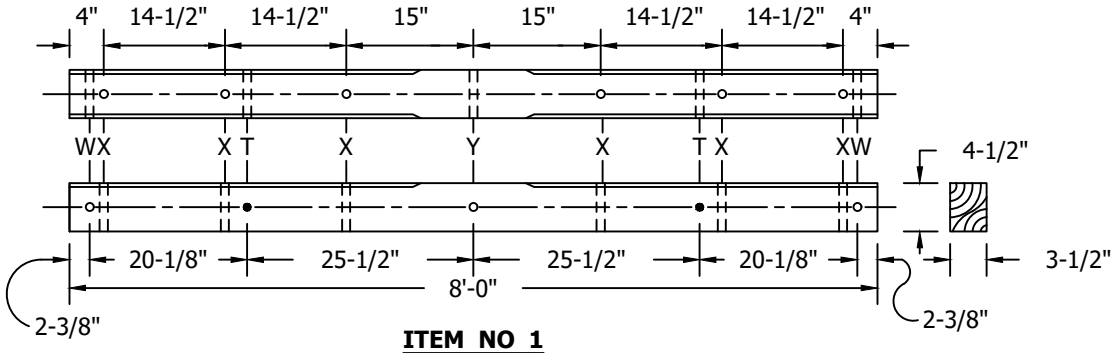

ITEM NO 1

(36" FLAT BRACES #164224) (A)

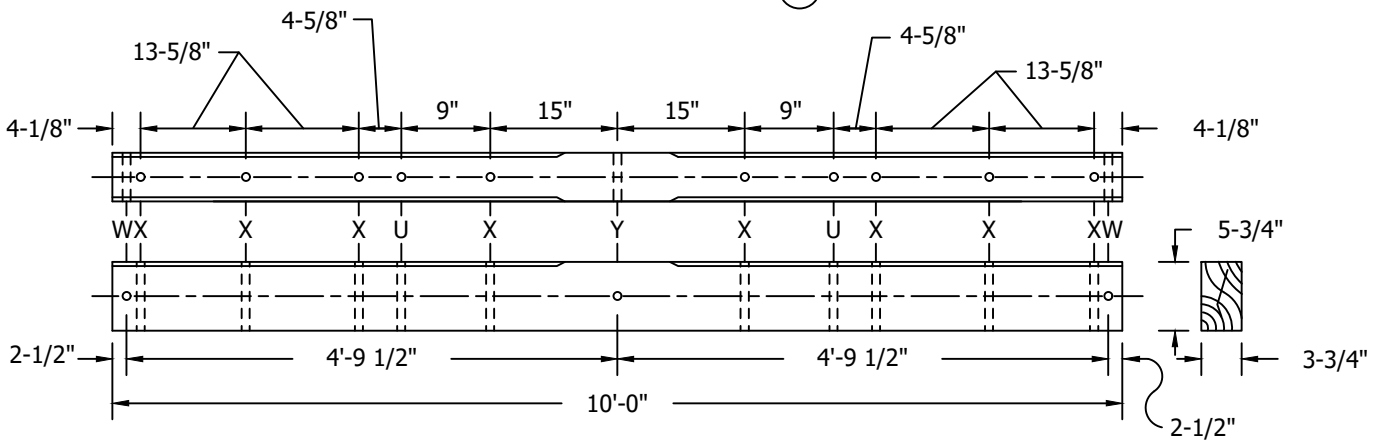

ITEM NO 2

(4' BRACE #164032)

INSTALLATION:

(A) THIS ARM SUPPLIED TO DISTRICT WITH 2-36" FLAT BRACES ATTACHED.

B. HOLE LEGEND:

T - BRACE BOLT HOLE 3/8" DIA.
U - BRACE BOLT HOLE 1/2" DIA.
W - SPACE BOLT HOLE 11/16" DIA.
X - PIN HOLE 11/16" DIA.
Y - THRU BOLT HOLE 11/16" DIA.

BILL OF MATERIALS:

ITEM	DESCRIPTION	STOCK NUMBER
1	CROSSARM, 6 PIN, TREATED, 3-1/2" X 4-1/2" X 8'	S293680
2	CROSSARM, 8 PIN, TREATED, 3-3/4" X 5-3/4" X 10'	S293696

NOTES:

I. 1/4" BEVELED OR ROUNDED EDGES ON TOP SIDE OF ALL ARMS.

REFERENCE: NONE

© 1998 - 2019 San Diego Gas & Electric Company. All rights reserved. Removal of this copyright notice without permission is not permitted under law.

REV	CHANGE	BY	DSGN	APPV	DATE	REV	CHANGE	BY	DSGN	APPV	DATE
C						F					
B	DRAWING UPDATE	PEI	-	-	03/18/2019	E					
A	ORIGINAL ISSUE	-	-	PTA/RDG	01/01/1994	D					

X Indicates Latest Revision | Completely Revised | New Page | Information Removed

SDG&E ELECTRIC OVERHEAD CONSTRUCTION STANDARDS

DISTRIBUTION LINE ARMS - 4KV & SECONDARY

OH380.1

TABLE OF CONTENTS

SCOPE: THIS STANDARD SHOWS VARIOUS TYPES OF CROSSARMS FOR USE IN DISTRIBUTION 12KV SYSTEMS.

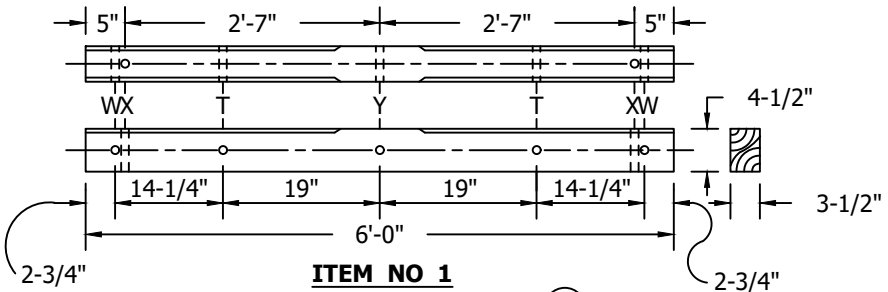

ITEM NO 1
(28" FLAT BRACES #164192) (B)

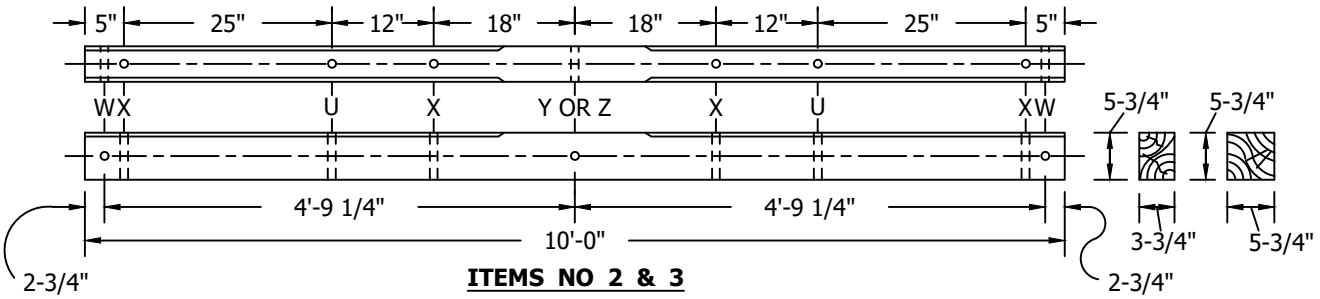

ITEMS NO 2 & 3
(5' BRACE #164128)

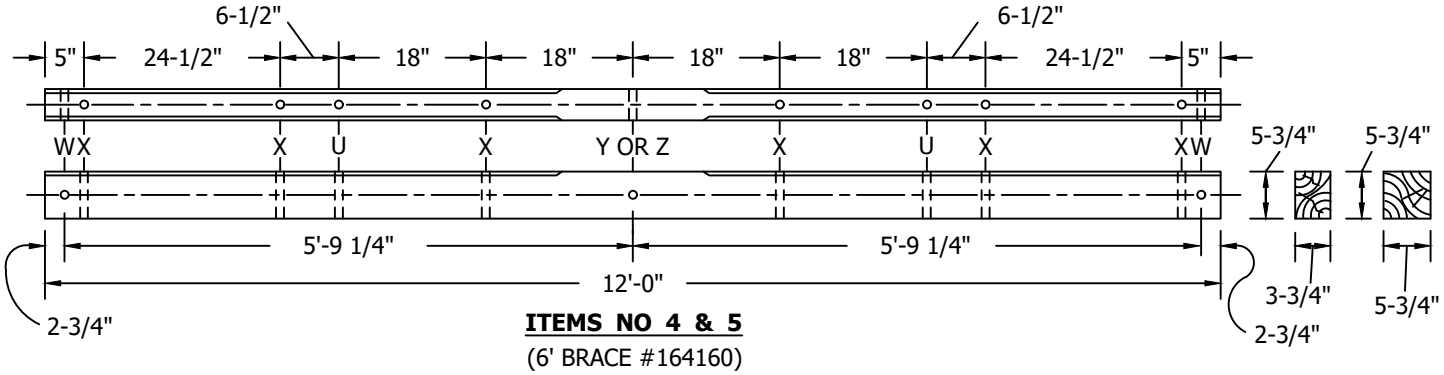

ITEMS NO 4 & 5
(6' BRACE #164160)

INSTALLATION:

A. HOLE LEGEND:

T - BRACE BOLT HOLE 3/8" DIA.
U - BRACE BOLT HOLE 1/2" DIA.
W - SPACE BOLT HOLE 11/16" DIA.
X - PIN HOLE 11/16" DIA.
Y - THRU BOLT HOLE 11/16" DIA. - 3-3/4" X 5-3/4" ARMS
Z - THRU BOLT HOLE 13/16" DIA. - 5-3/4" X 5-3/4" ARMS

(B) THIS ARM SUPPLIED TO DISTRICT WITH 2-28" FLAT BRACES ATTACHED.

© 1998 - 2019 San Diego Gas & Electric Company. All rights reserved. Removal of this copyright notice without permission is not permitted under law.

REV	CHANGE	BY	DSGN	APPV	DATE	REV	CHANGE	BY	DSGN	APPV	DATE
C						F					
B	DRAWING UPDATE	PEI	-	-	03/18/2019	E					
A	ORIGINAL ISSUE	-	-	PTA/RDG	01/01/1994	D					

X Indicates Latest Revision | Completely Revised | New Page | Information Removed

SDG&E ELECTRIC OVERHEAD CONSTRUCTION STANDARDS

DISTRIBUTION LINE ARMS - 12KV

OH380.2

TABLE OF CONTENTS

BILL OF MATERIALS:

ITEM	DESCRIPTION	STOCK NUMBER
1	CROSSARM, 2 PIN, TREATED, 3-1/2" X 4-1/2" X 6'	S294112
2	CROSSARM, 4 PIN, TREATED, 3-3/4" X 5-3/4" X 10'	S294128
3	CROSSARM, 4 PIN, TREATED, 5-3/4" X 5-3/4" X 10'	S294144
4	CROSSARM, 6 PIN, TREATED, 3-3/4" X 5-3/4" X 12'	S294160
5	CROSSARM, 6 PIN, TREATED, 5-3/4" X 5-3/4" X 12'	S294176

NOTES:

I. 1/4" BEVELED OR ROUNDED EDGES ON TOP SIDE OF ALL ARMS.

REFERENCE: NONE

TABLE OF CONTENTS

© 1998 - 2019 San Diego Gas & Electric Company. All rights reserved. Removal of this copyright notice without permission is not permitted under law.

REV	CHANGE	BY	DSGN	APPV	DATE	REV	CHANGE	BY	DSGN	APPV	DATE
C						F					
B	DRAWING UPDATE	PEI	-	-	03/18/2019	E					
A	ORIGINAL ISSUE	-	-	PTA/RDG	01/01/1994	D					

X Indicates Latest Revision | Completely Revised | New Page | Information Removed

SDG&E ELECTRIC OVERHEAD CONSTRUCTION STANDARDS

DISTRIBUTION LINE ARMS - 12KV

OH380.3

SCOPE: THIS STANDARD SHOWS VARIOUS TYPES OF CROSSARMS FOR USE IN DISTRIBUTION ALLEY ARM CONSTRUCTION FOR 4KV AND SECONDARY SYSTEMS.

ITEM #1
7'
ALLEY BRACE
#164352

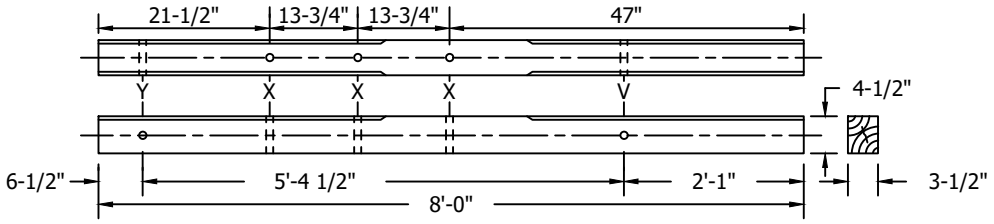

ITEM #2
7'
ALLEY BRACE
#164352

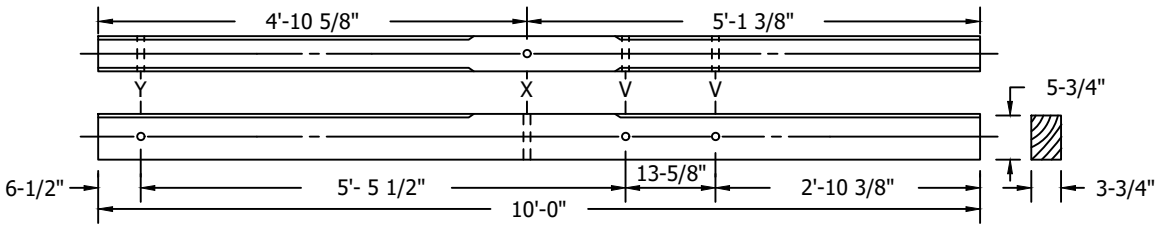

ITEM #3
7'
ALLEY BRACE
#164352

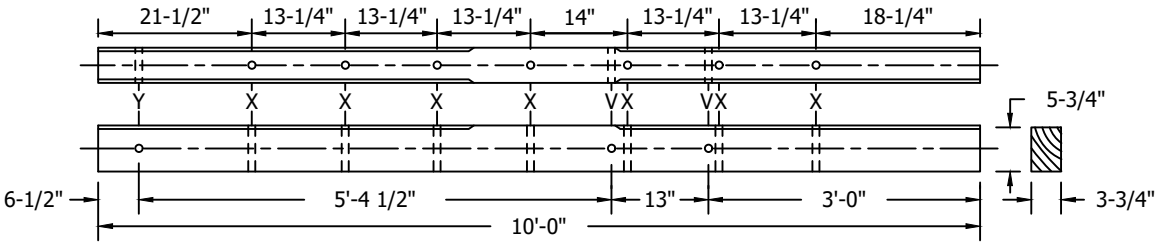

ITEM #4
10'
ALLEY BRACE
#164288

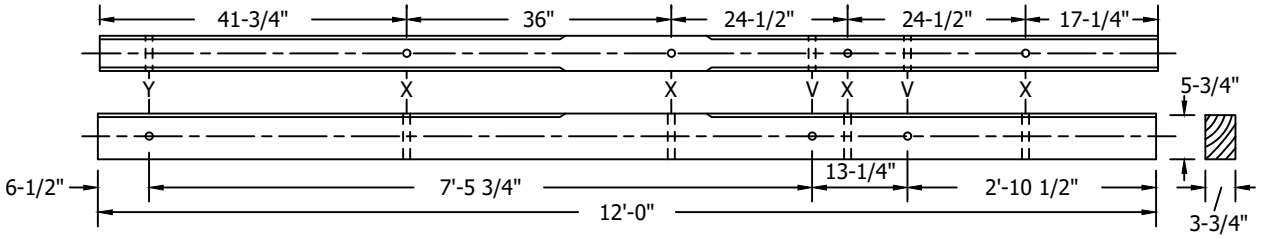

ITEM #5
10'
ALLEY BRACE
#164288

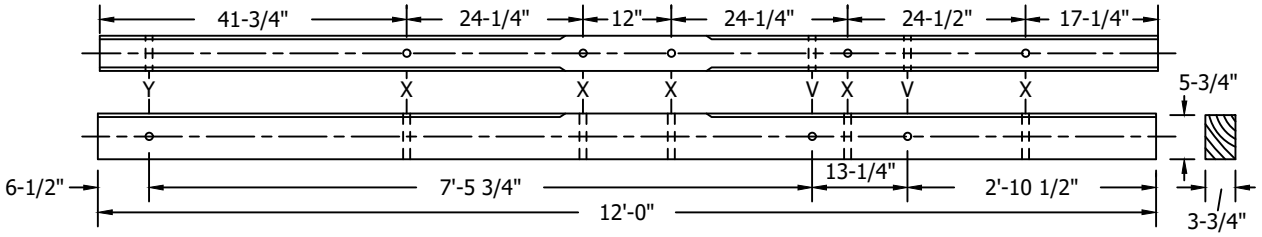

INSTALLATION:

A. HOLE LEGEND:
V - BRACE BOLT HOLE 5/8" DIA.
X - PIN HOLE 11/16" DIA.
Y - THRU BOLT HOLE 11/16" DIA.

TABLE OF CONTENTS

© 1998 - 2019 San Diego Gas & Electric Company. All rights reserved. Removal of this copyright notice without permission is not permitted under law.

REV	CHANGE	BY	DSGN	APPV	DATE	REV	CHANGE	BY	DSGN	APPV	DATE
C						F					
B	DRAWING UPDATE	PEI	-	-	03/18/2019	E					
A	ORIGINAL ISSUE	-	-	PTA/RDG	01/01/1994	D					

X Indicates Latest Revision | Completely Revised | New Page | Information Removed

SDG&E ELECTRIC OVERHEAD CONSTRUCTION STANDARDS

DISTRIBUTION ALLEY ARMS - 4 KV & SECONDARY

OH380.4

BILL OF MATERIALS:

ITEM	DESCRIPTION	STOCK NUMBER
1	ITEM 1 PG 380.1 DRILLED FOR 6 PIN TREATED ALLEY ARM	S293680
2	ITEM 2 PG 380.1 DRILLED FOR 7 PIN TREATED ALLEY ARM	S293696
3	ITEM 2 PG 380.2 DRILLED FOR 8 PIN TREATED ALLEY ARM	S294128
4	ITEM 4 PG 380.2 DRILLED FOR 9 PIN TREATED ALLEY ARM	S294160
5	ITEM 4 PG 380.2 DRILLED FOR 10 PIN TREATED ALLEY ARM	S294160

NOTES: NONE

REFERENCE: NONE

TABLE OF CONTENTS

© 1998 - 2019 San Diego Gas & Electric Company. All rights reserved. Removal of this copyright notice without permission is not permitted under law.

REV	CHANGE	BY	DSGN	APPV	DATE	REV	CHANGE	BY	DSGN	APPV	DATE
C						F					
B	DRAWING UPDATE	PEI	-	-	03/18/2019	E					
A	ORIGINAL ISSUE	-	-	PTA/RDG	01/01/1994	D					

X Indicates Latest Revision | Completely Revised | New Page | Information Removed

SDG&E ELECTRIC OVERHEAD CONSTRUCTION STANDARDS

DISTRIBUTION ALLEY ARMS - 4 KV & SECONDARY

OH380.5

SCOPE: THIS STANDARD SHOWS VARIOUS TYPES OF CROSSARMS FOR USE IN DISTRIBUTION ALLEY ARM CONSTRUCTION ALLEY ARM CONSTRUCTION FOR 12KV SYSTEMS.

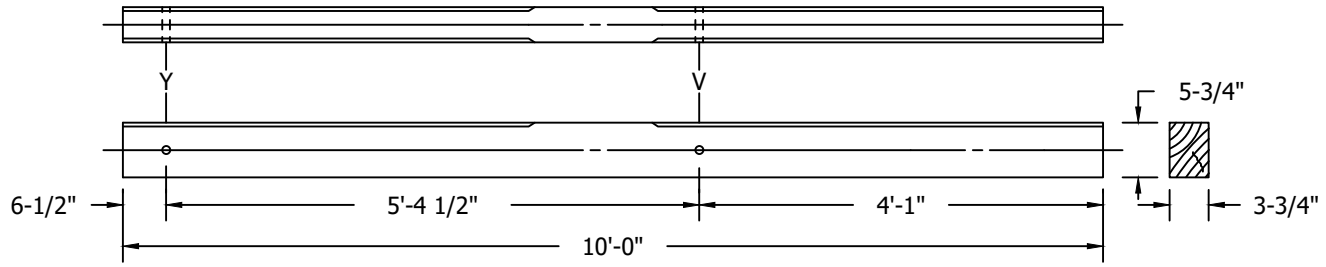

ITEM #1

(7' ALLEY BRACE #164352)

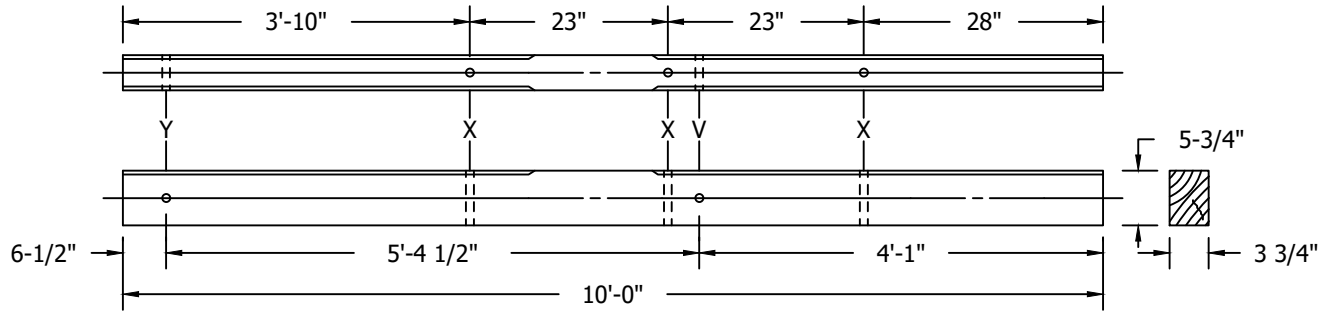

ITEM #2

(7' ALLEY BRACE #164352)

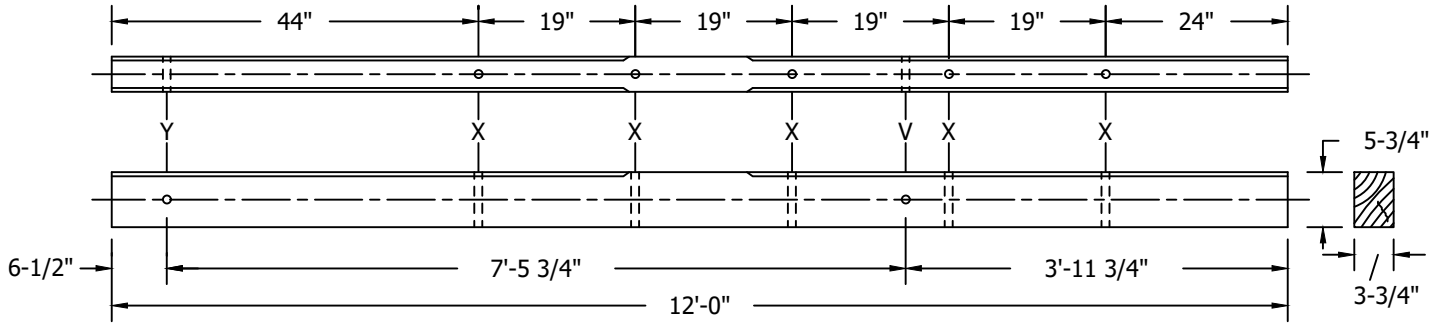

ITEM #3

(10' ALLEY BRACE #164288)

INSTALLATION:

A. HOLE LEGEND:

V - BRACE BOLT HOLE 5/8" DIA.
X - PIN HOLE 11/16" DIA.
Y - THRU BOLT HOLE 11/16" DIA.

© 1998 - 2019 San Diego Gas & Electric Company. All rights reserved. Removal of this copyright notice without permission is not permitted under law.

REV	CHANGE	BY	DSGN	APPV	DATE	REV	CHANGE	BY	DSGN	APPV	DATE
C						F					
B	DRAWING UPDATE	PEI	-	-	03/18/2019	E					
A	ORIGINAL ISSUE	-	-	PTA/RDG	01/01/1994	D					

X Indicates Latest Revision | Completely Revised | New Page | Information Removed

SDG&E ELECTRIC OVERHEAD CONSTRUCTION STANDARDS

SHEET 6 OF 10

DISTRIBUTION ALLEY ARMS - 12 KV PRIMARY

OH380.6

TABLE OF CONTENTS

BILL OF MATERIALS:

ITEM	DESCRIPTION	STOCK NUMBER
1	ITEM 2 PG 380.2 DRILLED FOR 3 PIN TREATED ALLEY ARM	S294128
2	ITEM 2 PG 380.2 DRILLED FOR 3 PIN TREATED ALLEY ARM	S294128
3	ITEM 4 PG 380.2 DRILLED FOR 6 PIN TREATED ALLEY ARM	S294160

NOTES: NONE

REFERENCE: NONE

TABLE OF CONTENTS

© 1998 - 2019 San Diego Gas & Electric Company. All rights reserved. Removal of this copyright notice without permission is not permitted under law.

REV	CHANGE	BY	DSGN	APPV	DATE	REV	CHANGE	BY	DSGN	APPV	DATE
C						F					
B	DRAWING UPDATE	PEI	-	-	03/18/2019	E					
A	ORIGINAL ISSUE	-	-	PTA/RDG	01/01/1994	D					

X Indicates Latest Revision | Completely Revised | New Page | Information Removed

SDG&E ELECTRIC OVERHEAD CONSTRUCTION STANDARDS

DISTRIBUTION ALLEY ARMS - 12 KV PRIMARY

OH380.7

SCOPE: THIS STANDARD SHOWS VARIOUS TYPES OF CROSSARMS FOR SPECIAL PURPOSE CONSTRUCTION IN THE DISTRIBUTION SYSTEM.

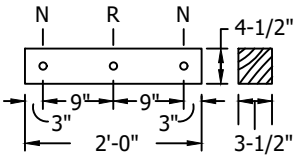

ITEM #1 - KICK ARM
(28" FLAT BRACES #164192)

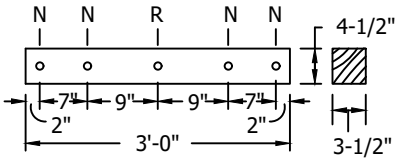

ITEM #2 - KICK ARM
(28" FLAT BRACES #164192)

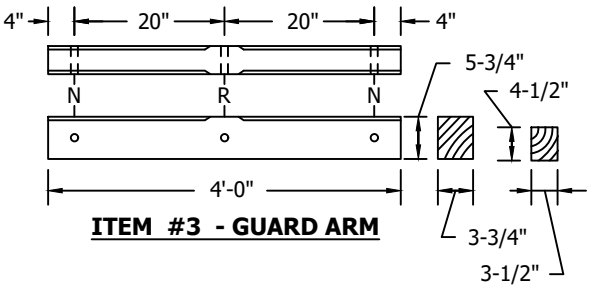

ITEM #3 - GUARD ARM

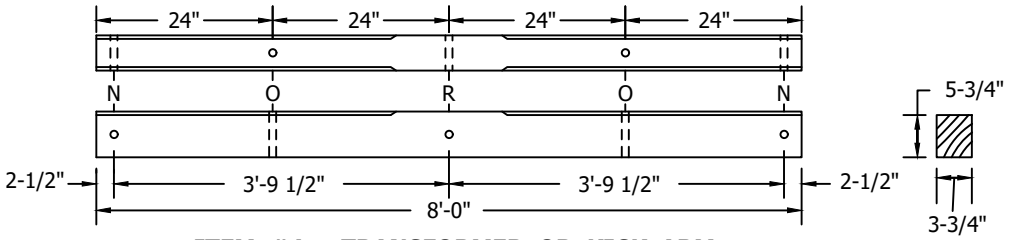

ITEM #4 - TRANSFORMER OR KICK ARM
(4' BRACE #164032)

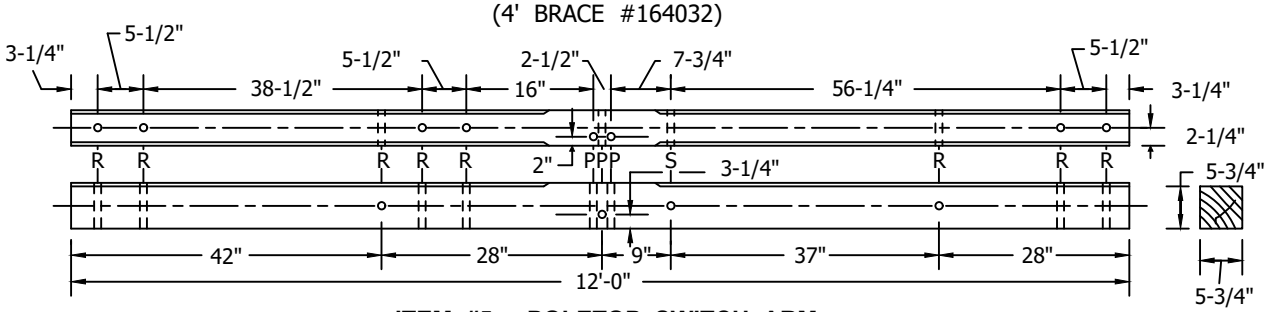

ITEM #5 - POLETOP SWITCH ARM
(4' SPECIAL BRACE #163808)

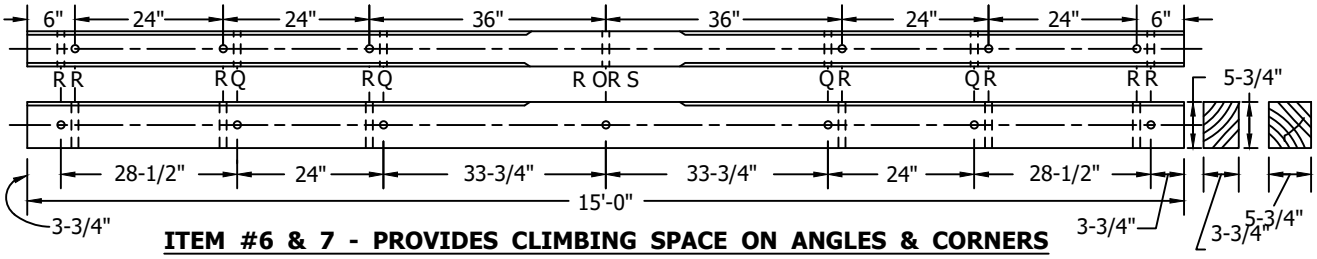

ITEM #6 & 7 - PROVIDES CLIMBING SPACE ON ANGLES & CORNERS

(4' SPECIAL BRACE #163808, OR
6' SPECIAL BRACE #163840)

INSTALLATION:

A. HOLE LEGEND:

N - 3/8" DIA. P - 9/16" DIA. R - 11/16" DIA. - 3-3/4" X 5-3/4" ARMS
O - 1/2" DIA. Q - 5/8" DIA. S - 13/16" DIA. - 5-3/4" X 5-3/4" ARMS

© 1998 - 2019 San Diego Gas & Electric Company. All rights reserved. Removal of this copyright notice without permission is not permitted under law.

REV	CHANGE	BY	DSGN	APPV	DATE	REV	CHANGE	BY	DSGN	APPV	DATE
C						F					
B	DRAWING UPDATE	PEI	-	-	03/18/2019	E					
A	ORIGINAL ISSUE	-	-	PTA/RDG	01/01/1994	D					

X Indicates Latest Revision | Completely Revised | New Page | Information Removed

SDG&E ELECTRIC OVERHEAD CONSTRUCTION STANDARDS

SHEET 8 OF 10

DISTRIBUTION SPECIAL PURPOSE ARMS

OH380.8

TABLE OF CONTENTS

BILL OF MATERIALS:

ITEM	DESCRIPTION	STOCK NUMBER
1	3-1/2" X 4-1/2" X 2', TREATED	S293968
2	3-1/2" X 4-1/2" X 3', TREATED	S293744
3	3-1/2" X 4-1/2" OR 3-3/4" X 5-3/4", TREATED	S294000
4	3-3/4" X 5-3/4" X 8', TREATED	S294960
5	ADDITIONAL DRILLING TO CONVERT ITEM 5 PG 380.2 TO POLETOP SWITCH	-
6	3-3/4" X 5-3/4" X 15', TREATED	S293712
7	5-3/4" X 5-3/4" X 15', TREATED	S293728

NOTES:

I. ITEMS 1 THRU 3 ARE NO LONGER PURCHASED. OBTAIN THESE FROM SALVAGE.
II. ITEMS 6 & 7: 1/4", BEVELED OR ROUNDED EDGES ON TOP SIDE OF ARMS.

REFERENCE: NONE

TABLE OF CONTENTS

© 1998 - 2019 San Diego Gas & Electric Company. All rights reserved. Removal of this copyright notice without permission is not permitted under law.

REV	CHANGE	BY	DSGN	APPV	DATE	REV	CHANGE	BY	DSGN	APPV	DATE
C						F					
B	DRAWING UPDATE	PEI	-	-	03/18/2019	E					
A	ORIGINAL ISSUE	-	-	PTA/RDG	01/01/1994	D					

X Indicates Latest Revision | Completely Revised | New Page | Information Removed

SDG&E ELECTRIC OVERHEAD CONSTRUCTION STANDARDS

DISTRIBUTION SPECIAL PURPOSE ARMS

OH380.9

SCOPE: THIS STANDARD PROVIDES VARIOUS ASSEMBLY UNITS FOR DISTRIBUTION CROSSARMS.

12KV DISTRIBUTION LINEARMS		
DESCRIPTION	**ASSEMBLY UNITS**	**SAP CU**
1-2 PIN STD ARM W/STD BRACE	2	2PIN
1-2 PIN STD ARM W/O BRACE	2-	2-
1-2 PIN STD ARM W/STD BRACE-BUCK	2B	2-PIN
2-2 PIN STD ARM W/STD BRACE	D2	D2
2-2 PIN STD ARM W/STD BRACE-BUCK	D2B	D2
1-4 PIN STD ARM W/STD BRACE	4	4PIN
1-4 PIN STD ARM W/O BRACE	4-	4-
1-4 PIN STD ARM W/STD BRACE-BUCK	4B	4PIN
1-4 PIN HVY ARM W/STD BRACE	4H	4H
1-4 PIN HVY ARM W/O BRACE	4H-	4H-
1-4 PIN HVY ARM W/STD BRACE-BUCK	4BH	4H
2-4 PIN STD ARM W/STD BRACE	D4	D4
2-4 PIN STD ARM W/STD BRACE-BUCK	D4B	D4
2-4 PIN HVY ARM W/STD BRACE	D4H	D4H
2-4 PIN HVY ARM W/STD BRACE-BUCK	D4BH	D4H
1-6 PIN STD ARM W/STD BRACE	6	6PIN
1-6 PIN STD ARM W/O BRACE	6-	6-
1-6 PIN STD ARM W/STD BRACE-BUCK	6B	6PIN
1-6 PIN HVY ARM W/STD BRACE	6H	6H
1-6 PIN HVY ARM W/O BRACE	6H-	6H-
1-6 PIN HVY ARM W/STD BRACE-BUCK	6BH	6H
2-6 PIN STD ARM W/STD BRACE	D6	D6
2-6 PIN STD ARM W/STD BRACE-BUCK	D6B	D6
2-6 PIN HVY ARM W/STD BRACE	D6H	D6H
2-6 PIN HVY ARM W/STD BRACE-BUCK	D6BH	D6H
1-6 PIN 15' STD ARM W/SPEC BRACE	6L	6L
1-6 PIN 15' STD ARM W/O BRACE	6L-	6L-
1-6 PIN 15' STD ARM W/SPEC BRACE-BUCK	6BL	6L
1-6 PIN 15' HVY ARM W/SPEC BRACE	6HL	6HL
1-6 PIN 15' HVY ARM W/O BRACE	6HL-	6HL-
1-6 PIN 15' HVY ARM W/SPEC BRACE-BUCK	6BHL	6HL
2-6 PIN 15' STD ARM W/SPEC BRACE	D6L	D6L
2-6 PIN 15' STD ARM W/SPEC BRACE-BUCK	D6BL	D6L
2-6 PIN 15' HVY ARM W/SPEC BRACE	D6HL	D6HL
2-6 PIN 15' HVY ARM W/SPEC BRACE-BUCK	D6HL	D6HL

INSTALLATION: NONE

BILL OF MATERIALS: NONE

NOTES: NONE

REFERENCE: NONE

© 1998 - 2019 San Diego Gas & Electric Company. All rights reserved. Removal of this copyright notice without permission is not permitted under law.

REV	CHANGE	BY	DSGN	APPV	DATE	REV	CHANGE	BY	DSGN	APPV	DATE
C						F					
B	DRAWING UPDATE	PEI	-	-	03/18/2019	E					
A	ORIGINAL ISSUE	-	-	KN/DW	01/01/1994	D					

X Indicates Latest Revision | Completely Revised | New Page | Information Removed

SDG&E ELECTRIC OVERHEAD CONSTRUCTION STANDARDS

DISTRIBUTION CROSSARMS ASSEMBLY UNITS

TABLE OF CONTENTS

SCOPE: THIS STANDARD DESCRIBES THE METHOD OF SIZING AND DETERMINING THE CONDUCTOR VERTICAL LOADING ON WOOD CROSSARMS.

THE FOLLOWING PROCEDURES ARE USED WHEN DETERMINING VERTICAL LOADING ON CROSSARMS:

STEP 1: A) DETERMINE 1/2 THE LENGTH OF EACH ADJACENT SPAN AND ADD THEM TOGETHER; OR,

B) IF AN ADJACENT SPAN HAS A CHANGE IN ELEVATION, THEN THE FOLLOWING FORMULA SHALL BE USED TO DETERMINE 1/2 THE SPAN LENGTH (SEE FIG. 1).

$$X = \frac{D}{2} + \frac{HT}{DW}$$

WHERE: X = 1/2 THE ADJACENT SPAN IN FEET
D = HORIZONTAL DISTANCE BETWEEN SUPPORTS IN FEET
H = DIFFERENCE IN ELEVATION OF SUPPORTS IN FEET
T = CONDUCTOR TENSION IN POUNDS
W = WEIGHT PER CONDUCTOR IN POUNDS PER FOOT

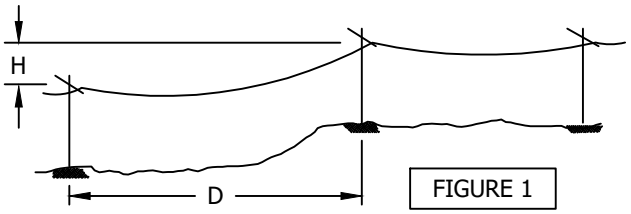

FIGURE 1

STEP 2: FIND THE WEIGHT PER FOOT OF THE CONDUCTOR (W) UNDER THE PROPER LOADING COLUMN FROM PAGE 381.2.

STEP 3: MULTIPLY THE SPAN LENGTH DETERMINED IN STEP 1 BY THE CONDUCTOR WEIGHT FOUND IN STEP 2. THIS ANSWER GIVES THE THEORETICAL VERTICAL LOADING PER CONDUCTOR ON THE CROSSARM (SEE NOTE).

STEP 4: FROM STANDARD 382, SELECT THE APPROPRIATE SINGLE OR DOUBLE CROSSARM WITH AN ALLOWABLE VERTICAL LOADING GREATER THAN THE VERTICAL LOADING DETERMINED IN STEP 3 (SEE NOTE).

EXAMPLE:

PROBLEM: DETERMINE THE VERTICAL LOADING PER PIN POSITION ON P2 CROSSARM (SEE FIG. 2).

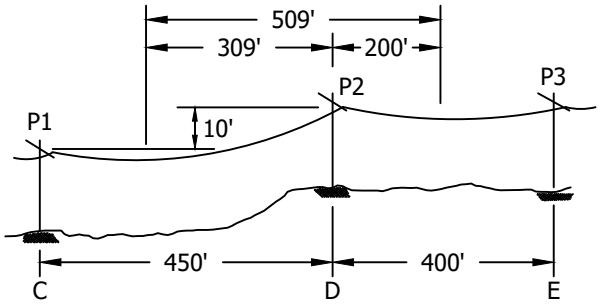

FIGURE 2

ASSUME: LIGHT LOADING DISTRICT.
CONDUCTOR STRUNG = 4 CONDUCTORS, #636 ACSR
TENSION = 3000 LBS PER CONDUCTOR

SOLUTION: A) $X = \left[\frac{450}{2} + \frac{10(3000)}{450 \times .79}\right]_{\text{SPAN CD}} + \underbrace{\frac{(400)}{2}}_{\text{SPAN DE}} = 309' + 200' = 509'$

B) FROM STANDARD PAGE 381.2 FOR 636 ACSR IN LIGHT LOADING, W = .79 LBS/FT

C) THE ACTUAL VERTICAL LOADING PER CONDUCTOR ON P2 CROSSARM = .79 LBS/FT X 509 FT = 402 LBS (SEE NOTE).

D) FROM STANDARD 382, IT IS DETERMINED THAT A SINGLE 4 PIN 12 KV HEAVY 10 FOOT CROSSARM WITH A MAXIMUM LOADING OF 598 LBS PER CONDUCTOR IS REQUIRED.

CONCLUSION: A SINGLE 4.12 KV, 10 FOOT HEAVY CROSSARM MEETS THE REQUIREMENTS OF THE EXAMPLE PROBLEM.

© 1998 - 2019 San Diego Gas & Electric Company. All rights reserved. Removal of this copyright notice without permission is not permitted under law.

REV	CHANGE	BY	DSGN	APPV	DATE	REV	CHANGE	BY	DSGN	APPV	DATE
C						F					
B	DRAWING UPDATE	PEI	-	-	03/18/2019	E					
A	ORIGINAL ISSUE	-	-	PTA/MC	08/04/2009	D					

X Indicates Latest Revision | Completely Revised | New Page | Information Removed

SDG&E ELECTRIC OVERHEAD CONSTRUCTION STANDARDS

SHEET 1 OF 3

CONDUCTOR DESIGN - VERTICAL LOADING

OH381.1

TABLE OF CONTENTS

CONDUCTOR SIZES BARE	LIGHT/EXTREME WIND LOADING LBS/FT ONE WIRE	HEAVY LOADING LBS/FT ONE WIRE	EXTRA HEAVY LBS/FT ONE WIRE
1033.5 KCM ACSR	1.14	2.21	3.90
636 KCM ACSR	.79	1.71	3.25
397.5 KCM ACSR	.52	1.32	2.75
394.5 KCM 5005	.37	(I) -	(I) -
336.4 KCM ACSR 26/7	.44	1.20	2.59
336.4 KCM ACSR 18/1	.36	(I) -	(I) -
4/0 ACSR	.28	(I) -	(I) -
4/0 COPPER	.65	1.29	2.56
3/0 AWAC	(I) .28	.92	2.18
3/0 5005	.18	(I) -	(I) -
3/0 ACSR	.22	(I) -	(I) -
1/0 AWAC	(I) .23	.82	2.04
2/0 COPPER	.41	.98	2.18
1/0 ACSR	.14	(I) -	(I) -
1/0 5005	.12	(I) -	(I) -
#2 AWAC 3/4	(I) .20	.75	1.93
1/0 COPPER	.33	.87	2.03
#2 AWAC 5/2	(I) .11	(I) -	(I) -
#1 COPPER	.26	.78	1.92
#2 5005	.07	(I) -	(I) -
#2 ACSR	.09	(I) -	(I) -
#2 COPPER	.20	.71	1.85
#4 COPPER	.13	.60	1.69
#4 5005	.05	(I) -	(I) -
#4 ACSR	.05	(I) -	(I) -
#4A COPPERWELD	.16	.65	1.77
#6 COPPER	.08	.52	1.58
#6A COPPERWELD	.10	.56	1.64
#8 COPPER	.05	.44	1.46
WEATHERPROOF (SINGLE CONDUCTOR)			
336.4 KCM ALUMINUM	.39	(I) -	(I) -
4/0 COPPER	.72	1.43	2.78
3/0 ALUMINUM	.21	(I) -	(I) -
1/0 COPPER	.37	.99	2.24
1/0 ALUMINUM	.14	(I) -	(I) -
#2 COPPER	.23	.79	1.97
#4 COPPER	.14	.62	1.72
#6 COPPER	.09	.54	1.62

TABLE OF CONTENTS

INSTALLATION: NONE

BILL OF MATERIALS: NONE

© 1998 - 2019 San Diego Gas & Electric Company. All rights reserved. Removal of this copyright notice without permission is not permitted under law.

REV	CHANGE	BY	DSGN	APPV	DATE	REV	CHANGE	BY	DSGN	APPV	DATE
C						F					
B	DRAWING UPDATE	PEI	-	-	03/18/2019	E					
A	ORIGINAL ISSUE	-	-	PTA/MC	08/04/2009	D					

X Indicates Latest Revision | Completely Revised | New Page | Information Removed

NOTES:

(I) CONDUCTOR IS NOT TO BE USED UNDER THESE LOADING CONDITIONS.
VERTICAL LOADING (LBS/FT) = 0.311 [D+2r) $-D^2$] +(WEIGHT OF CONDUCTOR)

II. WHERE D = CONDUCTOR DIAMETER (INCHES), r = RADIAL THICKNESS OF ICE (INCHES), r = 0 FOR LIGHT LOADING DISTRICT; 0.50 FOR HEAVY LOADING DISTRICT; 1.0 FOR EXTRA HEAVY LOADING DISTRICT

III. G.O. 95 REQUIRES THAT 200 LBS BE ADDED AT THE OUTER PIN POSITION OF THE CROSSARM IN ADDITION TO THE ACTUAL VERTICAL LOADING OF THE CONDUCTORS. THIS ADDITIONAL 200 LBS IS INCLUDED IN THE TABLE VALUES FROM STANDARD 382. IF THE TABLES OF STANDARD 382 ARE NOT USED, THEN 200 LBS MUST BE ADDED TO THE VALUE CALCULATION IN STEP 3.

REFERENCE: NONE

TABLE OF CONTENTS

© 1998 - 2019 San Diego Gas & Electric Company. All rights reserved. Removal of this copyright notice without permission is not permitted under law.

REV	CHANGE	BY	DSGN	APPV	DATE	REV	CHANGE	BY	DSGN	APPV	DATE
C						F					
B	DRAWING UPDATE	PEI	-	-	03/18/2019	E					
A	ORIGINAL ISSUE	-	-	PTA/MC	08/04/2009	D					

SCOPE: THIS STANDARD SHOWS THE MAXIMUM PERMISSIBLE VERTICAL LOADING PER PIN POSITION ON CROSSARMS.

ARM CONFIGURATION			LOADING (LBS)
6 PIN 8 FT PG 380.1 - ITEM 1	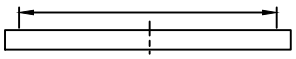 2 PIN SPACING 88"	SINGLE	262
		DOUBLE	725
	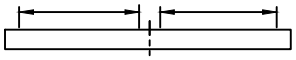 4 PIN SPACING 29"	SINGLE	196
		DOUBLE	541
	 6 PIN SPACING 14 1/2"	SINGLE	130
		DOUBLE	360
2 PIN 6 FT PG 380.2 - ITEM 1	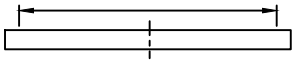 2 PIN SPACING 62"	SINGLE	457
		DOUBLE	1112
	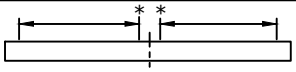 4 PIN SPACING 16"	SINGLE	308
		DOUBLE	750
4 PIN 10 FT PG 380.2 - ITEM 2	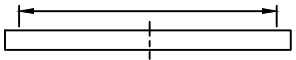 2 PIN SPACING 110"	SINGLE	449
		DOUBLE	1099
	 3 PIN SPACING	SINGLE	338
		DOUBLE	829
	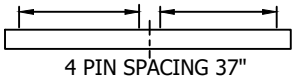 4 PIN SPACING 37"	SINGLE	338
		DOUBLE	829
6 PIN 12 FT PG 380.2 - ITEM 4	 2 PIN SPACING 134"	SINGLE	333
		DOUBLE	866
	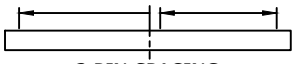 3 PIN SPACING	SINGLE	262
		DOUBLE	683
	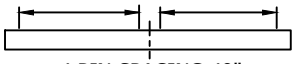 4 PIN SPACING 49"	SINGLE	262
		DOUBLE	683
	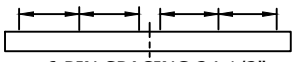 6 PIN SPACING 24 1/2"	SINGLE	175
		DOUBLE	455
	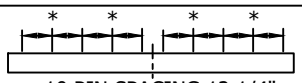 10 PIN SPACING 12 1/4"	SINGLE	105
		DOUBLE	273

ARM CONFIGURATION			LOADING (LBS)
8 PIN 10 FT PG 380.1 - ITEM 2	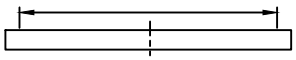 2 PIN SPACING 111 3/4"	SINGLE	439
		DOUBLE	1078
	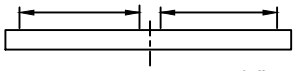 4 PIN SPACING 40 7/8"	SINGLE	346
		DOUBLE	850
	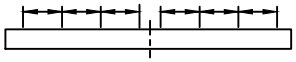 8 PIN SPACING 13 5/8"	SINGLE	173
		DOUBLE	425
ARM CONFIGURATION (HEAVY)			**LOADING (LBS)**
4 PIN 10 FT PG 380.2 - ITEM 3	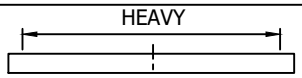 HEAVY 2 PIN SPACING 110"	SINGLE	794
		DOUBLE	1790
	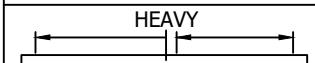 HEAVY 3 PIN SPACING	SINGLE	598
		DOUBLE	1348
	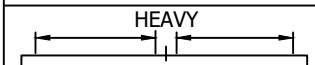 HEAVY 4 PIN SPACING 37"	SINGLE	598
		DOUBLE	1348
6 PIN 12 FT PG 380.2 - ITEM 5	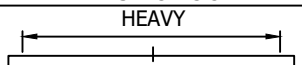 HEAVY 2 PIN SPACING 134"	SINGLE	616
		DOUBLE	1433
	 HEAVY 3 PIN SPACING	SINGLE	486
		DOUBLE	1130
	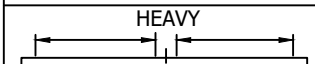 HEAVY 4 PIN SPACING 49"	SINGLE	486
		DOUBLE	1130
	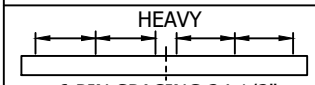 HEAVY 6 PIN SPACING 24 1/2"	SINGLE	324
		DOUBLE	753

TABLE OF CONTENTS

© 1998 - 2019 San Diego Gas & Electric Company. All rights reserved. Removal of this copyright notice without permission is not permitted under law.

REV	CHANGE	BY	DSGN	APPV	DATE	REV	CHANGE	BY	DSGN	APPV	DATE
C						F					
B	DRAWING UPDATE	PEI	-	-	03/18/2019	E					
A	ORIGINAL ISSUE	-	-	PTA/RDG	01/01/1987	D					

X Indicates Latest Revision | Completely Revised | New Page | Information Removed

SDG&E ELECTRIC OVERHEAD CONSTRUCTION STANDARDS

MAXIMUM CONDUCTOR LOADING ON CROSSARM VERTICAL LOADING

OH382.1

ARM CONFIGURATION			STANDARD ARM CONSTRUCTION						HEAVY ARM CONSTRUCTION					
			LOADING (LBS) BY POLE CLASS			GRADE OF CONSTRUCTION			LOADING (LBS) BY POLE CLASS			GRADE OF CONSTRUCTION		
			1	3	5	A	B	C	1	3	5	A	B	C
6 PIN 15 FT PG 380.5 - ITEM 6 & 7	2 PIN SPACING 168"	SINGLE	402	402	402	X	X	X	697	697	697	-	X	X
			-	-	-	-	-	-	697	632	499	X	-	-
		DOUBLE	772	632	499	X	-	-	772	632	499	X	-	-
			992	897	726	-	X	-	1082	897	726	-	X	-
			992	992	992	-	-	X	1580	1410	1160	-	-	X
	4 PIN SPACING 48"	SINGLE	316	316	316	X	X	X	547	547	547	-	X	X
			-	-	-	-	-	-	547	495	392	X	-	-
		DOUBLE	605	495	392	X	-	-	606	495	392	X	-	-
			778	704	569	-	X	-	848	704	569	-	X	-
			778	778	778	-	-	X	1240	1110	915	-	-	X
	6 PIN SPACING 24"	SINGLE	211	211	211	X	X	X	366	366	366	-	X	X
			-	-	-	-	-	-	366	332	262	X	-	-
		DOUBLE	405	332	262	X	-	-	405	332	262	X	-	-
			521	471	381	-	X	-	568	471	381	-	X	-
			521	521	521	-	-	X	831	745	612	-	-	X
	7 PIN SPACING 24" & 22"	SINGLE	190	190	190	X	X	X	330	330	330	-	X	X
			-	-	-	-	-	-	330	297	232	X	-	-
		DOUBLE	367	297	232	X	-	-	367	297	232	X	-	-
			470	429	344	-	X	-	520	429	344	-	X	-
			470	470	470	-	-	X	750	687	562	-	-	X

INSTALLATION: NONE

BILL OF MATERIALS: NONE

NOTES:

I. (*) INDICATES FIELD DRILLED PIN HOLES.
II. 15 FT. CROSSARM LOADING LIMITED BY THE CAPACITY OF POLE ATTACHMENTS.
III. LOADINGS CALCULATED WITH INDICATED PIN SPACING AND ARE PER PIN POSITION.
IV. TABLE VALUES ARE BASED ON LONG TERM LOADING. THE 200 LBS REQUIRED BY G.O. 95 RULE 46 ARE INCLUDED IN THE PRECEDING TABLES.

REFERENCE: NONE

© 1998 - 2019 San Diego Gas & Electric Company. All rights reserved. Removal of this copyright notice without permission is not permitted under law.

REV	CHANGE	BY	DSGN	APPV	DATE	REV	CHANGE	BY	DSGN	APPV	DATE
C						F					
B	DRAWING UPDATE	PEI	-	-	03/18/2019	E					
A	ORIGINAL ISSUE	-	-	PTA/RDG	01/01/1987	D					

X Indicates Latest Revision | Completely Revised | New Page | Information Removed

SDG&E ELECTRIC OVERHEAD CONSTRUCTION STANDARDS

MAXIMUM CONDUCTOR LOADING ON CROSSARM VERTICAL LOADING

OH382.2

TABLE OF CONTENTS

SCOPE: THIS PAGE SHOWS THE MAXIMUM PERMISSIBLE DEAD-END TENSION PER PIN POSITION ALLOWED ON DOUBLE CROSSARMS.

HORIZONTAL LOADING

DOUBLE ARMS ARE TO BE USED WHEN DEAD-ENDING PRIMARY CONDUCTORS. USE THE FOLLOWING PROCEDURES TO DETERMINE THE CORRECT SIZE AND TYPE OF CROSSARM TO DEAD-END CONDUCTORS.

1. DETERMINE THE MAXIMUM TENSION FOR THE CONDUCTOR TO BE INSTALLED.
2. DETERMINE THE TOTAL NUMBER OF CONDUCTORS TO BE INSTALLED.
3. FROM PAGE 383.2 AND 383.3, LOCATE THE CROSSARMS WHICH HAVE THE SAME OR MORE DEAD-END POSITIONS AS THE NUMBER OF CONDUCTORS.
4. FROM THE CROSSARMS DETERMINED IN (3) ABOVE; SELECT ONLY THOSE WHICH SHOW LOADINGS GREATER THAN THE MAXIMUM CONDUCTOR GUYING TENSION DETERMINED IN (1) ABOVE.
5. DETERMINE IF IT IS A LONG TERM OR SHORT TERM LOADING (SEE G.O. 95, RULE 48.1.A.) 6. BASED ON ECONOMICS AND DESIGN REQUIREMENTS, SELECT THE PROPER CROSSARM

EXAMPLE:

GIVEN:

- FOUR 3/0 ACSR CONDUCTORS TO BE DEAD-ENDED ON CROSSARMS.

- SPAN LENGTH IS 300 FEET.

- DETERMINE THE CROSSARMS TO DEAD-END THE CONDUCTORS ON.

SOLUTION

1. THE MAXIMUM GUYING TENSION FOR THE 3/0 ACSR CONDUCTOR IS 1850 POUNDS PER CONDUCTOR.
2. 4-3/0 ACSR CONDUCTORS WILL BE INSTALLED.
3. FROM PAGES 383.2 AND 383.3, THE CROSSARMS WITH FOUR OR MORE DEAD-END POSITIONS AND LOADINGS GREATER THAN THE MAXIMUM CONDUCTOR GUYING TENSION ARE SUMMARIZED BELOW.

CROSSARM CONFIGURATION	MAXIMUM CONDUCTOR DESIGN TENSION	HORIZONTAL LOADINGS
4 PIN 10FT, HEAVY	1850 LBS	2778 (SHORT TERM)
6 PIN 12FT, HEAVY	"	2202 (SHORT TERM)
6 PIN 12FT, HEAVY	"	2416 (SHORT TERM)

4. SELECT THE PROPER CROSSARM BASED ON ECONOMICS AND DESIGN REQUIREMENTS.

TABLE OF CONTENTS

© 1998 - 2019 San Diego Gas & Electric Company. All rights reserved. Removal of this copyright notice without permission is not permitted under law.

REV	CHANGE	BY	DSGN	APPV	DATE	REV	CHANGE	BY	DSGN	APPV	DATE
C						F					
B	DRAWING UPDATE	PEI	-	-	03/18/2019	E					
A	ORIGINAL ISSUE	-	-	PTA/RDG	01/01/1987	D					

X Indicates Latest Revision | Completely Revised | New Page | Information Removed

SDG&E ELECTRIC OVERHEAD CONSTRUCTION STANDARDS

MAXIMUM CONDUCTOR LOADING ON CROSSARM HORIZONTAL LOADING

OH383.1

ARM CONFIGURATION		THRU-BOLT SIZE	LOADING(LBS) SHORT TERM	LOADING(LBS) LONG TERM
6 PIN 8 FT PG 380.1 - ITEM 1	 SPACING 91 1/4"	5/8"	1396	767
		3/4"	1351	743
	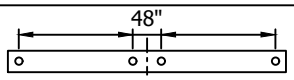 48" SPACING 21 5/8"	5/8"	915	503
		3/4"	885	487
8 PIN 10 FT PG 380.1 - ITEM 2	 SPACING 115"	5/8"	1689	929
		3/4"	1649	907
	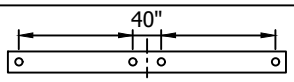 40" SPACING 37 1/2"	5/8"	996	548
		3/4"	973	535
	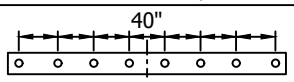 40" SPACING 12 1/2"	5/8"	626	344
		3/4"	612	336
2 PIN 6 FT PG 380.2 - ITEM 1	 SPACING 66 1/2"	5/8"	1916	1054
		3/4"	1855	1020
4 PIN 10 FT PG 380.2 - ITEM 2	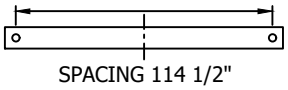 SPACING 114 1/2"	5/8"	1696	933
		3/4"	1656	911
	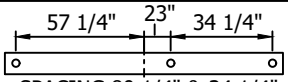 57 1/4" 23" 34 1/4" SPACING 80 1/4" & 34 1/4"	5/8"	1210	665
		3/4"	1181	649
	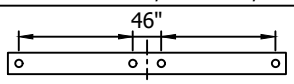 46" SPACING 34 1/4"	5/8"	1210	665
		3/4"	1182	650
4 PIN 10 FT PG 380.2 - ITEM 3	HEAVY 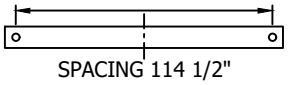 SPACING 114 1/2"	5/8"	3988	2193
		3/4"	3894	2142
	HEAVY 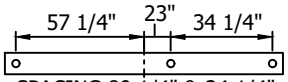 57 1/4" 23" 34 1/4" SPACING 80 1/4" & 34 1/4"	5/8"	2845	1564
		3/4"	2777	1527
	HEAVY 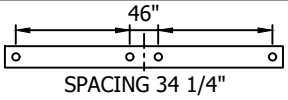 46" SPACING 34 1/4"	5/8"	2845	1565
		3/4"	2778	1528

ARM CONFIGURATION		THRU-BOLT SIZE	LOADING(LBS) SHORT TERM	LOADING(LBS) LONG TERM
6 PIN 12 FT PG 380.2 ITEM 4 & 5	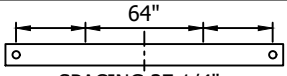 64" SPACING 37 1/4"	5/8"	959	527
		3/4"	936	515
	HEAVY 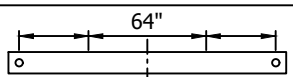 64" SPACING 37 1/4"	5/8"	2255	1240
		3/4"	2202	1211
6 PIN 12 FT PG 380.2 - ITEM 4	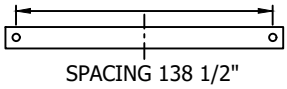 SPACING 138 1/2"	5/8"	1402	771
		3/4"	1369	753
	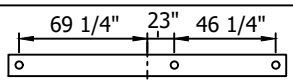 69 1/4" 23" 46 1/4" SPACING 92 1/4" & 46 1/4"	5/8"	1052	579
		3/4"	1027	564
	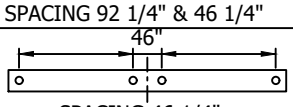 46" SPACING 46 1/4"	5/8"	1053	579
		3/4"	1028	565
	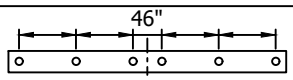 46" SPACING 23 1/8"	5/8"	702	386
		3/4"	685	376
	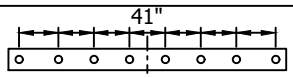 41" SPACING 16 1/4"	5/8"	541	297
		3/4"	528	290
6 PIN 12 FT PG 380.5 - ITEM 5	HEAVY  SPACING 138 1/2"	5/8"	3297	1813
		3/4"	3219	1770
	HEAVY 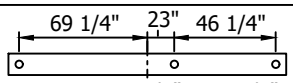 69 1/4" 23" 46 1/4" SPACING 92 1/4" & 46 1/4"	5/8"	2472	1360
		3/4"	2414	1327
	HEAVY 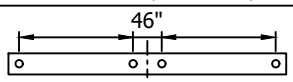 46" SPACING 46 1/4"	5/8"	2475	1361
		3/4"	2416	1329
	HEAVY 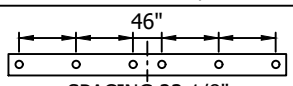 46" SPACING 23 1/8"	5/8"	1649	907
		3/4"	1610	885

TABLE OF CONTENTS

© 1998 - 2019 San Diego Gas & Electric Company. All rights reserved. Removal of this copyright notice without permission is not permitted under law.

REV	CHANGE	BY	DSGN	APPV	DATE	REV	CHANGE	BY	DSGN	APPV	DATE
C						F					
B	DRAWING UPDATE	PEI	-	-	03/18/2019	E					
A	ORIGINAL ISSUE	-	-	PTA/RDG	01/01/1987	D					

X Indicates Latest Revision | Completely Revised | New Page | Information Removed

SDG&E ELECTRIC OVERHEAD CONSTRUCTION STANDARDS

MAXIMUM CONDUCTOR LOADING ON CROSSARM HORIZONTAL LOADING

OH383.2

ARM CONFIGURATION		THRU-BOLT SIZE	LOADING (LBS) SHORT TERM	LOADING (LBS) LONG TERM
6 PIN 15 FT PG 380.5 - ITEM 6	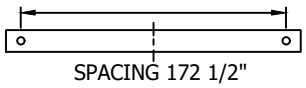 SPACING 172 1/2"	5/8"	1126	619
		3/4"	1099	604
	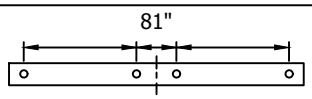 81" SPACING 45 7/8"	5/8"	765	421
		3/4"	747	411
	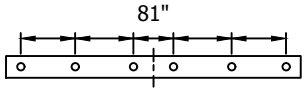 81" SPACING 22 7/8"	5/8"	510	280
		3/4"	498	274
	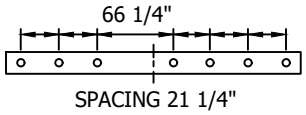 66 1/4" SPACING 21 1/4"	5/8"	446	245
		3/4"	435	239

ARM CONFIGURATION		THRU-BOLT SIZE	LOADING (LBS) SHORT TERM	LOADING (LBS) LONG TERM
6 PIN 15 FT PG 380.5 - ITEM 7	HEAVY 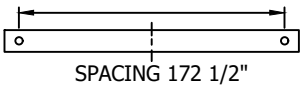 SPACING 172 1/2"	5/8"	2647	1456
		3/4"	2584	1421
	HEAVY 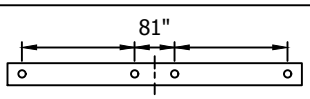 81" SPACING 45 3/4"	5/8"	1801	991
		3/4"	1758	967
	HEAVY 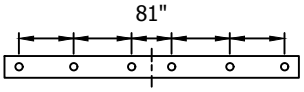 81" SPACING 22 7/8"	5/8"	1200	660
		3/4"	1172	644
	HEAVY 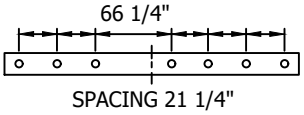 66 1/4" SPACING 21 1/4"	5/8"	1048	576
		3/4"	1023	562

INSTALLATION: NONE

BILL OF MATERIALS: NONE

NOTES:

I. LOADINGS ARE PER CONDUCTOR, CALCULATED WITH INDICATED DEAD-END SPACING, BUILT ON DOUBLE CROSSARM CONFIGURATIONS.

II. SINGLE ARM WILL BE USED WHEN DEAD-ENDING CONDUCTORS SLACK SPAN CONSTRUCTION (SEE STD. 820.1).

REFERENCE: NONE

TABLE OF CONTENTS

© 1998 - 2019 San Diego Gas & Electric Company. All rights reserved. Removal of this copyright notice without permission is not permitted under law.

REV	CHANGE	BY	DSGN	APPV	DATE	REV	CHANGE	BY	DSGN	APPV	DATE
C						F					
B	DRAWING UPDATE	PEI	-	-	03/18/2019	E					
A	ORIGINAL ISSUE	-	-	PTA/RDG	01/01/1987	D					

X Indicates Latest Revision | Completely Revised | New Page | Information Removed

SDG&E ELECTRIC OVERHEAD CONSTRUCTION STANDARDS

MAXIMUM CONDUCTOR LOADING ON CROSSARM HORIZONTAL LOADING

OH383.3

SCOPE: THIS STANDARD SHOWS DOUBLE ARMING BRACKETS, AND IS USED TO INCREASE THE BREAKING STRENGTH OF A DOUBLE OR TRIPLE ARM ASSEMBLY WHERE ARM GUYS ARE NOT POSSIBLE.

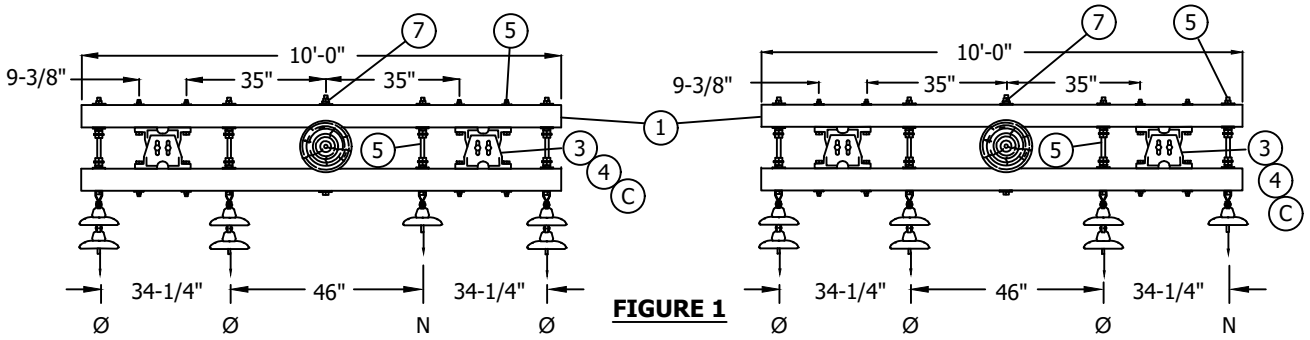

FIGURE 1

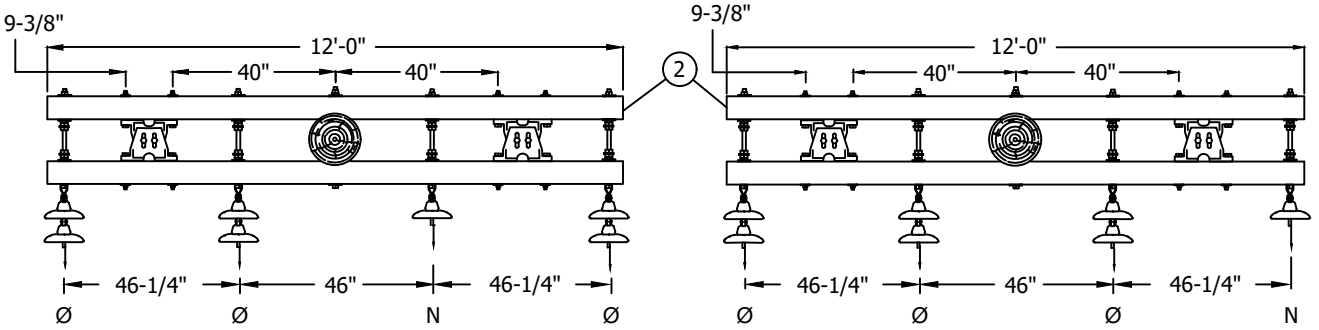

FIGURE 2

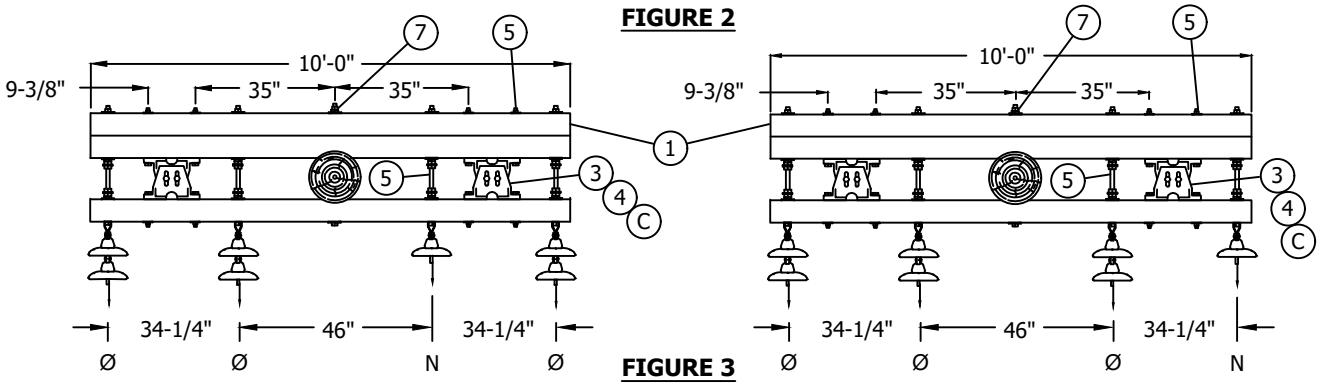

FIGURE 3

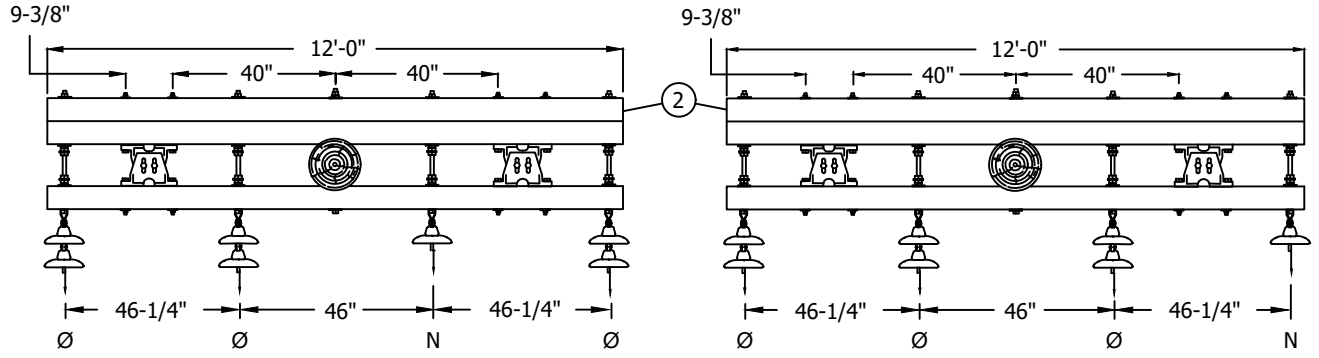

FIGURE 4

© 1998 - 2019 San Diego Gas & Electric Company. All rights reserved. Removal of this copyright notice without permission is not permitted under law.

REV	CHANGE	BY	DSGN	APPV	DATE	REV	CHANGE	BY	DSGN	APPV	DATE
C						F					
B	DRAWING UPDATE	PEI	-	-	03/18/2019	E					
A	ORIGINAL ISSUE	-	-	PTA/MC	01/08/2008	D					

X Indicates Latest Revision | Completely Revised | New Page | Information Removed

SDG&E ELECTRIC OVERHEAD CONSTRUCTION STANDARDS

DOUBLE AND TRIPLE CROSSARMS
WITH DOUBLE ARMING BRACKETS

OH384.1

TABLE OF CONTENTS

TABLE 1 (A)

CROSS-ARM				MAXIMUM LOAD PER CONDUCTOR (LBS)			
				W/O DOUBLE ARMING BRACKET		WITH DOUBLE ARMING BRACKET	
TYPE	NO. OF ARMS	FIGURE	LENGTH	SHORT TERM	LONG TERM	SHORT-TERM	LONG-TERM
HEAVY 5-3/4" X 5-3/4"	2	1	10'	2780	1530	3170	1730
		2	12'	2415	1330	2800	1530
	3	3	10'	3840	2110	4275	2350
		4	12'	3340	1840	3715	2045

INSTALLATION:

(A) STRENGTH OF WOOD POLE MUST BE VERIFIED FOR THE CONDUCTOR LOADS LISTED IN TABLE 1.

(B) REDUCE QUANTITIES AS REQUIRED WHEN NOT USING NEUTRAL.

(C) POLE DIAMETERS OVER 13-1/2" REQUIRE THE USE OF AN EXTENSION PLATE. ORDER TWO PER CROSSARM LEVEL MAXIMUM DIAMETER OF POLE WITH EXTENSION PLATE IS 20-1/2".

BILL OF MATERIALS:

ITEM	DESCRIPTION		QUANTITY	CONST STD OR PAGE NO	STOCK NUMBER	ASSEMBLY UNITS
1	CROSS ARM, 5-3/4" X 5-3/4" X 10'-0"		SEE TABLE 1	-	S294144	-
2	CROSS ARM, 5-3/4" X 5-3/4" X 12'-0"		SEE TABLE 1	-	S294176	-
3	DOUBLE ARMING BRACKET	POLE DIAMETER 6-3/4" TO 10-1/2"	2	-	S165792	DAB10A DAB10G
		POLE DIAMETER 10-1/2" TO 13-1/2"	2	-	S165796	DAB13A DAB13G
4	DOUBLE ARMING BRACKET EXTENSION PLATE (C)		AS REQ'D	-	S165444	DABEXT
5	BOLT, MACH., GALV 5/8" X (LENGTH AS REQ'D), & 1 DBL. COIL SPRING WASHER		4	392.1 & .2	-	-
6	BOLT, SPACE, GALV., 3/4" X (LENGTH AS REQ'D) 3 SQ., 1 RD. & 2 DBL. COIL SPRING WASHER		4 (B)	392.1 & .2	-	-
7	BOLT, MACH., GALV., 3/4" X (LENGTH AS REQ'D) 2 SQ. & 1 DBL. COIL SPRING WASHER		1	392.1 & .2	-	-

NOTES: NONE

REFERENCE: NONE

TABLE OF CONTENTS

© 1998 - 2019 San Diego Gas & Electric Company. All rights reserved. Removal of this copyright notice without permission is not permitted under law.

REV	CHANGE	BY	DSGN	APPV	DATE	REV	CHANGE	BY	DSGN	APPV	DATE
C						F					
B	DRAWING UPDATE	PEI	-	-	03/18/2019	E					
A	ORIGINAL ISSUE	-	-	PTA/MC	01/08/2008	D					

X Indicates Latest Revision | Completely Revised | New Page | Information Removed

SDG&E ELECTRIC OVERHEAD CONSTRUCTION STANDARDS

DOUBLE AND TRIPLE CROSSARMS
WITH DOUBLE ARMING BRACKETS

OH384.2

SCOPE: THIS STANDARD SHOWS ALL WEATHERING & GALVANIZED STEEL CROSSARMS AND GIVES THEIR ALLOWABLE LOADING VALUES. THESE CROSSARMS CAN BE USED ON STEEL POLES. **POLE LOADING STUDY REQUIRED.**

10FT DEADEND STEEL CROSSARM

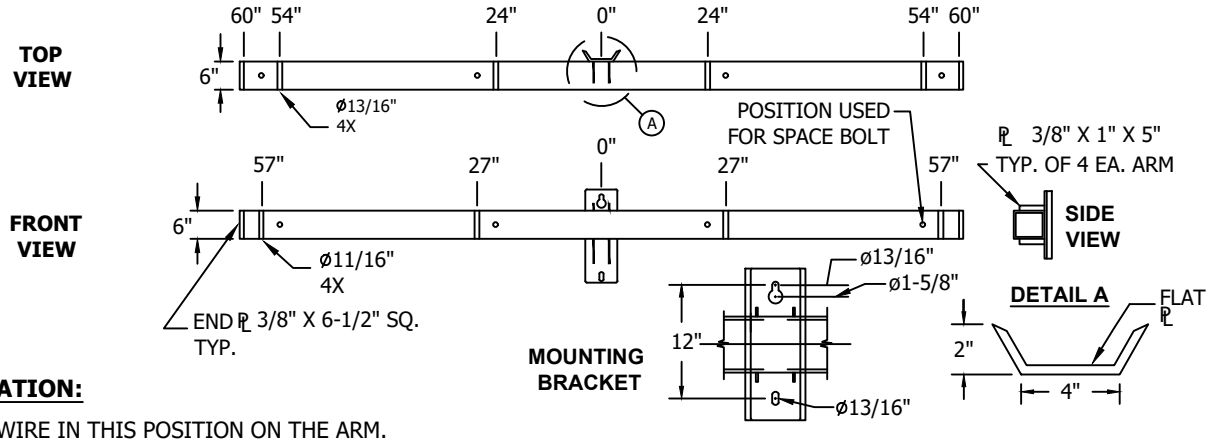

INSTALLATION:

A. "X" = WIRE IN THIS POSITION ON THE ARM.
B. ALL ALLOWABLE LOADS INCLUDE REDUCTION FACTORS PER AISC SPECIFICATION FOR STRUCTURAL STEEL BUILDINGS.
C. ALLOWABLE VERTICAL LOADS INCLUDE 200LBS ON ONE OUTERMOST POSITION.
D. *ALLOWABLE VERTICAL LOAD PER POSITION ASSUMES HORIZONTAL AND TRANSVERSE LOADING IS ZERO.
E. **ALLOWABLE HORIZONTAL LOAD PER POSITION ASSUMES VERTICAL AND TRANSVERSE LOADING IS ZERO.
F. ***ALLOWABLE TRANSVERSE LOAD PER POSITION ASSUMES VERTICAL AND HORIZONTAL LOADING IS ZERO.
G. ADDITIONAL TRANSVERSE LOADING DUE TO THE EXTREME WIND CONDITION SHALL BE ADDED TO THE APPLIED LOAD CALCULATIONS BY TAKING CONDUCTOR DIAMETER MULTIPLIED BY THE HALF SPAN LENGTHS MULTIPLIED BY 18.5LBS PER SQUARE INCH.
H. REFER TO ANGLE CHART FOR ANGULAR CONSTRUCTION.
J. INSURE THE FOLLOWING CALCULATION IS NOT VIOLATED WHEN COMPARING APPLIED LOADS TO ALLOWABLE LOADS:

$$\frac{\text{(APPLIED VERTICAL LOAD)}}{\text{(ALLOWABLE VERTICAL LOAD)}} + \frac{\text{(APPLIED HORIZONTAL LOAD)}}{\text{(ALLOWABLE HORIZONTAL LOAD)}} + \frac{\text{(APPLIED TRANSVERSE LOAD)}}{\text{(ALLOWABLE TRANSVERSE LOAD)}} \leq 1$$

K. ABOVE LOADS VALID FOR CONNECTION TO STEEL POLES ONLY.

TABLE 1 - ALLOWABLE LOADING OF 10FT DEADEND STEEL CROSSARM

TYPE	AU	SAP CU	STOCK NUMBER	TOTAL ALLOWABLE VERTICAL MOMENT (FT-LBS)	TOTAL ALLOWABLE HORIZONTAL MOMENT (FT-LBS)	TOTAL ALLOWABLE TRANSVERSE LOAD (LBS)	DISTANCE FROM CENTER 54"	24"	CENTER	24"	54"	*ALLOWABLE VERTICAL LOAD PER POS (LBS)	**ALLOWABLE HORIZONTAL LOAD PER POS (LBS)	***ALLOWABLE TRANSVERSE LOAD PER POS (LBS)
10FT DE	4DSW	10TSW	S294180 (WEATHERING)	5,300	947	10,600		X		X		1,840	6,900	1,840
							X				X	1,840	6,900	1,840
								X		X	X	895	211	1,840
	4DSG	10TSG	S294186 (GALVANIZED)				X			X	X	1,725	474	1,840
							X	X		X	X	1,840	4,970	1,840

BILL OF MATERIALS: NONE

NOTES:

I. FOR USE ON STEEL POLES ONLY.
II. WEIGHT = 325 LBS.
III. FIELD DRILLING IS PERMISSIBLE USING CARBIDE TIPPED DRILL BIT. ENSURE MINIMUM HORIZONTAL CONDUCTOR SPACING, OR GREATER, IS MAINTAINED BEFORE FIELD DRILLING (OH STD. 819). RE-COAT GALVANIZED SURFACES AFTER DRILLING AS NEEDED.
IV. HOLES SHALL BE NO CLOSER THAN 2 INCHES CENTER-TO-CENTER AND NO LARGER THAN 13/16 INCHES IN DIAMETER. THROUGH BOLT, SPACE BOLT, AND RELATED HARDWARE SHALL BE A MINIMUM OF 3/4" OR LARGER.

REFERENCE: NONE

© 1998 - 2019 San Diego Gas & Electric Company. All rights reserved. Removal of this copyright notice without permission is not permitted under law.

REV	CHANGE	BY	DSGN	APPV	DATE	REV	CHANGE	BY	DSGN	APPV	DATE
C						F					
B	DRAWING UPDATE	PEI	-	-	03/18/2019	E					
A	ORIGINAL ISSUE	-	-	KN/DW	01/06/2014	D					

X Indicates Latest Revision | Completely Revised | New Page | Information Removed

SDG&E ELECTRIC OVERHEAD CONSTRUCTION STANDARDS

WEATHERING & GALVANIZED STEEL CROSSARMS - 10FT DEADEND

OH385.1

TABLE OF CONTENTS

SCOPE: THIS STANDARD SHOWS ALL WEATHERING & GALVANIZED STEEL CROSSARMS AND GIVES THEIR ALLOWABLE LOADING VALUES. THESE CROSSARMS CAN BE USED ON STEEL POLES. **POLE LOADING STUDY REQUIRED.**

10FT TANGENT STEEL CROSSARM

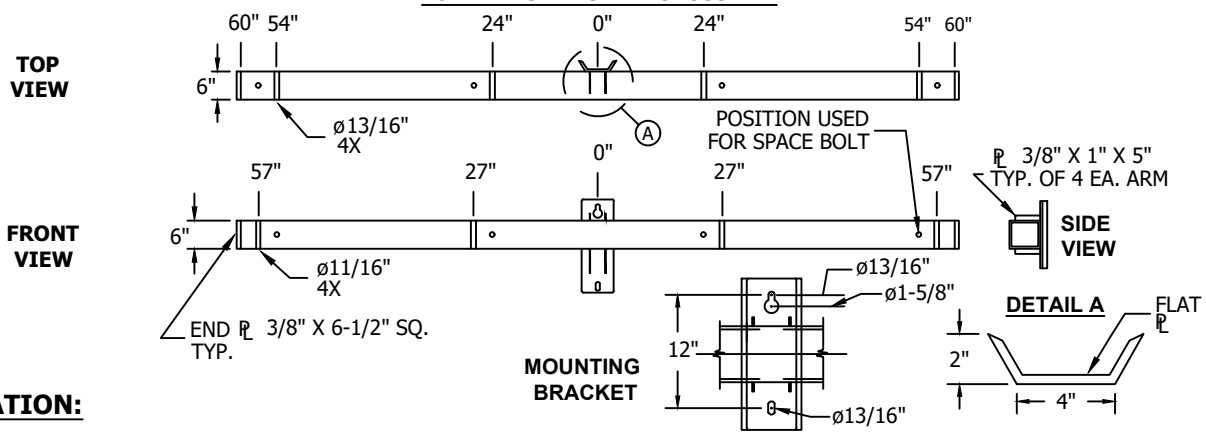

INSTALLATION:

A. "X" = WIRE IN THIS POSITION ON THE ARM.
B. ALL ALLOWABLE LOADS INCLUDE REDUCTION FACTORS PER AISC SPECIFICATION FOR STRUCTURAL STEEL BUILDINGS.
C. ALLOWABLE VERTICAL LOADS INCLUDE 200LBS ON ONE OUTERMOST POSITION.
D. *ALLOWABLE VERTICAL LOAD PER POSITION ASSUMES HORIZONTAL AND TRANSVERSE LOADING IS ZERO.
E. **ALLOWABLE HORIZONTAL LOAD PER POSITION ASSUMES VERTICAL AND TRANSVERSE LOADING IS ZERO.
F. ***ALLOWABLE TRANSVERSE LOAD PER POSITION ASSUMES VERTICAL AND HORIZONTAL LOADING IS ZERO.
G. ADDITIONAL TRANSVERSE LOADING DUE TO THE EXTREME WIND CONDITION SHALL BE ADDED TO THE APPLIED LOAD CALCULATIONS BY TAKING CONDUCTOR DIAMETER MULTIPLIED BY THE HALF SPAN LENGTHS MULTIPLIED BY 18.5LBS PER SQUARE INCH.
H. REFER TO ANGLE CHART FOR ANGULAR CONSTRUCTION.
J. INSURE THE FOLLOWING CALCULATION IS NOT VIOLATED WHEN COMPARING APPLIED LOADS TO ALLOWABLE LOADS:

$$\frac{\text{(APPLIED VERTICAL LOAD)}}{\text{(ALLOWABLE VERTICAL LOAD)}} + \frac{\text{(APPLIED HORIZONTAL LOAD)}}{\text{(ALLOWABLE HORIZONTAL LOAD)}} + \frac{\text{(APPLIED TRANSVERSE LOAD)}}{\text{(ALLOWABLE TRANSVERSE LOAD)}} \leq 1$$

K. ABOVE LOADS VALID FOR CONNECTION TO STEEL POLES ONLY.

TABLE 1 - ALLOWABLE LOADING OF 10FT TANGENT STEEL CROSSARM

TYPE	AU	SAP CU	STOCK NUMBER	TOTAL ALLOWABLE			DISTANCE FROM CENTER				*ALLOWABLE VERT. LOAD PER POS (LBS)	**ALLOWABLE HORI. LOAD PER POS (LBS)		***ALLOWABLE TRANSVERSE LOAD PER POS (LBS)	
				VERTICAL MOMENT (FT-LBS)	HORIZONTAL MOMENT (FT-LBS)	TRANSVERSE LOAD (LBS)	57"	27"	CENTER	27" 57"		STRAIGHT PIN (1" & 1 3/8" COBB)	ANGLE PIN	STRAIGHT PIN (1" & 1 3/8" COBB)	ANGLE PIN
10FT TAN	4TSW	10TSW	S294180 (WEATHERING)	5,300	947	10,600		X		X	4,900	1,840	1,472	1,840	1,725
							X			X	4,900	1,840	1,472	1,840	1,725
	4TSG	10TSG	S294186 (GALVANIZED)					X		X	855	199	199	1,840	1,725
							X			X	1,585	421	421	1,840	1,725
							X	X		X	2,450	1,840	1,472	1,840	1,725

BILL OF MATERIALS: NONE

NOTES:

I. FOR USE ON STEEL POLES ONLY.
II. WEIGHT = 325 LBS.
III. FIELD DRILLING IS PERMISSIBLE USING CARBIDE TIPPED DRILL BIT. ENSURE MINIMUM HORIZONTAL CONDUCTOR SPACING, OR GREATER, IS MAINTAINED BEFORE FIELD DRILLING (OH STD. 819). RE-COAT GALVANIZED SURFACES AFTER DRILLING AS NEEDED.
IV. HOLES SHALL BE NO CLOSER THAN 2 INCHES CENTER-TO-CENTER AND NO LARGER THAN 13/16 INCHES IN DIAMETER. THROUGH BOLT, SPACE BOLT, AND RELATED HARDWARE SHALL BE A MINIMUM OF 3/4" OR LARGER.

REFERENCE: NONE

© 1998 - 2019 San Diego Gas & Electric Company. All rights reserved. Removal of this copyright notice without permission is not permitted under law.

REV	CHANGE	BY	DSGN	APPV	DATE	REV	CHANGE	BY	DSGN	APPV	DATE
C						F					
B	DRAWING UPDATE	PEI	-	-	03/18/2019	E					
A	ORIGINAL ISSUE	-	-	KN/DW	01/06/2014	D					

X Indicates Latest Revision | Completely Revised | New Page | Information Removed

TABLE OF CONTENTS

SCOPE: THIS STANDARD SHOWS ALL WEATHERING & GALVANIZED STEEL CROSSARMS AND GIVES THEIR ALLOWABLE LOADING VALUES. THESE CROSSARMS CAN BE USED ON STEEL POLES. **POLE LOADING STUDY REQUIRED.**

12FT DEADEND STEEL CROSSARM

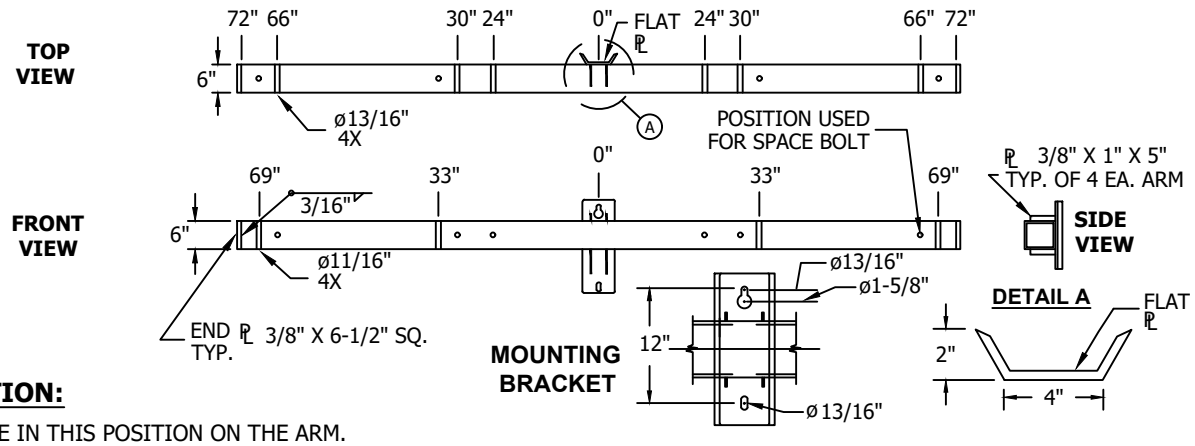

INSTALLATION:

A. "X" = WIRE IN THIS POSITION ON THE ARM.
B. ALL ALLOWABLE LOADS INCLUDE REDUCTION FACTORS PER AISC SPECIFICATION FOR STRUCTURAL STEEL BUILDINGS.
C. ALLOWABLE VERTICAL LOADS INCLUDE 200LBS ON ONE OUTERMOST POSITION.
D. *ALLOWABLE VERTICAL LOAD PER POSITION ASSUMES HORIZONTAL AND TRANSVERSE LOADING IS ZERO.
E. **ALLOWABLE HORIZONTAL LOAD PER POSITION ASSUMES VERTICAL AND TRANSVERSE LOADING IS ZERO.
F. ***ALLOWABLE TRANSVERSE LOAD PER POSITION ASSUMES VERTICAL AND HORIZONTAL LOADING IS ZERO.
G. ADDITIONAL TRANSVERSE LOADING DUE TO THE EXTREME WIND CONDITION SHALL BE ADDED TO THE APPLIED LOAD CALCULATIONS BY TAKING CONDUCTOR DIAMETER MULTIPLIED BY THE HALF SPAN LENGTHS MULTIPLIED BY 18.5LBS PER SQUARE INCH.
H. REFER TO ANGLE CHART FOR ANGULAR CONSTRUCTION.
J. INSURE THE FOLLOWING CALCULATION IS NOT VIOLATED WHEN COMPARING APPLIED LOADS TO ALLOWABLE LOADS:

$$\frac{\text{(APPLIED VERTICAL LOAD)}}{\text{(ALLOWABLE VERTICAL LOAD)}} + \frac{\text{(APPLIED HORIZONTAL LOAD)}}{\text{(ALLOWABLE HORIZONTAL LOAD)}} + \frac{\text{(APPLIED TRANSVERSE LOAD)}}{\text{(ALLOWABLE TRANSVERSE LOAD)}} \leq 1$$

K. ABOVE LOADS VALID FOR CONNECTION TO STEEL POLES ONLY.

TABLE 1 - ALLOWABLE LOADING OF 12FT DEADEND STEEL CROSSARM

TYPE	AU	SAP CU	STOCK NUMBER	TOTAL ALLOWABLE			DISTANCE FROM CENTER				*ALLOWABLE VERTICAL LOAD PER POS (LBS)	**ALLOWABLE HORIZONTAL LOAD PER POS (LBS)	***ALLOWABLE TRANSVERSE LOAD PER POS (LBS)
				VERTICAL MOMENT (FT-LBS)	HORIZONTAL MOMENT (FT-LBS)	TRANSVERSE LOAD (LBS)	66"	30"	CENTER	30" 66"			
12FT DE	6DSW	6DS	S294182 (WEATHERING)	5,300	947	10,600		X		X	1,840	6,900	1,840
							X			X	1,840	6,900	1,840
	6DSG	6DSG	S294188 (GALVANIZED)					X		X X	710	172	1,840
							X			X X	1,405	379	1,840
							X	X		X X	1,840	4,928	1,840

BILL OF MATERIALS: NONE

NOTES:

I. FOR USE ON STEEL POLES ONLY.
II. WEIGHT = 375 LBS.
III. FIELD DRILLING IS PERMISSIBLE USING CARBIDE TIPPED DRILL BIT. ENSURE MINIMUM HORIZONTAL CONDUCTOR SPACING, OR GREATER, IS MAINTAINED BEFORE FIELD DRILLING (OH STD. 819). RE-COAT GALVANIZED SURFACES AFTER DRILLING AS NEEDED.
IV. HOLES SHALL BE NO CLOSER THAN 2 INCHES CENTER-TO-CENTER AND NO LARGER THAN 13/16 INCHES IN DIAMETER. THROUGH BOLT, SPACE BOLT, AND RELATED HARDWARE SHALL BE A MINIMUM OF 3/4" OR LARGER.

REFERENCE: NONE

© 1998 - 2019 San Diego Gas & Electric Company. All rights reserved. Removal of this copyright notice without permission is not permitted under law.

REV	CHANGE	BY	DSGN	APPV	DATE	REV	CHANGE	BY	DSGN	APPV	DATE
C						F					
B	DRAWING UPDATE	PEI	-	-	03/18/2019	E					
A	ORIGINAL ISSUE	-	-	KN/DW	01/06/2014	D					

X Indicates Latest Revision | Completely Revised | New Page | Information Removed

TABLE OF CONTENTS

SCOPE: THIS STANDARD SHOWS ALL WEATHERING & GALVANIZED STEEL CROSSARMS AND GIVES THEIR ALLOWABLE LOADING VALUES. THESE CROSSARMS CAN BE USED ON STEEL POLES. **POLE LOADING STUDY REQUIRED.**

12FT TANGENT STEEL CROSSARM

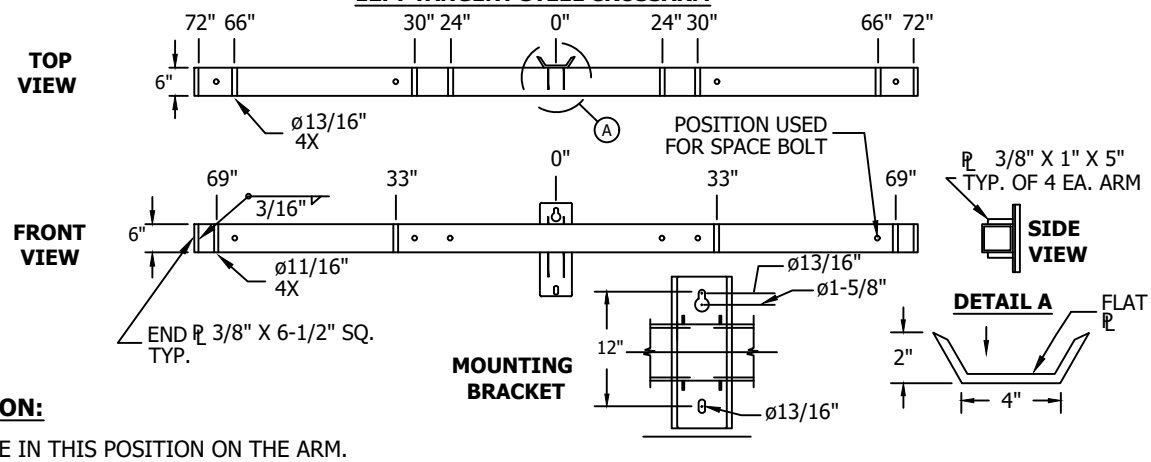

INSTALLATION:

A. "X" = WIRE IN THIS POSITION ON THE ARM.
B. ALL ALLOWABLE LOADS INCLUDE REDUCTION FACTORS PER AISC SPECIFICATION FOR STRUCTURAL STEEL BUILDINGS.
C. ALLOWABLE VERTICAL LOADS INCLUDE 200LBS ON ONE OUTERMOST POSITION.
D. *ALLOWABLE VERTICAL LOAD PER POSITION ASSUMES HORIZONTAL AND TRANSVERSE LOADING IS ZERO.
E. **ALLOWABLE HORIZONTAL LOAD PER POSITION ASSUMES VERTICAL AND TRANSVERSE LOADING IS ZERO.
F. ***ALLOWABLE TRANSVERSE LOAD PER POSITION ASSUMES VERTICAL AND HORIZONTAL LOADING IS ZERO.
G. ADDITIONAL TRANSVERSE LOADING DUE TO THE EXTREME WIND CONDITION SHALL BE ADDED TO THE APPLIED LOAD CALCULATIONS BY TAKING CONDUCTOR DIAMETER MULTIPLIED BY THE HALF SPAN LENGTHS MULTIPLIED BY 18.5LBS PER SQUARE INCH.
H. REFER TO ANGLE CHART FOR ANGULAR CONSTRUCTION.
J. INSURE THE FOLLOWING CALCULATION IS NOT VIOLATED WHEN COMPARING APPLIED LOADS TO ALLOWABLE LOADS:

$$\frac{\text{(APPLIED VERTICAL LOAD)}}{\text{(ALLOWABLE VERTICAL LOAD)}} + \frac{\text{(APPLIED HORIZONTAL LOAD)}}{\text{(ALLOWABLE HORIZONTAL LOAD)}} + \frac{\text{(APPLIED TRANSVERSE LOAD)}}{\text{(ALLOWABLE TRANSVERSE LOAD)}} \leq 1$$

K. ABOVE LOADS VALID FOR CONNECTION TO STEEL POLES ONLY.

TABLE 1 - ALLOWABLE LOADING OF 12FT TANGENT STEEL CROSSARM

TYPE	AU	SAP CU	STOCK NUMBER	TOTAL ALLOWABLE			DISTANCE FROM CENTER				*ALLOWABLE VERT. LOAD PER POS (LBS)	**ALLOWABLE HORI. LOAD PER POS (LBS)		***ALLOWABLE TRANSVERSE LOAD PER POS (LBS)	
				VERTICAL MOMENT (FT-LBS)	HORIZONTAL MOMENT (FT-LBS)	TRANSVERSE LOAD (LBS)	69"	33"	CENTER	33" 69"		STRAIGHT PIN (1" & 1 3/8" COBB)	ANGLE PIN	STRAIGHT PIN (1" & 1 3/8" COBB)	ANGLE PIN
12FT TAN	6TSW	6DS	S294182 (WEATHERING)	5,300	947	10,600		X		X	4,850	1,840	1,472	1,840	1,725
							X			X	4,850	1,840	1,472	1,840	1,725
	6TSG	6TSG	S294188 (GALVANIZED)					X		X X	680	165	165	1,840	1,725
							X			X X	1,300	344	344	1,840	1,725
							X	X		X X	2,400	1,840	1,472	1,840	1,725

BILL OF MATERIALS: NONE

NOTES:

I. FOR USE ON STEEL POLES ONLY.
II. WEIGHT = 375 LBS.
III. FIELD DRILLING IS PERMISSIBLE USING CARBIDE TIPPED DRILL BIT. ENSURE MINIMUM HORIZONTAL CONDUCTOR SPACING, OR GREATER, IS MAINTAINED BEFORE FIELD DRILLING (OH STD. 819). RE-COAT GALVANIZED SURFACES AFTER DRILLING AS NEEDED.
IV. HOLES SHALL BE NO CLOSER THAN 2 INCHES CENTER-TO-CENTER AND NO LARGER THAN 13/16 INCHES IN DIAMETER. THROUGH BOLT, SPACE BOLT, AND RELATED HARDWARE SHALL BE A MINIMUM OF 3/4" OR LARGER.

REFERENCE: NONE

© 1998 - 2019 San Diego Gas & Electric Company. All rights reserved. Removal of this copyright notice without permission is not permitted under law.

REV	CHANGE	BY	DSGN	APPV	DATE	REV	CHANGE	BY	DSGN	APPV	DATE
C						F					
B	DRAWING UPDATE	PEI	-	-	03/18/2019	E					
A	ORIGINAL ISSUE	-	-	KN/DW	01/06/2014	D					

X Indicates Latest Revision | Completely Revised | New Page | Information Removed

TABLE OF CONTENTS

SCOPE: THIS STANDARD SHOWS ALL WEATHERING & GALVANIZED STEEL CROSSARMS AND GIVES THEIR ALLOWABLE LOADING VALUES. THESE CROSSARMS CAN BE USED ON STEEL POLES. **POLE LOADING STUDY REQUIRED.**

15FT DEADEND STEEL CROSSARM

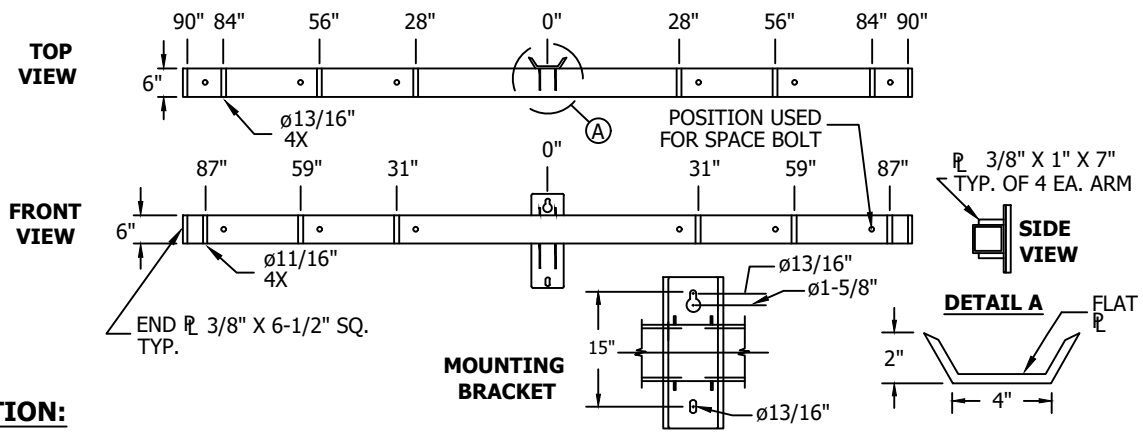

INSTALLATION:

A. "X" = WIRE IN THIS POSITION ON THE ARM.
B. ALL ALLOWABLE LOADS INCLUDE REDUCTION FACTORS PER AISC SPECIFICATION FOR STRUCTURAL STEEL BUILDINGS.
C. ALLOWABLE VERTICAL LOADS INCLUDE 200LBS ON ONE OUTERMOST POSITION.
D. *ALLOWABLE VERTICAL LOAD PER POSITION ASSUMES HORIZONTAL AND TRANSVERSE LOADING IS ZERO.
E. **ALLOWABLE HORIZONTAL LOAD PER POSITION ASSUMES VERTICAL AND TRANSVERSE LOADING IS ZERO.
F. ***ALLOWABLE TRANSVERSE LOAD PER POSITION ASSUMES VERTICAL AND HORIZONTAL LOADING IS ZERO.
G. ADDITIONAL TRANSVERSE LOADING DUE TO THE EXTREME WIND CONDITION SHALL BE ADDED TO THE APPLIED LOAD CALCULATIONS BY TAKING CONDUCTOR DIAMETER MULTIPLIED BY THE HALF SPAN LENGTHS MULTIPLIED BY 18.5LBS PER SQUARE INCH.
H. REFER TO ANGLE CHART FOR ANGULAR CONSTRUCTION.
J. INSURE THE FOLLOWING CALCULATION IS NOT VIOLATED WHEN COMPARING APPLIED LOADS TO ALLOWABLE LOADS:

$$\frac{\text{(APPLIED VERTICAL LOAD)}}{\text{(ALLOWABLE VERTICAL LOAD)}} + \frac{\text{(APPLIED HORIZONTAL LOAD)}}{\text{(ALLOWABLE HORIZONTAL LOAD)}} + \frac{\text{(APPLIED TRANSVERSE LOAD)}}{\text{(ALLOWABLE TRANSVERSE LOAD)}} \leq 1$$

K. ABOVE LOADS VALID FOR CONNECTION TO STEEL POLES ONLY.

TABLE 1 - ALLOWABLE LOADING OF 15FT DEADEND STEEL CROSSARM

TYPE	AU	SAP CU	STOCK NUMBER	TOTAL ALLOWABLE VERTICAL MOMENT (FT-LBS)	TOTAL ALLOWABLE HORIZONTAL MOMENT (FT-LBS)	TOTAL ALLOWABLE TRANSVERSE LOAD (LBS)	DISTANCE FROM CENTER 84"	56"	28"	CENTER	28"	56"	84"	*ALLOWABLE VERTICAL LOAD PER POS (LBS)	**ALLOWABLE HORIZONTAL LOAD PER POS (LBS)	***ALLOWABLE TRANSVERSE LOAD PER POS (LBS)
15FT DE	6LDSW	6LDSW	S294184 (WEATHERING)	6,625	1,137	10,600			X		X			2,103	6,900	2,103
								X				X		2,103	6,900	2,103
							X						X	2,103	6,900	2,103
							X		X				X	1,705	487	2,103
	6LDSG	6LDS	S294190 (GALVANIZED)				X	X					X	1,000	244	2,103
							X		X		X		X	2,103	4,970	2,103
							X	X				X	X	2,103	4,970	2,103
							X	X	X		X	X	X	1,580	3,313	1,767

BILL OF MATERIALS: NONE

NOTES:

I. FOR USE ON STEEL POLES ONLY.
II. WEIGHT = 625 LBS.
III. FIELD DRILLING IS PERMISSIBLE USING CARBIDE TIPPED DRILL BIT. ENSURE MINIMUM HORIZONTAL CONDUCTOR SPACING, OR GREATER, IS MAINTAINED BEFORE FIELD DRILLING (OH STD. 819). RE-COAT GALVANIZED SURFACES AFTER DRILLING AS NEEDED.
IV. HOLES SHALL BE NO CLOSER THAN 2 INCHES CENTER-TO-CENTER AND NO LARGER THAN 13/16 INCHES IN DIAMETER. THROUGH BOLT, SPACE BOLT, AND RELATED HARDWARE SHALL BE A MINIMUM OF 3/4" OR LARGER.

REFERENCE: NONE

© 1998 - 2019 San Diego Gas & Electric Company. All rights reserved. Removal of this copyright notice without permission is not permitted under law.

REV	CHANGE	BY	DSGN	APPV	DATE	REV	CHANGE	BY	DSGN	APPV	DATE
C						F					
B	DRAWING UPDATE	PEI	-	-	03/18/2019	E					
A	ORIGINAL ISSUE	-	-	KN/DW	01/06/2014	D					

X Indicates Latest Revision | Completely Revised | New Page | Information Removed

SDG&E ELECTRIC OVERHEAD CONSTRUCTION STANDARDS

WEATHERING & GALVANIZED STEEL CROSSARMS - 15FT DEADEND

TABLE OF CONTENTS

SCOPE: THIS STANDARD SHOWS ALL WEATHERING & GALVANIZED STEEL CROSSARMS AND GIVES THEIR ALLOWABLE LOADING VALUES. THESE CROSSARMS CAN BE USED ON STEEL POLES. **POLE LOADING STUDY REQUIRED.**

15FT TANGENT STEEL CROSSARM

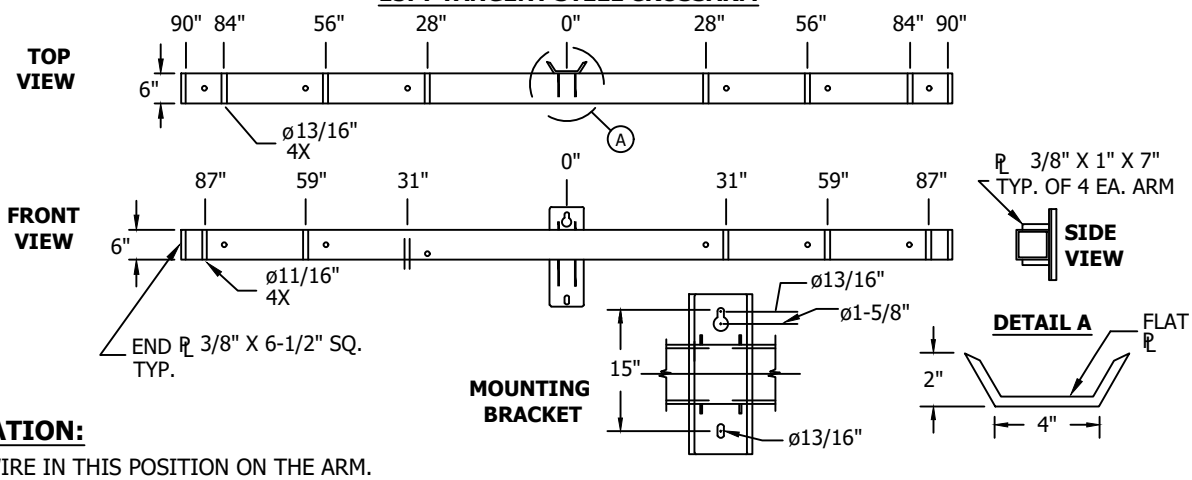

INSTALLATION:

A. "X" = WIRE IN THIS POSITION ON THE ARM.
B. ALL ALLOWABLE LOADS INCLUDE REDUCTION FACTORS PER AISC SPECIFICATION FOR STRUCTURAL STEEL BUILDINGS.
C. ALLOWABLE VERTICAL LOADS INCLUDE 200LBS ON ONE OUTERMOST POSITION.
D. *ALLOWABLE VERTICAL LOAD PER POSITION ASSUMES HORIZONTAL AND TRANSVERSE LOADING IS ZERO.
E. **ALLOWABLE HORIZONTAL LOAD PER POSITION ASSUMES VERTICAL AND TRANSVERSE LOADING IS ZERO.
F. ***ALLOWABLE TRANSVERSE LOAD PER POSITION ASSUMES VERTICAL AND HORIZONTAL LOADING IS ZERO.
G. ADDITIONAL TRANSVERSE LOADING DUE TO THE EXTREME WIND CONDITION SHALL BE ADDED TO THE APPLIED LOAD CALCULATIONS BY TAKING CONDUCTOR DIAMETER MULTIPLIED BY THE HALF SPAN LENGTHS MULTIPLIED BY 18.5LBS PER SQUARE INCH.
H. REFER TO ANGLE CHART FOR ANGULAR CONSTRUCTION.
J. INSURE THE FOLLOWING CALCULATION IS NOT VIOLATED WHEN COMPARING APPLIED LOADS TO ALLOWABLE LOADS:

$$\frac{\text{(APPLIED VERTICAL LOAD)}}{\text{(ALLOWABLE VERTICAL LOAD)}} + \frac{\text{(APPLIED HORIZONTAL LOAD)}}{\text{(ALLOWABLE HORIZONTAL LOAD)}} + \frac{\text{(APPLIED TRANSVERSE LOAD)}}{\text{(ALLOWABLE TRANSVERSE LOAD)}} \leq 1$$

K. ABOVE LOADS VALID FOR CONNECTION TO STEEL POLES ONLY.

TABLE 1 - ALLOWABLE LOADING OF 15FT TANGENT STEEL CROSSARM

TYPE	AU	SAP CU	STOCK NUMBER	TOTAL ALLOWABLE			DISTANCE FROM CENTER						*ALLOWABLE VERTICAL LOAD PER POS (LBS)	**ALLOWABLE HORIZONTAL LOAD PER POS (lbs)		***ALLOWABLE TRANSVERSE LOAD PER POS (lbs)	
				VERTICAL MOMENT (FT-LBS)	HORIZONTAL MOMENT (FT-LBS)	TRANSVERSE LOAD (LBS)	87"	59"	31"	CENTER	31"	59"	87"		STRAIGHT PIN (1" & 1 3/8" COBB)	ANGLE PIN	STRAIGHT PIN (1" & 1 3/8" COBB)	ANGLE PIN
15FT TAN	6LTSW	6LDSW	S294184 (WEATHERING)	6,625	1,137	10,600			X		X			4,750	2,103	1,732	2,103	1,592
								X				X		4,750	2,103	1,732	2,103	1,592
							X						X	4,750	2,103	1,732	2,103	1,592
	6LTSG	6LDS	S294190 (GALVANIZED)				X		X				X	1,590	440	440	2,103	1,592
							X	X					X	950	231	231	2,103	1,592
							X		X		X		X	2,375	2,103	1,732	2,103	1,592
							X	X				X	X	2,375	2,103	1,732	2,103	1,592
							X	X	X		X	X	X	1,580	2,103	1,732	1,767	1,592

BILL OF MATERIALS: NONE

NOTES:

I. FOR USE ON STEEL POLES ONLY.
II. WEIGHT = 625 LBS.
III. FIELD DRILLING IS PERMISSIBLE USING CARBIDE TIPPED DRILL BIT. ENSURE MINIMUM HORIZONTAL CONDUCTOR SPACING, OR GREATER, IS MAINTAINED BEFORE FIELD DRILLING (OH STD. 819). RE-COAT GALVANIZED SURFACES AFTER DRILLING AS NEEDED.
IV. HOLES SHALL BE NO CLOSER THAN 2 INCHES CENTER-TO-CENTER AND NO LARGER THAN 13/16 INCHES IN DIAMETER. THROUGH BOLT, SPACE BOLT, AND RELATED HARDWARE SHALL BE A MINIMUM OF 3/4" OR LARGER.

REFERENCE: NONE

© 1998 - 2019 San Diego Gas & Electric Company. All rights reserved. Removal of this copyright notice without permission is not permitted under law.

REV	CHANGE	BY	DSGN	APPV	DATE	REV	CHANGE	BY	DSGN	APPV	DATE
C						F					
B	DRAWING UPDATE	PEI	-	-	03/18/2019	E					
A	ORIGINAL ISSUE	-	-	KN/DW	01/06/2014	D					

X Indicates Latest Revision | Completely Revised | New Page | Information Removed

SDG&E ELECTRIC OVERHEAD CONSTRUCTION STANDARDS

WEATHERING & GALVANIZED STEEL CROSSARMS - 15FT TANGENT

TABLE OF CONTENTS

SCOPE: THIS STANDARD ILLUSTRATES AND DESCRIBES THE INSTALLATION OF STEEL CROSSARM GAINS.

ATTENTION:

* MANUFACTURED CROSSARM GAINS ARE NOT TO BE CUT INTO POLES.

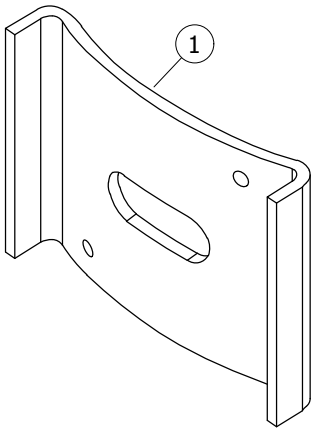

FIGURE 1
ISOMETRIC VIEW

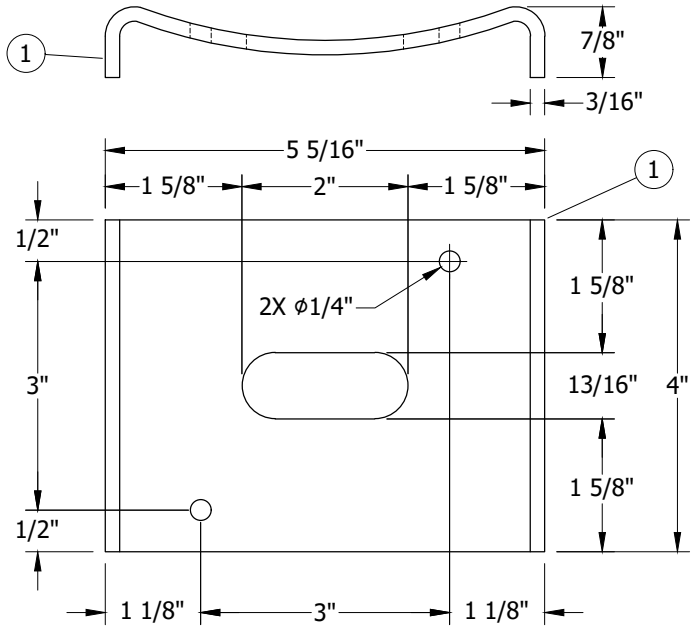

FIGURE 1

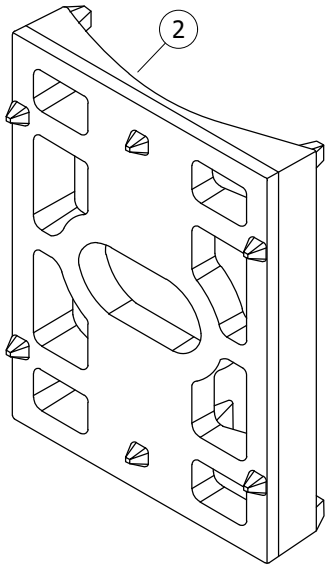

FIGURE 2
ISOMETRIC VIEW

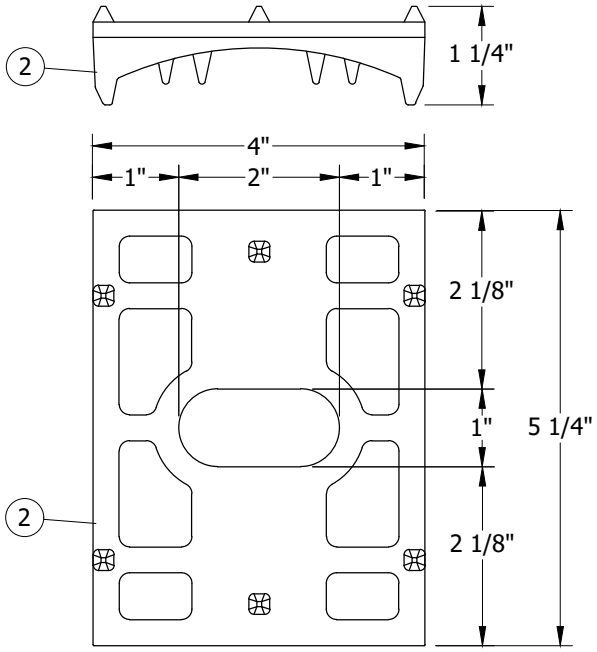

FIGURE 2

TABLE OF CONTENTS

© 1998 - 2021 San Diego Gas & Electric Company. All rights reserved. Removal of this copyright notice without permission is not permitted under law.

REV	CHANGE	DR	BY	DSN	APV	DATE	REV	CHANGE	DR	BY	DSN	APV	DATE
C	COMPLETELY REVISED	EDM	MRF	GLW	CZH	4/12/2021	F						
B	MOVED TO FMO	-	SL	JS	CZH	7/10/2019	E						
A	REVISION	-	-	-	PEA/JJ	11/15/2005	D						

Indicates Latest Revision | Completely Revised [X] | New Page | Information Removed

SDG&E ELECTRIC OVERHEAD CONSTRUCTION STANDARDS

STEEL CROSSARM GAINS

OH388.1

INSTALLATION:

A. GAINS MAY BE USED ANYTIME IT IS NECESSARY TO TRANSITION BETWEEN A FLAT AND ROUND SURFACE.

B. THESE METAL GAINS REPLACE PLASTIC GAINS AND ARE APPROVED FOR USE ON STEEL, WOOD AND FIBERGLASS POLES.

C. NOT FOR USE WITH FIBERGLASS CROSSARMS. (a)

BILL OF MATERIALS:

ITEM	DESCRIPTION	QUANTITY	STANDARD PAGE	STOCK NUMBER	DESIGN UNITS
1	GAIN, CROSSARM, STEEL, 5 5/16" X 4"	1	--	S369618	--
2	GAIN, CROSSARM, STEEL, CAST, 4" X 5 1/4"	1	--	S369596	--

NOTES: NONE

REFERENCE:

(a) SEE OH379 FOR FIBERGLASS CROSSARMS.

b. SEE OH380 FOR WOOD CROSSARMS.

c. SEE OH390 FOR HARDWARE.

TABLE OF CONTENTS

© 1998 - 2021 San Diego Gas & Electric Company. All rights reserved. Removal of this copyright notice without permission is not permitted under law.

REV	CHANGE	DR	BY	DSN	APV	DATE	REV	CHANGE	DR	BY	DSN	APV	DATE
C	COMPLETELY REVISED	EDM	MRF	GLW	CZH	4/12/2021	F						
B	MOVED TO FMO	-	SL	JS	CZH	7/10/2019	E						
A	REVISION	-	-	-	PEA/JJ	11/15/2005	D						

Indicates Latest Revision | Completely Revised [X] | New Page | Information Removed

SCOPE: THIS STANDARD LISTS TYPES OF FIBERGLASS GUY STRAIN INSULATORS USED IN DISTRIBUTION CONSTRUCTION.

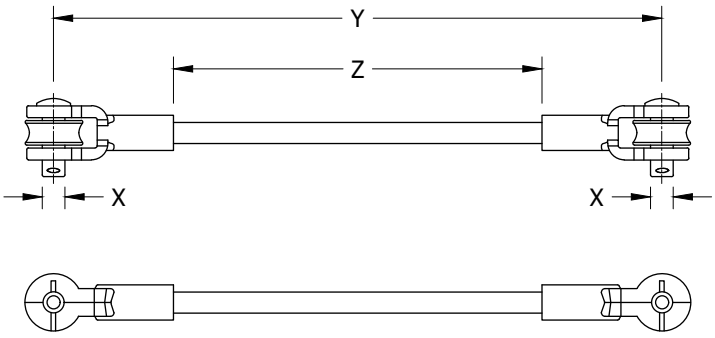

FIGURE 1
CLEVIS-CLEVIS
TWO ROLLERS



FIGURE 1
ISOMETRIC
VIEW

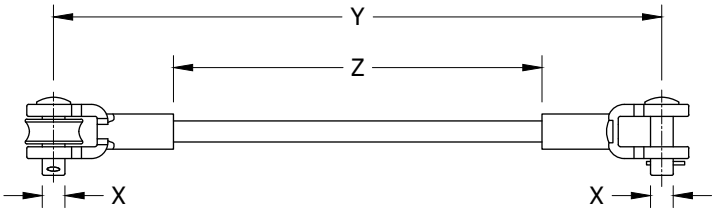

FIGURE 2
CLEVIS-CLEVIS
ONE ROLLER



FIGURE 2
ISOMETRIC
VIEW

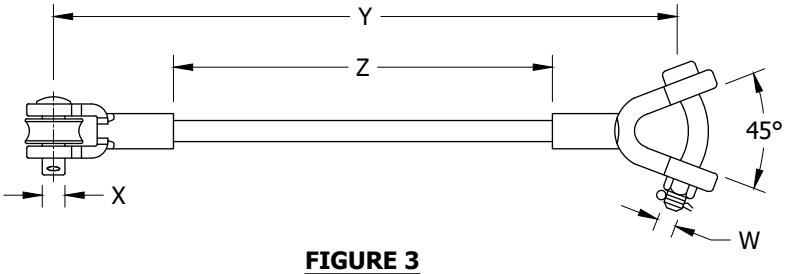

FIGURE 3
Y-CLEVIS-CLEVIS
ONE ROLLER



FIGURE 3
ISOMETRIC
VIEW

INSTALLATION:

A. USE NO MORE THAN TWO FIBERGLASS STRAIN INSULATORS LINKED WHEN REQUIRED TO SECTIONALIZE. (d)

B. TWO GUY ASSEMBLIES SHALL NOT BE ATTACHED TO THE SAME DEADEND CROSSARM BRACKET.

C. USE FLAT HARDWARE ON 12-SIDED STEEL POLES.

© 1998 - 2022 San Diego Gas & Electric Company. All rights reserved. Removal of this copyright notice without permission is not permitted under law.

REV	CHANGE	DR	BY	DSN	APV	DATE	REV	CHANGE	DR	BY	DSN	APV	DATE
C	BILL OF MATERIALS UPDATE	EDM	RSL	JAS	KRG	11/03/2022	F						
B	EDITORIAL CHANGES	-	JC	JS	CZH	07/06/2018	E						
A	ORIGINAL ISSUE	-	GW	JS	MDJ	09/26/2017	D						

TABLE OF CONTENTS

BILL OF MATERIALS:

GUY ROD INSULATORS						STOCK NUMBER	DESIGN UNITS
FIGURE	Z (IN)	Y (IN)	X (IN)	W (IN)	MAX WORKING STRENGTH (LBS) (b)		
1	10	18	5/8	--	7,000	S602942 (X)	--
	12	20			7,000	S602944 (X)	--
2	54	67	3/4		10,000	S430878	FG54
	78	91			10,000	S430880	FG78
3	120	132 5/16		3/4	10,000	S430882	FG-GUY

NOTES:

I. USE OF FIBERGLASS STRAIN INSULATOR DOES NOT REDUCE REQUIRED G.O. 95 CLEARANCES.

II. FOR STEEL POLES - A FIBERGLASS GUY STRAIN INSULATOR MUST BE PLACED IN THE GUY AND ATTACHED TO THE POLE, EXTENDING OUTSIDE THE CYLINDER IN THE ZONE BETWEEN PLANE "A" AND "B". IF A SINGLE GUY FIBERGLASS STRAIN INSULATOR DOES NOT EXTEND OUTSIDE OF THE CYLINDER, A SECOND FIBERGLASS GUY STRAIN INSULATOR CAN BE USED, BUT CANNOT BE LOWER THAN PLANE "B". (d)

(X) THIS ITEM IS EXEMPT.

REFERENCE:

a. FOR DIFFERENT TYPES OF GUY CONSTRUCTION, SEE OH927.

(b) MINIMUM SAFETY FACTOR OF THREE PER G.O. 95, SECTION IV, TABLE 4.

c. SEE G.O. 95 RULES 56.6 & 56.7.

(d) FOR GUYING PROXIMITY, SEE OH907.

TABLE OF CONTENTS

© 1998 - 2022 San Diego Gas & Electric Company. All rights reserved. Removal of this copyright notice without permission is not permitted under law.

REV	CHANGE	DR	BY	DSN	APV	DATE	REV	CHANGE	DR	BY	DSN	APV	DATE
C	BILL OF MATERIALS UPDATE	EDM	RSL	JAS	KRG	11/03/2022	F						
B	EDITORIAL CHANGES	-	JC	JS	CZH	07/06/2018	E						
A	ORIGINAL ISSUE	-	GW	JS	MDJ	09/26/2017	D						

SCOPE: THIS STANDARD SHOWS AND DESCRIBES THE BRACKETS FOR MOUNTING EITHER TWO OR THREE TRANSFORMERS ON THE SAME POLE OR SET OF CROSSARMS.



FIGURE 1
TOP VIEW

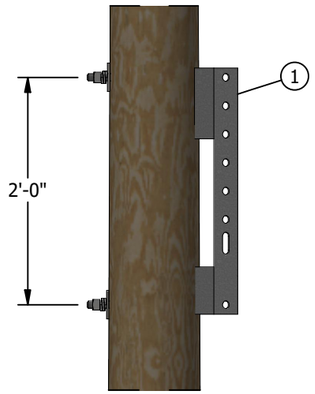

FIGURE 1
SIDE VIEW

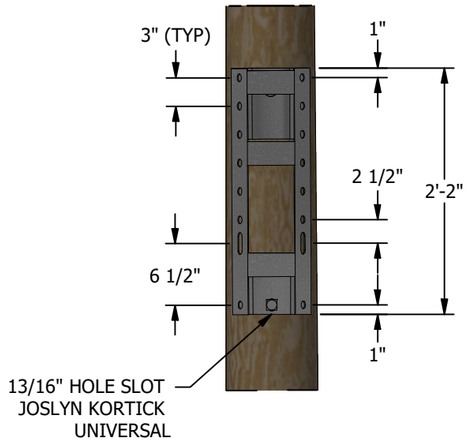

FIGURE 1
FRONT VIEW

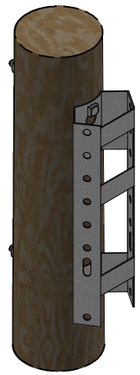

FIGURE 1
ISO VIEW

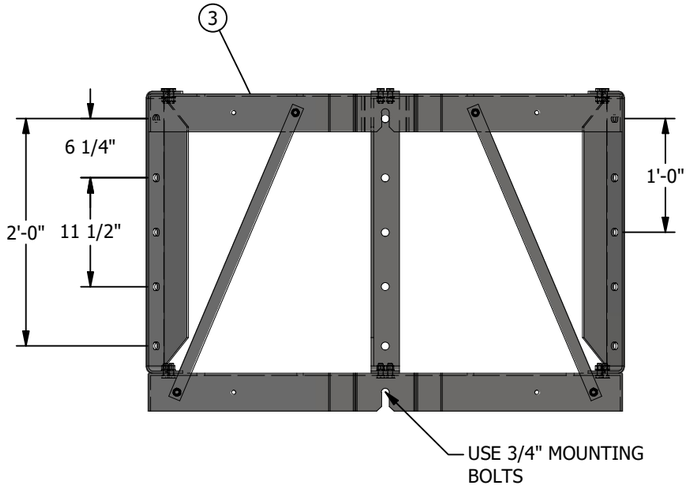

FIGURE 3
FRONT VIEW

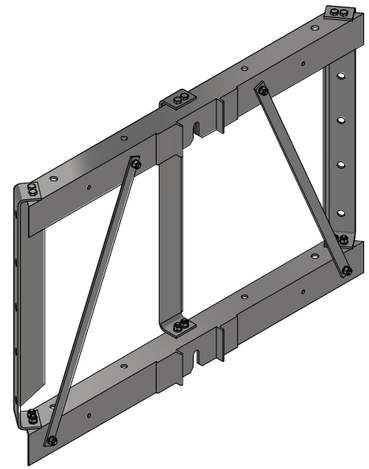

FIGURE 3
ISO VIEW

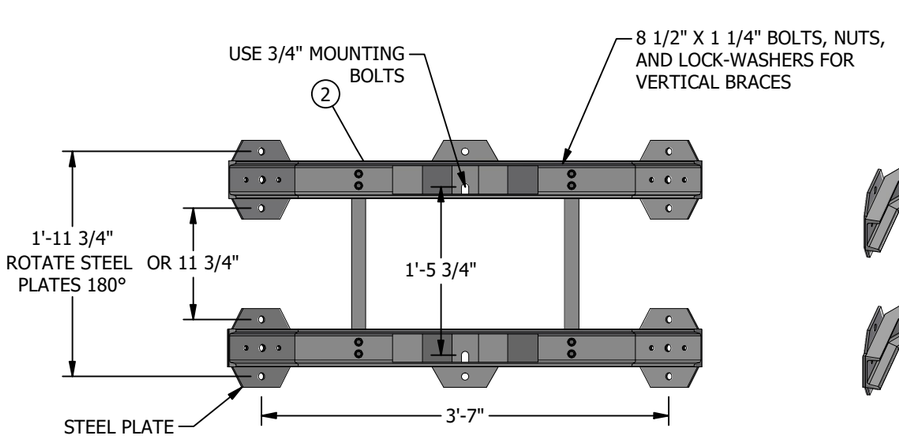

FIGURE 2
FRONT VIEW

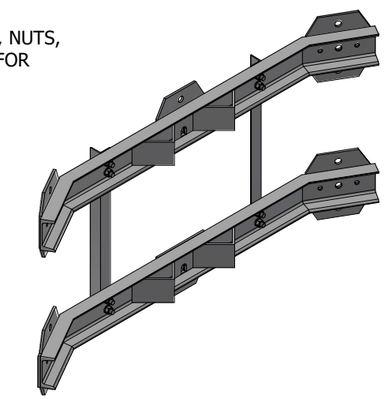

FIGURE 2
ISO VIEW

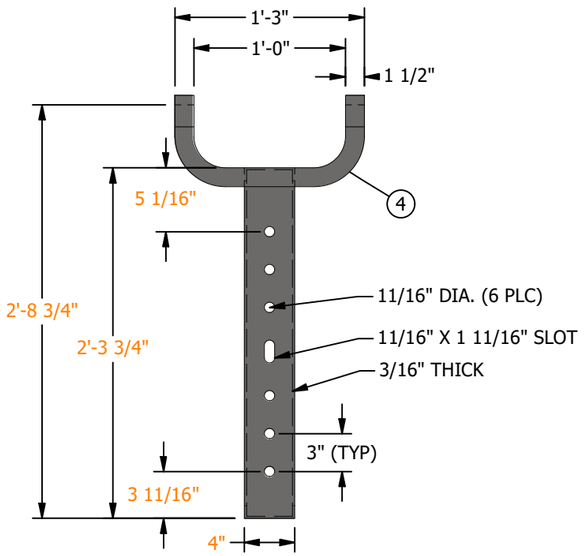

FIGURE 4
FRONT VIEW

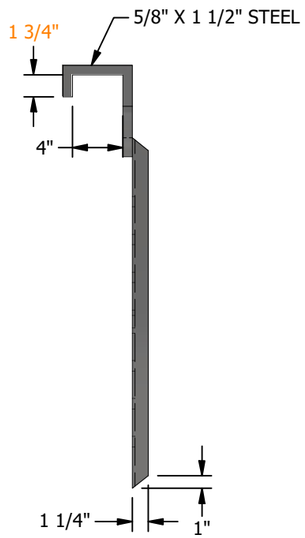

FIGURE 4
SIDE VIEW

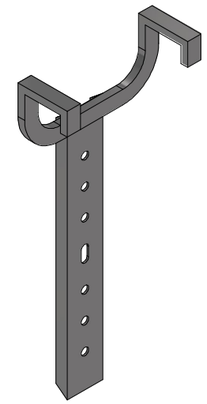

FIGURE 4
ISO VIEW

REV	CHANGE	DRWN	BY	CHKD	APVD	DATE
F	TABLE UPDATE/REVISED TO 3D FORMAT	ARC	RSL	JAS	KRG	02/16/2023
E	OH390.12 MOVED TO FMO	EDM	JAC	GLW	FRC	03/01/2022
D	FIGURE UPDATE	EDM	JIK	JES	CZH	10/12/2020

SDG&E ELECTRIC OVERHEAD CONSTRUCTION STANDARDS

HARDWARE
TRANSFORMER MOUNTING BRACKETS

SCALE: NOT TO SCALE

DRAWING NO: OH390.1

SHEET: 1 OF 7

© 1998 - 2023 San Diego Gas and Electric Company. All rights reserved. Removal of this copyright notice without permission is not permitted under law.

X Indicates Latest Revision | Completely Revised | New Page | Information Removed

TABLE OF CONTENTS

TABLE OF CONTENTS

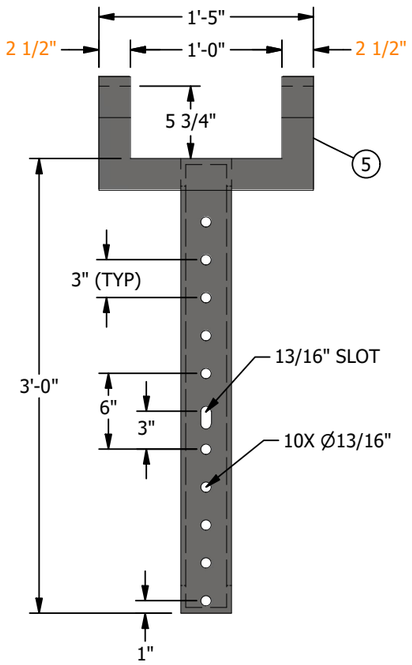

FIGURE 5
FRONT VIEW

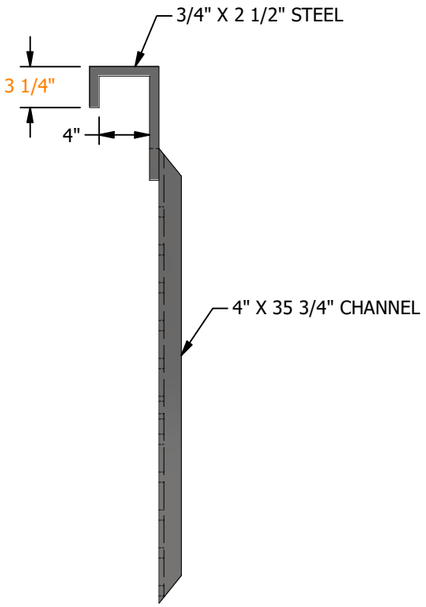

FIGURE 5
SIDE VIEW

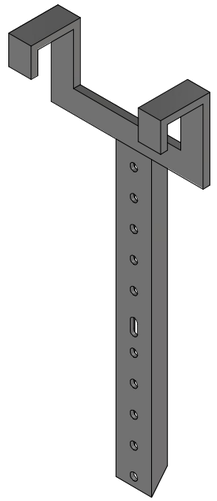

FIGURE 5
ISO VIEW

INSTALLATION: NONE

BILL OF MATERIALS:

ITEM	DESCRIPTION	QUANTITY	CALLOUTS	STANDARD PAGE	STOCK NUMBER	DESIGN UNITS
1	HANGER, TRANSFORMER, 2 POSITION	AS REQ'D	(I)	-	S402976	UBM
2	BRACKET, MOUNT 3 TRANSFORMER (CLUSTER), 17-3/4" MOUNT SPACING, GALVANIZED STEEL	AS REQ'D	(II)	-	S403008	CMB
3	BRACKET, HEAVY DUTY, MOUNT 3 TRANSFORMERS (CLUSTER)	AS REQ'D	(III)	-	S402920	CMBHD
4	CROSSARM TEE HANGER, 22"	AS REQ'D	(IV)	-	S402912	T1HANG
5	CROSSARM TEE HANGER, 36"	AS REQ'D	(V)	-	S402944	T2HANG

NOTES:

(I) TOTAL MAXIMUM TRANSFORMER WEIGHT = 1,600 LBS.
(II) MAXIMUM WEIGHT PER TRANSFORMER = 1,200 LBS.
(III) MAXIMUM WEIGHT PER TRANSFORMER = 4,000 LBS.
(IV) MAXIMUM TRANSFORMER WEIGHT EACH HANGER = 1,200 LBS.
(V) MAXIMUM TRANSFORMER WEIGHT EACH HANGER = 1,200 LBS.

REFERENCE: NONE

SCOPE: THIS STANDARD ILLUSTRATES STEEL BRACES FOR WOOD CROSSARM AND ALLEY ARM CONSTRUCTION.

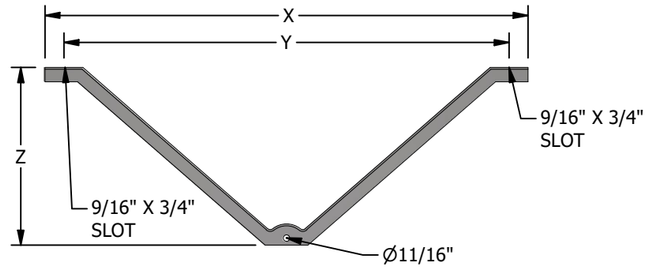

FIGURE 1
ANGLE CROSSARM BRACE

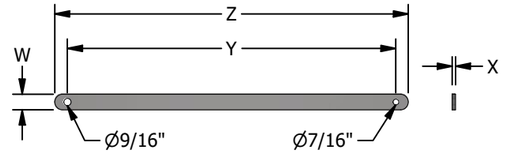

FIGURE 2
FLAT CROSSARM BRACE

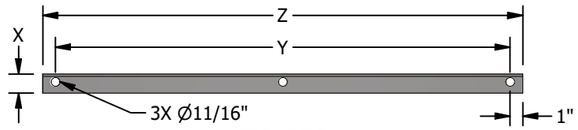

FIGURE 3
ALLEY ARM BRACE

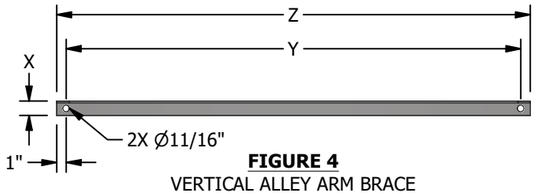

FIGURE 4
VERTICAL ALLEY ARM BRACE

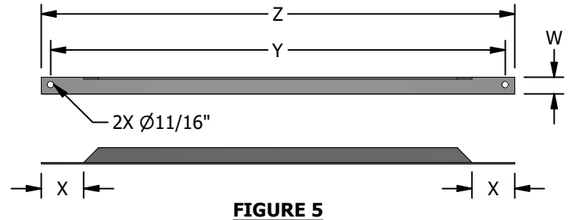

FIGURE 5
SPECIAL ANGLE BRACE

INSTALLATION:

A. ITEMS TO BE MADE OF STEEL, HOT-DIP GALVANIZED AFTER FABRICATION.

TABLE 1

CROSSARM BRACES							
ITEM	DESCRIPTION	Z	Y	X	W	STOCK NUMBER	DESIGN UNITS
1	BRACE, ANGLE, CROSSARM 4', 1-1/2" X 1-1/2" X 3/16"	1'-6"	4'-0"	4'-3"	-	S164032	4HUB
	BRACE, CROSSARM, ANGLE, 5FT, 1 1/2" X 3/16", STEEL, GALVANIZED	1'-6"	5'-0"	5'-3"	-	S164128	5HUB
	BRACE, CROSSARM, ANGLE, 6FT, 1 3/4" X 3/16", STEEL, GALVANIZED	1'-6"	6'-0"	6'-3 1/2"	-	S164160	6HUB
2	BRACE, FLAT CROSSARM 28"	2'-4"	2'-2"	1/4"	1 1/4"	S164192	28FLAT
	BRACE, FLAT CROSSARM 36"	3'-0"	2'-10"			S164224	36FLAT
3	BRACE, VERT. ANGLE 36", 1-1/2" X 1-1/2" X 3/16"	3'-2"	3'-0"	7/8"	-	S164256	3VERT
	BRACE, ALLEY ARM, 13', 2-1/2" X 2-1/2" X 3/16"	13'-0"	12'-9"		-	S164320	13DIAG
	BRACE, ALLEY ARM, 10', 2" X 2" X 3/16"	10'-0"	9'-9"		-	S164288	10DIAG
	BRACE 7FT 3/16" X 2" X 2"	7'-0"	6'-9"		-	S164352	7DIAG
4	BRACE, VERT. ALLEY ARM, 6', 1-3/4" X 1-3/4" X 3/16"	6'-2"	6'-0"	3/4"	-	S163904	6VERT
	BRACE, VERT. ALLEY ARM, 4', 1-3/4" X 1-3/4" X 3/16"	4'-2"	4'-0"		-	S163872	4VERT
5	BRACE, SPECIAL ANGLE, 6', 2" X 2" X 3/16"	6'-2"	6'-0"	4 1/2"	7/8"	S163840	6SPCL
	BRACE, SPECIAL ANGLE, 4', 1-3/4" X 1-3/4" X 3/16"	4'-2"	4'-0"		3/4"	S163808	4SPCL

BILL OF MATERIALS: NONE

NOTES: NONE

REFERENCE: NONE

REV	CHANGE	DRWN	BY	CHKD	APVD	DATE
F	TABLE UPDATE/REVISED TO 3D FORMAT	ARC	RSL	JAS	KRG	02/16/2023
E	OH390.12 MOVED TO FMO	EDM	JAC	GLW	FRC	03/01/2022
D	FIGURE UPDATE	EDM	JIK	JES	CZH	10/12/2020

SDG&E ELECTRIC OVERHEAD CONSTRUCTION STANDARDS

HARDWARE
TRANSFORMER MOUNTING BRACKETS/
STEEL BRACES FOR CROSSARM AND ALLEY ARM

SCALE: NOT TO SCALE

DRAWING NO:	SHEET:
OH390.2	2 OF 7

© 1998 - 2023 San Diego Gas and Electric Company. All rights reserved. Removal of this copyright notice without permission is not permitted under law.

X Indicates Latest Revision | Completely Revised | New Page | Information Removed

TABLE OF CONTENTS

SCOPE: THIS STANDARD ILLUSTRATES FIBERGLASS, TWO PIECE BRACES TO BE USED ON FIBERGLASS OR WOOD CROSSARM.

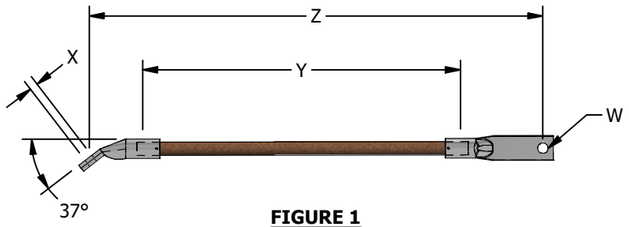

FIGURE 1

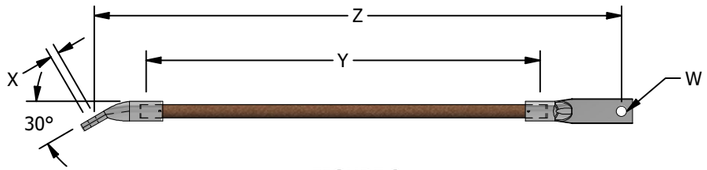

FIGURE 2

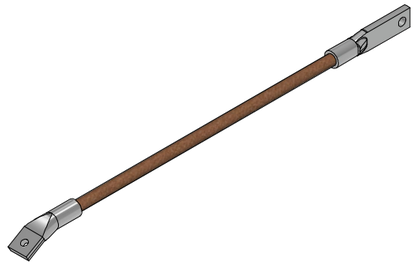

ISO VIEW

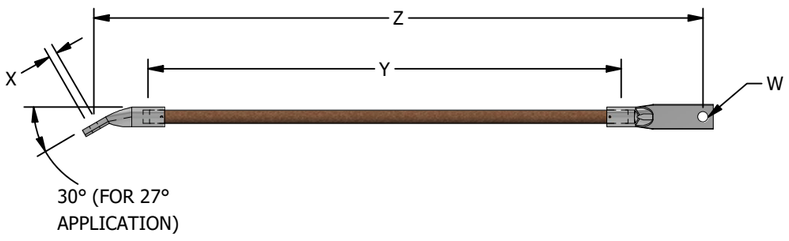

FIGURE 3

INSTALLATION: NONE

TABLE 1

TWO-PIECE BRACES							
ITEM	**DESCRIPTION**	**Z**	**Y**	**X**	**W**	**STOCK NUMBER**	**DESIGN UNITS**
1	BRACE, CROSSARM, BOTTOM MOUNT 48" X 7/8"	2'-6"	1'- 7 1/4"	9/16"	11/16"	S163940	FG2/48
2	BRACE, CROSSARM, BOTTOM MOUNT 60" X 7/8"	2'-11"	1'-11 15/16"	9/16"	11/16"	S163942	FG2/60
3	BRACE, CROSSARM, BOTTOM MOUNT 72" X 7/8"	3'- 4 1/4"	2'-5 3/16"	9/16"	11/16"	S163944	FG2/72

BILL OF MATERIALS: NONE

NOTES: NONE

REFERENCE: NONE

SCOPE: THIS STANDARD ILLUSTRATES FIBERGLASS BRACES TO BE USED ON FIBERGLASS ALLEY ARMS.

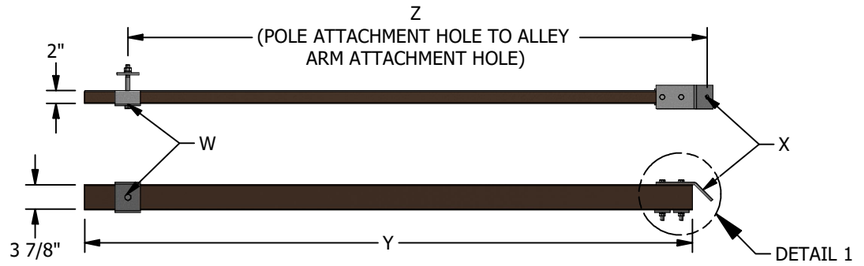

FIGURE 1

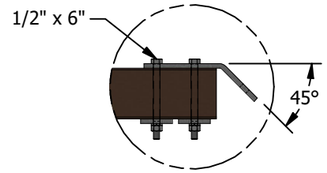

DETAIL 1
ALLEY ARM BRACKET

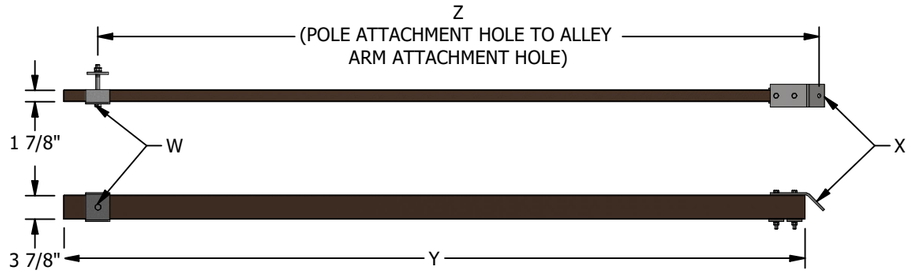

FIGURE 2

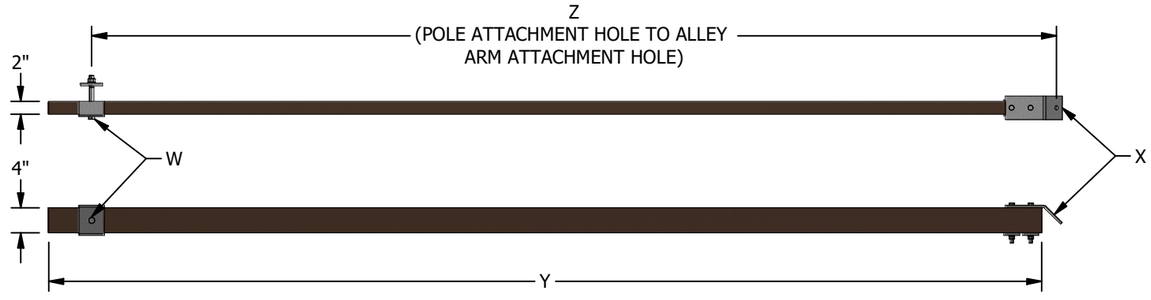

FIGURE 3

INSTALLATION: NONE

TABLE 1

FIBERGLASS ALLEY ARM BRACES							
ITEM	**DESCRIPTION**	**Z**	**Y**	**X (IN)**	**W (IN)**	**STOCK NUMBER**	**DESIGN UNITS**
1	BRACE, ALLEY ARM, FIBERGLASS, 10'-0"	7'-8 1/4"	8'-0 1/4"	13/16	13/16	S163946	10FGAB
2	BRACE, ALLEY ARM, FIBERGLASS, 12'-0"	9'-11"	10'-2 1/4"	13/16	13/16	S163948	12FGAB
3	BRACE, ALLEY ARM, FIBERGLASS, 15'-0"	12'-8 13/16"	13'- 1 1/4"	13/16	13/16	S163950	15FGAB

BILL OF MATERIALS: NONE

NOTES: NONE

REFERENCE: NONE

REV	CHANGE	DRWN	BY	CHKD	APVD	DATE
F	TABLE UPDATE/REVISED TO 3D FORMAT	ARC	RSL	JAS	KRG	02/16/2023
E	OH390.12 MOVED TO FMO	EDM	JAC	GLW	FRC	03/01/2022
D	FIGURE UPDATE	EDM	JIK	JES	CZH	10/12/2020

© 1998 - 2023 San Diego Gas and Electric Company. All rights reserved. Removal of this copyright notice without permission is not permitted under law.

SDG&E ELECTRIC OVERHEAD CONSTRUCTION STANDARDS

HARDWARE
FIBERGLASS CROSSARM BRACE/
FIBERGLASS ALLEY ARM BRACE

SCALE: NOT TO SCALE

DRAWING NO:	SHEET:
OH390.3	3 OF 7

X Indicates Latest Revision | Completely Revised | New Page | Information Removed

SCOPE: THIS STANDARD SHOWS TYPICAL BOLTS, LAGS AND NUTS USED ON CROSSARMS AND POLES.

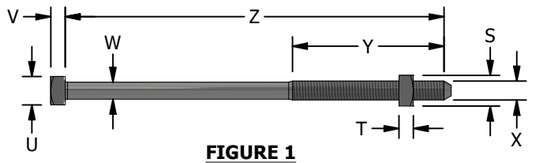

FIGURE 1
MACHINE BOLTS
ITEMS 1-16

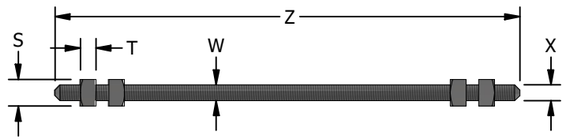

FIGURE 2
SPACE BOLTS
ITEMS 17-20

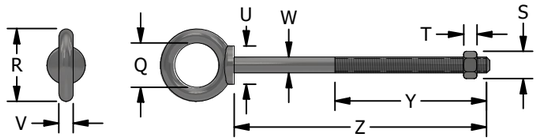

FIGURE 3
SHOULDER EYE BOLTS
ITEMS 21-24

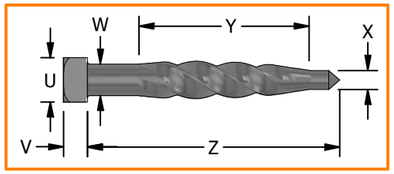

FIGURE 4
LAG SCREW
ITEM 25

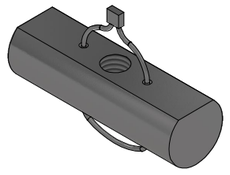

FIGURE 5 (A)
BLIND NUT
ITEMS 26-28

INSTALLATION:

(A) USED FOR GROUNDING STEEL POLES, LADDER ARMS AND EQUIPMENT ARMS.

TABLE 1

BOLTS, LAGS AND NUTS (a)													
FIGURE NUMBER	ITEM	LENGTH Z (IN)	Y MIN. (IN)	X (IN)	W (IN)	V (IN)	U (IN)	T (IN)	S (IN)	R (IN)	Q (IN)	ULT. STRENGTH (LBS)	STOCK NUMBER (X)
MACHINE BOLTS													
1	1	4 1/2	1 1/2	3/8	11/32	9/32	9/16	5/16	5/8	-	-	5,000	S158528, WASHERHEAD
	2	5 TO 8	1 1/2	1/2	29/64	3/8	3/4	3/8	13/16	-	-	10,500	S153024 - S153450
	3	8 TO 10	4										S153450 - S153184 & S152736
	4	5 TO 8	3	5/8	9/16	1/2	15/16	1	1 1/16	-	-	15,500	S155488 - S155584
	5	8 TO 14	4										S155584 & S155616, S154816 - S154880
	6	16 TO 36	6										S154912, S154944, S155072 - S155200
	7	8 TO 14	4	3/4	11/16	3/4	1 1/8	3/4	1 1/4	-	-	23,000	S154080, S154114, S153408, S153440
		14 TO 30	6										S153440, S153472, S153504, S153632 - S153760 & S153826
	8	32 TO 40	6										S153858, S153888, S153984
	9	14 TO 18	2 1/2	7/8	13/16	7/8	1 5/16	7/8	1 7/16	-	-	33,500	S155712, S155744, S155778
	10	18 TO 30	4										S155778 THRU S155902

TABLE 1 (CONT'D)

BOLTS, LAGS AND NUTS (a)													
FIGURE NUMBER	ITEM	LENGTH Z (IN)	Y MIN. (IN)	X (IN)	W (IN)	V (IN)	U (IN)	T (IN)	S (IN)	R (IN)	Q (IN)	ULT. STRENGTH (LBS)	STOCK NUMBER
A449 HEAVY-DUTY MACHINE BOLTS (III)													
1	11	10	-	3/4	-								S158732
	12	12											S158734
	13	14											S158736
	14	18											S155686
	15	22											S155688
	16	24											S155690
SPACE													
2	17	16	(I)	5/8	9/16	-	-	5/8	1 1/16	-		15,500	S156512
	18	18 TO 30											S156544 THRU S156738 (X)
	19	16 TO 30		5/8	-			3/4	1 1/4			26,000	-
	20	36 TO 40		3/4									-
													S156362, S156372 (X)
EYE													
3	21	6	4	-	5/8	9/16	1 3/4	5/8	1 1/16	2 7/8	1 3/4	12,500	-
	22	8 TO 20	6										S150786, S150818 (X)
	23	6	4		3/4	11/16		3/4	1 2/4	3 1/8		21,500	-
	24	8 TO 20	6										-
LAG													
4	25	4 1/16	2 1/4	5/16	1/2	5/16	3/4	-	-	-	-	-	S621602 (X)
BLIND NUTS													
5	26	1/2-13	-									500 (II)	S503460 (X)
	27	5/8-11										800 (II)	S503462 (X)
	28	3/4-10										1,000 (II)	S503464 (X)

BILL OF MATERIALS: NONE

NOTES:

(I) COMPLETELY THREADED

(II) INCLUDES SAFETY FACTOR

(III) THESE ARE STRUCTURAL BOLTS FOR USE SPECIFICALLY WITH REGULATOR PLATFORM.

(X) THIS ITEM IS EXEMPT.

REFERENCE:

(a) GALVANIZED PER A.S.T.M. SPECS. A153-53.

TABLE OF CONTENTS

REV	CHANGE	DRWN	BY	CHKD	APVD	DATE
F	TABLE UPDATE/REVISED TO 3D FORMAT	ARC	RSL	JAS	KRG	02/16/2023
E	OH390.12 MOVED TO FMO	EDM	JAC	GLW	FRC	03/01/2022
D	FIGURE UPDATE	EDM	JIK	JES	CZH	10/12/2020

SDG&E ELECTRIC OVERHEAD CONSTRUCTION STANDARDS

HARDWARE
BOLTS, LAGS AND NUTS

SCALE: NOT TO SCALE

DRAWING NO: OH390.4

SHEET: 4 OF 7

© 1998 - 2023 San Diego Gas and Electric Company. All rights reserved. Removal of this copyright notice without permission is not permitted under law.

X Indicates Latest Revision | Completely Revised | New Page | Information Removed

TABLE OF CONTENTS

SCOPE: THIS STANDARD SHOWS TYPICAL WASHERS USED ON CROSSARMS AND POLES.

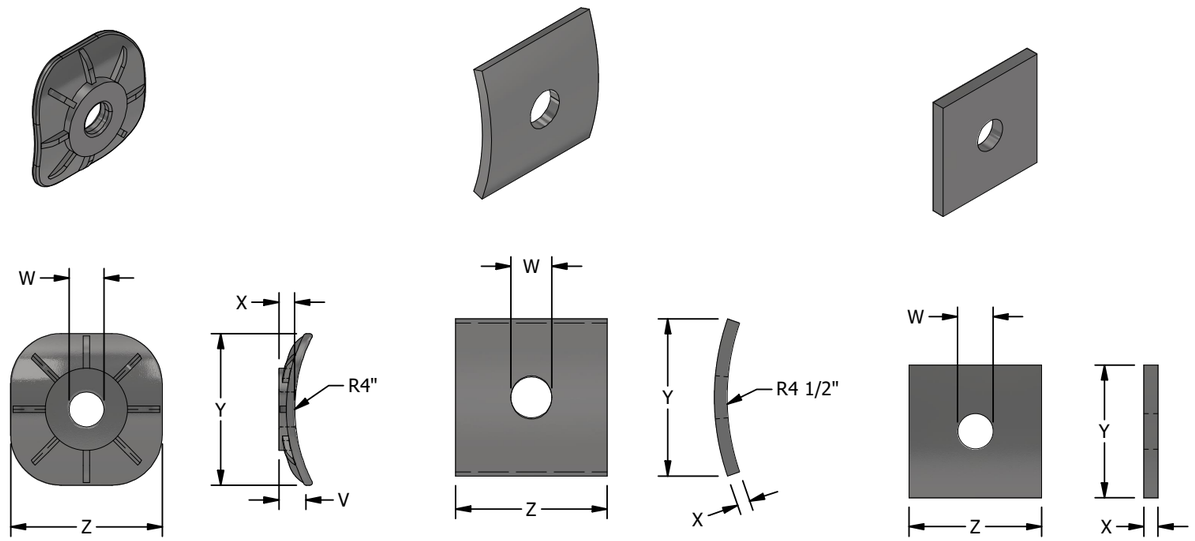

FIGURE 1
ITEMS 1-2

FIGURE 2
ITEM 3

FIGURE 3
ITEMS 4-7

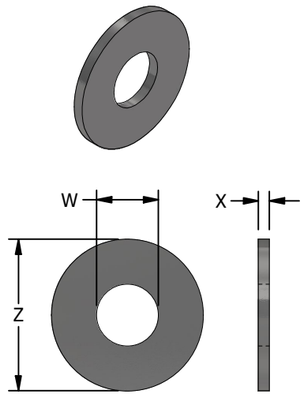

FIGURE 4
ITEMS 8-11

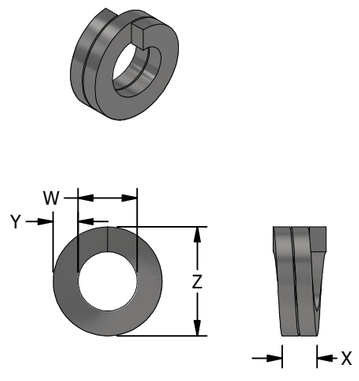

FIGURE 5 (A)
ITEMS 12-14

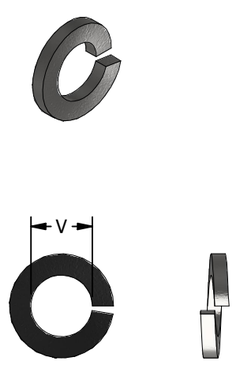

FIGURE 6
ITEMS 15-18

INSTALLATION:

(A) BACK OFF ONE-QUARTER TURN AFTER WASHER HAS BEEN FULLY COMPRESSED.

TABLE 1

WASHERS							
ITEM	**Z (IN)**	**Y (IN)**	**X (IN)**	**W (IN)**	**V (IN)**	**STOCK NUMBER**	**DESIGN UNITS**
SQUARE CURVED WASHER (a)							
1	3	3	5/16	11/16	5/8	S797792	-
2	4	4	7/16	13/16	1	S797760	RIBWSH
3	3	3	1/4	13/16	-	S798912	-
SQUARE FLAT WASHERS (a)							
4	3 1/2	3 1/2	3/8	15/16	-	S799138	-
5	4	4	3/8	13/16	-	S800070 (X)	-
6	2 1/4	2 1/4	3/16	11/16	-	S799040	5/8SQ
7	3	3	1/4	13/16	-	S799104	SQ-WSH
ROUND WASHERS (a)							
8	2	-	9/64	13/16	-	S800256	RD-WSH
9	1 3/4	-	1/8	11/16	-	S800320	5/8R
10	1 3/8	-	7/64	9/16	-	S800192	1/2R
11	1	-	5/64	7/16	-	S800288	3/8R
DOUBLE COIL SPRING WASHERS (A) (I)							
12	1 1/4	7/32	11/64	13/16	-	S798496	SP-WSH
13	1 1/16	3/16	9/64	11/16	-	S798560	5/8S
14	27/32	5/32	7/64	17/32	-	S798464	1/2S
MISCELLANEOUS (I)							
15	SPRING LOCK WASHER				3/8	S796834	-
16					1/2	S796770	-
17					5/8	S796866	-
18					3/4	S796802 (X)	LK-WSH

BILL OF MATERIALS: NONE

NOTES:

(I) OPTIONAL FOR SECONDARY AND GUY CONNECTIONS

(X) THIS ITEM IS EXEMPT

REFERENCE:

(a) GALVANIZED PER A.S.T.M. SPECS. A153-53

REV	CHANGE	DRWN	BY	CHKD	APVD	DATE
F	TABLE UPDATE/REVISED TO 3D FORMAT	ARC	RSL	JAS	KRG	02/16/2023
E	OH390.12 MOVED TO FMO	EDM	JAC	GLW	FRC	03/01/2022
D	FIGURE UPDATE	EDM	JIK	JES	CZH	10/12/2020

SDG&E ELECTRIC OVERHEAD CONSTRUCTION STANDARDS

HARDWARE WASHERS

SCALE: NOT TO SCALE

DRAWING NO: OH390.5

SHEET: 5 OF 7

© 1998 - 2023 San Diego Gas and Electric Company. All rights reserved. Removal of this copyright notice without permission is not permitted under law.

X Indicates Latest Revision | Completely Revised | New Page | Information Removed

SCOPE: THIS STANDARD SHOWS TYPICAL BOLT AND WASHER ASSEMBLIES USED ON CROSSARMS AND POLES.

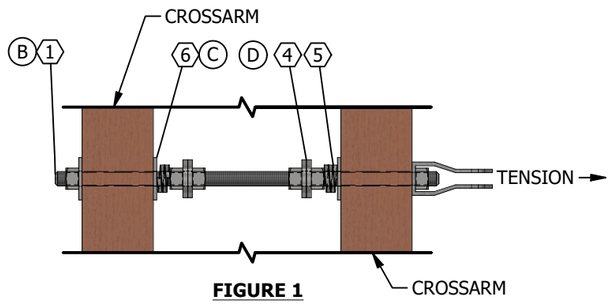

FIGURE 1
SPACE BOLT
(TENSION IN ONE DIRECTION)

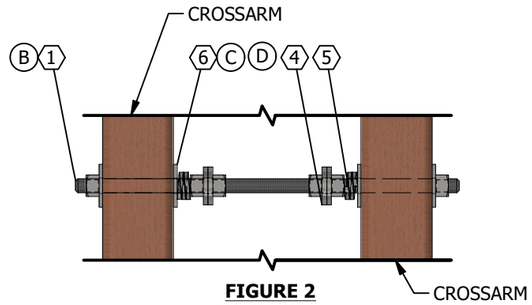

FIGURE 2
SPACE BOLT
(NO TENSION OR IN EITHER DIRECTION)

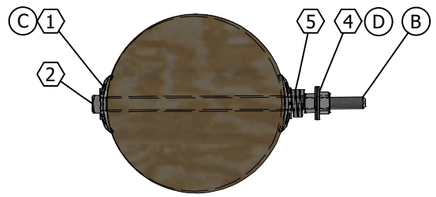

FIGURE 3
MACHINE BOLT

TABLE 1

BOLT AND WASHER ASSEMBLIES			
ITEM	DESCRIPTION	QUANTITY	STANDARD PAGE
1	BOLT, SPACE, GALV., & 6 NUTS (SIZE AS REQ'D)	1	390.4
2	BOLT, MACH, GALV. & 2 NUTS (SIZE AS REQ'D)	1	
3	WASHER, SQUARE, CURVED, GALV. (SIZE AS REQ'D)	2	390.5
4	WASHER, ROUND, GALV. (SIZE AS REQ'D)	AS REQ'D	
5	WASHER, DOUBLE COIL SPRING, GALV. (SIZE AS REQ'D)	AS REQ'D	
6	WASHER, SQUARE, FLAT, GALV. (SIZE AS REQ'D)	4	

INSTALLATION:

A. DOUBLE COIL SPRING LOCK WASHER INSTALLATION.
   1. PLACE SQUARE FLAT WASHER AGAINST WOOD.
   2. INSTALL DOUBLE COIL WASHER OF PROPER SIZE ON BOLT.
   3. INSTALL NUT AND TIGHTEN UNTIL COIL IS FULLY COMPRESSED.
   4. BACK OFF NUT APPROXIMATELY 1/4 TURN.

(B) CUT OFF END OF BOLT WHEN IT PROTRUDES MORE THAN TWO INCHES BEYOND NUT.

(C) USE FLAT SQUARE WASHERS FOR FLAT SURFACES AND FOR BOLTING TRANSFORMERS TO POLES. USE CURVED SQUARE WASHERS ON CURVED SURFACES WHEN HOLDING GUYS OR CONDUCTORS.

(D) DOUBLE ROUND WASHERS FOR BONDING AND FUTURE BONDING.

BILL OF MATERIALS: NONE

NOTES: NONE

REFERENCE: NONE

SCOPE: THIS STANDARD SHOWS TYPICAL SPLIT RING AND STEEL THRUST PLATE ASSEMBLIES USED ON CROSSARMS AND POLES.

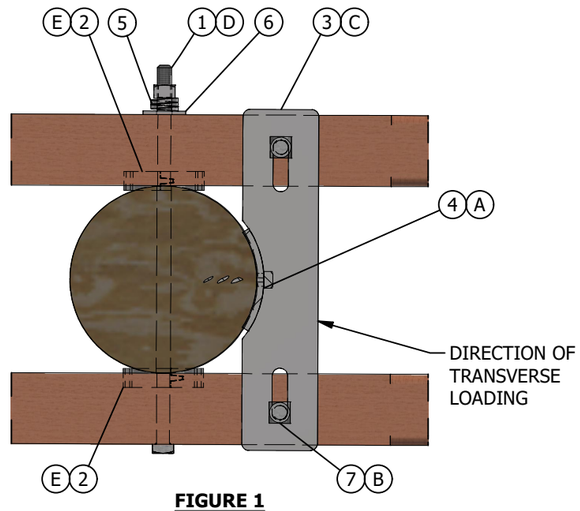

FIGURE 1

TABLE 1

THRUST PLATE APPLICATION (F)				
THRUST PLATE SIZE (IN)	DIAMETER OF POLE AT CROSSARM THRU-BOLT (IN)			
	STANDARD CROSSARMS		HEAVY CROSSARMS	
	MIN.	MAX.	MIN.	MAX.
18	7 3/4	11 3/4	5 3/4	9 3/4
22	11 3/4	15 3/4	9 3/4	13 3/4

ATTENTION:

* SPLIT RINGS MAY NOT BE REQUIRED. (a)

INSTALLATION:

(A) BEFORE DRILLING CROSSARMS FOR BOLTING THRUST PLATE TO CROSSARMS, ENSURE THAT THRUST PLATE IS DRIVEN TIGHT AGAINST POLE WITH LAG SCREW.

(B) DRILL THRUST PLATE MOUNTING BOLT HOLES ON CROSSARMS CENTERLINE.

(C) DO NOT BOND STEEL THRUST PLATE OR HARDWARE.

(D) SEE SHEET 3 FOR TYPICAL BOLT AND WASHER ASSEMBLY.

(E) CUT POLE GAIN ON BOTH SIDES WHEN SPLIT RINGS ARE INSTALLED.

(F) ADD 1/2" TO THESE DIMENSIONS IF SPLIT RINGS ARE INSTALLED.

BILL OF MATERIALS:

ITEM	DESCRIPTION	QUANTITY	CALLOUTS	STANDARD PAGE	STOCK NUMBER	DESIGN UNITS
1	BOLT, MACHINE, 3/4" X 20", GALV W/ NUT	1	-	390.4	S153632	-
2	SPLIT RING, STEEL, 1" X 4" TECO	2	-	-	S599584	SPLT-R
3	PLATE, THRUST, 18" X 4" X 3/8" STEEL, HOT DIPPED GALVANIZED, WITH 2 SLOTTED CROSSARM BOLT HOLES 13/16" X 2-13/16"; AND 2 ROUND POLE LAG SCREW HOLES 11/16".	1	-	-	S541210	TPLT18
	PLATE, THRUST, 22" X 5" X 3/8" STEEL	1	-	-	S541208	TPLT22
4	SCREW LAG SQUARE HEAD FETTER DRIVE	1	(X)	-	S621602	-
5	WASHER, 3/4", DOUBLE COIL SPRING, TYPE M-W, STEEL, TIN/ZINC COAT	1	(I)	390.5	S798496	NP/F
6	WASHER, FLAT, SQUARE, 2-1/4" X 2-1/4" X 3/16", 13/16" HOLE, STEEL GALV	3	(I)	390.5	S799050	NP/F
7	BOLT, MACH, GALV, 3/4" X 9", 1 SQUARE AND 1 DOUBLE COIL SPRING WASHER	2	-	390.4	S154080	-

NOTES:

(I) SIZE AND/OR TYPE MAY VARY DEPENDING UPON SPECIFIC DESIGN NEEDS.

(X) THIS ITEM IS EXEMPT.

REFERENCE:

(a) FOR APPLICATION OF THRUST PLATE AND SPLIT RINGS, SEE OH433.

TABLE OF CONTENTS

REV	CHANGE	DRWN	BY	CHKD	APVD	DATE
F	TABLE UPDATE/REVISED TO 3D FORMAT	ARC	RSL	JAS	KRG	02/16/2023
E	OH390.12 MOVED TO FMO	EDM	JAC	GLW	FRC	03/01/2022
D	FIGURE UPDATE	EDM	JIK	JES	CZH	10/12/2020

SDG&E ELECTRIC OVERHEAD CONSTRUCTION STANDARDS

HARDWARE
TYPICAL BOLT AND WASHER ASSEMBLY/
TYPICAL SPLIT RING AND STEEL THRUST PLATE ASSEMBLY

SCALE: NOT TO SCALE

DRAWING NO: OH390.6

SHEET: 6 OF 7

© 1998 - 2023 San Diego Gas and Electric Company. All rights reserved. Removal of this copyright notice without permission is not permitted under law.

X Indicates Latest Revision | Completely Revised | New Page | Information Removed

TABLE OF CONTENTS

SCOPE: THIS STANDARD SHOWS TYPES OF INSULATOR BRACKETS USED IN THE DISTRIBUTION SYSTEM.

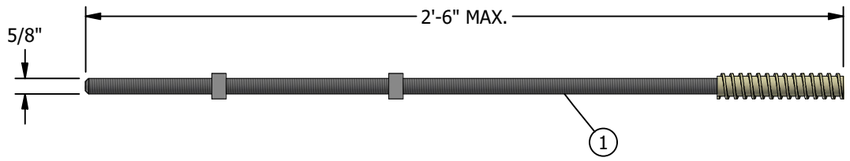

FIGURE 1

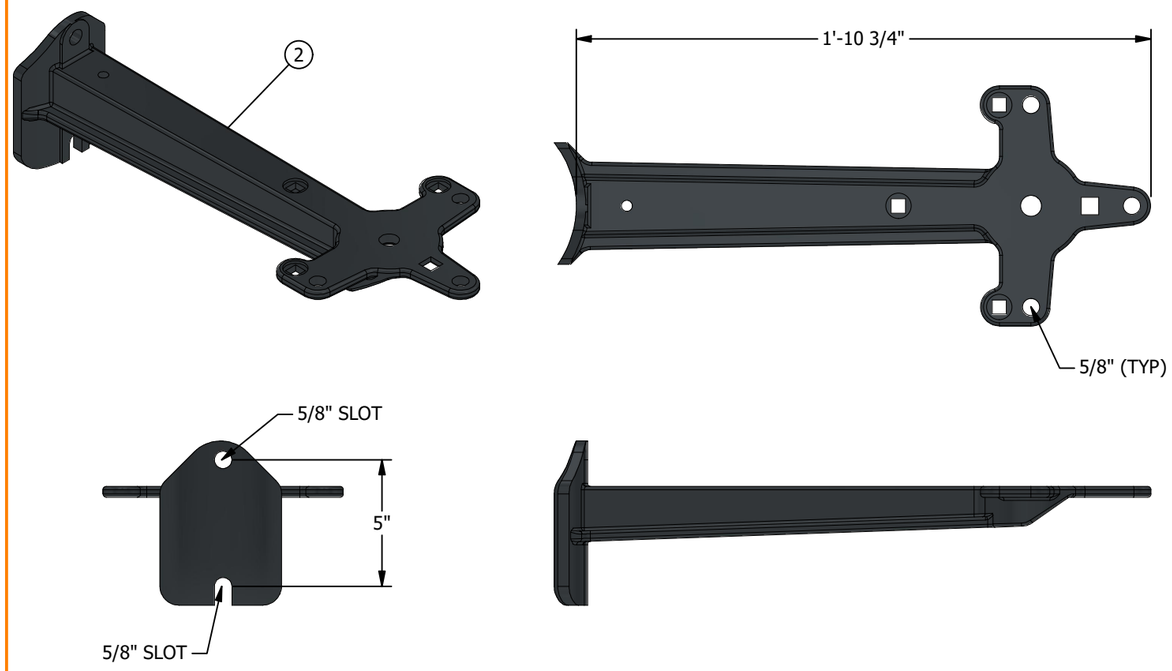

FIGURE 2

INSTALLATION: NONE

BILL OF MATERIALS:

ITEM	DESCRIPTION	QUANTITY	CALLOUTS	STANDARD PAGE	STOCK NUMBER	DESIGN UNITS
1	BRACKET, INSULATOR, STANDOFF, 1" LEAD THREAD, 30" LONG	AS REQ'D	-	-	S166144	KBKT30
	BRACKET, INSULATOR, STANDOFF, 1 3/8" LEAD THREAD, 28" LONG				S166176	KBKT28
2	BRACKET 18" VERTICAL MALLEABLE IRON H.D. GALV.	AS REQ'D	-	-	S166240	4H-BKT

NOTES: NONE

REFERENCE: NONE

SCOPE: THIS STANDARD SHOWS BOLT COVERS AND DESCRIBES THEIR APPLICATION.

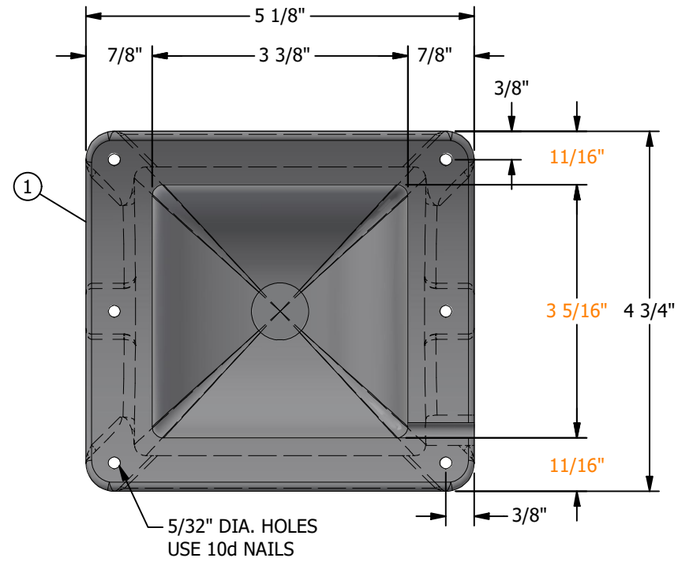

FIGURE 1
REAR VIEW
PLASTIC THRU BOLT COVERS FOR POLES (A)

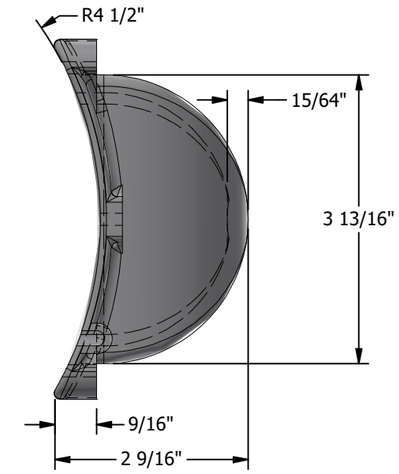

FIGURE 1
SIDE VIEW
PLASTIC THRU BOLT COVERS FOR POLES (A)

INSTALLATION:

(A) TO BE USED IN COVERING 3" X 3" X 1/4" WASHERS.

B. A BOLT COVER IS NOT REQUIRED ON EQUIPMENT THAT IS EFFECTIVELY GROUNDED.

C. A BOLT COVER IS NOT REQUIRED ON STEEL POLES.

D. A BOLT COVER IS REQUIRED IF A SPACE BOLT AND/OR MACHINE BOLT SUPPORTING DEADEND HARDWARE OF AN ENERGIZED CONDUCTOR OR POLE TOP APPARATUS PROJECTS INTO THE CLIMBING SPACE. A BOLT COVER IS NOT REQUIRED IF VOLTAGE IS 750V OR LESS, OR CIRCUIT IS LOCATED AT TOP LEVEL OF POLE AND VOLTAGE IS GREATER THAN 7500V. SEE G.O. 95 RULE 54.7 A3.

BILL OF MATERIALS:

ITEM	DESCRIPTION	QUANTITY	CALLOUTS	STANDARD PAGE	STOCK NUMBER	DESIGN UNITS
1	COVER, BOLT, PLASTIC	AS REQ'D	-	-	S285696	-

NOTES: NONE

REFERENCE: NONE

REV	CHANGE	DRWN	BY	CHKD	APVD	DATE
F	TABLE UPDATE/REVISED TO 3D FORMAT	ARC	RSL	JAS	KRG	02/16/2023
E	OH390.12 MOVED TO FMO	EDM	JAC	GLW	FRC	03/01/2022
D	FIGURE UPDATE	EDM	JIK	JES	CZH	10/12/2020

SDG&E ELECTRIC OVERHEAD CONSTRUCTION STANDARDS

HARDWARE
INSULATOR BRACKETS/PLASTIC THRU BOLT COVERS

SCALE: NOT TO SCALE

DRAWING NO:	SHEET:
OH390.7	7 OF 7

© 1998 - 2023 San Diego Gas and Electric Company. All rights reserved. Removal of this copyright notice without permission is not permitted under law.

X Indicates Latest Revision | Completely Revised | New Page | Information Removed

SCOPE: THIS STANDARD SHOWS VARIOUS TYPES OF INSULATOR PINS, POST TOP INSULATORS, AND FIBERGLASS CONDUCTOR SPACER.

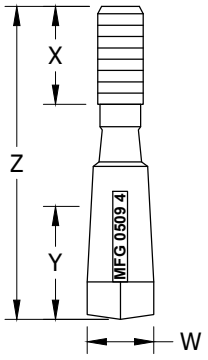

ITEM 1

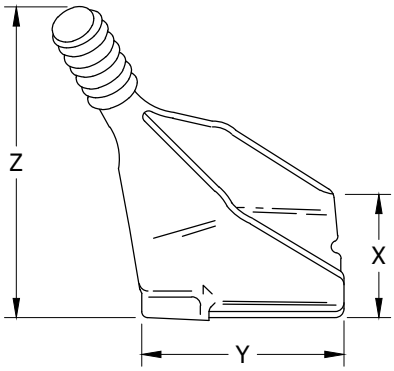

ITEM 2 (a)

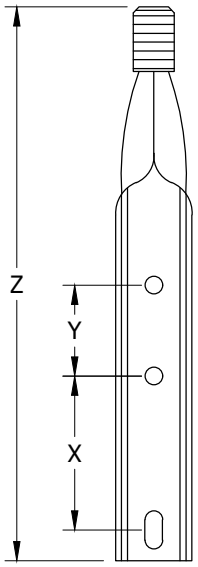

ITEM 3

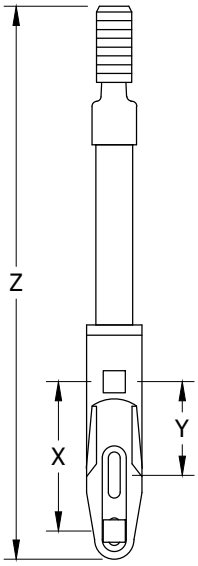

ITEM 4

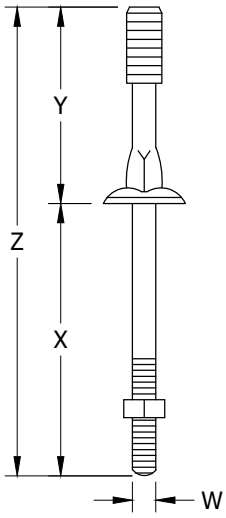

ITEM 5

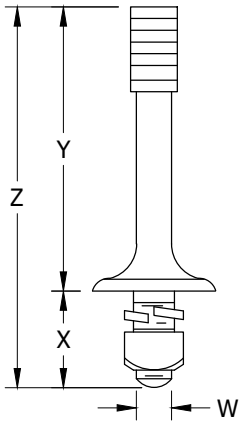

ITEM 6

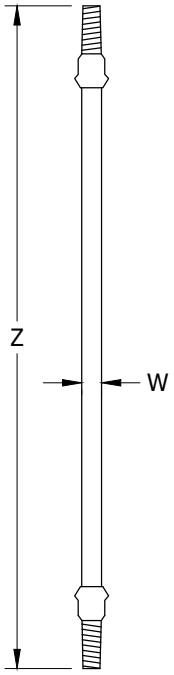

ITEM 7 (b)

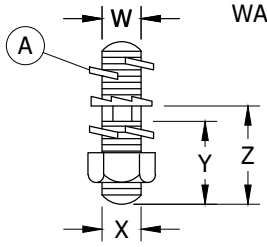

ITEM 8A/8B (III)

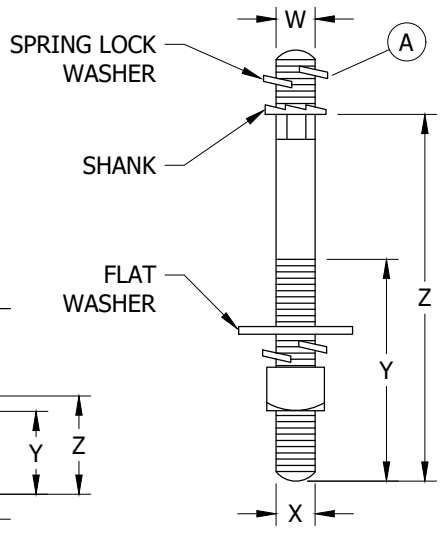

ITEM 8C/8D (IV)

FIGURE 1

© 1998 - 2020 San Diego Gas & Electric Company. All rights reserved. Removal of this copyright notice without permission is not permitted under law.

REV	CHANGE	DR	BY	DSN	APV	DATE	REV	CHANGE	DR	BY	DSN	APV	DATE
C	EDITORIAL CHANGES	-	JIK	JES	CZH	04/20/2019	F	TABLE UPDATE	EDM	RSL	JES	CZH	10/12/2020
B	EDITORIAL CHANGES	-	GW	JS	MDJ	08/29/2017	E	INFORMATION REMOVED	-	JK	JES	CZH	11/12/2019
A	EDITORIAL CHANGES	-	JS	JS	MDJ	04/30/2017	D	EDITORIAL CHANGES	-	JC	JES	CZH	09/17/2019

X Indicates Latest Revision | Completely Revised | New Page | Information Removed

SDG&E ELECTRIC OVERHEAD CONSTRUCTION STANDARDS

INSULATOR PINS AND SPACERS

OH396.1

TABLE OF CONTENTS

INSTALLATION:

(A) WHEN ASSEMBLING STUD TO INSULATOR, PLACE A 3/4" LOCK WASHER BETWEEN THE STUD AND INSULATOR.

(B) FOR FIBERGLASS CROSSARMS, DO NOT EXCEED A TORQUE VALUE OF 25 FT-LBS WHEN ATTACHING HARDWARE TO CROSSARM. USE EITHER A HELICAL SPRING LOCK WASHER OR A DOUBLE COIL HELICAL SPRING LOCK WASHER AND TORQUE NO MORE THAN WHAT IS NEEDED TO CLOSE THE GAP OF THE COILS (APPROXIMATELY 25 FT-LBS MAX). OVER TORQUING HARDWARE MAY DAMAGE CROSSARM.

TABLE 1

INSULATOR PIN AND SPACER SPECIFICATIONS

ITEM	DESCRIPTION	Z	Y	X	W	STOCK NUMBER	DESIGN UNITS
1	PIN, TRANSFORMER, 1 3/8"	5"	1 3/4"	1 1/2"	5/8"	S529214 (X)	PS/01+
	PIN, TRANSFORMER, 1"	5"	1 3/4"	1 1/2"	5/8"	S529248	PS/01
2	PIN, INSULATOR, ANGLE, 1 3/8"	8"	4 1/2"	4"	-	S531072	PA1+
	PIN, INSULATOR, ANGLE, 1"	8"	4 1/2"	4"	-	S531104	PA1
3	PIN, POLE TOP, 1 3/8"	2'-0"	5"	8"	-	S531760	PTP1+
	PIN, POLE TOP, 1"	2'-0"	5"	8"	-	S532480	PTP1
4	PIN, POLE TOP FIBERGLASS, 1"	2'-6"	5 1/2"	8"	-	S529220	PTP18
5	PIN, INSULATOR, 4KV/SEC, 1"	1'-0 1/2"	6"	6 1/2"	5/8"	S532608	PS1S
	PIN, INSULATOR, 12KV, 1 3/8"	1'-2 1/2"	7"	7 1/2"	5/8"	S532448	PS1+
	PIN, INSULATOR, 12KV, 1"	1'-1 1/2"	6"	7 1/2"	5/8"	S532706 (X)	PS1
	PIN, INSULATOR, 12KV, 1 3/8" - K7774-8 1/2"	1'-3 1/2"	7"	8 1/2"	5/8"	S532450	PS1Z
6	PIN, SHORT SHANK, 1"	8 1/2"	6"	2 1/2"	5/8"	S532426	PSS1
	PIN, SHORT SHANK, 1 3/8"	9 5/8"	8"	1 5/8"	3/4"	S532434	PSS1+
7	CONDUCTOR SPACER, FIBERGLASS	2'-0"	-	-	3/4"	S663266	FGS24"
	CONDUCTOR SPACER, FIBERGLASS	4'-0"	-	-	3/4"	S663278	FGS48"
8A	POST INSULATOR STUD, STEEL	1 3/4"	1 9/16"	5/8"	3/4"	S701728	STUD-S
8B	POST INSULATOR STUD, STEEL	1 3/4"	1 9/16"	3/4"	3/4"	S701726	STUD-D
8C	POST INSULATOR STUD, FG/WOOD	7 1/2"	3 1/2"	5/8"	3/4"	S701760	STUD-W
8D	POST INSULATOR STUD, FG/WOOD	10"	4"	5/8"	3/4"	S701762	STUD-L

TABLE OF CONTENTS

BILL OF MATERIALS: NONE

NOTES:

I. THE ALLOWABLE TRANSVERSE LOAD ON PINS IS AS FOLLOWS:

a. 1" STRAIGHT = 330 LBS (C)
b. 1 3/8" STRAIGHT = 650 LBS (C)
c. ANGLE PIN = 365 LBS (C)
d. 1" AND 1 3/8" STEEL POLE TOP PIN = 600 LBS
e. 1" FIBERGLASS POLE TOP PIN = 750 LBS (C)
f. POST INSULATOR, STUD STEEL (8A) = 800 LBS
g. POST INSULATOR, STUD STEEL (8B) = 1,150 LBS
h. POST INSULATOR, STUD FG/WOOD (8C) = 800 LBS
i. POST INSULATOR, STUD FG/WOOD (8D) = 800 LBS

© 1998 - 2020 San Diego Gas & Electric Company. All rights reserved. Removal of this copyright notice without permission is not permitted under law.

REV	CHANGE	DR	BY	DSN	APV	DATE	REV	CHANGE	DR	BY	DSN	APV	DATE
C	EDITORIAL CHANGES	-	JIK	JES	CZH	04/20/2019	F	TABLE UPDATE	EDM	RSL	JES	CZH	10/12/2020
B	EDITORIAL CHANGES	-	GW	JS	MDJ	08/29/2017	E	INFORMATION REMOVED	-	JK	JES	CZH	11/12/2019
A	EDITORIAL CHANGES	-	JS	JS	MDJ	04/30/2017	D	EDITORIAL CHANGES	-	JC	JES	CZH	09/17/2019

NOTES (CONT'D):

II. DOUBLE COIL HELICAL SPRING LOCK WASHERS ARE TYPICALLY USED ON WOODEN POLE LINE ASSEMBLIES THAT ARE SUBJECT TO CONSIDERABLE EXPANSION AND CONTRACTION. THE DOUBLE COIL PROVIDES THE TRAVEL NECESSARY TO MAINTAIN EFFECTIVE CLAMPING FORCE IN SUCH ASSEMBLIES. IT CAN BE USED ON STEEL POLE AND FIBERGLASS ASSEMBLIES AS WELL.

(III) FOR STEEL CROSSARM OR BRACKET.

(IV) FOR WOOD AND FIBERGLASS CROSSARMS. (B)

(X) THIS ITEM IS EXEMPT.

REFERENCE:

(a) ANGLE PIN APPLICATION, SEE OH433. IF PLS-CADD IS UTILIZED FOR DEVELOPING STRINGING/SAGGING CHARTS, THE LINE ANGLE LIMITS SHOWN IN OH433 CAN BE OVERRIDDEN WITH THE RESULTS FROM THE PLS-CADD ANALYSIS.

(b) FIBERGLASS CONDUCTOR SPACER, SEE OH755.

(c) PIN VALUES ARE BASED ON THE HEIGHT OF A FULLY ATTACHED TYPICAL F-NECK INSULATOR. ALL OTHER INSULATORS OR ATTACHMENT CONFIGURATIONS THAT MAY INCREASE THE HEIGHT OF THE CONDUCTOR SHALL BE A DEVIATION REQUIRING APPROVAL BY DISTRIBUTION CIVIL/STRUCTURAL ENGINEERING.

TABLE OF CONTENTS

© 1998 - 2020 San Diego Gas & Electric Company. All rights reserved. Removal of this copyright notice without permission is not permitted under law.

REV	CHANGE	DR	BY	DSN	APV	DATE	REV	CHANGE	DR	BY	DSN	APV	DATE
C	EDITORIAL CHANGES	-	JIK	JES	CZH	04/20/2019	F	TABLE UPDATE	EDM	RSL	JES	CZH	10/12/2020
B	EDITORIAL CHANGES	-	GW	JS	MDJ	08/29/2017	E	INFORMATION REMOVED	-	JK	JES	CZH	11/12/2019
A	EDITORIAL CHANGES	-	JS	JS	MDJ	04/30/2017	D	EDITORIAL CHANGES	-	JC	JES	CZH	09/17/2019

SCOPE: THIS STANDARD SHOWS VARIOUS BRACKETS FOR THE MOUNTING OF EQUIPMENT.

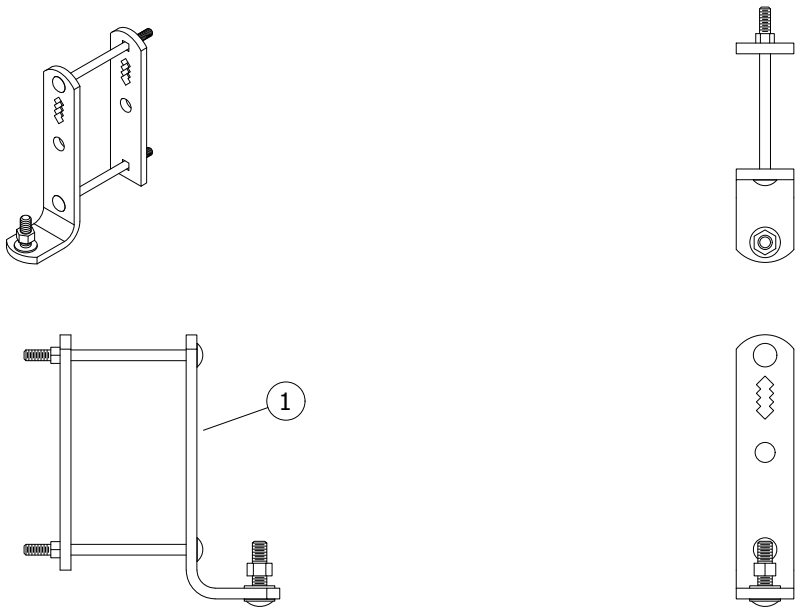

FIGURE 1
CROSSARM CUTOUT (A)
MOUNTING BRACKET

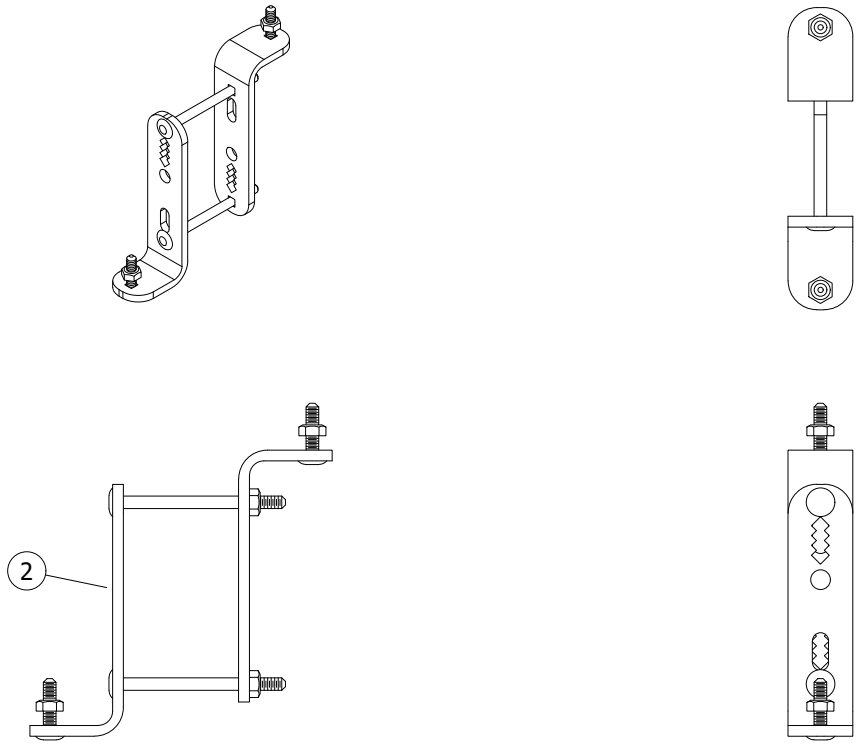

FIGURE 2
CROSSARM CUTOUT/ARRESTER (A)
DOUBLE MOUNTING BRACKET

© 1998 - 2022 San Diego Gas & Electric Company. All rights reserved. Removal of this copyright notice without permission is not permitted under law.

REV	CHANGE	DR	BY	DSN	APV	DATE	REV	CHANGE	DR	BY	DSN	APV	DATE
C	DRAWING UPDATE	EDM	RSL	GLW	KRG	11/09/2022	F						
B	TABLE UPDATE	EDM	JIK	JES	CZH	05/11/2020	E						
A	ORIGINAL ISSUE	-	-	-	PTA/MJC	12/08/2010	D						

Indicates Latest Revision | Completely Revised | New Page X | Information Removed

SDG&E ELECTRIC OVERHEAD CONSTRUCTION STANDARDS

EQUIPMENT MOUNTING BRACKETS

OH397.1

TABLE OF CONTENTS

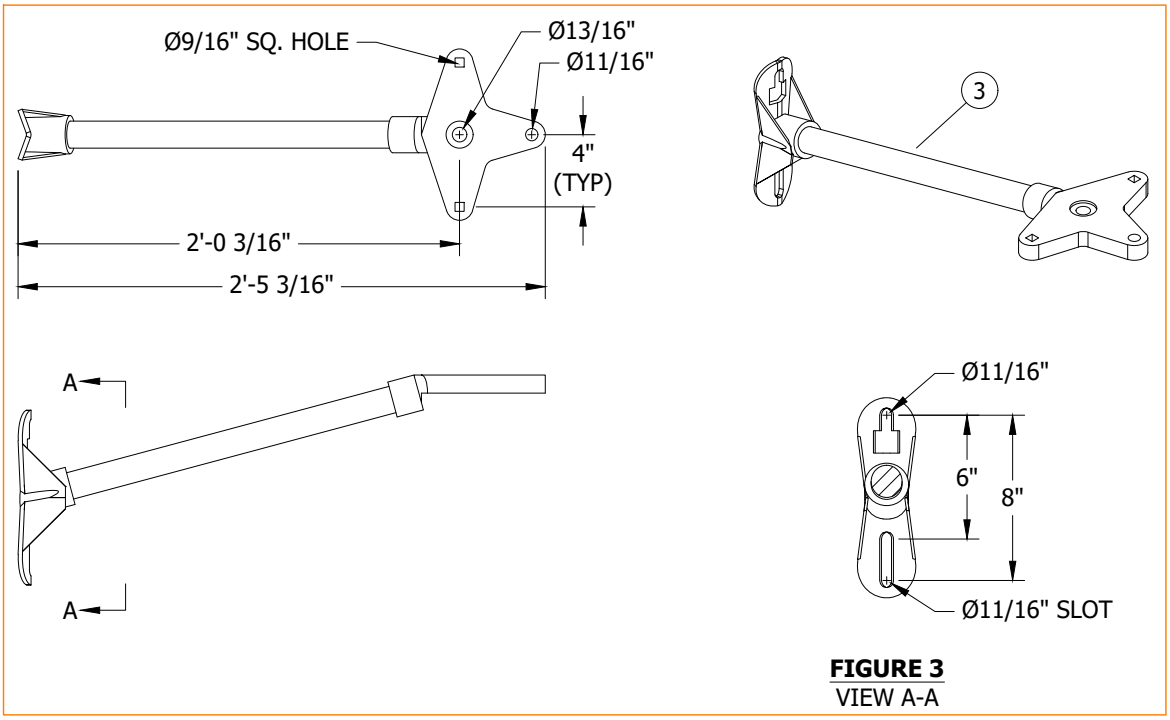

FIGURE 3
VIEW A-A

FIGURE 3
EQUIPMENT MOUNTING
BRACKET

TABLE OF CONTENTS

INSTALLATION:

(A) WHEN INSTALLING ON A 6-INCH WIDE CROSSARM, REPLACE BRACKET SUPPLIED CARRIAGE BOLTS WITH 8-INCH CARRIAGE BOLTS.

BILL OF MATERIALS:

ITEM	DESCRIPTION	QUANTITY	STANDARD PAGE	STOCK NUMBER	DESIGN UNITS
1	BRACKET, CUTOUT/ARRESTER, CROSSARM MOUNTING	--	--	S165452 (X)	COBKT
2	BRACKET, DOUBLE CUTOUT/ARRESTER, CROSSARM MOUNTING	--	--	S165454 (X)	DBLBKT
3	BRACKET, FIBERGLASS, EQUIPMENT MOUNTING, 2'-0"	--	--	S166450	COLABS
4	BOLT, CARRIAGE, 3/8" X 8" W/SQ NUT (A) (I)	--	--	S150144	--

NOTES:

(I) ITEM NOT SHOWN ON FIGURES.
(X) THIS ITEM IS EXEMPT.

REFERENCE: NONE

© 1998 - 2022 San Diego Gas & Electric Company. All rights reserved. Removal of this copyright notice without permission is not permitted under law.

REV	CHANGE	DR	BY	DSN	APV	DATE	REV	CHANGE	DR	BY	DSN	APV	DATE
C	DRAWING UPDATE	EDM	RSL	GLW	KRG	11/09/2022	F						
B	TABLE UPDATE	EDM	JIK	JES	CZH	05/11/2020	E						
A	ORIGINAL ISSUE	-	-	-	PTA/MJC	12/08/2010	D						

MAIN TABLE OF CONTENTS

PAGE	SUBJECT
401	TABLE OF CONTENTS
430	CROSSARM CONSTRUCTION
432	CROSSARM CONSTRUCTION, SINGLE ARM, DEADEND
433	LINE ANGLES ON CROSSARMS
435	BUCKARM CONSTRUCTION
437	FLYING TAP
440	ALLEY ARMS
473	FIBERGLASS POLE TOP EXTENSIONS-EQUIPMENT MOUNTING
474	DEADENDING

REV	CHANGE	DRWN	BY	CHKD	APVD	DATE
G	REVISED TO 3D FORMAT	ARC	JIK	-	-	01/31/2022
F	EDITORIAL CHANGES	EDM	GLW	JES	CZH	03/10/2020
E	UPDATED STANDARDS	-	JK	-	-	09/21/2018

SDGE
A Sempra Energy utility®

© 1998 - 2022 San Diego Gas and Electric Company. All rights reserved. Removal of this copyright notice without permission is not permitted under law.

SDG&E ELECTRIC OVERHEAD CONSTRUCTION STANDARDS

DISTRIBUTION POLE TOP
TABLE OF CONTENTS

SCALE: NOT TO SCALE

DRAWING NO: OH401.1

SHEET: 1 OF 1

X Indicates Latest Revision | Completely Revised | New Page | Information Removed

SCOPE: THIS STANDARD SHOWS PHASE CONDUCTOR PIN POSITION FOR TANGENT LINE FIBERGLASS CROSSARM CONSTRUCTION LINES UNDER 4KV.

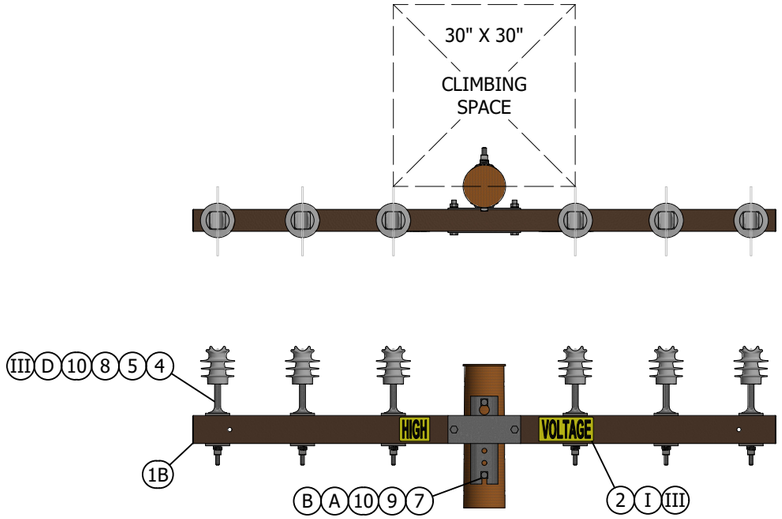

FIGURE 1
TANGENT LINE
SINGLE CROSSARM

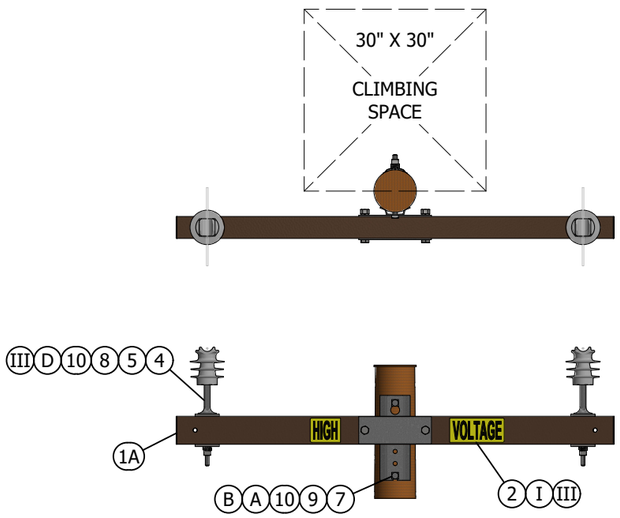

FIGURE 2
TANGENT LINE
SINGLE CROSSARM

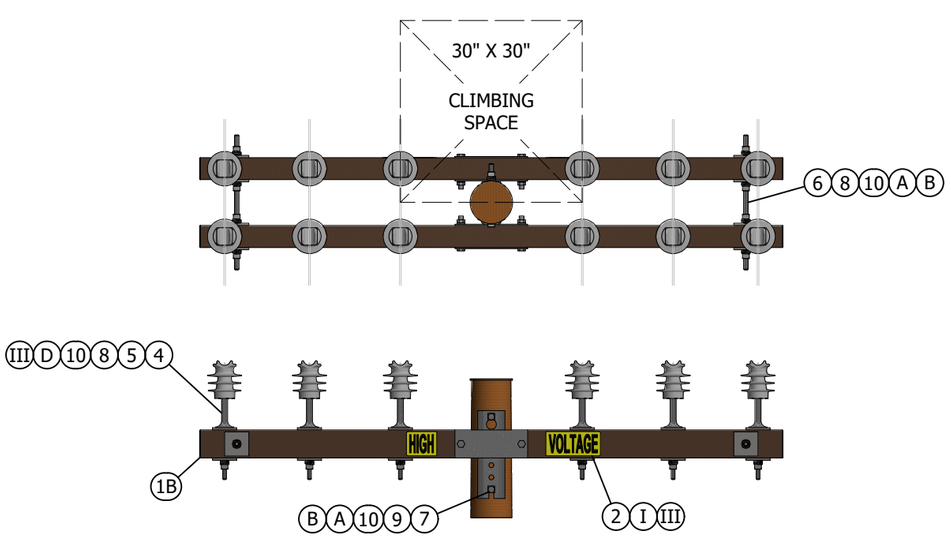

FIGURE 3
TANGENT LINE
DOUBLE CROSSARMS

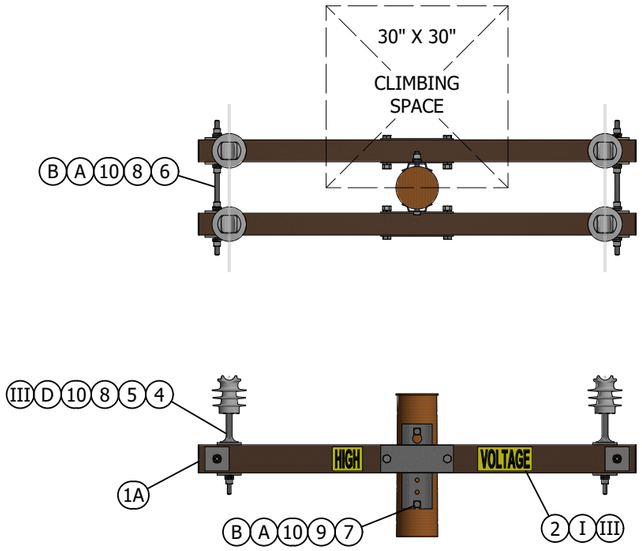

FIGURE 4
TANGENT LINE
DOUBLE CROSSARMS

REV	CHANGE	DRWN	BY	CHKD	APVD	DATE
F	REVISED TO 3D FORMAT	AMP	JIK	-	-	03/16/2023
E	INSTALLATION UPDATE	EDM	MRF	GLW	CZH	09/30/2021
D	DRAWING UPDATE	-	GLW	JES	CZH	03/18/2019

SDG&E ELECTRIC OVERHEAD CONSTRUCTION STANDARDS

CROSSARM CONSTRUCTION, FIBERGLASS, TANGENT LINES UNDER 4KV

SCALE: NOT TO SCALE

DRAWING NO:	SHEET:
OH430.1	1 OF 4

© 1998 - 2023 San Diego Gas and Electric Company. All rights reserved. Removal of this copyright notice without permission is not permitted under law.

X Indicates Latest Revision | Completely Revised | New Page | Information Removed

TABLE OF CONTENTS

TABLE OF CONTENTS

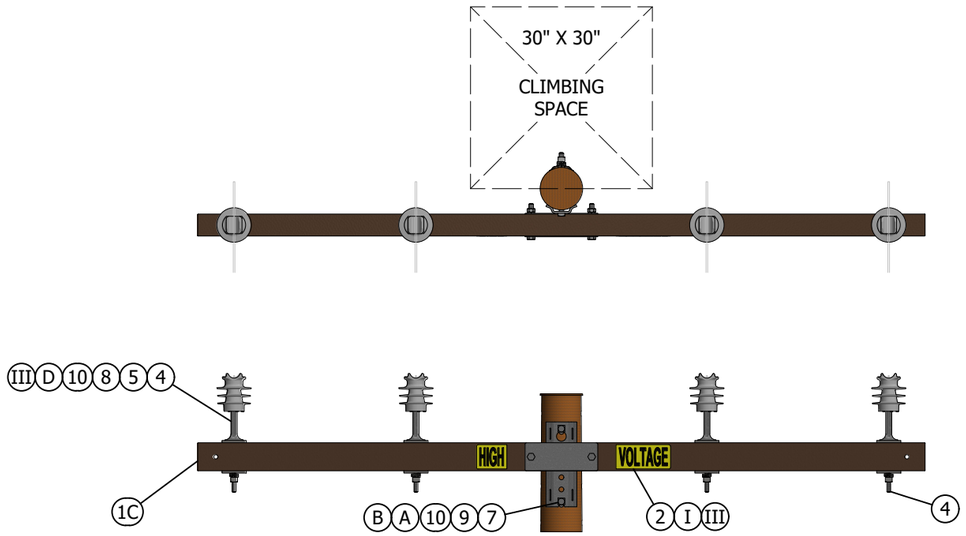

FIGURE 5
TANGENT LINE
SINGLE CROSSARM

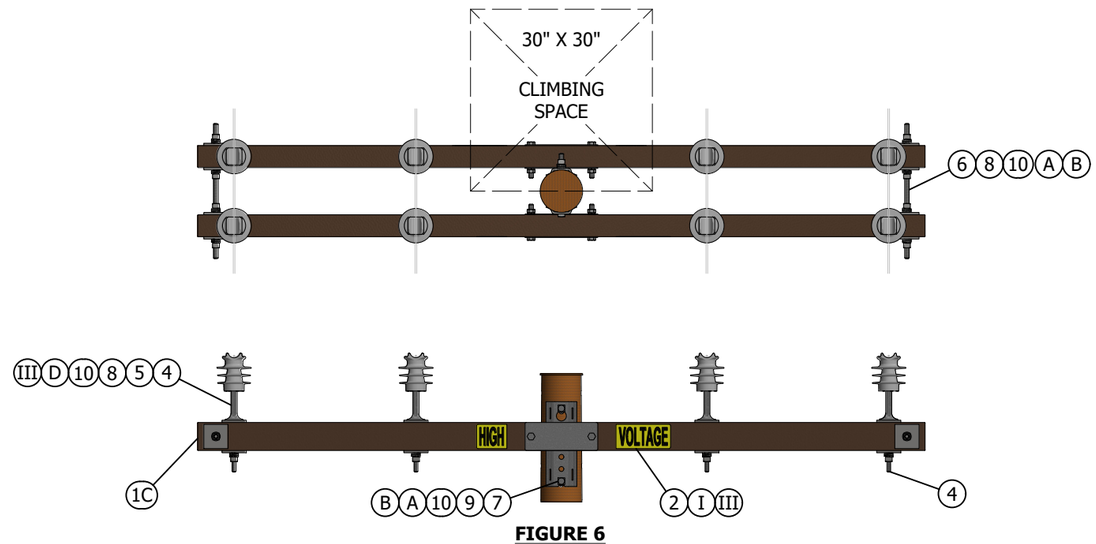

FIGURE 6
TANGENT LINE
DOUBLE CROSSARMS

INSTALLATION:

(A) ON STEEL OR COMPOSITE POLES USE SPRING OR LOCK WASHER.
(B) CUT OFF END OF BOLT WHEN IT PROTRUDES MORE THAN TWO INCHES BEYOND NUT.
C. VICE TOP INSULATORS ARE TO BE USED FOR JUMPER WIRE CONFIGURATIONS ONLY.
(D) 4" X 4" X 3/8" FLAT SQUARE WASHERS ARE TO BE PLACED BETWEEN THE INSULATOR PINS AND THE FIBERGLASS ARM ON TOP AND BOTTOM OF ARMS.

BILL OF MATERIALS:

ITEM	DESCRIPTION	QUANTITY	STANDARD PAGE	STOCK NUMBER	DESIGN UNIT
1A	6FT TANGENT FIBERGLASS CROSSARM	AS REQ'D	379	S294354	6FT
1B	CROSSARM, FIBERGLASS, 8FT, TANGENT 4 5/8	AS REQ'D	379	S294356	8FT
1C	CROSSARM, FIBERGLASS, 10 FT, TANGENT, 4 5/8 IN WITH FOUR 11/16 IN PRE-DRILLED	AS REQ'D	379	S294378	4TF
2	SIGN, PRINTED "HIGH VOLTAGE" 3INCH BLACK LETTERS ON YELLOW REFLECTIVE BACKGROUND, 14IN X 4IN SELF ADHESIVE PEEL-OFF BACKING, R	AS REQ'D	208	S647650	HV/D
3	SIGN, PRINTED "PN" IN 3" HIGH X 1-1/8" (IV)	AS REQ'D	208	S648004 (X)	PN-D
4	PIN, INSULATOR, 12KV, FORGED STEEL, GALV	AS REQ'D	396	S532450	PS1Z
5	INSULATOR, 25KV, "F" NECK, PIN TYPE 1-3/8"	AS REQ'D	750	S429054	Design Unit
6	BOLT, SPACE, 3/4" (SIZE AS REQ'D)	AS REQ'D	390	S156224	-
7	BOLT, MACHINE, 3/4" (SIZE AS REQ'D)	AS REQ'D		-	-
8	WASHER, FLAT, SQUARE, 4" X 4" X 3/8", 13/16" HOLE, STEEL GALV	AS REQ'D	379	S800070 (X)	-
9	WASHER, CURVED, RIB, 4" X 4" X 17/32", 13/16" HOLE, FOR 3/4" BOLT, GALV	AS REQ'D	750	S797760	RIBWSH
10	WASHER, 3/4", DOUBLE COIL SPRING, TYPE M-W, STEEL, TIN/ZINC COAT	AS REQ'D	390	S798496 (X)	NP/F

NOTES:

(I) PRIMARY NEUTRAL CONDUCTORS ARE TO BE IDENTIFIED ON EACH POLE THEY CONTACT BY INSULATORS OF DIFFERENT COLOR, SHAPE OR QUANTITY AS COMPARED TO THE PHASE CONDUCTORS, OR BY A SIGN. WHEN THE PRIMARY PHASE AND PRIMARY NEUTRAL CONDUCTORS ARE NOT DISTINGUISHED AS MENTIONED, THE PRIMARY NEUTRAL SHALL BE IDENTIFIED THROUGH THE USE OF A "PN" (PRIMARY NEUTRAL) SIGN INSTALLED. (b)
II. NEW CONSTRUCTION SHALL USE AERIAL CABLE CONSTRUCTION FOR SECONDARY APPLICATIONS. EXISTING CONSTRUCTION CAN USE CROSSARMS FOR OPEN WIRE SECONDARY CONSTRUCTION. (e)
(III) PRIMARY INSULATORS AND HIGH VOLTAGE SIGNS SHOWN FOR ILLUSTRATIVE PURPOSES. FOR SECONDARY APPLICATIONS, USE SECONDARY INSULATORS AND OMIT HIGH VOLTAGE SIGNS.
(IV) NOT SHOWN ON FIGURES.
(X) THIS ITEM IS EXEMPT.

REFERENCE:

a. SEE DM5124.2 FOR NEUTRAL INSTALLATION.
(b) SEE OH208 FOR "PN" SIGN AND POLE SIGNAGE.
c. SEE OH379 FOR FIBERGLASS CROSSARMS.
d. SEE OH251 FOR CLIMBING AND WORKING SPACE.
(e) SEE OH612 FOR SECONDARY CABLE CONSTRUCTION.
f. SEE OH1004 FOR NEUTRAL GROUNDING.

REV	CHANGE	DRWN	BY	CHKD	APVD	DATE
F	REVISED TO 3D FORMAT	AMP	JIK	-	-	03/16/2023
E	INSTALLATION UPDATE	EDM	MRF	GLW	CZH	09/30/2021
D	DRAWING UPDATE	-	GLW	JES	CZH	03/18/2019

SDGE

SDG&E ELECTRIC OVERHEAD CONSTRUCTION STANDARDS

CROSSARM CONSTRUCTION, FIBERGLASS, TANGENT LINES UNDER 4KV

SCALE: NOT TO SCALE
DRAWING NO: OH430.2
SHEET: 2 OF 4

© 1998 - 2023 San Diego Gas and Electric Company. All rights reserved. Removal of this copyright notice without permission is not permitted under law.

X Indicates Latest Revision | Completely Revised | New Page | Information Removed

SCOPE: THIS STANDARD SHOWS PHASE CONDUCTOR PIN POSITIONS FOR TANGENT LINE CROSSARM CONSTRUCTION, 4KV TO 12KV LINES.

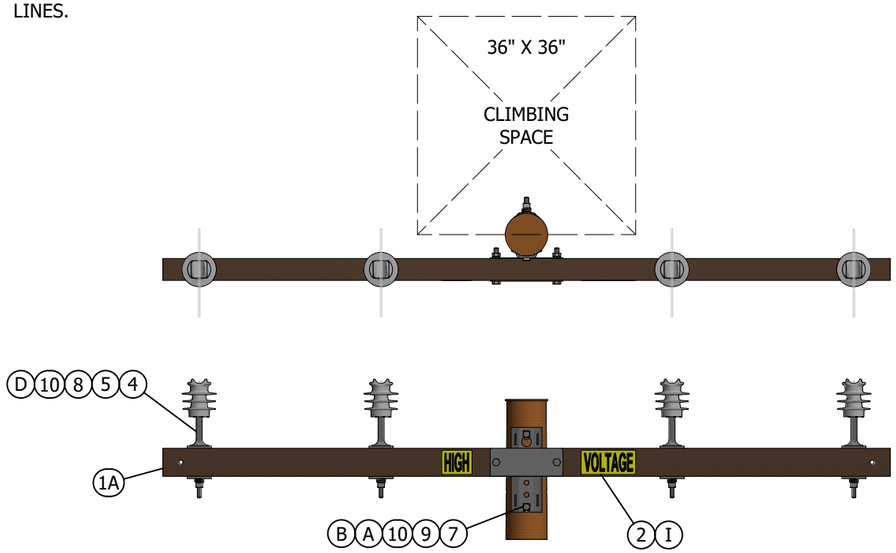

FIGURE 1
TANGENT LINE
SINGLE CROSSARM

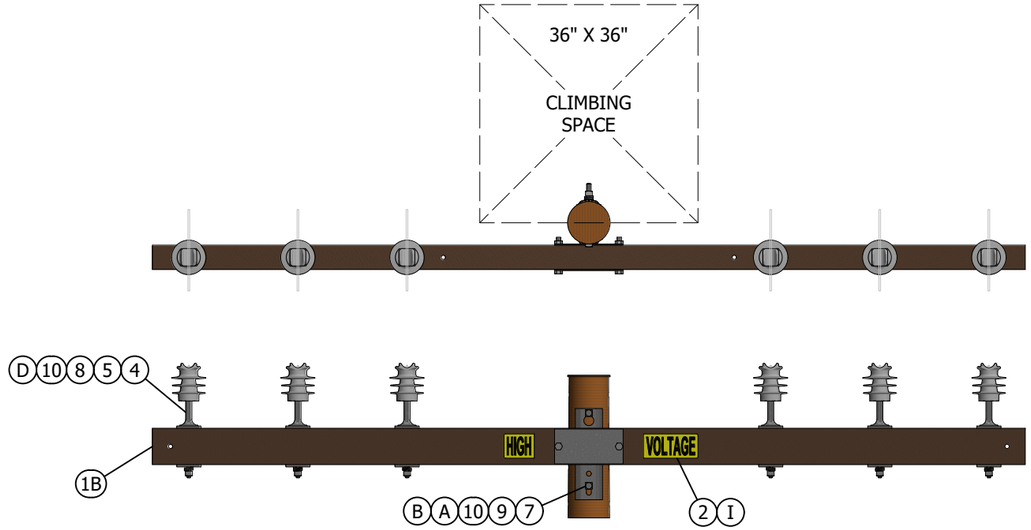

FIGURE 2
TANGENT LINE
SINGLE CROSSARM

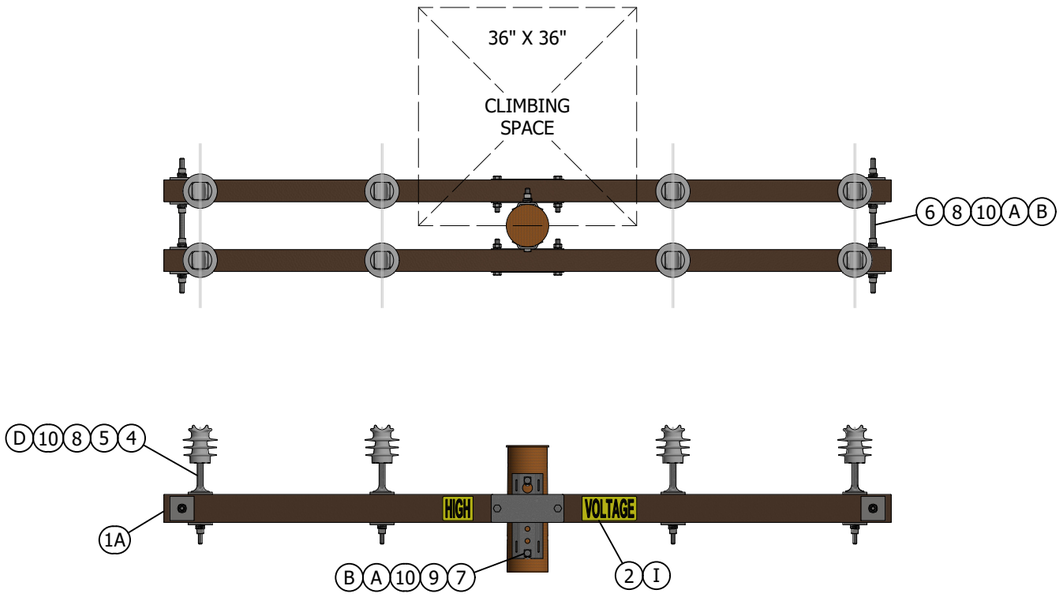

FIGURE 3
TANGENT LINE
DOUBLE CROSSARMS

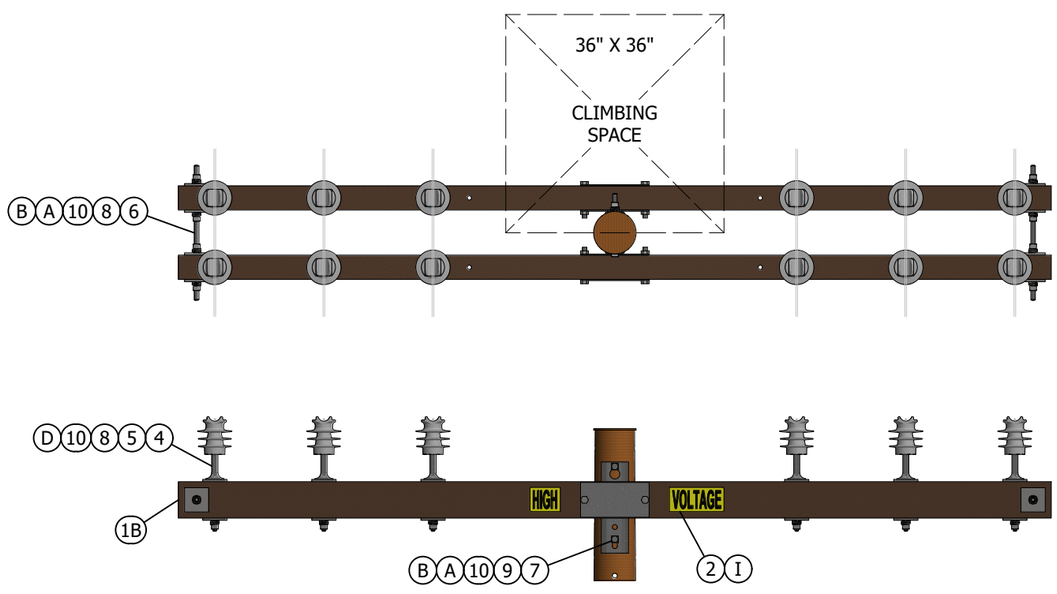

FIGURE 4
TANGENT LINE
DOUBLE CROSSARMS

REV	CHANGE	DRWN	BY	CHKD	APVD	DATE
F	REVISED TO 3D FORMAT	AMP	JIK	-	-	03/16/2023
E	INSTALLATION UPDATE	EDM	MRF	GLW	CZH	09/30/2021
D	DRAWING UPDATE	-	GLW	JES	CZH	03/18/2019

SDG&E ELECTRIC OVERHEAD CONSTRUCTION STANDARDS

CROSSARM CONTRUCTION FIBERGLASS, TANGENT LINES UNDER 4KV TO 12KV

SCALE: NOT TO SCALE

DRAWING NO: OH430.3

SHEET: 3 OF 4

© 1998 - 2023 San Diego Gas and Electric Company. All rights reserved. Removal of this copyright notice without permission is not permitted under law.

X Indicates Latest Revision | Completely Revised | New Page | Information Removed

TABLE OF CONTENTS

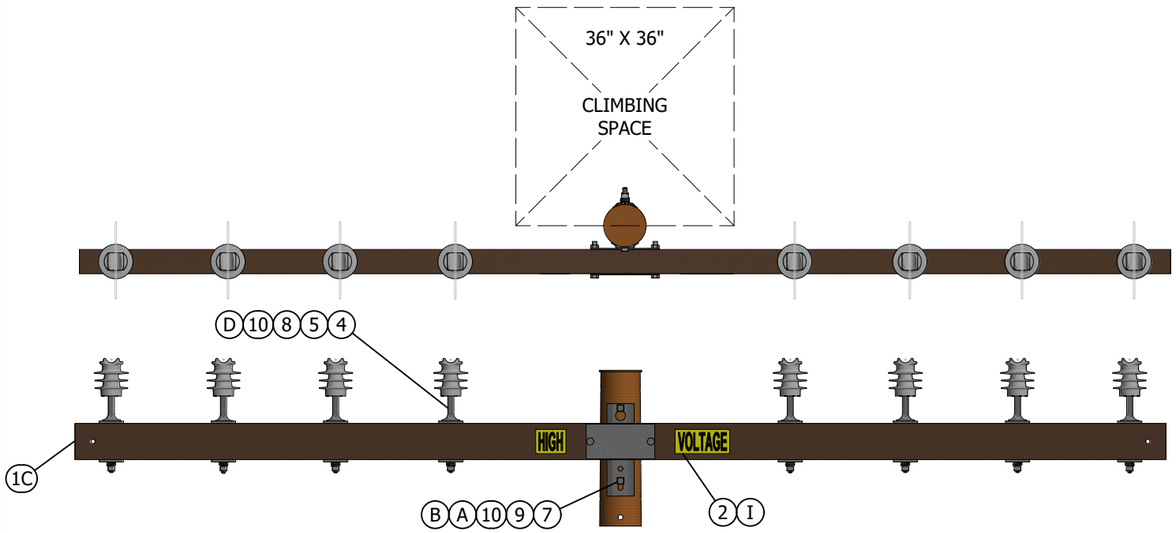

FIGURE 5
TANGENT LINE
SINGLE CROSSARM

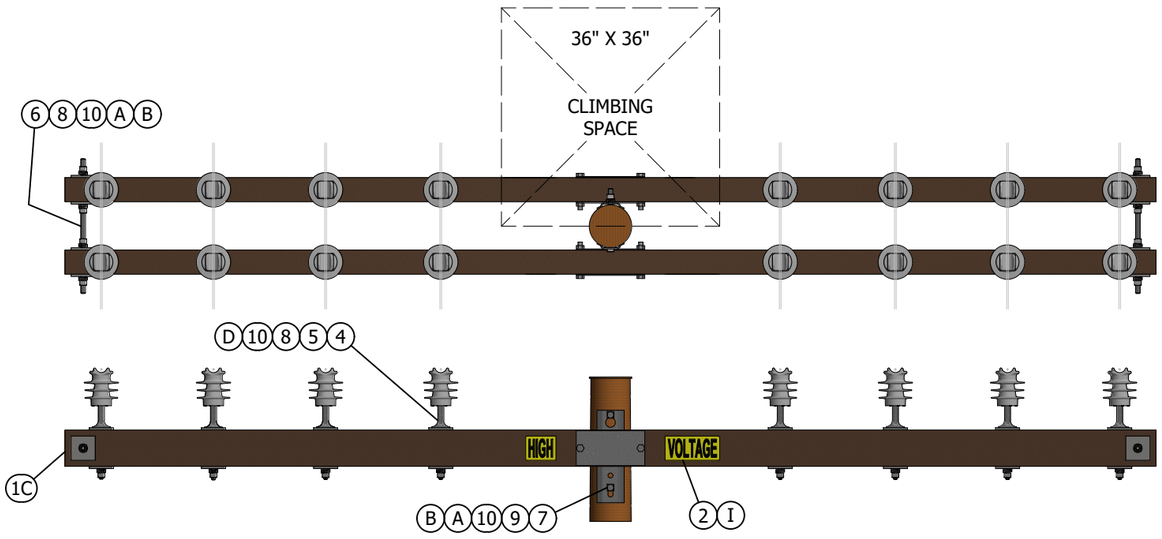

FIGURE 6
TANGENT LINE
DOUBLE CROSSARMS

INSTALLATION:

(A) ON STEEL OR COMPOSITE POLES USE SPRING OR LOCK WASHER.
(B) CUT OFF END OF BOLT WHEN IT PROTRUDES MORE THAN TWO INCHES BEYOND NUT.
C. VICE TOP INSULATORS ARE TO BE USED FOR JUMPER WIRE CONFIGURATIONS ONLY.
(D) 4" X 4" X 3/8" FLAT SQUARE WASHERS ARE TO BE PLACED BETWEEN THE INSULATOR PINS AND THE FIBERGLASS ARM ON TOP AND BOTTOM OF ARM.

BILL OF MATERIALS:

ITEM	DESCRIPTION	QUANTITY	STANDARD PAGE	STOCK NUMBER	DESIGN UNIT
1A	CROSSARM, FIBERGLASS, 10 FT, TANGENT, 4 5/8 IN WITH FOUR 11/16 IN PRE-DRILLED	AS REQ'D	379	S294378	4TF
1B	CROSSARM, FIBERGLASS, TANGENT 12' MIN	AS REQ'D	379	S294374	6TF
1C	CROSSARM, FIBERGLASS, 15FT HEAVY TANGENT	AS REQ'D	379	S294370	15TF
2	SIGN, PRINTED "HIGH VOLTAGE" 3INCH BLACK LETTERS ON YELLOW REFLECTIVE BACKGROUND, 14IN X 4IN SELF ADHESIVE PEEL-OFF BACKING, R	AS REQ'D	208	S647650	HV/D
3	SIGN, PRINTED "PN" IN 3" HIGH X 1-1/8" (II)	AS REQ'D	208	S648004 (X)	PN-D
4	PIN, INSULATOR, 1-3.8" (SIZE AS REQ'D)	AS REQ'D	379	-	-
5	INSULATOR, POLY (SIZE AS REQ'D)	AS REQ'D	750	-	-
6	SPACE BOLT 3/4" (SIZE AS REQ'D)	AS REQ'D	390	-	-
7	BOLT, MACHINE, 3/4" (SIZE AS REQ'D)	AS REQ'D	390	-	-
8	WASHER, 4IN X 4IN X 3/8IN, STEEL, HOT GA	AS REQ'D	390	S800070	-
9	WASHER, RIB SQ. CURVED, 3/4" BOLT, HOT DIPPED GALV.	AS REQ'D	390	S797760 (X)	RIBWSH
10	WASHER SPRING LOCK, 3/4"	AS REQ'D	390	S796802 (X)	LK-WSH

NOTES:

(I) PRIMARY NEUTRAL CONDUCTORS ARE TO BE IDENTIFIED ON EACH POLE THEY CONTACT BY INSULATORS OF DIFFERENT COLOR, SHAPE OR QUANTITY AS COMPARED TO THE PHASE CONDUCTORS, OR BY A SIGN. WHEN THE PRIMARY PHASE AND PRIMARY NEUTRAL CONDUCTORS ARE NOT DISTINGUISHED AS MENTIONED, THE PRIMARY NEUTRAL SHALL BE IDENTIFIED THROUGH THE USE OF A "PN" (PRIMARY NEUTRAL) SIGN INSTALLED. (b)
(II) NOT SHOWN ON FIGURES.
(X) THIS ITEM IS EXEMPT.

REFERENCE:

a. SEE DM5124.2 FOR NEUTRAL INSTALLATION.
(b) SEE OH208 FOR "PN" SIGN AND POLE SIGNAGE.
c. SEE OH379 FOR FIBERGLASS CROSSARMS.
d. SEE OH251 FOR CLIMBING AND WORKING SPACE.
e. SEE OH1004 FOR NEUTRAL GROUNDING.

REV	CHANGE	DRWN	BY	CHKD	APVD	DATE
F	REVISED TO 3D FORMAT	AMP	JIK	-	-	03/16/2023
E	INSTALLATION UPDATE	EDM	MRF	GLW	CZH	09/30/2021
D	DRAWING UPDATE	-	GLW	JES	CZH	03/18/2019

SDG&E ELECTRIC OVERHEAD CONSTRUCTION STANDARDS

CROSSARM CONTRUCTION FIBERGLASS, TANGENT LINES UNDER 4KV TO 12KV

SCALE: NOT TO SCALE
DRAWING NO: OH430.4
SHEET: 4 OF 4

X Indicates Latest Revision | Completely Revised | New Page | Information Removed

© 1998 - 2023 San Diego Gas and Electric Company. All rights reserved. Removal of this copyright notice without permission is not permitted under law.

TABLE OF CONTENTS

TABLE OF CONTENTS

SCOPE: THIS STANDARD SHOWS PHASE CONDUCTOR POSITIONS WHEN DEADENDING ON FIBERGLASS CROSSARMS.

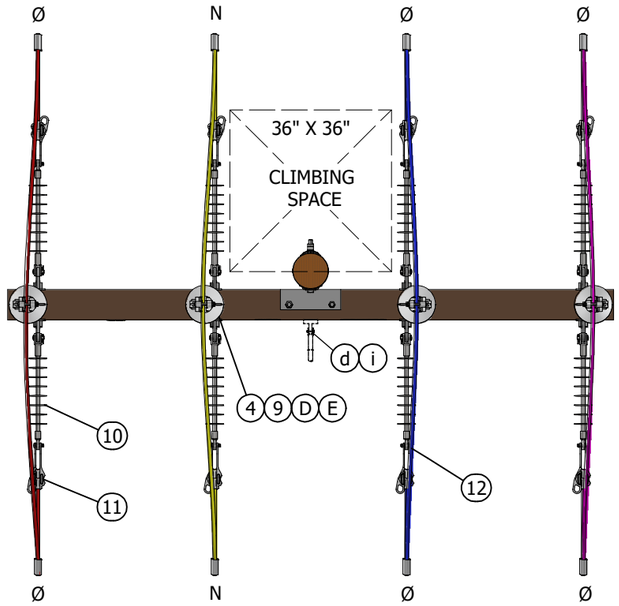

VIEW A-A

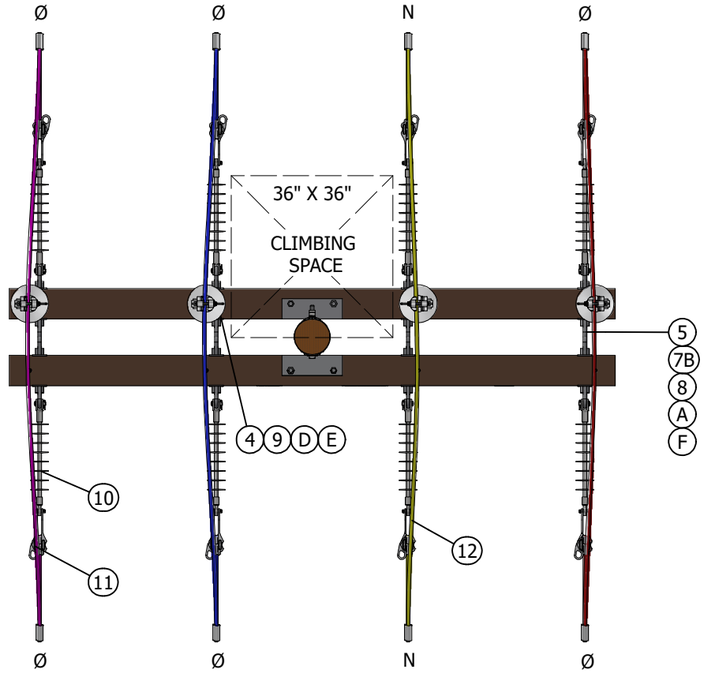

VIEW B-B

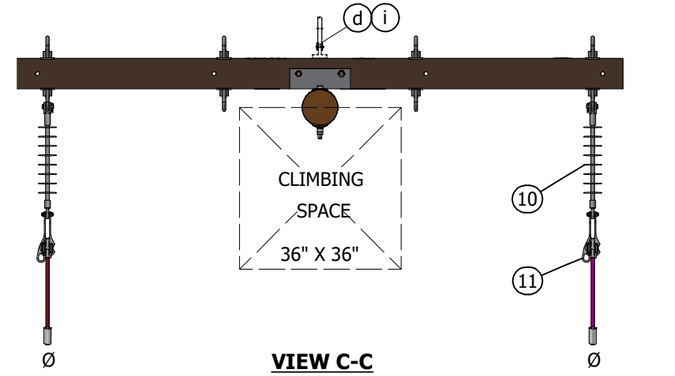

VIEW C-C

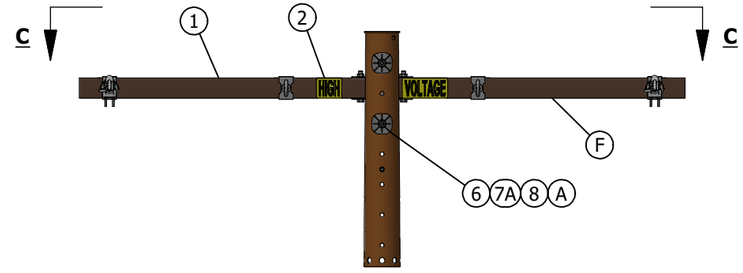

FIGURE 3
TWO WIRE DEADEND

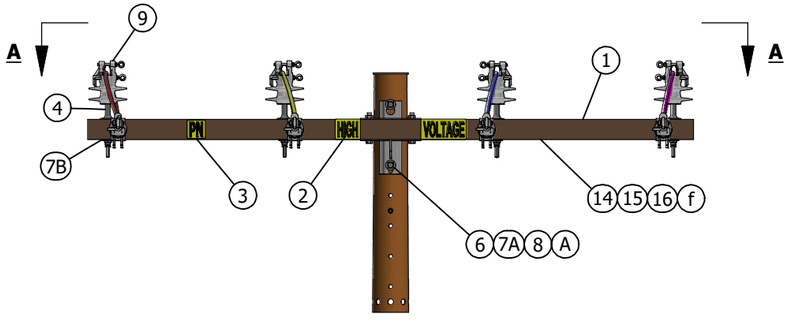

FIGURE 1
TANGENT, DEADEND TO REDUCE TENSION

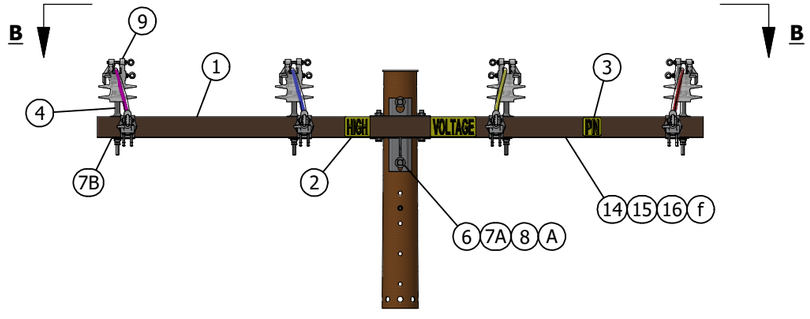

FIGURE 2
TANGENT, BACK TO BACK DEADEND

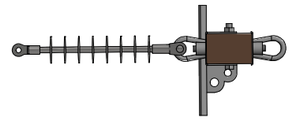

FIGURE 4
SINGLE ARM CONNECTION DIAGRAM

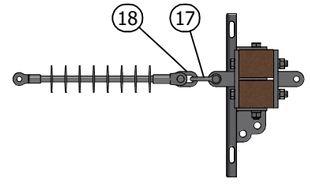

FIGURE 5
STACKED ARM CONNECTION DIAGRAM

REV	CHANGE	DRWN	BY	CHKD	APVD	DATE
E	FIGURE 2 UPDATE	ARC	MRF	GLW	KRG	07/22/2022
D	DRAWING UPDATE	EDM	MRF	JES	CZH	08/03/2021
C	DRAWING UPDATE	-	GLW	JES	CZH	02/20/2019

SDG&E ELECTRIC OVERHEAD CONSTRUCTION STANDARDS

CROSSARM CONSTRUCTION FIBERGLASS, DEADENDS

SCALE: NOT TO SCALE

DRAWING NO: OH432.1

SHEET: 1 OF 2

© 1998 - 2022 San Diego Gas and Electric Company. All rights reserved. Removal of this copyright notice without permission is not permitted under law.

X Indicates Latest Revision | Completely Revised | New Page | Information Removed

TABLE OF CONTENTS

INSTALLATION:

(A) ON STEEL OR COMPOSITE POLES USE SPRING OR LOCK WASHER.

B. SINGLE ARM "HARD" DEADENDING REQUIRES ONE OF THE FOLLOWING BALANCED CONDITIONS:
   1. TWO CONDUCTOR SINGLE-PHASE.
   2. THREE CONDUCTOR THREE-PHASE WITH CENTER CONDUCTOR IN POLE POSITION, IN LINE CONSTRUCTION ONLY. POLE POSITION DEADENDING ON BUCK CONSTRUCTION NOT ALLOWED.
   3. THE UNBALANCED STRAIN IS HELD BY ARM GUYS.

C. DEADENDING "BACK-TO-BACK", SINGLE OR THREE-PHASE, 2, 3 OR 4 CONDUCTORS ON A SINGLE CROSSARM WITH EQUAL STRAIN IN EITHER DIRECTION (SAME CONDUCTOR SIZE, SAME SPAN LENGTH WITHIN 20 PERCENT) WOULD BE DEPENDENT ON WIRE SIZE, SPAN LENGTH AND STRINGING TENSION USED TO DETERMINE ALLOWABLE VERTICAL LOADING.

(D) VISE TOP INSULATORS ARE TO BE USED ONLY FOR JUMPER WIRE CONFIGURATIONS.

(E) 4-INCH X 4-INCH FLAT SQUARE WASHERS ARE TO BE PLACED BETWEEN THE INSULATOR PINS AND THE FIBERGLASS ARM ON TOP AND BOTTOM OF ARM.

(F) CUT OFF END OF BOLT WHEN IT PROTRUDES MORE THAN TWO INCHES BEYOND NUT.

BILL OF MATERIALS:

ITEM		DESCRIPTION	QUANTITY	STANDARD PAGE	STOCK NUMBER	DESIGN UNITS
1		CROSSARM, FIBERGLASS, DEADEND (SIZE AS REQ'D) (a)	AS REQ'D	379	-	-
2		SIGN, HIGH VOLTAGE STICKER	AS REQ'D	208	S647650	HV/D
3		SIGN, PN, ADHESIVE (c)	AS REQ'D		S648004 (X)	PN/D
4		PIN, INSULATOR, 4KV/12KV, 1 3/8"	AS REQ'D	396	S532448	PS1+
5		SPACE BOLT, 3/4", (SIZE AS REQ'D)	AS REQ'D	390	-	-
6		MACHINE BOLT, 3/4" (SIZE AS REQ'D)	AS REQ'D	390	-	-
7	A	WASHER, SQUARE CURVED	AS REQ'D		S797760	RIBWSH
	B	4" X 4", FLAT SQUARE WASHER, CENTER, 3/4"	AS REQ'D		S800070 (X)	-
8		WASHER, SPRING LOCK, 3/4"	AS REQ'D		S796802 (X)	LK-WSH
9		INSULATOR, POLY (SIZE AS REQ'D)	AS REQ'D	750	-	-
10	A	INSULATOR, SUSPENSION, 12KV, CLEVIS	AS REQ'D		S431650	1DE
	B	INSULATOR, SUSPENSION, 35KV, CLEVIS	AS REQ'D		S428958	LONGDE
11		CLAMP, STRAIGHT LINE, STRAIN, D.E.	AS REQ'D	739	-	-
12		WIRE, POLY COVERED, COPPER	AS REQ'D	711	-	-
13		CONNECTOR, WIRE, WEDGE (SIZE AS REQ'D) (V)	AS REQ'D	784	-	-
14		SCREW, SELF TAPPING, 1 1/4", #12, 24 THREADED	AS REQ'D	1002	S618086 (X)	-
15		STRAP, PIPE, GALVANIZED, 1/4", ONE HOLE	AS REQ'D		S697302	-
16		WIRE, COPPER, BARE, SOLID, ANNEALED, #8	AS REQ'D	711	S812928	BOND8
17		SHACKLE, 5/8" PIN, HOT DIP GALVANIZED, 15,000LB WORKING LOAD	AS REQ'D	739	S636432 (X)	30KSHK
18		LINK, CHAIN 30,000 LBS., GALVANIZED	AS REQ'D	739	S465750 (X)	D-LINK

NOTES:

I. PRIMARY NEUTRAL CONDUCTORS ARE TO BE IDENTIFIED ON EACH POLE THEY CONTACT BY INSULATORS OF DIFFERENT COLOR, SHAPE OR QUANTITY AS COMPARED TO THE PHASE CONDUCTORS, OR BY A SIGN. WHEN THE PRIMARY PHASE AND PRIMARY NEUTRAL CONDUCTORS ARE NOT DISTINGUISHED AS MENTIONED, THE PRIMARY NEUTRAL SHALL BE IDENTIFIED THROUGH THE USE OF A "PN" (PRIMARY NEUTRAL) SIGN INSTALLED. (c)

II. BOND ALL DEADEND SUSPENSION TYPE INSULATORS. (f)

III. FOR MORE CROSSARM DEADEND CONSTRUCTION, SEE THE WILDLIFE PROTECTION SECTION. (g)

IV. DEADEND CROSSARMS CAN BE DOUBLED UP FOR INCREASED STRENGTH.

(V) NOT SHOWN ON FIGURES.

(X) THIS ITEM IS EXEMPT.

REFERENCE:

(a) SEE OH379 FOR FIBERGLASS CROSSARMS.

b. SEE DM5124.2 FOR NEUTRAL INSTALLATION.

(c) SEE OH208 FOR "PN" SIGN AND POLE SIGNAGE.

(d) SEE OH251 AND OH262 FOR CLIMBING AND WORKING SPACE.

e. SEE OH433 FOR ALLOWABLE LINE ANGLES.

(f) SEE OH1003 FOR BONDING.

(g) SEE OH1650, OH1651, OH1653, AND OH1654 FOR WILDLIFE PROTECTION AREAS.

h. SEE OH1004 FOR NEUTRAL GROUNDING.

(i) SEE SECTION OH900 FOR GUYING AND GUY ASSEMBLY DETAILS.

REV	CHANGE	DRWN	BY	CHKD	APVD	DATE
E	FIGURE 2 UPDATE	ARC	MRF	GLW	KRG	07/22/2022
D	DRAWING UPDATE	EDM	MRF	JES	CZH	08/03/2021
C	DRAWING UPDATE	-	GLW	JES	CZH	02/20/2019

SDG&E

A Sempra Energy utility

SDG&E ELECTRIC OVERHEAD CONSTRUCTION STANDARDS

CROSSARM CONSTRUCTION FIBERGLASS, DEADENDS

SCALE: NOT TO SCALE

DRAWING NO: OH432.2

SHEET: 2 OF 2

© 1998 - 2022 San Diego Gas and Electric Company. All rights reserved. Removal of this copyright notice without permission is not permitted under law.

X Indicates Latest Revision | Completely Revised | New Page | Information Removed

SCOPE: THIS STANDARD SHOWS THE LIMITING ANGLES IN LINES WHERE STANDARD 1", 1 3/8" AND ANGLE PINS ARE USED. TABLES ARE FOR SINGLE ARM AND DOUBLE ARMS.

TABLE 1

ALUMINUM: MAXIMUM PERMISSIBLE LINE ANGLE ON PINS (A)(B)(C)(D)

CONDUCTOR SIZE	STRANDING AL/ST (AW/AL)	DESIGN ALLOWABLE MAX. TENSION (LBS)	ANGLE OF DEVIATION (NEAREST 5°) (RS<250 FT)						CONTROLLING LOADING DISTRICT (INCL 85 MPH)
			SINGLE ARM			DOUBLE ARM			
			1" PIN	1 3/8" PIN	ANGLE PIN	1" PIN	1 3/8" PIN	ANGLE PIN	
#2 ACSR/AW	6/1 SPARROW	850	10°	30°	55°	30°	60°	60°	GO 95 LIGHT
1/0 ACSR/AW	6/1 RAVEN	1,240	5°	20°	35°	20°	60°	60°	GO 95 LIGHT
3/0 ACSR/AW	6/1 PIGEON	1,850	USE 1 3/8" PIN	10°	20°	10°	30°	55°	GO 95 LIGHT
4/0 ACSR/AW	6/1 PENGUIN	2,400	USE 1 3/8" PIN	10°	15°	10°	25°	40°	GO 95 LIGHT
336.4 ACSR/AW	26/7 LINNET	3,000	USE 1 3/8" PIN	5°	10°	5°	20°	30°	GO 95 LIGHT
			USE 1 3/8" PIN	5°	15°	5°	20°	30°	GO 95 HEAVY
397.5 ACSR/AW	26/7 IBIS	3,000	USE 1 3/8" PIN	5°	10°	5°	15°	30°	GO 95 LIGHT
	--		USE 1 3/8" PIN	5°	10°	5°	20°	30°	GO 95 HEAVY
636 ACSR/AW	24/7 ROOK	3,000	USE ANGLE PIN	USE ANGLE PIN	10°	USE 1 3/8" PIN	15°	25°	GO 95 LIGHT
			USE 1 3/8" PIN	5°	10°	5°	20°	30°	GO 95 HEAVY
1033.5 ACSR/AW	45/7 ORTOLAN	3,000	USE ANGLE PIN	USE ANGLE PIN	5°	USE 1 3/8" PIN	10°	20°	GO 95 LIGHT
			USE ANGLE PIN	USE ANGLE PIN	10°	USE 1 3/8" PIN	15°	30°	GO 95 HEAVY
#2 AWAC 5/2	5 AW / 2 AL	1,800	USE 1 3/8" PIN	10°	20°	10°	30°	55°	GO 95 HEAVY
		1,200	5°	25°	40°	25°	55°	60°	GO 95 LIGHT
#2 AWAC 3/4	3 AW / 4 AL	3,000	USE 1 3/8" PIN	5°	10°	5°	20°	30°	GO 95 HEAVY
			USE 1 3/8" PIN	10°	15°	10°	20°	35°	GO 95 LIGHT
1/0 AWAC 4/3	4 AW / 3 AL	3,000	USE 1 3/8" PIN	5°	15°	5°	20°	35°	GO 95 HEAVY
			USE 1 3/8" PIN	5°	15°	10°	20°	35°	GO 95 LIGHT

TABLE 2

ALUMINUM: MAXIMUM PERMISSIBLE LINE ANGLE ON PINS (A)(B)(C)(D)

CONDUCTOR SIZE	STRANDING AL/ST (AW/AL)	DESIGN ALLOWABLE MAX. TENSION LBS	ANGLE OF DEVIATION (NEAREST 5°) (250 FT < RS < 500 FT)						CONTROLLING LOADING DISTRICT (INCL 85 MPH)
			SINGLE ARM			DOUBLE ARM			
			1" PIN	1 3/8" PIN	ANGLE PIN	1" PIN	1 3/8" PIN	ANGLE PIN	
#2 ACSR/AW	6/1 SPARROW	850	10°	30°	55°	30°	60°	60°	GO 95 LIGHT
1/0 ACSR/AW	6/1 RAVEN	1,240	5°	20°	35°	20°	60°	60°	GO 95 LIGHT
3/0 ACSR/AW	6/1 PIGEON	1,850	USE 1 3/8" PIN	10°	20°	10°	30°	55°	GO 95 LIGHT
4/0 ACSR/AW	6/1 PENGUIN	2,400	USE 1 3/8" PIN	10°	15°	10°	25°	40°	GO 95 LIGHT
336.4 ACSR/AW	26/7 LINNET	3,000	USE 1 3/8" PIN	5°	10°	5°	20°	30°	GO 95 LIGHT
			USE 1 3/8" PIN	5°	15°	5°	20°	30°	GO 95 HEAVY
397.5 ACSR/AW	26/7 IBIS	3000	USE ANGLE PIN	USE ANGLE PIN	5°	USE 1 3/8" PIN	5°	20°	GO 95 LIGHT
			USE ANGLE PIN	USE ANGLE PIN	5°	USE 1 3/8" PIN	15°	30°	GO 95 HEAVY
636 ACSR/AW	24/7 ROOK	3000	USE DBL ARM	USE DBL ARM	USE DBL ARM	USE 1 3/8" PIN	5°	15°	GO 95 LIGHT
			USE ANGLE PIN	USE ANGLE PIN	5°	USE 1 3/8" PIN	10°	25°	GO 95 HEAVY
1033.5 ACSR/AW	45/7 ORTOLAN	3000	USE DBL ARM	USE DBL ARM	USE DBL ARM	USE ANGLE PIN	USE ANGLE PIN	10°	GO 95 LIGHT
			USE DBL ARM	USE DBL ARM	USE DBL ARM	USE ANGLE PIN	USE ANGLE PIN	20°	GO 95 HEAVY
#2 AWAC 5/2	5 AW / 2 AL	1800	USE 1 3/8" PIN	5°	15°	5°	25°	50°	GO 95 HEAVY
		1200	USE 1 3/8" PIN	15°	25°	15°	40°	60°	GO 95 LIGHT
#2 AWAC 3/4	3 AW / 4 AL	3000	USE ANGLE PIN	USE ANGLE PIN	5°	USE 1 3/8" PIN	15°	25°	GO 95 HEAVY
			USE 1 3/8" PIN	5°	10°	5°	15°	30°	GO 95 LIGHT
1/0 AWAC 4/3	4 AW / 3 AL	3000	USE 1 3/8" PIN	5°	10°	5°	15°	30°	GO 95 HEAVY
			USE 1 3/8" PIN	5°	10°	5°	15°	30°	GO 95 LIGHT

TABLE OF CONTENTS

© 1998 - 2021 San Diego Gas & Electric Company. All rights reserved. Removal of this copyright notice without permission is not permitted under law.

REV	CHANGE	DR	BY	DSN	APV	DATE	REV	CHANGE	DR	BY	DSN	APV	DATE
C	EDITORIAL CHANGES	-	JS	JS	CZH	8/1/2018	F						
B	EDITORIAL CHANGES	-	GW	JS	MDJ	6/25/2017	E	EDITORIAL CHANGES	EDM	JIK	-	-	10/9/2020
A	ORIGINAL ISSUE	-	GW	GW	MDJ	10/25/2016	D	TABLE UPDATE	EDM	JIK	JES	CZH	4/13/2020

X Indicates Latest Revision | Completely Revised | New Page | Information Removed

TABLE 3

COPPER: MAXIMUM PERMISSIBLE LINE ANGLE ON PINS									
CONDUCTOR SIZE	STRANDING	DESIGN ALLOWABLE MAX. TENSION (LBS) (II)	ANGLE OF DEVIATION (NEAREST 5°) (RS<250 FT)						CONTROLLING LOADING DISTRICT (INCL 85 MPH)
			SINGLE ARM			DOUBLE ARM			
			1" PIN	1 3/8" PIN	ANGLE PIN	1" PIN	1 3/8" PIN	ANGLE PIN	
#6 B.S. CU	3 STRAND	482	25°	55°	60°	60°	60°	60°	GO 95 LIGHT
#4 B.S. CU	3 STRAND	752	15°	35°	60°	40°	60°	60°	GO 95 LIGHT
#2 B.S. CU	3 STRAND	1,165	10°	25°	40°	25°	55°	60°	GO 95 LIGHT
1/0 B.S. CU	7 STRAND	1,372	5°	20°	35°	20°	45°	60°	GO 95 LIGHT
2/0 B.S. CU	7 STRAND	1,777	5°	15°	25°	15°	35°	60°	GO 95 LIGHT
4/0 B.S. CU	7 STRAND	2,746	USE 1 3/8" PIN	10°	15°	10°	25°	40°	GO 95 LIGHT

TABLE 4

COPPER: MAXIMUM PERMISSIBLE LINE ANGLE ON PINS									
CONDUCTOR SIZE	STRANDING	DESIGN ALLOWABLE MAX. TENSION (LBS) (II)	ANGLE OF DEVIATION (NEAREST 5°) (250 FT<RS<500 FT)						CONTROLLING LOADING DISTRICT (INCL 85 MPH)
			SINGLE ARM			DOUBLE ARM			
			1" PIN	1 3/8" PIN	ANGLE PIN	1" PIN	1 3/8" PIN	ANGLE PIN	
#6 B.S. CU	3 STRAND	482	15°	45°	60°	45°	60°	60°	GO 95 LIGHT
#4 B.S. CU	3 STRAND	752	5°	25°	50°	25°	60°	60°	GO 95 LIGHT
#2 B.S. CU	3 STRAND	1,165	USE 1 3/8" PIN	15°	30°	15°	40°	60°	GO 95 LIGHT
1/0 B.S. CU	7 STRAND	1,372	USE 1 3/8" PIN	10°	20°	10°	30°	60°	GO 95 LIGHT
2/0 B.S. CU	7 STRAND	1,777	USE 1 3/8" PIN	5°	15°	5°	25°	45°	GO 95 LIGHT
4/0 B.S. CU	7 STRAND	2,746	USE ANGLE PIN	USE ANGLE PIN	10°	USE 1 3/8" PIN	15°	30°	GO 95 LIGHT

TABLE 5

MAXIMUM PERMISSIBLE TRANSVERSE CROSSARM LOADING (WOOD ARMS ON WOOD POLES) (LBS).			
THRU BOLT SIZE	BOLT ONLY	BOLT AND THRUST PLATE	BOLT, SPLIT RINGS AND THRUST PLATE
5/8"	1,700	-	-
3/4"	2,400	8,500	12,000

TABLE OF CONTENTS

INSTALLATION:

(A) ANGLES INDICATED ARE BASED ON ALLOWABLE SHEAR LOAD ON PINS.

(B) USE STANDARD DEADENDS WHEN PERMISSIBLE ANGLE IS EXCEEDED IN THE ABOVE TABLES. LINE AND BUCK CONSTRUCTION IS REQUIRED FOR ALL LINE ANGLES IN EXCESS OF 60 DEGREES. CROSSARMS MUST BE INSTALLED TO BISECT THE ANGLE.

(C) FULL TENSION GUYING IS REQUIRED ON ALL DEADENDS. BISECTOR GUYS ARE REQUIRED ON ALL LINE ANGLES.

(D) ALL ANGLES NOTED IN THE TABLES ABOVE ARE BASED ON SDG&E'S MAXIMUM DESIGN TENSIONS AND LIMITED TO PIN STRENGTHS. IF THE MAXIMUM DESIGN TENSIONS ARE REDUCED BELOW SDG&E'S LIMITS, THEN THE LINE ANGLES CAN BE INCREASED UP TO THE ALLOWABLE LIMIT OF THE PINS BEING USED.

(E) FOR SINGLE CROSSARMS, USE HALF OF THE VALUES.

BILL OF MATERIALS: NONE

NOTES:

I. IF PLS-CADD IS UTILIZED FOR DEVELOPING STRINGING/SAGGING CHARTS, THE LINE ANGLE LIMITS SHOWN IN THE ABOVE TABLES CAN BE OVERRIDDEN WITH THE RESULTS FROM THE PLS-CADD ANALYSIS.

(II) COPPER DESIGN TENSIONS ARE 40% OF ULTIMATE FOR 1/0 AND SMALLER AND 30% OF ULTIMATE FOR 2/0 AND 4/0.

© 1998 - 2021 San Diego Gas & Electric Company. All rights reserved. Removal of this copyright notice without permission is not permitted under law.

REV	CHANGE	DR	BY	DSN	APV	DATE	REV	CHANGE	DR	BY	DSN	APV	DATE
C	EDITORIAL CHANGES	-	JS	JS	CZH	8/1/2018	F						
B	EDITORIAL CHANGES	-	GW	JS	MDJ	6/25/2017	E	EDITORIAL CHANGES	EDM	JIK	-	-	10/9/2020
A	ORIGINAL ISSUE	-	GW	GW	MDJ	10/25/2016	D	TABLE UPDATE	EDM	JIK	JES	CZH	4/13/2020

REFERENCE:

a. SEE OH392 FOR WOOD POLE INSTALLATIONS.
b. SEE OH800 FOR LOADING DISTRICT APPLICATION LIMITS PER CONDUCTOR SIZE.
c. SEE OH379 FOR FIBERGLASS CROSSARM ALLOWABLE LOADS.
d. SEE OH396 FOR PIN STRENGTHS.
e. SEE SDG&E DRAWING 12100 FOR KNOWN LOCAL WIND CONDITIONS (SDG&E)
f. SEE GO 95 APPENDIX C FOR TENSION LIMITATIONS IN LIGHT AND HEAVY DISTRICTS.
g. SEE OH392 FOR THRU BOLT, STEEL THRUST PLATE AND SPLIT RING ASSEMBLY DETAIL.

TABLE OF CONTENTS

© 1998 - 2021 San Diego Gas & Electric Company. All rights reserved. Removal of this copyright notice without permission is not permitted under law.

REV	CHANGE	DR	BY	DSN	APV	DATE	REV	CHANGE	DR	BY	DSN	APV	DATE
C	EDITORIAL CHANGES	-	JS	JS	CZH	8/1/2018	F						
B	EDITORIAL CHANGES	-	GW	JS	MDJ	6/25/2017	E	EDITORIAL CHANGES	EDM	JIK	-	-	10/9/2020
A	ORIGINAL ISSUE	-	GW	GW	MDJ	10/25/2016	D	TABLE UPDATE	EDM	JIK	JES	CZH	4/13/2020

X Indicates Latest Revision | Completely Revised | New Page | Information Removed

SDG&E ELECTRIC OVERHEAD CONSTRUCTION STANDARDS

LINE ANGLES ON CROSSARMS, 0-20KV LINES

OH433.3

SCOPE: THIS CONSTRUCTION IS TO BE USED WHENEVER A BUCKARM CORNER(7.5-20kV) IS REQUIRED BELOW POLE TOP

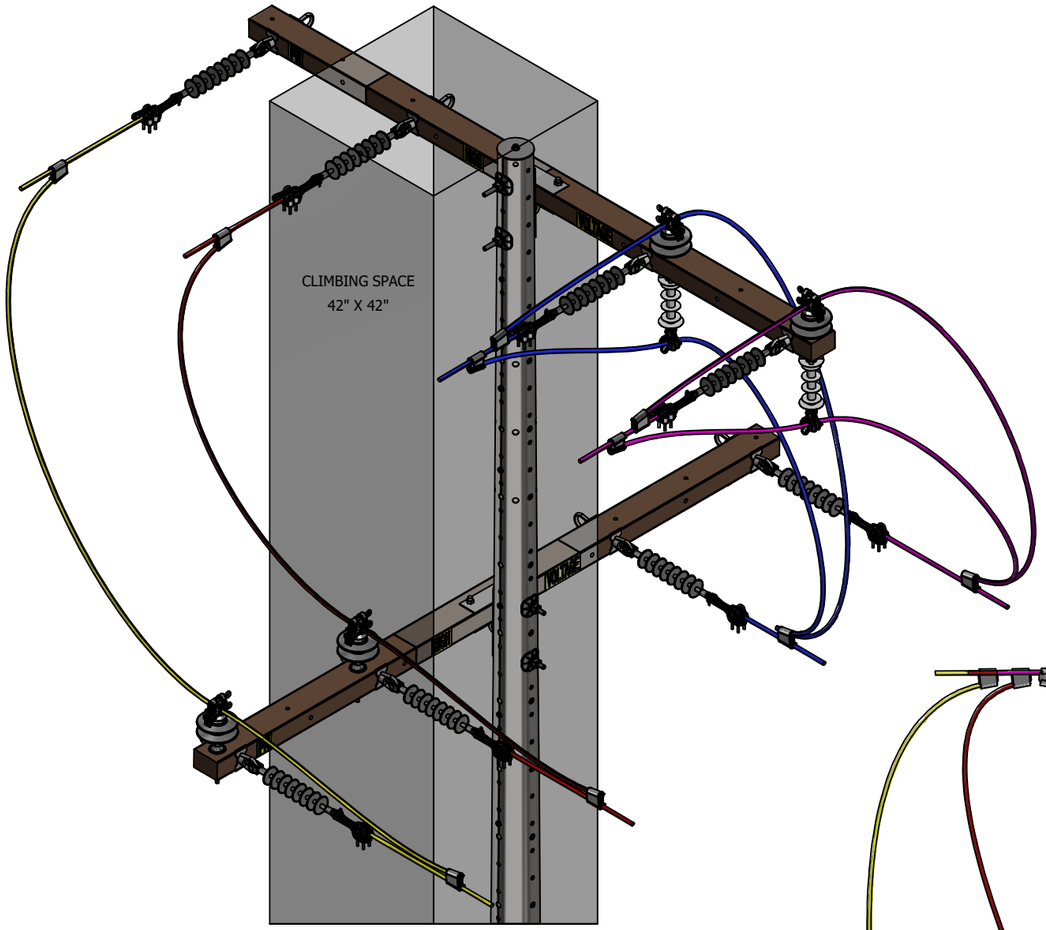

FIGURE 1
ISOMETRIC (C)

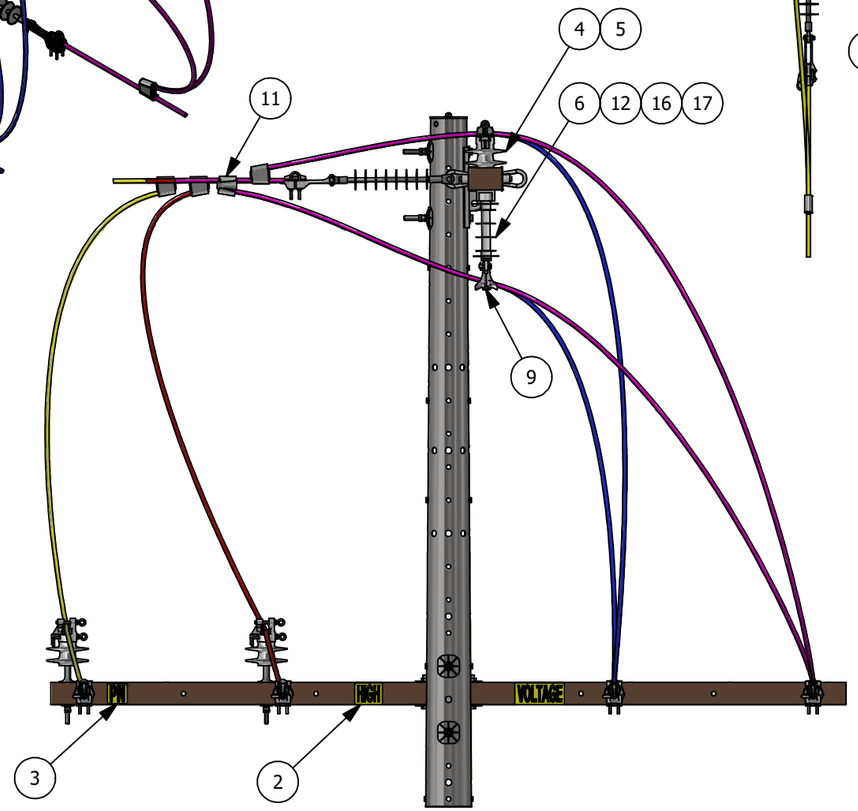

FIGURE 2
ELEVATION (C)

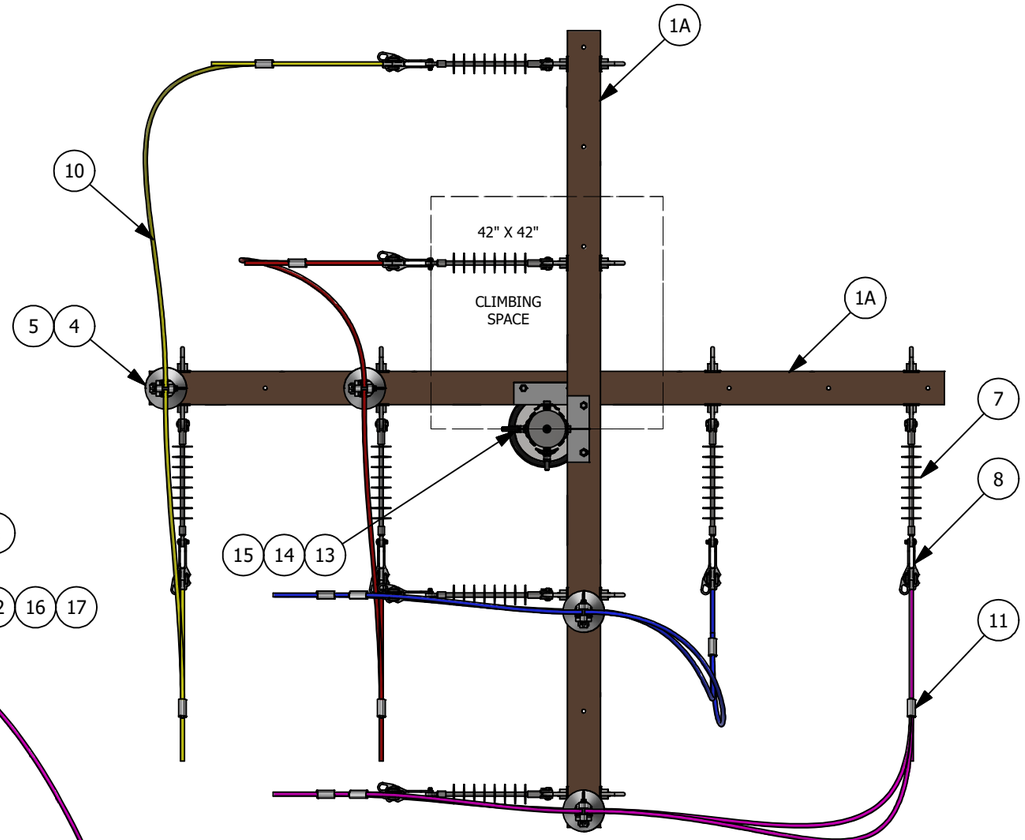

FIGURE 3
PLAN (C)

TABLE OF CONTENTS

REV	CHANGE	DRWN	BY	CHKD	APVD	DATE
F	REVISE TO 3D FORMAT	DV	JIK	-	-	12/1/2021
E	INSTALLATION UPDATE	EDM	JA	JES	CZH	08/24/2021
D	TABLE UPDATE	-	JIK	JES	CZH	11/12/2019

SDG&E
A Sempra Energy utility

SDG&E ELECTRIC OVERHEAD CONSTRUCTION STANDARDS

DISTRIBUTION CONSTRUCTION:
7.5kV-20kV BUCKARM CORNERS

SCALE: NOT TO SCALE

DRAWING NO:	SHEET:
OH435.1	1 OF 3

© 1998 - 2021 San Diego Gas and Electric Company. All rights reserved. Removal of this copyright notice without permission is not permitted under law.

X Indicates Latest Revision | Completely Revised | New Page | Information Removed

TABLE OF CONTENTS

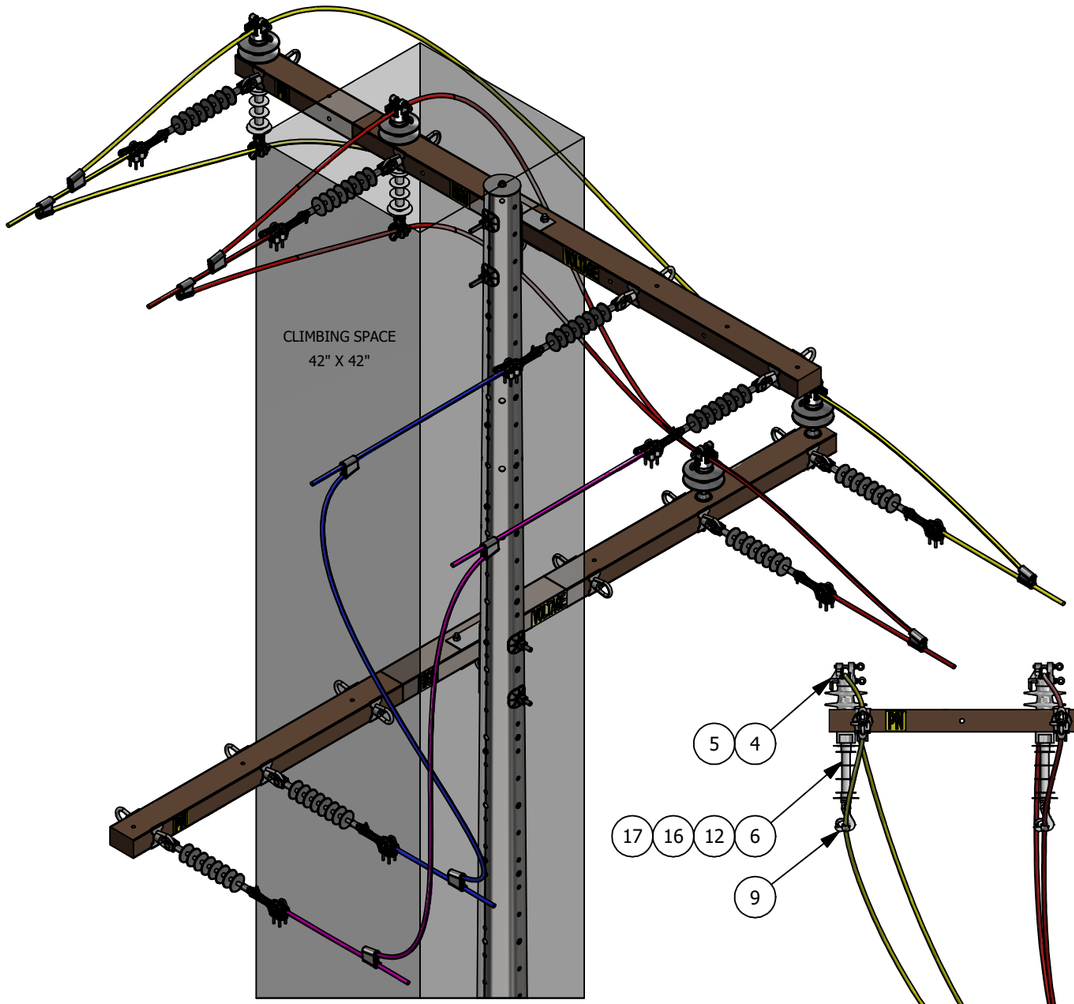

FIGURE 4 C
ISOMETRIC

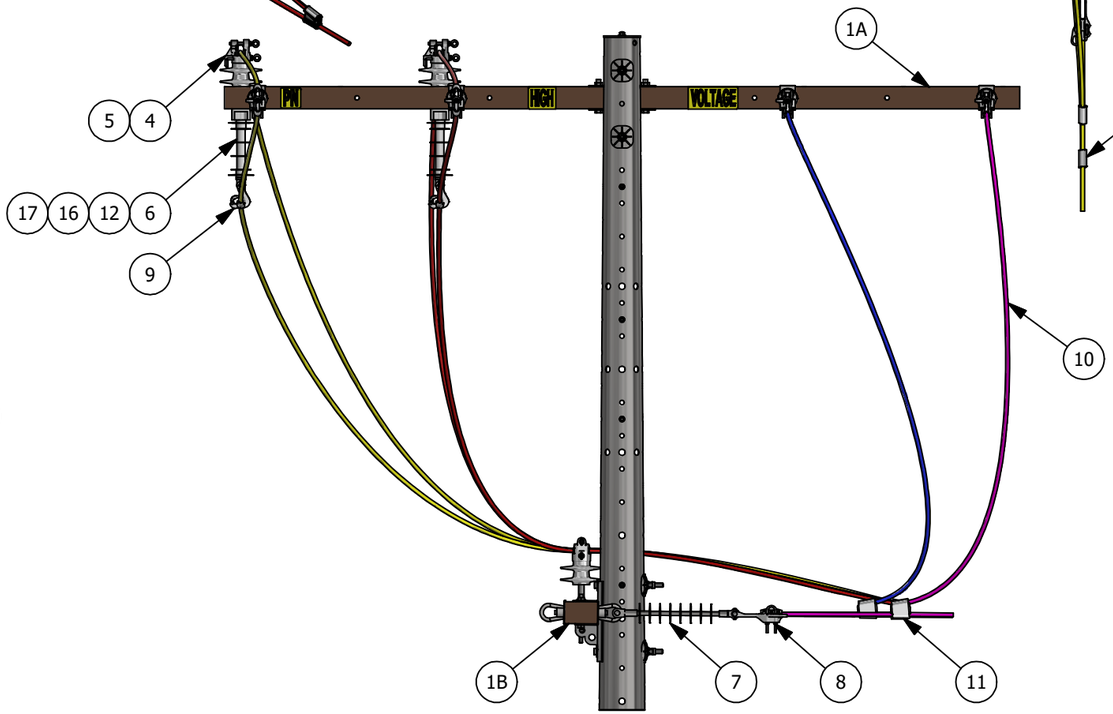

FIGURE 5 C
ELEVATION

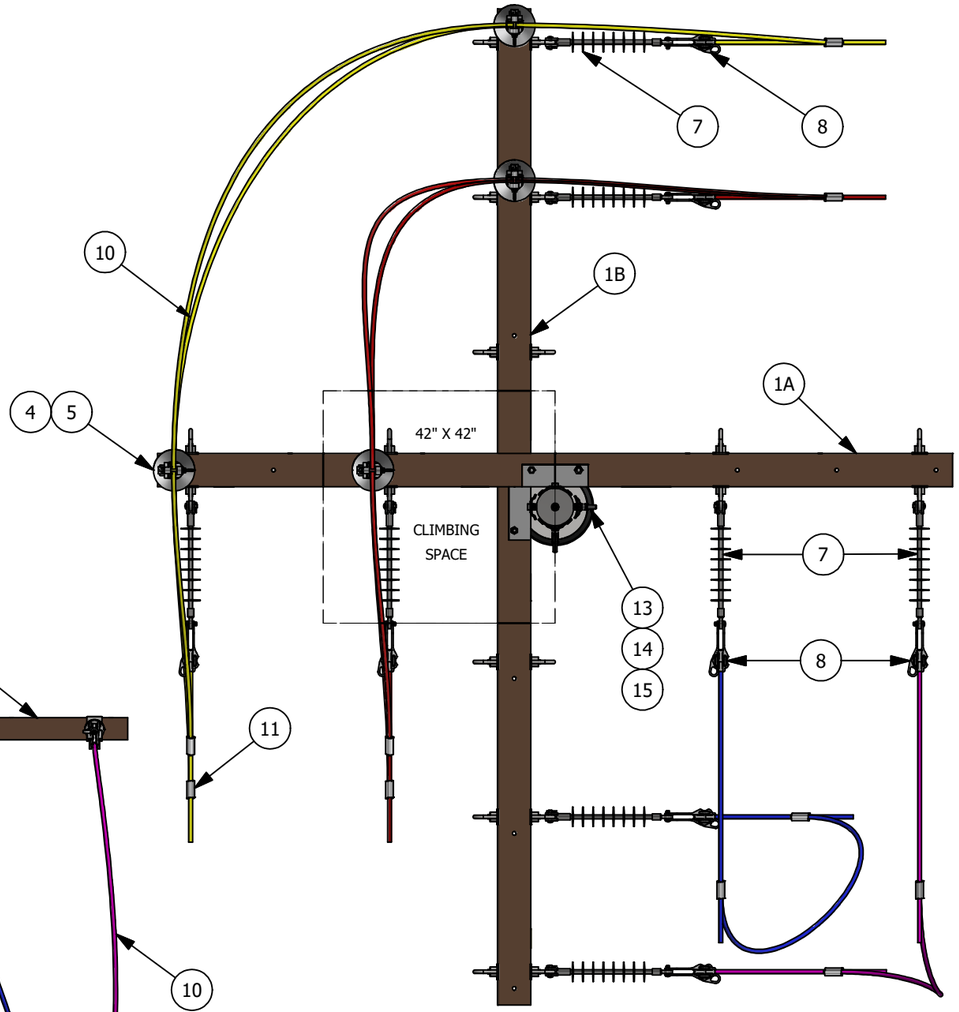

FIGURE 6 C
PLAN

REV	CHANGE	DRWN	BY	CHKD	APVD	DATE
F	REVISE TO 3D FORMAT	DV	JIK	-	-	12/1/2021
E	INSTALLATION UPDATE	EDM	JA	JES	CZH	08/24/2021
D	TABLE UPDATE	-	JIK	JES	CZH	11/12/2019

SDG&E ELECTRIC OVERHEAD CONSTRUCTION STANDARDS

DISTRIBUTION CONSTRUCTION:
7.5kV-20kV BUCKARM CORNERS

SCALE: NOT TO SCALE

DRAWING NO:	SHEET:
OH435.2	2 OF 3

© 1998 - 2021 San Diego Gas and Electric Company. All rights reserved. Removal of this copyright notice without permission is not permitted under law.

X Indicates Latest Revision | Completely Revised | New Page | Information Removed

TABLE OF CONTENTS

INSTALLATION:

(A) ON STEEL POLES USE SPRING LOCK WASHER.

(B) CUT OFF END OF BOLT WHEN IT PROTRUDES MORE THAN TWO INCHES BEYOND NUT.

(C) OVER THE ARM AND UNDER THE ARM JUMPERS ARE SHOWN AS ALTERNATIVE CONSTRUCTION. CHOOSE THE CONSTRUCTION THAT BEST SUITES THE CONSTRUCTION CONDITIONS.

BILL OF MATERIALS:

ITEM	DESCRIPTION	QUANTITY	STANDARD PAGE	STOCK NUMBER	DESIGN UNIT
1A	CROSSARM, FIBERGLASS, 12FT, HEAVY DEAD	AS REQ'D	379	-	-
1B	CROSSARM, FIBERGLASS, 15FT, HEAVY DEAD	AS REQ'D	379	-	-
2	SIGN, PRINTED "HIGH VOLTAGE" 3INCH BLACK LETTERS ON YELLOW REFLECTIVE BACKGROUND, 14IN X 4IN SELF ADHESIVE PEEL-OFF BACKING, R	AS REQ'D	208	S647650	PN/D
3	SIGN, PRINTED "PN" IN 3" HIGH X 1-1/8"	AS REQ'D	208	S648004 (X)	HV/D
4	PIN, INSULATOR	AS REQ'D	396	-	-
5	INSULATOR, CLAMP TOP	AS REQ'D	750	-	-
6	INSULATOR, UNDERARM	AS REQ'D	750	S431298	UA-INS
7	INSULATOR, SUSPENSION TYPE, PIN AND	8	750	S428958	LONGDE
8	CLAMP STRAIGHTLINE, DEAD END, SIDE OPEN	8	739	-	-
9	CLAMP, SUSPENSION	AS REQ'D	775	-	-
10	WIRE, POLY COVERED, COPPER OR ALUMINUM	AS REQ'D	711	-	-
11	CONNECTOR, WEDGE, 0.750"-0.537" RUN, 0.750"-0.524" TAP, YELLOW	AS REQ'D	784	-	-
12	STUD, 5/8" X 7-1/2" X 3/4", POST	AS REQ'D	396	S701760	STUD-W
13	BOLT, MACHINE, 3/4", GALV W/ NUT	4	390	-	-
14	WASHER, RIB SQ. CURVED, 3/4" BOLT, HOT DIPPED GALV.	4	390	S797760	RIBWSH
15	WASHER, SPRING LOCK, 3/4", GALV	4	390	S796802 (X)	LK-WSH
16	WASHER, FLAT, SQUARE, 2-1/4" X 2-1/4" X 3/8", 11/16" HOLE, STEEL GALV	AS REQ'D	390	S799040	5/85SQ
17	WASHER, SPRING LOCK, 5/8", GALV	AS REQ'D	390	S796886 (X)	-

NOTES:

I. PRIMARY NEUTRAL CONDUCTORS ARE TO BE IDENTIFIED ON EACH POLE THEY CONTACT BY INSULATORS OF DIFFERENT COLOR, SHAPE OF QUANTITY AS COMPARED TO THE PHASE CONDUCTORS, OR BY A SIGN. WHEN THE PRIMARY PHASE AND PRIMARY NEUTRAL CONDUCTORS ARE NOT DISTINGUISHED AS MENTIOND, THE PRIMARY NEUTRAL SHALL BE IDENTIFIED THROUGH THE USE OF A "PIN" (PRIMARY NEUTRAL) SIGN INSTALLED. (B)

II. NEW CONSTRUCTION SHALL USE AERIAL CABLE CONSTRUCTION FOR SECONDARY APPLICATIONS. EXISTING CONSTRUCTION CAN USE CROSSARMS FOR OPEN WIRE SECONDARY CONSTRUCTION. (e)

III THE CLIMBING SPACE WHERE LINE ARMS AND RELATED BUCKARMS ARE INVOLVED ON POLES OR STRUCTURES SHALL BE ON ONE SIDE OR FACE OF THE POLE, OR IN A QUADRANT AS DEFINED BELOW:

a. WHERE THE VERTICAL CLEARANCE BETWEEN CONDUCTORS ON LINE AND BUCKARM IS FOUR FEET OR MORE: THE CLIMBING SPACE SHALL BE PROVIDED ON ONE SIDE OR FACE OF THE POLE FOR EACH ARM AS SPECIFIED IN G.O. 95 RULE 54.7-A1.

b. WHERE THE VERTICAL CLEARANCE BETWEEN CONDUCTORS ON LINE AND BUCKARM IS LESS THAN FOUR FEET: THE CLIMBING SPACE SHALL BE PROVIDED THROUGH SUCH LEVELS AND LOCATED IN QUADRANT AND SHALL HAVE AT LEAST THE FOLLOWING DIMENSIONS. (f)

TABLE 1:

CLIMBING SPACE DIMENSIONS	
VOLTAGE OF CONDUCTORS (V)	DIMENSIONS OF SQUARE (IN)
0-7,500	30
7,500-35,000	42

(X) THIS ITEM IS EXEMPT.

REFERENCE:

a. NEUTRAL INSTALLATION, SEE DM5124.2.

b. "PIN" SIGN AND POLE SIGNAGE, SEE OH208.

c. FIBERGLASS CROSSARMS, SEE OH379.

d. FOR CLIMBING AND WORKING SPACE SEE OH251.

(e) SECONDARY CABLE CONSTRUCTION, SEE OH612.

(f) SEE G.O. 95 RULE 54-6

REV	CHANGE	DRWN	BY	CHKD	APVD	DATE
F	REVISE TO 3D FORMAT	DV	JIK	-	-	12/1/2021
E	INSTALLATION UPDATE	EDM	JA	JES	CZH	08/24/2021
D	TABLE UPDATE	-	JIK	JES	CZH	11/12/2019

SDG&E

A Sempra Energy utility

SDG&E ELECTRIC OVERHEAD CONSTRUCTION STANDARDS

DISTRIBUTION CONSTRUCTION:
7.5kV-20kV BUCKARM CORNERS

SCALE: NOT TO SCALE

DRAWING NO: OH435.3

SHEET: 3 OF 3

© 1998 - 2021 San Diego Gas and Electric Company. All rights reserved. Removal of this copyright notice without permission is not permitted under law.

X Indicates Latest Revision | Completely Revised | New Page | Information Removed

TABLE OF CONTENTS

SCOPE: THIS STANDARD SHOWS THE INSTALLATION OF A FLYING TAP. USE TO AVOID SETTING AN ADDITIONAL POLE AND REALIGNING CONDUCTORS WHEN POLE REMOVAL IS NECESSARY.

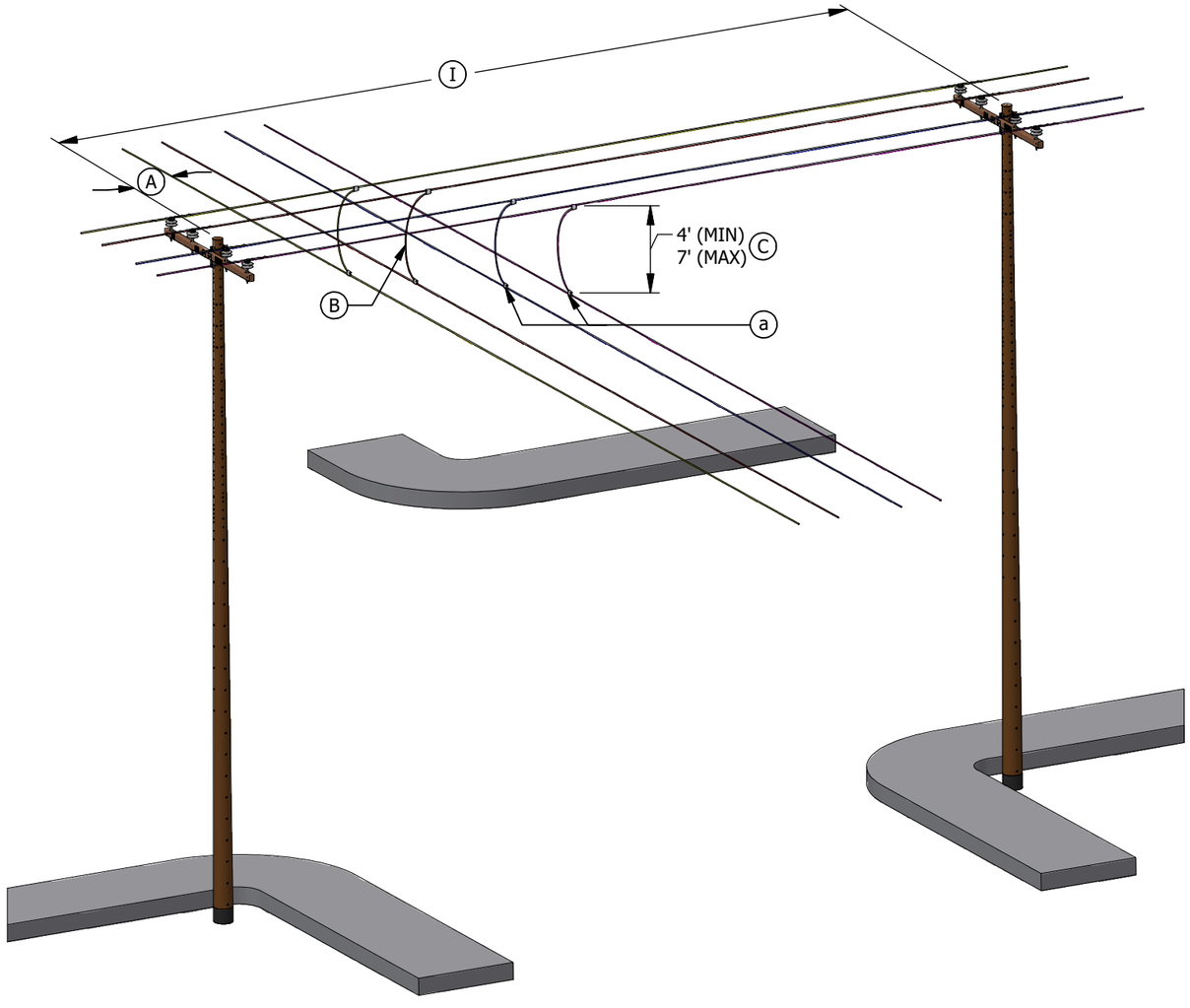

FIGURE 1

TABLE 1:

OVERHEAD FLYING TAP ASSEMBLY UNITS-LABOR ONLY	
AU/CU	**DESCRIPTION**
FTS	3/0 AND BELOW-HOT/COLD
FTLC	4/0 AND ABOVE-COLD
FTLH	4/0 AND ABOVE-HOT

INSTALLATION:

(A) THE CIRCUIT CROSSING IS TO BE MINIMUM OF 27" FROM CENTERLINE OF POLE PER G.O. 95 RULE 54.4-D2.

(B) JUMPER WIRE SIZE AND TYPE TO BE SAME AS SMALLEST LINE WIRE - MINIMUM #2 AL OR #4 B.S. CU. WHEN CONNECTING ALUMINUM AND COPPER, USE COPPER JUMPERS AND LOCATE CONNECTOR AT THE SAME LEVEL OR BELOW THE ALUMINUM LINE CONDUCTOR.

(C) 4' MINIMUM IS DESIRABLE. MAY BE REDUCED TO 24" (BUCKET ACCESSIBLE ONLY) PER G.O. 95 RULE 54.4-C7 TO AVOID POLE CHANGE-OUT OR CONDUCTOR REARRANGEMENT.

BILL OF MATERIALS: NONE

NOTES:

(I) MAXIMUM SPAN LENGTH IN EITHER DIRECTION IS 300 FEET FOR 3/0 AND ABOVE - 200 FEET FOR 1/0 AND BELOW.

REFERENCE:

(a) FOR PROPER CONNECTOR, SEE OVERHEAD CONSTRUCTION STANDARD 783 TO 785.

REV	CHANGE	DRWN	BY	CHKD	APVD	DATE
C	REVISED TO 3D FORMAT	ARC	JIK	-	-	08/09/2022
B	EDITORIAL CHANGES	-	GW	JS	CZH	08/01/2018
A	COMPLETELY REVISED	-	JS	IL	MDJ	08/08/2016

SDG&E

A Sempra Energy utility

© 1998 - 2022 San Diego Gas and Electric Company. All rights reserved. Removal of this copyright notice without permission is not permitted under law.

SDG&E ELECTRIC OVERHEAD CONSTRUCTION STANDARDS

FLYING TAP

SCALE: NOT TO SCALE

DRAWING NO: OH437.1

SHEET: 1 OF 1

X Indicates Latest Revision | Completely Revised | New Page | Information Removed

SCOPE: THIS STANDARD SHOWS SINGLE AND DOUBLE ALLEY ARM CONSTRUCTION USED TO POSITION CONDUCTORS AWAY FROM BUILDINGS AND OTHER OBSTACLES OR TO RELOCATE A POLE.

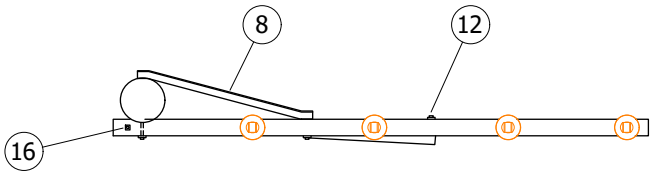

FIGURE 1
SECTION VIEW A-A

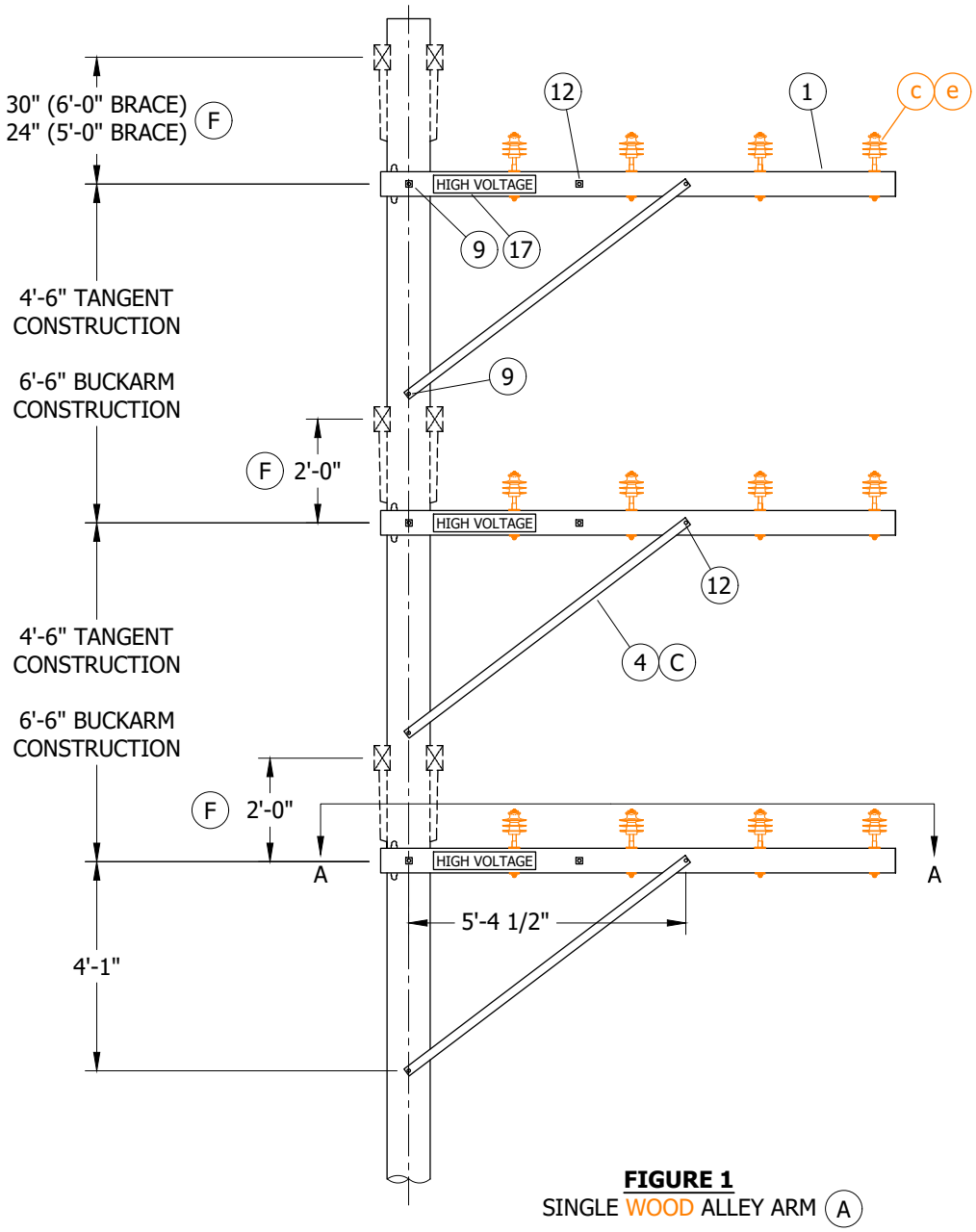

FIGURE 1
SINGLE WOOD ALLEY ARM (A)

© 1998 - 2022 San Diego Gas & Electric Company. All rights reserved. Removal of this copyright notice without permission is not permitted under law.

REV	CHANGE	DR	BY	DSN	APV	DATE	REV	CHANGE	DR	BY	DSN	APV	DATE
C	DRAWING UPDATE	EDM	JIK	MRF	KRG	11/09/2022	F						
B	EDITORIAL CHANGES	-	JS	JS	CZH	08/01/2018	E						
A	ORIGINAL ISSUE	-	-	-	PA/DRM	01/01/1994	D						

X Indicates Latest Revision | Completely Revised | New Page | Information Removed

SDG&E ELECTRIC OVERHEAD CONSTRUCTION STANDARDS

ATTACHMENT OF WOOD ALLEY ARMS, 0-20KV LINES

OH440.1

TABLE OF CONTENTS

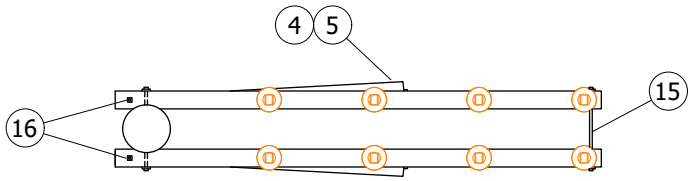

FIGURE 2
SECTION VIEW A-A

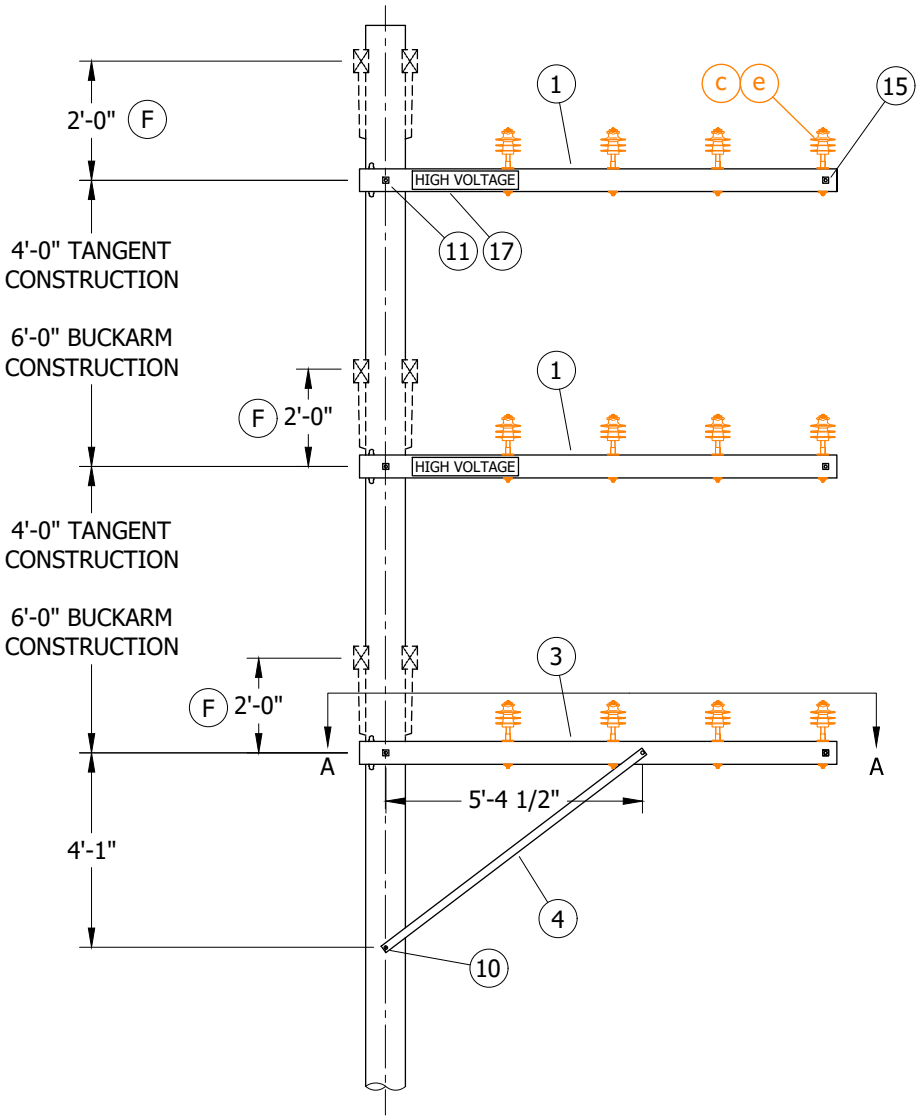

FIGURE 2
10'-0" DOUBLE WOOD ALLEY ARM (B)

© 1998 - 2022 San Diego Gas & Electric Company. All rights reserved. Removal of this copyright notice without permission is not permitted under law.

REV	CHANGE	DR	BY	DSN	APV	DATE	REV	CHANGE	DR	BY	DSN	APV	DATE
C	DRAWING UPDATE	EDM	JIK	MRF	KRG	11/09/2022	F						
B	EDITORIAL CHANGES	-	JS	JS	CZH	08/01/2018	E						
A	ORIGINAL ISSUE	-	-	-	PA/DRM	01/01/1994	D						

X Indicates Latest Revision | Completely Revised | New Page | Information Removed

SDG&E ELECTRIC OVERHEAD CONSTRUCTION STANDARDS

ATTACHMENT OF WOOD ALLEY ARMS, 0-20KV LINES

OH440.2

TABLE OF CONTENTS

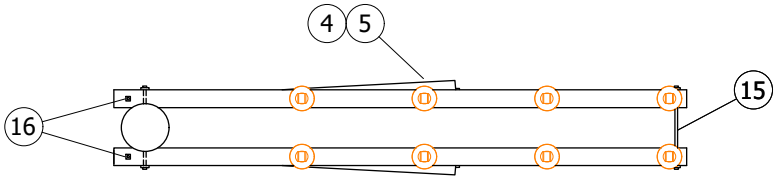

FIGURE 3
SECTION VIEW A-A

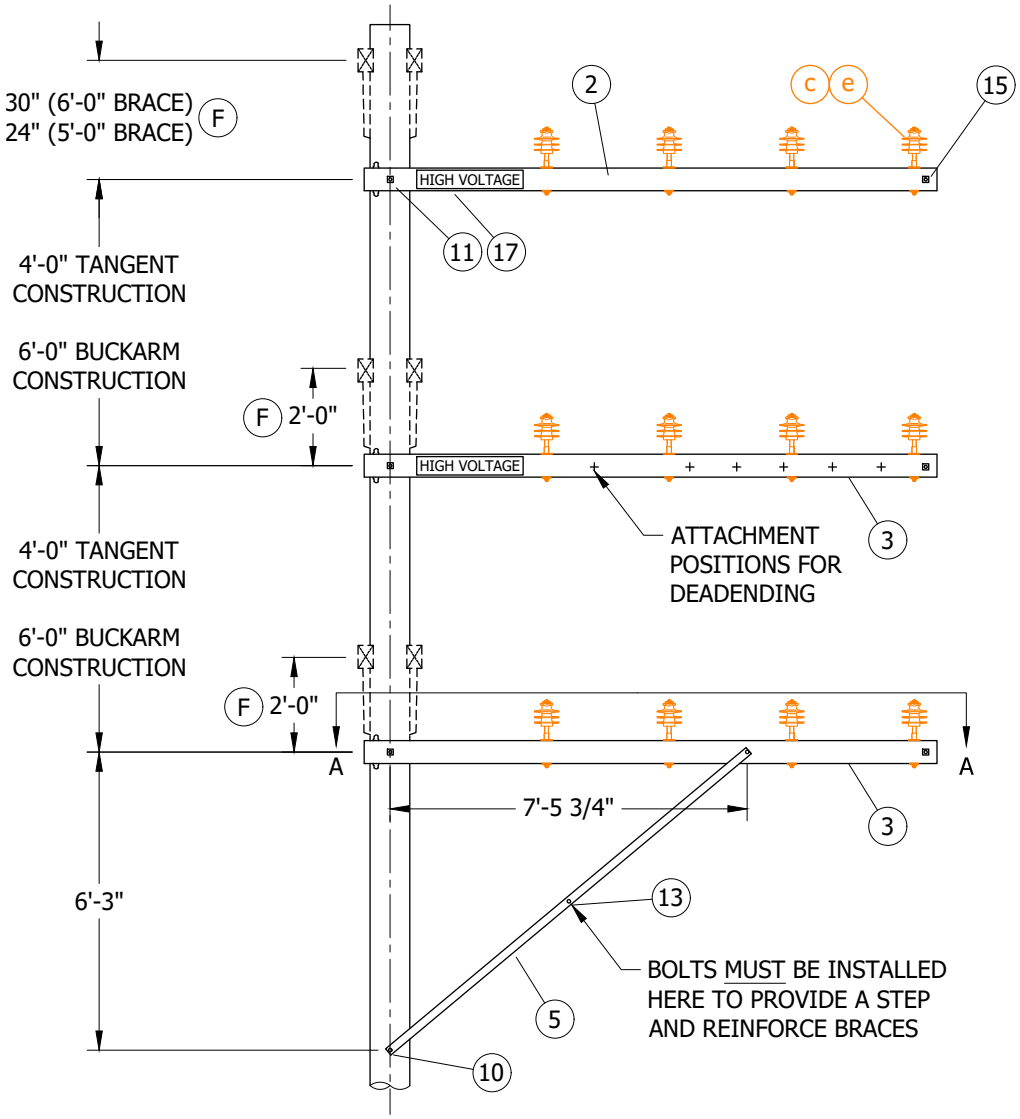

FIGURE 3
12'-0" DOUBLE WOOD ALLEY ARM (B)

© 1998 - 2022 San Diego Gas & Electric Company. All rights reserved. Removal of this copyright notice without permission is not permitted under law.

REV	CHANGE	DR	BY	DSN	APV	DATE	REV	CHANGE	DR	BY	DSN	APV	DATE
C	DRAWING UPDATE	EDM	JIK	MRF	KRG	11/09/2022	F						
B	EDITORIAL CHANGES	-	JS	JS	CZH	08/01/2018	E						
A	ORIGINAL ISSUE	-	-	-	PA/DRM	01/01/1994	D						

X Indicates Latest Revision | Completely Revised | New Page | Information Removed

SDG&E ELECTRIC OVERHEAD CONSTRUCTION STANDARDS

ATTACHMENT OF WOOD ALLEY ARMS, 0-20KV LINES

OH440.3

TABLE OF CONTENTS

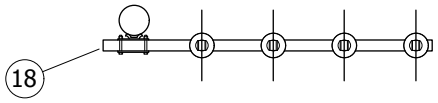

FIGURE 4
SECTION VIEW A-A

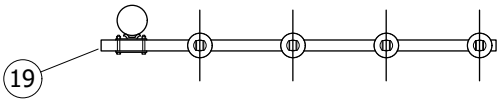

FIGURE 5
SECTION VIEW A-A

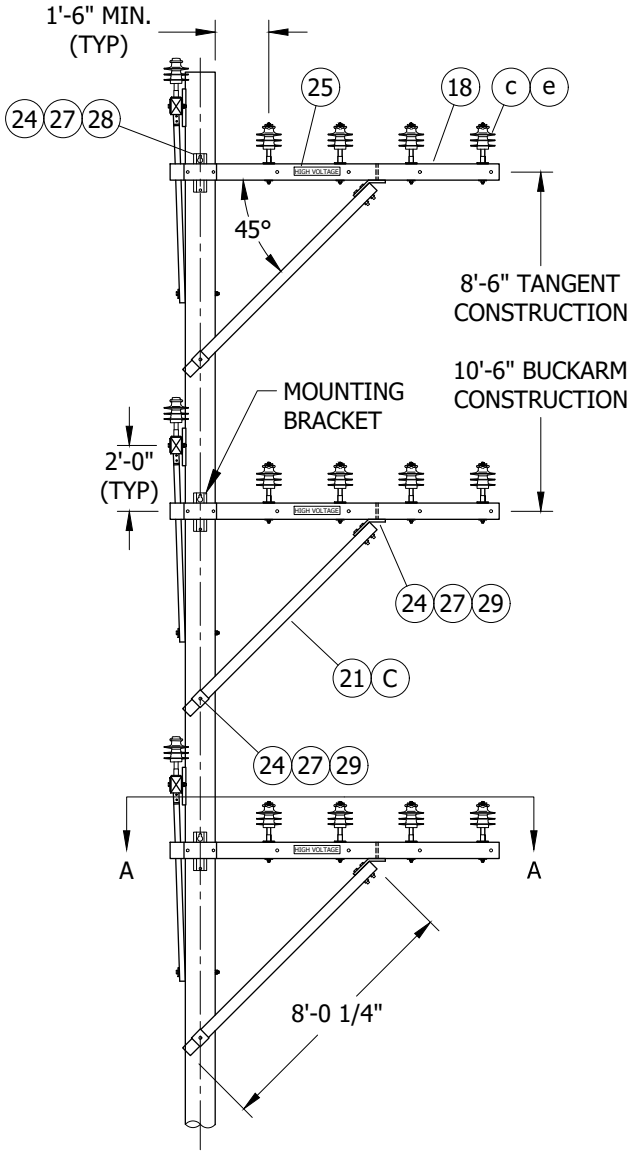

FIGURE 4
10'-0" SINGLE FIBERGLASS ALLEY ARMS (A)

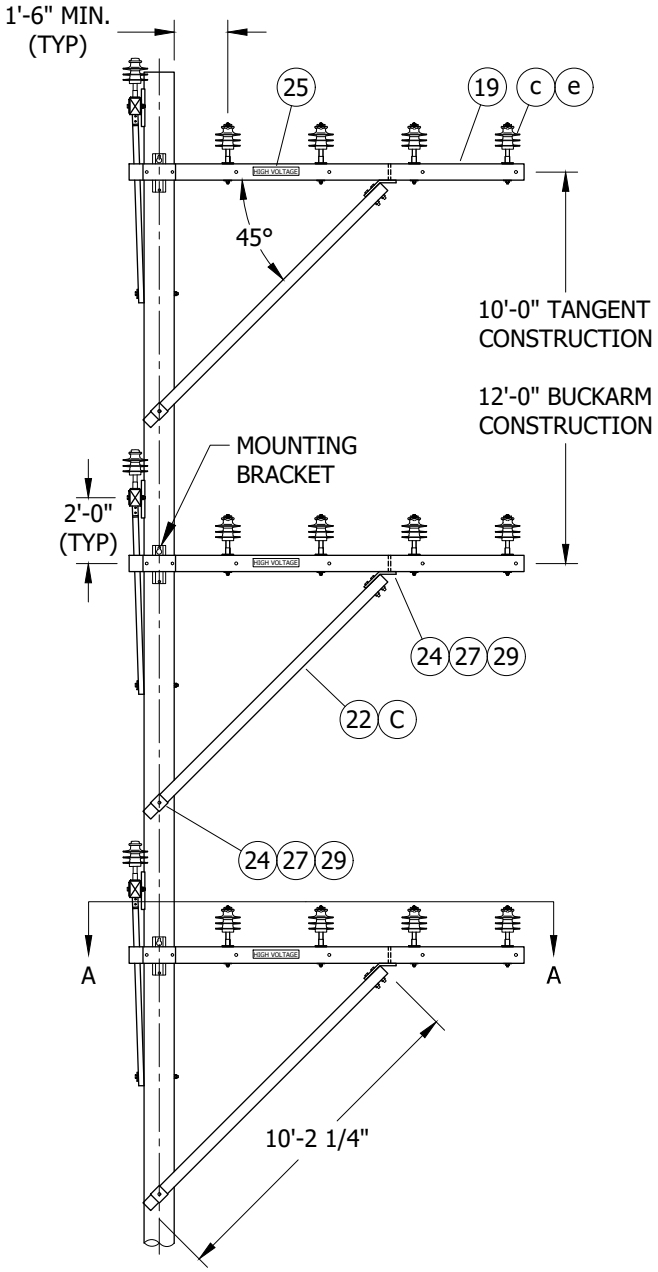

FIGURE 5
12'-0" SINGLE FIBERGLASS ALLEY ARMS (A)

© 1998 - 2022 San Diego Gas & Electric Company. All rights reserved. Removal of this copyright notice without permission is not permitted under law.

REV	CHANGE	DR	BY	DSN	APV	DATE	REV	CHANGE	DR	BY	DSN	APV	DATE
C	DRAWING UPDATE	EDM	JIK	MRF	KRG	11/09/2022	F						
B	EDITORIAL CHANGES	-	JS	JS	CZH	08/01/2018	E						
A	ORIGINAL ISSUE	-	-	-	PA/DRM	01/01/1994	D						

Indicates Latest Revision | Completely Revised | X New Page | Information Removed

SDG&E ELECTRIC OVERHEAD CONSTRUCTION STANDARDS

ATTACHMENT OF FIBERGLASS ALLEY ARMS

OH440.4

TABLE OF CONTENTS

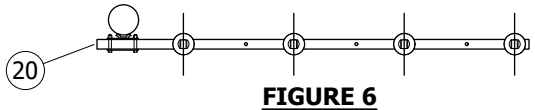

FIGURE 6
SECTION VIEW A-A

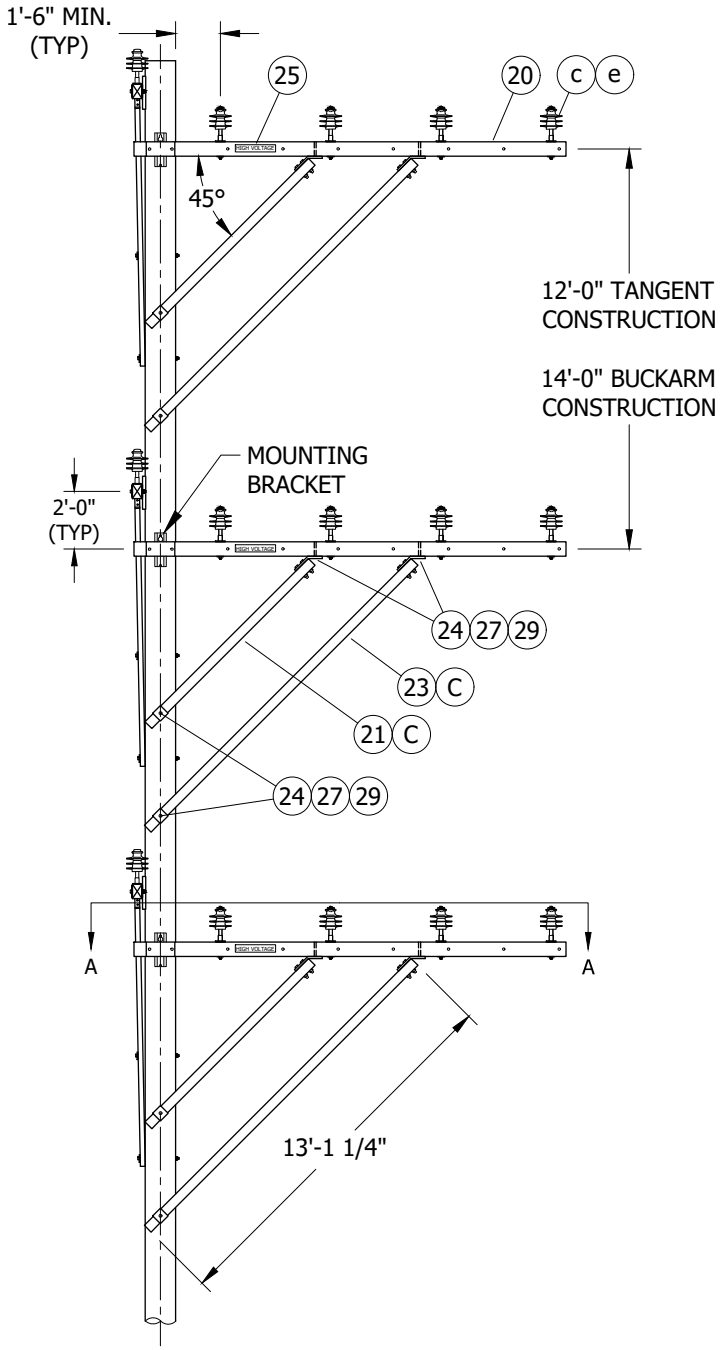

FIGURE 6
15'-0" SINGLE FIBERGLASS ALLEY ARMS W/ 2 BRACES (A)

© 1998 - 2022 San Diego Gas & Electric Company. All rights reserved. Removal of this copyright notice without permission is not permitted under law.

REV	CHANGE	DR	BY	DSN	APV	DATE	REV	CHANGE	DR	BY	DSN	APV	DATE
C	DRAWING UPDATE	EDM	JIK	MRF	KRG	11/09/2022	F						
B	EDITORIAL CHANGES	-	JS	JS	CZH	08/01/2018	E						
A	ORIGINAL ISSUE	-	-	-	PA/DRM	01/01/1994	D						

Indicates Latest Revision | Completely Revised | X New Page | Information Removed

SDG&E ELECTRIC OVERHEAD CONSTRUCTION STANDARDS

ATTACHMENT OF FIBERGLASS ALLEY ARMS

OH440.5

TABLE OF CONTENTS

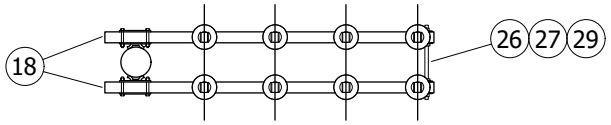

FIGURE 7
SECTION VIEW A-A

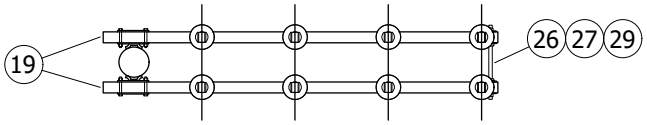

FIGURE 8
SECTION VIEW A-A

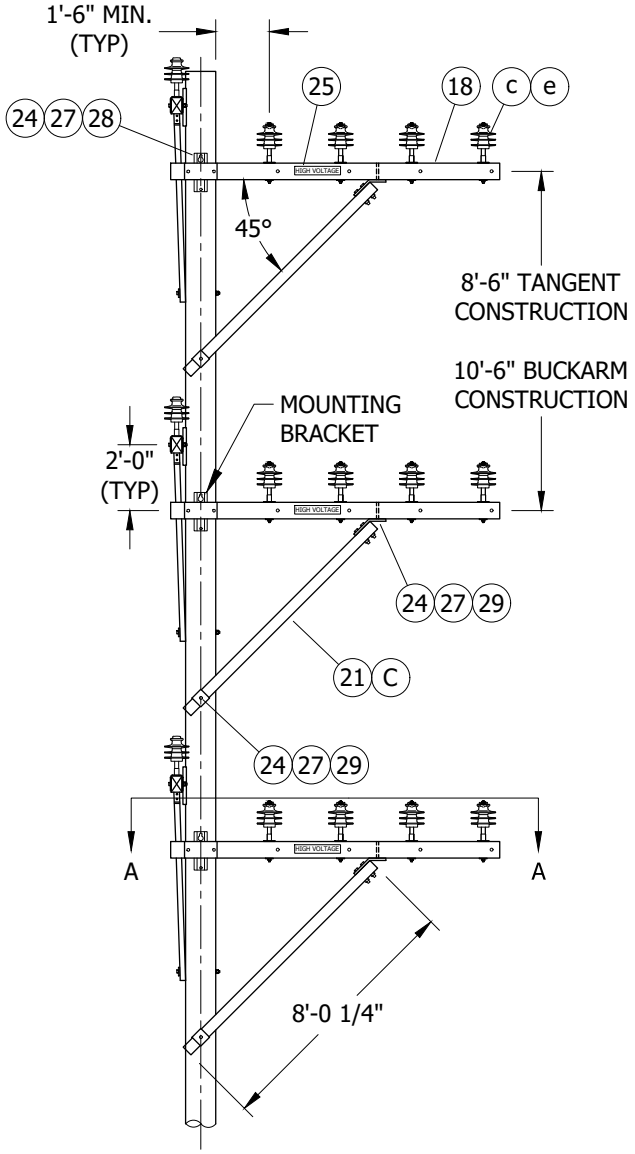

FIGURE 7
10'-0" DOUBLE FIBERGLASS ALLEY ARMS (B)

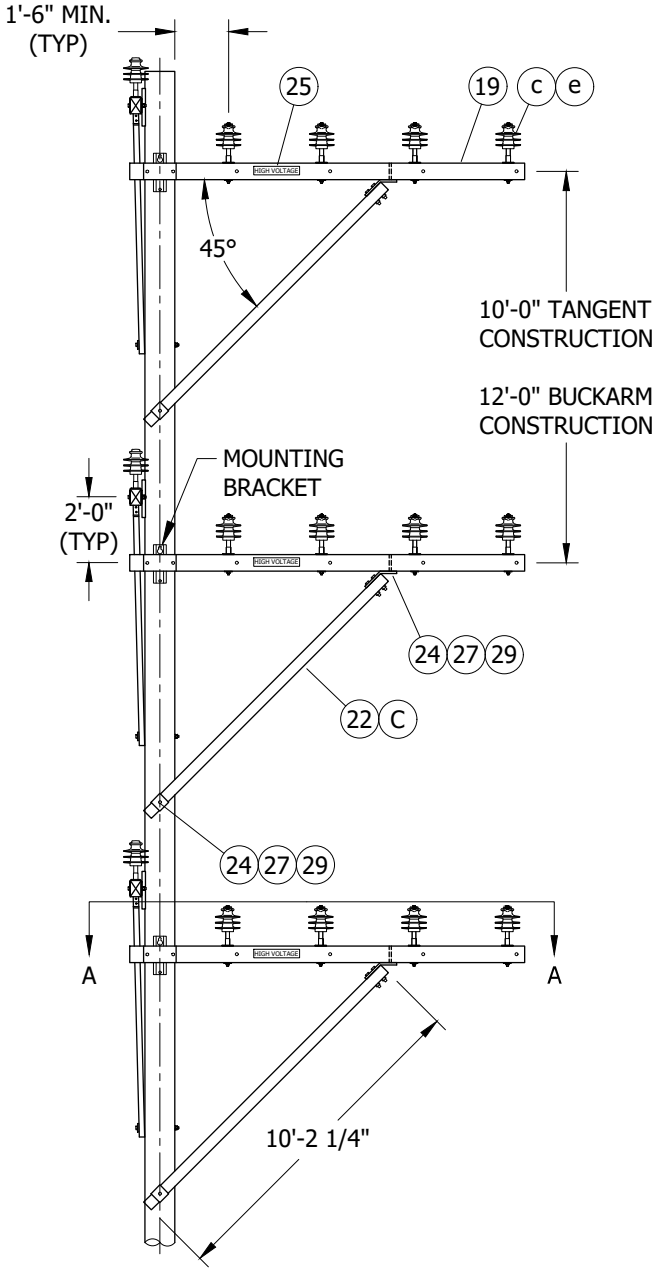

FIGURE 8
12'-0" DOUBLE FIBERGLASS ALLEY ARMS (B)

© 1998 - 2022 San Diego Gas & Electric Company. All rights reserved. Removal of this copyright notice without permission is not permitted under law.

REV	CHANGE	DR	BY	DSN	APV	DATE	REV	CHANGE	DR	BY	DSN	APV	DATE
C	DRAWING UPDATE	EDM	JIK	MRF	KRG	11/09/2022	F						
B	EDITORIAL CHANGES	-	JS	JS	CZH	08/01/2018	E						
A	ORIGINAL ISSUE	-	-	-	PA/DRM	01/01/1994	D						

Indicates Latest Revision | Completely Revised | X New Page | Information Removed

SDG&E ELECTRIC OVERHEAD CONSTRUCTION STANDARDS

ATTACHMENT OF FIBERGLASS ALLEY ARMS

OH440.6

TABLE OF CONTENTS

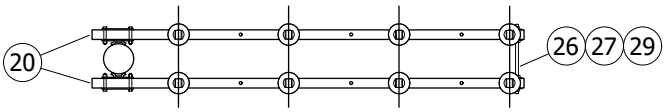

FIGURE 9
SECTION VIEW A-A

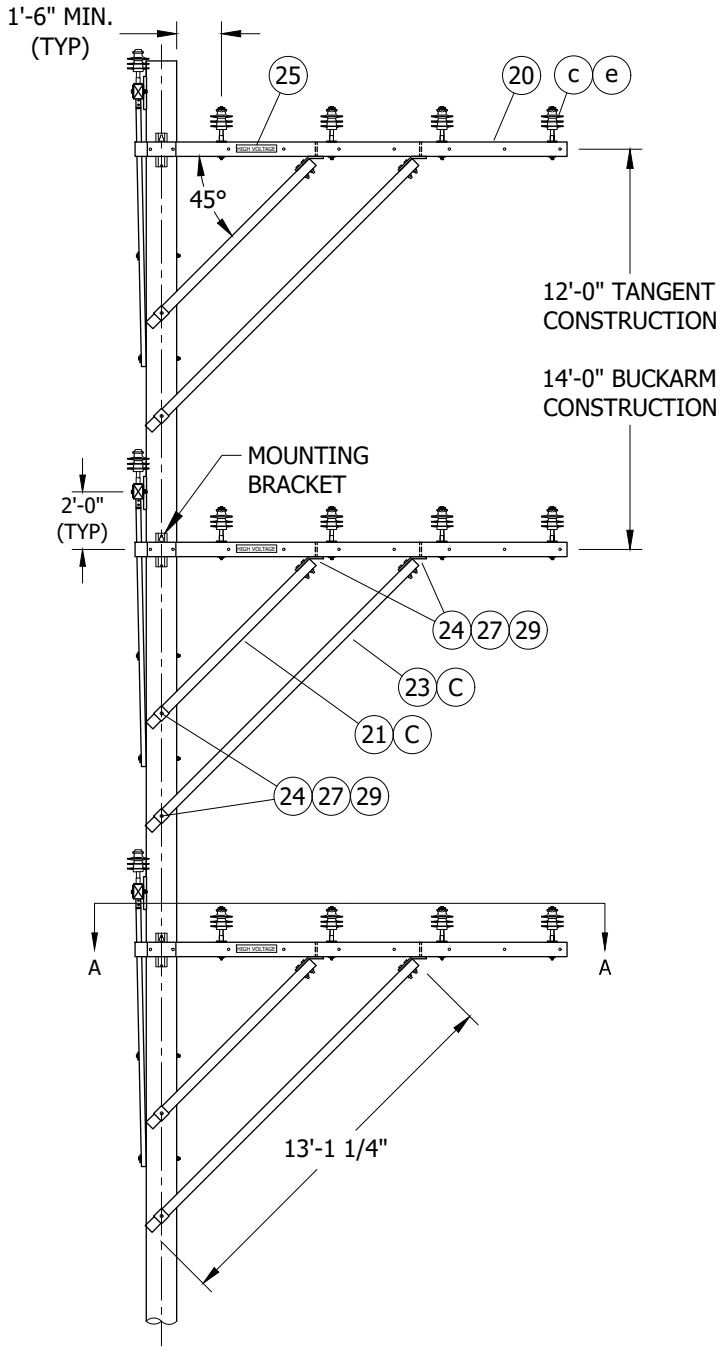

FIGURE 9
15'-0" DOUBLE FIBERGLASS ALLEY ARMS W/ 2 BRACES (B)

© 1998 - 2022 San Diego Gas & Electric Company. All rights reserved. Removal of this copyright notice without permission is not permitted under law.

REV	CHANGE	DR	BY	DSN	APV	DATE	REV	CHANGE	DR	BY	DSN	APV	DATE
C	DRAWING UPDATE	EDM	JIK	MRF	KRG	11/09/2022	F						
B	EDITORIAL CHANGES	-	JS	JS	CZH	08/01/2018	E						
A	ORIGINAL ISSUE	-	-	-	PA/DRM	01/01/1994	D						

X Indicates Latest Revision | Completely Revised | New Page | Information Removed

SDG&E ELECTRIC OVERHEAD CONSTRUCTION STANDARDS

ATTACHMENT OF FIBERGLASS ALLEY ARMS

TABLE OF CONTENTS

INSTALLATION:

(A) SINGLE ALLEY ARM CONSTRUCTION (FIG. 1, 3, 4, & 5) IS THE PREFERRED METHOD TO BE USED WITH THE FOLLOWING LIMITATIONS:

1. LIMITED TO THE LIGHT LOADING DISTRICT.
2. CONDUCTOR NO LARGER THAN #2 ACSR OR 4/3 BARE STRANDED COPPER.
3. MAXIMUM SPAN LENGTH NOT TO EXCEED 200 FEET.
4. ANGLES NO GREATER THAN 15 DEGREES.
5. NO DEADENDING ALLOWED.

(B) BEYOND THE LIMITATIONS LISTED IN NOTE A, DOUBLE ALLEY ARM CONSTRUCTION (FIG. 2, 6, 7, & 8) IS REQUIRED.

(C) "STACKING" OF SINGLE ALLEY ARM CONSTRUCTION IS NOT ALLOWED. EACH ARM MUST BE SUPPORTED BY A DIAGONAL BRACE TO THE POLE.

(D) FOR NEW CONSTRUCTION, PRIMARY AND SECONDARY ALLEY ARMS MUST BE ALL OF THE SAME LENGTH.

E. DIMENSIONS APPLY TO STEEL, FIBERGLASS AND WOOD POLES.

(F) 24-INCH SEPARATION MUST BE INCREASED TO 30 INCHES WHERE 6-FOOT "HUBBARD" BRACES ARE INSTALLED ON CROSSARMS IN STANDARD POSITIONS ABOVE ALLEY ARMS. THIS NECESSITATES THE USE OF 7-FOOT DIAGONAL ALLEY ARM BRACES AS VERTICAL ALLEY ARM BRACES.

BILL OF MATERIALS:

ITEM	DESCRIPTION		QUANTITY FIG.1	QUANTITY FIG.2	QUANTITY FIG.3	STANDARD PAGE	STOCK NUMBER	DESIGN UNITS
	WOOD CROSSARMS							
1	CROSSARM, 12KV ALLEY, 3 PIN		3	--	2	380	S294128	4-
2	CROSSARM, 12KV ALLEY, 6 PIN		--	2	--		S294160	6-
3	CROSSARM, PRIMARY & SECONDARY ALLEY (D)	7 PIN	--	--	4		S293696	8PA-
		8 PIN	--	--	4		S294128	4-
		9 PIN	--	4	--		S294160	6-
		10 PIN	--	4	--		S294160	6-
4	BRACE, DIAGONAL ALLEY ARM, 7'-0"		3	--	2	--	S164352	7D1AG
5	BRACE, DIAGONAL ALLEY ARM, 10'-0"		--	2	--	--	S164288	10D1AG
6	BRACE, VERTICAL ALLEY ARM, 4'-0" (I)		--	4	4	--	S163872	4VERT
7	BRACE, VERTICAL ALLEY ARM, 6'-0" (I)		--	4	4	--	S163904	6VERT
8	BRACE, BACK, CROSSARM		3	--	--	--	S163802	BBRACE
9	BOLT, MACH, GALV., 5/8" X (LENGTH AS REQ'D), 1 SQUARE AND 1 DOUBLE COIL SPRING WASHER		6	--	--	390	--	--
10	BOLT, MACH, GALV., 5/8" X (LENGTH AS REQ'D), AND 1 DOUBLE COIL SPRING WASHER		--	1	1		--	--
11	BOLT, MACH, GALV., 5/8" X (LENGTH AS REQ'D), 2 SQUARE AND 1 DOUBLE COIL SPRING WASHER		--	3	3		--	--
12	BOLT, MACH, GALV., 5/8" X 6", 1 SQUARE AND 1 DOUBLE COIL SPRING WASHER		6	--	--		--	--
13	BOLT, SPACE, GALV., 5/8" X (LENGTH AS REQ'D)		1	1	--		--	--
14	BOLT, SPACE, GALV., 5/8" X (LENGTH AS REQ'D), 2 SQUARE AND 2 DOUBLE COIL SPRING WASHERS (I)		--	5	5		--	--
15	BOLT, SPACE, GALV., 5/8" X (LENGTH AS REQ'D), 4 SQUARE AND 2 DOUBLE COIL SPRING WASHERS		--	3	3		--	--
16	BOLT, MACH, GALV., 5/8" X 8" 2 SQUARE AND 1 DOUBLE COIL SPRING WASHERS		3	6	6		--	--
17	SIGN, HIGH VOLTAGE, AND 9 ROOFING NAILS, GALV.		4	4	4	--	S647648	HV
			--	--	--	--	S492224	

TABLE OF CONTENTS

© 1998 - 2022 San Diego Gas & Electric Company. All rights reserved. Removal of this copyright notice without permission is not permitted under law.

REV	CHANGE	DR	BY	DSN	APV	DATE	REV	CHANGE	DR	BY	DSN	APV	DATE
C	DRAWING UPDATE	EDM	JIK	MRF	KRG	11/09/2022	F						
B	EDITORIAL CHANGES	-	JS	JS	CZH	08/01/2018	E						
A	ORIGINAL ISSUE	-	-	-	PA/DRM	01/01/1994	D						

BILL OF MATERIALS (CONT'D):

ITEM	DESCRIPTION	QUANTITY						STANDARD PAGE	STOCK NUMBER	DESIGN UNITS
		FIG. 4	FIG. 5	FIG. 6	FIG. 7	FIG. 8	FIG. 9			
FIBERGLASS CROSSARMS										
18	ALLEY ARM, FIBERGLASS, 10'-0"	AS REQ'D	--	--	AS REQ'D	--	--	379	S294102	10AA
19	ALLEY ARM, FIBERGLASS, 12'-0"	--	AS REQ'D	--	--	AS REQ'D	--		S294104	12AA
20	ALLEY ARM, FIBERGLASS, 15'-0"	--	--	AS REQ'D	--	--	AS REQ'D		S294106	15AA
21	BRACE, ALLEY ARM, FIBERGLASS, 10'-0"	AS REQ'D	--	AS REQ'D	AS REQ'D	--	AS REQ'D		S163946	10FGAB
22	BRACE, ALLEY ARM, FIBERGLASS, 12'-0"	--	AS REQ'D	--	--	AS REQ'D	--		S163948	12FGAB
23	BRACE, ALLEY ARM, FIBERGLASS, 15'-0"	--	--	AS REQ'D	--	--	AS REQ'D		S163950	15FGAB
24	BOLT, MACHINE, 3/4" (SIZE AS REQ'D)	AS REQ'D						390	--	--
25	SIGN, ADHESIVE STICKER, HIGH VOLTAGE	AS REQ'D						208	S647660	HV/D
26	BOLT, SPACE, 3/4" (SIZE AS REQ'D)	--	--	--	AS REQ'D			390	--	--
27	WASHER, SPRING LOCK, 3/4" (STEEL/FIBERGLASS ONLY)	AS REQ'D							S796802 (X)	LK-WSH
28	WASHER, CURVED, SQUARE	AS REQ'D							S797760	RIBWSH
29	WASHER, FLAT, SQUARE, 4" X 4", STEEL, GALV., CENTER HOLE DIA 3/4"	AS REQ'D							S800070	--

NOTES:

(I) NOT SHOWN ON FIGURES.

(X) THIS ITEM IS EXEMPT.

REFERENCE:

a. FOR MINIMUM VERTICAL SEPARATION BETWEEN CIRCUIT LEVELS AND BETWEEN ASSOCIATED LINE AND BUCKARMS, SEE OH220.

b. FOR POLE CLASS SELECTION, SEE OH303.

(c) FOR INSULATORS, SEE OH750.

d. FOR INSTALLATION REQUIREMENTS SPECIFIC TO FIBERGLASS CROSSARMS ON STEEL POLES, SEE OH379.

(e) FOR INSULATOR PINS, SEE OH396.

f. FOR UTILIZING WOOD CROSSARMS, SEE OH380.

g. FOR GROUNDING REQUIREMENTS, SEE OH SECTION 1000.

TABLE OF CONTENTS

© 1998 - 2022 San Diego Gas & Electric Company. All rights reserved. Removal of this copyright notice without permission is not permitted under law.

REV	CHANGE	DR	BY	DSN	APV	DATE	REV	CHANGE	DR	BY	DSN	APV	DATE
C	DRAWING UPDATE	EDM	JIK	MRF	KRG	11/09/2022	F						
B	EDITORIAL CHANGES	-	JS	JS	CZH	08/01/2018	E						
A	ORIGINAL ISSUE	-	-	-	PA/DRM	01/01/1994	D						

SCOPE: THIS STANDARD SHOWS A POLE TOP EXTENSION FOR MOUNTING LINE ARMS, TO BE USED ON EXISTING POLES WHEN ADDITIONAL HEIGHT IS REQUIRED.

NOTES:

I. THE INSTALLATION OF THIS POLE TOP EXTENSION REQUIRES BUCKET TRUCK ACCESS.

II. ANY WOOD, FIBERGLASS OR STEEL POLE THAT IS SELECTED AS A CANDIDATE FOR THE INSTALLATION OF A POLE TOP EXTENSION SHOULD FIRST BE REVIEWED FOR STRUCTURAL INTEGRITY.

III. FIBERGLASS POLE TOP EXTENSIONS ARE FOR USE ON SECONDARY POLES ONLY.

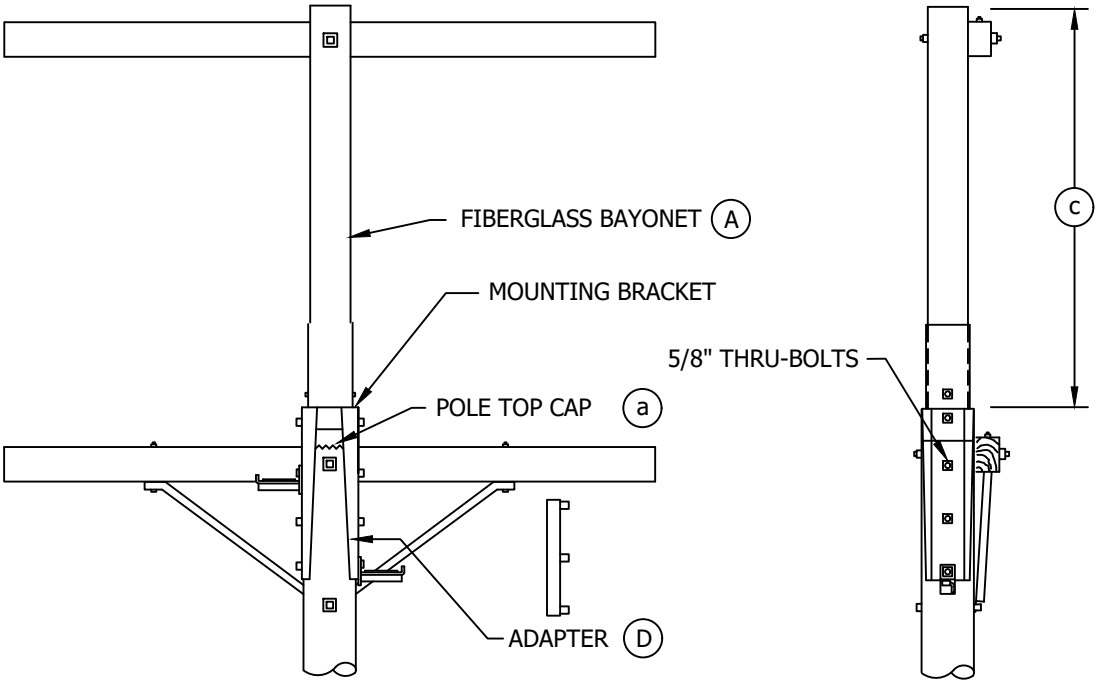

HEIGHT (c)	STOCK NUMBER	DESCRIPTION	ASSEMBLY UNITS
5 FT.	S549950	5' FIBERGLASS POLE TOP EXTENSION	FPTX5
6 FT.	S549438	6' FIBERGLASS POLE TOP EXTENSION	FPTX6
7 FT.	S550424	7' FIBERGLASS POLE TOP EXTENSION	FPTX7
(D)	S102550	POLE TOP EXTENSION ADAPTOR	WPTXA
(a)	S552700	POLE TOP CAP-BLACK MASTIC	

INSTALLATION:

(A) FIBERGLASS BAYONET IS 5" SQUARE, DARK BRONZE IN COLOR AND IS SUPPLIED PRE-ASSEMBLED WITH A GALVANIZED STEEL MOUNTING BRACKET THAT WILL FIT A POLE TOP OF 6" TO 10" IN DIAMETER. ATTACH TO POLE TOP USING THREE 5/8" THRU-BOLTS.

(B) SEE TABLE ONE FOR ALLOWABLE UNGUYED CONDUCTOR LOADING WHICH INCLUDES SF=4. DEAD-END CONSTRUCTION AND GUYING IS ALLOWED ON THIS FIBERGLASS POLE TOP EXTENSION.

C. THIS POLE TOP EXTENSION MAY BE USED FOR 1/0 AND SMALLER WIRE IN THE LIGHT LOADING DISTRICTS ONLY.

(D) ADAPTER IS REQUIRED FOR ATTACHING THE POLE TOP EXTENSION BRACKET ON A POLE WITH LESS THAN 6 INCHES OF POLE TOP DIAMETER. INSTALL ADAPTER BETWEEN POLE AND BRACKET.

© 1998 - 2018 San Diego Gas & Electric Company. All rights reserved. Removal of this copyright notice without permission is not permitted under law.

REV	CHANGE	BY	DSGN	APPV	DATE	REV	CHANGE	BY	DSGN	APPV	DATE
C	EDITORIAL CHANGES	JS	JS	CZH	8/1/2018	F					
B	EDITORIAL CHANGES	JK	JS	MDJ	9/26/2017	E					
A	DRAWING UPDATES	JS	JS	MDJ	12/20/2016	D					

X Indicates Latest Revision | Completely Revised | New Page | Information Removed

SDG&E ELECTRIC OVERHEAD CONSTRUCTION STANDARD

FIBERGLASS POLE TOP EXTENSION FOR LINE ARMS OR EQUIPMENT MOUNTING

OH473.1

TABLE OF CONTENTS

REFERENCE:

(a) A POLE TOP CAP IS TO BE INSTALLED, PER MANUFACTURERS INSTRUCTIONS, WHENEVER A POLE TOP EXTENSION IS INSTALLED. THIS POLE TOP CAP IS INCLUDED IN THE ASSEMBLY UNITS FOR THE THREE HEIGHTS OF FIBERGLASS POLE TOP EXTENSION.

(b) INCREASING POLE LENGTH BY USE OF A POLE TOP EXTENSION INCREASES THE BENDING MOMENT AT THE GROUND POLE MUST HAVE ADEQUATE USABLE STRENGTH TO WITHSTAND THE INCREASED BENDING MOMENT IMPOSED BY THE POLE TOP EXTENSION (SEE STANDARD 344-354).

(c) DO NOT USE IN GRADE "A" CROSSING - G.O. 95 49.1

TABLE OF CONTENTS

© 1998 - 2018 San Diego Gas & Electric Company. All rights reserved. Removal of this copyright notice without permission is not permitted under law.

REV	CHANGE	BY	DSGN	APPV	DATE	REV	CHANGE	BY	DSGN	APPV	DATE
C	EDITORIAL CHANGES	JS	JS	CZH	8/1/2018	F					
B	EDITORIAL CHANGES	JK	JS	MDJ	9/26/2017	E					
A	DRAWING UPDATES	JS	JS	MDJ	12/20/2016	D					

X Indicates Latest Revision | Completely Revised | New Page | Information Removed

SDG&E ELECTRIC OVERHEAD CONSTRUCTION STANDARD

FIBERGLASS POLE TOP EXTENSION FOR LINE ARMS OR EQUIPMENT MOUNTING

OH473.2

SCOPE: THIS STANDARD ILLUSTRATES THE INSTALLATION OF A CENTER-PHASE DEADEND TO THE POLE IN DEADEND ARM CONSTRUCTION WITH FIBERGLASS CROSSARMS.

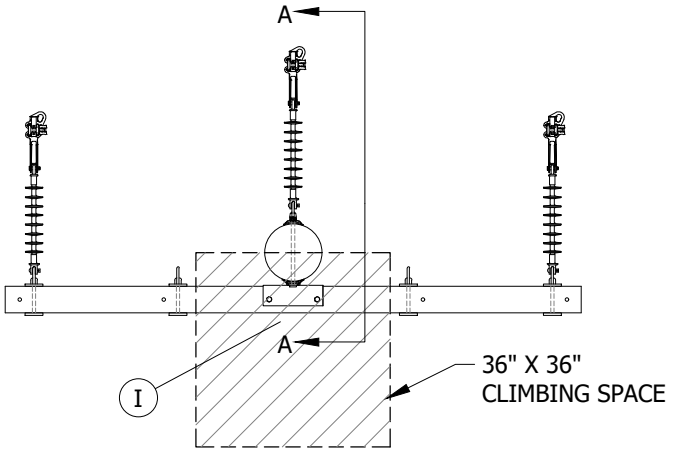

FIGURE 1
TOP VIEW

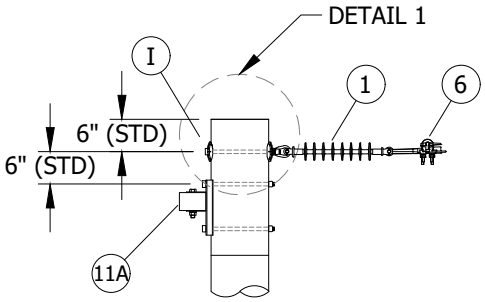

FIGURE 1
VIEW A-A

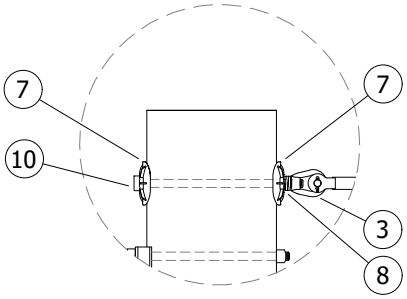

DETAIL 1

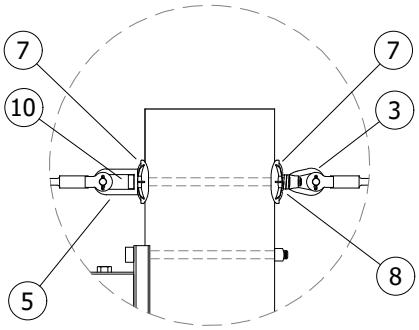

DETAIL 2

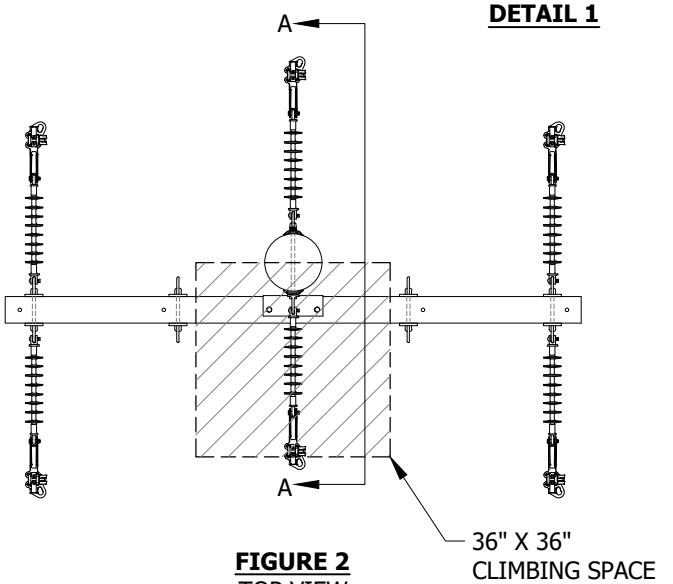

FIGURE 2
TOP VIEW

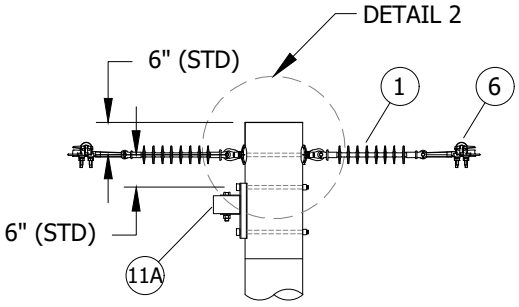

FIGURE 2
VIEW A-A

TABLE OF CONTENTS

© 1998 - 2021 San Diego Gas & Electric Company. All rights reserved. Removal of this copyright notice without permission is not permitted under law.

REV	CHANGE	DR	BY	DSN	APV	DATE	REV	CHANGE	DR	BY	DSN	APV	DATE
C	EDITORIAL CHANGES	EDM	MRF	GLW	CZH	12/06/2021	F						
B	EDITORIAL CHANGES	EDM	GLW	JES	CZH	08/07/2020	E						
A	ORIGINAL ISSUE	EDM	GLW	JES	CZH	03/10/2020	D						

INSTALLATION:

A. **CLIMBING SPACE** - SHALL BE MAINTAINED IN THE SAME POSITION FOR A DISTANCE OF NOT LESS THAN 4 FEET VERTICALLY BOTH ABOVE AND BELOW EACH CONDUCTOR LEVEL THROUGH WHICH IT PASSES.

B. TO COMPLY WITH THIS REQUIREMENT, THE POSITION OF THE CLIMBING SPACE SHALL NOT BE CHANGED THROUGH CONDUCTOR LEVELS WHICH ARE LESS THAN 4 FEET APART.

C. WHERE THE VERTICAL DISTANCE BETWEEN CONSECUTIVE CONDUCTOR LEVELS IS 4 FEET OR MORE, AND LESS THAN 8 FEET, THE POSITION OF THE CLIMBING SPACE THROUGH SUCH CONSECUTIVE LEVEL MAY BE SHIFTED NOT MORE THAN ONE-QUARTER (90 DEGREES) OF THE DISTANCE AROUND THE POLE.

D. ALL APPLICABLE CLIMBING SPACE REQUIREMENTS OF GO 95 RULE 54.7 HAVE BEEN APPLIED IN THIS STANDARD. HOWEVER, DUE TO THE DIFFERENCE IN THE MATERIAL OF POLES (WOOD, STEEL) AND CROSSARMS (FIBERGLASS, WOOD) AND THE DISSIMILAR CLIMBING METHODS, CERTAIN CLIMBING SPACE REQUIREMENTS MAY BE ADJUSTED. FOR QUESTIONS/INTERPRETATION CONTACT STANDARD'S GO95 COMPLIANCE.

(E) 3/4-INCH CLOSED CLEVIS MAY BE SUBSTITUTED FOR THE PREFERRED 3/4-INCH EYE NUT.

(F) ROUND WASHER OPTIONAL FOR PLACEMENT BETWEEN COIL SPRING AND EYE NUT OR BETWEEN COIL SPRING AND CLOSED CLEVIS.

BILL OF MATERIALS:

ITEM		DESCRIPTION	QUANTITY	STANDARD PAGE	STOCK NUMBER	DESIGN UNITS
1		INSULATOR, SUSPENSION, 35KV	AS REQ'D	750	S428958	LONGDE
2		LINK, CHAIN, 5/8" X 3 1/4", GALVANIZED	AS REQ'D	739	S465760	-
3		NUT, EYE, 3/4" (E)	AS REQ'D	739	S504020	-
4		CLEVIS, CLOSED, 3/4" (E)	AS REQ'D	739	S235624	-
5		EYELET, 3/4"	AS REQ'D	962	S235648	-
6		CLAMP, STRAIN	AS REQ'D	739	-	-
7		WASHER, CURVED, 3/4"	AS REQ'D	392	S797760	RIBWSH
8		WASHER, DOUBLE COIL, SPRING	AS REQ'D	392	S798496	SP-WSH
9		WASHER, ROUND, 2" (F)	AS REQ'D	392	S800256	RD-WSH
10		BOLT, MACHINE, 3/4"	AS REQ'D	392	-	-
11	A	CROSSARM, DEADEND, FIBERGLASS	AS REQ'D	379	-	-
	B	CROSSARM, WOOD	AS REQ'D	380	-	-

NOTES:

(I) FOR WOOD POLE CONSTRUCTION. INSTALL A BOLT COVER OVER THE CENTER PHASE THRU-BOLT HARDWARE.

REFERENCE: NONE

TABLE OF CONTENTS

© 1998 - 2021 San Diego Gas & Electric Company. All rights reserved. Removal of this copyright notice without permission is not permitted under law.

REV	CHANGE	DR	BY	DSN	APV	DATE	REV	CHANGE	DR	BY	DSN	APV	DATE
C	EDITORIAL CHANGES	EDM	MRF	GLW	CZH	12/06/2021	F						
B	EDITORIAL CHANGES	EDM	GLW	JES	CZH	08/07/2020	E						
A	ORIGINAL ISSUE	EDM	GLW	JES	CZH	03/10/2020	D						

SCOPE: THIS STANDARD ILLUSTRATES THE INSTALLATION OF DEADEND CONSTRUCTION WITH WOOD CROSSARMS.

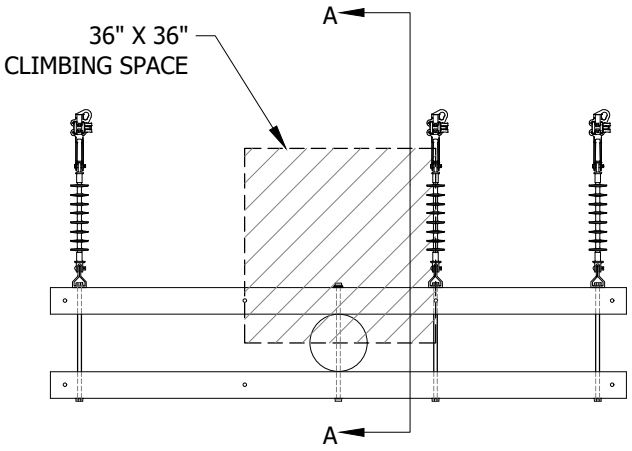

FIGURE 1 (D)
TOP VIEW

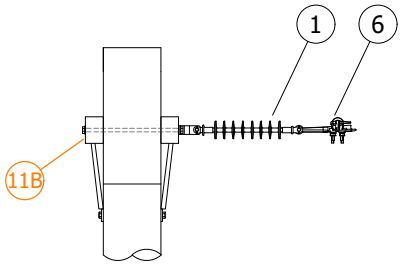

FIGURE 1
VIEW A-A

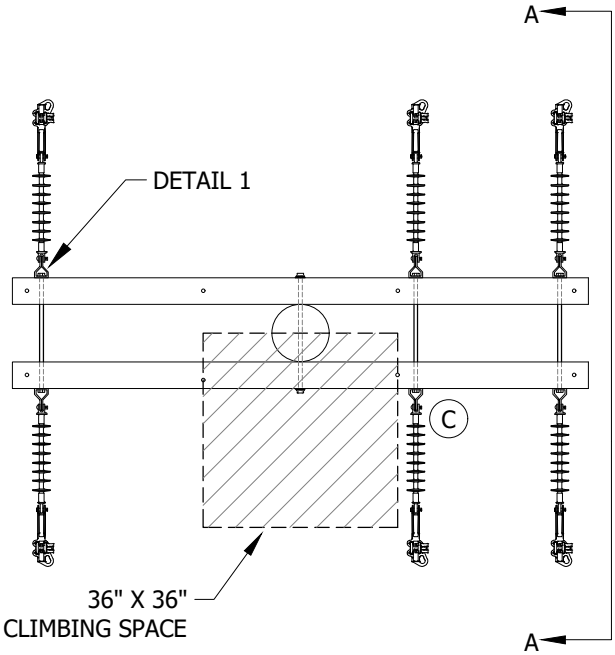

FIGURE 2 (D)
TOP VIEW



DETAIL 1
EYE NUT
OPTIONAL HARDWARE

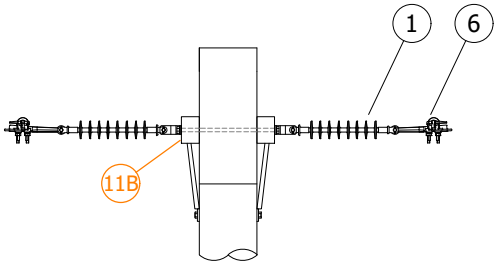

FIGURE 2
VIEW A-A

TABLE OF CONTENTS

© 1998 - 2021 San Diego Gas & Electric Company. All rights reserved. Removal of this copyright notice without permission is not permitted under law.

REV	CHANGE	DR	BY	DSN	APV	DATE	REV	CHANGE	DR	BY	DSN	APV	DATE
C	EDITORIAL CHANGES	EDM	MRF	GLW	CZH	12/06/2021	F						
B	EDITORIAL CHANGES	EDM	GLW	JES	CZH	08/07/2020	E						
A	ORIGINAL ISSUE	EDM	GLW	JES	CZH	03/10/2020	D						

INSTALLATION:

(A) A 3/4-INCH CLOSED CLEVIS MAY BE SUBSTITUTED FOR THE PREFERRED 3/4-INCH EYE NUT.

(B) ROUND WASHER OPTIONAL FOR PLACEMENT BETWEEN COIL SPRING AND EYE NUT OR BETWEEN COIL SPRING & CLOSED CLEVIS.

(C) HARDWARE MEASUREMENTS FOR THE CENTER PHASE ARE THE SAME FOR STEEL AND WOOD.

(D) INSULATOR, ATTACHING BRACKET AND CONDUCTOR ARE SHOWN OUTSIDE THE CLIMBING SPACE DIMENSIONS.

BILL OF MATERIALS:

ITEM		DESCRIPTION	QUANTITY	STANDARD PAGE	STOCK NUMBER	DESIGN UNITS
1		INSULATOR, SUSPENSION, 35KV	AS REQ'D	750	S428958	LONGDE
2		LINK, CHAIN, 5/8" X 3 1/4", GALVANIZED	AS REQ'D	739	S465760	-
3		NUT, EYE, 3/4" (A)	AS REQ'D	739	S504020	-
4		CLEVIS, CLOSED, 3/4" (A)	AS REQ'D	739	S235624	-
5		EYELET, 3/4"	AS REQ'D	962	S235648	-
6		CLAMP, STRAIN	AS REQ'D	739	-	-
7		WASHER, CURVED, 3/4"	AS REQ'D	392	S797760	RIBWSH
8		WASHER, DOUBLE, COIL SPRING	AS REQ'D	392	S798496	SP-WSH
9		WASHER, ROUND, 2" (B)	AS REQ'D	392	S800256	RD-WSH
10		BOLT, MACHINE, 3/4"	AS REQ'D	392	-	-
11	A	CROSSARM, DEADEND, FIBERGLASS	AS REQ'D	379	-	-
	B	CROSSARM, WOOD	2	380	-	-

NOTES: NONE

REFERENCE: NONE

TABLE OF CONTENTS

© 1998 - 2021 San Diego Gas & Electric Company. All rights reserved. Removal of this copyright notice without permission is not permitted under law.

REV	CHANGE	DR	BY	DSN	APV	DATE	REV	CHANGE	DR	BY	DSN	APV	DATE
C	EDITORIAL CHANGES	EDM	MRF	GLW	CZH	12/06/2021	F						
B	EDITORIAL CHANGES	EDM	GLW	JES	CZH	08/07/2020	E						
A	ORIGINAL ISSUE	EDM	GLW	JES	CZH	03/10/2020	D						

SCOPE: THIS STANDARD ILLUSTRATES THE INSTALLATION OF A CENTER-PHASE DEADEND ON BUCKARM CONSTRUCTION WITH FIBERGLASS CROSSARMS.

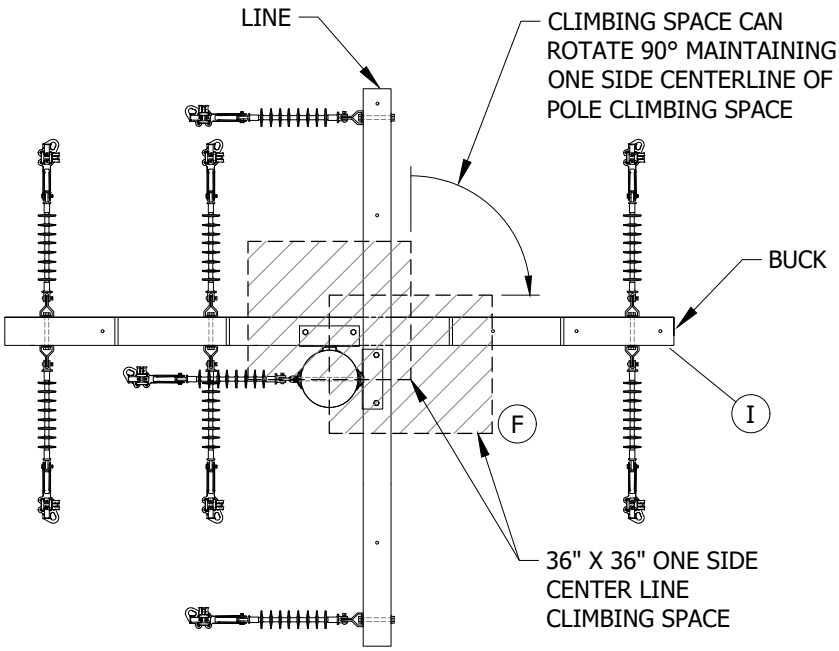

FIGURE 1
TOP VIEW

INSTALLATION:

(A) IF DEADENDING TO THE POLE IS USED ON THE BUCK ARM; INCREASE ARM SPACING BETWEEN LINE AND BUCK BY SIX INCHES TO COMPENSATE FOR THE INCREASED HEIGHT OF THE CENTER PHASE.

(B) A 3/4-INCH CLOSED CLEVIS MAY BE SUBSTITUTED FOR THE PREFERRED 3/4-INCH EYE NUT.

C. ROUND WASHER OPTIONAL FOR PLACEMENT BETWEEN COIL SPRING AND EYE NUT OR BETWEEN COIL SPRING & CLOSED CLEVIS.

D. **CLIMBING SPACE** - SHALL BE MAINTAINED IN THE SAME POSITION FOR A DISTANCE OF NOT LESS THAN FOUR FEET VERTICALLY BOTH ABOVE AND BELOW EACH CONDUCTOR LEVEL THROUGH WHICH IT PASSES.

E. TO COMPLY WITH THIS REQUIREMENT, THE POSITION OF THE CLIMBING SPACE SHALL NOT BE CHANGED THROUGH CONDUCTOR LEVELS WHICH ARE LESS THAN FOUR FEET APART.

(F) WHERE THE VERTICAL DISTANCE BETWEEN CONSECUTIVE CONDUCTOR LEVELS IS FOUR FEET OR MORE, AND LESS THAN EIGHT FEET, THE POSITION OF THE CLIMBING SPACE THROUGH SUCH CONSECUTIVE LEVEL MAY BE SHIFTED NOT MORE THAN ONE-QUARTER (90 DEGREES) OF THE DISTANCE AROUND THE POLE.

G. ALL APPLICABLE CLIMBING SPACE REQUIREMENTS OF GO 95 RULE 54.7 HAVE BEEN APPLIED IN THIS STANDARD. HOWEVER, DUE TO THE DIFFERENCE IN THE MATERIAL (WOOD, STEEL) OF POLES AND CROSSARMS (FIBERGLASS, WOOD) AND THE DISSIMILAR CLIMBING METHODS, CERTAIN CLIMBING SPACE REQUIREMENTS MAY BE ADJUSTED. FOR QUESTIONS/INTERPRETATION CONTACT ELECTRIC DISTRIBUTION STANDARD'S GO95 COMPLIANCE.

© 1998 - 2021 San Diego Gas & Electric Company. All rights reserved. Removal of this copyright notice without permission is not permitted under law.

REV	CHANGE	DR	BY	DSN	APV	DATE	REV	CHANGE	DR	BY	DSN	APV	DATE
C	EDITORIAL CHANGES	EDM	MRF	GLW	CZH	12/06/2021	F						
B	EDITORIAL CHANGES	EDM	GLW	JES	CZH	08/07/2020	E						
A	ORIGINAL ISSUE	EDM	GLW	JES	CZH	03/10/2020	D						

X Indicates Latest Revision | Completely Revised | New Page | Information Removed

SDG&E ELECTRIC OVERHEAD CONSTRUCTION STANDARDS

DEADENDING CONDUCTOR
CENTER-PHASE WITH BUCKARM CONSTRUCTION
FIBERGLASS CROSSARMS

OH474.5

TABLE OF CONTENTS

BILL OF MATERIALS:

ITEM		DESCRIPTION	QUANTITY	STANDARD PAGE	STOCK NUMBER	DESIGN UNITS
1		INSULATOR, SUSPENSION, 35KV	AS REQ'D	750	S428958	LONGDE
2		LINK, CHAIN, 5/8" X 3 1/4", GALVANIZED	AS REQ'D	739	S465760	-
3		NUT, EYE, 3/4" (A)	AS REQ'D	739	S504020	-
4		CLEVIS, CLOSED, 3/4" (A)	AS REQ'D	739	S235624	-
5		EYELET, 3/4"	AS REQ'D	962	S235648	-
6		CLAMP, STRAIN	AS REQ'D	739	-	-
7		WASHER, CURVED, 3/4"	AS REQ'D	392	S797760	RIBWSH
8		WASHER, DOUBLE COIL, SPRING	AS REQ'D	392	S798496	SP-WSH
9		WASHER, ROUND, 2" (B)	AS REQ'D	392	S800256	RD-WSH
10		BOLT, MACHINE, 3/4"	AS REQ'D	392	-	-
11	A	CROSSARM, DEADEND, FIBERGLASS	AS REQ'D	379	-	-
	B	CROSSARM, WOOD	AS REQ'D	380	-	-

NOTES:

(I) STRAIGHT THROUGH DEADEND ARM CONSTRUCTION, HAVING THE BUCK ARM AT FOUR FEET OR MORE SEPARATION, CENTER PHASE MUST STAY ON BUCK ARM TO MAINTAIN CLIMBING SPACE.

REFERENCE: NONE

TABLE OF CONTENTS

© 1998 - 2021 San Diego Gas & Electric Company. All rights reserved. Removal of this copyright notice without permission is not permitted under law.

REV	CHANGE	DR	BY	DSN	APV	DATE	REV	CHANGE	DR	BY	DSN	APV	DATE
C	EDITORIAL CHANGES	EDM	MRF	GLW	CZH	12/06/2021	F						
B	EDITORIAL CHANGES	EDM	GLW	JES	CZH	08/07/2020	E						
A	ORIGINAL ISSUE	EDM	GLW	JES	CZH	03/10/2020	D						

X Indicates Latest Revision | Completely Revised | New Page | Information Removed

SDG&E ELECTRIC OVERHEAD CONSTRUCTION STANDARDS

DEADENDING CONDUCTOR
CENTER-PHASE WITH BUCKARM CONSTRUCTION
FIBERGLASS CROSSARMS

OH474.6

SCOPE: THIS STANDARD ILLUSTRATES THE INSTALLATION OF A CENTER PHASE DEADEND ON BUCKARM CONSTRUCTION WITH WOOD CROSSARMS.

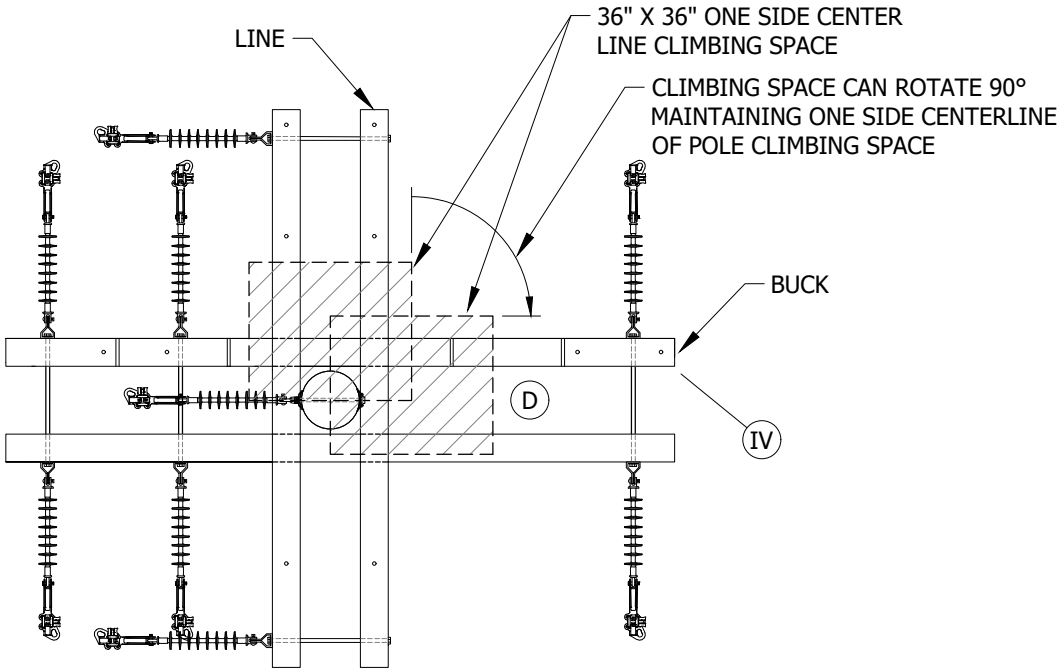

FIGURE 1
TOP VIEW

INSTALLATION:

A. IF DEADENDING TO THE POLE IS USED ON THE BUCK ARM; INCREASE ARM SPACING BETWEEN LINE AND BUCK BY 6 INCHES TO COMPENSATE FOR THE INCREASED HEIGHT OF THE CENTER PHASE.

(B) A 3/4-INCH CLOSED CLEVIS MAY BE SUBSTITUTED FOR THE PREFERRED 3/4-INCH EYE NUT.

(C) ROUND WASHER OPTIONAL FOR PLACEMENT BETWEEN COIL SPRING AND EYE NUT OR BETWEEN COIL SPRING AND CLOSED CLEVIS.

(D) IF FOUR FEET OR MORE: ROTATE 90 DEGREES, MAINTAIN HALF POLE CLIMBING SPACE. IF FOUR FEET OR LESS, QUADRANT CLIMBING WILL BE REQUIRED.

BILL OF MATERIALS:

ITEM	DESCRIPTION	QUANTITY	STANDARD PAGE	STOCK NUMBER	DESIGN UNITS
1	INSULATOR, SUSPENSION, 35KV	AS REQ'D	750	S428958	LONGDE
2	LINK, CHAIN, 5/8" X 3 1/4", GALVANIZED	AS REQ'D	739	S465760	-
3	NUT, EYE, 3/4" (B)	AS REQ'D	739	S504020	-
4	CLEVIS, CLOSED, 3/4" (B)	AS REQ'D	739	S235624	-

© 1998 - 2021 San Diego Gas & Electric Company. All rights reserved. Removal of this copyright notice without permission is not permitted under law.

REV	CHANGE	DR	BY	DSN	APV	DATE	REV	CHANGE	DR	BY	DSN	APV	DATE
C	EDITORIAL CHANGES	EDM	MRF	GLW	CZH	12/06/2021	F						
B	EDITORIAL CHANGES	EDM	GLW	JES	CZH	08/07/2020	E						
A	ORIGINAL ISSUE	EDM	GLW	JES	CZH	03/10/2020	D						

X Indicates Latest Revision | Completely Revised | New Page | Information Removed

SDG&E ELECTRIC OVERHEAD CONSTRUCTION STANDARDS

DEADENDING CONDUCTOR
CENTER-PHASE WITH BUCKARM CONSTRUCTION
WOOD CROSSARMS

OH474.7

TABLE OF CONTENTS

BILL OF MATERIALS (CONT'D):

ITEM		DESCRIPTION	QUANTITY	STANDARD PAGE	STOCK NUMBER	DESIGN UNITS
5		EYELET, 3/4"	AS REQ'D	962	S235648	-
6		CLAMP, STRAIN	AS REQ'D	739	-	-
7		WASHER, CURVED, 3/4"	AS REQ'D	392	S797760	RIBWSH
8		WASHER, DOUBLE COIL, SPRING	AS REQ'D	392	S798496	SP-WSH
9		WASHER, ROUND, 2" (C)	AS REQ'D	392	S800256	RD-WSH
10		BOLT, MACHINE, 3/4"	AS REQ'D	392	-	-
11	A	CROSSARM, DEADEND, FIBERGLASS	AS REQ'D	379	-	-
	B	CROSSARM, WOOD	2	380	-	-

NOTES:

I. A 3'-0" MINIMUM CLEARANCE FROM FACE OF POLE TO LAST SKIRT OF THE SUSPENSION INSULATOR MUST BE MAINTAINED.

II. POLE DEADENDING IS ONLY REQUIRED WHEN THE DEADENDING CONFIGURATION PRODUCES AN UNBALANCED ARM.

III. BUCK ARMS WITH FOUR FEET OR MORE SPACING BETWEEN LINE ARM MUST MAINTAIN HALF A POLE FOR CLIMBING SPACE.

(IV) IN STRAIGHT THROUGH DEADEND ARM CONSTRUCTION, WHILE IN THE BUCK POSITION, THE CENTER PHASE MUST STAY ON THE ARM TO MAINTAIN CLIMBING SPACE.

REFERENCE:

a. SEE OH251.4 FOR CLIMBING SPACE CLEARANCES.

TABLE OF CONTENTS

© 1998 - 2021 San Diego Gas & Electric Company. All rights reserved. Removal of this copyright notice without permission is not permitted under law.

REV	CHANGE	DR	BY	DSN	APV	DATE	REV	CHANGE	DR	BY	DSN	APV	DATE
C	EDITORIAL CHANGES	EDM	MRF	GLW	CZH	12/06/2021	F						
B	EDITORIAL CHANGES	EDM	GLW	JES	CZH	08/07/2020	E						
A	ORIGINAL ISSUE	EDM	GLW	JES	CZH	03/10/2020	D						

MAIN TABLE OF CONTENTS

PAGE	SUBJECT
510	TELECOMMUNICATION FIGURE "8" CABLE INSTALLATION
511	TRACER WIRE TERMINATION ON RISER POLES
530	LTE ANTENNA STAND ALONE/DISTRIBUTION STEEL POLE
540	SCADA LINE MONITOR
543	EFD SENSOR
545	SCADA REPEATER STATION
546	SOLAR SCADA REPEATER STATION
550	FIBER OPTIC ADSS LINE HARDWARE AND SPLICE ACCESSORIES
560	CELL RELAY/RF LAN RANGE EXTENDER ATTACHMENT TO DISTRIBUTION POLE
565	ZIGBEE RANGE EXTENDER ATTACHMENT TO DISTRIBUTION POLE
575	CUSTOMER-OWNED WIRELESS COMMUNICATIONS PROVIDER ATTACHMENT TO DISTRIBUTION POLE (METERED SERVICE)
576	WEATHER MONITORING SYSTEM
577	CUSTOMER-OWNED WIRELESS COMMUNICATIONS PROVIDER ATTACHMENT TO DISTRIBUTION POLE TOP (UNMETERED SERVICE)
578	CUSTOMER-OWNED WIRELESS COMMUNICATIONS PROVIDER ATTACHMENT TO DISTRIBUTION STREET LIGHT POLES (UNMETERED SERVICE)
579	LOW POWER COMMUNICATIONS NETWORK (LPCN)
580	AVIATION LED SYSTEM W/ EXISTING SECONDARY
581	AVIATION LED WARNING LIGHT WITH SOLAR D.C. SOURCE
590	FIELD BROADBAND DEVICE CONNECTION
591	STREET LIGHT WITH 5G ATTACHMENT

THIS SECTION HAS BEEN REMOVED FROM THE EXTERNAL VERSION.
DUE TO CONFIDENTIAL INFORMATION.

REV	CHANGE	DRWN	BY	CHKD	APVD	DATE
I	REVISED TO 3D FORMAT	ARC	JIK	-	-	01/27/2022
H	ADDED OH530	EDM	GLW	JES	CZH	02/08/2021
G	ADDED OH543	EDM	CWB	JES	CZH	10/19/2020

SDGE
A Sempra Energy utility

© 1998 - 2022 San Diego Gas and Electric Company. All rights reserved. Removal of this copyright notice without permission is not permitted under law.

SDG&E ELECTRIC OVERHEAD CONSTRUCTION STANDARDS

TELECOMMUNICATION SECTION
TABLE OF CONTENTS

SCALE: NOT TO SCALE

DRAWING NO:	SHEET:
OH501.1	1 OF 1

X Indicates Latest Revision | Completely Revised | New Page | Information Removed

PAGE	SUBJECT
601	TABLE OF CONTENTS
602	OVERHEAD IN-LINE POWER REGULATOR TRANSFORMER UNIVERSAL TRANSFORMER BRACKET
612	0-750V CABLE CONSTRUCTION
614	MESSENGER SUPPORTED CENTER SPAN SERVICES
617	MID-SPAN SERVICES
631	SERVICES INSULATOR BRACKETS
635	SECONDARY AND SERVICE CABLE CONNECTION/STORM SAFE
641	SERVICE DROP ATTACHMENTS
644	SIZING SERVICE DROP CONDUIT RISERS
645	PERMANENT SERVICE AND METER POLES
646	TEMPORARY SERVICE AND METER POLES
651	CATHODIC PROTECTION STATION OVERHEAD ELECTRIC POWER SUPPLY

MAIN TABLE OF CONTENTS

© 1998 - 2020 San Diego Gas & Electric Company. All rights reserved. Removal of this copyright notice without permission is not permitted under law.

REV	CHANGE	DR	BY	DSN	APV	DATE	REV	CHANGE	DR	BY	DSN	APV	DATE
C	604 MOVED TO FMO	-	JS	JS	CZH	07/18/2018	F	EDITORIAL CHANGES	EDM	MRF	GLW	CZH	12/11/2020
B	EDITORIAL CHANGES	-	JK	JS	MDJ	04/01/2018	E	UPDATED STANDARDS	PEI	-	-	-	12/10/2018
A	ADDTION OF 604	-	JS	JS	MDJ	07/25/2017	D	635.41 MOVED TO FMO	-	JS	JS	CZH	09/21/2018

SCOPE: THIS STANDARD SHOWS THE INSTALLATION METHODS FOR AN OVERHEAD, IN-LINE POWER REGULATOR (IPR), ON A UNIVERSAL TRANSFORMER BRACKET AND STEEL POLE.

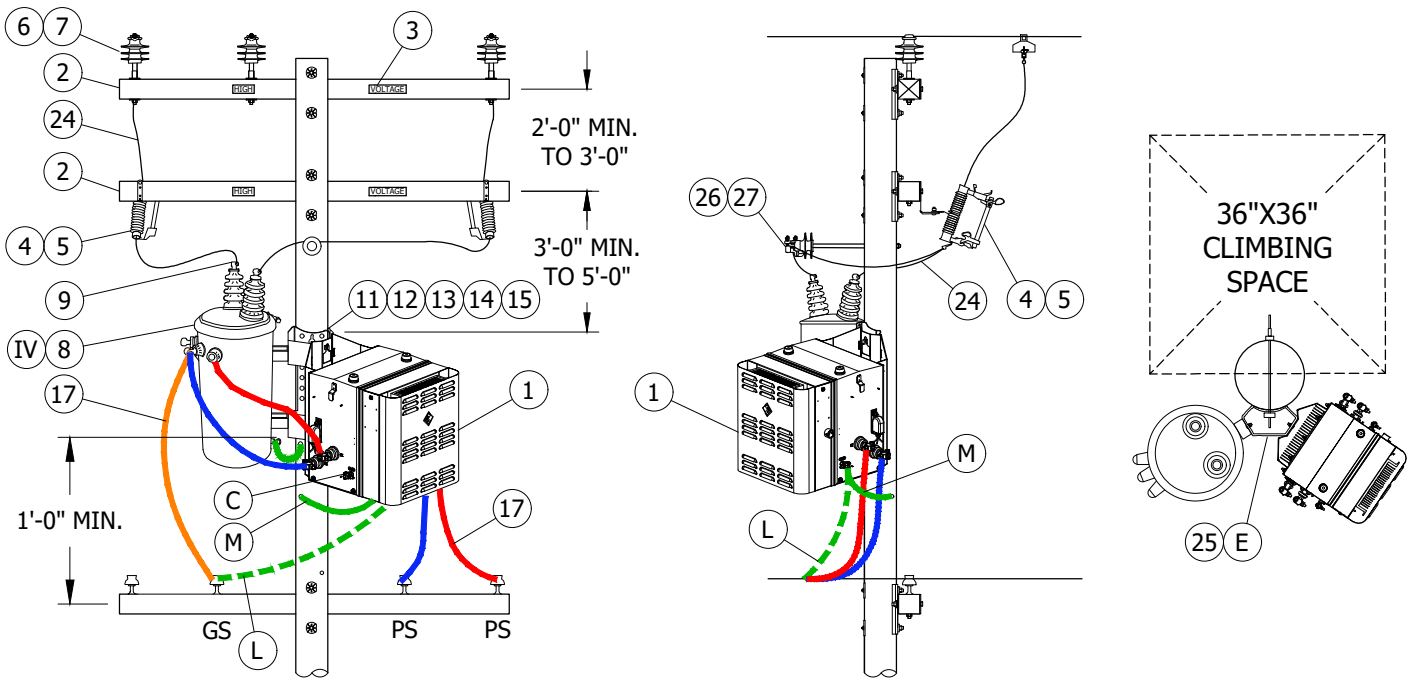

FIGURE 1
TRANSFORMER CONSTRUCTION

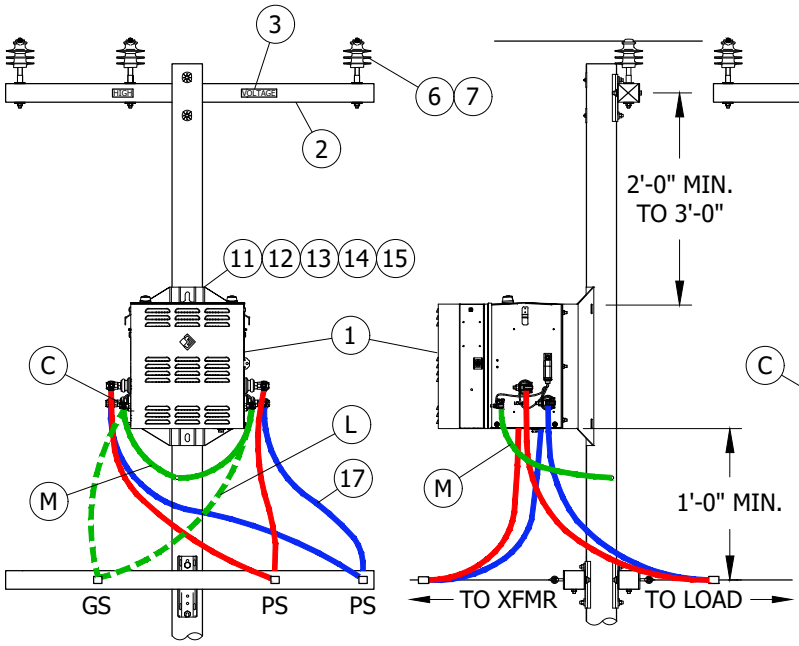

FIGURE 2
OPEN WIRE SECONDARY CONSTRUCTION

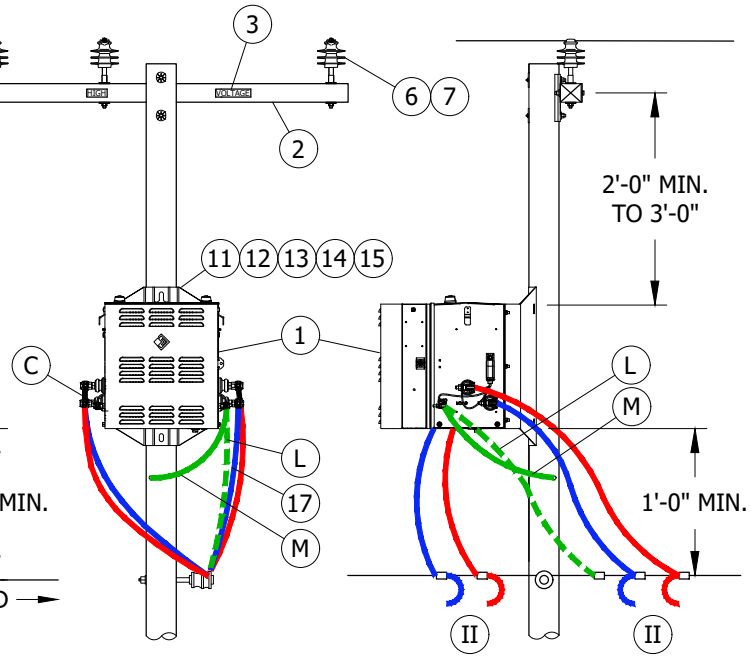

FIGURE 3
TRIPLEX SECONDARY CONSTRUCTION

© 1998 - 2023 San Diego Gas & Electric Company. All rights reserved. Removal of this copyright notice without permission is not permitted under law.

REV	CHANGE	DR	BY	DSN	APV	DATE	REV	CHANGE	DR	BY	DSN	APV	DATE
C	EDITORIAL CHANGES	-	KR	JS	MDJ	12/21/2017	F	BILL OF MATERIALS UPDATE	GLC	RSL	JAS	KRG	03/10/2023
B	EDITORIAL CHANGES	-	PD	JS	MDJ	01/31/2017	E	BILL OF MATERIALS UPDATE	EDM	JAC	JES	CZH	12/11/2020
A	ORIGINAL ISSUE	-	JBH	IL	MDJ	04/15/2016	D	DRAWING UPDATE	PEI	-	-	-	12/10/2018

X Indicates Latest Revision | Completely Revised | New Page | Information Removed

SDG&E ELECTRIC OVERHEAD CONSTRUCTION STANDARDS

OVERHEAD INLINE POWER REGULATOR
TRANSFORMER UNIVERSAL TRANSFORMER BRACKET

OH602.1

TABLE OF CONTENTS

INSTALLATION:

A. THE IPR IS DESIGNED TO CONNECT TO THE SECONDARY SIDE OF A DISTRIBUTION TRANSFORMER RATED FOR 50KVA OR LESS.THE MAXIMUM CURRENT LIMIT OF THE IPR IS 250 AMPS. IF THE CURRENT EXCEEDS 250 AMPS, THE IPR WILL AUTOMATICALLY GO TO BYPASS. WHEN THE CURRENT RETURNS BELOW 250 AMPS, THE UNIT WILL AUTOMATICALLY TRANSITION OUT OF BYPASS AND RETURN TO ACTIVE STATE.

B. WEIGHT APPROXIMATELY 325 POUNDS.

(C) THE IPR UNIT MUST BE PROPERLY GROUNDED BEFORE ENERGIZING THE SYSTEM.

D. DE-ENERGIZE THE TRANSFORMER BEFORE CONNECTING THE IPR.

(E) UNIVERSAL BRACKET LIMITED TO TWO 50KVA MAXIMUM TRANSFORMERS BECAUSE OF ENCROACHMENT ON CLIMBING SPACE.

F. TRANSFORMER TO BE HUNG ON SAME SIDE OF POLE AS TWO PHASE WIRES.

G. SECTIONALIZING FUSES AND A STATION ARE NOT ALLOWED ON THE SAME POLE. A DEVIATION REQUEST WILL NOT BE APPROVED FOR THIS CONSTRUCTION.

H. SOURCE BUSHINGS ARE LOCATED TO THE LEFT SIDE OF THE IPR DESIGNATED AS S1 AND S2. THE LOAD BUSHINGS ARE LOCATED ON THE RIGHT DESIGNATED AS L1 AND L2.

J. PRIOR TO ENERGIZING THE UNIT, THE BYPASS SWITCH SHOULD BE IN THE BYPASS POSITION. ONCE THE TRANSFORMER IS ENERGIZED, CHECK VOLTAGE ON THE SECONDARY SIDE. TURN BYPASS SWITCH TO "ON" AND CHECK SECONDARY VOLTAGE AGAIN AFTER GIVING THE POWER ELECTRONICS A MINUTE TO BECOME OPERATIONAL. THE SECONDARY VOLTAGE SHOULD BE REGULATED PER THE FACTORY PROGRAM CONFIGURATION, 240 VOLTS.

K. TRANSFORMER TYPE WILL DICTATE ARM CONSTRUCTION AND CUTOUT USE.

(L) ON FIBERGLASS AND WOOD POLES, CONNECT NEUTRAL TO 'GND' OR 'SL' CONNECTION ON IPR.

(M) ON STEEL POLES, CONNECT 'GND' OR 'SL' OF IPR TO STEEL POLE.

BILL OF MATERIALS:

ITEM	DESCRIPTION	QUANTITY	STANDARD PAGE	STOCK NUMBER	DESIGN UNITS
1	IPR50 AND DGC (PREFERRED)	1	602	S581250	IPR50
2	CROSSARM, FIBERGLASS, TANGENT (SIZE AS REQ'D)	AS REQ'D	379	-	-
3	SIGN, HIGH VOLTAGE STICKER	AS REQ'D	208	S647650	-
4	BRACKET, CUTOUT/ARRESTER, FOR CROSSARM MOUNT	AS REQ'D	397	S165452	CO/B
5	CUTOUT, 12KV	AS REQ'D	1212	-	-
6	PIN, INSULATOR (SIZE AS REQ'D)	AS REQ'D	396	-	-
7	INSULATOR, POLY, TIE-TOP (SIZE AS REQ'D)	AS REQ'D	750	-	-
8	TRANSFORMER, SINGLE PHASE	AS REQ'D	1121	-	-
9	BUSHING COVER, TRANSFORMER	2	1630	S289270 (X)	BSHCOV
10	BRACKET, TRANSFORMER MOUNTING	1	390	S402976	UMB
11	BOLT, MACH, GALV, 3/4" OR 5/8" X 2", RD WASHER AND SPRING LOCK WASHER	4	392	-	-
12	MACHINE BOLT, 3/4" (SIZE AS REQ'D)	AS REQ'D	392	-	-
13	SQUARE CURVED WASHERS	AS REQ'D	392	S797760	RIBWSH
14	SPRING LOCK WASHER 3/4" (STEEL ONLY)	AS REQ'D	392	S796802 (X)	LK-WSH
15	DOUBLE COIL SPRING WASHERS, 3/4"	AS REQ'D	392	S798496	SP-WSH
16	COVER, BOLT, PLASTIC (WOOD ONLY)	AS REQ'D	395	S285696	-

TABLE OF CONTENTS

© 1998 - 2023 San Diego Gas & Electric Company. All rights reserved. Removal of this copyright notice without permission is not permitted under law.

REV	CHANGE	DR	BY	DSN	APV	DATE	REV	CHANGE	DR	BY	DSN	APV	DATE
C	EDITORIAL CHANGES	-	KR	JS	MDJ	12/21/2017	F	BILL OF MATERIALS UPDATE	GLC	RSL	JAS	KRG	03/10/2023
B	EDITORIAL CHANGES	-	PD	JS	MDJ	01/31/2017	E	BILL OF MATERIALS UPDATE	EDM	JAC	JES	CZH	12/11/2020
A	ORIGINAL ISSUE	-	JBH	IL	MDJ	04/15/2016	D	DRAWING UPDATE	PEI	-	-	-	12/10/2018

BILL OF MATERIALS (CONT'D):

ITEM	DESCRIPTION	QUANTITY	STANDARD PAGE	STOCK NUMBER	DESIGN UNITS
17	WIRE, THW COPPER, (SIZE DETERMINED BY TRANSFORMER CAPACITY)	AS REQ'D	1125	-	-
18	#4 CU SOLID GROUND WIRE, PVC COVERED	AS REQ'D	-	S812490	GNDPVC
19	GALVANIZED STAPLES FOR PVC COVERED GROUND WIRE (WOOD ONLY)	AS REQ'D	-	S678564 (X)	-
20	STRAP, PIPE, GALV, 3/8", ONE HOLE	AS REQ'D	1002	S697304	-
21	SCREW, SELF-TAPPING, 1 1/4"	AS REQ'D	1002	S403522	-
22	BLIND NUT, 1/2"	AS REQ'D	1002	S503460 (X)	-
23	CONNECTOR, SPLIT BOLT, BRONZE, 1/2" X 13 (STEEL ONLY)	AS REQ'D	1002	S262560	SPCONN
24	WIRE, #4-7, POLY COVERED	AS REQ'D	718	S815044	POLY 4J
25	BRACKET, MOUNT 2 TRANSFORMER	AS REQ'D	-	S402976	UMB
26	BRACKET, INSULATOR, STANDOFF, 30", 1" OR 1 3/8" THREAD (AS REQ'D)	1	-	S166144 S166176	-
27	INSULATOR, PIN TYPE, CLASS AS REQ'D	1	-	S429152	-

NOTES:

I. SEE OH612 FIGURE 3 FOR TANGENT SECONDARY CONSTRUCTION.

(II) PEEL BACK TRIPLEX PS LEGS SO THAT PS LEGS ARE NOT CONTINUOUS ACROSS IPR SOURCE AND LOAD. GROUNDED MESSENGER WILL REMAIN CONTINUOUS.

III. THE IPR IS A SERIES COMPONENT, THEREFORE IN BYPASS, UNREGULATED POWER WILL CONTINUE TO FLOW.

(IV) THE IPR WILL PROTECT ITSELF FROM OVER CURRENT BY GOING INTO BYPASS. THERE IS A STATUS LIGHT LABELED "ACTIVE" LOCATED ON THE FRONT PANEL OF THE CONTROLLER. WHEN THE "ACTIVE" STATUS LIGHT IS ON, THE UNIT IS ACTIVELY REGULATING. WHEN THE STATUS LIGHT IS OFF, THE UNIT IS IN BYPASS.

V. THE UNIT IS AIR COOLED AND THE SURFACES OF THE IPR CAN EXCEED 100°C. BE SURE TO TAKE APPROPRIATE PRECAUTIONS WHEN HANDLING THE DEVICE.

VI. THE TRANSFORMER CAN BE USED WHEN POLE CANNOT ACCOMMODATE AN EQUIPMENT CROSSARM.

(X) THIS ITEM IS EXEMPT.

REFERENCE:

a. GROUNDING METHODS, SEE OH1002.

b. BONDING, SEE OH1003.

c. POLE STEPPING, SEE OH363.

TABLE OF CONTENTS

© 1998 - 2023 San Diego Gas & Electric Company. All rights reserved. Removal of this copyright notice without permission is not permitted under law.

REV	CHANGE	DR	BY	DSN	APV	DATE	REV	CHANGE	DR	BY	DSN	APV	DATE
C	EDITORIAL CHANGES	-	KR	JS	MDJ	12/21/2017	F	BILL OF MATERIALS UPDATE	GLC	RSL	JAS	KRG	03/10/2023
B	EDITORIAL CHANGES	-	PD	JS	MDJ	01/31/2017	E	BILL OF MATERIALS UPDATE	EDM	JAC	JES	CZH	12/11/2020
A	ORIGINAL ISSUE	-	JBH	IL	MDJ	04/15/2016	D	DRAWING UPDATE	PEI	-	-	-	12/10/2018

SCOPE: THIS STANDARD SHOWS THE VARIOUS METHODS OF CABLE CONSTRUCTION USED ON NEW INSTALLATIONS AND LINE EXTENSIONS.

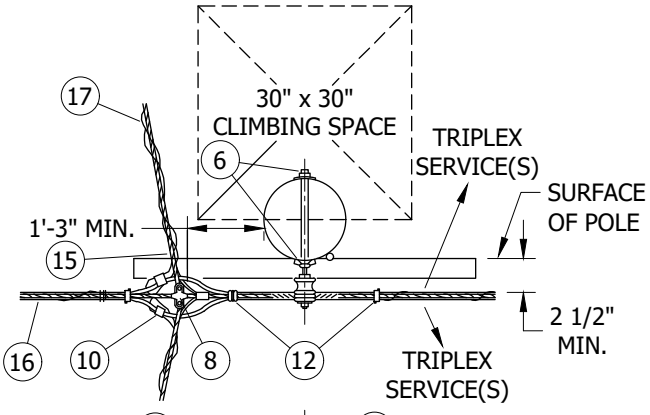

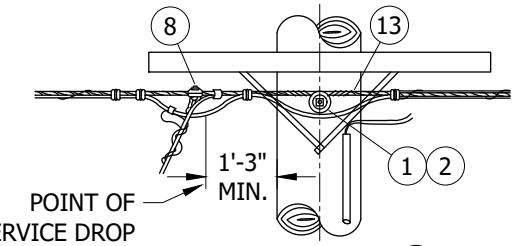

FIGURE 1 (IV)
TANGENT AND SERVICE DROP CONSTRUCTION

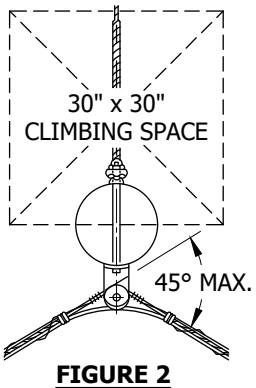

FIGURE 2
PLAN VIEW
OPTION 1

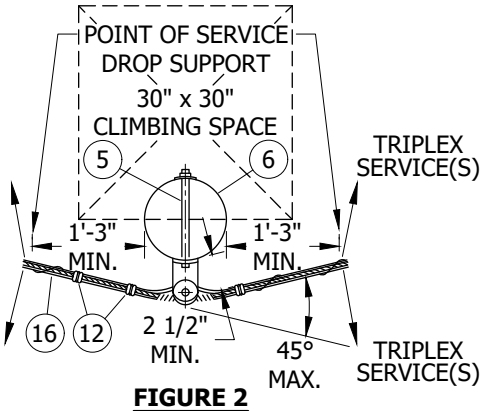

FIGURE 2
PLAN VIEW
OPTION 2

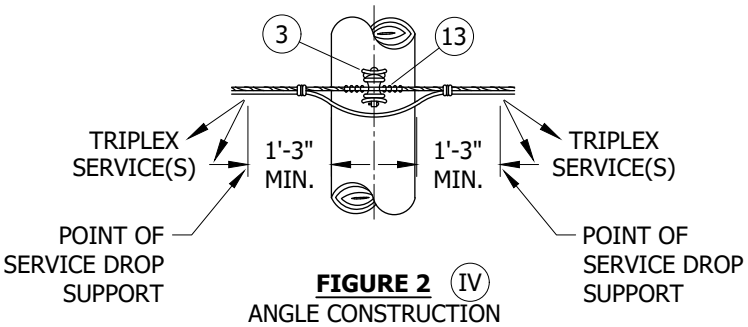

FIGURE 2 (IV)
ANGLE CONSTRUCTION
45° OR LESS
FRONT VIEW

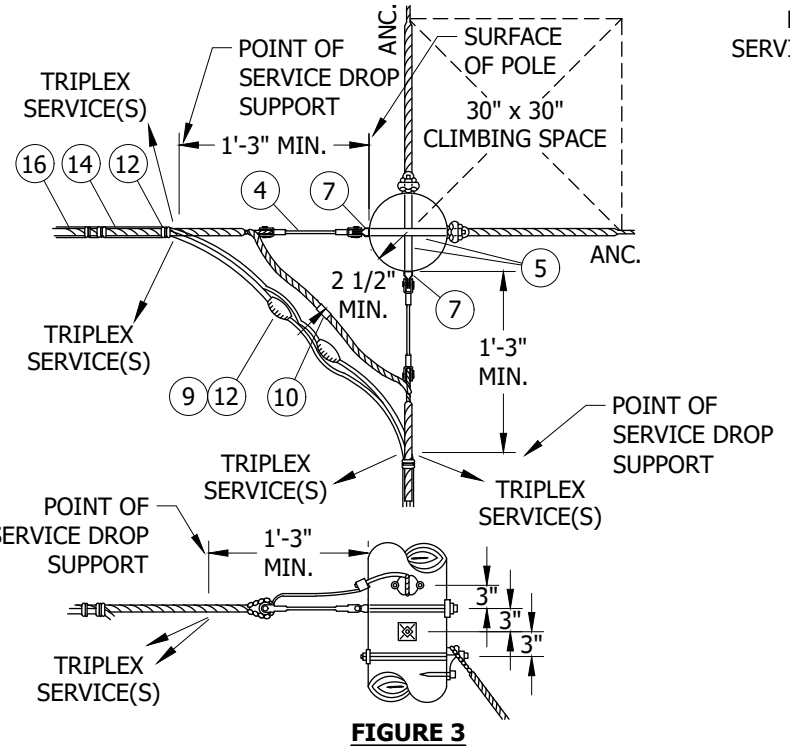

FIGURE 3
TWO WAY DEADEND FOR ANGLES
BETWEEN 45° AND 135°

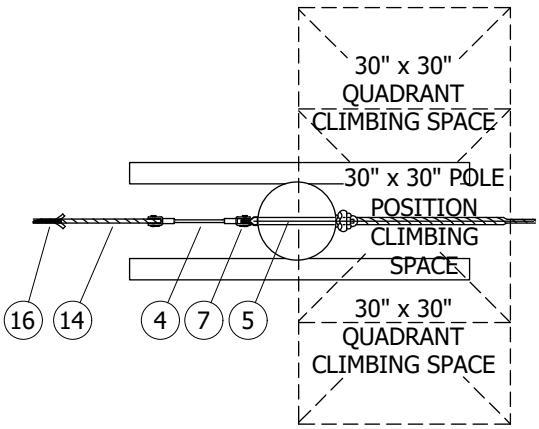

FIGURE 4
ONE WAY DEADEND

© 1998 - 2022 San Diego Gas & Electric Company. All rights reserved. Removal of this copyright notice without permission is not permitted under law.

REV	CHANGE	DR	BY	DSN	APV	DATE	REV	CHANGE	DR	BY	DSN	APV	DATE
C	UPDATED STANDARDS	-	PEI	-	-	12/10/2018	F	BILL OF MATERIALS UPDATE	EDM	RSL	JAS	KRG	10/21/2022
B	EDITORIAL CHANGES	-	KR	JS	MDJ	12/21/2017	E	TABLE UPDATE	EDM	MRF	GLW	CZH	07/29/2021
A	DRAWING UPDATE	-	JC	JS	MDJ	09/28/2017	D	EDITORIAL CHANGES	GLC	RSL	JES	CZH	11/09/2020

X Indicates Latest Revision | Completely Revised | New Page | Information Removed

SDG&E ELECTRIC OVERHEAD CONSTRUCTION STANDARDS

SHEET
1 OF 4

0-750V CABLE CONSTRUCTION

OH612.1

TABLE OF CONTENTS

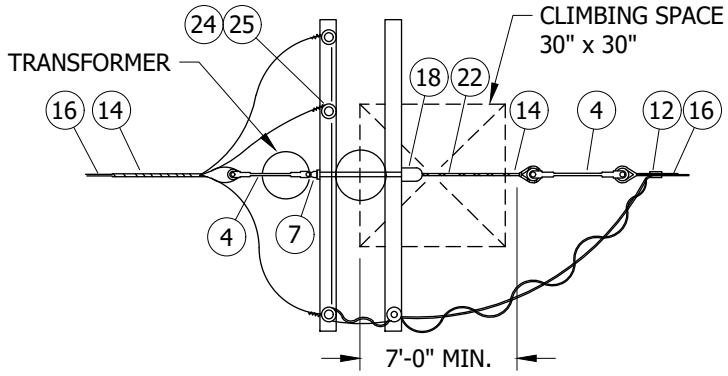

FIGURE 5
CABLE TO CABLE
W/TRANSFORMER

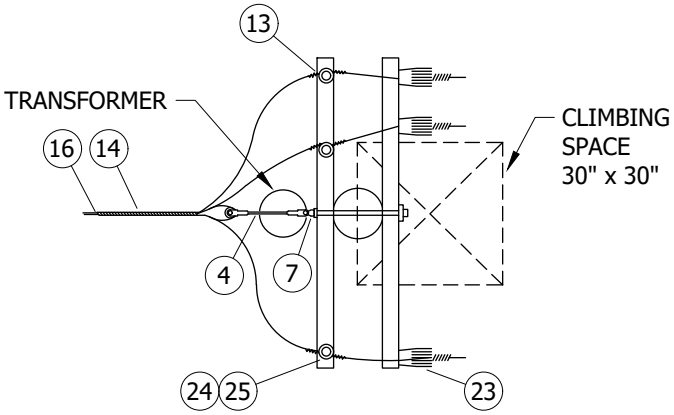

FIGURE 6
OPEN WIRE TO CABLE

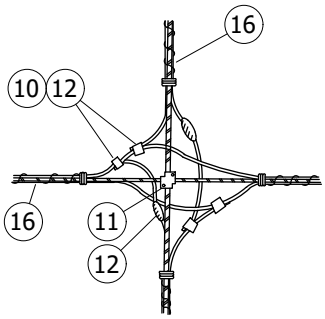

FIGURE 7
CROSSOVER

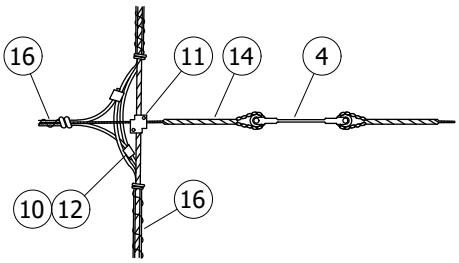

FIGURE 8

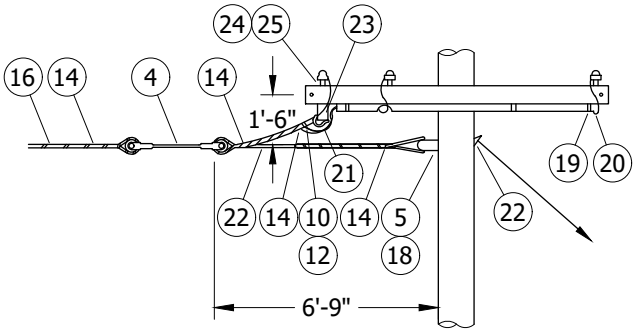

FIGURE 9
CORNER - CABLE TO OPEN WIRE

© 1998 - 2022 San Diego Gas & Electric Company. All rights reserved. Removal of this copyright notice without permission is not permitted under law.

REV	CHANGE	DR	BY	DSN	APV	DATE	REV	CHANGE	DR	BY	DSN	APV	DATE
C	UPDATED STANDARDS	-	PEI	-	-	12/10/2018	F	BILL OF MATERIALS UPDATE	EDM	RSL	JAS	KRG	10/21/2022
B	EDITORIAL CHANGES	-	KR	JS	MDJ	12/21/2017	E	TABLE UPDATE	EDM	MRF	GLW	CZH	07/29/2021
A	DRAWING UPDATE	-	JC	JS	MDJ	09/28/2017	D	EDITORIAL CHANGES	GLC	RSL	JES	CZH	11/09/2020

TABLE OF CONTENTS

INSTALLATION: NONE

BILL OF MATERIALS:

ITEM	DESCRIPTION	QUANTITY FIGURE 1	2	3	4	5	6	7	8	9	STANDARD PAGE	STOCK NUMBER	DESIGN UNITS
1	INSULATOR, SPOOL, 3" X 3"	1	--	--	--	--	--	--	--	--	--	S430752	J105
2	BOLT, DOUBLE UPSET, 5/8" X 9" OR 12"	1	--	--	--	--	--	--	--	--	--	S150370 (X)	UP9
		1	--	--	--	--	--	--	--	--	--	S150338 (X)	UP12
3	CLEVIS, INSULATED	--	1	--	--	--	--	--	--	--	--	S235874 (X)	1CDE
4	ROD, FIBERGLASS, 10" WITH ROLLER	--	--	2	1	2	1	--	1	1	--	S602942 (X)	--
5	BOLT, MACH, GALV., 5/8" X (LENGTH AS REQ'D)	--	1	2	1	1	1	--	--	1	390	--	--
6	WASHER, SQ, CURVED, RIBBED, 5/8" X 3"	2	1	2	1	1	--	--	--	--	--	S797792	--
7	CLEVIS, CLOSED, GALV., 5/8"	--	--	--	--	--	1	--	--	--	--	S235712	TBD
8	CLAMP, SERVICE PULLOFF	1	--	--	--	--	--	--	--	--	--	S229954 (X)	PULOFF
9	CONNECTORS, SERVICE	--	--	--	--	--	--	2	--	--	784	--	--
10	CONNECTORS, COMPRESSION	3	--	--	--	--	--	4	2	3	783	--	--
11	CLAMP, CROSS PARALLEL, 2-BOLT	--	--	--	--	--	--	1	1	--	--	S228256	XPCLMP
12	TAPE, ELECTRICAL, 3/4" X 66'-0", (O/H ONLY)	AS REQUIRED									--	S720576	--
13	WIRE, TIE, BARE SOLID ALUMINUM, #4	1	1	--	1	--	3	--	--	--	--	S815040	AL-TIE
14	GRIP, DEADEND	--	--	1	1	2	1	1	1	3	962	--	--
15	GRIP, SERVICE	2	--	--	--	--	--	--	--	--	745	--	--
16	CABLE, PREASSEMBLED, 1/0 OR 3/0	AS REQUIRED									--	S194432	CS1/0
											--	S194464	CS3/0
17	CABLE, SERVICE, SSC	AS REQUIRED									711	--	--
18	EYELET, 5/8"	AS REQUIRED									--	S338176	THMBLE
19	STRAP, CONDUIT, GALV. (SIZE AS REQ'D) & 2 - 6D NAILS, GALV.	--	--	--	--	--	--	--	--	3	--	S697---	--
											--	S697856	
20	CONDUIT, PVC, SCH 40, (SIZE AS REQ'D)	AS REQUIRED									--	S251---	--
21	THW, CU, SIZE PER CABLE	--	--	--	--	--	--	--	--	17'-0"	--	S808---	--
22	GUY	AS REQUIRED									900	--	--
23	CLEVIS, DEADEND, INSULATED SPOOL	--	--	--	--	--	3	--	--	1	--	S235488	SDE
24	PIN, STRAIGHT, 1"	--	--	--	--	4	3	--	--	3	--	S532608	PS1S
25	INSULATOR, GLASS DGDP	--	--	--	--	4	3	--	--	3	--	S429024	55-2

TABLE OF CONTENTS

© 1998 - 2022 San Diego Gas & Electric Company. All rights reserved. Removal of this copyright notice without permission is not permitted under law.

REV	CHANGE	DR	BY	DSN	APV	DATE	REV	CHANGE	DR	BY	DSN	APV	DATE
C	UPDATED STANDARDS	-	PEI	-	-	12/10/2018	F	BILL OF MATERIALS UPDATE	EDM	RSL	JAS	KRG	10/21/2022
B	EDITORIAL CHANGES	-	KR	JS	MDJ	12/21/2017	E	TABLE UPDATE	EDM	MRF	GLW	CZH	07/29/2021
A	DRAWING UPDATE	-	JC	JS	MDJ	09/28/2017	D	EDITORIAL CHANGES	GLC	RSL	JES	CZH	11/09/2020

NOTES:

I. MINIMUM VERTICAL CLEARANCE OF 6 FEET IS REQUIRED BETWEEN CABLE AND UNPROTECTED CONDUCTORS WITH VOLTAGES ABOVE 750V. GUARD ARMS MAY BE USED TO REDUCE REQUIRED CLEARANCE BY 2 FEET FOR CABLES OF 0-750V. (a)

II. GUARD ARMS CAN BE USED TO REDUCE THE NORMAL 6-FOOT MINIMUM CLEARANCE TO A 4-FOOT MINIMUM, BETWEEN CABLE AND TELCO OR CATV. (b)

III. DIFFERENT SIZE FIBERGLASS RODS OR SINGLE POLYMER DE INSULATOR MAY BE USED AS AN OPTION THAT MAINTAIN CLEARANCES.

(IV) ATTACHMENT LIMITED TO ONE SIDE OF POLE.

(X) THIS ITEM IS EXEMPT.

REFERENCE:

(a) SEE G.O. 95, RULE 54.10-C.

(b) SEE G.O. 95, RULE 92.1B.

TABLE OF CONTENTS

© 1998 - 2022 San Diego Gas & Electric Company. All rights reserved. Removal of this copyright notice without permission is not permitted under law.

REV	CHANGE	DR	BY	DSN	APV	DATE	REV	CHANGE	DR	BY	DSN	APV	DATE
C	UPDATED STANDARDS	-	PEI	-	-	12/10/2018	F	BILL OF MATERIALS UPDATE	EDM	RSL	JAS	KRG	10/21/2022
B	EDITORIAL CHANGES	-	KR	JS	MDJ	12/21/2017	E	TABLE UPDATE	EDM	MRF	GLW	CZH	07/29/2021
A	DRAWING UPDATE	-	JC	JS	MDJ	09/28/2017	D	EDITORIAL CHANGES	GLC	RSL	JES	CZH	11/09/2020

X Indicates Latest Revision | Completely Revised | New Page | Information Removed

SDG&E ELECTRIC OVERHEAD CONSTRUCTION STANDARDS

0-750V CABLE CONSTRUCTION

OH612.4

SCOPE: THIS STANDARD SHOWS A CENTER SPAN SERVICE TAP USING SELF SUPPORTING CABLE AND IS TO BE USED WHERE SERVICE DROPS FROM POLES CAN NOT REACH THE POINT OF ATTACHMENT.

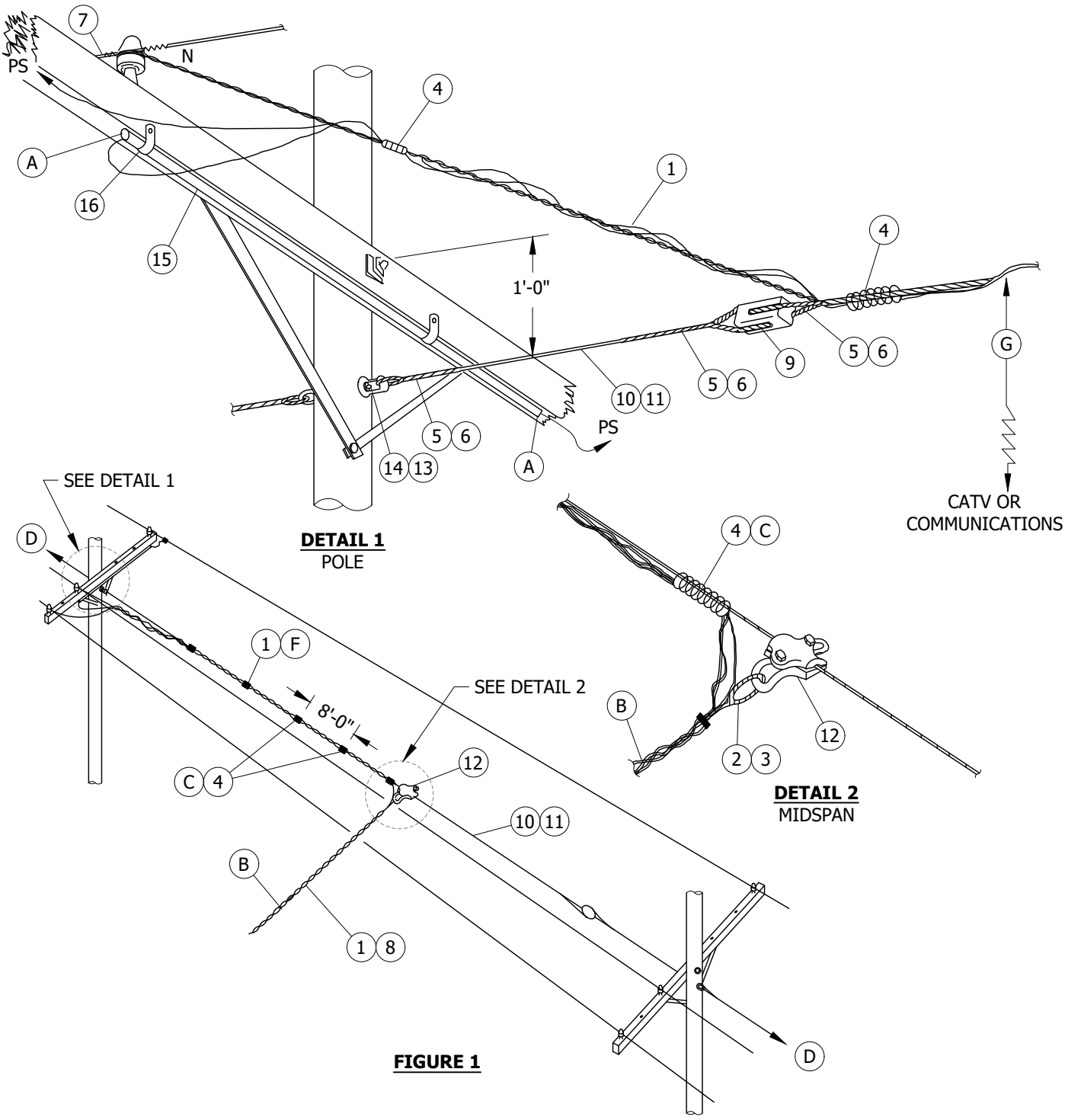

DETAIL 1
POLE

DETAIL 2
MIDSPAN

FIGURE 1

© 1998 - 2020 San Diego Gas & Electric Company. All rights reserved. Removal of this copyright notice without permission is not permitted under law.

REV	CHANGE	DR	BY	DSN	APV	DATE	REV	CHANGE	DR	BY	DSN	APV	DATE
C	TABLE UPDATE	EDM	JIK	JES	CZH	5/11/2020	F						
B	UPDATED STANDARDS	-	PEI	-	-	12/10/2018	E						
A	ORIGINAL ISSUE	-	-	PTA	RDG	01/01/1989	D						

X Indicates Latest Revision | Completely Revised | New Page | Information Removed

SDG&E ELECTRIC OVERHEAD CONSTRUCTION STANDARDS

MESSENGER SUPPORTED CENTER SPAN SERVICE

OH614.1

TABLE OF CONTENTS

INSTALLATION:

(A) CONDUIT MUST EXTEND TO COMPLY WITH G.O. 95, RULE 54.6C4.

(B) THIS TYPE OF SERVICE DROP IS LIMITED TO 100 FEET OR LESS IN LENGTH FROM SERVICE PULL OFF TO POINT OF ATTACHMENT ON BUILDING.

(C) WRAP AN EIGHT- INCH LENGTH OF PLASTIC LASHING AROUND BOTH CABLE AND MESSENGER AT EIGHT FOOT INTERVALS. THE FIRST AND LAST TWO WRAPS SHALL BE PLACED AROUND ONE SINGLE CONDUCTOR ONLY.

(D) GUY WIRE SHALL BE THE SAME SIZE AS CENTER SPAN GUY.

(E) NO LONGER PURCHASED.

(F) CENTERSPAN OR MIDSPAN SERVICES ARE NOT TO BE INSTALLED ON SELF SUPPORTING CONDUCTORS (SSC) UNLESS SSC IS LASHED TO MESSENGER GUY.

(G) AERIAL CABLE OR SSC SUPPLY CONDUCTORS MIDSPAN MAY BE REDUCED TO 36" MIN. VERT. CLEARANCE FROM CATV OR COMMUNICATIONS-G.O. 95, RULE 38, CASE 8 & 9.

BILL OF MATERIALS:

ITEM	DESCRIPTION		QUANTITY		STANDARD PAGE	STOCK NUMBER	DESIGN UNITS
			COPPER	ALUMINUM			
1	CABLE, CROSS-LINKED POLYETHYLENE TRIPLEX SELF-SUPPORTING (SSC)	COPPER CONDUCTOR WITH BARE NEUTRAL MESSENGER	AS REQ'D	-	716	-	-
		ALUMINUM CONDUCTOR WITH 5005 BARE NEUTRAL MESSENGER (E)	-	AS REQ'D	-	-	-
2	GRIP, CABLE AND DEAD-END FOR W.P. COPPER CONDUCTOR		2	-	747	-	-
3	GRIP, SERVICE, FOR ALUMINUM SERVICE CABLE NEUTRAL		-	2	746	-	-
4	LASHING, PLASTIC (C)		AS REQ'D	AS REQ'D	-	S454950	-
5	GRIP, GALVANIZED GUY 1/4"		6	-	-	S393216	-
6	GRIP, ALUMOWELD GUY, 4M		-	6	-	S392928	-
7	CONNECTORS, COMPRESSION	COPPER	3	-	786	-	-
		ALUMINUM	-	3	783	-	-
8	CONNECTOR, INSULATED SERVICE SLEEVE		3	3	796	-	-
9	INSULATOR, STRAIN		2	2	-	S430912	-
10	WIRE, GALVANIZED GUY 1/4"		AS REQ'D	-	-	S811360	-
11	WIRE, ALUMOWELD GUY 4M		-	AS REQ'D	-	S810944	-
12	CLAMP, SERVICE PULL OFF		1	1	-	S229954 (X)	-
13	BOLT EYE, GALVANIZED 5/8"		2	2	-	S338176	-
14	BOLT, MACHINE, GALVANIZED, 5/8" X 10"		2	2	-	S154816	-
15	CONDUIT, PVC SCHEDULE 40, (SIZE AS REQ'D)		AS REQ'D	AS REQ'D	-	-	-
16	STRAP, CONDUIT, GALVANIZED (SIZE AS REQ'D) & 2 #6D NAILS, GALVANIZED		3	3	-	S491552	-

NOTES:

I. USE THIS CONSTRUCTION IF EXISTING SECONDARY IS NOT STRONG ENOUGH TO SUPPORT A MIDSPAN SERVICE OR ON SPANS OVER 100 FEET.

II. MESSENGER SUPPORT GUY IS NOT REQUIRED ON AERIAL CABLE; REVERSE TWIST SECONDARY CABLE WITH #2-3/4 AWAC BARE NEUTRAL.

(X) THIS ITEM IS EXEMPT.

REFERENCE: NONE

© 1998 - 2020 San Diego Gas & Electric Company. All rights reserved. Removal of this copyright notice without permission is not permitted under law.

REV	CHANGE	DR	BY	DSN	APV	DATE	REV	CHANGE	DR	BY	DSN	APV	DATE
C	TABLE UPDATE	EDM	JIK	JES	CZH	5/11/2020	F						
B	UPDATED STANDARDS	-	PEI	-	-	12/10/2018	E						
A	ORIGINAL ISSUE	-	-	PTA	RDG	01/01/1989	D						

TABLE OF CONTENTS

SCOPE: THIS STANDARD SHOWS THE METHOD OF INSTALLING MID-SPAN SERVICES FROM HORIZONTAL OPEN WIRE SECONDARY.

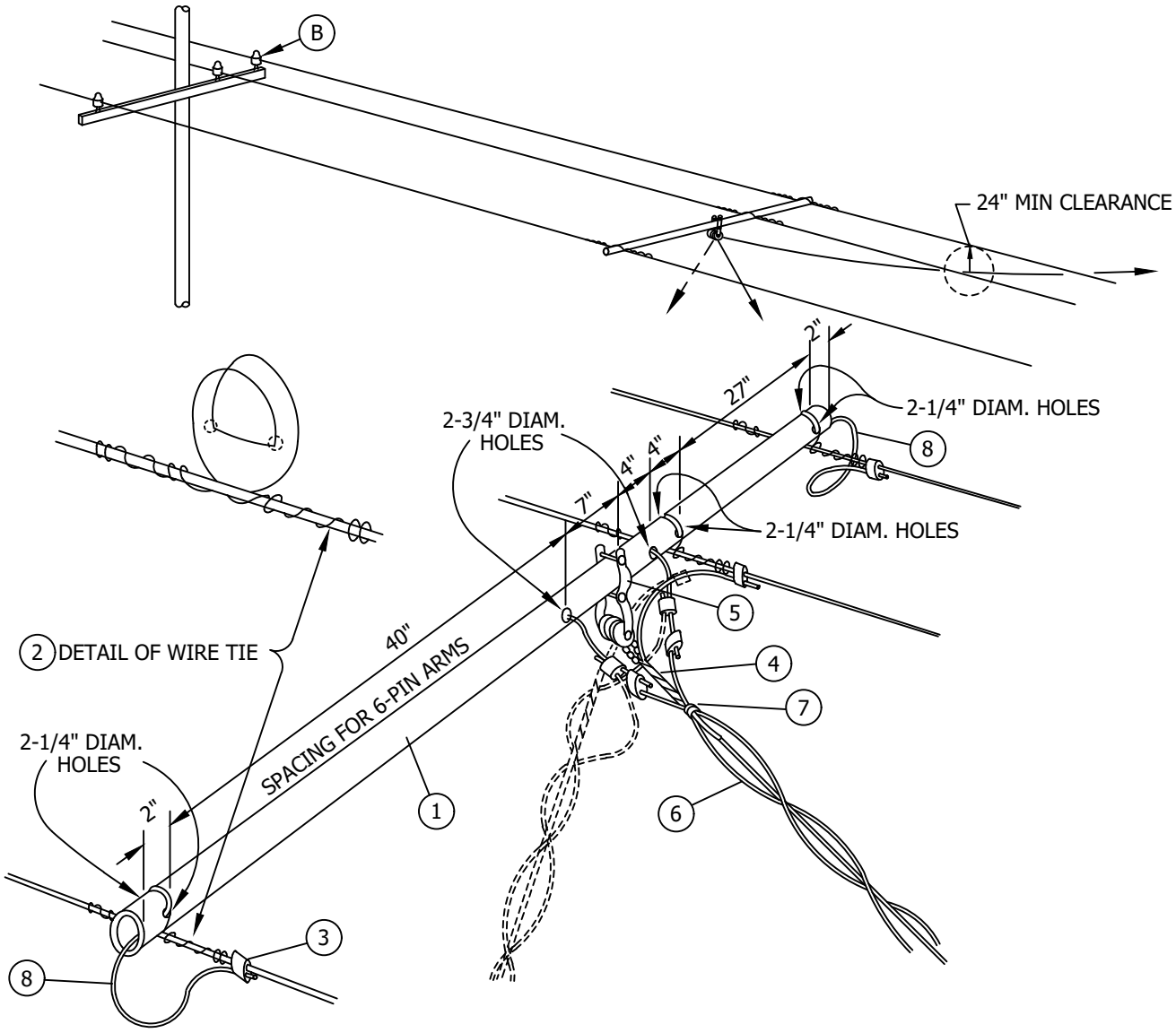

INSTALLATION:

A. FOR USE ON SERVICE DROPS 100 FEET OR LESS IN LENGTH.

(B) LOCATE THE SECONDARY CONDUCTOR SO THAT ANY SIDE STRAIN PULLS IT INTO THE INSULATOR.

C. THIS MIDSPAN SERVICE METHOD IS NOT RECOMMENDED ON SOLID SECONDARY WIRES.

© 1998 - 2018 San Diego Gas & Electric Company. All rights reserved. Removal of this copyright notice without permission is not permitted under law.

REV	CHANGE	BY	DSGN	APPV	DATE	REV	CHANGE	BY	DSGN	APPV	DATE
C						F					
B	UPDATED STANDARDS	PEI	-	-	12/10/2018	E					
A	ORIGINAL ISSUE	-	PTA	RDG	01/01/1986	D					

X Indicates Latest Revision | Completely Revised | New Page | Information Removed

SDG&E ELECTRIC OVERHEAD CONSTRUCTION STANDARD

MID-SPAN SERVICES FROM HORIZONTAL OPEN WIRE SECONDARY

OH617.1

TABLE OF CONTENTS

BILL OF MATERIALS:

ITEM	DESCRIPTION	QUANTITY	CONSTRUCTION STANDARD	STOCK NUMBER
1	SPREADER, SERVICE, MID-SPAN, 2" X 7'-2", PVC, TYPE 2 SCHEDULE 80	1	-	S670656
2	WIRE, TIE, CU #4 OR #6	3	-	S815168
		3	-	S815200
3	CONNECTOR, COMPRESSION OR SPLIT BOLT	AS REQ'D	STD 783-787	-
4	GRIP, SERVICE	1	STD 746-747	-
5	BRACKET, SERVICE INSULATOR	1	STD 631	-
6	CABLE, TRIPLEX SERVICE	AS REQ'D	STD 711-716	-
7	TAPE, ELECTRICAL, 3/4"	AS REQ'D	-	S720576
8	WIRE, THW, (SIZE AS REQUIRED)	12'	716	-

TABLE OF CONTENTS

© 1998 - 2018 San Diego Gas & Electric Company. All rights reserved. Removal of this copyright notice without permission is not permitted under law.

REV	CHANGE	BY	DSGN	APPV	DATE	REV	CHANGE	BY	DSGN	APPV	DATE
C						F					
B	UPDATED STANDARDS	PEI	-	-	12/10/2018	E					
A	ORIGINAL ISSUE	-	PTA	RDG	01/01/1986	D					

SCOPE: THIS STANDARD SHOWS A SHOP MADE SECONDARY CONDUCTOR SPREADER USED FOR MID-SPAN SERVICES INSTALLED FROM VERTICAL RACK SECONDARY.

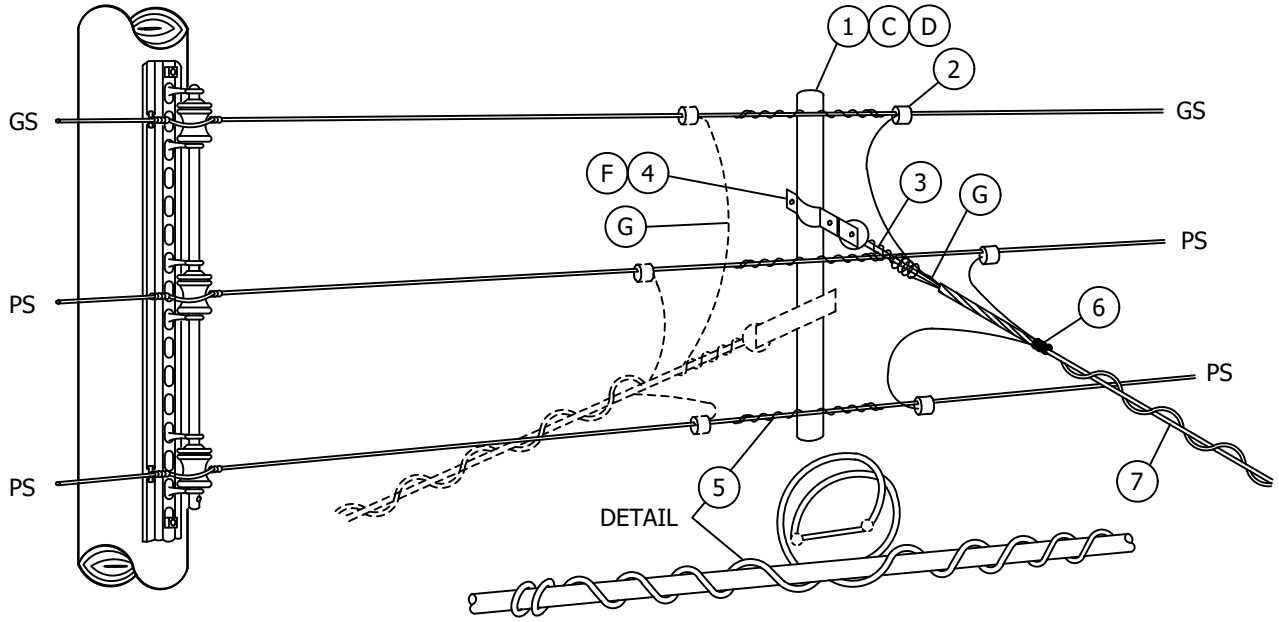

INSTALLATION:

A. FOR USE ON SERVICE DROPS 100 FEET OR LESS IN LENGTH.

B. WHERE 2 TO 4 TRIPLEX SERVICE DROPS ARE INSTALLED ON ONE SECONDARY CONDUCTOR SPREADER, CONNECT RESPECTIVE SERVICE CONDUCTORS TO THE LINE CONDUCTOR WITH ONE APPROPRIATE COMPRESSION CONNECTOR.

(C) CONDUIT SPREADER COMES WITH 3-3/8 INCH HOLES, TWO HOLES SPACED 12 INCHES APART FROM CENTER HOLE.

(D) FOR A SINGLE SERVICE, CONDUIT SPACER SHALL BE INSTALLED ON THE OPPOSITE SIDE OF THE SERVICE PULL.

(F) THE JOSLYN J0588 TYPE SERVICE INSULATOR BRACKET CAN BE INSTALLED BACK TO BACK.

(G) MAINTAIN 3 INCHES RADIAL SEPARATION BETWEEN SECONDARY AND SERVICE CONNECTORS OR LEAD, PER G.O. 95 TABLE II CASE 17.

BILL OF MATERIALS:

ITEM	DESCRIPTION	QUANTITY	CONSTRUCTION STANDARD OR PAGE NUMBER	STOCK NUMBER
1	SPREADER, CONDUIT, 2" DIA. PVC, TYPE II, SCH. 80	30"	-	S670592
2	CONNECTOR, COMPRESSION	AS REQ'D	STD 783, 786	-
3	GRIPS, SERVICE	AS REQ'D	STD 746, 747	-
4	BRACKET, SERVICE INSULATOR	1	631	S166880
5	WIRE, TIE #6 CU. WP OR #4 CU. WP 30" LENGTH	3	715	S812512 S812480
6	TAPE, ELECTRICAL 3/4"	AS REQ'D	-	S720576
7	CABLE, SELF SUPPORTING	AS REQ'D	STD 712, 716	-

© 1998 - 2018 San Diego Gas & Electric Company. All rights reserved. Removal of this copyright notice without permission is not permitted under law.

REV	CHANGE	BY	DSGN	APPV	DATE	REV	CHANGE	BY	DSGN	APPV	DATE
C						F					
B	UPDATED STDS & DWG NO FROM 619	PEI	-	-	12/10/2018	E					
A	ORIGINAL ISSUE	-	PTA	RDG	04/05/1983	D					

X Indicates Latest Revision | Completely Revised | New Page | Information Removed

SDG&E ELECTRIC OVERHEAD CONSTRUCTION STANDARD

MID-SPAN SERVICES FROM VERTICAL RACK SECONDARY

OH617.3

TABLE OF CONTENTS

SCOPE: THIS STANDARD SHOWS TWO TYPES OF SERVICE INSULATOR BRACKETS. THEY ARE USED TO ATTACH SELF SUPPORTING CABLE (SSC) SERVICE DROPS TO SERVICE RISERS.

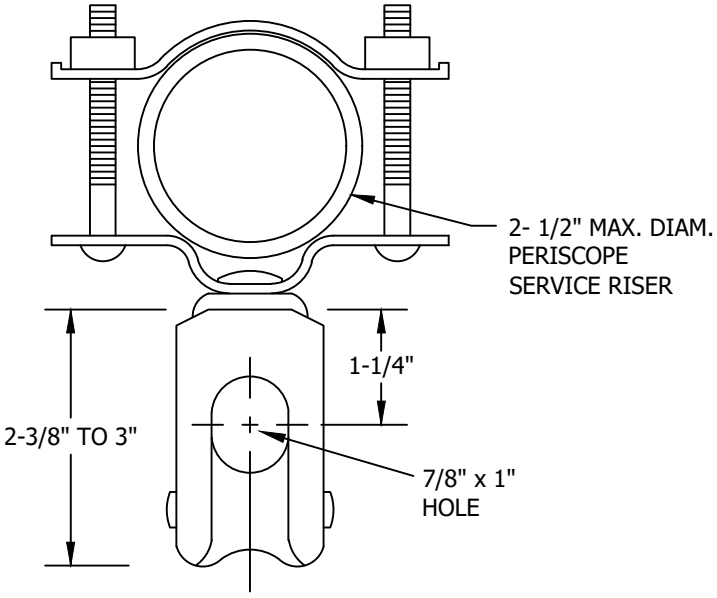

ITEM 1

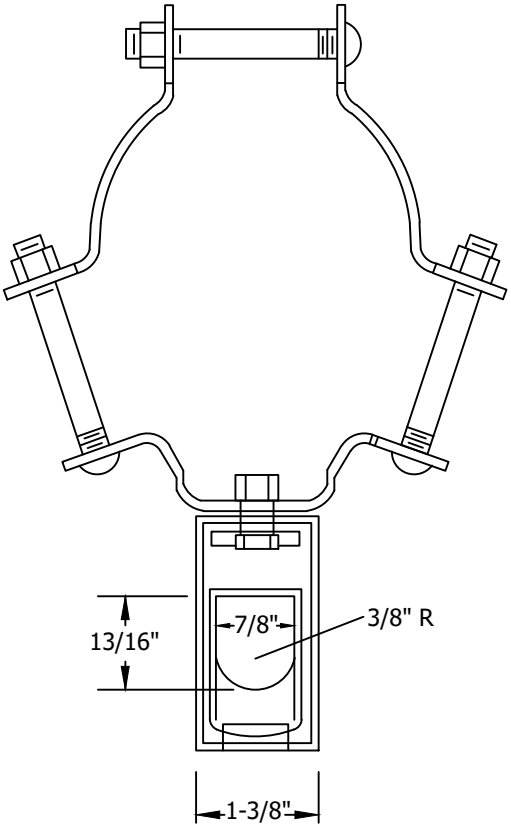

ITEM 2

INSTALLATION:

(A) FOR USE ON 1-1/4 INCH - 2-1/2 INCH WEATHERHEADS.

(B) FOR USE ON 3 INCH - 4 INCH WEATHERHEADS.

BILL OF MATERIALS:

ITEM	DESCRIPTION		QUANTITY	STOCK NUMBER OR CONSTRUCTION STANDARD	ASSEMBLY UNIT
1	BRACKET, SERVICE INSULATOR, WEATHERHEAD	(A)	1	166880	INSBKT
2	BRACKET, SERVICE INSULATOR, WEATHERHEAD	(B)	1	166882	--

NOTES:

I. BOLTS ARE SUPPLIED WITH THE BRACKET.

© 1998 - 2018 San Diego Gas & Electric Company. All rights reserved. Removal of this copyright notice without permission is not permitted under law.

REV	CHANGE	BY	DSGN	APPV	DATE	REV	CHANGE	BY	DSGN	APPV	DATE
C						F					
B	UPDATED STANDARDS	PEI	-	-	12/10/2018	E					
A	COMPLETELY REVISED	JC	JS	MDJ	03/01/2018	D					

X Indicates Latest Revision | Completely Revised | New Page | Information Removed

SHEET 1 OF 1

SDG&E ELECTRIC OVERHEAD CONSTRUCTION STANDARD

SERVICE INSULATOR BRACKET, FOR SERVICE RISERS

OH631.1

TABLE OF CONTENTS

SCOPE: THIS STANDARD SHOWS THE STRAIGHT SPLICE METHOD OF CONNECTING INSULATED SECONDARY CABLE TO INSULATED SERVICE CABLE TO PREVENT CORROSION.

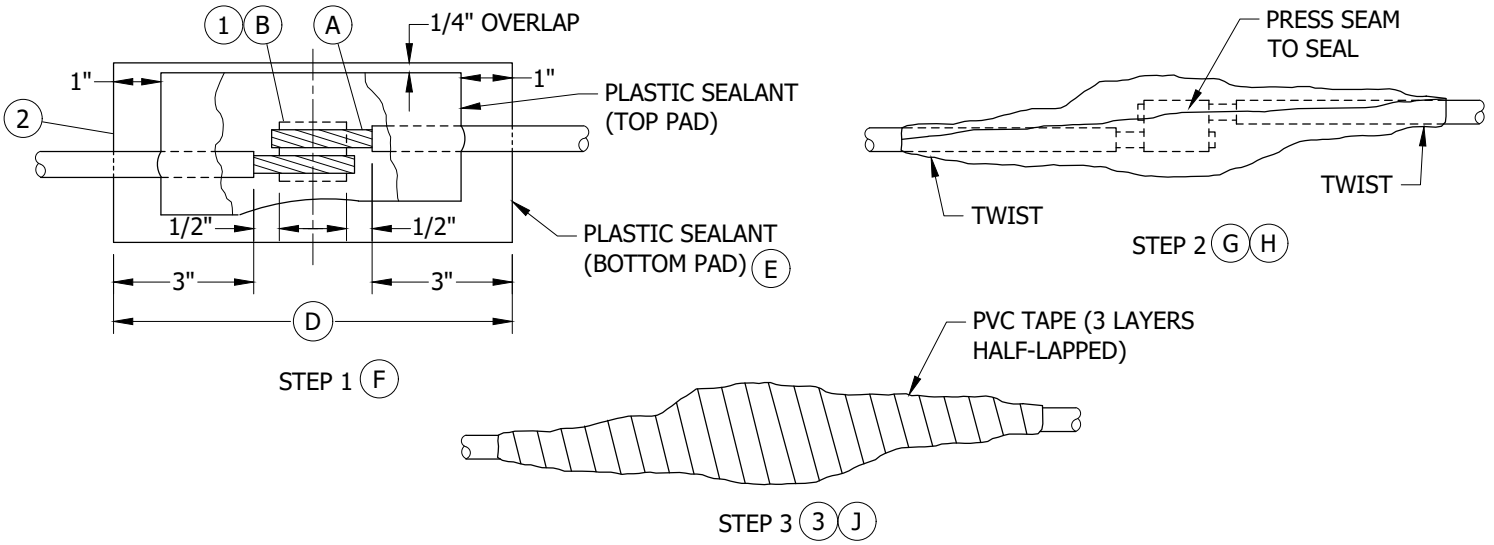

FIGURE 1
STRAIGHT SPLICE METHOD

INSTALLATION:

(A) CUT CABLES TO DESIRED LENGTH AND REMOVE INSULATION TO 1/2-INCH ON EITHER SIDE OF CONNECTOR (STEP 1).

(B) SELECT PROPER CONNECTOR FROM OH783 AND OH785 AND PRESS ON.

C. WIPE EXCESS GREASE OR JOINTING COMPOUNDS FROM THE CONNECTOR AND CABLE STRANDS USING A CLEAN, DRY CLOTH. FOLLOW THIS WITH A CLEAN, DRY CLOTH SLIGHTLY MOISTENED WITH SOLVENT. **EXCESSIVE USE OF SOLVENT COULD DAMAGE THE METAL AND INSULATION**. NEXT, THOROUGHLY CLEAN THE INSULATION USING ELEC-TRO-CUT CLOTH, FOLLOWED BY A CLEAN, DRY CLOTH SLIGHTLY MOISTENED WITH SOLVENT.

(D) CUT LENGTH 'D' (STEP 1) FROM ROLL OF SEALANT. DO NOT REMOVE THE BACKING PAPER AT THIS TIME.

(E) PRESS SEALANT AGAINST UNDERSIDE OF SPLICE SO THAT CONNECTOR IS CENTRALLY LOCATED (IN STEP 1.)

(F) CUT ANOTHER LENGTH OF SEALANT FROM THE ROLL, 2 INCHES SHORTER THAN THE FIRST LENGTH. REMOVE THE BACKING PAPER AND PLACE THIS PAD CENTRALLY OVER THE TOP OF THE CONNECTOR. THE BOTTOM PAD SHOULD OVERLAP TOP PAD AT TOP EDGE BY 1/4-INCH. MOULD TOP PAD TO CONTOUR OF THE CONNECTOR AND CABLE, WORKING FROM TOP EDGE TO THE BOTTOM. THE SEALANT SHOULD NOT BE REDUCED IN THICKNESS MORE THAN NECESSARY. PRESS ALL SEAMS TO SEAL.

(G) REMOVE PAPER BACKING FROM UNDERSIDE PAD. FOLD TOP EDGE OF SEALANT UP OVER CONNECTOR AND CABLE AND MOULD TO SHAPE OF THE SPLICE. FOLD BOTTOM EDGE IN THE SAME MANNER (STEP 2).

(H) CAREFULLY PRESS ALL SEAMS TO SEAL. TWIST SEALANT SLOWLY AND FIRMLY AROUND THE INSULATION FOR A DISTANCE OF 1-INCH AT ENDS OF THE SPLICE TO ENSURE ADEQUATE SEALING.

(J) APPLY 3 LAYERS OF 1/2-LAPPED PVC TAPE OVER THE SEALANT (STEP 3). **IF CONNECTOR HAS ANY PROTRUDING AREAS, THESE SHOULD BE COVERED WITH A FEW EXTRA LAYERS OF TAPE FOR ADDED PROTECTION.**

CAUTION:

* USE MODERATE TENSION IN APPLYING TAPE. SEALANT WILL COLD-FLOW UNDER EXCESSIVE TENSION.

© 1998 - 2023 San Diego Gas & Electric Company. All rights reserved. Removal of this copyright notice without permission is not permitted under law.

REV	CHANGE	DR	BY	DSN	APV	DATE	REV	CHANGE	DR	BY	DSN	APV	DATE
D	DRAWING UPDATE	EDM	MRF	GLW	CZH	12/11/2020	G	TABLE UPDATE	GLC	RSL	MRF	KRG	05/10/2023
C	TABLE UPDATE	-	JIK	JES	CZH	01/14/2020	F	DRAWING UPDATE	GLC	SPC	GLW	KRG	12/09/2022
B	UPDATED STANDARDS	PEI	-	-	-	12/10/2018	E	TABLE UPDATE	EDM	SPC	GLW	CZH	07/04/2021

BILL OF MATERIALS:

ITEM	DESCRIPTION		QUANTITY	STANDARD PAGE	STOCK NUMBER	DESIGN UNITS
1	CONNECTORS, WIRE, COMPRESSION, CU OR AL AS REQ'D		1	783-785	-	-
2	KIT, AQUASEAL, SEALANT (3 3/4" X 1/8" X 10'-0")		AS REQ'D	-	S442976	-
3	TAPE, ELECTRICAL, PVC, OVERHEAD, (3/4" X 66'-0")		AS REQ'D	-	S720576	-
4	CLOTH, ELEC-TRO-CUT, 3M, UTILITY ROLL (II)	80 GRIT	AS REQ'D	-	S239682	-
		180 GRIT	AS REQ'D	-	S239684	-
5	SOLVENT, TRICHLOROETHANE (II)		AS REQ'D	-	-	-

NOTES:

I. THIS METHOD OF CONNECTING SHOULD BE USED IN ALL AREAS.

(II) NOT SHOWN ON FIGURES.

REFERENCE: NONE

TABLE OF CONTENTS

© 1998 - 2023 San Diego Gas & Electric Company. All rights reserved. Removal of this copyright notice without permission is not permitted under law.

REV	CHANGE	DR	BY	DSN	APV	DATE	REV	CHANGE	DR	BY	DSN	APV	DATE
D	DRAWING UPDATE	EDM	MRF	GLW	CZH	12/11/2020	G	TABLE UPDATE	GLC	RSL	MRF	KRG	05/10/2023
C	TABLE UPDATE	-	JIK	JES	CZH	01/14/2020	F	DRAWING UPDATE	GLC	SPC	GLW	KRG	12/09/2022
B	UPDATED STANDARDS	PEI	-	-	-	12/10/2018	E	TABLE UPDATE	EDM	SPC	GLW	CZH	07/04/2021

SCOPE: THIS STANDARD SHOWS THE SINGLE TAP SPLICE METHOD OF CONNECTING INSULATED SECONDARY CABLE TO INSULATED SERVICE CABLE TO PREVENT CORROSION.

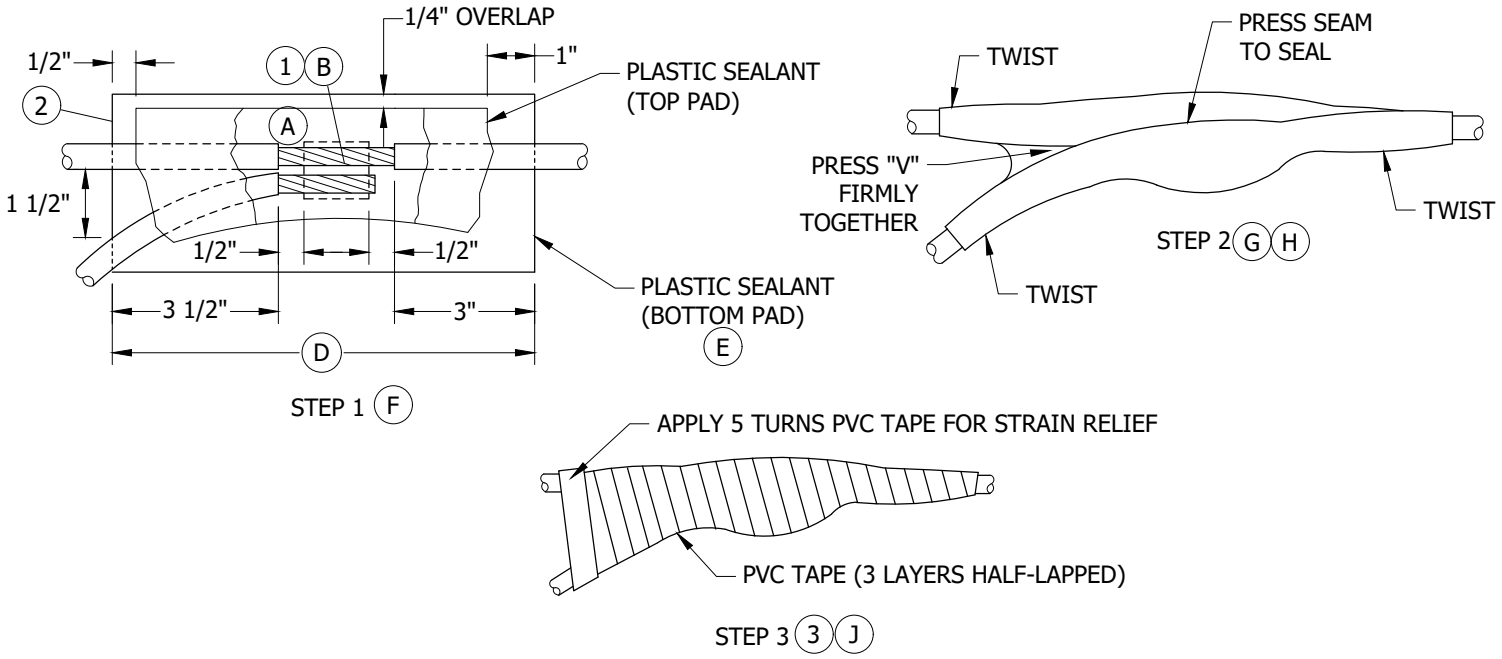

FIGURE 1
SINGLE TAP SPLICE METHOD

INSTALLATION:

(A) CUT CABLES TO DESIRED LENGTH AND REMOVE INSULATION TO 1/2-INCH ON EITHER SIDE OF CONNECTOR (STEP 1).

(B) SELECT PROPER CONNECTOR FROM OH783 AND OH785 AND PRESS ON.

C. WIPE EXCESS GREASE OR JOINTING COMPOUNDS FROM THE CONNECTOR AND CABLE STRANDS USING A CLEAN, DRY CLOTH. FOLLOW THIS WITH A CLEAN, DRY CLOTH SLIGHTLY MOISTENED WITH SOLVENT. **EXCESSIVE USE OF SOLVENT COULD DAMAGE THE METAL AND INSULATION**. NEXT, THOROUGHLY CLEAN THE INSULATION USING ELEC-TRO-CUT CLOTH, FOLLOWED BY A CLEAN, DRY CLOTH SLIGHTLY MOISTENED WITH SOLVENT.

(D) CUT LENGTH 'D' (STEP 1) FROM ROLL OF SEALANT. DO NOT REMOVE THE BACKING PAPER AT THIS TIME.

(E) PRESS SEALANT AGAINST UNDERSIDE OF SPLICE SO THAT CONNECTOR IS CENTRALLY LOCATED.

(F) CUT ANOTHER LENGTH OF SEALANT FROM THE ROLL, 1-INCH SHORTER THAN THE FIRST LENGTH. REMOVE THE BACKING PAPER AND PLACE THIS PAD CENTRALLY OVER THE TOP OF THE CONNECTOR. THE BOTTOM PAD SHOULD OVERLAP TOP PAD AT TOP EDGE BY 1/4-INCH, AND EACH END, AS INDICATED IN STEP 1. MOULD TOP PAD TO CONTOUR OF THE CONNECTOR AND CABLE, WORKING FROM TOP EDGE TO THE BOTTOM. THE SEALANT SHOULD NOT BE REDUCED IN THICKNESS MORE THAN NECESSARY. PRESS ALL SEAMS TO SEAL. ESPECIALLY THE "V" FORMED BY MAIN AND TAP CABLES.

(G) REMOVE PAPER BACKING FROM UNDERSIDE PAD. FOLD TOP EDGE OF SEALANT UP OVER CONNECTOR AND CABLE AND MOULD TO SHAPE OF THE SPLICE. FOLD BOTTOM EDGE IN THE SAME MANNER (STEP 2).

(H) CAREFULLY PRESS ALL SEAMS TO SEAL. TWIST SEALANT SLOWLY AND FIRMLY AROUND THE INSULATION FOR A DISTANCE OF 1-INCH AT ENDS OF THE SPLICE TO ENSURE ADEQUATE SEALING.

(J) APPLY 3 LAYERS OF 1/2-LAPPED PVC TAPE OVER THE SEALANT (STEP 3). **IF CONNECTOR HAS ANY PROTRUDING AREAS, THESE SHOULD BE COVERED WITH A FEW EXTRA LAYERS OF TAPE FOR ADDED PROTECTION**. APPLY 5 TURNS OF TAPE AT THE END FOR STRAIN RELIEF.

CAUTION:

* USE MODERATE TENSION IN APPLYING TAPE. SEALANT WILL COLD-FLOW UNDER EXCESSIVE TENSION.

© 1998 - 2023 San Diego Gas & Electric Company. All rights reserved. Removal of this copyright notice without permission is not permitted under law.

REV	CHANGE	DR	BY	DSN	APV	DATE	REV	CHANGE	DR	BY	DSN	APV	DATE
D	DRAWING UPDATE	EDM	MRF	GLW	CZH	12/11/2020	G	TABLE UPDATE	GLC	RSL	MRF	KRG	05/10/2023
C	TABLE UPDATE	-	JIK	JES	CZH	01/14/2020	F	DRAWING UPDATE	GLC	SPC	GLW	KRG	12/09/2022
B	UPDATED STANDARDS	PEI	-	-	-	12/10/2018	E	TABLE UPDATE	EDM	SPC	GLW	CZH	07/04/2021

X Indicates Latest Revision | Completely Revised | New Page | Information Removed

TABLE OF CONTENTS

BILL OF MATERIALS:

ITEM	DESCRIPTION		QUANTITY	STANDARD PAGE	STOCK NUMBER	DESIGN UNITS
1	CONNECTORS, WIRE, COMPRESSION, CU OR AL AS REQ'D		1	783-785	-	-
2	KIT, AQUASEAL SEALANT, (3 3/4" X 1/8" X 10'-0")		AS REQ'D	-	S442976	-
3	TAPE, ELECTRICAL, PVC, OVERHEAD, (3/4" x 66'-0")		AS REQ'D	-	S720576	-
4	CLOTH, ELEC-TRO-CUT, 3M, UTILITY ROLL (II)	80 GRIT	AS REQ'D	-	S239682	-
		180 GRIT	AS REQ'D	-	S239684	-
5	SOLVENT, TRICHLOROETHANE (II)		AS REQ'D	-	-	-

NOTES:

I. THIS METHOD OF CONNECTING SHOULD BE USED IN ALL AREAS.

(II) NOT SHOWN ON FIGURES.

REFERENCE: NONE

TABLE OF CONTENTS

© 1998 - 2023 San Diego Gas & Electric Company. All rights reserved. Removal of this copyright notice without permission is not permitted under law.

REV	CHANGE	DR	BY	DSN	APV	DATE	REV	CHANGE	DR	BY	DSN	APV	DATE
D	DRAWING UPDATE	EDM	MRF	GLW	CZH	12/11/2020	G	TABLE UPDATE	GLC	RSL	MRF	KRG	05/10/2023
C	TABLE UPDATE	-	JIK	JES	CZH	01/14/2020	F	DRAWING UPDATE	GLC	SPC	GLW	KRG	12/09/2022
B	UPDATED STANDARDS	PEI	-	-	-	12/10/2018	E	TABLE UPDATE	EDM	SPC	GLW	CZH	07/04/2021

SCOPE: THIS STANDARD SHOWS THE DOUBLE TAP SPLICE METHOD OF CONNECTING INSULATED SECONDARY CABLE TO INSULATED SERVICE CABLE TO PREVENT CORROSION.

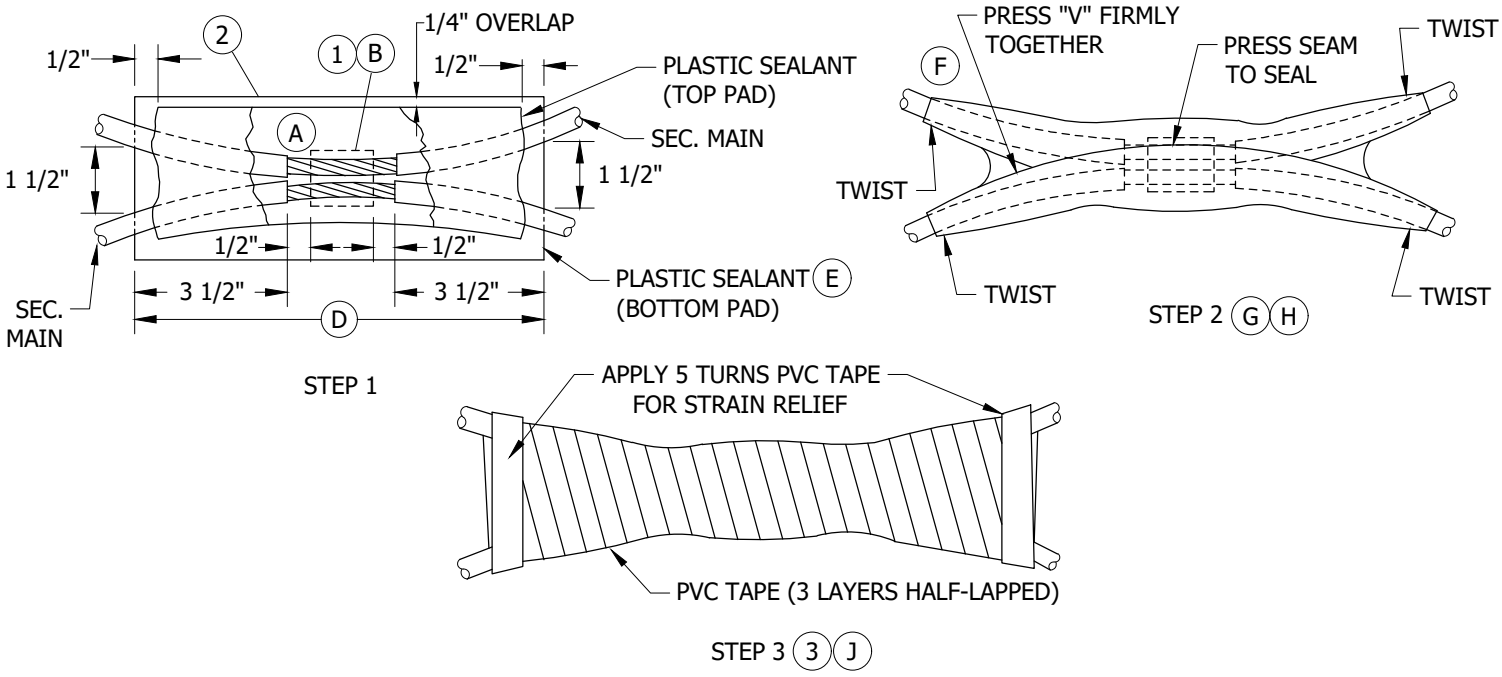

FIGURE 1
DOUBLE TAP SPLICE METHOD

INSTALLATION:

(A) CUT CABLES TO DESIRED LENGTH AND REMOVE INSULATION TO 1/2-INCH ON EITHER SIDE OF CONNECTOR (STEP 1).

(B) SELECT PROPER CONNECTOR FROM OH783 AND OH785 AND PRESS ON.

C. WIPE EXCESS GREASE OR JOINTING COMPOUNDS FROM THE CONNECTOR AND CABLE STRANDS USING A CLEAN, DRY CLOTH. FOLLOW THIS WITH A CLEAN, DRY CLOTH SLIGHTLY MOISTENED WITH SOLVENT. **EXCESSIVE USE OF SOLVENT COULD DAMAGE THE METAL AND INSULATION**. NEXT, THOROUGHLY CLEAN THE INSULATION USING ELEC-TRO-CUT CLOTH, FOLLOWED BY A CLEAN, DRY CLOTH SLIGHTLY MOISTENED WITH SOLVENT.

(D) CUT LENGTH 'D' (STEP 1) FROM ROLL OF SEALANT. DO NOT REMOVE THE BACKING PAPER AT THIS TIME.

(E) PRESS SEALANT AGAINST UNDERSIDE OF SPLICE SO THAT CONNECTOR IS CENTRALLY LOCATED.

(F) CUT ANOTHER LENGTH OF SEALANT FROM THE ROLL, 1-INCH SHORTER THAN THE FIRST LENGTH. REMOVE THE BACKING PAPER AND PLACE THIS PAD CENTRALLY OVER THE TOP OF THE CONNECTOR. THE BOTTOM PAD SHOULD OVERLAP TOP PAD AT TOP EDGE BY 1/4-INCH, AND EACH END, AS INDICATED IN STEP 1. MOULD TOP PAD TO CONTOUR OF THE CONNECTOR AND CABLE, WORKING FROM TOP EDGE TO THE BOTTOM. THE SEALANT SHOULD NOT BE REDUCED IN THICKNESS MORE THAN NECESSARY. PRESS ALL SEAMS TO SEAL. ESPECIALLY THE "V" FORMED BY MAIN AND TAP CABLES.

(G) REMOVE PAPER BACKING FROM UNDERSIDE PAD. FOLD TOP EDGE OF SEALANT UP OVER CONNECTOR AND CABLE AND MOULD TO SHAPE OF THE SPLICE. FOLD BOTTOM EDGE IN THE SAME MANNER (STEP 2).

(H) CAREFULLY PRESS ALL SEAMS TO SEAL. TWIST SEALANT SLOWLY AND FIRMLY AROUND THE INSULATION FOR A DISTANCE OF 1-INCH AT ENDS OF THE SPLICE TO ENSURE ADEQUATE SEALING.

(J) APPLY 3 LAYERS OF 1/2-LAPPED PVC TAPE OVER THE SEALANT (STEP 3). **IF CONNECTOR HAS ANY PROTRUDING AREAS, THESE SHOULD BE COVERED WITH A FEW EXTRA LAYERS OF TAPE FOR ADDED PROTECTION**. APPLY 5 TURNS OF TAPE AT THE END FOR STRAIN RELIEF.

CAUTION:

* USE MODERATE TENSION IN APPLYING TAPE. SEALANT WILL COLD-FLOW UNDER EXCESSIVE TENSION.

© 1998 - 2023 San Diego Gas & Electric Company. All rights reserved. Removal of this copyright notice without permission is not permitted under law.

REV	CHANGE	DR	BY	DSN	APV	DATE	REV	CHANGE	DR	BY	DSN	APV	DATE
D	DRAWING UPDATE	EDM	MRF	GLW	CZH	12/11/2020	G	TABLE UPDATE	GLC	RSL	MRF	KRG	05/10/2023
C	TABLE UPDATE	-	JIK	JES	CZH	01/14/2020	F	DRAWING UPDATE	GLC	SPC	GLW	KRG	12/09/2022
B	UPDATED STANDARDS	PEI	-	-	-	12/10/2018	E	TABLE UPDATE	EDM	SPC	GLW	CZH	07/04/2021

X Indicates Latest Revision | Completely Revised | New Page | Information Removed

TABLE OF CONTENTS

BILL OF MATERIALS:

ITEM	DESCRIPTION		QUANTITY	STANDARD PAGE	STOCK NUMBER	DESIGN UNITS
1	CONNECTORS, WIRE, COMPRESSION, CU OR AL AS REQ'D		1	783-785	-	-
2	KIT, AQUASEAL SEALANT, (3 3/4" X 1/8" X 10'-0")		AS REQ'D	-	S442976	-
3	TAPE, ELECTRICAL, PVC, OVERHEAD, (3/4" X 66'-0")		AS REQ'D	-	S720576	-
4	CLOTH, ELEC-TRO-CUT, 3M, UTILITY ROLL (II)	80 GRIT	AS REQ'D	-	S239682	-
		180 GRIT	AS REQ'D	-	S239684	-
5	SOLVENT, TRICHLOROETHANE (II)		AS REQ'D	-	-	-

NOTES:

I. THIS METHOD OF CONNECTING SHOULD BE USED IN ALL AREAS.

(II) NOT SHOWN ON FIGURES.

REFERENCE: NONE

TABLE OF CONTENTS

© 1998 - 2023 San Diego Gas & Electric Company. All rights reserved. Removal of this copyright notice without permission is not permitted under law.

REV	CHANGE	DR	BY	DSN	APV	DATE	REV	CHANGE	DR	BY	DSN	APV	DATE
D	DRAWING UPDATE	EDM	MRF	GLW	CZH	12/11/2020	G	TABLE UPDATE	GLC	RSL	MRF	KRG	05/10/2023
C	TABLE UPDATE	-	JIK	JES	CZH	01/14/2020	F	DRAWING UPDATE	GLC	SPC	GLW	KRG	12/09/2022
B	UPDATED STANDARDS	PEI	-	-	-	12/10/2018	E	TABLE UPDATE	EDM	SPC	GLW	CZH	07/04/2021

X Indicates Latest Revision | Completely Revised | New Page | Information Removed

SDG&E ELECTRIC OVERHEAD CONSTRUCTION STANDARDS

SECONDARY AND SERVICE CABLE CONNECTION
0-600V DOUBLE TAP SPLICE

OH635.6

SCOPE: THIS STANDARD IDENTIFIES THE DEADEND GRIPS FOR VARIOUS TYPES AND SIZES OF CONDUCTOR.

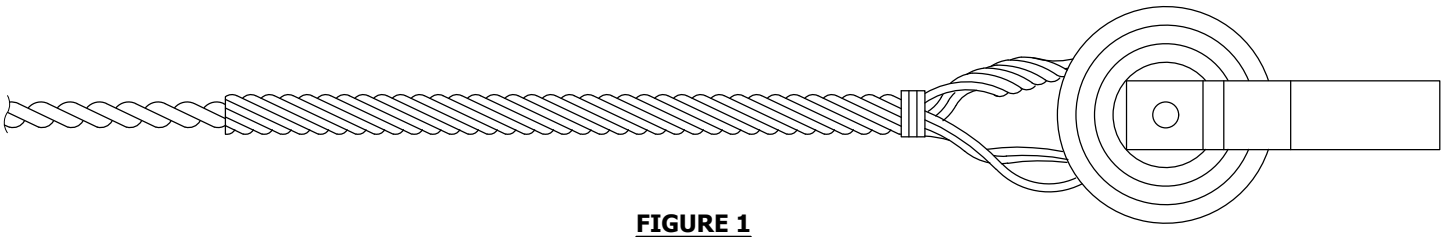

FIGURE 1

TABLE 1:

ALUMOWELD DEADEND GRIPS FOR 5005, AWAC, OR ACSR/AW LINE CONDUCTORS AND TRIPLEX SERVICE MESSENGERS								
CONDUCTOR				COLOR CODE	MANUFACTURER CATALOG NUMBER		STOCK NUMBER	DESIGN UNITS
SIZE (AWG OR KCMIL)	STRANDING 5005	STRANDING AWAC	STRANDING ACSR/AW		CHANCE/FANNER	PREFORMED		
6 (A) (B)	7	-	6	BLUE	-	DG-4554	-	-
4	7	-	6/1	ORANGE	20 AWCG	DG-4541	S392448	DEG4
2	7	-	6/1	RED	30 AWCG	DG-4542	S392416	-
1/0	7	(C)	6/1	YELLOW	50 AWCG	DG-4544	S392512	-
3/0	7	-	6/1	ORANGE	70 AWCG	DG-4546	S392544	-
4/0	-	-	6/1	RED	80 AWCG	DG-4547	S392548 (X)	CSG336 DEG4/0
336.4 KCMIL	-	-	18/1	GREEN	-	DG-4549	(C)	-
394.5 KCMIL	19	-	-					
2	-	3/4	-	ORANGE	16M-AWSBG	AWDE-4122	S392896	CSG1/0 CSG3/0 DEG2WH

TABLE 2:

COATED DEADEND GRIPS FOR NEOPRENE OR POLYETHYLENE ALL ALUMINUM LINE CONDUCTORS										
CONDUCTOR		COLOR CODE	MANUFACTURER						STOCK NUMBER	DESIGN UNITS
			CHANCE			PREFORMED OR DULMISON				
SIZE (AWG OR KCMIL)	STRANDING		CATALOG NUMBER	DIAMETER RANGE (IN) MIN.	DIAMETER RANGE (IN) MAX.	CATALOG NUMBER	DIAMETER RANGE (IN) MIN.	DIAMETER RANGE (IN) MAX.		
4 (B)	7	ORANGE	-	-	-	AND-0825	.324	.338	S392672	CD4C
2	7	RED	40 PCAG	.376	.415	ND-0106	.375	.397	S392640	CDE2
1/0	7	BLUE	60 PCAG	.451	.510	ND-0110	.476	.507	S392736	CD1/0C
3/0	7	YELLOW	80 PCAG	.551	.640	ND-0113	.572	.608	S392768	CDE3/0
336.4 KCMIL	19	BLUE	110 PCAG	.740	.837	ND-0118	.784	.834	S392800	CDE336

TABLE OF CONTENTS

© 1998 - 2023 San Diego Gas & Electric Company. All rights reserved. Removal of this copyright notice without permission is not permitted under law.

REV	CHANGE	DR	BY	DSN	APV	DATE	REV	CHANGE	DR	BY	DSN	APV	DATE
D	DRAWING UPDATE	EDM	MRF	GLW	CZH	12/11/2020	G	TABLE UPDATE	GLC	RSL	MRF	KRG	05/10/2023
C	TABLE UPDATE	-	JIK	JES	CZH	01/14/2020	F	DRAWING UPDATE	GLC	SPC	GLW	KRG	12/09/2022
B	UPDATED STANDARDS	PEI	-	-	-	12/10/2018	E	TABLE UPDATE	EDM	SPC	GLW	CZH	07/04/2021

TABLE 3:

COPPERWELD DEADEND GRIPS FOR COPPER LINE CONDUCTORS AND TRIPLEX SERVICE MESSENGERS							
CONDUCTOR SIZE	COPPERWELD GRIP (M SERIES)		COLOR CODE	MANUFACTURER CATALOG NUMBER		STOCK NUMBER	DESIGN UNITS
AWG/STRANDING	SIZE	DIAMETER (IN)		PREFORMED	HELICAL		
6/1	8C	.174	RED	CDE-8102	-	S393122 (X)	CDE6
6/3	4M	.209	WHITE	CDE-8106	-	S309058 (X)	CDE6BS
4/3	6M	.237	YELLOW	CDE-3103	HG4106M	S393090 (X)	CDE4BS
2/3	10M	.303	RED	CDE-3109	HG41510MTL	S392994 (X)	CDE2BS
1/0	16M	.389	WHITE	CDE-3115	HG52516MTL	S393026 (X)	CDE1/0

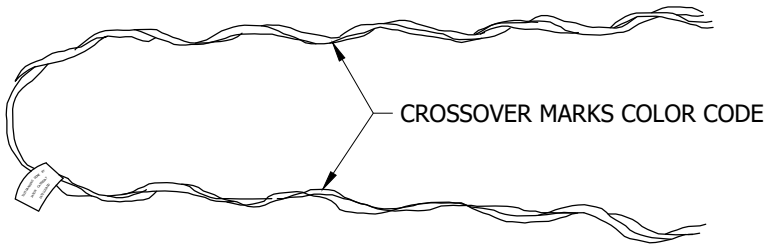

FIGURE 2

TABLE 4:

SERVICE GRIPS					
CONDUCTOR		COLOR CODE	DIAMETER RANGE (IN)		STOCK NUMBER
SIZE	STRANDING		MIN.	MAX.	
	5005				
6	7	BLUE	.169	.198	S394208
4	7	ORANGE	.225	.257	S394176
2	7	RED	.290	.325	S394144
1/0	7	YELLOW	.361	.400	S394240

ATTENTION:

* FOR USE ON 5005 TRIPLEX SERVICE DROP NEUTRAL.

** SEE OH614 FOR APPLICATION TO CENTER SPAN SERVICE.

TABLE OF CONTENTS

© 1998 - 2023 San Diego Gas & Electric Company. All rights reserved. Removal of this copyright notice without permission is not permitted under law.

REV	CHANGE	DR	BY	DSN	APV	DATE	REV	CHANGE	DR	BY	DSN	APV	DATE
D	DRAWING UPDATE	EDM	MRF	GLW	CZH	12/11/2020	G	TABLE UPDATE	GLC	RSL	MRF	KRG	05/10/2023
C	TABLE UPDATE	-	JIK	JES	CZH	01/14/2020	F	DRAWING UPDATE	GLC	SPC	GLW	KRG	12/09/2022
B	UPDATED STANDARDS	PEI	-	-	-	12/10/2018	E	TABLE UPDATE	EDM	SPC	GLW	CZH	07/04/2021

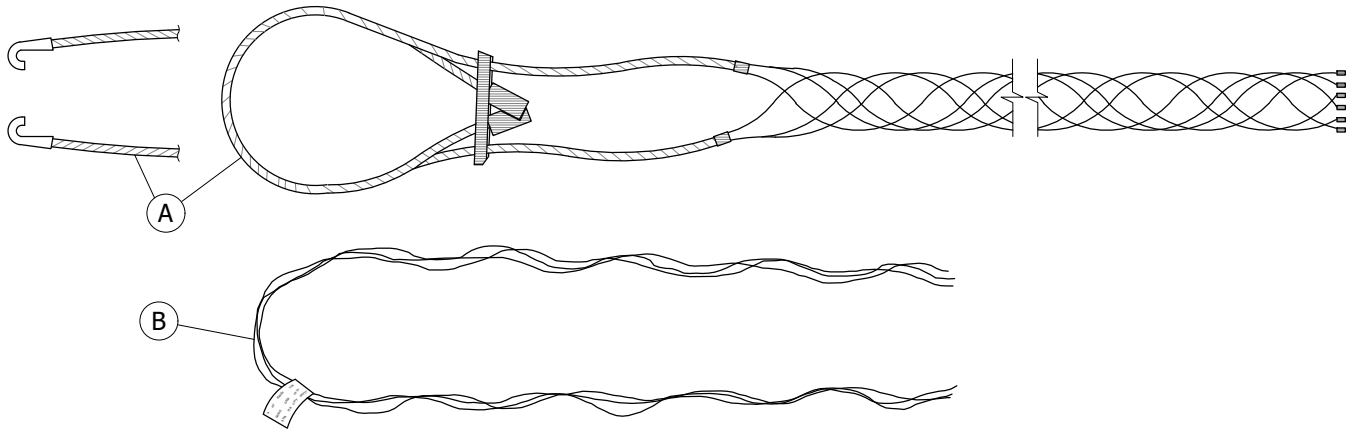

FIGURE 3

TABLE 5:

CABLE GRIPS FOR W.P. COPPER SERVICE CONDUCTORS (A)										
WIRE SIZE	**NOMINAL DIA. (IN)**	**CABLE DIAMETERS (IN)**	**GRIP OR MESH LENGTH (IN)**	**BAIL LENGTH (IN)**	**BREKG. STR. (LBS)**	**WT. #/100**	**MFR.**	**CATOLOG NUMBER**	**STOCK NUMBER**	**DESIGN UNITS**
1/0	.53	1/2; .46 -.56	5 1/4	12	780	8 1/2	KELLEMS	022-16-020	S394272	CG1/0
		1/2 - 5/8	6	13	950	6	ECONOMY	SPJ-050-H		
4/0	.71	11/16; .64 -.75	6 3/4	13	940	12 1/2	KELLEMS	022-16-023	S394304	CG4/0
		5/8 - 3/4	6 1/2	14	1,000	10	ECONOMY	SPJ-062-H		
500 KCM	1.02	1; .94 - 1.06	9	15	1,125	18 1/2	KELLEMS	022-16-028	S394336	CG500
		1 - 1 1/8	9 1/2	16	1,300	15	ECONOMY	SPJ-100-H		
750 KCM	1.195	1 1/8; 1.00 - 1.24	14	10	1,400	20 1/2	KELLEMS	022-01-081	S394368	CG750
		1 1/8 - 1 1/4	8	14	1,500	16	ECONOMY	SPC-100-SH		

TABLE 6:

NEOPRENE COATED DEADEND GRIPS FOR NEOPRENE OR POLYETHYLENE COPPER SECONDARY LINE CONDUCTORS (B)								
WP COPPER CONDUCTOR		**DEADEND GRIP DATA**					**STOCK NUMBER**	**DESIGN UNITS**
SIZE	**STRAND**	**COLOR CODE**	**OVERALL LENGTH (IN)**	**WT - LBS PER 100**	**PREFORMED CATALOG NUMBER**	**FANNER CATALOG NUMBER**		
6	SOLID	RED	17	10	ND-0501	-	S392704	-
4	SOLID	ORANGE	19	13	ND-0103	-	S392672	CD4C
2	7	RED	23	19	ND-0106	40 PCAG	S392640	CD2C
1/0	7	BLUE	30	44	ND-0110	60 PCAG	S392736	CD1/0C

TABLE OF CONTENTS

© 1998 - 2023 San Diego Gas & Electric Company. All rights reserved. Removal of this copyright notice without permission is not permitted under law.

REV	CHANGE	DR	BY	DSN	APV	DATE	REV	CHANGE	DR	BY	DSN	APV	DATE
D	DRAWING UPDATE	EDM	MRF	GLW	CZH	12/11/2020	G	TABLE UPDATE	GLC	RSL	MRF	KRG	05/10/2023
C	TABLE UPDATE	-	JIK	JES	CZH	01/14/2020	F	DRAWING UPDATE	GLC	SPC	GLW	KRG	12/09/2022
B	UPDATED STANDARDS	PEI	-	-	-	12/10/2018	E	TABLE UPDATE	EDM	SPC	GLW	CZH	07/04/2021

INSTALLATION:

(A) NO LONGER PURCHASED.

(B) OBSOLETE WIRE SIZE, MINIMUM STOCK MAINTAINED FOR MAINTENANCE.

(C) USE S392512 WHEN DEADENDING #2-3/4 AWAC REDUCED TENSION SPAN TO A 55-5 PIN INSULATOR.

BILL OF MATERIALS: NONE

NOTES:

(X) THIS ITEM IS EXEMPT.

REFERENCE: NONE

TABLE OF CONTENTS

© 1998 - 2023 San Diego Gas & Electric Company. All rights reserved. Removal of this copyright notice without permission is not permitted under law.

REV	CHANGE	DR	BY	DSN	APV	DATE	REV	CHANGE	DR	BY	DSN	APV	DATE
D	DRAWING UPDATE	EDM	MRF	GLW	CZH	12/11/2020	G	TABLE UPDATE	GLC	RSL	MRF	KRG	05/10/2023
C	TABLE UPDATE	-	JIK	JES	CZH	01/14/2020	F	DRAWING UPDATE	GLC	SPC	GLW	KRG	12/09/2022
B	UPDATED STANDARDS	PEI	-	-	-	12/10/2018	E	TABLE UPDATE	EDM	SPC	GLW	CZH	07/04/2021

X Indicates Latest Revision | Completely Revised | New Page | Information Removed

SDG&E ELECTRIC OVERHEAD CONSTRUCTION STANDARDS

GRIPS, CABLE AND DEADEND FOR W.P. COPPER CONDUCTORS

OH635.10

SCOPE: THIS STANDARD SHOWS THE STORM SAFE BREAKAWAY SECONDARY AND SERVICE CONNECTION.

ATTENTION:

* FOR USE WHERE CUSTOMER WILL NOT ALLOW UNDERGROUND SERVICE CONNECTION. NO OTHER APPROVED USES.

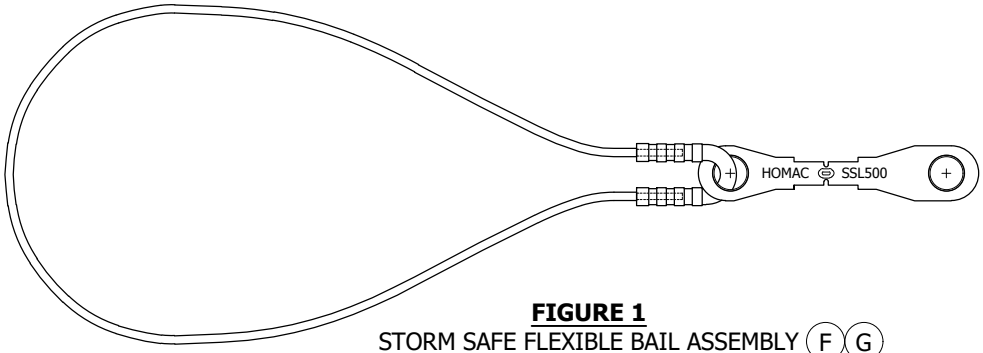

FIGURE 1
STORM SAFE FLEXIBLE BAIL ASSEMBLY (F)(G)
SSFB 500 OR SSFB 750

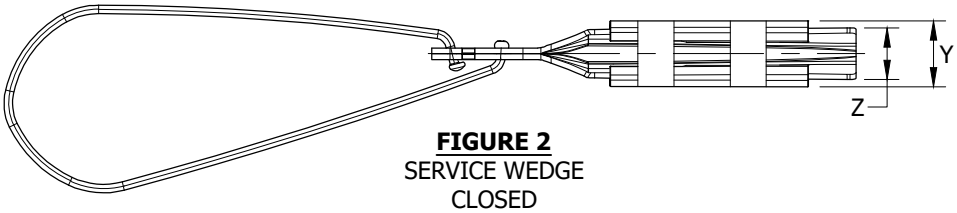

FIGURE 2
SERVICE WEDGE
CLOSED
TOP VIEW

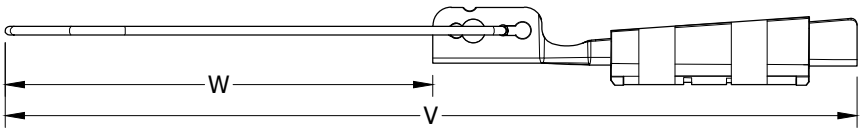

FIGURE 2
SERVICE WEDGE
CLOSED
SIDE VIEW

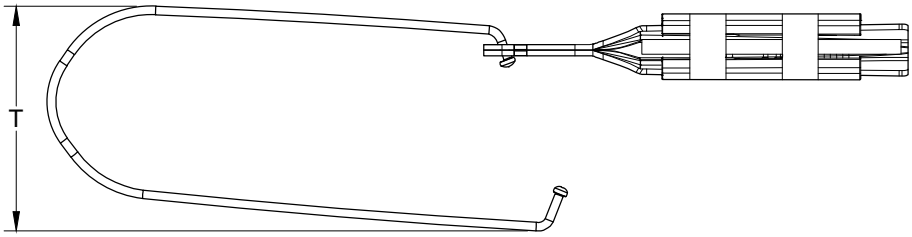

FIGURE 3
SERVICE WEDGE
OPEN
TOP VIEW



FIGURE 4
STORM SAFE FLEXIBLE BAIL ASSEMBLY

TABLE OF CONTENTS

© 1998 - 2023 San Diego Gas & Electric Company. All rights reserved. Removal of this copyright notice without permission is not permitted under law.

REV	CHANGE	DR	BY	DSN	APV	DATE	REV	CHANGE	DR	BY	DSN	APV	DATE
D	DRAWING UPDATE	EDM	MRF	GLW	CZH	12/11/2020	G	TABLE UPDATE	GLC	RSL	MRF	KRG	05/10/2023
C	TABLE UPDATE	-	JIK	JES	CZH	01/14/2020	F	DRAWING UPDATE	GLC	SPC	GLW	KRG	12/09/2022
B	UPDATED STANDARDS	PEI	-	-	-	12/10/2018	E	TABLE UPDATE	EDM	SPC	GLW	CZH	07/04/2021

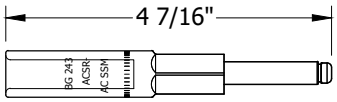

FIGURE 5
SSM2 INPUT

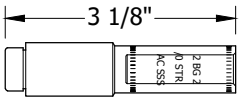

FIGURE 6
SSS 1/0 RECEIVER (D)

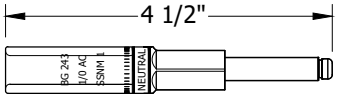

FIGURE 7
SSNM 1/0 INPUT

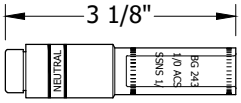

FIGURE 8
SSM 1/0 RECEIVER (D)

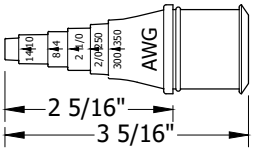

FIGURE 9
FSS 350 CAP

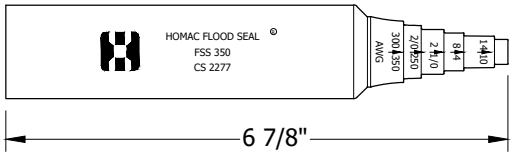

FIGURE 10
.350 MAX. FLOOD SEAL
CS 2277

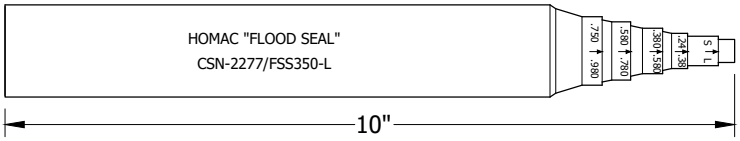

FIGURE 11
.980 MAX. FLOOD SEAL
CSN-2277

TABLE 1:

STORM SAFE BAIL KIT														
SSM 1/0	SSNM 1/0	SSS 1/0	SSM 2	SSS 2	SSS 4	CSN 2277	CS 2277	FSS 350 CAP	BAIL ASS. SSFB 500	SSFB 750	SILICONE GREASE	INSTRUCT. SHEET	MANUFACTURER PART NUMBER	STOCK NUMBER
2	1	2	--	1	--	2	1	2	1	--	2	1	SS1 1/0RNS2 500K MSI	S120440
--	--	--	3	2	1	2	1	1	1	--	2	1	SS1 2 RNS4 500K MSI	S120442
--	--	--	--	--	--	--	--	--	1	--	--	--	SSFB 500	S120450
--	--	--	--	--	--	--	--	--	--	1	--	--	SSFB 750	S120452

TABLE 2:

SERVICE WEDGE										
CONDUCTOR APPLICATION	DIMENSION (IN)							SIZE INDICATOR TAPE COLOR	MANUFACTURER PART NUMBER	STOCK NUMBER
	Z	Y	X	W	V	U	T			
ACSR/AAC 1/0-#4 AWG AAC 2/0 STR.-#2 SOL. AWG DIA. RANGE: .248-.414	1.0	1.3	2.5	5.8	12.3	1.4	3.2	BLUE	SW7187LB	S394370 (X)

TABLE OF CONTENTS

© 1998 - 2023 San Diego Gas & Electric Company. All rights reserved. Removal of this copyright notice without permission is not permitted under law.

REV	CHANGE	DR	BY	DSN	APV	DATE	REV	CHANGE	DR	BY	DSN	APV	DATE
D	DRAWING UPDATE	EDM	MRF	GLW	CZH	12/11/2020	G	TABLE UPDATE	GLC	RSL	MRF	KRG	05/10/2023
C	TABLE UPDATE	-	JIK	JES	CZH	01/14/2020	F	DRAWING UPDATE	GLC	SPC	GLW	KRG	12/09/2022
B	UPDATED STANDARDS	PEI	-	-	-	12/10/2018	E	TABLE UPDATE	EDM	SPC	GLW	CZH	07/04/2021

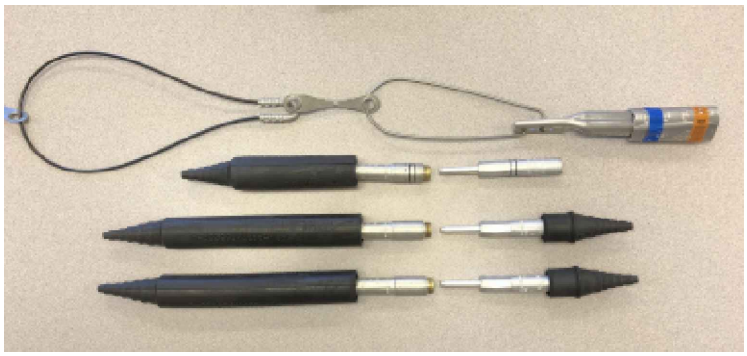



INSTALLATION:

A. LIMIT SPANS TO 80 FEET MAXIMUM.

B. MUST INSTALL IN A MANNER THAT MAKES AN AUDIBLE CLICK FOR CONFIRMATION CONNECTION IS PROPERLY MADE.

C. MUST NOT PUT ANY TORSIONAL LOAD (SIDE TO SIDE MOVEMENT) ON BREAKAWAY LINK WHILE INSTALLING. WIRE TO BE KEPT STRAIGHT AS POSSIBLE DURING INSTALLATION.

(D) THE RECEIVER SHALL BE INSTALLED ON LINE SIDE OF CONNECTION.

E. DRIP LOOPS, "**NEUTRAL MUST BE**" SIX TO TWELVE INCHES LONGER THAN THE PS LEGS FOR PROPER OPERATION.

(F) IF THE BREAK-AWAY LINK FAILS PREMATURELY DUE TO WIND OR CIRCUMSTANCES OTHER THAN PHYSICAL CONTACT, E.G. TREE LIMB, IT SHALL BE REPLACED WITH AN SLL750 (750 LB) BREAK-AWAY LINK (S120452).

(G) IF THE BREAK-AWAY LINK FAILS DUE TO PHYSICAL CONTACT, IT CAN BE RECONNECTED WITH A NEW SSL500 (500 LB) BREAK-AWAY LINK (S120450) PROVIDING NO OTHER DAMAGE TO EXISTING SERVICE OR EQUIPMENT IS FOUND.

BILL OF MATERIALS: NONE

NOTES:

I. USE ALUMINUM WEDGE CLAMP IN CONJUNCTION WITH STORM SAFE BREAKAWAY CLAMP.

II. STANDARD SERVICE PREFORMS SHALL NOT BE USED IN CONJUNCTION WITH STORM SAFE BREAK-AWAY.

(X) THIS ITEM IS EXEMPT.

REFERENCE: NONE

TABLE OF CONTENTS

© 1998 - 2023 San Diego Gas & Electric Company. All rights reserved. Removal of this copyright notice without permission is not permitted under law.

REV	CHANGE	DR	BY	DSN	APV	DATE	REV	CHANGE	DR	BY	DSN	APV	DATE
D	DRAWING UPDATE	EDM	MRF	GLW	CZH	12/11/2020	G	TABLE UPDATE	GLC	RSL	MRF	KRG	05/10/2023
C	TABLE UPDATE	-	JIK	JES	CZH	01/14/2020	F	DRAWING UPDATE	GLC	SPC	GLW	KRG	12/09/2022
B	UPDATED STANDARDS	PEI	-	-	-	12/10/2018	E	TABLE UPDATE	EDM	SPC	GLW	CZH	07/04/2021

X Indicates Latest Revision | Completely Revised | New Page | Information Removed

SDG&E ELECTRIC OVERHEAD CONSTRUCTION STANDARDS

SECONDARY AND SERVICE CABLE CONNECTION
STORM SAFE BREAKAWAY

OH635.13

SCOPE: THIS STANDARD SHOWS THE METHODS OF INSTALLING OVERHEAD SERVICE ATTACHMENT CONDUIT RISERS.

GALVANIZED RIGID CONDUIT RISER OR INTERMEDIATE METALLIC CONDUIT FOR OVERHEAD SERVICE ATTACHMENT

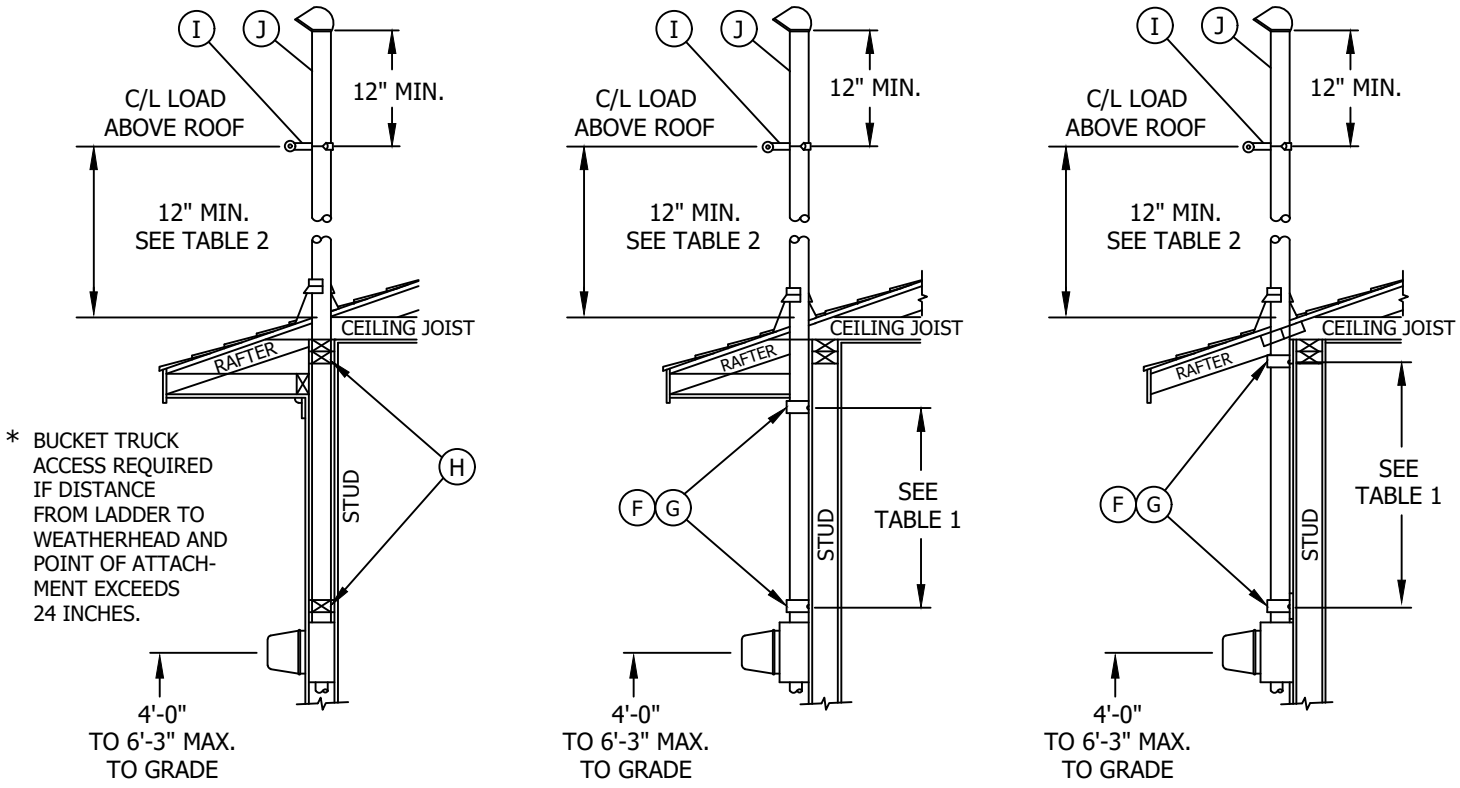

ENCLOSED **EXTERIOR 1** **EXTERIOR 2**

TABLE 1

MINIMUM SUPPORT DISTANCE IS MEASURED FROM CENTERLINE OF HEAVY DUTY PIPE STRAPS.

CONDUIT SIZE	DISTANCE
1-1/4"	12"
1-1/2"	15"
2"	22"
2-1/2"	30"
3"	40"

TABLE 2

MAX DISTANCE OF C/L OF LOAD ABOVE ROOF

CONDUIT SIZE	DISTANCE
1-1/4"	30"
1-1/2"	40"
2"	5'-0"
2-1/2"	8'-0"
3"	8'-0"

© 1998 - 2018 San Diego Gas & Electric Company. All rights reserved. Removal of this copyright notice without permission is not permitted under law.

REV	CHANGE	BY	DSGN	APPV	DATE	REV	CHANGE	BY	DSGN	APPV	DATE
C						F					
B	UPDATED STANDARDS	PEI	-	-	12/10/2018	E					
A	UPDATED TABLE 1 & 2	JC	-	-	10/07/2014	D					

X Indicates Latest Revision | Completely Revised | New Page | Information Removed

SDG&E ELECTRIC OVERHEAD CONSTRUCTION STANDARD

SERVICE DROP ATTACHMENTS TO CONDUIT RISERS

OH641.1

TABLE OF CONTENTS

INSTALLATION:

A. SDG&E WILL NOT BE RESPONSIBLE FOR ANY DAMAGE TO THE BUILDING CAUSED BY RAIN OR STRUCTURAL FAILURE.

B. THESE METHODS ARE SUGGESTED TO OBTAIN THE REQUIRED GROUND AND ROOF CLEARANCES AS REQUIRED BY THE AUTHORITIES HAVING JURISDICTION. WHEN THIS METHOD IS USED, IT WILL BE ACCEPTABLE TO SDG&E PROVIDED THE DIMENSIONS AND CONSTRUCTION DETAILS ARE COMPLIED WITH.

C. SEE SERVICE GUIDE PAGES 604 AND 605 WHERE METER INSTALLATION IS TO BE RECESSED, PAGES 606.1 AND 606.2 WHERE ENCLOSED IN A CABINET, OR, PAGES 604.2 THROUGH 604.4 WHEN LOCATED IN A METER ROOM.

D. NO COUPLINGS WILL BE PERMITTED BETWEEN, OR ABOVE, THE TOP TWO PIPE STRAP SUPPORTS FOR CONDUIT SIZES 1-1/4" TO 2" INCLUSIVE. IF A COUPLING IS NECESSARY IN THE 2-1/2" SIZE CONDUIT TO OBTAIN THE MAXIMUM POINT OF ATTACHMENT OF 8 FT. ABOVE THE TOP SUPPORT OR ROOFLINE, THE COUPLING SHALL BE INSTALLED AT THE UPPER END NEAR THE WEATHER HEAD.

E. SERVICE DROP ATTACHMENT SHALL NORMALLY BE LOCATED ON THE WALL FACING AND NEAREST SDG&E'S POLE LINE. SEE SERVICE GUIDE PAGE 105 (a) & (b) FOR EXCEPTIONS TO OBTAIN SERVICE DROP CLEARANCES.

(F) HEAVY DUTY TWO HOLE PIPE STRAPS. UPPER STRAP MUST BE DIRECTLY BELOW SOFFIT (SEE EXTERIOR 1), OR, SCREWED WITH 3/8" X 3" LAG SCREWS INTO PLATE (SEE EXTERIOR 2). 1/4" TOGGLE BOLTS MAY BE USED IN LIEU OF LAG SCREWS. ZANAC NAIL HEADS 1/4" X 1.875" (MUSHROOM) MAY BE USED IN PLACE OF LAG SCREWS WHEN ATTACHING TO CINDER BLOCK OR CONCRETE WALLS.

(G) HEAVY DUTY ONE HOLE PIPE STRAPS ARE ACCEPTABLE IF USED WITH 3/8" X 3" LAG SCREW (MIN. SIZE) INTO WALL STUD OR PLATE. A ZANAC NAIL HEAD 1/4" X 1.875" (MUSHROOM) MAY BE USED IN PLACE OF LAG SCREW WHEN ATTACHING TO CINDER BLOCK OR CONCRETE WALLS.

(H) ENCLOSED RISERS MUST BE SECURELY SUPPORTED AT THE PLATE AND IMMEDIATELY ABOVE THE METER SOCKET.

(I) SDG&E WILL PROVIDE THE CLAMP AND INSULATOR FOR ATTACHMENT OF THE SERVICE DROP TO THE CUSTOMER'S RISER.

(J) ONLY POWER SERVICE DROP CONDUCTORS SHALL BE PERMITTED TO BE ATTACHED TO THE SERVICE RISER.

TABLE OF CONTENTS

© 1998 - 2018 San Diego Gas & Electric Company. All rights reserved. Removal of this copyright notice without permission is not permitted under law.

REV	CHANGE	BY	DSGN	APPV	DATE	REV	CHANGE	BY	DSGN	APPV	DATE
C						F					
B	UPDATED STANDARDS	PEI	-	-	12/10/2018	E					
A	UPDATED TABLE 1 & 2	JC	-	-	10/07/2014	D					

X Indicates Latest Revision | Completely Revised | New Page | Information Removed

SDG&E ELECTRIC OVERHEAD CONSTRUCTION STANDARD

SERVICE DROP ATTACHMENTS TO CONDUIT RISERS

OH641.2

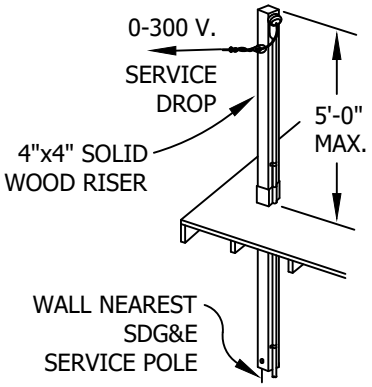

FIGURE ONE

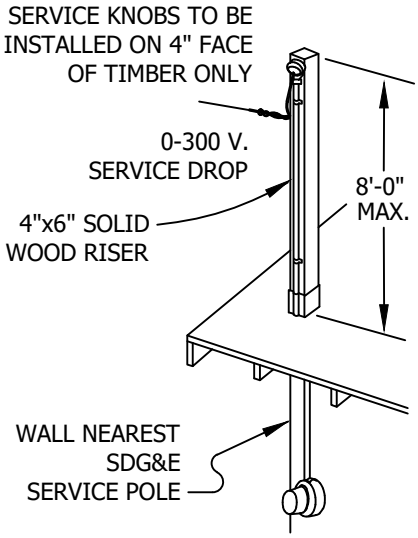

FIGURE TWO

SEE SERVICE GUIDE PAGES 118 THRU 128 FOR SERVICE DROP CLEARANCES.

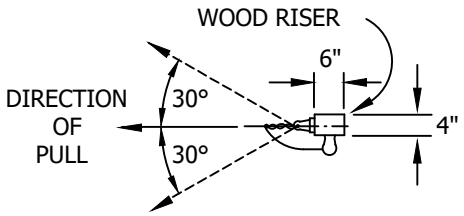

PLAN

SERVICE DROP ATTACHMENT SHALL NORMALLY BE LOCATED ON THE WALL FACING AND NEAREST SDG&E'S POLE LINE. SEE SERVICE GUIDE PAGE 105-2(B) FOR EXCEPTION TO OBTAIN SERVICE DROP CLEARANCES.

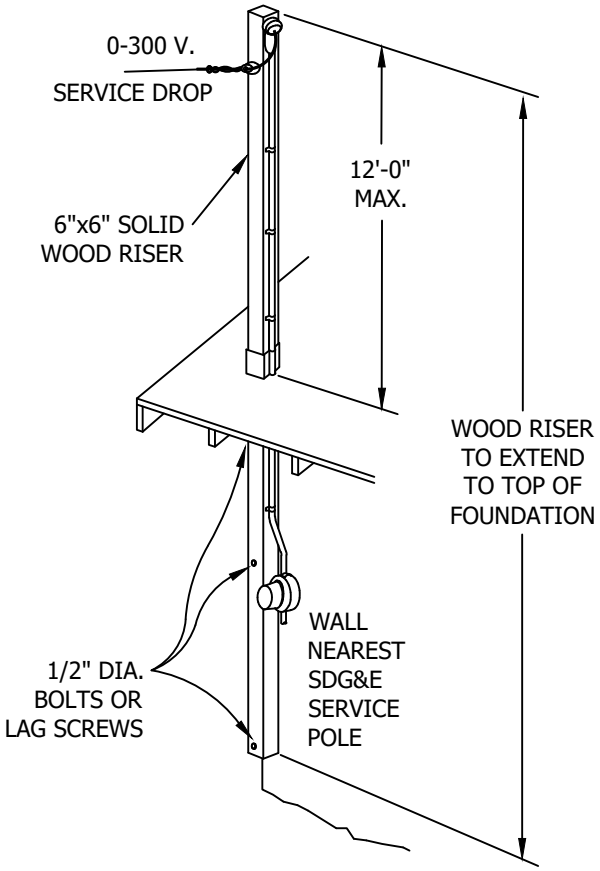

FIGURE THREE

TABLE OF CONTENTS

© 1998 - 2018 San Diego Gas & Electric Company. All rights reserved. Removal of this copyright notice without permission is not permitted under law.

REV	CHANGE	BY	DSGN	APPV	DATE	REV	CHANGE	BY	DSGN	APPV	DATE
C						F					
B	UPDATED STDS & DWG NO FROM 643	PEI	-	-	12/10/2018	E					
A	ORIGINAL ISSUE	-	PTA	RDG	11/20/2002	D					

X Indicates Latest Revision | Completely Revised | New Page | Information Removed

SDG&E ELECTRIC OVERHEAD CONSTRUCTION STANDARD

SERVICE DROP ATTACHMENTS TO WOOD RISERS

OH641.3

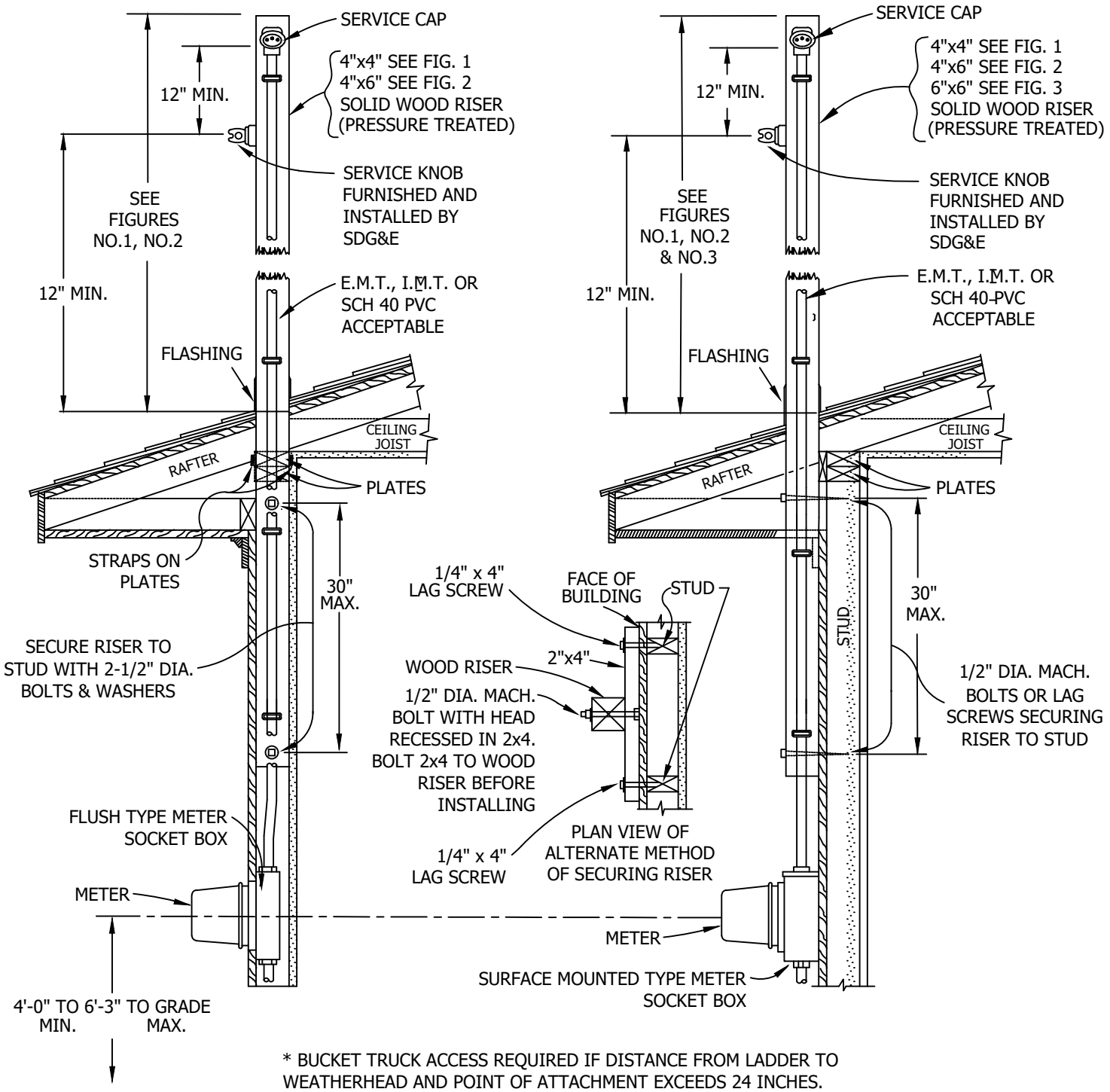

* BUCKET TRUCK ACCESS REQUIRED IF DISTANCE FROM LADDER TO WEATHERHEAD AND POINT OF ATTACHMENT EXCEEDS 24 INCHES.

NOTES:

I. NONE OF THESE WOOD RISERS SHALL BE SPLICED OR OF LAMINATED CONSTRUCTION. 2x4's, 2x6's, ETC. NAILED OR BOLTED TOGETHER ARE NOT ACCEPTABLE.

© 1998 - 2018 San Diego Gas & Electric Company. All rights reserved. Removal of this copyright notice without permission is not permitted under law.

REV	CHANGE	BY	DSGN	APPV	DATE	REV	CHANGE	BY	DSGN	APPV	DATE
C						F					
B	UPDATED STDS & DWG NO FROM 643	PEI	-	-	12/10/2018	E					
A	ORIGINAL ISSUE	-	PTA	RDG	11/20/2002	D					

X Indicates Latest Revision | Completely Revised | New Page | Information Removed

SDG&E ELECTRIC OVERHEAD CONSTRUCTION STANDARD

SHEET 4 OF 4

SERVICE DROP ATTACHMENTS TO WOOD RISERS

OH641.4

TABLE OF CONTENTS

SCOPE: THIS STANDARD DESCRIBES PROCEDURES THAT MAY ALLOW SERVICE DROP LENGTH GREATER THAN 100 FEET.

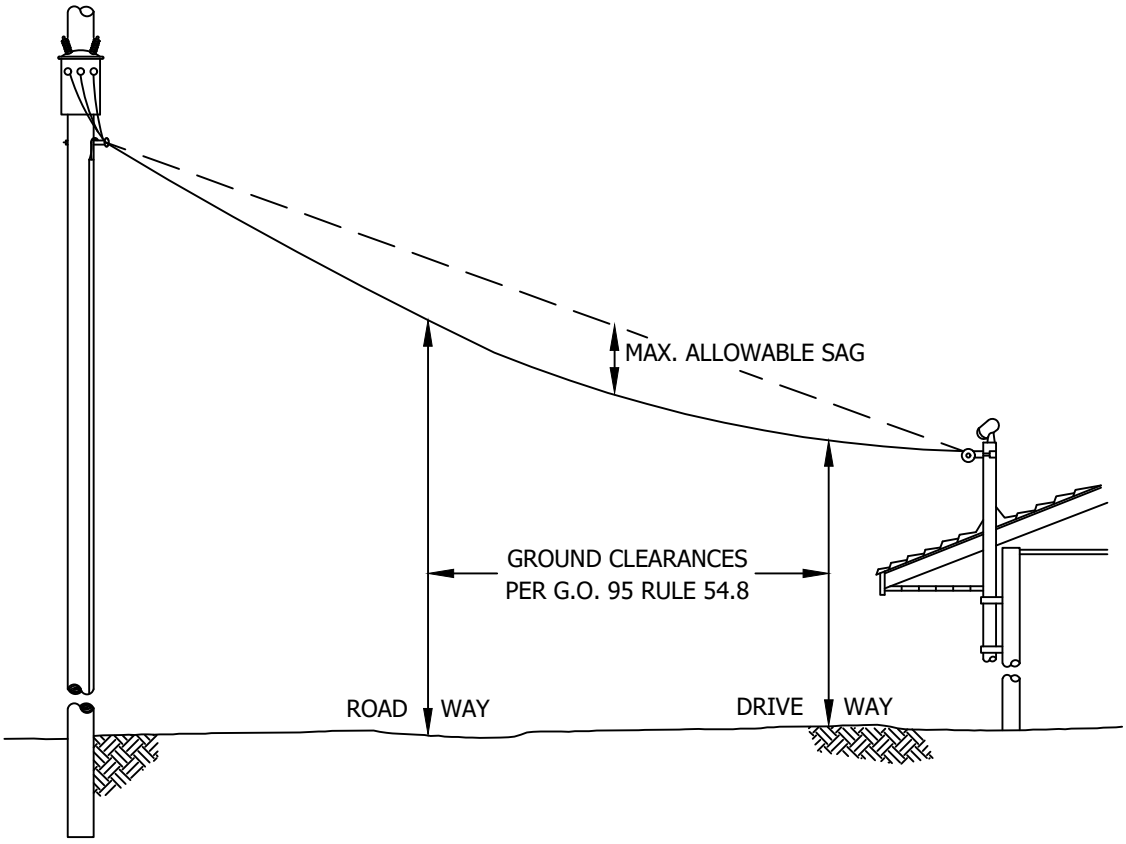

EXAMPLE:

PROBLEM: DETERMINE THE REQUIRED LENGTH AND DIAMETER OF A SERVICE CONDUIT RISER.

ASSUME: LIGHT LOADING DISTRICT
WIRE TO BE STRUNG IS #4 SSC AL TRIPLEX
SERVICE DROP LENGTH = 130 FEET
SAG = 3'-6" (SEE DRAWING)

SOLUTION:
1) ASSURE THAT ALL MINIMUM GROUND CLEARANCES ARE MET, PER G.O. 95, RULE 54.8, (SEE DRAWING)
2) FROM TENSION TABLE 1, #4 SSC AL TRIPLEX, LIGHT LOADING CONDITION, SPAN = 130 FEET AND SAG = 3'-6", THE MAXIMUM TENSION = 335 LBS
3) FROM SERVICE CONDUIT RISER ALLOWABLE TENSION TABLE 3, LOCATE TENSION VALUE EQUAL TO OR GREATER THAN 335 LBS SELECT EITHER: A) 2.50" DIAMETER CONDUIT RISER, 4'-0" LONG, OR
B) 2.00" DIAMETER CONDUIT RISER, 1'-6" LONG

CONCLUSION: 130 FEET SERVICE DROP LENGTH IS ALLOWED WHEN THE SERVICE CONDUIT RISER DIAMETER IS 2.50" WITH A PIPE HEIGHT OF 4'-0" OR LESS, OR 2.00" DIAMETER WITH A PIPE HEIGHT OF 1'-6" OR LESS.

INSTALLATION:

A. DO NOT USE A CONDUCTOR TENSION LESS THAN 50 LBS, OR GREATER THAN 450 LBS.

B. DO NOT USE SERVICE RISER WITH CAPACITY LESS THAN 50 LBS.

© 1998 - 2018 San Diego Gas & Electric Company. All rights reserved. Removal of this copyright notice without permission is not permitted under law.

REV	CHANGE	BY	DSGN	APPV	DATE	REV	CHANGE	BY	DSGN	APPV	DATE
C						F					
B	UPDATED STANDARDS	PEI	-	-	12/10/2018	E					
A	ORIGINAL ISSUE	-	BV	MC	08/04/2009	D					

X Indicates Latest Revision | Completely Revised | New Page | Information Removed

SDG&E ELECTRIC OVERHEAD CONSTRUCTION STANDARD

SIZING SERVICE DROP CONDUIT RISERS

OH644.1

TABLE OF CONTENTS

TABLE 1

SINGLE CONDUCTOR MAXIMUM TENSION TABLE #4 SSC TRIPLEX - ACSR/AW NEUTRAL - PERIWINKLE LIGHT LOADING CONDITIONS---25° INITIAL WITH NO ICE										
SPAN (FEET)	**SAG AT 130° F--FINAL**									
	1'-0"	1'-6"	2'-0"	2'-6"	3'-0"	3'-6"	4'-0"	4'-6"	5'-0"	5'-6"
60	340	181	121	92	75	63	55	50	-	-
70	450	263	173	129	104	87	75	67	60	54
80	-	361	237	175	139	116	100	88	78	71
90	-	-	314	229	181	149	128	112	100	90
100	-	-	395	293	229	188	160	140	124	112
110	-	-	-	360	285	233	198	172	152	137
120	-	-	-	430	342	283	240	208	183	164
130	-	-	-	-	405	335	285	247	218	195
140	-	-	-	-	-	390	335	290	256	229
150	-	-	-	-	-	450	385	334	296	265

TABLE 2

SINGLE CONDUCTOR MAXIMUM TENSION TABLE #2 SSC TRIPLEX - ACSR/AW NEUTRAL - CONCH LIGHT LOADING CONDITIONS---25° INITIAL WITH NO ICE										
SPAN (FEET)	**SAG AT 130° F--FINAL**									
	1'-0"	1'-6"	2'-0"	2'-6"	3'-0"	3'-6"	4'-0"	4'-6"	5'-0"	5'-6"
60	-	232	150	115	93	79	68	61	55	50
70	-	351	220	160	129	108	94	83	74	68
80	-	-	308	221	174	144	124	109	97	88
90	-	-	422	294	228	187	160	140	124	112
100	-	-	-	385	293	238	201	175	155	140
110	-	-	-	-	367	297	249	215	190	171
120	-	-	-	-	-	362	304	261	230	206
130	-	-	-	-	-	438	366	314	275	245
140	-	-	-	-	-	-	432	370	324	288
150	-	-	-	-	-	-	-	432	377	335

TABLE OF CONTENTS

© 1998 - 2018 San Diego Gas & Electric Company. All rights reserved. Removal of this copyright notice without permission is not permitted under law.

REV	CHANGE	BY	DSGN	APPV	DATE	REV	CHANGE	BY	DSGN	APPV	DATE
C						F					
B	UPDATED STANDARDS	PEI	-	-	12/10/2018	E					
A	ORIGINAL ISSUE	-	BV	MC	08/04/2009	D					

X Indicates Latest Revision | Completely Revised | New Page | Information Removed

SDG&E ELECTRIC OVERHEAD CONSTRUCTION STANDARD

SIZING SERVICE DROP CONDUIT RISERS

OH644.2

TABLE 3

SERVICE RISER MAXIMUM ALLOWABLE TENSION (LB)				
POINT OF ATTACHMENT PIPE HEIGHT ABOVE ROOF (FEET)	**PIPE DIAMETER (IN)**			
	1.25	1.50	2.00	2.50
1'-0"	227	315	-	-
1'-6"	170	236	407	-
2'-0"	136	188	325	-
2'-6"	113	156	270	-
3'-0"	96	134	231	438
3'-6"	84	116	201	382
4'-0"	74	103	178	339
4'-6"	66	92	160	304
5'-0"	60	83	145	276
5'-6"	54	76	132	252
6'-0"	50	70	121	232
6'-6"	-	64	112	214
7'-0"	-	59	104	199
7'-6"	-	55	97	186
8'-0"	-	51	90	174
8'-6"	-	-	85	164

TABLE OF CONTENTS

© 1998 - 2018 San Diego Gas & Electric Company. All rights reserved. Removal of this copyright notice without permission is not permitted under law.

REV	CHANGE	BY	DSGN	APPV	DATE	REV	CHANGE	BY	DSGN	APPV	DATE
C						F					
B	UPDATED STANDARDS	PEI	-	-	12/10/2018	E					
A	ORIGINAL ISSUE	-	BV	MC	08/04/2009	D					

X Indicates Latest Revision | Completely Revised | New Page | Information Removed

SDG&E ELECTRIC OVERHEAD CONSTRUCTION STANDARD

SIZING SERVICE DROP CONDUIT RISERS

OH644.3

SCOPE: THIS STANDARD SHOWS AND DESCRIBES THE INSTALLATION OF A PERMANENT/CLIMBABLE, CUSTOMER OWNED, SERVICE AND METER POLE.

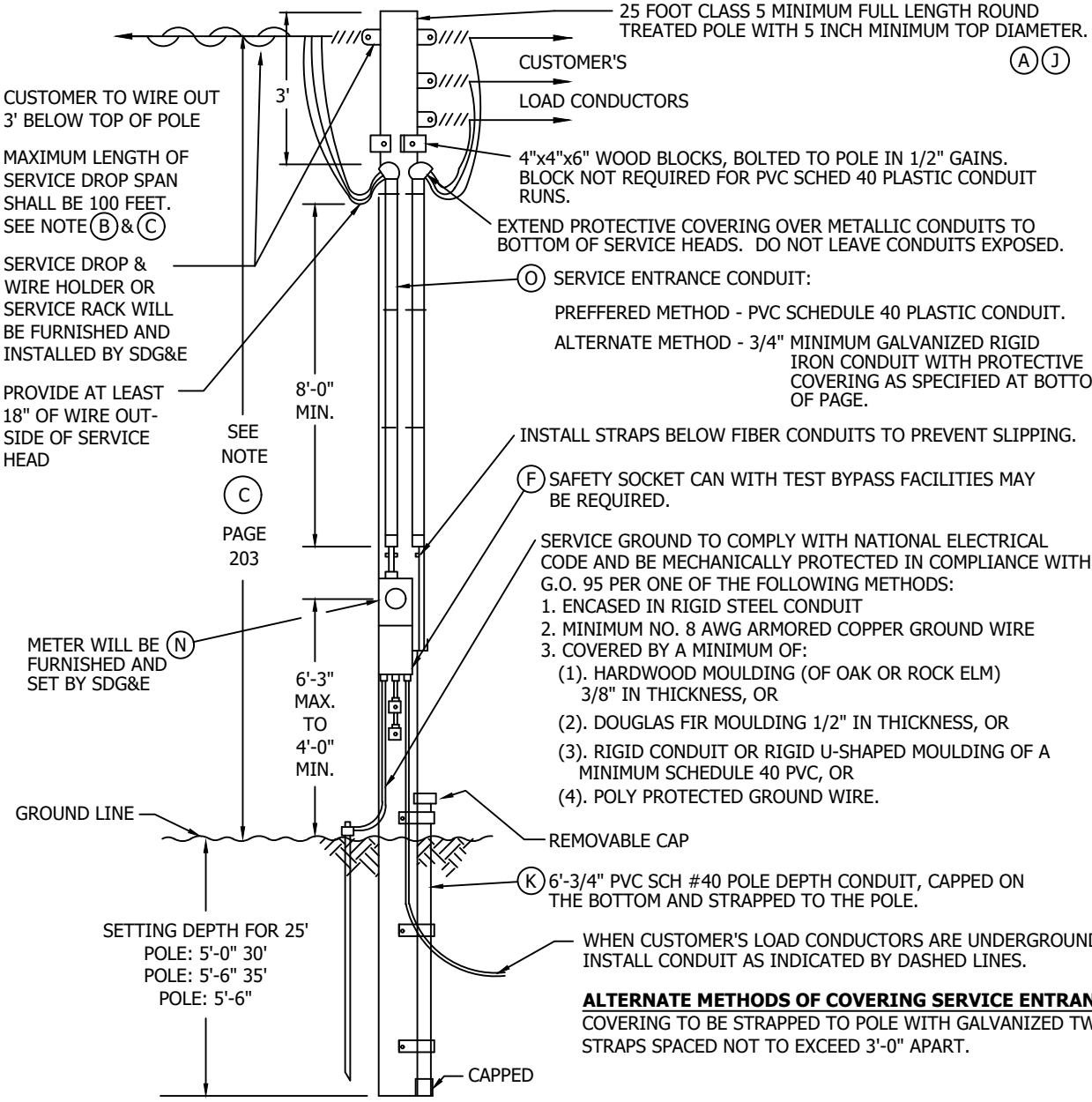

ALTERNATE METHODS OF COVERING SERVICE ENTRANCE CONDUITS
COVERING TO BE STRAPPED TO POLE WITH GALVANIZED TWO HOLE PIPE STRAPS SPACED NOT TO EXCEED 3'-0" APART.

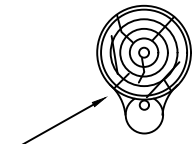
IMPREGNATED FIBER CONDUIT OF 1/4" MINIMUM THICKNESS

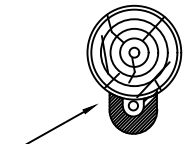
WOOD MOULDING OF 1 1/2" MINIMUM THICKNESS

SEE PAGE 645.2 FOR NOTES

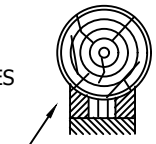
BOXING OF WOOD OF 1 1/2" MINIMUM THICKNESS. THE COVER IS TO BE NAILED TO THE SIDE PIECES.


POLE DEPTH CONDUIT TOP VIEW

© 1998 - 2018 San Diego Gas & Electric Company. All rights reserved. Removal of this copyright notice without permission is not permitted under law.

REV	CHANGE	BY	DSGN	APPV	DATE	REV	CHANGE	BY	DSGN	APPV	DATE
C						F					
B	UPDATED STANDARDS	PEI	-	-	12/10/2018	E					
A	ORIGINAL ISSUE	-	PTA	JJ	09/08/2005	D					

X Indicates Latest Revision | Completely Revised | New Page | Information Removed

SDG&E ELECTRIC OVERHEAD CONSTRUCTION STANDARD

CUSTOMER - OWNED SERVICE AND METER POLES
PERMANENT/CLIMBABLE

OH645.1

TABLE OF CONTENTS

GENERAL NOTES:

(A) THESE ARE MINIMUM REQUIREMENTS FOR PERMANENT CUSTOMER-OWNED SERVICE AND METER POLES. THEY ARE ALSO APPROVED FOR TEMPORARY INSTALLATIONS. (SEE NOTE F)

(B) **POLE LOCATION:**

POLE SHALL BE SET NOT MORE THAN 100 FEET NOR LESS THAN 10 FEET FROM THE SURFACE OF SDG&E'S SERVICE POLE AND SO LOCATED THAT ALL REQUIRED SERVICE DROP CLEARANCES WILL BE OBTAINED FROM GROUND, BUILDINGS, STRUCTURES AND OTHER CONDUCTORS ON SDG&E'S POLE INCLUDING FOREIGN COMMUNICATION AND SUPPLY CONDUCTORS IN SELECTING THE POLE LOCATION, CONSIDERATION SHOULD BE GIVEN TO PROVIDING ADEQUATE CLEARANCE IN AREAS WHERE:

1. CONSTRUCTION EQUIPMENT WILL BE OPERATED.
2. CHANGES IN GRADE OF STREETS, DRIVEWAY AND OTHER LANDS ARE PROPOSED.
3. BUILDINGS OR STRUCTURES ARE PROPOSED TO BE ADDED DURING THE PERIOD OF PERMANENT OR TEMPORARY SERVICE.

ADEQUATE CLEARANCE SHALL BE PROVIDED, WHETHER OR NOT SUCH AREAS OF CONFLICT OR OBSTRUCTION ARE ON THE PREMISES SERVED.

CONTACT SDG&E AT ANY REGIONAL PROJECT MANAGEMENT OFFICE AND REQUEST AN ELECTRIC METER AND SERVICE LOCATION.

(C) **SERVICE DROP MINIMUM CLEARANCES:**

AT CENTER OF STREET OR 12 FEET FROM CURB WHICHEVER IS LESS . . . . . 18 FT.
AT CURB LINE . . . . . .16 FT.
OVER COMMERCIAL OR INDUSTRIAL DRIVEWAYS, PARKING AREAS OR AREAS CAPABLE OF BEING TRAVERSED BY VEHICLES . . . . . 16 FT.
OVER RESIDENTIAL DRIVEWAYS . . . . . 12 FT.*
OVER AGRICULTURAL AREAS . . . . . .15 FT.
OVER RAILROADS OR FOR OTHER SPECIAL CONDITIONS, CONSULT SDG&E'S REPRESENTATIVE.

*MAY BE REDUCED TO 10 FT. IF SSC SERVICE.
SERVICE DROP CABLE SHALL BE USED BY SDG&E. THE TYPE OF CONSTRUCTION USED BY THE CUSTOMER IS HIS OPTION.

D. WHERE CLEARANCES IN NOTE "C" CANNOT BE OBTAINED WITH THE 25 FOOT POLE SHOWN, A 35 FOOT MAXIMUM POLE SHALL BE USED.

(F) SAFETY SOCKET CAN WITH TEST-BYPASS FACILITIES IS REQUIRED WHEN POLE IS TO BE USED FOR COMMERCIAL/INDUSTRIAL PREMISES TEMPORARY/CONSTRUCTION POWER OR PERMANENT NON-RESIDENTIAL SERVICE. SERVICE EQUIPMENT AND RECEPTACLES MUST BE RAIN TIGHT, PROPERLY RATED FOR THE LOAD TO BE SERVED AND SHALL BE ADEQUATELY BONDED AND GROUNDED.

G. RECEPTACLES USED TO CONNECT PORTABLE TOOLS SHALL BE 3-POLE TYPE FOR SINGLE-PHASE MOTORS AND 4-POLE FOR THREE-PHASE MOTORS, ONE CONTACT TO BE USED FOR GROUNDING CONNECTION. WHERE MORE THAN ONE VOLTAGE TYPE IS USED, RECEPTACLES SHALL BE NON-INTERCHANGEABLE.

H. PERMIT AND INSPECTION MUST BE OBTAINED FROM THE INSPECTION AUTHORITY HAVING JURISDICTION BEFORE SERVICE WILL BE CONNECTED BY SDG&E.

(I) CONSULT SDG&E FOR SERVICE REQUIREMENTS WHENEVER THREE-PHASE SERVICE IS DESIRED.

(J) SDG&E WILL FURNISH AND INSTALL THE METER, SERVICE DROP AND SERVICE DROP RACK OR WIRE HOLDERS. ALL OTHER EQUIPMENT, INCLUDING THE POLE, SHALL BE FURNISHED AND INSTALLED BY THE CUSTOMER.

(K) CUSTOMER TO DIG POLE IN NATURAL SOIL. BACK FILL MUST BE COMPACTED TO 90% MINIMUM WITHIN A 5 FOOT RADIUS OF POLE. POLE DEPTH WILL BE CONFIRMED BY INSERTION OF A GROUND ROD OR SIMILAR PROBE INTO THE PVC CONDUIT ATTACHED TO CLIMBABLE POLE. INSTALL REMOVABLE CAP ON TOP OF CONDUIT TO PREVENT FALLING DEBRIS. GUY WIRES ARE NOT PERMITTED AS A MEANS OF SUPPORTING A METER POLE.

© 1998 - 2018 San Diego Gas & Electric Company. All rights reserved. Removal of this copyright notice without permission is not permitted under law.

REV	CHANGE	BY	DSGN	APPV	DATE	REV	CHANGE	BY	DSGN	APPV	DATE
C						F					
B	UPDATED STANDARDS	PEI	-	-	12/10/2018	E					
A	ORIGINAL ISSUE	-	PTA	JJ	09/08/2005	D					

X Indicates Latest Revision | Completely Revised | New Page | Information Removed

SDG&E ELECTRIC OVERHEAD CONSTRUCTION STANDARD

CUSTOMER - OWNED SERVICE AND METER POLES
PERMANENT/CLIMBABLE

OH645.2

TABLE OF CONTENTS

GENERAL NOTES (CONT'D):

M. FLOOD LIGHTS, SIGNS, ROPES AND ANY SIMILAR EQUIPMENT SHALL NOT BE ATTACHED TO SERVICE AND METER POLES.

(N) ALL METER POLES MUST HAVE THE NUMERIC PORTION OF THE STREET ADDRESS FIRMLY ATTACHED AND FACING THE STREET OR DRIVABLE SURFACE. PLASTIC OR METALLIC NUMBERS OF THE TYPE USED FOR HOUSE ADDRESSES ARE DRIP LOOP, AND (3) IT MEETS ALL G.O. 95 REQUIREMENTS ACCEPTABLE.

(O) ALL CONDUIT FITTINGS MUST BE RAINTIGHT. APPROVED WIRE, NOT LESS THAN NO. 8 AWG, SHALL BE USED IN THE SERVICE ENTRANCE CONDUIT.

P. A TELEPHONE AND/OR CABLE TV SERVICE DROP MAY ATTACH TO A METER POLE PROVIDED: (1) THE ATTACHMENT IS OUTSIDE THE CLIMBING SPACE, (2) A MINIMUM RADIAL CLEARANCE OF 12" IS MAINTAINED FROM ANY PORTION OF THE DRIP LOOP, AND (3) IT MEETS ALL G.O. 95 REQUIREMENTS.

TABLE OF CONTENTS

© 1998 - 2018 San Diego Gas & Electric Company. All rights reserved. Removal of this copyright notice without permission is not permitted under law.

REV	CHANGE	BY	DSGN	APPV	DATE	REV	CHANGE	BY	DSGN	APPV	DATE
C						F					
B	UPDATED STANDARDS	PEI	-	-	12/10/2018	E					
A	ORIGINAL ISSUE	-	PTA	JJ	09/08/2005	D					

X Indicates Latest Revision | Completely Revised | New Page | Information Removed

SDG&E ELECTRIC OVERHEAD CONSTRUCTION STANDARD

CUSTOMER - OWNED SERVICE AND METER POLES
PERMANENT/CLIMBABLE

OH645.3

SCOPE: THIS STANDARD SHOWS AND DESCRIBES THE INSTALLATION OF A TEMPORARY/NON-CLIMBABLE, CUSTOMER OWNED, SERVICE AND METER POLE.

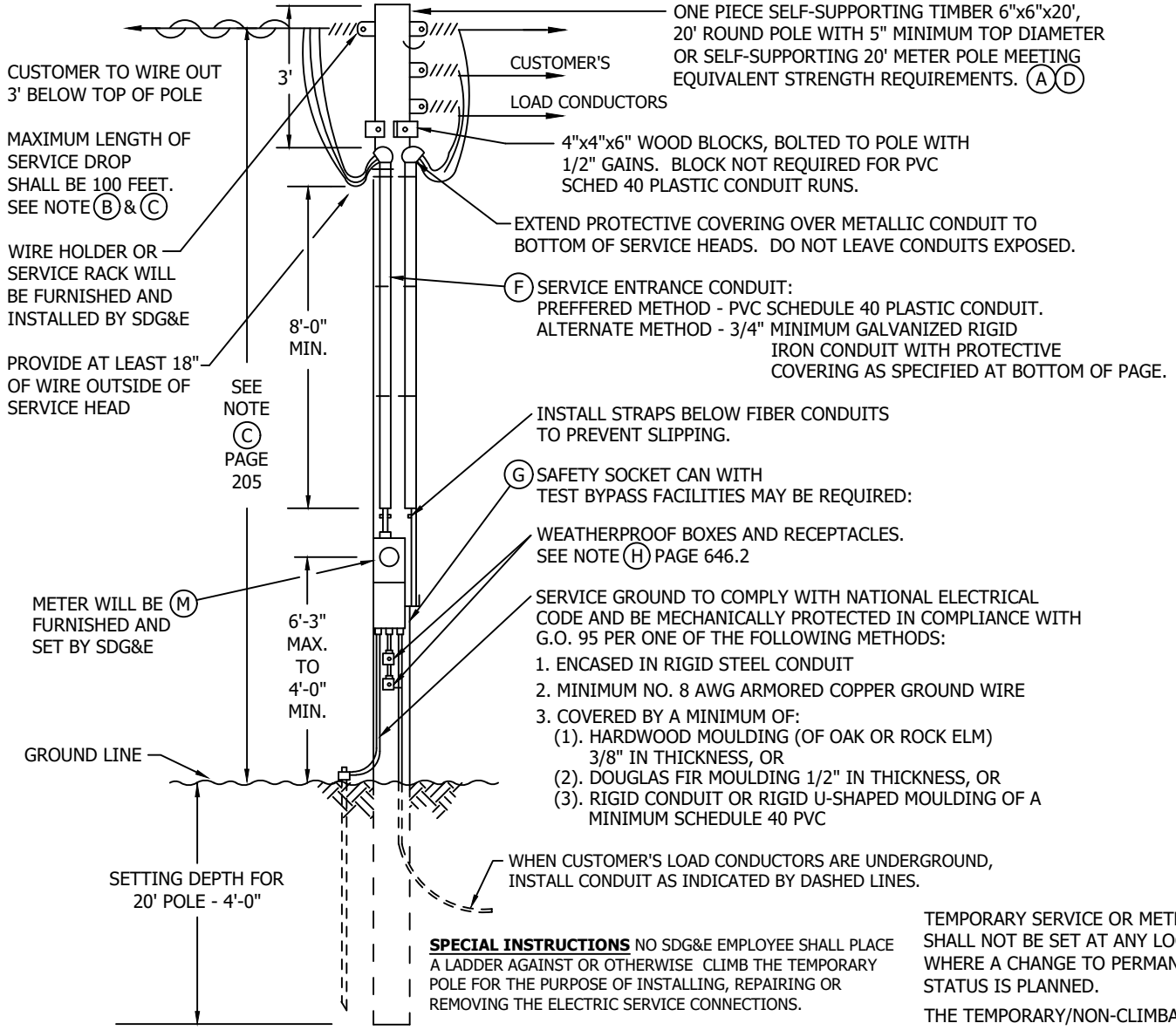

SPECIAL INSTRUCTIONS NO SDG&E EMPLOYEE SHALL PLACE A LADDER AGAINST OR OTHERWISE CLIMB THE TEMPORARY POLE FOR THE PURPOSE OF INSTALLING, REPAIRING OR REMOVING THE ELECTRIC SERVICE CONNECTIONS.

TEMPORARY SERVICE OR METER POLES SHALL NOT BE SET AT ANY LOCATION WHERE A CHANGE TO PERMANENT STATUS IS PLANNED.

THE TEMPORARY/NON-CLIMBABLE POLE MUST BE LOCATED WITHIN A 20 FOOT RADIUS FROM A ROAD OR OTHER DRIVABLE SURFACE SO SDG&E CAN CONNECT AND MAINTAIN THE SERVICE DROP FROM A BUCKET TRUCK. TRUCK ACCESS MUST BE MAINTAINED DURING THE PERIOD OF TEMPORARY SERVICE. (A)

ANY SERVICE OR METER POLES THAT CAN NOT BE LOCATED WITHIN THE 20 FOOT RADIUS MUST BE BUILT TO THE STANDARD OF A PERMANENT/ CLIMBABLE POLE. SEE PAGE 645.1.

ALTERNATE METHODS OF COVERING SERVICE ENTRANCE CONDUITS COVERING TO BE STRAPPED TO POLE WITH GALVANIZED TWO HOLE PIPE STRAPS SPACED NOT TO EXCEED 3'-0" APART.

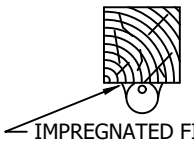

IMPREGNATED FIBER CONDUIT OF 1/4" MINIMUM THICKNESS

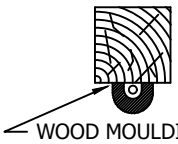

WOOD MOULDING OF 1 1/2" MINIMUM THICKNESS

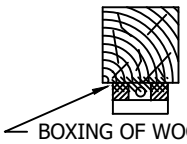

BOXING OF WOOD OF 1 1/2" MINIMUM THICK-NESS. THE COVER IS TO BE NAILED TO THE SIDE PIECES.

SEE PAGE 646.2 FOR NOTES

© 1998 - 2018 San Diego Gas & Electric Company. All rights reserved. Removal of this copyright notice without permission is not permitted under law.

REV	CHANGE	BY	DSGN	APPV	DATE	REV	CHANGE	BY	DSGN	APPV	DATE
C						F					
B	UPDATED STANDARDS	PEI	-	-	12/10/2018	E					
A	ORIGINAL ISSUE	-	PTA	VCK	03/01/2002	D					

X Indicates Latest Revision | Completely Revised | New Page | Information Removed

SDG&E ELECTRIC OVERHEAD CONSTRUCTION STANDARD

CUSTOMER - OWNED SERVICE AND METER POLES TEMPORARY/NON-CLIMBABLE

OH646.1

TABLE OF CONTENTS

GENERAL NOTES:

(A) THESE ARE MINIMUM REQUIREMENTS FOR ALL TEMPORARY SERVICES. TEMPORARY SERVICE IS FOR A PERIOD OF ONE YEAR OR LESS.

(B) **POLE LOCATION:**

POLE SHALL BE SET NOT MORE THAN 100 FEET NOR LESS THAN 10 FEET FROM THE SURFACE OF SDG&E SERVICE POLE AND SO LOCATED THAT ALL REQUIRED SERVICE DROP CLEARANCES WILL BE OBTAINED FROM GROUND, BUILDINGS, STRUCTURES AND OTHER CONDUCTORS ON SDG&E'S POLE INCLUDING FOREIGN COMMUNICATION AND SUPPLY CONDUCTORS. IT ALSO MUST BE LOCATED WITHIN A 20 FOOT RADIUS FROM A ROAD OR OTHER DRIVABLE SURFACE SO SDG&E CAN CONNECT AND MAINTAIN THE SERVICE DROP FROM A BUCKET TRUCK. IN SELECTING THE POLE LOCATION, CONSIDERATION SHOULD BE GIVEN TO PROVIDING ADEQUATE CLEARANCE IN AREAS WHERE:

1. CONSTRUCTION EQUIPMENT WILL BE OPERATED.
2. CHANGES IN GRADE OF STREETS, DRIVEWAY AND OTHER LANDS ARE PROPOSED.
3. BUILDINGS OR STRUCTURES ARE PROPOSED TO BE ADDED DURING THE PERIOD OF TEMPORARY SERVICE.

ADEQUATE CLEARANCES SHALL BE PROVIDED, WHETHER OR NOT SUCH AREAS OF CONFLICT OR OBSTRUCTION ARE ON THE PREMISES SERVED.

WHENEVER THERE IS ANY UNCERTAINTY REGARDING THE POLE LOCATION, CONTACT SDG&E AT ANY REGIONAL PROJECT MANAGEMENT OFFICE AND REQUEST AN ELECTRIC METER AND SERVICE LOCATION..

(C) **SERVICE DROP MINIMUM CLEARANCES:**

AT CENTER OF STREET OR 12 FEET FROM CURB WHICHEVER IS LESS . . . . . 18 FT.
AT CURB LINE . . . . . .16 FT.
OVER COMMERCIAL OR INDUSTRIAL DRIVEWAYS, PARKING AREAS OR AREAS CAPABLE OF BEING TRAVERSED BY VEHICLES . . . . . 16 FT.
OVER RESIDENTIAL DRIVEWAYS . . . . . 12 FT.*
OVER AGRICULTURAL AREAS . . . . . .15 FT.
OVER RAILROADS OR FOR OTHER SPECIAL CONDITIONS, CONSULT SDG&E'S REPRESENTATIVE.

*MAY BE REDUCED TO 10 FT. IF SSC SERVICE.

SERVICE DROP CABLE SHALL BE USED BY SDG&E. THE TYPE OF CONSTRUCTION USED BY THE CUSTOMER IS HIS OPTION.

(D) WHERE CLEARANCES CANNOT BE OBTAINED WITH THE 20 FOOT POLE SHOWN, A PERMANENT/CLIMBABLE POLE. IS REQUIRED. SEE STD. 645.

(F) ALL CONDUIT FITTINGS MUST BE RAINTIGHT. APPROVED WIRE, NOT LESS THAN NO. 8 AWG, SHALL BE USED IN THE SERVICE ENTRANCE CONDUIT.

(G) SAFETY SOCKET CAN WITH TEST-BYPASS FACILITIES IS REQUIRED WHEN POLE IS TO BE USED FOR COMMERCIAL/INDUSTRIAL PREMISES TEMPORARY/CONSTRUCTION POWER. SERVICE EQUIPMENT AND RECEPTACLES MUST BE RAIN TIGHT, PROPERLY RATED FOR THE LOAD TO BE SERVED AND SHALL BE ADEQUATELY BONDED AND GROUNDED.

(H) RECEPTACLES USED TO CONNECT PORTABLE TOOLS SHALL BE 3-POLE TYPE FOR SINGLE-PHASE MOTORS AND 4-POLE TYPE FOR THREE-PHASE MOTORS, ONE CONTACT TO BE USED FOR GROUNDING CONNECTION. WHERE MORE THAN ONE VOLTAGE IS USED, THE RECEPTACLES SHALL BE NON-INTERCHANGEABLE.

I. PERMIT AND INSPECTION MUST BE OBTAINED FROM THE INSPECTION AUTHORITY HAVING JURISDICTION BEFORE SERVICE WILL BE CONNECTED BY SDG&E.

J. CONSULT SDG&E FOR SERVICE REQUIREMENTS WHENEVER THREE-PHASE SERVICE IS DESIRED.

K. FLOODLIGHTS, SIGNS, ROPES AND ANY SIMILAR EQUIPMENT SHALL NOT BE ATTACHED TO TEMPORARY SERVICE METER POLES.

L. COVERING OF METALLIC CONDUIT WILL NOT BE REQUIRED ON METAL POLES, PROVIDED THE METAL POLE IS EFFECTIVELY GROUNDED AND PROVIDED ALL METALLIC CONDUITS ARE ADEQUATELY BONDED TO THE METAL POLE WITH APPROVED CLAMPS OR CONNECTORS.

© 1998 - 2018 San Diego Gas & Electric Company. All rights reserved. Removal of this copyright notice without permission is not permitted under law.

REV	CHANGE	BY	DSGN	APPV	DATE	REV	CHANGE	BY	DSGN	APPV	DATE
C						F					
B	UPDATED STANDARDS	PEI	-	-	12/10/2018	E					
A	ORIGINAL ISSUE	-	PTA	VCK	03/01/2002	D					

X Indicates Latest Revision | Completely Revised | New Page | Information Removed

SDG&E ELECTRIC OVERHEAD CONSTRUCTION STANDARD

CUSTOMER - OWNED SERVICE AND METER POLES
TEMPORARY/NON-CLIMBABLE

OH646.2

TABLE OF CONTENTS

GENERAL NOTES (CONT'D):

(M) ALL METER POLES MUST HAVE THE NUMERIC PORTION OF THE STREET ADDRESS FIRMLY ATTACHED AND FACING THE STREET OR DRIVABLE SURFACE. PLASTIC OR METALLIC NUMBERS OF THE TYPE USED FOR HOUSE ADDRESSES ARE ACCEPTABLE.

N. A TELEPHONE AND/OR CABLE TV SERVICE DROP MAY ATTACH TO A METER POLE PROVIDED:
1) THE ATTACHMENT IS OUTSIDE THE CLIMBING SPACE,
2) A MINIMUM RADIAL CLEARANCE OF 12" IS MAINTAINED FORM ANY PORTION OF THE DRIP LOOP, AND
3) IT MEETS ALL G.O. 95 REQUIREMENTS.

TABLE OF CONTENTS

© 1998 - 2018 San Diego Gas & Electric Company. All rights reserved. Removal of this copyright notice without permission is not permitted under law.

REV	CHANGE	BY	DSGN	APPV	DATE	REV	CHANGE	BY	DSGN	APPV	DATE
C						F					
B	UPDATED STANDARDS	PEI	-	-	12/10/2018	E					
A	ORIGINAL ISSUE	-	PTA	VCK	03/01/2002	D					

X Indicates Latest Revision | Completely Revised | New Page | Information Removed

SDG&E ELECTRIC OVERHEAD CONSTRUCTION STANDARD

CUSTOMER - OWNED SERVICE AND METER POLES
TEMPORARY/NON-CLIMBABLE

OH646.3

SCOPE: THIS STANDARD SHOWS CATHODIC PROTECTION WHERE THE RECTIFIER IS MOUNTED ON A FREE STANDING PEDESTAL AND THE OVERHEAD DISTRIBUTION LINES ARE USED TO CONNECT THE ANODE CONDUCTOR TO A REMOTE ANODE.

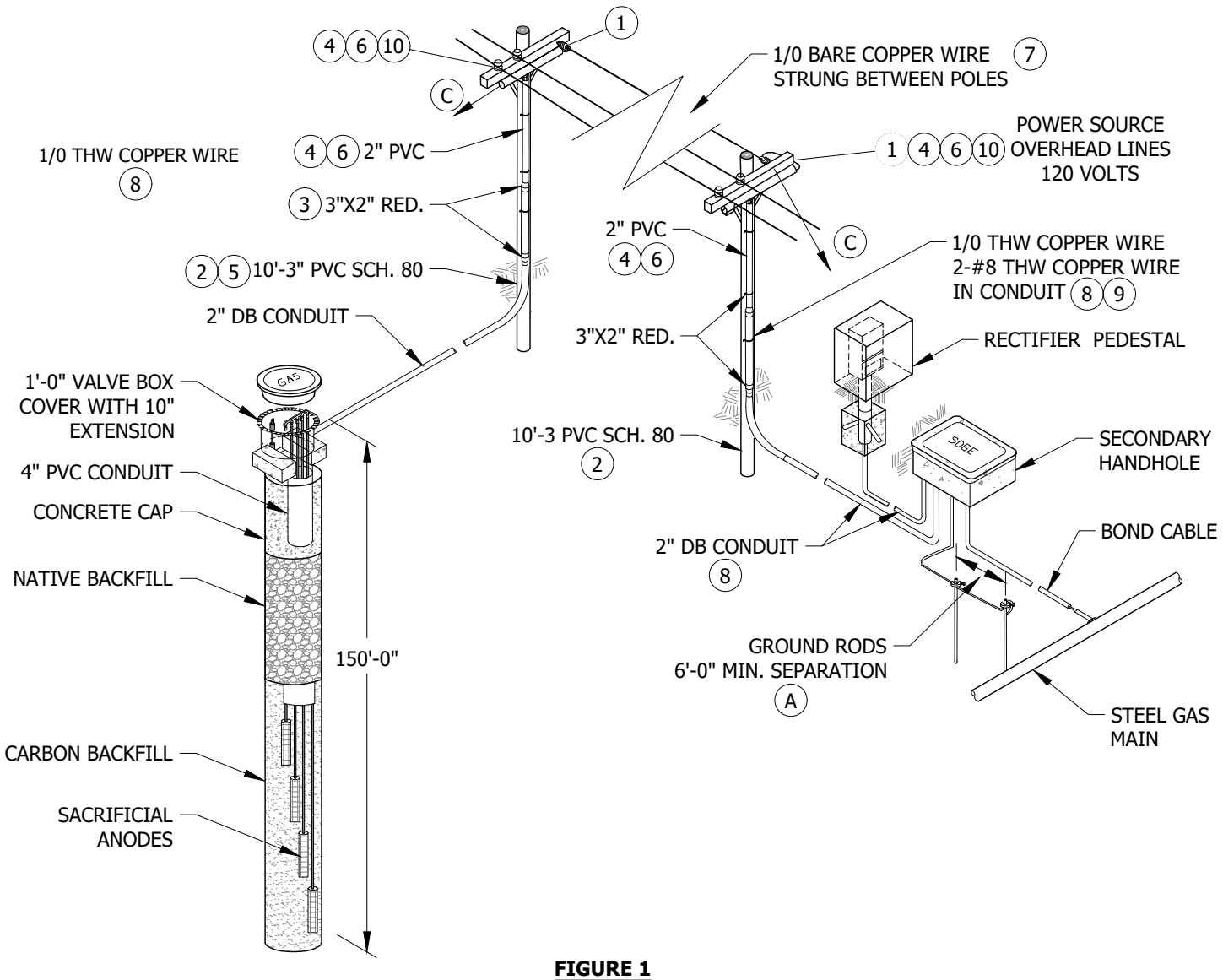

FIGURE 1

INSTALLATION:

(A) USE ONLY ONE GROUND ROD WHENEVER AN IMPEDANCE OF LESS THAN 25 OHMS CAN BE OBTAINED PER GO 95 RULE 21.2A.

B. ELECTRIC METER BASES, AMPLIFIERS, TELCO CABLE DRYERS AND SIMILAR EQUIPMENT ARE NOT PERMITTED ON CLIMBABLE POLES.

(C) SEE OH SECTION 900 FOR GUYING REQUIREMENTS.

D. GAS CONSTRUCTION CREW TO COMPLETE WORK UP TO 8' ABOVE FINISH GRADE ON CABLE POLE.

© 1998 - 2020 San Diego Gas & Electric Company. All rights reserved. Removal of this copyright notice without permission is not permitted under law.

REV	CHANGE	DR	BY	DSN	APV	DATE	REV	CHANGE	DR	BY	DSN	APV	DATE
C	TABLE UPDATE	EDM	JIK	JES	CZH	05/11/2020	F						
B	UPDATED STANDARDS	PEI	-	-	-	12/10/2018	E						
A	ORIGINAL ISSUE	-	-	PTA	RDG	01/01/1996	D						

TABLE OF CONTENTS

BILL OF MATERIALS:

ITEM	DESCRIPTION	QUANTITY	STANDARD PAGE	STOCK NUMBER	DESIGN UNITS
1	INSULATORS, SEC. D.E.	2	-	S235488	-
2	PVC SCHEDULE 80 3" W/CPLG	16'-0"	-	S251552	-
3	PVC RED'D 3" X 2" E	4	-	S573392	-
4	PVC SCHEDULE 40 2"	AS REQ'D	-	S251296	-
5	PIPESTRAPS, GALV. 3"	AS REQ'D	-	S697920	-
6	PIPESTRAPS, GALV. 2"	AS REQ'D	-	S697856	-
7	WIRE, BARE CPR, STRANDED, 1/0	AS REQ'D	-	S813570 (X)	-
8	WIRE, CPR, THW 1/0 600V	AS REQ'D	-	S808034 (X)	-
9	WIRE, CPR, THW #8 600V	AS REQ'D	-	S808320	-
10	CONNECTORS, WIRE, COM. TYPE	AS REQ'D	783-787	-	-
11	GROUND RODS, 5/8" X 8'	2	-	S603074 (X)	-
12	GROUND ROD CLAMPS, 5/8"	2	-	S230018 (X)	-

NOTES:

(X) THIS ITEM IS EXEMPT.

REFERENCE: NONE

TABLE OF CONTENTS

© 1998 - 2020 San Diego Gas & Electric Company. All rights reserved. Removal of this copyright notice without permission is not permitted under law.

REV	CHANGE	DR	BY	DSN	APV	DATE	REV	CHANGE	DR	BY	DSN	APV	DATE
C	TABLE UPDATE	EDM	JIK	JES	CZH	05/11/2020	F						
B	UPDATED STANDARDS	PEI	-	-	-	12/10/2018	E						
A	ORIGINAL ISSUE	-	-	PTA	RDG	01/01/1996	D						

MAIN TABLE OF CONTENTS

PAGE	SUBJECT
711	WIRE TABLES
720	TENSION SLEEVE
731	JUMPER SLEEVES
739	DEADENDS CLAMPS AND CLEVISES
745	GRIPS
750	INSULATORS
751	MOVED TO STANDARD 396
755	FIBERGLASS CONDUCTOR SPACER
758	TREE GUARDS
759	LINE GUARDS
760	CONDUCTOR TIES
773	POST INSULATOR CLAMPS AND D.E. ATTACHMENTS
775	ANGLE SUSPENSION CLAMPS
777	INSULATOR CONNECTORS
783	WEDGE CONNECTORS
784	COMPRESSION AND TERMINAL COMPRESSION CONNECTORS
785	ALUMINUM COMPRESSION CONNECTORS
787	CONNECTORS - BRONZE - TWO BOLT FOR COPPER TAPS AND JUMPERS
788	HOT LINE CLAMPS AND STIRRUPS
789	VIBRATION DAMPERS FOR BARE CONDUCTOR
793	TRANSFORMER SECONDARY TERMINAL CONNECTORS

© 1998 - 2023 San Diego Gas & Electric Company. All rights reserved. Removal of this copyright notice without permission is not permitted under law.

REV	CHANGE	DR	BY	DSN	APV	DATE	REV	CHANGE	DR	BY	DSN	APV	DATE
D	UPDATE TABLE ON CONTENTS	PEI	-	-	-	04/19/2019	G	ADDED OH787	ARC	PAS	MRF	KRG	03/10/2023
C	EDITORIAL CHANGES	-	JK	JS	MDJ	04/01/2018	F	EDITORIAL CHANGES	EDM	MRF	GLW	KRG	11/09/2022
B	EDITORIAL CHANGES	-	GW	JS	MDJ	01/25/2018	E	EDITORIAL CHANGES	EDM	JIK	JES	CZH	04/13/2020

X Indicates Latest Revision | Completely Revised | New Page | X Information Removed

SDG&E ELECTRIC OVERHEAD CONSTRUCTION STANDARDS

CONDUCTOR DATA & ACCESSORIES
TABLE OF CONTENTS

OH701.1

SCOPE: THIS STANDARD LISTS VARIOUS TYPES OF ALUMINUM CONDUCTORS USED FOR DISTRIBUTION INSTALLATIONS.

TABLE 1

ACSR/AW BARE											
SIZE OF WIRE	AWG OR KCM	4 (V)	2 (I)(III)	1/0 (I)(III)	3/0 (I)(III)	4/0 (V)	336.4 (V)	336.4 (I)(VIII)	397.5 (V)	636 (I)(VIII)	1033.5 (I)(VIII)
	CODE WORD	SWAN	SPARROW/ AW	RAVEN	PIGEON/ AW	PENGUIN	MERLIN/ AW	LINNET/ AW	IBIS	ROOK/AW	ORTOLAN/ AW
STOCK NUMBER		S812096	S812000	S811968	S812032	S812064	S811840	S811904	S811936	S811888	S811808
DESIGN UNITS		A4	A2	A1/0	A3/0	-	-	A336	A397	A636	A1033
CU. EQUIV. AWG OR KCM		6	4	2	1/0	2/0	4/0	4/0	250	400	650
STRANDING AL/STEEL		6/1	6/1	6/1	6/1	6/1	18/1	26/7	26/7	24/7	45/7
DIAMETER - INCHES		.250	.316	.398	.502	.563	.684	.721	.783	.977	1.213
WEIGHT - LBS PER 1,000 FT		54.6	86.8	138.2	219.4	276.8	357.7	440.7	520.3	785.6	1,138
MAXIMUM DESIGN TENSION - LBS		-	850	1,240	1,850	2,400	-	3,000	3,000	3,000	3,000
ULTIMATE TENSILE STRENGTH - LBS		-	2,760	4,425	6,300	-	-	13,500	-	22,000	27,700
AMPACITY-AMPERES (PER CONDUCTOR AT 75°C)		140	180	230	300	340	530	530	590	780	1,060
RESISTANCE OHMS PER 1,000 FT	CONDUCTOR AT 75°C	.53	.35	.23	.15	.12	.063	.063	.054	.033	.020

TABLE 2

ALUMOWELD/ALUMINUM (AWAC) BARE					
SIZE OF WIRE	AWG OR KCM	2 (I)(VI)	2 (I)(VII)	1/0 (I)(VII)	3/0 (I)(VII)
	CODE WORD	-	-	-	-
STOCK NUMBER		S812256	S812240	S812272	S812280
DESIGN UNITS		W2M	W2H	W1/0	W3/0
CU. EQUIV. AWG OR KCM		4	4	2	1/0
STRANDING ALUMINUM/ALUMOWELD		5/2	3/4	4/3	5/2
DIAMETER - INCHES		.330	.386	.447	.524
WEIGHT - LBS PER 1,000 FT		110.8	196.6	233.5	280.6
MAXIMUM DESIGN TENSION - LBS		1,600	3,000	-	-
ULTIMATE TENSILE STRENGTH - LBS		4,370	9,690	9,680	9,660
AMPACITY - AMPERES (PER CONDUCTOR AT 75°C)		180	180	255	335
RESISTANCE OHMS PER 1,000 FT	CONDUCTOR AT 75°C	.3295	.3286	.2193	.1402

TABLE 3

5005 BARE STRANDED ALUMINUM ALLOY (FOR FIELD MAINTENANCE ONLY)						
SIZE OF WIRE	AWG OR KCM	4	2	1/0	3/0	394.5
	CODE WORD	KAKI	KENCH	KIBE	KOPECK	RADIAN
STOCK NUMBER		-	S813952	S813920	S813984	S813888
DESIGN UNITS		-	5A2	5A1/0	5A3/0	5A394
CU. EQUIV. AWG OR KCM		6	4	2	1/0	4/0
STRANDING ALUMINUM ALLOY		7	7	7	7	19
DIAMETER - INCHES		.250	.316	.398	.502	.721
WEIGHT - LBS PER 1,000 FT		45.7	72.7	115.7	183.7	370.3
ULTIMATE TENS. STRENGTH - LBS		1,415	2,195	3,405	4,965	10,190
AMPACITY-AMPERES (PER CONDUCTOR AT 75°C)		140	185	255	345	540
RESISTANCE OHMS PER 1,000 FT	CONDUCTOR AT 75°C	.48	.30	.19	.12	.06

© 1998 - 2021 San Diego Gas & Electric Company. All rights reserved. Removal of this copyright notice without permission is not permitted under law.

REV	CHANGE	DR	BY	DSN	APV	DATE	REV	CHANGE	DR	BY	DSN	APV	DATE
C	DRAWING UPDATE	PEI	-	-	-	03/18/2019	F	NOTES UPDATE	EDM	MRF	JES	CZH	12/01/2021
B	EDITORIAL CHANGES	-	GW	JS	CZH	10/07/2018	E	TABLE UPDATE	-	RSL	JES	CZH	11/12/2019
A	EDITORIAL CHANGES	-	JK	JS	MDJ	04/01/2018	D	TABLE UPDATE	-	JCE	JES	CZH	06/14/2019

TABLE OF CONTENTS

TABLE 4

OVERHEAD BARE CONDUCTOR REEL DIMENSIONS AND WEIGHTS											
		ACSR/AW						AWAC			
SIZE OF WIRE	AWG	2	1/0	3/0	336.4	636	1033.5	2	2	1/0	3/0
	CODE WORD	SPARROW	RAVEN	PIGEON	LINNET	ROOK	ORTOLAN	-	-	-	-
STOCK NUMBER		S812000	S811968	S812032	S811904	S811888	S811808	S812256	S812240	S812272	S812280
STRANDING		6/1	6/1	6/1	26/7	24/7	45/7	5/2	3/4	4/3	5/2
REEL SIZE - INCHES		48X24	60X32	60X32	68X38	84X45	90X45	48X24	48X24	50X32	60X32
WIRE QUANTITY - FT		14,980	17,500	10,500	9,300	8,300	9,500	14,000	8,000	12,800	8,000
REEL TARE - LBS		225	340	340	500	900	1,030	225	225	260	340
WIRE WEIGHT - LBS		1,303	2,431	2,333	4,043	6,385	10,556	1,556	1,569	2,977	2,222
REEL + WIRE WEIGHT - LBS		1,528	2,771	2,673	4,543	7,285	11,586	1,781	1,794	3,237	2,562
WEIGHT - LBS PER 1,000 FT		86.8	138.2	219.4	440.7	785.6	1,138	110.8	196.6	233.5	280.6
FT/LB		11.5	7.2	4.5	2.3	1.3	0.9	9	5.1	4.3	3.6

INSTALLATION: NONE

BILL OF MATERIALS: NONE

NOTES:

(I) NORMALLY PURCHASED MATERIAL.

II. 336.4, 636 AND 1033 KCM MAY BE INSTALLED ON THE COAST. COPPER EQUIVALENTS SHALL BE SUBSTITUTED FOR ACSR/AW, WHERE SMALLER SIZES OF ACSR/AW ARE PROHIBITED. SMALL ALUMINUM CONDUCTOR (LESS THAN 336.4 ACSR/AW AND ALL AWAC) SHALL NOT BE INSTALLED (FOR PRIMARY VOLTAGE) WITHIN CONTAMINATION DISTRICT 1, NOR WITHIN 5 MILES OF THE COAST.

(III) FOR USE IN LIGHT LOADING DISTRICTS ONLY.

IV. THE AMPACITY FIGURES GIVEN SHOULD BE CONSIDERED AS MAXIMUM OR CHANGEOUT VALUES, BUT IF INCREASED VALUES ARE DESIRED, CONTACT ELECTRIC DISTRIBUTION ENGINEERING.

(V) MATERIAL NO LONGER PURCHASED. FIELD MAINTENANCE ONLY. NOT FOR NEW CONSTRUCTION.

(VI) MINIMUM REQUIREMENT FOR USE IN HEAVY LOADING DISTRICTS AND TIER 3.

(VII) FOR USE IN EXTRA HEAVY LOADING DISTRICTS.

(VIII) FOR USE IN ALL LOADING DISTRICTS.

REFERENCE: NONE

TABLE OF CONTENTS

© 1998 - 2021 San Diego Gas & Electric Company. All rights reserved. Removal of this copyright notice without permission is not permitted under law.

REV	CHANGE	DR	BY	DSN	APV	DATE	REV	CHANGE	DR	BY	DSN	APV	DATE
C	DRAWING UPDATE	PEI	-	-	-	03/18/2019	F	NOTES UPDATE	EDM	MRF	JES	CZH	12/01/2021
B	EDITORIAL CHANGES	-	GW	JS	CZH	10/07/2018	E	TABLE UPDATE	-	RSL	JES	CZH	11/12/2019
A	EDITORIAL CHANGES	-	JK	JS	MDJ	04/01/2018	D	TABLE UPDATE	-	JCE	JES	CZH	06/14/2019

SCOPE: THIS STANDARD LISTS VARIOUS TYPES OF COMPACT ALUMINUM CONDUCTORS USED FOR SECONDARY AND SERVICE INSTALLATIONS. ALL RATED FOR 600V.

TABLE 1

		REVERSE TWIST SECONDARY (RTS) CABLE WITH AWAC BARE NEUTRAL MESSENGER (II)				
		TRIPLEX			QUADRUPLEX	
SIZE OF WIRE	AWG	1/0 RTS (I)	3/0 RTS (I)	336.4 RTS (I)	1/0 RTS (I)	3/0 RTS (I)
	CODE WORD	-	-	-	-	-
STOCK NUMBER		S194432	S194464	S194470	S196532	S196534
DESIGN UNITS		CS1/0	CS3/0	CS336	CS1/0Q	CS3/0Q
PHASE CONDUCTOR ALUMINUM STRANDS		7	7	19	7	7
MESSENGER AWAC (SIZE - STRANDING)		2 3/4	2 3/4	4/0-6/1	2 3/4	2 3/4
INSULATION THICKNESS - INCHES		.060	.060	.080	0.06	0.06
CABLE DIAMETER - INCHES		.976	1.168	2.010	1.059	1.238
WEIGHT - LBS PER 1,000 FT		481	629	1,120	606	804
MAXIMUM DESIGN TENSION - LBS		2,000	2,000	2,000	2,000	2,000
ULTIMATE TENSILE STRENGTH - LBS		9,793	9,793	7,685	9,690	9,690
AMPACITY - AMPERES (PER CONDUCTOR)		180	250	400	160	225
RESISTANCE OHMS PER 1,000 FT	PHASE CONDUCTOR AT 75°C	.1981	.1248	.0632	0.2001	0.126
	MESSENGER AT 75°C	.3286	.3286	.0971	0.3286	0.3286

TABLE 2

			SECONDARY AND SERVICE DROP CABLE (SSC AL) WITH ACSR/AW BARE NEUTRAL MESSENGER (II) (III)					
			TRIPLEX				QUADRUPLEX	
SIZE OF WIRE	AWG		4 (I)	2 (I)	1/0 (I)	3/0 (I)	2 (I)	3/0 (I)
	CODE WORD		PERIWINKLE	CONCH	NERITINA	-	-	-
STOCK NUMBER			S196546 (X)	S196510 (X)	S196480	S196520	S196470	S196474
DESIGN UNITS			TX4A	TX2A	TX1/0A	TX3/0A	QX2A	QX3/0A
PHASE CONDUCTOR ALUMINUM STRANDS			7	7	10	16	7	16
MESSENGER ACSR/AW (SIZE - STRANDING)			4-6/1	2-6/1	1/0-6/1	3/0-6/1	4-6/1	1/0-6/1
INSULATION THICKNESS - INCHES			.045	.045	.060	.060	.045	.060
CABLE DIAMETER - INCHES			.61	.73	.93	1.173	.785	1.205
WEIGHT - LBS PER 1,000 FT			162.6	244.4	394.6	618	306.6	750.2
AMPACITY - AMPERES (PER CONDUCTOR)			100	135	180	215	112	192
RESISTANCE OHMS PER 1,000 FT	PHASE CONDUCTOR AT 75°C		.5008	.3152	.1981	.126	.3152	.1248
	MESSENGER	TRIPLEX AT 75°C	.4769	.2996	.1883	.0773	-	-
		QUADRUPLEX AT 75°C	-	-	-	-	.3994	.1578

TABLE 3

POLYETHYLENE INSULATED ALL-ALUMINUM (WEATHERPROOF-NOT 600V RATED) (FIELD MAINTENANCE ONLY) (II)							
SIZE OF WIRE	AWG OR KCMILS	6	4	2	1/0	3/0	336.4
	CODE WORD	APPLE	APRICOT	PEACH	QUINCE	FIG	ANONA
STOCK NUMBER		-	-	-	S813440	S813504	S813408
DESIGN UNITS		-	-	-	PAA1/0	PAA3/0	PAA336
STRANDING - ALL ALUMINUM		SOLID	7	7	7	7	18
DIAMETER - INCHES		.225	.294	.386	.493	.589	.791
WEIGHT - LBS PER 1,000 FT		32	53	88	141	211	391
ULTIMATE TENS. STRENGTH - LBS		475	785	1,204	1,771	2,705	5,643
AMPACITY - AMPERES (PER CONDUCTOR)		95	125	170	230	310	480
RESISTANCE OHMS PER 1,000 FT	CONDUCTOR AT 75°C	.79	.51	.32	.20	.13	.063

© 1998 - 2021 San Diego Gas & Electric Company. All rights reserved. Removal of this copyright notice without permission is not permitted under law.

REV	CHANGE	DR	BY	DSN	APV	DATE	REV	CHANGE	DR	BY	DSN	APV	DATE
C	DRAWING UPDATE	PEI	-	-	-	03/18/2019	F	NOTES UPDATE	EDM	MRF	JES	CZH	12/01/2021
B	EDITORIAL CHANGES	-	GW	JS	CZH	10/07/2018	E	TABLE UPDATE	-	RSL	JES	CZH	11/12/2019
A	EDITORIAL CHANGES	-	JK	JS	MDJ	04/01/2018	D	TABLE UPDATE	-	JCE	JES	CZH	06/14/2019

TABLE OF CONTENTS

TABLE 4

SIZE OF WIRE		SECONDARY SSC REEL DIMENSIONS AND WEIGHTS					
		TRIPLEX				QUADRUPLEX	
AWG		4	2	1/0	3/0	2	3/0
CODE WORD		PERIWINKLE	CONCH	NERITINA	-	-	-
STOCK NUMBER		S196546 (X)	S196510 (X)	S196480	S196520	S196470	S196474
STRANDING		7	7	10	16	7	16
ULTIMATE TENSION - LBS		1,875	2,875	4,425	7,690	1,875	4,425
REEL SIZE - INCHES		-	-	-	-	-	-
WIRE QUANTITY - FT		-	-	-	-	-	-
REEL TARE - LBS		-	-	-	-	-	-
WIRE WEIGHT - LBS		-	-	-	-	-	-
TOTAL WEIGHT - LBS		-	-	-	-	-	-
WEIGHT - LBS PER 1,000 FT		162.6	244.4	394.6	618	306.6	750.2
FT/LB		-	-	-	-	-	-

TABLE 5

SIZE OF WIRE		REVERSE TWIST SECONDARY (RTS) CABLE WITH AWAC BARE NEUTRAL MESSENGER				
		TRIPLEX			QUADRUPLEX	
AWG		1/0	3/0	336.4	1/0 RTS	3/0 RTS
CODE WORD		-	-	-	-	-
STOCK NUMBER		S194432	S194464	S194470	S196532	S196534
STRANDING		7	7	19	7	7
ULTIMATE TENSION - LBS		9,793	9,793	7,685	9,690	9,690
REEL SIZE - INCHES		-	-	-	-	-
WIRE QUANTITY - FT		-	-	-	-	-
REEL TARE - LBS		-	-	-	-	-
WIRE WEIGHT - LBS		-	-	-	-	-
TOTAL WEIGHT - LBS		-	-	-	-	-
WEIGHT - LBS PER 1,000 FT		481	629	1,120	606	804
FT/LB		-	-	-	-	-

INSTALLATION: NONE

BILL OF MATERIALS: NONE

NOTES:

(I) NORMALLY PURCHASED MATERIAL.

(II) USE COPPER SERVICE WIRE WITHIN CONTAMINATION DISTRICT 1, OR WITHIN 5 MILES OF THE COAST.

(III) MIDSPAN SERVICES ARE NOT TO BE INSTALLED ON SSC CONDUCTORS UNLESS LASHED TO MESSENGER GUY.

IV. HAND BUILD SECONDARIES WITH 4/0-7 STRAND COPPER FOR SECONDARY LOADS REQUIRING 336.4 ACSR.

V. AMPACITY BASED ON 75°C CONDUCTOR TEMPERATURE, 40°C AMBIENT AND 2 FPS WIND, AND SHALL NOT BE EXCEEDED.

(X) THIS ITEM IS EXEMPT.

REFERENCE: NONE

© 1998 - 2021 San Diego Gas & Electric Company. All rights reserved. Removal of this copyright notice without permission is not permitted under law.

REV	CHANGE	DR	BY	DSN	APV	DATE	REV	CHANGE	DR	BY	DSN	APV	DATE
C	DRAWING UPDATE	PEI	-	-	-	03/18/2019	F	NOTES UPDATE	EDM	MRF	JES	CZH	12/01/2021
B	EDITORIAL CHANGES	-	GW	JS	CZH	10/07/2018	E	TABLE UPDATE	-	RSL	JES	CZH	11/12/2019
A	EDITORIAL CHANGES	-	JK	JS	MDJ	04/01/2018	D	TABLE UPDATE	-	JCE	JES	CZH	06/14/2019

TABLE OF CONTENTS

SCOPE: THIS STANDARD LISTS VARIOUS TYPES OF COPPER CONDUCTORS USED THROUGHOUT THE DISTRIBUTION SYSTEM.

TABLE 1

BARE COPPER WIRE											
SIZE OF WIRE	AWG	6 (I)		4 (I)		2 (I)	1/0 (I)	2/0	4/0 (I)	- (I)	-	-
	CIRC MILS	26,240		41,740		66,360	105,600	133,100	211,600	500K	750K	1,000K
STOCK NUMBER		S813780 (V)		S813760 (V)		S813664	S813570 (X)	S813632	S813728	S813792	S813824	S813600
DESIGN UNITS		BS6R		BS4R		BS2R	BS1/0	BS2/0	BS4/0	BS500	BS750	BS1000
NUMBER OF STRANDS		1 (VII)	3	1 (VII)	3	3	7	7	7	37	61	61
DIAMETER - INCHES		.1620	.201	.204	.254	.320	.368	.414	.522	.813	.997	1.151
AREA - SQUARE INCHES		.021	.032	.033	.033	.052	.083	.105	.166	.393	.589	.785
WEIGHT - LBS/1,000 FT		79.46	82.5	126.4	127.6	202.9	325.8	410.9	653.3	1,544.0	2,316.0	3,088.0
ULTIMATE TENSILE STRENGTH - LBS	HARD DRAWN	1,280	1,204	1,970	1,879	2,913	4,753	5,925	9,154	22,510	34,090	45,030
AMPACITY (AMPERES) (PER COND)	B. HARD DRAWN COND AT 75°C	120	130	170	180	240	310	360	480	840	1,090	1,300
RESISTANCE AT 75°C OHMS/1,000 FT		.49	.49	.31	.31	.19	.12	.10	.061	.026	.018	.014

TABLE 2

WEATHERPROOF COPPER WIRE														
SIZE OF WIRE	AWG	8	6		6 (5KV-XLP)	4 (I)		2 (I)	1/0 (I)	2/0	4/0	- (I)	-	-
	CIRC MILS	16,510	26,240		-	41,740		66,360	105,600	133,100	211,600	500K	750K	1,000K
DESIGN UNITS		WP8	WP6		5K	WP4		WP2	WP1/0	WP2/0	WP4/0	WP500	WP750	-
STOCK NUMBER		- (IV)	S812512 (VI)		S194304	S812480 (VI)		S812608 (VI)	S812576 (VI)	- (IV)	S812640 (IV)	- (IV)	S812704	-
NUMBER OF STRANDS		1	1	3	7	1	3	7	7	7	7	37	61	61
DIAMETER - INCHES		.194	.228	-	.424	.270	-	-	.499	.544	.653	.980	1.204	1.357
AREA - SQUARE INCHES		.013	.021	.032	.14	.033	.033	.052	.083	.105	.166	.393	.589	.785
WEIGHT - LBS/1,000 FT		56	87	-	129	136	-	-	367	458	715	1,698	2,476	3,275
ULTIMATE TENSILE STRENGTH - LBS	HARD DRAWN	826	1,280	1,204	-	1,970	1,879	2,913	4,753	5,925	9,154	22,510	34,090	45,030
	WP MED HARD DRAWN	667	1,046	995	-	1,642	1,564	2,360	3,953	4,952	7,772	18,726	28,272	37,210
AMPACITY (AMPERES) (PER COND)	WP COND AT 75°C	71	96	-	75	128	-	175	243	282	387	684	871	1,055
RESISTANCE AT 75°C OHMS/1,000 FT		.76	.49	.49	-	.31	.31	.19	.12	.10	.061	.026	.018	.014

INSTALLATION: NONE

BILL OF MATERIALS: NONE

© 1998 - 2021 San Diego Gas & Electric Company. All rights reserved. Removal of this copyright notice without permission is not permitted under law.

REV	CHANGE	DR	BY	DSN	APV	DATE	REV	CHANGE	DR	BY	DSN	APV	DATE
C	DRAWING UPDATE	PEI	-	-	-	03/18/2019	F	NOTES UPDATE	EDM	MRF	JES	CZH	12/01/2021
B	EDITORIAL CHANGES	-	GW	JS	CZH	10/07/2018	E	TABLE UPDATE	-	RSL	JES	CZH	11/12/2019
A	EDITORIAL CHANGES	-	JK	JS	MDJ	04/01/2018	D	TABLE UPDATE	-	JCE	JES	CZH	06/14/2019

TABLE OF CONTENTS

NOTES:

(I) NORMALLY PURCHASED MATERIAL.

II. FOR PRIMARY CONDUCTORS, USE COPPER #4 THRU 4/0 IN CONTAMINATION DISTRICT 1 OR WITHIN 5 MILES FROM THE COAST. 336 ACSR TO 1033 ACSR IS ALLOWED IN CONTAMINATION DISTRICT 1.

III. THE AMPACITY FIGURES GIVEN SHOULD BE CONSIDERED AS MAXIMUM OR CHANGEOUT VALUES.

(IV) NO LONGER PURCHASED. SUBSTITUTE WITH THW WIRE. (a)

(V) STOCK NUMBER IS FOR 3 STRAND ONLY.

(VI) 50'-0" HANDCOILS ONLY.

(VII) NO LONGER PURCHASED. FIELD MAINTENANCE ONLY.

(X) THIS ITEM IS EXEMPT.

REFERENCE:

(a) REFER TO OH711.7, COPPER - SECONDARY THW, AND SERVICE DROP CABLE WIRE TABLES.

TABLE OF CONTENTS

© 1998 - 2021 San Diego Gas & Electric Company. All rights reserved. Removal of this copyright notice without permission is not permitted under law.

REV	CHANGE	DR	BY	DSN	APV	DATE	REV	CHANGE	DR	BY	DSN	APV	DATE
C	DRAWING UPDATE	PEI	-	-	-	03/18/2019	F	NOTES UPDATE	EDM	MRF	JES	CZH	12/01/2021
B	EDITORIAL CHANGES	-	GW	JS	CZH	10/07/2018	E	TABLE UPDATE	-	RSL	JES	CZH	11/12/2019
A	EDITORIAL CHANGES	-	JK	JS	MDJ	04/01/2018	D	TABLE UPDATE	-	JCE	JES	CZH	06/14/2019

SCOPE: THIS STANDARD LISTS VARIOUS TYPES OF COPPER CONDUCTORS USED THROUGHOUT THE DISTRIBUTION SYSTEM.

TABLE 1

COPPER WIRE - TYPE THW																		
SIZE OF WIRE	AWG	12 (I)	10 (I)	8 (I)	6 (I)	4 (I)	2 (I)	1/0 (I)	2/0	3/0	4/0 (I)	-	-	-	-	- (I)	-	-
	CIRC MILS	6,530	10,382	16,510	26,250	41,740	66,370	105,500	133,100	167,800	211,600	250K	300K	350K	400K	500K	750K	1,000 K
STOCK NUMBER		S808096	S808064	S808320	S808288	S808256	S808162 (X)	S808034 (X)	S808944	-	S808224	-	-	-	-	S808928	-	-
DESIGN UNITS		THW12	THW10	THW8	THW6	THW4	THW2	THW1/0	THW2/0	-	THW4/0	-	-	-	-	THW500	-	-
NUMBER OF STRANDS		7	7	7	7	7	7	19	19	19	19	37	37	37	37	37	61	61
APPROXIMATE DIAMETER - INCHES	BARE	.092	.116	.146	.184	.232	.292	.373	.418	.470	.528	.575	.630	.681	.728	.813	.998	1.152
	INSULATED CONDUCTOR	.179	.199	.259	.323	.372	.433	.549	.595	.647	.705	.788	.843	.895	.942	1.029	1.249	1.404
APPROX. AREA OF INSULATED CONDUCTOR (SQ IN.)		.025	.031	.053	.082	.109	.147	.237	.278	.329	.390	.488	.558	.629	.697	.832	1.225	1.548
APPROX. WEIGHT INSULATED CONDUCTOR (LBS/1,000 FT)		35	48	77	120	170	260	410	510	620	770	920	1,090	1,260	1,420	1,760	2,610	3,420
AMPACITY (AMPERES) AT 75°C	THREE CONDUCTOR IN CONDUIT	20	30	45	65	85	115	150	175	200	230	255	285	310	335	380	475	545
	SINGLE CONDUCTOR IN FREE AIR	25	40	65	96	125	170	230	265	310	360	405	445	505	545	620	785	935
RESISTANCE AT 75°C OHMS PER 1,000 FT		1.93	1.21	.76	.49	.31	.19	.12	.097	.077	.061	.052	.043	.037	.033	.026	.018	.014

TABLE 2

BLACK LOW-DENSITY POLYETHYLENE SELF-SUPPORTING COPPER SECONDARY AND SERVICE CONDUCTOR WITH BARE HARD DRAWN COPPER NEUTRAL MESSENGER, RATED 600V								
CONDUCTOR		DUPLEX	TRIPLEX			QUADRUPLEX		
SIZE OF WIRE	AWG	8 (I)	6 (I)	4 (I)	2 (I)	6 (IV)	4 (I)	2 (I)
	CODE WORD	KAPPA	FUTURA	IONIC	CENTURY	CHEYENNE	-	-
STOCK NUMBER		S196432	S196384	S196320	S196288	S196416	S196352	S196530
DESIGN UNITS		DX8C	TX6C	TX4C	TX2C	QX6C	QX4C	QX2C
STRANDING	MESSENGER	7	6-SOLID	4-SOLID	2-7	6-SOLID	4-SOLID	7
	PHASE CONDUCTOR	7	7	7	7	7	7	7
INSULATION THICKNESS - INCHES		.045	.045	.045	.045	.045	.045	.045
CABLE DIAMETER - INCHES		.42	.58	.66	.79	.68	.82	.9
WEIGHT, LBS PER 1,000 FT		115	275	430	670	375	580	893
ULTIMATE TENSILE STRENGTH (LBS)		777	1,280	1,970	3,042	1,280	1,970	3,050
AMPACITY (AMPERES) AT 75°C		70	100	135	180	80	120	135
RESISTANCE OHMS PER 1,000 FT AT 75°C	MESSENGER AND PHASE COND	.779	.490	.308	.193	.490	.308	.200

TABLE OF CONTENTS

© 1998 - 2021 San Diego Gas & Electric Company. All rights reserved. Removal of this copyright notice without permission is not permitted under law.

REV	CHANGE	DR	BY	DSN	APV	DATE	REV	CHANGE	DR	BY	DSN	APV	DATE
C	DRAWING UPDATE	PEI	-	-	-	03/18/2019	F	NOTES UPDATE	EDM	MRF	JES	CZH	12/01/2021
B	EDITORIAL CHANGES	-	GW	JS	CZH	10/07/2018	E	TABLE UPDATE	-	RSL	JES	CZH	11/12/2019
A	EDITORIAL CHANGES	-	JK	JS	MDJ	04/01/2018	D	TABLE UPDATE	-	JCE	JES	CZH	06/14/2019

TABLE 3

REVERSE TWIST SECONDARY (RTS) CABLE WITH BARE HARD DRAWN COPPER NEUTRAL MESSENGER			
SIZE OF WIRE	**AWG**	**#2 RTS (I)**	**1/0 RTS (I)**
	CODE WORD	**NA**	**NA**
STOCK NUMBER		S193612	S193610
DESIGN UNITS		CUS#2	CUS1/0
STRANDING	**PHASE CONDUCTOR COPPER STRANDS**	7	19
	MESSENGER (SIZE STRANDING)	2-7	1/0-7
INSULATION THICKNESS - INCHES		.045	.060
CABLE DIAMETER - INCHES		1.073	1.309
WEIGHT, LBS PER 1,000 FT		701	1,095
ULTIMATE TENSILE STRENGTH (LBS)		3,050	4,750
AMPACITY (AMPERES) (PER CONDUCTOR) AT 75°C		155	205
RESISTANCE OHMS PER 1,000 FT	**PHASE COND AT 75°C**	.2004	.126
	MESSENGER AT 75°C	.2004	.126

INSTALLATION: NONE

BILL OF MATERIALS: NONE

NOTES:

(I) NORMALLY PURCHASED MATERIAL.

II. USE SELF-SUPPORTING COPPER SERVICE CABLE WITHIN CONTAMINATION DISTRICT 1, OR WITHIN 5 MILES OF THE COAST.

III. THE AMPACITY VALUES GIVEN ARE MAXIMUM OR CHANGEOUT VALUES.

(IV) NO LONGER PURCHASED.

(X) THIS ITEM IS EXEMPT.

REFERENCE: NONE

TABLE OF CONTENTS

© 1998 - 2021 San Diego Gas & Electric Company. All rights reserved. Removal of this copyright notice without permission is not permitted under law.

REV	CHANGE	DR	BY	DSN	APV	DATE	REV	CHANGE	DR	BY	DSN	APV	DATE
C	DRAWING UPDATE	PEI	-	-	-	03/18/2019	F	NOTES UPDATE	EDM	MRF	JES	CZH	12/01/2021
B	EDITORIAL CHANGES	-	GW	JS	CZH	10/07/2018	E	TABLE UPDATE	-	RSL	JES	CZH	11/12/2019
A	EDITORIAL CHANGES	-	JK	JS	MDJ	04/01/2018	D	TABLE UPDATE	-	JCE	JES	CZH	06/14/2019

SCOPE: THIS STANDARD LISTS THE PROPERTIES OF THE COPPER TREE WIRE USED THROUGHOUT THE DISTRIBUTION SYSTEM.

TABLE 1

SIZE OF WIRE	A.W.G.	2
	CIRCULAR MILS.	66,370
STOCK NUMBER		S815460
NUMBER OF STRANDS		7
CONDUCTOR AREA SQUARE INCHES		.0521
NOMINAL O.D. INCHES		.622
BARE CONDUCTOR DIAMETER - INCHES		.292
APPROX. WEIGHT LBS. PER 1,000 FT.		320
ULTIMATE TENSILE STRENGTH - LBS.		3,050
CAPACITY AMPERES AT 75°C		167
RESISTANCE AT 75°C OHMS M FEET		.20
DESIGN UNITS		TREE2

INSTALLATION: NONE

BILL OF MATERIALS: NONE

NOTES: NONE

REFERENCE: NONE

TABLE OF CONTENTS

© 1998 - 2021 San Diego Gas & Electric Company. All rights reserved. Removal of this copyright notice without permission is not permitted under law.

REV	CHANGE	DR	BY	DSN	APV	DATE	REV	CHANGE	DR	BY	DSN	APV	DATE
C	DRAWING UPDATE	PEI	-	-	-	03/18/2019	F	NOTES UPDATE	EDM	MRF	JES	CZH	12/01/2021
B	EDITORIAL CHANGES	-	GW	JS	CZH	10/07/2018	E	TABLE UPDATE	-	RSL	JES	CZH	11/12/2019
A	EDITORIAL CHANGES	-	JK	JS	MDJ	04/01/2018	D	TABLE UPDATE	-	JCE	JES	CZH	06/14/2019

SCOPE: THIS STANDARD LISTS THE TYPE OF COVERED COPPER EQUIPMENT AND LINE WIRE JUMPERS AND GROUND WIRE USED THROUGHOUT THE DISTRIBUTION SYSTEM. THESE WIRES ARE NOT TO BE USED FOR STRINGING.

TABLE 1

HENDRIX TAP WIRE					
WIRE DETAILS		CU			
		#4 (I)	#2 (I)	1/0 (I)	4/0 (I)
STOCK NUMBER		S812124	S812122	S812120	S812126
DESIGN UNITS		HEND4	HEND2	HEN1/0	HEN4/0
STRANDING		7	7	19	19
DIAMETER - INCHES	BARE	0.232	0.283	0.362	0.512
	TOTAL	0.532	0.583	0.662	0.812
WEIGHT - LBS PER 1,000 FT		214	290	428	783
DRAW TYPE (SOFT/MED/MED-HD/HARD)		SOFT	SOFT	SOFT	SOFT
AMPACITY (A) - PER CONDUCTOR AT 75°C CONDUCTOR TEMP		175	230	304	464

TABLE 2

WIRE DETAILS		CU				
		#4 (I)(III)	#4 (I)(II)	1/0 (I)(II)	4/0 (I)(II)	500 (I)(II)
STOCK NUMBER		S812490	S815044	S812114 (X)	S812106	S812108
DESIGN UNITS		4POLY	POLY4J	CW1/0	CW4/0	CW500
STRANDING		1	7	7	7	37
DIAMETER - INCHES	BARE	0.204	0.232	0.357	0.506	0.79
	TOTAL	0.424	0.285	0.477	0.626	0.95
WEIGHT - LBS PER 1,000 FT		170	141	363.3	707.6	1,637.2
DRAW TYPE (SOFT/MED/MED-HD/HARD)		SOFT	MED-HARD	SOFT	SOFT	SOFT
AMPACITY (A) - PER CONDUCTOR AT 75°C		65	175	305	465	785

TABLE OF CONTENTS

INSTALLATION:

A. THESE COVERED WIRES DO NOT HAVE INSULATION RATINGS AND ARE INTENDED FOR INCIDENTAL CONTACT ONLY. THEY ARE TO BE TREATED LIKE BARE WIRE.

BILL OF MATERIALS: NONE

NOTES:

(I) NORMALLY PURCHASED MATERIAL.

(II) A COVERED TIE WIRE MUST BE USED WHEN INSTALLING COVERED JUMPER WIRE ON TIE TOP STAND-OFF INSULATORS. (a)

(III) THIS WIRE IS FOR GROUND ONLY.

IV. WHEN JUMPERING FROM LINE TO LINE, USE THE FOLLOWING GUIDELINES TO DETERMINE JUMPER SIZE AND MATERIAL:

a. IF LINE WIRE IS THE SAME SIZE AND MATERIAL ON BOTH SIDES, JUMPER SHALL MATCH.

b. IF LINE WIRE IS OF DIFFERENT MATERIAL ON EACH SIDE (E.G. COPPER ON ONE SIDE, ALUMINUM ON OTHER), JUMPER SHALL MATCH LARGER AMPACITY AND SHALL BE COPPER IF AVAILABLE.

c. IF LINE WIRE SIZES ARE DIFFERENT AND MATERIAL IS THE SAME, JUMPER SHALL MATCH LARGER SIZE AND MATERIAL.

V. WHEN JUMPERING LINE TO EQUIPMENT, JUMPERS SHALL BE COPPER USED WITH A WEDGE CONNECTOR. (b)

(X) THIS ITEM IS EXEMPT.

REFERENCE:

(a) SEE OH760 FOR COPPER TIE WIRES.

(b) SEE OH783 FOR WEDGE CONNECTORS.

© 1998 - 2021 San Diego Gas & Electric Company. All rights reserved. Removal of this copyright notice without permission is not permitted under law.

REV	CHANGE	DR	BY	DSN	APV	DATE	REV	CHANGE	DR	BY	DSN	APV	DATE
C	DRAWING UPDATE	PEI	-	-	-	03/18/2019	F	NOTES UPDATE	EDM	MRF	JES	CZH	12/01/2021
B	EDITORIAL CHANGES	-	GW	JS	CZH	10/07/2018	E	TABLE UPDATE	-	RSL	JES	CZH	11/12/2019
A	EDITORIAL CHANGES	-	JK	JS	MDJ	04/01/2018	D	TABLE UPDATE	-	JCE	JES	CZH	06/14/2019

SCOPE: THIS STANDARD LISTS VARIOUS TYPES AND SIZES OF COPPER CONDUCTORS PACKAGED AS HANDCOILS USED FOR JUMPERS AND PRIMARY AND SECONDARY REPAIR.

TABLE 1

COPPER HAND COILS (FOR FIELD MAINTENANCE ONLY)									
WIRE DESCRIPTION		**#8 AWG BARE HARD DRAWN**	**#6 AWG BARE HARD DRAWN**	**#4 AWG BARE HARD DRAWN**	**#2 AWG BARE HARD DRAWN**	**#6 AWG SOLID HARD DRAWN POLYCOVERED**	**#4 AWG SOLID HARD DRAWN POLYCOVERED**	**#4 AWG MEDIUM HARD DRAWN POLYCOVERED**	**#2 AWG MEDIUM HARD DRAWN POLYCOVERED**	**1/0 AWG MEDIUM HARD DRAWN POLYCOVERED**
CIRCULAR MILS		16,510	26,240	41,740	66,360	26,240	41,740	41,740	66,370	105,600
NUMBER OF STRANDS		1	3	3	3	1	1	7	7	7
DIAMETER (INCHES)	**BARE**	0.1285	0.201	0.254	0.32	0.162	0.204	0.232	0.292	0.368
	TOTAL	-	-	-	-	0.220	0.260	0.285	0.380	0.486
AREA (SQ. INCHES)	**BARE**	0.013	0.032	0.033	0.052	0.021	0.033	0.033	0.052	0.083
	TOTAL	-	-	-	-	0.40	0.050	0.050	0.110	0.190
WEIGHT (LBS/1,000 FT)		49.98	82.5	127.6	202.9	87	135	140.8	224	359
ULTIMATE TENSILE STRENGTH (LBS)		826	1,204	1,879	2,913	1,280	1,970	1,505	2,360	3,705
AMPACITY AT 75°C		90	130	180	240	130	170	175	230	305
RESISTANCE AT 75°C OHMS/1,000 FT		0.76	0.49	0.31	0.19	0.49	0.31	0.310	0.19	0.12
PACKAGE		-	50 LB HAND COILS	50 LB HAND COILS	50 LB HAND COILS	50 LB HAND COILS	50 LB HAND COILS	50 LB HAND COILS	100 LB HAND COILS	50 LB HAND COILS
STOCK NUMBER		S812928 (III)	S813536	S813764	S813668	S812512	S812480	S815044	S812608	S812576
DESIGN UNITS		BOND8	BS6	BS4	BS2	WP6	WP4	POLY4J	WP2	WP1/0

INSTALLATION: NONE

BILL OF MATERIALS: NONE

NOTES:

I. WHEN JUMPERING FROM LINE TO LINE, USE THE FOLLOWING GUIDELINES TO DETERMINE JUMPER SIZE AND MATERIAL:

a. IF LINE WIRE IS THE SAME SIZE AND MATERIAL ON BOTH SIDES, JUMPER SHALL MATCH.

b. IF LINE WIRE IS OF DIFFERENT MATERIAL ON EACH SIDE (E.G. COPPER ON ONE SIDE, ALUMINUM ON OTHER), JUMPER SHALL MATCH LARGER AMPACITY AND SHALL BE COPPER IF AVAILABLE.

c. IF LINE WIRE SIZES ARE DIFFERENT AND MATERIAL IS THE SAME, JUMPER SHALL MATCH LARGER SIZE AND MATERIAL.

II. WHEN JUMPERING LINE TO EQUIPMENT, JUMPERS SHALL BE COPPER USED WITH A WEDGE CONNECTOR. (a)

(III) 50'-0" HAND COILS ONLY.

REFERENCE:

(a) SEE OH783 FOR WEDGE CONNECTORS.

TABLE OF CONTENTS

© 1998 - 2021 San Diego Gas & Electric Company. All rights reserved. Removal of this copyright notice without permission is not permitted under law.

REV	CHANGE	DR	BY	DSN	APV	DATE	REV	CHANGE	DR	BY	DSN	APV	DATE
C	DRAWING UPDATE	PEI	-	-	-	03/18/2019	F	NOTES UPDATE	EDM	MRF	JES	CZH	12/01/2021
B	EDITORIAL CHANGES	-	GW	JS	CZH	10/07/2018	E	TABLE UPDATE	-	RSL	JES	CZH	11/12/2019
A	EDITORIAL CHANGES	-	JK	JS	MDJ	04/01/2018	D	TABLE UPDATE	-	JCE	JES	CZH	06/14/2019

SCOPE: THIS STANDARD LISTS THE TYPE OF COVERED ALUMINUM LINE WIRE JUMPERS USED THROUGHOUT THE DISTRIBUTION SYSTEM. THESE WIRES ARE NOT TO BE USED FOR STRINGING.

TABLE 1

WIRE DETAILS		ALUMINUM				
		#2 (I)(II)	1/0 (I)(II)	3/0 (I)(II)	336.4 (I)(II)	636 (I)(II)
STOCK NUMBER		S812100	S812098	S812116 (X)	S812112	S812110
DESIGN UNITS		CWA2	CWA1/0	CWA3/0	CWA336	CWA636
STRANDING		7	7	7	19	61
DIAMETER - INCHES	BARE	0.282	0.356	0.449	0.644	0.89
	TOTAL	0.372	.476	0.569	0.764	1.08
WEIGHT - LBS PER 1,000 FT		83.9	133.5	200.6	375	724
AMPACITY (A) - PER CONDUCTOR AT 75°C		185	245	325	500	725

INSTALLATION:

A. THESE COVERED WIRES DO NOT HAVE INSULATION RATINGS AND ARE INTENDED FOR INCIDENTAL CONTACT ONLY. THEY ARE TO BE TREATED LIKE BARE WIRE.

BILL OF MATERIALS: NONE

NOTES:

(I) NORMALLY PURCHASED MATERIAL.

(II) THIS WIRE IS FOR LINE JUMPERS ONLY.

III. WHEN JUMPERING FROM LINE TO LINE, USE THE FOLLOWING GUIDELINES TO DETERMINE JUMPER SIZE AND MATERIAL:

a. IF LINE WIRE IS THE SAME SIZE AND MATERIAL ON BOTH SIDES, JUMPER SHALL MATCH.

b. IF LINE WIRE IS OF DIFFERENT MATERIAL ON EACH SIDE (E.G. COPPER ON ONE SIDE, ALUMINUM ON OTHER), JUMPER SHALL MATCH LARGER AMPACITY AND SHALL BE COPPER IF AVAILABLE.

c. IF LINE WIRE SIZES ARE DIFFERENT AND MATERIAL IS THE SAME, JUMPER SHALL MATCH LARGER SIZE AND MATERIAL.

IV. WHEN JUMPERING LINE TO EQUIPMENT, JUMPERS SHALL BE COPPER USED WITH A WEDGE CONNECTOR. (a)

(X) THIS ITEM IS EXEMPT.

REFERENCE:

(a) SEE OH783 FOR WEDGE CONNECTORS.

TABLE OF CONTENTS

© 1998 - 2021 San Diego Gas & Electric Company. All rights reserved. Removal of this copyright notice without permission is not permitted under law.

REV	CHANGE	DR	BY	DSN	APV	DATE	REV	CHANGE	DR	BY	DSN	APV	DATE
C	DRAWING UPDATE	PEI	-	-	-	03/18/2019	F	NOTES UPDATE	EDM	MRF	JES	CZH	12/01/2021
B	EDITORIAL CHANGES	-	GW	JS	CZH	10/07/2018	E	TABLE UPDATE	-	RSL	JES	CZH	11/12/2019
A	EDITORIAL CHANGES	-	JK	JS	MDJ	04/01/2018	D	TABLE UPDATE	-	JCE	JES	CZH	06/14/2019

SCOPE: THIS STANDARD SHOWS THE PROPER SLEEVES REQUIRED TO SPLICE ALUMINUM OR COPPER WIRE TOGETHER WITH TENSION SLEEVES.



FIGURE 1
AUTOMATIC SLEEVE

TABLE 1

AUTOMATIC SLEEVES FOR ACSR/AW CONDUCTORS				
WIRE		STOCK NUMBER	DESIGN UNITS	SAP CU
SIZE (AWG OR KCMIL)	STRAND			
2	6/1	S666946	SA2	AS2
1/0	6/1	S666916	AS1/0	AS1/0
3/0	6/1	S666918	AS3/0	AS3/0
336.4	26/7	S666912	AS336	AS336
636	24/7	S666942	SA636	AS636
AUTOMATIC SLEEVES FOR AWAC CONDUCTORS				
2	5/2	S666946	SA2	AS2WM
2	3/4	S666916	AS2WH	AS2WH
1/0	4/3	S666914	AS1/0W	AS1/0W
3/0	5/2	S666918	AS3/0W	AS3/0W

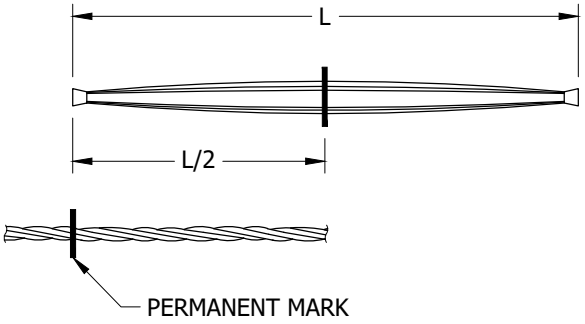

FIGURE 2

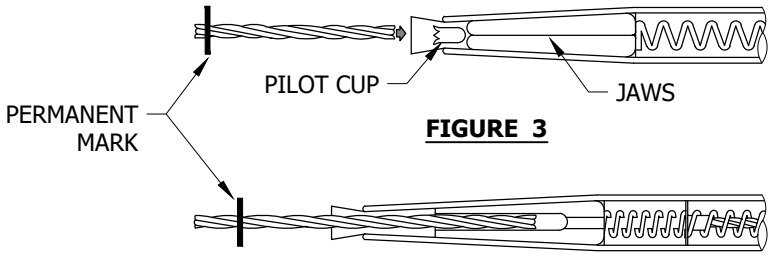

FIGURE 3

FIGURE 4

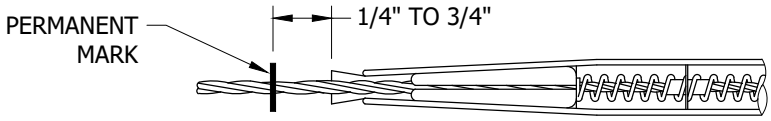

FIGURE 5

© 1998 - 2022 San Diego Gas & Electric Company. All rights reserved. Removal of this copyright notice without permission is not permitted under law.

REV	CHANGE	DR	BY	DSN	APV	DATE	REV	CHANGE	DR	BY	DSN	APV	DATE
F	TABLE UPDATE	EDM	JIK	JES	CZH	11/09/2020	I	NOTES UPDATE	EDM	JAC	GLW	KRG	06/27/2022
E	EDITORIAL CHANGES	-	JK	JS	CH	10/19/2018	H	NOTES UPDATE	EDM	MRF	GLW	CZH	12/06/2021
D	EDITORIAL CHANGES	-	JK	JS	CH	08/30/2018	G	TABLE UPDATE	EDM	MRF	GLW	CZH	07/29/2021

TABLE OF CONTENTS

INSTALLATION:

A. THE CONDUCTOR MUST BE CUT IN SUCH A MANNER THAT THE END OF THE CONDUCTOR IS CLEAN AND SQUARE. TO PREVENT UNWRAPPING OF THE STRANDS, TAPE THE CONDUCTOR AND CUT THROUGH THE TAPE. REMOVE THE TAPE.

B. THOROUGHLY CLEAN THE CONDUCTOR WITH A WIRE BRUSH IMMEDIATELY BEFORE MAKING THE SPLICE. THE AUTOMATIC SLEEVES ARE FACTORY FILLED WITH INHIBITOR GREASE.

C. MEASURE THE CONDUCTOR END, MAKING A PERMANENT MARK 1/2 THE LENGTH OF THE AUTOMATIC SLEEVE, FROM THE CONDUCTOR'S END. (FIGURE 2)

D. THE CONDUCTOR MUST BE INSERTED INTO SLEEVE THE FULL LENGTH INDICATED BY THE PERMANENT MARK. THIS LENGTH SHALL BE MARKED ON THE CONDUCTOR, AND THE CONDUCTOR SHALL BE HELD AT THIS POINT DURING INSERTION. MAKE SURE THAT THE SECTION OF CONDUCTOR TO BE INSERTED INTO THE SLEEVE IS STRAIGHT. AS TENSION IS APPLIED THE CONDUCTOR WILL MOVE APPROXIMATELY 1/4" TO 3/4", DEPENDING ON CONDUCTOR AND SPLICE SIZE, TOWARD THE OPEN END OF THE SPLICE AS THE JAWS MOVE TOWARD A "SET" POSITION. SEE (FIGURE 5). A CONDUCTOR THAT IS ON THE SMALL END OF THE CONDUCTOR RANGE WILL MOVE MORE THAN A LARGER CONDUCTOR IN THE SAME SPLICE. THE AUTOMATIC SLEEVES HAVE AN INTERNAL PILOT CUP WHICH CONFINES THE STRANDS DURING INSERTION. THE CONDUCTOR MUST NOT BE TWISTED OR BENT DURING THE INSERTION. TWISTING TENDS TO SEPARATE THE STRANDS, CAUSING THEM TO INTERFERE WITH JAW OPERATION.

E. WHEN THE SPLICE HAS BEEN MADE, AND BEFORE FULL TENSION IS APPLIED, IT IS EXTREMELY IMPORTANT THAT A MOMENTARY TENSION BE APPLIED TO THE CONDUCTOR USING SEVERAL SEVERE JERKS TO SET THE SLEEVE AND TO ENSURE THAT THE INSTALLATION HAS BEEN PROPERLY MADE. IF THE DISTANCE BETWEEN THE END OF THE SLEEVE AND THE PERMANENT MARK EXCEEDS 3/4", START OVER WITH A NEW SLEEVE.

F. AUTOMATIC SLEEVES ARE NOT REUSABLE. IF A SPLICE DOES NOT SMOOTHLY AND EASILY ACCEPT THE CONDUCTOR, REJECT IT AND USE A NEW ONE.

G. 18 INCHES (+/-) TYPICAL OF EXPOSED CONDUCTOR SHALL BE LEFT BETWEEN SLEEVES AND POINT OF SUPPORT OR END OF DEADEND CLAMP.

H. THE FIGURES ABOVE ILLUSTRATE THE BASIC OPERATING PRINCIPLES OF THE AUTOMATIC SLEEVES. AS THE PREPARED CONDUCTOR IS INSERTED INTO THE SLEEVE (FIGURE 3), THE JAWS ARE FORCED TOWARD THE WIDER PORTION OF THE TAPERED SPLICE BODY, PERMITTING THE JAWS TO SEPARATE AND ACCEPT THE CONDUCTOR (FIGURE 4). THE INTERNAL SPRING KEEPS THE JAWS FROM OPENING ANY MORE THAN NECESSARY. WHEN THE CONDUCTOR HAS BEEN COMPLETELY INSERTED, TENSION IS APPLIED, FORCING THE JAWS IN THE DIRECTION OF THE NARROWING TAPER, WHICH IN TURN INCREASES THE COMPRESSIVE FORCES OF THE JAWS UPON THE CONDUCTOR. AS THE LINE TENSION INCREASES, SO DOES THE GRIPPING FORCE OF THE JAWS.

BILL OF MATERIALS: NONE

NOTES:

I. SLEEVES SHALL NOT BE INSTALLED IN CROSSING SPANS THAT REQUIRE GRADE A CONSTRUCTION, FREEWAY CROSSINGS, OR RAILWAYS.

II. AUTOMATIC SLEEVES DEPEND ON LINE TENSION FOR THEIR OPERATION. THEY SHALL NOT BE USED ON TAPS, JUMPERS, SLACK, OR REDUCED TENSION SPANS.

III. ALL AUTOMATIC SLEEVES LISTED ABOVE ARE APPROVED FOR USE IN THE TIER 2 & TIER 3 AREAS.

REFERENCE:

a. FOR GRADE A CONSTRUCTION, SEE G.O. 95 RULE 42.

b. FOR FURTHER EXPLANATION ON GRADE A CONSTRUCTION, SEE G.O. 95 RULES 103.1A AND 113.1A.

TABLE OF CONTENTS

© 1998 - 2022 San Diego Gas & Electric Company. All rights reserved. Removal of this copyright notice without permission is not permitted under law.

REV	CHANGE	DR	BY	DSN	APV	DATE	REV	CHANGE	DR	BY	DSN	APV	DATE
F	TABLE UPDATE	EDM	JIK	JES	CZH	11/09/2020	I	NOTES UPDATE	EDM	JAC	GLW	KRG	06/27/2022
E	EDITORIAL CHANGES	-	JK	JS	CH	10/19/2018	H	NOTES UPDATE	EDM	MRF	GLW	CZH	12/06/2021
D	EDITORIAL CHANGES	-	JK	JS	CH	08/30/2018	G	TABLE UPDATE	EDM	MRF	GLW	CZH	07/29/2021

SCOPE: THIS STANDARD SHOWS THE PROPER SLEEVES REQUIRED TO SPLICE ALUMINUM OR COPPER WIRE TOGETHER WITH TENSION SLEEVES.

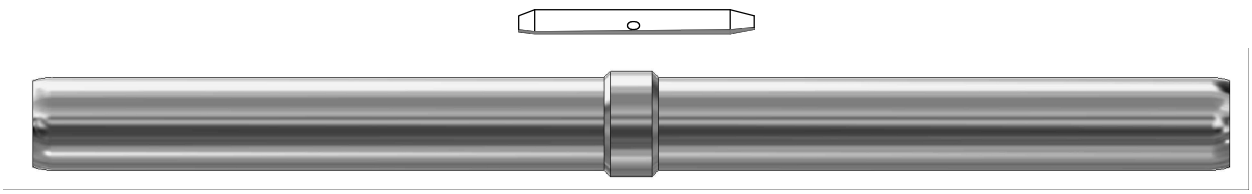

FIGURE 1
ACSR/AW DUAL TENSION SLEEVE

TABLE 1

DUAL TENSION SLEEVES FOR ACSR/AW CONDUCTORS (A)(B)					
WIRE		BURNDY		STOCK NUMBER	DESIGN UNITS
SIZE AWG OR KCMIL	STRAND	DIE INDEX OR NUMBER			
		ALUM	STEEL		
1033.5	45/7	13CD	--	S652898 (X)	TS1033

INSTALLATION:

(A) 18 INCHES (+/-) TYPICAL OF EXPOSED CONDUCTOR SHALL BE LEFT BETWEEN SPLICES AND POINT OF SUPPORT OR END OF DEADEND CLAMP.

(B) THOROUGHLY CLEAN THE CONDUCTOR WITH A WIRE BRUSH IMMEDIATELY BEFORE MAKING THE SPLICE.

BILL OF MATERIALS: NONE

NOTES:

I. SLEEVES SHALL NOT BE INSTALLED IN CROSSING SPANS, THAT REQUIRE GRADE A CONSTRUCTION, FREEWAY CROSSINGS, OR RAILWAYS.

II. PRESSES AND NUMBER OF INDENTS ARE NO LONGER SHOWN ON THESE STANDARDS. ALL PERTINENT INFORMATION IS PHYSICALLY STAMPED ON THE INDIVIDUAL SLEEVES.

(X) THIS ITEM IS EXEMPT.

REFERENCE: NONE

TABLE OF CONTENTS

© 1998 - 2022 San Diego Gas & Electric Company. All rights reserved. Removal of this copyright notice without permission is not permitted under law.

REV	CHANGE	DR	BY	DSN	APV	DATE	REV	CHANGE	DR	BY	DSN	APV	DATE
F	TABLE UPDATE	EDM	JIK	JES	CZH	11/09/2020	I	NOTES UPDATE	EDM	JAC	GLW	KRG	06/27/2022
E	EDITORIAL CHANGES	-	JK	JS	CH	10/19/2018	H	NOTES UPDATE	EDM	MRF	GLW	CZH	12/06/2021
D	EDITORIAL CHANGES	-	JK	JS	CH	08/30/2018	G	TABLE UPDATE	EDM	MRF	GLW	CZH	07/29/2021

SCOPE: THIS STANDARD SHOWS THE PROPER SLEEVES REQUIRED TO SPLICE ALUMINUM OR COPPER WIRE TOGETHER WITH TENSION SLEEVES.



FIGURE 1
ACSR/AW SINGLE TENSION SLEEVE

TABLE 1

SINGLE TENSION SLEEVES FOR ACSR/AW CONDUCTORS (A)(B)				
WIRE		BURNDY	STOCK NUMBER	DESIGN UNITS
SIZE AWG OR KCMIL	STRAND	DIE INDEX OR NUMBER		
4	6/1	U243	S653506 (X)	ST4
2	6/1	U243	S653026 (X)	ST2
1/0	6/1	U247	S652866 (X)	ST1/0
3/0	6/1	U658	S653122 (X)	ST3/0
SINGLE TENSION SLEEVES FOR AWAC CONDUCTORS (A)(B)				
2	5/2	U677	S666944	ST2W
3/0	5/2	U317	S653196 (X)	ST3/0W
SINGLE TENSION SLEEVES FOR 5005 ALUMINUM ALLOY CONDUCTORS				
4	7	WBG/UBG	S653506 (X)	S4AS
2	7	W243/U243 W687	S653026 (X)	S2A5
1/0	7	U247 U167	S653866 (X)	S1/0A5
3/0	7	U658	S653122 (X)	S3/0A5

TABLE OF CONTENTS

INSTALLATION:

(A) 18 INCHES (+/-) TYPICAL OF EXPOSED CONDUCTOR SHALL BE LEFT BETWEEN SPLICES AND POINT OF SUPPORT OR END OF DEADEND CLAMP.

(B) THOROUGHLY CLEAN THE CONDUCTOR WITH A WIRE BRUSH IMMEDIATELY BEFORE MAKING THE SPLICE.

BILL OF MATERIALS: NONE

NOTES:

I. SLEEVES SHALL NOT BE INSTALLED IN CROSSING SPANS, THAT REQUIRE GRADE A CONSTRUCTION, FREEWAY CROSSINGS, OR RAILWAYS.

II. PRESSES AND NUMBER OF INDENTS ARE NO LONGER SHOWN ON THESE STANDARDS. ALL PERTINENT INFORMATION IS PHYSICALLY STAMPED ON THE INDIVIDUAL SLEEVES.

(X) THIS ITEM IS EXEMPT.

REFERENCE: NONE

© 1998 - 2022 San Diego Gas & Electric Company. All rights reserved. Removal of this copyright notice without permission is not permitted under law.

REV	CHANGE	DR	BY	DSN	APV	DATE	REV	CHANGE	DR	BY	DSN	APV	DATE
F	TABLE UPDATE	EDM	JIK	JES	CZH	11/09/2020	I	NOTES UPDATE	EDM	JAC	GLW	KRG	06/27/2022
E	EDITORIAL CHANGES	-	JK	JS	CH	10/19/2018	H	NOTES UPDATE	EDM	MRF	GLW	CZH	12/06/2021
D	EDITORIAL CHANGES	-	JK	JS	CH	08/30/2018	G	TABLE UPDATE	EDM	MRF	GLW	CZH	07/29/2021

SCOPE: THIS STANDARD SHOWS THE PROPER SLEEVES REQUIRED TO SPLICE ALUMINUM OR COPPER WIRE TOGETHER WITH TENSION SLEEVES.



FIGURE 1
ALUMINUM SINGLE TENSION SLEEVE

TABLE 1

SINGLE TENSION JUMPER SLEEVES FOR NON-TENSION SPLICING ALL ALUMINUM CONDUCTORS (A)(B)				
WIRE		BURNDY	STOCK NUMBER	DESIGN UNITS
SIZE AWG OR KCMIL	STRAND	DIE INDEX OR NUMBER		
2	7	W163/U163	S652994 (X)	ST2A
1/0	7	U165	S652802 (X)	ST1/0A
3/0	7	U331	S653154 (X)	ST3/0A
336.4	19	U317	S653282 (X)	ST336A

INSTALLATION:

(A) 18 INCHES (+/-) TYPICAL OF EXPOSED CONDUCTOR SHALL BE LEFT BETWEEN SPLICES AND POINT OF SUPPORT OR END OF DEADEND CLAMP.

(B) THOROUGHLY CLEAN THE CONDUCTOR WITH A WIRE BRUSH IMMEDIATELY BEFORE MAKING THE SPLICE.

BILL OF MATERIALS: NONE

NOTES:

I. SLEEVES SHALL NOT BE INSTALLED IN CROSSING SPANS, THAT REQUIRE GRADE A CONSTRUCTION, FREEWAY CROSSINGS, OR RAILWAYS.

II. PRESSES AND NUMBER OF INDENTS ARE NO LONGER SHOWN ON THESE STANDARDS. ALL PERTINENT INFORMATION IS PHYSICALLY STAMPED ON THE INDIVIDUAL SLEEVES.

(X) THIS ITEM IS EXEMPT.

REFERENCE: NONE

TABLE OF CONTENTS

© 1998 - 2022 San Diego Gas & Electric Company. All rights reserved. Removal of this copyright notice without permission is not permitted under law.

REV	CHANGE	DR	BY	DSN	APV	DATE	REV	CHANGE	DR	BY	DSN	APV	DATE
F	TABLE UPDATE	EDM	JIK	JES	CZH	11/09/2020	I	NOTES UPDATE	EDM	JAC	GLW	KRG	06/27/2022
E	EDITORIAL CHANGES	-	JK	JS	CH	10/19/2018	H	NOTES UPDATE	EDM	MRF	GLW	CZH	12/06/2021
D	EDITORIAL CHANGES	-	JK	JS	CH	08/30/2018	G	TABLE UPDATE	EDM	MRF	GLW	CZH	07/29/2021

TABLE OF CONTENTS

THIS PAGE INTENTIONALLY LEFT BLANK

© 1998 - 2022 San Diego Gas & Electric Company. All rights reserved. Removal of this copyright notice without permission is not permitted under law.

REV	CHANGE	DR	BY	DSN	APV	DATE	REV	CHANGE	DR	BY	DSN	APV	DATE
F	TABLE UPDATE	EDM	JIK	JES	CZH	11/09/2020	I	NOTES UPDATE	EDM	JAC	GLW	KRG	06/27/2022
E	EDITORIAL CHANGES	-	JK	JS	CH	10/19/2018	H	NOTES UPDATE	EDM	MRF	GLW	CZH	12/06/2021
D	EDITORIAL CHANGES	-	JK	JS	CH	08/30/2018	G	TABLE UPDATE	EDM	MRF	GLW	CZH	07/29/2021

SCOPE: THIS STANDARD SHOWS THE PROPER SLEEVES REQUIRED TO SPLICE ALUMINUM OR COPPER WIRE TOGETHER WITH TENSION SLEEVES.

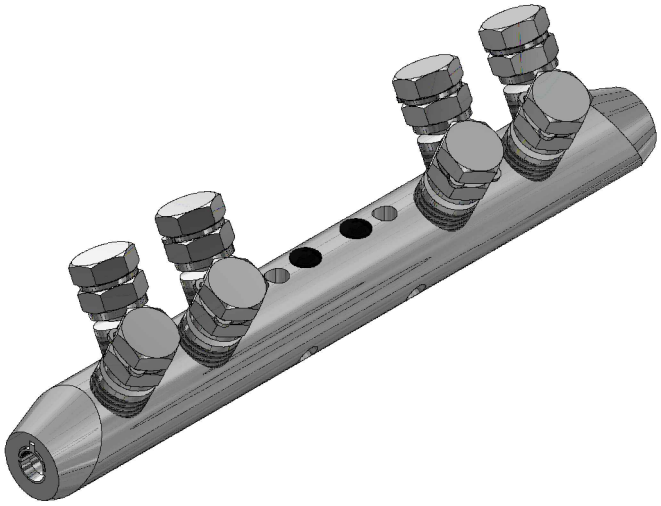

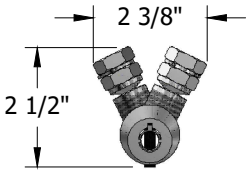

FIGURE 1
TOP VIEW

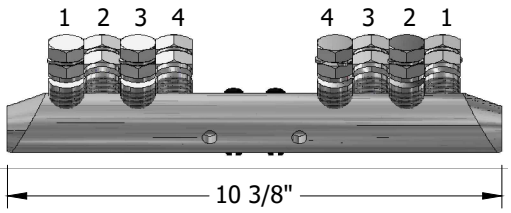

FIGURE 1
TIGHTENING SEQUENCE

TABLE 1

CABLE SIZE	STRANDING	CABLE TYPE	STOCK NUMBER	DESIGN UNITS
#4-1/0	6/1, 5/2, 3/4 AND 4/3	ACSR/AWAC	S666948	STM#4
3/0 ACSR	6/1, 5/2	ACSR/AWAC	S666950	STM3/0
336 ACSR	26/7	ACSR	S666952	STM336
636 ACSR	24/7	ACSR	S666954	STM636

TABLE OF CONTENTS

INSTALLATION:

A. TIGHTENING SEQUENCE IS FROM EACH END TO THE CENTER (1-1, 2-2, 3-3 AND 4-4).

B. THE TIGHTENING SEQUENCE SHOULD BE COMPLETED TWICE. THE FIRST PASS SHOULD SHEAR THE TOP SHEAR HEAD OFF. THEN REPEAT THE SEQUENCE. SHEARING OFF THE SECOND SHEAR HEAD.

C. DO NOT SHEAR BOTH SHEAR HEADS OFF AT THE SAME TIME.

D. CLICK HERE FOR INSTALLATION VIDEO.

BILL OF MATERIALS: NONE

NOTES:

I. SLEEVES SHALL NOT BE INSTALLED IN CROSSING SPANS, THAT REQUIRE GRADE A CONSTRUCTION, FREEWAY CROSSINGS, OR RAILWAYS.

II. SLEEVES LISTED ABOVE ARE APPROVED FOR USE IN TIER 2 & TIER 3 AREAS.

REFERENCE: NONE

© 1998 - 2022 San Diego Gas & Electric Company. All rights reserved. Removal of this copyright notice without permission is not permitted under law.

REV	CHANGE	DR	BY	DSN	APV	DATE	REV	CHANGE	DR	BY	DSN	APV	DATE
F	TABLE UPDATE	EDM	JIK	JES	CZH	11/09/2020	I	NOTES UPDATE	EDM	JAC	GLW	KRG	06/27/2022
E	EDITORIAL CHANGES	-	JK	JS	CH	10/19/2018	H	NOTES UPDATE	EDM	MRF	GLW	CZH	12/06/2021
D	EDITORIAL CHANGES	-	JK	JS	CH	08/30/2018	G	TABLE UPDATE	EDM	MRF	GLW	CZH	07/29/2021

SCOPE: THIS STANDARD SHOWS THE PROPER SLEEVES REQUIRED TO SPLICE ALUMINUM OR COPPER WIRE TOGETHER WITH TENSION SLEEVES.



FIGURE 1
AUTOMATIC COPPER SLEEVE

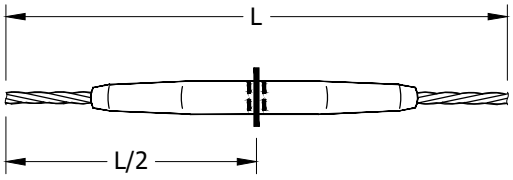

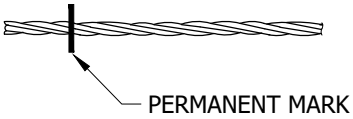

FIGURE 2

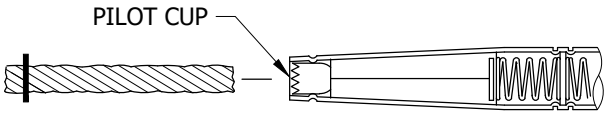

FIGURE 3

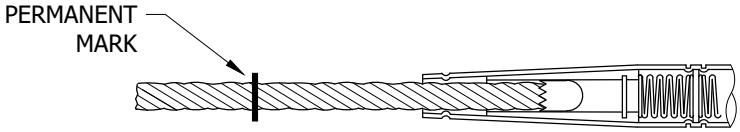

FIGURE 4

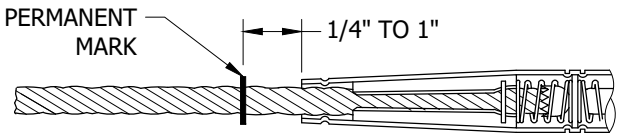

FIGURE 5

TABLE 1

AUTOMATIC SLEEVES FOR COPPER CONDUCTORS			
WIRE		STOCK NUMBER	DESIGN UNITS
SIZE	STRAND		
4	3	S653324 (X)	--
2	SOLID	S653324 (X)	--
2	3	S653328 (X)	--
2	7	S653330 (X)	--
1	3	S653332 (X)	--
1/0	7	S653334 (X)	--
2/0	7	S653336 (X)	--
4/0	7	S653338 (X)	--

© 1998 - 2022 San Diego Gas & Electric Company. All rights reserved. Removal of this copyright notice without permission is not permitted under law.

REV	CHANGE	DR	BY	DSN	APV	DATE	REV	CHANGE	DR	BY	DSN	APV	DATE
F	TABLE UPDATE	EDM	JIK	JES	CZH	11/09/2020	I	NOTES UPDATE	EDM	JAC	GLW	KRG	06/27/2022
E	EDITORIAL CHANGES	-	JK	JS	CH	10/19/2018	H	NOTES UPDATE	EDM	MRF	GLW	CZH	12/06/2021
D	EDITORIAL CHANGES	-	JK	JS	CH	08/30/2018	G	TABLE UPDATE	EDM	MRF	GLW	CZH	07/29/2021

TABLE OF CONTENTS

INSTALLATION:

A. THE CONDUCTOR MUST BE CUT IN SUCH A MANNER THAT THE END OF THE CONDUCTOR IS CLEAN AND SQUARE. TO PREVENT UNWRAPPING OF THE STRANDS, TAPE THE CONDUCTOR AND CUT THROUGH THE TAPE. REMOVE THE TAPE.

B. THOROUGHLY CLEAN THE CONDUCTOR WITH A WIRE BRUSH IMMEDIATELY BEFORE MAKING THE SPLICE. THE AUTOMATIC SLEEVES ARE FACTORY FILLED WITH INHIBITOR GREASE.

C. MEASURE THE CONDUCTOR END, MAKING A PERMANENT MARK 1/2 THE LENGTH OF THE AUTOMATIC SLEEVE, FROM THE CONDUCTOR'S END. (FIGURE 2)

D. THE CONDUCTOR MUST BE INSERTED INTO SLEEVE THE FULL LENGTH INDICATED BY THE PERMANENT MARK. THIS LENGTH SHALL BE MARKED ON THE CONDUCTOR, AND THE CONDUCTOR SHALL BE HELD AT THIS POINT DURING INSERTION. MAKE SURE THAT THE SECTION OF CONDUCTOR TO BE INSERTED INTO THE SLEEVE IS STRAIGHT. AS TENSION IS APPLIED THE CONDUCTOR WILL MOVE APPROXIMATELY 1/4" TO 1", DEPENDING ON CONDUCTOR AND SPLICE SIZE, TOWARD THE OPEN END OF THE SPLICE AS THE JAWS MOVE TOWARD A "SET" POSITION. SEE (FIGURE 5). A CONDUCTOR THAT IS ON THE SMALL END OF THE CONDUCTOR RANGE WILL MOVE MORE THAN A LARGER CONDUCTOR IN THE SAME SPLICE. THE AUTOMATIC SLEEVES HAVE AN INTERNAL PILOT CUP WHICH CONFINES THE STRANDS DURING INSERTION. THE CONDUCTOR MUST NOT BE TWISTED OR BENT DURING THE INSERTION. TWISTING TENDS TO SEPARATE THE STRANDS, CAUSING THEM TO INTERFERE WITH JAW OPERATION.

E. WHEN THE SPLICE HAS BEEN MADE, AND BEFORE FULL TENSION IS APPLIED, IT IS EXTREMELY IMPORTANT THAT A MOMENTARY TENSION BE APPLIED TO THE CONDUCTOR USING SEVERAL SEVERE JERKS TO SET THE SLEEVE AND TO ENSURE THAT THE INSTALLATION HAS BEEN PROPERLY MADE. IF THE DISTANCE BETWEEN THE END OF THE SLEEVE AND THE PERMANENT MARK EXCEEDS 1", START OVER WITH A NEW SLEEVE.

F. AUTOMATIC SLEEVES ARE NOT REUSABLE. IF A SPLICE DOES NOT SMOOTHLY AND EASILY ACCEPT THE CONDUCTOR, REJECT IT AND USE A NEW ONE.

G. 18 INCHES (+/-) TYPICAL OF EXPOSED CONDUCTOR SHALL BE LEFT BETWEEN SLEEVES AND POINT OF SUPPORT OR END OF DEADEND CLAMP.

H. THE FIGURES ABOVE ILLUSTRATE THE BASIC OPERATING PRINCIPLES OF THE AUTOMATIC SLEEVES. AS THE PREPARED CONDUCTOR IS INSERTED INTO THE SLEEVE (FIGURE 3), THE JAWS ARE FORCED TOWARD THE WIDER PORTION OF THE TAPERED SPLICE BODY, PERMITTING THE JAWS TO SEPARATE AND ACCEPT THE CONDUCTOR (FIGURE 4). THE INTERNAL SPRING KEEPS THE JAWS FROM OPENING ANY MORE THAN NECESSARY. WHEN THE CONDUCTOR HAS BEEN COMPLETELY INSERTED, TENSION IS APPLIED, FORCING THE JAWS IN THE DIRECTION OF THE NARROWING TAPER, WHICH IN TURN INCREASES THE COMPRESSIVE FORCES OF THE JAWS UPON THE CONDUCTOR. AS THE LINE TENSION INCREASES, SO DOES THE GRIPPING FORCE OF THE JAWS. THESE SLEEVES ARE NOT TO BE USED IN THE TIER 2 & TIER 3 AREAS.

BILL OF MATERIALS: NONE

NOTES:

I. SLEEVES SHALL NOT BE INSTALLED IN CROSSING SPANS THAT REQUIRE GRADE A CONSTRUCTION, FREEWAY CROSSINGS, OR RAILWAYS.

II. AUTOMATIC SLEEVES DEPEND ON LINE TENSION FOR THEIR OPERATION. THEY SHALL NOT BE USED ON TAPS, JUMPERS, SLACK, OR REDUCED TENSION SPANS.

(X) THIS ITEM IS EXEMPT.

REFERENCE:

a. FOR GRADE A CONSTRUCTION, SEE G.O. 95 RULE 42.

b. FOR FURTHER EXPLANATION ON GRADE A CONSTRUCTION, SEE G.O. 95 RULES 103.1A AND 113.1A.

TABLE OF CONTENTS

© 1998 - 2022 San Diego Gas & Electric Company. All rights reserved. Removal of this copyright notice without permission is not permitted under law.

REV	CHANGE	DR	BY	DSN	APV	DATE	REV	CHANGE	DR	BY	DSN	APV	DATE
F	TABLE UPDATE	EDM	JIK	JES	CZH	11/09/2020	I	NOTES UPDATE	EDM	JAC	GLW	KRG	06/27/2022
E	EDITORIAL CHANGES	-	JK	JS	CH	10/19/2018	H	NOTES UPDATE	EDM	MRF	GLW	CZH	12/06/2021
D	EDITORIAL CHANGES	-	JK	JS	CH	08/30/2018	G	TABLE UPDATE	EDM	MRF	GLW	CZH	07/29/2021

SCOPE: THIS STANDARD SHOWS THE PROPER SLEEVES REQUIRED TO SPLICE ALUMINUM OR COPPER WIRE TOGETHER WITH TENSION SLEEVES.

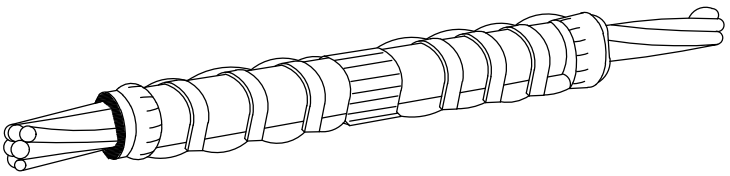

FIGURE 1
COPPER SINGLE TENSION SLEEVE

TABLE 1

COMPRESSION TENSION SLEEVES FOR COPPER CONDUCTORS (A)(B)				
WIRE		DIE INDEX OR NUMBER	STOCK NUMBER	DESIGN UNITS
SIZE	STRAND	BURNDY		
#6	SOLID	161	S654464	--
	3	162	S654240	--
	7	161	S654400	--
	3 TO SOLID	162	S654528	--
#4	SOLID	162	S654240	--
	3	163	S653920	--
	3 TO SOLID	163	S654304	--
#2	SOLID	163	S653920	--
	3	163	S653936	--
	7	163	S653888	--
	3 TO SOLID	163	S653760	--
	7 TO SOLID	163	S653986 (X)	--
#1	3	U459	S653632	TS1C
1/0	7 OR 19	165	S653600	TS1/0C
2/0	7 OR 19	U168	S653728	TS2/0C
4/0	7 OR 19	--	S654144	TS4/0C
250 KCMIL	19 OR 37	U169	S654018 (X)	--
400 KCMIL	19 OR 37	U209	S654338 (X)	TS400C
500 KCMIL	19 OR 37	U210	S654370 (X)	TS500C
750 KCMIL	37 OR 61	L627	S654560	TS750C
COMPRESSION SLEEVES FOR COPPER SERVICE CONDUCTORS (A)(B)				
#8	SOLID	NICOPRESS E	S649888	649888
#6	SOLID	J	S649856	649856
#6 TO #8	SOLID	J	S652386 (X)	652386

TABLE OF CONTENTS

© 1998 - 2022 San Diego Gas & Electric Company. All rights reserved. Removal of this copyright notice without permission is not permitted under law.

REV	CHANGE	DR	BY	DSN	APV	DATE	REV	CHANGE	DR	BY	DSN	APV	DATE
F	TABLE UPDATE	EDM	JIK	JES	CZH	11/09/2020	I	NOTES UPDATE	EDM	JAC	GLW	KRG	06/27/2022
E	EDITORIAL CHANGES	-	JK	JS	CH	10/19/2018	H	NOTES UPDATE	EDM	MRF	GLW	CZH	12/06/2021
D	EDITORIAL CHANGES	-	JK	JS	CH	08/30/2018	G	TABLE UPDATE	EDM	MRF	GLW	CZH	07/29/2021

TABLE 1 (CONT'D)

COMPRESSION TENSION SLEEVES FOR COPPER CONDUCTORS (A)(B)				
WIRE		DIE INDEX OR NUMBER	STOCK NUMBER	DESIGN UNITS
SIZE	STRAND	BURNDY		
#8A	1CW/2CU	W162 OR U202	S654846 (X)	654846
#6A	1CW/2CU	W162 OR U203	S654832	654832
#6A TO #4	1CW/2CU	U308	S654836	654836
	3			
#6C	1CW/2CU	W162 OR U203	S654832	654832
#6D	2CW/1CU	--	S654840	654840
#4A	1CW/2CU	W163 OR U204	--	--
#4D	2CW/1CU	U331	S654754 (X)	654754
#4N	5CW/2CU	U331	S654754 (X)	654754
COMPRESSION TENSION SLEEVES FOR GALVANIZED AND SHIELD CONDUCTORS (A)(B)				
10M	7CW	--	S654592	654592

INSTALLATION:

(A) 18 INCHES (+/-) TYPICAL OF EXPOSED CONDUCTOR SHALL BE LEFT BETWEEN SPLICES AND POINT OF SUPPORT OR END OF DEADEND CLAMP.

(B) THOROUGHLY CLEAN THE CONDUCTOR WITH A WIRE BRUSH IMMEDIATELY BEFORE MAKING THE SPLICE.

BILL OF MATERIALS: NONE

NOTES:

I. SLEEVES SHALL NOT BE INSTALLED IN CROSSING SPANS, THAT REQUIRE GRADE A CONSTRUCTION, FREEWAY CROSSINGS, OR RAILWAYS.

II. PRESSES AND NUMBER OF INDENTS ARE NO LONGER SHOWN ON THESE STANDARDS. ALL PERTINENT INFORMATION IS PHYSICALLY STAMPED ON THE INDIVIDUAL SLEEVES.

(X) THIS ITEM IS EXEMPT.

REFERENCE: NONE

TABLE OF CONTENTS

© 1998 - 2022 San Diego Gas & Electric Company. All rights reserved. Removal of this copyright notice without permission is not permitted under law.

REV	CHANGE	DR	BY	DSN	APV	DATE	REV	CHANGE	DR	BY	DSN	APV	DATE
F	TABLE UPDATE	EDM	JIK	JES	CZH	11/09/2020	I	NOTES UPDATE	EDM	JAC	GLW	KRG	06/27/2022
E	EDITORIAL CHANGES	-	JK	JS	CH	10/19/2018	H	NOTES UPDATE	EDM	MRF	GLW	CZH	12/06/2021
D	EDITORIAL CHANGES	-	JK	JS	CH	08/30/2018	G	TABLE UPDATE	EDM	MRF	GLW	CZH	07/29/2021

SCOPE: THIS STANDARD SHOWS THE PROPER SLEEVES, TOOLS, DIES AND NUMBER OF INDENTATIONS REQUIRED TO SPLICE COPPER OR ALUMINUM JUMPER WIRE TOGETHER USING JUMPER SLEEVES.

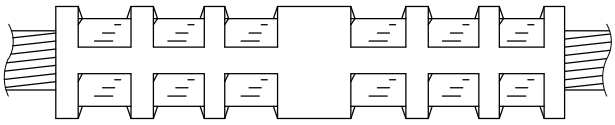

FIGURE 1
COPPER JUMPER SLEEVES

TABLE 1

WIRE		CATOLOG NUMBERS		DIE SIZE OR NUMBER	INDENTS EA END	SLEEVE LENGTH IN.		STOCK NUMBER	ASSEMBLY UNITS
					BURNDY				
SIZE	STRAND	KEARNEY	BURNDY	BURNDY	Y-35	KEARNEY	BURNDY		
4/0	7	HR 4/0-7CJ	YCS 28	U 168	3	6	3-1/8	S650786 (X)	JS4/0C
250 KCM	19	-	YCS 29	U 169	4	-	3-5/8	S650752	JS250C
400 KCM	19	-	YCS 32	U 209	6	-	5-3/4	S650850 (X)	JS400C
500 KCM	19 OR 37	-	YCS 34	U 210	3	-	5-1/8	S650082 (X)	JS500C
750 KCM	37 OR 61	-	(A) YCS 39	(A) L 627	3	-	6-7/8	S650208	JS750C

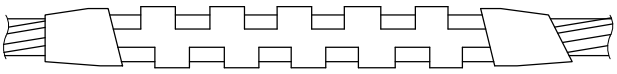

FIGURE 2
ALUMINUM JUMPER SLEEVES

TABLE 2

WIRE		CATALOG NUMBERS			DIE				PRESS	STOCK NUMBER	ASSEMBLY UNITS
SIZE	STRAND	KEARNEY	ALCOA	BURNDY	KEARNEY	BURNDY	HUSKIE	ALCOA			
1/0	5005-7W ACSR 6/1	OHR1/0 -61AJ	-	-	737	247	HT41DT	74AH	Y-35	S650274 (X)	JS1/0
336.4	ACSR 26/7	-	5020-781	-	-	317	HT41FN	20AH	Y-35	S650266 (X)	JS336
636	ACSR 24/7	-	5027-106	YCS43R	-	292 OR 319	-	27AH	Y-45	S650658 (X)	JS636
1033.5	ACSR 45/7	-	5034-128	-	-	-	HA60-24	34AH	60A OR 60	S650338 (X)	JS1033

INSTALLATION:

(A) USE ALCOA MODEL 60A TOOL.

B. THOROUGHLY CLEAN CONDUCTOR BEFORE MAKING THE SPLICE.

BILL OF MATERIALS: NONE

NOTES:

I. NEVER APPLY TENSION TO A JUMPER SLEEVE.

(X) THIS ITEM IS EXEMPT.

REFERENCE: NONE

© 1998 - 2020 San Diego Gas & Electric Company. All rights reserved. Removal of this copyright notice without permission is not permitted under law.

REV	CHANGE	BY	DSGN	APPV	DATE	REV	CHANGE	BY	DSGN	APPV	DATE
C	TABLE UPDATE	JIK	JES	CZH	1/14/2020	F					
B	DRAWING UPDATE	PEI	-	-	03/18/2019	E					
A	ORIGINAL ISSUE	-	PTA	RDJ	01/01/1998	D					

X Indicates Latest Revision | Completely Revised | New Page | Information Removed

SDG&E ELECTRIC OVERHEAD CONSTRUCTION STANDARDS

SHEET 1 OF 1

JUMPER SLEEVES FOR COPPER AND ALUMINUM CONDUCTORS

OH731.1

TABLE OF CONTENTS

SCOPE: THIS STANDARD SHOWS AND LISTS MECHANICAL WEDGE STRAIN CLAMPS USED TO ATTACH ALUMINUM ALLOY CONDUCTORS TO DEADEND INSULATORS.

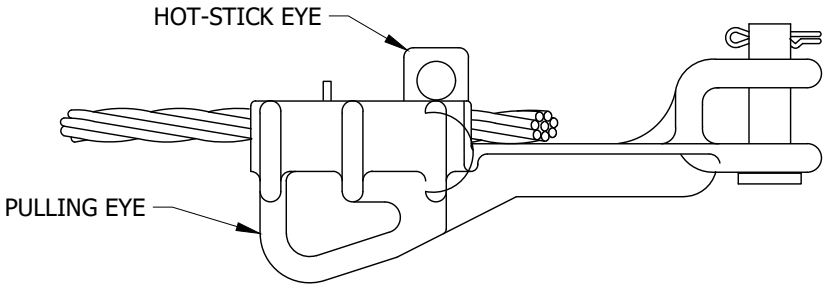

FIGURE 1
TOP VIEW

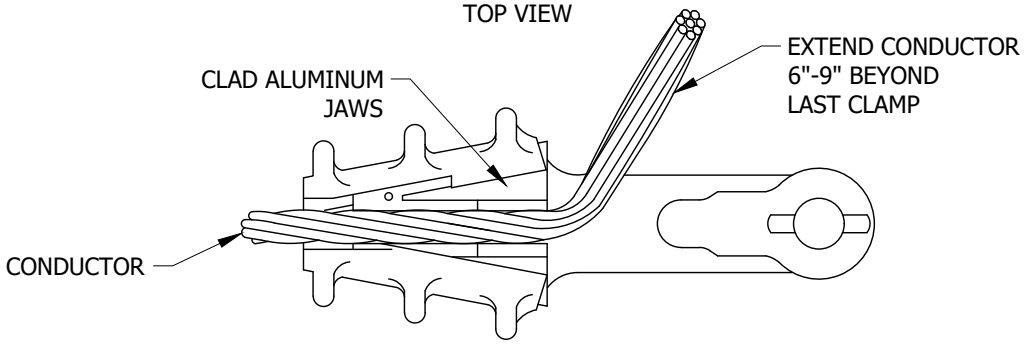

FIGURE 1
FRONT VIEW

TABLE 1

MECHANICAL WEDGE DEADEND STRAIN END CLAMP APPLICATION				
STOCK NUMBER	**CONDUCTOR SIZE**		**ACSR**	
	ACSR	**COPPER**	**AU**	**SAP CU**
S230520	#4	#4 STR.	ADE4	ADE2
	#2	#2	ADE2	ADE2
	1/0	1/0	ADE1/0	ADE2
S230522	3/0	--	ADE3/0	ADE3/0
S230524	336	--	ADE336	ADE336
	--	4/0	--	--
S230526	636	--	ADE636	ADE636

INSTALLATION:

A. DO NOT USE MECHANICAL WEDGE STRAIN CLAMPS ON AWAC CONDUCTORS.

B. THESE CLAMPS ARE NOT TO BE USED FOR REDUCED TENSION CONSTRUCTION.

C. THESE MECHANICAL WEDGE STRAIN CLAMPS MAY BE USED WITH ACSR CONDUCTOR IN ALL CONTAMINATION DISTRICTS.

BILL OF MATERIALS: NONE

NOTES:

I. FOR NEW CONSTRUCTION, REPLACE OLD DEADEND CLAMPS WITH NEW DEADEND CLAMPS. PREVIOUSLY INSTALLED DEADEND CLAMPS MAY BE UTILIZED IN TROUBLE SITUATIONS, HOWEVER IT IS RECOMMENDED TO INSTALL NEW DEADEAND CLAMPS.

REFERENCE: NONE

© 1998 - 2023 San Diego Gas & Electric Company. All rights reserved. Removal of this copyright notice without permission is not permitted under law.

REV	CHANGE	DR	BY	DSN	APV	DATE	REV	CHANGE	DR	BY	DSN	APV	DATE
E	FIGURE UPDATE	EDM	GLW	JES	CZH	10/12/2020	H	INSTALLATION UPDATE	ARC	MRF	JAS	KRG	04/07/2023
D	TABLE UPDATE	EDM	JIK	JES	CZH	01/15/2020	G	TABLE UPDATE	EDM	MRF	GLW	KRG	06/27/2022
C	DRAWING UPDATE	PEI	-	-	-	03/18/2019	F	NOTES UPDATE	EDM	MRF	GLW	CZH	12/06/2021

SCOPE: THIS STANDARD SHOWS AND LISTS BOLTED, SIDE OPEN, STRAIN CLAMPS USED TO ATTACH ALUMINUM ALLOY CONDUCTORS TO DEADEND INSULATORS.

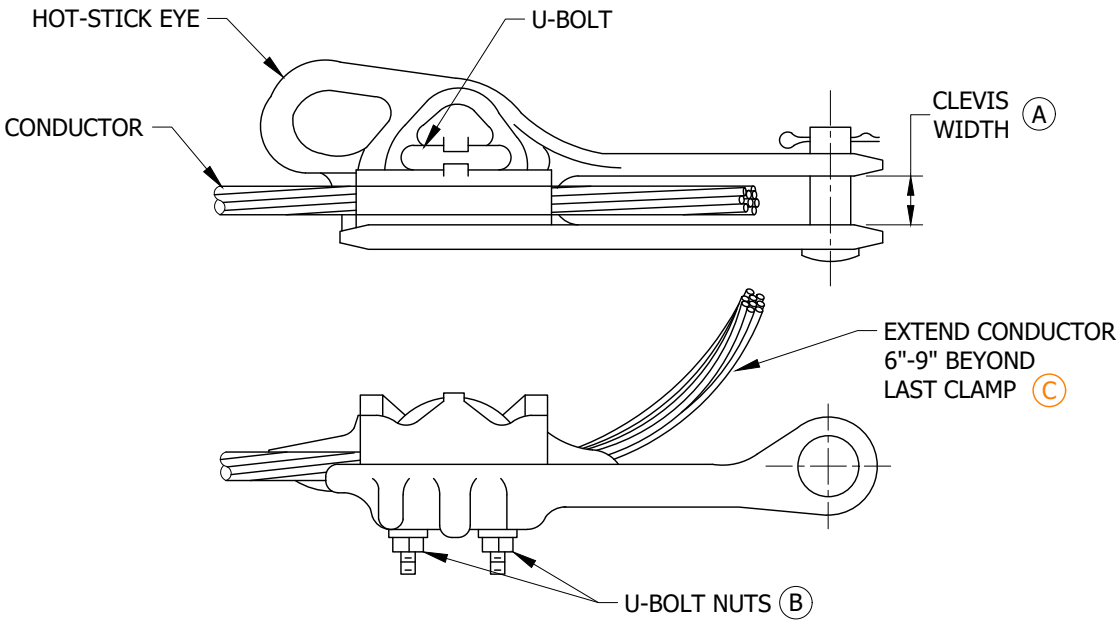

FIGURE 1
(S230464)

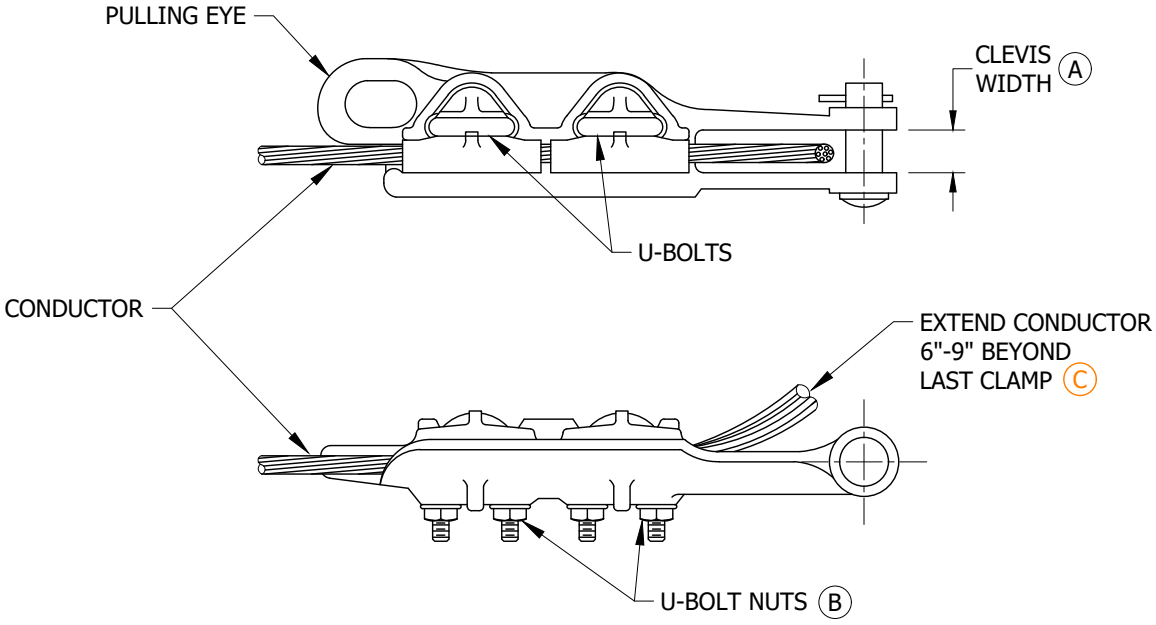

FIGURE 2
(S230512)

TABLE OF CONTENTS

© 1998 - 2023 San Diego Gas & Electric Company. All rights reserved. Removal of this copyright notice without permission is not permitted under law.

REV	CHANGE	DR	BY	DSN	APV	DATE	REV	CHANGE	DR	BY	DSN	APV	DATE
E	FIGURE UPDATE	EDM	GLW	JES	CZH	10/12/2020	H	INSTALLATION UPDATE	ARC	MRF	JAS	KRG	04/07/2023
D	TABLE UPDATE	EDM	JIK	JES	CZH	01/15/2020	G	TABLE UPDATE	EDM	MRF	GLW	KRG	06/27/2022
C	DRAWING UPDATE	PEI	-	-	-	03/18/2019	F	NOTES UPDATE	EDM	MRF	GLW	CZH	12/06/2021

TABLE 1

WIRE SIZE									CLAMP RANGE (IN)		CLAMP DATA			STOCK NUMBER	DESIGN UNITS
ACSR/AW OR 5005 (AWG)				ACSR/AW				5005							
4 6/1 OR 7	2 6/1 OR 7	1/0 6/1 OR 7	3/0 6/1 OR 7	336.4 KCMIL 18/1	336.4 KCMIL 26/7	636 KCMIL 24/7	1033.5 KCMIL 45/7	394.5 KCMIL 19	MIN.	MAX.	BOLT SIZE	TORQUE (FT-LBS) (B)	CLEVIS WIDTH (A)		
--	--	--	--	--	--	X	--	--	.680	1.160	1/2	40	1	S230464	DE636
--	--	--	--	X	X	--	--	X	.440	.880	1/2	40	15/16	S230498	DE336
--	X	X	X	--	--	--	--	--	.316	.721	3/8	20	15/16	S230512	DE2 DE3/0

INSTALLATION:

(A) SEE CLAMP DATA COLUMN FOR CLEVIS WIDTH.

(B) HAND TIGHTEN U-BOLT NUTS AND TORQUE TO THE VALUES IN CLAMP DATA COLUMN.

(C) DEADEND TAILS SHALL BE APPROXIMATELY 15" LONG WHEN THE TAIL TAPPING METHOD IS UTILIZED.

BILL OF MATERIALS: NONE

NOTES:

I. DO NOT USE STRAIGHT STRAIN CLAMPS ON AWAC CONDUCTORS.

II. FOR NEW CONSTRUCTION, REPLACE OLD DEADEND CLAMPS WITH NEW DEADEND CLAMPS. PREVIOUSLY INSTALLED DEADEND CLAMPS MAY BE UTILIZED IN TROUBLE SITUATIONS, HOWEVER IT IS RECOMMENDED TO INSTALL NEW DEADEAND CLAMPS.

REFERENCE: NONE

TABLE OF CONTENTS

© 1998 - 2023 San Diego Gas & Electric Company. All rights reserved. Removal of this copyright notice without permission is not permitted under law.

REV	CHANGE	DR	BY	DSN	APV	DATE	REV	CHANGE	DR	BY	DSN	APV	DATE
E	FIGURE UPDATE	EDM	GLW	JES	CZH	10/12/2020	H	INSTALLATION UPDATE	ARC	MRF	JAS	KRG	04/07/2023
D	TABLE UPDATE	EDM	JIK	JES	CZH	01/15/2020	G	TABLE UPDATE	EDM	MRF	GLW	KRG	06/27/2022
C	DRAWING UPDATE	PEI	-	-	-	03/18/2019	F	NOTES UPDATE	EDM	MRF	GLW	CZH	12/06/2021

SCOPE: THIS STANDARD SHOWS AND LISTS STRAIN CLAMPS USED TO ATTACH ALUMINUM ALLOY CONDUCTORS TO DEADEND INSULATORS.

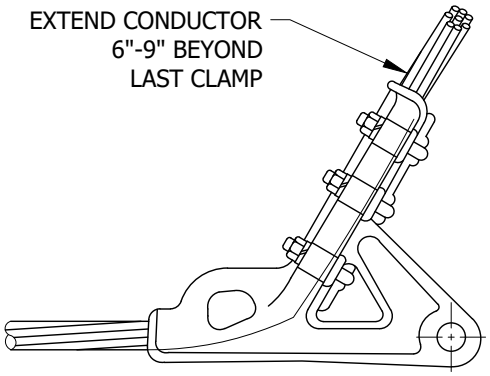

FIGURE 1

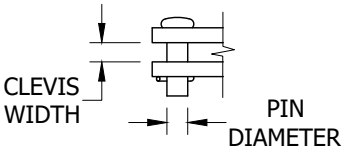

DETAIL 1

TABLE 1

WIRE SIZE									CLAMP RANGE (IN)		CLAMP DATA			STOCK NUMBER	DESIGN UNITS
AWAC (I)		ACSR													
2		1/0	3/0	336.4 MCM		397.5 MCM	636 MCM	1033.5 MCM							
5/2	3/4	6/1	6/1	18/1	26/7	26/7	24/7	45/7	MIN.	MAX.	CLEVIS WIDTH (IN)	PIN DIAMETER	TORQUE (FT-LBS)		
X	X	--	--	--	--	--	--	--	.20	.57	3/4	5/8"	40	S230672	DE2W
--	--	X	X	--	--	--	--	--	.30	.75	15/16	5/8"	40	S231616	DE1/0W DE3/0W
--	--	--	--	X	X	X	--	--	.46	.94	1 1/16	5/8"	40	S231700	DE336W DE397W
--	--	--	--	--	--	--	X	X	.71	1.318	1 7/16	3/4"	60	S230686	DE636W DE1033W

INSTALLATION:

A. HAND TIGHTEN U-BOLT NUTS AND THEN ALTERNATELY APPLY WRENCH UNTIL DESIRED TORQUE IS ACHIEVED.

BILL OF MATERIALS: NONE

NOTES:

(I) THESE STRAIN CLAMPS ARE TO BE USED FOR AWAC CONDUCTORS IN THE DISTRIBUTION SYSTEM.

II. FOR NEW CONSTRUCTION, REPLACE OLD DEADEND CLAMPS WITH NEW DEADEND CLAMPS. PREVIOUSLY INSTALLED DEADEND CLAMPS MAY BE UTILIZED IN TROUBLE SITUATIONS, HOWEVER IT IS RECOMMENDED TO INSTALL NEW DEADEAND CLAMPS

REFERENCE: NONE

© 1998 - 2023 San Diego Gas & Electric Company. All rights reserved. Removal of this copyright notice without permission is not permitted under law.

REV	CHANGE	DR	BY	DSN	APV	DATE	REV	CHANGE	DR	BY	DSN	APV	DATE
E	FIGURE UPDATE	EDM	GLW	JES	CZH	10/12/2020	H	INSTALLATION UPDATE	ARC	MRF	JAS	KRG	04/07/2023
D	TABLE UPDATE	EDM	JIK	JES	CZH	01/15/2020	G	TABLE UPDATE	EDM	MRF	GLW	KRG	06/27/2022
C	DRAWING UPDATE	PEI	-	-	-	03/18/2019	F	NOTES UPDATE	EDM	MRF	GLW	CZH	12/06/2021

TABLE OF CONTENTS

SCOPE: THIS STANDARD SHOWS AND LISTS BOLTED STRAIN CLAMPS USED TO ATTACH COPPER CONDUCTORS TO DEADEND INSULATORS.



FIGURE 1
SINGLE U-BOLT CLAMP



FIGURE 2
DOUBLE U-BOLT CLAMP

TABLE 1

FIGURE	WIRE SIZE										CLAMP RANGE (IN)		U-BOLT TORQUE (FT-LBS)	CLAMP P/N (STOCK#)	DESIGN UNITS
	COPPER						CW/CU								
	6 SOL	6 3-STR	4 3-STR	2 3-STR	1/0 7-STR	4/0 7-STR	6A 1/2	4A 1/2	4D 2/1	4N 5/2	MIN.	MAX.			
1	X	--	--	--	--	--	--	--	--	--	0.16	0.40	40	S231704	DE6C
2	--	X	X	X	X	--	X	X	X	X	0.18	0.46	20	S230368 (X)	DE1/0C
	--	--	--	--	X	X	--	--	--	--	0.36	0.60	40	S230402 (X)	DE4/0C

INSTALLATION:

A. HAND TIGHTEN U-BOLT NUTS AND THEN ALTERNATELY APPLY WRENCH UNTIL DESIRED TORQUE IS ACHIEVED.

BILL OF MATERIALS: NONE

NOTES:

I. NOT TO BE USED FOR TRANSMISSION APPLICATIONS.

II. THE USE OF THE SINGLE U-BOLT CLAMP BECAME EFFECTIVE ON 11/01/17.

III. FOR NEW CONSTRUCTION, REPLACE OLD DEADEND CLAMPS WITH NEW DEADEND CLAMPS. PREVIOUSLY INSTALLED DEADEND CLAMPS MAY BE UTILIZED IN TROUBLE SITUATIONS, HOWEVER IT IS RECOMMENDED TO INSTALL NEW DEADEAND CLAMPS.

(X) THIS ITEM IS EXEMPT.

REFERENCE: NONE

TABLE OF CONTENTS

© 1998 - 2023 San Diego Gas & Electric Company. All rights reserved. Removal of this copyright notice without permission is not permitted under law.

REV	CHANGE	DR	BY	DSN	APV	DATE	REV	CHANGE	DR	BY	DSN	APV	DATE
E	FIGURE UPDATE	EDM	GLW	JES	CZH	10/12/2020	H	INSTALLATION UPDATE	ARC	MRF	JAS	KRG	04/07/2023
D	TABLE UPDATE	EDM	JIK	JES	CZH	01/15/2020	G	TABLE UPDATE	EDM	MRF	GLW	KRG	06/27/2022
C	DRAWING UPDATE	PEI	-	-	-	03/18/2019	F	NOTES UPDATE	EDM	MRF	GLW	CZH	12/06/2021

SCOPE: THIS STANDARD SHOWS CLEVISES, BRACKET, SHACKLE, EXTENSION LINK, AND DEADEND STRAP USED IN THE DISTRIBUTION SYSTEM.

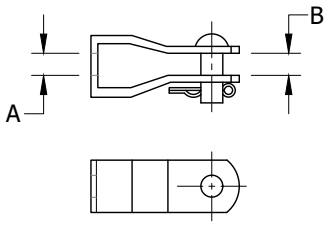

FIGURE 1

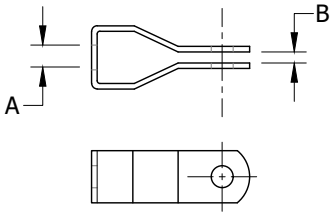

FIGURE 2

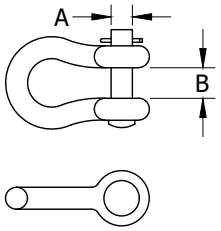

FIGURE 3

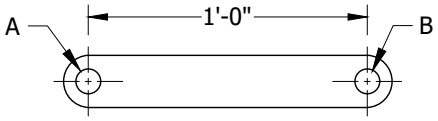

FIGURE 4

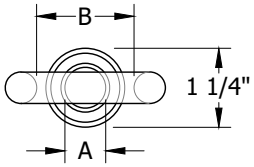

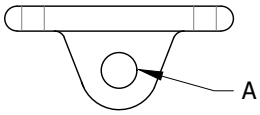

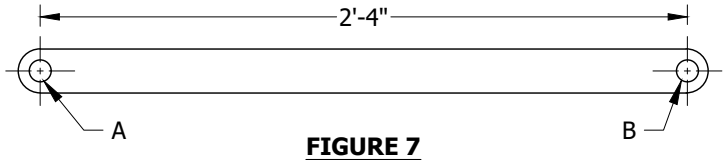

FIGURE 7

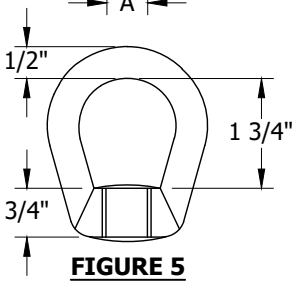

FIGURE 5

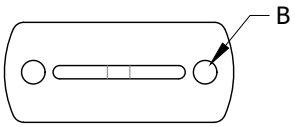

FIGURE 6

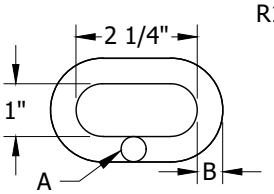

FIGURE 8

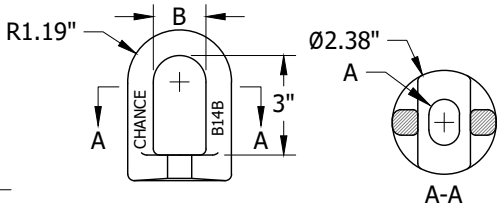

FIGURE 9

INSTALLATION: NONE

TABLE 1

FIGURE NUMBER	DESCRIPTION	DIMENSION		STOCK NUMBER	DESIGN UNITS
		A	B		
1	CLEVIS, OPEN, GALV., WITH PIN	5/8"	5/8"	S235622 (X)	--
	CLEVIS, OPEN, GALV., WITH PIN	3/4"	5/8"	S235616	DE-O/C
2	CLEVIS, CLOSED, GALV.	5/8"	1/4"	S235712	--
	CLEVIS, CLOSED, GALV.	3/4"	1/4"	S235624 (X)	DE-C/C
3	ATTACHED SHACKLE, ANCHOR, 5/8" PIN, HOT DIP GALVANIZED, 15,000 LB WORKING LOAD	5/8"	7/8"	S636432 (X)	30KSHK
4	LINK, EXTENSION, GALV., 1/2" X 2" X 12"	13/16"	13/16"	S466240	DEEXT
5	NUT, EYE	5/8"	1 1/2"	S503822 (X)	--
	NUT, EYE	3/4"	1 1/2"	S504020	--
6	TEE BRACKET, DEADEND, GALV.	1 1/4"	13/16"	S723968	T-BRKT
7	STRAP, DEADEND, GALV., 1/2" X 1 1/2" X 28"	11/16"	11/16"	S696870	DESTRP
8	LINK, CHAIN 30,000 LBS., GALV.	1/2"	1/2"	S465750 (X)	D-LINK
9	EYELET, STANDARD, FOR 3/4" BOLT GALV.	13/16" X 1 1/8" SLOT	1 1/4"	S235648 (X)	--

BILL OF MATERIALS: NONE

NOTES:

(X) THIS ITEM IS EXEMPT.

REFERENCE: NONE

© 1998 - 2023 San Diego Gas & Electric Company. All rights reserved. Removal of this copyright notice without permission is not permitted under law.

REV	CHANGE	DR	BY	DSN	APV	DATE	REV	CHANGE	DR	BY	DSN	APV	DATE
E	FIGURE UPDATE	EDM	GLW	JES	CZH	10/12/2020	H	INSTALLATION UPDATE	ARC	MRF	JAS	KRG	04/07/2023
D	TABLE UPDATE	EDM	JIK	JES	CZH	01/15/2020	G	TABLE UPDATE	EDM	MRF	GLW	KRG	06/27/2022
C	DRAWING UPDATE	PEI	-	-	-	03/18/2019	F	NOTES UPDATE	EDM	MRF	GLW	CZH	12/06/2021

SCOPE: THIS STANDARD IDENTIFIES THE DEADEND GRIPS FOR VARIOUS TYPES AND SIZES OF CONDUCTOR.

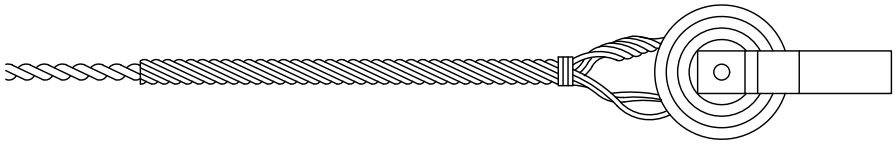

FIGURE 1

TABLE 1

ALUMOWELD DEADEND GRIPS FOR 5005, AWAC, OR ACSR/AW LINE CONDUCTORS AND TRIPLEX SERVICE MESSENGERS								
CONDUCTOR				COLOR CODE	MANUFACTURER		STOCK NUMBER	DESIGN UNITS
SIZE	STRANDING				CHANCE/FANNER	PREFORMED		
(AWG OR KCMIL)	5005 (B)	AWAC	ACSR/AW		CATALOG NO.	CATALOG NO.		
6	7	-	6/1	BLUE	-	DG-4554	(A)(B)	-
4	7	-	6/1	ORANGE	20 AWCG	DG-4541	S392448	DEG4
2	7	-	6/1	RED	30 AWCG	DG-4542	S392416	DEG2
1/0	7	(C)	6/1	YELLOW	50 AWCG	DG-4544	S392512	DEG1/0
3/0	7	-	6/1	ORANGE	70 AWCG	DG-4546	S392544	DEG3/0
4/0	-	-	6/1	RED	80 AWCG	DG-4547	S392548 (X)	C5G336 DEG4/0
336.4 KCML	-	-	18/1	GREEN	-	DG-4549	(A)	-
394.5 KCML	19	-	-					
2	-	3/4	-	ORANGE	16M-AWSBG	AWDE-4122	S392896	C5G1/0 C5G3/0 DEG2WH

TABLE 2

COATED DEADEND GRIPS FOR NEOPRENE OR POLYETHYLENE ALL ALUMINUM LINE CONDUCTORS										
CONDUCTOR		COLOR CODE	MANUFACTURER						STOCK NUMBER	DESIGN UNITS
			CHANCE			PREFORMED OR DULMISON				
SIZE	STRANDING		CATALOG NUMBER	DIAMETER RANGE		CATALOG NUMBER	DIAMETER RANGE			
(AWG OR KMIL)				MIN.	MAX.		MIN.	MAX.		
4 (B)	7	ORANGE	-	-	-	AND-0825	.324	.338	S392672	CD4C
2	7	RED	40 PCAG	.376	.415	ND-0106	.375	.397	S392640	CDE2
1/0	7	BLUE	60 PCAG	.451	.510	ND-0110	.476	.507	S392736	CD1/0C
3/0	7	YELLOW	80 PCAG	.551	.640	ND-0113	.572	.608	S392768	CDE3/0
336.4 KCMIL	19	BLUE	110 PCAG	.740	.837	ND-0118	.784	.834	S392800	CDE336

TABLE OF CONTENTS

© 1998 - 2023 San Diego Gas & Electric Company. All rights reserved. Removal of this copyright notice without permission is not permitted under law.

REV	CHANGE	DR	BY	DSN	APV	DATE	REV	CHANGE	DR	BY	DSN	APV	DATE
C	TABLE UPDATE	EDM	JIK	JES	CZH	11/9/2020	F						
B	DRAWING UPDATE	PEI	-	-	-	03/18/2019	E						
A	ORIGINAL ISSUE	-	-	PTA	CAK	01/01/1998	D	INSTALLATION UPDATE	ARC	RSL	GLW	KRG	03/29/2023

TABLE 3

COPPERWELD DEADEND GRIPS FOR COPPER LINE CONDUCTORS AND TRIPLEX SERVICE MESSENGERS							
CONDUCTOR SIZE	COPPERWELD GRIP (M SERIES)		COLOR CODE	MANUFACTURER CATALOG NUMBER		STOCK NUMBER	DESIGN UNITS
AWG/STRANDING	SIZE	DIAMETER		PREFORMED	HELICAL		
6/1	8C	.174"	RED	CDE-8102	-	S393122 (X)	CDE6
6/3	4M	.209"	WHITE	CDE-8106	-	S309058 (X)	CDE6BS
4/3	6M	.237"	YELLOW	CDE-3103	HG4106M	S393090 (X)	CDE4BS
2/3	10M	.303"	RED	CDE-3109	HG41510MTL	S392994 (X)	CDE2BS
1/0	16M	.386"	WHITE	CDE-3115	HG52516MTL	S393026 (X)	CDE1/0

INSTALLATION:

(A) NO LONGER PURCHASED.

(B) OBSOLETE WIRE SIZE, MINIMUM STOCK MAINTAINED FOR MAINTENANCE.

(C) USE STOCK NUMBER S392512 WHEN DEADENDING #2-3/4 AWAC REDUCED TENSION TO A 55-5 PIN INSULATOR.

BILL OF MATERIALS: NONE

NOTES:

(X) THIS ITEM IS EXEMPT.

REFERENCE: NONE

TABLE OF CONTENTS

© 1998 - 2023 San Diego Gas & Electric Company. All rights reserved. Removal of this copyright notice without permission is not permitted under law.

REV	CHANGE	DR	BY	DSN	APV	DATE	REV	CHANGE	DR	BY	DSN	APV	DATE
C	TABLE UPDATE	EDM	JIK	JES	CZH	11/9/2020	F						
B	DRAWING UPDATE	PEI	-	-	-	03/18/2019	E						
A	ORIGINAL ISSUE	-	-	PTA	CAK	01/01/1998	D	INSTALLATION UPDATE	ARC	RSL	GLW	KRG	03/29/2023

SCOPE: THIS STANDARD IDENTIFIES THE SERVICE GRIPS FOR BARE 5005 TRIPLEX NEUTRAL.

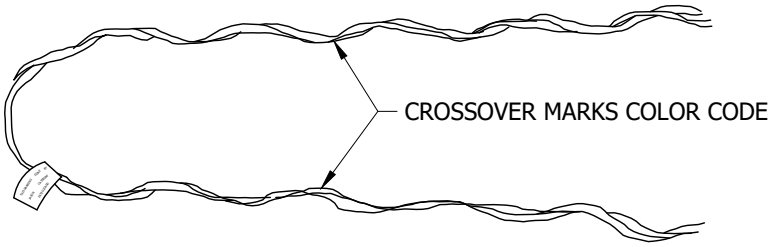

FIGURE 1

TABLE 1

SERVICE GRIPS					
CONDUCTOR		COLOR CODE	DIAMETER RANGE		STOCK NUMBER
SIZE	STRANDING		MIN.	MAX.	
	5005				
4	7	ORANGE	.225	.257	S394176
2	7	RED	.290	.325	S394144
1/0	7	YELLOW	.361	.400	S394240

INSTALLATION: NONE

BILL OF MATERIALS: NONE

NOTES:

I. FOR USE ON 5005 TRIPLEX SERVICE DROP NEUTRAL.

II. SEE PAGES OH614 AND OH617 FOR APPLICATION TO CENTER SPAN SERVICE.

REFERENCE: NONE

TABLE OF CONTENTS

© 1998 - 2023 San Diego Gas & Electric Company. All rights reserved. Removal of this copyright notice without permission is not permitted under law.

REV	CHANGE	DR	BY	DSN	APV	DATE	REV	CHANGE	DR	BY	DSN	APV	DATE
C	TABLE UPDATE	EDM	JIK	JES	CZH	11/9/2020	F						
B	DRAWING UPDATE	PEI	-	-	-	03/18/2019	E						
A	ORIGINAL ISSUE	-	-	PTA	CAK	01/01/1998	D	INSTALLATION UPDATE	ARC	RSL	GLW	KRG	03/29/2023

X Indicates Latest Revision | Completely Revised | New Page | Information Removed

SCOPE: THIS STANDARD IDENTIFIES CABLE AND DEADEND GRIPS FOR W.P. COPPER CONDUCTOR.

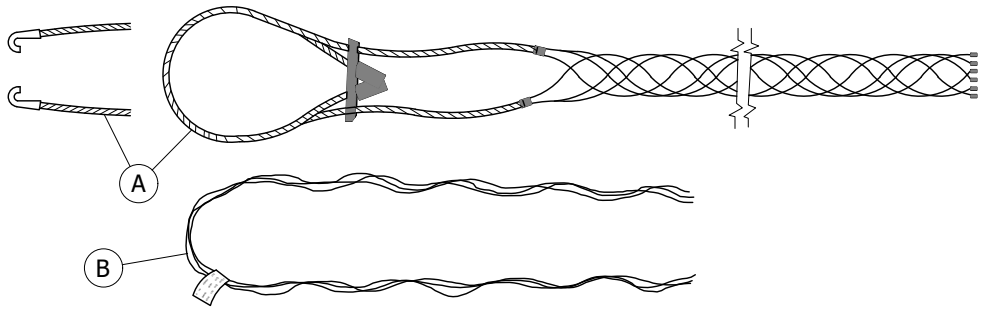

FIGURE 1

TABLE 1

CABLE GRIPS FOR W.P. COPPER SERVICE CONDUCTORS ASSEMBLY (A)										
WIRE SIZE	**NOM. DIA.**	**CABLE DIAMETERS**	**GRIP OR MESH LENGTH (IN)**	**BAIL LENGTH (IN)**	**BREAK STRENGTH (LBS)**	**WT. #/100**	**MANUFACTURER**	**CATALOG NUMBER**	**STOCK NUMBER**	**DESIGN UNITS**
1/0	.53"	1/2" ; .46" - .56"	5 1/4	12	780	8 1/2	KELLEMS	022-16-020	S394272	CG1/0
		1/2" - 5/8"	6	13	950	6	ECONOMY	SPJ-050-H		
		-	-	-	-	-	-	-		
4/0	.71"	11/16" ; .64" - .75"	6 3/4	13	940	12 1/2	KELLEMS	022-16-023	S394304	CG4/0
		5/8" - 3/4"	6 1/2	14	1000	10	ECONOMY	SPJ-062-H		
		-	-	-	-	-	-	-		
500 KCM	1.02"	1" ; .94" - 1.06"	9	15	1125	18 1/2	KELLEMS	022-16-028	S394336	CG500
		1" - 1 1/8"	9 1/2	15	1300	15	ECONOMY	SPJ-100-H		
		-	-	-	-	-	-	-		
750 KCM	1.195"	1 1/8" ; 1.00" - 1.24"	14	10	1400	20 1/2	KELLEMS	022-01-081	S394368	CG750
		1 1/8" - 1 1/4"	8	14	1500	16	ECONOMY	SPC-100-SH		
		-	-	-	-	-	-	-		

TABLE 2

NEOPRENE COATED DEADEND GRIPS FOR NEOPRENE OR POLYETHYLENE COPPER SECONDARY LINE CONDUCTORS (B)								
WP COPPER CONDUCTOR		**DEADEND GRIP DATA**					**STOCK NUMBER**	**DESIGN UNITS**
SIZE	**NOM. DIA.**	**COLOR CODE**	**OVERALL LENGTH**	**WT. #/100**	**PREFORMED CATALOG NUMBER**	**FANNER CATALOG NUMBER**		
6	SOLID	RED	17"	10	ND-0501	-	S392704	-
4	SOLID	ORANGE	19"	13	ND-0103	-	S392672	CD4C
2	7	RED	23"	19	ND-0106	40 PCAG	S392640	CD2C
1/0	7	BLUE	30"	44	ND-0110	60 PCAG	S392736	CD1/0C

INSTALLATION: NONE

BILL OF MATERIALS: NONE

NOTES: NONE

REFERENCE: NONE

© 1998 - 2023 San Diego Gas & Electric Company. All rights reserved. Removal of this copyright notice without permission is not permitted under law.

REV	CHANGE	DR	BY	DSN	APV	DATE	REV	CHANGE	DR	BY	DSN	APV	DATE
C	TABLE UPDATE	EDM	JIK	JES	CZH	11/9/2020	F						
B	DRAWING UPDATE	PEI	-	-	-	03/18/2019	E						
A	ORIGINAL ISSUE	-	-	PTA	CAK	01/01/1998	D	INSTALLATION UPDATE	ARC	RSL	GLW	KRG	03/29/2023

TABLE OF CONTENTS

SCOPE: THIS STANDARD SHOWS THE VARIOUS TYPES OF INSULATORS USED IN THE DISTRIBUTION SYSTEM.

TABLE 1

VERTICAL-POST TYPE INSULATORS

APPLICATION	DESCRIPTION	WORKING STRENGTH (LBS) (I)	BONDING	COLOR	STOCK NUMBER	DESIGN UNITS
12KV VPI (VERTICAL POST INSULATOR) (b)	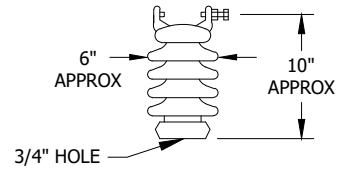	650 TENSION 900 CANTILEVER	UNBONDED	GRAY	S428608	VPI
12KV VPR (VERTICAL POST RESISTIVE) (A a b)	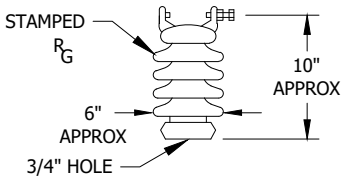	650 TENSION 900 CANTILEVER	UNBONDED	GRAY	S432224	HPI-VR
12KV AND BELOW FOR GENERAL APPLICATION (HORIZONTAL POST) (b)	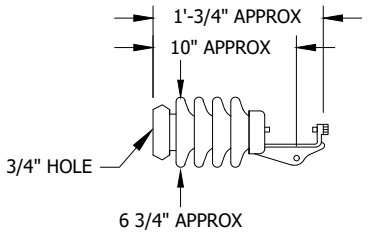	--	--	GRAY	S428576	HPI
UNDERARM INSULATOR	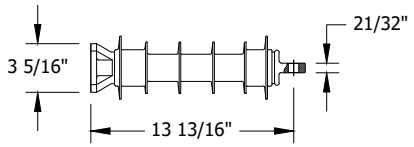	650 TENSION 900 CANTILEVER	BONDED	GRAY	S431298	UA-INS
4KV AND 12KV (RATED TO 25KV) (C G L a c)	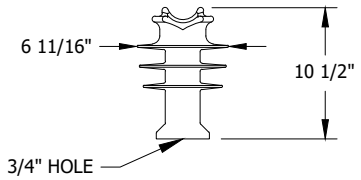	1,500 TENSION 750 CANTILEVER	UNBONDED	GRAY	S429142	LP-11F
4KV AND 12KV (RATED TO 35KV) (C G L a c)	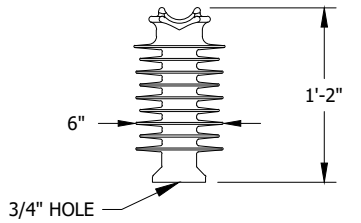	1,500 TENSION 900 CANTILEVER	UNBONDED	GRAY	S429144	LP-14F

TABLE OF CONTENTS

© 1998 - 2021 San Diego Gas & Electric Company. All rights reserved. Removal of this copyright notice without permission is not permitted under law.

REV	CHANGE	DR	BY	DSN	APV	DATE	REV	CHANGE	DR	BY	DSN	APV	DATE
E	EDITORIAL CHANGES	EDM	EJA	GLW	CZH	04/14/2020	H	TABLE UPDATE	EDM	JIK	JES	CZH	12/06/2021
D	EDITORIAL CHANGES	EDM	JES	JES	CZH	07/15/2019	G	TABLE UPDATE	EDM	RSL	JES	CZH	03/17/2021
C	EDITORIAL CHANGES	-	GW	JS	CZH	09/21/2018	F	TABLE UPDATE	EDM	RSL	JES	CZH	08/14/2020

TABLE 2

PIN TYPE INSULATORS						
APPLICATION	**DESCRIPTION**	**PIN**	**WORKING STRENGTH (LBS)**	**INSERT TYPE**	**STOCK NUMBER**	**DESIGN UNITS**
4KV NEUTRAL & SECONDARY CODE 55-2	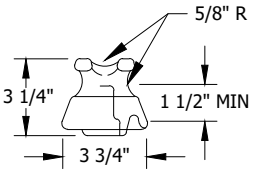 TIE-TOP 'C' NECK	1"	100 TENSION 800 CANTILEVER	--	S429024	55-2/I
12KV PHASE/NEUTRAL (RATED 25KV) (C a c d)	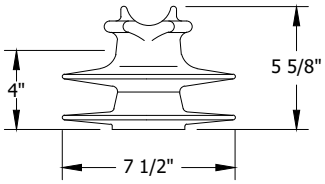 TIE-TOP 'F' NECK	1"	1,500 TENSION 800 CANTILEVER	--	S429050	56-1NP
		1 3/8"	1,500 TENSION 800 CANTILEVER	--	S429140	56-2NP
4KV AND 12KV NEUTRAL (RATED 25KV) (WHITE) (C a c d)	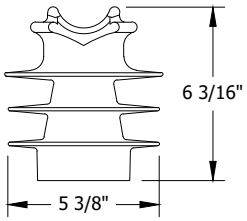 TIE-TOP 'F' NECK	1 3/8"	1,500 TENSION 1,100 CANTILEVER	--	S432220	IWN
4KV AND 12KV POLY (RATED 25KV) (C a c d)		1"	1,500 TENSION 800 CANTILEVER	--	S429052	IPF1
		1 3/8"	1,500 TENSION 1,100 CANTILEVER	--	S429054	IPF1LG
12KV PHASE/NEUTRAL (RATED 25KV) (D E F I II IV V VI a c d)	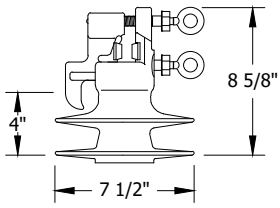 VISE-TOP	1"	100 TENSION HORIZONTAL: SEE TABLE 3 900 CANTILEVER	UNIVERSAL	S429270	IPU1
		1 3/8"	160 TENSION HORIZONTAL: SEE TABLE 3 1,000 CANTILEVER	UNIVERSAL	S429272	IPULG

TABLE 3

HORIZONTAL WORKING STRENGTHS, AT-INSTALLATION			
JAW INSERT TYPE	**CONDUCTOR TYPE**	**CONDUCTOR OUTSIDE DIAMETER RANGE (IN)**	**WORKING STRENGTH (LB)**
ALUMINUM	ALUMINUM BARE	0.316-1.17	223
BRONZE	COPPER BARE	0.316-0.684	101
NYLON	COVERED CONDUCTOR	0.728-0.993	276
COMPOSITE (UNIVERSAL)	BARE CONDUCTOR	0.165-1.17	241
COMPOSITE (UNIVERSAL)	COVERED CONDUCTOR	0.728-1.24	275

© 1998 - 2021 San Diego Gas & Electric Company. All rights reserved. Removal of this copyright notice without permission is not permitted under law.

REV	CHANGE	DR	BY	DSN	APV	DATE	REV	CHANGE	DR	BY	DSN	APV	DATE
E	EDITORIAL CHANGES	EDM	EJA	GLW	CZH	04/14/2020	H	TABLE UPDATE	EDM	JIK	JES	CZH	12/06/2021
D	EDITORIAL CHANGES	EDM	JES	JES	CZH	07/15/2019	G	TABLE UPDATE	EDM	RSL	JES	CZH	03/17/2021
C	EDITORIAL CHANGES	-	GW	JS	CZH	09/21/2018	F	TABLE UPDATE	EDM	RSL	JES	CZH	08/14/2020

TABLE 4

GAIN BASE TYPE INSULATORS

APPLICATION	DESCRIPTION	WORKING STRENGTH (LBS)	BONDING	COLOR	HUBBELL MFR STOCK NUMBER	STOCK NUMBER	DESIGN UNITS
VERTICAL CONSTRUCTION DISTRIBUTION 12KV PHASE/NEUTRAL (RATED 35KV)	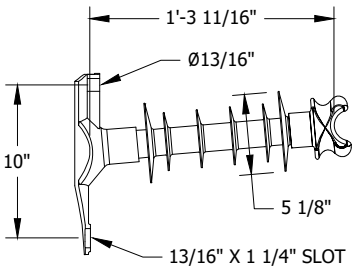 TIE-TOP 'F' NECK	(III)	UNDBONDED	GRAY	HPS-80S0280F00	TBD	TBD
	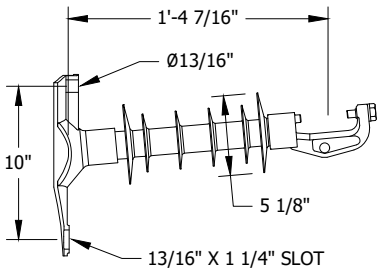 CLAMPTOP	(III)	UNDBONDED	GRAY	HPS-80S0280100	TBD	TBD
	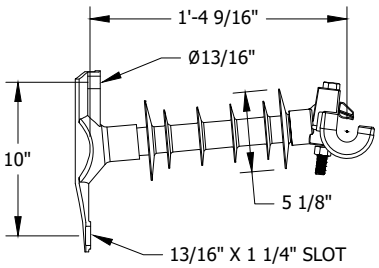 UNIVERSAL CLAMP	(III)	UNDBONDED	GRAY	HPS-80S0280K00	TBD	TBD

TABLE OF CONTENTS

© 1998 - 2021 San Diego Gas & Electric Company. All rights reserved. Removal of this copyright notice without permission is not permitted under law.

REV	CHANGE	DR	BY	DSN	APV	DATE	REV	CHANGE	DR	BY	DSN	APV	DATE
E	EDITORIAL CHANGES	EDM	EJA	GLW	CZH	04/14/2020	H	TABLE UPDATE	EDM	JIK	JES	CZH	12/06/2021
D	EDITORIAL CHANGES	EDM	JES	JES	CZH	07/15/2019	G	TABLE UPDATE	EDM	RSL	JES	CZH	03/17/2021
C	EDITORIAL CHANGES	-	GW	JS	CZH	09/21/2018	F	TABLE UPDATE	EDM	RSL	JES	CZH	08/14/2020

TABLE 5

SUSPENSION TYPE INSULATORS

APPLICATION	DESCRIPTION	WORKING STRENGTH (LBS) (I)	BONDING	COLOR	STOCK NUMBER	DESIGN UNITS
DISTRIBUTION (2 MAX. PER DEADEND SHOE). EXCLUDING NEW CONSTRUCTION (INSTALLATION OF NEW WIRE) AND RECONDUCTORS.	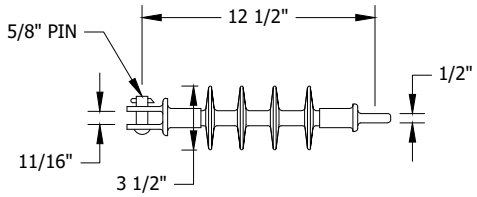 12KV SUSPENSION INSULATOR GALVANIZED END FITTINGS	5,000 TENSION	UNBONDED	GRAY	S431650	1DE
	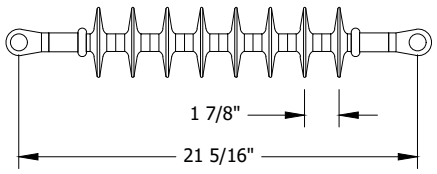 35KV SUSPENSION INSULATOR GALVANIZED END FITTINGS (G)(K)	5,000 TENSION	UNBONDED	GRAY	S428958	LONGDE
	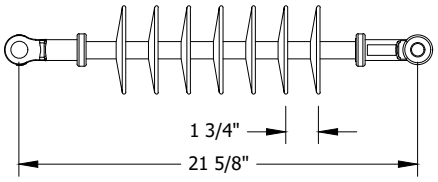 35KV SUSPENSION INSULATOR STAINLESS STEEL END FITTINGS (K)(L)	5,000 TENSION	UNBONDED	GRAY	S428954	LONGDES5
	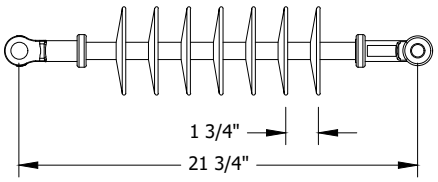 35KV SUSPENSION INSULATOR GALVANIZED END FITTINGS (G)(K)	7,000 TENSION	UNBONDED	GRAY	S428956	LONGDEG7

TABLE OF CONTENTS

© 1998 - 2021 San Diego Gas & Electric Company. All rights reserved. Removal of this copyright notice without permission is not permitted under law.

REV	CHANGE	DR	BY	DSN	APV	DATE	REV	CHANGE	DR	BY	DSN	APV	DATE
E	EDITORIAL CHANGES	EDM	EJA	GLW	CZH	04/14/2020	H	TABLE UPDATE	EDM	JIK	JES	CZH	12/06/2021
D	EDITORIAL CHANGES	EDM	JES	JES	CZH	07/15/2019	G	TABLE UPDATE	EDM	RSL	JES	CZH	03/17/2021
C	EDITORIAL CHANGES	-	GW	JS	CZH	09/21/2018	F	TABLE UPDATE	EDM	RSL	JES	CZH	08/14/2020

TABLE OF CONTENTS

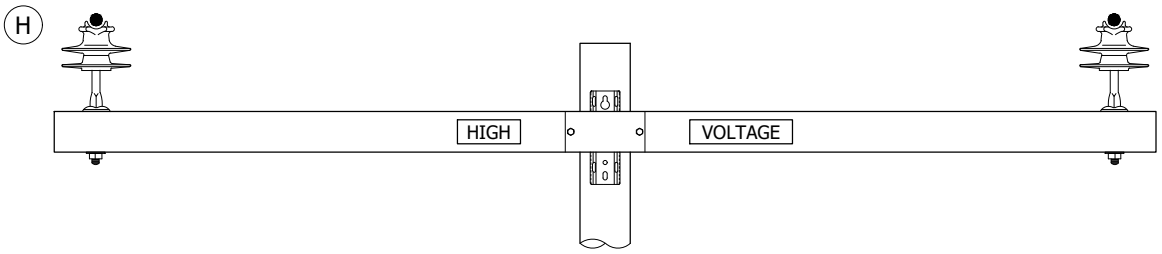

FIGURE 1
TANGENT - TIE TOPS (C)

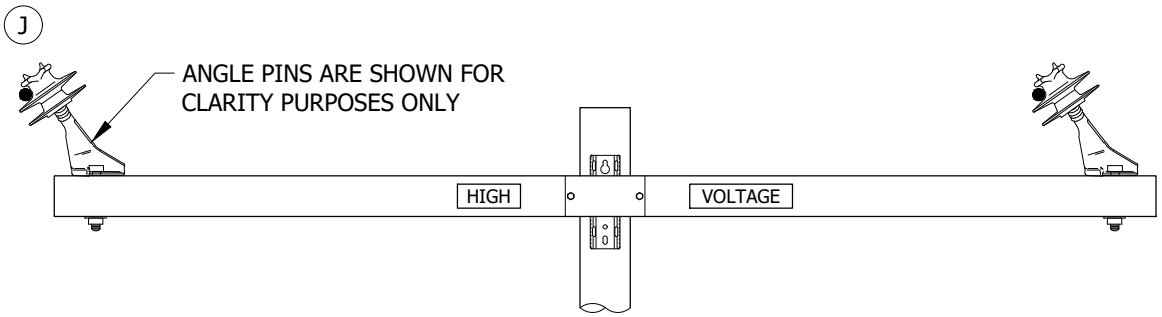

FIGURE 2
LINE ANGLES (C)

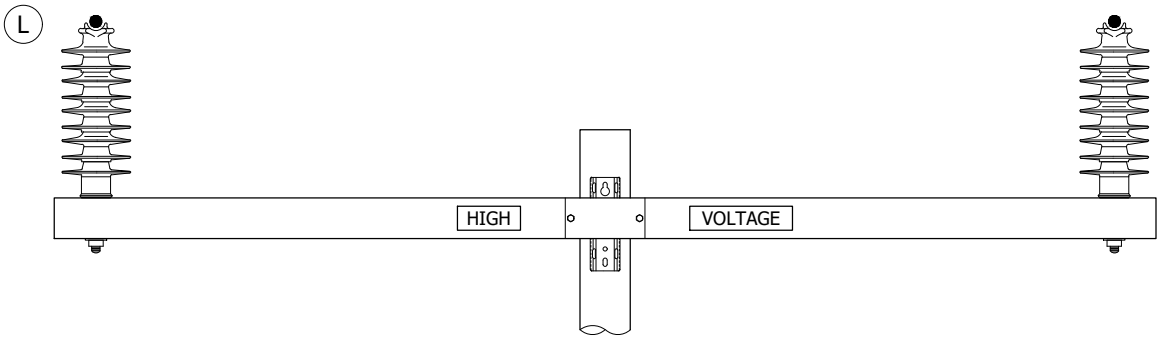

FIGURE 3
TANGENT - TIE TOPS 25KV OR 35KV POST TOP
INSULATORS (35KV SHOWN FOR CLARITY)

© 1998 - 2021 San Diego Gas & Electric Company. All rights reserved. Removal of this copyright notice without permission is not permitted under law.

REV	CHANGE	DR	BY	DSN	APV	DATE	REV	CHANGE	DR	BY	DSN	APV	DATE
E	EDITORIAL CHANGES	EDM	EJA	GLW	CZH	04/14/2020	H	TABLE UPDATE	EDM	JIK	JES	CZH	12/06/2021
D	EDITORIAL CHANGES	EDM	JES	JES	CZH	07/15/2019	G	TABLE UPDATE	EDM	RSL	JES	CZH	03/17/2021
C	EDITORIAL CHANGES	-	GW	JS	CZH	09/21/2018	F	TABLE UPDATE	EDM	RSL	JES	CZH	08/14/2020

X Indicates Latest Revision | Completely Revised | New Page | Information Removed

SDG&E ELECTRIC OVERHEAD CONSTRUCTION STANDARDS

INSULATORS

OH750.5

INSTALLATION:

(A) USE THIS INSULATOR, WHICH HAS A SPECIAL RESISTIVE GLAZE, TO REDUCE FLASHOVER PROBLEMS. BASES MUST BE BONDED AND INSULATORS MUST NOT BE MIXED WITH OTHER TYPES ON PHASE WIRES ON ONE POLE. DO NOT WASH OR INSULGREASE THESE INSULATORS. FOR THREE-PHASE APPLICATION ONLY.

B. VERTICAL POST-TYPE INSULATORS FOR DISTRIBUTION USE HAVE A 3/4-INCH HOLE FOR MOUNTING STUD. STUDS ARE STOCKED BY REFERENCING THE SIZE OF THE STUD WHICH MATES WITH THE REST OF THE STRUCTURE. (c)

TABLE 6

TOP/VERTICAL-POST INSULATOR-MACRO UNITS	
DESCRIPTION	MU ID
VERTICAL-POST	1VPI
VERTICAL-POST IN AIR	1VPIA

(C) WHEN INSTALLING A TIE-TOP INSULATOR, THE LINE ANGLE IS LIMITED TO A MAXIMUM OF SIX DEGREES WHEN THE CONDUCTOR IS PLACED IN THE SADDLE OF THE INSULATOR AND PROPERLY SECURED WITH THE APPROPRIATE CONDUCTOR TIE. FOR LINE ANGLES GREATER THAN SIX DEGREES, THE CONDUCTOR SHALL BE PLACED ON THE NECK OF THE TIE-TOP INSULATOR AND PROPERLY SECURED WITH THE APPROPRIATE CONDUCTOR TIE. FOR CLARIFICATION, REFER TO FIGURES 1 AND 2 ON PAGE 4.

(D) VISE-TOP INSULATORS ARE TO BE USED FOR JUMPER WIRE CONFIGURATIONS ONLY.

(E) THE VISE-TOP INSULATOR HAS BEEN TESTED AND APPROVED FOR ALL CONDUCTOR SIZES WITH THE EXCEPTION OF #2 SOLID, #4 SOLID, AND #6 SOLID. THESE CONDUCTOR SIZES WILL BE USED WITH INSULATORS THAT REQUIRE TIE-WIRES.

(F) VISE-TOP INSULATORS WITH UNIVERSAL JAW MAY BE USED ON ALL JUMPER TYPES.

(G) NOT FOR USE IN SPINDRIFT AREA

1. SPINDRIFT AREA IS DEFINED AS THAT AREA WHERE SALT SPRAY IS CARRIED INLAND BY THE WIND ON CLEAR DAYS.

(H) FIGURE 1 ILLUSTRATES CONDUCTOR PLACED IN SADDLE OF TIE-TOP INSULATOR.

(J) FIGURE 2 ILLUSTRATES CONDUCTOR PLACED ON NECK OF TIE-TOP INSULATOR.

(K) PROVIDES ADEQUATE CLIMBING SPACE FOR PRIMARY ON STEEL POLES.

(L) FOR HIGH CONTAMINATION AREAS WHERE EXCESSIVE CURRENT LEAKAGE/TRACKING CONDITIONS EXIST.

BILL OF MATERIALS: NONE

NOTES:

(I) A SAFETY FACTOR OF THREE IS INCLUDED IN THE WORKING STRENGTH VALUE.

(II) VISE-TOP INSULATOR MAY BE USED IN THE INSTALLATION OF A STAND-OFF PIN INSULATOR FOR TRANSFORMER CONSTRUCTION AND JUMPERS.(F)

(III) WORKING STRENGTHS ARE NOT TO EXCEED MANUFACTURER DESIGNATED CAPACITIES. VERIFY STRENGTH UTILIZATION THROUGH PLS WITH MANUFACTURER SUPPLIED **INSULATOR LIBRARY**. INSULATOR LIBRARY INCLUDES A SAFETY FACTOR OF THREE.

(IV) TENSION IS VERTICAL (UPLIFT) WORKING STRENGTH.

(V) CANTILEVER IS TRANSVERSE (PERPENDICULAR TO THE CONDUCTOR) WORKING STRENGTH.

(VI) HORIZONTAL IS LONGITUDINAL (IN LINE WITH CONDUCTOR) WORKING STRENGTH. HORIZONTAL WORKING STRENGTHS ARE DEPENDENT ON CONDUCTOR MATERIAL, CONDUCTOR DIAMETER, AND JAW INSERT MATERIAL. SEE TABLE 3 FOR HORIZONTAL WORKING STRENGTHS.

REFERENCE:

(a) FOR CONTAMINATION DISTRICTS, SEE OH287.

(b) FOR CLAMP TOP APPLICATIONS, POST INSULATOR CLAMPS AND D.E. ATTACHMENTS, SEE OH773.

(c) FOR PIN STRENGTHS, STUD SIZING AND INSULATOR PINS AND SPACERS, SEE OH396.

(d) FOR LINE ANGLE REQUIREMENTS AND LINE ANGLES ON CROSSARM, SEE OH433.

e. FOR PROPER SELECTION OF FORMED WIRED TIES AND CONDUCTOR TIES, SEE OH760.

TABLE OF CONTENTS

© 1998 - 2021 San Diego Gas & Electric Company. All rights reserved. Removal of this copyright notice without permission is not permitted under law.

REV	CHANGE	DR	BY	DSN	APV	DATE	REV	CHANGE	DR	BY	DSN	APV	DATE
E	EDITORIAL CHANGES	EDM	EJA	GLW	CZH	04/14/2020	H	TABLE UPDATE	EDM	JIK	JES	CZH	12/06/2021
D	EDITORIAL CHANGES	EDM	JES	JES	CZH	07/15/2019	G	TABLE UPDATE	EDM	RSL	JES	CZH	03/17/2021
C	EDITORIAL CHANGES	-	GW	JS	CZH	09/21/2018	F	TABLE UPDATE	EDM	RSL	JES	CZH	08/14/2020

SCOPE: THE FOLLOWING STANDARD SHOWS THE OH CONDUCTOR SPACER SYSTEM USING THE VISE-TOP INSULATOR, FIBERGLASS ROD (24" OR 48").

ATTENTION: CONDUCTOR SPACERS ARE TO BE INSTALLED MID-SPAN AND REQUIRE BUCKET TRUCK ACCESS. EFFECTIVE WITH CONDUCTORS RANGING FROM 3/0 THROUGH 636. IF THERE IS NO BUCKET TRUCK ACCESS. (C)

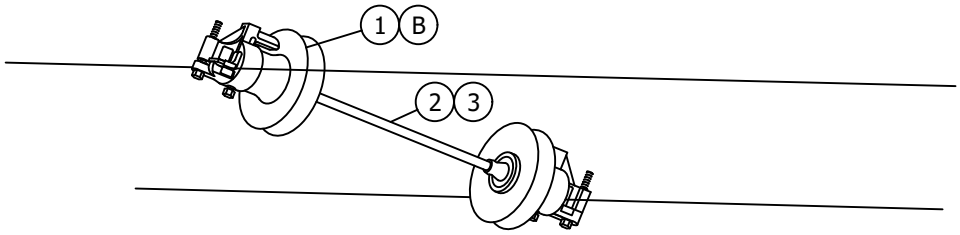

FIGURE 1
SINGLE SPACER
INSTALLATION

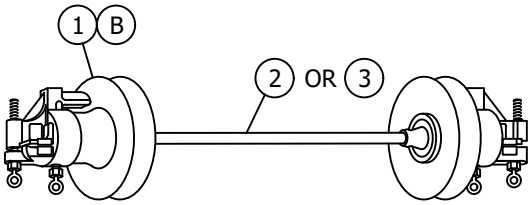

FIGURE 2
FIBERGLASS SPACER WITH
VISE-TOP INSULATOR.

TABLE OF CONTENTS

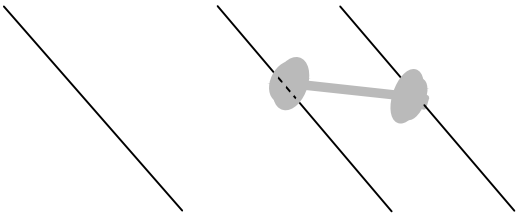

FIGURE 3 (A)
THREE-WIRE SPACER INSTALLATION

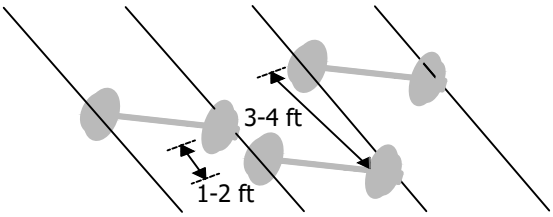

FIGURE 4 (A)
FOUR-WIRE SPACER INSTALLATION

© 1998 - 2019 San Diego Gas & Electric Company. All rights reserved. Removal of this copyright notice without permission is not permitted under law.

REV	CHANGE	BY	DSGN	APPV	DATE	REV	CHANGE	BY	DSGN	APPV	DATE
C	EDITORIAL CHANGES	JK	JS	MDJ	04/01/2018	F					
B	EDITORIAL CHANGES	JC	JS	MDJ	03/01/2018	E	EDITORIAL CHANGES	JIK	JES	CZH	10/20/2019
A	ORIGINAL ISSUE	-	-	WT/MC	02/11/2009	D	DRAWING UPDATE	PEI	-	-	03/18/2019

X Indicates Latest Revision | Completely Revised | New Page | Information Removed

SDG&E ELECTRIC OVERHEAD CONSTRUCTION STANDARDS

FIBERGLASS CONDUCTOR SPACER

OH755.1

INSTALLATION:

(A) FOR THREE WIRE LOCATIONS, ONLY ONE SPACER IS NEEDED FOR THE TWO OUTER MOST PHASES AS DEPICTED IN FIGURE 3. FOR FOUR WIRE LOCATIONS, INSTALL THREE SPACERS AND STAGGER THEM AS DEPICTED IN FIGURE 4.

(B) THE POLY VISE-TOP IS THE ONLY APPROVED INSULATOR FOR THIS APPLICATION.

(C) IF BUCKET TRUCK ACCESS TO THE MID-SPAN IS NOT POSSIBLE, TWO OPTIONS REMAIN:

1. SPREAD THE WIRE BY RECONSTRUCTING THE POLE TOP USING THE 3-WIRE TANGENT CONSTRUCTION.(a)
2. SPREAD THE WIRE BY RECONSTRUCTING THE POLE TOP USING 4-WIRE TANGENT, TWO LEVELS.(b)

BILL OF MATERIALS:

ITEM	DESCRIPTION	QUANTITY	STANDARD PAGE	STOCK NUMBER	DESIGN UNITS
1	INSULATOR, VISE-TOP, POLYETHYLENE, PIN TYPE 1" (B)	2	750.2	--	--
2	CONDUCTOR SPACER, FIBERGLASS, 3/4" X 48", 1" THREAD	1	396	S663278	--
3	CONDUCTOR SPACER, FIBERGLASS, 3/4" X 24", 1" THREAD	1	396	S663266	--

NOTES: NONE

REFERENCE:

(a) SEE STANDARD OH1650.

(b) SEE STANDARD OH1655.

TABLE OF CONTENTS

© 1998 - 2019 San Diego Gas & Electric Company. All rights reserved. Removal of this copyright notice without permission is not permitted under law.

REV	CHANGE	BY	DSGN	APPV	DATE	REV	CHANGE	BY	DSGN	APPV	DATE
C	EDITORIAL CHANGES	JK	JS	MDJ	04/01/2018	F					
B	EDITORIAL CHANGES	JC	JS	MDJ	03/01/2018	E	EDITORIAL CHANGES	JIK	JES	CZH	10/20/2019
A	ORIGINAL ISSUE	-	-	WT/MC	02/11/2009	D	DRAWING UPDATE	PEI	-	-	03/18/2019

X Indicates Latest Revision | Completely Revised | New Page | Information Removed

SDG&E ELECTRIC OVERHEAD CONSTRUCTION STANDARDS

FIBERGLASS CONDUCTOR SPACER

OH755.2

SCOPE: THIS STANDARD SHOWS TREE GUARDS USED TO PROTECT INSULATED WIRES AGAINST MECHANICAL ABRASIONS CAUSED BY TREE LIMBS OR OTHER OBSTRUCTIONS.

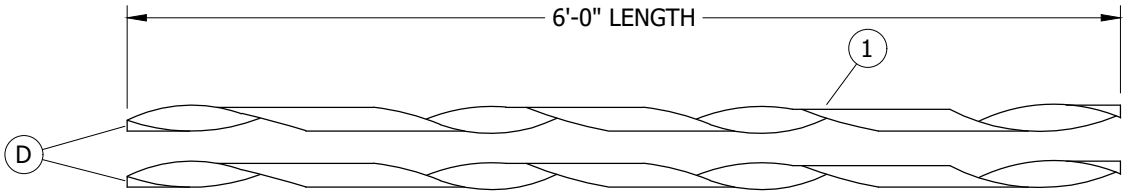

FIGURE 1

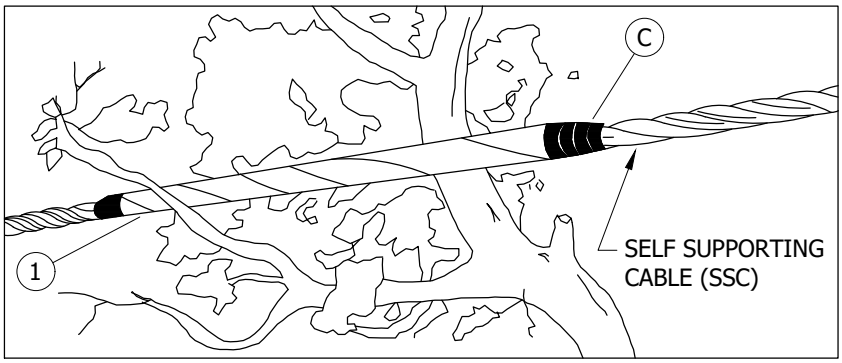

FIGURE 2

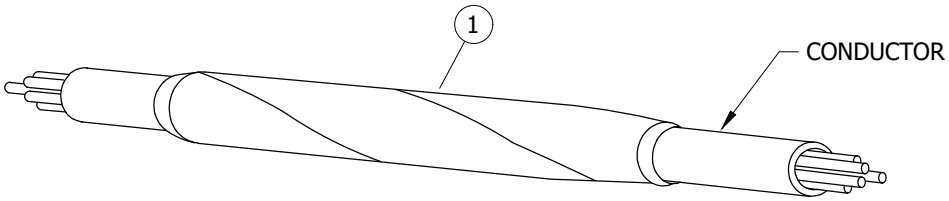

FIGURE 3

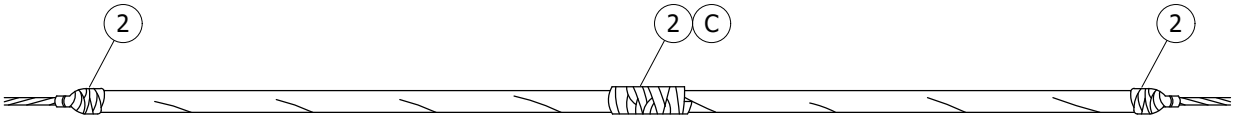

FIGURE 4

© 1998 - 2021 San Diego Gas & Electric Company. All rights reserved. Removal of this copyright notice without permission is not permitted under law.

REV	CHANGE	DR	BY	DSN	APV	DATE	REV	CHANGE	DR	BY	DSN	APV	DATE
C	TABLE UPDATE	EDM	JIK	JES	CZH	08/25/2021	F						
B	DRAWING UPDATE	PEI	-	-	-	03/18/2019	E						
A	ORIGINAL ISSUE	-	-	PTA	RDJ	05/06/1983	D						

X Indicates Latest Revision | Completely Revised | New Page | Information Removed

SDG&E ELECTRIC OVERHEAD CONSTRUCTION STANDARDS

SHEET 1 OF 2

TREE GUARD

OH758.1

TABLE OF CONTENTS

INSTALLATION:

A. TREE GUARDS ARE PURCHASED IN 6-FOOT LENGTHS.

B. TREE GUARDS ARE NOT TO BE USED IN PLACE OF CONDUCTOR INSULATION.

(C) WHEN EXTRA LENGTH IS REQUIRED, BUTT GUARDS TOGETHER. USE ELECTRICAL TAPE TO SECURE GUARDS TO WIRE AND AT JOINTS.

(D) FOR EASIER INSTALLATION, SEPARATE TREE GUARD BEFORE INSTALLING.

BILL OF MATERIALS:

ITEM	DESCRIPTION	CONDUCTOR SIZE		TREE GUARDS DIAMETER RANGE (INCHES)		MFG	CATALOG NUMBER	STOCK NUMBER	DESIGN UNITS
		CU	AL	MIN.	MAX.				
1	GUARD, TREE, PLASTIC	#6 & #4 W.P.	--	.267	.296	PREFORMED	PTG0104	S397856	--
		#2 CU W.P.	--	.359	.389		PTG0113	S397888	--
		--	SSC #4	.599	.641		PTG0137	S397920	--
		--	SSC#2	.883	.947		PTG0152	S397952	--
		--	SSC 1/0 RTS 1/0	1.195	1.255		PTG0167	S397984	--
		--	SSC 3/0 RTS 3/0	1.329	1.450		PTG0173	S397988 (X)	--
2	TAPE, ELECTRIC, 3/4" X 66'-0"	--	--	--	--	--	--	S720576	--

NOTES:

I. SIZE OF GUARD TO BE USED IS DETERMINED BY THE OUTSIDE DIAMETER OF A SINGLE CONDUCTOR OR A GROUP OF CONDUCTORS (SSC).

(X) THIS ITEM IS EXEMPT.

REFERENCE: NONE

TABLE OF CONTENTS

© 1998 - 2021 San Diego Gas & Electric Company. All rights reserved. Removal of this copyright notice without permission is not permitted under law.

REV	CHANGE	DR	BY	DSN	APV	DATE	REV	CHANGE	DR	BY	DSN	APV	DATE
C	TABLE UPDATE	EDM	JIK	JES	CZH	08/25/2021	F						
B	DRAWING UPDATE	PEI	-	-	-	03/18/2019	E						
A	ORIGINAL ISSUE	-	-	PTA	RDJ	05/06/1983	D						

SCOPE: THIS STANDARD IDENTIFIES LINE GUARDS FOR 5005, ACSR & AWAC.

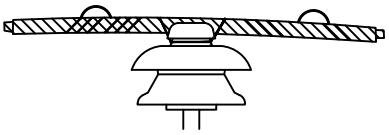

SINGLE ARM CONSTRUCTION-DISTRIBUTION

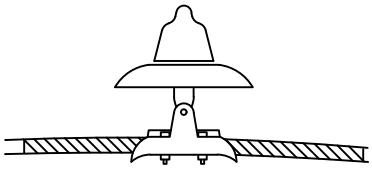

SUSPENSION CONSTRUCTION-TRANSMISSION

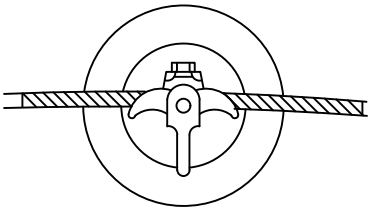

CLAMPTOP CONSTRUCTION

CONDUCTOR DATA						ROD DIAM. (IN.)	DIAMETER OVER RODS ON COND. (INCHES)	NUMBER OF RODS PER SET	LENGTH (INCHES)	COLOR CODE	CATALOG NUMBER		STOCK NO.	ASSEMBLY UNITS
5005		ACSR		AWAC							CHANCE	PREFORMED		
SIZE	STRAND	SIZE	STRAND	SIZE	STRAND									
4	7	4	6/1	-	-	.121	.492	8	19	ORANGE	19 AMG-013	MG-0127	S397408	SG4
2	7	2	6/1	-	-	.121	.558	9	21	RED	21 AMG-020	MG-0131	S397440	SG2
-	-	-	-	2	5/2	.121	.572	10	21	BLUE	21 AMG-021	MG-0132	S397472	SG2WM
-	-	-	-	2	3/4	.121	.628	11	23	WHITE	23 AMG-026	MG-0134	S397504	SG2WH
1/0	7	1/0	6/1	-	-	.121	.630	11	25	YELLOW	25 AMG-027	MG-0135	S397536	SG1/0
-	-	-	-	1/0	4/3	.121	.689	13	27	BLUE	27 AMG-032	MG-0137	S397392	SG1/0W
3/0	7	3/0	6/1	-	-	.121	.744	14	29	ORANGE	29 AMG-036	MG-0139	S397568	SG3/0
3/0	-	-	-	3/0	5/2	.121	.766	14	29	BLACK	29 AMG-038	MG-0140	S397584	SG3/0W
-	-	4/0	6/1	-	-	.121	.805	15	31	RED	31-AMG-040	MG-0141	(III)	-
-	-	336.4 KCM	18/1	-	-	.146	.976	15	35	BLUE	35-AMG-048	MG-0146	S397632	-
394.5 KCM	19	336.4 KCM	26/7	-	-	.146	1.013	16	37	GREEN	37 AMG-049	MG-0147	S397664	SG336
-	-	397.5 KCM	26/7	-	-	.146	1.075	17	39	ORANGE	39 AMG-052	MG-0148	S397696	SG397
-	-	636 KCM	24/7	-	-	.182	1.341	17	45	WHITE	45 AMG-059	MG-0152	S397728	SG636
-	-	1033.5 KCM	45/7	-	-	.250	1.713	16	53	BLACK	53 AMG-068	MG-0158	S397760	SG1033

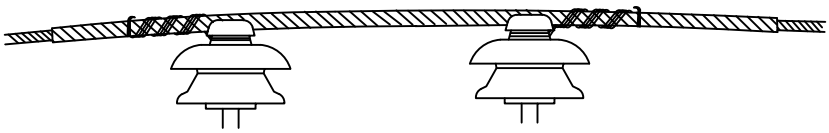

DOUBLE ARM CONSTRUCTION-DISTRIBUTION

CONDUCTOR DATA						ROD DIAM. (IN.)	DIAMETER OVER RODS ON COND. (INCHES)	NUMBER OF RODS PER SET	LENGTH (INCHES)	COLOR CODE	CATALOG NUMBER		STOCK NO.	ASSEMBLY UNITS
5005		ACSR		AWAC							CHANCE	PREFORMED		
SIZE	STRAND	SIZE	STRAND	SIZE	STRAND									
4	7	4	6/1	-	-	.121	.492	8	31	ORANGE	31 AMG-013	MG-0310	S397120	DG4
2	7	2	6/1	-	-	.121	.558	9	33	RED	33 AMG-020	MG-0314	S397152	DG2
-	-	-	-	2	5/2	.121	.572	10	33	BLUE	33 AMG-021	MG-0315	S397184	DG2WM
-	-	-	-	2	3/4	.121	.628	11	35	WHITE	35 AMG-026	MG-0317	S397216	DG2WH
1/0	7	1/0	6/1	-	-	.121	.630	11	37	YELLOW	37 AMG-027	MG-0318	S397248	DG1/0
3/0	7	3/0	6/1	-	-	.121	.744	14	41	ORANGE	41 AMG-036	MG-0322	S397280	DG3/0
-	-	336.4 KCM	18/1	-	-	.146	.976	15	47	BLUE	47 AMG-048	MG-0329	S397312	-
394.5 KCM	19	336.4 KCM	26/7	-	-	.146	1.013	16	49	GREEN	49 AMG-049	MG-0330	S397344	DG336
-	-	636 KCM	24/7	-	-	.182	1.341	17	57	WHITE	-	MG-0335	S397376	DG636

© 1998 - 2019 San Diego Gas & Electric Company. All rights reserved. Removal of this copyright notice without permission is not permitted under law.

REV	CHANGE	BY	DSGN	APPV	DATE	REV	CHANGE	BY	DSGN	APPV	DATE
C						F					
B	DRAWING UPDATE	PEI	-	-	03/18/2019	E					
A	ORIGINAL ISSUE	-	PTA	RDJ	01/01/1994	D					

X Indicates Latest Revision | Completely Revised | New Page | Information Removed

SDG&E ELECTRIC OVERHEAD STANDARDS

LINE GUARDS ALUMINUM ALLOY: FOR 5005. ACSR & AWAC

OH759.1

TABLE OF CONTENTS

INSTALLATION: NONE

BILL OF MATERIALS: NONE

NOTES:

I. FORMED TIES ARE PREFERRED IN LIEU OF LINE GUARDS AND HAND TIES.

II. USE LINE GUARDS OVER ALUMINUM CONDUCTORS AT PIN AND ALL SUSPENSION SUPPORTS UNLESS A FORMED TOP OR SIDE TIE PER PAGE 760 IS USED.

(III) THIS IS A SPECIAL ORDER ITEM AND IS NO LONGER PURCHASED.

REFERENCE: NONE

TABLE OF CONTENTS

© 1998 - 2019 San Diego Gas & Electric Company. All rights reserved. Removal of this copyright notice without permission is not permitted under law.

REV	CHANGE	BY	DSGN	APPV	DATE	REV	CHANGE	BY	DSGN	APPV	DATE
C						F					
B	DRAWING UPDATE	PEI	-	-	03/18/2019	E					
A	ORIGINAL ISSUE	-	PTA	RDJ	01/01/1994	D					

X Indicates Latest Revision | Completely Revised | New Page | Information Removed

SDG&E ELECTRIC OVERHEAD STANDARDS

LINE GUARDS ALUMINUM ALLOY: FOR 5005. ACSR & AWAC

OH759.2

SCOPE: THESE TIES SHALL BE USED TO ATTACH ALUMINUM CONDUCTORS TO "C" OR "F", NECK INSULATORS.

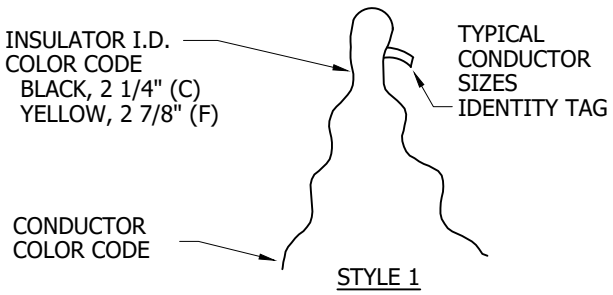

FIGURE 1
SINGLE TOP TIE

TABLE 1

CONDUCTOR DATA									TOP TIE						
5005			ACSR			AWAC			"C" NECK (BLACK)			"F" NECK (YELLOW)			CONDUCTOR COLOR CODE
SIZE	STRAND	OUTSIDE DIA	SIZE	STRAND	OUTSIDE DIA	SIZE	STRAND	OUTSIDE DIA	STOCK NUMBER	ASSEMBLY UNIT	SAP CU	STOCK NUMBER	ASSEMBLY UNIT	SAP CU	
2	7	.316	2	6/1	.316	2	5/2	.330	S738880	ST2CWM/ST2C	ST2C	S738884	ST2FWM/ST2F	ST2F	RED
-	-	-	-	-	-	2	3/4	.386	S738881	ST2CWH	ST2CWM	S738886	ST2FWH	ST2FWM	YELLOW
1/0	7	.398	1/0	6/1	.398	-	-	-	S738882	ST1/0C	ST1/0C	S738886	ST1/0F	ST1/0F	YELLOW
3/0	7	.502	3/0	6/1	.502	-	-	-	S738888	ST3/0C	ST3/0C	S738892	ST3/0F	ST3/0F	ORANGE
-	-	-	336.4	18/1	.684	-	-	-	S738896	ST336C	ST336C	S738900	ST336F	ST336F	BROWN
394.5	19	.721	336.4	26/7	.721	-	-	-	S738896	-	-	S738900	-	-	BROWN
-	-	-	636	24/7	.977	-	-	-	-	-	-	S738932	ST636F	ST636F	GREEN

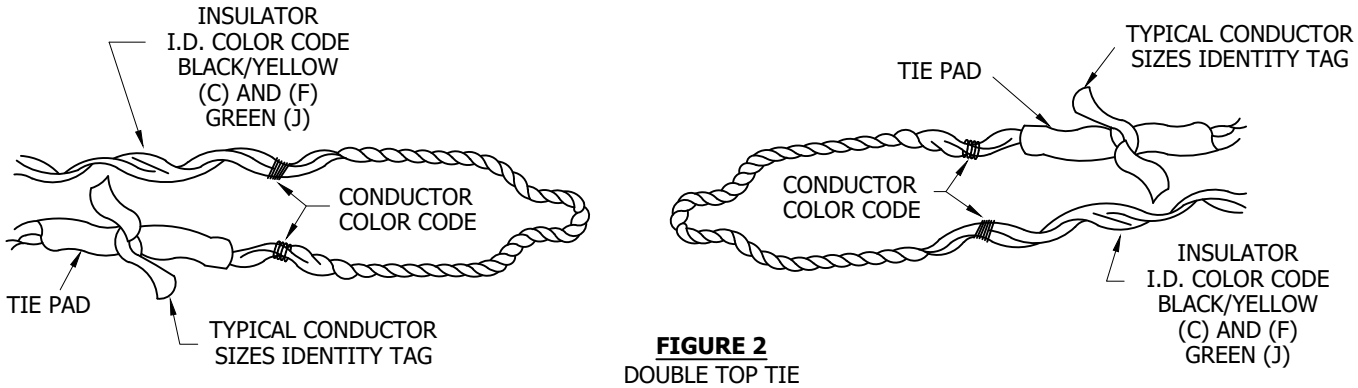

FIGURE 2
DOUBLE TOP TIE

TABLE 2

CONDUCTOR DATA									TOP TIE					
5005			ACSR			AWAC			"C" NECK (BLACK)			"F" NECK (YELLOW)		
SIZE	STRAND	OUTSIDE DIAMETER	SIZE	STRAND	OUTSIDE DIAMETER	SIZE	STRAND	OUTSIDE DIAMETER	STOCK NUMBER	ASSEMBLY UNIT	SAP CU	STOCK NUMBER	ASSEMBLY UNIT	SAP CU
394.5	19	.721	336.4	26/7	.721	-	-	-	S738912	DT336C	DT336C	S738912	DT336F	DT336C
-	-	-	636	24/7	.977	-	-	-	S738950	DT636C	DT636C	S738950	DT636F	DT636C
-	-	-	-	-	-	5/2	7	.330	S738980 (X)	DT5/2C	DT5/2C	S738980 (X)	DT5/2C	DT5/2C
-	-	-	-	-	-	3/4	7	.386	S738982 (X)	DT3/4C	DT3/4C	S738982 (X)	DT3/4C	DT3/4C

© 1998 - 2023 San Diego Gas & Electric Company. All rights reserved. Removal of this copyright notice without permission is not permitted under law.

REV	CHANGE	DR	BY	DSN	APV	DATE	REV	CHANGE	DR	BY	DSN	APV	DATE
C	EDITORIAL CHANGES	-	GW	JES	CZH	04/20/2019	F	TABLE UPDATE	GLC	MRF	MRF	KRG	05/10/2023
B	EDITORIAL CHANGES	-	GW	JS	MDJ	04/11/2018	E	EDITORIAL CHANGES	-	JAC	JES	CZH	04/13/2020
A	REVISION	-	-	TQ	DW	02/10/2014	D	EDITORIAL CHANGES	-	JC	JES	CZH	09/13/2019

TABLE OF CONTENTS

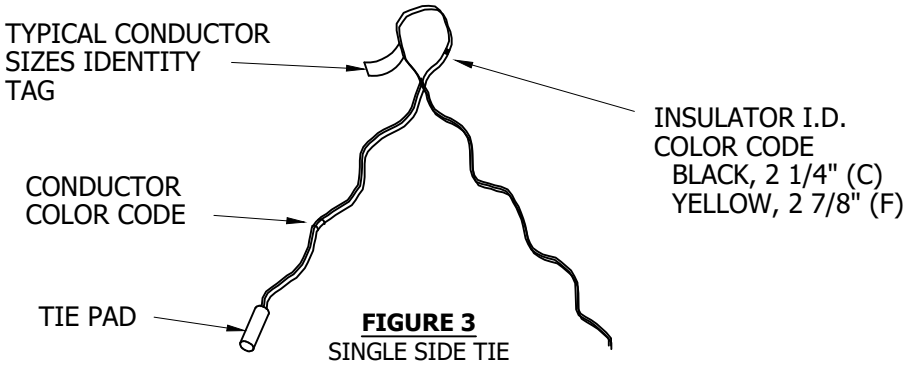

FIGURE 3
SINGLE SIDE TIE

TABLE 3

CONDUCTOR DATA									SINGLE SIDE TIE						
5005			ACSR			AWAC			"C" NECK (BLACK)			"F" NECK (YELLOW)			
SIZE	STRAND	OUTSIDE DIAMETER	SIZE	STRAND	OUTSIDE DIAMETER	SIZE	STRAND	OUTSIDE DIAMETER	STOCK NUMBER	ASSEMBLY UNIT	SAP CU	STOCK NUMBER	ASSEMBLY UNIT	SAP CU	CONDUCTOR COLOR CODE
2	7	.316	2	6/1	.316	2	5/2	.330	S738856	SS2CWM/SS2C	SS2C	S738860	SS2FWM/SS2F	SS2F	RED
-	-	-	-	-	-	2	3/4	.386	S738862	SS2CWH	SS2CWH	S738866	SS2FWH	SS2FWH	YELLOW
1/0	7	.398	1/0	6/1	.398	-	-	-	S738862	SS1/0C	SS1/0C	S738866	SS1/0F	SS1/0F	YELLOW
3/0	7	.502	3/0	6/1	.502	-	-	-	S738864	SS3/0C	SS3/0C	S738868	SS3/0F	SS3/0F	ORANGE
-	-	-	336.4	18/1	.684	-	-	-	-	-	-	-	-	-	BROWN
394.5	19	.721	336.4	26/7	.721	-	-	-	S738872	SS336C	SS336C	S738876	SS336F	SS336F	BROWN
-	-	-	636	24/7	.977	-	-	-	-	-	-	S738942	SS636F	SS636F	GREEN

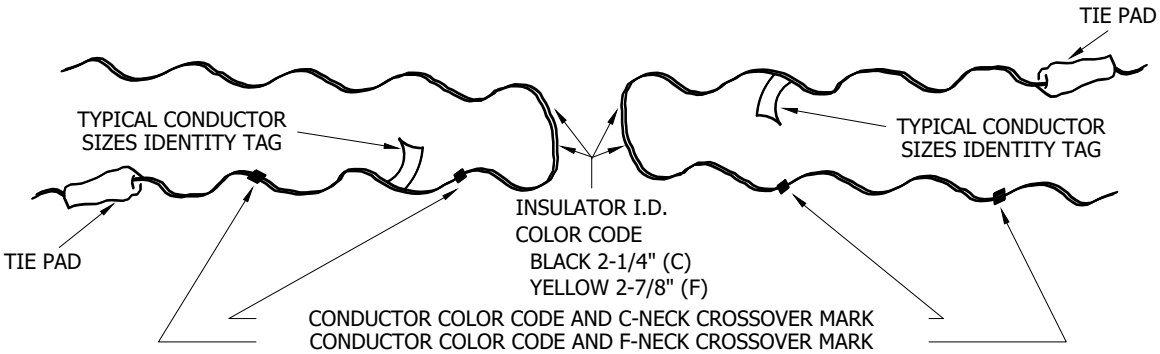

FIGURE 4
DOUBLE SIDE TIE

TABLE 4

CONDUCTOR DATA								DOUBLE SIDE TIE					
5005			ACSR			AWAC		"C" NECK (BLACK)			"F" NECK (YELLOW)		
SIZE	STRAND	OUTSIDE DIAMETER	SIZE	STRAND	OUTSIDE DIAMETER	SIZE	STRAND	STOCK NUMBER	ASSEMBLY UNIT	SAP CU	STOCK NUMBER	ASSEMBLY UNIT	SAP CU
394.5	19	.721	336.4	26/7	.721	-	-	S738924 (D)	D DS336C	DS336C	S738924 (D)	DS336F	DS336C
-	-	-	636	24/7	.977	-	-	-	-	-	S738962	DS636F	DS636F
2	7	.316	2	6/1	.316	5/2	7	S738984 (X)	DT5/2C	DT5/2C	S738984 (X)	DT5/2C	DT5/2C
-	-	-	-	-	-	3/4	7	S738986 (X)	DT3/4C	DT3/4C	S738986 (X)	DT3/4C	DT3/4C

© 1998 - 2023 San Diego Gas & Electric Company. All rights reserved. Removal of this copyright notice without permission is not permitted under law.

REV	CHANGE	DR	BY	DSN	APV	DATE	REV	CHANGE	DR	BY	DSN	APV	DATE
C	EDITORIAL CHANGES	-	GW	JES	CZH	04/20/2019	F	TABLE UPDATE	GLC	MRF	MRF	KRG	05/10/2023
B	EDITORIAL CHANGES	-	GW	JS	MDJ	04/11/2018	E	EDITORIAL CHANGES	-	JAC	JES	CZH	04/13/2020
A	REVISION	-	-	TQ	DW	02/10/2014	D	EDITORIAL CHANGES	-	JC	JES	CZH	09/13/2019

TABLE OF CONTENTS

INSTALLATION:

A. C-NECK INDICATES TIE TOP POST, 55-3, AND J105 INSULATOR.

B. F-NECK INDICATES HENDRIX TIE-TOP INSULATOR.

C. J & K NECK MOVE TO FMO.

(D) USE TIE PADS FOR STYLE 2, SIDE TIE AND DOUBLE SIDE TIES.

E. FACTORY FORMED TIES WILL HOLD A MAXIMUM OF 250 LBS UPLIFT FOR F-NECK INSULATORS FOR #2 ACSR WIRE AND ABOVE.

BILL OF MATERIALS: NONE

NOTES:

(X) THIS ITEM IS EXEMPT.

REFERENCE: NONE

TABLE OF CONTENTS

© 1998 - 2023 San Diego Gas & Electric Company. All rights reserved. Removal of this copyright notice without permission is not permitted under law.

REV	CHANGE	DR	BY	DSN	APV	DATE	REV	CHANGE	DR	BY	DSN	APV	DATE
C	EDITORIAL CHANGES	-	GW	JES	CZH	04/20/2019	F	TABLE UPDATE	GLC	MRF	MRF	KRG	05/10/2023
B	EDITORIAL CHANGES	-	GW	JS	MDJ	04/11/2018	E	EDITORIAL CHANGES	-	JAC	JES	CZH	04/13/2020
A	REVISION	-	-	TQ	DW	02/10/2014	D	EDITORIAL CHANGES	-	JC	JES	CZH	09/13/2019

SCOPE: THESE TIES SHALL BE USED TO ATTACH COPPER TREE WIRE TO "C" OR "F", NECK INSULATORS.

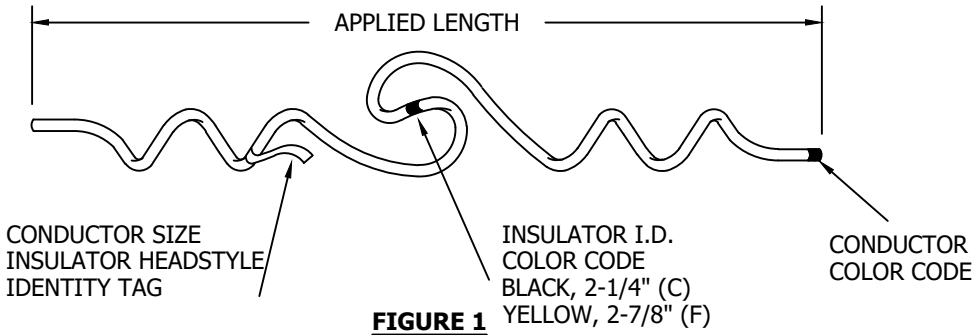

FIGURE 1
TOP TIE

TABLE 1

CONDUCTOR DATA			TOP TIE			
COPPER TREE WIRE			"F" NECK (YELLOW) (A)			CONDUCTOR COLOR CODE
SIZE	STRAND	OUTSIDE DIAMETER	APPLIED LENGTH	STOCK NUMBER	ASSEMBLY UNIT	
2	7	.622	19"	S738450	ST2TF	BLUE

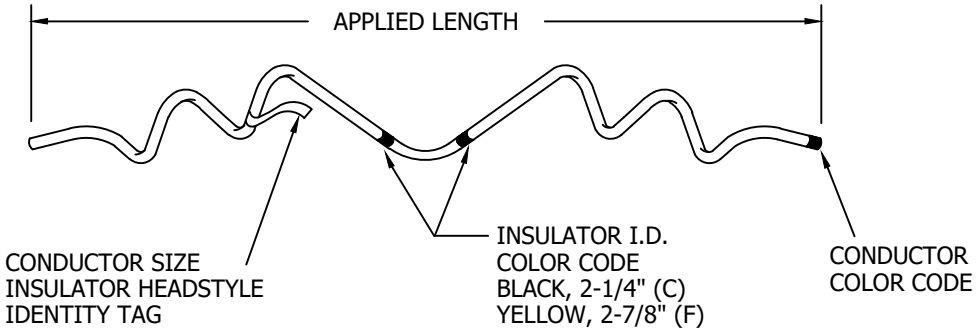

FIGURE 2
SIDE TIE

TABLE 2

CONDUCTOR DATA			SIDE TIE			
COPPER TREE WIRE			"F" NECK (YELLOW) (A)			CONDUCTOR COLOR CODE
SIZE	STRAND	OUTSIDE DIAMETER	APPLIED LENGTH	STOCK NUMBER	ASSEMBLY UNIT	
2	7	.622	17"	S738452	SS2TF	BLUE

INSTALLATION:

(A) F-NECK INSULATOR IN NON-PORCELAIN IS A CLASS 56-1; SEE OVERHEAD STANDARD 750.2.

BILL OF MATERIALS: NONE

NOTES: NONE

REFERENCE: NONE

© 1998 - 2023 San Diego Gas & Electric Company. All rights reserved. Removal of this copyright notice without permission is not permitted under law.

REV	CHANGE	DR	BY	DSN	APV	DATE	REV	CHANGE	DR	BY	DSN	APV	DATE
C	EDITORIAL CHANGES	-	GW	JES	CZH	04/20/2019	F	TABLE UPDATE	GLC	MRF	MRF	KRG	05/10/2023
B	EDITORIAL CHANGES	-	GW	JS	MDJ	04/11/2018	E	EDITORIAL CHANGES	-	JAC	JES	CZH	04/13/2020
A	REVISION	-	-	TQ	DW	02/10/2014	D	EDITORIAL CHANGES	-	JC	JES	CZH	09/13/2019

X Indicates Latest Revision | Completely Revised | New Page | Information Removed

TABLE OF CONTENTS

SCOPE: THIS STANDARD SHOWS VARIOUS METHODS OF INSTALLING ALUMINUM TIE WIRES.

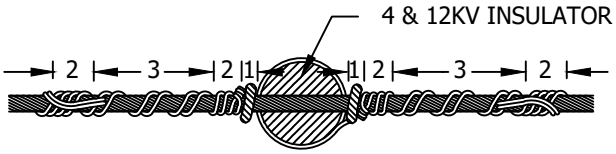

FIGURE 1
HOT TIE - TOP TIE - TWO TIE WIRES

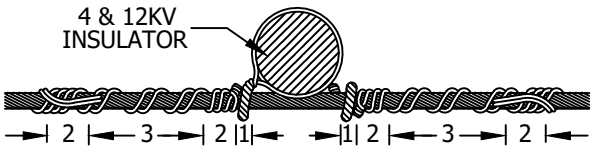

FIGURE 2
HOT TIE - SIDE TIE - TWO TIE WIRES

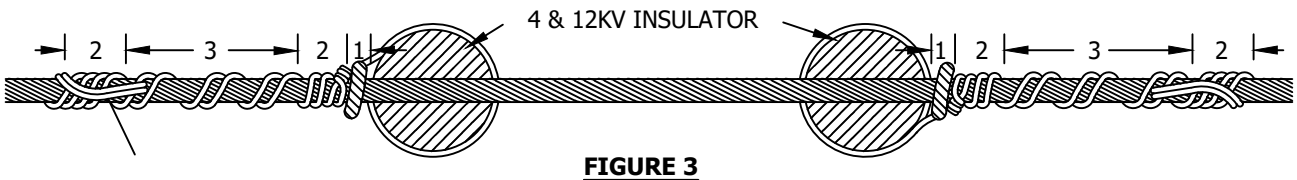

FIGURE 3
HOT TIE - TOP TIE - DOUBLE SUPPORTS - TWO TIE WIRES

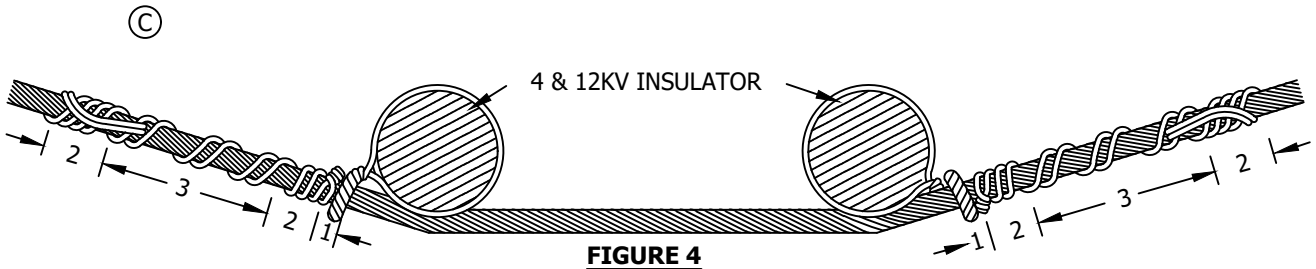

FIGURE 4
HOT TIE - SIDE TIE - DOUBLE SUPPORTS - TWO TIE WIRES

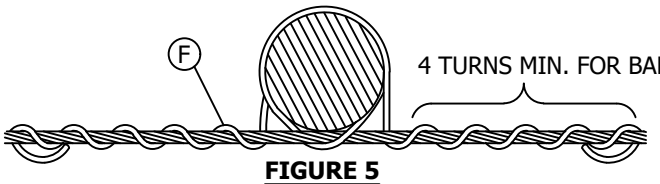

FIGURE 5
LOOPED WESTERN UNION TIE
ONE TIE WIRE

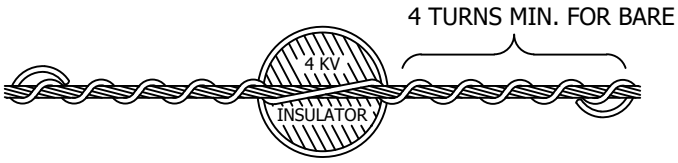

FIGURE 6
LOOPED CROSS TOP TIE
ONE TIE WIRE

TABLE OF CONTENTS

© 1998 - 2023 San Diego Gas & Electric Company. All rights reserved. Removal of this copyright notice without permission is not permitted under law.

REV	CHANGE	DR	BY	DSN	APV	DATE	REV	CHANGE	DR	BY	DSN	APV	DATE
C	EDITORIAL CHANGES	-	GW	JES	CZH	04/20/2019	F	TABLE UPDATE	GLC	MRF	MRF	KRG	05/10/2023
B	EDITORIAL CHANGES	-	GW	JS	MDJ	04/11/2018	E	EDITORIAL CHANGES	-	JAC	JES	CZH	04/13/2020
A	REVISION	-	-	TQ	DW	02/10/2014	D	EDITORIAL CHANGES	-	JC	JES	CZH	09/13/2019

TABLE 1

FOR FIGURES 1 THRU 4					
CONDUCTOR SIZE	TIE WIRE SIZE	TOP TIE OR SIDE TIE HOT TIES (2 TIES WIRES/TIE) TIE WIRE LENGTH	 NUMBER OF WRAPS	STOCK NUMBER OR CONSTRUCTION STANDARD	ASSEMBLY UNITS
4	4	4' - 10"	2-1/2" TWIST 1-2-3-2	S815040	AL-TIE
2		5' - 10"	2-1/2" TWIST 1-2-4-2		
1/0		5' - 10"	2-1/2" TWIST 1-2-3-2		
3/0		6' - 10"	3" TWIST 1-2-3-2		
4/0		6' - 10"	3" TWIST 1-2-3-2		
336.4 KCM		8' - 3"	4" TWIST 1-2-3-2		
394.5 KCM		10' - 0"	4" TWIST 1-3-4-2		
636 KCM		11' - 10"	4" TWIST 1-2-4-3		
FOR FIGURES 5 AND 6					
-	#4 BARE	44"	-	S815040	AL-TIE
-	#4 WP	44"	-	S815104 (X)	-

INSTALLATION:

A. USE POLYETHYLENE-COVERED TIE WIRES WITH POLYETHYLENE-COVERED LINE CONDUCTORS OPERATING AT 4KV OR LESS.

B. FOR 12KV POLYETHYLENE-COVERED WIRE, BARE THE CONDUCTOR AND TIE THE SAME AS BARE CONDUCTOR.

(C) SPRING 12KV TIE WIRE ENDS TO CONTACT CONDUCTORS.

D. ALL TIES EXCEPT SECONDARY SERVICE RACKS TO BE TWISTED CLOCKWISE, FACING THE INSULATOR.

E. UPLIFT FOR HAND TIES LIMITED TO 50LBS.

(F) FOR USE ON SECONDARY RACKS AND SECONDARY CABLE.

BILL OF MATERIALS: NONE

NOTES:

(X) THIS ITEM IS EXEMPT.

REFERENCE: NONE

TABLE OF CONTENTS

© 1998 - 2023 San Diego Gas & Electric Company. All rights reserved. Removal of this copyright notice without permission is not permitted under law.

REV	CHANGE	DR	BY	DSN	APV	DATE	REV	CHANGE	DR	BY	DSN	APV	DATE
C	EDITORIAL CHANGES	-	GW	JES	CZH	04/20/2019	F	TABLE UPDATE	GLC	MRF	MRF	KRG	05/10/2023
B	EDITORIAL CHANGES	-	GW	JS	MDJ	04/11/2018	E	EDITORIAL CHANGES	-	JAC	JES	CZH	04/13/2020
A	REVISION	-	-	TQ	DW	02/10/2014	D	EDITORIAL CHANGES	-	JC	JES	CZH	09/13/2019

SCOPE: THIS STANDARD SHOWS VARIOUS METHODS OF INSTALLING COPPER TIE WIRES.

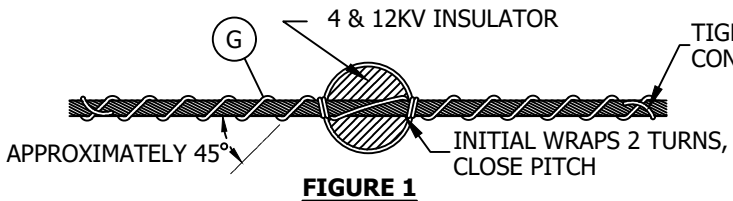

FIGURE 1
HOT TIE - TOP TIE - ONE TIE WIRE

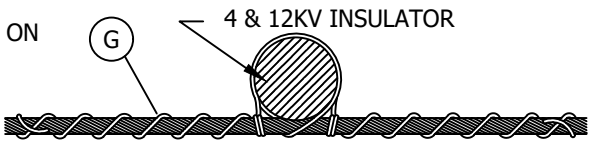

FIGURE 2
HOT TIE - SIDE TIE - ONE TIE WIRE

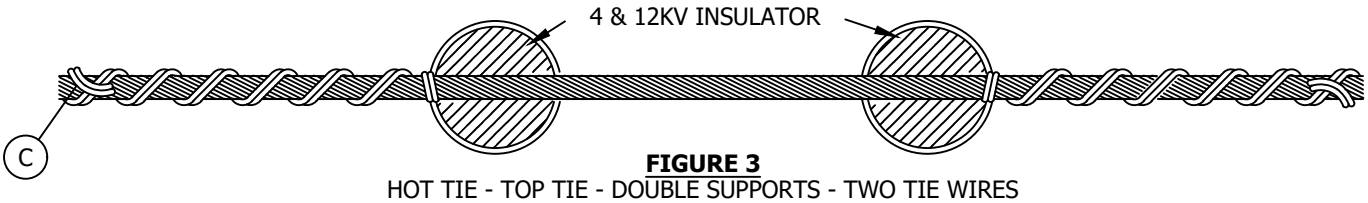

FIGURE 3
HOT TIE - TOP TIE - DOUBLE SUPPORTS - TWO TIE WIRES

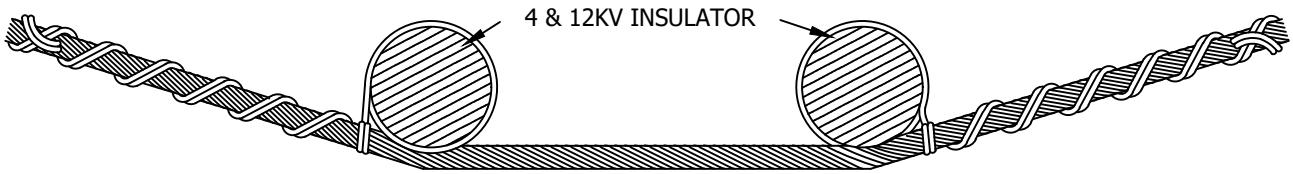

FIGURE 4
HOT TIE - SIDE TIE - DOUBLE SUPPORTS - TWO TIE WIRES

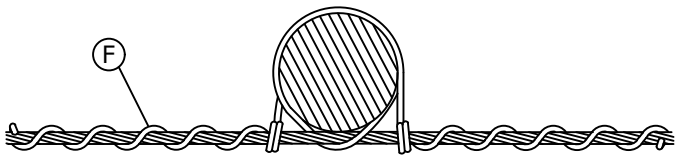

FIGURE 5
LOOPED WESTERN UNION TIE
ONE TIE WIRE



FIGURE 6
LOOPED CROSS TOP TIE
ONE TIE WIRE

TABLE OF CONTENTS

© 1998 - 2023 San Diego Gas & Electric Company. All rights reserved. Removal of this copyright notice without permission is not permitted under law.

REV	CHANGE	DR	BY	DSN	APV	DATE	REV	CHANGE	DR	BY	DSN	APV	DATE
C	EDITORIAL CHANGES	-	GW	JES	CZH	04/20/2019	F	TABLE UPDATE	GLC	MRF	MRF	KRG	05/10/2023
B	EDITORIAL CHANGES	-	GW	JS	MDJ	04/11/2018	E	EDITORIAL CHANGES	-	JAC	JES	CZH	04/13/2020
A	REVISION	-	-	TQ	DW	02/10/2014	D	EDITORIAL CHANGES	-	JC	JES	CZH	09/13/2019

TABLE 1

FIGURE	CONDUCTOR SIZE		TOP TIE OR SIDE TIE		STOCK NUMBER OR CONSTR. STD	ASSEMBLY UNITS
	CU	CW/CU	THE WIRE SIZE	TIE WIRE LENGTH (IN.)		
1-2	#4	-	#6	54	S811852	CS6C
1-4	#6 AND #4	-	#6	54	S812866 (X)	-
1-4	#2 AND LARGER	-	#4	66	S812832	BS4G
5-6	#6 AND #4	#6A AND #4A	#6	44	S812866 (X)	-
5-6	#2 AND LARGER	#4D AND #4N	#4	44	S812832	BS4G

INSTALLATION:

A. USE POLYETHYLENE-COVERED TIE WIRES WITH POLYETHYLENE-COVERED LINE CONDUCTORS OPERATING AT 4KV OR LESS.

B. FOR 12KV POLYETHYLENE-COVERED WIRE, BARE THE WIRE AND TIE THE SAME AS BARE CONDUCTOR.

(C) SPRING 12KV TIE WIRE ENDS TO CONTACT CONDUCTORS.

D. ALL TIES EXCEPT SECONDARY SERVICE RACKS TO BE TWISTED CLOCKWISE, FACING THE INSULATOR.

E. UPLIFT FOR HAND TIES LIMITED TO 50LBS.

(F) FOR USE ON SECONDARY RACKS AND SECONDARY CABLE.

(G) FOR COVERED COPPER EQUIPMENT JUMPERS, DO NOT BARE THE TIE WIRE AND TIE SAME AS BARE CONDUCTOR.

BILL OF MATERIALS: NONE

NOTES:

(X) THIS ITEM IS EXEMPT.

REFERENCE: NONE

TABLE OF CONTENTS

© 1998 - 2023 San Diego Gas & Electric Company. All rights reserved. Removal of this copyright notice without permission is not permitted under law.

REV	CHANGE	DR	BY	DSN	APV	DATE	REV	CHANGE	DR	BY	DSN	APV	DATE
C	EDITORIAL CHANGES	-	GW	JES	CZH	04/20/2019	F	TABLE UPDATE	GLC	MRF	MRF	KRG	05/10/2023
B	EDITORIAL CHANGES	-	GW	JS	MDJ	04/11/2018	E	EDITORIAL CHANGES	-	JAC	JES	CZH	04/13/2020
A	REVISION	-	-	TQ	DW	02/10/2014	D	EDITORIAL CHANGES	-	JC	JES	CZH	09/13/2019

SCOPE: THIS STANDARD SHOWS VARIOUS POST INSULATOR CLAMPS AND D.E. ATTACHMENTS, AND EXPLAINS THEIR APPLICATION.

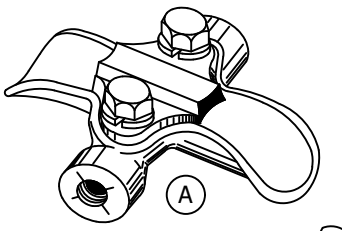

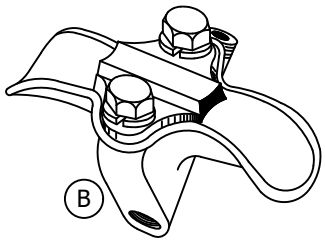

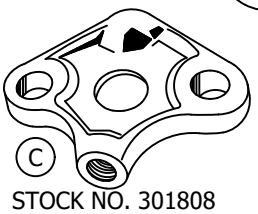

STOCK NO. 301808

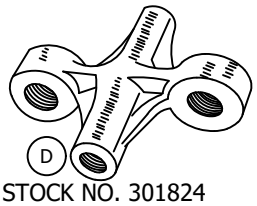

STOCK NO. 301824

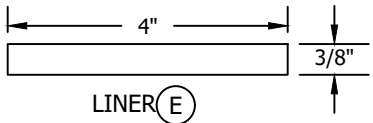

LINER (E)
STOCK NO. 464192

ASSEMBLY UNIT	PCLINR

INSTALLATION:

(A) SUPPORT CONDUCTOR FROM CLAMP TOP INSULATOR WITH LIMITS OF 0 TO 15 DEGREES.

(B) SUPPORT CONDUCTOR FROM CLAMP TOP INSULATOR WITH LIMITS OF 15 TO 30 DEGREES.

(C) WHEN LINE ANGLE IS 30 TO 45 DEGREES, USE HORIZONTAL DEAD END ATTACHMENT WITH TWO DEAD END CLAMPS.

(D) WHEN VERTICAL ANGLE IS EXCESSIVE, USE VERTICAL DEAD END ATTACHMENT WITH TWO DEAD END CLAMPS.

(E) USE LINER SHOWN ABOVE, MADE WITH .062" THICK SOFT SHEET COPPER. BEND ENDS AROUND SMALL GROOVE OF KEEPER.

(F) 336.4 KCM, 26/7 ACSR ONLY.

ALUMINUM CONDUCTORS

CONDUCTOR								CLAMP					
ACSR. 5005 OR AWAC			ACSR	5005	ACSR			RANGE		STOCK NUMBER	ASSEMBLY UNITS	STOCK NUMBER	ASSEMBLY UNITS
2	1/0	3/0	336.4 KCM	394.5 KCM	397.5 KCM	636 KCM	1033.5 KCM	MIN.	MAX.	(A) STANDARD 0° - 15°		(B) ANGLE 15° - 30°	
X	X	X	-	-	-	-	-	.35	.84	229696	PC3/0	229824	PCA3/0
-	-	X	X	X	-	-	-	.70	1.06	229728	PC394	229856	PCA394
-	-	-	X (F)	X	X	X	-	1.00	1.50	229760	PC636	229888	PCA636
-	-	-	-	-	-	-	X	1.50	2.00	229792	PC1033	-	-

BARE STRANDED COPPER CONDUCTORS

CONDUCTOR											CLAMP					
6		4		2	1/0	4/0	250 KCM	400 KCM	500 KCM	750 KCM	RANGE		STOCK NUMBER	ASSEMBLY UNITS	STOCK NUMBER	ASSEMBLY UNITS
SOL .162	STR .201	SOL .204	STR .254	.320	.368	.527	.574	.726	.813	.997	MIN.	MAX.	(A) STANDARD 0° - 15°		(B) ANGLE 15° - 30°	
X (E)	X (E)	X (E)	X	X	X	X	-	-	-	-	.25	.56	227824	PC4/0	-	-
-	-	-	-	-	X	X	X	X	X	-	.35	.84	-	-	226656	PC500
-	-	-	-	-	-	-	-	X	X	X	.70	1.06	227872	PC750	-	-

BILL OF MATERIAL: NONE

NOTES: NONE

REFERENCE: NONE

© 1998 - 2019 San Diego Gas & Electric Company. All rights reserved. Removal of this copyright notice without permission is not permitted under law.

REV	CHANGE	BY	DSGN	APPV	DATE	REV	CHANGE	BY	DSGN	APPV	DATE
C						F					
B	DRAWING UPDATE	PEI	-	-	03/18/2019	E					
A	ORIGINAL ISSUE	-	PTA	RDJ	01/01/1994	D					

X Indicates Latest Revision | Completely Revised | New Page | Information Removed

SDG&E ELECTRIC OVERHEAD STANDARDS

SHEET 1 OF 1

POST INSULATOR CLAMPS AND D.E. ATTACHMENTS

OH773.1

TABLE OF CONTENTS

SCOPE: THIS PAGE SHOWS THE DIMENSIONS AND WORKING STRENGTH OF THE ANGLED SUSPENSION CLAMP. THE CLAMP IS TO BE USED IN CONJUNCTION WITH THE UNDERARM INSULATOR (S431298) FOR SUPPORTING CONDUCTORS ON UNDERARM AND/OR AVIAN SAFE CONSTRUCTION.

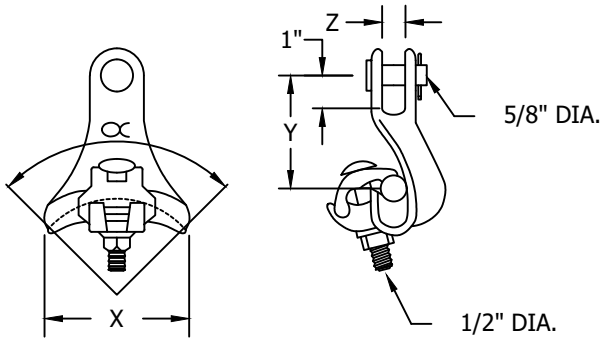

FOR COPPER CONDUCTOR

FIGURE 1

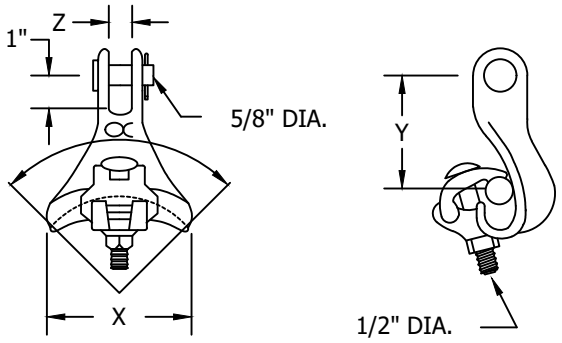

FOR ALUMINUM CONDUCTOR

FIGURE 2

INSTALLATION:

A. LINE GUARDS ARE TO BE USED WITH CLAMPS.

B. RECOMMENDED TORQUE ON U-BOLTS: 40-50 FT/LBS.

C. DO NOT BARE POLYETHYLENE-COVERED JUMPER WIRE WHEN USING THE ANGLE SUSPENSION CLAMP.

D. WHEN USING POLYETHYLENE-COVERED JUMPER WIRE DISREGARD ANGLE CLAMP MATERIAL SPECIFICATIONS. REFER TO TABLE TO SIZE ANGLE CLAMP TO POLYETHYLENE-COVERED JUMPER WIRE.

BILL OF MATERIALS:

DIMENSIONS			ANGLE (DEGREES)	WORKING STRENGTH (POUNDS)	CONDUCTOR RANGE			MATERIAL	STOCK NUMBER	ASSEMBLY UNITS
X	Y	Z			INCHES	ALUMINUM	COPPER			
4.13	2.88	0.69	90	5000	0.23-0.75	#4-397.54	-	ALUMINUM ALLOY	S232008	SCSM
3.75	4.63	0.75	80	6000	0.50-1.25	3/0-1033.5	-	ALUMINUM ALLOY	S232006	SCLG
3	4.25	0.75	120	5500	0.16-0.75	-	#6-4/0	DUCTILE IRON	S232010	SCLV

NOTES:

I. TABLE 1 IS TO BE USED TO DETERMINE PHYSICAL DIMENSION, WORKING STRENGTH OF CLAMPS AND PROPER SIZING OF ANGLE SUSPENSION CLAMP FOR CONDUCTORS.

II. SAFETY FACTOR OF TWO IS INCLUDED IN THE WORKING STRENGTH VALUE.

REFERENCE:

a. BONDING IS REQUIRED IN CONTAMINATION DISTRICT 1, SEE OVERHEAD STANDARD 287.

TABLE OF CONTENTS

© 1998 - 2019 San Diego Gas & Electric Company. All rights reserved. Removal of this copyright notice without permission is not permitted under law.

REV	CHANGE	BY	DSGN	APPV	DATE	REV	CHANGE	BY	DSGN	APPV	DATE
C						F					
B	DRAWING UPDATE	PEI	-	-	03/18/2019	E					
A	COMPLETELY REVISED	JC	IL	JS/MDJ	10/16/2015	D					

X Indicates Latest Revision | Completely Revised | New Page | Information Removed

SHEET 1 OF 1

SDG&E ELECTRIC OVERHEAD STANDARDS

ANGLE SUSPENSION CLAMP

OH775.1

SCOPE: CLEVIS AND SOCKET EYES ARE USED TO CONNECT INSULATORS TO GALVANIZED DEAD END STRAIN CLAMPS, SUSPENSION CLAMPS, AND ANGLE SUSPENSION CLAMPS.

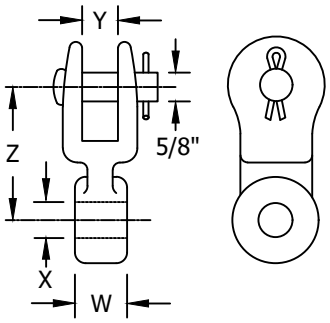

CLEVIS EYE

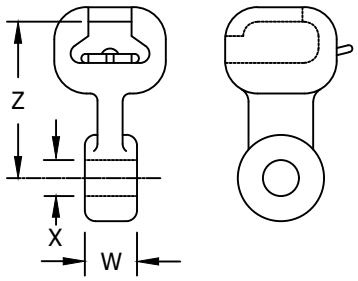

SOCKET EYE

INSTALLATION:

(A) WHEN INSTALLING FOG INSULATORS, USE LONG CLEVIS OR LONG SOCKET EYES.

(B) WHEN INSTALLING DISC INSULATORS, USE SHORT CLEVIS OR SHORT SOCKET EYES.

(C) NOT SHOWN IN ILLUSTRATION WITH 90° TWIST.

BILL OF MATERIALS:

LONG CLEVIS EYE (A)

DIMENSIONS (INCHES)				STOCK NUMBER	ASSEMBLY UNITS
W	X	Y	Z		
5/8	11/16	11/16	3 13/16	256320	LCE-LG
5/8	11/16	13/16	3 1/8	256352	LCE-SM

LONG SOCKET EYE (A)

DIMENSIONS (INCHES)				STOCK NUMBER
W	X	Z	-	
1/2	11/16	3 5/8	-	262848
5/8	11/16	3 5/8	-	263040
3/4	11/16	3 5/8	-	262944
7/8	11/16	3 5/8	-	263104

SHORT CLEVIS EYE (B)

DIMENSIONS (INCHES)				STOCK NUMBER	ASSEMBLY UNITS
W	X	Y	Z		
1/2	11/16	13/16	2 13/16	256272	SCE-LG
7/8	11/16	13/16	2 9/16	256368 (C)	SCE-SM

SHORT SOCKET EYE (B)

DIMENSIONS (INCHES)				STOCK NUMBER
W	X	Z	-	
1/2	11/16	2 3/8	-	262880
3/4	11/16	2 1/8	-	262976
1	11/16	2 9/16	-	262720

NOTES: NONE

REFERENCE:

a. SEE STANDARD 776 FOR USE OF ANGLE SUSPENSION CLAMPS.

b. SEE STANDARD 742 AND 744 FOR DEADEND STRAIN CLAMPS.

c. SEE STANDARD 775 FOR USE OF SUSPENSION CLAMPS.

d. SEE SECTION 700 FOR INSULATORS

TABLE OF CONTENTS

© 1998 - 2019 San Diego Gas & Electric Company. All rights reserved. Removal of this copyright notice without permission is not permitted under law.

REV	CHANGE	BY	DSGN	APPV	DATE	REV	CHANGE	BY	DSGN	APPV	DATE
C						F					
B	DRAWING UPDATE	PEI	-	-	03/18/2019	E					
A	ORIGINAL ISSUE	-	PTA	RDJ	01/01/1994	D					

X Indicates Latest Revision | Completely Revised | New Page | Information Removed

SDG&E ELECTRIC OVERHEAD STANDARDS

CONNECTORS FOR STRAIN AND SUSPENSION INSULATORS

SCOPE: THIS STANDARD SHOWS THE VARIOUS WEDGE CONNECTORS THAT ARE USED TO CONNECT ALL TYPES AND SIZES OF JUMPER WIRES TO LINE CONDUCTORS.

ATTENTION:

* WEDGE CONNECTORS ARE PREFERRED OVER COMPRESSION CONNECTORS.

TABLE 1

CONNECTORS, WEDGE, BARE CONDUCTOR, ALUMINUM TO ALUMINUM

MAIN	CONDUCTOR DIAMETER (IN)	TAP	CONDUCTOR DIAMETER (IN)	TOTAL DIAMETER (IN)	WEJTAP CHOICE 1			WEJTAP CHOICE 2		
					MFR PART #	STOCK NUMBER	DESIGN UNIT	MFR PART #	STOCK NUMBER	DESIGN UNIT
1033.5 ACSR	1.213	1033.5 ACSR	1.213	2.426	WCY86	S269766	LW1033	602180-0	S269766	LW1033
		636 ACSR	0.977	2.190	WCY89	S269789	LW750	602180-3	S269789	LW750
		336 ACSR	0.721	1.934	WCY93	S269771	LW500	602180-6	S269771	LW500
		3/0 (5/2) AWAC	0.524	1.737	WCY97	S269774	LW3/0A	1-602180-3	S269762	LW1/0A
		3/0 ACSR	0.502	1.715						
		1/0 (4/3) AWAC	0.447	1.660						
		1/0 ACSR	0.398	1.611	WCY99	S269762	LW1/0A	WCY97	S269774	LW3/0A
		#2 (3/4) AWAC	0.386	1.599						
		#2 (5/2) AWAC	0.330	1.543	WCY100	S269770	LW2A	WCY99	S269762	LW2A
		#2 ACSR	0.316	1.529				N/A		
636 ACSR	0.977	636 ACSR	0.977	1.954	WCY74	S269784	WC636	WCY73	S269791	WC750
		336 ACSR	0.721	1.698	WCY77	S269768	WC336	602121-7	S269768	WC336
		3/0 (5/2) AWAC	0.524	1.501	WCY80	S269775	WC4/0	WCY81	S269776	WC3/0A
		3/0 ACSR	0.502	1.479	WCY81	S269776	WC3/0A	WCY80	S269775	WC4/0
		1/0 (4/3) AWAC	0.447	1.454				1-602121-0	S269776	WC3/0A
		1/0 ACSR	0.398	1.375	WCY83	S269773	WC2A	WCY82	S269764	WC1/0A
		#2 (3/4) AWAC	0.386	1.363						
		#2 (5/2) AWAC	0.330	1.307				WCY84	S269773	WC2A
		#2 ACSR	0.316	1.293						

TABLE OF CONTENTS

© 1998 - 2023 San Diego Gas & Electric Company. All rights reserved. Removal of this copyright notice without permission is not permitted under law.

REV	CHANGE	DR	BY	DSN	APV	DATE	REV	CHANGE	DR	BY	DSN	APV	DATE
C	SCOPE UPDATE	-	GW	JS	CZH	02/21/2019	F	TABLE UPDATE	EDM	MRF	MRF	KRG	04/06/2023
B	TABLE UPDATE	-	GW	JS	MDH	09/28/2017	E	TABLE UPDATE	EDM	JIK	JES	CZH	02/08/2021
A	COMPLETLEY REVISED	-	GW	JS	MDJ	05/17/2017	D	REFERENCE UPDATE	-	MRF	JES	CZH	02/27/2020

ATTENTION:

* WEDGE CONNECTORS ARE PREFERRED OVER COMPRESSION CONNECTORS.

TABLE 1 (CONT'D)

CONNECTORS, WEDGE, BARE CONDUCTOR, ALUMINUM TO ALUMINUM

MAIN	CONDUCTOR DIAMETER (IN)	TAP	CONDUCTOR DIAMETER (IN)	TOTAL DIAMETER (IN)	WEJTAP CHOICE 1			WEJTAP CHOICE 2		
					MFR PART #	STOCK NUMBER	DESIGN UNIT	MFR PART #	STOCK NUMBER	DESIGN UNIT
336 ACSR	0.721	336 ACSR	0.721	1.442	WCY56	S269730	336WC	WCY62	TBD	
		3/0 (5/2) AWAC	0.524	1.245	WCY64	S269648	CY1/0	WCY54	S269732	4/0WC
		3/0 ACSR	0.502	1.223						
		1/0 (4/3) AWAC	0.447	1.168	WCY53	S269740	3/0WC	WCY64	S269648	CY1/0
		1/0 ACSR	0.398	1.119	WCY67	S269650	CY500	WCY51	S269734	1/0WC
		#2 (3/4) AWAC	0.386	1.107				N/A		
		#2 (5/2) AWAC	0.330	1.051	WCY51	S269734	1/0WC			
		#2 ACSR	0.316	1.037	WCY57	S269662	CY2ST			
3/0 (5/2) AWAC	0.524	3/0 (5/2) AWAC	0.524	1.048	WCB19	S269820	CB3/0	N/A		
		1/0 ACSR	0.398	0.922	WCB17	S269818	CB1/0			
		1/0 (4/3) AWAC	0.447	0.971	WCB19	S269820	CB3/0	WCB17	S269818	CB1/0
		#2 3/4 AWAC	0.386	0.910	WCB17	S269818	CB1/0	WCB11	S269824	WCB2S
		#2 5/2 AWAC	0.330	0.854						
		#2 ACSR	0.316	0.840	WCB11	S269824	WCB2S	WCB17	S269818	CB1/0
3/0 ACSR	0.502	3/0 (5/2) AWAC	0.524	1.026	WCB19	S269820	CB3/0	N/A		
		3/0 ACSR	0.502	1.004						
		1/0 (4/3) AWAC	0.447	0.949						
		1/0 ACSR	0.398	0.900	WCB17	S269818	CB1/0	WCB11	S269824	WCB2S

TABLE OF CONTENTS

© 1998 - 2023 San Diego Gas & Electric Company. All rights reserved. Removal of this copyright notice without permission is not permitted under law.

REV	CHANGE	DR	BY	DSN	APV	DATE	REV	CHANGE	DR	BY	DSN	APV	DATE
C	SCOPE UPDATE	-	GW	JS	CZH	02/21/2019	F	TABLE UPDATE	EDM	MRF	MRF	KRG	04/06/2023
B	TABLE UPDATE	-	GW	JS	MDH	09/28/2017	E	TABLE UPDATE	EDM	JIK	JES	CZH	02/08/2021
A	COMPLETLEY REVISED	-	GW	JS	MDJ	05/17/2017	D	REFERENCE UPDATE	-	MRF	JES	CZH	02/27/2020

ATTENTION:

* WEDGE CONNECTORS ARE PREFERRED OVER COMPRESSION CONNECTORS.

TABLE 1 (CONT'D)

CONNECTORS, WEDGE, BARE CONDUCTOR, ALUMINUM TO ALUMINUM

MAIN	CONDUCTOR DIAMETER (IN)	TAP	CONDUCTOR DIAMETER (IN)	TOTAL DIAMETER (IN)	WEJTAP CHOICE 1			WEJTAP CHOICE 2		
					MFR PART #	STOCK NUMBER	DESIGN UNIT	MFR PART #	STOCK NUMBER	DESIGN UNIT
3/0 ACSR	0.502	#2 (3/4) AWAC	0.386	0.888	WSM3	S269612	WCS4/0	WCB17	S269818	CB1/0
		#2 (5/2) AWAC	0.330	0.832				WCB11	S269824	WCB2S
		#2 ACSR	0.316	0.818						
1/0 (4/3) AWAC	0.447	1/0 (4/3) AWAC	0.447	0.894	WCB11	S269824	WCB2S	WCB17	S269818	CB1/0
		#2 (3/4) AWAC	0.386	0.833						
		#2 (5/2) AWAC	0.330	0.777	WCB14	S269810	WCB3/0 & WCB14	WCB11	S269824	WCB2S
1/0 ACSR	0.398	1/0 ACSR	0.398	0.796	WCB11	S269824	WCB2S	WCB14	S269810	WCB3/0
		#2 (3/4) AWAC	0.386	0.784						
		#2 (5/2) AWAC	0.330	0.728	WCB14	S269810	WCB3/0	WCB10	S269826 (X)	WCB2T
		#2 ACSR	0.316	0.714						
#2 (3/4) AWAC	0.386	#2 (3/4) AWAC	0.386	0.772	WCB11	S269824	CB2S	WCB14	S269810	WCB3/0
		#2 (5/2) AWAC	0.330	0.716	WCB10	S269826 (X)	WCB2T			WCB3/0 & WCB14
		#2 ACSR	0.316	0.702				WCR29	S269828 (X)	WCR2S
#2 (5/2) AWAC	0.330	#2 (5/2) AWAC	0.330	0.660	WCR29	S269828 (X)	WCR2S	WCB10	S269826 (X)	WCB2T
		#2 ACSR	0.316	0.646	WCB10	S269826 (X)	WCB2T	WCR29	S269828 (X)	WCR2S
#2 ACSR	0.316	#2 (3/4) AWAC	0.386	0.702	WCB10	S269826 (X)	WCB2T	WCR29	S269828 (X)	WCR2S
		#2 (5/2) AWAC	0.330	0.646	WCR29	S269828 (X)	WCR2S	WCR30	S269832	WCR2T
		#2 ACSR	0.316	0.632						

TABLE OF CONTENTS

© 1998 - 2023 San Diego Gas & Electric Company. All rights reserved. Removal of this copyright notice without permission is not permitted under law.

REV	CHANGE	DR	BY	DSN	APV	DATE	REV	CHANGE	DR	BY	DSN	APV	DATE
C	SCOPE UPDATE	-	GW	JS	CZH	02/21/2019	F	TABLE UPDATE	EDM	MRF	MRF	KRG	04/06/2023
B	TABLE UPDATE	-	GW	JS	MDH	09/28/2017	E	TABLE UPDATE	EDM	JIK	JES	CZH	02/08/2021
A	COMPLETLEY REVISED	-	GW	JS	MDJ	05/17/2017	D	REFERENCE UPDATE	-	MRF	JES	CZH	02/27/2020

ATTENTION:

* WEDGE CONNECTORS ARE PREFERRED OVER COMPRESSION CONNECTORS.

TABLE 2

CONNECTORS, WEDGE, BARE CONDUCTOR, ALUMINUM TO COVERED ALUMINUM

MAIN	CONDUCTOR DIAMETER (IN)	TAP	COVERED CONDUCTOR DIAMETER (IN) (b)	TOTAL DIAMETER (IN)	WEJTAP CHOICE 1			WEJTAP CHOICE 2		
					MFR PART #	STOCK NUMBER	DESIGN UNIT	MFR PART #	STOCK NUMBER	DESIGN UNIT
1033.5 ACSR	1.213	636 AL	0.89	2.103	WCY91	S269790	LW636	602180-4	S269790	LW636
		336 AL	0.644	1.857	WCY95	S269786	LW4/0	1-602180-0	S269786	LW4/0
		3/0 AL	0.449	1.662	WCY97	S269710	LW3/0A	1-602180-1	S269774	LW3/0A
		1/0 AL	0.356	1.569	WCY99	S269762	LW1/0A	N/A		
636 ACSR	0.977	636 AL	0.89	1.867	WCY76	S269777	WC500	WCY76	S269777	WC500
		336 AL	0.644	1.621	WCY78	S269708	N/A	N/A		
		3/0 AL	0.449	1.426	WCY81	S269776	WC3/0A			
		1/0 AL	0.356	1.333	WCY83	S269773	WC2A			
336 ACSR	0.721	3/0 AL	0.449	1.170	WCY66	S269732	4/0WC	602004	S269732	4/0WC
		1/0 AL	0.356	1.077	WCY51	S269734	1/0WC	WCY67	S269650	CY500
		#2 AL	0.282	1.003	WCY57	S269662	CY2ST & WCY57	N/A		
3/0 (5/2) AWAC	0.524	3/0 AL	0.449	0.973	WCB19	S269820	CB3/0	N/A		
		1/0 AL	0.356	0.880	WCB17	S269818	CB1/0	WCB11	S269824	WCB2S
		#2 AL	0.282	0.806	WSM3	S269612	WCS4/0			
3/0 ACSR	0.502	3/0 AL	0.449	0.951	WCB19	S269820	CB3/0	N/A		
		1/0 AL	0.356	0.858	WCB17	S269818	CB1/0	WCB11	S269824	WCB2S
		#2 AL	0.282	0.784	WSM3	S269612	WCS4/0			

TABLE OF CONTENTS

© 1998 - 2023 San Diego Gas & Electric Company. All rights reserved. Removal of this copyright notice without permission is not permitted under law.

REV	CHANGE	DR	BY	DSN	APV	DATE	REV	CHANGE	DR	BY	DSN	APV	DATE
C	SCOPE UPDATE	-	GW	JS	CZH	02/21/2019	F	TABLE UPDATE	EDM	MRF	MRF	KRG	04/06/2023
B	TABLE UPDATE	-	GW	JS	MDH	09/28/2017	E	TABLE UPDATE	EDM	JIK	JES	CZH	02/08/2021
A	COMPLETLEY REVISED	-	GW	JS	MDJ	05/17/2017	D	REFERENCE UPDATE	-	MRF	JES	CZH	02/27/2020

ATTENTION:

* WEDGE CONNECTORS ARE PREFERRED OVER COMPRESSION CONNECTORS.

TABLE 2 (CONT'D)

CONNECTORS, WEDGE, BARE CONDUCTOR, ALUMINUM TO COVERED ALUMINUM

MAIN	CONDUCTOR DIAMETER (IN)	TAP	COVERED CONDUCTOR DIAMETER (IN) (b)	TOTAL DIAMETER (IN)	WEJTAP CHOICE 1			WEJTAP CHOICE 2		
					MFR PART #	STOCK NUMBER	DESIGN UNIT	MFR PART #	STOCK NUMBER	DESIGN UNIT
1/0 (4/3) AWAC	0.447	1/0 AL	0.356	0.803	WCB11	S269824	WCB2S	WCB14	S269810	WCB3/0 & WCB14
		#2 AL	0.282	0.729	WCB14	S269810	WCB3/0 & WCB14	WCB10	S269826 (X)	WCB2T
1/0 ACSR	0.398	1/0 AL	0.356	0.754	WCB10	S269826 (X)	WCB2T	WCB14	S269810	WCB3/0
		#2 AL	0.282	0.680						
#2 (3/4) AWAC	0.386	1/0 AL	0.356	0.742	WCB10	S269826 (X)	WCB2T	WCB14	S269810	WCB3/0
		#2 AL	0.282	0.668				WCR29	S269828 (X)	WCR2S
#2 (5/2) AWAC	0.330	1/0 AL	0.356	0.686	WCR29	S269828 (X)	WCR2S	WCB10	S269826 (X)	WCB2T
		#2 AL	0.282	0.612	WCR30	S269832	WCR2T	WCR29	S269828 (X)	WCR2S
#2 ACSR	0.316	1/0 AL	0.356	0.672	WCR29	S269828 (X)	WCR2S	WCB10	S269826 (X)	WCB2T
		#2 AL	0.282	0.598	WCR30	S269832	WCR2T	WCR29	S269828 (X)	WCR2S

TABLE OF CONTENTS

© 1998 - 2023 San Diego Gas & Electric Company. All rights reserved. Removal of this copyright notice without permission is not permitted under law.

REV	CHANGE	DR	BY	DSN	APV	DATE	REV	CHANGE	DR	BY	DSN	APV	DATE
C	SCOPE UPDATE	-	GW	JS	CZH	02/21/2019	F	TABLE UPDATE	EDM	MRF	MRF	KRG	04/06/2023
B	TABLE UPDATE	-	GW	JS	MDH	09/28/2017	E	TABLE UPDATE	EDM	JIK	JES	CZH	02/08/2021
A	COMPLETLEY REVISED	-	GW	JS	MDJ	05/17/2017	D	REFERENCE UPDATE	-	MRF	JES	CZH	02/27/2020

ATTENTION:

* WEDGE CONNECTORS ARE PREFERRED OVER COMPRESSION CONNECTORS.

TABLE 3

CONNECTORS, WEDGE, BARE CONDUCTOR, ALUMINUM TO COPPER											
MAIN	CONDUCTOR DIAMETER (IN)	TAP	COVERED CONDUCTOR DIAMETER (IN) (b)	TOTAL DIAMETER (IN)	WEJTAP CHOICE 1			WEJTAP CHOICE 2		
					MFR PART #	STOCK NUMBER	DESIGN UNIT	MFR PART #	STOCK NUMBER	DESIGN UNIT
1033.5 ACSR	1.213	500 CU	0.813	2.026	WCY92	S269778	LW394 & LW336	WCY93	S269771	LW500
		4/0 CU	0.522	1.735	WCY97	S269774	LW3/0A	1-602180-1	S269774	LW3/0A
		1/0 CU	0.368	1.581	WCY99	S269762	LW1/0C	1-602180-3	S269762	LW1/0C
		#2 CU	0.320	1.533	(G)(e)			WCY100	S269770	LW2C
		#4/3 CU	0.254	1.467				WCY101	S269782	LW4C
636 ACSR	0.977	500 CU	0.813	1.790	WCY76	S269777	WC500	N/A		
		4/0 CU	0.522	1.499	WCY80	S269775	WC4/0	WCY81	S269776	WC3/0A
		1/0 CU	0.368	1.345	WCY83	S269773	WC2C	N/A		
		#2 CU	0.320	1.297	(G)(e)			WCY83	S269773	WC2C
		#4/3 CU	0.254	1.231				WCY84	S269772	WC4C

TABLE OF CONTENTS

© 1998 - 2023 San Diego Gas & Electric Company. All rights reserved. Removal of this copyright notice without permission is not permitted under law.

REV	CHANGE	DR	BY	DSN	APV	DATE	REV	CHANGE	DR	BY	DSN	APV	DATE
C	SCOPE UPDATE	-	GW	JS	CZH	02/21/2019	F	TABLE UPDATE	EDM	MRF	MRF	KRG	04/06/2023
B	TABLE UPDATE	-	GW	JS	MDH	09/28/2017	E	TABLE UPDATE	EDM	JIK	JES	CZH	02/08/2021
A	COMPLETLEY REVISED	-	GW	JS	MDJ	05/17/2017	D	REFERENCE UPDATE	-	MRF	JES	CZH	02/27/2020

ATTENTION:

* WEDGE CONNECTORS ARE PREFERRED OVER COMPRESSION CONNECTORS.

TABLE 3 (CONT'D)

CONNECTORS, WEDGE, BARE CONDUCTOR, ALUMINUM TO COPPER

MAIN	CONDUCTOR DIAMETER (IN)	TAP	CONDUCTOR DIAMETER (IN) (b)	TOTAL DIAMETER (IN)	WEJTAP CHOICE 1			WEJTAP CHOICE 2		
					MFR PART #	STOCK NUMBER	DESIGN UNIT	MFR PART #	STOCK NUMBER	DESIGN UNIT
336.4 ACSR	0.721	500 CU	0.813	1.534	WCY61	S269646	WCY500	WCY62	S269840	500WC
		4/0 CU	0.522	1.243	WCY65	S269700	N/A	WCY55	S269706	N/A
		1/0 CU	0.368	1.089	WCY52	S269704		WCY67	S269650	CY500
		#2 CU	0.320	1.041	(G) (e)			WCY57	S269662	WCY57
		#4/3 CU	0.254	0.973				WCY58	S269664	4TCY
3/0 (5/2) AWAC	0.524	1/0 CU	0.368	0.892	WCB17	S269818	CB1/0	WCB11	S269824	WCB2S
		#2 CU	0.320	0.844						
		#4/3 CU	0.254	0.776	WCB16	S269816	WCB4ST	N/A		
3/0 ACSR	0.502	1/0 CU	0.368	0.870	WCB17	S269818	CB1/0	WCB11	S269824	WCB2S
		#2 CU	0.320	0.822	WSM3	S269612	WCS4/0			
		#4/3 CU	0.254	0.754				WCB16	S269816	WCB4ST
#2 (3/4) AWAC	0.386	#2 CU	0.320	0.706	WCB10	S269826 (X)	WCB2T	WCB14	S269810	WCB3/0
		#4/3 CU	0.254	0.638	WCR30	S269832	WCR2T	N/A		
#2 (5/2) AWAC	0.330	#2 CU	0.320	0.650	WCB10	S269826 (X)	WCB2T	WCR29	S269828 (X)	WCR2S
		#4/3 CU	0.254	0.582	WCR30	S269832	WCR2T	WCR31	S269836 (X)	WCR6ST
#2 ACSR	0.316	#2 CU	0.320	0.636	WCR29	S269828 (X)	WCR2S	WCB10	S269826 (X)	WCB2T
		#4/3 CU	0.254	0.568	WCR30	S269832	WCR2T	WCR31	S269836 (X)	WCR6ST

TABLE OF CONTENTS

© 1998 - 2023 San Diego Gas & Electric Company. All rights reserved. Removal of this copyright notice without permission is not permitted under law.

REV	CHANGE	DR	BY	DSN	APV	DATE	REV	CHANGE	DR	BY	DSN	APV	DATE
C	SCOPE UPDATE	-	GW	JS	CZH	02/21/2019	F	TABLE UPDATE	EDM	MRF	MRF	KRG	04/06/2023
B	TABLE UPDATE	-	GW	JS	MDH	09/28/2017	E	TABLE UPDATE	EDM	JIK	JES	CZH	02/08/2021
A	COMPLETLEY REVISED	-	GW	JS	MDJ	05/17/2017	D	REFERENCE UPDATE	-	MRF	JES	CZH	02/27/2020

ATTENTION:

* WEDGE CONNECTORS ARE PREFERRED OVER COMPRESSION CONNECTORS.

TABLE 4

CONNECTORS, WEDGE, BARE CONDUCTOR, ALUMINUM TO COVERED COPPER											
MAIN	CONDUCTOR DIAMETER (IN)	TAP	CONDUCTOR DIAMETER (IN) (b)	TOTAL DIAMETER (IN)	WEJTAP CHOICE 1			WEJTAP CHOICE 2		
					MFR PART #	STOCK NUMBER	DESIGN UNIT	MFR PART #	STOCK NUMBER	DESIGN UNIT
1033.5 ACSR	1.213	500 CU	0.790	2.003	WCY92	S269778	LW394 & LW336	WCY93	S269771	LW500
		4/0 CU	0.506	1.719	WCY97	S269774	LW3/0A	N/A		
		1/0 CU	0.357	1.570	WCY99	S269762	LW1/0			
		#4 CU	0.232	1.445	(G)(e)					
636 ACSR	0.977	500 CU	0.790	1.767	WCY76	S269777	WC500	N/A		
		4/0 CU	0.506	1.483	WCY80	S269775	WC4/0	WCY81	S269776	WC3/0A
		1/0 CU	0.357	1.334	WCY83	S269773	WC2C	N/A		
		#4/1 CU	0.204	1.209	(G)(e)			WCY84	S269772	WC4C
		#4/7 CU	0.232							
336.4 ACSR	0.721	500 CU	0.790	1.511	WCY62	S269840	500WC	N/A		
		4/0 CU	0.506	1.227	WCY65	S269700	N/A	WCY64	S269648	CY1/0
		1/0 CU	0.357	1.078	WCY67	S269650	1/0WC	N/A		
		#4/1 CU	0.204	0.953	(G)(e)			WCY58	S269664	4TCY
		#4/7 CU	0.232							
3/0 (5/2) AWAC	0.524	4/0 CU	0.506	1.030	WCB20	S269716	N/A	WCB19	S269820	CB3/0
		1/0 CU	0.357	0.881	WCB17	S269818	CB1/0	WCB11	S269824	WCB2S
		#4 CU	0.232	0.756	WCB16	S269816	WCB4ST	WCB13	S269838	CB4T

TABLE OF CONTENTS

© 1998 - 2023 San Diego Gas & Electric Company. All rights reserved. Removal of this copyright notice without permission is not permitted under law.

REV	CHANGE	DR	BY	DSN	APV	DATE	REV	CHANGE	DR	BY	DSN	APV	DATE
C	SCOPE UPDATE	-	GW	JS	CZH	02/21/2019	F	TABLE UPDATE	EDM	MRF	MRF	KRG	04/06/2023
B	TABLE UPDATE	-	GW	JS	MDH	09/28/2017	E	TABLE UPDATE	EDM	JIK	JES	CZH	02/08/2021
A	COMPLETLEY REVISED	-	GW	JS	MDJ	05/17/2017	D	REFERENCE UPDATE	-	MRF	JES	CZH	02/27/2020

ATTENTION:

* WEDGE CONNECTORS ARE PREFERRED OVER COMPRESSION CONNECTORS.

TABLE 4 (CONT'D)

CONNECTORS, WEDGE, BARE CONDUCTOR, ALUMINUM TO COVERED COPPER											
MAIN	CONDUCTOR DIAMETER (IN)	TAP	CONDUCTOR DIAMETER (IN) (C)	TOTAL DIAMETER (IN)	WEJTAP CHOICE 1			WEJTAP CHOICE 2		
					MFR PART #	STOCK NUMBER	DESIGN UNIT	MFR PART #	STOCK NUMBER	DESIGN UNIT
3/0 ACSR	0.502	4/0 CU	0.506	1.008	WCB20	S269716	N/A	WCB19	S269820	CB3/0
		1/0 CU	0.357	0.859	WCB17	S269818	CB1/0	WCB11	S269824	WCB2S
		#4 CU	0.232	0.734	WCB16	S269816	WCB4ST	WCB13	S269838	WCB4ST
1/0 (4/3) AWAC	0.447	1/0 CU	0.357	0.804	WCB17	S269818	CB1/0	WCB11	S269824	WCB2S
		#4 CU	0.232	0.679	WCB13	S269838	CB4T	WCB16	S269816	WCB4ST
#2 (3/4) AWAC	0.386	1/0 CU	0.357	0.743	WCB14	S269810	WCB3/0	WCB10	S269826 (X)	WCB2T
		#4 CU	0.232	0.618	WCB13	S269838	CB4T	WCR30	S269832	WCR2T
#2 (5/2) AWAC	0.330	1/0 CU	0.357	0.687	WCB10	S269826 (X)	WCB2T	WCR29	S269828 (X)	WCR2S
		#4 CU	0.232	0.562	WCR30	S269832	WCR2T	WCR31	S269836 (X)	WCR6ST
#2 ACSR	0.316	1/0 CU	0.357	0.673	WCB10	S269826 (X)	WCB2T	WCR29	S269828 (X)	WCR2S
		#4	0.232	0.548	WCR30	S269832	WCR2T	WCR31	S269836 (X)	WCR6ST

TABLE OF CONTENTS

© 1998 - 2023 San Diego Gas & Electric Company. All rights reserved. Removal of this copyright notice without permission is not permitted under law.

REV	CHANGE	DR	BY	DSN	APV	DATE	REV	CHANGE	DR	BY	DSN	APV	DATE
C	SCOPE UPDATE	-	GW	JS	CZH	02/21/2019	F	TABLE UPDATE	EDM	MRF	MRF	KRG	04/06/2023
B	TABLE UPDATE	-	GW	JS	MDH	09/28/2017	E	TABLE UPDATE	EDM	JIK	JES	CZH	02/08/2021
A	COMPLETLEY REVISED	-	GW	JS	MDJ	05/17/2017	D	REFERENCE UPDATE	-	MRF	JES	CZH	02/27/2020

ATTENTION:

* WEDGE CONNECTORS ARE PREFERRED OVER COMPRESSION CONNECTORS.

TABLE 5

CONNECTORS, WEDGE, BARE CONDUCTOR, COPPER TO COPPER											
MAIN	CONDUCTOR DIAMETER (IN)	TAP	CONDUCTOR DIAMETER (IN)	TOTAL DIAMETER (IN)	WEJTAP CHOICE 1			WEJTAP CHOICE 2		
					MFR PART #	STOCK NUMBER	DESIGN UNIT	MFR PART #	STOCK NUMBER	DESIGN UNIT
4/0 CU	0.522	4/0 CU	0.522	1.044	WCB250C250	S269726	N/A	WCB40C40	S269720	N/A
		1/0 CU	0.368	0.890	WCB40C20	S269702		WCB250C20	S269724	

TABLE OF CONTENTS

© 1998 - 2023 San Diego Gas & Electric Company. All rights reserved. Removal of this copyright notice without permission is not permitted under law.

REV	CHANGE	DR	BY	DSN	APV	DATE	REV	CHANGE	DR	BY	DSN	APV	DATE
C	SCOPE UPDATE	-	GW	JS	CZH	02/21/2019	F	TABLE UPDATE	EDM	MRF	MRF	KRG	04/06/2023
B	TABLE UPDATE	-	GW	JS	MDH	09/28/2017	E	TABLE UPDATE	EDM	JIK	JES	CZH	02/08/2021
A	COMPLETLEY REVISED	-	GW	JS	MDJ	05/17/2017	D	REFERENCE UPDATE	-	MRF	JES	CZH	02/27/2020

ATTENTION:

* WEDGE CONNECTORS ARE PREFERRED OVER COMPRESSION CONNECTORS.

TABLE 6

CONNECTORS, WEDGE, BARE CONDUCTOR, COPPER TO ALUMINUM											
MAIN	CONDUCTOR DIAMETER (IN)	TAP	CONDUCTOR DIAMETER (IN)	TOTAL DIAMETER (IN)	WEJTAP CHOICE 1			WEJTAP CHOICE 2		
					MFR PART #	STOCK NUMBER	DESIGN UNIT	MFR PART #	STOCK NUMBER	DESIGN UNIT
500 CU	0.813	336 ACSR	0.721	1.534	WCY61	S269646	WCY500	WCY62	S269840	500WC
		394.5 5005								
		3/0 ACSR	0.502	1.315	WCY64	S269648	CY1/0	N/A		
		3/0 5005								
		1/0 ACSR	0.398	1.211	WCY66	S269732	4/0WC	WCY67	S269650	CY500
		1/0 5005								
		#2 ACSR	0.316	1.129	WCY67	S269650	CY500	WCY57	S269662	CY2ST
		#2 5005								

TABLE OF CONTENTS

© 1998 - 2023 San Diego Gas & Electric Company. All rights reserved. Removal of this copyright notice without permission is not permitted under law.

REV	CHANGE	DR	BY	DSN	APV	DATE	REV	CHANGE	DR	BY	DSN	APV	DATE
C	SCOPE UPDATE	-	GW	JS	CZH	02/21/2019	F	TABLE UPDATE	EDM	MRF	MRF	KRG	04/06/2023
B	TABLE UPDATE	-	GW	JS	MDH	09/28/2017	E	TABLE UPDATE	EDM	JIK	JES	CZH	02/08/2021
A	COMPLETLEY REVISED	-	GW	JS	MDJ	05/17/2017	D	REFERENCE UPDATE	-	MRF	JES	CZH	02/27/2020

ATTENTION:

* WEDGE CONNECTORS ARE PREFERRED OVER COMPRESSION CONNECTORS.

TABLE 6 (CONT'D)

CONNECTORS, WEDGE, BARE CONDUCTOR, COPPER TO ALUMINUM											
MAIN	CONDUCTOR DIAMETER (IN)	TAP	CONDUCTOR DIAMETER (IN)	TOTAL DIAMETER (IN)	WEJTAP CHOICE 1			WEJTAP CHOICE 2		
					MFR PART #	STOCK NUMBER	DESIGN UNIT	MFR PART #	STOCK NUMBER	DESIGN UNIT
4/0 CU	0.522	394.5 5005	0.721	1.243	WCY66	S269732	4/0WC	WCY65	S269700	N/A
		3/0 ACSR	0.502	1.024	WCB19	S269820	CB3/0	N/A		
		3/0 5005								
		1/0 ACSR	0.398	0.920	WCB17	S269818	CB1/0			
		1/0 5005								
		#2 ACSR	0.316	0.838	WCB14	S269810	WCB3/0	WCB11	S269824	WCB2S
1/0 CU	0.368	3/0 ACSR	0.502	0.870	WCB17	S269818	CB1/0	WCB11	S269824	WCB2S
		1/0 ACSR	0.398	0.766	WCB14	S269810	WCB3/0	WCB10	S269826 (X)	WCB2T
		1/0 5005								
		#2 ACSR	0.316	0.684						

TABLE OF CONTENTS

© 1998 - 2023 San Diego Gas & Electric Company. All rights reserved. Removal of this copyright notice without permission is not permitted under law.

REV	CHANGE	DR	BY	DSN	APV	DATE	REV	CHANGE	DR	BY	DSN	APV	DATE
C	SCOPE UPDATE	-	GW	JS	CZH	02/21/2019	F	TABLE UPDATE	EDM	MRF	MRF	KRG	04/06/2023
B	TABLE UPDATE	-	GW	JS	MDH	09/28/2017	E	TABLE UPDATE	EDM	JIK	JES	CZH	02/08/2021
A	COMPLETLEY REVISED	-	GW	JS	MDJ	05/17/2017	D	REFERENCE UPDATE	-	MRF	JES	CZH	02/27/2020

ATTENTION:

* WEDGE CONNECTORS ARE PREFERRED OVER COMPRESSION CONNECTORS.

TABLE 7

CONNECTORS, WEDGE, BARE CONDUCTOR, COPPER TO COVERED COPPER											
MAIN	CONDUCTOR DIAMETER (IN)	TAP	CONDUCTOR DIAMETER (IN) (c)	TOTAL DIAMETER (IN)	WEJTAP CHOICE 1			WEJTAP CHOICE 2		
					MFR PART #	STOCK NUMBER	DESIGN UNIT	MFR PART #	STOCK NUMBER	DESIGN UNIT
4/0 CU	0.522	4/0 CU	0.506	1.050	WCB250C250	S269726	N/A	WCB40C40	S269720	N/A
		1/0 CU	0.357	0.879	WCB40C20	S269702		N/A		
#2-3STR (BARE)	0.320	4/0 CU (COVERED)	0.506	0.826						
4/0 CU	0.522	#4 CU	0.232	0.754	WCB250C2 BAIL2G1B	S269722 S227650				
1/0 CU	0.368	1/0 CU	0.357	0.741	WCB20C20	S269718	N/A	N/A		
		#4 CU	0.232	0.600	WCB20C2	S269714				
#2 CU	0.320	#4 CU	0.232	0.552	WCB2C2	S265944	WCB2C2	N/A		
#4 CU	0.252	#4 CU	0.232	0.484	(a)	N/A		N/A		
#6 CU	0.201	#4 CU	0.232	0.433	(a)	N/A		N/A		

TABLE OF CONTENTS

© 1998 - 2023 San Diego Gas & Electric Company. All rights reserved. Removal of this copyright notice without permission is not permitted under law.

REV	CHANGE	DR	BY	DSN	APV	DATE	REV	CHANGE	DR	BY	DSN	APV	DATE
C	SCOPE UPDATE	-	GW	JS	CZH	02/21/2019	F	TABLE UPDATE	EDM	MRF	MRF	KRG	04/06/2023
B	TABLE UPDATE	-	GW	JS	MDH	09/28/2017	E	TABLE UPDATE	EDM	JIK	JES	CZH	02/08/2021
A	COMPLETLEY REVISED	-	GW	JS	MDJ	05/17/2017	D	REFERENCE UPDATE	-	MRF	JES	CZH	02/27/2020

ATTENTION:

* WEDGE CONNECTORS ARE PREFERRED OVER COMPRESSION CONNECTORS.

TABLE 8

CONNECTORS, WEDGE, BARE CONDUCTOR, COPPER TO COVERED ALUMINUM											
MAIN	CONDUCTOR DIAMETER (IN)	TAP	CONDUCTOR DIAMETER (IN) (b)	TOTAL DIAMETER (IN)	WEJTAP CHOICE 1			WEJTAP CHOICE 2		
					MFR PART #	STOCK NUMBER	DESIGN UNIT	MFR PART #	STOCK NUMBER	DESIGN UNIT
4/0 CU	0.522	3/0 AL	0.449	0.971	WCB19	S269820	CB3/0	N/A		
		#2 AL	0.282	0.804	WCB11	S269824	WCB2S	WCB14	S269810	WCB3/0 & WCB14
1/0 CU	0.368	3/0 AL	0.449	0.817	WCB11	S269824	WCB2S	WCB17	S269818	CB1/0
		#2 AL	0.282	0.650	WCR29	S269828 (X)	WCR2S	WCB10	S269826 (X)	WCB2T
#2 CU	0.320	#2 AL	0.282	0.602	WCR30	S269832	WCR2T	WCR29	S269828 (X)	WCR2S
#4 CU	0.252	#2 AL	0.282	0.534	WCR31	S269836 (X)	WCR6ST	WCR30	S269832	WCR2T

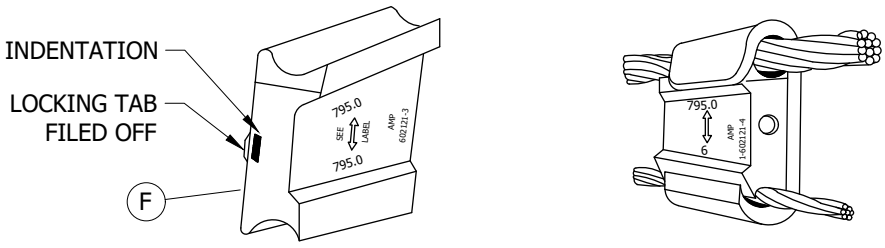

FIGURE 1

TABLE OF CONTENTS

© 1998 - 2023 San Diego Gas & Electric Company. All rights reserved. Removal of this copyright notice without permission is not permitted under law.

REV	CHANGE	DR	BY	DSN	APV	DATE	REV	CHANGE	DR	BY	DSN	APV	DATE
C	SCOPE UPDATE	-	GW	JS	CZH	02/21/2019	F	TABLE UPDATE	EDM	MRF	MRF	KRG	04/06/2023
B	TABLE UPDATE	-	GW	JS	MDH	09/28/2017	E	TABLE UPDATE	EDM	JIK	JES	CZH	02/08/2021
A	COMPLETLEY REVISED	-	GW	JS	MDJ	05/17/2017	D	REFERENCE UPDATE	-	MRF	JES	CZH	02/27/2020

INSTALLATION:

A. USE YELLOW CARTRIDGE (S209408) FOR INSTALLING CONNECTORS.

B. USE BLUE CARTRIDGE (S209392) FOR REMOVING CONNECTORS.

C. CONNECTORS TO BE USED FOR TAPS AND JUMPERS.

D. WIRE BRUSH THE CONDUCTORS AND USE A LIBERAL AMOUNT OF INHIBITOR BEFORE INSTALLING CONNECTOR.

E. WHEN MAKING ALUMINUM TO COPPER CONNECTIONS, LOCATE THE COPPER AT THE SAME LEVEL OR BELOW THE ALUMINUM CONDUCTOR.

(F) THE 636 TO 636 AND 1033 TO 1033 CONNECTORS MAY BE REUSED ONCE BY FOLLOWING THESE STEPS:

1. DETERMINE THAT THE CONNECTOR HAS BEEN USED ONLY ONCE BY CONFIRMING THERE IS ONLY 1 INDENTATION ON THE NARROW END OF THE WEDGE.
2. ADD ENOUGH INHIBITOR TO THE 'C' CLAMP AND WEDGE TO FULLY COAT THE CONDUCTOR.
3. INSTALL TOOL SO IT WILL NOT STRIKE THE WEDGE ON THE EXISTING TAB PRODUCING INDENTATION.

(G) WEDGE STIRRUPS SHALL BE USED ON ALL CONNECTIONS WHERE THE RUN IS 336 AND LARGER AND THE TAP IS #2 OR SMALLER. WEDGE STIRRUPS AND HOT LINE CLAMPS ARE NOT TO BE USED ON SYSTEM NEUTRALS OR EQUIPMENT GROUNDS. (e)

ATTENTION:

* ONLY USE AMPACT CARTRIDGES WITH AMPACT FIRING TOOLS. AMPACTS ARE CENTER FIRE CARTRIDGES.

BURNDY WEJTAP INSTALLATION:

A. USE YELLOW CARTRIDGE (S555008) FOR INSTALLING WCY TYPE BURNDY WEJTAP CONNECTORS.

B. USE BLUE CARTRIDGE (S555010) FOR INSTALLING WCB TYPE BURNDY WEJTAP CONNECTORS.

C. USE RED CARTRIDGE (S209410) FOR INSTALLING WCR TYPE BURNDY WEJTAP CONNECTORS.

BURNDY WEJTAP REMOVAL:

A. USE BLUE CARTRIDGE FOR REMOVING WCY TYPE CONNECTORS.

B. USE RED CARTRIDGE FOR REMOVING WCB TYPE CONNECTORS.

C. USE RED CARTRIDGE FOR REMOVING WCR TYPE CONNECTORS.

BILL OF MATERIALS: NONE

NOTES:

I. NEVER USE A YELLOW BURNDY CARTRIDGE FOR ANY REMOVAL OF WEJTAP CONNECTORS. ONLY USE BURNDY WEJTAP CARTRIDGES WITH BURNDY WEJTAP FIRING TOOLS. BURNDY'S ARE RIM FIRE CARTRIDGES.

(X) THIS ITEM IS EXEMPT.

REFERENCE:

(a) FOR COPPER COMPRESSION CONNECTORS, SEE OH784.

(b) FOR COVERED ALUMINUM LINE JUMPER WIRE, SEE OH711.

(c) FOR COVERED COPPER LINE JUMPERS AND GROUND WIRE, SEE OH711.

(d) FOR COPPER SECONDARY THW, AND SERVICE DROP CABLE WIRES, SEE OH711.

(e) FOR HOT LINE CLAMPS AND STIRRUPS, SEE OH788.

TABLE OF CONTENTS

© 1998 - 2023 San Diego Gas & Electric Company. All rights reserved. Removal of this copyright notice without permission is not permitted under law.

REV	CHANGE	DR	BY	DSN	APV	DATE	REV	CHANGE	DR	BY	DSN	APV	DATE
C	SCOPE UPDATE	-	GW	JS	CZH	02/21/2019	F	TABLE UPDATE	EDM	MRF	MRF	KRG	04/06/2023
B	TABLE UPDATE	-	GW	JS	MDH	09/28/2017	E	TABLE UPDATE	EDM	JIK	JES	CZH	02/08/2021
A	COMPLETLEY REVISED	-	GW	JS	MDJ	05/17/2017	D	REFERENCE UPDATE	-	MRF	JES	CZH	02/27/2020

SCOPE: THIS STANDARD SHOWS COPPER COMPRESSION FOR COPPER TO COPPER JUMPER AND TAP.



FIGURE 1
DOUBLE TAB SQUEEZONS

TABLE 1

LINE SIDE	TAP SIDE											TOOL & INDEX DIE		STOCK NUMBER
	#8	#6		#4		#2		#1	#1/0	#2/0	#4/0	NO. INDENTS		
	SOL	SOL	STR	SOL	STR	SOL	STR	STR	STR	STR	STR	MD-6	Y-35	
												3	1	
#6 SOL #4 SOL STR	X	X	X	X	-	-	-	-	-	-	-	WKT	N/A	S257952
#4 SOL #2 SOL STR	-	-	-	X	X	X	-	-	-	-	-	WKK	N/A	S257920
#2, 1 - 1/0 (ALL STR)	-	X	X	X	X	X	-	-	-	-	-	N/A	0	S257792
	-	-	-	-	-	-	X	X	X	-	-	N/A	0	S257760
#2/0 - 4/0 STR	-	-	-	X	X	X	-	-	-	-	-	N/A	U-D3	S257888
	-	-	-	-	-	-	X	X	X	-	-	N/A	U-D3	S257856
	-	-	-	-	-	-	-	-	-	X	X	N/A	U-D3	S257824

INSTALLATION:

A. UNDERGROUND CONCENTRIC NEUTRAL CONNECTIONS SHOULD BE SQUEEZED WITH COMPRESSION CONNECTORS UNLESS OTHERWISE SPECIFIED IN THE UNDERGROUND CONSTRUCTION STANDARDS BOOK.

BILL OF MATERIALS: NONE

NOTES: NONE

REFERENCE: NONE

TABLE OF CONTENTS

© 1998 - 2021 San Diego Gas & Electric Company. All rights reserved. Removal of this copyright notice without permission is not permitted under law.

REV	CHANGE	DR	BY	DSN	APV	DATE	REV	CHANGE	DR	BY	DSN	APV	DATE
D	TABLE UPDATE	-	JIK	JES	CZH	11/12/2019	G	FIGURE UPDATE	EDM	RSL	JES	CZH	12/12/2021
C	EDITORIAL CHANGES	-	JC	JES	CZH	06/13/2019	F	MOVED FROM 4172	EDM	JIK	-	-	06/02/2020
B	FIGURE UPDATE	-	JAC	JES	CZH	04/20/2019	E	EDITORIAL CHANGES	EDM	JIK	JES	CZH	04/13/2020

SCOPE: THIS STANDARD SHOWS CONNECTORS USED FOR SPLICING SECONDARY OR SERVICE CONDUCTORS.

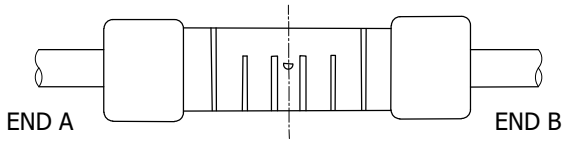

FIGURE 1
SECONDARY OR SERVICE CONDUCTORS

TABLE 1

INSULINK COMPRESSION-SECONDARY OR SERVICE CONNECTORS (NON-TENSION)

END A		END B										END CAP COLOR CODE (C)		CATALOG NUMBERS				STOCK NUMBER
ACSR OR 5005	ALL ALUM OR COPPER	ALL ALUMINUM OR COPPER									ACSR OR 5005			BLACK-BURN	BURNDY	HOMAC (SOMERSET)	PENN UNION	
		8		6		4		2		1/0								
		SOL	STR	SOL	STR	SOL	STR	SOL	STR	STR		END A	END B					
-	8 STR & 6 SOL	X	-	-	-	-	-	-	-	-	-	GREEN	BROWN	ICS60	ES6W8W	U1N81	-	-
		-	X	X	-	-	-	-	-	-	-	GREEN	GREEN	ICS61	ES6W6W	U1N88	-	S258496
6	6 STR & 4 SOL	X	-	-	-	-	-	-	-	-	-	BLUE	BROWN	ICS62	ES4W8W	U1N61	-	-
		-	X	X	-	-	-	-	-	-	-	BLUE	GREEN	ICS63	ES4W6W	U1N68	PIK 46	S258464
		-	-	-	X	X	-	-	-	-	6	BLUE	BLUE	ICS64	ES4W4W	U1N66	-	S258336
4	4 STR & 2 SOL	X	-	-	-	-	-	-	-	-	-	ORANGE	BROWN	ICS65	ES2W8W	U1N41	PIK 28	S258384
		-	X	X	-	-	-	-	-	-	-	ORANGE	GREEN	ICS66	ES2W6W	U1N48	PIK 26	S258432
		-	-	-	X	X	-	-	-	-	6	ORANGE	BLUE	ICS67	ES2W4W	U1N46	-	S258272
		-	-	-	-	-	X	X	-	-	4	ORANGE	ORANGE	ICS68	ES2W2W	U1N44	-	S258562 (X)
2	2 STR	X	-	-	-	-	-	-	-	-	-	RED	BROWN	ICS69	ES2R8W	U1N21	-	S258368
		-	X	X	-	-	-	-	-	-	-	RED	GREEN	ICS70	ES2R6W	U1N28	-	S258400
		-	-	-	X	X	-	-	-	-	6	RED	BLUE	ICS71	ES2R4W	U1N26	-	S258240
		-	-	-	-	-	X	X	-	-	4	RED	ORANGE	ICS72	ES2R2W	U1N24	PIK 12	S258528
		-	-	-	-	-	-	-	X	-	2	RED	RED	ICS73	ES2R2R	U1N22	-	S258624
1/0	1/0 STR	-	X	X	-	-	-	-	-	-	-	YELLOW	GREEN	ICS74	ES25R6W	U1N108	-	S258692
		-	-	-	X	X	-	-	-	-	6	YELLOW	BLUE	ICS75	ES25R4W	U1N106	-	S258304
		-	-	-	-	-	X	X	-	-	4	YELLOW	ORANGE	ICS76	ES25R2W	U1N104	-	S258592
		-	-	-	-	-	-	-	X	-	2	YELLOW	RED	ICS77	ES25R2R	U1N102	-	S258656
		-	-	-	-	-	-	-	-	X	1/0	YELLOW	YELLOW	ICS78	ES25R25R	U1N1010	-	S258688

TABLE 2

COMPRESSION SLEEVE SECONDARY OR SERVICE CONNECTORS (NON TENSION)

AL WIRE SIZE	INSTALLING DIE SIZE	MANUFACTURER/CATALOG NUMBER		COMPRESSION SPLICE STOCK NUMBER
		HOMAC	PENN UNION	
3/0	247	ASC 3/0	BCUA-3/0	S668420
350	U31ART	ASC 350	BCUA-350	S668418 (X)
500	317	ASC 500	BCUA-500	S668424
750	301	ASC 750	BCUA-750	S668426
1000	302	ASC 1000	BCUA-1000	S668428

TABLE OF CONTENTS

© 1998 - 2021 San Diego Gas & Electric Company. All rights reserved. Removal of this copyright notice without permission is not permitted under law.

REV	CHANGE	DR	BY	DSN	APV	DATE	REV	CHANGE	DR	BY	DSN	APV	DATE
D	TABLE UPDATE	-	JIK	JES	CZH	11/12/2019	G	FIGURE UPDATE	EDM	RSL	JES	CZH	12/12/2021
C	EDITORIAL CHANGES	-	JC	JES	CZH	06/13/2019	F	MOVED FROM 4172	EDM	JIK	-	-	06/02/2020
B	FIGURE UPDATE	-	JAC	JES	CZH	04/20/2019	E	EDITORIAL CHANGES	EDM	JIK	JES	CZH	04/13/2020

TABLE 3

TRIPLEX NEUTRAL SLEEVES (TENSION)					
NEUTRAL SIZE	COLOR CODE	INDENTS EACH END	LENGTH - INCHES	CATALOG NUMBERS	STOCK NUMBER
		MD-6	KEARNEY	KEARNEY	
6	BLUE	6	3 1/4	30008	S652690 (X)
4	ORANGE	6	3 1/4	30009	S652640
2	RED	6	3 1/4	30010	S652576
1/0	CLEAR	14 (B)	7 1/2	OHR-1/0-61AJ	S650274 (X)

INSTALLATION:

A. WIRE BRUSH THE CONDUCTORS BEFORE INSTALLING CONNECTOR.

(B) USE THE WK. 737 DIE IN THE MD-6 TOOL OR U-247 DIE IN THE Y35 TOOL OR KEARNEY INSULINK TOOL.

(C) MAKE **THREE INDENTS IN EACH END** OF THE COMPRESSION CONNECTOR STARTING FROM THE CENTER AND WORK OUTWARD USING THE FIXED NOSE DIE (5/8) OR W-BG DIE OF THE MD-6 TOOL.

D. USE NEUTRAL SLEEVES AS TENSION SPLICE ON 5005 AND ACSR SERVICE CABLE NEUTRAL.

E. USE HEAT SHRINK TUBES OVER CONNECTORS WHEN PLACED IN ANY BELOW GRADE INSTALLATION.

BILL OF MATERIALS: NONE

NOTES:

I. CONNECTORS WILL ACCEPT EITHER ALUMINUM OR COPPER CONDUCTORS.

(X) THIS ITEM IS EXEMPT.

REFERENCE: NONE

TABLE OF CONTENTS

© 1998 - 2021 San Diego Gas & Electric Company. All rights reserved. Removal of this copyright notice without permission is not permitted under law.

REV	CHANGE	DR	BY	DSN	APV	DATE	REV	CHANGE	DR	BY	DSN	APV	DATE
D	TABLE UPDATE	-	JIK	JES	CZH	11/12/2019	G	FIGURE UPDATE	EDM	RSL	JES	CZH	12/12/2021
C	EDITORIAL CHANGES	-	JC	JES	CZH	06/13/2019	F	MOVED FROM 4172	EDM	JIK	-	-	06/02/2020
B	FIGURE UPDATE	-	JAC	JES	CZH	04/20/2019	E	EDITORIAL CHANGES	EDM	JIK	JES	CZH	04/13/2020

SCOPE: THIS STANDARD SHOWS A 2-HOLE ALUMINUM COMPRESSION TERMINAL, USED FOR TERMINATING ALUMINUM CONDUCTORS ON POLE TOP SWITCH TABS AND TRANSFORMER FLAG CONNECTORS.

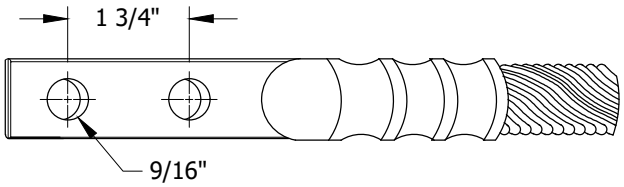

FIGURE 1

TABLE 1

CAST ALUMINUM ALLOY TERMINALS																	
WIRE							TOOL AND DIE			CATALOG NUMBER						STOCK NUMBER	DESIGN UNITS
5005		ACSR		ALUMINUM			BURNDY										
SIZE	STRAND	SIZE	STRAND	SIZE	STRAND		MD6	Y-35	Y-46	HOMAC	BURNDY	FRANKEL	KEARNEY	PENN-UNION	ANDERSON		
2	7	2	6/1	2	7	-	W-BG 5 CRIMPS	-	-	-	-	-	36918	-	-	S728672	CT2A
1/0		1/0		1/0		19	-	U840 5 CRIMPS	-	SAK 1/0-N	-	-	104741-2	-	-	S728608	CT1/0A
3/0		3/0		3/0			-	U317 5 CRIMPS	-	-	YCAK27R-2G2	GTN-3/0-2NE16	-	-	VAUD 3/0-12BN-S	S728928	CT3/0A
-	-	336.4 KCM	18/1	350 KCM	19	37	-		-	-	YCAK31A-2G1	GTM-35-2NE16	36364-2	KBLUA-035-D2	VAUD 350-12BN	S729024	-
394.5 KCM	19		26/7	400 KCM			-		-	-	-	-	36364-3	-	-	S729120	CT336A
-	-	397.5 KCM		500 KCM	37	61	-		-	-	YCAK361R-2G2	-	-	-	-	-	-
		636 KCM	24/7	750 KCM			-	-	342	SAL 750 NTN	-	-	-	-	-	S729266 (X)	CT636A

INSTALLATION:

A. THOROUGHLY CLEAN CONDUCTOR WITH WIRE BRUSH BEFORE INSERTING INTO BARREL.

B. MAKE OVERLAPPING CRIMPS FROM CONDUCTOR TO PAD.

C. USE 1/2" STAINLESS STEEL BOLTS FOR ALUMINUM TO COPPER CONNECTIONS.

D. WHEN USING TERMINALS, APPLY INHIBITOR (S247200) AT EACH ALUMINUM CONNECTION.

BILL OF MATERIALS: NONE

NOTES:

I. ALUMINUM COMPRESSION TERMINALS ARE FACTORY FILLED WITH INHIBITOR.

(X) THIS ITEM IS EXEMPT.

REFERENCE: NONE

© 1998 - 2021 San Diego Gas & Electric Company. All rights reserved. Removal of this copyright notice without permission is not permitted under law.

REV	CHANGE	DR	BY	DSN	APV	DATE	REV	CHANGE	DR	BY	DSN	APV	DATE
D	TABLE UPDATE	-	JIK	JES	CZH	11/12/2019	G	FIGURE UPDATE	EDM	RSL	JES	CZH	12/12/2021
C	EDITORIAL CHANGES	-	JC	JES	CZH	06/13/2019	F	MOVED FROM 4172	EDM	JIK	-	-	06/02/2020
B	FIGURE UPDATE	-	JAC	JES	CZH	04/20/2019	E	EDITORIAL CHANGES	EDM	JIK	JES	CZH	04/13/2020

TABLE OF CONTENTS

SCOPE: THIS STANDARD SHOWS A 2-HOLE COPPER COMPRESSION TERMINAL, USED FOR TERMINATING COPPER CONDUCTORS ON POLE TOP SWITCH TABS AND TRANSFORMER FLAG CONNECTORS.

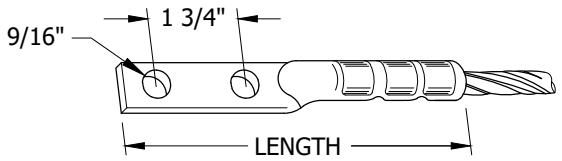

FIGURE 1

TABLE 1

TINNED COPPER TUBULAR COMPRESSION TERMINALS

WIRE			TOOL AND DIE SET CATALOG NUMBERS				NUMBER OF CRIMPS	CATALOG NUMBER				LENGTH (INCHES)	STOCK NUMBER	DESIGN UNITS
			BURNDY			ALCOA								
SIZE	STRANDING		MD6	Y-35	Y-45	60A		BURNDY	DOSSERT	PENN- UNION	HOMAC			
1/0	7	19	W163	-	-	-	4	YA25-2N	DPL10-2N	BBLU 1/0 D3	L 1/0-N	3 7/16	S729664	CT1/0C
			-	U25RT	U25RT (D)	-	2							
				U163	U163 (D)	-	2							
4/0	7	19	W243	-	-	-	3	YA28-2N	DPL21-2N	BBLU 4/0 D	L 4/0-N	5 9/32	S729792	CT4/0C
			W BG	U28RT	U28RT (D)	-	2							
				U243	U243 (D)	-	2							
350 KCM	19	37	-	U267	U267 (D)	-	6	YCA31-2N	-	-	-	6 1/2	S729744	CT350C
400 KCM	19	37	-	U32RT	U32RT (D)	-	4	YA32-2N	DPL40-2N	BBLU 040 D	L 400-N	5 31/32	S729824	CT400C
				U169	U169 (D)	-	5							
500 KCM	19	37	-	U34RT	U34RT (D)	-	4	YA34-2N	DPL50-2N	BBLU 050 D	L 500-N	6 3/16	S729856	CT500C
				U251	U251 (D)	-	3							
750 KCM	37	61	-	-	S39RT	-	6	YA39-2N	DPL75-2N	BBLU 075 D	L 750-N	7	S729920	CT750C
					-	L39RT	2							

INSTALLATION:

A. USE 1/2 INCH EVERDUR BOLTS FOR COPPER TO COPPER CONNECTIONS.

B. USE 1/2 INCH STAINLESS STEEL BOLTS FOR ALUMINUM TO COPPER CONNECTIONS.

C. USE FOR TERMINATING COPPER CONDUCTORS ON:

1. TRANSFORMER FLAG CONNECTORS, OH793.
2. MULTIPLE SERVICE CONNECTOR, OH793.
3. POLE TOP SWITCH TABS.

(D) USE ADAPTER DIE 6515 WITH BURNDY Y45 TOOL.

E. MAKE OVERLAPPING INDENTS FROM CONDUCTOR TO PAD.

F. WIRE BRUSH THE CONDUCTOR BEFORE INSTALLING TERMINAL.

BILL OF MATERIALS: NONE

NOTES: NONE

REFERENCE: NONE

© 1998 - 2021 San Diego Gas & Electric Company. All rights reserved. Removal of this copyright notice without permission is not permitted under law.

REV	CHANGE	DR	BY	DSN	APV	DATE	REV	CHANGE	DR	BY	DSN	APV	DATE
D	TABLE UPDATE	-	JIK	JES	CZH	11/12/2019	G	FIGURE UPDATE	EDM	RSL	JES	CZH	12/12/2021
C	EDITORIAL CHANGES	-	JC	JES	CZH	06/13/2019	F	MOVED FROM 4172	EDM	JIK	-	-	06/02/2020
B	FIGURE UPDATE	-	JAC	JES	CZH	04/20/2019	E	EDITORIAL CHANGES	EDM	JIK	JES	CZH	04/13/2020

TABLE OF CONTENTS

SCOPE: THIS STANDARD SHOWS THE VARIOUS COMPRESSION CONNECTORS THAT ARE USED TO CONNECT ALL TYPES AND SIZES OF JUMPER WIRES TO LINE CONDUCTORS.

TABLE 1:

CONDUCTOR			S256424 O DIE	S256432 O DIE	S256440 D DIE	S256448 D DIE D-3 DIE	S256456 D DIE D-3 DIE	S256464 D DIE D-3 DIE	S256472 D DIE D-3 DIE	S256488 N DIE	S256496 N DIE	S256864 N DIE	S256896 N DIE
DIA. IN.	AWG OR KCM	DESCRIPTION											
.162	6	SOLID											
.184	6	7 STR.											
.198	6	ACSR 6/1											
.198	6	5005 7W											
.199	8A	CUWLD 3 STR.											
.202	6	3 STR.											
.204	4	SOLID											
.229	3	SOLID											
.230	6A	CUWLD 3 STR.											
.232	4	7 STR.											
.250	4	ACSR 6/1											
.250	4	5005 7W											
.254	4	3 STR.											
.258	2	SOLID											
.276	6D	CUWLD 3 STR.											
.289	1	SOLID											
.290	4A	CUWLD 3 STR.											
.292	2	7 STR.											
.316	2	ACSR 6/1											
.316	2	5005 7W											
.320	2	3 STR.											
.324	1/0	SOLID											
.325	2	ACSR 7/1											
.328	4N	CUWLD 7 STR.											
.330	2	AWAC 5/2											
.338	1/0	7 STR. COMP.											
.348	4D	CUWLD 3 STR.											
.360	1	3 STR.											
.368	1/0	7 STR.											
.373	1/0	19 STR.											
.386	2	AWAC 3/4											
.398	1/0	ACSR 6/1											
.398	1/0	5005 7W											
.409	3/0	SOLID											
.414	2/0	7 STR.											
.426	3/0	7 STR. COMP.											
.447	1/0	AWAC 4/3											
.460	4/0	SOLID											
.464	3/0	7 STR.											
.470	3/0	19 STR.											
502	3/0	ACSR 6/1											
.502	3/0	5005 7W											
522	4/0	7 STR.											
.528	4/0	19 STR.											
.533	4/0	37 STR.											
.563	4/0	ACSR 6/1											
.575	250	19-37 STR.											
.629	300	19-37 STR.											
.666	336	19 STR.											
.680	350	19-37 STR.											
.684	336	ACSR 18/1											
.721	336	ACSR 26/7											
.721	394	5005 19W											
.727	400	19-37 STR.											
.743	397	ACSR 18/1											

EXAMPLE (A)

NO CONNECTOR AVAILABLE

EXAMPLE (A)

(C)

(G)

(D)

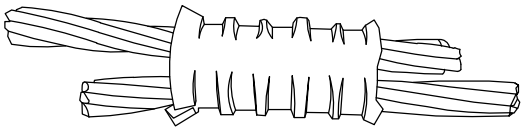

FIGURE 1

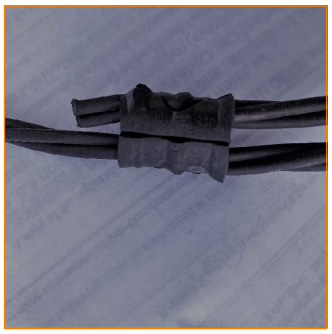

FIGURE 2

ATTENTION: WEDGE CONNECTORS ARE PREFERRED OVER COMPRESSION CONNECTORS.

TABLE OF CONTENTS

© 1998 - 2023 San Diego Gas & Electric Company. All rights reserved. Removal of this copyright notice without permission is not permitted under law.

REV	CHANGE	DR	BY	DSN	APV	DATE	REV	CHANGE	DR	BY	DSN	APV	DATE
D	EDITORIAL CHANGES	-	JC	JES	CZH	06/13/2019	G	EDITORIAL CHANGES	GLC	MRF	MRF	KRG	03/29/2023
C	FIGURE UPDATE	-	JAC	JES	CZH	04/20/2019	F	MOVED FROM OH784	EDM	JIK	JES	CZH	04/13/2020
B	COMPLETELY REVISED	-	GW	JS	MDJ	07/25/2017	E	TABLE UPDATE	-	JIK	JES	CZH	11/12/2019

TABLE 2:

STOCK NUMBER	MANUFACTURER'S CATALOG NUMBER					#INDENTS	
	BLACKBURN	KEARNEY	PENN-UNION	UTILCO	BURNDY	0-52,MD6	Y35
S256424	WR159	506-82	KO-R06	HT-6	-	4	2
S256432	WR189	506-82	KO-R08	HT-8	YHD-2	5	2
S256440	WR279	504-82	KD-R04	HT-4	YHD-4	5	2
S256448	WR289	502-82	KD-R02	HT-2	YHD-3	5	2
S256464	WR399	505-82	KD-R05	HT-5	YHD-6	5	2
S256472	WR419	507-82	KD-R28	-	YHD-7	7	3
S256456	WR379	503-82	KD-R03	HT-3	YHD-5	-	2
S256488	WR699	485-81	KN-R5	-	YHN500-1	-	2
S256496	WR719	486-81	KN-R6	-	YHN500-2	-	2
S256864	WR739	482-81	KN-R7	-	YHN-550	-	2
S256896	WR779	484	-	-	YHN-525	-	3

INSTALLATION:

(A) TO CHOOSE THE PROPER CONNECTOR, LOCATE THE TWO WIRE SIZES ON THE CHART. DRAW A HORIZONTAL LINE FROM THE LARGER CONDUCTOR SIZE AND A VERTICAL LINE FROM THE SMALLER SO THAT THEY INTERSECT. THE AREA CONTAINING THE INTERSECTION INCLUDES THE CONNECTOR STOCK NUMBER AND COMPRESSION INFORMATION. EXAMPLE: FOR CONDUCTOR SIZES 336 ACSR 18/1 AND#2 ACSR 6/1, THE CORRECT CONNECTOR STOCK NUMBER IS S256496.

B. THE ABOVE TABLE CAN BE USED TO DETERMINE THE SPECIFIC MANUFACTURER'S CATALOG NUMBER FOUND UNDER A STOCK NUMBER.

(C) 6 INDENTS REQUIRED FOR BLACKBURN WR279.

(D) 4 INDENTS REQUIRED FOR BLACKBURN WR779.

E. FOR COPPER COMPRESSION CONNECTORS SEE OH784.3.

F. WIRE BRUSH THE CONDUCTORS BEFORE INSTALLING CONNECTOR.

(G) WHEN MAKING ALUMINUM TO COPPER CONNECTIONS, LOCATE THE COPPER AT THE SAME LEVEL OR BELOW THE ALUMINUM CONDUCTOR.

BILL OF MATERIALS: NONE

NOTES: NONE

REFERENCE: NONE

TABLE OF CONTENTS

© 1998 - 2023 San Diego Gas & Electric Company. All rights reserved. Removal of this copyright notice without permission is not permitted under law.

REV	CHANGE	DR	BY	DSN	APV	DATE	REV	CHANGE	DR	BY	DSN	APV	DATE
D	EDITORIAL CHANGES	-	JC	JES	CZH	06/13/2019	G	EDITORIAL CHANGES	GLC	MRF	MRF	KRG	03/29/2023
C	FIGURE UPDATE	-	JAC	JES	CZH	04/20/2019	F	MOVED FROM OH784	EDM	JIK	JES	CZH	04/13/2020
B	COMPLETELY REVISED	-	GW	JS	MDJ	07/25/2017	E	TABLE UPDATE	-	JIK	JES	CZH	11/12/2019

SCOPE: THIS STANDARD SHOWS THE VARIOUS COMPRESSION CONNECTORS THAT ARE USED TO CONNECT ALL TYPES AND SIZES OF JUMPER WIRES TO LINE CONDUCTORS.

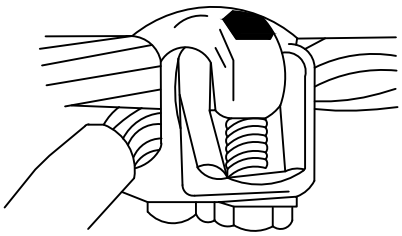

FIGURE 1
PARALLEL 2-BOLT CONNECTORS

TABLE 1

CONDUCTOR DIA. IN.	AWG OR KCM	DESCRIPTION	
.128	8	SOLID	
.162	6	SOLID	
.184	6	7 STR.	
.199	8A	CUWLD 3 STR.	
.202	6	3 STR.	
.204	4	SOLID	
.229	3	SOLID	
.230	6A	CUWLD 3 STR.	
.232	4	7 STR.	
.254	4	3 STR.	SEE PAGE 784
.258	2	SOLID	
.276	6D	CUWLD 3 STR.	
.289	1	SOLID	
.290	4A	CUWLD 3 STR.	
.292	2	7 STR.	
.320	2	3 STR.	
.324	1/0	SOLID	
.328	1	7 STR.	S261856
.328	4N	CUWLD 7 STR.	
.338	1/0	7 STR. COMP.	
.348	4D	CUWLD 3 STR.	
.360	1	3 STR.	
.368	1/0	7 STR.	
.373	1/0	19 STR.	
.414	2/0	7 STR.	S262336
.418	2/0	19 STR.	
.460	4/0	SOLID	
.464	3/0	7 STR.	
.470	3/0	19 STR.	
.522	4/0	7 STR.	
.528	4/0	19 STR.	NO CONNECTOR AVAILABLE
.533	4/0	37 STR.	
.575	250	19-37 STR.	
.666	336	19 STR.	S262400
.680	350	19-37 STR.	
.727	400	19-37 STR.	S262432
.813	500	37 STR.	

NO CONNECTOR AVAILABLE

TABLE OF CONTENTS

© 1998 - 2023 San Diego Gas & Electric Company. All Rights Reserved. Removal Of This Copyright Notice Without Permission Is Not Permitted Under Law.

REV	CHANGE	DR	BY	DSN	APV	DATE	REV	CHANGE	DR	BY	DSN	APV	DATE
C							F						
B							E						
A	ORIGINAL ISSUE	ARC	PAS	MRF	KRG	03/10/2023	D						

Indicates Latest Revision | Completely Revised | X New Page | Information Removed

SDG&E ELECTRIC OVERHEAD CONSTRUCTION STANDARDS

CONNECTORS - BRONZE - TWO BOLT
FOR COPPER TAPS AND JUMPERS

OH787.1

TABLE 2

ASSEMBLY UNITS	STOCK NUMBER	MANUFACTURERS CATALOG NUMBER				
		PENN-UNION	BURNDY	BLACKBURN	DOSSERT	ANDERSON
-	S261856	VT-0	-	2B10	-	K-1
CN4/0	S262336	VT-2	KVS28	2B40	DSU21	-
CN350	S262400	VT-3	KVS31	-	DSU35	-
CN500	S262432	VT-4	KVS34	2B500	DSU50	-

TABLE 3

CONDUCTOR SIZE				BOLT LENGTH INCHES	MANUFACTURER	CATALOG NUMBER	ASSEMBLY UNITS	STOCK NUMBER
RUN		TAP						
MIN	MAX	MIN	MAX					
#6 STR	#2 STR	#6 STR	#2 STR	1 1/4	ANDERSON	XP-018018	-	S228320
#6 STR	1/0 STR	#6 STR	1/0 STR	1 3/4	ANDERSON	AXP 44	X-CLMP	S228256

INSTALLATION: NONE

BILL OF MATERIALS: NONE

NOTES:

I. TO CHOOSE THE PROPER CONNECTOR, LOCATE THE TWO WIRE SIZES ON THE CHART. DRAW A HORIZONTAL LINE FROM THE LARGER CONDUCTOR SIZE AND A VERTICAL LINE FROM THE SMALLER SO THAT THEY INTERSECT. THE AREA CONTAINING THE INTERSECTION INDICATES THE CORRECT CONNECTOR STOCK .
EXAMPLE: FOR CONDUCTOR SIZES 4/0 SOLID AND #4 3 STRAND. THE CORRECT CONNECTOR STOCK NUMBER IS S262336.

II. THE ADJACENT TABLE CAN BE USED TO DETERMINE THE SPECIFIC MANUFACTURER'S CATALOG NUMBER FOUND UNDER A STOCK NUMBER.

REFERENCE: NONE

TABLE OF CONTENTS

© 1998 - 2023 San Diego Gas & Electric Company. All Rights Reserved. Removal Of This Copyright Notice Without Permission Is Not Permitted Under Law.

REV	CHANGE	DR	BY	DSN	APV	DATE	REV	CHANGE	DR	BY	DSN	APV	DATE
C							F						
B							E						
A	ORIGINAL ISSUE	ARC	PAS	MRF	KRG	03/10/2023	D						

Indicates Latest Revision | Completely Revised [X] | New Page | Information Removed

SDG&E ELECTRIC OVERHEAD CONSTRUCTION STANDARDS

CONNECTORS - BRONZE - TWO BOLT
FOR COPPER TAPS AND JUMPERS

OH787.2

SCOPE: THIS STANDARDS PAGE LISTS HOT LINE CLAMPS AND STIRRUPS THAT ARE APPROVED FOR INSTALLATION ON ACSR AND AWAC CONDUCTORS.

CAUTION:

* WHEN INSTALLED ON POLES THAT ARE NOT AERIAL TRUCK ACCESSIBLE, IT IS MANDATORY THAT CONNECTORS ILLUSTRATED IN STANDARD 788 ARE INSTALLED AS IS IF THE WORK IS BEING PERFORMED OFF THE POLE.

** TO AVOID LINE BURN DOWNS, HOT LINE CLAMPS SHALL ALWAYS BE USED WITH STIRRUPS. DO NOT INSTALL HOT LINE CLAMPS DIRECTLY ON THE LINE CONDUCTOR. THE ONLY EXCEPTION TO THIS REQUIREMENT IS WHEN HOTLINE CLAMPS ARE ATTACHED DIRECTLY TO JUMPER LEADS.

*** WHEN TAPPING LINE CONDUCTOR WITH A HOT LINE CLAMP, USE WEDGE CONNECTOR/STIRRUP COMBINATION AS SHOWN IN FIGURE 2.

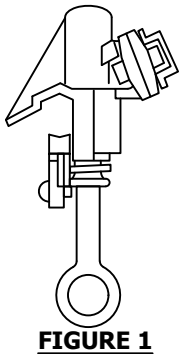

FIGURE 1
HOT LINE CLAMP

TABLE 1

HOT LINE CLAMPS (A)					
STOCK NUMBER	CATALOG NUMBER	MAIN SIZE		TAP	
		MAX.	MIN.	MAX.	MIN.
S227680	HLB2/0	2/0	8 SOL	2/0	8 SOL
	BC20				
S227648	S1530-CC	400	6 SOL	4/0	6 SOL

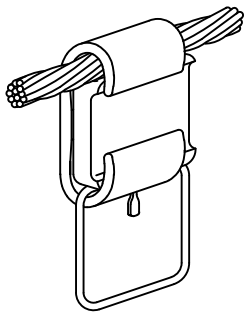

FIGURE 2
WEDGE CONNECTOR/STIRRUP COMBINATION

TABLE 2

WEDGE CONNECTOR/STIRRUP COMBINATION FOR ACSR AND AWAC CONDUCTOR (B) (C)					
BURNDY CATALOG NUMBER	CONDUCTOR SIZE		STIRRUP SIZE	STOCK NUMBER	AU/CU
	AWAC	ACSR			
WSS2	-	#4 & #2	#2 SOL.	S269618 (X)	WCS4
WSM1	#2 (5/2 & 3/4)	1/0	#2 SOL.	S269616	WSM1
WSM2	1/0	1/0 & 3/0	#2 SOL.	S269610	WCS1/0
WSM3	3/0	3/0	#2 SOL.	S269612	WCS4/0
WSL1	-	336.4	1/0 SOL.	S269604	WCS336
WSL11	-	636	2/0 SOL.	S269606	WCS636

INSTALLATION:

(A) THE RECOMMENDED TORQUE FOR MAIN AND TAP CONNECTIONS IS 15 FOOT-LBS.

(B) SEE STANDARD 783.15 FOR INSTALLATION NOTES.

(C) THESE CONNECTIONS ARE FOR ALUMINUM CONDUCTORS ONLY. THEY ARE NOT TO BE USED ON COPPER CONDUCTORS.

© 1998 - 2019 San Diego Gas & Electric Company. All rights reserved. Removal of this copyright notice without permission is not permitted under law.

REV	CHANGE	BY	DSGN	APPV	DATE	REV	CHANGE	BY	DSGN	APPV	DATE
C	TABLE UPDATES	GW	JS	MDJ	06/22/2017	F					
B	TITLE BLOCK UPDATE	GW	JS	MDJ	01/31/2017	E	TABLE UPDATES	GLW	JES	CZH	10/20/2019
A	TABLE UPDATES	GW	TQ	DW	05/10/2013	D	DRAWING UPDATE	PEI	-	-	03/18/2019

X Indicates Latest Revision | Completely Revised | New Page | Information Removed

SDG&E ELECTRIC OVERHEAD CONSTRUCTION STANDARDS

HOT LINE CLAMPS AND STIRRUPS FOR ACSR AND AWAC CONNECTIONS

OH788.1

TABLE OF CONTENTS

BILL OF MATERIALS: NONE

NOTES:

I. HOT LINE CLAMPS SHALL BE USED TO CONNECT 1) SELF PROTECTED TRANSFORMER LEADS (E.G. HE, YJ) AND 2) WHERE CONNECTING LIGHTNING ARRESTERS TO JUMPER LEADS. AT CLEARANCE CORNERS AND OTHER LOCATIONS WHERE HOT LINE CLAMPS WERE USED PREVIOUSLY, MORE RELIABLE SECTIONALIZING MEANS SUCH AS DISCONNECTS OR CUTOUTS CAN BE SUBSTITUTED. CONTACT DISTRIBUTION PLANNING TO HAVE SUCH HOT LINE CLAMPS IN CRITICAL LOCATIONS REPLACED WITH APPROVED SECTIONALIZING DEVICES AS ONE MEANS OF PROMOTING RELIABILITY.

II. WHEN A HOT LINE CLAMP IS TO BE INSTALLED OR REINSTALLED, ITS JAWS, AND THE BAIL OF THE STIRRUP IT IS BEING APPLIED TO, SHALL BE WIRE BRUSHED TO REMOVE OXIDES, AND INHIBITOR WILL BE APPLIED (STOCK NO. 247200). (THIS IS BEST DONE BY APPLYING INHIBITOR TO THE WIRE BRUSH AND THEN BRUSHING THE ITEM). IF THE CLAMP IS TO BE REINSTALLED THE JAWS SHALL BE INSPECTED AND IF ANY BURNING HAS TAKEN PLACE, THE CLAMP SHALL BE SCRAPPED.

III. HOT LINE CLAMPS PRESENTLY CONNECTED DIRECTLY TO THE OVERHEAD LINE SHALL BE REMOVED AND REPLACED WITH APPROVED HOT LINE CLAMP AND STIRRUP OR APPROVED SECTIONALIZING DEVICES WHEN WORK IS DONE ON THE POLE.

(X) THIS ITEM IS EXEMPT.

REFERENCE: NONE

TABLE OF CONTENTS

© 1998 - 2019 San Diego Gas & Electric Company. All rights reserved. Removal of this copyright notice without permission is not permitted under law.

REV	CHANGE	BY	DSGN	APPV	DATE	REV	CHANGE	BY	DSGN	APPV	DATE
C	TABLE UPDATES	GW	JS	MDJ	06/22/2017	F					
B	TITLE BLOCK UPDATE	GW	JS	MDJ	01/31/2017	E	TABLE UPDATES	GLW	JES	CZH	10/20/2019
A	TABLE UPDATES	GW	TQ	DW	05/10/2013	D	DRAWING UPDATE	PEI	-	-	03/18/2019

X Indicates Latest Revision | Completely Revised | New Page | Information Removed

SDG&E ELECTRIC OVERHEAD CONSTRUCTION STANDARDS

HOT LINE CLAMPS AND STIRRUPS
FOR ACSR AND AWAC CONNECTIONS

OH788.2

SCOPE: THIS STANDARDS PAGE LISTS HOT LINE CLAMPS AND STIRRUPS THAT ARE APPROVED FOR INSTALLATION ON COPPER CONDUCTORS.

CAUTION:

* TO AVOID LINE BURN DOWNS, HOT LINE CLAMPS SHALL ALWAYS BE USED WITH STIRRUPS. DO NOT INSTALL HOT LINE CLAMPS DIRECTLY ON THE LINE CONDUCTOR. THE ONLY EXCEPTION TO THIS REQUIREMENT IS WHEN HOTLINE CLAMPS ARE ATTACHED DIRECTLY TO JUMPER LEADS.

** WHEN TAPPING LINE CONDUCTOR WITH A HOT LINE CLAMP, USE WEDGE CONNECTOR/STIRRUP COMBINATION AS SHOWN IN FIGURE 2.

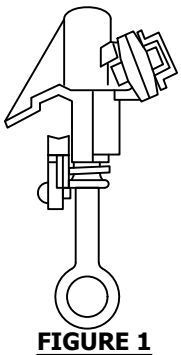

FIGURE 1
HOT LINE CLAMP

TABLE 1

HOT LINE CLAMPS (A)					
STOCK NUMBER	CATALOG NUMBER	MAIN SIZE		TAP	
		MAX.	MIN.	MAX.	MIN.
S227680	HLB2/0 BC20	2/0	8 SOL	2/0	8 SOL
S227648	S1530-CC	400	6 SOL	4/0	6 SOL

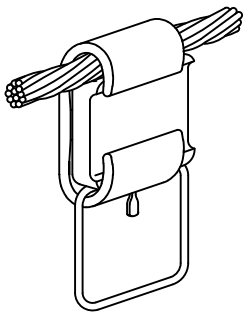

FIGURE 2
WEDGE CONNECTOR/STIRRUP COMBINATION

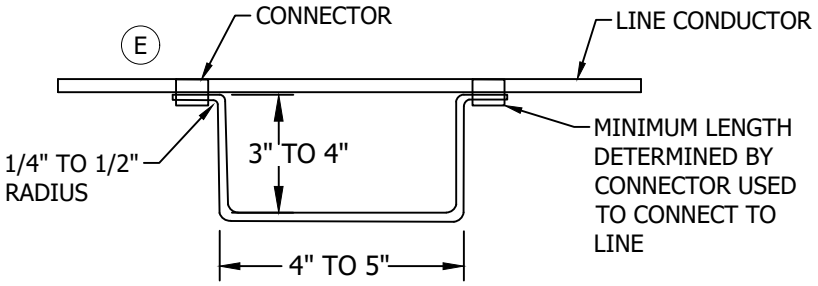

FIGURE 3
HANDMADE STIRRUP (D)

TABLE 2

WEDGE CONNECTOR/STIRRUP COMBINATION FOR COPPER CONDUCTOR (B) (C)					
BURNDY CATALOG NUMBER	CONDUCTOR SIZE	STIRRUP SIZE	STOCK NUMBER	STIRRUP STOCK NUMBER	AU/CU
	CU				
N/A	#6 & #6/3	#6 SOLID HD	SEE FIGURE 3	S227650	N/A
WCB2C2	#4/3	#2 SOL.	S265944	S227650	N/A
WCB2C2	#2/7 & #2/3	#2 SOL.	S265944	S227650	N/A
WCB20C2	1/0	#2 SOL.	S269714	S227650	N/A
WCB40C2	4/0	#2 SOL.	S269698	S227650	N/A

© 1998 - 2019 San Diego Gas & Electric Company. All rights reserved. Removal of this copyright notice without permission is not permitted under law.

REV	CHANGE	BY	DSGN	APPV	DATE	REV	CHANGE	BY	DSGN	APPV	DATE
C	TABLE UPDATES	GW	JS	MDJ	06/22/2017	F					
B	TITLE BLOCK UPDATE	GW	JS	MDJ	01/31/2017	E	TABLE UPDATES	GLW	JES	CZH	10/20/2019
A	TABLE UPDATES	GW	TQ	DW	05/10/2013	D	DRAWING UPDATE	PEI	-	-	03/18/2019

TABLE OF CONTENTS

INSTALLATION:

(A) THE RECOMMENDED TORQUE FOR MAIN AND TAP CONNECTIONS IS 15 FOOT-LBS.

(B) SEE STANDARD 783.15 FOR INSTALLATION NOTES.

(C) COPPER WEDGE STIRRUPS DO NOT COME WITH BAILS. BAILS MUST BE ORDERED SEPARATELY. THE STOCK NUMBER FOR THE BAIL SHOWN IN TABLE 2 WILL WORK FOR ALL THE COPPER WEDGE TAPS LISTED.

(D) HANDMADE STIRRUPS SHALL BE MADE OF NUMBER 4-3 STRAND COPPER, SHAPED AS SHOWN IN FIGURE 3. USE COPPER COMPRESSION CONNECTORS AS REQUIRED.

BILL OF MATERIALS: NONE

NOTES:

I. HOT LINE CLAMPS SHALL BE USED TO CONNECT 1) SELF PROTECTED TRANSFORMER LEADS (I.E.: HE, YJ) AND 2) WHERE CONNECTING LIGHTNING ARRESTERS TO JUMPER LEADS. AT CLEARANCE CORNERS AND OTHER LOCATIONS WHERE HOT LINE CLAMPS WERE USED PREVIOUSLY, MORE RELIABLE SECTIONALIZING MEANS SUCH AS DISCONNECTS OR CUTOUTS CAN BE SUBSTITUTED. CONTACT DISTRIBUTION PLANNING TO HAVE SUCH HOT LINE CLAMPS IN CRITICAL LOCATIONS REPLACED WITH APPROVED SECTIONALIZING DEVICES AS ONE MEANS OF PROMOTING RELIABILITY.

II. WHEN A HOT LINE CLAMP IS TO BE INSTALLED OR REINSTALLED, ITS JAWS, AND THE BAIL OF THE STIRRUP IT IS BEING APPLIED TO, SHALL BE WIRE BRUSHED TO REMOVE OXIDES, AND INHIBITOR WILL BE APPLIED (STOCK NO. 247200). (THIS IS BEST DONE BY APPLYING INHIBITOR TO THE WIRE BRUSH AND THEN BRUSHING THE ITEM). IF THE CLAMP IS TO BE REINSTALLED THE JAWS SHALL BE INSPECTED AND IF ANY BURNING HAS TAKEN PLACE, THE CLAMP SHALL BE SCRAPPED.

III. HOT LINE CLAMPS PRESENTLY CONNECTED DIRECTLY TO THE OVERHEAD LINE SHALL BE REMOVED AND REPLACED WITH APPROVED HOT LINE CLAMP AND STIRRUP OR APPROVED SECTIONALIZING DEVICES WHEN WORK IS DONE ON THE POLE.

REFERENCE: NONE

TABLE OF CONTENTS

© 1998 - 2019 San Diego Gas & Electric Company. All rights reserved. Removal of this copyright notice without permission is not permitted under law.

REV	CHANGE	BY	DSGN	APPV	DATE	REV	CHANGE	BY	DSGN	APPV	DATE
C	TABLE UPDATES	GW	JS	MDJ	06/22/2017	F					
B	TITLE BLOCK UPDATE	GW	JS	MDJ	01/31/2017	E	TABLE UPDATES	GLW	JES	CZH	10/20/2019
A	TABLE UPDATES	GW	TQ	DW	05/10/2013	D	DRAWING UPDATE	PEI	-	-	03/18/2019

X Indicates Latest Revision | Completely Revised | New Page | Information Removed

SDG&E ELECTRIC OVERHEAD CONSTRUCTION STANDARDS

HOT LINE CLAMPS AND STIRRUPS FOR COPPER CONNECTIONS

OH788.4

SCOPE: THIS STANDARD SHOWS VARIOUS SPIRAL VIBRATION DAMPER INSTALLATIONS ON BARE CONDUCTOR USED IN THE OVERHEAD DISTRIBUTION SYSTEM.

ATTENTION:

* APPLIES TO ALL LOADING ZONES.

** NOT TO BE INSTALLED ON REDUCED TENSION SPANS.



FIGURE 1
SINGLE WRAP DAMPENER



FIGURE 2
DOUBLE WRAP DAMPENER



FIGURE 3
TRIPLE WRAP DAMPENER

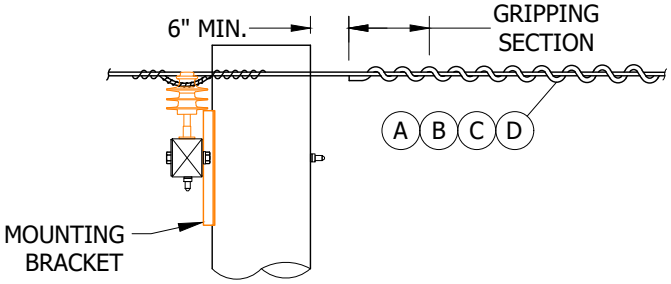

CONFIGURATION 1
TANGENT CONSTRUCTION

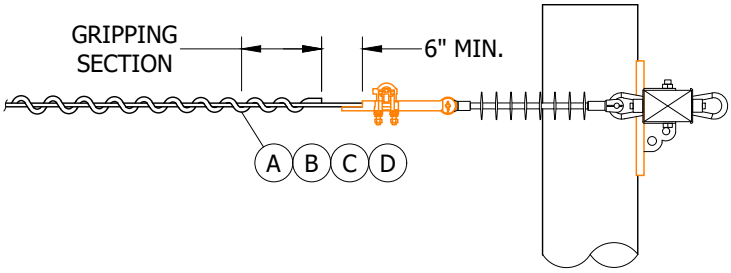

CONFIGURATION 2
DEADEND CONSTRUCTION

FIGURE 4
SPAN LENGTH 101 - 800 FEET
SEE TABLE 1

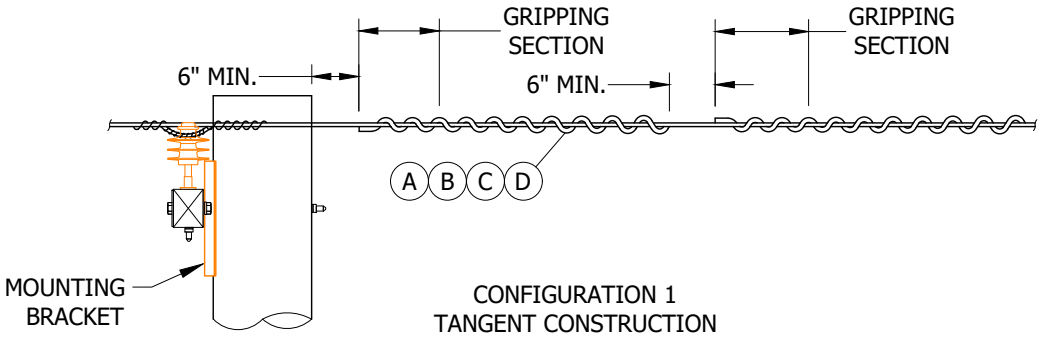

CONFIGURATION 1
TANGENT CONSTRUCTION

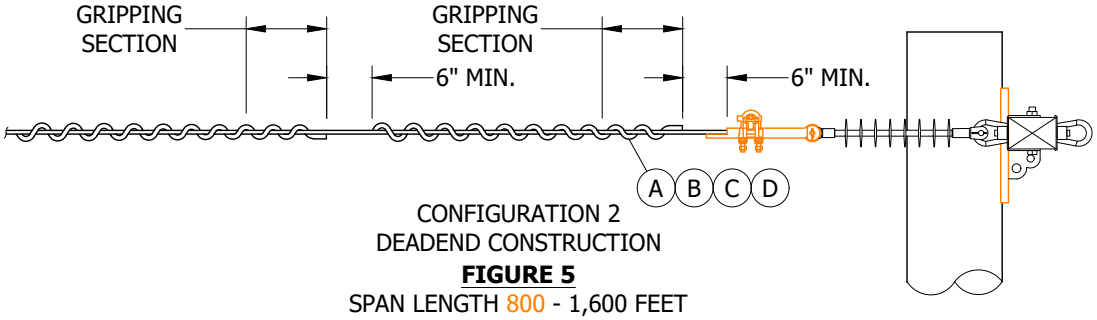

CONFIGURATION 2
DEADEND CONSTRUCTION

FIGURE 5
SPAN LENGTH 800 - 1,600 FEET
SEE TABLE 1

TABLE OF CONTENTS

© 1998 - 2022 San Diego Gas & Electric Company. All rights reserved. Removal of this copyright notice without permission is not permitted under law.

REV	CHANGE	DR	BY	DSN	APV	DATE	REV	CHANGE	DR	BY	DSN	APV	DATE
D	DRAWING UPDATE	EDM	EJA	JES	CZH	08/07/2020	G	TABLE UPDATE	EDM	MRF	GLW	KRG	11/09/2022
C	DRAWING UPDATE	PEI	-	-	-	03/18/2019	F	TABLE UPDATE	EDM	JIK	JES	CZH	02/08/2021
B	REVISION	-	-	-	PIA/RDJ	01/01/1994	E	EDITORIAL CHANGES	GLC	JAC	GLW	CZH	11/09/2020

X Indicates Latest Revision | Completely Revised | New Page | Information Removed

SDG&E ELECTRIC OVERHEAD CONSTRUCTION STANDARDS

VIBRATION DAMPERS FOR BARE CONDUCTOR
SPIRAL

OH789.1

TABLE 1 (FIGURES 4 AND 5)

SPIRAL DAMPERS FOR 5005, ASCR/AW AND AWAC												
CONDUCTOR						DAMPER WEIGHT (LBS)	SPAN LENGTH (FT)	QUANTITY OF DAMPERS REQUIRED PER SPAN			STOCK NUMBER	DESIGN UNITS
5005		ACSR/AW		AWAC				STANDARD APPLICATION	STANDARD APPLICATION WITH FINAL TENSIONS ≥ 20% OF RBS/UTS OR CROSSING SPAN APPLICATION (A)(I)	CROSSING SPAN APPLICATION WITH FINAL TENSIONS ≥ 20% OF RBS/UTS (A)		
SIZE	STRAND	SIZE	STRAND	SIZE	STRAND							
2	7	2	6/1	--	--	0.62	101-800	2	4	6	S300452 (X)	DMP2
							800-1,600	4	6	10		
1/0	7	1/0	6/1	2 AND 1/0	5/2, 3/4 AND 4/3	0.68	101-800	2	4	6	S300454	DMP2A
							800-1,600	4	6	10		
3/0	7	3/0 AND 4/0	6/1	3/0	5/2	0.72	101-800	2	4	6	S300456	DMP3/0
							800-1,600	4	6	10		
394.5	19	336.4	18/1 AND 26/7	--	--	2	101-800	2	4	6	S300458	DMP336
							800-1,600	4	6	10		

INSTALLATION:

(A) TENSION VALUES SHOULD CORRESPOND TO THE AVERAGE ANNUAL MINIMUM TEMPERATURE OF 60 DEGREES FAHRENHEIT AT FINAL TENSIONS.

(B) SPIRAL VIBRATION DAMPERS MAY BE SUBSET TOGETHER IN SETS OF THREE ON 1/0 AND SMALLER CONDUCTORS. SUBSETS OF TWO CAN BE USED ON 3/0 AND 336 CONDUCTORS.

(C) SPIRAL VIBRATION DAMPERS MAY BE PLACED AT EITHER END OF THE SPAN, OR AT BOTH ENDS. PLACE SPIRAL VIBRATION DAMPERS DIRECTLY ON THE CONDUCTOR APPROXIMATELY SIX INCHES AWAY FROM ARMOR ROD, AVIAN COVERS, LINE SPLICES, FORMED TIES, HARDWARE, ETC.

(D) PREFERRED INSTALLATION METHOD IS WITH GRIPPING SECTION OF SVD NEAR SUPPORT POINT. PERFORMANCE IS NOT AFFECTED IF REVERSED. APPLICATION MAY BE STARTED CLOSE TO SUPPORT AND THEN SLID OUT AS DESIRED.

E. FOR SPANS OVER 1,600 FEET, REFER TO STOCKBRIDGE DAMPERS REQUIREMENTS, SHEETS 4 AND 5.

F. FOR CONDUCTORS LARGER THAN 336 ACSR, REFER TO STOCKBRIDGE DAMPER REQUIREMENTS, SHEETS 4 AND 5.

G. WRAP THE DAMPING SECTION OF THE DAMPER ON AND OUT FROM THE SUPPORT POINT.

H. COMPLETE APPLICATION BY WRAPPING ON GRIPPING SECTION.

BILL OF MATERIALS: NONE

NOTES:

(I) FOR "CROSSING" LINE APPLICATIONS THAT SPAN WATER, CANYONS, HIGHWAYS, OR OTHER VIBRATION INDUCING TERRAIN.

(X) THIS ITEM IS EXEMPT.

REFERENCE: NONE

TABLE OF CONTENTS

© 1998 - 2022 San Diego Gas & Electric Company. All rights reserved. Removal of this copyright notice without permission is not permitted under law.

REV	CHANGE	DR	BY	DSN	APV	DATE	REV	CHANGE	DR	BY	DSN	APV	DATE
D	DRAWING UPDATE	EDM	EJA	JES	CZH	08/07/2020	G	TABLE UPDATE	EDM	MRF	GLW	KRG	11/09/2022
C	DRAWING UPDATE	PEI	-	-	-	03/18/2019	F	TABLE UPDATE	EDM	JIK	JES	CZH	02/08/2021
B	REVISION	-	-	-	PIA/RDJ	01/01/1994	E	EDITORIAL CHANGES	GLC	JAC	GLW	CZH	11/09/2020

SCOPE: THIS STANDARD SHOWS INSTALLATION REQUIREMENTS FOR STOCKBRIDGE DAMPERS ON BARE CONDUCTOR.

ATTENTION:

* APPLIES TO ALL LOADING ZONES.

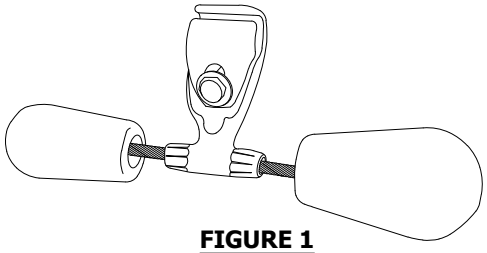

FIGURE 1
STOCKBRIDGE DAMPER
ISOMETRIC VIEW

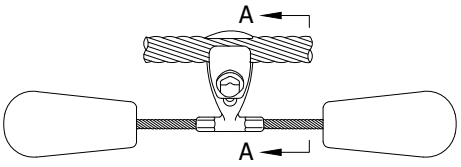

FIGURE 1
STOCKBRIDGE DAMPER
FRONT VIEW



FIGURE 1
STOCKBRIDGE DAMPER
VIEW A-A

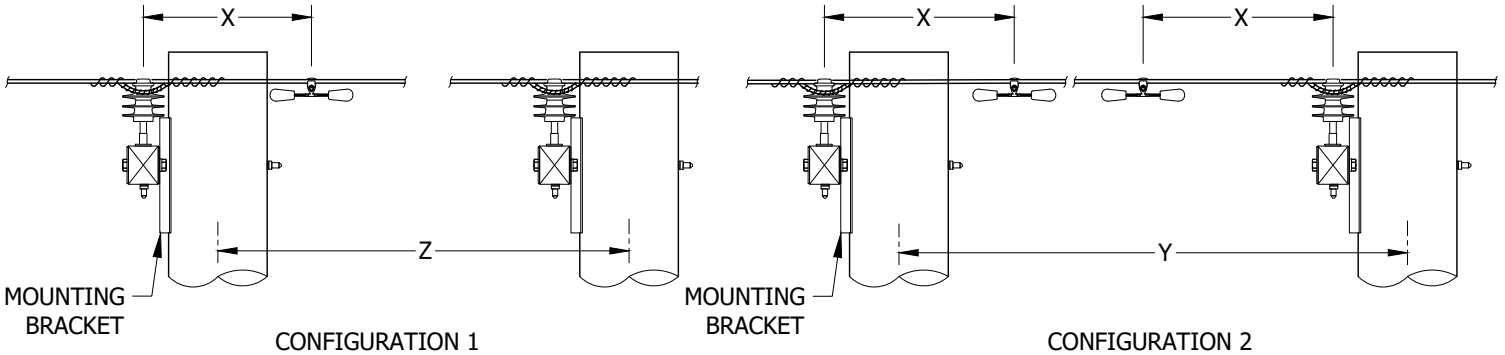

CONFIGURATION 1
ONE DAMPER PER SPAN

CONFIGURATION 2
TWO DAMPERS PER SPAN

FIGURE 2
TANGENT SPANS - PHASE CONDUCTOR (1)
SEE TABLE 1

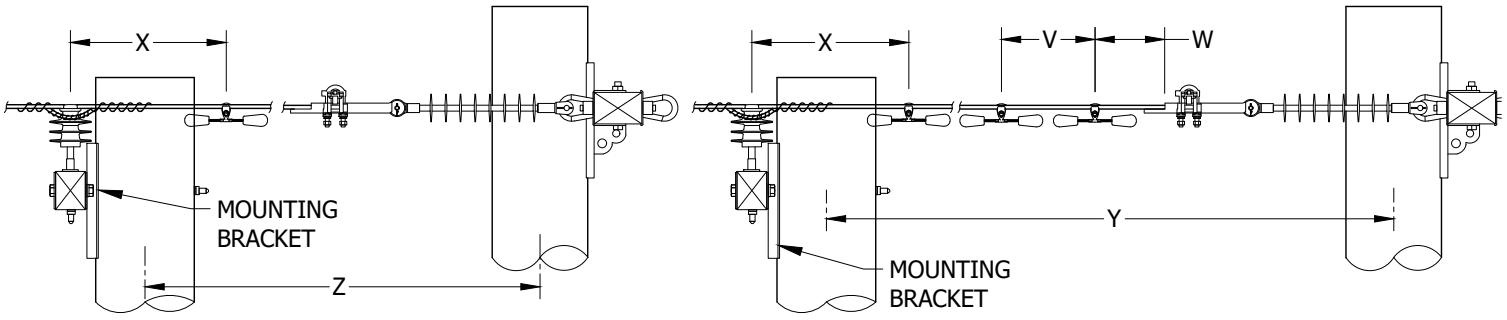

CONFIGURATION 1
ONE DAMPER PER SPAN

CONFIGURATION 2
THREE DAMPERS PER SPAN

FIGURE 3
TANGENT SPANS - DEAD-ENDED AT ONE END (1)
SEE TABLE 1

© 1998 - 2022 San Diego Gas & Electric Company. All rights reserved. Removal of this copyright notice without permission is not permitted under law.

REV	CHANGE	DR	BY	DSN	APV	DATE	REV	CHANGE	DR	BY	DSN	APV	DATE
D	DRAWING UPDATE	EDM	EJA	JES	CZH	08/07/2020	G	TABLE UPDATE	EDM	MRF	GLW	KRG	11/09/2022
C	DRAWING UPDATE	PEI	-	-	-	03/18/2019	F	TABLE UPDATE	EDM	JIK	JES	CZH	02/08/2021
B	REVISION	-	-	-	PIA/RDJ	01/01/1994	E	EDITORIAL CHANGES	GLC	JAC	GLW	CZH	11/09/2020

Indicates Latest Revision | Completely Revised | X | New Page | Information Removed

SDG&E ELECTRIC OVERHEAD CONSTRUCTION STANDARDS

VIBRATION DAMPERS FOR BARE CONDUCTOR
STOCKBRIDGE

OH789.3

TABLE OF CONTENTS

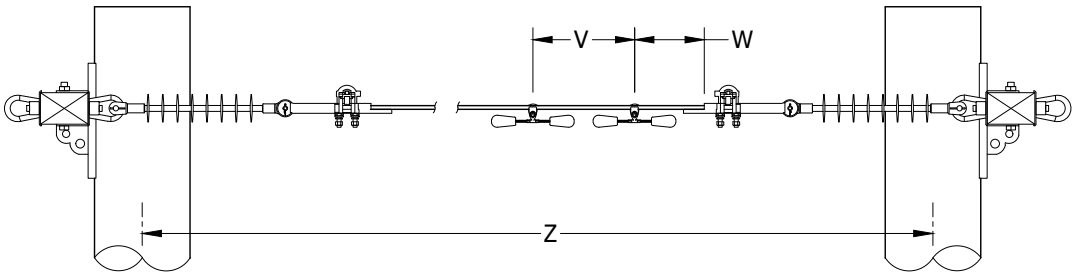

CONFIGURATION 1
TWO DAMPERS PER SPAN

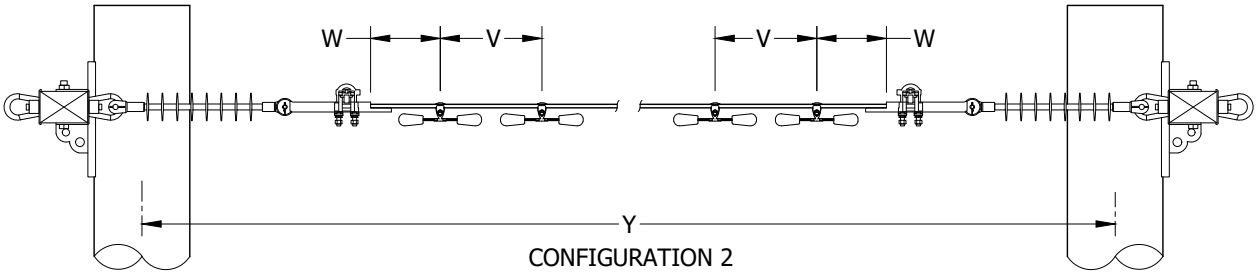

CONFIGURATION 2
FOUR DAMPERS PER SPAN

FIGURE 4
TANGENT SPANS - DEAD-ENDED AT BOTH ENDS
SEE TABLE 1

TABLE 1 (FIGURES 2-4)

STOCKBRIDGE DAMPERS												
STANDARD TERRAIN WITH 20 MPH WIND SPEED												
CONDUCTOR ACSR		**DAMPER WEIGHT (LBS)**	**MAXIMUM DESIGN TENSION (LBS)**	**SPAN LENGTH (FT)**				**X (IN)**	**W (IN)**	**V (IN)**	**STOCK NUMBER**	**DESIGN UNITS**
				Z	**Y**							
SIZE	**STRAND**			**BETWEEN**								
4/0	6/1	3	2,000	205 (I)	800	800	1,600	19	19	19	S300352	SBDMP4/0
336.4 KCMIL	26/7	6.9	3,000	370 (I)	1,185	1,185	2,370	23	24	24	S300416	SBDMP336
636 KCMIL	24/7	14.4	3,000	1,345 (I)	3,640	3,640	7,280	23	24	25	S300480	SBDMP636
1033.5 KCMIL	45/7	20.8	3,000	1,980 (I)	7,010	7,010	7,500	28	25	26	S300512	SBDM1033
CANYON/RIVER CROSSING WITH 25 MPH WIND SPEED												
4/0	6/1	3	2,000	170 (I)	660	660	1,320	15	16	16	S300352	SBDMP4/0
336.4 KCMIL	26/7	6.9	3,000	305 (I)	975	975	1,950	21	19	20	S300416	SBDMP336
636 KCMIL	24/7	14.4	3,000	1,105 (I)	3,000	3,000	6,000	25	20	21	S300480	SBDMP636
1033.5 KCMIL	45/7	20.8	3,000	1,630 (I)	5,770	5,770	7,500	30	20	21	S300512	SBDM1033

© 1998 - 2022 San Diego Gas & Electric Company. All rights reserved. Removal of this copyright notice without permission is not permitted under law.

REV	CHANGE	DR	BY	DSN	APV	DATE	REV	CHANGE	DR	BY	DSN	APV	DATE
D	DRAWING UPDATE	EDM	EJA	JES	CZH	08/07/2020	G	TABLE UPDATE	EDM	MRF	GLW	KRG	11/09/2022
C	DRAWING UPDATE	PEI	-	-	-	03/18/2019	F	TABLE UPDATE	EDM	JIK	JES	CZH	02/08/2021
B	REVISION	-	-	-	PIA/RDJ	01/01/1994	E	EDITORIAL CHANGES	GLC	JAC	GLW	CZH	11/09/2020

Indicates Latest Revision | Completely Revised | X New Page | Information Removed

SDG&E ELECTRIC OVERHEAD CONSTRUCTION STANDARDS

VIBRATION DAMPERS FOR BARE CONDUCTOR
STOCKBRIDGE

OH789.4

TABLE OF CONTENTS

INSTALLATION:

(I) SHORTER SPANS DO NOT REQUIRE DAMPING.

BILL OF MATERIALS: NONE

NOTES:

A. LOOSEN DAMPER BOLT TO SUFFICIENTLY OPEN CLAMP.

B. HANG DAMPER AT PROPER SPACING (SEE FIGURES 2 - 4).

C. HAND TIGHTEN AND THEN TIGHTEN WITH A TORQUE WRENCH ACCORDING TO TABLE 2 OR UNTIL BREAKAWAY HEAD SHEARS OFF.

TABLE 2

BOLT TORQUE	
BOLT DIA. (IN)	**TORQUE (LB-FT)**
7/16	20
1/2	25
5/8	40
3/4	60

REFERENCE:

a. FOR LINEGUARD APPLICATION, SEE OH759.

TABLE OF CONTENTS

© 1998 - 2022 San Diego Gas & Electric Company. All rights reserved. Removal of this copyright notice without permission is not permitted under law.

REV	CHANGE	DR	BY	DSN	APV	DATE	REV	CHANGE	DR	BY	DSN	APV	DATE
D	DRAWING UPDATE	EDM	EJA	JES	CZH	08/07/2020	G	TABLE UPDATE	EDM	MRF	GLW	KRG	11/09/2022
C	DRAWING UPDATE	PEI	-	-	-	03/18/2019	F	TABLE UPDATE	EDM	JIK	JES	CZH	02/08/2021
B	REVISION	-	-	-	PIA/RDJ	01/01/1994	E	EDITORIAL CHANGES	GLC	JAC	GLW	CZH	11/09/2020

SCOPE: THIS STANDARD COVERS THE APPLICATION OF A SECONDARY TRANSFORMER FLAG CONNECTOR USED FOR PARALLEL SERVICE ENTRANCE CONDUCTORS.

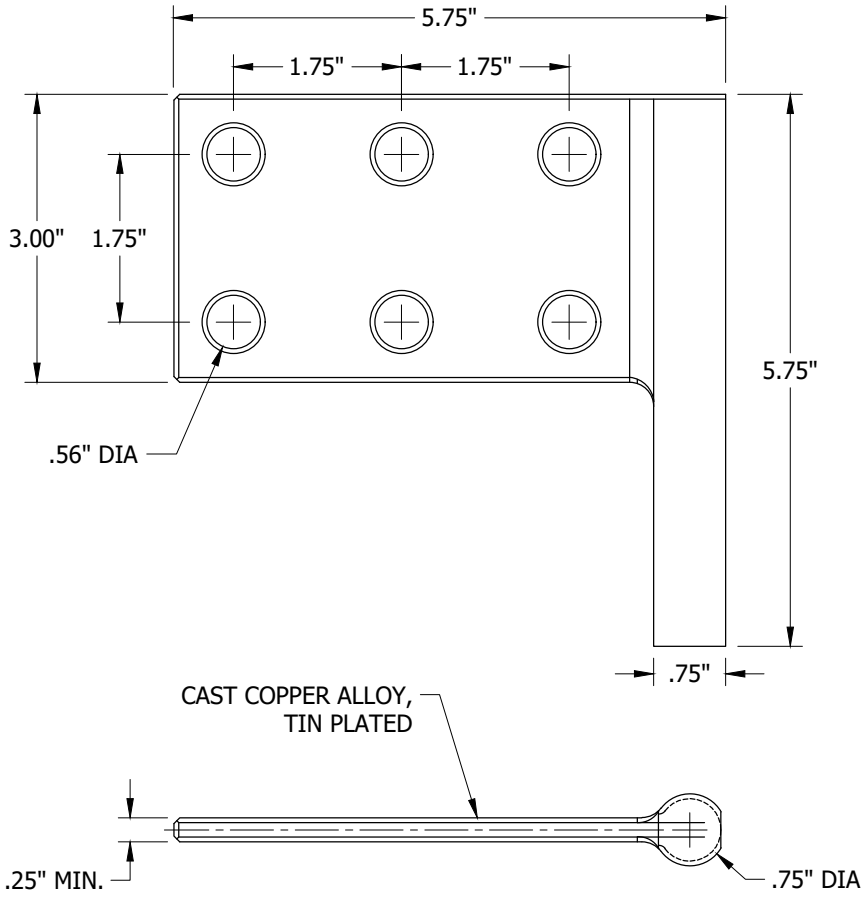

FIGURE 1
TRANSFORMER FLAG CONNECTOR

TABLE 1

STOCK NUMBER	DESIGN UNIT
S102848	FLAG

INSTALLATION:

A. USE TRANSFORMER FLAG CONNECTORS WITH COMPRESSION TERMINALS IN PREFERENCE TO MULTIPLE TAP CONNECTORS. (a) (b)

BILL OF MATERIALS: NONE

NOTES:

I. TIN PLATED CAST COPPER ALLOY TRANSFORMER CONNECTOR RATED FOR 860A NOMINAL.

REFERENCE:

(a) FOR COPPER COMPRESSION TERMINALS, SEE OH784.
(b) FOR ALUMINUM COMPRESSION TERMINALS, SEE OH784.

© 1998 - 2021 San Diego Gas & Electric Company. All rights reserved. Removal of this copyright notice without permission is not permitted under law.

REV	CHANGE	DR	BY	DSN	APV	DATE	REV	CHANGE	DR	BY	DSN	APV	DATE
C	DRAWING UPDATE	PEI	-	-	-	03/18/2019	F						
B	EDITORIAL CHANGES	-	JS	JS	CZH	09/01/2018	E						
A	COMPLETELY REVISED	-	GW	JS	MDJ	05/01/2018	D	REFERENCE UPDATE	EDM	RSL	JES	CZH	12/12/2021

X Indicates Latest Revision | Completely Revised | New Page | Information Removed

SDG&E ELECTRIC OVERHEAD CONSTRUCTION STANDARDS

SHEET 1 OF 1

CONNECTORS, TRANSFORMER SECONDARY TERMINAL FOR PARALLELED SERVICE ENTRANCE CONDUCTORS

OH793.1

TABLE OF CONTENTS

800 - SAG

PAGE	SUBJECT
805	GENERAL INSTRUCTIONS AND INFORMATION
806	#2 - 6/1 ACSR/AW SPARROW SAG AND TENSION TABLES
807	1/0 - 6/1 ACSR/AW RAVEN SAG AND TENSION TABLES
808	3/0 - 6/1 ACSR/AW PIGEON SAG AND TENSION TABLES
809	4/0 - 6/1 ACSR/AW PENGUIN SAG AND TENSION TABLES
810	336.4 - 26/7 ACSR/AW LINNET SAG AND TENSION TABLES
811	397.5 - 26/7 ACSR/AW IBIS SAG AND TENSION TABLES
812	636 - 24/7 ACSR/AW ROOK SAG AND TENSION TABLES
813	1033.5 - 45/7 ACSR/AW ORTOLAN SAG AND TENSION TABLES
814	#2 5/2 AWAC SAG AND TENSION TABLES
815	#2 3/4 AWAC SAG AND TENSION TABLES
816	#6 3-STR BARE COPPER SAG AND TENSION TABLES
817	#4 3-STR BARE COPPER SAG AND TENSION TABLES
818	#2 3-STR BARE COPPER SAG AND TENSION TABLES
819	1/0 BARE COPPER SAG AND TENSION TABLES
820	4/0 BARE COPPER SAG AND TENSION TABLES
821	1/0 RTS TRIPLEX SAG AND TENSION TABLES
822	3/0 RTS TRIPLEX SAG AND TENSION TABLES
823	336.4 RTS TRIPLEX SAG AND TENSION TABLES
824	REDUCED TENSION SPAN CONSTRUCTION - SINGLE/DOUBLE CROSSARMS

MAIN TABLE OF CONTENTS

THIS SECTION IS NOW IT'S OWN MANUAL, LABELED "OVERHEAD SAG AND TENSION STANDARDS" (OH800). CLICKING ANY OF THE ABOVE LINKS WILL OPEN THE NEW MANUAL.

REV	CHANGE	DRWN	BY	CHKD	APVD	DATE
D	EDITORIAL CHANGES	EDM	MRF	JES	KRG	07/14/2022
C	REVISED TO 3D FORMAT	ARC	JIK	-	-	03/09/2022
B	SCOPE UPDATE	-	GW	JS	CZH	07/01/2018

SDGE — A Sempra Energy utility

© 1998 - 2022 San Diego Gas and Electric Company. All rights reserved. Removal of this copyright notice without permission is not permitted under law.

SDG&E ELECTRIC OVERHEAD CONSTRUCTION STANDARDS

SAG SECTION
TABLE OF CONTENTS

SCALE: NOT TO SCALE

DRAWING NO: OH801.1

SHEET: 1 OF 1

X Indicates Latest Revision | Completely Revised | New Page | Information Removed

MAIN TABLE OF CONTENTS

PAGE	SUBJECT
901	TABLE OF CONTENTS
907	GUYING PROXIMITY
908	CLEARANCE
909	SECTIONALIZATION OF GUYS
920	GUY TENSION CHART AND INSTRUCTIONS
925	POLE BAND ASSEMBLY FOR GUYING
927	GUY ASSEMBLY DETAILS
928	FIBER-GLASS GUY STRAIN INSULATOR DETAILS
929	INSTALLATION OF PROTECTED CROSSPLATE ANCHORS
930	STAINLESS STEEL ANCHOR SYSTEM
941	ANCHOR INSTALLATION
950	MANTA-RAY EARTH ANCHOR
961	GUY WIRE
962	GUY HARDWARE
969	ANCHORS, AND HARDWARE
971	SIDEWALK ANCHOR GUY
972	SIDEWALK ANCHOR GUY POLE CLASS SELECTION
973	ROCK ANCHOR INSTALLATION
975	SIDEWALK DOWNGUY MARKER

© 1998 - 2023 San Diego Gas & Electric Company. All rights reserved. Removal of this copyright notice without permission is not permitted under law.

REV	CHANGE	DR	BY	DSN	APV	DATE	REV	CHANGE	DR	BY	DSN	APV	DATE
C	UPDATE TABLE OF CONTENTS	-	PEI	-	-	02/18/2019	F						
B	EDITORIAL CHANGES	-	JK	JS	MDJ	05/01/2018	E	REMOVED 974	GLC	RSL	JAS	KRG	04/06/2023
A	TEXT UPDATE	-	JW	JS	MDJ	11/28/2017	D	ADDED 930	-	JC	JS	CZH	09/17/2019

Indicates Latest Revision | Completely Revised | New Page X | Information Removed

SHEET 1 OF 1

SDG&E ELECTRIC OVERHEAD CONSTRUCTION STANDARDS

GUY SECTION
TABLE OF CONTENTS

OH901.1

TABLE OF CONTENTS

SCOPE: THIS STANDARD ILLUSTRATES THE CYLINDER OF PROXIMITY.

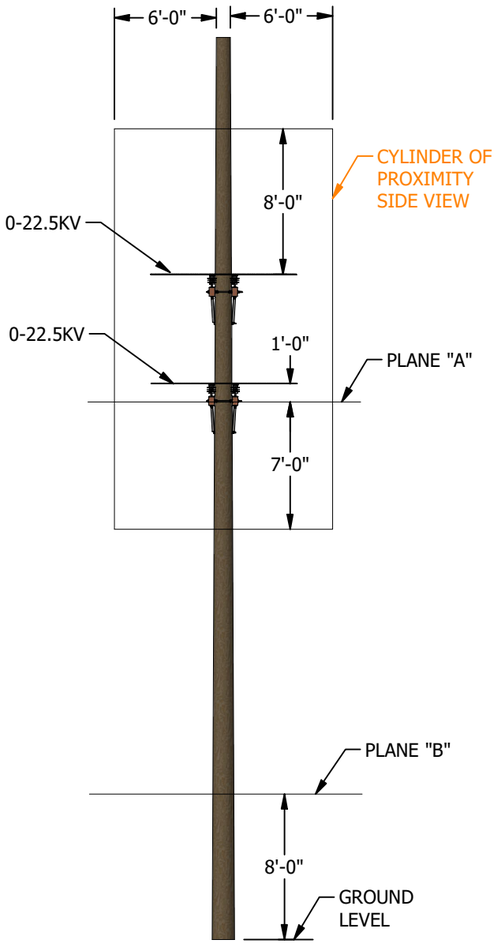

FIGURE 1
POLE SIDE VIEW

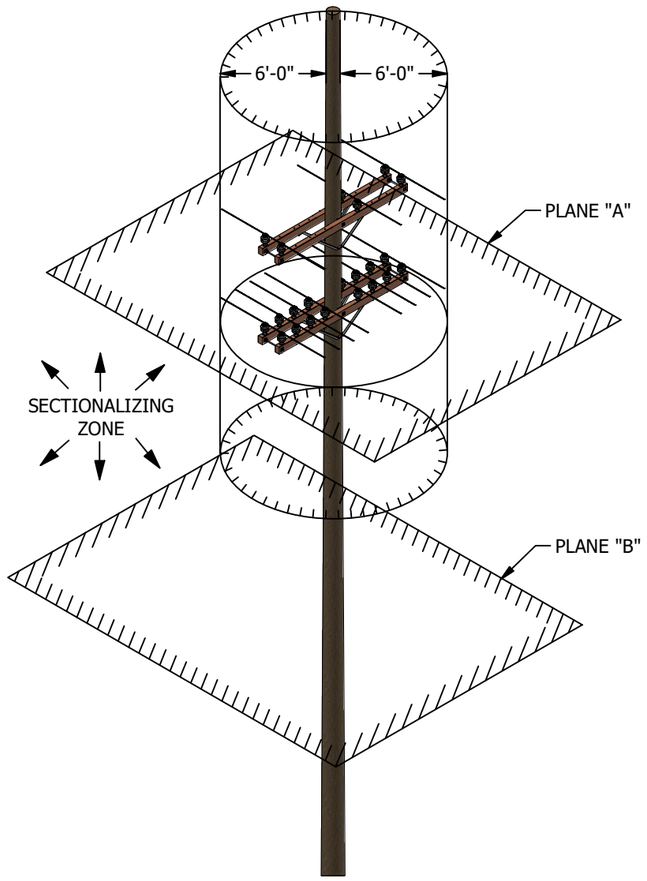

FIGURE 1
CYLINDER OF PROXIMITY

INSTALLATION: NONE

BILL OF MATERIALS: NONE

NOTES:

I. ALL ANCHOR, OVERHEAD, SIDEWALK OR TRUSS GUYS ATTACHED TO THE POLE OR CROSSARMS WITHIN THE SPACE ENCLOSED BY THE CYLINDER ARE CONSIDERED TO BE IN "PROXIMITY".

ANCHOR, SIDEWALK AND TRUSS GUYS IN PROXIMITY MUST BE SECTIONALIZED BY THE FOLLOWING METHODS:

II. FOR ALL ENERGIZED POLES, A FIBERGLASS OR PORCELAIN GUY STRAIN INSULATOR **MUST** BE PLACED IN THE GUY.
   a. FIBERGLASS INSULATORS ARE ATTACHED TO THE POLE, AND MUST EXTEND OUTSIDE THE CYLINDER IN THE ZONE BETWEEN PLANES 'A' AND 'B'. IF A SINGLE GUY FIBERGLASS STRAIN INSULATOR DOES NOT EXTEND OUTSIDE OF THE CYLINDER, A PORCELAIN STRAIN INSULATOR OR SECOND FIBERGLASS GUY STRAIN INSULATOR CAN BE USED, BUT CANNOT BE LOWER THAN PLANE 'B'.
   b. PORCELAIN STRAIN INSULATORS ARE PLACED IN THE GUY AT SOME POINT OUTSIDE OF THE CYLINDER IN THE ZONE BETWEEN PLANES 'A' AND 'B' AND AS CLOSE TO PLANE 'A' AND THE CYLINDER AS PRACTICAL.

III. OVERHEAD GUYS MUST BE SECTIONALIZED BY MEANS OF PORCELAIN STRAIN INSULATORS PLACED IN THE GUY AT SOME POINT OUTSIDE OF THE CYLINDER AND NOT LOWER THAN PLANE 'B'.

REFERENCE:

a. SEE G.O. 95, RULE 56.6 AND 56.7.

REV	CHANGE	DRWN	BY	CHKD	APVD	DATE
D	NOTES UPDATE/REVISED TO 3D FORMAT	ARC	MRF	GLW	KRG	01/09/2023
C	EDITORIAL CHANGES	-	JK	JS	CZH	10/15/2019
B	DRAWING UPDATE	PEI	-	-	-	02/18/2019

© 1998 - 2023 San Diego Gas and Electric Company. All rights reserved. Removal of this copyright notice without permission is not permitted under law.

SDG&E ELECTRIC OVERHEAD CONSTRUCTION STANDARDS

GUYING, PROXIMITY DEFINED

SCALE: NOT TO SCALE

DRAWING NO: OH907.1

SHEET: 1 OF 1

X Indicates Latest Revision | Completely Revised | New Page | Information Removed

SCOPE: THIS STANDARD ILLUSTRATES POLE GUY AND CLEARANCES BETWEEN GUYS PASSING CONDUCTORS.

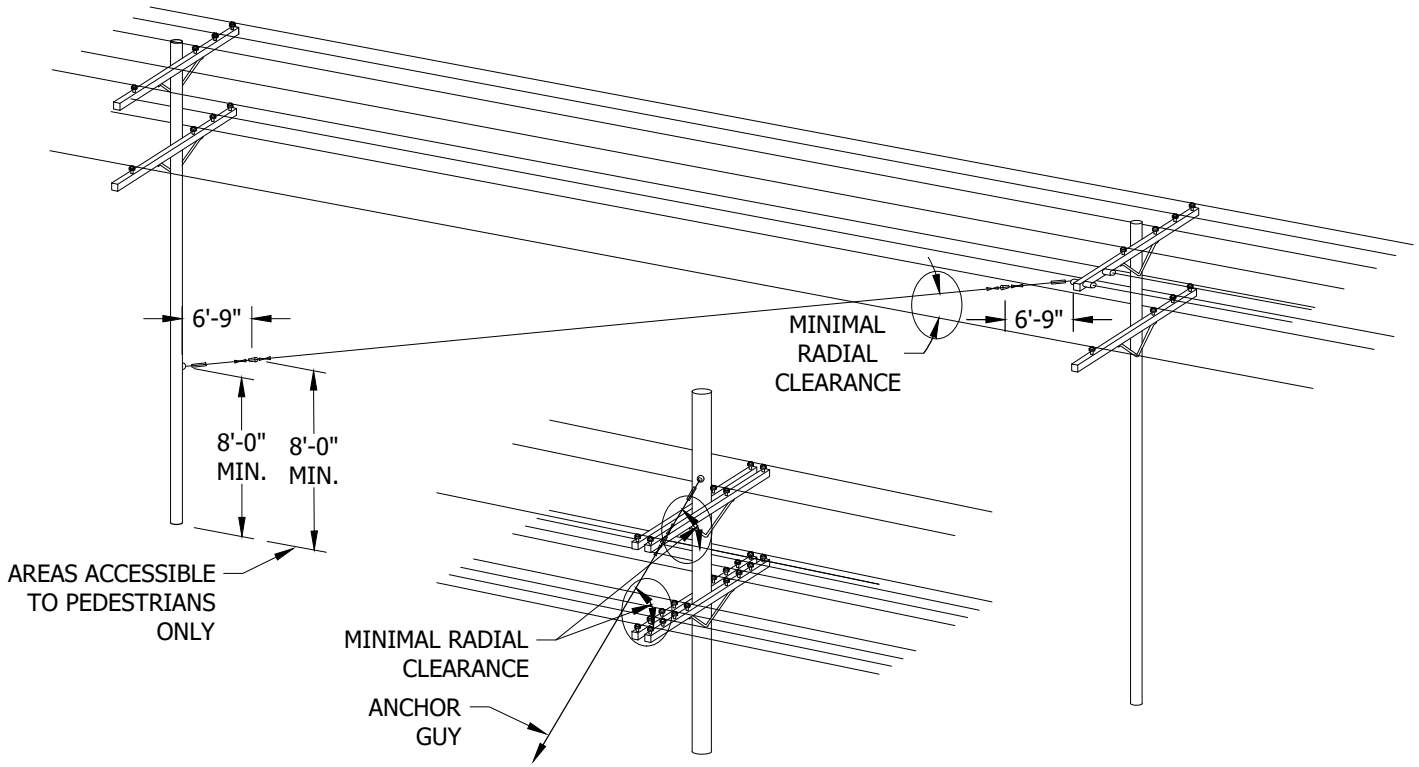

FIGURE 1

TABLE 1

MINIMUM G.O. 95 CLEARANCES BETWEEN GUYS PASSING CONDUCTORS			
VOLTAGE	RADIAL CLEARANCE		VERTICAL CLEARANCE
	SUPPORTED ON SAME POLE (IN)	SUPPORTED ON OTHER POLES OR SUPPORTED ON SAME POLE BUT APPROXIMATELY PARALLEL (IN)	AT CROSSINGS IN SPANS SUPPORTED ON OTHER POLES (IN)
OTHER GUYS	3	3	18
COMMUNICATIONS (CLASS C)	3	3	24
0 - 750	3	12	24
750 - 7,500	6	18	36
7,500 - 20,000	9	18	36
20,000 - 35,000	12	30	72
35,000 - 75,000	18	36	72
75,000 - 150,000	24	36 + 0.4 PER KV IN EXCESS OF 75KV	78
150,000 - 300,000	48 + 0.25 PER KV IN EXCESS OF 150KV	78 + 0.4 PER KV IN EXCESS OF 150KV	78 + 0.4 PER KV IN EXCESS OF 150KV

© 1998 - 2021 San Diego Gas & Electric Company. All rights reserved. Removal of this copyright notice without permission is not permitted under law.

REV	CHANGE	DR	BY	DSN	APV	DATE	REV	CHANGE	DR	BY	DSN	APV	DATE
C	TABLE UPDATE	EDM	MRF	GLW	CZH	07/29/2021	F						
B	DRAWING UPDATE	PEI	-	-	-	02/18/2019	E						
A	ORIGINAL ISSUE	-	-	PTA	RDJ	06/17/1974	D						

X Indicates Latest Revision | Completely Revised | New Page | Information Removed

SDG&E ELECTRIC OVERHEAD CONSTRUCTION STANDARDS

POLE GUYS AND CLEARANCE BETWEEN GUYS PASSING CONDUCTORS

OH908.1

TABLE OF CONTENTS

INSTALLATION: NONE

BILL OF MATERIALS: NONE

NOTES:

I. SIX INCH MINIMUM RADIAL CLEARANCE MUST BE MAINTAINED BETWEEN FIBERGLASS GUY STRAIN INSULATOR AND COVERED CONDUCTOR/JUMPERS.

REFERENCE: NONE

TABLE OF CONTENTS

© 1998 - 2021 San Diego Gas & Electric Company. All rights reserved. Removal of this copyright notice without permission is not permitted under law.

REV	CHANGE	DR	BY	DSN	APV	DATE	REV	CHANGE	DR	BY	DSN	APV	DATE
C	TABLE UPDATE	EDM	MRF	GLW	CZH	07/29/2021	F						
B	DRAWING UPDATE	PEI	-	-	-	02/18/2019	E						
A	ORIGINAL ISSUE	-	-	PTA	RDJ	06/17/1974	D						

X Indicates Latest Revision | Completely Revised | New Page | Information Removed

SDG&E ELECTRIC OVERHEAD CONSTRUCTION STANDARDS

POLE GUYS AND CLEARANCE BETWEEN GUYS PASSING CONDUCTORS

OH908.2

SCOPE: THIS STANDARD ILLUSTRATES THE SECTIONALIZATION OF OVERHEAD GUY WIRES.

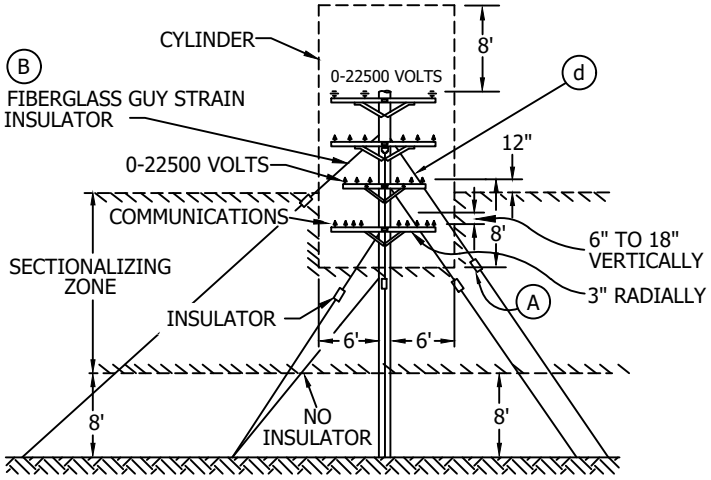

FIGURE 1 (a)

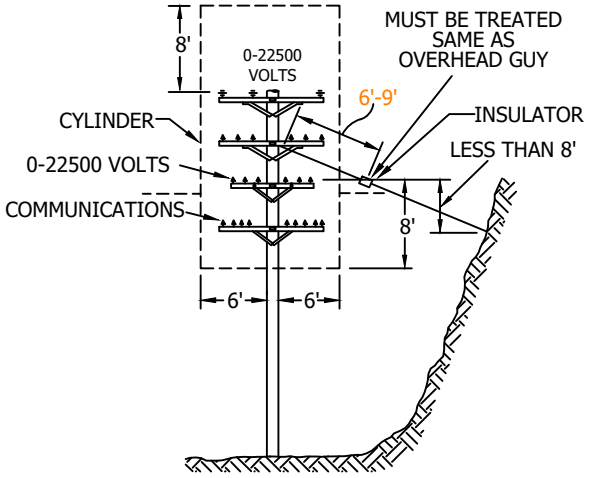

FIGURE 2 (a)

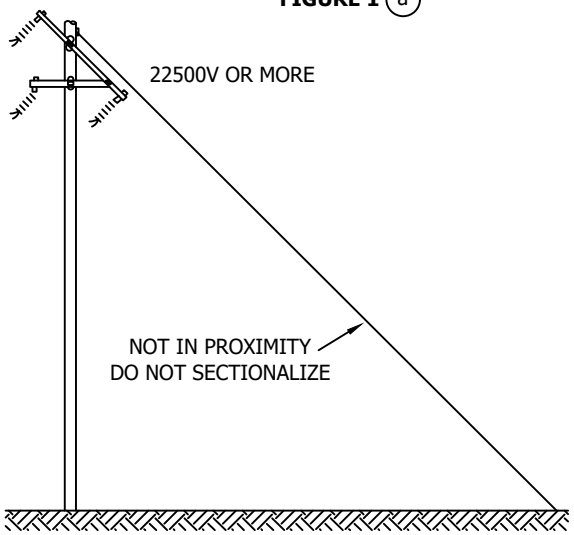

FIGURE 3 (c)

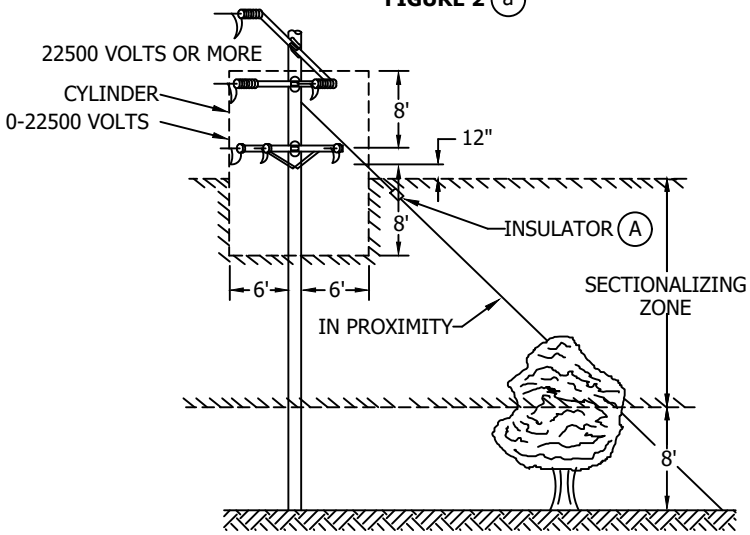

FIGURE 4

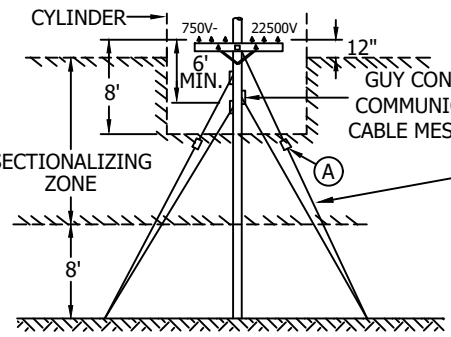

FIGURE 5

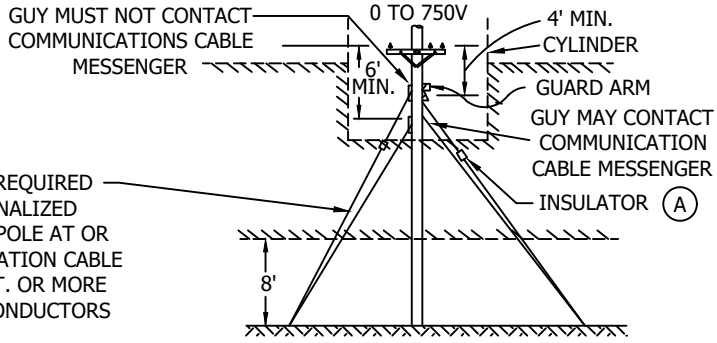

GUYS ARE NOT REQUIRED TO BE SECTIONALIZED IF ATTACHED TO POLE AT OR BELOW COMMUNICATION CABLE MESSENGERS 6 FT. OR MORE BELOW SUPPLY CONDUCTORS

FIGURE 6

© 1998 - 2019 San Diego Gas & Electric Company. All rights reserved. Removal of this copyright notice without permission is not permitted under law.

REV	CHANGE	BY	DSGN	APPV	DATE	REV	CHANGE	BY	DSGN	APPV	DATE
C	EDITORIAL CHANGES	JIK	JES	CZH	11/13/2019	F					
B	DRAWING UPDATE	PEI	-	-	02/18/2019	E					
A	EDITORIAL CHANGES	JBH	JBH	MDJ	08/17/2016	D					

X Indicates Latest Revision | Completely Revised | New Page | Information Removed

SDG&E ELECTRIC OVERHEAD CONSTRUCTION STANDARD

SHEET 1 OF 3

SECTIONALIZATION OF OVERHEAD GUY WIRES

OH909.1

TABLE OF CONTENTS

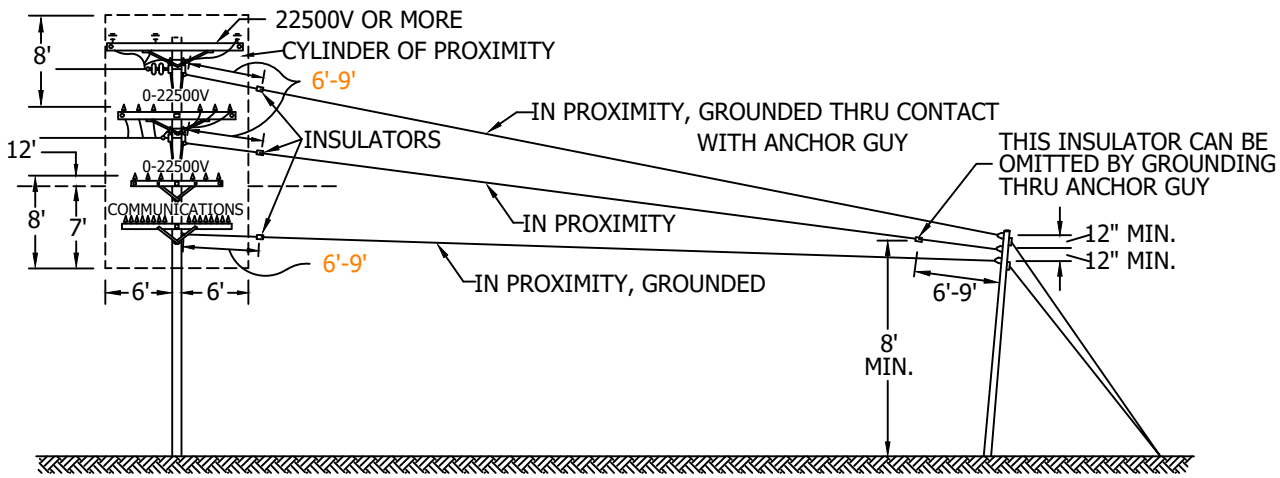

FIGURE 1

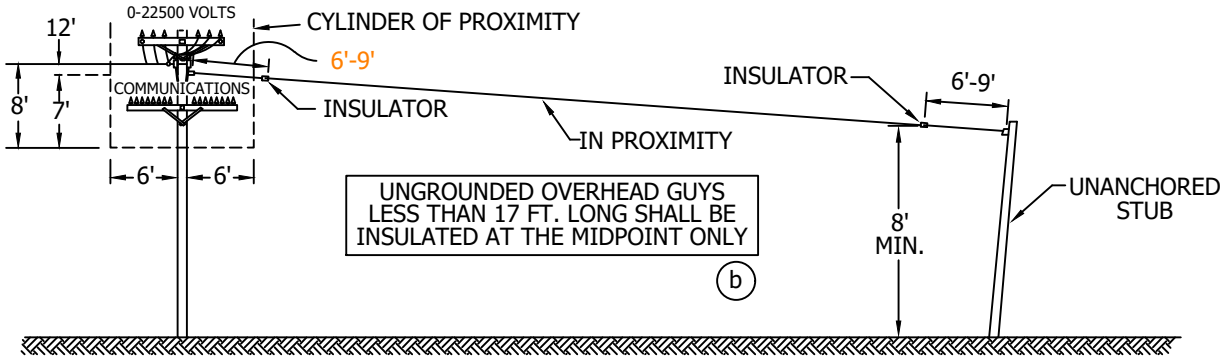

FIGURE 2

TABLE OF CONTENTS

© 1998 - 2019 San Diego Gas & Electric Company. All rights reserved. Removal of this copyright notice without permission is not permitted under law.

REV	CHANGE	BY	DSGN	APPV	DATE	REV	CHANGE	BY	DSGN	APPV	DATE
C	EDITORIAL CHANGES	JIK	JES	CZH	11/13/2019	F					
B	DRAWING UPDATE	PEI	-	-	02/18/2019	E					
A	EDITORIAL CHANGES	JBH	JBH	MDJ	08/17/2016	D					

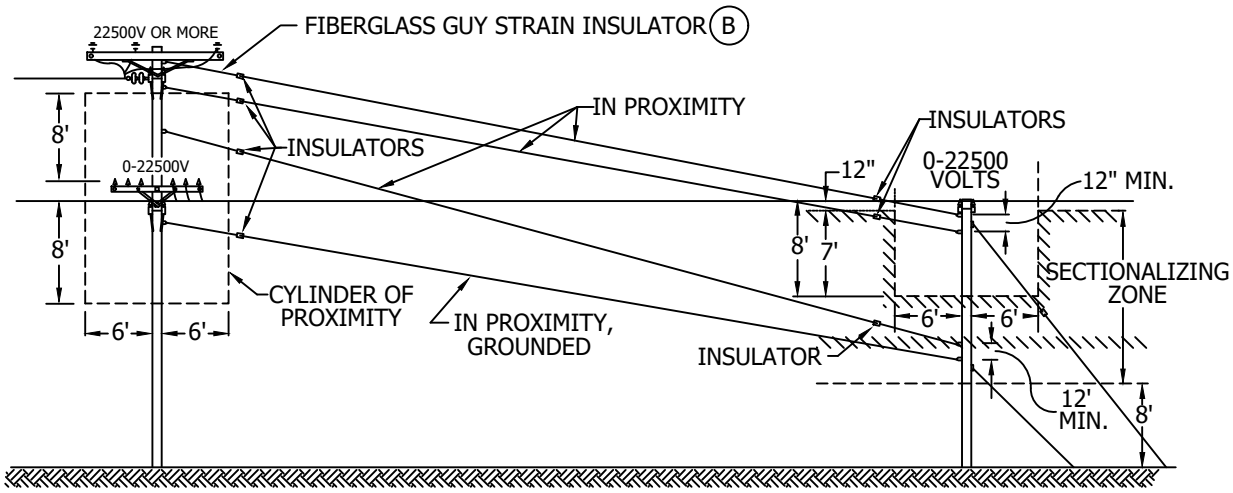

FIGURE 3

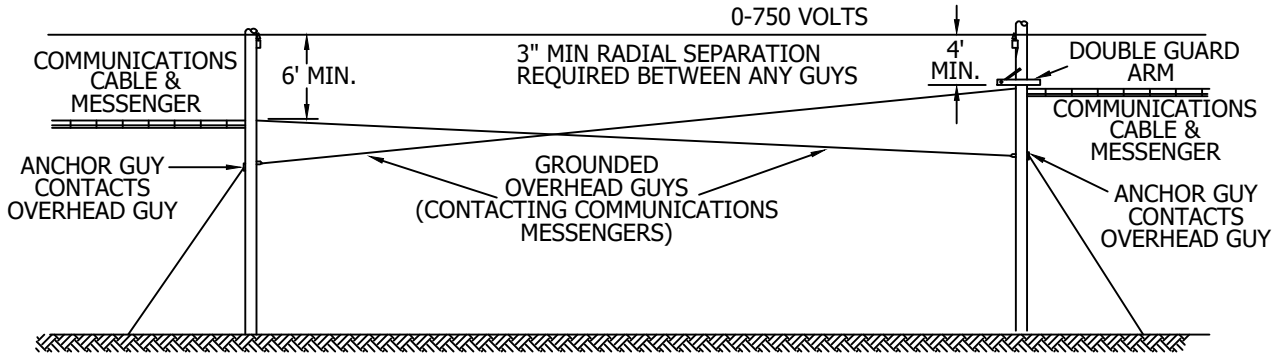

FIGURE 4

INSTALLATION:

(A) IN ORDER TO PREVENT TREES, MESSENGERS, ETC. FROM GROUNDING PORTIONS OF GUYS ABOVE GUY INSULATORS, LOCATE GUY INSULATORS AS HIGH AS PERMITTED.

(B) A FIBERGLASS GUY STRAIN INSULATOR IS REQUIRED FOR ALL GUY ATTACHMENTS IN THE CYLINDER OF PROXIMITY, FOR ALL STEEL POLES (f)

BILL OF MATERIALS: NONE

NOTES: NONE

REFERENCE:

(a) GUY WIRE LOCATIONS, SEE G.O.95 RULE 56.7B.

(b) MIDPOINT INSULATION, SEE G. O 95 RULE 56.7A

(c) GUYS NOT SECTIONALIZED, SEE G.O. 95 RULE 56.6D.

(d) RADIAL CLEARENCES, SEE OVERHEAD STANDARD 908.

e. FIBERGLASS GUY STRAIN INSULATORS, SEE OVERHEAD STANDARD 928.

(f) GUYING, PROXIMITY DEFINED, SEE OVERHEAD STANDARD 907.

© 1998 - 2019 San Diego Gas & Electric Company. All rights reserved. Removal of this copyright notice without permission is not permitted under law.

REV	CHANGE	BY	DSGN	APPV	DATE	REV	CHANGE	BY	DSGN	APPV	DATE
C	EDITORIAL CHANGES	JIK	JES	CZH	11/13/2019	F					
B	DRAWING UPDATE	PEI	-	-	02/18/2019	E					
A	EDITORIAL CHANGES	JBH	JBH	MDJ	08/17/2016	D					

X Indicates Latest Revision | Completely Revised | New Page | Information Removed

SDG&E ELECTRIC OVERHEAD CONSTRUCTION STANDARD

SHEET 3 OF 3

SECTIONALIZATION OF OVERHEAD GUY WIRES

OH909.3

TABLE OF CONTENTS

SCOPE: THIS STANDARD PROVIDES GUY TENSION CHARTS FOR VARIOUS WIRE TYPES.

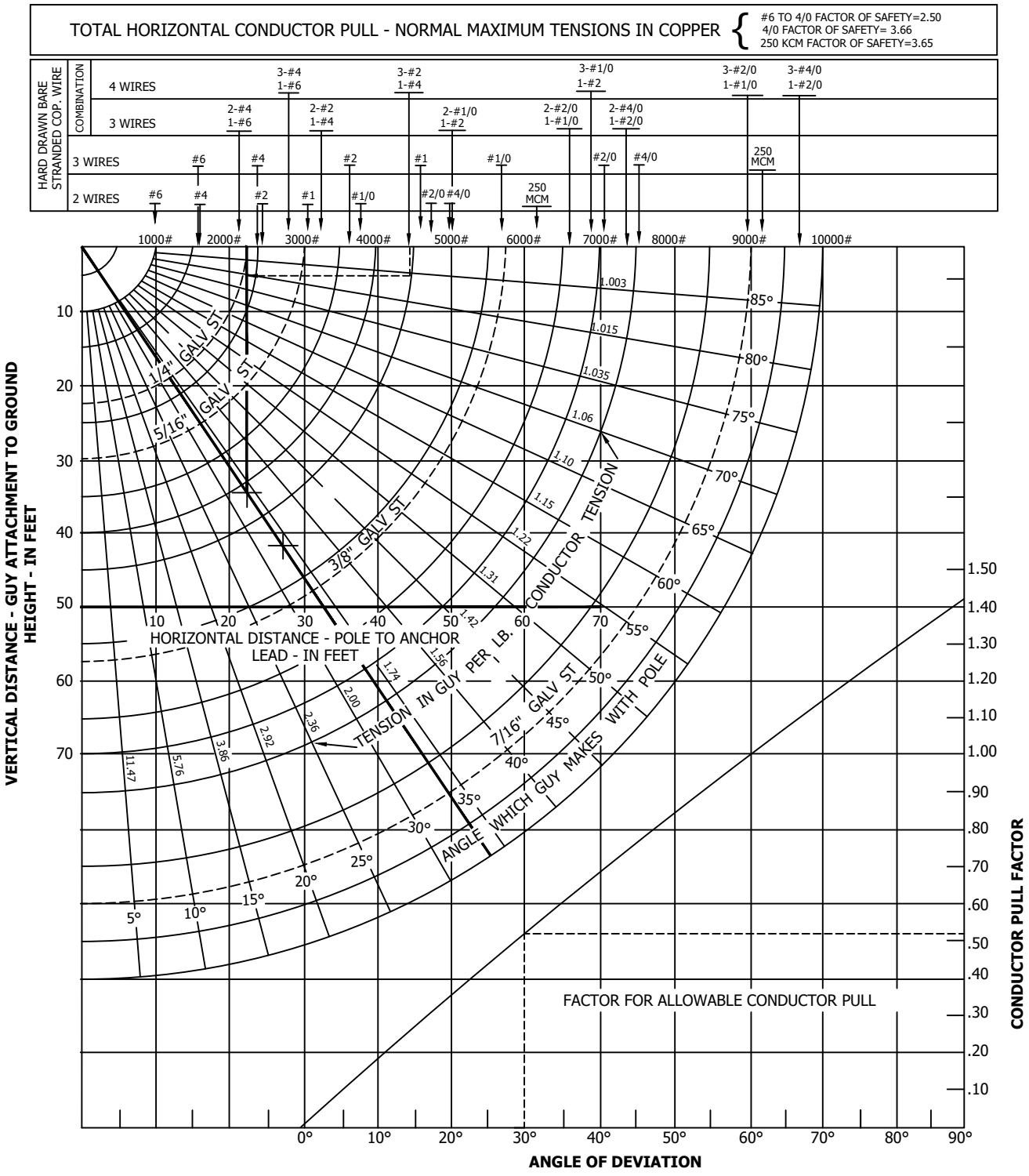

TABLE OF CONTENTS

© 1998 - 2019 San Diego Gas & Electric Company. All rights reserved. Removal of this copyright notice without permission is not permitted under law.

REV	CHANGE	BY	DSGN	APPV	DATE	REV	CHANGE	BY	DSGN	APPV	DATE
C						F					
B	DRAWING UPDATE	PEI	-	-	02/18/2019	E					
A	ORIGINAL ISSUE	-	PTA	VCR	03/04/1975	D					

X Indicates Latest Revision | Completely Revised | New Page | Information Removed

SDG&E ELECTRIC OVERHEAD CONSTRUCTION STANDARD

SHEET 1 OF 3

GUY TENSION CHART FOR HARD DRAWN BARE STRANDED COPPER WIRE

OH920.1

TABLE OF CONTENTS

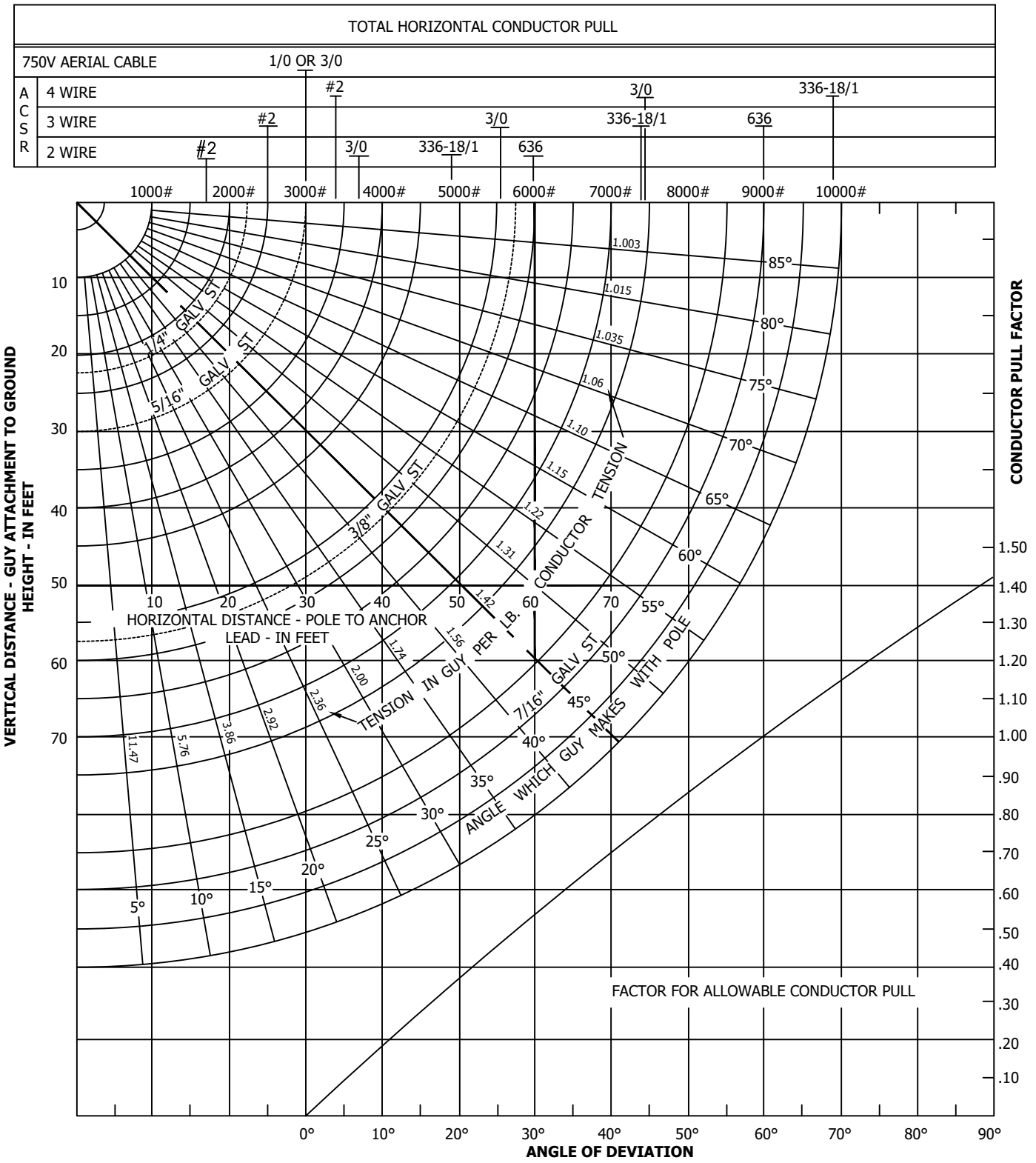

© 1998 - 2019 San Diego Gas & Electric Company. All rights reserved. Removal of this copyright notice without permission is not permitted under law.

REV	CHANGE	BY	DSGN	APPV	DATE	REV	CHANGE	BY	DSGN	APPV	DATE
C						F					
B	DRAWING UPDATE	PEI	-	-	02/18/2019	E					
A	ORIGINAL ISSUE	-	PTA	VCR	03/04/1975	D					

X Indicates Latest Revision | Completely Revised | New Page | Information Removed

SDG&E ELECTRIC OVERHEAD CONSTRUCTION STANDARDS

GUY TENSION CHART FOR ACSR AND SECONDARY AERIAL CABLE

OH920.2

INSTRUCTIONS FOR USING GUY TENSION CHART:

1) DETERMINE THE TYPE OF CONDUCTOR AND USE 920.1 OR 920.2 ACCORDINGLY.
2) KNOWING THE ANGLE OF DEVIATION, DETERMINE THE CONDUCTOR PULL FACTOR USING GRAPH ON LOWER RIGHT OF THE GUY TENSION CHART. IN DEAD-END CONSTRUCTION, CONDUCTOR PULL FACTOR IS EQUAL TO 1.0.
3) FIND THE TOTAL HORIZONTAL PULL ON TOP SECTION OF CHART. MULTIPLY BY CONDUCTOR PULL FACTOR AND OBTAIN CORRECTED HORIZONTAL CONDUCTOR PULL.
4) ENTER VERTICAL AND HORIZONTAL DISTANCE ON CHART IN FEET AND FIND THE ANGLE WHICH GUY MAKES WITH POLE.
5) FOLLOW ANGLE LINE UNTIL IT INTERSECTS CORRECTED HORIZONTAL CONDUCTOR PULL. PROCEED DOWNWARD FROM THIS POINT UNTIL IT INTERSECTS THE FIRST GUY WIRE LINE TO BE USED IN THAT CONTAMINATION DISTRICT (AS REQUIRED ON PAGES 287 AND 961). USE SIZE OF GUY INDICATED.

EXAMPLE

ASSUME FOUR ACSR CONDUCTORS (636 MCM) ARE TO BE DEAD-ENDED IN CONTAMINATION DISTRICT 2.THE GUY ATTACHMENT TO GROUND HEIGHT IS 30' AND THE POLE TO ANCHOR LEAD IS 30'.

F) USE CHART ON PAGE 920.2.
G) SINCE THIS IS DEAD END CONSTRUCTION, THE CONDUCTOR PULL FACTOR IS EQUAL TO 1.
H) AT TOP OF CHART FIND HORIZONTAL PULL FOR TWO 636 MCM ACSR CONDUCTORS OF 6000#. SINCE THE TOTAL HORIZONTAL PULL IS OFF THE CHARTS, USE THE 6000# VALUE TO DETERMINE TYPE OF GUY. TWO GUYS OF THE TYPE DETERMINED WILL THEREFORE COMPENSATE THE TOTAL HORIZONTAL LOAD FOR FOUR CONDUCTORS.
I) ENTER VERTICAL DISTANCE OF 30' AND HORIZONTAL DISTANCE OF 30'. FIND ANGLE WHICH GUY MAKES WITH POLE OF 45 .
J) FOLLOW ANGLE LINE UNTIL IT INTERSECTS 6000# LINE. FOLLOW ANGLE LINE FURTHER UNTIL IT INTERSECTS THE FIRST GALV. ST. GUY WIRE WHICH IS 7/16" GALV. ST.

USE TWO 7/16" GALV. ST. GUY WIRES.

INSTALLATION: NONE

BILL OF MATERIALS: NONE

NOTES: NONE

REFERENCE: NONE

TABLE OF CONTENTS

© 1998 - 2019 San Diego Gas & Electric Company. All rights reserved. Removal of this copyright notice without permission is not permitted under law.

REV	CHANGE	BY	DSGN	APPV	DATE	REV	CHANGE	BY	DSGN	APPV	DATE
C						F					
B	DRAWING UPDATE	PEI	-	-	02/18/2019	E					
A	ORIGINAL ISSUE	-	PTA	VCR	01/01/2000	D					

X Indicates Latest Revision | Completely Revised | New Page | Information Removed

SCOPE: THIS STANDARD SHOWS THE INSTALLATION OF A METAL POLE BAND FOR HEAVY GUYING (7/16" AND LARGER GUY WIRE), TO BE USED ON WOOD, CONCRETE OR METAL POLES.

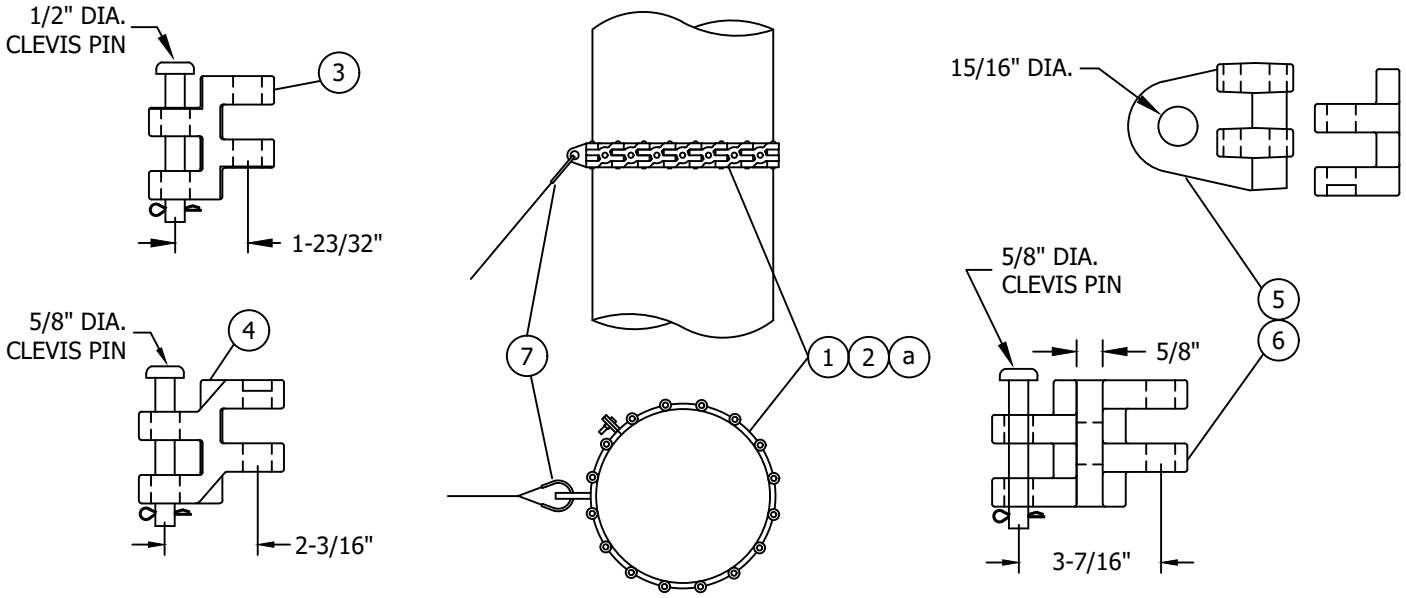

INSTALLATION:

(A) HALF LINKS AVAILABLE FOR ADDITIONAL ADJUSTMENT FOR VARYING POLE DIAMETERS.

(B) PULL-OFF LINKS MAY BE ADDED TO THE POLE BAND ASSEMBLY FOR ADDITIONAL POINTS OF GUY ATTACHMENT.

(C) TO PREVENT A DAMAGED PREFORM, THIMBLE MUST BE USED WITH EACH PREFORM GUY GRIP ATTACHMENT TO POLE BAND.

D. INSTALLATION OF POLE BAND ASSEMBLY REQUIRES NO DRILLING.

BILL OF MATERIALS:

ITEM	DESCRIPTION	QUANTITY	STOCK NUMBER	ASSEMBLY UNITS
1	BAND, POLE ASSEMBLY, 9-1/2" TO 12" DIA. 15,000 LBS.	1	S122232	BAND15
2	BAND, POLE ASSEMBLY, 12" TO 15" DIA. 30,000 LBS.	1	S122230	BAND30
3	HALF LINK, POLE BAND, 15,000 LBS. (A)	AS REQ'D	S465563	LINK15
4	HALF LINK, POLE BAND, 30,000 LBS. (A)	AS REQ'D	S465560	LINK30
5	LINK, PULL-OFF, POLE BAND, 15,000 LBS. (B)	AS REQ'D	S465564	POLK15
6	LINK, PULL-OFF, POLE BAND, 30,000 LBS. (B)	AS REQ'D	S465562	POLK30
7	THIMBLE, 1/2", OPEN (C)	AS REQ'D	S736600	OPTHMB

NOTES:

I. MAY BE USED FOR SMALLER GUY WIRE IF INTEGRITY OF WOOD POLE IS IN QUESTION.

REFERENCE:

(a) BANDS, LIMITED TO 6 INCHES IN WIDTH WITH NO MORE THAN ONE BAND ALLOWED IN ANY 24 INCH SECTION OF CLIMBING SPACE - PER G.O. 95 RULE 54.7-A3.

© 1998 - 2019 San Diego Gas & Electric Company. All rights reserved. Removal of this copyright notice without permission is not permitted under law.

REV	CHANGE	BY	DSGN	APPV	DATE	REV	CHANGE	BY	DSGN	APPV	DATE
C						F					
B	DRAWING UPDATE	PEI	-	-	02/18/2019	E					
A	ORIGINAL ISSUE	-	PTA	RDG	01/01/1996	D					

X Indicates Latest Revision | Completely Revised | New Page | Information Removed

SDG&E ELECTRIC OVERHEAD CONSTRUCTION STANDARD

SHEET 1 OF 1

POLE BAND ASSEMBLY FOR GUYING

OH925.1

TABLE OF CONTENTS

SCOPE: THIS STANDARD IS TO BE USED WHEN DETERMINING GUY ASSEMBLY DETAILS FOR VARIOUS TYPES OF CONSTRUCTION.

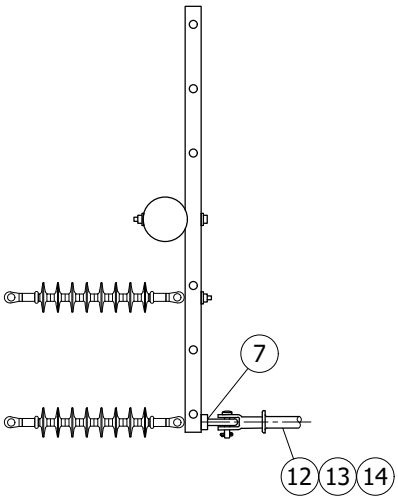

FIGURE 1
ARM GUY (V)

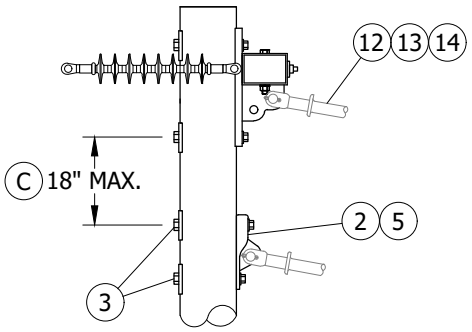

FIGURE 2
POLE TOP OR HEAD GUY

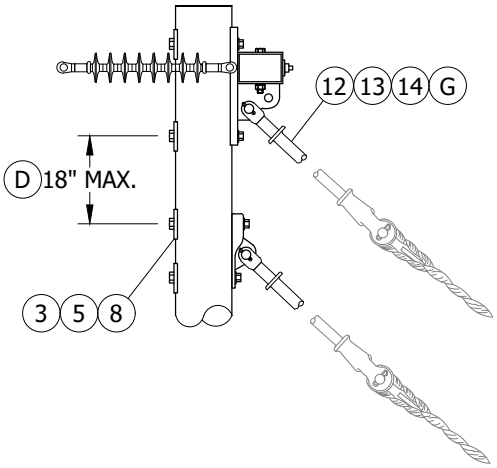

FIGURE 3
ANCHOR GUY

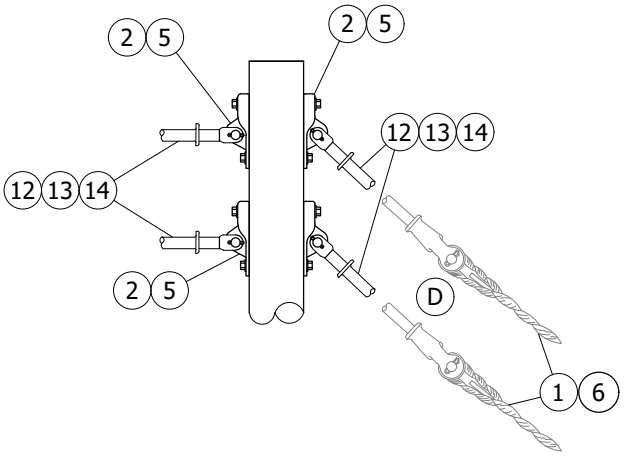

FIGURE 4
ANCHORED HEAD GUY

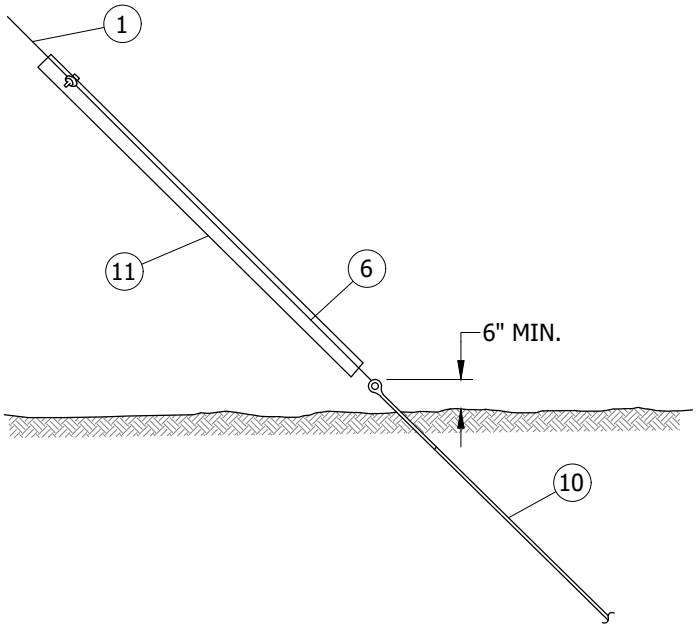

FIGURE 5
DOWN GUY AND GUY MARKER

TABLE OF CONTENTS

© 1998 - 2021 San Diego Gas & Electric Company. All rights reserved. Removal of this copyright notice without permission is not permitted under law.

REV	CHANGE	DR	BY	DSN	APV	DATE	REV	CHANGE	DR	BY	DSN	APV	DATE
C	EDITORIAL CHANGES	-	GW	JS	CZH	11/01/2018	F						
B	DRAWING UPDATES	-	JBH	JBH	MDJ	08/18/2016	E	BILL OF MATERIALS UPDATE	EDM	MRF	GLW	CZH	10/28/2021
A	COMPLETELY REVISED	-	JC	IL	JS/MDJ	10/08/2015	D	FIGURE UPDATE	-	JIK	JES	CZH	08/07/2020

X Indicates Latest Revision | Completely Revised | New Page | Information Removed

SDG&E ELECTRIC OVERHEAD CONSTRUCTION STANDARDS

GUY ASSEMBLY DETAILS

OH927.1

INSTALLATION:

A. A GUY MARKER MUST BE SECURELY ATTACHED TO ALL SINGLE ANCHOR GUYS. WHERE MORE THAN ONE GUY IS ATTACHED TO AN ANCHOR ROD ONLY, THE OUTER MOST GUY IS REQUIRED TO HAVE A MARKER.

B. IN CORROSIVE AREAS, SUBSTITUTE AN EPOXY COATED MANTA-RAY ANCHOR AND STAINLESS STEEL ROD, OR A STAINLESS STEEL ANCHOR/ ANCHOR ROD ASSEMBLY FOR ITEM 11.(a)

(C) IF NECESSARY, TWO GUYS ARE ALLOWED WITHIN A FOUR-FOOT VERTICAL SECTION OF CLIMBING SPACE, PROVIDED THEY ARE SEPARATED AT THE POLE BY A VERTICAL DISTANCE OF NOT MORE THAN 18 INCHES.(b)

(D) MUST MAINTAIN THREE-INCH SEPARATION BETWEEN GUY STRAIN INSULATORS.(c)

E. USE NO MORE THAN TWO FIBERGLASS STRAIN INSULATORS LINKED WHEN REQUIRED TO SECTIONALIZE.(d)

F. TWO GUY ASSEMBLIES SHALL NOT BE ATTACHED TO THE SAME DEADEND CROSSARM BRACKET.

(G) DOWN GUY OR HEAD GUY CAN BE INSTALLED IN EITHER EYELET.

BILL OF MATERIALS:

ITEM	DESCRIPTION		QUANTITY	STANDARD PAGE	STOCK NUMBER	DESIGN UNITS
1	WIRE - GUY - GALV.		AS REQ'D	961	--	--
2	PLATE - POLE EYE - GALV.		1	928	S542944	EYE-PL
3	WASHER - SQUARE CURVED RIBBED	3/4" - 4"	2		S797760	RIBWSH
4	BOLT - MACH - GALV. - 3/4" x LENGTH AS NEEDED & SQUARE FLAT WASHER		1	390	-- (X)	--
5	BOLT - MACH - GALV.	3/4"	2		--	--
6	GRIP - FACTORY FORMED GUY		2	962	--	--
7	SHACKLE - PIN	5/8"	1	745	S636432	30KSHK
8	NUT - EYE	3/4"	AS REQ'D		S504020 (X)	--
9	LINK - CHAIN - DEADEND 1/2" X 2 3/8"		1	928	S465750 (X)	DELINK
10	ROD - ANCHOR (VI)		1	969	-- (X)	--
11	MARKER - GUY - 8'-0" YELLOW		1	975	S476314	GUYMKR
12	INSULATOR - GUYSTRAIN - FIBERGLASS	10'-0"	AS REQ'D	928	S430882 (X)	FG-GUY
13	INSULATOR - GUYSTRAIN - FIBERGLASS	78"	AS REQ'D		S430880	FG78
14	INSULATOR - GUYSTRAIN - FIBERGLASS	54"	AS REQ'D		S430878	FG54

NOTES:

I. USE OF FIBERGLASS STRAIN INSULATOR DOES NOT REDUCE REQUIRED G.O. 95 CLEARANCES.

II. FOR STEEL POLES - A FIBERGLASS GUY STRAIN INSULATOR MUST BE PLACED IN THE GUY AND ATTACHED TO THE POLE, EXTENDING OUTSIDE THE CYLINDER IN THE ZONE BETWEEN PLANE "A" AND "B". IF A SINGLE GUY FIBERGLASS STRAIN INSULATOR DOES NOT EXTEND OUTSIDE OF THE CYLINDER, A PORCELAIN STRAIN INSULATOR OR SECOND FIBERGLASS GUY STRAIN INSULATOR CAN BE USED, BUT CANNOT BE LOWER THAN PLANE "B".

III. A FIBERGLASS STRAIN INSULATOR IS OPTIONAL FOR WOOD POLES.

IV. 1/2-INCH GUY WIRE IS A SPECIAL ORDER ITEM.

(V) ARM GUY ATTACHES TO SPACE BOLT.

(VI) NOT SHOWN ON FIGURES.

(X) THIS ITEM IS EXEMPT.

© 1998 - 2021 San Diego Gas & Electric Company. All rights reserved. Removal of this copyright notice without permission is not permitted under law.

REV	CHANGE	DR	BY	DSN	APV	DATE	REV	CHANGE	DR	BY	DSN	APV	DATE
C	EDITORIAL CHANGES	-	GW	JS	CZH	11/01/2018	F						
B	DRAWING UPDATES	-	JBH	JBH	MDJ	08/18/2016	E	BILL OF MATERIALS UPDATE	EDM	MRF	GLW	CZH	10/28/2021
A	COMPLETELY REVISED	-	JC	IL	JS/MDJ	10/08/2015	D	FIGURE UPDATE	-	JIK	JES	CZH	08/07/2020

Indicates Latest Revision | Completely Revised | New Page X | Information Removed

TABLE OF CONTENTS

REFERENCE:

(a) THESE ASSEMBLIES AND CORROSIVE SOIL AREAS ARE SHOWN IN OH929 AND OH950.
(b) SEE G.O. 95 RULE 54.7 A-4, 54.9 F, 54.10 F-3, 54.11-G, 65.4D, 84.7E.
(c) SEE G.O. 95 FOR GUY SEPARATION.
(d) SEE G.O. 95 RULES 56.6 & 56.7.
e. SEE OH907 FOR GUYING PROXIMITY.

TABLE OF CONTENTS

© 1998 - 2021 San Diego Gas & Electric Company. All rights reserved. Removal of this copyright notice without permission is not permitted under law.

REV	CHANGE	DR	BY	DSN	APV	DATE	REV	CHANGE	DR	BY	DSN	APV	DATE
C	EDITORIAL CHANGES	-	GW	JS	CZH	11/01/2018	F						
B	DRAWING UPDATES	-	JBH	JBH	MDJ	08/18/2016	E	BILL OF MATERIALS UPDATE	EDM	MRF	GLW	CZH	10/28/2021
A	COMPLETELY REVISED	-	JC	IL	JS/MDJ	10/08/2015	D	FIGURE UPDATE	-	JIK	JES	CZH	08/07/2020

X Indicates Latest Revision | Completely Revised | New Page | Information Removed

SDG&E ELECTRIC OVERHEAD CONSTRUCTION STANDARDS

GUY ASSEMBLY DETAILS

OH927.3

SCOPE: THIS STANDARD SHOWS GUY ASSEMBLY DETAILS FOR FIBERGLASS GUY STRAIN INSULATOR.

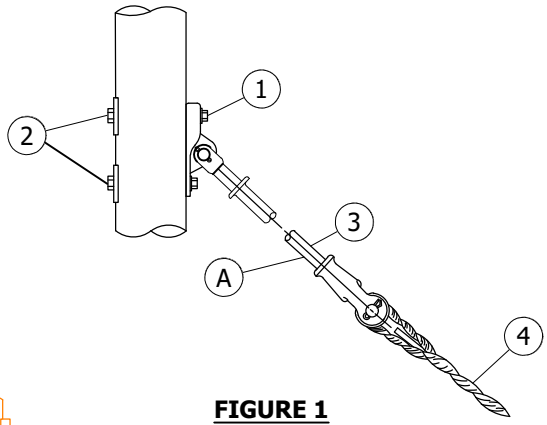

FIGURE 1

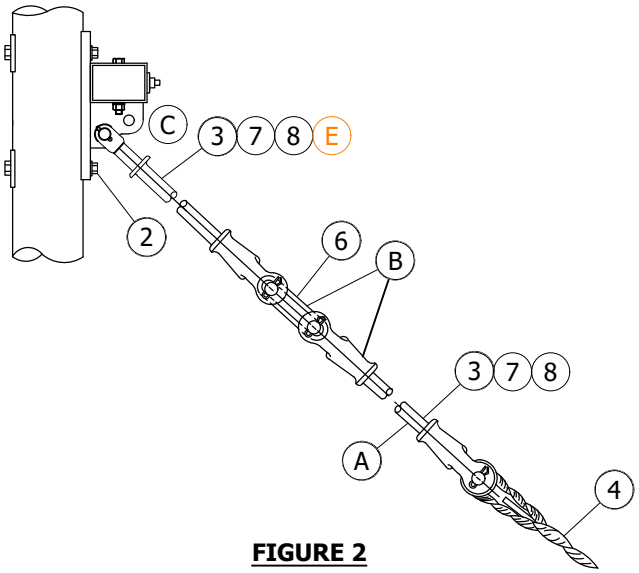

FIGURE 2

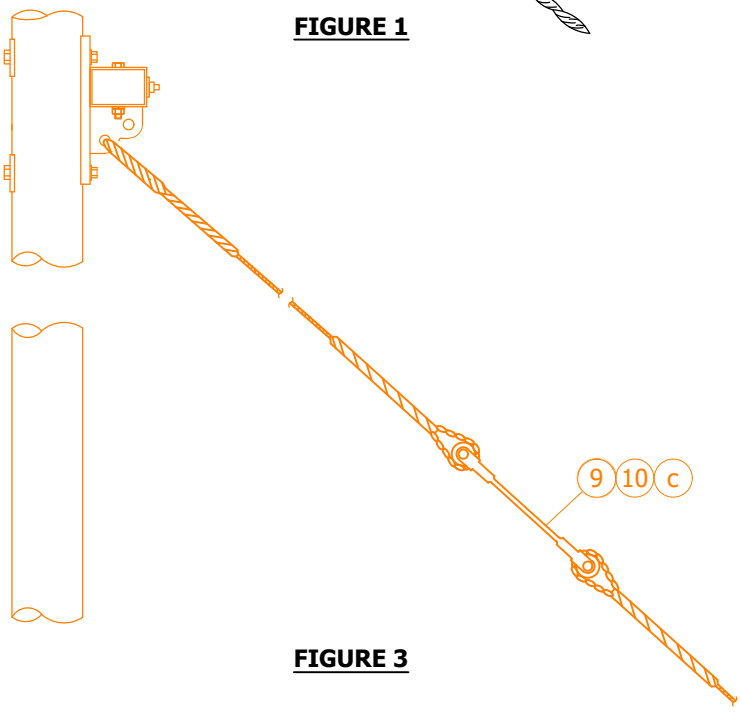

FIGURE 3

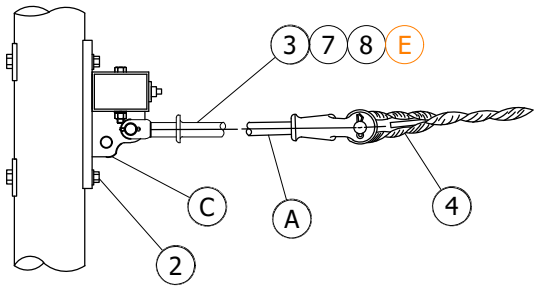

FIGURE 4

INSTALLATION:

(A) ITEMS 3, 7, AND 8 RATED AT 10,000 POUNDS MAXIMUM WORKING STRENGTH. ITEMS 9 AND 10 RATED AT 7,000 POUNDS MAXIMUM WORKING STRENGTH. (b)

(B) USE NO MORE THAN TWO FIBERGLASS STRAIN INSULATORS LINKED WHEN REQUIRED TO SECTIONALIZE, OR USE ONE FIBERGLASS STRAIN INSULATOR AND ONE PORCELAIN STRAIN INSULATOR.

(C) TWO GUY ASSEMBLIES SHALL NOT BE ATTACHED TO THE SAME DEADEND CROSSARM BRACKET.

(D) USE FLAT HARDWARE ON 12-SIDED STEEL POLES.

(E) DOWN GUY OR HEAD GUY CAN BE INSTALLED IN EITHER EYELET.

© 1998 - 2020 San Diego Gas & Electric Company. All rights reserved. Removal of this copyright notice without permission is not permitted under law.

REV	CHANGE	BY	DSGN	APPV	DATE	REV	CHANGE	BY	DSGN	APPV	DATE
C	EDITORIAL CHANGES	JC	JS	MDJ	9/14/2017	F	EDITORIAL CHANGES	JIK	JES	CZH	8/7/2020
B	EDITORIAL CHANGES	GW	JS	MDJ	3/28/2017	E	EDITORIAL CHANGES	GW	JS	MDJ	4/1/2018
A	EDITORIAL CHANGES	GW	JS	MDJ	10/27/2016	D	EDITORIAL CHANGES	JC	JS	MDJ	12/21/2017

X Indicates Latest Revision | Completely Revised | New Page | Information Removed

SDG&E ELECTRIC OVERHEAD CONSTRUCTION STANDARDS

SHEET 1 OF 2

GUY ASSEMBLY DETAILS
FOR FIBERGLASS GUY STRAIN INSULATOR

OH928.1

TABLE OF CONTENTS

BILL OF MATERIALS:

ITEM	DESCRIPTION	QUANTITY	STANDARD PAGE	STOCK NUMBER	DESIGN UNITS
1	PLATE, POLE EYE, GALV. (D)	1	-	S542944	EYE-PL
2	BOLT, MACHINE GALV., 3/4" X (LENGTH AS REQ'D), 1 SQ CURVED WASHER, 1 ROUND WASHER & 1 DBL COIL SPRING (B)	2	392.2	-	-
3	INSULATOR, GUY STRAIN, FIBERGLASS, 10'	AS REQ'D	389	S430882	FG-GUY
4	GRIP, GUY	AS REQ'D	965	-	-
5	SHACKLE, ANCHOR, GALV., 5/8"	AS REQ'D	-	S636432 (X)	-
6	LINK, CHAIN, 5/8" X 3-1/4", GALV. (B)	AS REQ'D	-	S465760	DELINK
7	INSULATOR, GUY STRAIN, FIBERGLASS, 78" (B)	AS REQ'D	389	S430880	FG78
8	INSULATOR, GUY STRAIN, FIBERGLASS, 54" (B)	AS REQ'D	389	S430878	FG54
9	INSULATOR, GUY STRAIN, FIBERGLASS, 10" (B)	AS REQ'D	389	S602942	-
10	INSULATOR, GUY STRAIN, FIBERGLASS, 12"	AS REQ'D	389	S602944	-

NOTES:

I. USE OF FIBERGLASS STRAIN INSULATOR DOES NOT REDUCE REQUIRED G.O. 95 CLEARANCES.

II. FOR STEEL POLES - A FIBERGLASS GUY STRAIN INSULATOR MUST BE PLACED IN THE GUY AND ATTACHED TO THE POLE, EXTENDING OUTSIDE THE CYLINDER IN THE ZONE BETWEEN PLANE "A" AND "B". IF A SINGLE GUY FIBERGLASS STRAIN INSULATOR DOES NOT EXTEND OUTSIDE OF THE CYLINDER, A PORCELAIN STRAIN INSULATOR OR SECOND FIBERGLASS GUY STRAIN INSULATOR CAN BE USED, BUT CANNOT BE LOWER THAT PLANE "B". (c)

III. A FIBERGLASS STRAIN INSULATOR IS OPTIONAL FOR WOOD POLES.

(X) THIS ITEM IS EXEMPT.

REFERENCE:

a. FOR ALTERNATIVE TYPES OF GUY CONSTRUCTION, SEE OVERHEAD STANDARD 927.

(b) MINIMUM SAFETY FACTOR OF THREE PER G.O. 95.

(c) FOR GUYING PROXIMITY, SEE OVERHEAD STANDARD 907

d. SEE G.O. 95 RULES 56.6 & 56.7.

TABLE OF CONTENTS

© 1998 - 2020 San Diego Gas & Electric Company. All rights reserved. Removal of this copyright notice without permission is not permitted under law.

REV	CHANGE	BY	DSGN	APPV	DATE	REV	CHANGE	BY	DSGN	APPV	DATE
C	EDITORIAL CHANGES	JC	JS	MDJ	9/14/2017	F	EDITORIAL CHANGES	JIK	JES	CZH	8/7/2020
B	EDITORIAL CHANGES	GW	JS	MDJ	3/28/2017	E	EDITORIAL CHANGES	GW	JS	MDJ	4/1/2018
A	EDITORIAL CHANGES	GW	JS	MDJ	10/27/2016	D	EDITORIAL CHANGES	JC	JS	MDJ	12/21/2017

SCOPE: THIS STANDARD SHOWS PROTECTED WRAPPED ANCHORS USED IN AREAS (SEE PAGE 929.2) THAT HAVE BEEN IDENTIFIED AS "CORROSIVE" TO INCREASE ANCHOR LIFE EXPECTANCY.

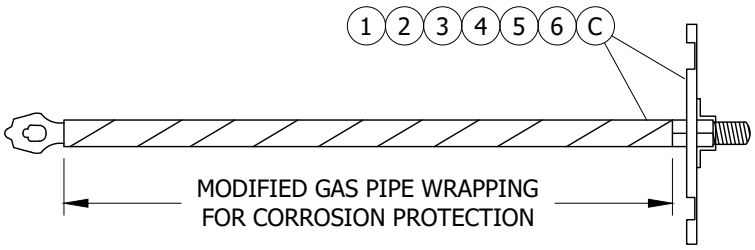

FIGURE 1
ANCHOR ROD PROTECTION DETAIL, ALL SIZES

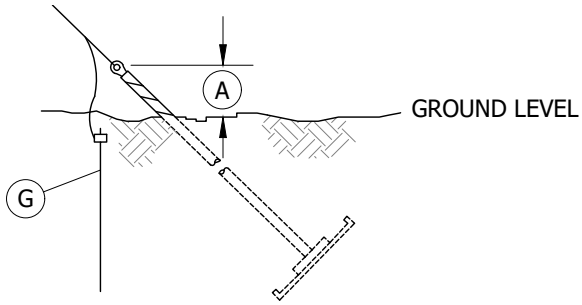

FIGURE 2
ANCHOR INSTALLATION DETAIL

INSTALLATION:

(A) EYE OF ANCHOR ROD SHALL BE INSTALLED 12" ABOVE GROUND LEVEL IN AREAS WHICH HAVE DRIFTING SAND, ELSEWHERE 6" IS SUFFICIENT.

(B) PROTECTED ANCHOR PLATES AND ANCHOR RODS ARE FURNISHED SEPARATELY BY STOREROOM. THE PLATES ARE EPOXY COATED AND THE RODS ARE PROTECTO TAPE WRAPPED. THEY WILL BE ISSUED AS A KIT, TO BE ASSEMBLED AT THE JOB SITE.

(C) ANCHOR PLATE TO BE DOUBLE NUTTED ON ROD.

D. AFTER ASSEMBLY TYPE 1027 PRIMER AND "PROTECTO WRAP" TAPE IS TO BE APPLIED TO THREADS, NUTS, AND ANY OTHER EXPOSED AREAS OF THE ANCHOR ASSEMBLY.

(E) NO LONGER PURCHASED (FIELD MAINTENANCE ONLY).

F. AREAS HAVE BEEN DECLARED "CORROSIVE" AS A RESULT OF OPERATING EXPERIENCE. PROTECTED ANCHORS ARE REQUIRED IN THE CORROSIVE AREA EAST OF THE LINE ON PAGE 929.2. PROBLEM AREAS HAVE ALSO BEEN OBSERVED IN THE METRO, BEACH CITIES, AND NORTH COAST OPERATING DISTRICTS. AS THESE AREAS ARE DEFINED, THEY WILL BE ADDED TO THE MAP AND IDENTIFIED AS CORROSIVE POCKETS.

(G) ONLY UNSECTIONALIZED ANCHOR GUYS THAT ARE EXPOSED TO 22,500 VOLTS OR MORE ARE REQUIRED TO BE GROUNDED (SEE G.O. RULE 56.6D). IF GROUNDING IS REQUIRED ON PROTECTED CROSSPLATE ANCHORS, REFER TO DRAWING TB 3204.0, AVAILABLE FROM TRANSMISSION ENGINEERING.

BILL OF MATERIALS:

ITEM	DESCRIPTION		QUANTITY	STANDARD PAGE	STOCK NUMBER	DESIGN UNITS
1	ANCHOR, PLATE, GALVANIZED, 16" / ANCHOR ROD, GALVANIZED - 3/4" X 8' (FIELD MAINTENANCE ONLY) (B)		AS REQ'D	-	S604448 (E)	-
2	ANCHOR, PLATE, GALVANIZED, 20" / ANCHOR ROD, GALVANIZED - 1" X 10' (B)		AS REQ'D	-	S604480	-
3	ANCHOR, PLATE, GALVANIZED, 24" / ANCHOR ROD, GALVANIZED - 1" X 10' (B)		AS REQ'D	-	S604512	-
4	NUTS, GALVANIZED STEEL	a) 3/4"	AS REQ'D	-	S504578 (X)	-
		b) 1"	AS REQ'D	-	S505664	-
5	PREMIER, TYPE 1027		AS REQ'D	-	S557696	-
6	TAPE, PROTECTO WRAP 4"		AS REQ'D	-	S720064	-

NOTES:

(X) THIS ITEM IS EXEMPT.

REFERENCE: NONE

© 1998 - 2020 San Diego Gas & Electric Company. All rights reserved. Removal of this copyright notice without permission is not permitted under law.

REV	CHANGE	BY	DSGN	APPV	DATE	REV	CHANGE	BY	DSGN	APPV	DATE
C	TABLE UPDATE		JES	CZH	05/11/2020	F					
B	DRAWING UPDATE	PEI	-	-	02/18/2019	E					
A	ORIGINAL ISSUE	-	PTA	JDJ	01/10/2008	D					

TABLE OF CONTENTS

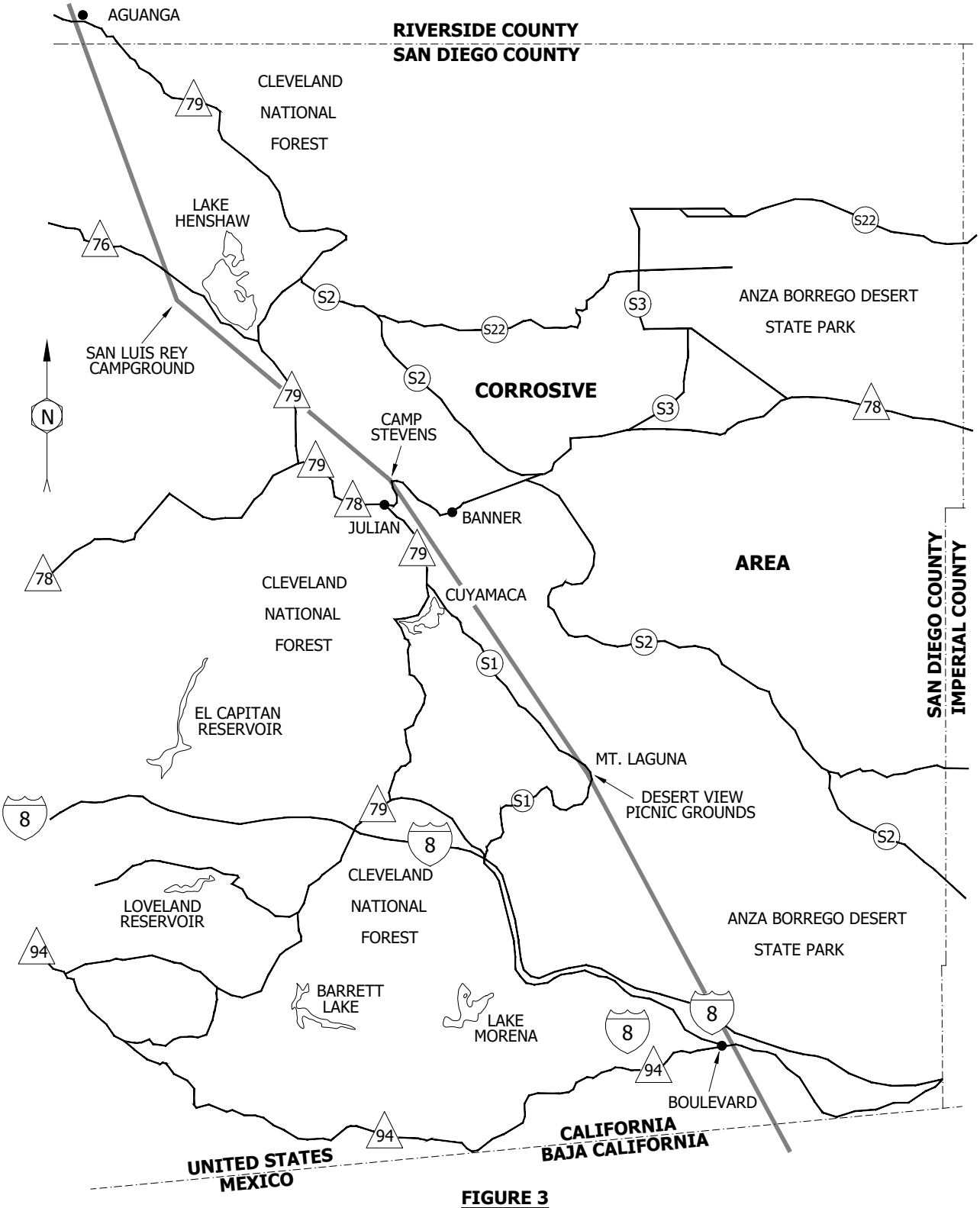

FIGURE 3

© 1998 - 2020 San Diego Gas & Electric Company. All rights reserved. Removal of this copyright notice without permission is not permitted under law.

REV	CHANGE	BY	DSGN	APPV	DATE	REV	CHANGE	BY	DSGN	APPV	DATE
C	TABLE UPDATE		JES	CZH	05/11/2020	F					
B	DRAWING UPDATE	PEI	-	-	02/18/2019	E					
A	ORIGINAL ISSUE	-	PTA	JDJ	01/10/2008	D					

X Indicates Latest Revision | Completely Revised | New Page | Information Removed

SHEET 2 OF 2

SDG&E ELECTRIC OVERHEAD CONSTRUCTION STANDARDS

INSTALLATION OF PROTECTED CROSSPLATE ANCHORS

OH929.2

TABLE OF CONTENTS

SCOPE: THIS STANDARD SHOWS THE USE AND INSTALLATION OF STAINLESS STEEL ANCHORS.

ATTENTION: THIS ANCHOR SYSTEM IS TO BE USED FOR THE INTENDED PURPOSE OF A GUY WIRE ANCHOR AND IS TO ONLY BE INSTALLED BY PROPERLY TRAINED PROFESSIONALS.

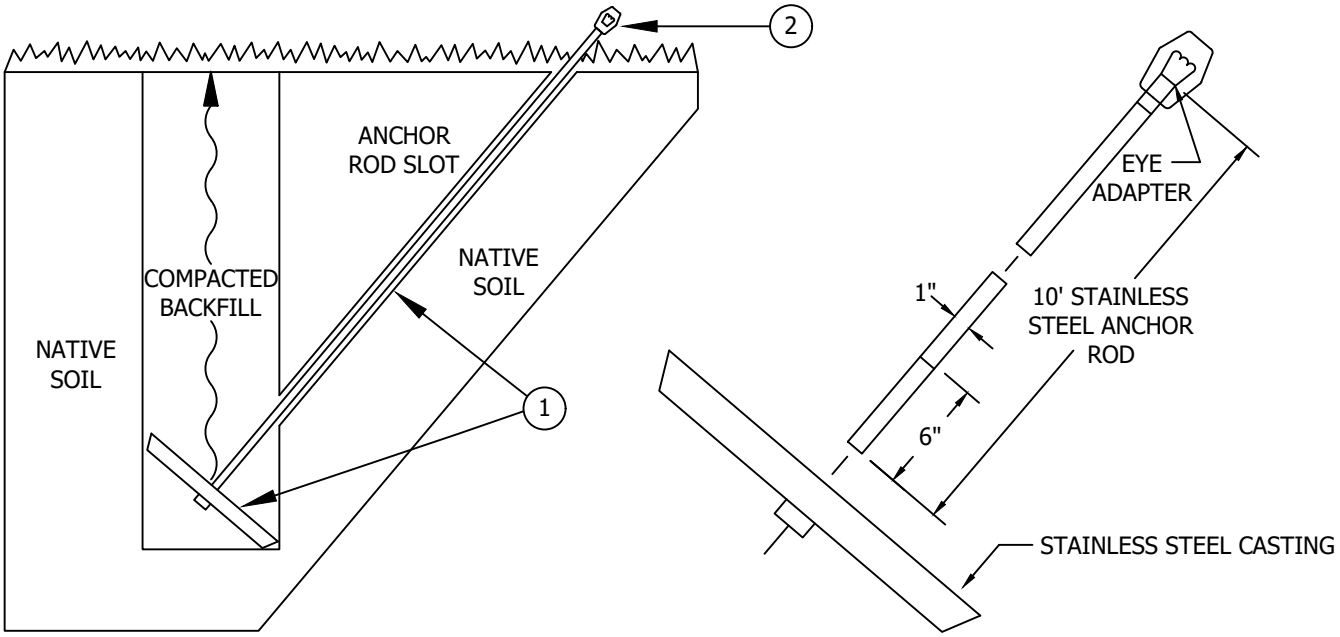

INSTALLATION:

A. AUGER OR HAND DIG AN ANCHOR HOLE TO A DEPTH OF APPROXIMATELY 8.5' (THE HOLE MAY BE SHALLOWER OR DEEPER DEPENDING ON THE ANGLE OF THE ANCHOR ROD "LEAN"). THE DIAMETER OF THE HOLE SHALL BE A MINIMUM OF AT LEAST 8" WIDER THAN THE SIZE OF THE ANCHOR PLATE. ie: A 22" DIAMETER ANCHOR PLATE SHOULD HAVE A 30" DIAMETER ANCHOR HOLE.

B. SLIDE THE ANCHOR SYSTEM INTO THE HOLE AND CUT A "ROD SLOT" TOWARDS THE POLE TO ALLOW THE ANCHOR ROD TO ANGLE TOWARDS THE GUY LOCATION ON THE POLE. (REFERENCE STD. 941).

C. BACKFILL AND THOROUGHLY COMPACT BOTH THE ANCHOR HOLE AND ROD SLOT IN SHALLOW LIFTS.

D. EYE OF ANCHOR ROD SHALL BE INSTALLED 12" ABOVE GROUND LEVEL IN AREAS WHICH HAVE DRIFTING SAND, ELSEWHERE 6"-12" IS SUFFICIENT.

E. ONLY UNSECTIONALIZED ANCHOR GUYS THAT ARE EXPOSED TO 22,500 VOLTS OR MORE ARE REQUIRED TO BE GROUNDED. (SEE G.O. 95 RULE 56.6D)

F. JOINT ANCHORAGE: CONTACT THE TELEPHONE COMPANY AND/OR APPLICABLE TV COMPANY FOR JOINT UTILITY PLANNING WHERE ANCHORS ARE TO BE USED JOINTLY OR WHERE JOINT USE IS ANTICIPATED. DO NOT EXCEED THE ANCHOR HOLDING POWER. EXCEEDING INDIVIDUAL ANCHOR HOLDING POWER WILL NORMALLY REQUIRE A SEPARATE ANCHOR FOR EACH UTILITIES GUYS.

G. IF MORE THAN 17,800 LBS HOLDING POWER IS NECESSARY AND SOIL IS NON-CORROSIVE, INSTALL TWO ANCHORS. CONCRETE USED AS BACKFILL IN SOFT UNSTABLE SOIL SUPPLIES 1,900 LBS PER CUBIC FOOT.

© 1998 - 2019 San Diego Gas & Electric Company. All rights reserved. Removal of this copyright notice without permission is not permitted under law.

REV	CHANGE	BY	DSGN	APPV	DATE	REV	CHANGE	BY	DSGN	APPV	DATE
C						F					
B						E					
A	ORIGINAL ISSUE	JC	JS	CZH	9/17/2019	D					

Indicates Latest Revision | Completely Revised X | New Page | Information Removed

SDG&E ELECTRIC OVERHEAD CONSTRUCTION STANDARDS

STAINLESS STEEL ANCHOR SYSTEM

OH930.1

TABLE OF CONTENTS

BILL OF MATERIALS:

ITEM	DESCRIPTION	QUANTITY	STOCK NUMBER	DESIGN UNITS
1	ANCHOR, 22" STAINLESS STEEL PLATE WITH 1" x 10' STAINLESS STEEL ROD	AS REQ'D	108146	TBD
2	TRIPLE EYE NUT, 1" STAINLESS STEEL	AS REQ'D	108208	3ES/S1

TABLE 1

TYPE OF ANCHOR	HOLDING POWER (LB)		
	HARD GROUND (ROCK, HARDPAN, SHALE, SANDSTONE)	MEDIUM GROUND (CLAY OR MOIST GROUND WHICH CAN BE FIRMLY TAMPED)	SOFT GROUND (LOOSE SAND OR LOAM WITH LITTLE BOND)
22" PLATE	17,800	15,600	8,700

ATTENTION: A SAFETY FACTOR OF TWO WAS APPLIED TO THESE HOLDING POWER VALUES

NOTES: NONE

REFERENCE: NONE

TABLE OF CONTENTS

© 1998 - 2019 San Diego Gas & Electric Company. All rights reserved. Removal of this copyright notice without permission is not permitted under law.

REV	CHANGE	BY	DSGN	APPV	DATE	REV	CHANGE	BY	DSGN	APPV	DATE
C						F					
B						E					
A	ORIGINAL ISSUE	JC	JS	CZH	9/17/2019	D					

Indicates Latest Revision | Completely Revised [X] | New Page | Information Removed

SDG&E ELECTRIC OVERHEAD CONSTRUCTION STANDARDS

STAINLESS STEEL ANCHOR SYSTEM

OH930.2

SCOPE: THIS STANDARD SHOWS ANCHOR SETTING DEPTHS AND STAKING REQUIREMENTS.

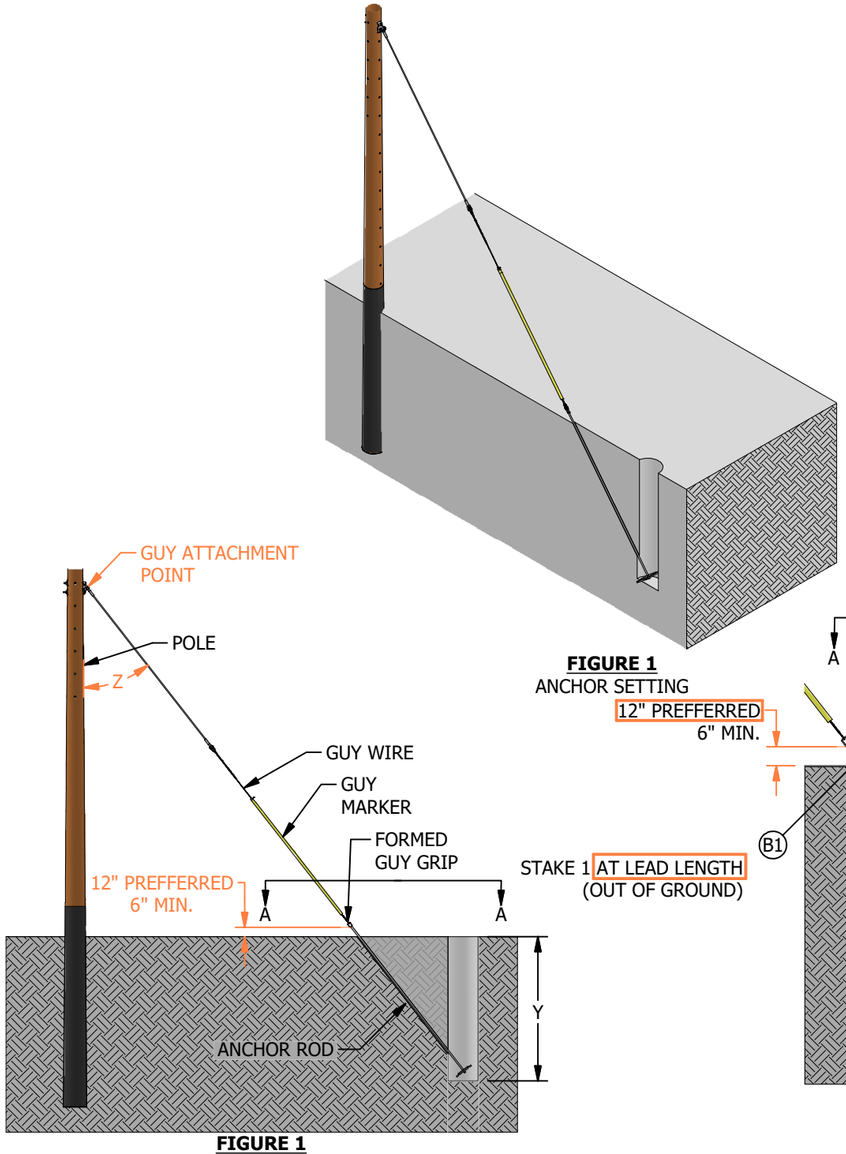

FIGURE 1
ANCHOR SETTING
SEE TABLE 1

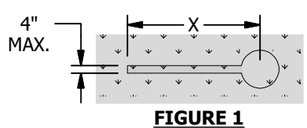

FIGURE 1
VIEW A-A
SEE TABLE 1

FIGURE 2
STAKING DETAIL (B)(C)

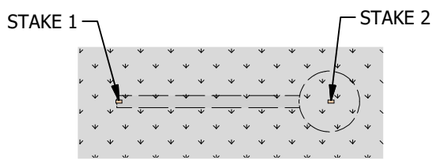

FIGURE 2
VIEW A-A

TABLE 1

10-FOOT ANCHOR ROD EXCAVATION DIMENSIONS (BASED ON GUY ANGLE) (A)		
GUY ANGLE Z (DEG)	HOLE DEPTH Y	SLOT LENGTH X
20	9'-0"	4'-0"
25	8'-6"	5'-0"
30	8'-0"	5'-6"
35	7'-6"	6'-6"
40	7'-0"	7'-0"
45	6'-6"	7'-6"

INSTALLATION:

(A) DETERMINE ANGLE BETWEEN GUY AND POLE (Z) BASED ON POLE HEIGHT AND GUY LEAD LENGTH. (a)

(B) STAKE THE AREA OF ANCHOR ROD INSTALLATION IN TWO LOCATIONS:

- (1) ONE WHERE THE ANCHOR ROD/NECK SURFACES OUT OF THE GROUND
- (2) SECOND AT THE CENTER OF TRENCH HOLE

(C) SPRAY PAINT A CIRCLE AROUND SECOND STAKE LOCATION TO INDICATE WHERE THE TRENCH HOLE WILL BE DUG.

BILL OF MATERIALS: NONE

NOTES: NONE

REFERENCE:

(a) SEE CHARTS IN OH920.

TABLE OF CONTENTS

REV	CHANGE	DRWN	BY	CHKD	APVD	DATE
C	FIGURE UPDATE	EDM	JAC	JAS	KRG	11/04/2022
B	DRAWING UPDATE	-	GW	JS	CZH	07/18/2018
A	REVISION	-	-	PIA	CAK	01/01/1993

SDG&E
A Sempra Energy utility

SDG&E ELECTRIC OVERHEAD CONSTRUCTION STANDARDS

ANCHOR INSTALLATION CROSSPLATE REQUIREMENTS

SCALE: NOT TO SCALE

DRAWING NO: OH941.1

SHEET: 1 OF 1

© 1998 - 2022 San Diego Gas and Electric Company. All rights reserved. Removal of this copyright notice without permission is not permitted under law.

X Indicates Latest Revision | Completely Revised | New Page | Information Removed

SCOPE: THIS STANDARD DESCRIBES AND ILLUSTRATES THE INSTALLATION OF THE MANTA-RAY EARTH ANCHOR SYSTEM.

ATTENTION: USE OF THE MANTA-RAY ANCHOR IS RESTRICTED TO ENVIRONMENTALLY SENSITIVE AREAS ONLY. THE MANTA-RAY ANCHOR MAY ONLY BE INSTALLED IN ALLOWABLE SOIL TYPES. IF SOIL CONDITIONS DO NOT ALLOW THE INSTALLATION OF A MANTA-RAY EARTH ANCHOR, USE THE GALVANIZED CROSSPLATE, STAINLESS STEEL DISC OR ROCK ANCHOR AS AN ALTERNATIVE, FOUND ELSEWHERE IN THIS SECTION.

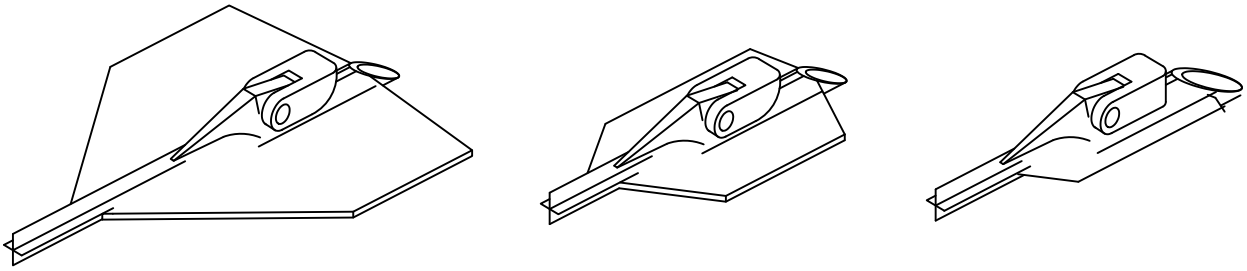

ANCHOR PLATE SELECTION: (A)

ALLOWABLE SOIL TYPE (B)	ANCHOR PLATE SIZE/ MODEL NUMBER	USABLE STRENGTH (G)
SOFT: LOOSE SAND OR WET	LARGE/MR-SR	4,500 LBS
MEDIUM: CLAY OR MOIST GROUND WHICH CAN BE FIRMLY TAMPED	MEDIUM/MR-1	9,000 LBS
HARD: ROCK, HARDPAN, SHALE OR SANDSTONE	SMALL/MR-2	7,500 LBS

ATTENTION: THE MAXIMUM USABLE STRENGTH OF ANY MANTA-RAY ANCHOR INSTALLATION IS DETERMINED BY THE PLATE HOLDING CAPACITY AND SOIL TYPE.

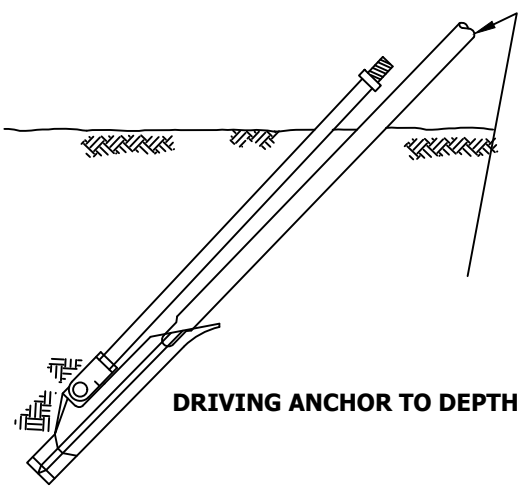

DRIVING ANCHOR TO DEPTH

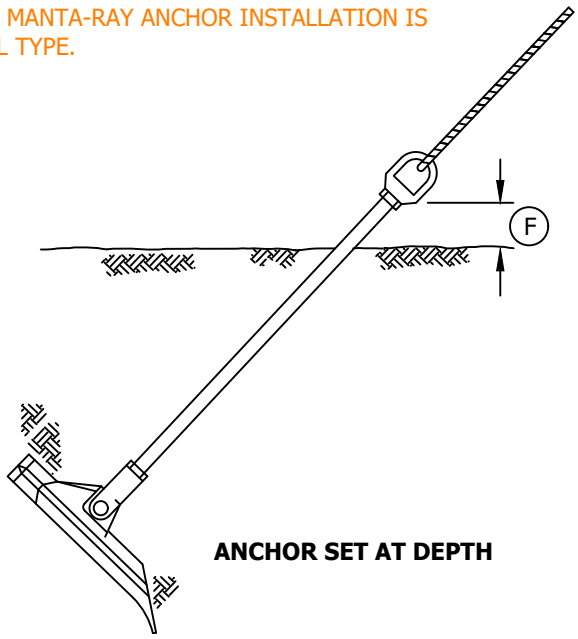

ANCHOR SET AT DEPTH

TABLE OF CONTENTS

© 1998 - 2019 San Diego Gas & Electric Company. All rights reserved. Removal of this copyright notice without permission is not permitted under law.

REV	CHANGE	BY	DSGN	APPV	DATE	REV	CHANGE	BY	DSGN	APPV	DATE
C	EDITORIAL CHANGES	JC	JS	MDJ	12/21/2017	F					
B	NOTES UPDATES	GW	JS	MDJ	09/28/2017	E	EDITORIAL CHANGES	LS	GW	CZH	11/12/2019
A	UPDATED NOTES	JC	JH	DW	08/27/2014	D	DRAWING UPDATE	PEI	-	-	02/18/2019

X Indicates Latest Revision | Completely Revised | New Page | Information Removed

SDG&E ELECTRIC OVERHEAD CONSTRUCTION STANDARDS

MANTA-RAY EARTH ANCHOR

OH950.1

INSTALLATION:

(A) EVERY MANTA-RAY ANCHOR INSTALLATION REQUIRES THAT A "MANTA-RAY ANCHOR RECORD", FORM 131-52005 BE COMPLETED AND ATTACHED TO THE WORKING COPY OF THE JOB, EVEN IF THE MANTA-RAY ANCHOR INSTALLATION IS UNSUCCESSFUL. A COPY OF THIS RECORD IS TO BE FORWARDED TO ELECTRIC DISTRIBUTION ENGINEERING STANDARDS.

(B) TO DETERMINE SOIL CONDITIONS AND TO FACILITATE THE INSTALLATION OF A MANTA-RAY ANCHOR, A 1-1/2" PILOT HOLE MUST FIRST BE DRILLED TO A MINIMUM DEPTH OF 6'. IF A PILOT HOLE CAN NOT BE DRILLED TO AT LEAST 6' OF DEPTH, THEN YOU MUST CONSIDER AN ALTERNATIVE METHOD OF ANCHOR.

C. THE FIRST ROD'S MIN. DEPTH MUST BE 7' TO MAINTAIN CAPACITY VALUES. NEVER START YOUR ANCHOR INSTALLATION WITH A 3-1/2 FOOT ANCHOR ROD. IT IS NOT PERMITTED TO BE USED BY ITSELF FOR ANCHOR INSTALLATION.

(D) WHEN INSTALLING A MANTA-RAY ANCHOR IN A COASTAL AREA WITH WET, SALTY, CORROSIVE SOIL (SUCH AS AROUND BAYS AND LAGOONS); SELECT THE PROPER SIZE ANCHOR PLATE WITH EPOXY COATING.

(E) WHEN INSTALLING AN EPOXY COATED MANTA-RAY ANCHOR PLATE, ALWAYS INSTALL STAINLESS STEEL RODS, COUPLINGS AND TRIPLE EYE NUT.

(F) EYE OF THE ANCHOR ROD SHALL BE INSTALLED 12" ABOVE GROUND LEVEL IN AREAS WHICH HAVE DRIFTING SAND, ELSEWHERE 6" IS SUFFICIENT.

(G) ULTIMATE STRENGTH VALUES WITH A SAFETY FACTOR OF 2 IS APPLIED TO THE ULTIMATE STRENGTH OF THE ANCHOR PLATE CAPACITIES. THE LIMITING FACTOR IS THE SOIL CONDITION FOR EACH ANCHOR PLATE APPLICATION.

H. POST-INTALLATION "PROOF TEST" IS REQUIRED. "PROOF-TEST" SHALL STATE TEST LOAD AND SOIL TYPE. MINIMUM TEST LOAD SHALL BE THE LESSER OF EITHER 2X THE DESIGN TENSION OR 18,000 LBS.

BILL OF MATERIALS:

ITEM	DESCRIPTION	QUANTITY	STOCK NUMBER	DPSS AU'S
1	MANTA-RAY ANCHOR PLATE, SMALL, GALVANIZED	AS REQ'D	S108220	MA-S
2	MANTA-RAY ANCHOR PLATE, MEDIUM, GALVANIZED	AS REQ'D	S108222	MA-M
3	MANTA-RAY ANCHOR PLATE, LARGE, GALVANIZED	AS REQ'D	S108224	MA-L
4	MANTA-RAY ANCHOR PLATE, SMALL, GALVANIZED, EPOXY COATED (D)	AS REQ'D	S108194	MA-S-E
5	MANTA-RAY ANCHOR PLATE, MEDIUM, GALVANIZED, EPOXY COATED (D)	AS REQ'D	S108196	MA-M-E
6	MANTA-RAY ANCHOR PLATE, LARGE, GALVANIZED, EPOXY COATED (D)	AS REQ'D	S108198	MA-L-E
7	ANCHOR ROD, 1" X 18", THREADED, GALVANIZED	AS REQ'D	S601774	EXT-18
8	ANCHOR ROD, 1" X 3.5', THREADED, GALVANIZED	AS REQ'D	S601776	EXT3-
9	ANCHOR ROD, 1" X 7', THREADED, GALVANIZED	AS REQ'D	S601792	EXT7-
10	ANCHOR ROD, 1" X 3.5', STAINLESS STEEL (E)	AS REQ'D	S601800	EXT3SS
11	ANCHOR ROD, 1" X 7', STAINLESS STEEL (E)	AS REQ'D	S601802	EXT7SS
12	COUPLING, 1", GALVANIZED	AS REQ'D	S279272	RODCPL
13	COUPLING, 1", STAINLESS STEEL (E)	AS REQ'D	S279280	1RCS/S
14	TRIPLE EYE NUT, 1", GALVANIZED	AS REQ'D	S504016	3EYE-1
15	TRIPLE EYE NUT, 1", STAINLESS STEEL (E)	AS REQ'D	S108208	3ES/S1

NOTES: NONE

REFERENCE:

a. FOR INSTALLATION INSTRUCTIONS OF THE MANTA-RAY ANCHOR, INCLUDING INSTALLATION TOOLS, SEE ELECTRIC STANDARD PRACTICE ESP-304.

© 1998 - 2019 San Diego Gas & Electric Company. All rights reserved. Removal of this copyright notice without permission is not permitted under law.

REV	CHANGE	BY	DSGN	APPV	DATE	REV	CHANGE	BY	DSGN	APPV	DATE
C	EDITORIAL CHANGES	JC	JS	MDJ	12/21/2017	F					
B	NOTES UPDATES	GW	JS	MDJ	09/28/2017	E	EDITORIAL CHANGES	LS	GW	CZH	11/12/2019
A	UPDATED NOTES	JC	JH	DW	08/27/2014	D	DRAWING UPDATE	PEI	-	-	02/18/2019

X Indicates Latest Revision | Completely Revised | New Page | Information Removed

SDG&E ELECTRIC OVERHEAD CONSTRUCTION STANDARDS

MANTA-RAY EARTH ANCHOR

OH950.2

TABLE OF CONTENTS

Manta Ray Anchor Record

Work Order #: _____ Project #: _____

USA Mark Out #: _____

Address: _____

City: _____ Thomas Bros: _____

District: _____

Pole # _____ Crew Leader: _____

Date: _____ / _____ / _____ Hrs. Total: _____

Pilot Hole Test Successful: Yes_____ No_____

Reason for failure or not Feasible: _____

_____

_____

_____

Material Used

Galvanized: _____ Stainless Steel: _____ Epoxy Plate: _____

Anchor Plate Size: _____ (small, medium, large)

Coupler Amount: _____

7' Rod Amount: _____ 3.5' Rod Amount: _____ 18" Rod Amount: _____

Final Depth: _____

Load Lock Proof Test lbs.: _____

Soil Type: _____

ATTENTION: COMPLETE THIS FORM AND SUBMIT TO THE ELECTRIC DISTRIBUTION ENGINEERING STANDARDS OVERHEAD WORK METHODS ANALYST FOR RECORD KEEPING, WHETHER THE PILOT HOLE PASSED OR FAILED.

TABLE OF CONTENTS

© 1998 - 2019 San Diego Gas & Electric Company. All rights reserved. Removal of this copyright notice without permission is not permitted under law.

REV	CHANGE	BY	DSGN	APPV	DATE	REV	CHANGE	BY	DSGN	APPV	DATE
C	EDITORIAL CHANGES	JC	JS	MDJ	12/21/2017	F					
B	NOTES UPDATES	GW	JS	MDJ	09/28/2017	E	EDITORIAL CHANGES	LS	GW	CZH	11/12/2019
A	UPDATED NOTES	JC	JH	DW	08/27/2014	D	DRAWING UPDATE	PEI	-	-	02/18/2019

X Indicates Latest Revision | Completely Revised | New Page | Information Removed

SDG&E ELECTRIC OVERHEAD CONSTRUCTION STANDARDS

MANTA-RAY EARTH ANCHOR

OH950.3

SCOPE: THIS STANDARD LISTS TYPES AND SIZES OF GUY STRAND WIRE USED IN DISTRIBUTION CONSTRUCTION.

INSTALLATION:

A. ALUMOWELD GUY STRAND WIRE IS NO LONGER PURCHASED.

(B) WHEN STRAIN INSULATORS ARE USED TO SECTIONALIZE GUY WIRE, THE LOADING MUST NOT EXCEED THE WORKING STRENGTH OF THE INSULATOR, 6,000 LBS FOR 54-2, 10,000 LBS FOR THE 54-3.

(C) A SAFETY FACTOR OF TWO IS INCLUDED IN THE WORKING STRENGTH VALUE.

(D) ALL GUY WIRES INSTALLED IN 2007 AND AFTER ARE EXTRA HIGH STRENGTH. FOR EXISTING FACILITIES, DEFAULT TO UTILITY GRADE FOR POLE CALCULATIONS.

GALVANIZED STEEL WIRE STRAND					
NOMINAL DIAMETER (INCHES)		1/4	3/8	7/16	1/2
STOCK NUMBER		811360	811296	811264	811232
ASSEMBLY UNITS		1/4	3/8	7/16	1/2
NUMBER OF STRANDS		7	7	7	7
POUND PER 100 FEET		12.10	27.3	39.9	51.7
FEET PER POUND		8.26	3.67	2.51	1.93
WORKING STRENGTH (POUNDS) (C)	EXTRA HIGH STRENGTH	(C) 3325	(C)(B) 7700	(C)(B) 10400	(C)(B) 13450
WORKING STRENGTH (POUNDS) (C)	UTILITY STRENGTH (D)	(C)(D) 2250	(C)(D) 5750	(C)(D) 9000	(C)(D) 12500

BILL OF MATERIALS: NONE

NOTES: NONE

REFERENCE:

a. CONTAMINATION DISTRICTS ARE DEFINED ON STANDARDS PAGE 287.

TABLE OF CONTENTS

© 1998 - 2023 San Diego Gas & Electric Company. All rights reserved. Removal of this copyright notice without permission is not permitted under law.

REV	CHANGE	DR	BY	DSN	APV	DATE	REV	CHANGE	DR	BY	DSN	APV	DATE
C	EDITORIAL CHANGES	GLC	JAS	JAS	KRG	02/09/2023	F						
B	DRAWING UPDATE	-	PEI	-	-	02/18/2019	E						
A	ORIGINAL ISSUE	-	-	TQ	DW	02/13/2014	D						

SCOPE: THIS STANDARD DESCRIBES SOME OF THE HARDWARE TO BE USED WITH GUY INSTALLATIONS.

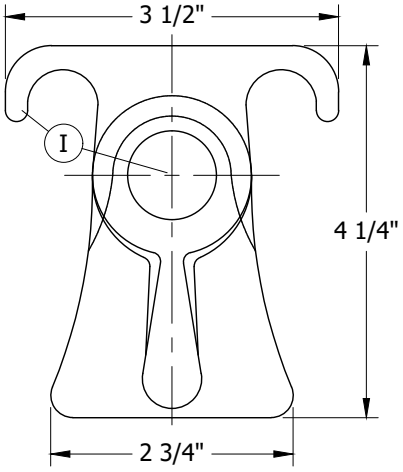

FIGURE 1
GUY HOOK
FRONT VIEW

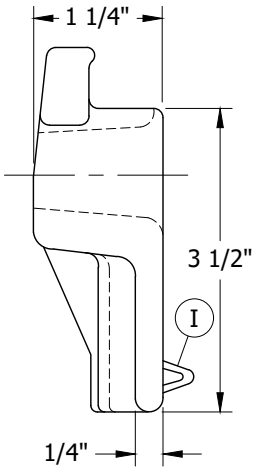

FIGURE 1
GUY HOOK
SIDE VIEW

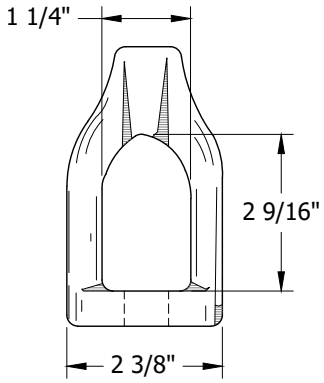

FIGURE 2
EYELET
FRONT VIEW

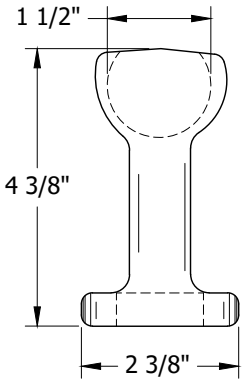

FIGURE 2
EYELET
SIDE VIEW

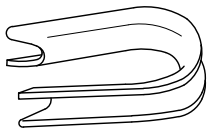

FIGURE 3
THIMBLE

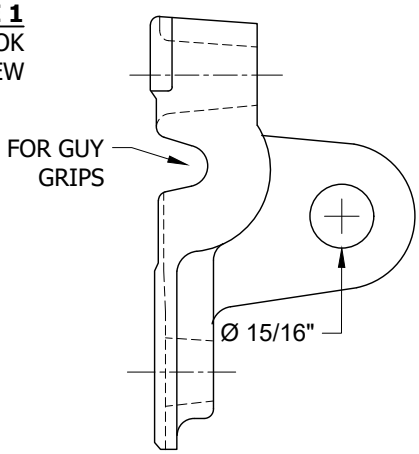

FIGURE 4
EYE PLATE
FRONT VIEW

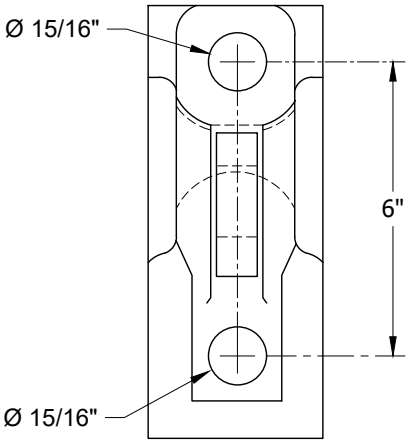

FIGURE 4
EYE PLATE
SIDE VIEW

TABLE 1

GUY HARDWARE				
FIGURE	**DESCRIPTION**	**MOUNTING BOLT SIZE (IN)**	**STOCK NUMBER**	**DESIGN UNITS**
1	HOOK, GUY	5/8	S415072	GUY-HK
		3/4		
2	EYELET	5/8	S338176	THMBLE
		3/4	S338144	EYELET
3	THIMBLE, 1/2", OPEN	--	S736600	OPTHMB
4	PLATE, POLE EYE, GALV.	15/16	S542944	EYE-PL

INSTALLATION: NONE

BILL OF MATERIALS: NONE

NOTES:

(I) CURRENTLY STOCKED GUY HOOKS DO NOT REQUIRE LAG SCREWS. THEY USE 5/8-INCH OR 3/4-INCH BOLTS AND WILL TAKE 1/4-INCH TO 1/2-INCH GUY WIRES. GUY HOOKS WHICH REQUIRE LAG SCREWS SHOULD BE SCRAPPED. DO NOT SALVAGE.

REFERENCE: NONE

© 1998 - 2023 San Diego Gas & Electric Company. All rights reserved. Removal of this copyright notice without permission is not permitted under law.

REV	CHANGE	DR	BY	DSN	APV	DATE	REV	CHANGE	DR	BY	DSN	APV	DATE
C	NOTES UPDATE	ARC	RSL	JES	KRG	03/29/2023	F						
B	DRAWING UPDATE	PEI	-	-	-	02/18/2019	E						
A	COMPLETELY REVISED	-	JS	GW	MDJ	09/08/2016	D						

TABLE OF CONTENTS

SCOPE: THIS STANDARD LISTS TYPES AND SIZES OF GUY GRIPS USED TO ATTACH GUY WIRE TO SUPPORT EQUIPMENT.

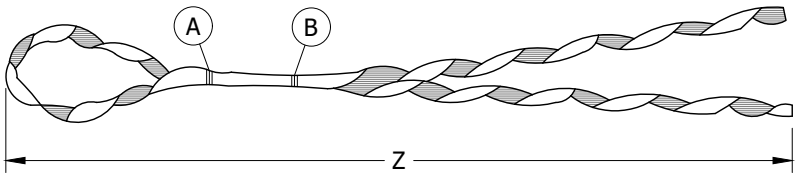

FIGURE 1

TABLE 1

FORMED GUY GRIPS									
GALVANIZED STEEL STRAND									
GUY WIRE STRAND DATA		MEAN DIA. (IN)	COLOR CODE	MANUFACTURER				STOCK NUMBER	DESIGN UNITS
				PREFORMED		CHANCE			
SIZE	STRANDING			CAT. NO.	Z (IN)	CAT. NO.	Z (IN)		
1/4"	3 OR 7 W	.250	YELLOW	GDE-1104	25	1/4-CTLG	25	S393216	--
5/16"		.312	BLACK	GDE-1106	31	5/16-CTLG	31	S393280	GR5/16
3/8"	7 WIRE	.358	ORANGE	GDE-1107	35	3/8-CTLG	35	S393248	GR3/8
7/16"		.435	GREEN	GDE-1108	38	7/16-CTLG	38	S393312	GR7/16
1/2"		.498	BLUE	BG-2115	49	1/2-CTLG	49	S393184	GR1/2
ALUMOWELD STRAND									
10M	7 WIRE	.306	BLACK	AWDE-4116	26	10M-AWSBG	25	S392864	GR10M

INSTALLATION:

(A) COLORED MARK INDICATES CROSSOVER POINT FOR SMALL INSULATORS OR THIMBLE EYES.

(B) COLORED MARK INDICATES CROSSOVER POINT FOR LARGE INSULATORS.

BILL OF MATERIALS: NONE

NOTES: NONE

REFERENCE: NONE

TABLE OF CONTENTS

© 1998 - 2023 San Diego Gas & Electric Company. All rights reserved. Removal of this copyright notice without permission is not permitted under law.

REV	CHANGE	DR	BY	DSN	APV	DATE	REV	CHANGE	DR	BY	DSN	APV	DATE
C	NOTES UPDATE	ARC	RSL	JES	KRG	03/29/2023	F						
B	DRAWING UPDATE	PEI	-	-	-	02/18/2019	E						
A	COMPLETELY REVISED	-	JS	GW	MDJ	09/08/2016	D						

SCOPE: THIS STANDARD LISTS TYPES AND SIZES OF AUTOMATIC GUY GRIPS.

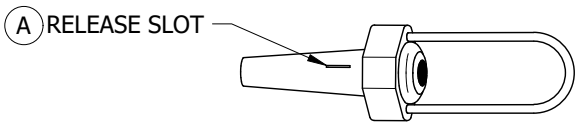

FIGURE 1

TABLE 1

AUTOMATIC GUY GRIPS						
GALVANIZED STEEL STRAND						
GUY WIRE SIZE (IN)	GRIP RANGE (IN)	BAIL TYPE (B)	MANUFACTURER CATALOG NUMBER		STOCK NUMBER	DESIGN UNITS
			RELIABLE	FARGO		
1/4	.240 - .253	SHORT	5100	--	S305680	A1/4S
		LONG	5100L	--	S305682	A1/4L
		INSULATOR	5150	--	S305681	A1/4I
5/16	.310 - .335	SHORT	5101	GDE-701	S305684	A5/16S
		LONG	5101L	--	S305686	A5/16L
		INSULATOR	5151	--	S305685	A5/16I
3/8	.360 - .405	SHORT	5102	GDE-702	S305688	A3/8S
		LONG	5102L	--	S305690	A3/8L
		INSULATOR	5152	--	S305689	A3/8I
7/16	.392 - .455	SHORT	5203	--	S305692	A7/16S
		LONG	5203L	--	S305694	A7/16L
		INSULATOR	5253-6	--	S305693	A7/16I

TABLE OF CONTENTS

INSTALLATION:

(A) RELEASE SLOT PROVIDED FOR GRIP REMOVAL OR RE-TENSION.

(B) FOR MULTIPLE GUY ATTACHMENT, USE COMBINATION OF SHORT AND LONG BAIL.

BILL OF MATERIALS: NONE

NOTES: NONE

REFERENCE: NONE

© 1998 - 2023 San Diego Gas & Electric Company. All rights reserved. Removal of this copyright notice without permission is not permitted under law.

REV	CHANGE	DR	BY	DSN	APV	DATE	REV	CHANGE	DR	BY	DSN	APV	DATE
C	NOTES UPDATE	ARC	RSL	JES	KRG	03/29/2023	F						
B	DRAWING UPDATE	PEI	-	-	-	02/18/2019	E						
A	COMPLETELY REVISED	-	JS	GW	MDJ	09/08/2016	D						

SCOPE: THIS STANDARD LISTS TYPES AND SIZES OF GUY SPLICES USED TO SPLICE GUY WIRE.

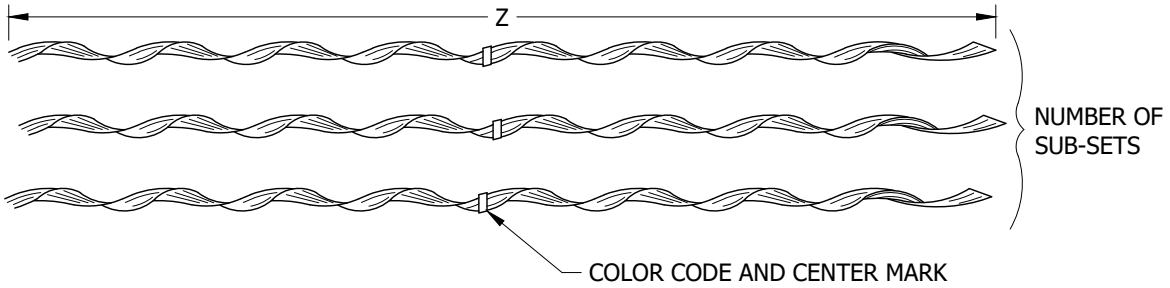

FIGURE 1

TABLE 1

FORMED GUY SPLICES											
GALVANIZED STEEL STRAND											
GUY WIRE STRAND DATA			COLOR CODE	MANUFACTURER						STOCK NUMBER	DESIGN UNITS
				PREFORMED			FANNER				
SIZE (IN)	STRANDING	MEAN DIAM (IN)		CAT. NO.	Z (IN)	SUBSETS (QTY)	CAT. NO.	Z (IN)	SUBSETS (QTY)		
1/4	3 OR 7 W	.250	YELLOW	GLS-2104	35	2	SS 1/4	29		S668288	--
5/16		.312	BLACK	GLS-2106	42		6SS 5/16	36		S668352	SP5/16
3/8		.358	ORANGE	GLS-2107	50		10SS 3/8	42		S668320	SP3/8
7/16	7 WIRE	.435	GREEN	GLS-2108	56	3	16SS 7/16	48	3	S668384	SP7/16
1/2		.498	BLUE	--	--		--	--		--	--

INSTALLATION: NONE

BILL OF MATERIALS: NONE

NOTES:

I. INDIVIDUAL RODS ARE ASSEMBLED INTO SUBSETS AND GRITTED INTO GROUPS OF TWO, THREE, OR FOUR.

II. CENTER MARK ESTABLISHES ALIGNMENT OF RODS DURING APPLICATION.

III. COLOR CODE AND LENGTH ASSIST IN IDENTIFICATION OF STRAND SIZE.

REFERENCE: NONE

TABLE OF CONTENTS

© 1998 - 2023 San Diego Gas & Electric Company. All rights reserved. Removal of this copyright notice without permission is not permitted under law.

REV	CHANGE	DR	BY	DSN	APV	DATE	REV	CHANGE	DR	BY	DSN	APV	DATE
C	NOTES UPDATE	ARC	RSL	JES	KRG	03/29/2023	F						
B	DRAWING UPDATE	PEI	-	-	-	02/18/2019	E						
A	COMPLETELY REVISED	-	JS	GW	MDJ	09/08/2016	D						

SCOPE: THIS STANDARD LISTS TYPES AND SIZES OF AUTOMATIC GUY SPLICES USED TO SPLICE GUY WIRE.

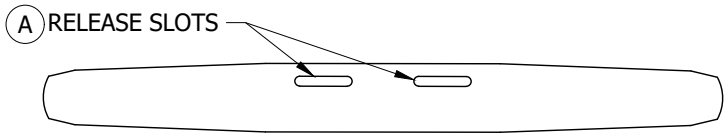

FIGURE 1

TABLE 1

AUTOMATIC SPLICES				
GALVANIZED STEEL STRAND				
GUY WIRE SIZE (IN)	GUY SPLICE RANGE (IN)	MANUFACTURER	STOCK NUMBER	DESIGN UNITS
		RELIABLE		
1/4	.240 - .253	5000	S305679	SA1/4
5/16	.310 - .335	5001	S305683	SA5/16
3/8	.360 - .405	5002	S305687	SA3/8
7/16	.392 - .455	5043	S305691	SA7/16

INSTALLATION:

(A) RELEASE SLOTS PROVIDED FOR GRIP REMOVAL.

BILL OF MATERIALS: NONE

NOTES:

I. AUTOMATIC GUY SPLICES SHALL NOT BE UTILIZED WITH DOWNGUYS/ANCHORS.

REFERENCE: NONE

TABLE OF CONTENTS

© 1998 - 2023 San Diego Gas & Electric Company. All rights reserved. Removal of this copyright notice without permission is not permitted under law.

REV	CHANGE	DR	BY	DSN	APV	DATE	REV	CHANGE	DR	BY	DSN	APV	DATE
C	NOTES UPDATE	ARC	RSL	JES	KRG	03/29/2023	F						
B	DRAWING UPDATE	PEI	-	-	-	02/18/2019	E						
A	COMPLETELY REVISED	-	JS	GW	MDJ	09/08/2016	D						

SCOPE: THIS STANDARD PROVIDES A LIST OF TYPES AND SIZES OF GUY CROSSPLATE ANCHORS & RODS.

INSTALLATION: NONE

BILL OF MATERIALS:

TYPE OF ANCHOR	NOMINAL SQUARE INCHES	ROD SIZE	(IV)(VII) HOLDING POWER (LB)			STOCK NUMBER
			HARD GROUND (I)	MEDIUM GROUND (I)	SOFT GROUND (I)	
16" CROSS PLATE GALV	150	3/4" X 8'	12,500	10,000	5,000	S108128 (V)
20" CROSS PLATE GALV	250	1" X 10'	17,000	13,000	7,000	S108160
24" CROSS PLATE GALV	400	1" X 10'	18,000 (II)	16,000	9,000	S108192

ANCHOR RODS	
DESCRIPTION	STOCK NUMBER
3/4" X 8' GALV WITH DOUBLE EYE	S601920 (V)
1" X 10' GALV WITH TRIPLEYE	S602016
1" X 14' GALV WITH DOUBLE EYE	S601824
1" X 15' GALV WITH DOUBLE EYE	S601856
1" X 16' GALV WITH DOUBLE EYE	S601888
1 1/4" X 10' GALV WITH TRIPLEYE	S602048

O.H. MACRO UNITS ANCHOR ROD, PLATE & GUY ASSEMBLIES				
GUY WIRE SIZE	PLATE SIZE	ROD SIZE	MU ID	
			STD	WRAPPED
1/4	16"	3/4"	1/4SA	-
1/4	20"	1"	1/4LA	-
1/4	20"	1"	-	1/4LW
3/8	16"	3/4"	3/8SA	-
3/8	20"	1"	3/8LA	-
3/8	20"	1"	-	3/8LW
3/8	24"	1"	3/8XA	-
5/16 (V)	16"	3/4"	5/16SA	-
5/16 (V)	20"	1"	5/16LA	-
5/16 (V)	20"	1"	-	5/16LW
7/16	20"	1"	7/16LA	-
7/16	20"	1"	-	7/16LW
7/16	24"	1"	7/16XA	-
7/16	24"	1"	-	7/16XW

NOTES:

(I) SOIL CLASSIFICATION DEFINITIONS:
- HARD GROUND: ROCK, HARDPAN, SHALE OR SANDSTONE.
- MEDIUM GROUND: CLAY OR MOIST GROUND WHICH CAN BE FIRMLY TAMPED.
- SOFT GROUND: LOOSE SAND OR LOAM WITH LITTLE BOND.

(II) ROD STRENGTH AT SAFETY FACTOR OF 2 LIMITS THIS VALUE.

© 1998 - 2019 San Diego Gas & Electric Company. All rights reserved. Removal of this copyright notice without permission is not permitted under law.

REV	CHANGE	BY	DSGN	APPV	DATE	REV	CHANGE	BY	DSGN	APPV	DATE
C						F					
B	DRAWING UPDATE	PEI	-	-	02/18/2019	E					
A	ORIGINAL ISSUE	-	PTA	MF	01/10/2008	D					

X Indicates Latest Revision | Completely Revised | New Page | Information Removed

SDG&E ELECTRIC OVERHEAD CONSTRUCTION STANDARD

CROSSPLATE ANCHORS AND RODS

OH969.1

TABLE OF CONTENTS

NOTES (CONT'D):

III. JOINT ANCHORAGE: CONTACT THE TELEPHONE COMPANY AND/OR APPLICABLE CABLE TV COMPANY FOR JOINT UTILITY PLANNING WHERE ANCHORS ARE TO BE USED JOINTLY OR WHERE JOINT USE IS ANTICIPATED. USE A 1" TRIPLE EYE ROD WITH A 250 OR 400 SQUARE INCH PLATE FOR A DEADEND ANCHOR WHERE THE COMBINED UTILITY GUY TENSIONS (AT A FACTOR OF SAFETY OF 2) DO NOT EXCEED THE ABOVE TABULATED ANCHOR HOLDING POWER. COMBINED GUY TENSIONS (AT A FACTOR OF SAFETY OF 2) EXCEEDING INDIVIDUAL ANCHOR HOLDING POWER WILL NORMALLY REQUIRE A SEPARATE ANCHOR FOR EACH UTILITY'S GUYS. CLOSE CONSIDERATION SHOULD BE GIVEN TO THE SIZE OF DEADEND PLATES. A 400 SQUARE INCH PLATE COSTS 2.4 TIMES THE COST OF A 250 SQUARE INCH PLATE AND ALSO INCREASES ANCHOR COST DUE TO THE NECESSITY OF CHANGING THE DIGGING MACHINE EARTH BORING AUGER TO A LARGER SIZE.

(IV) A FACTOR OF SAFETY OF TWO WAS APPLIED TO THESE HOLDING POWER VALUES.

(V) NO LONGER PURCHASED (FIELD MAINTENANCE ONLY).

VI. IF MORE THAN 18,000 LBS. HOLDING POWER IS NECESSARY AND SOIL IS NON-CORROSIVE. INSTALL TWO ANCHORS, OR USE THE TRIPLE HELIX TYPE SS ANCHOR, PAGE 967. CONCRETE USED AS A BACKFILL IN SOFT UNSTABLE SOIL SUPPLIES 1900 LBS PER CUBIC FOOT.

(VII) IN CORROSIVE AREAS, PROTECTED ANCHORS, PAGE 929.1, SHALL BE INSTALLED.

REFERENCE: NONE

TABLE OF CONTENTS

© 1998 - 2019 San Diego Gas & Electric Company. All rights reserved. Removal of this copyright notice without permission is not permitted under law.

REV	CHANGE	BY	DSGN	APPV	DATE	REV	CHANGE	BY	DSGN	APPV	DATE
C						F					
B	DRAWING UPDATE	PEI	-	-	02/18/2019	E					
A	ORIGINAL ISSUE	-	PTA	MF	01/10/2008	D					

X Indicates Latest Revision | Completely Revised | New Page | Information Removed

SDG&E ELECTRIC OVERHEAD CONSTRUCTION STANDARD

CROSSPLATE ANCHORS AND RODS

OH969.2

SCOPE: THIS STANDARD SHOWS ANCHOR ROD EXTENSION PLATE TO BE USED ONLY AS EXTENSION ON EXISTING ANCHOR RODS WITH FORGED EYES.

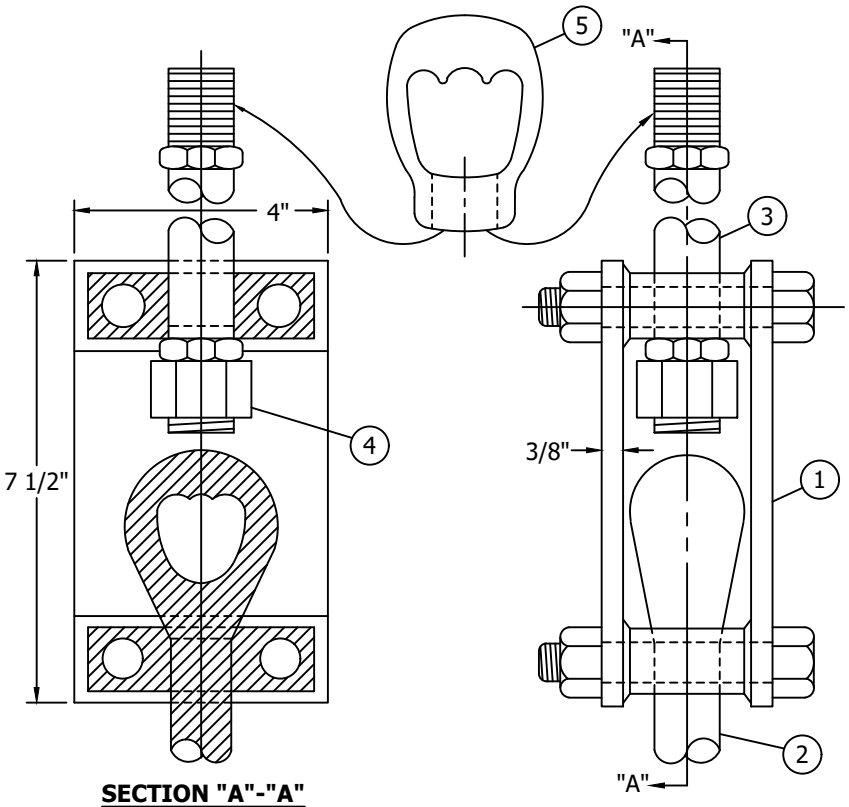

SECTION "A"-"A"

INSTALLATION:

A. MAXIMUM STRENGTH OF EXTENSION PLATE WITH 1" ROD AND SAFETY FACTOR OF 2 IS 18,000#.

B. NOT TO BE USED ON ANCHOR RODS WITH THREADED EYES.

BILL OF MATERIALS:

ITEM	DESCRIPTION		QUANTITY	STOCK NO. OR CONSTR STD	ASSEMBLY UNITS
1	PLATE, ANCHOR ROD EXTENSION (SUPPLIED WITH BOLTS)		1-SET	542360	ROD-XP
2	ANCHOR ROD 1" X 10' OR 3/4" X 8' (EXISTING ANCHOR WITH FORGED EYE)		-	900 SECTION	-
3	ROD, EXTENSION, ANCHOR, 1" X	18"	1	601774	EXT1
		3-1/2'	1	601776	EXT3
		7'	1	601792	EXT7
4	NUT, GALVANIZED 1"		1	506784	-
5	NUT, GALVANIZED TRIPLEYE		1	504016	-

NOTES: NONE

REFERENCE: NONE

© 1998 - 2019 San Diego Gas & Electric Company. All rights reserved. Removal of this copyright notice without permission is not permitted under law.

REV	CHANGE	BY	DSGN	APPV	DATE	REV	CHANGE	BY	DSGN	APPV	DATE
C						F					
B	DRAWING UPDATE	PEI	-	-	02/18/2019	E					
A	EDITORIAL CHANGES	SL	JS	MDJ	03/01/2018	D					

X Indicates Latest Revision | Completely Revised | New Page | Information Removed

SDG&E ELECTRIC OVERHEAD CONSTRUCTION STANDARD

ANCHOR ROD EXTENSION PLATE

OH969.3

TABLE OF CONTENTS

SCOPE: THIS STANDARD SHOWS AN ANCHOR ROD EXTENSION.

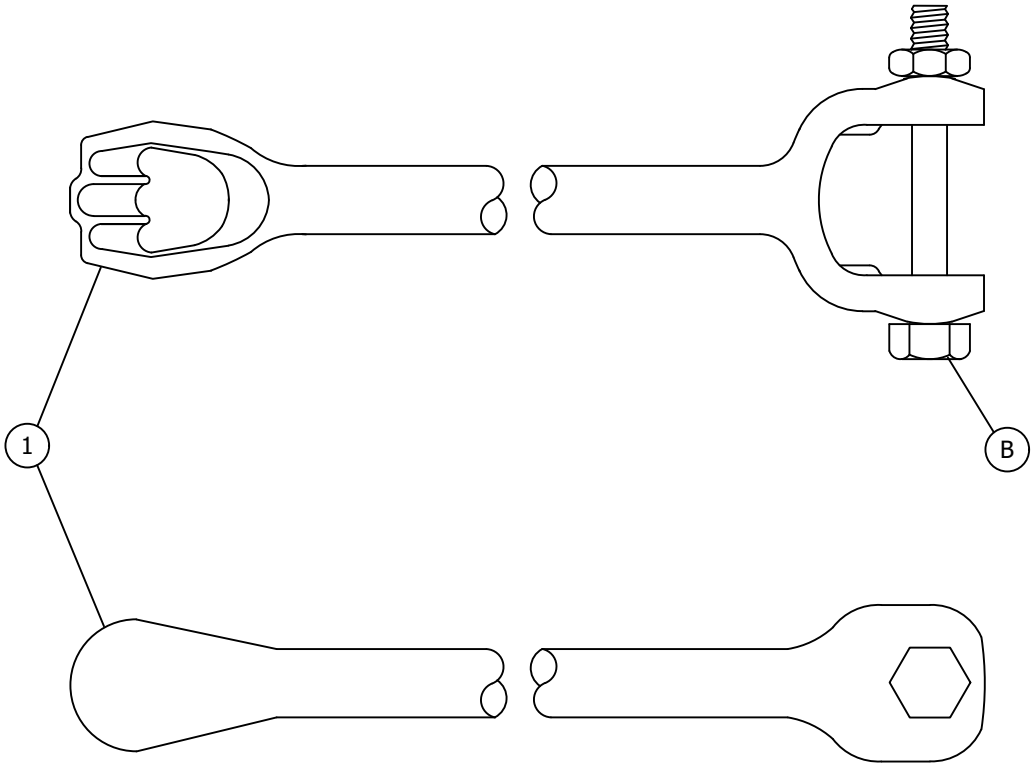

INSTALLATION:

A. MAXIMUM STRENGTH OF EXTENSION WITH 1" ROD AND SAFETY FACTOR OF TWO IS 18,000 LBS.

(B) INCLUDES 1" X 5" HEX HEAD GRADE 2 BOLT AND NUT.

BILL OF MATERIALS:

ITEM	DESCRIPTION	QUANTITY	STOCK NO. OR CONSTR STD	ASSEMBLY UNITS
1	ROD, EXTENSION, ANCHOR, 1-1/4" X 24", GALVANIZED (B)	1	S108214	EXT24

NOTES: NONE

REFERENCE: NONE

TABLE OF CONTENTS

© 1998 - 2019 San Diego Gas & Electric Company. All rights reserved. Removal of this copyright notice without permission is not permitted under law.

REV	CHANGE	BY	DSGN	APPV	DATE	REV	CHANGE	BY	DSGN	APPV	DATE
C						F					
B	DRAWING UPDATE	PEI	-	-	02/18/2019	E					
A	EDITORIAL CHANGES	SL	JS	MDJ	03/01/2018	D					

X Indicates Latest Revision | Completely Revised | New Page | Information Removed

SDG&E ELECTRIC OVERHEAD CONSTRUCTION STANDARD

ANCHOR ROD EXTENSION

OH969.4

SCOPE: THIS STANDARD SHOWS SIDEWALK ANCHOR GUY TO BE USED ONLY WHERE A STANDARD ANCHOR GUY WILL INTERFERE WITH PEDESTRIAN TRAFFIC, PROPERTY RIGHTS, OR OBSTRUCTIONS WILL PREVENT ITS USE.

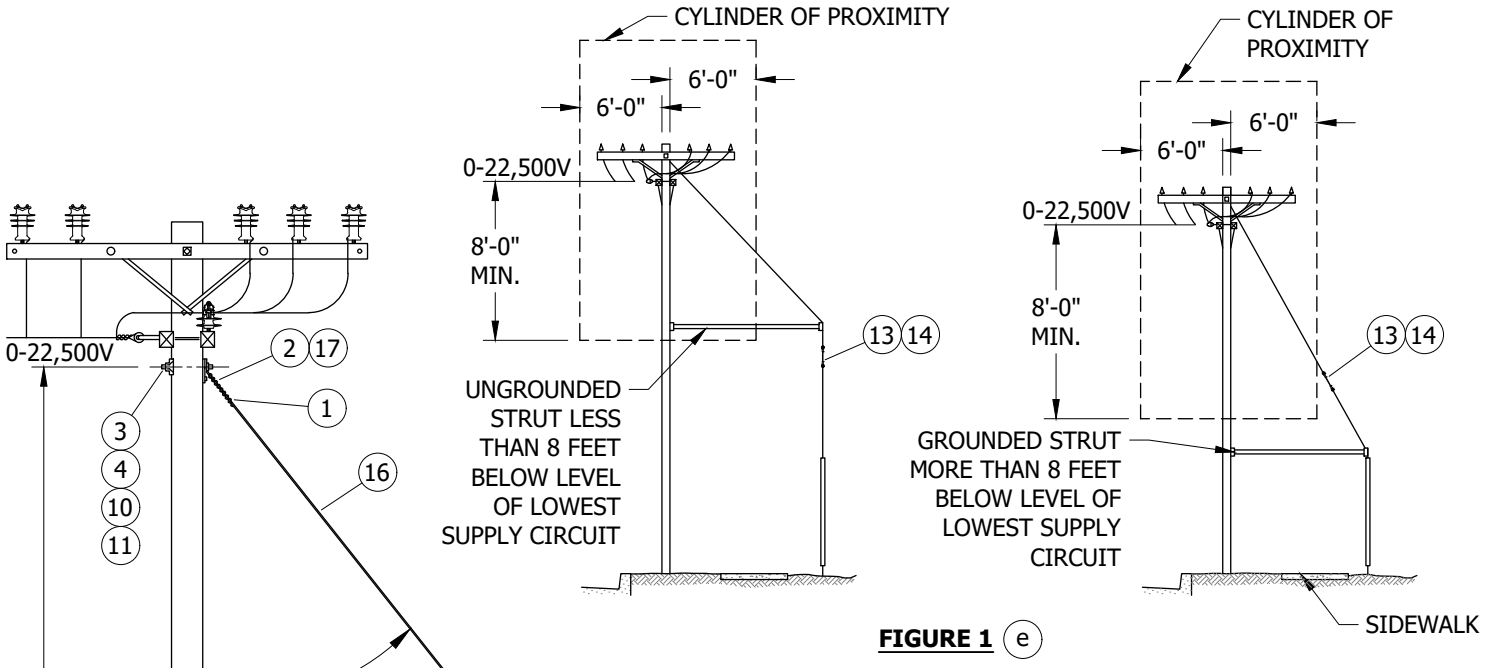

FIGURE 1 (e)

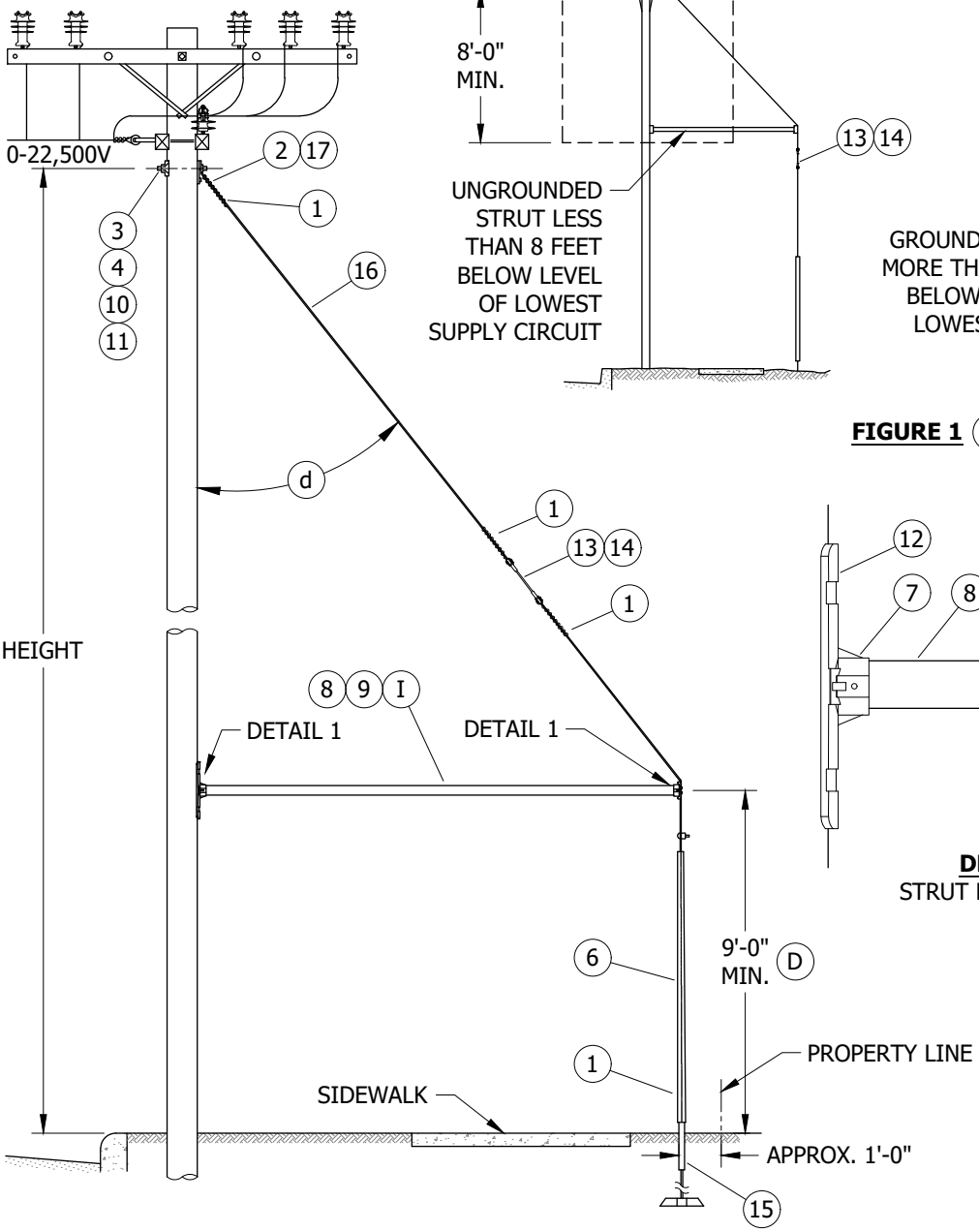

FIGURE 2

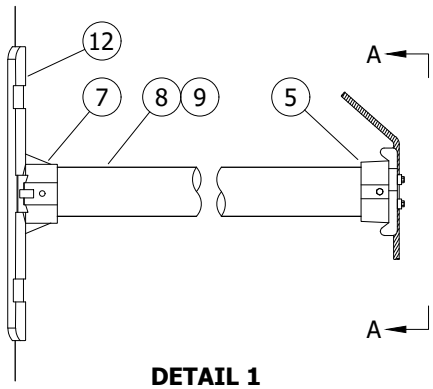

DETAIL 1
STRUT END FITTINGS

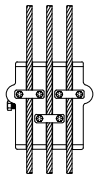

VIEW A-A
ANCHOR PLATE END CAP

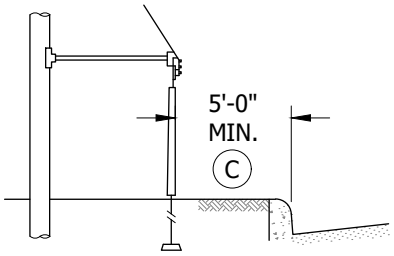

DETAIL 2

TABLE OF CONTENTS

© 1998 - 2022 San Diego Gas & Electric Company. All rights reserved. Removal of this copyright notice without permission is not permitted under law.

REV	CHANGE	DR	BY	DSN	APV	DATE	REV	CHANGE	DR	BY	DSN	APV	DATE
C	FIGURE UPDATE	EDM	GLW	JES	CZH	03/05/2021	F						
B	DRAWING UPDATE	PEI	-	-	-	02/18/2019	E						
A	DRAWING UPDATES	-	JC	JS	MDJ	07/25/2017	D	BILL OF MATERIALS UPDATE	EDM	RSL	JAS	KRG	09/30/2022

X Indicates Latest Revision | Completely Revised | New Page | Information Removed

SDG&E ELECTRIC OVERHEAD CONSTRUCTION STANDARDS

SHEET 1 OF 2

SIDEWALK ANCHOR GUY

OH971.1

INSTALLATION:

(A) IF END FITTING TO HAVE THREE GUYS, 2 1/2" STRUT SHALL BE UTILIZED (ONLY WHERE 3 GUYS ARE EXISTING OR A FUTURE CERTAINTY).

(B) END PLATE CAN BE USED FOR 2" OR 2 1/2" STRUT AND ALL GUY WIRE SIZES.

(C) WHENEVER POSSIBLE, DO NOT INSTALL SIDEWALK ANCHOR GUY CLOSER THAN 5 FEET BEHIND CURB POSITION TO PREVENT VEHICULAR CONTACT.

(D) SET STRUT AS CLOSE TO 9'-0" AGL AS PRACTICAL.

BILL OF MATERIALS:

ITEM	DESCRIPTION	QUANTITY		STANDARD PAGE	STOCK NUMBER	DESIGN UNITS	SAP CU
		10M OR 3/8	16M OR 7/16				
1	GRIPS, GUY	4	4	900 SECTION	--	--	--
2	GUY HOOK, GALV., 3/4"	1	1	--	--	--	--
3	WASHER, SQUARE CURVED RIB, 5/8", 3" X 3"	1	--	--	S797792	--	--
4	WASHER, SQUARE CURVED RIB, 3/4", 4" X 4"	--	1	--	S797760	RIBWSH	RIBWSH
5	CAP, END PLATE, ANCHOR, SIDEWALK (1, 2, 3 GUYS) (A)(B)	1	1	--	S108430	END3G	END3G
6	MARKER, GUY WIRE, 8'-0"	1	1	--	S476314 (X)	GUYMKR	GUYMKR
7	PLATE, ANCHOR, SIDEWALK, 18"	1	1	--	S108432	PPLATE	PPLATE
8	STRUT, PIPE, 2" STD GALV., 12'-0"	1	--	--	S536736	STRT2	STRT2
9	STRUT, PIPE, 2 1/2" STD GALV., 15'-0"	--	1	--	S536864	STRT2+	STRT2LG
10	BOLT, GALV., 5/8" X LENGTH REQ'D	1	--	390	--	--	--
11	BOLT, GALV., 3/4" X LENGTH REQ'D	--	1	390	--	--	--
12	LAG SCREW, 1/2" X 4"	4	4	--	S621568	--	--
13	ROD, FIBERGLASS, 10"	1	--	--	S602942 (X)	--	--
14	ROD, FIBERGLASS, 12"	--	1	--	S602944	--	--
15	ANCHOR AND ROD	AS REQ'D		900 SECTION	--	--	--
16	GUY WIRE	AS REQ'D		900 SECTION	--	--	--
17	CONNECTOR, SHEAR PLATE, #2	--	1	--	S262240	SHRPLT	SHRPLT

NOTES:

(I) STRUT LENGTHS MAY BE ADJUSTED TO ACCOMMODATE SPECIFIC SITUATIONS. MAXIMUM LENGTH OF 2.5-INCH DIAMETER STRUT IS 15 FEET. MAXIMUM LENGTH OF 2-INCH DIAMETER STRUT IS 12 FEET.

(X) THIS ITEM IS EXEMPT.

REFERENCE:

a. FOR POLE CLASS, SEE OH303.2.

b. FOR FIBERGLASS GUY INSULATOR REQUIREMENTS, SEE OH909.3 NOTE B.

c. SEE OH927.3 & OH928.2, NOTES 2 & 3.

(d) TO DETERMINE GUY STRESS, SEE OH920, GUY TENSION CHARTS.

(e) G.O.95 RULE 56.7B.

TABLE OF CONTENTS

© 1998 - 2022 San Diego Gas & Electric Company. All rights reserved. Removal of this copyright notice without permission is not permitted under law.

REV	CHANGE	DR	BY	DSN	APV	DATE	REV	CHANGE	DR	BY	DSN	APV	DATE
C	FIGURE UPDATE	EDM	GLW	JES	CZH	03/05/2021	F						
B	DRAWING UPDATE	PEI	-	-	-	02/18/2019	E						
A	DRAWING UPDATES	-	JC	JS	MDJ	07/25/2017	D	BILL OF MATERIALS UPDATE	EDM	RSL	JAS	KRG	09/30/2022

SCOPE: THIS STANDARD DESCRIBES POLE CLASS SELECTION FOR SIDEWALK ANCHORS.

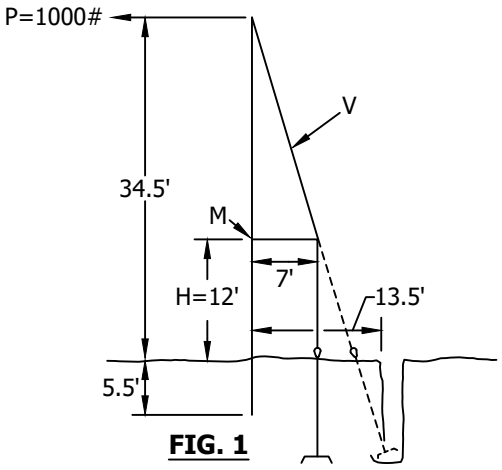

FIG. 1

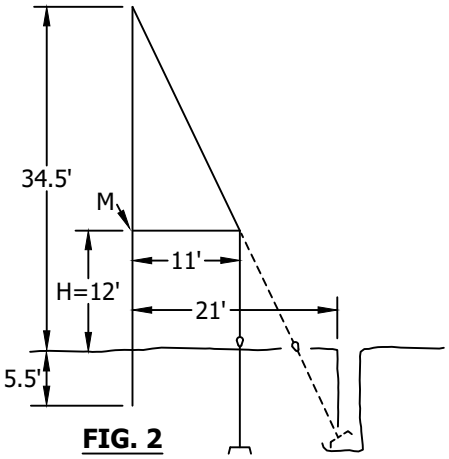

FIG. 2

EXAMPLE:

PROBLEM: DETERMINE THE CLASS OF POLE TO BE SET FOR A GIVEN HORIZONTAL PULL ON A SIDEWALK ANCHOR.

ASSUME: HORIZONTAL PULL (P) = 1,000 LBS
LENGTH OF POLE = 40 FEET
NO EQUIPMENT ON POLE
7 FT STRUT, 12 FT ABOVE GROUND LEVEL (H)

SOLUTION: FIND BENDING MOMENT (M), AND VERTICAL LOADING (V)

BENDING MOMENT
M = P X H = 1,000 LBS X 12 FT = 12,000 FT-LB

VERTICAL LOADING
USING GUY COMPUTER, FIND THE GUY TENSION OF 1,000 LBS HORIZONTAL PULL ON 40 FT POLE AND 13.5 FT ANCHOR (SEE FIG.1)
VERTICAL LOADING V = 3400 LBS

TRY A 40 FT CLASS 3 POLE WITH SF=4 (SEE STD. 354) FOR WIND LOADING AND VERTICAL LOADING USABLE STRENGTH

INTERACTION EQUATION: $\frac{M}{\text{WIND LOADING USEABLE STRENGTH}} + \frac{V}{\text{VERTICAL LOADING USEABLE STRENGTH}} \leq 1.0$

$$\frac{12{,}000 \text{ FT-LB}}{21{,}827 \text{ FT-LB}} + \frac{3{,}400 \text{ LB}}{7{,}768 \text{ LB}} = .549 + .437 = .986 \leq 1.0$$

CONCLUSION: A 40 FT CLASS 3 POLE IS ADEQUATE FOR THE HORIZONTAL PULL OF 1,000 LBS.

INSTALLATION: NONE

BILL OF MATERIALS: NONE

NOTES:
I. USE THE DIMENSIONS SHOWN IN FIG. 2 WHEN CONSTRUCTING SIDEWALK ANCHOR USING 11 FT. STRUT.

REFERENCE: NONE

© 1998 - 2019 San Diego Gas & Electric Company. All rights reserved. Removal of this copyright notice without permission is not permitted under law.

REV	CHANGE	BY	DSGN	APPV	DATE	REV	CHANGE	BY	DSGN	APPV	DATE
C						F					
B	DRAWING UPDATE	PEI	-	-	02/18/2019	E					
A	ORIGINAL ISSUE	-	PTA	VCR	01/01/2000	D					

X Indicates Latest Revision | Completely Revised | New Page | Information Removed

SHEET 1 OF 1

SDG&E ELECTRIC OVERHEAD CONSTRUCTION STANDARD

SIDEWALK ANCHOR POLE CLASS SELECTION

OH972.1

TABLE OF CONTENTS

SCOPE: THIS STANDARD ILLUSTRATES INSTALLATION OF ROCK ANCHORS.

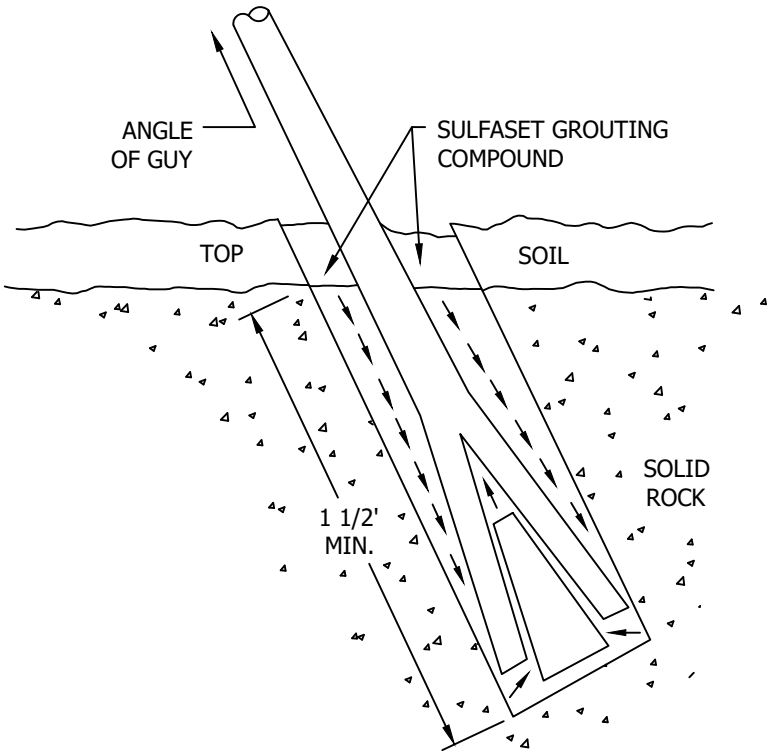

INSTALLATION: NONE

BILL OF MATERIALS:

ROCK ANCHORS										
SULFASET ANCHORING COMPOUND			ROD SIZE	HOLDING POWER (III)	STOCK NO.	ASSEMBLY UNITS	ROD SIZE	HOLDING POWER (III)	STOCK NO.	ASSEMBLY UNITS
MANUFACTURER	CATALOG NUMBER	STOCK NO.								
RANDUSTRIAL CORPORATION	F-181	S248060	1" X 2'	18,000	S108308	RA2	1" X 7'	18,000	S108384	RA7
			1" X 3'	18,000	S108312	RA3	1" X 8'	18,000	S108400	RA8
-	-	-	1" X 4'	18,000	S108320	RA4	1" X 9'	18,000	S108416	RA9
			1" X 5'	18,000	S108336	RA5	1" X 10'	18,000	S108304	RA10
-	-	-	1" X 6'	18,000	S108352	RA6	-	-	-	-

NOTES:

I. ANCHOR ROD TO BE INSTALLED AT SAME ANGLE AS GUY WIRE. DO NOT BEND ANCHOR ROD AFTER INSTALLATION.

II. ROCK ANCHOR WILL BE INSTALLED AT A MINIMUM DEPTH OF 1 1/2 FEET IN SOLID ROCK.

(III) HOLDING POWER HAS A FACTOR OF SAFETY OF TWO.

REFERENCE: NONE

© 1998 - 2019 San Diego Gas & Electric Company. All rights reserved. Removal of this copyright notice without permission is not permitted under law.

REV	CHANGE	BY	DSGN	APPV	DATE	REV	CHANGE	BY	DSGN	APPV	DATE
C						F					
B	DRAWING UPDATE	PEI	-	-	02/18/2019	E					
A	ORIGINAL ISSUE	-	PTA	RDJ	01/01/1994	D					

X Indicates Latest Revision | Completely Revised | New Page | Information Removed

SDG&E ELECTRIC OVERHEAD CONSTRUCTION STANDARD

ROCK ANCHORS

SHEET 1 OF 1

OH973.1

TABLE OF CONTENTS

SCOPE: THIS STANDARD SHOWS A TYPICAL GUY MARKER INSTALLATION ON DOWNGUY IN A CONCRETE SIDEWALK.

TABLE 1

O.H. MACRO UNITS ONE SIDEWALK DOWNGUY MARKER AND GUY ASSEMBLY	
GUY WIRE SIZE	**MU ID**
1/4	1/4DM
5/16 (E)	5/16DM
3/8	3/8DM
7/16	7/16DM

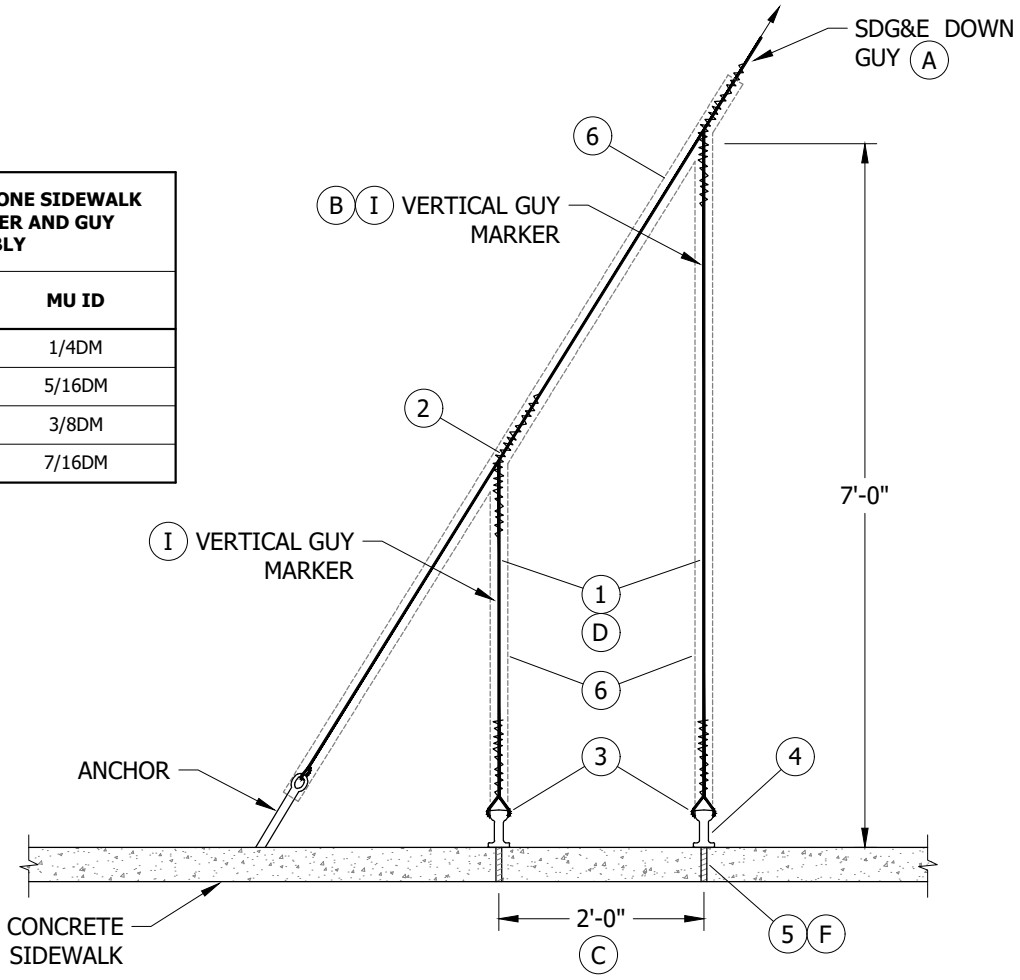

FIGURE 1

INSTALLATION:

(A) BEFORE INSTALLING VERTICAL GUY MARKER(S) ON EXISTING DOWNGUY, RE-TENSION DOWNGUY TO ANCHOR IF NECESSARY.

(B) CONNECT THE FIRST VERTICAL GUY MARKER (NEAREST TO POLE) TO THE SDG&E DOWNGUY AT A LEVEL 7'-0" ABOVE SIDEWALK SURFACE.

(C) INSTALL ADDITIONAL VERTICAL GUY MARKERS AT 2'-0" INTERVALS TOWARD THE ANCHOR FROM FIRST VERTICAL GUY MARKER. DO NOT INSTALL VERTICAL GUY MARKER WHERE DISTANCE FROM DOWN GUY TO SIDEWALK SURFACE IS LESS THAN 3'-0".

(D) TENSION VERTICAL GUYS SUFFICIENTLY TO REMOVE SLACK, BUT NOT ENOUGH TO DEFLECT DOWNGUY.

(E) THIS WIRE IS NO LONGER PURCHASED.

(F) WHEN INSTALLING CONCRETE ANCHOR BOLT, DRILL THROUGH SIDEWALK. THIS WILL MAKE FUTURE BOLT REMOVAL EASIER BY DRIVING BOLT DOWN THROUGH SIDEWALK.

© 1998 - 2020 San Diego Gas & Electric Company. All rights reserved. Removal of this copyright notice without permission is not permitted under law.

REV	CHANGE	DR	BY	DSN	APV	DATE	REV	CHANGE	DR	BY	DSN	APV	DATE
C	TABLE UPDATE	EDM	JIK	JES	CZH	11/9/2020	F						
B	DRAWING UPDATE	-	PEI	-	-	2/18/2019	E						
A	ORIGINAL ISSUE	-	-	PTA	MF	3/13/2006	D						

X Indicates Latest Revision | Completely Revised | New Page | Information Removed

TABLE OF CONTENTS

BILL OF MATERIALS:

ITEM	DESCRIPTION	QUANTITY	STANDARD PAGE	STOCK NUMBER	DESIGN UNITS
1	WIRE, GUY (SAME SIZE AND TYPE AS DOWNGUY)	AS REQ'D	961	-	-
2	SPLICE, GUY (SIZE AND TYPE AS REQ'D)	AS REQ'D	962	-	-
3	GRIP, GUY (SIZE AND TYPE AS REQ'D)	AS REQ'D	962	-	-
4	EYELET, THIMBLE, 5/8", GALV.	AS REQ'D	962	S338176	-
5	ANCHOR, CONCRETE, 1/2" X 4", 1/2" S/S ROUND WASHER AND 1/2" S/S NUT	AS REQ'D	-	S107654	-
6	MARKER, GUY, YELLOW, 8'-0"	AS REQ'D	-	S476314 (X)	-

NOTES:

(I) GUY MARKERS ARE TO BE ATTACHED TO SDG&E DOWNGUYS ONLY.

(X) THIS ITEM IS EXEMPT.

REFERENCE: NONE

TABLE OF CONTENTS

© 1998 - 2020 San Diego Gas & Electric Company. All rights reserved. Removal of this copyright notice without permission is not permitted under law.

REV	CHANGE	DR	BY	DSN	APV	DATE	REV	CHANGE	DR	BY	DSN	APV	DATE
C	TABLE UPDATE	EDM	JIK	JES	CZH	11/9/2020	F						
B	DRAWING UPDATE	-	PEI	-	-	2/18/2019	E						
A	ORIGINAL ISSUE	-	-	PTA	MF	3/13/2006	D						

MAIN TABLE OF CONTENTS

PAGE	SUBJECT
1001	TABLE OF CONTENTS
1002	GROUNDING GENERAL INFORMATION
1003	BONDING GENERAL INFORMATION
1004	NEUTRAL GROUNDING TO STEEL POLES

REV	CHANGE	DRWN	BY	CHKD	APVD	DATE
F	REVISED TO 3D FORMAT	ARC	JIK	-	-	05/10/2022
E	UPDATED TABLE OF CONTENTS	PEI	-	-	-	03/18/2019
D	UPDATES TO 1003	GW	JS	-	MDJ	11/28/2016

SDGE — A Sempra Energy utility®

© 1998 - 2022 San Diego Gas and Electric Company. All rights reserved. Removal of this copyright notice without permission is not permitted under law.

SDG&E ELECTRIC OVERHEAD CONSTRUCTION STANDARDS

GROUNDING, BONDING SECTION
TABLE OF CONTENTS

SCALE: NOT TO SCALE

DRAWING NO:	SHEET:
OH1001.1	1 OF 1

X Indicates Latest Revision | Completely Revised | New Page | Information Removed

SCOPE: THIS STANDARD SHOWS GROUNDING DETAILS FOR WOOD, FIBERGLASS, CONCRETE, AND STEEL POLES.

ATTENTION:

* THE PURPOSE OF THIS SECTION IS TO DEFINE GROUNDING APPLICATIONS FOR THE OVERHEAD DISTRIBUTION SYSTEM AND TO IDENTIFY EQUIPMENT TO BE GROUNDED AND THE METHODS FOR GROUNDING THEM.

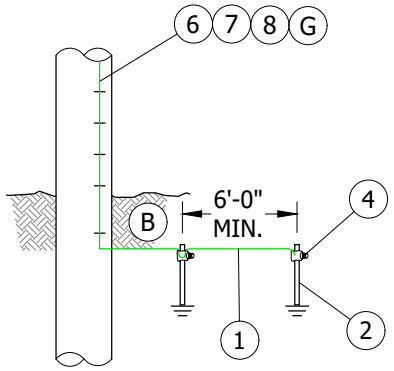

FIGURE 1
WOOD OR FIBERGLASS

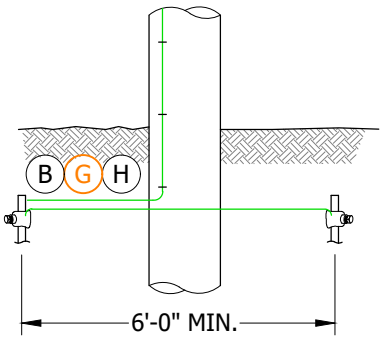

FIGURE 2
WOOD OR FIBERGLASS

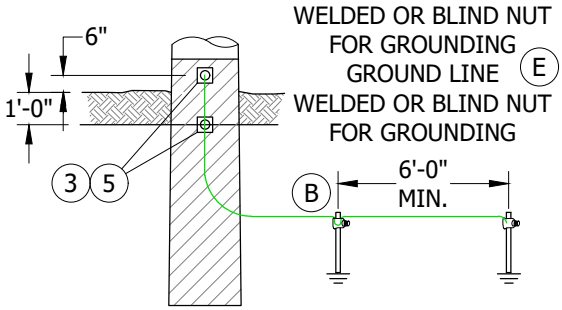

FIGURE 3
STEEL

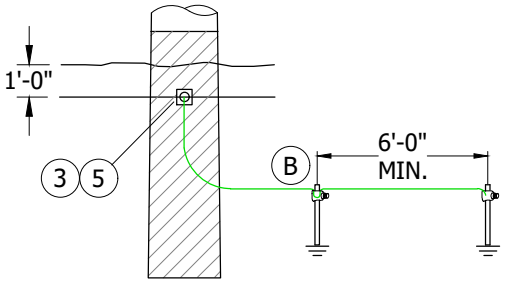

FIGURE 4
CONCRETE

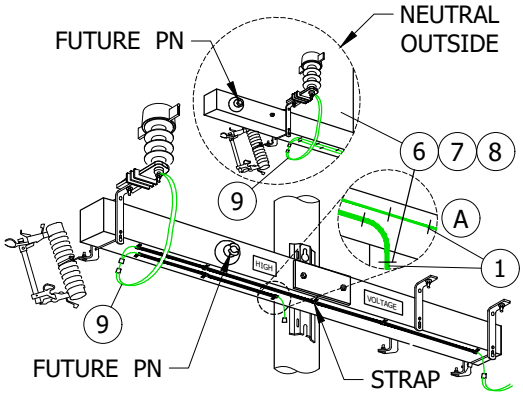

FIGURE 5
FIBERGLASS ARM ON WOOD/FIBERGLASS POLE

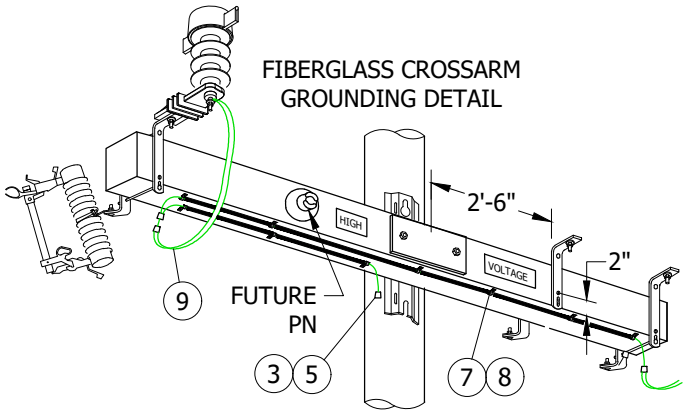

FIGURE 6
FIBERGLASS ARM ON STEEL/CONCRETE POLES

© 1998 - 2022 San Diego Gas & Electric Company. All rights reserved. Removal of this copyright notice without permission is not permitted under law.

REV	CHANGE	DR	BY	DSN	APV	DATE	REV	CHANGE	DR	BY	DSN	APV	DATE
C	EDITORIAL CHANGES	-	GW	JS	MDJ	04/01/2018	F	BILL OF MATERIALS UPDATE	EDM	RSL	JES	FRC	03/01/2022
B	UPDATE DRAWING & NOTES	-	GW	GW	MDJ	06/16/2016	E	EDITORIAL CHANGES	EDM	JAC	JES	CZH	03/09/2020
A	EDITORIAL CHANGES	-	JC	IL	JS	02/19/2015	D	EDITORIAL CHANGES	-	GW	JS	CZH	09/01/2018

TABLE OF CONTENTS

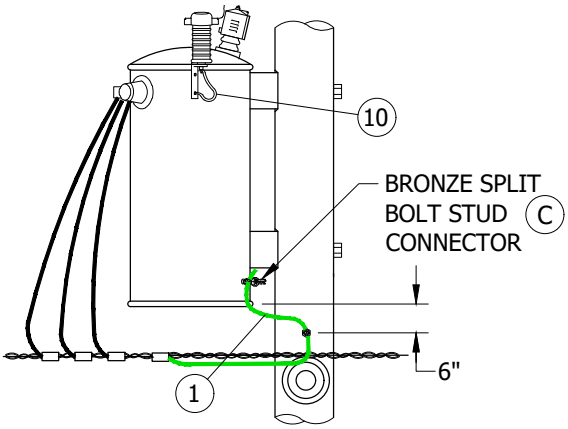

FIGURE 7
EQUIPMENT ON ALL DISTRIBUTION POLES (F)

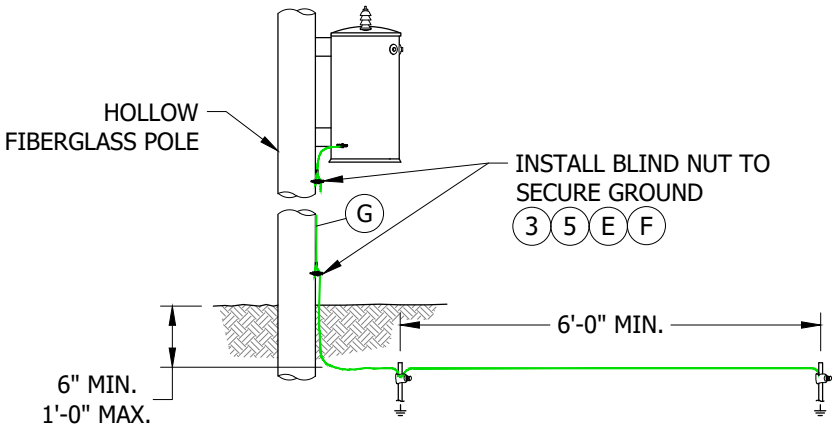

FIGURE 8
EQUIPMENT ON FIBERGLASS POLES

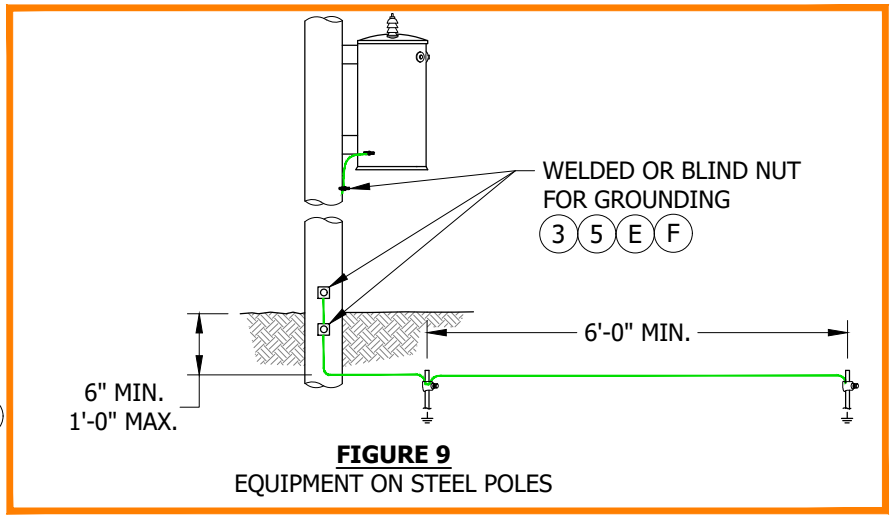

FIGURE 9
EQUIPMENT ON STEEL POLES

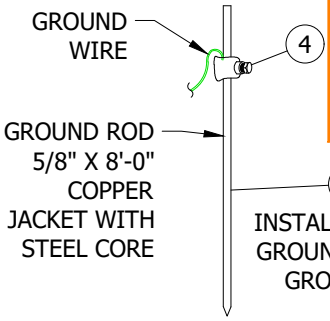

GROUND CONNECTOR

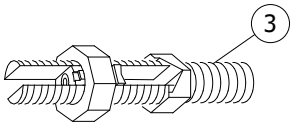

BRONZE SPLIT BOLT
STUD CONNECTOR
1/2" X 13

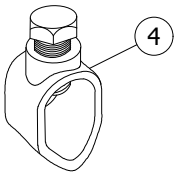

COPPER BONDED
GROUND ROD CONNECTORS

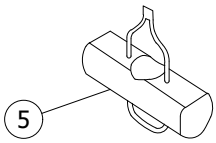

BLIND NUT

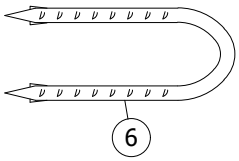

SERRATED COVERED
GROUND WIRE STAPLE
2" X 7/8" X 1/8"

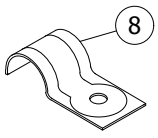

CLIP

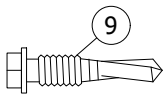

SELF-TAPPING SCREW

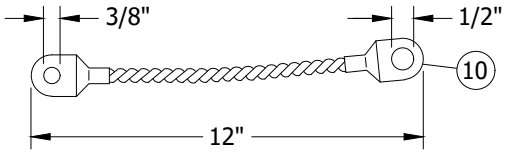

COPPER GROUNDING HARNESS

FIGURE 10
GROUNDING COMPONENTS

© 1998 - 2022 San Diego Gas & Electric Company. All rights reserved. Removal of this copyright notice without permission is not permitted under law.

REV	CHANGE	DR	BY	DSN	APV	DATE	REV	CHANGE	DR	BY	DSN	APV	DATE
C	EDITORIAL CHANGES	-	GW	JS	MDJ	04/01/2018	F	BILL OF MATERIALS UPDATE	EDM	RSL	JES	FRC	03/01/2022
B	UPDATE DRAWING & NOTES	-	GW	GW	MDJ	06/16/2016	E	EDITORIAL CHANGES	EDM	JAC	JES	CZH	03/09/2020
A	EDITORIAL CHANGES	-	JC	IL	JS	02/19/2015	D	EDITORIAL CHANGES	-	GW	JS	CZH	09/01/2018

Indicates Latest Revision | Completely Revised | New Page X | Information Removed

TABLE OF CONTENTS

DEFINITIONS:

- **GROUND**: A CONDUCTING CONNECTION, WHETHER ACCIDENTAL OR INTENTIONAL, BETWEEN AN ELECTRICAL CIRCUIT OR EQUIPMENT AND THE EARTH.
- **GROUND CONNECTION**: THE EQUIPMENT USED IN ESTABLISHING A CONDUCTING PATH BETWEEN AN ELECTRICAL CIRCUIT OR EQUIPMENT AND EARTH. A GROUND CONNECTION CONSISTS OF A GROUND CONDUCTOR, A GROUND ELECTRODE AND THE EARTH WHICH SURROUNDS THE ELECTRODE. (b)
- **GROUNDED**: CONNECTED TO EARTH BY A GROUND CONNECTION OR BY AN UNINTENTIONAL CONDUCTING PATH.
- **EFFECTIVELY GROUNDED**: GROUNDED THROUGH A GROUND CONNECTION OF SUFFICIENTLY LOW IMPEDANCE (INHERENTLY AND/OR INTENTIONALLY OBTAINED) SO THAT GROUND FAULT WHICH MAY OCCUR CANNOT BUILD UP VOLTAGES DANGEROUS TO CONNECTED EQUIPMENT. (c)

  A GROUND CONNECTION WITH AN IMPEDANCE OF NOT MORE THAN 25 OHMS IS CONSIDERED AN EFFECTIVELY GROUNDED SYSTEM. (d)

  CONNECTING A GROUND CONDUCTOR NOT LESS THAN #6 AWG COPPER CONNECTED TO TWO CORROSION RESISTING RODS, NOT LESS THAN 5/8-INCH IN DIAMETER AND EIGHT FEET IN LENGTH AND CONTINUOUS THROUGHOUT, DRIVEN TO A MINIMUM DEPTH OF EIGHT FEET IN THE EARTH AT NOT LESS THAN SIX-FOOT CENTERS, WILL BE CONSIDERED AN EFFECTIVE GROUND. (d)
- **PERMANENTLY GROUNDED**: REFERS TO TIME AND MEANS GROUNDED WHILE THE EQUIPMENT CONCERNED IS IN PLACE UNDER THE CONDITIONS SPECIFIED IN THESE RULES. (e)
- **SECURELY GROUNDED**: CONNECTED TO EARTH THROUGH A METAL SURFACE IN GOOD CONTACT WITH THE EARTH SUCH AS THE CONTACT OF ANCHOR RODS OR METAL POLES SET DIRECTLY IN THE GROUND. METAL POLES SET IN CONCRETE ARE CONSIDERED AS GROUNDED BUT WILL NOT BE CONSIDERED AS SECURELY GROUNDED. (e)

INSTALLATION:

(A) PVC COVERED GROUND WIRE SHALL BE USED ON ALL EQUIPMENT INSTALLATIONS. A MINIMUM OF #4 AWG SOLID COPPER PVC COVERED GROUND WIRE SHALL BE USED FOR EQUIPMENT AND SECONDARY GROUNDS.

(B) MINIMUM ROD AND WIRE DEPTH SHALL BE SIX INCHES UNDER CONCRETE OR FINISHED GRADE, 12 INCHES FOR OPEN GROUND, AND 18 INCHES IN AREAS SUBJECT TO PLOWING.

(C) FOR HJ AND YJ TRANSFORMERS, REMOVE THE GAP GROUND AND INSTALL THE BRONZE SPLIT BOLT CONNECTOR AND A CONTINUOUS PIECE OF #4 AWG SOLID COPPER WIRE FROM THE TANK GROUND THROUGH THE POLE GROUND CONNECTION AND TERMINATE ON THE SECONDARY NEUTRAL.

D. ALL STEEL AND CONCRETE POLES WILL BE EFFECTIVELY GROUNDED.

(E) USE BLIND NUTS TO PROVIDE A GROUNDING POINT ON STEEL, CONCRETE, AND FIBERGLASS POLES. AN 1 1/8-INCH HOLE IS REQUIRED TO INSTALL THE BLIND NUT.

(F) ALL EQUIPMENT HAVING GROUND PROVISIONS SUCH AS TRANSFORMERS, SWITCHES, CAPACITORS, AND REGULATORS SHALL BE INTENTIONALLY GROUNDED TO A GROUND WIRE OR STEEL POLE TO PROVIDE A LOW IMPEDANCE GROUND FAULT PATH TO ENSURE GROUND FAULT WILL NOT REMAIN. A PROPER LOW RESISTANCE GROUND CONNECTION IS NECESSARY FOR SAFE OPERATION.

(G) STAPLES ARE USED TO ATTACH GROUND WIRE TO WOOD POLES. CLIPS WITH SELF-TAPPING SCREWS ARE USED TO ATTACH GROUND WIRE TO FIBERGLASS POLES.

(H) WHEN PERFORMING CORRECTIVE MAINTENANCE REPAIRS, REMOVE WOOD MOULDING AND REPLACE WITH THE #4 PVC COVERED GROUND WIRE.

BILL OF MATERIALS:

ITEM	DESCRIPTION		QUANTITY	STANDARD PAGE	STOCK NUMBER	DESIGN UNITS	MACRO	
1	WIRE, SOLID, #4 SOFT DRAWN CU, UV RESISTANT (A)	WOOD/FG	50'-0"	--	S812490	--	GNDPVC (FOR WOOD) (VI)	GNDPSP (FOR STEEL) (VI)
		STEEL	12'-0"					
2	ROD, GROUND, COPPERWELD, 5/8" X 8'-0"		2	--	S603074 (X)	--		
3	CONNECTOR, SPLIT BOLT, BRONZE, 1/2" X 13		2	--	S262560	SPCONN	--	

© 1998 - 2022 San Diego Gas & Electric Company. All rights reserved. Removal of this copyright notice without permission is not permitted under law.

REV	CHANGE	DR	BY	DSN	APV	DATE	REV	CHANGE	DR	BY	DSN	APV	DATE
C	EDITORIAL CHANGES	-	GW	JS	MDJ	04/01/2018	F	BILL OF MATERIALS UPDATE	EDM	RSL	JES	FRC	03/01/2022
B	UPDATE DRAWING & NOTES	-	GW	GW	MDJ	06/16/2016	E	EDITORIAL CHANGES	EDM	JAC	JES	CZH	03/09/2020
A	EDITORIAL CHANGES	-	JC	IL	JS	02/19/2015	D	EDITORIAL CHANGES	-	GW	JS	CZH	09/01/2018

TABLE OF CONTENTS

BILL OF MATERIALS (CONT'D):

ITEM	DESCRIPTION		QUANTITY	STANDARD PAGE	STOCK NUMBER	DESIGN UNITS	MACRO	
4	CLAMP, GROUND ROD, 5/8"		AS REQ'D	--	S230018 (X)	--	--	--
5	BLIND NUT, 1/2"	STEEL FG	AS REQ'D	--	S503460 (X)	--	--	--
6	STAPLES, GALVANIZED (FOR PVC COVERED GROUND WIRE)	WOOD	AS REQ'D	--	S678564 (X)	--	--	--
7	SCREW, SELF TAPPING, 1 1/4", #12, 24 THREADED	FG	AS REQ'D	-	S618086 (X)	--	--	--
8	STRAP, PIPE, GALV, 3/8", ONE HOLE		AS REQ'D	--	S697304	--	--	--
9	ARRESTER GROUND STRAP		AS REQ'D	--	S698754	--	--	--
10	HARNESS, GROUNDING, SINGLE 12", STRANDED TIN COPPER		AS REQ'D	--	S403522	--	--	--

NOTES:

I. CONCRETE POLES COME WITH PRE-INSTALLED GROUNDING POINTS.

II. TRANSMISSION GROUNDING STANDARDS SUPERSEDE DISTRIBUTION GROUNDING STANDARDS ON STEEL AND CONCRETE TRANSMISSION STRUCTURES.

III. PURPOSE OF GROUNDING

a. TO PROVIDE A PATH TO GROUND FOR LIGHTNING AND SURGES.

b. SYSTEM GROUNDING TO STABILIZE CIRCUIT POTENTIALS WITH RESPECT TO GROUND AND TO PROVIDE A MEANS OF CIRCUIT RELAYING TO CLEAR GROUND FAULTS.

c. GROUNDING OF NON-CURRENT CARRYING STRUCTURES AND PARTS AND AUXILIARY LOW VOLTAGE CIRCUITS FOR SAFETY TO PERSONNEL.

d. COMPLY WITH CALIFORNIA GENERAL ORDER REQUIREMENTS.

IV. GENERAL APPLICATIONS

a. LOCATE GROUND RODS AND HORIZONTAL RUNS CLEAR OF ROAD MAINTENANCE WORK INSTALL AND GROUND WIRE ON THE SIDE OF POLES AWAY FROM TRAFFIC AND OUT OF THE CLIMBING SPACE.

b. WHERE PRACTICABLE, THE CLOSEST GROUND ROD SHALL BE LOCATED NOT LESS THAN 12 INCHES FROM THE POLE SURFACE.

c. GROUND RODS SHALL BE DRIVEN THEIR ENTIRE LENGTH INTO THE EARTH. ROD AND WIRE DEPTH SHALL BE SIX INCHES MINIMUM, UNDER CONCRETE OR FINISHED GRADE, TWELVE INCHES FOR OPEN GROUND, AND EIGHTEEN INCHES, MINIMUM, IN AREAS SUBJECT TO PLOWING.

d. POLES WHICH ARE TO BE SET OUTSIDE OF SUBSTATION YARDS SHOULD BE LOCATED SIX FEET OR MORE FROM THE FENCE, IF PRACTICAL. GROUNDS ON THESE POLES SHOULD NOT BE CONNECTED TO THE FENCE OR SUBSTATION GROUNDING SYSTEM REGARDLESS OF THE DISTANCE OF THE POLE FROM THE FENCES.

e. NO FUSE, SWITCH, CUTOUT OR OTHER DEVICE SHALL BE INSERTED IN THE GROUND CONDUCTOR NOR SHALL THERE BE ANY SPLICES OR CONNECTORS EXCEPT THOSE MADE WITH A COMPRESSION SLEEVE.

f. ON ALL POLES AND WOOD AND FIBERGLASS CROSSARMS, GROUND CONDUCTORS MUST CLEAR, BY NOT LESS THAN 1.5 INCHES, ALL EQUIPMENT WHICH THEY ARE NOT INTENDED TO GROUND. SUCH EQUIPMENT MUST BE INSTALLED SUCH THAT THIS CLEARANCE IS MAINTAINED UNDER ALL CONDITIONS. (f)

g. GROUND WIRE COVERED BY PLASTIC PER G.O. RULE 54.7A,22.8A3 IS ALLOWED IN THE CLIMBING SPACE. (g)

h. WOOD COVERED GROUND RUNS ARE PERMITTED IN THE CLIMBING SPACE.

i. GROUND WIRES ARE NOT TO BE INSTALLED IN THE SAME POLE QUADRANT AS THE TELEPHONE CABLE AND/OR CATV CABLE RUNS.

TABLE OF CONTENTS

© 1998 - 2022 San Diego Gas & Electric Company. All rights reserved. Removal of this copyright notice without permission is not permitted under law.

REV	CHANGE	DR	BY	DSN	APV	DATE	REV	CHANGE	DR	BY	DSN	APV	DATE
C	EDITORIAL CHANGES	-	GW	JS	MDJ	04/01/2018	F	BILL OF MATERIALS UPDATE	EDM	RSL	JES	FRC	03/01/2022
B	UPDATE DRAWING & NOTES	-	GW	GW	MDJ	06/16/2016	E	EDITORIAL CHANGES	EDM	JAC	JES	CZH	03/09/2020
A	EDITORIAL CHANGES	-	JC	IL	JS	02/19/2015	D	EDITORIAL CHANGES	-	GW	JS	CZH	09/01/2018

NOTES (CONT'D):

V. WHAT SHOULD BE GROUNDED:
WHERE POLE GROUNDS OR GROUNDED CONDUCTORS ARE AVAILABLE, CONNECTIONS SHALL BE MADE TO THE FOLLOWING CONDUCTORS, APPARATUS OR COMPONENT PARTS OF THE OVERHEAD DISTRIBUTION SYSTEM.

a. **CONDUCTORS:**

THE NEUTRAL CONDUCTOR OF WYE CONNECTED PRIMARY CIRCUITS AT:

EACH CABLE POLE LOCATION.

EACH INTELLIRUPTER SWITCH LOCATION.

EACH SCADAMATE SWITCH LOCATION.

THE SECONDARY NEUTRAL CONDUCTOR OF:

120V, 2-WIRE, SINGLE-PHASE SECONDARY.

3-WIRE, SINGLE-PHASE SECONDARY.

4-WIRE, THREE-PHASE, DELTA SECONDARY OF LESS THAN 750V.

4-WIRE, THREE-PHASE, WYE SECONDARY OF LESS THAN 750V.

THE CONCENTRIC NEUTRAL OF UNDERGROUND DISTRIBUTION CABLE.

b. **CAPACITOR EQUIPMENT:**
SHUNT CAPACITOR RACKS SHALL BE GROUNDED WHEN REQUIRED AS SHOWN IN OH1325 AND WILL FOLLOW THE OH1002.1 FOR STEEL POLES. CAPACITOR CONTROL PANEL SHALL BE GROUNDED. CAPACITOR RACK GROUNDS SHALL BE INTERCONNECTED WITH SURGE ARRESTER GROUNDS.

c. **SURGE (LIGHTNING) ARRESTERS:**
SURGE ARRESTER GROUND TERMINALS SHALL BE GROUNDED. THIS GROUND SHALL BE INTERCONNECTED TO THE CAPACITOR RACK GROUND.

d. **SERVICE RESTORER:**
SERVICE RESTORERS SHALL BE GROUNDED. CONNECT RESTORER RACK GROUND LEAD TO LIGHTNING ARRESTER GROUND.

e. **PRIMARY NEUTRAL INSTALLATION:**
WHERE PRACTICAL, ON STEEL POLES, THE PRIMARY NEUTRAL SHALL BE LOCATED IN THE INSIDE POLE PIN POSITION.

(VI) ITEMS SLATED FOR DELETION ARE NOT LISTED.

(X) THIS ITEM IS EXEMPT.

REFERENCE:

a. SEE ELECTRIC TRANSMISSION ENGINEERING AND DESIGN STANDARDS 17135, 17136 & 17137 FOR TRANSMISSION GROUNDING.

(b) SEE G.O. 95 RULE 213 FOR GROUND CONNECTION.

(c) SEE G.O. 95 RULE 21.4-A FOR EFFECTIVELY GROUNDED EQUIPMENT.

(d) SEE G.O. 95 RULE 21.4-A1 FOR ALLOWABLE GROUND IMPEDANCE.

(e) SEE G.O. 95 RULE 52.7-C, 54.6G FOR PERMANENTLY GROUNDED.

(f) SEE G.O. 95 RULE 52.7-C, 54.6G FOR GROUND CLEARANCE.

(g) SEE G.O. 95 RULE 54.7-A (3) FOR GROUNDS IN THE CLIMBING SPACE.

h. ELECTRIC DISTRIBUTION DESIGN MANUAL.

TABLE OF CONTENTS

© 1998 - 2022 San Diego Gas & Electric Company. All rights reserved. Removal of this copyright notice without permission is not permitted under law.

REV	CHANGE	DR	BY	DSN	APV	DATE	REV	CHANGE	DR	BY	DSN	APV	DATE
C	EDITORIAL CHANGES	-	GW	JS	MDJ	04/01/2018	F	BILL OF MATERIALS UPDATE	EDM	RSL	JES	FRC	03/01/2022
B	UPDATE DRAWING & NOTES	-	GW	GW	MDJ	06/16/2016	E	EDITORIAL CHANGES	EDM	JAC	JES	CZH	03/09/2020
A	EDITORIAL CHANGES	-	JC	IL	JS	02/19/2015	D	EDITORIAL CHANGES	-	GW	JS	CZH	09/01/2018

X Indicates Latest Revision | Completely Revised | New Page | Information Removed

SDG&E ELECTRIC OVERHEAD CONSTRUCTION STANDARDS

GROUNDING GENERAL INFORMATION

OH1002.5

SCOPE: THIS STANDARD SHOWS METHODS OF BONDING 12KV.

ATTENTION:

* DASHED GREEN INDICATES BOND WIRE.

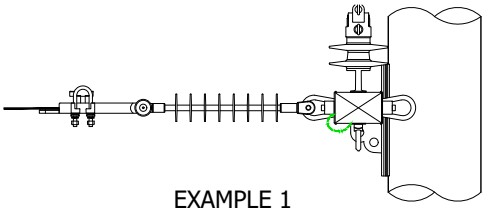

EXAMPLE 1
12KV DEADEND AND PIN TYPE INSULATOR

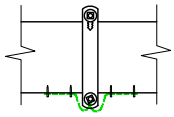

EXAMPLE 2
CROSSARM MOUNTING BRACKET

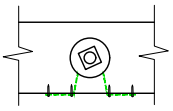

EXAMPLE 3
ANGLE BRACKET

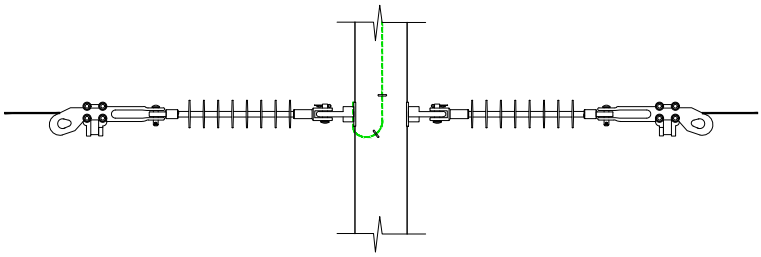

EXAMPLE 4
12KV CROSSARM
DOUBLE DEADEND

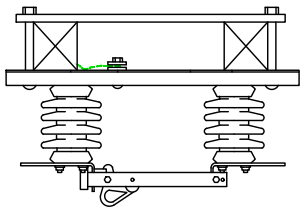

EXAMPLE 5
HOOKSTICK SWITCH

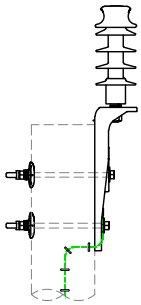

EXAMPLE 6
RIDGE PIN

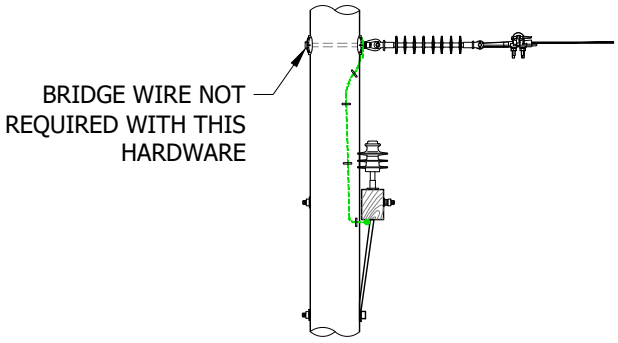

EXAMPLE 7
DEADEND ON POLE

FIGURE 1
EXAMPLES OF BONDING

INSTALLATION:

A. GENERAL APPLICATIONS-WOOD CONSTRUCTION - CONTAMINATION DISTRICT 1

1. BOND 12KV DISTRIBUTION HARDWARE AND EQUIPMENT USING #8 BARE SOLID ANNEALED COPPER WIRE (S812928) ATTACHED TO WOOD CROSSARMS AND/OR POLES USING 1 1/4-INCH GALVANIZED FENCE STAPLES (S678528).
2. FENCE STAPLES SHALL BE DRIVEN HARD ENOUGH AS TO ESTABLISH POSITIVE CONTACT BETWEEN BONDING WIRE AND STAPLE.
3. BONDING WIRE SHALL BE ROUTED TO CLEAR METAL BRACES BY A MINIMUM OF 1 1/2-INCH. (a)
4. BONDING WIRE SHALL BE INSTALLED ON THE BOTTOM OF A CROSSARM, BUT MAY BE INSTALLED ON THE FACE OR BACK FOR A SHORT DISTANCE TO MAINTAIN THE 1 1/2-INCH CLEARANCE FROM ANY HARDWARE. (a)
5. IN NO CASE SHALL BONDING WIRE BE INSTALLED ON THE TOP SURFACE OF ANY CROSSARM.

© 1998 - 2022 San Diego Gas & Electric Company. All rights reserved. Removal of this copyright notice without permission is not permitted under law.

REV	CHANGE	DR	BY	DSN	APV	DATE	REV	CHANGE	DR	BY	DSN	APV	DATE
C	EDITORIAL CHANGES	EDM	GLW	JES	CZH	10/12/2020	F						
B	COMPLETELY REVISED	-	GW	JS	CZH	12/17/2018	E						
A	EDITORIAL CHANGES	-	GW	JS	MDJ	11/28/2016	D	EDITORIAL CHANGE	EDM	MRF	GLW	KRG	04/06/2022

TABLE OF CONTENTS

INSTALLATION:

B. GENERAL APPLICATION - STEEL POLES WITH FIBERGLASS CROSS ARMS
   1. BONDING IS NOT MANDATORY.
   2. LOCAL CONDITIONS MAY REQUIRE BONDING.

C. GENERAL APPLICATION - WOOD OR COMPOSITE POLES WITH FIBERGLASS CROSSARMS
   1. CONTAMINATION DISTRICT 1, BONDING IS MANDATORY.
   2. ALL OTHER CONTAMINATION DISTRICTS, BONDING IS OPTIONAL.

D. BONDING IS MANDATORY FOR WOOD CROSSARMS ON STEEL POLES - CONTAMINATION DISTRICT 1

E. WHAT SHOULD BE BONDED
   1. DEADEND INSULATORS
   2. EQUIPMENT ARM MOUNTED CUTOUTS
   3. LINE ARM MOUNTED CUTOUTS
   4. INSULATOR PINS AND STUDS
   5. RIDGE PINS FOR NON-CONDUCTIVE POLES.
   6. BONDING 4KV IS OPTIONAL.

BILL OF MATERIALS: NONE

NOTES: NONE

REFERENCE:

(a) FOR MORE BONDING REQUIREMENTS, SEE G.O. 95 RULE 53.4.

b. FOR TRANSMISSION BONDING REQUIREMENTS, REFER TO TRANSMISSION ENGINEERING.

c. FOR POST INSULATOR AND BRACKET CONSTRUCTION SEE FMO OH422.

TABLE OF CONTENTS

© 1998 - 2022 San Diego Gas & Electric Company. All rights reserved. Removal of this copyright notice without permission is not permitted under law.

REV	CHANGE	DR	BY	DSN	APV	DATE	REV	CHANGE	DR	BY	DSN	APV	DATE
C	EDITORIAL CHANGES	EDM	GLW	JES	CZH	10/12/2020	F						
B	COMPLETELY REVISED	-	GW	JS	CZH	12/17/2018	E						
A	EDITORIAL CHANGES	-	GW	JS	MDJ	11/28/2016	D	EDITORIAL CHANGE	EDM	MRF	GLW	KRG	04/06/2022

SCOPE: THIS STANDARD SHOWS VARIOUS METHODS OF BRIDGING CROSSARMS AND EQUIPMENT UTILIZING A SHORT LENGTH OF BARE WIRE, WHICH GREATLY REDUCES THE FORMATION OF HOT SPOTS.

CAUTION:

* UNDER NO CIRCUMSTANCES SHALL BRIDGING AND BONDING WIRES COME INTO CONTACT. A MINIMUM DISTANCE OF 1 1/2 INCHES SHALL BE MAINTAINED BETWEEN ALL BRIDGE WIRE AND BOND WIRE, AND BETWEEN ALL ASSOCIATED HARDWARE.

ATTENTION:

* DASHED GREEN AND YELLOW INDICATES BRIDGE WIRE.

** DASHED GREEN INDICATES BOND WIRE.

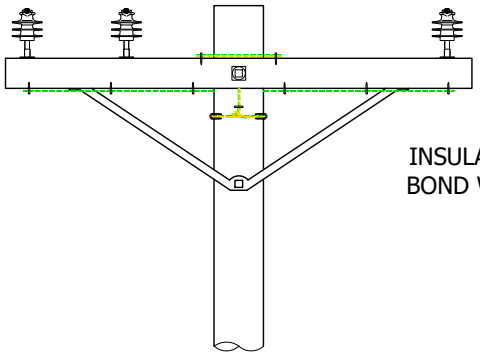

FIGURE 1
WOOD CROSSARM
FRONT VIEW

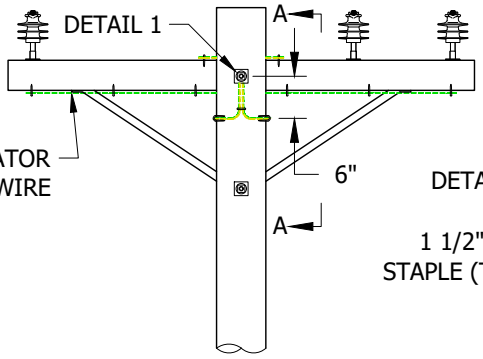

FIGURE 1
WOOD CROSSARM
REAR VIEW

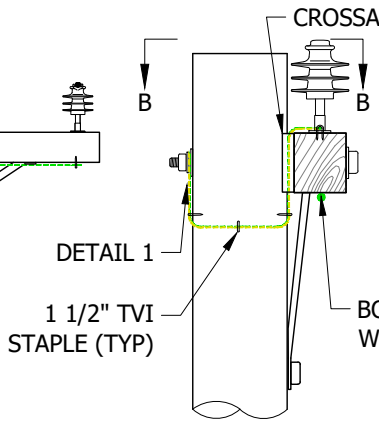

FIGURE 1
VIEW A-A

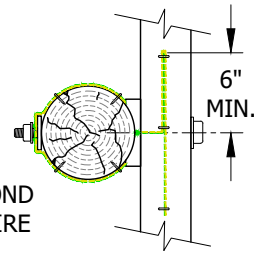

FIGURE 1
VIEW B-B

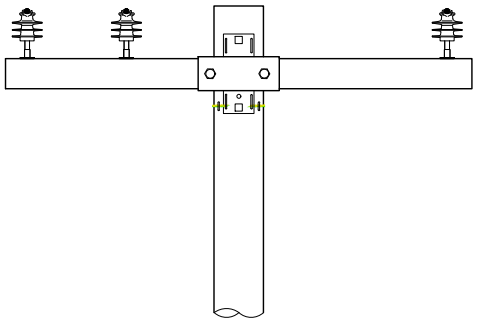

FIGURE 2
FIBERGLASS CROSSARM
FRONT VIEW

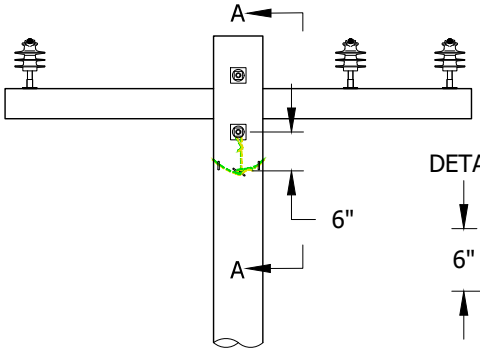

FIGURE 2
FIBERGLASS CROSSARM
REAR VIEW

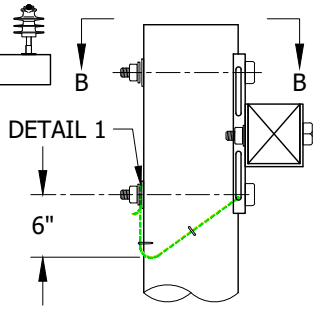

FIGURE 2
VIEW A-A

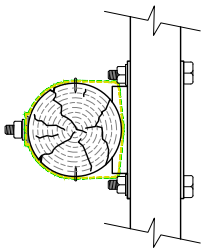

FIGURE 2
VIEW B-B

TABLE OF CONTENTS

© 1998 - 2022 San Diego Gas & Electric Company. All rights reserved. Removal of this copyright notice without permission is not permitted under law.

REV	CHANGE	DR	BY	DSN	APV	DATE	REV	CHANGE	DR	BY	DSN	APV	DATE
C	EDITORIAL CHANGES	EDM	GLW	JES	CZH	10/12/2020	F						
B	COMPLETELY REVISED	-	GW	JS	CZH	12/17/2018	E						
A	EDITORIAL CHANGES	-	GW	JS	MDJ	11/28/2016	D	EDITORIAL CHANGE	EDM	MRF	GLW	KRG	04/06/2022

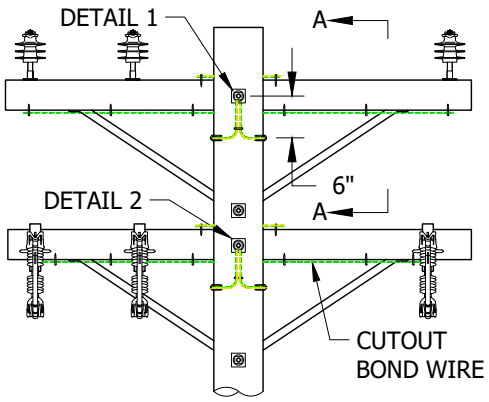

FIGURE 3
SINGLE CIRCUIT WITH
CUTOUT ARM

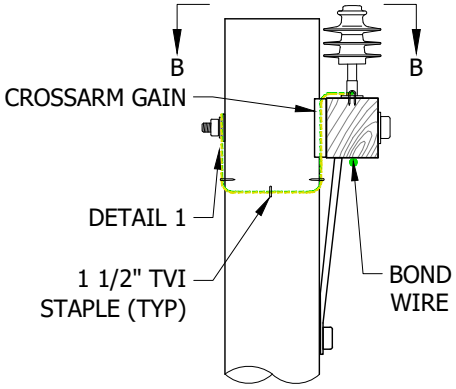

FIGURE 3
VIEW A-A

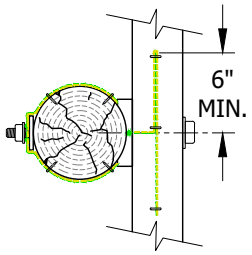

FIGURE 3
VIEW B-B

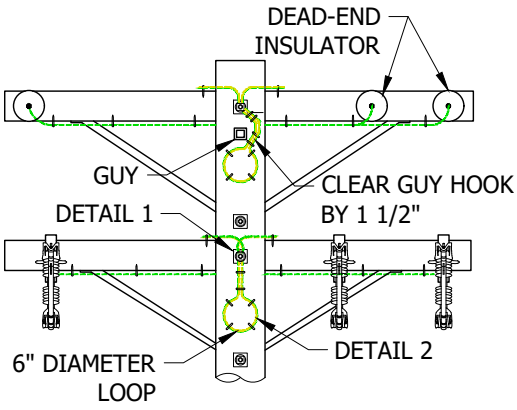

FIGURE 4
SINGLE CIRCUIT DEAD-END
WITH CUTOUT ARM

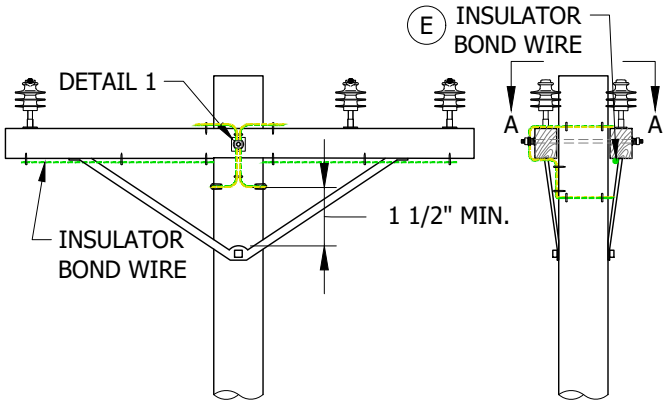

FIGURE 5
DOUBLE ARMS SINGLE CIRCUIT

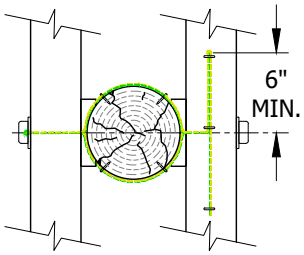

FIGURE 5
VIEW A-A

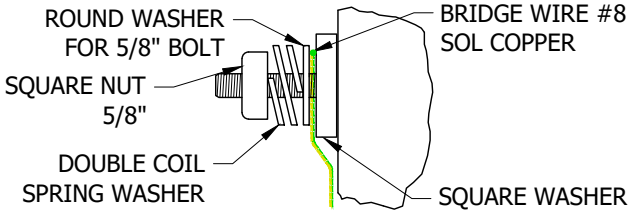

DETAIL 1

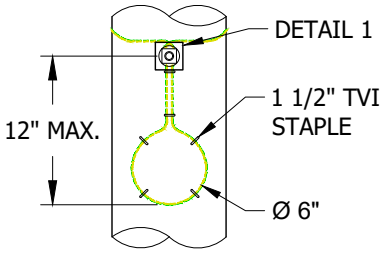

DETAIL 2

© 1998 - 2022 San Diego Gas & Electric Company. All rights reserved. Removal of this copyright notice without permission is not permitted under law.

REV	CHANGE	DR	BY	DSN	APV	DATE	REV	CHANGE	DR	BY	DSN	APV	DATE
C	EDITORIAL CHANGES	EDM	GLW	JES	CZH	10/12/2020	F						
B	COMPLETELY REVISED	-	GW	JS	CZH	12/17/2018	E						
A	EDITORIAL CHANGES	-	GW	JS	MDJ	11/28/2016	D	EDITORIAL CHANGE	EDM	MRF	GLW	KRG	04/06/2022

Indicates Latest Revision | Completely Revised | X New Page | Information Removed

TABLE OF CONTENTS

INSTALLATION: NONE

BILL OF MATERIALS: NONE

NOTES:

I. IN CONTAMINATION DISTRICT I, BRIDGING IS REQUIRED ON NEW AND REBUILT 12KV:

a. POLES WITH WOOD CROSSARM CONSTRUCTION.

b. WOOD POLES WITH FIBERGLASS CROSSARM CONSTRUCTION.

II. BRIDGING IS RECOMMENDED ON EXISTING 12KV/4KV CONSTRUCTION WHERE THERE IS A POTENTIAL HAZARD OF POLETOP FIRES.

REFERENCE: NONE

TABLE OF CONTENTS

© 1998 - 2022 San Diego Gas & Electric Company. All rights reserved. Removal of this copyright notice without permission is not permitted under law.

REV	CHANGE	DR	BY	DSN	APV	DATE	REV	CHANGE	DR	BY	DSN	APV	DATE
C	EDITORIAL CHANGES	EDM	GLW	JES	CZH	10/12/2020	F						
B	COMPLETELY REVISED	-	GW	JS	CZH	12/17/2018	E						
A	EDITORIAL CHANGES	-	GW	JS	MDJ	11/28/2016	D	EDITORIAL CHANGE	EDM	MRF	GLW	KRG	04/06/2022

Indicates Latest Revision | Completely Revised | X | New Page | Information Removed

SDG&E ELECTRIC OVERHEAD CONSTRUCTION STANDARDS

BRIDGING

OH1003.5

SCOPE: THIS STANDARD SHOWS CONNECTING THE NEUTRAL TO A STEEL POLE FOR GROUNDING PURPOSES.

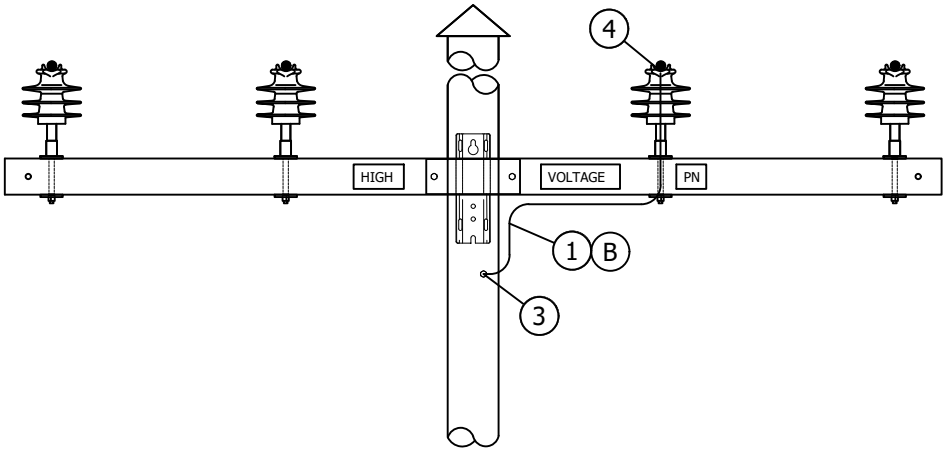

FIGURE 1: NEUTRAL IN INSIDE PIN POSITION

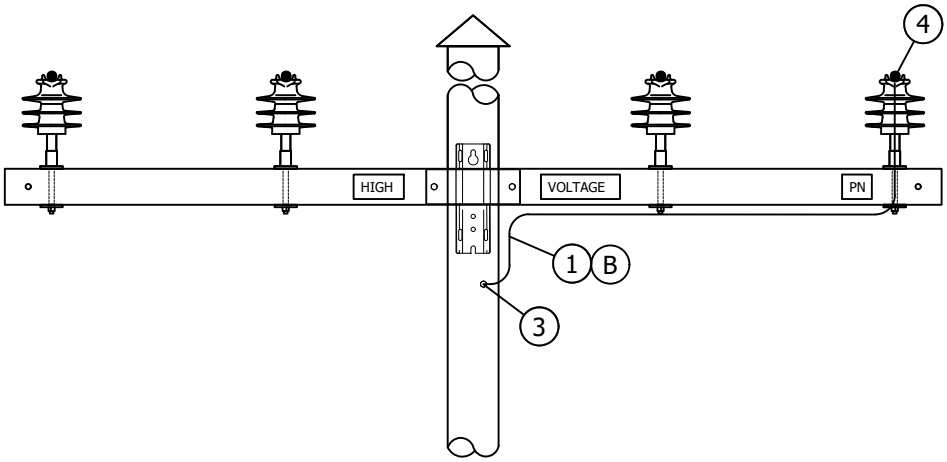

FIGURE 2: NEUTRAL IN OUTSIDE PIN POSITION

© 1998 - 2019 San Diego Gas & Electric Company. All rights reserved. Removal of this copyright notice without permission is not permitted under law.

REV	CHANGE	BY	DSGN	APPV	DATE	REV	CHANGE	BY	DSGN	APPV	DATE
C	EDITORIAL CHANGES	GW	JS	MDJ	7/9/2018	F	NOTES UPDATE	JK	JES	CZH	6/13/2019
B	TABLE UPDATE	SL	JS	MDJ	12/21/2017	E	TABLE UPDATE	JAC	JES	CZH	4/19/2019
A	DRAWING UPDATE	SL	JS	MDJ	11/28/2016	D	EDITORIAL CHANGES	GW	JS	CZH	9/16/2018

X Indicates Latest Revision | Completely Revised | New Page | Information Removed

SDG&E ELECTRIC OVERHEAD CONSTRUCTION STANDARD

NEUTRAL GROUNDING TO STEEL POLES

OH1004.1

TABLE OF CONTENTS

INSTALLATION:

A. NEUTRAL TO BE TREATED AS A PHASE. (I)

(B) INSTALL WITH JIFFY CLIPS OR CONDUIT.

BILL OF MATERIALS:

ITEM	DESCRIPTION	QUANTITY	STANDARD PAGE	STOCK NUMBER	ASSEMBLY UNITS
1	WIRE - POLY COVERED - COPPER - #4 SOLID	AS REQ'D	1002	S812490	4POLY
2	STRAP - PIPE - GALV. - ONE HOLE - 3/8"	AS REQ'D		S697304	-
3	CONNECTOR - STUD - SPLIT BOLT 1/2" X 13	1		S262560	SPCONN
4	CONNECTOR - WIRE - WEDGE - (SIZE AS REQ'D)	1	784	-	-

NOTES:

(I) PRIOR TO REMOVING NEUTRAL GROUND, CHECK ADJACENT POLES TO MAKE SURE NEUTRAL IS EFFECTIVELY GROUNDED AT THOSE LOCATIONS.

II. IN SOME LOCATIONS NEUTRAL MAY BE A GROUNDED CONDUCTOR AND NOT A NEUTRAL RETURN TO THE SUBSTATION. EQUIPMENT IS NOT TO BE CONNECTED TO THE GROUNDED CONDUCTOR THAT DOES NOT RETURN TO THE SUBSTATION. GROUNDED CONDUCTOR CAN BE USED TO ESTABLISH AN EPZ.

III. THE PRIMARY NEUTRAL SHALL HAVE A GROUND EVERY 1000 FEET OR LESS IF ONLY STEEL POLES ARE WITHIN THAT DISTANCE. IF STEEL, WOOD, OR COMPOSITE POLES EXIST WITHIN THE 1000-FOOT DISTANCE, ONLY STEEL POLES SHALL BE GROUNDED. IF THERE ARE ONLY WOOD OR COMPOSITE POLES WITHIN THE 1000-FOOT DISTANCE, NONE OF THE POLES SHALL BE GROUNDED. ALL EQUIPMENT SHALL BE GROUNDED. GROUNDED EQUIPMENT AND CABLE POLES DO NOT COUNT TOWARD THE GROUND EVERY 1000 FEET REQUIREMENT.

IV. CIRCUITS THAT OPERATE AT 12,470 VOLTS WYE (MOUNTAIN EMPIRE DISTRICT), WHERE THE PRIMARY NEUTRAL EXTENDS FROM THE SUBSTATION, SHALL HAVE A GROUND EVERY 1000 FEET OR LESS IF ONLY STEEL POLES ARE WITHIN THAT DISTANCE. IF STEEL, WOOD, OR COMPOSITE POLES EXIST WITHIN THE 100-FOOT DISTANCE, ONLY STEEL POLES SHALL BE GROUNDED. IF THERE ARE ONLY WOOD OR COMPOSITE POLES WITHIN THE 1000-FOOT DISTANCE, NONE OF THE POLES SHALL BE GROUNDED. ALL EQUIPMENT SHALL BE GROUNDED. GROUNDED EQUIPMENT AND CABLE POLES DO NOT COUNT TOWARD THE GROUND EVERY 1000 FEET REQUIREMENT.

TABLE OF CONTENTS

REFERENCE:

a. GROUNDING COMPONENTS, SEE OVERHEAD STANDARD 1002.

b. GROUNDING CONDUCTORS IN CLIMBING SPACE, SEE G.O. 95 RULE 54.7-A.

c. TRANSMISSION GROUNDING, SEE ELECTRIC TRANSMISSION ENGINEERING AND DESIGN STANDARDS 17135, 17136 & 17137.

d. GROUND CONNECTION, SEE G.O. 95 RULE 213.

e. EFFECTIVELY GROUNDED EQUIPMENT, SEE G.O. 95 RULE 21.4-A.

f. ALLOWABLE GROUND INPEDENCE, SEE G.O. 95 RULE 21.4-A1.

g. PERMANENTLY GROUNDED, SEE G.O. 95 RULE 21.4C.

h. GROUND CLEARANCE, SEE G.O. 95 RULE 52.7-C, 54.6G.

© 1998 - 2019 San Diego Gas & Electric Company. All rights reserved. Removal of this copyright notice without permission is not permitted under law.

REV	CHANGE	BY	DSGN	APPV	DATE	REV	CHANGE	BY	DSGN	APPV	DATE
C	EDITORIAL CHANGES	GW	JS	MDJ	7/9/2018	F	NOTES UPDATE	JK	JES	CZH	6/13/2019
B	TABLE UPDATE	SL	JS	MDJ	12/21/2017	E	TABLE UPDATE	JAC	JES	CZH	4/19/2019
A	DRAWING UPDATE	SL	JS	MDJ	11/28/2016	D	EDITORIAL CHANGES	GW	JS	CZH	9/16/2018

Indicates Latest Revision | Completely Revised | New Page X | Information Removed

SDG&E ELECTRIC OVERHEAD CONSTRUCTION STANDARD

NEUTRAL GROUNDING TO STEEL POLES

OH1004.2

PAGE	SUBJECT
1104	TRANSFORMER MOUNTING BRACKETS
1105	LOADING GUIDE
1109	FUSING
1111	TRANSFORMER CONNECTIONS, BOOSTING AND BUCKING, TABLES AND DIAGRAMS
1115	TRANSFORMER POLARITY AND SINGLE-PHASE PARALLELING
1116	TRANSFORMER CONNECTIONS
1121	PREFIXES
1122	TRANSFORMER APPLICATION
1125	SECONDARY LEAD WIRES
1128	SECONDARY TRANSFORMER INSTALLATION
1131	2.4KV OR 4KV SINGLE-PHASE INSTALLATION
1141	7.2 OR 12KV SINGLE-PHASE INSTALLATION
1168	2.4KV, THREE-PHASE, DELTA INSTALLATION, SINGLE-PHASE TRANSFORMERS
1170	4KV, THREE-PHASE INSTALLATION, SINGLE-PHASE TRANSFORMERS
1174	7.2 OR 12KV THREE-PHASE INSTALLATION, SINGLE-PHASE TRANSFORMER
1184	TRANSFORMER CONNECTIONS 12KV TO 2.4KV DELTA TRANSFORMER CONSTRUCTION 12KV/2400/4160Y
1188	SINGLE-PHASE VOLTAGE BOOSTING INSTALLATION

REV	CHANGE	DRWN	BY	CHKD	APVD	DATE
M	OH1156 MOVED TO FMO	ARC	MRF	GLW	KRG	02/16/2023
L	OH1190 MOVED TO FMO	EDM	MRF	GLW	KRG	10/21/2022
K	EDITORIAL CHANGES	DV	JIK	-	-	10/6/2022

SDGE™

SDG&E ELECTRIC OVERHEAD CONSTRUCTION STANDARDS

TRANSFORMERS, BOOSTERS SECTION
TABLE OF CONTENTS

SCALE: NOT TO SCALE

DRAWING NO:	SHEET:
OH1101.1	1 OF 1

© 1998 - 2023 San Diego Gas and Electric Company. All rights reserved. Removal of this copyright notice without permission is not permitted under law.

X Indicates Latest Revision | Completely Revised | New Page | Information Removed

TABLE OF CONTENTS

SCOPE: THIS STANDARD SHOWS AND DESCRIBES THE BRACKETS FOR MOUNTING EITHER TWO OR THREE TRANSFORMERS ON THE SAME POLE OR SET OF CROSSARMS.

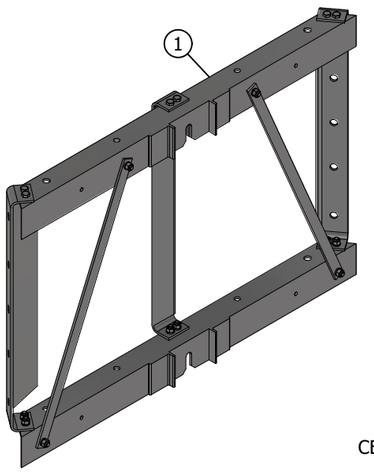

FIGURE 1
ISOMETRIC VIEW

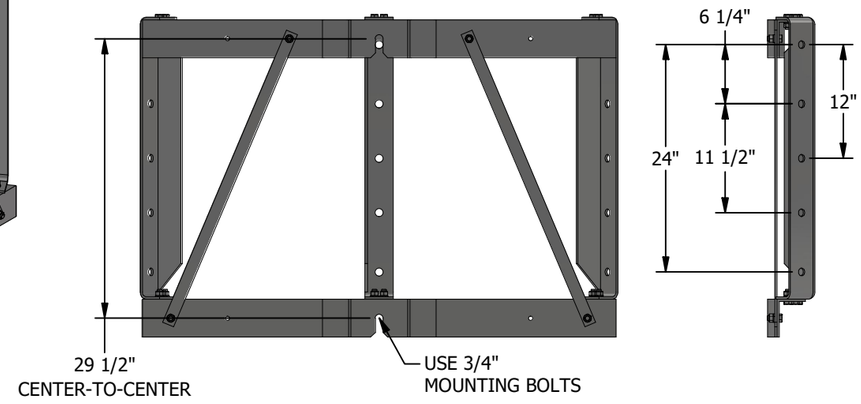

FIGURE 1
BACK VIEW
(MAXIMUM WEIGHT PER TRANSFORMER - 4000 POUNDS)

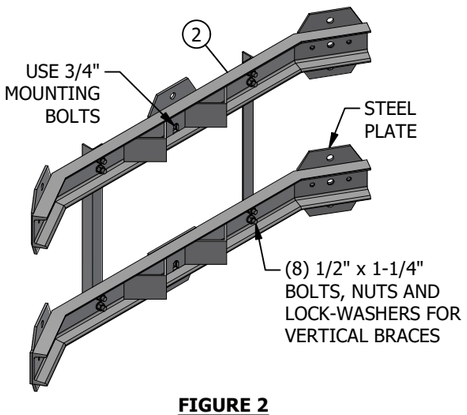

FIGURE 2
ISOMETRIC VIEW

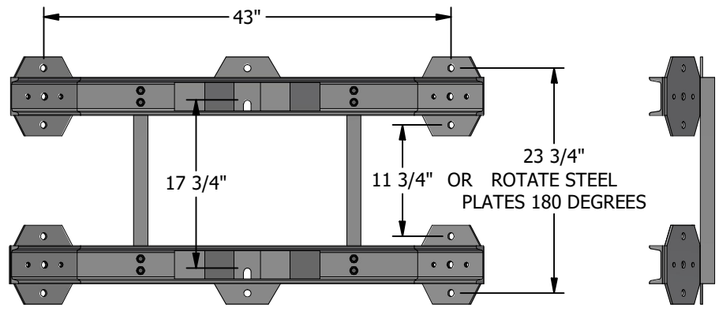

FIGURE 2
BACK VIEW
(MAXIMUM WEIGHT PER TRANSFORMER - 1200 POUNDS)

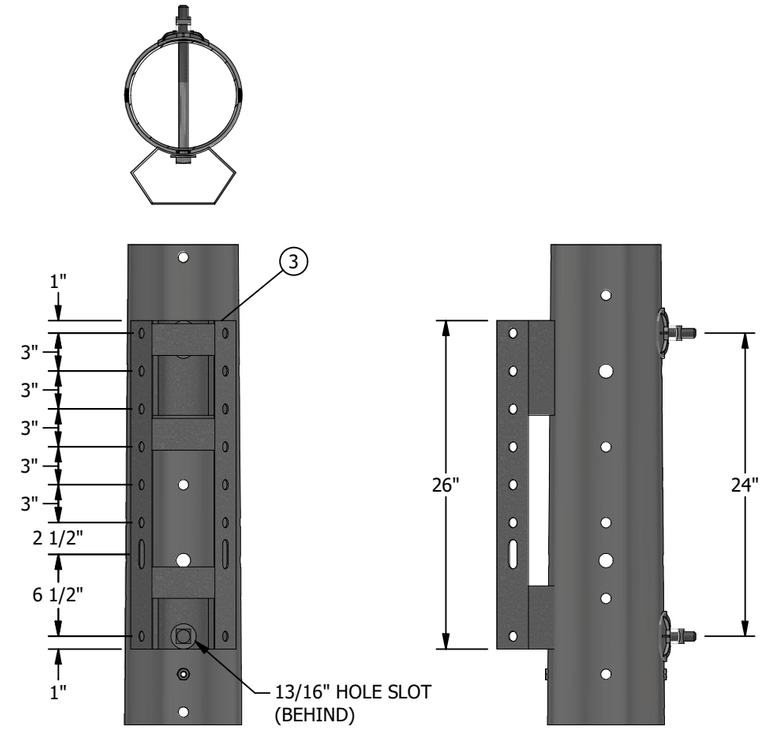

FIGURE 3
FRONT VIEW
(TOTAL MAXIMUM TRANSFORMER WEIGHT - 1600 POUNDS)

INSTALLATION: NONE

BILL OF MATERIALS:

ITEM	DESCRIPTION	QUANTITY	STANDARD PAGE	STOCK NUMBER	DESIGN UNIT
1	BRACKET, HEAVY DUTY, MOUNT 3 TRANSFORMERS (CLUSTER)	AS REQ'D	-	S402920	CMBHD
2	BRACKET, MOUNT 3 TRANSFORMERS (CLUSTER)	AS REQ'D	-	S403008	CMB
3	BRACKET, MOUNT 2 TRANSFORMERS	AS REQ'D	-	S402976	UMB

NOTES: NONE

REFERENCE: NONE

REV	CHANGE	DRWN	BY	CHKD	APVD	DATE
D	REVISED TO 3D FORMAT	GLC/DV	JIK	-	-	08/10/2022
C	EDITORIAL CHANGES	-	JS	JS	CZH	10/1/2018
B	EDITORIAL CHANGES	-	SL	JES	MDJ	11/29/2016

SDG&E ELECTRIC OVERHEAD CONSTRUCTION STANDARDS

TRANSFORMER MOUNTING BRACKETS

SCALE: NOT TO SCALE

DRAWING NO:	SHEET:
OH1104.1	1 OF 1

© 1998 - 2022 San Diego Gas and Electric Company. All rights reserved. Removal of this copyright notice without permission is not permitted under law.

X Indicates Latest Revision | Completely Revised | New Page | Information Removed

SCOPE: THIS STANDARD PROVIDES A TRANSFORMER LOADING GUIDE FOR THREE-PHASE STATIONS WITH SINGLE-PHASE TRANSFORMERS.

INSTALLATION: NONE

BILL OF MATERIAL: NONE

NOTES:

I. DELTA-DELTA BANKS:

a. THE DIVISION OF SINGLE-PHASE LOAD BETWEEN TRANSFORMERS IN A DELTA-DELTA BANK IS NOT A FIXED RATIO LIKE AS IT IS IN THE WYE-DELTA BANK. IT WILL DIVIDE INVERSELY TO THE IMPEDANCE OF THE TWO PARALLEL PATHS MAKING UP THE DELTA. TABLE 1 GIVES THE PERCENT OF SINGLE-PHASE CURRENT IN EACH TRANSFORMER IN THE BANK FOR A LARGE SELECTION OF COMBINATIONS.

TABLE 1:

SINGLE-PHASE LOAD CURRENT IN EACH TRANSFORMER OF A DELTA-DELTA BANK-IN PERCENT							
SIZE OF TRANSFORMERS IN BANK		% OF SINGLE-PHASE CURRENT		SIZE OF TRANSFORMERS IN BANK		% OF SINGLE-PHASE CURRENT	
1	2 & 3	1	2 & 3	1	2 & 3	1	2 & 3
5	5	67	33	15	15	67	33
7 1/2	5	75	25	25	15	77	23
10	5	80	20	37 1/2	15	82	18
15	5	86	14	50	15	86	14
25	5	91	9	75	15	91	9
37 1/2	5	93	7	100	15	92	8
50	5	95	5	-	-	-	-
75	5	97	3	25	25	67	33
100	5	97	3	37 1/2	25	73	27
-	-	-	-	50	25	79	21
10	7 1/2	73	27	75	25	85	15
15	7 1/2	80	20	100	25	88	12
25	7 1/2	87	13	-	-	-	-
37 1/2	7 1/2	90	10	37 1/2	37 1/2	67	33
50	7 1/2	92	8	50	37 1/2	73	27
75	7 1/2	95	5	75	37 1/2	81	19
100	7 1/2	96	4	100	37 1/2	84	16
-	-	-	-	-	-	-	-
10	10	67	33	50	50	67	33
15	10	75	25	75	50	76	24
25	10	83	17	100	50	79	21
37 1/2	10	87	13	-	-	-	-
50	10	90	10	75	75	67	33
75	10	94	6	100	75	71	29
100	10	95	5	-	-	-	-
-	-	-	-	100	100	67	33

b. THE SINGLE PHASE LOAD IS CONNECTED ACROSS TRANSFORMER 1.

c. THE THREE-PHASE MOTOR LOAD WITH BALANCED VOLTAGES WILL DIVIDE ITS LOAD EQUALLY AMONG THE THE TRANSFORMERS. THE CURRENT IN EACH TRANSFORMER COIL WILL BE THE FULL LOAD CURRENT OF THE MOTOR DIVIDED BY THE SQUARE ROOT OF THREE (1.732).

d. IN ORDER TO HAVE BALANCED CURRENTS IN A DELTA-DELTA BANK, WITH A BALANCED THREE-PHASE LOAD, THE TRANSFORMERS MUST BE ON THE SAME TAP SETTING, HAVE THE SAME VOLTAGE RATIOS AND THE SAME IMPEDANCE.

e. TRANSFORMERS OF DIFFERENT IMPEDANCES MAY BE CONNECTED DELTA-DELTA, PROVIDED TWO UNITS HAVE THE SAME IMPEDANCE AND THE THIRD UNIT HAS AN IMPEDANCE WITHIN 25% OF THE LIKE UNITS. TABLE II SHOWS THE UNBALANCED DIVISION OF LOAD, IN PERCENT, WHEN TRANSFORMERS OF SUCH IMPEDANCES HAVE THE SAME KVA RATING, TAP CONNECTIONS AND VOLTAGE RATIO. (Z_1 = IMPEDANCE OF ODD UNIT AND Z_2 = IMPEDANCE OF THE LIKE UNITS).

NOTES (CONT'D):

f. WITH UNBALANCED TRANSFORMER LOADING, THE LOAD MUST BE CHECKED SO THAT NO ONE TRANSFORMER IS OVERLOADED.

TABLE 2:

RATIO $\frac{Z_1}{Z_2}$	PERCENT LOAD ON	
	ODD UNIT - Z_1	LIKE UNITS - Z_2
.75	109.0	96.0
.80	107.0	96.5
.85	105.2	97.3
.90	103.3	98.3
1.10	96.7	102.0
1.15	95.2	102.2
1.20	93.8	103.1
1.25	92.3	103.9

II. WYE-DELTA BANKS:

a. TRANSFORMERS, TO SUCCESSFULLY OPERATE TOGETHER IN BANK, CONNECTED WYE-DELTA SHOULD BE OF THE SAME VOLTAGE RATIO. IN THE WYE-DELTA BANK WITH THE PRIMARY NEUTRAL FLOATING (NOT GROUNDED), IT WILL MAKE NO DIFFERENCE WHAT SIZE OF TRANSFORMERS ARE INSTALLED OR WHAT THE IMPEDANCE MAY BE, THE DIVISION OF SINGLE-PHASE LOAD WILL ALWAYS REMAIN THE SAME: TWO-THIRDS AND ONE-THIRD. TWO-THIRDS OF THE SINGLE-PHASE LOAD WILL BE FURNISHED BY THE TRANSFORMER TO WHICH IT IS DIRECTLY CONNECTED AND ONE-THIRD BY THE OTHER TWO TRANSFORMERS IN THE BANK. THE THREE-PHASE MOTOR LOAD WITH BALANCED VOLTAGES WILL DIVIDE ITS LOAD EQUALLY AMONG THE THREE TRANSFORMERS.

b. IF THE HIGH-VOLTAGE NEUTRAL OF THE TRANSFORMER BANK IS CONNECTED TO THE CIRCUIT NEUTRAL, THE TRANSFORMER BANK MAY BURN OUT FOR THE FOLLOWING REASONS:

- IT WILL CARRY CIRCULATING CURRENT IN THE DELTA IN AN ATTEMPT TO BALANCE ANY UNBALANCED LOAD CONNECTED TO THE PRIMARY LINE BEYOND IT.
- IT WILL ACT AS A GROUNDING BANK AND WILL SUPPLY FAULT CURRENT TO ANY FAULT ON THE CIRCUIT TO WHICH IT IS CONNECTED
- IT PROVIDES A DELTA IN WHICH TRIPLE HARMONIC CURRENTS WILL CIRCULATE.

ALL OF THESE EFFECTS CAUSE THE BANK TO CARRY CURRENT IN ADDITION TO ITS NORMAL LOAD CURRENT, AND MAY BURN OUT THE BANK.

c. WHEN TRANSFORMER KVA'S ARE UNEQUAL, MAXIMUM SAFE BANK RATING FOR BALANCED THREE-PHASE LOADS IS THREE TIMES THE KVA OF THE SMALLEST UNIT.

d. IN THE EVENT THAT A TRANSFORMER FAILS, IT CAN BE DISCONNECTED, AND THE REMAINING UNITS RECONNECTED AS AN OPEN-WYE, OPEN-DELTA BANK. IN THAT CASE, THE PRIMARY NEUTRAL BUS MUST BE CONNECTED TO THE SYSTEM NEUTRAL AND SECTION "E" OF THIS APPLICATION GUIDE SHOULD BE REVIEWED FOR SAFE TRANSFORMER LOADING.

III. WYE-WYE BANKS:

a. A BANK OF WYE-WYE TRANSFORMERS SHOULD NOT BE USED UNLESS THE SYSTEM IS 4 WIRE. IT IS IMPORTANT THAT THE PRIMARY NEUTRAL OF THE TRANSFORMER BANK BE TIED FIRMLY TO THE SYSTEM NEUTRAL. IF THIS IS NOT DONE, EXCESSIVE VOLTAGES MAY DEVELOP ON THE SECONDARY SIDE.

TABLE OF CONTENTS

REV	CHANGE	DRWN	BY	CHKD	APVD	DATE
C	REVISED TO 3D FORMAT	GLC/DV	JIK	-	-	09/13/2022
B	EDITORIAL CHANGES	-	JS	JS	CZH	10/01/2018
A	ORIGINAL ISSUE	-	-	PTA	CAK	01/01/2000

SDG&E ELECTRIC OVERHEAD CONSTRUCTION STANDARDS

TRANSFORMER LOADING GUIDE FOR THREE-PHASE STATIONS WITH SINGLE-PHASE TRANSFORMERS

SCALE: NOT TO SCALE

DRAWING NO: OH1105.1

SHEET: 1 OF 2

© 1998 - 2022 San Diego Gas and Electric Company. All rights reserved. Removal of this copyright notice without permission is not permitted under law.

Indicates Latest Revision | Completely Revised | New Page | Information Removed

TABLE OF CONTENTS

IV. DELTA WYE BANKS:

a. COMBINED THREE PHASE POWER AND SINGLE-PHASE LIGHTING AND APPLIANCE LOAD MAY BE SUPPLIED BY A THREE-PHASE TRANSFORMER BANK CONNECTED DELTA-WYE. BALANCED THREE-PHASE LOAD MAY BE THOUGHT OF AS THREE EQUAL SINGLE-PHASE LOADS CONNECTED BETWEEN PHASES OR CONNECTED BETWEEN EACH PHASE WIRE AND NEUTRAL. THE SINGLE-PHASE LOAD SHOULD BE KEPT IN AS CLOSE BALANCE BETWEEN PHASES AS POSSIBLE, TO ASSURE MOST ECONOMICAL USE OF TRANSFORMER CAPACITY AND TO PREVENT POOR REGULATION FROM EXCESSIVE LOAD ON ONE PHASE.

b. WHEN TRANSFORMER KVA'S ARE UNEQUAL, MAXIMUM SAFE BANK RATING FOR BALANCED THREE-PHASE LOADS IS THREE TIMES THE KVA OF THE SMALLEST UNIT. A DISABLED TRANSFORMER RENDERS THE BANK INOPERATIVE.

V. OPEN-WYE, OPEN-DELTA BANKS:

a. SINCE BOTH TRANSFORMERS CARRY THE THREE-PHASE LOAD, AND ONE CARRIES THE SINGLE-PHASE LOAD IN ADDITION, THE LATTER TRANSFORMER MUST BE THE LARGER UNIT. IT MUST CARRY THE VECTORIAL SUM OF THE SINGLE-PHASE LOAD PLUS 58 PERCENT OF THE THREE-PHASE LOAD. FOR EXAMPLE, IF IT IS DESIRED TO CARRY A SINGLE-PHASE LOAD OF 30 KVA AND A THREE-PHASE LOAD OF 12 KVA, WITH THE SAME POWER FACTOR, THE TRANSFORMER LOADS CAN BE DETERMINED AS FOLLOWS:

TABLE 3:

	LARGE TRANSFORMER LOAD (KVA)	SMALL TRANSFORMER LOAD (KVA)
SINGLE-PHASE LOAD	30	-
+ THREE-PHASE LOAD (0.58 x 12)	7	7
TOTAL LOAD	37	7

VI. OPEN-DELTA, OPEN-DELTA BANKS:

a. THIS CONNECTION IS SIMILAR TO OPEN-WYE, OPEN-DELTA EXCEPT THAT THE TRANSFORMERS ARE CONNECTED PHASE-TO-PHASE INSTEAD OF PHASE-TO-NEUTRAL. SELECTION OF LARGE AND SMALL TRANSFORMER RATINGS IS MADE THE SAME AS THE OPEN-WYE, OPEN-DELTA BANKS ABOVE.

RESTRICTIONS ON USE OF SELF-PROTECTED TRANSFORMERS:

VII. THE WE (CP) OR HJ (CSP) TYPE TRANSFORMERS WITH INTERNAL SECONDARY BREAKERS SHOULD NOT BE USED IN ANY WYE-DELTA CONNECTED TRANSFORMER BANK WITH THE PRIMARY BANK NEUTRAL FLOATING, UNBALANCED SECONDARY VOLTAGES WILL OCCUR REGARDLESS OF WHICH OF THE SECONDARY BREAKERS OPENS. THESE EFFECTS MAY BE SERIOUS ENOUGH TO CAUSE DAMAGE TO THE CUSTOMER'S EQUIPMENT DUE TO HIGH VOLTAGE OR OVERHEATING.

VIII. DO NOT USE SELF-PROTECTED TRANSFORMERS TO SUPPLY THREE-PHASE, 4 WIRE, CLOSED-DELTA CIRCUITS SERVING COMBINED THREE-PHASE POWER AND SINGLE-PHASE LIGHTING LOADS. IF THE SECONDARY BREAKER IN THE LIGHTING PHASE OPENS, THE LIGHTING PHASE IS STILL SUPPLIED WITH 240 VOLTS; HOWEVER, THERE IS NOTHING TO HOLD THE LOW-VOLTAGE NEUTRAL AT THE MID-POINT THE 240 VOLTS AND THE VOLTAGE BETWEEN EACH PHASE AND NEUTRAL WILL DEPEND ON THE RELATIVE IMPEDANCE OF THE LOADS CONNECTED ON EITHER SIDE OF THE 120/240 VOLT CIRCUIT. SINCE THESE ARE RARELY EQUAL, THE LAMPS ON ONE SIDE WILL PROBABLY BURN OUT FROM OVERVOLTAGE.

IX. IN AN EMERGENCY, SELF-PROTECTED TRANSFORMERS MAY BE INSTALLED IN THREE PHASE BANKS WHERE SHOWN ON STANDARDS PAGES 1117, 1118 AND 1119 AS A SUBSTITUTION FOR CONVENTIONAL (NON-SELF-PROTECTED) TRANSFORMERS. THIS MAY ONLY BE DONE WITH THE APPROVAL OF ELECTRIC DISTRIBUTION ENGINEERING, AND THEY SHALL BE REPLACED AS SOON AS THE PROPER TRANSFORMERS ARE AVAILABLE.

REFERENCE: NONE

REV	CHANGE	DRWN	BY	CHKD	APVD	DATE
C	REVISED TO 3D FORMAT	GLC/DV	JIK	-	-	09/13/2022
B	EDITORIAL CHANGES	-	JS	JS	CZH	10/01/2018
A	ORIGINAL ISSUE	-	-	PTA	CAK	01/01/2000

SDG&E

A Sempra Energy utility®

© 1998 - 2022 San Diego Gas and Electric Company. All rights reserved. Removal of this copyright notice without permission is not permitted under law.

SDG&E ELECTRIC OVERHEAD CONSTRUCTION STANDARDS

TRANSFORMER LOADING GUIDE FOR THREE-PHASE STATIONS WITH SINGLE-PHASE TRANSFORMERS

SCALE: NOT TO SCALE

DRAWING NO: OH1105.2

SHEET: 2 OF 2

X Indicates Latest Revision | Completely Revised | New Page | Information Removed

TABLE OF CONTENTS

SCOPE: THIS STANDARD PROVIDES INSTRUCTIONS FOR TRANSFORMER FUSE SIZING.

TRANSFORMER FUSE SIZING TABLES:

TABLE 1:

480 VOLT STATIONS	
SIZE OF TRANSFORMER IN KVA	SIZE OF FUSE IN AMPS FOR SINGLE-PHASE STATIONS
1.5	5
3	15
5	20
7.5	30
10	40
15	60
25	100

TABLE 2:

2.4KV STATIONS						
TRANSFORMER SIZE (KVA)	1Ø STATION FULL LOAD AMPS (AMPS)	(VI) 1Ø STATION FUSE SIZE (AMPS)	(II)(IV) 3Ø XFMR FUSE SIZE (AMPS)	(VI) SAME KVA TRANSFORMERS CONNECTED		
				OPEN DELTA		CLOSED DELTA
				OUTSIDE LEAD FUSE AMPERES	COMMON LEAD FUSE AMPERES	(IV) FUSE AMPERES
1.5 TO 3	(III)	5	-	5	5	5
5	2.08	5	-	5	10	10
7 1/2	3.13	10	-	10	10	15
9	3.75	-	5	-	-	-
10	4.17	10	5	10	15	15
15	6.25	15	10	15	20	25
20	8.33	20	-	20	20	30
25	10.4	20	15	20	25	40
30	12.5	25	-	25	30	40
37.5	15.6	30	20	30	40	50
45	18.8	-	25	-	-	-
50	20.8	40	25	40	50	60
75	31.3	60	40	60	75	100
100	41.7	75	50	75	100	125
112.5	46.9	-	60	-	-	-

TABLE 3:

2.4/4.16KV STATIONS		
SIZE OF TRANSFORMER (KVA)	(I)(VI) SIZE OF FUSE IN AMPERES	
	SINGLE PHASE TRANSFORMER	THREE PHASE TRANSFORMER
1.5 TO 5	5	-
7.5	10	-
9	-	5
10	10	5
15	15	5
20	20	-
25	20	10
30	25	10
37.5	30	10
45	-	15
50	40	15
75	60	20
100	75	30
150	125	40
167	150	-
200	150	60
250	200	-
300	-	75

TABLE 4:

12KV STATIONS						
TRANSFORMER SIZE (KVA)	1Ø STATION FULL LOAD AMPS (AMPS)	(VI) 1Ø STATION FUSE SIZE (AMPS)	(II)(IV) 3Ø XFMR FUSE SIZE (AMPS)	(VI) SAME KVA TRANSFORMERS CONNECTED		
				OPEN DELTA		CLOSED DELTA
				OUTSIDE LEAD FUSE AMPERES	COMMON LEAD FUSE AMPERES	(IV) FUSE AMPERES
1.5 TO 15	(III)	5	5	5	5	5
25	2.08	5	5	5	10	10
30	2.5	-	5	-	-	-
37.5	3.13	10	5	10	10	10
45	3.75	-	5	-	-	-
50	4.17	10	5	10	15	15
75	6.25	15	10	15	20	25
100	8.33	20	10	20	25	30
112.5	9.37	-	10	-	-	-
150	12.5	25	15	25	30	40
167	13.9	30	-	30	40	40
200	16.7	30	20	30	40	50
250	20.8	40	-	40	50	60
300	25.0	-	30	-	-	-
333	27.7	50	-	50	60	100
500	41.7	75	40	75	100	125

TABLE 5:

7.2/12.470KV STATIONS		
SIZE OF TRANSFORMER (KVA)	(I)(VI) SIZE OF FUSE IN AMPERES	
	SINGLE PHASE TRANSFORMER	THREE PHASE TRANSFORMER
1.5 TO 5	5	5
7.5	5	5
9	5	5
10	5	5
15	5	5
20	5	5
25	5	5
30	-	5
37.5	10	5
45	-	5
50	15	5
75	20	5
100	30	10
150	40	15
167	50	-
200	60	20
250	70	-
300	80	30
333	100	-

TABLE 6: THREE PHASE TRANSFORMER FUSE SIZING TABLE

2.4KV 3 WIRE DELTA TRANSFORMER BANKS												
DIFFERENT KVA TRANSFORMERS CONNECTED OPEN DELTA				DIFFERENT KVA TRANSFORMERS CONNECTED CLOSED DELTA								
COLUMN NUMBER FOR FIGURE 1				COLUMN NUMBER FOR FIGURE 2				COLUMN NUMBER FOR FIGURE 2				
1	2	3	4	5	6	7	8	5	6	7	8	
SMALL TRANSFORMER		LARGE TRANSFORMER		SMALL TRANSFORMER		LARGE TRANSFORMER		SMALL TRANSFORMER		LARGE TRANSFORMER		
SIZE (KVA)	FUSE X (AMPS)	SIZE (KVA)	FUSE Y & Z (AMPS)	SIZE (KVA)	FUSE X (AMPS)	SIZE (KVA)	FUSE Y & Z (AMPS)	SIZE (KVA)	FUSE X (AMPS)	SIZE (KVA)	FUSE Y & Z (AMPS)	
1.5-5	5	7.5-10	10	5	10	7.5-10	15	25-30	40	37.5	50	
		15	15			15	25			50	60	
		20-25	20			20	30			75	100	
		30	25			25-30	40			100	125	
		37.5	30			37.5	50	37.5	50	50	60	
		50	40			50	60			75	100	
		75	60			75	100			100	125	
		100	75			100	125	50	60	75	100	
7.5-10	10	15	15	7.5-10	15	15	25			100	125	
		20-25	20			20	30	75	100	100	125	
		30	25			25-30	40					
		37.5	30			37.5	50					
		50	40			50	60					
		75	60			75	100					
		100	75			100	125					
15	15	20-25	20	15	25	20	30					
		30	25			25-30	40					
		37.5	30			37.5	50					
		50	40			50	60					
		75	60			75	100					
		100	75			100	125					
20-25	20	30	25	20	30	25-30	40					
		37.5	30			37.5	50					
		50	40			50	60					
		75	60			75	100					
		100	75			100	125					

TABLE 7:

12KV 3 WIRE DELTA TRANSFORMER BANKS												
DIFFERENT KVA TRANSFORMERS CONNECTED OPEN DELTA				DIFFERENT KVA TRANSFORMERS CONNECTED CLOSED DELTA								
COLUMN NUMBER FOR FIGURE 1				COLUMN NUMBER FOR FIGURE 2				COLUMN NUMBER FOR FIGURE 2				
1	2	3	4	5	6	7	8	5	6	7	8	
SMALL TRANSFORMER		LARGE TRANSFORMER		SMALL TRANSFORMER		LARGE TRANSFORMER		SMALL TRANSFORMER		LARGE TRANSFORMER		
SIZE (KVA)	FUSE X (AMPS)	SIZE (KVA)	FUSE Y & Z (AMPS)	SIZE (KVA)	FUSE X (AMPS)	SIZE (KVA)	FUSE Y & Z (AMPS)	SIZE (KVA)	FUSE X (AMPS)	SIZE (KVA)	FUSE Y & Z (AMPS)	
1.5-25	5	10-25	(VI) 5	1.5-15	5	25-37.5	10	100	30	150-167	40	
		37.5-50	10			50	15			200	50	
		75	15			75	25			250	60	
		100	20			100	30			333	100	
		150	25			150-167	40			500	125	
		167	30	25-37.5	10	50	15	150-167	40	200	50	
37.5-50	10	75	15			75	25			250	60	
		100	20			100	30			333	100	
		150	25			150-167	40			500	125	
		167	30	50	15	75	25	200	50	250	60	
						100	30			333	100	
						150-167	40			500	125	
						100	30	250	60	333	100	
						150-167	40			500	125	
				75	25	200	50	333	100	500	125	
						250	60					
						333	100					
						500	125					

REV	CHANGE	DRWN	BY	CHKD	APVD	DATE
D	REVISED TO 3D FORMAT	GLC/DV	JIK	-	-	09/08/2022
C	EDITORIAL CHANGES	-	JCE	JS	CZH	4/15/2019
B	EDITORIAL CHANGES	-	JS	JS	CZH	10/1/2018

SDGE — A Sempra Energy utility®

© 1998 - 2022 San Diego Gas and Electric Company. All rights reserved. Removal of this copyright notice without permission is not permitted under law.

SDG&E ELECTRIC OVERHEAD CONSTRUCTION STANDARDS

TRANSFORMER STATION FUSING

SCALE: NOT TO SCALE

DRAWING NO: OH1109.1

SHEET: 1 OF 2

X Indicates Latest Revision | Completely Revised | New Page | Information Removed

TABLE OF CONTENTS

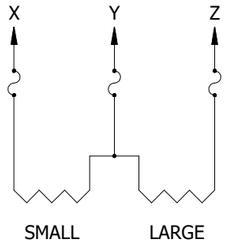

FIGURE 1
OPEN DELTA
DIFFERENT KVA TRANSFORMERS
FUSING INSTRUCTIONS

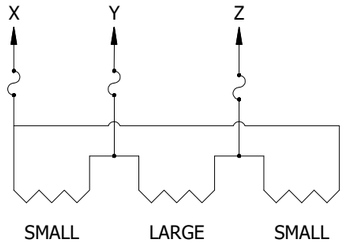

FIGURE 2
CLOSED DELTA
DIFFERENT KVA TRANSFORMERS
FUSING INSTRUCTIONS

INSTALLATION:

A. REFERRING TO FIGURE 1, FIND SMALL TRANSFORMER SIZE IN COLUMN 1 OF THREE PHASE TRANSFORMER FUSE SIZING TABLES. FUSE SIZE OF PHASE "X" IS LOCATED UNDER COLUMN 2. FIND LARGE TRANSFORMER SIZE IN COLUMN 3. FUSE SIZE FOR PHASES "Y" AND "Z" IS LOCATED IN COLUMN 4.

2.4KV EXAMPLE:

SMALL TRANSFORMER__5 KVA
LARGE TRANSFORMER__37.5 KVA
FUSE X = 5 AMP
FUSE Y & Z = 30 AMP

12KV EXAMPLE:

SMALL TRANSFORMER__5 KVA
LARGE TRANSFORMER__100 KVA
FUSE X = 5 AMP
FUSE Y & Z = 20 AMP

B. REFERRING TO FIGURE 2, FIND SMALL TRANSFORMER SIZE IN COLUMN 5 OF THREE PHASE TRANSFORMER FUSE SIZING TABLES. FUSE SIZE OF PHASE "X" IS LOCATED UNDER COLUMN 6. FIND LARGE TRANSFORMER SIZE IN COLUMN 7. FUSE SIZE FOR PHASES "Y" AND "Z" IS LOCATED IN COLUMN 8.

2.4KV EXAMPLE:

SMALL TRANSFORMER__25 KVA
LARGE TRANSFORMER__50 KVA
FUSE X = 40 AMP
FUSE Y & Z = 60 AMP

12KV EXAMPLE:

SMALL TRANSFORMER__25 KVA
LARGE TRANSFORMER__50 KVA
FUSE X = 10 AMP
FUSE Y & Z = 15 AMP

BILL OF MATERIALS: NONE

NOTES:

(I) SINGLE PHASE TRANSFORMERS ARE FUSED THE SAME IN SINGLE PHASE STATIONS AND THREE PHASE OPEN AND CLOSED WYE STATIONS.

(II) THREE SINGLE PHASE TRANSFORMERS OF THE SAME SIZE CONNECTED IN DELTA ARE FUSED THE SAME AS A THREE PHASE TRANSFORMER OF EQUIVALENT CAPACITY.

(III) 12KV FULL LOAD SINGLE PHASE CURRENT = (KVA) X .0833, 2.4KV FULL LOAD SINGLE PHASE CURRENT = (KVA) X .417.

(IV) FULL LOAD THREE PHASE CURRENT = (FULL LOAD SINGLE PHASE CURRENT) X .577.

V. FUSE PARALLELED TRANSFORMERS FOR COMBINED KVA, THE NEUTRAL LEAD IS NEVER FUSED.

(VI) IF 5 AMP FUSE IS NOT AVAILABLE A 10 AMP FUSE CAN BE SUBSTITUTED.

VII. SECTIONALIZING FUSES AND A STATION ARE **NOT** ALLOWED ON THE SAME POLE. A DEVIATION REQUEST WILL NOT BE APPROVED FOR THIS CONSTRUCTION.

REFERENCE: NONE

REV	CHANGE	DRWN	BY	CHKD	APVD	DATE
D	REVISED TO 3D FORMAT	GLC/DV	JIK	-	-	09/08/2022
C	EDITORIAL CHANGES	-	JCE	JS	CZH	4/15/2019
B	EDITORIAL CHANGES	-	JS	JS	CZH	10/1/2018

SDG&E
A Sempra Energy utility

SDG&E ELECTRIC OVERHEAD CONSTRUCTION STANDARDS

TRANSFORMER STATION FUSING

SCALE: NOT TO SCALE
DRAWING NO: OH1109.2
SHEET: 2 OF 2

© 1998 - 2022 San Diego Gas and Electric Company. All rights reserved. Removal of this copyright notice without permission is not permitted under law.

X Indicates Latest Revision | Completely Revised | New Page | Information Removed

TABLE OF CONTENTS

SINGLE PHASE CONNECTIONS FOR BOOSTING OR BUCKING

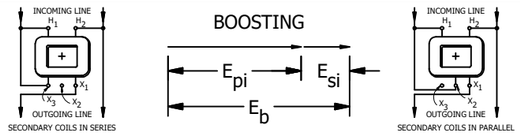

Kva. Size Required for Transformer = $\frac{\text{Epo x Load kva.}}{\text{Epi (r+1)}}$

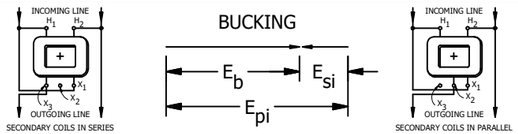

Kva. Size Required for Transformer = $\frac{\text{Epo x Load kva.}}{\text{Epi (r-1)}}$

THREE PHASE CONNECTIONS USING THREE SINGLE PHASE TRANSFORMERS FOR BOOSTING

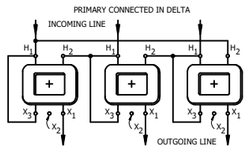

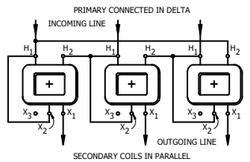

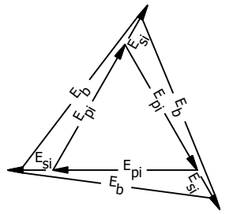

Kva. Size Required for each Transformer = $\frac{\text{Epo x Load Kva.}}{\sqrt{3}\ E_{pi} \times \sqrt{r^2-3r+3}}$

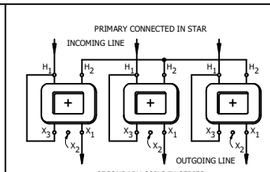

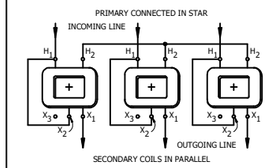

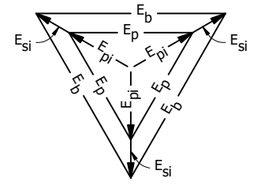

Kva. Size Required for each Transformer = $\frac{\text{Epo x Load Kva.}}{\sqrt{3}\ E_p\ (r+I)}$

THREE PHASE CONNECTIONS USING THREE SINGLE PHASE TRANSFORMERS FOR BUCKING

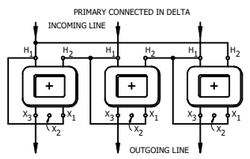

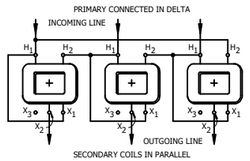

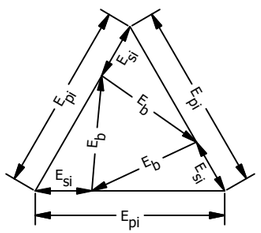

Kva. Size Required for each Transformer = $\frac{\text{Epo x Load Kva.}}{\sqrt{3}\ E_{pi} \times \sqrt{r^2-3r+3}}$

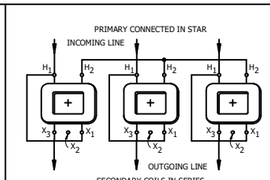

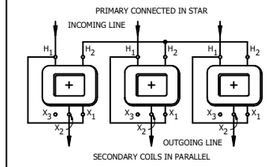

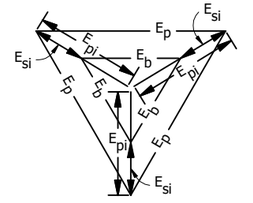

Kva. Size Required for each Transformer = $\frac{\text{Epo x Load Kva.}}{\sqrt{3}\ E_p\ (r-I)}$

NOTES:

I. THE ARRANGEMENT OF LETTERS IDENTIFYING H.V. TERMINALS (H_1 & H_2), AND L.V. TERMINALS (X_1 & X_2 & X_3) SHOWN IN THE DIAGRAMS ON THIS PAGE ARE FOR ADDITIVE POLARITY (+) TRANSFORMERS AND ARE IN ACCORDANCE WITH THE N.E.M.A. STANDARDS PUBLICATION NO. 42-73, MAY 1942.

II. L.V. TERMINALS (X_1 & X_2 & X_3) ON SUBTRACTIVE POLARITY (-) TRANSFORMERS READ IN REVERSE ORDER TO THOSE SHOWN ABOVE, H_1 (WHICH IS ON THE LEFT) WILL REMAIN THE LINE LEAD FOR BOOSTING AND THE PRIMARY TO SECONDARY TIE FOR BUCKING.

NOMENCLATURE:

E_b = BOOSTED OR BUCKED LINE VOLTAGE, PHASE TO PHASE

E_{po} = RATED PRIMARY COIL VOLTAGE

E_p = PRIMARY LINE VOLTAGE

E_{pi} = PRIMARY COIL VOLTAGE

E_{si} = SECONDARY COIL VOLTAGE

r = TRANSFORMER RATIO = $\frac{\text{Epo}}{\text{Eso}} = \frac{\text{Epi}}{\text{Esi}}$

E_{so} = RATED SECONDARY COIL VOLTAGE

E_s = INCLUDED SECONDARY VOLTAGE

TABLE 1:

BOOSTING VOLTAGE PERCENTAGES (USING STANDARD RATIO TRANSFORMERS)

RATED PRIMARY COIL VOLTAGE EPO	RATED SECONDARY COIL VOLTAGE EPO	TRANSFORMER RATIO r= Epo/Eso	PERCANTAGE BOOST OR BUCK		
			1Φ	3Φ Δ	3Φ Y
2400	120	20.0	5.0	7.6	5.0
2400	240	10.0	10.0	15.3	10.0
2400	480	5.0	20.0	31.15	20.0
2280	120	19.0	5.3	8.0	5.3
2280	240	9.5	10.5	16.1	10.5
2280	480	4.75	21.0	32.8	21.0
2160	120	18.0	5.6	8.45	5.6
2160	240	9.0	11.1	17.1	11.1
2160	480	4.5	22.2	34.7	22.2
12000	480	25.0	4.0	6.1	4.0
12000	960*	12.5	8.0	12.2	8.0
12000	2400	5.0	20.0	31.15	20.0
11400	480	23.75	4.2	6.4	4.2
11400	960*	11.88	8.4	12.9	8.4
11400	2400	4.75	21.0	32.8	21.0
10800	480	22.5	4.4	6.8	4.4
10800	960*	11.25	8.9	13.6	8.9
10800	2400	4.5	22.2	34.7	22.2

* USING FOUR OF THE FIVE 480 VOLT SECONDARY COILS CONNECTED IN SERIES-PARALLEL FOR 960 VOLT BOOST OR BUCK.

NOTES:

I. SECONDARY LEADS OF BOOSTING TRANSFORMERS SHOULD BE REINSULATED WITH PRIMARY BUSHINGS. PLACE NO CUTOUTS IN THE PRIMARIES OF BOOSTING OR BUCKING STATIONS.

TABLE 2:

VALUES OF "A" FOR VALUES OF "r" BOOST OR BUCK			
"r" BOOST	"A"	"r" BUCK	"A"
20	1.517	20	1.48
10	1.532	10	1.456
5	1.557	5	1.394

GENERAL INFORMATION:

1. VALUE OF BOOSTED VOLTAGE IS DETERMINED BY THE FOLLOWING:
   FOR 1Φ AND 3Φ Y; $E_B=E_P\frac{(r+1)}{r}$ FOR BOOST
   AND $E_B=E_P\frac{(r+1)}{r}$ FOR BUCK.
   FOR 3Φ Δ; $E_B=E_P\frac{\sqrt{r^2-3r+3}}{r}$ FOR BOOST
   AND $E_B=E_P\frac{\sqrt{r^2-3r+3}}{r}$ FOR BUCK.
2. FROM THE ABOVE FORMULAS:
   FOR 1Φ AND 3Φ Y;
   % BOOST OR BUCK = $\frac{1}{\text{TRANSFORMER RATIO}}$ x 100.
   FOR 3Φ Δ;
   % BOOST OR BUCK = $\frac{\text{A (SEE TABLE 2)}}{\text{TRANSFORMER RATIO}}$ x 100.
3. THE ABOVE FORMULAS FOR CALCULATING % BOOST OR BUCK AND BOOSTING TRANSFORMER SIZES FOR GIVEN LOADS ARE BASED ON ZERO PERCENT VOLTAGE REGULATION AND DISPLACEMENT.
4. WHEN ONLY PART OF THE SECONDARY COILS ARE USED, THE SIZE OF THE BOOSTING TRANSFORMER MUST BE INCREASED IN PROPORTION.

TABLE 3:

BOOSTING TRANSFORMER KVA FOR EACH KVA OF LOAD

r= Epo/Eso	1Φ BOOST				3Φ Δ BOOST (USING 3 - 1Φ TRANSFORMERS)				3Φ Y BOOST (USING 3 - 1Φ TRANSFORMERS)			
	RATED PRIMARY COIL VOLTAGE EPO	PRIMARY LINE VOLTAGE EP	% BOOST	KVA PER KVA OF LOAD	RATED PRIMARY COIL VOLTAGE EPO	PRIMARY LINE VOLTAGE EP	% BOOST	KVA PER KVA OF LOAD (EACH TRANSFORMER)	RATED PRIMARY COIL VOLTAGE EPO	PRIMARY LINE VOLTAGE EP	% BOOST	KVA PER KVA OF LOAD (EACH TRANSFORMER)
20	2400	2285	5	$\frac{1}{r}$ = .050	2400	2230	7.6	$\frac{1}{r\sqrt{3}}$ = .029	2400	2285	5	$\frac{1}{r\sqrt{3}}$ = .029
										3960	5	$\frac{1}{3r}$ = .017
10	2400	2180	10	$\frac{1}{r}$ = .100	2400	2080	15.3	$\frac{1}{r\sqrt{3}}$ = .058	2400	2180	10	$\frac{1}{r\sqrt{3}}$ = .058
										3780	10	$\frac{1}{3r}$ = .033
5	2400	2000	20	$\frac{1}{r}$ = .200	2400	1825	31.15	$\frac{1}{r\sqrt{3}}$ = .116	2400	2000	20	$\frac{1}{r\sqrt{3}}$ = .116
										3470	20	$\frac{1}{3r}$ = .067
25	12000	11540	4	$\frac{1}{r}$ = .040	12000	11310	6.1	$\frac{1}{r\sqrt{3}}$ = .023	12000	11540	4	$\frac{1}{r\sqrt{3}}$ = .023
12.5	12000	11110	8	$\frac{1.25}{r}$ = .100*	12000	10690	12.2	$\frac{1.25}{r\sqrt{3}}$ = .058*	12000	11110	8	$\frac{1.25}{r\sqrt{3}}$ = .058*
5	12000	10000	20	$\frac{1}{r}$ = .200	12000	9125	31.15	$\frac{1}{r\sqrt{3}}$ = .116	12000	10000	20	$\frac{1}{r\sqrt{3}}$ = .116

THE ABOVE TABLE (NO. 3) IS FOR CASES WHERE A LOWER VOLTAGE IS **BOOSTED UP TO THE RATED TRANSFORMER VOLTAGE** AND MAY BE USED ALSO TO CALCULATE KVA. OF BUCKING TRANSFORMERS WHERE THE IMPRESSED PRIMARY VOLTAGE IS **BUCKED DOWN TO THE RATED TRANSFORMER VOLTAGE**.

* BOOSTER TRANSFORMER KVA. INCREASED 25% ON ACCOUNT OF FOUR OF THE FIVE 480 VOLT SECONDARY COILS CONNECTED IN SERIES-PARALLEL FOR A 960 VOLT BOOST.

REV	CHANGE	DRWN	BY	CHKD	APVD	DATE
C	REVISE TO 3D FORMAT	DV	JIK	-	-	10/6/2022
B	EDITORIAL CHANGES	-	JS	JS	CZH	10/1/2018
A	ORIGINAL ISSUE	-	-	PTA	RDG	11/1/1994

SDGE — A Sempra Energy utility®

© 1998 - 2022 San Diego Gas and Electric Company. All rights reserved. Removal of this copyright notice without permission is not permitted under law.

SDG&E ELECTRIC OVERHEAD CONSTRUCTION STANDARDS

TRANSFORMER CONNECTIONS BOOSTING AND BUCKING TABLES AND DIAGRAMS

SCALE: NOT TO SCALE

DRAWING NO: OH1111.1

SHEET: 1 OF 1

X Indicates Latest Revision | Completely Revised | New Page | Information Removed

SCOPE: THIS STANDARD DESCRIBES TRANSFORMER POLARITY AND SINGE PHASE PARALLELING.

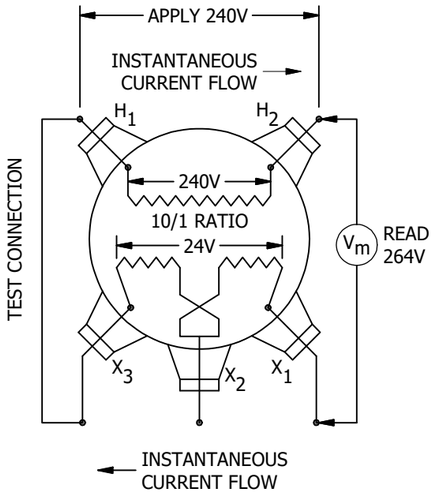

FIGURE 1
ADDITIVE POLARITY

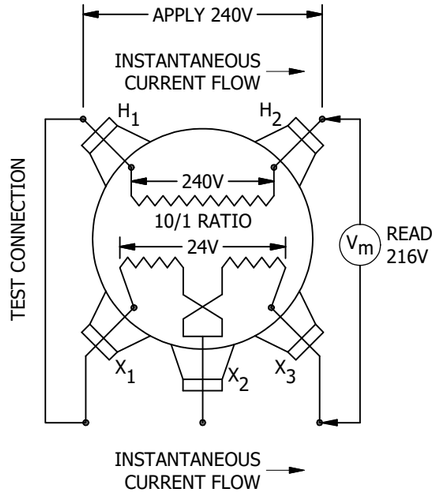

FIGURE 2
SUBTRACTIVE POLARITY

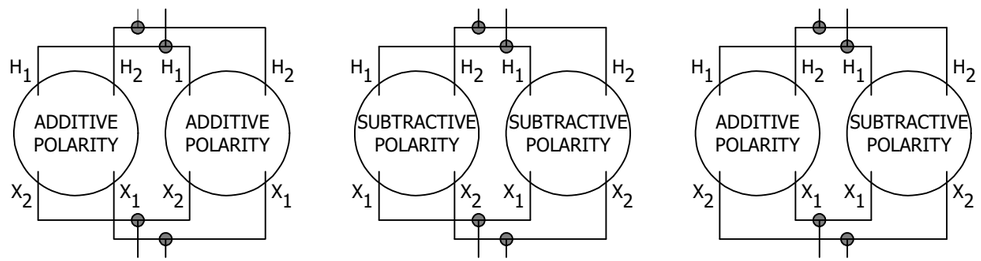

FIGURE 3
SINGLE PHASE CONNECTIONS FOR PARALLELING
TRANSFORMERS OF VARIOUS POLARITIES

INSTALLATION:

A. NEVER CONNECT ANY VOLTAGE ACROSS THE SECONDARY BUSHING WHEN TESTING TRANSFORMERS.

BILL OF MATERIALS: NONE

NOTES:

TRANSFORMER POLARITY:

I. TRANSFORMER POLARITY IS AN INDICATION OF THE DIRECTION OF CURRENT FLOW THROUGH THE HIGH-VOLTAGE TERMINALS WITH RESPECT TO THE DIRECTION OF CURRENT FLOW THROUGH THE LOW-VOLTAGE TERMINALS AT ANY GIVEN INSTANT IN THE ALTERNATING CYCLE.

II. THE POLARITY OF A SINGLE PHASE DISTRIBUTION TRANSFORMER MAY BE EITHER ADDITIVE OR SUBTRACTIVE. A SIMPLE TEST FOR POLARITY IS TO CONNECT TWO ADJACENT TERMINALS OF THE HIGH AND LOW WINDINGS TOGETHER AND APPLY A MODERATE VOLTAGE TO EITHER WINDING.

III. THE POLARITY IS ADDITIVE IF THE VOLTAGE ACROSS THE OTHER TWO LEADS OF THE WINDINGS IN QUESTION IS GREATER THAN THAT OF THE HIGH-VOLTAGE WINDING ALONE (FIGURE 1).

IV. THE POLARITY IS SUBTRACTIVE IF THE WINDING ACROSS THE OTHER TWO LEADS OF THE WINDINGS IN QUESTION IS LESS THAN THAT OF THE HIGH-VOLTAGE WINDING ALONE (FIGURE 2).

V. BY INDUSTRY STANDARDS, ALL SINGLE PHASE DISTRIBUTION TRANSFORMERS 200KVA AND SMALLER, WITH A HIGH VOLTAGE OF 8,660V AND BELOW, WILL HAVE ADDITIVE POLARITY. ALL OTHER SINGLE PHASE TRANSFORMERS WILL HAVE SUBTRACTIVE POLARITY.

VI. BY INDUSTRY STANDARDS, THE HIGH-VOLTAGE TERMINAL MARKINGS ARE H1 TO THE RIGHT AND H2 TO THE LEFT WHEN FACING THE HIGH-VOLTAGE SIDE OF THE TRANSFORMER.

VII. FOR ADDITIVE POLARITY THE LOW-VOLTAGE X1 TERMINAL IS ON THE RIGHT WHEN FACING THE LOW-VOLTAGE SIDE OF THE TRANSFORMER, AND FOR SUBTRACTIVE POLARITY, THE LOW-VOLTAGE X1 TERMINAL IS ON THE LEFT.

SINGLE PHASE PARALLELING:

VIII. IF GREATER CAPACITY IS DESIRED, TWO TRANSFORMERS OF THE SAME OR DIFFERENT KVA RATINGS MAY BE CONNECTED IN PARALLEL. SINGLE PHASE TRANSFORMERS HAVING EITHER ADDITIVE OR SUBTRACTIVE POLARITY MAY BE PARALLELED SUCCESSFULLY IF THEY ARE CONNECTED AS SHOWN IN FIGURE 3 AND THE FOLLOWING CONDITIONS EXIST:

a. VOLTAGE RATINGS ARE IDENTICAL
b. PERCENT IMPEDANCES ARE WITHIN 7 1/2% OF EACH OTHER
c. TAP SETTINGS ARE IDENTICAL
d. FREQUENCY IS THE SAME

REFERENCE:

a. SEE OH1116, OH1117, OH1118 AND OH1119 FOR SINGLE AND THREE PHASE TRANSFORMER CONNECTIONS.

TABLE OF CONTENTS

REV	CHANGE	DRWN	BY	CHKD	APVD	DATE
D	REVISE TO 3D FORMAT	DV	JIK	-	-	10/6/2022
C	DRAWING UPDATE	EDM	GLW	JES	CZH	2/8/2021
B	EDITORIAL CHANGES	-	JS	JS	CZH	10/1/2018

SDG&E
A Sempra Energy utility

SDG&E ELECTRIC OVERHEAD CONSTRUCTION STANDARDS

TRANSFORMER POLARITY AND SINGLE PHASE PARALLELING

SCALE: NOT TO SCALE

DRAWING NO: OH1115.1

SHEET: 1 OF 2

© 1998 - 2022 San Diego Gas and Electric Company. All rights reserved. Removal of this copyright notice without permission is not permitted under law.

X Indicates Latest Revision | Completely Revised | New Page | Information Removed

TABLE OF CONTENTS

SCOPE: THIS STANDARD IDENTIFIES ACCEPTED METHODS FOR OVERHEAD SECONDARY CONDUCTOR MARKING. IT SHALL BE USED FOR NEW INSTALLATIONS.

ATTENTION:

* ALWAYS VERIFY EXISTING CONDUCTOR VOLTAGE AND MARKINGS.

INSTALLATION:

SINGLE PHASE COLORS:

A. WHITE OR GRAY = (n) NEUTRAL (**ALWAYS** WITH NO EXCEPTIONS)

B. BLACK = a-PHASE

C. RED = b-PHASE

THREE PHASE COLORS:

D. 120/240V 4-WIRE DELTA THREE PHASE

1. BLACK = a-PHASE
2. RED = b-PHASE
3. ORANGE = c-PHASE (HIGH/POWER LEG 208V)

E. 120/208V 4-WIRE WYE THREE PHASE

1. BLACK = a-PHASE
2. RED = b-PHASE
3. BLUE = c-PHASE

F. 480V 4-WIRE DELTA THREE PHASE POWER SECONDARY

1. GREEN OR GREEN W/ YELLOW STRIPE = SERVICE GROUND CONDUCTOR (OVERHEAD ONLY)
2. RED = b-PHASE

ROTATION THREE PHASE

G. PHASE ARRANGEMENT: SHALL BE (A, B, C) LEFT TO RIGHT, TOP TO BOTTOM, FRONT TO BACK AS VIEWED FROM FRONT OF THE TRANSFORMER, TRANSFORMER BANK, TERMINATING ENCLOSURE, METER PANEL, AND/OR SWITCH BOARDS.

H. ROTATION INDICATOR LEADS ARRANGEMENT: SHALL BE ATTACHED (RED, WHITE, BLUE) (1, 2, 3) (A, B, C) LEFT TO RIGHT, TOP TO BOTTOM, FRONT TO BACK AS VIEWED FROM FRONT OF THE TRANSFORMER, TRANSFORMER BANK, TERMINATING ENCLOSURE, METER PANEL, AND/OR SWITCH BOARDS.

J. **WHEN MARKING:**

1. CW = CLOCKWISE
2. CCW = COUNTERCLOCKWISE

BILL OF MATERIALS: NONE

NOTES: NONE

REFERENCE: NONE

REV	CHANGE	DRWN	BY	CHKD	APVD	DATE
D	REVISE TO 3D FORMAT	DV	JIK	-	-	10/6/2022
C	DRAWING UPDATE	EDM	GLW	JES	CZH	2/8/2021
B	EDITORIAL CHANGES	-	JS	JS	CZH	10/1/2018

SDG&E ELECTRIC OVERHEAD CONSTRUCTION STANDARDS

SECONDARY CABLE MARKING

SCALE: NOT TO SCALE

DRAWING NO: OH1115.2

SHEET: 2 OF 2

© 1998 - 2022 San Diego Gas and Electric Company. All rights reserved. Removal of this copyright notice without permission is not permitted under law.

X Indicates Latest Revision | Completely Revised | New Page | Information Removed

SCOPE: THIS STANDARD ILLUSTRATES WIRING DIAGRAMS FOR SINGLE PHASE TRANSFORMER CONNECTIONS.

TABLE 1:

2.4KV SINGLE PHASE CONNECTIONS

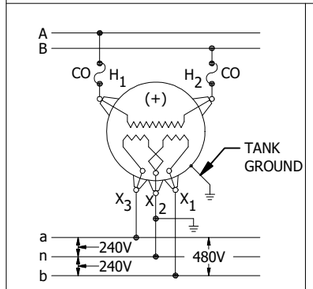

FIGURE 1
TYPE WF
240-480V, 1Ø, 3 WIRE SEC.

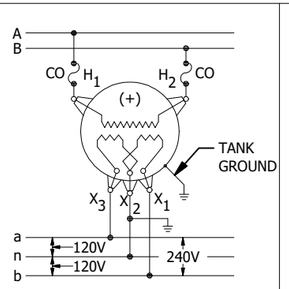

FIGURE 2
TYPE W
120-240V, 1Ø, 3 WIRE SEC.

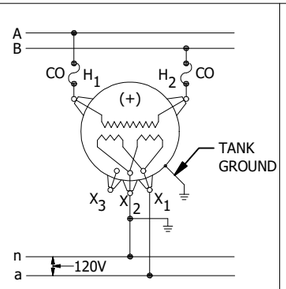

FIGURE 3
TYPE W
120V, 1Ø, 2 WIRE SEC.

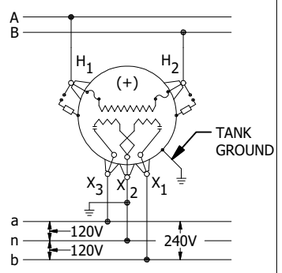

FIGURE 4
TYPE WJ
120-240V, 1Ø, 3 WIRE SEC.

TABLE 2:

2.4KV/4.16KV AND 7.2KV/12.4KV SINGLE PHASE CONNECTIONS

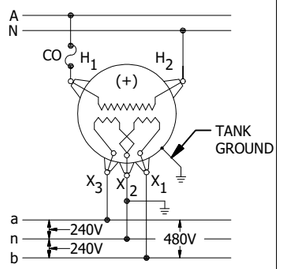

FIGURE 5
TYPE WF OR YF
240-480V, 1Ø, 3 WIRE SEC.

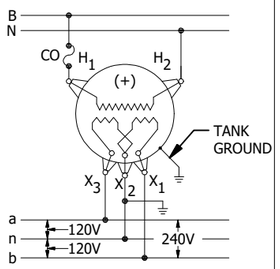

FIGURE 6
TYPE W OR Y
120-240V, 1Ø, 3 WIRE SEC.

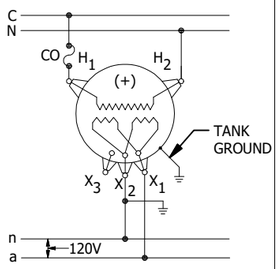

FIGURE 7
TYPE W OR Y
120V, 1Ø, 2 WIRE SEC.

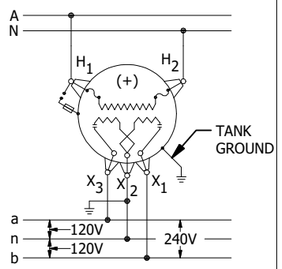

FIGURE 8
TYPE WJ OR YJ
120-240V, 1Ø, 3 WIRE SEC.

TABLE 3:

12KV SINGLE PHASE CONNECTIONS

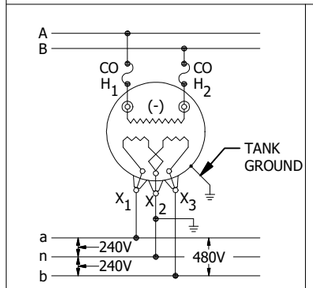

FIGURE 9
TYPE HF
240-480V, 1Ø, 3 WIRE SEC.

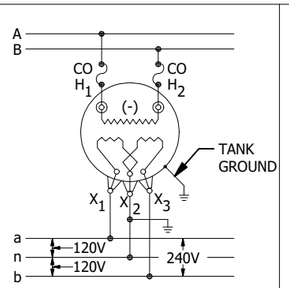

FIGURE 10
TYPE H
120-240V, 1Ø, 3 WIRE SEC.

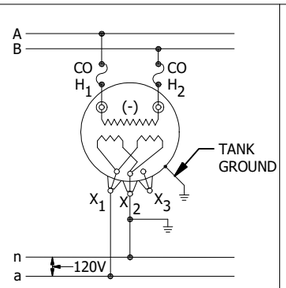

FIGURE 11
TYPE H
120V, 1Ø, 2 WIRE SEC.

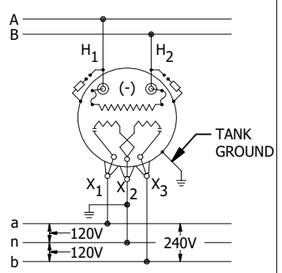

FIGURE 12
TYPE HJ
120-240V, 1Ø, 3 WIRE SEC.

INSTALLATION:

A. THE REQUIRED MINIMUM DISTANCE OF UNCOVERED CONDUCTOR PHASE-TO-PHASE, PHASE-TO-NEUTRAL, OR PHASE-TO-GROUND IS 60 INCHES.

B. THE HAND WHEEL THAT IS SUPPLIED WITH THE BUSHING COVER MUST BE INSTALLED TO SECURE THE COVER TO THE BUSHING AND PREVENT ANIMALS FROM MAKING CONTACT WITH THE BUSHING CONNECTION. THE JUMPER WIRE SHALL BE SECURED USING THE EYEBOLT TIGHTENING NUT, WHILE THE HAND WHEEL SHALL THREAD ONTO THE REMAINING THREADS. IF THERE ARE NOT ENOUGH THREADS REMAINING, THE EYE BOLT TIGHTENING NUT SHOULD BE REPLACED WITH THE HAND WHEEL AND HAND TIGHTENED ONLY.

C. USE SELF FUSING TAPE SILICONE TAPE (SQUIRREL TAPE) FOR COVERING HIGH VOLTAGE CONNECTIONS.
1" TAPE - S721736
2" TAPE - S721738
FOR DIFFICULT TO COVER TERMINATIONS, LAYER TAPE PER MANUFACTURERS INSTRUCTIONS.

BILL OF MATERIALS: NONE

NOTES:

I. (+) ADDITIVE POLARITY TRANSFORMERS.

II. (-) NEGATIVE POLARITY TRANSFORMERS.

REFERENCE:

a. FOR DETERMINING WHERE AVIAN PROTECTION COVER-UP DEVICES SHOULD BE INSTALLED, SEE OH1610 OR GO TO LAND SERVICES GEOGRAPHIC INFORMATION SYSTEMS (LS-GIS) FOR THE MAPPING LAYER TITLED "AVIAN AREA" UNDER ENVIRONMENTAL.

b. AVIAN POWER LINE INTERACTION COMMITTEE (APLIC), BEST PRACTICES DATED APRIL, 2005.

TABLE OF CONTENTS

REV	CHANGE	DRWN	BY	CHKD	APVD	DATE
F	REVISE TO 3D FORMAT	DV	JIK	-	-	10/11/2022
E	EDITORIAL CHANGES	GLC	JIK	JES	CZH	10/12/2020
D	TABLE UPDATE	EDM	GLW	JES	CZH	7/14/2020

SDG&E ELECTRIC OVERHEAD CONSTRUCTION STANDARDS

TRANSFORMER CONNECTIONS SINGLE PHASE

SCALE: NOT TO SCALE

DRAWING NO: OH1116.1

SHEET: 1 OF 4

© 1998 - 2022 San Diego Gas and Electric Company. All rights reserved. Removal of this copyright notice without permission is not permitted under law.

X Indicates Latest Revision | Completely Revised | New Page | Information Removed

SCOPE: THIS STANDARD ILLUSTRATES WIRING DIAGRAMS FOR 2.4KV DELTA TRANSFORMER CONNECTIONS.

TABLE 1:

2.4KV DELTA SINGLE AND THREE PHASE CONNECTIONS

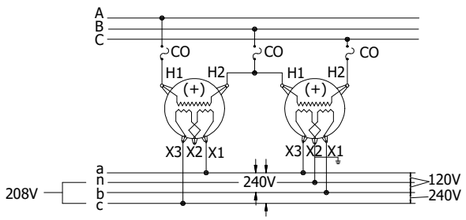

FIGURE 1 (VIII)(XI)
TYPE W
120-240V OPEN DELTA, 1Ø LTG, 3Ø POWER, 4 WIRE SECONDARY

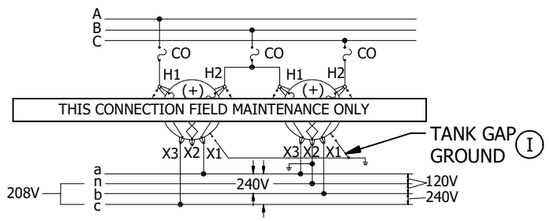

FIGURE 2 (III)(IX)(XI)
TYPE WJ
120-240V OPEN DELTA, 1Ø LTG, 3Ø POWER, 4 WIRE SECONDARY

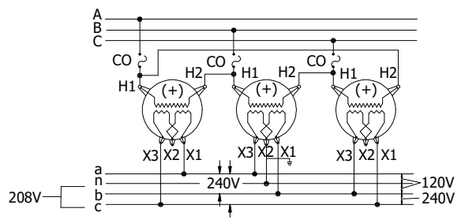

FIGURE 3 (VIII)(XI)
TYPE W
120-240V DELTA, 1Ø LTG &/OR 3Ø POWER, 4 WIRE SECONDARY

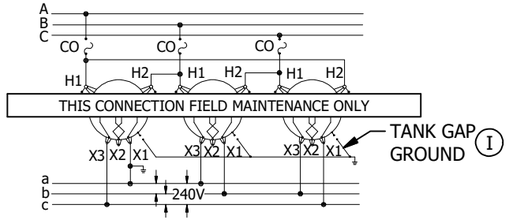

FIGURE 4 (II)
TYPE WJ
240V DELTA, 3Ø, 3 WIRE POWER SECONDARY

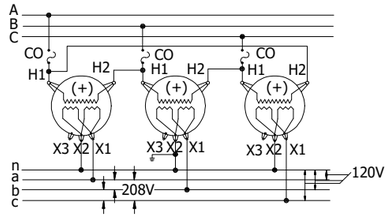

FIGURE 5 (VIII)
TYPE W
120-208V WYE, 3Ø, 4 WIRE LTG AND POWER SECONDARY

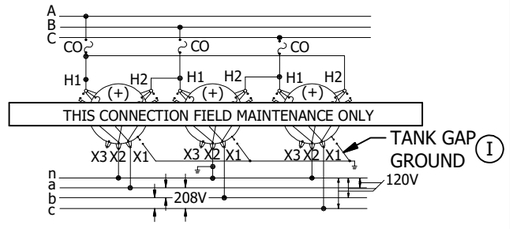

FIGURE 6 (III)(VIII)
TYPE WJ
120-208V WYE, 3Ø, 4 WIRE, LTG AND POWER SECONDARY

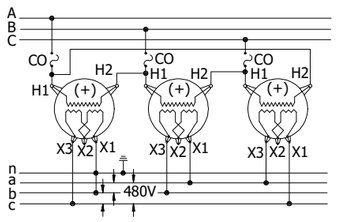

FIGURE 7 (IV)(V)(VI)(VII)(VIII)
TYPE WF
480V DELTA, 3Ø, 4 WIRE POWER SECONDARY

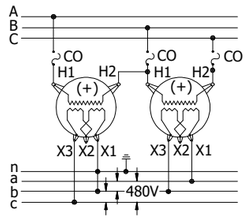

FIGURE 8 (IV)(V)(VI)(VII)(VIII)
TYPE WF
480V OPEN DELTA, 3Ø, 4 WIRE POWER SECONDARY

INSTALLATION: NONE

BILL OF MATERIALS: NONE

NOTES:

(I) OMIT LIGHTNING ARRESTERS AND TANK GAP GROUNDS ON TYPE WE TRANSFORMER INSTALLATIONS.

(II) NOT TO BE USED EXCEPT WHERE APPROVED BY DESIGN STANDARDS GROUP FOR EMERGENCY SUBSTITUTION FOR TYPE W'S AND MUST BE CHANGED TO TYPE 'W' WHEN THEY ARE AVAILABLE.

(III) NOT TO BE USED EXCEPT WHERE APPROVED BY DESIGN STANDARDS GROUP. LATER CHANGEOUT IS NOT REQUIRED.

(IV) NEW CUSTOMER CONNECTED TO NEW STATION: CONNECT AS SHOWN IN FIGURES 7 & 8. THE SERVICE GROUND CONDUCTOR (4TH WIRE) SHALL BE MARKED GREEN OR GREEN WITH ONE OR MORE YELLOW STRIPES IN COLOR AND THE GROUNDED PHASE CONDUCTOR SHALL BE MARKED RED IN COLOR FOR THE CUSTOMER. THE GROUNDED PHASE CONDUCTOR MUST BE CONNECTED TO THE "B" PHASE IN THE SERVICE & METERING EQUIPMENT.

(V) NEW CUSTOMER CONNECTED TO EXISTING UNGROUNDED STATION: RUN FOUR WIRE SERVICE AND IDENTIFY THE FOURTH WIRE FOR THE CUSTOMER AND GROUND IT AT THE STATION POLE, BUT DO NOT INTERCONNECT FOURTH WIRE TO PHASE WIRE AT THE POLE. TIE ONE CORNER OF THE DELTA TO THE GROUND WHEN ALL SERVICES FROM THAT STATION ARE FOUR WIRE.

(VI) EXISTING CUSTOMER CONNECTED TO EXISTING UNGROUNDED STATION: 3-WIRE SERVICE TO REMAIN UNCHANGED AND UN-GROUNDED.

(VII) THE MINIMUM SIZE OF THE SERVICE GROUND CONDUCTOR (4TH WIRE) SHALL BE #6 COPPER OR EQUIVALENT. #4/C SERVICE DROP CABLE MAY BE USED FOR 480 VOLT SERVICES, AND THE MESSENGER SHALL THEN BE USED AS THE SERVICE GROUND CONDUCTOR.

(VIII) THE NEUTRAL OR SERVICE GROUND CONDUCTOR SHALL ALWAYS BE CONNECTED TO NEW CUSTOMER'S SERVICE EQUIPMENT.

(IX) (+) ADDITIVE POLARITY TRANSFORMERS.

(XI) HIGH LEG MARKING: 4-WIRE DELTA-CONNECTED SERVICE WHERE THE MIDPOINT OF ONE PHASE IS GROUNDED, THE SERVICE-ENTRANCE CONDUCTOR HAVING THE HIGHER PHASE VOLTAGE-TO-GROUND SHALL BE MARKED ORANGE IN COLOR. THE HIGH LEG CONDUCTOR MUST BE CONNECTED TO THE "C" PHASE WITHIN THE SERVICE AND METERING EQUIPMENT.

REFERENCE: NONE

TABLE OF CONTENTS

REV	CHANGE	DRWN	BY	CHKD	APVD	DATE
F	REVISE TO 3D FORMAT	DV	JIK	-	-	10/11/2022
E	EDITORIAL CHANGES	GLC	JIK	JES	CZH	10/12/2020
D	TABLE UPDATE	EDM	GLW	JES	CZH	7/14/2020

SDG&E ELECTRIC OVERHEAD CONSTRUCTION STANDARDS

TRANSFORMER CONNECTIONS 2.4KV DELTA

SCALE: NOT TO SCALE

DRAWING NO: OH1116.2

SHEET: 2 OF 4

© 1998 - 2022 San Diego Gas and Electric Company. All rights reserved. Removal of this copyright notice without permission is not permitted under law.

X Indicates Latest Revision | Completely Revised | New Page | Information Removed

SCOPE: THIS STANDARD ILLUSTRATES WIRING DIAGRAMS FOR 2.4KV/4.16KV AND 7.2KV/12.4KV WYE PRIMARY TRANSFORMER CONNECTIONS.

TABLE 1:

2.4KV/4.16KV AND 7.2KV/12.4KV WYE SINGLE AND THREE PHASE CONNECTIONS

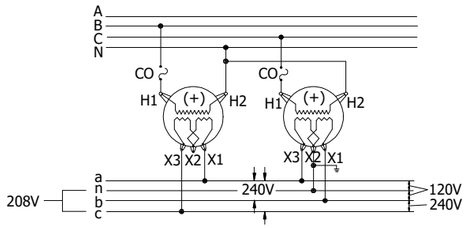

FIGURE 1 (VIII)(XI)
TYPE W OR Y
120-240V OPEN DELTA, 1Ø LTG, 3Ø POWER, 4 WIRE SECONDARY

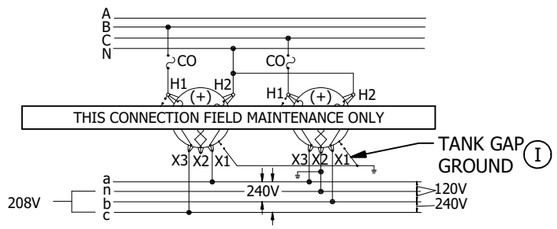

FIGURE 2 (III)(IX)(XI)
TYPE WJ OR YJ
120-240V OPEN DELTA, 1Ø LTG, 3Ø POWER, 4 WIRE SECONDARY

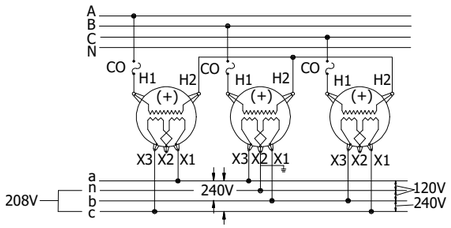

FIGURE 3 (VIII)(XI)
TYPE W OR Y
120-240V DELTA, 1Ø LTG &/OR 3Ø POWER, 4 WIRE SECONDARY

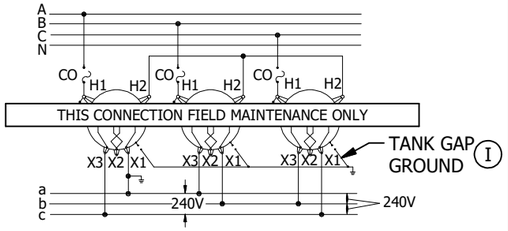

FIGURE 4 (II)
TYPE WJ OR YJ
240V DELTA, 3Ø, 3 WIRE POWER SECONDARY

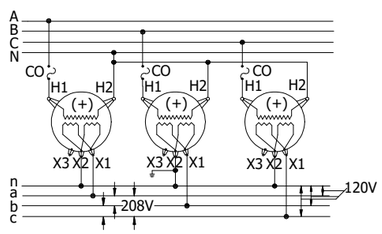

FIGURE 5 (VIII)
TYPE W OR Y
120-208V WYE, 3Ø, 4 WIRE LTG AND POWER SECONDARY

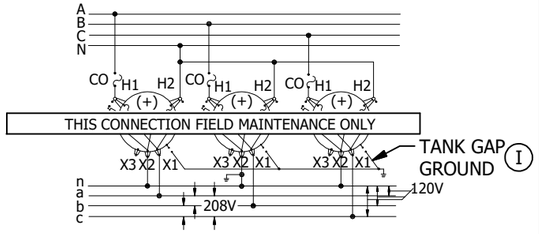

FIGURE 6 (III)(VIII)
TYPE WJ OR YJ
120-208V WYE, 3Ø, 4 WIRE, LTG AND POWER SECONDARY

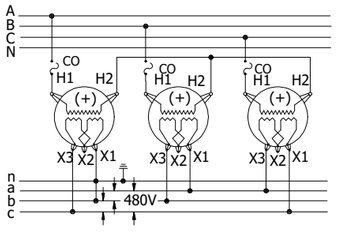

FIGURE 7 (IV)(V)(VI)(VII)(VIII)
TYPE WF OR YF
480V DELTA, 3Ø, 4 WIRE POWER SECONDARY

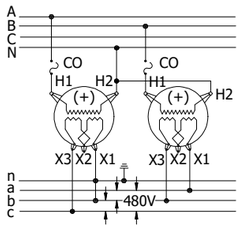

FIGURE 8 (IV)(V)(VI)(VII)(VIII)
TYPE WF OR YF
480V OPEN DELTA, 3Ø, 4 WIRE POWER SECONDARY

INSTALLATION: NONE

BILL OF MATERIALS: NONE

NOTES:

(I) OMIT LIGHTNING ARRESTERS AND TANK GAP GROUNDS ON TYPE WE TRANSFORMER INSTALLATIONS.

(II) NOT TO BE USED EXCEPT WHERE APPROVED BY DESIGN STANDARDS GROUP FOR EMERGENCY SUBSTITUTION FOR TYPE W'S AND MUST BE CHANGED TO TYPE 'W' WHEN THEY ARE AVAILABLE.

(III) NOT TO BE USED EXCEPT WHERE APPROVED BY DESIGN STANDARDS GROUP. LATER CHANGEOUT IS NOT REQUIRED.

(IV) NEW CUSTOMER CONNECTED TO NEW STATION: CONNECT AS SHOWN IN FIGURES 7 & 8. THE SERVICE GROUND CONDUCTOR (4TH WIRE) SHALL BE MARKED GREEN OR GREEN WITH ONE OR MORE YELLOW STRIPES IN COLOR AND THE GROUNDED PHASE CONDUCTOR SHALL BE MARKED RED IN COLOR FOR THE CUSTOMER. THE GROUNDED PHASE CONDUCTOR MUST BE CONNECTED TO THE "B" PHASE IN THE SERVICE & METERING EQUIPMENT.

(V) NEW CUSTOMER CONNECTED TO EXISTING UNGROUNDED STATION: RUN FOUR WIRE SERVICE AND IDENTIFY THE FOURTH WIRE FOR THE CUSTOMER AND GROUND IT AT THE STATION POLE, BUT DO NOT INTERCONNECT FOURTH WIRE TO PHASE WIRE AT THE POLE. TIE ONE CORNER OF THE DELTA TO THE GROUND WHEN ALL SERVICES FROM THAT STATION ARE FOUR WIRE.

(VI) EXISTING CUSTOMER CONNECTED TO EXISTING UNGROUNDED STATION: 3-WIRE SERVICE TO REMAIN UNCHANGED AND UN-GROUNDED.

(VII) THE MINIMUM SIZE OF THE SERVICE GROUND CONDUCTOR (4TH WIRE) SHALL BE #6 COPPER OR EQUIVALENT. #4/C SERVICE DROP CABLE MAY BE USED FOR 480 VOLT SERVICES, AND THE MESSENGER SHALL THEN BE USED AS THE SERVICE GROUND CONDUCTOR.

(VIII) THE NEUTRAL OR SERVICE GROUND CONDUCTOR SHALL ALWAYS BE CONNECTED TO NEW CUSTOMER'S SERVICE EQUIPMENT.

(IX) (+) ADDITIVE POLARITY TRANSFORMERS.

(XI) HIGH LEG MARKING: 4-WIRE DELTA-CONNECTED SERVICE WHERE THE MIDPOINT OF ONE PHASE IS GROUNDED, THE SERVICE-ENTRANCE CONDUCTOR HAVING THE HIGHER PHASE VOLTAGE-TO-GROUND SHALL BE MARKED ORANGE IN COLOR. THE HIGH LEG CONDUCTOR MUST BE CONNECTED TO THE "C" PHASE WITHIN THE SERVICE AND METERING EQUIPMENT.

REFERENCE: NONE

TABLE OF CONTENTS

REV	CHANGE	DRWN	BY	CHKD	APVD	DATE
F	REVISE TO 3D FORMAT	DV	JIK	-	-	10/11/2022
E	EDITORIAL CHANGES	GLC	JIK	JES	CZH	10/12/2020
D	TABLE UPDATE	EDM	GLW	JES	CZH	7/14/2020

SDG&E ELECTRIC OVERHEAD CONSTRUCTION STANDARDS

TRANSFORMER CONNECTIONS
2.4KV/4.16KV AND 7.2KV/12.4KV WYE PRIMARY

SCALE: NOT TO SCALE

DRAWING NO: OH1116.3

SHEET: 3 OF 4

© 1998 - 2022 San Diego Gas and Electric Company. All rights reserved. Removal of this copyright notice without permission is not permitted under law.

X Indicates Latest Revision | Completely Revised | New Page | Information Removed

TABLE OF CONTENTS

SCOPE: THIS STANDARD ILLUSTRATES WIRING DIAGRAMS FOR 12KV DELTA TRANSFORMER CONNECTIONS.

TABLE 1:

12KV DELTA SINGLE AND THREE PHASE CONNECTIONS

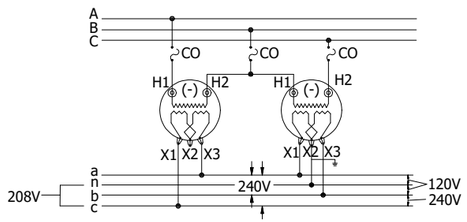

FIGURE 1 (VIII)(XI)
TYPE H
120-240V OPEN DELTA, 1Ø LTG, 3Ø POWER, 4 WIRE SECONDARY

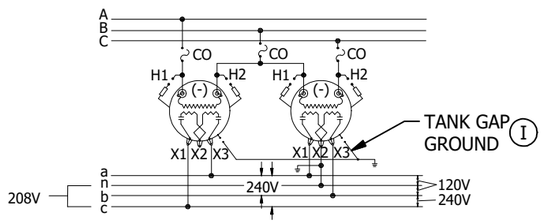

FIGURE 2 (III)(IX)(XI)
TYPE HJ
120-240V OPEN DELTA, 1Ø LTG, 3Ø POWER, 4 WIRE SECONDARY

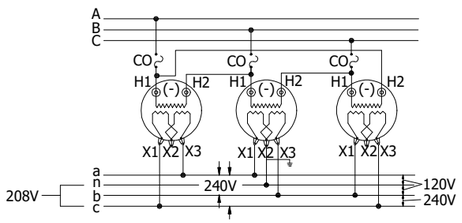

FIGURE 3 (VIII)(XI)
TYPE H
120-240V DELTA, 1Ø LTG &/OR 3Ø POWER, 4 WIRE SECONDARY

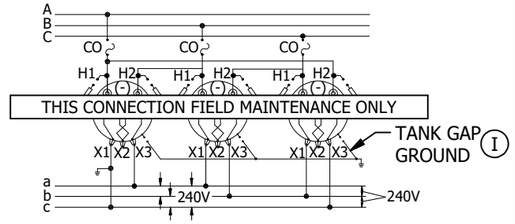

FIGURE 4 (II)
TYPE HJ
240V DELTA, 3Ø POWER, 3 WIRE SECONDARY

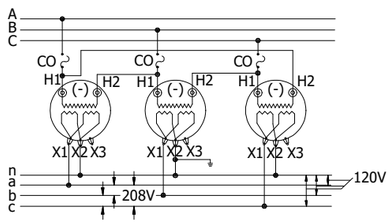

FIGURE 5 (VIII)
TYPE H
120-208V WYE, 3Ø, 4 WIRE LTG AND POWER SECONDARY

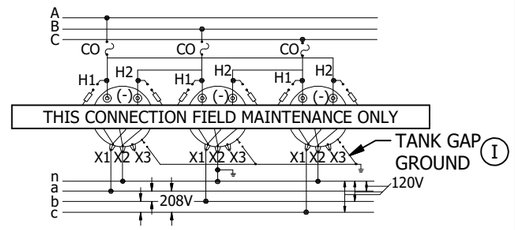

FIGURE 6 (III)(VIII)
TYPE HJ
120-208V WYE, 3Ø, 4 WIRE, LTG AND POWER SECONDARY

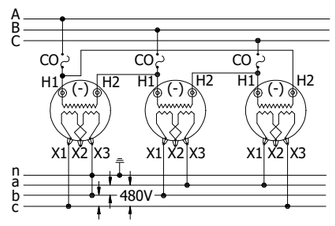

FIGURE 7 (IV)(V)(VI)(VII)(VIII)
TYPE HF
480V DELTA, 3Ø, 4 WIRE POWER SECONDARY

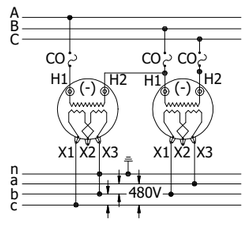

FIGURE 8 (IV)(V)(VI)(VII)(VIII)
TYPE HF
480V OPEN DELTA, 3Ø, 4 WIRE POWER SECONDARY

INSTALLATION: NONE

BILL OF MATERIALS: NONE

NOTES:

(I) OMIT LIGHTNING ARRESTERS AND TANK GAP GROUNDS ON TYPE WE TRANSFORMER INSTALLATIONS.

(II) NOT TO BE USED EXCEPT WHERE APPROVED BY DESIGN STANDARDS GROUP FOR EMERGENCY SUBSTITUTION FOR TYPE W'S AND MUST BE CHANGED TO TYPE 'W' WHEN THEY ARE AVAILABLE.

(III) NOT TO BE USED EXCEPT WHERE APPROVED BY DESIGN STANDARDS GROUP. LATER CHANGEOUT IS NOT REQUIRED.

(IV) NEW CUSTOMER CONNECTED TO NEW STATION: CONNECT AS SHOWN IN FIGURES 7 & 8. THE SERVICE GROUND CONDUCTOR (4TH WIRE) SHALL BE MARKED GREEN OR GREEN WITH ONE OR MORE YELLOW STRIPES IN COLOR AND THE GROUNDED PHASE CONDUCTOR SHALL BE MARKED RED IN COLOR FOR THE CUSTOMER. THE GROUNDED PHASE CONDUCTOR MUST BE CONNECTED TO THE "B" PHASE IN THE SERVICE & METERING EQUIPMENT.

(V) NEW CUSTOMER CONNECTED TO EXISTING UNGROUNDED STATION: RUN FOUR WIRE SERVICE AND IDENTIFY THE FOURTH WIRE FOR THE CUSTOMER AND GROUND IT AT THE STATION POLE, BUT DO NOT INTERCONNECT FOURTH WIRE TO PHASE WIRE AT THE POLE. TIE ONE CORNER OF THE DELTA TO THE GROUND WHEN ALL SERVICES FROM THAT STATION ARE FOUR WIRE.

(VI) EXISTING CUSTOMER CONNECTED TO EXISTING UNGROUNDED STATION: 3-WIRE SERVICE TO REMAIN UNCHANGED AND UN-GROUNDED.

(VII) THE MINIMUM SIZE OF THE SERVICE GROUND CONDUCTOR (4TH WIRE) SHALL BE #6 COPPER OR EQUIVALENT. #4/C SERVICE DROP CABLE MAY BE USED FOR 480 VOLT SERVICES, AND THE MESSENGER SHALL THEN BE USED AS THE SERVICE GROUND CONDUCTOR.

(VIII) THE NEUTRAL OR SERVICE GROUND CONDUCTOR SHALL ALWAYS BE CONNECTED TO NEW CUSTOMER'S SERVICE EQUIPMENT.

(IX) (+) ADDITIVE POLARITY TRANSFORMERS.

(XI) HIGH LEG MARKING: 4-WIRE DELTA-CONNECTED SERVICE WHERE THE MIDPOINT OF ONE PHASE IS GROUNDED, THE SERVICE-ENTRANCE CONDUCTOR HAVING THE HIGHER PHASE VOLTAGE-TO-GROUND SHALL BE MARKED ORANGE IN COLOR. THE HIGH LEG CONDUCTOR MUST BE CONNECTED TO THE "C" PHASE WITHIN THE SERVICE AND METERING EQUIPMENT.

REFERENCE: NONE

REV	CHANGE	DRWN	BY	CHKD	APVD	DATE
F	REVISE TO 3D FORMAT	DV	JIK	-	-	10/11/2022
E	EDITORIAL CHANGES	GLC	JIK	JES	CZH	10/12/2020
D	TABLE UPDATE	EDM	GLW	JES	CZH	7/14/2020

SDG&E

A Sempra Energy utility®

© 1998 - 2022 San Diego Gas and Electric Company. All rights reserved. Removal of this copyright notice without permission is not permitted under law.

SDG&E ELECTRIC OVERHEAD CONSTRUCTION STANDARDS

TRANSFORMER CONNECTIONS 12KV DELTA

SCALE: NOT TO SCALE

DRAWING NO: OH1116.4

SHEET: 4 OF 4

X Indicates Latest Revision | Completely Revised | New Page | Information Removed

SCOPE: THIS STANDARD IDENTIFIES SINGLE-PHASE & THREE-PHASE TRANSFORMERS BY PREFIX.

INSTALLATION:

(A) ONE 2 1/2% TAP ABOVE AND BELOW.

(B) TWO 2 1/2% TAPS ABOVE AND BELOW.

(C) THREE-PHASE SECONDARY AVAILABLE WHEN BANKED.

(D) WHEN MIRAMAR SUBSTITUTES TAPPED TRANSFORMERS FOR UNTAPPED ONES, THEY SHALL BE USED IN THE FLAT (STRAIGHT OR NEUTRAL) TAP POSITION.

(E) FOR USE IN METAL CLAD ENVIRONMENTS ONLY, UNIT HAS 200A TAP WELLS TO ACCOMMODATE INSTALLATION.

(F) AUTHORIZATION FROM DISTRICT ENGINEER REQUIRED BEFORE USING TAPS. IF AFTER NORMAL WORKING HOURS, AND TAPS MUST BE USED, INFORM DISTRICT ENGINEER OF THE USE AND TAP SETTING THE NEXT DAY.

(G) SPECIAL ORDER (MAY REQUIRE 20 WEEKS LEAD TIME TO RECEIVE ITEMS).

(H) FOR REPLACEMENT AND NEW INSTALLATION OF 208Y/120Y THREE-PHASE SERVICE. CUTTING COILS NOT REQUIRED FOR THIS TRANSFORMER.

BILL OF MATERIALS: NONE

NOTES:

I. DATA ON THIS PAGE WAS PREPARED TO AID IN UNDERSTANDING THE VOLTAGE RATINGS USED IN THE FOLLOWING "TRANSFORMER PREFIXES" STANDARDS PAGES.

II. TRANSFORMERS LISTED IN THIS STANDARD ARE FOR EITHER NEW INSTALLATIONS OR FIELD REPLACEMENTS FOR EXISTING UNITS.

III. TRANSFORMERS LISTED IN STANDARDS BEGINNING WITH FMO OH1199.201 ARE CLASSIFIED INTO TWO CATEGORIES:

a. THOSE THAT ARE FIELD REPLACEMENT FOR EXISTING UNITS (NOT TO BE USED FOR NEW INSTALLATIONS) AND,

b. THOSE THAT ARE NO LONGER PURCHASED (INDICATED BY A FOOTNOTE).

IV. **SINGLE-PHASE AND THREE-PHASE TRANSFORMERS HAVE HIGH VOLTAGE RATINGS AS FOLLOWS:**

VOLTAGE	DEFINITION
2400/4160Y	INDICATES A WINDING OF 2,400V SUITABLE FOR LINE-TO-LINE CONNECTION ON A 2,400V SYSTEM OR LINE-TO-NEUTRAL CONNECTION ON A 4,160V 4-WIRE WYE SYSTEM.
2400 X 4800	INDICATES A WINDING SUITABLE FOR SERIES OPERATION AT 4,800V OR MULTIPLE OPERATION AT 2,400V BUT NOT FOR THREE-WIRE OPERATION.
2400 X 7200	INDICATES A WINDING SUITABLE FOR SERIES OPERATION AT 7,200V OR MULTIPLE OPERATION AT 2,400V BUT NOT FOR THREE-WIRE OPERATION.
7200/12470Y	INDICATES A WINDING OF 7,200V SUITABLE FOR LINE-TO-LINE CONNECTION ON A 7,200V DELTA SYSTEM OR LINE-TO-NEUTRAL CONNECTION ON A 12.47KV FOUR-WIRE WYE SYSTEM.
12000 GRD Y/6930	INDICATES A WINDING OF 6,930V SUITABLE FOR LINE-TO-NEUTRAL CONNECTION ONLY ON A 12KV EFFECTIVELY GROUNDED SYSTEM.
12470 GRD Y/7200	INDICATES A WINDING OF 7,200V SUITABLE FOR LINE-TO-NEUTRAL CONNECTION ONLY ON A 12.47KV EFFECTIVELY GROUNDED SYSTEM.
4160	INDICATES A WINDING OF 4,160V SUITABLE FOR A LINE-TO-LINE CONNECTION ON A 4,160V WYE SYSTEM.
12000	INDICATES A WINDING OF 12KV SUITABLE FOR A LINE-TO-LINE CONNECTION ON A 12KV DELTA SYSTEM.

TABLE OF CONTENTS

© 1998 - 2023 San Diego Gas & Electric Company. All rights reserved. Removal of this copyright notice without permission is not permitted under law.

REV	CHANGE	DR	BY	DSN	APV	DATE	REV	CHANGE	DR	BY	DSN	APV	DATE
E	TABLE UPDATE	-	MRF	JES	CZH	11/12/2019	H	BILL OF MATERIALS UPDATE	ARC	MRF	FRC	KRG	01/09/2023
D	EDITORIAL CHANGES	-	JS	JS	CZH	10/01/2018	G	TABLE UPDATE	ARC	VMV	JES	CZH	10/28/2021
C	TABLE UPDATES	-	KR	JS	MDJ	10/27/2017	F	TABLE UPDATE	EDM	VMV	JES	CZH	02/08/2021

NOTES: (CONT'D)

V. **SINGLE-PHASE TRANSFORMERS HAVE LOW VOLTAGE RATINGS AS FOLLOWS:**

VOLTAGE	DEFINITION
120/240	INDICATES A SECONDARY WINDING SUITABLE FOR 240V SERIES OPERATION, THREE-WIRE OPERATION OR FOR 120V TWO-WIRE, MULTIPLE OPERATION.
240/480	INDICATES A SECONDARY WINDING SUITABLE FOR 480V SERIES OPERATION, THREE-WIRE OPERATION OR FOR 240V TWO-WIRE, MULTIPLE OPERATION.
240/120	INDICATES A SECONDARY WINDING SUITABLE FOR 240V SERIES OPERATION OR THREE-WIRE OPERATION, BUT NOT FOR 120V TWO-WIRE, MULTIPLE OPERATION.
240 X 480	INDICATES A SECONDARY WINDING SUITABLE FOR TWO-WIRE SERIES OPERATION AT 480V OR MULTIPLE OPERATION AT 240V, BUT NOT FOR THREE-WIRE OPERATION.
480 X 2400	INDICATES A SECONDARY WINDING SUITABLE FOR TWO-WIRE SERIES OPERATION AT 2,400V OR MULTIPLE OPERATION AT 480V, BUT NOT FOR THREE-WIRE OPERATION.
2400 X 7200	INDICATES A SECONDARY WINDING SUITABLE FOR TWO-WIRE SERIES OPERATION AT 7,200V OR MULTIPLE OPERATION AT 2,400V, BUT NOT FOR THREE-WIRE OPERATION.

VI. **THREE-PHASE TRANSFORMERS HAVE LOW VOLTAGE RATINGS AS FOLLOWS:**

VOLTAGE	DEFINITION
208Y/120	THIS INDICATES THE TRANSFORMER IS SUITABLE FOR FOUR-WIRE OPERATION ON 120/208Y VOLT SYSTEM ONLY.
480Y/277	THIS INDICATES THAT THE TRANSFORMER IS SUITABLE FOR FOUR-WIRE OPERATION ON A 277/480Y VOLT SYSTEM OR THREE-WIRE OPERATION ON A 480V SYSTEM.
4160Y/2400	THIS INDICATES THAT THE TRANSFORMER IS SUITABLE FOR FOUR-WIRE OPERATION ON A 2,400/4,160Y VOLT SYSTEM OR THREE-WIRE OPERATION ON A 4,160V SYSTEM.
12000Y/6930	THIS INDICATES THAT THE TRANSFORMER IS SUITABLE FOR FOUR-WIRE OPERATION ON A 6,930/12,000Y VOLT SYSTEM OR THREE-WIRE OPERATION ON A 12KV SYSTEM.
12470Y/7200	THIS INDICATES THAT THE TRANSFORMER IS SUITABLE FOR FOUR-WIRE OPERATION ON A 7,200/12,470Y VOLT SYSTEM OR THREE-WIRE OPERATION ON A 12.47KV SYSTEM.
480	THIS INDICATES THAT THE TRANSFORMER IS SUITABLE FOR THREE-WIRE DELTA OPERATION AT ITS RATED VOLTAGE.
240 X 480	THIS INDICATES THAT THE TRANSFORMER IS SUITABLE FOR SERIES OPERATION AT 480V OR FOR MULTIPLE OPERATION AT 240V BUT NOT FOR BOTH VOLTAGE SIMULTANEOUSLY.

TABLE OF CONTENTS

© 1998 - 2023 San Diego Gas & Electric Company. All rights reserved. Removal of this copyright notice without permission is not permitted under law.

REV	CHANGE	DR	BY	DSN	APV	DATE	REV	CHANGE	DR	BY	DSN	APV	DATE
E	TABLE UPDATE	-	MRF	JES	CZH	11/12/2019	H	BILL OF MATERIALS UPDATE	ARC	MRF	FRC	KRG	01/09/2023
D	EDITORIAL CHANGES	-	JS	JS	CZH	10/01/2018	G	TABLE UPDATE	ARC	VMV	JES	CZH	10/28/2021
C	TABLE UPDATES	-	KR	JS	MDJ	10/27/2017	F	TABLE UPDATE	EDM	VMV	JES	CZH	02/08/2021

TABLE 1

TRANSFORMER PREFIXES, POLEMOUNTED, SINGLE-PHASE

PREFIX	VOLTAGE		DESCRIPTION AND APPLICATION	KVA	TAPS (D)(F)	MILD STEEL		STAINLESS STEEL	
	PRIMARY	SECONDARY				STOCK NUMBER	DESIGN UNITS	STOCK NUMBER	DESIGN UNITS
--	12000	120	POTENTIAL TRANSFORMER	1	--	S762772 (G)	120VPT	--	--
BB	240/120	240/120	AUTO TRANSFORMER 5% BUCK OR BOOST, DRY TYPE	25	--	S750400 (G)	BB25	--	--
X	480	120/240	1Ø SECONDARY	3	--	S757808 (G)	X3	--	--
				5	--	S757840 (G)	X5	--	--
				10	--	S757728 (G)	X10	S757338	SSX10
XD	240/480	120/240	1Ø SECONDARY DRY TYPE	2	--	S757888 (G)	XD-002	--	--
				3	--	S757920	XD-003	--	--
W	2400/4160Y	120/240	1Ø SECONDARY 3Ø SECONDARY	25		S755168	W25	S757318	SSW25
				50		S755504	W50T	S757320	SSW50T
				75		S755616	W75T	S757322	SSW75T
				100		S754944	W100	S757324	SSW100
				167		S755072	W167	S757326	SSW167
WJ	2400/4160Y	120/240	INTERNALLY FUSED, SECONDARY BREAKER, & LIGHTNING ARRESTERS 1Ø SECONDARY	25		S756896	WJ25	S757334	SSWJ25
				50		S756990	WJ50T	S757336	SSWJ50T
WF	2400/4160Y	240/480	1Ø SECONDARY 3Ø SECONDARY	25		S756160	WF25T	S757328	SSWF25T
				50		S756320	WF50T	S757330	SSWF50T
				100	(B)	S755936	WF100T	S757332	SSWF100T
Y	7200/12470Y	120/240	1Ø SECONDARY 3Ø SECONDARY	25		S757968	Y25	S757340	SSY25
				50		S757976	Y50	S757342	SSY50
				100		S757972	Y100	S757344	SSY100
YJ	7200/12470Y	120/240	INTERNALLY FUSED, SECONDARY BREAKER & LIGHTNING ARRESTERS 1Ø SECONDARY	15		S765150	YJ15T	S757350	SSYJ15T
				25		S758000	YJ25	S757352	SSYJ25
				50		S758012	YJ50	S757354	SSYJ50
				100		S758015	YJ100	S757356	SSYJ100
YF	7200/12470Y	240/480	1Ø SECONDARY 3Ø SECONDARY (C)	25		S757934	YF25T	S757346	SSYF25T
				50		S757932	YF50T	S757348	SSYF50T
HH	7200	6930	BOOSTER, AUTO TRANSFORMER	625	--	S753248 (G)	HH625	--	--
H	12000	120/240	1Ø SECONDARY 3Ø SECONDARY (C)	25		S750832	H25T	S757282	SSH25T
				50		S751120	H50T	S757284	SSH50T
				75		S751232	H75T	S757286	SSH75T
				100		S750544	H100T	S757288	SSH100T
				167	(B)	S750720	H167T	S757290	SSH167T
				250		S765112	H250T	S757292	SSH250T
HE	12000	120/240	INTERNALLY FUSED, SECONDARY BREAKER (C) 1Ø SECONDARY	25		S752112	HE25T	S757294	SSHE25T
				50		S752368	HE50T	S757296	SSHE50T
				75		S752424	HE75T	S757298	SSHE75T

TABLE OF CONTENTS

© 1998 - 2023 San Diego Gas & Electric Company. All rights reserved. Removal of this copyright notice without permission is not permitted under law.

REV	CHANGE	DR	BY	DSN	APV	DATE	REV	CHANGE	DR	BY	DSN	APV	DATE
E	TABLE UPDATE	-	MRF	JES	CZH	11/12/2019	H	BILL OF MATERIALS UPDATE	ARC	MRF	FRC	KRG	01/09/2023
D	EDITORIAL CHANGES	-	JS	JS	CZH	10/01/2018	G	TABLE UPDATE	ARC	VMV	JES	CZH	10/28/2021
C	TABLE UPDATES	-	KR	JS	MDJ	10/27/2017	F	TABLE UPDATE	EDM	VMV	JES	CZH	02/08/2021

TABLE 1 (CONT'D)

TRANSFORMER PREFIXES, POLEMOUNTED, SINGLE-PHASE									
PREFIX	VOLTAGE		DESCRIPTION AND APPLICATION	KVA	TAPS (D)(F)	MILD STEEL		STAINLESS STEEL	
	PRIMARY	SECONDARY				STOCK NUMBER	DESIGN UNITS	STOCK NUMBER	DESIGN UNITS
HJ	12000	120/240	INTERNALLY FUSED, SECONDARY BREAKER & LIGHTNING ARRESTERS 1Ø SECONDARY	15		S753360	HJ15T	S757310	SSHJ15T
				25		S753456	HJ25T	S757312	SSHJ25T
				50		S753584	HJ50	S757314	SSHJ50T
				100		S753324	HJ100T	S757316	SSHJ100T
HF	12000	240/480	SINGLE-PHASE TRANSFORMER 1Ø SECONDARY 3Ø SECONDARY	25		S752768	HF25T	S757300	SSHF25T
				50		S752928	HF50T	S757302	SSHF50T
				75		S752992	HF75T	S757304	SSHF75T
				100		S752672	HF100T	S757306	SSHF100T
				167		S752736	HF167T	S757308	SSHF167T
HO	12000	2400/4160Y	SINGLE-PHASE TRANSFORMER (C) STEPDOWN	50	(B)	S754176	HO50T	--	--
				75		S754272	HO75T	--	--
				100		S753824	HO100T	--	--
				167		S753920	HO167T	--	--
				250		S754080	HO250T	--	--
				333		S754144	HO333T	--	--
				500		S754240 (G)	HO500T	--	--
				833		S754320 (G)	HO833T	--	--
				1,250		S753872 (G)	HO1250	--	--

TABLE 2

TRANSFORMER PREFIXES, POLE-MOUNTED, THREE-PHASE							
PREFIX	VOLTAGE		DESCRIPTION AND APPLICATION	KVA	TAPS (D)(F)	MILD STEEL	
	PRIMARY	SECONDARY				STOCK NUMBER	DESIGN UNITS
HHT	12000Y/6930	12470Y/7200	THREE-PHASE BOOSTER, AUTO TRANSFORMER	1,875	--	S753256 (G)	HHT187
				3,750	(A)	S753272 (G)	HHT37T
				3,750	--	S753268 (G)	HHT375
YGT	7200/12470Y	208Y/120 3 PHASE 4 WIRE	THREE-PHASE TRANSFORMER THREE-PHASE SECONDARY	45		S765136 (H)	YGT45
				75		S765138 (H)	YGT75
				150	(B)	S765140 (H)	YGT150
HGT	12000	208Y/120 3 PHASE 4 WIRE	THREE-PHASE TRANSFORMER THREE-PHASE SECONDARY	45		S765144 (H)	HGT45
				75		S765146 (H)	HGT75
				150		S765148 (H)	HGT150

TABLE OF CONTENTS

© 1998 - 2023 San Diego Gas & Electric Company. All rights reserved. Removal of this copyright notice without permission is not permitted under law.

REV	CHANGE	DR	BY	DSN	APV	DATE	REV	CHANGE	DR	BY	DSN	APV	DATE
E	TABLE UPDATE	-	MRF	JES	CZH	11/12/2019	H	BILL OF MATERIALS UPDATE	ARC	MRF	FRC	KRG	01/09/2023
D	EDITORIAL CHANGES	-	JS	JS	CZH	10/01/2018	G	TABLE UPDATE	ARC	VMV	JES	CZH	10/28/2021
C	TABLE UPDATES	-	KR	JS	MDJ	10/27/2017	F	TABLE UPDATE	EDM	VMV	JES	CZH	02/08/2021

TABLE 3

TRANSFORMER PREFIXES, STREETLIGHT							
PREFIX	COIL RATING		DESCRIPTION & APPLICATION	KVA	TAPS	MILD STEEL	
	PRIMARY	SECONDARY				STOCK NUMBER	DESIGN UNITS
R	2400	6.6A	CONSTANT CURRENT	5	--	S763296 (G)	R5
				25	--	S763232 (G)	R25
RU	2400	6.6A	CONSTANT CURRENT	20	--	S765142 (E)(G)	RU20
RH	12000	6.6A	CONSTANT CURRENT	5	--	S763448 (G)	RH5
				15	--	S763456 (G)	RH15
				25	--	S763488 (G)	RH25
RHU	12000	6.6A	CONSTANT CURRENT	20	--	S763458 (E)(G)	RHU20
				25	--	S763460 (E)(G)	RHU25

REFERENCE:

a. FOR SINGLE AND THREE-PHASE PADMOUNTS, AND SUBSURFACE TRANSFORMERS, SEE UNDERGROUND STANDARDS BOOK.

TABLE OF CONTENTS

© 1998 - 2023 San Diego Gas & Electric Company. All rights reserved. Removal of this copyright notice without permission is not permitted under law.

REV	CHANGE	DR	BY	DSN	APV	DATE	REV	CHANGE	DR	BY	DSN	APV	DATE
E	TABLE UPDATE	-	MRF	JES	CZH	11/12/2019	H	BILL OF MATERIALS UPDATE	ARC	MRF	FRC	KRG	01/09/2023
D	EDITORIAL CHANGES	-	JS	JS	CZH	10/01/2018	G	TABLE UPDATE	ARC	VMV	JES	CZH	10/28/2021
C	TABLE UPDATES	-	KR	JS	MDJ	10/27/2017	F	TABLE UPDATE	EDM	VMV	JES	CZH	02/08/2021

TABLE OF CONTENTS

SCOPE: THIS STANDARD IS A GUIDE FOR SELECTING TRANSFORMER(S), BY PREFIX, FOR REPLACEMENT OF EXISTING UNITS IN FIELD, AND DETERMINING THOSE THAT ARE OBSOLETE.

INSTALLATION:

(A) A PREFERRED TRANSFORMER SHOULD BE USED AS A REPLACEMENT WHEN PRACTICAL.

(B) AN ALTERNATE TRANSFORMER CAN BE USED IF THE PREFERRED REPLACEMENT TRANSFORMER IS NOT PRACTICAL TO USE.

(C) "HD" AND "HOY" ARE NOT PURCHASED NEW. USE REFURBISHED TRANSFORMER ONLY.

TABLE 1:

SINGLE-PHASE INSTALLATIONS (OVERHEAD)					
VOLTAGE		EXISTING FIELD UNITS	REPLACEMENT UNITS		NOT TO BE USED OR REORDER (OBSOLETE)
PRIMARY	SECONDARY		PREFERRED (A)	ALTERNATE (B)	
2400	120/240	W, WE, WJ	W	WJ	WE
2400	240/480	WF	WF	-	-
4160	120/240	OY	-	-	OY
7200	120/240	Y, YE, YJ	Y	YJ	YE
7200	240/480	YF	YF	-	-
12000	120/240	H, HE, HEB, HJ	H, HE	HJ	HEB
12000	240/480	HF	HF	-	-
7200	6930	HH	HH	-	-
12000	2400	HD, HO, HOY	HD, HO, HOY (C)	-	-
12000	7200	HOY, HR	HOY, HR (C)	-	-
480	120/240	X	X	-	-
240	120	A	A	-	-
240/120	240/120	BB	BB	BB	-
240/480	120/240	XD	XD	-	-
THREE-PHASE INSTALLATIONS (OVERHEAD)					
2400/4160Y	240	W, WF, WT, WFT, WAT	W	WF	WAT, WFT, WT
2400/4160Y	480	WF, WT, WFT, WFY	WF	-	WT, WFT, WFY
2400/4160Y	208Y/120	W	W	-	-
7200/12470Y	120/240	Y, YJ	Y	YJ	-
7200/12470Y	240/480	YF	YF	-	-
7200/12470Y	208Y/120	Y	Y	-	-
12000	208Y/120	H, HGT, HZT	H	HGT	HZT
12000	240	H, HF, HAT, HBT, HLT	H	HF	HAT, HBT, HLT
12000	480	HBT, HD, HF, HJM, HLT, HMT	HD, HF (C)	-	HBT, HJM, HLT, HMT
12000	480Y/277	HNT, HY	HNT	-	HY
12000	4160Y/2400	HD, HO, HOT, HOY	HD, HO, HOY (C)	HOT	-
12000	12470Y/7200	HHT, HOY, HR	HOY, HHT, HR (C)	-	-

BILL OF MATERIAL: NONE

NOTES: NONE

REFERENCE: NONE

REV	CHANGE	DRWN	BY	CHKD	APVD	DATE
D	REVISED TO 3D FORMAT	GLC	JIK	-	-	11/10/2022
C	EDITORIAL CHANGES	GLC	JAC	GLW	CZH	8/28/2020
B	EDITORIAL CHANGES	-	JS	JS	CZH	10/01/2018

SDG&E

A Sempra Energy utility®

© 1998 - 2022 San Diego Gas and Electric Company. All rights reserved. Removal of this copyright notice without permission is not permitted under law.

SDG&E ELECTRIC OVERHEAD CONSTRUCTION STANDARDS

DISTRIBUTION TRANSFORMER APPLICATIONS

SCALE: NOT TO SCALE

DRAWING NO: OH1122.1

SHEET: 1 OF 1

X Indicates Latest Revision | Completely Revised | New Page | Information Removed

SCOPE: THIS STANDARD PROVIDES INFORMATION ON DETERMINING TRANSFORMER SECONDARY LEAD WIRE SIZES.

TABLE 1:

COPPER SECONDARY LEADS							
KVA	SINGLE PHASE TRANSFORMERS				THREE PHASE TRANSFORMERS (VI)		
	120V	240V	480V	7200V	208V	240V	480V
5	6	6	6	-	-	-	-
10	4	6	6	-	-	-	-
15	1/0	4	6	-	-	-	-
25	4/0	1/0	6	-	-	-	-
30	-	-	-	-	-	4	6
37.5	500	4/0	4	-	-	-	-
45	-	-	-	-	-	2	4
50	500	4/0	1/0	-	-	-	-
75	500 (II)	500	4/0	-	4/0	4/0	2
100	500 (II)	500	4/0	6 (I)	-	-	-
112	-	-	-	-	-	500	1/0
150	-	-	-	-	500	-	-
167	500 (III)	500 (II)	500	6 (I)	-	-	-
225	-	-	-	-	500 (II)	-	-
333	-	-	-	6 (I)	-	-	-

INSTALLATION: NONE

BILL OF MATERIALS: NONE

NOTES:

(I) USE BARE STRANDED WIRE.

(II) PARALLEL 2 CONDUCTORS PER LEAD.

(III) PARALLEL 3 CONDUCTORS PER LEAD.

IV. WHERE TRANSFORMERS FEED ONE SERVICE ONLY, LEAD WIRES ARE TO BE SAME SIZE AS SERVICES OR COPPER EQUIVALENT IF SERVICE IS ALUMINUM.

V. UNLESS OTHERWISE NOTED, ALL LEAD WIRES ARE TO BE POLYETHLENE COVERED COPPER.

(VI) FIELD MAINTENANCE ONLY.

REFERENCE: NONE

TABLE OF CONTENTS

REV	CHANGE	DRWN	BY	CHKD	APVD	DATE
C	REVISED TO 3D FORMAT	GLC	JIK	-	-	11/18/2022
B	EDITORIAL CHANGES	-	JS	JS	CZH	10/01/2018
A	ORIGINAL ISSUE	-	-	PTA	RDG	01/01/1992

SDG&E

A Sempra Energy utility®

SDG&E ELECTRIC OVERHEAD CONSTRUCTION STANDARDS

TRANSFORMER SECONDARY LEAD WIRES

SCALE: NOT TO SCALE

DRAWING NO: OH1125.1

SHEET: 1 OF 1

© 1998 - 2022 San Diego Gas and Electric Company. All rights reserved. Removal of this copyright notice without permission is not permitted under law.

X Indicates Latest Revision | Completely Revised | New Page | Information Removed

SCOPE: THIS STANDARD SHOWS THE INSTALLATION OF A SINGLE-PHASE, 240/120 VOLT, SECONDARY TRANSFORMER FOR RAISING OR LOWERING SECONDARY VOLTAGE.

INSTALLATION:

(A) MOUNT TRANSFORMER ON CROSSARM, OUTSIDE OF STRAP BRACE WITH 1-1/2" MINIMUM HARDWARE CLEARANCE.

B. INSTALL TRANSFORMER ON SOURCE SIDE OF LOAD.

(C) ATTACH TAG TO BASE OF POLE WHICH READS "SEC TRANS", IF PERMANENT INSTALLATION.

(D) TAPE BUSHINGS TO COVER EXPOSED HOT TERMINALS. (OPTIONAL)

(E) USE EXISTING UNDERARM MOUNTED CONDUIT IF POSSIBLE, OR INSTALL MINIMUM OF 1-1/2" CONDUIT.

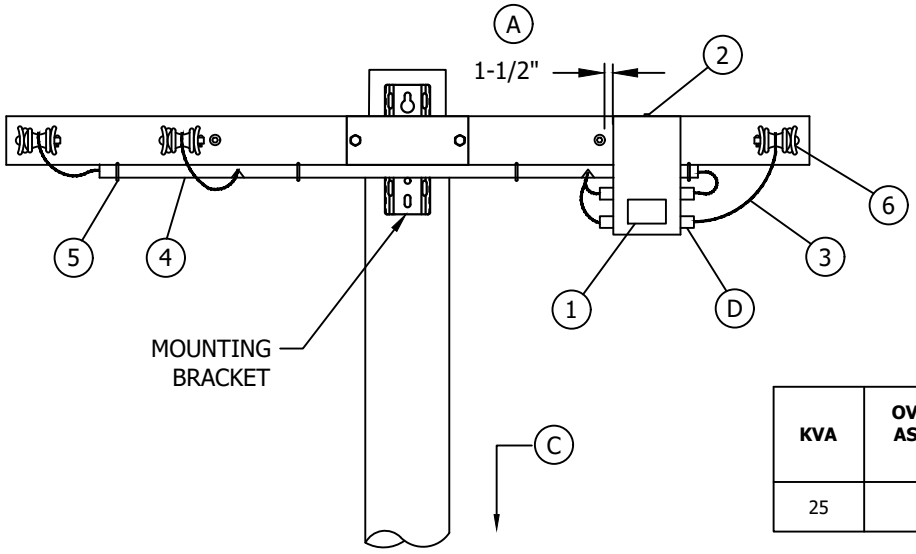

KVA	OVERHEAD ASSEMBLY UNIT
25	BB25

BILL OF MATERIALS:

ITEM	DESCRIPTION	QUANTITY	STOCK NUMBER
1	TRANSFORMER, SINGLE-PHASE, 240/120 VOLT, 25 KVA TYPE HANDI-AUTO CROSSARM MOUNTED	1	S750400
2	BOLT, MACH, GALVANIZED, 5/8" X 7", 2 SQ & 1 DOUBLE COIL SPRING WASHER	1	S155552
3	WIRE, COPPER OR ALUMINUM, W.P. (SAME SIZE AS SECONDARY WIRE)	AS REQ'D	712-716
4	CONDUIT, PVC, TYPE 2, SCHEDULE 40 (E)	8'	-
5	STRAPS, PIPE, STAINLESS STEEL, (SIZE AS REQUIRED) AND 2-6D NAILS, GALVANIZED	AS REQ'D	-
		-	S491552
6	CONNECTOR, WIRE, COMPRESSION (SIZE AS REQUIRED)	AS REQ'D	783-787

NOTE: THIS TRANSFORMER TO BE CROSSARM MOUNTED WITH OPEN WIRE OR AERIAL CABLE SECONDARY. **DO NOT POLE MOUNT**. STANDARD PRACTICE 310 SHOULD BE REVIEWED PRIOR TO INSTALLATION.

© 1998 - 2018 San Diego Gas & Electric Company. All rights reserved. Removal of this copyright notice without permission is not permitted under law.

REV	CHANGE	BY	DSGN	APPV	DATE	REV	CHANGE	BY	DSGN	APPV	DATE
C						F					
B	EDITORIAL CHANGES	JS	JS	CZH	10/1/2018	E					
A	ORIGINAL ISSUE	-	TQ	DW	07/17/2013	D					

X Indicates Latest Revision | Completely Revised | New Page | Information Removed

SHEET 1 OF 1

SDG&E ELECTRIC OVERHEAD CONSTRUCTION STANDARDS

240/120V SINGLE-PHASE, SECONDARY TRANSFORMER INSTALLATION

OH1128.1

TABLE OF CONTENTS

SCOPE: THIS STANDARD SHOWS THE INSTALLATION METHOD OF A TYPE 'WJ' TRANSFORMER, ON SECONDARY CABLE CONSTRUCTION.

ATTENTION:

* NOT TO BE CONSTRUCTED IN TIER 3.

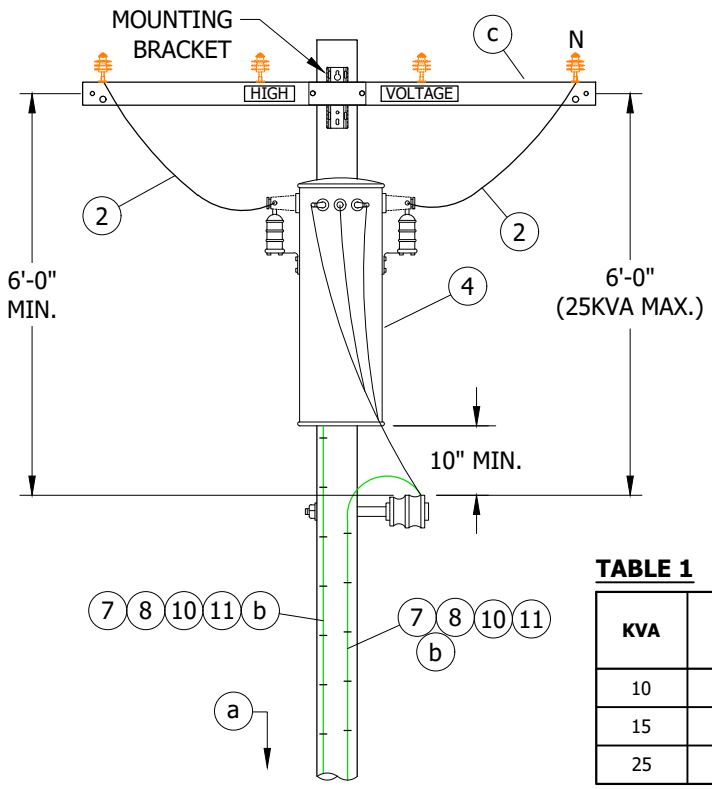

FIGURE 1
FRONT VIEW

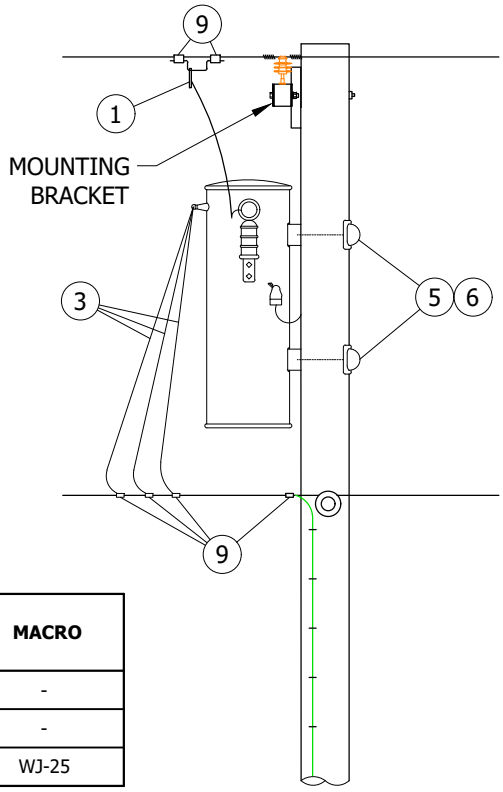

FIGURE 1
SIDE VIEW

TABLE 1

KVA	DESIGN UNITS	MACRO
10	WJ10	-
15	WJ15	-
25	WJ25	WJ-25

INSTALLATION:

A. SECTIONALIZING FUSES AND A STATION ARE **NOT** ALLOWED ON THE SAME POLE. A DEVIATION REQUEST WILL NOT BE APPROVED FOR THIS CONSTRUCTION.

BILL OF MATERIALS:

ITEM	DESCRIPTION	QUANTITY	STANDARD PAGE	STOCK NUMBER	DESIGN UNITS
1	CLAMP, HOTLINE & STIRRUP	2	788	-	-
2	WIRE, 5KV INSULATED, XLP, #6 STRANDED COPPER	12'-0"	-	S194304	-
3	WIRE, THW, COPPER (SIZE GOVERNED BY TRANSFORMER CAPACITY)	21'-0"	1125	-	-
4	TRANSFORMER, SINGLE PHASE, TYPE 'WE'	1	1121	-	-
5	BOLT, MACH, GALV, 5/8" OR 3/4" X (LENGTH AS REQ'D), 1 SQ CURVED & 1 DBL COIL SPRING WASHER	2	390	-	-
6	COVER, BOLT, PLASTIC & 6-10D NAILS, GALV	2	-	S285696	-
		-	-	S491392	-
7	WIRE, GROUND, #4 CU SOLID, PVC COVERED - NA IF STEEL POLE	100'-0"	-	S812490	GNDPVC
8	GROUND ROD, 5/8" X 8'-0", COPPERWELD	2	-	S603074 (X)	

© 1998 - 2021 San Diego Gas & Electric Company. All rights reserved. Removal of this copyright notice without permission is not permitted under law.

REV	CHANGE	DR	BY	DSN	APV	DATE	REV	CHANGE	DR	BY	DSN	APV	DATE
C	TABLE UPDATE	EDM	JES	JES	CZH	10/28/2021	F						
B	EDITORIAL CHANGES	-	JS	JS	CZH	10/01/2018	E						
A	ORIGINAL ISSUE	-	-	TQ	DW	07/11/2013	D						

X Indicates Latest Revision | Completely Revised | New Page | Information Removed

SDG&E ELECTRIC OVERHEAD CONSTRUCTION STANDARDS

2.4 OR 4KV, SINGLE-PHASE, TYPE "WJ" TRANSFORMER
INSTALLATION, 25 KVA MAX, SECONDARY CABLE CONSTRUCTION

OH1131.1

TABLE OF CONTENTS

BILL OF MATERIALS (CONT'D):

ITEM	DESCRIPTION	QUANTITY	STANDARD PAGE	STOCK NUMBER	DESIGN UNITS
9	CONNECTORS, WIRE COMPRESSION, CU OR AL, AS REQ'D	AS REQ'D	783-785	-	-
10	COPPER BONDED GROUND CONNECTOR	2	-	S259010	-
11	GALVANIZED STAPLES FOR PVC COVERED GROUND WIRE - NA IF STEEL POLE	AS REQ'D	-	S678564 (X)	-

NOTES:

(X) THIS ITEM IS EXEMPT.

REFERENCE:

(a) FOR POLE STEPPING, SEE OH363.

(b) FOR GROUNDING METHODS, SEE OH1002.

(c) FOR FIBERGLASS CROSSARMS, SEE OH379.

TABLE OF CONTENTS

© 1998 - 2021 San Diego Gas & Electric Company. All rights reserved. Removal of this copyright notice without permission is not permitted under law.

REV	CHANGE	DR	BY	DSN	APV	DATE	REV	CHANGE	DR	BY	DSN	APV	DATE
C	TABLE UPDATE	EDM	JES	JES	CZH	10/28/2021	F						
B	EDITORIAL CHANGES	-	JS	JS	CZH	10/01/2018	E						
A	ORIGINAL ISSUE	-	-	TQ	DW	07/11/2013	D						

SCOPE: THIS STANDARD SHOWS THE INSTALLATION METHOD OF A TYPE 'WJ' TRANSFORMER, ON SECONDARY LINE ARM CONSTRUCTION.

ATTENTION:

* NOT TO BE CONSTRUCTED IN TIER 3.

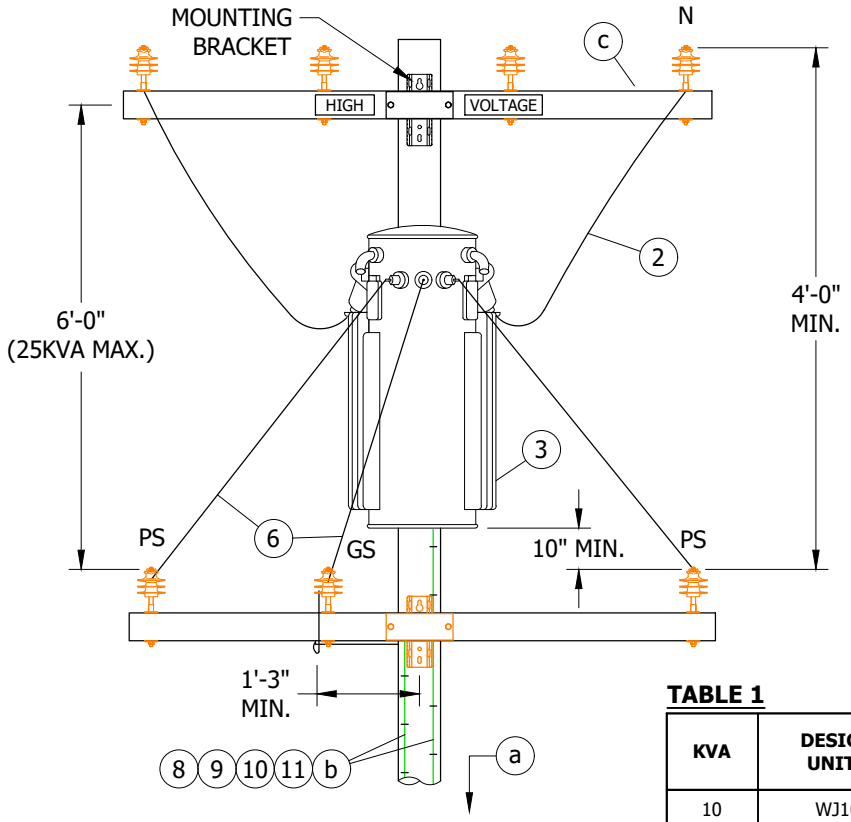

FIGURE 1
FRONT VIEW

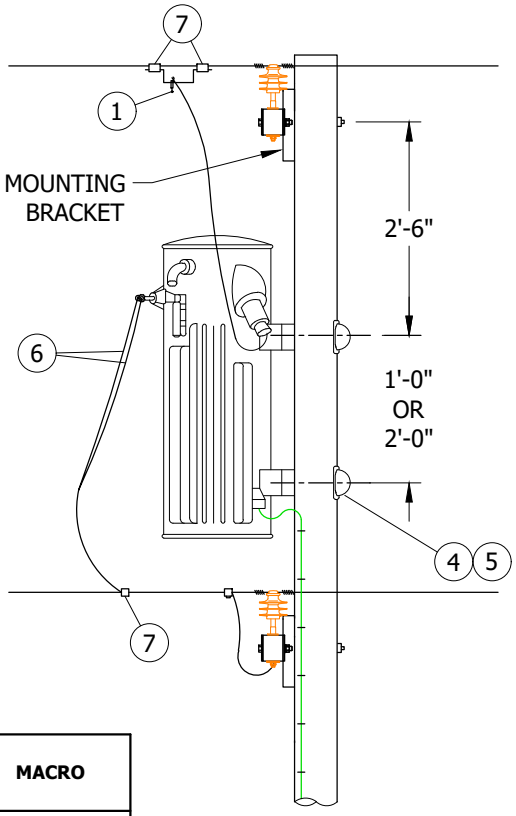

FIGURE 1
SIDE VIEW

TABLE 1

KVA	DESIGN UNITS	MACRO
10	WJ10	-
15	WJ15	-
25	WJ25	WJ-25

INSTALLATION:

A. SECTIONALIZING FUSES AND A STATION ARE **NOT** ALLOWED ON THE SAME POLE. A DEVIATION REQUEST WILL NOT BE APPROVED FOR THIS CONSTRUCTION.

BILL OF MATERIALS:

ITEM	DESCRIPTION	QUANTITY	STANDARD PAGE	STOCK NUMBER	DESIGN UNITS
1	CLAMP, HOTLINE & STIRRUP	2	788	-	-
2	WIRE, 5KV INSULATED, XLP, #6 STRANDED COPPER	12'-0"	-	S194304	-
3	TRANSFORMER, SINGLE PHASE, TYPE 'WE'	1	1121	-	-
4	BOLT, MACH, GALV, 5/8" OR 3/4" X (LENGTH AS REQ'D), 1 SQ CURVED & 1 DBL COIL SPRING WASHER	2	390	-	-
5	COVER, BOLT, PLASTIC & 6-10D NAILS, GALV	2	-	S285696	-
		-	-	S491392	-
6	WIRE, THW, COPPER (SIZE GOVERNED BY TRANSFORMER CAPACITY)	21'-0"	1125	-	-

© 1998 - 2021 San Diego Gas & Electric Company. All rights reserved. Removal of this copyright notice without permission is not permitted under law.

REV	CHANGE	DR	BY	DSN	APV	DATE	REV	CHANGE	DR	BY	DSN	APV	DATE
C	TABLE UPDATE	EDM	JES	JES	CZH	10/28/2021	F						
B	EDITORIAL CHANGES	-	JS	JS	CZH	10/01/2018	E						
A	ORIGINAL ISSUE	-	-	TQ	DW	07/11/2013	D						

TABLE OF CONTENTS

BILL OF MATERIALS (CONT'D):

ITEM	DESCRIPTION	QUANTITY	STANDARD PAGE	STOCK NUMBER	DESIGN UNITS
7	CONNECTORS, WIRE COMPRESSION, CU OR AL, AS REQ'D	AS REQ'D	783-785	-	-
8	WIRE, GROUND, #4 CU SOLID, PVC COVERED - NA IF STEEL POLE	100'-0"	-	S812490	GNDPVC
9	ROD, GROUND, 5/8" X 8'-0", COPPERWELD	2	-	S603074 (X)	
10	CONNECTOR, GROUND, COPPER BONDED	2	-	S259010	-
11	STAPLES, GALVANIZED, FOR PVC COVERED GROUND WIRE	AS REQ'D	-	S678564 (X)	-

NOTES:

(X) THIS ITEM IS EXEMPT.

REFERENCE:

(a) FOR POLE STEPPING, SEE OH363.

(b) FOR GROUNDING METHODS, SEE OH1002.

(c) FOR FIBERGLASS CROSSARMS, SEE OH379.

TABLE OF CONTENTS

© 1998 - 2021 San Diego Gas & Electric Company. All rights reserved. Removal of this copyright notice without permission is not permitted under law.

REV	CHANGE	DR	BY	DSN	APV	DATE	REV	CHANGE	DR	BY	DSN	APV	DATE
C	TABLE UPDATE	EDM	JES	JES	CZH	10/28/2021	F						
B	EDITORIAL CHANGES	-	JS	JS	CZH	10/01/2018	E						
A	ORIGINAL ISSUE	-	-	TQ	DW	07/11/2013	D						

SCOPE: THIS STANDARD SHOWS THE INSTALLATION METHOD OF A TYPE 'W' TRANSFORMER, ON SECONDARY CABLE CONSTRUCTION.

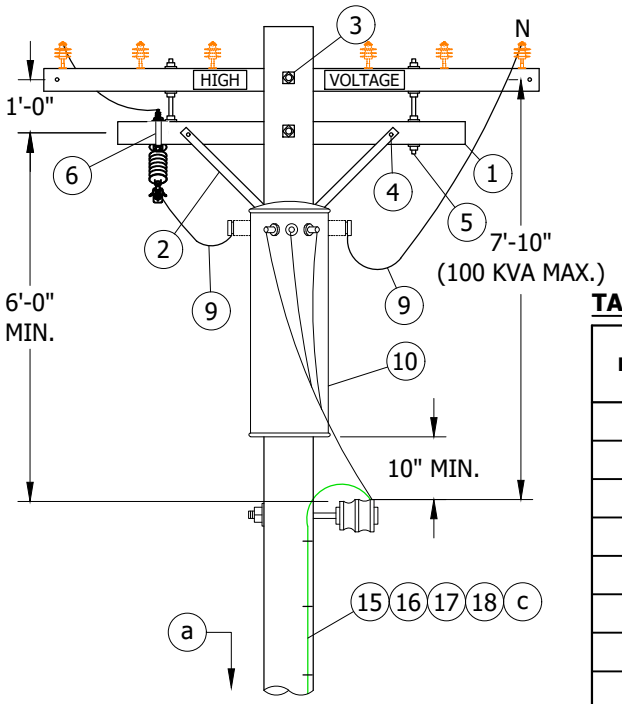

FIGURE 1
FRONT VIEW

TABLE 1

KVA	DESIGN UNITS	MACRO
5	W5	-
10	W10	W-10
15	W15	W-15
25	W25	W-25
50	W50	W-50
50	W50T(TAPS)	W-50
75	W75	W-75
100	W100	-
167	W167	-

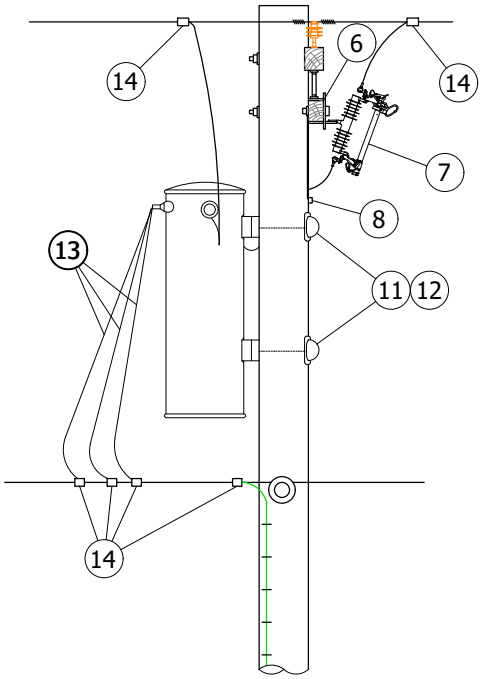

FIGURE 1
SIDE VIEW

INSTALLATION:

A. 2.4KV SINGLE PHASE INSTALLATIONS REQUIRE TWO CUTOUTS.

B. SECTIONALIZING FUSES AND A STATION ARE **NOT** ALLOWED ON THE SAME POLE. A DEVIATION REQUEST WILL NOT BE APPROVED FOR THIS CONSTRUCTION.

BILL OF MATERIALS:

ITEM	DESCRIPTION	QUANTITY	STANDARD PAGE	STOCK NUMBER	DESIGN UNITS
1	CROSSARM, 3 1/2" X 4 1/2" X 6'-0"	1	-	S294112	-
2	BRACE, FLAT, CROSSARM, 28"	1	-	S164192	-
3	BOLT, MACH, GALV, 5/8" X (LENGTH AS REQ'D), 2 SQ & 1 DBL COIL SPRING WASHER	1	390	-	-
4	BOLT, MACH, GALV, 3/8" X 4 1/2", 1 RD & 1 SPRING LOCK WASHER	2	390	-	-
5	BOLT, SPACE, GALV, 5/8" X 20", 4 SQ & 2 DBL COIL SPR WASHERS	2	390	-	-
6	BRACKET, CUTOUT/ARRESTER, FOR CROSSARM MOUNTING	1	-	S166070	-
7	CUTOUT, 12KV	1	1212	-	-
8	BOLT, MACH, GALV, 1/2" X (LENGTH AS REQ'D), 1 SQ & 1 DBL COIL SPRING WASHER	1	390	-	-
9	WIRE, 5KV INSULATED, XLP, #6 STRANDED COPPER	12'-0"	-	S194304	-
10	TRANSFORMER, SINGLE PHASE, TYPE 'W'	1	1121	-	-
11	BOLT, MACH, GALV, 5/8" X (LENGTH AS REQ'D), 1 SQ CURVED & 1 DBL COIL SPRING WASHER	2	390	-	-

TABLE OF CONTENTS

© 1998 - 2021 San Diego Gas & Electric Company. All rights reserved. Removal of this copyright notice without permission is not permitted under law.

REV	CHANGE	DR	BY	DSN	APV	DATE	REV	CHANGE	DR	BY	DSN	APV	DATE
C	TABLE UPDATE	EDM	JES	JES	CZH	10/28/2021	F						
B	EDITORIAL CHANGES	-	JS	JS	CZH	10/01/2018	E						
A	ORIGINAL ISSUE	-	-	TQ	DW	07/11/2013	D						

BILL OF MATERIALS (CONT'D):

ITEM	DESCRIPTION	QUANTITY	STANDARD PAGE	STOCK NUMBER	DESIGN UNITS
12	COVER, BOLT, PLASTIC & 6-10D NAILS, GALV	2	-	S285696	-
		-	-	S491392	
13	WIRE, THW, COPPER (SIZE GOVERNED BY TRANSFORMER CAPACITY)	21'-0"	1125	-	-
14	CONNECTORS, WIRE COMPRESSION, CU OR AL, AS REQ'D	AS REQ'D	783-785	-	-
15	WIRE, GROUND, #4 CU SOLID, PVC COVERED	50'-0"	-	S812490	GNDPVC
16	ROD, GROUND, 5/8" X 8'-0", COPPERWELD	1	-	S603074 (X)	
17	CONNECTOR, GROUND, COPPER BONDED	1	-	S259010	-
18	STAPLES, GALVANIZED, FOR PVC COVERED GROUND WIRE	AS REQ'D	-	S678564 (X)	-

NOTES:

(X) THIS ITEM IS EXEMPT.

REFERENCE:

(a) FOR POLE STEPPING, SEE OH363.

b. FOR LIGHTING ARRESTER REQUIREMENTS, SEE OH1247.

(c) FOR GROUNDING METHODS, SEE OH1002.

TABLE OF CONTENTS

© 1998 - 2021 San Diego Gas & Electric Company. All rights reserved. Removal of this copyright notice without permission is not permitted under law.

REV	CHANGE	DR	BY	DSN	APV	DATE	REV	CHANGE	DR	BY	DSN	APV	DATE
C	TABLE UPDATE	EDM	JES	JES	CZH	10/28/2021	F						
B	EDITORIAL CHANGES	-	JS	JS	CZH	10/01/2018	E						
A	ORIGINAL ISSUE	-	-	TQ	DW	07/11/2013	D						

SCOPE: THIS STANDARD SHOWS THE INSTALLATION METHOD OF A TYPE 'W' TRANSFORMER, ON SECONDARY LINE ARM CONSTRUCTION.

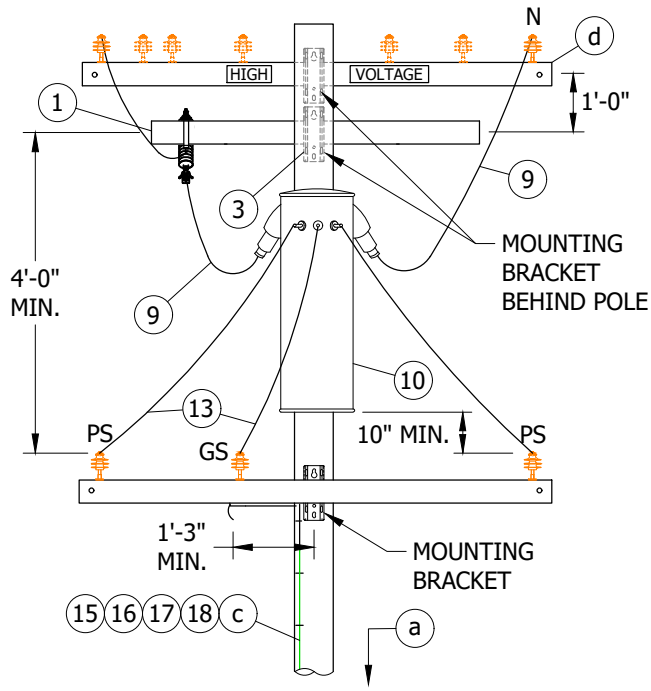

FIGURE 1
FRONT VIEW

TABLE 1

KVA	DESIGN UNITS	MACRO
5	W5	-
10	W10	W-10
15	W15	W-15
25	W25	W-25
50	W50	W-50
50	W50T(TAPS)	W-50
75	W75	W-75
100	W100	-
167	W167	-

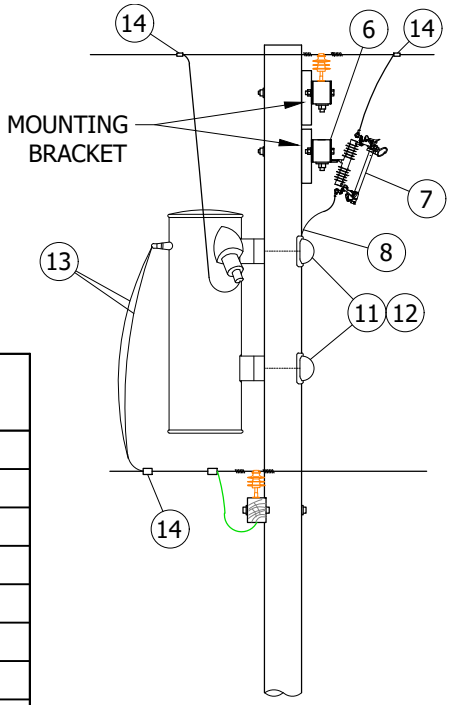

FIGURE 1
SIDE VIEW

INSTALLATION:

A. 2.4KV SINGLE PHASE INSTALLATIONS REQUIRE TWO CUTOUTS.

B. SECTIONALIZING FUSES AND A STATION ARE **NOT** ALLOWED ON THE SAME POLE. A DEVIATION REQUEST WILL NOT BE APPROVED FOR THIS CONSTRUCTION.

BILL OF MATERIALS:

ITEM	DESCRIPTION	QUANTITY	STANDARD PAGE	STOCK NUMBER	DESIGN UNITS
1	CROSSARM, 3 1/2" X 4 1/2" X 6'-0"	1	-	S294112	-
2	BRACE, FLAT, CROSSARM, 28"	1	-	S164192	-
3	BOLT, MACH, GALV, 5/8" X (LENGTH AS REQ'D), 2 SQ & 1 DBL COIL SPRING WASHER	1	390	-	-
4	BOLT, MACH, GALV, 3/8" X 4 1/2", 1 RD & 1 SPRING LOCK WASHER	2	390	-	-
5	BOLT, SPACE, GALV, 5/8" X 20", 4 SQ & 2 DBL COIL SPR WASHERS	2	390	-	-
6	BRACKET, CUTOUT/ARRESTER, FOR CROSSARM MOUNTING	1	-	S166070	-
7	CUTOUT, 12KV	1	1212	-	-
8	BOLT, MACH, GALV, 1/2" X (LENGTH AS REQ'D), 1 SQ & 1 DBL COIL SPRING WASHER	1	390	-	-
9	WIRE, 5KV INSULATED, XLP, #6 STRANDED COPPER	12'-0"	-	S194304	-
10	TRANSFORMER, SINGLE PHASE, TYPE 'W'	1	1121	-	-

© 1998 - 2021 San Diego Gas & Electric Company. All rights reserved. Removal of this copyright notice without permission is not permitted under law.

REV	CHANGE	DR	BY	DSN	APV	DATE	REV	CHANGE	DR	BY	DSN	APV	DATE
C	TABLE UPDATE	EDM	JES	JES	CZH	10/28/2021	F						
B	EDITORIAL CHANGES	-	JS	JS	CZH	10/01/2018	E						
A	ORIGINAL ISSUE	-	-	TQ	DW	07/11/2013	D						

TABLE OF CONTENTS

BILL OF MATERIALS (CONT'D):

ITEM	DESCRIPTION	QUANTITY	STANDARD PAGE	STOCK NUMBER	DESIGN UNITS
11	BOLT, MACH, GALV, 5/8" X (LENGTH AS REQ'D), 1 SQ CURVED & 1 DBL COIL SPRING WASHER	2	390	-	-
12	COVER, BOLT, PLASTIC & 6-10D NAILS, GALV	2	-	S285696	-
		-	-	S491392	
13	WIRE, THW, COPPER (SIZE GOVERNED BY TRANSFORMER CAPACITY)	21'-0"	1125	-	-
14	CONNECTORS, WIRE COMPRESSION, CU OR AL, AS REQ'D	AS REQ'D	783-785	-	-
15	WIRE, GROUND, #4 CU SOLID, PVC COVERED	50'-0"	-	S812490	GNDPVC
16	ROD, GROUND, 5/8" X 8'-0", COPPERWELD	1	-	S603074 (X)	
17	CONNECTOR, GROUND, COPPER BONDED	1	-	S259010	-
18	STAPLES, GALVANIZED, FOR PVC COVERED GROUND WIRE	AS REQ'D	-	S678564 (X)	-

NOTES:

(X) THIS ITEM IS EXEMPT.

REFERENCE:

(a) FOR POLE STEPPING, SEE OH363.

b. FOR LIGHTING ARRESTER REQUIREMENTS, SEE OH1247.

(c) FOR GROUNDING METHODS, SEE OH1002.

(d) FOR FIBERGLASS CROSSARMS, SEE OH379.

TABLE OF CONTENTS

© 1998 - 2021 San Diego Gas & Electric Company. All rights reserved. Removal of this copyright notice without permission is not permitted under law.

REV	CHANGE	DR	BY	DSN	APV	DATE	REV	CHANGE	DR	BY	DSN	APV	DATE
C	TABLE UPDATE	EDM	JES	JES	CZH	10/28/2021	F						
B	EDITORIAL CHANGES	-	JS	JS	CZH	10/01/2018	E						
A	ORIGINAL ISSUE	-	-	TQ	DW	07/11/2013	D						

SCOPE: THIS STANDARD SHOWS THE INSTALLATION METHOD OF A SINGLE PHASE TRANSFORMER, ON ALLEY ARM CONSTRUCTION.

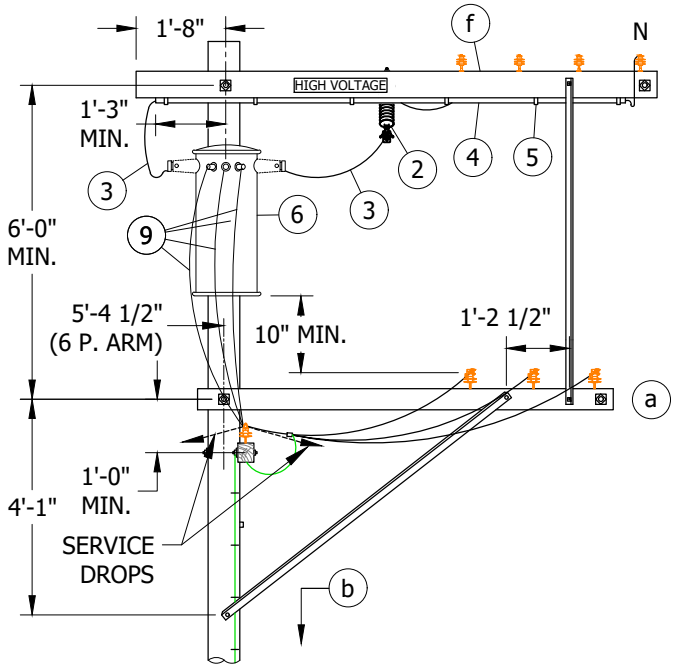

FIGURE 1
FRONT VIEW

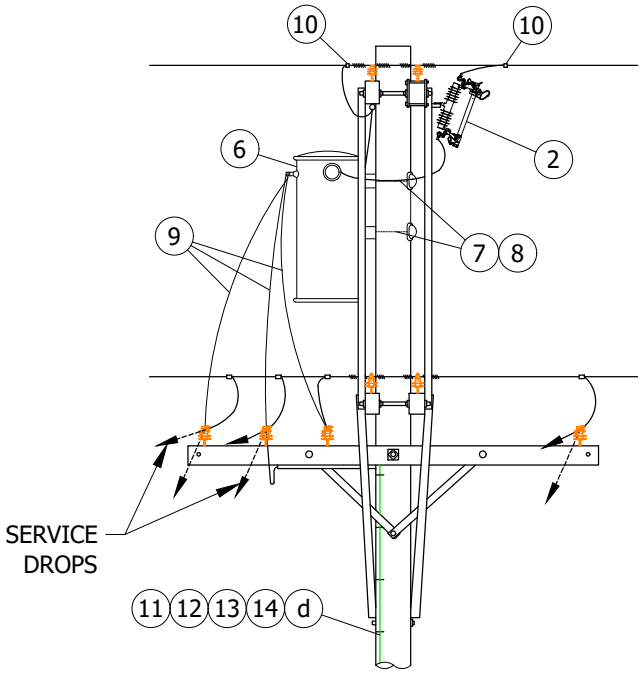

FIGURE 1
SIDE VIEW

INSTALLATION:

(A) 2.4KV SINGLE PHASE INSTALLATIONS REQUIRE TWO CUTOUTS.

B. SECTIONALIZING FUSES AND A STATION ARE **NOT** ALLOWED ON THE SAME POLE. A DEVIATION REQUEST WILL NOT BE APPROVED FOR THIS CONSTRUCTION.

BILL OF MATERIALS:

ITEM	DESCRIPTION	QUANTITY		STANDARD PAGE	STOCK NUMBER	DESIGN UNITS
		25 KVA MAX	100 KVA MAX			
1	BRACKET, CUTOUT/ARRESTER, FOR CROSSARM MOUNTING (A)	1	1	-	S166070	-
2	CUTOUT, 12KV (A)	1	1	1212	-	-
3	WIRE, 5KV XLP INSULATED, #6 STRANDED COPPER	22'-0"	22'-0"	-	S194304	-
4	CONDUIT, PVC, 3/4" X 10'-0" SCHEDULE 40, TYPE 2	1	1	-	S251328	-
5	STRAP, PIPE, GALV, 3/4" & 2-6D NAILS, GALV	6	6	-	S697888	-
		-	-	-	S491552	-
6	TRANSFORMER, SINGLE-PHASE, TYPE 'W'	1	1	1121	-	-
7	BOLT, MACH, GALV, 5/8" X (LENGTH AS REQ'D), 1-3" SQ CURVED & 1 DBL COIL SPRING WASHER	2	-	390	-	-
	BOLT, MACH, GALV, 3/4" X (LENGTH AS REQ'D), 1-3" SQ CURVED & 1 DBL COIL SPRING WASHER	-	2			

© 1998 - 2021 San Diego Gas & Electric Company. All rights reserved. Removal of this copyright notice without permission is not permitted under law.

REV	CHANGE	DR	BY	DSN	APV	DATE	REV	CHANGE	DR	BY	DSN	APV	DATE
C	TABLE UPDATE	EDM	JES	JES	CZH	10/28/2021	F						
B	EDITORIAL CHANGES	-	JS	JS	CZH	10/01/2018	E						
A	ORIGINAL ISSUE	-	-	TQ	DW	07/11/2013	D						

TABLE OF CONTENTS

BILL OF MATERIALS (CONT'D):

ITEM	DESCRIPTION	QUANTITY		STANDARD PAGE	STOCK NUMBER	DESIGN UNITS
		25 KVA MAX	100 KVA MAX			
8	COVER, BOLT, PLASTIC & 6-10D NAILS, GALV	2	2	-	S285696	-
		-	-	-	S491392	-
9	WIRE, THW, COPPER (SIZE GOVERNED BY TRANSFORMER CAPACITY)	40'-0"	40'-0"	1125	-	-
10	CONNECTORS, WIRE COMPRESSION, CU OR AL, AS REQ'D	AS REQ'D		783-785	-	-
11	WIRE, GROUND, #4 CU SOLID, PVC COVERED	50'-0"	50'-0"	-	S812490	GNDPVC
12	ROD, GROUND, 5/8" X 8'-0", COPPERWELD	1	1	-	S603074 (X)	
13	CONNECTOR, GROUND, COPPER BONDED	1	1	-	S259010	-
14	STAPLES, GALVANIZED, FOR PVC COVERED GROUND WIRE	AS REQ'D		-	S678564 (X)	-

NOTES:

(X) THIS ITEM IS EXEMPT.

REFERENCE:

(a) FOR SECONDARY CABLE CONSTRUCTION, SEE OH1141.

(b) FOR POLE STEPPING, SEE OH363.

c. FOR LIGHTING ARRESTER REQUIREMENTS, SEE OH1247.

(d) FOR GROUNDING METHODS, SEE OH1002.

e. FOR ALLEY ARM CONSTRUCTION, SEE OH440.

(f) FOR FIBERGLASS CROSSARMS, SEE OH379.

TABLE OF CONTENTS

© 1998 - 2021 San Diego Gas & Electric Company. All rights reserved. Removal of this copyright notice without permission is not permitted under law.

REV	CHANGE	DR	BY	DSN	APV	DATE	REV	CHANGE	DR	BY	DSN	APV	DATE
C	TABLE UPDATE	EDM	JES	JES	CZH	10/28/2021	F						
B	EDITORIAL CHANGES	-	JS	JS	CZH	10/01/2018	E						
A	ORIGINAL ISSUE	-	-	TQ	DW	07/11/2013	D						

SCOPE: THIS STANDARD SHOWS THE METHOD OF INSTALLING A 12KV SINGLE-PHASE TRANSFORMER, WITH ALLEY ARM CONSTRUCTION.

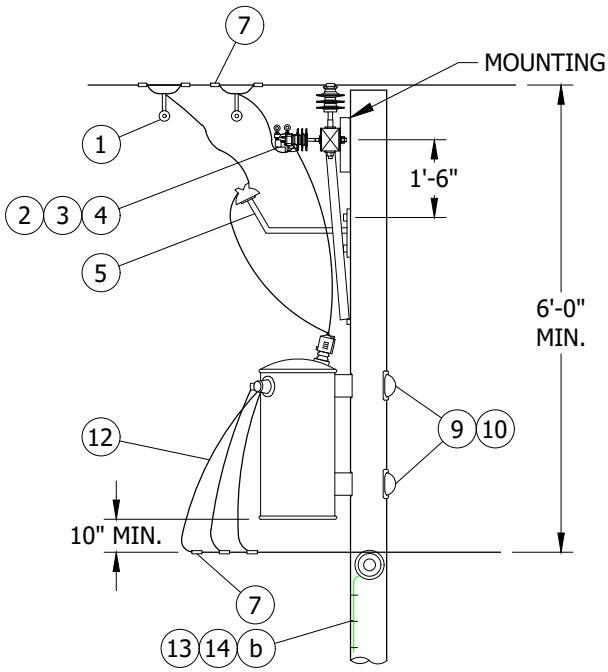

FIGURE 1
FRONT VIEW

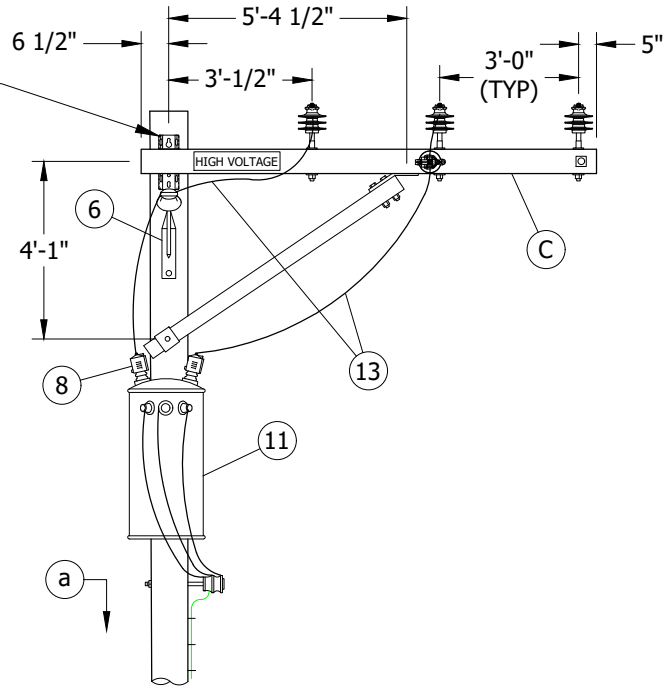

FIGURE 1
SIDE VIEW

INSTALLATION:

A. WHEN INSTALLING A NEW STATION ON THE 7.2/12.47KV SYSTEM IN MEOD, IF NO PRIMARY NEUTRAL GROUND EXISTS ON THE POLE, INCLUDE THE NECESSARY MATERIALS TO INSTALL THE REQUIRED PRIMARY NEUTRAL GROUND. CONNECT TO TRANSFORMER TANK GAP GROUND.

B. SECTIONALIZING FUSES AND A STATION ARE **NOT** ALLOWED ON THE SAME POLE. A DEVIATION REQUEST WILL NOT BE APPROVED FOR THIS CONSTRUCTION.

C. WHEN LIGHTNING ARRESTERS ARE REQUIRED, USE 'HJ' TYPE TRANSFORMER WITH TANK GAP GROUND. (d)

BILL OF MATERIALS:

ITEM	DESCRIPTION		QUANTITY HE	QUANTITY HJ	STANDARD PAGE	STOCK NUMBER	DESIGN UNITS
1	CLAMP, HOTLINE AND STIRRUP		2	2	788	-	-
2	BOLT, MACH, GALV., 5/8" x (LENGTH AS REQ'D), 1 SQ & 1 DBL COIL SPR WASHER		1	1	390	-	-
3	PIN, TRANSFORMER LEAD ADAPTOR, THREAD (AS REQ'D)	1"	1	1	-	S529248	-
		1 3/8"			-	S529214 (X)	-
4	INSULATOR, PIN TYPE, CLASS AS REQ'D		2	2	750	-	-
5	BRACKET, INSULATOR, THREAD (AS REQ'D)	1"	1	1	-	S166134	-
		1 3/8"			-	S166140	-
6	SCREW, LAG, 1/2" X 4"		2	2	-	S621568	-
7	CONNECTOR, WIRE, COMPRESSION, CU OR AL AS REQ'D		AS REQ'D		783-785	-	-

© 1998 - 2021 San Diego Gas & Electric Company. All rights reserved. Removal of this copyright notice without permission is not permitted under law.

REV	CHANGE	DR	BY	DSN	APV	DATE	REV	CHANGE	DR	BY	DSN	APV	DATE
D	EDITORIAL CHANGES	-	GW	JS	MDJ	04/01/2018	G	BILL OF MATERIALS UPDATE	EDM	RSL	JES	CZH	10/28/2021
C	COMPLETLEY REVISED	-	JBH	JBH	MDJ	07/21/2016	F	TABLE UPDATES	EDM	JCE	JES	CZH	02/08/2021
B	REVISION	-	-	TQ	DW	03/06/2014	E	EDITORIAL CHANGES	-	JS	JS	CZH	10/01/2018

TABLE OF CONTENTS

BILL OF MATERIALS (CONT'D):

ITEM	DESCRIPTION		QUANTITY HE	QUANTITY HJ	STANDARD PAGE	STOCK NUMBER	DESIGN UNITS
8	BUSHING COVER, TRANSFORMER		2	2	-	S289188 (X)	BSHCOV
9	BOLT, MACH, GALV., 5/8" OR 3/4" X (LENGTH AS REQ'D), 1 SQ CURVED & 1 DOUBLE COIL SPRING WASHER		2	2	390	-	-
10	COVER, BOLT, PLASTIC & 6 - 10D NAILS, GALV.		2	2	-	S285696	-
			-	-	-	S491392	-
11	TRANSFORMER, SINGLE PHASE, TYPE 'HE' OR 'HJ' (C)		1	1	1121	-	-
12	WIRE, THW COPPER (SIZED PER TRANSFORMER CAPACITY)		21'-0"	21'-0"	711/1125	-	-
13	GROUNDING, #4 PVC GROUND WIRE, RODS & CONNECTORS	STEEL POLE	1	1	1002	-	GNDPSP
		WOOD POLE				-	GNDPVC
14	GALVANIZED STAPLES FOR PVC COVERED GROUND WIRE		AS REQ'D		-	S678564 (X)	-

NOTES:

(X) THIS ITEM IS EXEMPT.

REFERENCE:

(a) FOR POLE STEPPING, SEE OH363.
(b) FOR GROUNDING METHODS, SEE OH1002.
(c) FOR FIBERGLASS CROSSARMS, SEE OH379.
(d) FOR SURGE (LIGHTNING) ARRESTERS, SEE OH1247.

TABLE OF CONTENTS

© 1998 - 2021 San Diego Gas & Electric Company. All rights reserved. Removal of this copyright notice without permission is not permitted under law.

REV	CHANGE	DR	BY	DSN	APV	DATE	REV	CHANGE	DR	BY	DSN	APV	DATE
D	EDITORIAL CHANGES	-	GW	JS	MDJ	04/01/2018	G	BILL OF MATERIALS UPDATE	EDM	RSL	JES	CZH	10/28/2021
C	COMPLETLEY REVISED	-	JBH	JBH	MDJ	07/21/2016	F	TABLE UPDATES	EDM	JCE	JES	CZH	02/08/2021
B	REVISION	-	-	TQ	DW	03/06/2014	E	EDITORIAL CHANGES	-	JS	JS	CZH	10/01/2018

SCOPE: THIS STANDARD SHOWS THE INSTALLATION METHOD OF A SINGLE-PHASE TYPE 'YE', 'YJ', 'HE', OR 'HJ' TRANSFORMER WITH SECONDARY CABLE CONSTRUCTION. NOT TO BE CONSTRUCTED IN THE HIGH FIRE THREAT DISTRICT.

TABLE 1

KVA	O.H. MACRO UNITS
5	HE-5
5	HE-5L
10	HE-10
10	HE-10L
15	HE-15
15	HE-15L
25	HE-25
25	HE-25L
50	HE-50
50	HE-50L
75	HE-75
75	HE-75L
10	HJ-10
15	HJ-15
25	HJ-25
50	HJ-50

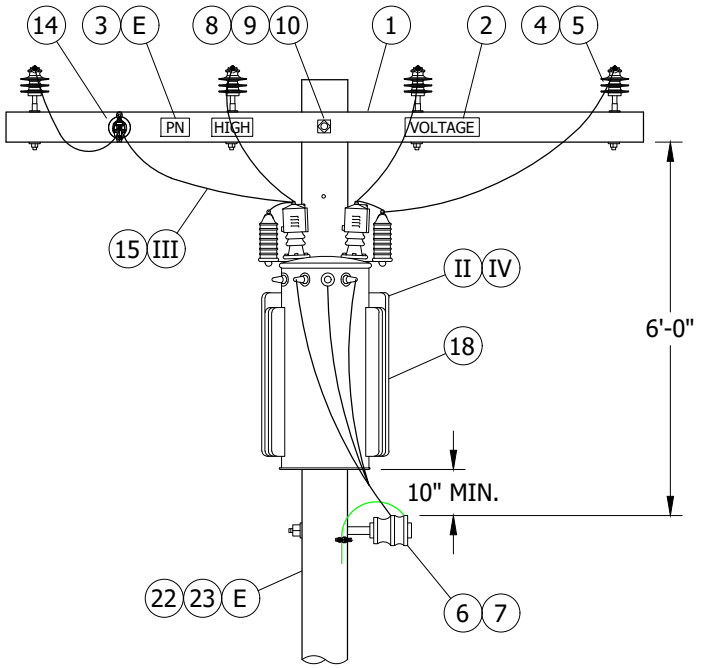

FIGURE 1
FRONT VIEW

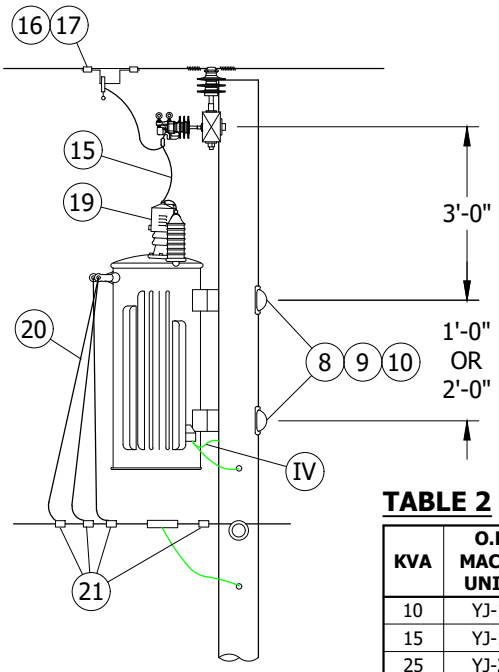

FIGURE 1
SIDE VIEW

TABLE 2

KVA	O.H. MACRO UNITS
10	YJ-10
15	YJ-15
25	YJ-25
50	YJ-50
75	YJ-75

INSTALLATION: NONE

BILL OF MATERIALS:

ITEM	DESCRIPTION		QUANTITY	STANDARD PAGE	STOCK NUMBER	DESIGN UNITS
1	CROSSARM, FIBERGLASS, TANGENT, (SIZE AS REQ'D)		1	379	-	-
2	SIGN, HIGH VOLTAGE, DECAL		AS REQ'D	208	S647650	HV/D
3	SIGN, PN, DECAL		AS REQ'D	208	S648004 (X)	PN/D
4	PIN, INSULATOR (SIZE AS REQ'D)		AS REQ'D	396	-	-
5	INSULATOR, POLY, TIE-TOP (SIZE REQ'D)		AS REQ'D	750	-	-
6	INSULATOR, SPOOL, 3" X 3"		AS REQ'D	-	S403752	J105
7	BOLT, DOUBLE UPSET, 5/8" X (SIZE AS REQ'D)	9"	AS REQ'D	612	S150370 (X)	UP9
		12"	AS REQ'D		S150338 (X)	UP12
8	MACHINE BOLT, 3/4" (SIZE AS REQ'D)		AS REQ'D	390	-	-
9	SPRING LOCK WASHER, 3/4"		AS REQ'D		S796802 (X)	LK-WSH
10	SQUARE CURVED WASHERS		AS REQ'D		S797760	RIBWSH
11	WIRE, #8, BARE, SOLID ANEALED COPPER (I)		AS REQ'D	711	S812928	BOND8
12	STRAP, PIPE, GALV., 1/4", ONE HOLE (I)		AS REQ'D	1002	S697302	-
13	SCREW, SELF TAPPING, 1 1/4", #12, 24 THREAD (I)		AS REQ'D		S618086 (X)	-
14	PIN, TRANSFORMER, 1"		2	396	S529248	PS/01
15	WIRE, #4-7, POLY COVERED, STRANDED COPPER		AS REQ'D	711	S815044	POLY4J

© 1998 - 2021 San Diego Gas & Electric Company. All rights reserved. Removal of this copyright notice without permission is not permitted under law.

REV	CHANGE	DR	BY	DSN	APV	DATE	REV	CHANGE	DR	BY	DSN	APV	DATE
D	EDITORIAL CHANGES	-	GW	JS	MDJ	04/01/2018	G	BILL OF MATERIALS UPDATE	EDM	RSL	JES	CZH	10/28/2021
C	COMPLETLEY REVISED	-	JBH	JBH	MDJ	07/21/2016	F	TABLE UPDATES	EDM	JCE	JES	CZH	02/08/2021
B	REVISION	-	-	TQ	DW	03/06/2014	E	EDITORIAL CHANGES	-	JS	JS	CZH	10/01/2018

TABLE OF CONTENTS

BILL OF MATERIALS (CONT'D):

ITEM	DESCRIPTION		QUANTITY	STANDARD PAGE	STOCK NUMBER	DESIGN UNITS
16	CLAMP, HOTLINE		2	788	-	-
17	CONNECTOR, WEDGE, STIRRUP		2		-	-
18	TRANSFORMER, SINGLE PHASE, (TYPE AS REQ'D)		1	1121	-	-
19	BUSHING COVER, TRANSFORMER		2	1630	S289188 (X)	BSHCOV
20	WIRE, THW, COPPER, (SIZE GOVERNED BY TRANSFORMER CAPACITY)		AS REQ'D	711	-	-
21	CONNECTORS, WIRE COMPRESSION, CU OR AL		AS REQ'D	783-785	-	-
22	GROUNDING, #4 PVC GROUND WIRE, RODS & CONNECTORS	STEEL POLE	1	1002	-	GNDPSP
		WOOD POLE			-	GNDPVC
23	BLIND NUT, 1/2"		AS REQ'D	-	S503460 (X)	-

NOTES:

(I) NOT SHOWN ON FIGURES

(X) THIS ITEM IS EXEMPT.

REFERENCE: NONE

TABLE OF CONTENTS

© 1998 - 2021 San Diego Gas & Electric Company. All rights reserved. Removal of this copyright notice without permission is not permitted under law.

REV	CHANGE	DR	BY	DSN	APV	DATE	REV	CHANGE	DR	BY	DSN	APV	DATE
D	EDITORIAL CHANGES	-	GW	JS	MDJ	04/01/2018	G	BILL OF MATERIALS UPDATE	EDM	RSL	JES	CZH	10/28/2021
C	COMPLETLEY REVISED	-	JBH	JBH	MDJ	07/21/2016	F	TABLE UPDATES	EDM	JCE	JES	CZH	02/08/2021
B	REVISION	-	-	TQ	DW	03/06/2014	E	EDITORIAL CHANGES	-	JS	JS	CZH	10/01/2018

SCOPE: THIS STANDARD SHOWS THE INSTALLATION METHOD OF A SINGLE-PHASE TRANSFORMER, WITH SECONDARY LINE ARM CONSTRUCTION.

TABLE 1

KVA	OH MACRO UNITS
5	HE-5
5	HE-5L
10	HE-10
10	HE-10L
15	HE-15
15	HE-15L
25	HE-25
25	HE-25L
50	HE-50
50	HE-50L
75	HE-75
75	HE-75L
10	HJ-10
15	HJ-15
25	HJ-25
50	HJ-50

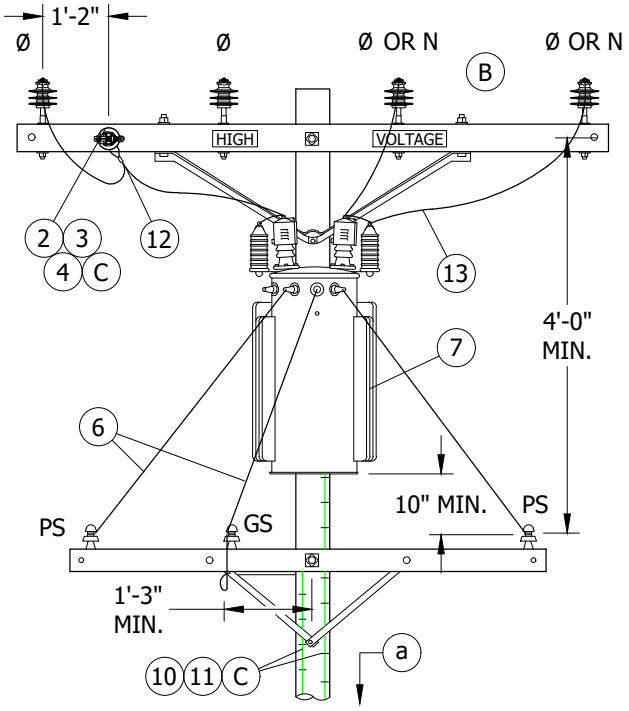

FIGURE 1
FRONT VIEW

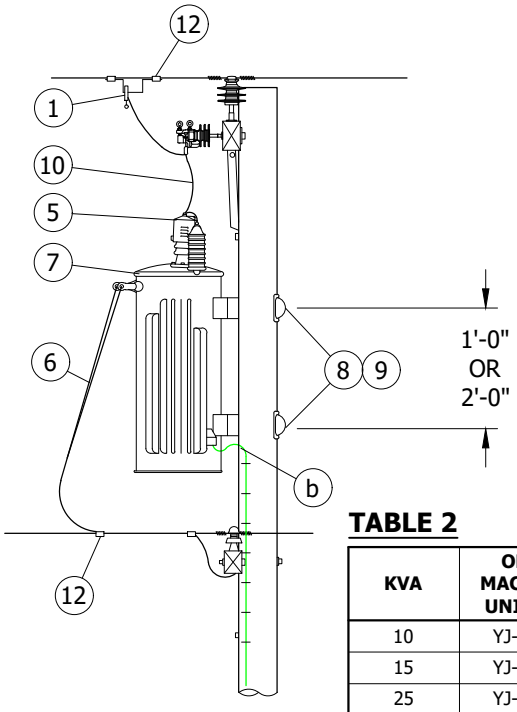

FIGURE 1
SIDE VIEW

TABLE 2

KVA	OH MACRO UNITS
10	YJ-10
15	YJ-15
25	YJ-25
50	YJ-50
75	YJ-75

INSTALLATION:

A. WHEN INSTALLING A NEW STATION ON THE 7.2/12.47KV SYSTEM IN MEOD, IF NO PRIMARY NEUTRAL GROUND EXISTS ON THE POLE, INCLUDE THE NECESSARY MATERIALS TO INSTALL THE REQUIRED PRIMARY NEUTRAL GROUND. CONNECT TO TRANSFORMER TANK GAP GROUND.

(B) 'YE' & 'YJ' TRANSFORMERS ARE TO BE CONNECTED PHASE TO NEUTRAL.

(C) INSTALLATION OF A STAND-OFF PIN/INSULATOR REQUIRES MINIMUM OF A 4 PIN ARM TO MAINTAIN HARDWARE CLEARANCE. ON EXISTING 2 PIN ARMS, THE STRAP BRACE ON THE STAND-OFF PIN SIDE MAY BE REMOVED TO MAINTAIN HARDWARE CLEARANCE.

D. SECTIONALIZING FUSES AND A STATION ARE **NOT** ALLOWED ON THE SAME POLE. A DEVIATION REQUEST WILL NOT BE APPROVED FOR THIS CONSTRUCTION.

BILL OF MATERIALS:

ITEM	DESCRIPTION		QUANTITY HE, YE	QUANTITY HJ, YJ	STANDARD PAGE	STOCK NUMBER	DESIGN UNITS
1	CLAMP, HOTLINE & STIRRUP		2	2	788	-	-
2	BOLT, MACH, GALV. 5/8" X (LENGTH AS REQ'D), 2 SQ WASHERS & 1 DBL COIL SPRING WASHER		1	1	390	-	-
3	PIN, TRANSFORMER LEAD ADAPTER	1"	1	1	-	S529248	-
		1 3/8"			-	S529214 (X)	-

© 1998 - 2021 San Diego Gas & Electric Company. All rights reserved. Removal of this copyright notice without permission is not permitted under law.

REV	CHANGE	DR	BY	DSN	APV	DATE	REV	CHANGE	DR	BY	DSN	APV	DATE
D	EDITORIAL CHANGES	-	GW	JS	MDJ	04/01/2018	G	BILL OF MATERIALS UPDATE	EDM	RSL	JES	CZH	10/28/2021
C	COMPLETLEY REVISED	-	JBH	JBH	MDJ	07/21/2016	F	TABLE UPDATES	EDM	JCE	JES	CZH	02/08/2021
B	REVISION	-	-	TQ	DW	03/06/2014	E	EDITORIAL CHANGES	-	JS	JS	CZH	10/01/2018

TABLE OF CONTENTS

BILL OF MATERIALS (CONT'D):

ITEM	DESCRIPTION		QUANTITY HE, YE	QUANTITY HJ, YJ	STANDARD PAGE	STOCK NUMBER	DESIGN UNITS
4	INSULATOR, 12KV, 1" OR 1 3/8" PIN		1	1	750	-	-
5	BUSHING COVER, TRANSFORMER		2	2	-	S289188 (X)	BSHCOV
6	WIRE, THW, COPPER (SIZE GOVERNED BY TRANSFORMER CAPACITY)		21'-0"	21'-0"	1125	-	-
7	TRANSFORMER, SINGLE PHASE (TYPE HE, HJ, OR YJ, YE)		1	1	1121	-	-
8	BOLT, MACH, GALV. 5/8" X 8'-0" OR 3/4" X (LENGTH AS REQ'D), 1 SQ CURVED & 1 DBL COIL SPRING WASHER		2	2	390	-	-
9	COVER, BOLT, PLASTIC		2	2	-	S285696	-
	NAIL, 10 D, COMMON WIRE				-	S491392	-
10	GROUNDING, #4 PVC GROUND WIRE, RODS & CONNECTORS	STEEL POLE	1	1	1002	-	GNDPSP
		WOOD POLE				-	GNDPVC
11	GALVANIZED STAPLES FOR PVC COVERED GROUND WIRE		AS REQ'D		-	S678564 (X)	-
12	CONNECTORS, WIRE COMPRESSION, CU OR AL, AS REQ'D		AS REQ'D		783-785	-	-
13	#4/7 STR CU. WIRE		AS REQ'D		-	S815044	POLY4J

NOTES:

(X) THIS ITEM IS EXEMPT.

REFERENCE:

(a) FOR POLE STEPPING, SEE OH363.

(b) WHEN LIGHTNING ARRESTERS ARE REQUIRED PER OH1247, USE 'HJ' OR 'YJ' TYPE TRANSFORMER WITH TANK GAP GROUND.

(c) FOR GROUNDING METHODS, SEE OH1002.

TABLE OF CONTENTS

© 1998 - 2021 San Diego Gas & Electric Company. All rights reserved. Removal of this copyright notice without permission is not permitted under law.

REV	CHANGE	DR	BY	DSN	APV	DATE	REV	CHANGE	DR	BY	DSN	APV	DATE
D	EDITORIAL CHANGES	-	GW	JS	MDJ	04/01/2018	G	BILL OF MATERIALS UPDATE	EDM	RSL	JES	CZH	10/28/2021
C	COMPLETLEY REVISED	-	JBH	JBH	MDJ	07/21/2016	F	TABLE UPDATES	EDM	JCE	JES	CZH	02/08/2021
B	REVISION	-	-	TQ	DW	03/06/2014	E	EDITORIAL CHANGES	-	JS	JS	CZH	10/01/2018

SCOPE: THIS STANDARD ILLUSTRATES THE INSTALLATION OF TYPE "Y" OR "H" TRANSFORMERS MOUNTED ON A STEEL POLE WITH MOUNTING BRACKET, CUTOUTS, AND LIGHTNING ARRESTERS. THIS WILL BE REQUIRED CONSTRUCTION BUILD IN HIGH FIRE THREAT DISTRICT. EQUIPMENT ARM CAN BE USED WITH EITHER A FIBERGLASS EQUIPMENT BRACKET OR EIGHT-FOOT FIBERGLASS CROSSARM.

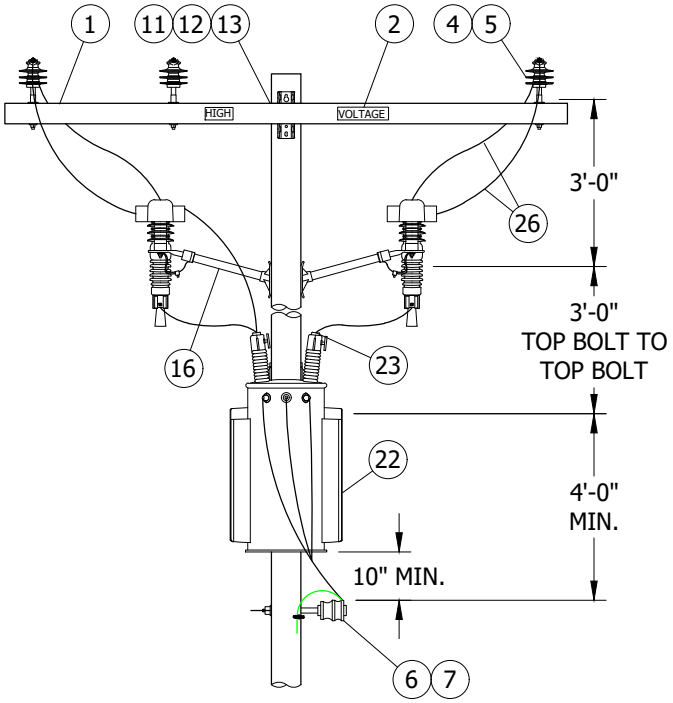

FIGURE 1
FRONT VIEW

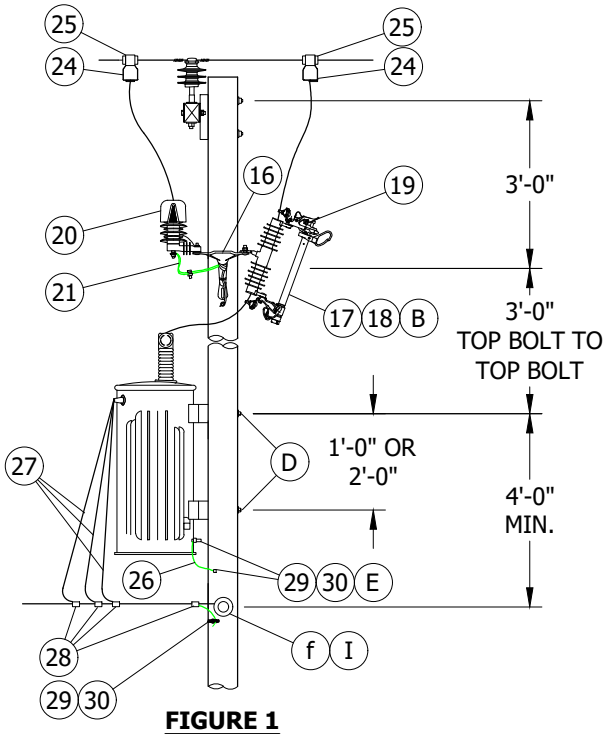

FIGURE 1
SIDE VIEW

INSTALLATION:

A. SECTIONALIZING FUSES AND A STATION ARE **NOT** ALLOWED ON THE SAME POLE. A DEVIATION WILL NOT BE APPROVED FOR THIS CONSTRUCTION.

(B) ONLY CMU OR SMU FUSES ARE TO BE USED IN THE FIRE THREAT ZONE. 'H' TYPE TRANSFORMERS REQUIRE 2 CUTOUTS AND 'Y' TYPE TRANSFORMERS REQUIRE ONLY 1 CUTOUT.

C. BOND ALL CUTOUTS IN HEAVY CONTAMINATION DISTRICT. (d)

(D) 75KVA TRANSFORMERS AND ABOVE, USE 3/4-INCH HARDWARE.

(E) TRANSFORMER TANK GROUND REQUIRED ON ALL INSTALLATIONS.

F. USE SAME POLE MEASUREMENTS ON TANGENT OR DEADEND CONSTRUCTION.

BILL OF MATERIALS:

ITEM	DESCRIPTION	QUANTITY	STANDARD PAGE	STOCK NUMBER	DESIGN UNITS
1	CROSSARM, FIBERGLASS, TANGENT (SIZE AS REQ'D)	2	379	-	-
2	SIGN, HIGH VOLTAGE STICKER	AS REQ'D	208	S647650	-
3	SIGN, PN, ADHESIVE (II)	AS REQ'D	208	S648004 (X)	PN-D
4	PIN, INSULATOR (SIZE AS REQ'D)	AS REQ'D	396	-	-
5	INSULATOR, POLY, TIE-TOP (SIZE AS REQ'D)	AS REQ'D	750	-	-
6	INSULATOR, SPOOL, 3" X 3"	AS REQ'D	-	S403752	J105

© 1998 - 2021 San Diego Gas & Electric Company. All rights reserved. Removal of this copyright notice without permission is not permitted under law.

REV	CHANGE	DR	BY	DSN	APV	DATE	REV	CHANGE	DR	BY	DSN	APV	DATE
D	EDITORIAL CHANGES	-	GW	JS	MDJ	04/01/2018	G	BILL OF MATERIALS UPDATE	EDM	RSL	JES	CZH	10/28/2021
C	COMPLETLEY REVISED	-	JBH	JBH	MDJ	07/21/2016	F	TABLE UPDATES	EDM	JCE	JES	CZH	02/08/2021
B	REVISION	-	-	TQ	DW	03/06/2014	E	EDITORIAL CHANGES	-	JS	JS	CZH	10/01/2018

TABLE OF CONTENTS

BILL OF MATERIALS (CONT'D):

ITEM	DESCRIPTION		QUANTITY	STANDARD PAGE	STOCK NUMBER	DESIGN UNITS
7	BOLT, DOUBLE UPSET, 5/8" X (SIZE AS REQUIRED)	9"	AS REQ'D	612	S150370 (X)	UP9
		12"	AS REQ'D		S150338 (X)	UP12
8	MACHINE BOLT, 5/8" (SIZE AS REQ'D) (II) (D)		AS REQ'D	390	-	-
9	SQUARE FLAT WASHERS (II)		AS REQ'D	390	S799040	5/8SQ
10	DOUBLE COIL SPRING WASHERS (II)		AS REQ'D		S798560	5/8S
11	MACHINE BOLT, 3/4" (SIZE AS REQ'D)		AS REQ'D	390	-	-
12	SPRING LOCK WASHER, 3/4" (D)		AS REQ'D	390	S796802 (X)	LK-WSH
13	SQUARE CURVED WASHERS		AS REQ'D		S797760	RIBWSH
14	STRAP, PIPE, GALV., 1/4", ONE HOLE (II)		AS REQ'D	1002	S697302	BOND8
15	SCREW, SELF TAPPING, 1 1/4", #12, 24 THREAD (II)		AS REQ'D	1002	S618086 (X)	-
16	FIBERGLASS EQUIPMENT MOUNTING BRACKET, 24"		2	-	S166450	COLABS
17	CUTOUT, 12KV, CMD OR SMD		AS REQ'D	1212	-	-
18	FUSE HOLDER, CMU OR SMU (B)		2	1212	-	-
19	CUTOUT, COVER (B)		AS REQ'D	1640	S289626	CCOVSL
20	ARRESTER, LIGHTNING, 12KV		AS REQ'D	1247	S113248	LA12
21	ARRESTER GROUND STRAP		2	1002	S698754	-
22	TRANSFORMER, SINGLE PHASE, TYPE 'H' OR 'Y'		1	1121	-	-
23	BUSHING COVER, TRANSFORMER		2	1630	S289188 (X)	BSHCOV
24	CLAMP, HOTLINE		4	788	-	-
25	CONNECTOR, WEDGE, STIRRUP		4		-	-
26	WIRE, #4-7, POLY COVERED, STRANDED COPPER		AS REQ'D	711	S815044	POLY4J
27	WIRE, THW, COPPER, (SIZE GOVERNED BY TRANSFORMER CAPACITY)		AS REQ'D		-	-
28	CONNECTORS, WIRE COMPRESSION, CU OR AL		AS REQ'D	783-785	-	-
29	GROUNDING, #4 PVC GROUND WIRE, RODS & CONNECTORS	STEEL POLE	1	1002	-	GNDPSP
		WOOD POLE			-	GNDPVC
30	BLIND NUT, 1/2"		AS REQ'D	1002	S503460 (X)	-

TABLE OF CONTENTS

NOTES:

(I) NEW CONSTRUCTION SHALL USE AERIAL CABLE CONSTRUCTION FOR SECONDARY APPLICATIONS. EXISTING CONSTRUCTION CAN USE CROSSARMS FOR OPEN WIRE SECONDARY CONSTRUCTION. (f)

(II) NOT SHOWN ON FIGURES.

(X) THIS ITEM IS EXEMPT.

REFERENCE:

a. FOR POLE STEPPING, SEE OH363.
b. FOR LIGHTNING ARRESTER REQUIREMENTS, SEE OH1247.
c. FOR GROUNDING METHOD, SEE OH1002.
(d) FOR BONDING, SEE OH287 & OH1002.
e. FOR TRANSFORMER FUSING, SEE OH1109.
(f) FOR SECONDARY CABLE CONSTRUCTION, SEE OH612.

© 1998 - 2021 San Diego Gas & Electric Company. All rights reserved. Removal of this copyright notice without permission is not permitted under law.

REV	CHANGE	DR	BY	DSN	APV	DATE	REV	CHANGE	DR	BY	DSN	APV	DATE
D	EDITORIAL CHANGES	-	GW	JS	MDJ	04/01/2018	G	BILL OF MATERIALS UPDATE	EDM	RSL	JES	CZH	10/28/2021
C	COMPLETLEY REVISED	-	JBH	JBH	MDJ	07/21/2016	F	TABLE UPDATES	EDM	JCE	JES	CZH	02/08/2021
B	REVISION	-	-	TQ	DW	03/06/2014	E	EDITORIAL CHANGES	-	JS	JS	CZH	10/01/2018

SCOPE: THIS STANDARD SHOWS THE INSTALLATION METHOD OF A TYPE 'H' TRANSFORMER, WITH CUTOUT ARM AND SECONDARY CABLE CONSTRUCTION.

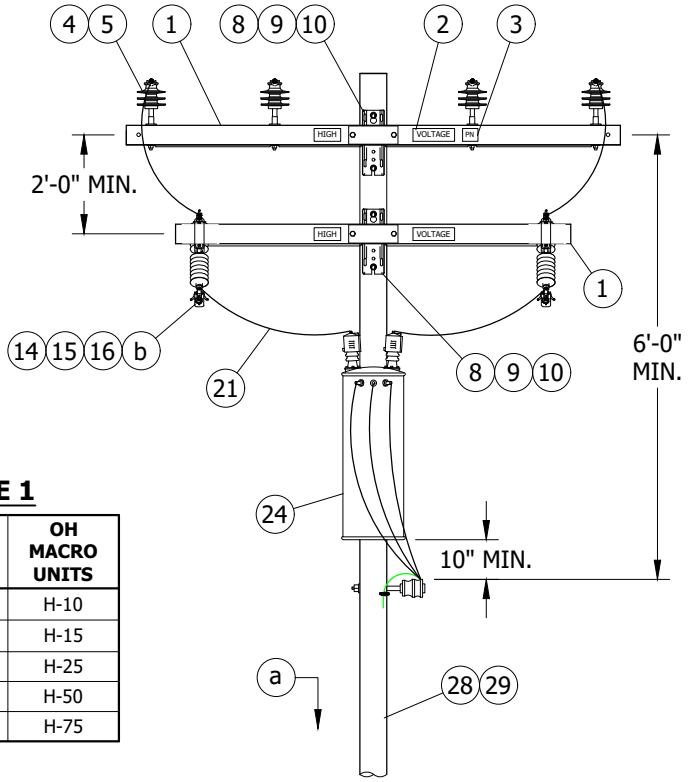

FIGURE 1
FRONT VIEW

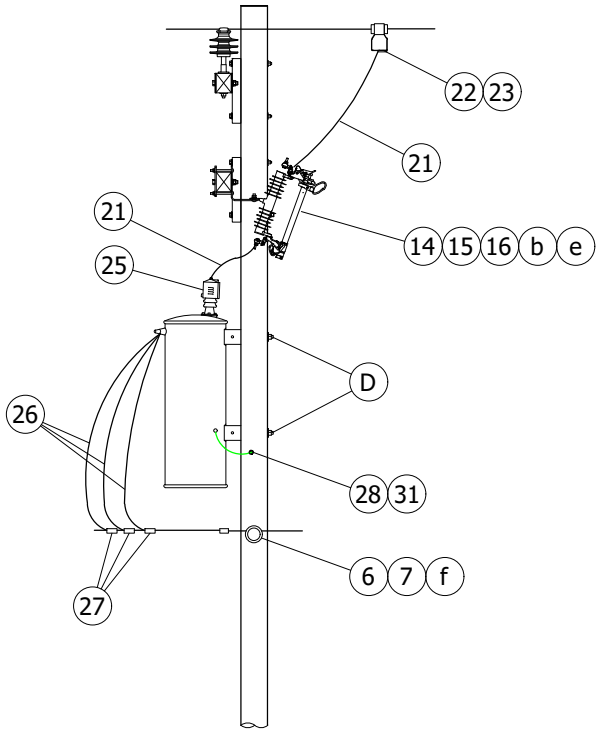

FIGURE 1
SIDE VIEW

TABLE 1

KVA	OH MACRO UNITS
10	H-10
15	H-15
25	H-25
50	H-50
75	H-75

INSTALLATION:

A. SECTIONALIZING FUSES AND A STATION ARE **NOT** ALLOWED ON THE SAME POLE. A DEVIATION WILL NOT BE APPROVED FOR THIS CONSTRUCTION.

B. ONLY CMU OR SMU FUSES ARE TO BE USED IN THE FIRE THREAT ZONE. 'H' TYPE TRANSFORMERS REQUIRE 2 CUTOUTS AND 'Y' TYPE TRANSFORMERS REQUIRE ONLY 1 CUTOUT.

C. BOND ALL CUTOUTS IN HEAVY CONTAMINATION DISTRICT. (b)

(D) 75KVA TRANSFORMERS AND ABOVE, USE 3/4-INCH HARDWARE.

E. PRIMARY NEUTRAL CONDUCTORS ARE TO BE IDENTIFIED ON EACH POLE THEY CONTACT BY INSULATORS OF DIFFERENT COLOR, SHAPE OR QUANTITY AS COMPARED TO THE PHASE CONDUCTORS, OR BY A SIGN. WHEN THE PRIMARY PHASE AND PRIMARY NEUTRAL CONDUCTORS ARE NOT DISTINGUISHED AS MENTIONED, THE PRIMARY NEUTRAL SHALL BE IDENTIFIED THROUGH THE USE OF A "PN" (PRIMARY NEUTRAL) SIGN INSTALLED. (g)

BILL OF MATERIALS:

ITEM	DESCRIPTION	QUANTITY	STANDARD PAGE	STOCK NUMBER	DESIGN UNITS
1	CROSSARM, FIBERGLASS, TANGENT (SIZE AS REQ'D)	2	379	-	-
2	SIGN, HIGH VOLTAGE, DECAL	AS REQ'D	208	S647650	HV/D

© 1998 - 2021 San Diego Gas & Electric Company. All rights reserved. Removal of this copyright notice without permission is not permitted under law.

REV	CHANGE	DR	BY	DSN	APV	DATE	REV	CHANGE	DR	BY	DSN	APV	DATE
D	EDITORIAL CHANGES	-	GW	JS	MDJ	04/01/2018	G	BILL OF MATERIALS UPDATE	EDM	RSL	JES	CZH	10/28/2021
C	COMPLETLEY REVISED	-	JBH	JBH	MDJ	07/21/2016	F	TABLE UPDATES	EDM	JCE	JES	CZH	02/08/2021
B	REVISION	-	-	TQ	DW	03/06/2014	E	EDITORIAL CHANGES	-	JS	JS	CZH	10/01/2018

TABLE OF CONTENTS

BILL OF MATERIALS (CONT'D):

ITEM	DESCRIPTION		QUANTITY	STANDARD PAGE	STOCK NUMBER	DESIGN UNITS
3	SIGN, PN, DECAL		AS REQ'D	208	S648004 (X)	PN/D
4	PIN, INSULATOR (SIZE AS REQ'D)		AS REQ'D	396	-	-
5	INSULATOR, POLY, TIE-TOP (SIZE AS REQ'D)		AS REQ'D	750	-	-
6	INSULATOR, SPOOL, 3" X 3"		AS REQ'D	-	S403752	J105
7	BOLT, DOUBLE UPSET, 5/8" X (SIZE AS REQ'D)	9"	AS REQ'D	612	S150370 (X)	UP9
		12"	AS REQ'D		S150338 (X)	UP12
8	MACHINE BOLT, 3/4" (SIZE AS REQ'D)		AS REQ'D	390	-	-
9	SPRING LOCK WASHER, 3/4"		AS REQ'D		S796802 (X)	LK-WSH
10	SQUARE CURVED WASHERS		AS REQ'D		S797760	RIBWSH
11	WIRE, #8, BARE, SOLID ANEALED COPPER (II)		AS REQ'D	715	S812928	BOND8
12	STRAP, PIPE, GALV., 1/4", ONE HOLE (II)		AS REQ'D	1002	S697302	-
13	SCREW, SELF TAPPING, 1 1/4", #12, 24 THREAD (II)		AS REQ'D		S618086 (X)	-
14	CUTOUT, 12KV		2	1212	-	-
15	FUSE HOLDER		2		-	-
16	BRACKET, CUTOUT, ARRESTER		2		S166070	-
17	BRACKET, DOUBLE, CUTOUT, ARRESTER MOUNTING (II)		AS REQ'D		S165446 (X)	-
18	ARRESTER, LIGHTNING, 12KV (II)		AS REQ'D	1247	S113248	LA12
19	ARRESTER GROUND STRAP (II)			1002	S678564 (X)	-
20	HARNESS, GROUNDING, SINGLE 12", STRANDED TIN COPPER (II)		AS REQ'D		S406522	-
21	WIRE, #4-7, POLY COVERED, STRANDED COPPER		AS REQ'D	718	S815044	POLY4J
22	CLAMP, HOTLINE		2	788	-	-
23	CONNECTOR, WEDGE, STIRRUP		2		-	-
24	TRANSFORMER, SINGLE PHASE, TYPE 'H'		1	1121	-	-
25	BUSHING COVER, TRANSFORMER		2	1630	S289188 (X)	BSHCOV
26	WIRE, THW, COPPER, (SIZE GOVERNED BY TRANSFORMER CAPACITY)		AS REQ'D	785	-	-
27	CONNECTORS, WIRE COMPRESSION, CU OR AL		AS REQ'D	783-785	-	-
28	GROUNDING, #4 PVC GROUND WIRE, RODS & CONNECTORS	STEEL POLE	1	1002	-	GNDPSP
		WOOD POLE			-	GNDPVC
29	BLIND NUT, 1/2"		AS REQ'D		S503460 (X)	-

NOTES:

I. NEW CONSTRUCTION, SHALL USE AERIAL CABLE CONSTRUCTION FOR SECONDARY APPLICATIONS. EXISTING CONSTRUCTION, CAN USE CROSSARMS FOR OPEN WIRE SECONDARY CONSTRUCTION. (f)

(II) NOT SHOWN ON FIGURES.

(X) THIS ITEM IS EXEMPT.

REFERENCE:

(a) FOR POLE STEPPING, SEE OH363.

(b) FOR LIGHTNING ARRESTER REQUIREMENTS, SEE OH1247.

c. FOR GROUNDING METHOD, SEE OH1002.

© 1998 - 2021 San Diego Gas & Electric Company. All rights reserved. Removal of this copyright notice without permission is not permitted under law.

REV	CHANGE	DR	BY	DSN	APV	DATE	REV	CHANGE	DR	BY	DSN	APV	DATE
D	EDITORIAL CHANGES	-	GW	JS	MDJ	04/01/2018	G	BILL OF MATERIALS UPDATE	EDM	RSL	JES	CZH	10/28/2021
C	COMPLETLEY REVISED	-	JBH	JBH	MDJ	07/21/2016	F	TABLE UPDATES	EDM	JCE	JES	CZH	02/08/2021
B	REVISION	-	-	TQ	DW	03/06/2014	E	EDITORIAL CHANGES	-	JS	JS	CZH	10/01/2018

TABLE OF CONTENTS

REFERENCE (CONT'D):

d. FOR BONDING, SEE OH287 & OH1002.
e. FOR TRANSFORMER FUSING, SEE OH1109.
f. FOR SECONDARY CABLE CONSTRUCTION, SEE OH612.
g. FOR "PN" SIGN AND POLE SIGNAGE, SEE OH208.
h. FOR NEUTRAL GROUNDING, SEE OH1004.

TABLE OF CONTENTS

© 1998 - 2021 San Diego Gas & Electric Company. All rights reserved. Removal of this copyright notice without permission is not permitted under law.

REV	CHANGE	DR	BY	DSN	APV	DATE	REV	CHANGE	DR	BY	DSN	APV	DATE
D	EDITORIAL CHANGES	-	GW	JS	MDJ	04/01/2018	G	BILL OF MATERIALS UPDATE	EDM	RSL	JES	CZH	10/28/2021
C	COMPLETLEY REVISED	-	JBH	JBH	MDJ	07/21/2016	F	TABLE UPDATES	EDM	JCE	JES	CZH	02/08/2021
B	REVISION	-	-	TQ	DW	03/06/2014	E	EDITORIAL CHANGES	-	JS	JS	CZH	10/01/2018

SCOPE: THIS STANDARD SHOWS THE INSTALLATION METHOD OF A TYPE 'H' TRANSFORMER, WITH CUTOUT ARM AND SECONDARY CROSSARM CONSTRUCTION.

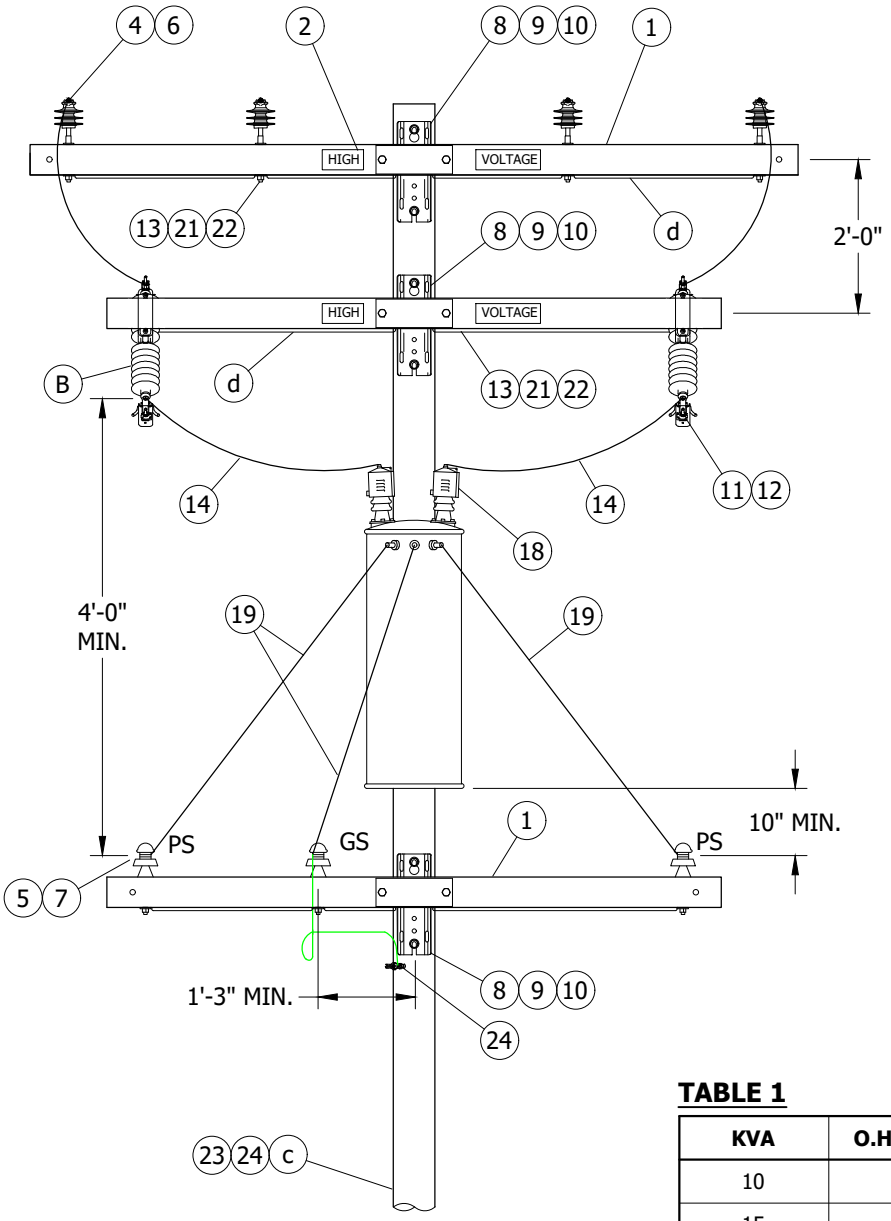

FIGURE 1
FRONT VIEW

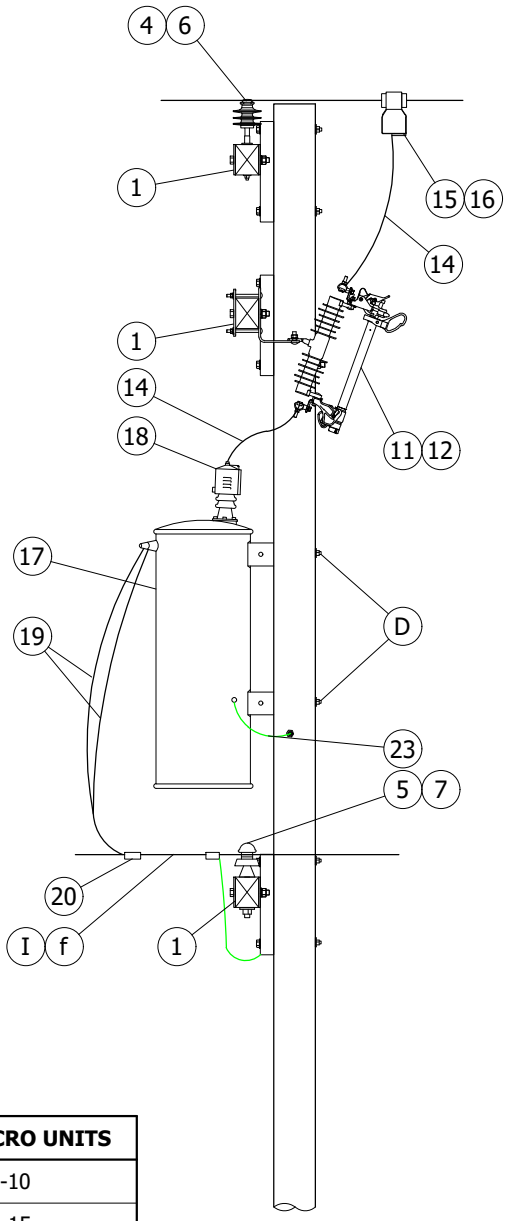

FIGURE 1
SIDE VIEW

TABLE 1

KVA	O.H. MACRO UNITS
10	H-10
15	H-15
25	H-25
50	H-50
75	H-75

© 1998 - 2021 San Diego Gas & Electric Company. All rights reserved. Removal of this copyright notice without permission is not permitted under law.

REV	CHANGE	DR	BY	DSN	APV	DATE	REV	CHANGE	DR	BY	DSN	APV	DATE
D	EDITORIAL CHANGES	-	GW	JS	MDJ	04/01/2018	G	BILL OF MATERIALS UPDATE	EDM	RSL	JES	CZH	10/28/2021
C	COMPLETLEY REVISED	-	JBH	JBH	MDJ	07/21/2016	F	TABLE UPDATES	EDM	JCE	JES	CZH	02/08/2021
B	REVISION	-	-	TQ	DW	03/06/2014	E	EDITORIAL CHANGES	-	JS	JS	CZH	10/01/2018

INSTALLATION:

A. SECTIONALIZING FUSES AND A STATION ARE **NOT** ALLOWED ON THE SAME POLE. A DEVIATION WILL NOT BE APPROVED FOR THIS CONSTRUCTION.

(B) ONLY CMU OR SMU FUSES ARE TO BE USED IN THE FIRE THREAT ZONE. 'H' TYPE TRANSFORMERS REQUIRE 2 CUTOUTS AND 'Y' TYPE TRANSFORMERS REQUIRE ONLY 1 CUTOUT.

C. BOND ALL CUTOUTS IN HEAVY CONTAMINATION DISTRICT. (d)

(D) 75KVA TRANSFORMERS AND ABOVE, USE 3/4-INCH HARDWARE.

BILL OF MATERIALS:

ITEM	DESCRIPTION		QUANTITY	STANDARD PAGE	STOCK NUMBER	DESIGN UNITS
1	CROSSARM, FIBERGLASS, TANGENT (SIZE AS REQ'D)		3	379	-	-
2	SIGN, HIGH VOLTAGE STICKER		AS REQ'D	208	S647650	HV/D
3	SIGN, PN, ADHESIVE (II)		AS REQ'D		S648004 (X)	PN-D
4	PIN, INSULATOR (SIZE AS REQ'D)		AS REQ'D	396	-	-
5	PIN, INSULATOR, 4KV/SEC 1"		AS REQ'D		S532608	PS1S
6	INSULATOR, POLY, TIE-TOP (SIZE AS REQ'D)		AS REQ'D	750	-	-
7	INSULATOR, PIN TYPE, SECONDARY		AS REQ'D		S429024	55-2/I
8	MACHINE BOLT, 3/4" (SIZE AS REQ'D)		AS REQ'D	390	-	-
9	SPRING LOCK WASHER, 3/4"		AS REQ'D		S796802 (X)	LK-WSH
10	SQUARE CURVED WASHERS		AS REQ'D		S797760	RIBWSH
11	CUTOUT, 12KV		2	1212	-	-
12	FUSE HOLDER		2		-	-
13	WIRE, #8, BARE, SOLID ANNEALED COPPER		AS REQ'D	711	S812928	BOND8
14	WIRE, #4-7, POLY COVERED, STRANDED COPPER		AS REQ'D	711	S815044	POLY4J
15	CLAMP, HOTLINE		2	788	-	-
16	CONNECTOR, WEDGE, STIRRUP		2		-	-
17	TRANSFORMER, SINGLE PHASE, TYPE 'H'		1	1121	-	-
18	BUSHING COVER, TRANSFORMER		2	1630	S289188 (X)	BSHCOV
19	WIRE, THW, COPPER, (SIZE GOVERNED BY TRANSFORMER CAPACITY)		AS REQ'D	711	-	-
20	CONNECTORS, WIRE COMPRESSION, CU OR AL		AS REQ'D	783-785	-	-
21	STRAP, PIPE, GALV., 1/4", ONE HOLE		AS REQ'D	1002	S697302	-
22	SCREW, SELF TAPPING, 1 1/4", #12, 24 THREAD		AS REQ'D		S618086 (X)	-
23	GROUNDING, #4 PVC GROUND WIRE, RODS & CONNECTORS	STEEL POLE	1	1002	-	GNDPSP
		WOOD POLE			-	GNDPVC
24	BLIND NUT, 1/2"		AS REQ'D	-	S503460 (X)	-

NOTES:

(I) NEW CONSTRUCTION SHALL USE AERIAL CABLE CONSTRUCTION FOR SECONDARY APPLICATIONS. EXISTING CONSTRUCTION, CAN USE CROSSARMS FOR OPEN WIRE SECONDARY CONSTRUCTION. (f)

(II) NOT SHOWN ON FIGURES.

(X) THIS ITEM IS EXEMPT.

© 1998 - 2021 San Diego Gas & Electric Company. All rights reserved. Removal of this copyright notice without permission is not permitted under law.

REV	CHANGE	DR	BY	DSN	APV	DATE	REV	CHANGE	DR	BY	DSN	APV	DATE
D	EDITORIAL CHANGES	-	GW	JS	MDJ	04/01/2018	G	BILL OF MATERIALS UPDATE	EDM	RSL	JES	CZH	10/28/2021
C	COMPLETLEY REVISED	-	JBH	JBH	MDJ	07/21/2016	F	TABLE UPDATES	EDM	JCE	JES	CZH	02/08/2021
B	REVISION	-	-	TQ	DW	03/06/2014	E	EDITORIAL CHANGES	-	JS	JS	CZH	10/01/2018

REFERENCE:

a. FOR POLE STEPPING, SEE OH363.

b. FOR FOR LIGHTNING ARRESTER REQUIREMENTS, SEE OH1247.

(c) FOR GROUNDING METHOD, SEE OH1002.

(d) FOR BONDING, SEE OH287 & OH1002.

e. FOR TRANSFORMER FUSING, SEE OH1109.

(f) FOR SECONDARY CABLE CONSTRUCTION, SEE OH612 .

g. FOR NEUTRAL GROUNDING, SEE OH1004.

© 1998 - 2021 San Diego Gas & Electric Company. All rights reserved. Removal of this copyright notice without permission is not permitted under law.

REV	CHANGE	DR	BY	DSN	APV	DATE	REV	CHANGE	DR	BY	DSN	APV	DATE
D	EDITORIAL CHANGES	-	GW	JS	MDJ	04/01/2018	G	BILL OF MATERIALS UPDATE	EDM	RSL	JES	CZH	10/28/2021
C	COMPLETLEY REVISED	-	JBH	JBH	MDJ	07/21/2016	F	TABLE UPDATES	EDM	JCE	JES	CZH	02/08/2021
B	REVISION	-	-	TQ	DW	03/06/2014	E	EDITORIAL CHANGES	-	JS	JS	CZH	10/01/2018

X Indicates Latest Revision | Completely Revised | New Page | Information Removed

SDG&E ELECTRIC OVERHEAD CONSTRUCTION STANDARDS

12KV, SINGLE-PHASE TYPE 'H' TRANSFORMER INSTALLATION, 100KVA MAXIMUM, CUTOUT ARM

OH1141.14

SCOPE: THIS STANDARD SHOWS THE INSTALLATION METHOD OF A 3Ø, 2.4KV DELTA, TYPE 'W' TRANSFORMER WITH SECONDARY CROSSARM CONSTRUCTION.

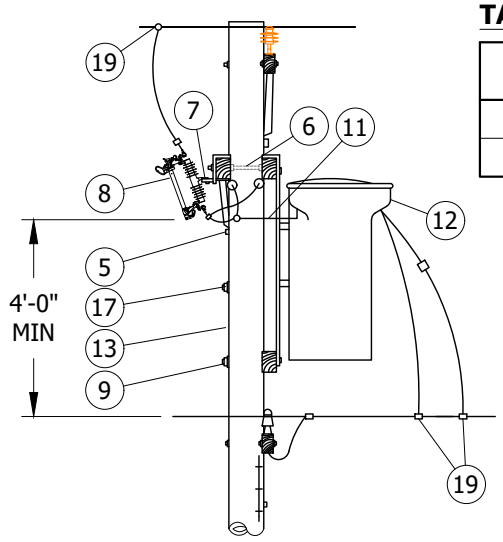

FIGURE 1
STEEL POLE CONSTRUCTION
SIDE VIEW

TABLE 1

KVA	OVERHEAD MACRO UNITS
50	50W240
75	75W240

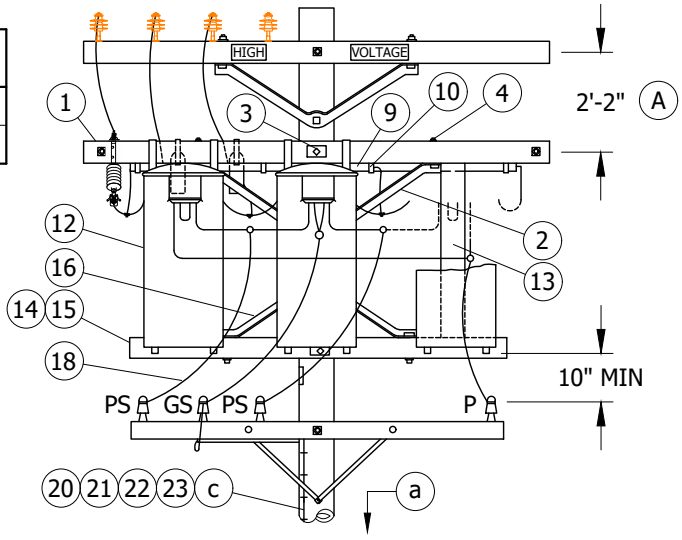

FIGURE 1
STEEL POLE CONSTRUCTION
FRONT VIEW

INSTALLATION:

(A) IF ADDITIONAL SPACE IS REQUIRED BELOW THE CUTOUT ARM THE SEPARATION BETWEEN THE LINE ARM AND CUTOUT ARM MAY BE REDUCED TO 12" WITH THE USE OF SPACE BOLTS.

B. SECTIONALIZING FUSES AND A STATION ARE **NOT** ALLOWED ON THE SAME POLE. A DEVIATION REQUEST WILL NOT BE APPROVED FOR THIS CONSTRUCTION.

BILL OF MATERIALS:

ITEM	DESCRIPTION	QUANTITY 7.5 - 25KVA	QUANTITY 37.5 KVA	STANDARD PAGE	STOCK NUMBER	DESIGN UNITS
1	CROSSARM, TRANSFORMER, 3 3/4" X 5 3/4" X 10' - 0"	2	2	-	S294128	4TF
2	ANGLE, CROSSARM, 5' - 0"	2	2	-	S164128	-
3	BOLT, MACH, GALV, 5/8" X (LENGTH AS REQ'D) 2 SQ & 1 DBL COIL SPRING WASHER	2	2	392	-	-
4	BOLT, MACH, GALV, 1/2" X 7", 1 RD & 1 DBL COIL SPRING WASHER	4	6	392	-	-
5	BOLT, MACH, GALV, 5/8" X (LENGTH AS REQ'D), 1 DBL COIL SPR WASH	1	1	392	-	-
6	BOLT, SPACE, GALV, 5/8" X (LENGTH AS REQ'D) & 4 SQ WASHERS & 2 DBL COIL SPRING WASHERS	2	2	392	-	-
7	BRACKET, CUTOUT/ARRESTER, FOR CROSSARM MOUNTING	3	3	-	S166070	-
8	CUTOUT, 12KV	3	3	1212	-	-
9	CONDUIT, PVC, 1", SCHEDULE 40, TYPE 2	16'	16'	-	S251202 (X)	-
10	STRAP, CONDUIT, GALV & 2 - 6D NAILS, GALV	8	8	-	S697792	-
		-	-	-	S491552	

© 1998 - 2020 San Diego Gas & Electric Company. All rights reserved. Removal of this copyright notice without permission is not permitted under law.

REV	CHANGE	BY	DSGN	APPV	DATE	REV	CHANGE	BY	DSGN	APPV	DATE
C	TABLE UPDATE	GLW	JES	CZH	05/11/2020	F					
B	EDITORIAL CHANGES	JS	JS	CZH	10/01/2018	E					
A	ORIGINAL ISSUE	-	JS	DW	06/13/2013	D					

X Indicates Latest Revision | Completely Revised | New Page | Information Removed

SDG&E ELECTRIC OVERHEAD CONSTRUCTION STANDARDS

2.4KV, THREE-PHASE, DELTA TYPE "W" TRANSFORMER INSTALLATION, THREE 37.5 KVA MAXIMUM SECONDARY LINE ARM CONSTRUCTION

OH1168.1

TABLE OF CONTENTS

BILL OF MATERIALS (CONT'D):

ITEM	DESCRIPTION	QUANTITY		STANDARD PAGE	STOCK NUMBER	DESIGN UNITS
		7.5 - 25KVA	37.5 KVA			
11	CABLE, 5KV, XLP INSULATED, #6 STRANDED COPPER	40'	40'	-	S194304	-
12	TRANSFORMER, SINGLE PHASE, TYPE W	3	3	1121	-	-
13	STRUT, 3 3/4" X 5 3/4" X 10' VERTICAL (CUT INTO 2 PIECES TO FIT)	-	1	-	S294128	-
14	CROSSARM, KICK, 3 1/2" X 4 1/2" X 8' - 0"	1	-	-	S293680	-
15	CROSSARM, KICK, 3 3/4" X 5 3/4" X 8' - 0"	-	1	-	S294960	-
16	BRACE, ANGLE, CROSSARM, 4' - 0"	-	1	-	S164032	-
17	BOLT, MACH, GALV, 5/8" X (LENGTH AS REQ'D), 1 SQ & 1 DBL COIL SPRING WASHER	-	1	392	-	-
18	WIRE, THW COPPER, SIZE GOVERNED BY TRANSFORMER CAPACITY	48'	48'	1125	-	-
19	CONNECTORS, WIRE COMPRESSION, CU OR AL, AS REQ'D	AS REQ'D		783-787	-	-
20	#4 CU SOLID GROUND WIRE, PVC COVERED	50'	50'	-	S812490	GNDPVC
21	GROUND ROD, 5/8" X 8', COPPERWELD	1	1	-	S603074 (X)	
22	COPPER BONDED GROUND CONNECTOR	1	1	-	S259010	-
23	GALVANIZED STAPLES FOR PVC COVERED GROUND WIRE	AS REQ'D		-	S678564 (X)	-

NOTES:

(X) THIS ITEM IS EXEMPT.

REFERENCE:

(a) POLE STEPPING - SEE OH363.

b. FOR LIGHTNING ARRESTER REQUIREMENTS - SEE OH1247.

(c) GROUNDING METHODS - SEE OH1002.

d. SEE OH1117 FOR TRANSFORMER CONNECTION DIAGRAMS. CONNECTION SHOWN FOR ILLUSTRATIVE PURPOSES ONLY.

TABLE OF CONTENTS

© 1998 - 2020 San Diego Gas & Electric Company. All rights reserved. Removal of this copyright notice without permission is not permitted under law.

REV	CHANGE	BY	DSGN	APPV	DATE	REV	CHANGE	BY	DSGN	APPV	DATE
C	TABLE UPDATE	GLW	JES	CZH	05/11/2020	F					
B	EDITORIAL CHANGES	JS	JS	CZH	10/01/2018	E					
A	ORIGINAL ISSUE	-	JS	DW	06/13/2013	D					

SCOPE: THIS STANDARD SHOWS THE INSTALLATION METHOD OF A CLUSTER MOUNTED, THREE-PHASE, 4KV, TYPE "W" TRANSFORMER, 25KVA MAXIMUM, WITH SECONDARY CABLE CONSTRUCTION.

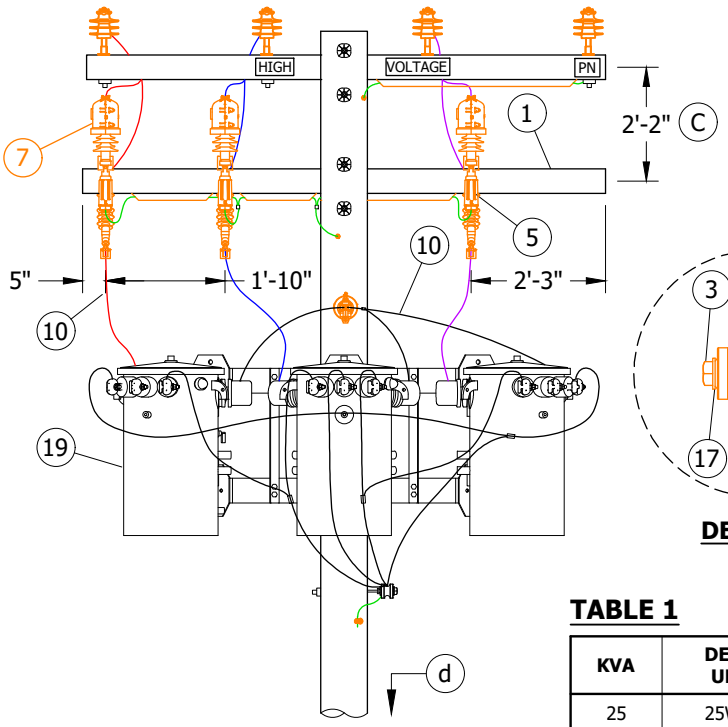

FIGURE 1
FRONT VIEW

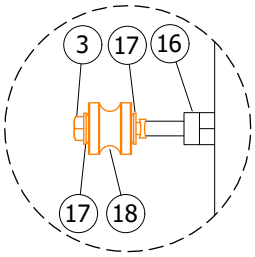

DETAIL 1

TABLE 1

KVA	DESIGN UNITS
25	25WCMB
25	25WFCM

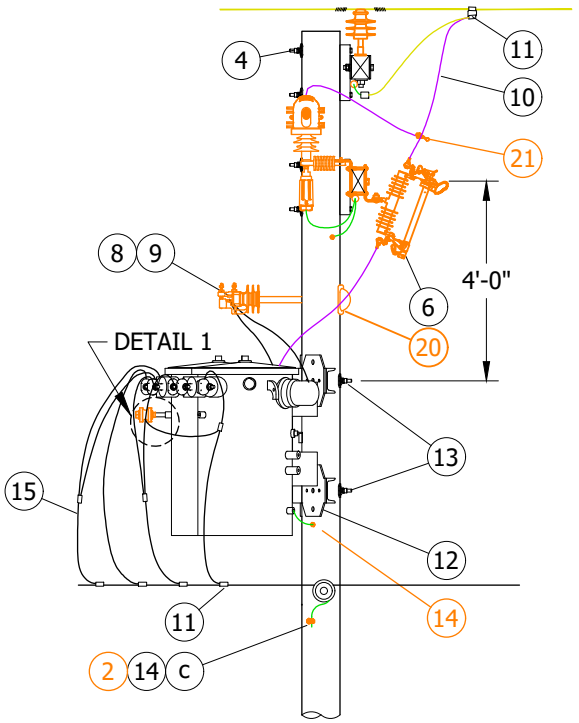

FIGURE 1
SIDE VIEW

INSTALLATION:

A. LIMITED TO TRANSFORMER WEIGHING 1,200 POUNDS OR LESS EACH.

B. WHEN PRACTICAL, BOLT TRANSFORMERS TO BRACKET ON THE GROUND AND INSTALL THEM AS A PREWIRED ASSEMBLY.

(C) IF ADDITIONAL SPACE IS REQUIRED BELOW THE CUTOUT ARM, THE SEPARATION BETWEEN THE LINE ARM AND CUTOUT ARM MAY BE REDUCED TO 1-FOOT WITH THE USE OF SPACE BOLTS. THIS NOTE DOES NOT APPLY IF LIGHTNING ARRESTERS ARE INSTALLED. SECTIONALIZING FUSES AND A STATION ARE **NOT** ALLOWED ON THE SAME POLE. A DEVIATION REQUEST WILL NOT BE APPROVED FOR THIS CONSTRUCTION.

BILL OF MATERIALS:

ITEM	DESCRIPTION		QUANTITY	STANDARD PAGE	STOCK NUMBER	DESIGN UNITS
1	CROSSARM, FIBERGLASS, 3 3/4" X 5 3/4" X 10'-0"		1	--	S294378	4TF
2	BLIND NUT, 1/2"	STEEL POLE ONLY	AS REQ'D	--	S503460 (X)	--
3	SCREW		AS REQ'D	--	S618086 (X)	--
4	BOLT, MACH, GALV., 5/8" X (LENGTH AS REQ'D), 2 SQ & 1 DBL COIL SPRING WASHER		4	390	--	--

© 1998 - 2023 San Diego Gas & Electric Company. All rights reserved. Removal of this copyright notice without permission is not permitted under law.

REV	CHANGE	DR	BY	DSN	APV	DATE	REV	CHANGE	DR	BY	DSN	APV	DATE
C	DRAWING UPDATE	EDM	MRF	MRF	KRG	04/06/2023	F						
B	EDITORIAL CHANGES	-	JS	JS	CZH	10/01/2018	E						
A	ORIGINAL ISSUE	-	-	JS	DW	06/13/2013	D						

TABLE OF CONTENTS

BILL OF MATERIALS (CONT'D):

ITEM	DESCRIPTION		QUANTITY	STANDARD PAGE	STOCK NUMBER	DESIGN UNITS
5	BRACKET, DOUBLE CUTOUT/ARRESTER, CROSSARM MOUNTING		3	397	S165454 (X)	DBLBKT
6	CUTOUT, 12KV, WITH LOADBUSTER HOOK		3	1212	--	--
7	ARRESTER, LIGHTNING		3	1247	--	--
8	BRACKET, INSULATOR (AS REQ'D)	1" THREAD	1	390	S166144	KBKT30
		1 3/8" THREAD			S166176	KBKT28
9	INSULATOR, PIN TYPE, VISE-TOP		1	750	--	--
10	WIRE, TAP, #4, HENDRIX		36'-0"	--	S812124	HEND4
11	CONNECTOR, WIRE, COMPRESSION, CU OR AL AS REQ'D		AS REQ'D	783-785	--	--
12	BRACKET, TRANSFORMER CLUSTER MOUNTING		1	--	S403008	--
13	BOLT, MACH, GALV., 3/4" X (LENGTH AS REQ'D), 1 SQUARE CURVED & 1 DOUBLE COIL SPRING WASHER		2	390	--	--
14	GROUNDING, #4 PVC GROUND WIRE, RODS & CONNECTORS	STEEL POLE	1	1002	--	GNDPSP
		WOOD/FG POLE				GNDPVC
15	WIRE, THW, COPPER, SIZED PER TRANSFORMER CAPACITY		50'-0"	1125	--	--
16	NUT, GALV., 1/2"		1	--	S504736	--
17	WASHER, GALV., 1/2", ROUND		2	--	S800192	--
18	INSULATOR, SECONDARY, SPOOL, PORCELAIN		1	--	S430752	--
19	TRANSFORMER, SINGLE-PHASE, TYPE 'W', 25KVA MAXIMUM		3	1121	--	--
20	COVER, BOLT, PLASTIC	WOOD OR FG POLE	1	390	--	--
21	CLAMP, HOTLINE		3	788	--	--

NOTES:

(X) THIS ITEM IS EXEMPT.

REFERENCE:

a. PRIMARY AND SECONDARY CONNECTIONS ARE SHOWN FOR ILLUSTRATIVE PURPOSES. SEE OH1111 FOR SPECIFIC CONNECTION DIAGRAMS.

b. FOR LIGHTNING ARRESTER APPLICATION, SEE OH1247.

(c) FOR GROUNDING METHOD AND APPLICATION, SEE OH1002.

(d) FOR POLE STEPPING, SEE OH363.

TABLE OF CONTENTS

© 1998 - 2023 San Diego Gas & Electric Company. All rights reserved. Removal of this copyright notice without permission is not permitted under law.

REV	CHANGE	DR	BY	DSN	APV	DATE	REV	CHANGE	DR	BY	DSN	APV	DATE
C	DRAWING UPDATE	EDM	MRF	MRF	KRG	04/06/2023	F						
B	EDITORIAL CHANGES	-	JS	JS	CZH	10/01/2018	E						
A	ORIGINAL ISSUE	-	-	JS	DW	06/13/2013	D						

SCOPE: THIS STANDARD SHOWS THE INSTALLATION METHOD OF A THREE-PHASE, 4KV TYPE 'W' OR 'WF' TRANSFORMERS WITH ALLEY ARM CONSTRUCTION.

ATTENTION:

* THIS CONSTRUCTION CANNOT BE USED ON UNDERBUILD.

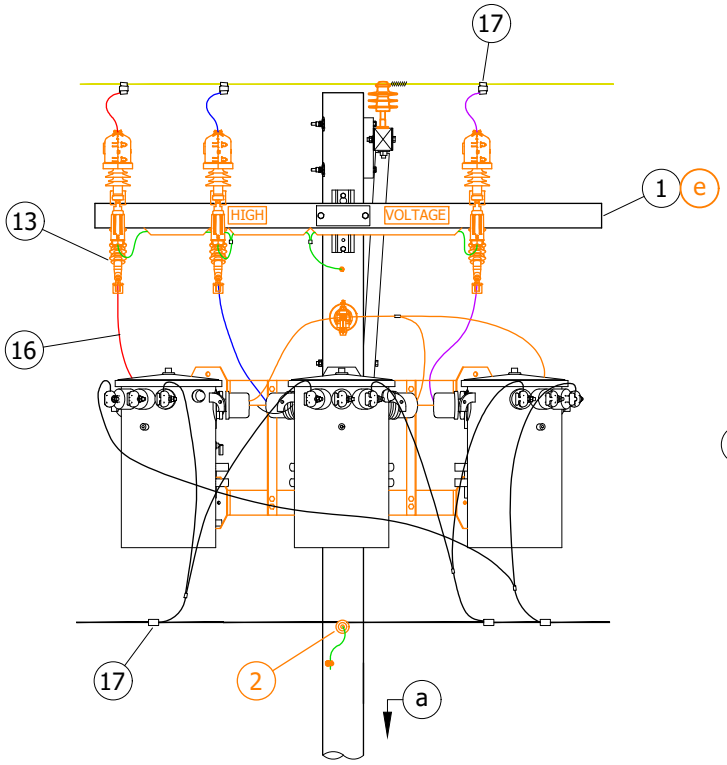

FIGURE 1
FRONT VIEW

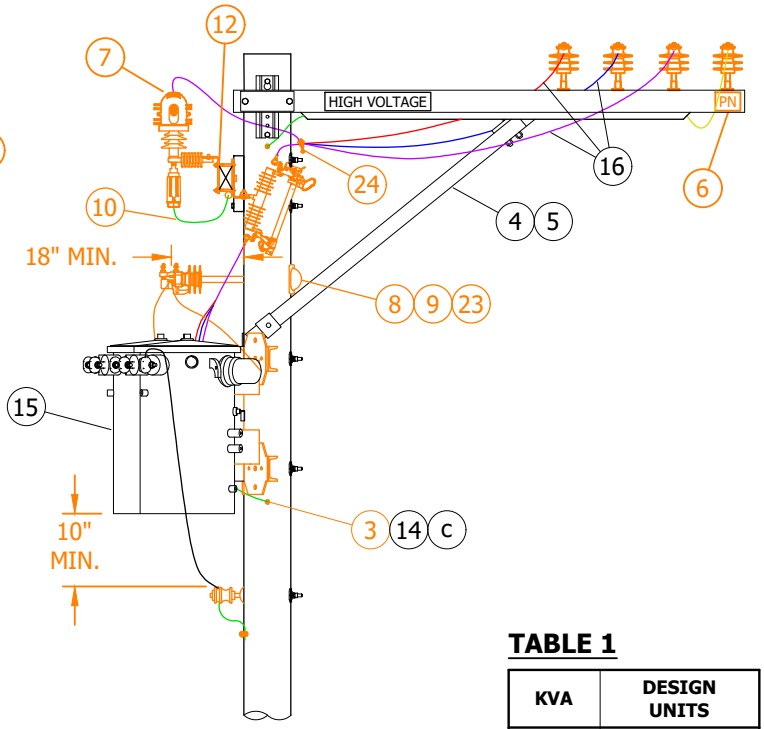

FIGURE 1
SIDE VIEW

TABLE 1

KVA	DESIGN UNITS
25	25WF-P
25	25W120
25	25W208
25	25W240
50	50WF-P
50	50WHVY
50	50W120
50	50W208
75	75WF-P
75	75WHVY
75	75W208

INSTALLATION:

A. LIMITED TO TRANSFORMERS WEIGHING 1,200 POUNDS OR LESS EACH.

B. SPACING OF TRANSFORMERS TO BE AS CLOSE AS PRACTICABLE BUT NOT TO EXCEED 39 1/2 INCHES CENTER TO CENTER.

C. SECTIONALIZING FUSES AND A STATION ARE **NOT** ALLOWED ON THE SAME POLE. A DEVIATION REQUEST WILL NOT BE APPROVED FOR THIS CONSTRUCTION.

© 1998 - 2023 San Diego Gas & Electric Company. All rights reserved. Removal of this copyright notice without permission is not permitted under law.

REV	CHANGE	DR	BY	DSN	APV	DATE	REV	CHANGE	DR	BY	DSN	APV	DATE
C	DRAWING UPDATE	EDM	MRF	MRF	KRG	04/06/2023	F						
B	EDITORIAL CHANGES	-	JS	JS	CZH	10/01/2018	E						
A	ORIGINAL ISSUE	-	-	JS	DW	06/13/2013	D						

TABLE OF CONTENTS

BILL OF MATERIALS:

ITEM	DESCRIPTION			QUANTITY 5 TO 25KVA	QUANTITY 37.5 TO 75KVA	STANDARD PAGE	STOCK NUMBER	DESIGN UNITS
1	CROSSARM, FIBERGLASS, 3 3/4" X 5 3/4" X 10'-0"			2	4	--	S294378	4TF
2	INSULATOR, SECONDARY, SPOOL, PORCELAIN			1	1	--	S430752	--
3	BLIND NUT, 1/2"			AS REQ'D		--	S503460 (X)	--
4	SCREW			--	4	--	S618086 (X)	--
5	BRACE, VERTICAL, 36"			--	2	--	S164256	--
6	LABEL, PRIMARY NEUTRAL			1	1	--	S430752	--
7	ARRESTER, LIGHTNING			3	3	1247	--	--
8	INSULATOR, PIN TYPE, VISE-TOP			1	1	750	--	--
9	BRACKET, INSULATOR, STANDOFF	30"	1" THREAD	1	1	390	S166144	KBKT30
		28"	1 3/8" THREAD	1	1		S166176	KBKT28
10	STRAP, GROUND, FLEXIBLE, ARRESTER			AS REQ'D		--	S698754	--
11	BOLT, MACH, GALV., 5/8" X (LENGTH AS REQ'D) 1 RD & 1 DBL SPR WASHER (I)			2	1	--	S621568	--
12	BRACKET, DOUBLE CUTOUT/ARRESTER, CROSSARM MOUNTING			3	3	397	S165454	DBLBKT
13	CUTOUT, 12KV			3	3	1212	--	--
14	GROUNDING, #4 PVC GROUND WIRE, RODS & CONNECTORS	STEEL POLE		1	1	1002	--	GNDPSP
		WOOD/FG POLE						GNDPVC
15	TRANSFORMER, SINGLE PHASE, TYPE W OR WF			3	3	1121	--	--
16	WIRE, TAP, #4, HENDRIX			50'-0"	50'-0"	--	S812124	HEND4
17	CONNECTORS, WIRE COMPRESSION, CU OR AL, AS REQ'D			AS REQ'D		783-785	--	--
18	WIRE, THW COPPER, SIZE GOVERNED BY TRANSFORMER CAPACITY (I)			80'-0"	80'-0"	1125	--	--
19	COVER STRIP, 1 5/8" X 3 5/8" X 8'-0" (2X4S4S) (I)			1	--	--	S699328	--
20	COVER STRIP, 1 5/8" X 3 5/8" X 10'-0" (2X4S4S) (I)			--	1	--	S699360	--
21	BOLT, MACH, GALV., 3/8" X 6", 1 RD & 1 SPRING WASHER (I)			2	2	390	--	--
22	INSULATOR (I)			4	4	--	S428960	--
23	COVER, BOLT, PLASTIC	WOOD OR FG POLE		1	1	390	--	--
24	CLAMP, HOTLINE			--	3	788	--	--

TABLE OF CONTENTS

NOTES:

(I) NOT SHOWN ON FIGURES

(X) THIS ITEM IS EXEMPT.

REFERENCE:

(a) FOR POLE STEPPING, SEE OH363.

b. FOR LIGHTNING ARRESTER REQUIREMENTS, SEE OH1247.

(c) FOR GROUNDING METHODS, SEE OH1002.

d. FOR TRANSFORMER CONNECTION DIAGRAMS, SEE OH1111. CONNECTION SHOWN FOR ILLUSTRATIVE PURPOSES ONLY.

(e) SEE OH379: FIBERGLASS CROSSARMS.

© 1998 - 2023 San Diego Gas & Electric Company. All rights reserved. Removal of this copyright notice without permission is not permitted under law.

REV	CHANGE	DR	BY	DSN	APV	DATE	REV	CHANGE	DR	BY	DSN	APV	DATE
C	DRAWING UPDATE	EDM	MRF	MRF	KRG	04/06/2023	F						
B	EDITORIAL CHANGES	-	JS	JS	CZH	10/01/2018	E						
A	ORIGINAL ISSUE	-	-	JS	DW	06/13/2013	D						

SCOPE: THIS STANDARD SHOWS THE INSTALLATION OF 7.2 AND 12KV, THREE-PHASE TRANSFORMERS, ALLEY ARM CONSTRUCTION, WITH CLUSTER MOUNTING BRACKET.

ATTENTION: THIS CONSTRUCTION CAN **NOT** BE USED ON UNDER BUILD.

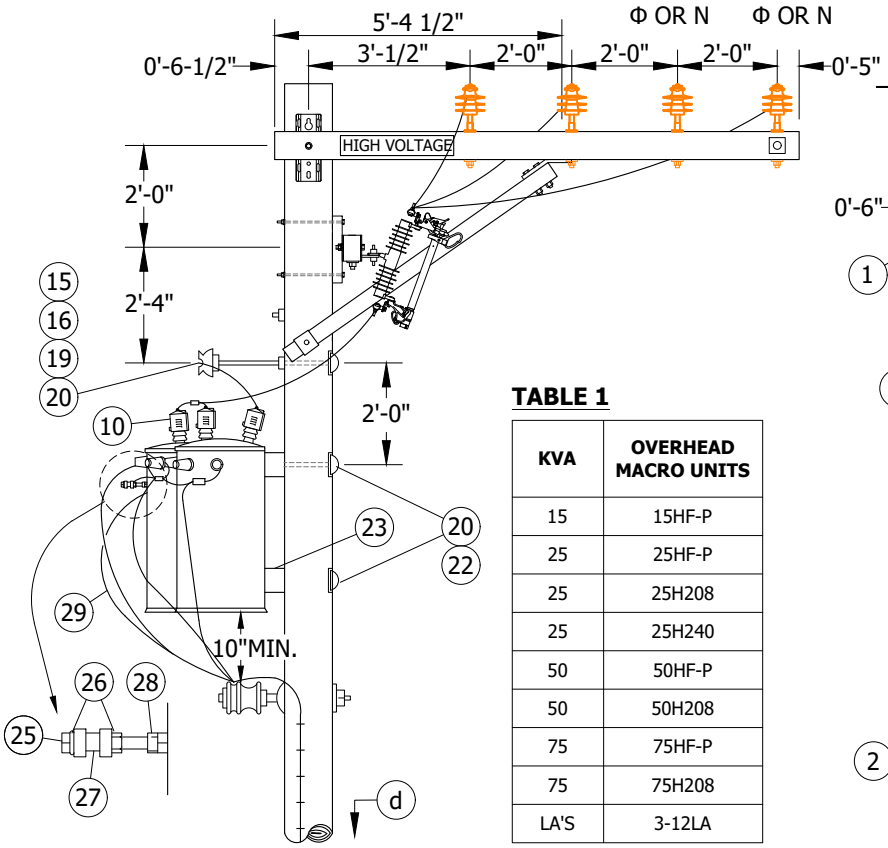

FIGURE 1
DELTA PRIMARY CONNECTION
SIDE VIEW

TABLE 1

KVA	OVERHEAD MACRO UNITS
15	15HF-P
25	25HF-P
25	25H208
25	25H240
50	50HF-P
50	50H208
75	75HF-P
75	75H208
LA'S	3-12LA

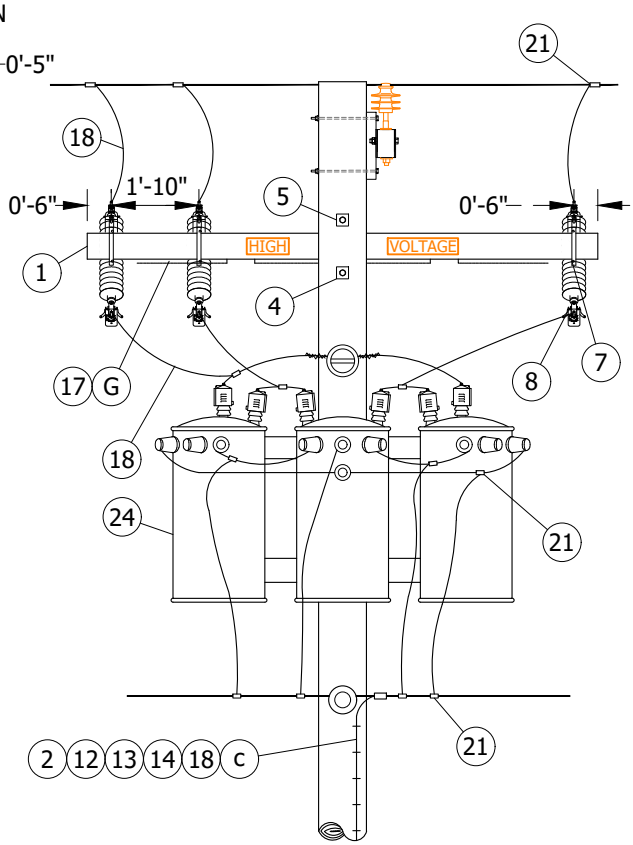

FIGURE 1
DELTA PRIMARY CONNECTION
FRONT VIEW

TABLE OF CONTENTS

© 1998 - 2020 San Diego Gas & Electric Company. All rights reserved. Removal of this copyright notice without permission is not permitted under law.

REV	CHANGE	BY	DSGN	APPV	DATE	REV	CHANGE	BY	DSGN	APPV	DATE
C	TABLE UPDATE	JAC	JES	CZH	1/15/2020	F					
B	EDITORIAL CHANGES	JS	JS	CZH	10/1/2018	E					
A	ORIGINAL ISSUE	JS	JS	DW	06/14/2013	D					

X Indicates Latest Revision | Completely Revised | New Page | Information Removed

SDG&E ELECTRIC OVERHEAD CONSTRUCTION STANDARDS

7.2KV AND 12KV THREE-PHASE TRANSFORMER
CLUSTER MOUNT INSTALLATION-ALLEY ARM CONSTRUCTION

OH1174.1

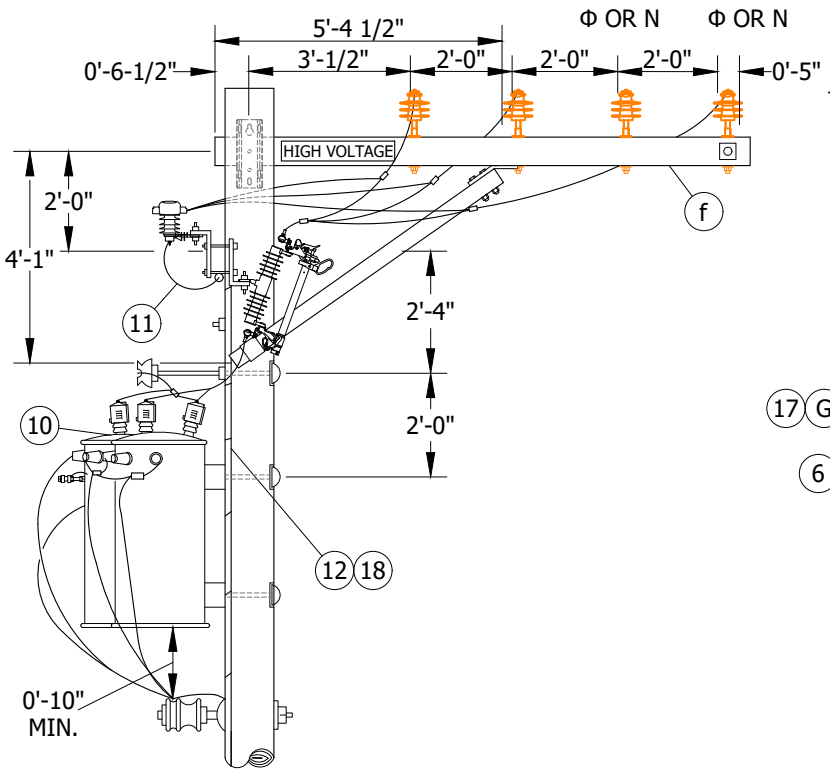

FIGURE 2
WYE PRIMARY CONNECTION WITH
LIGHTNING ARRESTERS
SIDE VIEW

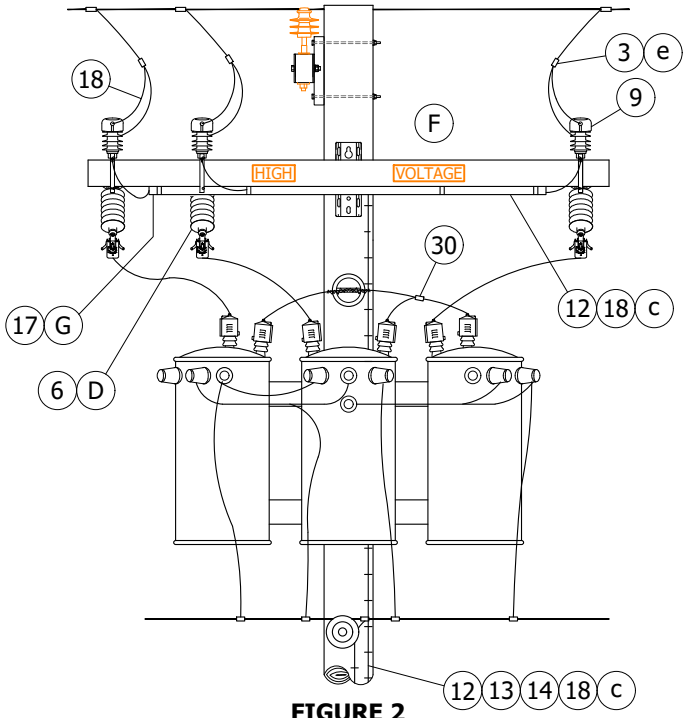

FIGURE 2
WYE PRIMARY CONNECTION WITH (b)
LIGHTNING ARRESTERS
FRONT VIEW

TABLE OF CONTENTS

INSTALLATION:

A. USE THIS CONSTRUCTION FOR TRANSFORMERS RATED 12KV AND BELOW WHICH HAVE HIGH.

B. LIMITED TO TRANSFORMERS 100 KVA AND SMALLER, EACH WEIGHING 1200 POUNDS OR LESS.

C. WHEN PRACTICAL, BOLT TRANSFORMERS TO BRACKET ON THE GROUND AND INSTALL THEM AS A PREWIRED ASSEMBLY.

(D) DRILL THROUGH CROSSARM 1" UP FROM LOWER EDGE SO THAT LOWER CROSSARM MOUNTING BRACKET BOLT DOES NOT INTERFERE WITH PVC CONDUIT.

E. SECTIONALIZING FUSES AND A STATION ARE **NOT** ALLOWED ON THE SAME POLE. A DEVIATION REQUEST WILL NOT BE APPROVED FOR THIS CONSTRUCTION.

(F) INSTALL LA/CO CROSSARM ON SAME SIDE OF POLE AS TRANSFORMERS.

(G) BOND ALL CUTOUTS IN HEAVY CONTAMINATION DISTRICT, AS IDENTIFIED ON STANDARD 287. IN AREAS WHERE BONDING IS REQUIRED, TO AVOID BONDWIRE AND LIGHTNING ARRESTER GROUNDWIRE ON THE SAME CROSSARM, USE TWO CROSSARMS; ONE FOR CUTOUTS AND ONE FOR LIGHTNING ARRESTERS.

© 1998 - 2020 San Diego Gas & Electric Company. All rights reserved. Removal of this copyright notice without permission is not permitted under law.

REV	CHANGE	BY	DSGN	APPV	DATE	REV	CHANGE	BY	DSGN	APPV	DATE
C	TABLE UPDATE	JAC	JES	CZH	1/15/2020	F					
B	EDITORIAL CHANGES	JS	JS	CZH	10/1/2018	E					
A	ORIGINAL ISSUE	JS	JS	DW	06/14/2013	D					

BILL OF MATERIALS:

ITEM	DESCRIPTION		QUANTITY		STANDARD PAGE	STOCK NUMBER	DESIGN UNITS
			STATION WITH (b) ARRESTERS	STATION WITHOUT ARRESTERS			
1	FIBERGLASS CROSSARM, 3 3/4" X 5 3/4" X 10' - 0"		1	1	-	S294378	4TF
2	#4/7 STRAND, COVERED JUMPER WIRE		1	1	-	S815044	POLY4J
3	HOT LINE CLAMP		3	0	-	S227680	-
4	SCREW		-	-		S618086 (X)	-
5	BOLT, MACH, GALV, 5/8" X (LENGTH AS REQ'D), 2 SQUARE & 1 DOUBLE COIL SPRING WASHER		2	1	392	-	-
6	BRACKET, DOUBLE, CUTOUT/ARRESTER, FOR CROSSARM MOUNTING		3	-	-	S165446 (X)	-
7	BRACKET, CUTOUT/ARRESTER, FOR CROSSARM MOUNTING		-	3	-	S166070	-
8	CUTOUT, 12KV, WITH LOADBUSTER HOOK		3	3	1212	-	-
9	ARRESTER, LIGHTNING		3	-	-	S113248	-
10	BUSHING COVER, TRANSFORMER		6	6	-	S289188 (X)	-
11	FLEXIBLE ARRESTER GROUND STRAP		AS REQ'D	-	-	S698754	-
12	GALVANIZED STAPLES FOR PVC COVERED GROUND WIRE		AS REQ'D	AS REQ'D	-	S678564 (X)	-
13	COPPER BONDED GROUND CONNECTOR		2	1	-	S259010	-
14	GROUND ROD, 5/8" X 8", COPPERWELD		2	1	-	S603074 (X)	GNDPVC
15	INSULATOR, PIN TYPE, CLASS AS REQ'D		1	1	750	-	-
16	WIRE, TIE		1	1	-	S815232	-
17	WIRE, #8 BARE SOLID ANNEALED COPPER (G)	FT	15	15	-	S812928	-
		LB	1	1			-
18	#4 CU SOLID GROUND WIRE, PVC COVERED		100'	50'	-	S812490	GNDPVC
19	BRACKET, INSULATOR, 1" OR 1 3/8" THREAD (AS REQ'D)		1	1	-	S166144	-
			1	1	-	S166176	-
20	COVER, BOLT, PLASTIC		3	3	-	S285696	-
21	CONNECTOR, WIRE, COMPRESSION, CU OR AL AS REQ'D		AS REQ'D	AS REQ'D	783-786	-	
22	BOLT, MACH, GALV, 3/4" X (LENGTH AS REQ'D), 1 SQUARE CURVED & 1 DOUBLE COIL SPRING WASHER		2	2	392	-	-
23	BRACKET, TRANSFORMER CLUSTER MOUNTING		1	1	-	S403008	-
24	TRANSFORMER, SINGLE PHASE, TYPE 'Y', 'YF', 'H' OR 'HF'		3	3	1121	-	-
25	BOLT, MACH, GALV, 1/2" X 5"		1	1	-	S153024	-
26	WASHER, GALV, 1/2", ROUND		2	2	-	S800192	-
27	INSULATOR, SECONDARY, SPOOL, PORCELAIN		1	1	-	S430752	-
28	NUT, GALV, 1/2"		1	1	-	S504736	-
29	WIRE, THW COPPER, SIZED PER TRANSFORMER CAPACITY		35'	35'	1125	-	-

TABLE OF CONTENTS

© 1998 - 2020 San Diego Gas & Electric Company. All rights reserved. Removal of this copyright notice without permission is not permitted under law.

REV	CHANGE	BY	DSGN	APPV	DATE	REV	CHANGE	BY	DSGN	APPV	DATE
C	TABLE UPDATE	JAC	JES	CZH	1/15/2020	F					
B	EDITORIAL CHANGES	JS	JS	CZH	10/1/2018	E					
A	ORIGINAL ISSUE	JS	JS	DW	06/14/2013	D					

NOTES:

(X) THIS ITEM IS EXEMPT.

REFERENCE:

a. PRIMARY AND SECONDARY CONNECTIONS ARE SHOWN FOR ILLUSTRATIVE PURPOSES. SEE STANDARD 1118-1119 FOR SPECIFIC CONNECTION DIAGRAMS.

(b) LIGHTNING ARRESTER APPLICATION, SEE STANDARD 1247.

(c) GROUNDING METHODS AND APPLICATION, SEE STANDARD 1002.

(d) POLE STEPPING, SEE STANDARD 363.

(e) HOT LINE CLAMP CONNECTIONS, SEE STANDARD 788.

(f) FIBERGLASS CROSSARMS, SEE STANDARD 379.

TABLE OF CONTENTS

© 1998 - 2020 San Diego Gas & Electric Company. All rights reserved. Removal of this copyright notice without permission is not permitted under law.

REV	CHANGE	BY	DSGN	APPV	DATE	REV	CHANGE	BY	DSGN	APPV	DATE
C	TABLE UPDATE	JAC	JES	CZH	1/15/2020	F					
B	EDITORIAL CHANGES	JS	JS	CZH	10/1/2018	E					
A	ORIGINAL ISSUE	JS	JS	DW	06/14/2013	D					

X Indicates Latest Revision | Completely Revised | New Page | Information Removed

SDG&E ELECTRIC OVERHEAD CONSTRUCTION STANDARDS

7.2KV AND 12KV THREE-PHASE TRANSFORMER
CLUSTER MOUNT INSTALLATION-ALLEY ARM CONSTRUCTION

OH1174.4

SCOPE: THIS STANDARD SHOWS THE INSTALLATION OF 7.2 AND 12KV THREE-PHASE TRANSFORMERS WITH CLUSTER MOUNTING BRACKET.

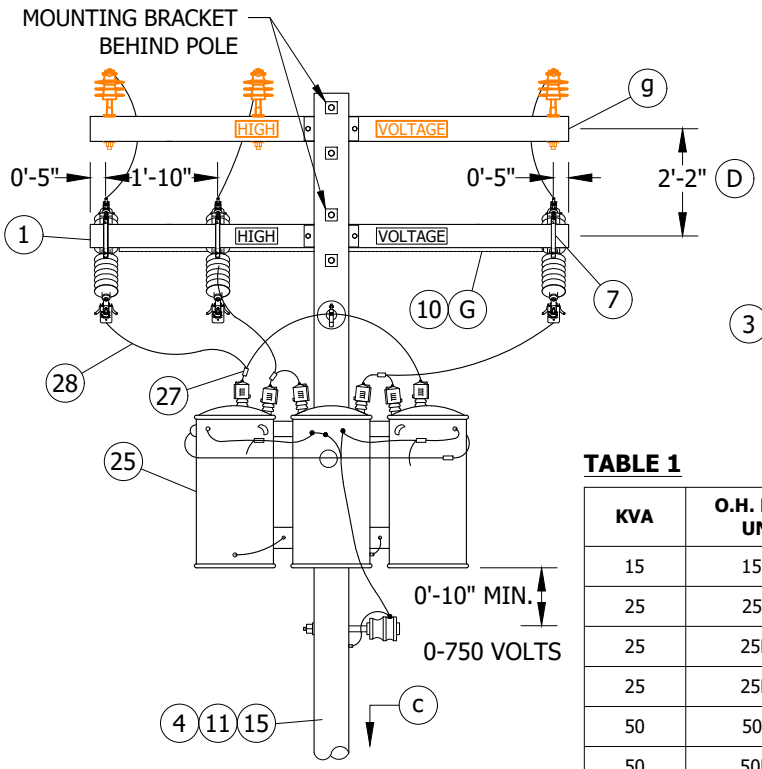

FIGURE 1
DELTA PRIMARY CONNECTION
WITHOUT LIGHTNING ARRESTERS
FRONT VIEW

TABLE 1

KVA	O.H. MACRO UNITS
15	15HF-P
25	25HF-P
25	25H208
25	25H240
50	50HF-P
50	50H208
75	75HF-P
75	75H208
LA'S	3-12LA

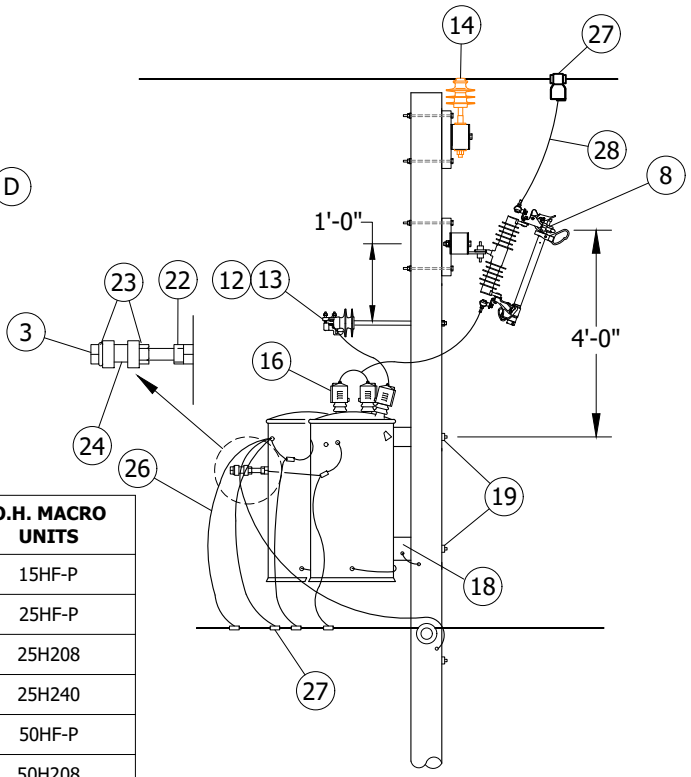

FIGURE 1
DELTA PRIMARY CONNECTION
WITHOUT LIGHTNING ARRESTERS
SIDE VIEW

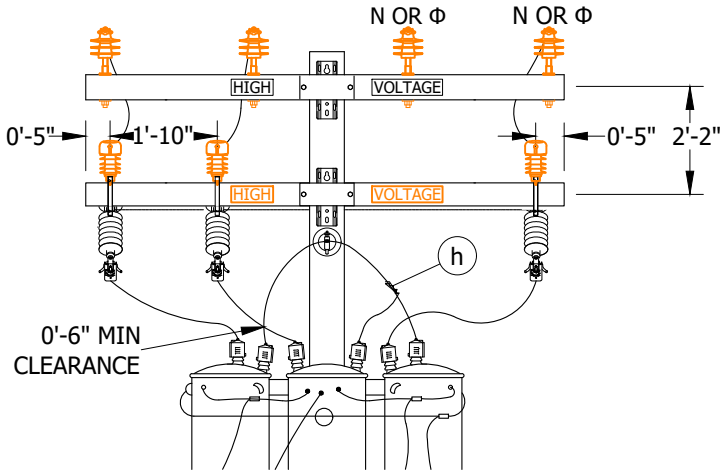

FIGURE 2
WYE PRIMARY CONNECTION
WITH LIGHTNING ARRESTERS
FRONT VIEW

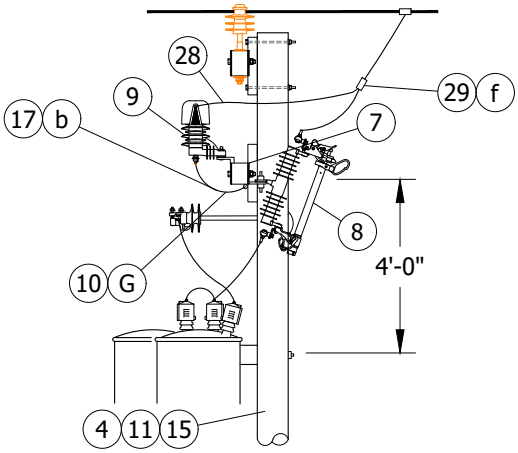

FIGURE 2
WYE PRIMARY CONNECTION
WITH LIGHTNING ARRESTERS
SIDE VIEW

TABLE OF CONTENTS

© 1998 - 2020 San Diego Gas & Electric Company. All rights reserved. Removal of this copyright notice without permission is not permitted under law.

REV	CHANGE	BY	DSGN	APPV	DATE	REV	CHANGE	BY	DSGN	APPV	DATE
C	TABLE UPDATE	JAC	JES	CZH	1/15/2020	F					
B	EDITORIAL CHANGES	JS	JS	CZH	10/1/2018	E					
A	ORIGINAL ISSUE	JS	JS	DW	06/14/2013	D					

INSTALLATION:

A. USE THIS CONSTRUCTION FOR TRANSFORMER RATED 12KV AND BELOW WHICH HAVE HIGH VOLTAGE BUSHINGS MOUNTED ON TOP OF COVER.

B. LIMITED TO TRANSFORMERS 100 KVA AND SMALLER, WEIGHING 1200 POUNDS OR LESS EACH.

C. WHEN PRACTICAL, BOLT TRANSFORMERS TO BRACKET ON THE GROUND AND INSTALL THEM AS A PREWIRED ASSEMBLY.

(D) IF ADDITIONAL SPACE IS REQUIRED BELOW THE CUTOUT ARM, THE SEPARATION BETWEEN THE LINE ARM AND CUTOUT ARM MAY BE REDUCED TO 12" WITH THE USE OF SPACE BOLTS. REQUIRES 4' ANGLE BRACE TO BE INSTALLED ON CUTOUT ARM FOR PROPER CLEARANCE. THIS NOTE DOES NOT APPLY IF LIGHTNING ARRESTERS ARE INSTALLED. SECTIONALIZING FUSES AND A STATION ARE **NOT** ALLOWED ON THE SAME POLE. A DEVIATION REQUEST WILL NOT BE APPROVED FOR THIS CONSTRUCTION.

E. PRIMARY AND SECONDARY CONSTRUCTION SHOWN ARE TYPICAL, AND THEIR MATERIALS ARE NOT INCLUDED. MAY BE INSTALLED WITH CABLE SECONDARY.

F. IF LA/CO CROSSARM AND TRANSFORMERS CANNOT BE INSTALLED ON THE SAME SIDE OF THE POLE AS AN EXISTING LINEARM, INSTEAD, FIELD DRILL LA/CO CROSSARM FOR 2-36" FLAT BRACES. SECURE BRACES TO POLE WITH A LAG SCREW. (SEE STD. 380.1, ITEM 1 FOR DRILLING MEASUREMENTS).

(G) BOND ALL CUTOUTS IN HEAVY CONTAMINATION DISTRICT, AS IDENTIFIED ON STANDARD 287. IN AREAS WHERE BONDING IS REQUIRED, TO AVOID BOND WIRE AND LIGHTNING ARRESTER GROUND WIRE ON THE SAME CROSSARM, IT IS PERMISSIBLE TO USE TWO CROSSARMS; ONE FOR CUTOUTS AND ONE FOR LIGHTNING ARRESTERS.

BILL OF MATERIALS:

TABLE OF CONTENTS

ITEM	DESCRIPTION	QUANTITY		STANDARD PAGE	STOCK NUMBER	DESIGN UNITS
		STATION (a) WITH ARRESTERS	STATION WITHOUT ARRESTERS			
1	FIBERGLASS CROSSARM - 3-3/4" X 5-3/4" X 10'-0" (D)	1	1	-	S294378	4TF
2	BLIND NUT, 1/2"	AS REQ'D		1002	S503460 (X)	-
3	SCREW	2	-	-	S618086 (X)	-
4	GROUND ROD, 5/8" X 8", COPPERWELD	2	1	-	S603074 (X)	GNDPVC
5	BOLT - MACH - GALV - 3/4" X (LENGTH AS REQ'D) 2 SQUARE & 1 DOUBLE COIL SPRING WASHER	2	1	392	-	-
6	HOT LINE CLAMP	3	0	-	S227680	-
7	BRACKET - CUTOUT/ARRESTER - FOR CROSSARM MOUNTING - OR	-	3	-	S166070	-
	BRACKET - DOUBLE CUTOUT/ARRESTER - FOR CROSSARM MOUNTING	3	-	-	S165446 (X)	
8	CUTOUT - 12KV - WITH LOADBUSTER HOOK	3	3	1212	-	-
9	ARRESTER - LIGHTNING	3	-		S113248	-
10	WIRE - #8 BARE SOLID ANNEALED COPPER FT.	15	15	-	S812928	-
	WIRE - #8 BARE SOLID ANNEALED COPPER LBS.	1	1			
11	COPPER BONDED GROUND CONNECTOR	2	1	-	S259010	-

© 1998 - 2020 San Diego Gas & Electric Company. All rights reserved. Removal of this copyright notice without permission is not permitted under law.

REV	CHANGE	BY	DSGN	APPV	DATE	REV	CHANGE	BY	DSGN	APPV	DATE
C	TABLE UPDATE	JAC	JES	CZH	1/15/2020	F					
B	EDITORIAL CHANGES	JS	JS	CZH	10/1/2018	E					
A	ORIGINAL ISSUE	JS	JS	DW	06/14/2013	D					

X Indicates Latest Revision | Completely Revised | New Page | Information Removed

SDG&E ELECTRIC OVERHEAD CONSTRUCTION STANDARDS

7.2KV AND 12KV THREE-PHASE TRANSFORMER CLUSTER MOUNT INSTALLATION

OH1174.6

BILL OF MATERIALS (CONT'D):

ITEM	DESCRIPTION	QUANTITY		STANDARD PAGE	STOCK NUMBER	DESIGN UNITS
		STATION (a) WITH ARRESTERS	STATION WITHOUT ARRESTERS			
12	BRACKET - INSULATOR - STANDOFF - 30" - 1" OR 1-3/8" THREAD (AS REQ'D)	1	1	-	S166144	-
				-	S166176	
13	INSULATOR - PIN TYPE - CLASS AS REQ'D	1	1	-	S429152	-
14	WIRE - TIE	1	1	763-764	-	-
15	GALVANIZED STAPLES FOR PVC COVERED GROUND WIRE (WOOD POLE)	AS REQ'D	AS REQ'D	-	S678564 (X)	-
16	BUSHING COVER - TRANSFORMER	6	6	-	S289188 (X)	BSHCOV
17	FLEXIBLE ARRESTER GROUND STRAP	AS REQ'D	-	-	S698754	-
18	BRACKET - TRANSFORMER CLUSTER MOUNTING	1	1	-	S403008	-
19	BOLT - MACH - GALV - 3/4" X (LENGTH AS REQ'D) - 1 SQUARE CURVED & 1 DOUBLE COIL SPRING WASHER	2	2	392	-	-
20	COVER - BOLT - PLASTIC (WOOD POLE)	2	2	-	S285696	-
21	NAILS - GALV - 1-3/4" ROOFING (WOOD POLE)	AS REQ'D	AS REQ'D	-	S492192	-
22	NUT - GALV - 1/2"	1	1	-	S504736	-
23	WASHER - GALV - 1/2" - ROUND	2	2	-	S800192	-
24	INSULATOR - SECONDARY - SPOOL - PORCELAIN	1	1	-	S430752	-
25	TRANSFORMER - SINGLE PHASE - TYPE 'Y' - 'YF' - 'H' - OR 'HF'	3	3	1121	-	-
26	WIRE - THW COPPER - SIZED PER TRANSFORMER CAPACITY	AS REQ'D	AS REQ'D	1125	-	-
27	CONNECTOR, WEDGE, STIRRUP	AS REQ'D	AS REQ'D	783-786	-	-
28	4/7 CU STRAND WIRE	100'	50'	-	S815044	POLY4J

NOTES:

(X) THIS ITEM IS EXEMPT.

REFERENCE:

(a) PRIMARY AND SECONDARY CONNECTIONS ARE SHOWN FOR ILLUSTRATIVE PURPOSES. SEE STANDARD 1118 AND 1119 FOR SPECIFIC CONNECTION DIAGRAMS.

(b) LIGHTNING ARRESTER APPLICATION, SEE STANDARD 1247.

(c) GROUNDING METHOD AND APPLICATION, SEE STANDARD 1002.

d. POLE STEEPING, SEE STANDARD 363.

e. SECTIONALIZING CUTOUT INSTALLATION MAY VARY WITH POSITION OF NEUTRAL CONDUCTOR, SEE STANDARD 1240.

(f) HOT LINE CLAMP CONNECTIONS, SEE STANDARD 788.

(g) FIBERGLASS CROSSARMS, SEE STANDARD 379.

(h) REFER TO TRANSFORMER CONNECTIONS, OVERHEAD STANDARD 1116.

TABLE OF CONTENTS

© 1998 - 2020 San Diego Gas & Electric Company. All rights reserved. Removal of this copyright notice without permission is not permitted under law.

REV	CHANGE	BY	DSGN	APPV	DATE	REV	CHANGE	BY	DSGN	APPV	DATE
C	TABLE UPDATE	JAC	JES	CZH	1/15/2020	F					
B	EDITORIAL CHANGES	JS	JS	CZH	10/1/2018	E					
A	ORIGINAL ISSUE	JS	JS	DW	06/14/2013	D					

SCOPE: THIS STANDARD SHOWS THE INSTALLATION METHOD OF THREE-PHASE, 12KV TYPE 'H' OR 'HF' TRANSFORMERS, WITH TWO POLE STRUCTURE.

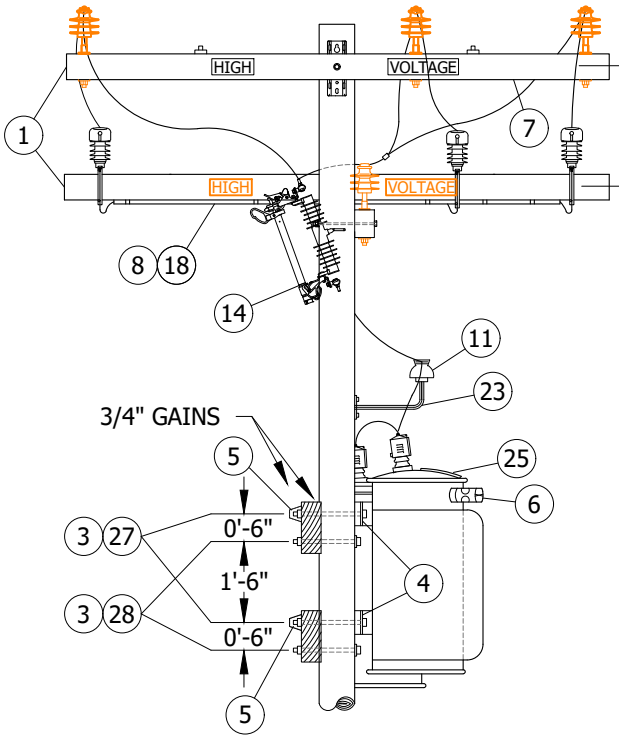

FIGURE 1
BUCK POSITION
SIDE VIEW

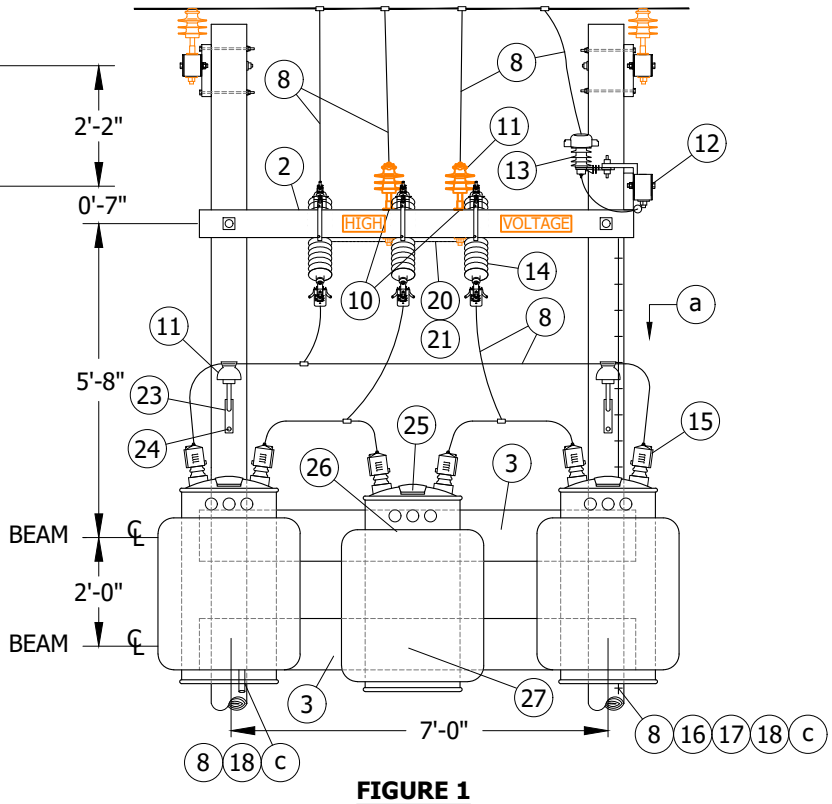

FIGURE 1
BUCK POSITION
FRONT VIEW

TABLE OF CONTENTS

© 1998 - 2020 San Diego Gas & Electric Company. All rights reserved. Removal of this copyright notice without permission is not permitted under law.

REV	CHANGE	BY	DSGN	APPV	DATE	REV	CHANGE	BY	DSGN	APPV	DATE
C	TABLE UPDATE	JAC	JES	CZH	1/15/2020	F					
B	EDITORIAL CHANGES	JS	JS	CZH	10/1/2018	E					
A	ORIGINAL ISSUE	JS	JS	DW	06/14/2013	D					

X Indicates Latest Revision | Completely Revised | New Page | Information Removed

SDG&E ELECTRIC OVERHEAD CONSTRUCTION STANDARDS

12KV THREE-PHASE, TYPE "H" OR "HF" TRANSFORMER INSTALLATION
500 KVA MAXIMUM, TWO POLE, 7 FT SPACING

OH1174.8

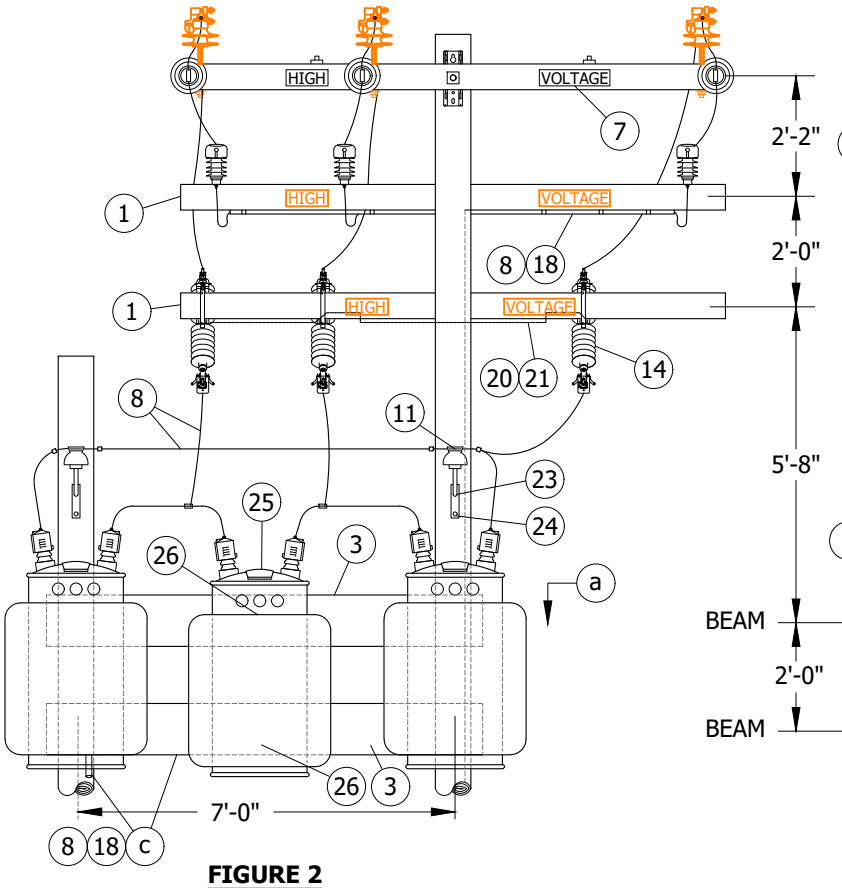

FIGURE 2
LINE POSITION
FRONT VIEW

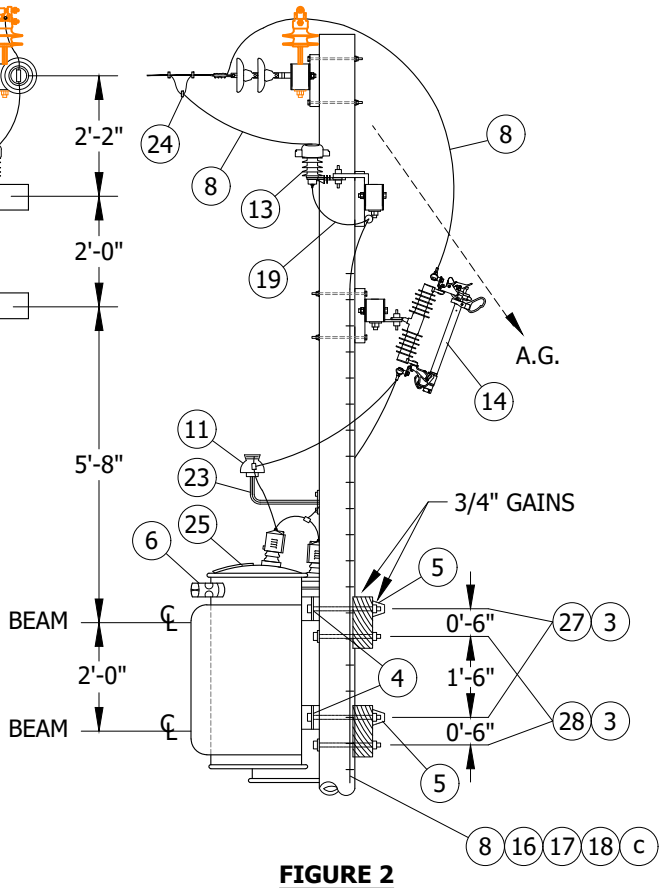

FIGURE 2
LINE POSITION
SIDE VIEW

TABLE OF CONTENTS

INSTALLATION:

(A) POLE MOUNT OUTSIDE TRANSFORMERS ON TOP TRANSFORMER TIMBER BOLT, ITEM 27.

(B) MIDDLE TRANSFORMER TO BE BOLTED DIRECTLY TO BEAMS.

C. TRANSFORMER STRUCTURE SHALL BE INSTALLED AS CLOSE TO CUSTOMER'S SERVICE HEAD AS POSSIBLE TO REDUCE HORIZONTAL SERVICE TENSION TO A MINIMUM. TRANSFORMERS SHOULD NORMALLY BE INSTALLED ON SIDE OF STRUCTURE OPPOSITE DIRECTION OF OVERHEAD SERVICES. STRUCTURE SHALL BE GUYED WHERE SERVICE TENSION OR MAINTENANCE OF GROUND CLEARANCE IS REQUIRED.

D. SECTIONALIZING FUSES AND A STATION ARE **NOT** ALLOWED ON THE SAME POLE. A DEVIATION REQUEST WILL NOT BE APPROVED FOR THE THIS CONSTRUCTION.

© 1998 - 2020 San Diego Gas & Electric Company. All rights reserved. Removal of this copyright notice without permission is not permitted under law.

REV	CHANGE	BY	DSGN	APPV	DATE	REV	CHANGE	BY	DSGN	APPV	DATE
C	TABLE UPDATE	JAC	JES	CZH	1/15/2020	F					
B	EDITORIAL CHANGES	JS	JS	CZH	10/1/2018	E					
A	ORIGINAL ISSUE	JS	JS	DW	06/14/2013	D					

BILL OF MATERIALS:

ITEM	DESCRIPTION		QUANTITY FIG 1	QUANTITY FIG 2	STANDARD PAGE	STOCK NUMBER	DESIGN UNITS
1	FIBERGLASS CROSSARM, 3 3/4" X 5 3/4" X 10' - 0"		2	3	-	S294378	4TF
2	#4 CU, 7 STRANDED, COVERED JUMPER WIRE		1	-	-	S815044	POLY4J
3	STEEL BEAM LUMBER, 4" X 12" X 8' - 0", DOUGLAS FIR, S4S		2	2	-	S471936	-
4	ADAPTER PLATES, TYPE C, FOR POLE BOLTING 167 KVA TRANSFORMERS		6	6	-	S102560	-
5	COVER, BOLT, PLASTIC & 6 - 10D NAILS, GALV		4	4	-	S285696	-
			-	-	-	S491392	-
6	CONNECTORS, MULTIPLE TAP		6	6	793, 797	-	-
7	BOLT, MACH, GALV, 1/2" X 5", 1 RD & 1 DBL COIL SPR WASHER		2	2	392	-	-
8	#4 CU SOLID GROUND WIRE, PVC COVERED		165'	165'	-	S812490	GNDPVC
9	BOLT, MACH, GALV, 1/2" X 7", 1 RD & 1 DBL COIL SPR WASHER		-	2	392	-	-
10	PIN, INSULATOR 12KV	1"	1	-	-	S532706 (X)	-
		3/8"	2	-	-	S532448	-
11	INSULATOR, 12KV (CLASS AS REQ'D)		4	2	750	-	-
12	BRACKET, CUTOUT/ARRESTER, FOR CROSSARM MOUNTING		6	6	-	S166070	-
13	ARRESTER, LIGHTNING, 12KV		3	3	-	S113248	-
14	CUTOUT, 12KV		3	3	1212	-	-
15	BUSHING COVER,TRANSFORMER		6	6	-	S289188 (X)	BSHCOV
16	GROUND ROD, 5/8" X 8', COPPERWELD		1	1	-	S603074 (X)	-
17	COPPER BONDED GROUND CONNECTOR		1	1	-	S259010	-
18	GALVANIZED STAPLES FOR PVC COVERED GROUND WIRE		AS REQ'D		-	S678564 (X)	-
19	FLEXIBLE ARRESTER GROUND STRAP		AS REQ'D		-	S698754	-
20	WIRE, #8 BARE SOLID ANNEALED COPPER, BONDING		6'	10'	-	S812928	-
21	STAPLES, FENCE, GALV, 1 1/4"		AS REQ'D		-	S678528	-
22	BOLT, MACH, GALV, 5/8" X (LENGTH AS REQ'D), 1 SQ & 1 DBL COIL SPRING WASHER		-	1	392	-	-
23	BRACKET, INSULATOR, LEAD THREAD	1"	2	2	-	S166134	-
		1-3/8"	2	2	-	S166140	-
24	HOT LINE CLAMP		3	3	-	S227680	
25	TRANSFORMER, 10, 12KV, 100-167KVA INCLUSIVE, TYPE H OR HF		3	3	1121	-	-
26	BOLT, MACH, GALV, 3/4" X 6", 1 MALLEABLE IRON WASHER & 1 DBL COIL SPRING WASHER (B)		2	2	392	-	-
27	BOLT, MACH, GALV, 3/4" X 16", 1 MALLEABLE IRON WASHER & 1 DBL COIL SPRING WASHER (A)		4	4	392	-	-
28	BOLT, MACH, GALV, 3/4" X 16", 1 MALLEABLE IRON WASHER, 1 SQ CURVED RIBBED WASHER & 1 DBL COIL SPRING WASHER		4	4	392	-	-

TABLE OF CONTENTS

© 1998 - 2020 San Diego Gas & Electric Company. All rights reserved. Removal of this copyright notice without permission is not permitted under law.

REV	CHANGE	BY	DSGN	APPV	DATE	REV	CHANGE	BY	DSGN	APPV	DATE
C	TABLE UPDATE	JAC	JES	CZH	1/15/2020	F					
B	EDITORIAL CHANGES	JS	JS	CZH	10/1/2018	E					
A	ORIGINAL ISSUE	JS	JS	DW	06/14/2013	D					

NOTES:

(X) THIS ITEM IS EXEMPT.

REFERENCE:

(a) POLE STEPPING - SEE STANDARD 363.

b. FOR LIGHTNING ARRESTER REQUIREMENTS - SEE STANDARD 1247.

(c) GROUNDING METHODS - SEE STANDARD 1002.

d. SEE STANDARDS PAGE 1119 FOR TRANSFORMER CONNECTION DIAGRAMS. CONNECTION SHOWN IS FOR ILLUSTRATIVE PURPOSES ONLY.

e. BOND ALL CUTOUTS IN HEAVY CONTAMINATION DISTRICTS AS IDENTIFIED ON STANDARD 287.

f. FIBERGLASS CROSSARMS - SEE STANDARD 379.

TABLE OF CONTENTS

© 1998 - 2020 San Diego Gas & Electric Company. All rights reserved. Removal of this copyright notice without permission is not permitted under law.

REV	CHANGE	BY	DSGN	APPV	DATE	REV	CHANGE	BY	DSGN	APPV	DATE
C	TABLE UPDATE	JAC	JES	CZH	1/15/2020	F					
B	EDITORIAL CHANGES	JS	JS	CZH	10/1/2018	E					
A	ORIGINAL ISSUE	JS	JS	DW	06/14/2013	D					

X Indicates Latest Revision | Completely Revised | New Page | Information Removed

SDG&E ELECTRIC OVERHEAD CONSTRUCTION STANDARDS

12KV THREE-PHASE, TYPE "H" OR "HF" TRANSFORMER INSTALLATION
500 KVA MAXIMUM, TWO POLE, 7 FT SPACING

OH1174.11

SCOPE: THIS STANDARD SHOWS THE TRANSFORMER DIAGRAMS FOR THE 12KV TO 2.4KV & 12KV TO 4.16KV STEP-DOWN TRANSFORMERS, USING THE 12KV/2400/4160Y HO TRANSFORMERS.

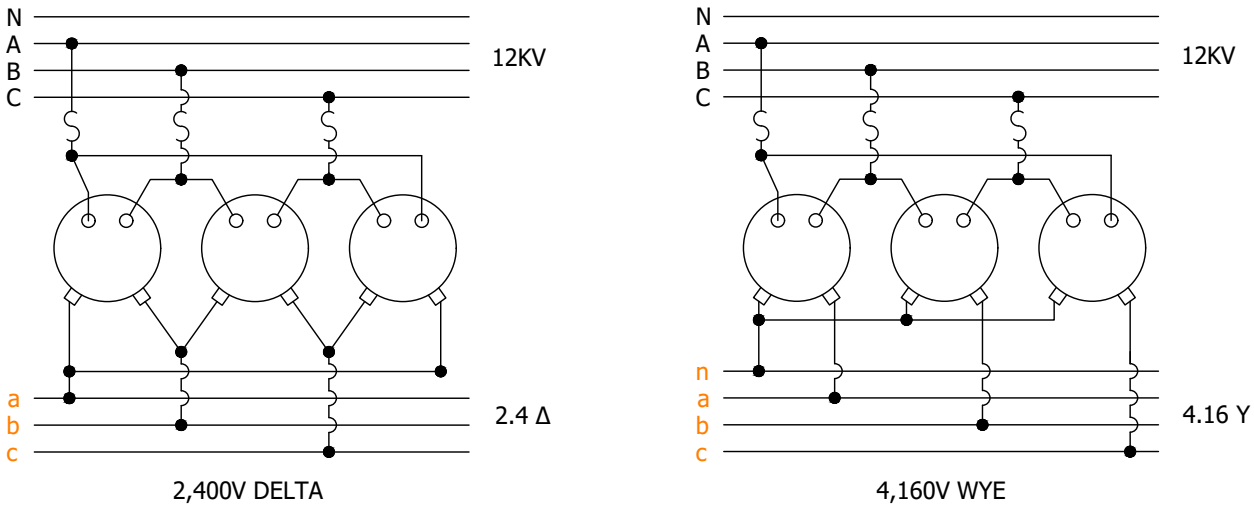

FIGURE 1
STEP-DOWN TRANSFORMERS

INSTALLATION: NONE

BILL OF MATERIALS: NONE

NOTES:

I. THE ABOVE DIAGRAMS ILLUSTRATE THE 12KV/2.4KV DELTA AND 12KV/4.16KV WYE STEP-DOWN TRANSFORMERS USING THREE, SINGLE-PHASE HO TRANSFORMERS CONNECTED FOR THREE-PHASE APPLICATION.

II. NEW CONSTRUCTION REQUIRES STEEL POLES AND FIBERGLASS CROSSARM CONSTRUCTION, WHICH MEETS POLE LOADING CALCULATION REQUIREMENTS FOR THIS TRANSFORMER CONSTRUCTION STANDARD DESIGN.

III. CONTAMINATION ZONE ONE CONSTRUCTION SHALL REQUIRE SEPARATE 12KV CUTOUT AND ARRESTOR ARMS FOR BONDING AND GROUNDING, AS REQUIRED.

IV. TRANSFORMERS 100KVA AND LARGER SHALL BE CONSTRUCTED ON A 2-POLE STRUCTURE USING STEEL POLES, ALUMINUM PLATFORM BASE, AND FIBERGLASS CROSSARMS. (a)

REFERENCE:

(a) SEE CONSTRUCTION STANDARD 1355.1 FOR PLATFORM CONSTRUCTION.

TABLE OF CONTENTS

© 1998 - 2023 San Diego Gas & Electric Company. All rights reserved. Removal of this copyright notice without permission is not permitted under law.

REV	CHANGE	DR	BY	DSN	APV	DATE	REV	CHANGE	DR	BY	DSN	APV	DATE
C	FIGURE UPDATE	EDM	JIK	JES	CZH	08/03/2021	F						
B	EDITORIAL CHANGES	-	JS	JS	CZH	10/01/2018	E						
A	ORIGINAL ISSUE	-	TR	TR	DW	06/25/2014	D	DRAWING UPDATE	GLC	SPC	GLW	KRG	01/09/2023

X Indicates Latest Revision | Completely Revised | New Page | Information Removed

SDG&E ELECTRIC OVERHEAD CONSTRUCTION STANDARDS

TRANSFORMER CONNECTIONS 12KV TO 2.4KV DELTA
TRANSFORMER CONSTRUCTION 12KV/2400/4160Y

OH1184.1

SCOPE: THIS STANDARD SHOWS THE PROPER CONNECTION OF A 12KV TO 2400/4160 WYE HO TRANSFORMER TO 75KVA FOR A STEP-DOWN TRANSFORMER APPLICATION, USING THE HEAVY-DUTY CLUSTER MOUNT INSTALLATION. (b)

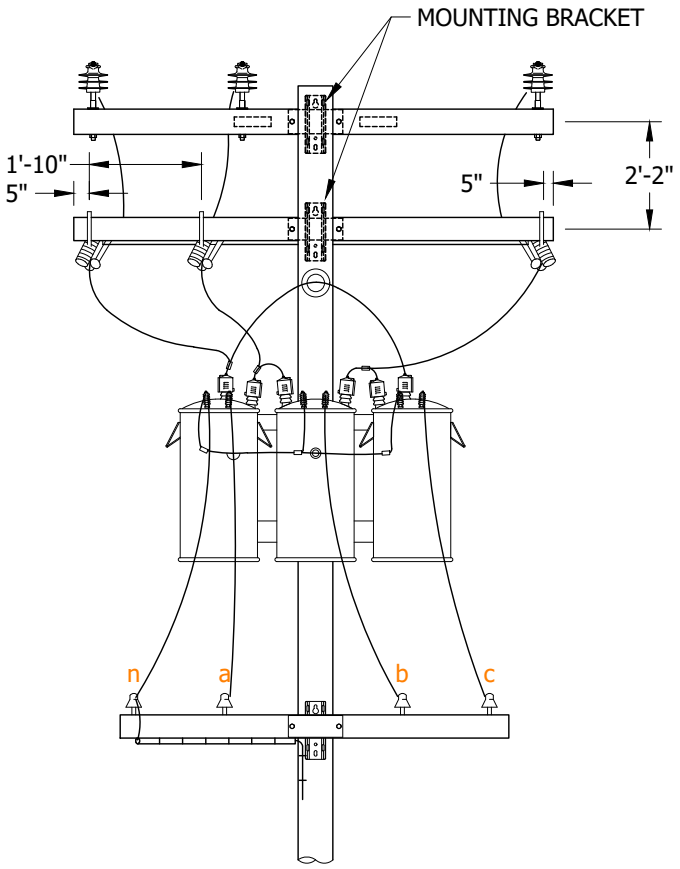

FIGURE 1
4KV

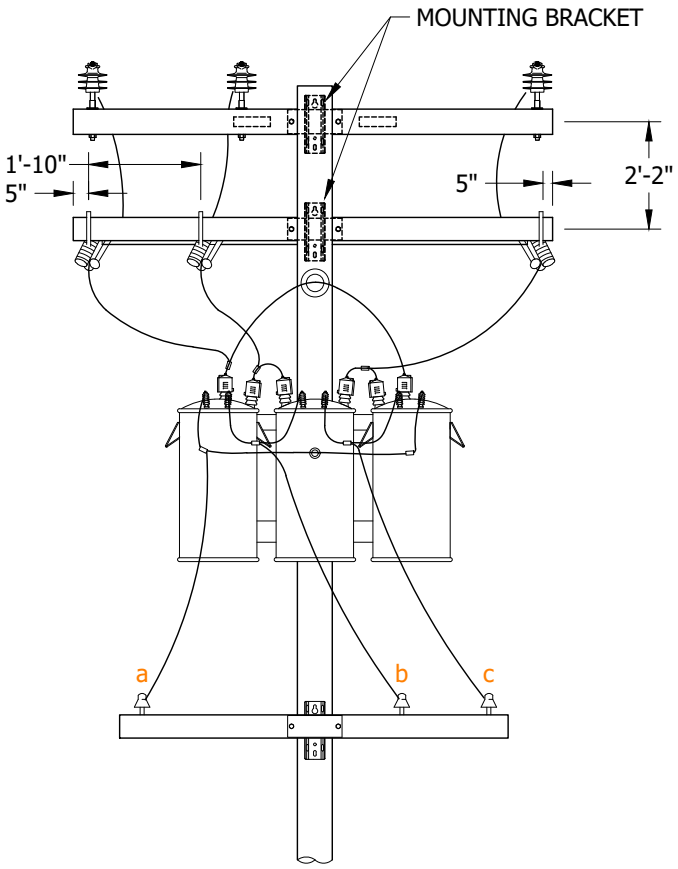

FIGURE 2
2.4KV

INSTALLATION: NONE

BILL OF MATERIALS: NONE

NOTES: NONE

REFERENCE:

a. SEE OH390 FOR HEAVY-DUTY MOUNTING BRACKET, STOCK NUMBER S402920.

(b) SEE OH1180.

TABLE OF CONTENTS

© 1998 - 2023 San Diego Gas & Electric Company. All rights reserved. Removal of this copyright notice without permission is not permitted under law.

REV	CHANGE	DR	BY	DSN	APV	DATE	REV	CHANGE	DR	BY	DSN	APV	DATE
C	FIGURE UPDATE	EDM	JIK	JES	CZH	08/03/2021	F						
B	EDITORIAL CHANGES	-	JS	JS	CZH	10/01/2018	E						
A	ORIGINAL ISSUE	-	TR	TR	DW	06/25/2014	D	DRAWING UPDATE	GLC	SPC	GLW	KRG	01/09/2023

X Indicates Latest Revision | Completely Revised | New Page | Information Removed

SDG&E ELECTRIC OVERHEAD CONSTRUCTION STANDARDS

TRANSFORMER CONNECTIONS 12KV TO 2.4KV DELTA
TRANSFORMER CONSTRUCTION 12KV/2400/4160Y
WITH CLUSTER MOUNTING BRACKET

OH1184.2

SCOPE: THIS STANDARD SHOWS THE INSTALLATION METHOD OF A 3Ø, 2.4KV DELTA, TYPE 'W' TRANSFORMER WITH SECONDARY CROSSARM CONSTRUCTION.

ATTENTION:

* THIS CONSTRUCTION MUST BE TRUCK ACCESSIBLE.

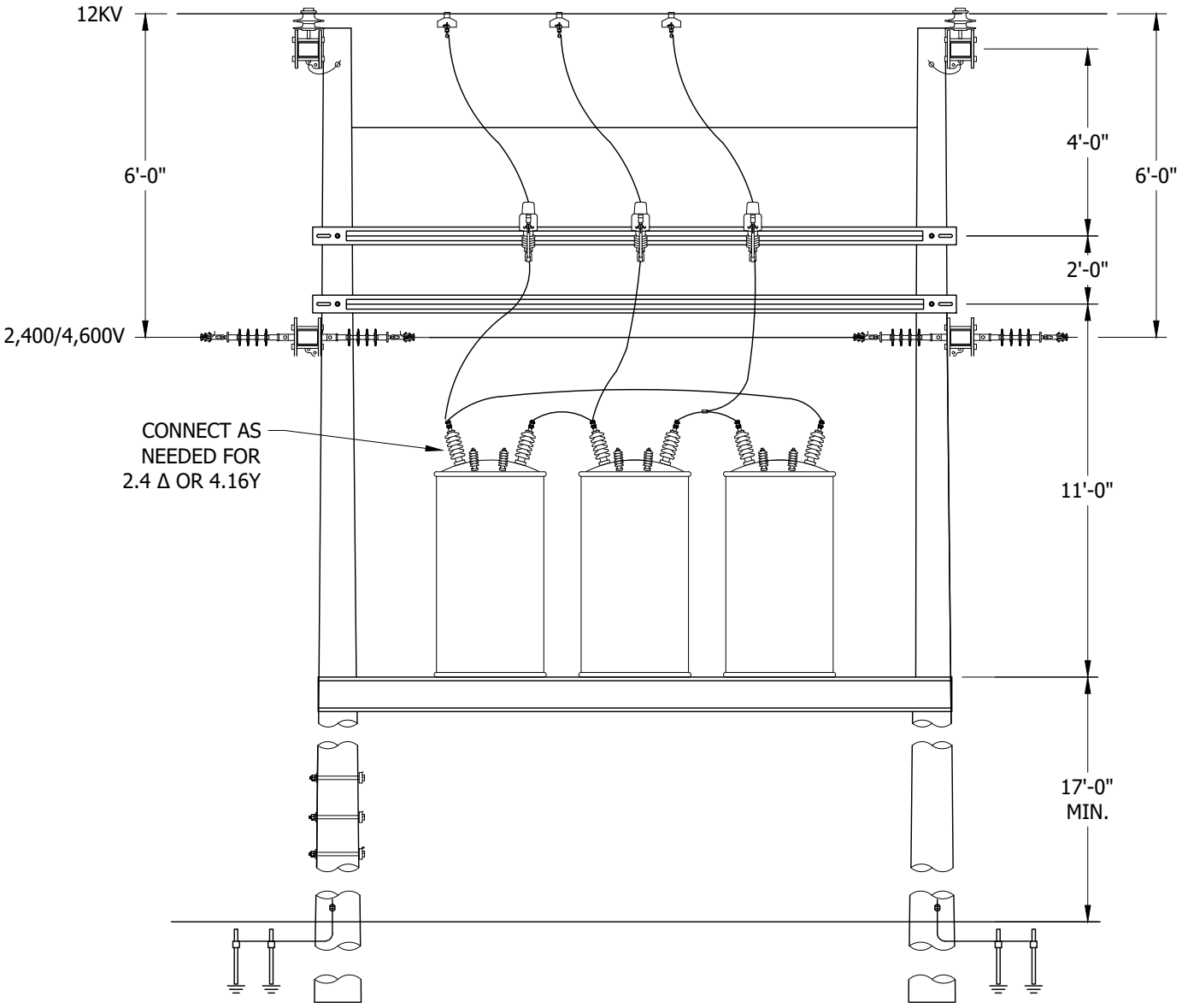

FIGURE 1

INSTALLATION: NONE

BILL OF MATERIALS: NONE

NOTES: NONE

REFERENCE: NONE

© 1998 - 2023 San Diego Gas & Electric Company. All rights reserved. Removal of this copyright notice without permission is not permitted under law.

REV	CHANGE	DR	BY	DSN	APV	DATE	REV	CHANGE	DR	BY	DSN	APV	DATE
C	FIGURE UPDATE	EDM	JIK	JES	CZH	08/03/2021	F						
B	EDITORIAL CHANGES	-	JS	JS	CZH	10/01/2018	E						
A	ORIGINAL ISSUE	-	TR	TR	DW	06/25/2014	D	DRAWING UPDATE	GLC	SPC	GLW	KRG	01/09/2023

X Indicates Latest Revision | Completely Revised | New Page | Information Removed

SDG&E ELECTRIC OVERHEAD CONSTRUCTION STANDARDS

TRANSFORMER CONNECTIONS 12KV TO 2.4KV DELTA
TRANSFORMER CONSTRUCTION 12KV/2400/4160Y
PLATFORM MOUNTED

OH1184.3

TABLE OF CONTENTS

SCOPE: THIS STANDARD SHOWS THE INSTALLATION METHOD OF A SINGLE-PHASE VOLTAGE BOOSTING TRANSFORMER.

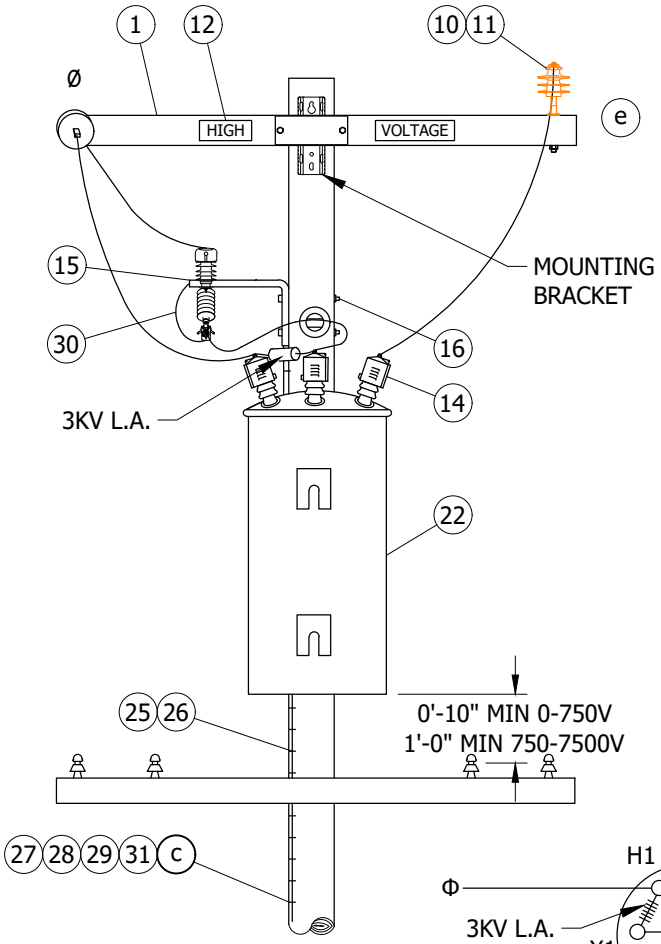

FIGURE 1
FRONT VIEW

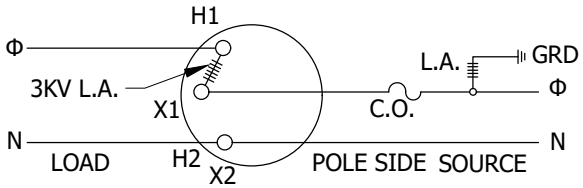

CONNECTION DIAGRAM

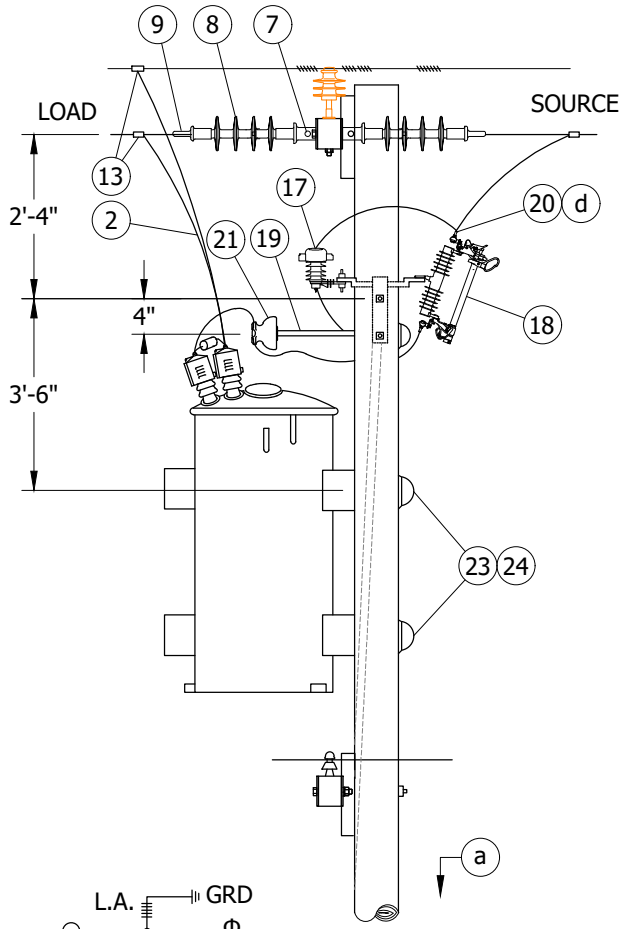

FIGURE 1
SIDE VIEW

INSTALLATION:

A. SPECIAL FUSING TO BE SPECIFIED BY DISTRICT ENGINEER.

BILL OF MATERIALS:

ITEM	DESCRIPTION	QUANTITY	STANDARD PAGE	STOCK NUMBER	DESIGN UNITS
1	CROSSARM, 2 PIN, 3 1/2" X 4 1/2" X 6' - 0"	2	-	S294112	-
2	BRACE, FLAT CROSSARM, 28"	4	-	S164192	-
3	BOLT, MACH, GALV, 5/8" X (LENGTH AS REQ'D), 2 SQUARE & 1 DOUBLE COIL SPRING WASHER	1	390	-	-
4	BOLT, MACH, GALV, 3/8" X 4 1/2", 1 RD & 1 SPR LOCK WASHER	4	390	-	-
5	BOLT, MACH, GALV, 1/2" X (LENGTH AS REQ'D) & 1 DOUBLE COIL SPRING WASHER	1	390	-	-
6	BOLT, SPACE, GALV, 5/8" X (LENGTH AS REQ'D), 4 SQUARE & 2 DOUBLE COIL SPRING WASHERS	2	390	-	-
7	CLEVIS, DEADEND, 5/8" BOLT STEEL (CLOSED TYPE)	2	-	S235712	-

© 1998 - 2020 San Diego Gas & Electric Company. All rights reserved. Removal of this copyright notice without permission is not permitted under law.

REV	CHANGE	DR	BY	DSN	APV	DATE	REV	CHANGE	DR	BY	DSN	APV	DATE
C	EDITIORAL CHANGES	-	JS	JS	CZH	10/01/2018	F						
B	DRAWING UPDATE	-	GW	JS	MDJ	04/01/2018	E						
A	ORIGINAL ISSUE	-	-	PIA	JJ	12/03/2005	D	TABLE UPDATE	EDM	JIK	JES	CZH	10/09/2020

X Indicates Latest Revision | Completely Revised | New Page | Information Removed

SDG&E ELECTRIC OVERHEAD CONSTRUCTION STANDARDS

VOLTAGE BOOSTING TRANSFORMER STATION
6.9 - 7.2KV - SINGLE-PHASE INSTALLATION

OH1188.1

TABLE OF CONTENTS

BILL OF MATERIALS (CONT'D):

ITEM	DESCRIPTION	QUANTITY	STANDARD PAGE	STOCK NUMBER	DESIGN UNITS
8	INSULATOR, SUSPENSION, 12KV, CLEVIS	4	750	-	-
9	CLAMP, STRAIGHT LINE, D.E.	2	739	-	-
10	PIN, INSULATOR, STRAIGHT, 12KV, 1" LEAD THREAD	2	-	S532706 (X)	-
11	INSULATOR, 12KV NEUTRAL	2	-	S429216	-
12	SIGN, HIGH VOLTAGE &	2	-	S647648	-
	9 ROOFING NAILS, GALV	-	-	S492224	-
13	CONNECTOR, WIRE, COMPRESSION, CU OR AL, AS REQ'D	AS REQ'D	783	-	-
14	BUSHING COVER, TRANSFORMER	3	-	S289188 (X)	BSHCOV
15	BRACKET, CUTOUT MOUNTING	1	-	S166448	-
16	BOLT, MACH, GALV, 5/8" X (LENGTH AS REQ'D), 1 SQ CURVED & 1 DBL COIL SPRING WASHER	2	390	-	-
17	ARRESTER, LIGHTNING, 12KV W/48" #6 COVERED LEAD WIRE (b)	1	-	S113256	10KVTA
18	CUTOUT, 12KV, WITH LOADBUSTER HOOKS, KEARNY TYPE HX	1	-	S297952	-
19	BRACKET, INSULATOR, 1" OR	1	-	S166144	-
	1 3/8" LEAD THREAD	1	-	S166176	-
20	HOT LINE CLAMP	1	-	S227680	-
21	INSULATOR, 12KV, (CLASS AS REQ'D)	1	750	-	-
22	AUTOTRANSFORMER, TYPE "HH", SINGLE PHASE, 6.9 - 7.2KV, 625KVA (COMPLETE WITH 1 - 3KV LIGHTNING ARRESTER)	1	-	S753248	-
23	BOLT, MACH, GALV, 3/4" X (LENGTH AS REQ'D) 1 SQ CURV WASHER & 1 DBL COIL SPR WASHER	2	390	-	-
24	COVER, BOLT, PLASTIC &	3	-	S285696	-
	6 - 10D NAILS, GALV	-	-	S491392	-
25	CONDUIT, PVC, 3/4", SCHEDULE 80	10'	-	S251520	-
26	STRAP, PIPE, GALV, 3/4" &	3	-	S285696	-
	2 - 6D NAILS, GALV	-	-	S491392	-
27	#4 CU SOLID GROUND WIRE, PVC COVERED	60'	-	S812490	GNDPVC
28	GROUND ROD, 5/8" X 8'-0", COPPERWELD	1	-	S603074 (X)	
29	COPPER BONDED GROUND CONNECTOR	1	-	S259010	-
30	FLEXIBLE ARRESTER GROUND STRAP	AS REQ'D	-	S698754	-
31	GALVANIZED STAPLES FOR PVC COVERED GROUND WIRE	AS REQ'D	-	S678564 (X)	-

NOTES:

(X) THIS ITEM IS EXEMPT.

REFERENCE:

(a) POLE STEPPING - SEE OH363.
(b) FOR LIGHTNING ARRESTER REQUIREMENTS - SEE OH1247.
(c) GROUNDING METHODS - SEE OH1002.
(d) FOR HOT LINE CLAMP CONNECTION, SEE OH788.
(e) FIBERGLASS CROSSARMS - SEE OH379.

© 1998 - 2020 San Diego Gas & Electric Company. All rights reserved. Removal of this copyright notice without permission is not permitted under law.

REV	CHANGE	DR	BY	DSN	APV	DATE	REV	CHANGE	DR	BY	DSN	APV	DATE
C	EDITIORAL CHANGES	-	JS	JS	CZH	10/01/2018	F						
B	DRAWING UPDATE	-	GW	JS	MDJ	04/01/2018	E						
A	ORIGINAL ISSUE	-	-	PIA	JJ	12/03/2005	D	TABLE UPDATE	EDM	JIK	JES	CZH	10/09/2020

X Indicates Latest Revision | Completely Revised | New Page | Information Removed

SDG&E ELECTRIC OVERHEAD CONSTRUCTION STANDARDS

VOLTAGE BOOSTING TRANSFORMER STATION
6.9 - 7.2KV - SINGLE-PHASE INSTALLATION

OH1188.2

TABLE OF CONTENTS

MAIN TABLE OF CONTENTS

PAGE	SUBJECT
1204	SECONDARY CURRENT-LIMITING FUSES
1206	PRIMARY CURRENT-LIMITING FUSE INSTALLATION
1207	FUSES USED IN OVERHEAD CONSTRUCTION
1208	FIREFLY FUSED CUTOUT INDICATOR
1210	OVERHEAD EXPULSION FUSE MARKING
1212	4KV, 12KV CUT OUT ASSEMBLY AND FUSE INSTALLATION
1218	IN-LINE HOOKSTICK SWITCH INSTALLATION
1222	SINGLE-PHASE HOOKSTICK SWITCH INSTALLATIONS
1231	INERTIA POLE TOP SWITCH, 12KV, UNDERARM, LOADBREAK TYPE, SINGLE CIRCUIT UNDERARM CONFIGURATION
1240	SECTIONALIZING CUTOUTS INSTALLATION FOR TANGENT AND BUCK CORNER POSITIONS
1242	CROSSARM MOUNTED PARALLEL FUSE AND HOOKSTICK SWITCH INSTALLATION
1247	APPLICATION OF SURGE (LIGHTNING) ARRESTERS
1251	LIGHTNING ARRESTER INSTALLATION ON 4KV CIRCUITS
1271	NOVA SWITCH AND SCADA FORM 6 CONTROLLER WITH HOOKSTICK BY-PASS U SWITCHES
1272	ELASTIMOLD MVR SWITCH AND SCADA 651R2 CONTROLLER WITH HOOKSTICK BY-PASS SWITCHES
1273	INTELLIRUPTER PULSECLOSER SWITCH
1274	SIEMENS DISTRIBUTION RECLOSER AND SCADA 651-R2
1275	OVERHEAD FAULT INDICATOR INSTALLATION AND OPERATION
1276	OVERHEAD AUTORANGING FAULT INDICATOR INSTALLATION AND OPERATION

© 1998 - 2023 San Diego Gas & Electric Company. All rights reserved. Removal of this copyright notice without permission is not permitted under law.

REV	CHANGE	DR	BY	DSN	APV	DATE	REV	CHANGE	DR	BY	DSN	APV	DATE
I	MOVED BACK 1208 FROM FMO	-	RSL	JES	CZH	03/09/2020	L	OH1243 MOVED TO FMO	EDM	MRF	MRF	KRG	04/06/2023
H	REMOVED 1208 FROM FMO	-	JC	JS	CZH	03/18/2019	K	1215 MOVED TO FMO	GLC	RSL	JES	CZH	12/12/2021
G	UPDATED TABLE OF CONTENTS	PEI	-	-	-	02/18/2019	J	MOVED OH1230 TO FMO	EDM	RSL	JES	CZH	12/06/2021

Indicates Latest Revision | Completely Revised | New Page X | Information Removed

SDG&E ELECTRIC OVERHEAD CONSTRUCTION STANDARDS

SECTIONALIZING, ARRESTER SECTION
TABLE OF CONTENTS

OH1201.1

SCOPE: THIS STANDARD DESCRIBES THE USE OF SECONDARY CURRENT LIMITING FUSES.

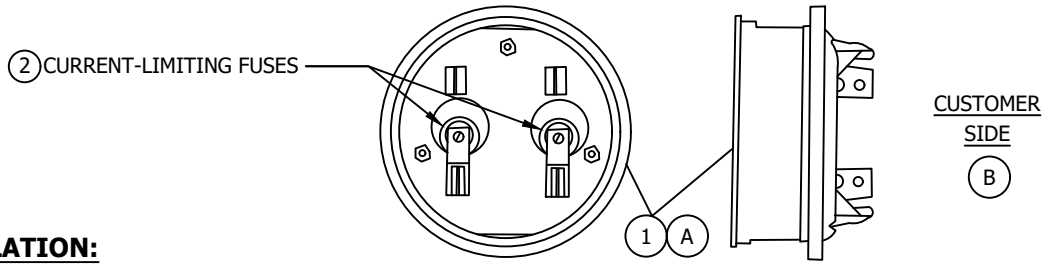

INSTALLATION:

(A) THE EKSTROM ADAPTER MAY BE INSTALLED ON 120/240 VOLT, SINGLE-PHASE SERVICES UP THROUGH 125 AMPERES.

(B) THIS ADAPTER PLUGS IN BETWEEN THE CUSTOMER'S METER SOCKET AND THE COMPANIES METER.

C. CONTACT THE DISTRICT ENGINEERING FOR LARGER SERVICES OR OTHER VOLTAGE REQUIREMENTS.

D. CHECK ALL ELECTRICAL CONNECTIONS ON ADAPTER FOR TIGHTNESS DURING INSTALLATION.

E. THE FOLLOWING GUIDELINES APPLY TO CHANGEOUTS OF EXISTING TRANSFORMERS, BASED UPON CUSTOMER'S EQUIPMENT WHICH MAY HAVE A MAXIMUM INTERRUPTING CAPABILITY OF 5000 AMPS.
   1. SINGLE-FAMILY RESIDENTIAL AND DUPLEX APPLICATIONS:
      ALL SERVICES FED DIRECTLY FROM THE TRANSFORMER POLE SHALL HAVE CURRENT LIMITING FUSES APPLIED AT EACH METER SOCKET WHENEVER THE TRANSFORMER AT AN EXISTING INSTALLATION IS INCREASED IN SIZE TO 50, 75, OR 100 KVA. SEE NOTES.
   2. INDIVIDUALLY METERED MOBILE HOMES: WHENEVER THE TRANSFORMER SIZE AT AN EXISTING INSTALLATION IS INCREASED, THE APPLICATION IS TO BE REFERRED TO DISTRICT ENGINEERING FOR REVIEW.

F. THE FOLLOWING GUIDELINES APPLY TO NEW INSTALLATIONS, BASED UPON CUSTOMER'S EQUIPMENT WHICH SHOULD HAVE A MINIMUM INTERRUPTING CAPABILITY OF 10,000 AMPS. THE TABLE BELOW SPECIFIES THE MINIMUM CONDUCTOR LENGTH REQUIRED TO LIMIT THE SHORT CIRCUIT CURRENTS TO LESS THAN 10,000 AMPS FOR VARIOUS SINGLE-PHASE TRANSFORMERS. THE LIMITER ADAPTOR SHALL BE APPLIED TO THOSE SERVICES WHICH DO NOT MEET THIS REQUIREMENT.

CONDUCTOR SIZE	MINIMUM CONDUCTOR LENGTH TO LIMIT ISC TO 10,000 AMPS			
	TRANSFORMER SIZE			
	25 KVA	50 KVA	75 KVA	100 KVA
OVERHEAD TRIPLEX #4 AL OR #6 CU	0	8	15	19
OVERHEAD TRIPLEX #2 AL OR #4 CU	0	12	24	30
OVERHEAD TRIPLEX 1/0 AL OR #2 CU	0	19	36	45
OVERHEAD TRIPLEX 3/0 AL	0	28	54	67

BILL OF MATERIALS:

ITEM	DESCRIPTION	STOCK NO
1	LIMITER, ADAPTER, INCLUDING 2 BUSS TYPE MSD LIMITERS	463402
2	FUSE, CURRENT LIMITING, REPLACEMENT, EKSTROM LIMITER ADAPTER, MSD 125A	365643

NOTES:

I. SECONDARY CURRENT LIMITING FUSES ARE TO BE APPLIED TO RESIDENTIAL TYPE SERVICES WHENEVER THE AVAILABLE FAULT CURRENT EXCEEDS THE INTERRUPTING RATING OF THE SERVICE ENTRANCE EQUIPMENT.

II. THESE SECONDARY CURRENT LIMITING FUSES ARE TO BE INSTALLED BY THE LINE CREWS ON SCHEDULED WORK. IF THE TRANSFORMER IS CHANGED OUT DUE TO TROUBLE, THE SECONDARY CURRENT LIMITING FUSES SHALL BE ADDED THE FOLLOWING WORK DAY.

III. INSTALLATIONS WHICH ARE DIFFICULT TO PROTECT SHOULD BE REFERRED TO DISTRICT ENGINEERING. CURRENT LIMITING FUSES MAY NOT BE REQUIRED IF SUFFICIENT SECONDARY CABLE LIMITS THE FAULT CURRENT TO SERVICE EQUIPMENT CAPABILITY.

REFERENCE: NONE

© 1998 - 2019 San Diego Gas & Electric Company. All rights reserved. Removal of this copyright notice without permission is not permitted under law.

REV	CHANGE	BY	DSGN	APPV	DATE	REV	CHANGE	BY	DSGN	APPV	DATE
C						F					
B	DRAWING UPDATE	PEI	-	-	02/18/2019	E					
A	ORIGINAL ISSUE	-	PTA	RDJ	09/01/1985	D					

X Indicates Latest Revision | Completely Revised | New Page | Information Removed

SHEET 1 OF 1

SDG&E ELECTRIC OVERHEAD STANDARDS

SECONDARY CURRENT LIMITING FUSES

OH1204.1

TABLE OF CONTENTS

SCOPE: THIS STANDARD SHOWS CURRENT LIMITING FUSES USED FOR CABLE POLE CONSTRUCTION.

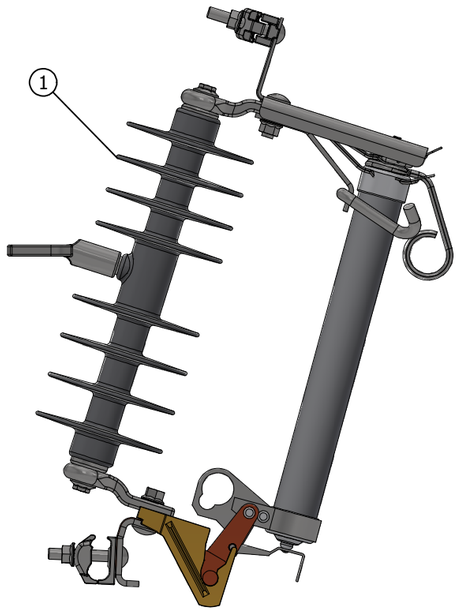

FIGURE 1
POLYMER INTERCHANGEABLE CUTOUT



FIGURE 2
SINGLE BARREL ELF FUSE

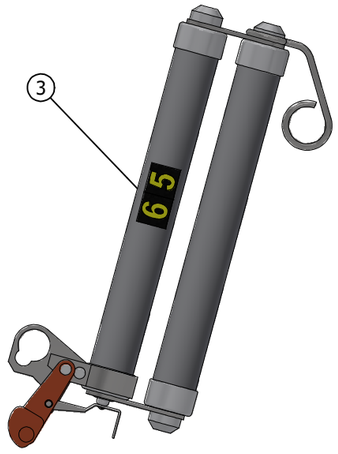

FIGURE 3
DOUBLE BARREL ELF FUSE

INSTALLATION:

(A) THESE FUSES DROP WHEN THEY OPERATE, ARE TOTALLY EXPENDABLE AND HAVE NO SALVAGEABLE PARTS. DISCARD ENTIRE FUSE ASSEMBLY AFTER OPERATION.

(B) INSTALL FUSE SIZE WITH DECALS ON EACH FUSE SO IT WILL BE VISIBLE AFTER INSTALLATION.(c)

BILL OF MATERIALS:

ITEM	DESCRIPTION	QUANTITY	STANDARD PAGE	STOCK NUMBER	DESIGN UNITS OH	DESIGN UNITS UG
1	CUTOUT, POLYMER, 25KV NOMINAL, 27KV MAX, 150 BIL	AS REQ'D	-	S298020 (III)	NPCO	NPCO
	CUTOUT, 12KV, 300A	AS REQ'D	-	S298026 (I)(IV)	NPCO-2	NPCO-2
2	FUSE, CURRENT LIMITING, 30 AMP, 8.3KV, (A)(B)(I)(II)	AS REQ'D	-	S365654	30AELF	ELF30A
3	FUSE, CURRENT LIMITING, 65 AMP, 8.3KV, (A)(B)(I)(II)	AS REQ'D	-	S365656	65AELF	ELF65A

NOTES:

(I) PERMITTED IN ALL CONTAMINATION DISTRICTS (d)

(II) FOR USE IN INTERCHANGEABLE CUTOUT.

(III) FOR USE IN CONTAMINATION DISTRICTS II AND III ONLY (d)

(IV) REQUIRED FOR CONTAMINATION DISTRICT I (d)

REFERENCE:

a. FOR APPLICATION OF THESE FUSES, SEE DM SECTION 6100.

b. FOR EQUIPMENT MOUNTING BRACKETS, SEE OH397.

(c) SEE OH208 AND UG3212.

(d) SEE OH287UG3140: CONTAMINATION DISTRICTS.

TABLE OF CONTENTS

REV	CHANGE	DRWN	BY	CHKD	APVD	DATE
F	EDITORIAL CHANGES	EDM	JAC	JAS	KRG	11/03/2022
E	REVISED TO 3D FORMAT	AMP	JIK	-	-	05/10/2022
D	FORMATTING	EDM	JIK	-	-	9/28/2020

SDGE — A Sempra Energy utility

SDG&E ELECTRIC OVERHEAD AND UNDERGROUND CONSTRUCTION STANDARDS

OVERHEAD 12KV CURRENT-LIMITING FUSE INSTALLATION

SCALE: NOT TO SCALE

DRAWING NO: OH1206.1 UG4306.1

SHEET: 1 OF 1

© 1998 - 2022 San Diego Gas and Electric Company. All rights reserved. Removal of this copyright notice without permission is not permitted under law.

X Indicates Latest Revision | Completely Revised | New Page | Information Removed

TABLE OF CONTENTS

SCOPE: THIS STANDARD SHOWS VARIOUS TYPES OF FUSES USED ON THE OVERHEAD DISTRIBUTION SYSTEM.

TABLE 1:

CURRENT-LIMITING FUSES (II)(d)		
SIZE (AMPS)	**TYPE**	**STOCK NUMBER**
30	CURRENT-LIMITING (HXELF)	S365732 (B)
30	CURRENT-LIMITING (ELF)	S365654 (C)
65	CURRENT-LIMITING (ELF)	S365656 (C)
65	CURRENT-LIMITING (HXELF)	S365738 (B)
150	CURRENT-LIMITING (HX)	S365689 (B)
12	CURRENT-LIMITING (BACK-UP)	S365634 (A)
40	CURRENT-LIMITING (BACK-UP)	S365636 (A)

TABLE 2:

15.5KV NX FUSES FOR CURRENT-LIMITING FUSE TOOL (USED FOR TESTING DISTRIBUTION TRANSFORMERS)		
SIZE (AMPS)	**TYPE**	**STOCK NUMBER**
8	CURRENT-LIMITING	S368000
10	CURRENT-LIMITING	S367552
12	CURRENT-LIMITING	S367584
18	CURRENT-LIMITING	S367648
21	CURRENT-LIMITING	S367712
25	CURRENT-LIMITING	S367744
30	CURRENT-LIMITING	S367808
40	CURRENT-LIMITING	S367872

TABLE 3:

15.5KV ELF FUSES (USED FOR TESTING DISTRIBUTION TRANSFORMERS)			
SIZE (AMPS)	**TYPE**	**STOCK NUMBER**	**DESIGN UNITS**
12	CURRENT-LIMITING	S365664	-
50	CURRENT-LIMITING	S365666	-

TABLE 4:

15.5KV CURRENT-LIMITING FUSE, CAPACITOR POWER TRANSFORMER			
SIZE (AMPS)	**TYPE**	**STOCK NUMBER**	**DESIGN UNITS**
3	CURRENT-LIMITING	S365732	-

TABLE 5:

SECONDARY CURRENT-LIMITING FUSE FOR EKSTROM ADAPTER (b)			
SIZE (AMPS)	**TYPE**	**STOCK NUMBER**	**DESIGN UNITS**
125	CURRENT-LIMITING	S365643	-

TABLE 6:

SMU FUSES FOR SMD20 CUTOUT BODY (I)(III)				
SIZE (AMPS)	**TYPE**	**STOCK NUMBER**	**DESIGN UNITS**	
			UG	**OH**
5	SMU-5	S368550	5SMU	SMU5 (D)
10	SMU-10	S368552	10SMU	SMU10 (D)
15	SMU-15	S368554	15SMU	SMU15 (D)
20	SMU-20	S368556	20SMU	SMU20 (D)
25	SMU-25	S368662	25SMU	SMU25 (D)
30	SMU-30	S368664	30SMU	SMU30 (D)
40	SMU-40	S368666	40SMU	SMU40 (D)
50	SMU-50	S368668	50SMU	SMU50 (D)
65	SMU-65	S368670	65SMU	SMU65 (D)
80	SMU-80	S368672	80SMU	SMU80 (D)
100	SMU-100	S368674	100SMU	SMU100 (D)
125	SMU-125	S368676	125SMU	SMU125
150	SMU-150	S368678	150SMU	SMU150
200	SMU-200	S368680	200SMU	SMU200

TABLE 7:

END FITTINGS FOR SMU FUSES	
DESCRIPTION	**STOCK NUMBER**
FUSE END FITTINGS	S368660

TABLE 8:

CMU FUSES FOR CMU CUTOUT BODY (I)				
SIZE (AMPS)	**TYPE**	**STOCK NUMBER**	**DESIGN UNITS**	
			UG	**OH**
5	CMU-5	S368692	5CMU	CMU5 (D)
10	CMU-10	S368694	10CMU	CMU10 (D)
15	CMU-15	S368696	15CMU	CMU15 (D)
20	CMU-20	S368698	20CMU	CMU20 (D)
25	CMU-25	S368700	25CMU	CMU25 (D)
30	CMU-30	S368702	30CMU	CMU30 (D)
40	CMU-40	S368704	40CMU	CMU40 (D)
50	CMU-50	S368706	50CMU	CMU50 (D)
65	CMU-65	S368708	65CMU	CMU65 (D)
80	CMU-80	S368710	80CMU	CMU80 (D)
100	CMU-100	S368712	100CMU	CMU100 (D)
125	CMU-125	S368714	125CMU	CMU125
150	CMU-150	S368716	150CMU	CMU150

TABLE 9:

END FITTINGS FOR CMU FUSES	
DESCRIPTION	**STOCK NUMBER**
FUSE END FITTINGS	S368690

TABLE 10:

EXPULSION FUSES (a)					
SIZE (AMPS)	**TYPE**	**STOCK NUMBER**	**DESIGN UNITS**		
			OH ACCTS.	**UG ACCTS.**	**OVERHEAD (B)(C)**
5	200	S366016	-	EXP-05	EX5 (D)
10	200	S365696	-	EXP-10	EX10 (D)
15	QA	S365792	015-QA	QA-015	QA15 (D)
20	QA	S365856	020-QA	QA-020	QA20 (D)
25	QA	S365920	025-QA	QA-025	QA25 (D)
30	QA	S365952	030-QA	QA-030	QA30 (D)
40	QA	S365984	040-QA	QA-040	QA40 (D)
50	QA	S366048	050-QA	QA-050	QA50 (D)
60	QA	S366080	060-QA	QA-060	QA60 (D)
75	QA	S366112	075-QA	QA-075	QA75 (D)
100	QA	S365728	100-QA	QA-100	QA100 (D)
125	QA	S365760	125-QA	QA-125	QA125
150	QA	S365824	150-QA	QA-150	QA150
200	200	S365888	200-QA	QA-200	QA200

INSTALLATION:

(A) NO LONGER PURCHASED.

(B) USE WITH KEARNEY CUTOUT. (c)(d)

(C) USE WITH INTERCHANGEABLE CUTOUT. (c)(d)

(D) CORRESPONDING FIREFLY SHOULD BE INSTALLED WITH APPLICABLE NEW FUSE INSTALLATION OR FUSE REPLACEMENT EXCEPT WHEN FUSING TRANSFORMERS. (e)

BILL OF MATERIALS: NONE

NOTES:

(I) THESE FUSES ARE CAL-FIRE EXEMPT. THEY WILL BE USED IN TIER 2 & TIER 3 AREAS.

(II) THESE FUSES ARE ALLOWED IN THE ENTIRE SERVICE TERRITORY.

(III) SMU FUSES ARE NOT TO BE LEFT HANGING IN THE OPEN POSITION. (f)

REFERENCE:

(a) SEE DESIGN STANDARDS SECTION 6100.

(b) SEE OH1204.

(c) SEE OH1207UG4307 FOR EXPLOSION FUSE.

(d) SEE OH1206UG4306 FOR CURRENT-LIMITING FUSE.

(e) SEE OH1208 FOR FIREFLY FUSED CUTOUT INDICATOR.

(f) SEE S&C INSTRUCTION SHEET 252-550.

REV	CHANGE	DRWN	BY	CHKD	APVD	DATE
G	REVISED TO 3D FORMAT	GLC/DV	JIK	-	-	01/27/2022
F	FORMATTING	EDM	JIK	-	-	09/28/2020
E	EDITORIAL CHANGES	-	SL	JES	CZH	03/09/2020

SDG&E ELECTRIC OVERHEAD AND UNDERGROUND CONSTRUCTION STANDARDS

FUSES USED IN OVERHEAD CONSTRUCTION

SCALE: NOT TO SCALE

DRAWING NO: OH1207.1 UG4307.1

SHEET: 1 OF 1

© 1998 - 2022 San Diego Gas and Electric Company. All rights reserved. Removal of this copyright notice without permission is not permitted under law.

Indicates Latest Revision | Completely Revised | New Page | Information Removed

SCOPE: THIS STANDARD DESCRIBES AND SHOWS THE INSTALLATION AND OPERATION OF THE FUSED CUTOUT INDICATOR.

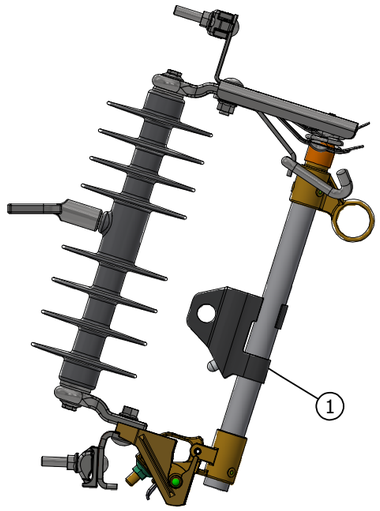

FIGURE 1

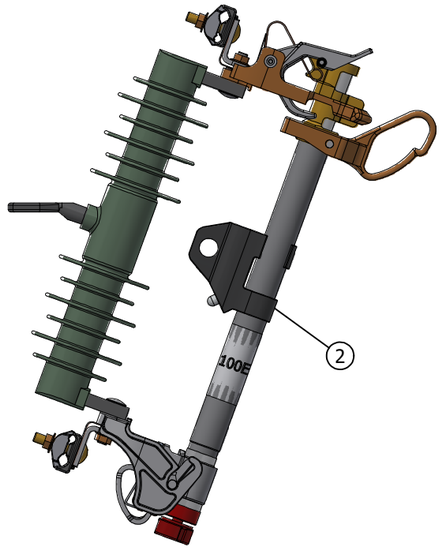

FIGURE 2

INSTALLATION:

A. FIREFLY SHOULD BE INSTALLED ON ALL NEW FUSE INSTALLATIONS AND CAN BE TRANSFERRED TO EXISTING FUSE HOLDERS WHEN A FUSE IS REPLACED.
   1. WHEN REPLACING A BLOWN FUSE, ADD FIREFLIES TO ALL PHASES.
B. REMOVE THE SHIPPING MAGNET FROM THE MAGNET POCKET.
C. TEST THE FIREFLY BY POINTING THE LED UPWARD TO SEE THE LED FLASH.
D. POSITION THE FIREFLY FOR BEST VIEWING WHEN THE FUSE IS DROPPED BY HAVING THE LED FACE THE OUTSIDE OF THE CUTOUT.
E. TO INSTALL THE FIREFLY ON AN ENERGIZED DOOR USING A SHOTGUN, LOAD THE FIREFLY INTO THE SHOTGUN WITH THE FIREFLY FLAT AND ROTATE CLOCKWISE UNTIL IT LOCKS IN PLACE.

BILL OF MATERIALS:

ITEM	DESCRIPTION	QUANTITY	STANDARD PAGE	STOCK NUMBER	DESIGN UNIT
1	INDICATOR, FUSE CUTOUT, 100AMP, FIREFLY	1	-	S423606	-
2	INDICATOR, FUSE, CUTOUT DOOR, CMU/SMU	1	-	S423608	-

NOTES:

I. THE FIREFLY MAY BE REUSED UNTIL THE INTERNAL BATTERY IS DEPLETED. THE MANUFACTURER SPECIFIES INACTIVE LIFE OF 20 YEARS AND ACTIVE LIFE OF 1,000 HOURS.
II. WHEN CLOSING A FUSE INTO A POSSIBLE FAULT, REMOVE THE FIREFLY BEFORE THE ATTEMPT. IF NO FAULT IS CLEARED BY THE FUSE, THE FIREFLY CAN BE REINSTALLED.
III. BOTH TYPES OF FIREFLIES ARE LABELED FOR THEIR PROPER APPLICATION.
IV. FIREFLIES MAY BE INSTALLED WITH LIVE-LINE TOOLS.

REFERENCE:

a. SEE ESP328

TABLE OF CONTENTS

REV	CHANGE	DRWN	BY	CHKD	APVD	DATE
E	REVISED TO 3D FORMAT	EDM	JIK	-	-	08/09/2022
D	FIGURE UPDATE	EDM	MRF	GLW	CZH	12/06/2021
C	MOVED OUT OF FMO & EDITORIAL CHANGES	-	RSL	JES	CZH	03/09/2020

SDG&E ELECTRIC OVERHEAD CONSTRUCTION STANDARDS

FIREFLY FUSED CUTOUT INDICATOR

SCALE: NOT TO SCALE

DRAWING NO: OH1208.1

SHEET: 1 OF 1

© 1998 - 2022 San Diego Gas and Electric Company. All rights reserved. Removal of this copyright notice without permission is not permitted under law.

X Indicates Latest Revision | Completely Revised | New Page | Information Removed

SCOPE: THIS STANDARD SHOWS DECALS TO BE INSTALLED ON OVERHEAD EXPULSION FUSEHOLDER TO IDENTITY AMPERAGE OF FUSE ELEMENT.

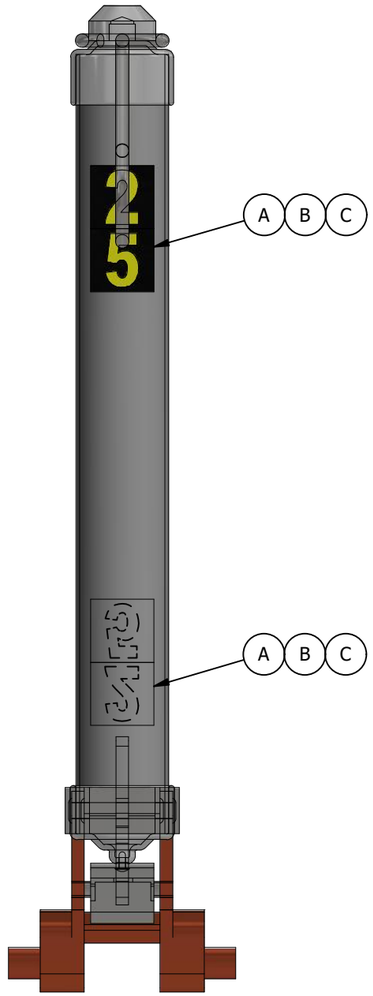

TABLE 1:

DESCRIPTION FOR UNIT NUMBER 1 (C)	
DECAL CHARACTER	**STOCK NUMBER**
1	S302001
2	S302002
3	S302003
4	S302004
5	S302005
6	S302006
7	S302007
8	S302008
9	S302009
0	S302000

INSTALLATION:

(A) CLEAN THE SURFACE WITH SOLVENT. REMOVE ANY DIRT, OIL, UNREADABLE OR DAMAGED DECALS, OR ANY OTHER FOREIGN MATERIAL THAT WOULD INTERFERE WITH ADHESION OF THE DECAL.

(B) INSTALL DECALS SO THAT THEY MAY BE READ FROM EITHER SIDE OF FUSE TUBE:

1) NEAR TOP OF FUSE TUBE, FACING AWAY FROM CUTOUT BODY, IN A MANNER THAT DECAL MAY BE READ FROM GROUND LEVEL WITH FUSE TUBE CLOSED, AND,

2) NEAR BOTTOM OF FUSE TUBE, FACING CUTOUT BODY WITH FUSE TUBE CLOSED, UPSIDE DOWN, SO THAT DECAL MAY BE READ FROM GROUND LEVEL AFTER FUSE OPERATES AND FUSE TUBE IS HANGING OPEN.

(C) SELF-ADHESIVE NUMBER DECALS ARE ISSUED IN SHEETS OF 70 DECALS EACH. EACH SHEET CONSISTS OF A UNIQUE NUMBER 0 THROUGH 9. SEE TABLE 1 FOR M & S NUMBERS.

D. IF SIZE OF FUSE ELEMENT IS CHANGED, PLACE NEW DECAL OVER ANY EXISTING DECAL, PROVIDED EXISTING DECAL WILL NOT INTERFERE WITH ADHESION OF NEW DECAL.

BILL OF MATERIALS: NONE

NOTES: NONE

REFERENCE: NONE

TABLE OF CONTENTS

REV	CHANGE	DRWN	BY	CHKD	APVD	DATE
C	REVISED TO 3D FORMAT	GLC/DV	JIK	-	-	01/27/2022
B	DRAWING UPDATE	PEI	JIK	-	-	02/18/2019
A	ORIGINAL ISSUE	-	-	PTA	RDG	01/01/1994

SDG&E

A Sempra Energy utility

SDG&E ELECTRIC OVERHEAD CONSTRUCTION STANDARDS

OVERHEAD EXPULSION FUSE MARKING

SCALE: NOT TO SCALE

DRAWING NO: OH1210.1

SHEET: 1 OF 1

© 1998 - 2022 San Diego Gas and Electric Company. All rights reserved. Removal of this copyright notice without permission is not permitted under law.

Indicates Latest Revision | Completely Revised | New Page | Information Removed

SCOPE: THIS STANDARD SHOWS THE CMU CUTOUT ASSEMBLY, PREPARED FOR USE ON THE 4KV AND 12KV ELECTRIC SYSTEM IN TIER 2 & TIER 3 AREAS.

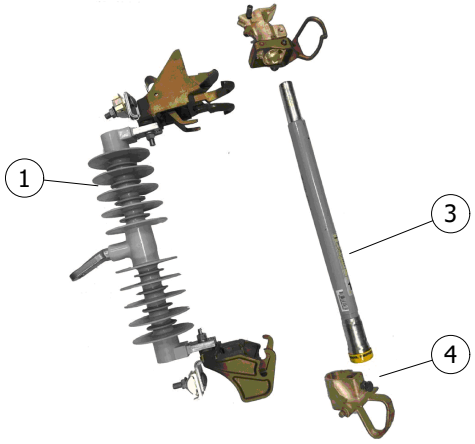

FIGURE 1
CUTOUT BODY WITH FUSE

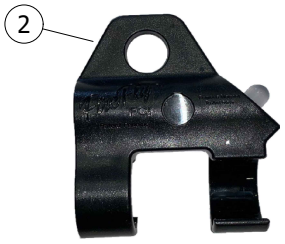

FIGURE 2
FIREFLY

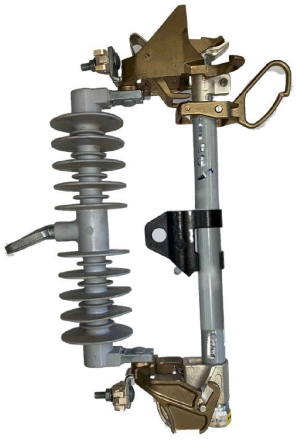

FIGURE 3
ASSEMBLED CUTOUT BODY WITH FUSE AND FIREFLY

INSTALLATION: NONE

BILL OF MATERIALS:

ITEM	DESCRIPTION	QUANTITY	STANDARD PAGE	STOCK NUMBER	DESIGN UNITS
1	FUSEHOLDER, POLYMER BODY, WITH END FITTINGS FOR CMU FUSE BARREL, CMU, CURRENT RANGE UP TO 150A	--	--	S298018	CMU
2	FIRELY FOR 100A AND SMALLER SMU/CMU FUSES (c)	--	--	S423608	
3	FUSE, BARREL, REFER TO SIZES	--	1207/4307	--	--
4	FITTINGS, END, UPPER & LOWER, FOR CMU FUSES (III)(a)	--	--	S368690	--

NOTES:

I. KEARNY TYPE HX CUTOUTS ARE NO LONGER AVAILABLE. FOR APPLICATIONS IN TIER 2 & TIER 3 AREAS, CMU/SMD20 CUTOUT BODY AND CMU/SMU FUSES WILL NOW BE USED.

II. THE PACKAGE CONTAINS THE CMU CUTOUT BODY AND UPPER AND LOWER END FITTINGS.

(III) TROUBLESHOOTER: END FITTINGS CAN BE ORDERED SEPARATELY.

IV. DO NOT DISCARD END FITTING FROM AN ASSEMBLED USED OR BLOWN FUSE.

V. WHEN ASSEMBLING END FITTINGS TO THE FUSE BARREL, MAKE SURE NOT TO OVER TIGHTEN BOLTS. FINGER TIGHTEN AND HALF A TURN WITH A WRENCH WILL SUFFICE.

VI. USE ON 2.4KV - 12KV.

VII. CROSSARM MOUNTING BRACKETS ARE INCLUDED WITH THE MATERIALS SUPPLIED BY THE OH DESIGN UNITS (USED ON DESIGN BY LOCATION JOBS). BRACKETS MUST BE ORDERED SEPARATELY ON MANUALLY PREPARED FIELD MEMO JOBS. (b)

a. DOUBLE CUTOUT & ARRESTER MTG BKT = S165454 (X)

b. CUTOUT OR ARRESTER MTG BKT = S165452 (X)

(X) THIS ITEM IS EXEMPT.

REFERENCE:

(a) SEE OH1207UG4307.

(b) SEE OH397.

(c) SEE OH1208.

© 1998 - 2021 San Diego Gas & Electric Company. All rights reserved. Removal of this copyright notice without permission is not permitted under law.

REV	CHANGE	DR	BY	DSN	APV	DATE	REV	CHANGE	DR	BY	DSN	APV	DATE
C	DRAWING UPDATE	-	RSL	JES	CZH	03/09/2020	F						
B	DRAWING UPDATE	-	JCE	JS	CZJ	03/18/2019	E	EDITORIAL CHANGES	EDM	CWB	JES	CZH	09/30/2021
A	ORGINAL ISSUE	-	GW	JS	MDJ	04/01/2018	D	FORMATTING	EDM	JIK	-	-	09/28/2020

X Indicates Latest Revision | Completely Revised | New Page | Information Removed

SDG&E ELECTRIC OVERHEAD AND UNDERGROUND CONSTRUCTION STANDARDS

CUTOUT ASSEMBLY
CMU

OH1212.1
UG4305.1

TABLE OF CONTENTS

SCOPE: THIS STANDARD SHOWS THE SMD20 CUTOUT ASSEMBLY, SECOND CHOICE FOR USE ON THE 4KV AND 12KV ELECTRIC SYSTEM IN TIER 2 & TIER 3 AREAS.

CAUTION:

* NOT FOR USE ON CABLE POLES DUE TO POSSIBILITY OF CONTACT WITH PHASE WIRES WHEN OPENED.

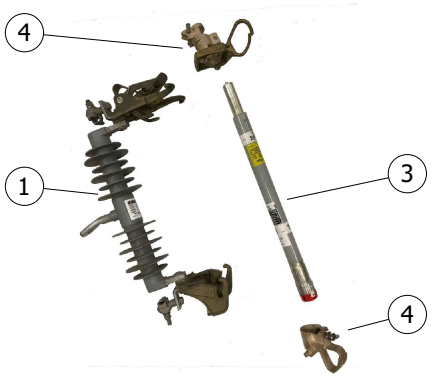

FIGURE 1
CUTOUT BODY WITH FUSE

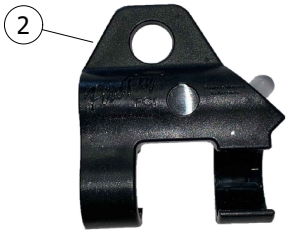

FIGURE 2
FIREFLY



FIGURE 3
ASSEMBLED CUTOUT BODY WITH FUSE AND FIREFLY

INSTALLATION: NONE

BILL OF MATERIALS:

ITEM	DESCRIPTION	QUANTITY	STANDARD PAGE	STOCK NUMBER	DESIGN UNITS
1	FUSEHOLDER, POLYMER BODY, WITH END FITTINGS FOR SMU FUSE BARREL SMD20, CURRENT RANGE UP TO 200A (VII)	--	--	S298022	SMD20
2	FIREFLY FOR 100A AND SMALLER SMU/CMU FUSES (c)	--	--	S423608	
3	FUSE, BARREL, REFER TO SIZES	--	1207/4307	--	--
4	FITTINGS, END, UPPER & LOWER, END FOR SMU FUSES (III)(a)	--	--	S368660	--

NOTES:

I. KEARNY TYPE HX CUTOUTS ARE NO LONGER AVAILABLE. FOR APPLICATIONS IN TIER 2 & TIER 3 AREAS, CMU/SMD20 CUTOUT BODY AND CMU/SMU FUSES WILL NOW BE USED.

II. THE PACKAGE CONTAINS THE SMD20 CUTOUT BODY AND UPPER AND LOWER END FITTINGS.

(III) TROUBLESHOOTER: END FITTINGS CAN BE ORDERED SEPARATELY.

IV. DO NOT DISCARD END FITTING FROM AN ASSEMBLED USED OR BLOWN FUSE.

V. WHEN ASSEMBLING END FITTINGS TO THE FUSE BARREL, MAKE SURE NOT TO OVER TIGHTEN BOLTS. FINGER TIGHTEN AND HALF A TURN WITH A WRENCH WILL SUFFICE.

VI. USE ON 2.4KV - 12KV.

(VII) CROSSARM MOUNTING BRACKETS ARE INCLUDED WITH THE MATERIALS SUPPLIED BY THE OH DESIGN UNITS (USED ON DESIGN BY LOCATION JOBS). BRACKETS MUST BE ORDERED SEPARATELY ON MANUALLY PREPARED FIELD MEMO JOBS. (b)

a. DOUBLE CUTOUT & ARRESTER = S165454 (X)

b. CUTOUT OR ARRESTER = S165452 (X)

(X) THIS ITEM IS EXEMPT.

REFERENCE:

(a) SEE OH1207UG4307.

(b) SEE OH397.

(c) SEE OH1208.

© 1998 - 2021 San Diego Gas & Electric Company. All rights reserved. Removal of this copyright notice without permission is not permitted under law.

REV	CHANGE	DR	BY	DSN	APV	DATE	REV	CHANGE	DR	BY	DSN	APV	DATE
C	DRAWING UPDATE	-	RSL	JES	CZH	03/09/2020	F						
B	DRAWING UPDATE	-	JCE	JS	CZJ	03/18/2019	E	EDITORIAL CHANGES	EDM	CWB	JES	CZH	09/30/2021
A	ORGINAL ISSUE	-	GW	JS	MDJ	04/01/2018	D	FORMATTING	EDM	JIK	-	-	09/28/2020

X Indicates Latest Revision | Completely Revised | New Page | Information Removed

SDG&E ELECTRIC OVERHEAD AND UNDERGROUND CONSTRUCTION STANDARDS

CUTOUT ASSEMBLY
SMD20

OH1212.2
UG4305.2

TABLE OF CONTENTS

SCOPE: THIS STANDARD SHOWS THE POLYMER INTERCHANGEABLE CUTOUT BODY.

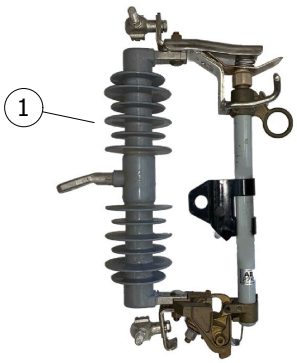

FIGURE 1
POLYMER INTERCHANGEABLE CUTOUT
WITH FUSE AND FIREFLY

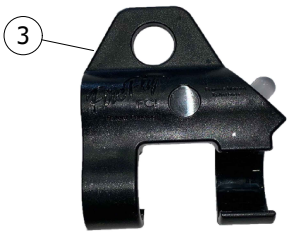

FIGURE 2
FIREFLY

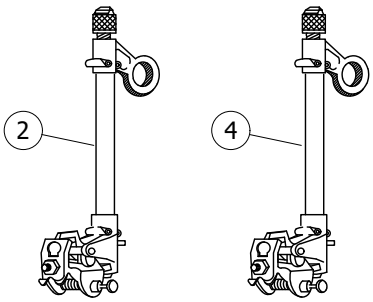

FIGURE 3
FUSEHOLDERS

INSTALLATION: NONE

BILL OF MATERIALS:

ITEM	DESCRIPTION	CURRENT RANGE	QUANTITY	STANDARD PAGE	STOCK NUMBER	DESIGN UNITS
1	CUTOUT BODY, INTERCHANGEABLE WITHOUT FUSEHOLDER (IV)	0-300A	--	--	S298024 (VI)	NPCO-1
			--	--	S298020 (VI)	NPCO
			--	--	S298026 (VII)	
2	FUSEHOLDER, 100A, WITH SOLID CAP AND ARC SHORTENING ROD, FOR USE IN CUTOUT BODY ITEM #4 (II) (III)	FUSE 5 THRU 100A	--	--	S413394	X100FH
3	FIREFLY FOR 100A QA FUSE DOORS (II) (III)		--	--	S423606	
4	FUSEHOLDER, 200A, WITH SOLID CAP, FOR USE IN CUTOUT BODY ITEM #4 (c)	FUSE 125 THRU 200A	--	--	S413396	X200FH

NOTES:

I. TO BE USED ONLY IN TIER 1 AREAS.

(II) ITEMS 2, 3 AND 4 ARE INTERCHANGEABLE WITH CUTOUT BODY ITEM 1 REGARDLESS OF MANUFACTURER.

(III) CUTOUTS SHALL BE BONDED IF INSTALLED IN CONTAMINATION DISTRICT 1. (d)

(IV) CROSSARM MOUNTING BRACKETS ARE INCLUDED WITH THE MATERIALS SUPPLIED BY THE OH DESIGN UNITS (USED ON DESIGN BY LOCATION JOBS). BRACKETS MUST BE ORDERED SEPARATELY ON MANUALLY PREPARED FIELD MEMO JOBS. (a)

a. DOUBLE CUTOUT & ARRESTER MTG BKT = S165454 (X)

b. CUTOUT OR ARRESTER MTG BKT = S165452 (X)

V. USE ON 2.4 - 12KV.

(VI) FOR USE IN INLAND AREAS ONLY.

(VII) REQUIRED FOR COASTAL DISTRICTS; PERMITTED IN INLAND AREA.

(X) THIS ITEM IS EXEMPT.

REFERENCE:

(a) SEE OH397.

b. SEE OH1207UG4307 FOR FUSES.

(c) SEE OH1208.

(d) SEE OH287UG3140.

© 1998 - 2021 San Diego Gas & Electric Company. All rights reserved. Removal of this copyright notice without permission is not permitted under law.

REV	CHANGE	DR	BY	DSN	APV	DATE	REV	CHANGE	DR	BY	DSN	APV	DATE
C	DRAWING UPDATE	-	RSL	JES	CZH	03/09/2020	F						
B	DRAWING UPDATE	-	JCE	JS	CZJ	03/18/2019	E	EDITORIAL CHANGES	EDM	CWB	JES	CZH	09/30/2021
A	ORGINAL ISSUE	-	GW	JS	MDJ	04/01/2018	D	FORMATTING	EDM	JIK	-	-	09/28/2020

X Indicates Latest Revision | Completely Revised | New Page | Information Removed

SDG&E ELECTRIC OVERHEAD AND UNDERGROUND CONSTRUCTION STANDARDS

CUTOUT ASSEMBLY
POLYMER INTERCHANGEABLE

OH1212.3
UG4305.3

TABLE OF CONTENTS

SCOPE: THIS STANDARD SHOWS THE INSTALLATION OF PRIMARY IN-LINE HOOKSTICK DISCONNECTS, DEADEND CLAM CONNECTED.

ATTENTION:

* THIS IS A PREFERRED METHOD FOR EXISTING PIN AND INSULATOR CONSTRUCTION.

** THESE SWITCHES CAN BE INSTALLED ON #4-4/0 COPPER AND #4-636 ALUMINUM CONDUCTOR.

CAUTION:

* DISCONNECT SWITCH SHALL NOT BE INSTALLED IN APPLICATIONS WHERE SWITCH IS NORMALLY CLOSED, IN TIER 2 & TIER 3, UNLESS IT IS LOCATED IN AN AREA OF NO FIRE RISK.

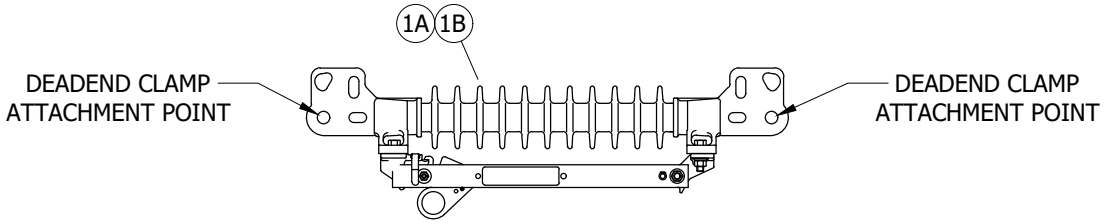

FIGURE 1
600A/900A SWITCH

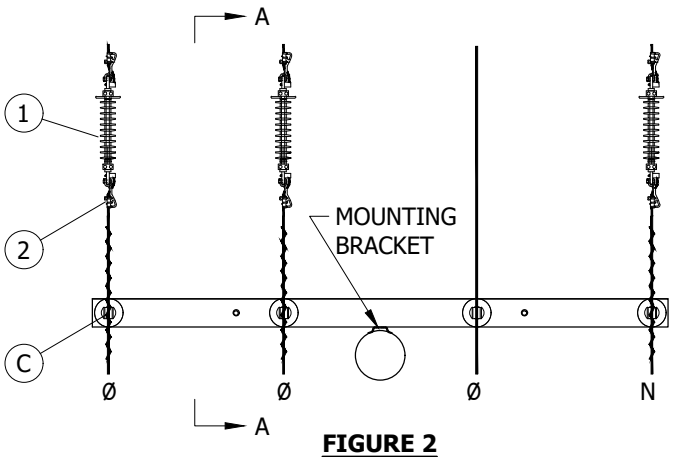

FIGURE 2
TANGENT CONSTRUCTION
PLAN VIEW

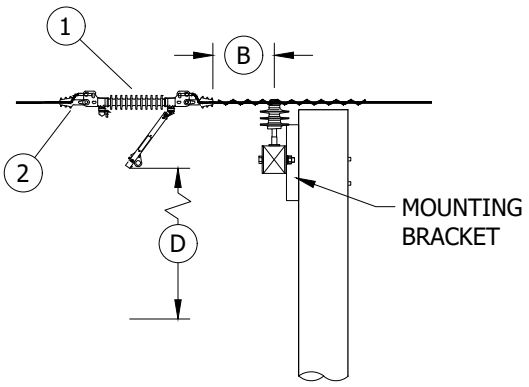

FIGURE 2
TANGENT CONSTRUCTION
VIEW A-A

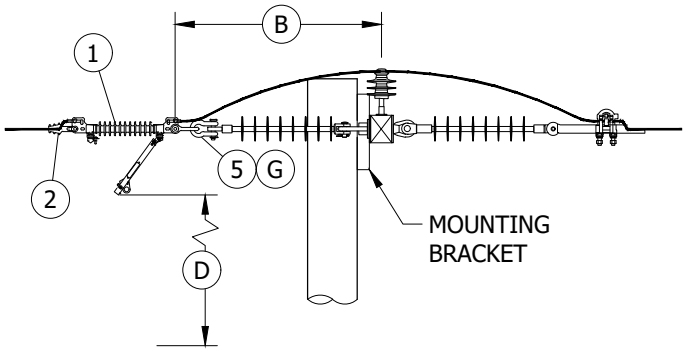

FIGURE 3
DEADEND CONSTRUCTION
SINGLE CROSSARM

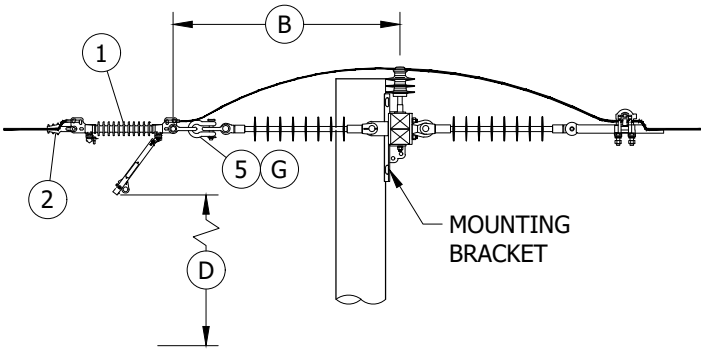

FIGURE 4
DEADEND CONSTRUCTION
DOUBLE STACK CROSSARM

© 1998 - 2022 San Diego Gas & Electric Company. All rights reserved. Removal of this copyright notice without permission is not permitted under law.

REV	CHANGE	DR	BY	DSN	APV	DATE	REV	CHANGE	DR	BY	DSN	APV	DATE
C	DRAWING UPDATE	EDM	RSL	JES	CZH	08/13/2021	F						
B	EDITORIAL CHANGES	-	GW	JS	MDJ	03/01/2018	E						
A	DRAWING UPDATE	-	SL	JS	MDJ	10/25/2016	D	FIGURE UPDATE	EDM	MRF	GLW	KRG	08/12/2022

X Indicates Latest Revision | Completely Revised | New Page | Information Removed

SDG&E ELECTRIC OVERHEAD CONSTRUCTION STANDARDS

IN-LINE DISCONNECT SWITCHES
DEADEND CLAMP CONNECTED - 12KV AND BELOW

OH1218.1

TABLE OF CONTENTS

INSTALLATION:

(A) SELECT DEADEND CLAMP TO MATCH WIRE SIZE AND TYPE.

(B) WHEN INSTALLING, POSITION SWITCH ON CONDUCTOR 18 INCHES FROM INSULATOR PIN TO DEADEND CLAMP.

(C) IF TIE WIRE EXISTING, REPLACE WITH PREFORMED TIE. DO NOT REPLACE EXISTING CLAMP-TOP INSULATOR.

(D) 4-FOOT MINIMUM CLEARANCE TO NEAREST CONDUCTOR BELOW WHEN SWITCH IS OPEN. WHERE CONSTRUCTION IS REQUIRED BELOW SWITCH, IT SHALL NOT INTERFERE WITH OPERATION OF ANY SWITCH FROM THE POLE.

(E) THE PREFERRED CHOICE FOR INSTALLATION IN ALL DISTRICTS

(F) THIS IS THE BACK-UP CHOICE. ONLY INSTALL THIS SWITCH WHEN S706674 IS NOT AVAILABLE.

(G) BRUSH WIRE, INSTALL PENETROX "INHIBITOR" AND BELLEVILLE WASHER WITH TL LUGS. WHEN USING TAP LUGS TWO ARE REQUIRED PER CONNECTION.

BILL OF MATERIALS:

ITEM		DESCRIPTION	QUANTITY	STANDARD PAGE	STOCK NUMBER	DESIGN UNITS
1	A	SWITCH, DISCONNECT, IN-LINE, 900A	3	--	S706674 (E)	PI900
	B	SWITCH, DISCONNECT, IN-LINE, 600A	3	--	S707020 (F)	ILDSW
2		CLAMP, STRAIGHT LINE, DEADEND (A)	6	739	--	--
3		COMPRESSION TERMINAL (SIZE AS REQ'D)	AS REQ'D	784	--	--
4		CONNECTOR, TAP LUG, 1/0 TO 500MCM CU TAP LUG -BRONZE (OPTION)	AS REQ'D	--	S471232	TL1/0
5		SHACKLE, ANCHOR, HOT DIP GALV., 15,000 LBS WORKING LOAD	AS REQ'D	739	S636432	30KHK

NOTES:

I. STANDARD BLADE OPENING IS 90 DEGREES. FOR ADDITIONAL CLEARANCE, REMOVE BLADE STOP PIN TO ALLOW BLADE OPENING OF 180 DEGREES.

REFERENCE: NONE

TABLE OF CONTENTS

© 1998 - 2022 San Diego Gas & Electric Company. All rights reserved. Removal of this copyright notice without permission is not permitted under law.

REV	CHANGE	DR	BY	DSN	APV	DATE	REV	CHANGE	DR	BY	DSN	APV	DATE
C	DRAWING UPDATE	EDM	RSL	JES	CZH	08/13/2021	F						
B	EDITORIAL CHANGES	-	GW	JS	MDJ	03/01/2018	E						
A	DRAWING UPDATE	-	SL	JS	MDJ	10/25/2016	D	FIGURE UPDATE	EDM	MRF	GLW	KRG	08/12/2022

SCOPE: THIS STANDARD SHOWS VARIOUS METHODS OF INSTALLING CROSSARM MOUNTED DISCONNECT SWITCHES, 12KV AND BELOW.

ATTENTION:

* FIGURE 1, 2, AND 3 CONFIGURATIONS MAY BE USED FOR 600A OR 1200A DISCONNECT SWITCHES.

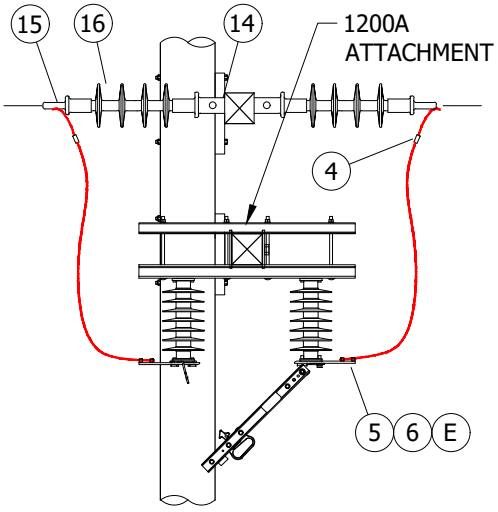

SIDE VIEW

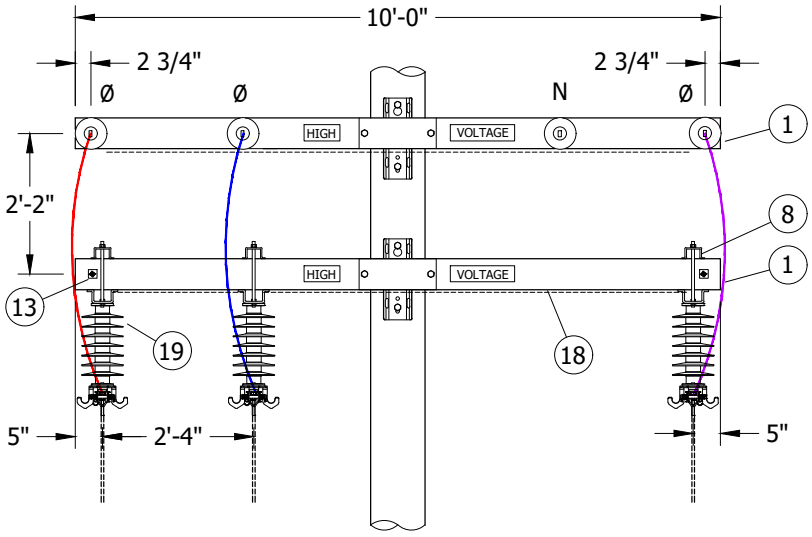

FRONT VIEW

FIGURE 1
CONFIGURATION A
EXISTING CONSTRUCTION WITH NEUTRAL
ON INSIDE PIN/DEADEND POSITION

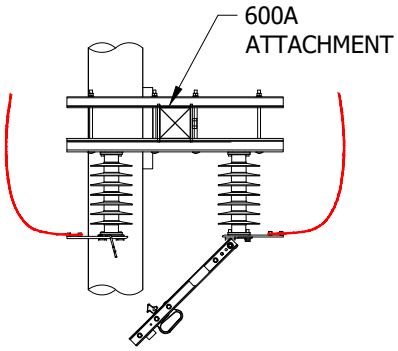

SIDE VIEW

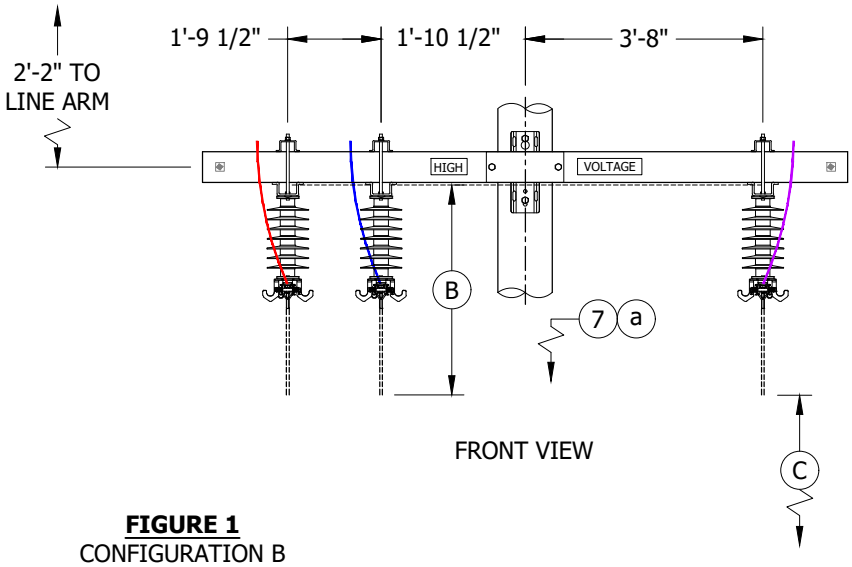

FRONT VIEW

FIGURE 1
CONFIGURATION B
EXISTING CONSTRUCTION WITH NEUTRAL
ON INSIDE PIN/DEADEND POSITION

© 1998 - 2023 San Diego Gas & Electric Company. All rights reserved. Removal of this copyright notice without permission is not permitted under law.

REV	CHANGE	DR	BY	DSN	APV	DATE	REV	CHANGE	DR	BY	DSN	APV	DATE
C	TABLE UPDATE	EDM	DEC	JES	CZH	08/25/2021	F						
B	EDITORIAL CHANGES	-	DEC	JES	CZH	04/15/2019	E	BILL OF MATERIALS UPDATE	GLC	RSL	MRF	KRG	05/10/2023
A	REVISION	-	-	PIA	CAK	01/01/1998	D	DRAWING UPDATE	EDM	MRF	GLW	KRG	11/04/2022

TABLE OF CONTENTS

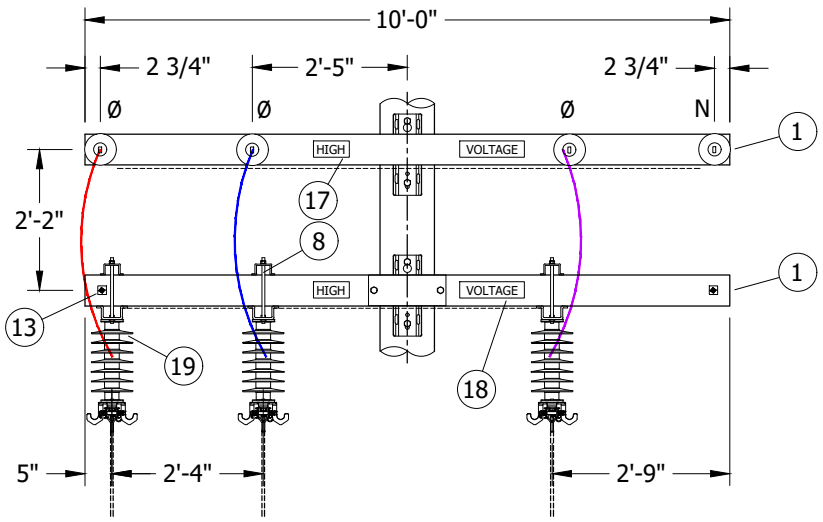

FIGURE 2
CONFIGURATION A
NEW CONSTRUCTION AND EXISTING WITH
NEUTRAL ON OUTSIDE PIN/DEADEND POSITION

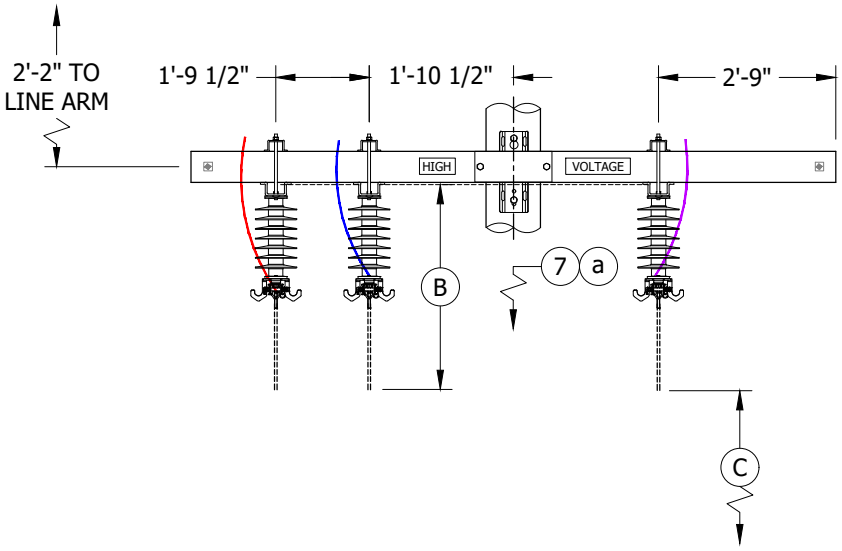

FIGURE 2
CONFIGURATION B
NEW CONSTRUCTION AND EXISTING WITH NEUTRAL
ON OUTSIDE PIN/DEADEND POSITION

© 1998 - 2023 San Diego Gas & Electric Company. All rights reserved. Removal of this copyright notice without permission is not permitted under law.

REV	CHANGE	DR	BY	DSN	APV	DATE	REV	CHANGE	DR	BY	DSN	APV	DATE
C	TABLE UPDATE	EDM	DEC	JES	CZH	08/25/2021	F						
B	EDITORIAL CHANGES	-	DEC	JES	CZH	04/15/2019	E	BILL OF MATERIALS UPDATE	GLC	RSL	MRF	KRG	05/10/2023
A	REVISION	-	-	PIA	CAK	01/01/1998	D	DRAWING UPDATE	EDM	MRF	GLW	KRG	11/04/2022

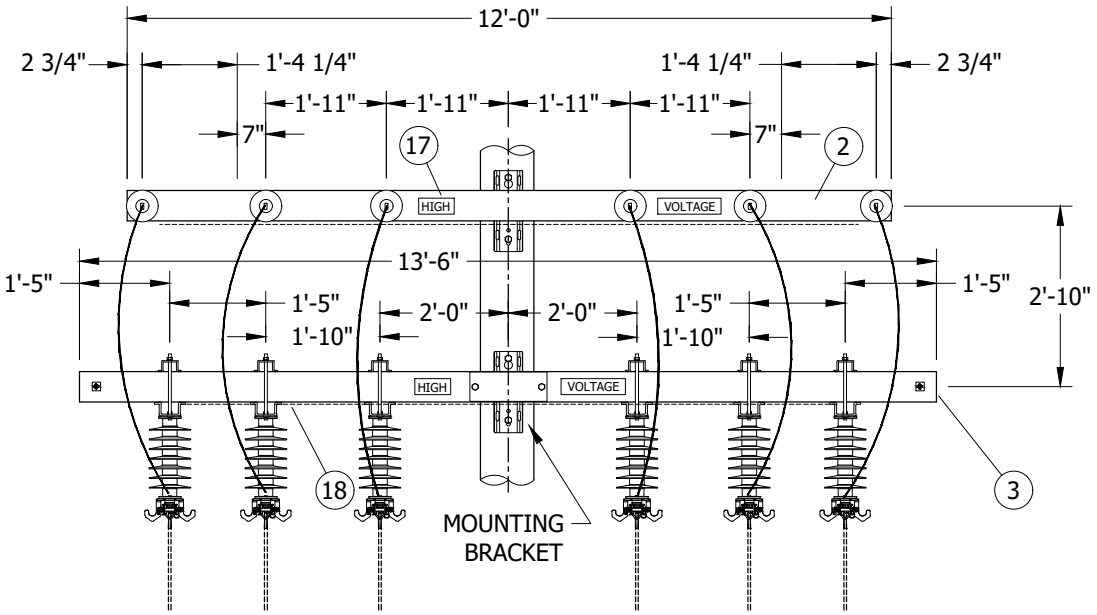

FIGURE 3
CONFIGURATION A

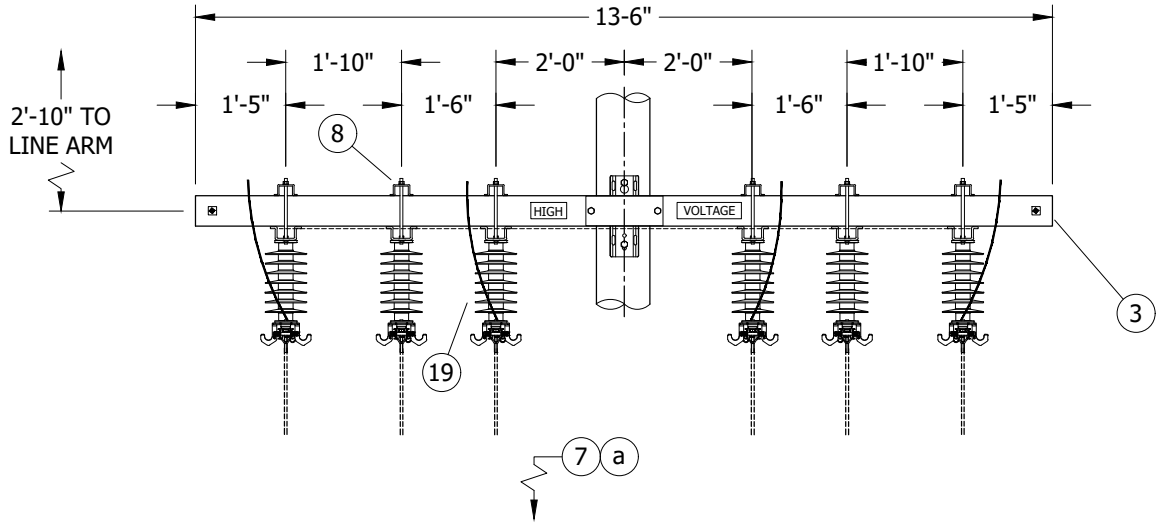

FIGURE 3
CONFIGURATION B

© 1998 - 2023 San Diego Gas & Electric Company. All rights reserved. Removal of this copyright notice without permission is not permitted under law.

REV	CHANGE	DR	BY	DSN	APV	DATE	REV	CHANGE	DR	BY	DSN	APV	DATE
C	TABLE UPDATE	EDM	DEC	JES	CZH	08/25/2021	F						
B	EDITORIAL CHANGES	-	DEC	JES	CZH	04/15/2019	E	BILL OF MATERIALS UPDATE	GLC	RSL	MRF	KRG	05/10/2023
A	REVISION	-	-	PIA	CAK	01/01/1998	D	DRAWING UPDATE	EDM	MRF	GLW	KRG	11/04/2022

X Indicates Latest Revision | Completely Revised | New Page | Information Removed

SDG&E ELECTRIC OVERHEAD CONSTRUCTION STANDARDS

CROSSARM MOUNTED DISCONNECT SWITCHES 12KV AND BELOW

OH1222.3

TABLE OF CONTENTS

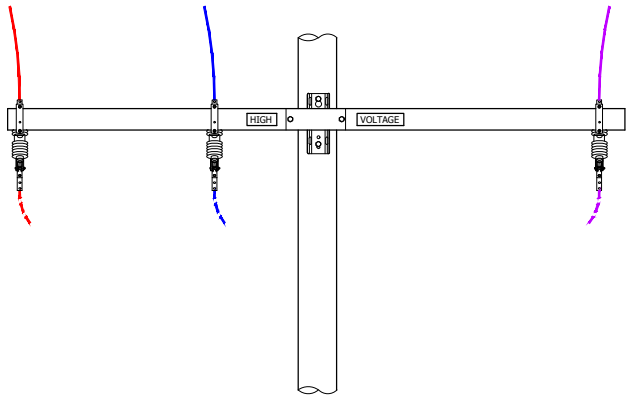

FIGURE 4
ARM DISCONNECT
FRONT VIEW

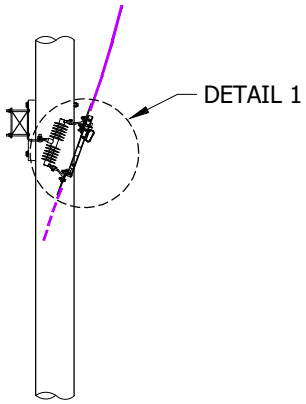

FIGURE 4
ARM DISCONNECT
SIDE VIEW

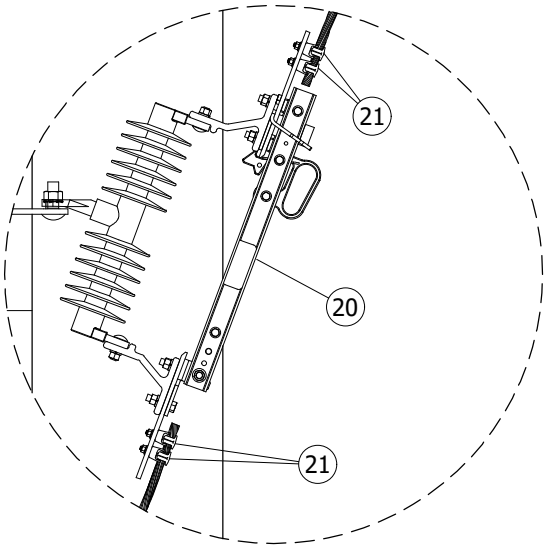

DETAIL 1

INSTALLATION:

(A) WHEN USING OTHER THAN KEARNEY DISCONNECT SWITCH, QUANTITIES OF ITEMS 8 ARE SUBJECT TO CHANGE.

(B) TOTAL LENGTH OF SWITCH WHEN OPEN - 1200A KEARNEY 36", 600A KEARNEY 27", 600A S & C 33".

(C) 4'-0" MINIMUM CLEARANCE TO NEAREST CROSSARM OR CONDUCTOR AND 6'-0" TO NEAREST RACK WHEN SWITCH IS OPEN. WHERE CONSTRUCTION IS REQUIRED BELOW SWITCH ARM, IT SHALL NOT INTERFERE WITH OPERATION OF ANY SWITCH FROM THE POLE.

D. IF SWITCHES ARE ADDED TO EXISTING CONSTRUCTION WITH A 10'-0" LINEARM AND 5'-0" CROSSARM ANGLE BRACE, DO NOT CHANGE ANGLE BRACE TO 4'-0". ENSURE THAT 1 1/2" HARDWARE CLEARANCE IS MAINTAINED.

(E) WHEN ATTACHING 1/0 AND 4/0 COPPER CONDUCTORS TO A DISCONNECT SWITCH, USE A BRONZE CABLE TAP LUG, STOCK NUMBER S471296. IF EXCESSIVE VIBRATION OR WHIPPING COULD OCCUR, USE TWO LUGS IN SERIES.

© 1998 - 2023 San Diego Gas & Electric Company. All rights reserved. Removal of this copyright notice without permission is not permitted under law.

REV	CHANGE	DR	BY	DSN	APV	DATE	REV	CHANGE	DR	BY	DSN	APV	DATE
C	TABLE UPDATE	EDM	DEC	JES	CZH	08/25/2021	F						
B	EDITORIAL CHANGES	-	DEC	JES	CZH	04/15/2019	E	BILL OF MATERIALS UPDATE	GLC	RSL	MRF	KRG	05/10/2023
A	REVISION	-	-	PIA	CAK	01/01/1998	D	DRAWING UPDATE	EDM	MRF	GLW	KRG	11/04/2022

X Indicates Latest Revision | Completely Revised | New Page | Information Removed

TABLE OF CONTENTS

BILL OF MATERIALS:

ITEM	DESCRIPTION	QUANTITY								STANDARD PAGE	STOCK NUMBER	DESIGN UNITS
		FIG. 1				FIG. 2						
		600A CONFIG		1200A CONFIG		600A CONFIG		1200A CONFIG				
		A	B	A	B	A	B	A	B			
1	CROSSARM, 3 3/4" X 5 3/4" X 10'-0"	4	4	4	4	--	--	--	--	--	S294128	4-
2	CROSSARM, 3 3/4" X 5 3/4" X 12'-0"	--	--	--	--	2	2	2	2	--	S294160	6-
3	CROSSARM, 3 3/4" X 5 3/4" X 13'-6"	--	--	--	--	2	2	2	2	--	S294368	--
4	CONNECTOR, WIRE COMPRESSION (SIZE AS REQUIRED)	AS REQ'D				AS REQ'D				783-786	--	--
5	PLATE, SECONDARY EXTENSION, & 2 1/2" X 1 1/2" STAINLESS STEEL BOLTS FOR USE IN CONNECTING COMPRESSION TERMINAL TO 1200A DISCONNECT	--	--	6	6	--	--	12	12	--	S542372	--
		--	--	--	--	--	--	--	--	--	S148674 (X)	--
6	TERMINAL, COMPRESSION, COPPER OR ALUMINUM (SIZE AS REQ'D) (E)	6	6	6	6	12	12	12	12	--	--	--
7	SWITCH TAGS, REFLECTIVE	2	2	2	2	4	4	4	4	208	--	--
8	BOLT, MACH, GALV., 1/2" X 9", 1 ROUND & 1 DOUBLE COIL SPRING WASHER (A)	3	1	12	4	2	4	8	16	390	--	--
9	BOLT, MACH, GALV., 5/8" X (LENGTH AS REQ'D), & 1 DOUBLE COIL SPRING WASHER	1	1	1	1	1	1	1	1	390	--	--
10	BOLT, MACH, GALV., 5/8" X (LENGTH AS REQ'D), 2 SQUARE FLAT & 1 DOUBLE COIL SPRING WASHER	2	2	2	2	2	2	2	2	390	--	--
11	BOLT, MACH, GALV., 1/2" X 6", 1 ROUND & 1 DOUBLE COIL SPRING WASHER	4	4	4	4	4	4	4	4	390	--	--
12	BOLT, MACH, GALV., 3/8" X 6", 1 ROUND & 1 DOUBLE COIL SPRING WASHER	4	4	4	4	4	4	4	4	390	--	--
13	BOLT, SPACE, 5/8" X (LENGTH AS REQ'D), 4 SQUARE 2 ROUND, 2 DOUBLE COIL SPRING WASHERS & 1 NUT	5	5	5	5	8	8	8	8	390	--	--
14	CLEVIS, DEADEND, 5/8" BOLT STEEL	6	6	6	6	12	12	12	12	--	S235712	--
15	CLAMP, STRAIGHT STRAIN, D.E.	6	6	6	6	12	12	12	12	741-743	--	--
16	INSULATOR, SUSPENSION	12	12	12	12	24	24	24	24	--	S431648	1DE
17	SIGN, HIGH VOLTAGE	2	2	2	2	2	2	2	2	--	S647650	HV
18	WIRE, #8, BARE SOLID ANNEALED COPPER FT.	22	22	22	22	30	30	30	30	--	S812928	BOND8
	WIRE, #8, BARE SOLID ANNEALED COPPER LBS.	1.5	1.5	1.5	1.5	1.5	1.5	1.5	1.5	--	--	--
19	SWITCH, DISCONNECT, UNDERARM, 27KV, 900A (I)	3	3	--	--	6	6	--	--	--	S706680 (II)	D900UA
										--	S706682 (III)	E900UA
										--	S706684	MGUA900A
20	SWITCH, DISCONNECT, 27KV, 900A	AS REQ'D								--	S706670 (II)	PS900
										--	S707004 (III)	P900D
	BRACKET, MOUNTING, CUTOUT									397	S166070	CO/B
21	CONNECTOR, TAP LUG, BRONZE, 1/0 TO 500MCM CU	AS REQ'D								--	S471232	TL1/0

TABLE OF CONTENTS

NOTES:

(I) SWITCH, DISCONNECT, 14.4KV, 600A (S707008, DU D600) MOVED TO FMO.

(II) REQUIRED IN CONTAMINATION DISTRICT 1 AND PREFERRED IN COASTAL DISTRICTS (OC, NC, BC, CM). (b)

(III) PREFERRED FOR INLAND DISTRICTS (NE, RA, EA, ME).

(X) THIS ITEM IS EXEMPT.

REFERENCE:

(a) REFLECTOR STRIPS ARE REQUIRED ON ALL SECTIONALIZING/TIELINE SWITCHES AND SERVICE RESTORERS.

(b) FOR CONTAMINATION DISTRICTS, SEE OH287.

© 1998 - 2023 San Diego Gas & Electric Company. All rights reserved. Removal of this copyright notice without permission is not permitted under law.

REV	CHANGE	DR	BY	DSN	APV	DATE	REV	CHANGE	DR	BY	DSN	APV	DATE
C	TABLE UPDATE	EDM	DEC	JES	CZH	08/25/2021	F						
B	EDITORIAL CHANGES	-	DEC	JES	CZH	04/15/2019	E	BILL OF MATERIALS UPDATE	GLC	RSL	MRF	KRG	05/10/2023
A	REVISION	-	-	PIA	CAK	01/01/1998	D	DRAWING UPDATE	EDM	MRF	GLW	KRG	11/04/2022

SCOPE: THIS STANDARD SHOWS A HORIZONTAL BREAK GANG OPERATED POLE TOP 600AMP UNDER ARM SWITCH FROM CIRCUIT TIES OR SECTIONALIZING PURPOSES.

ATTENTION:

* SDG&E VEHICLE ACCESS REQUIRED.

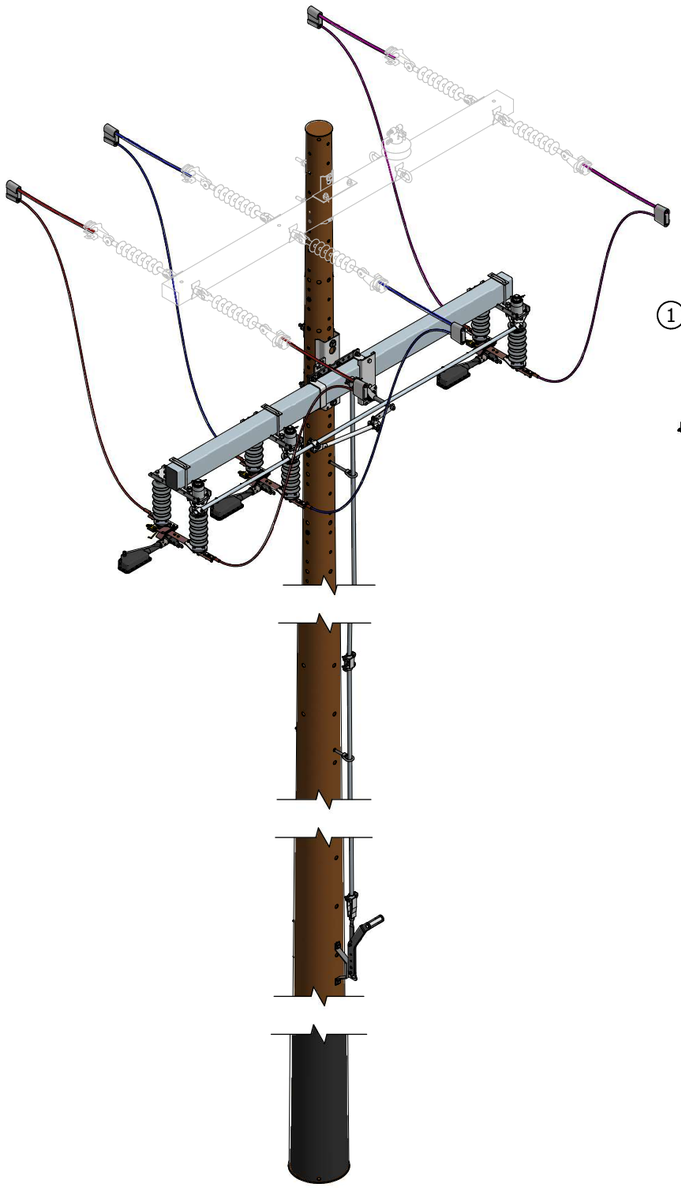

FIGURE 1
ISOMETRIC

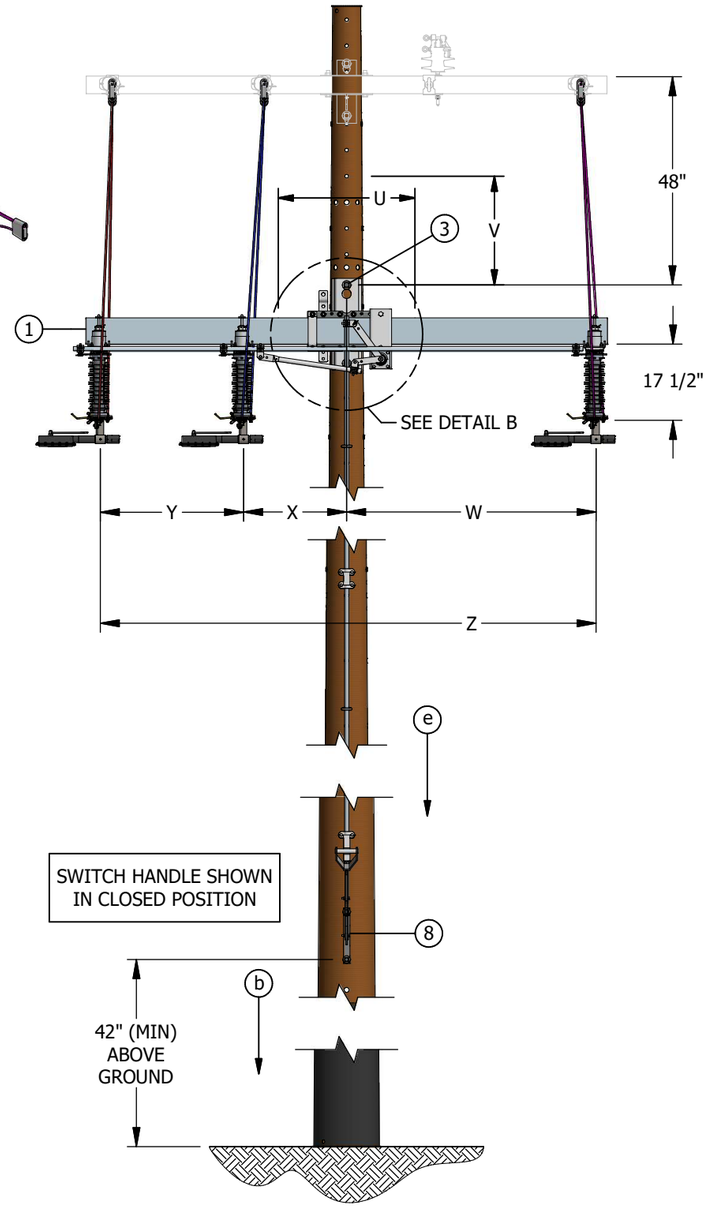

FIGURE 1
FRONT VIEW

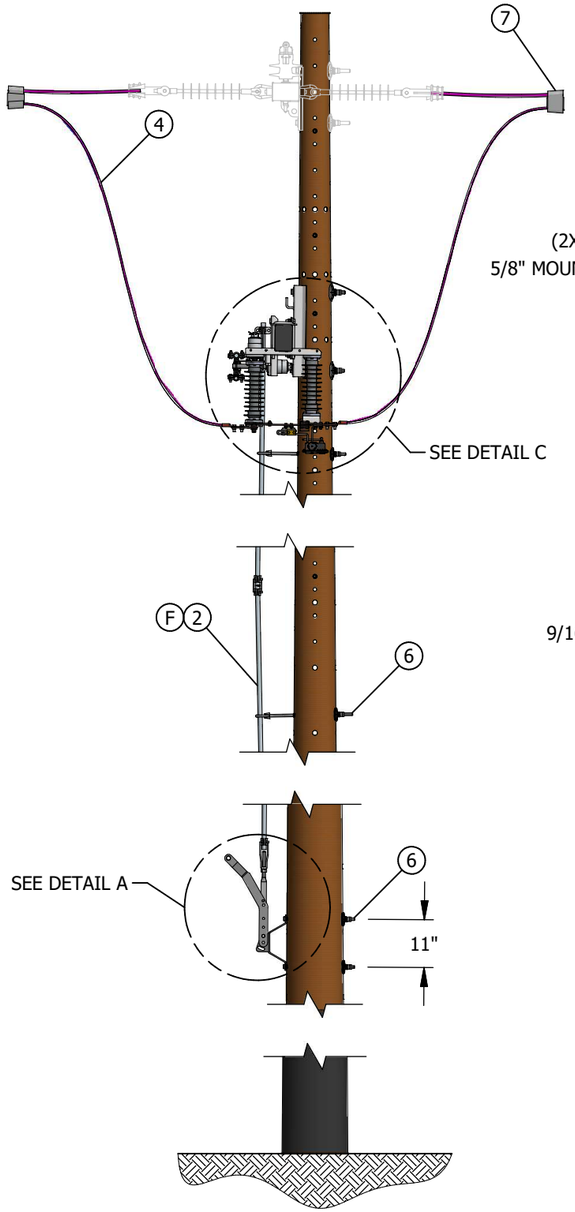

FIGURE 1
SIDE VIEW

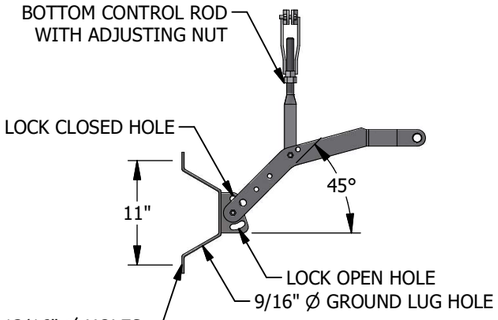

DETAIL A
CONTROL HANDLE
POSITION OF HANDLE FOR
CONTROL ROD COMPRESSION

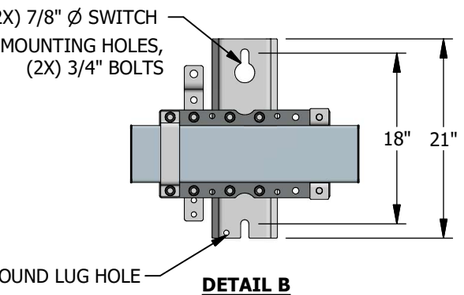

DETAIL B
MOUNTING PLATE

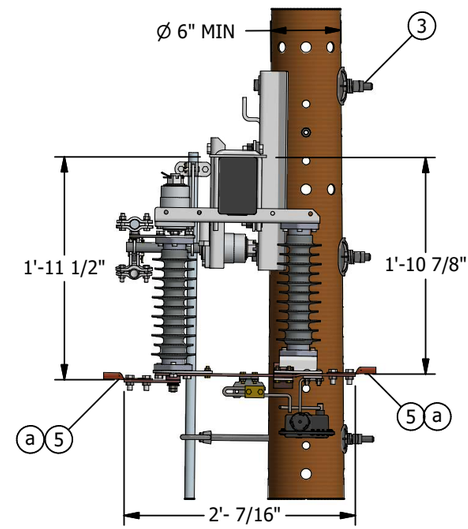

DETAIL C
SIDE VIEW

REV	CHANGE	DRWN	BY	CHKD	APVD	DATE
H	REVISE TO 3D FORMAT	DV	JIK	-	-	03/03/2023
G	EDITORIAL CHANGES	EDM	JIK	JES	CZH	12/06/2021
F	INSTALLATION UPDATE	EDM	JAC	JES	CZH	12/10/2020

SDG&E ELECTRIC OVERHEAD CONSTRUCTION STANDARDS

INERTIA GANG SWITCH, 12KV
UNDERARM LOADBREAK TYPE, SINGLE CIRCUIT
UNDERARM HORIZONTAL CONFIGURATION

SCALE: NOT TO SCALE

DRAWING NO: OH1231.1

SHEET: 1 OF 2

© 1998 - 2023 San Diego Gas and Electric Company. All rights reserved. Removal of this copyright notice without permission is not permitted under law.

X Indicates Latest Revision | Completely Revised | New Page | Information Removed

TABLE OF CONTENTS

TABLE OF CONTENTS

TABLE 1:

POLE TOP SWITCHES									
TYPE	WEIGHT	Z (FT)	Y (IN)	X (IN)	W (IN)	V (IN)	U (IN)	DESIGN UNIT	STOCK NUMBER
CENTER PH. LEFT	240 LBS.	10	33	24	57	28 5/8	31 1/2	GS10L	S709270
CENTER PH. RIGHT	240 LBS.	10	33	24	57	28 5/8	31 1/2	GS10R	S709268
CENTER PH. LEFT	250 LBS.	12	33	36	69	28 5/8	31 1/2	GS12L	S709274
CENTER PH. RIGHT	250 LBS.	12	33	36	69	28 5/8	31 1/2	GS12R	S709272
CENTER PH. LEFT	265 LBS.	15	33	45	87	28 5/8	31 1/2	GS15L	S709278
CENTER PH. RIGHT	265 LBS.	15	33	54	87	28 5/8	31 1/2	GS15R	S709276

INSTALLATION:

RECIPROCATING CONTROL ROD SWITCH INSTALLATION:

A. THE SWITCH IS SUPPLIED WITH THE CONTACTS TIED IN THE CLOSED POSITION. DO NOT CUT THESE TIES UNTIL THE SWITCH AND CONTROL ROD INSTALLATION IS COMPLETE.

B. V BRACES REQUIRED FOR NEW CONSTRUCTION.

C. VERIFY THE POLE QUADRANT WHERE THE CONTROL ROD WILL BE INSTALLED.

D. THE OPERATING HANDLE SHOULD BE LOCATED 40"-50" FROM GROUND GRADE, OR AT ANY INCREASED ELEVATION.

E. DRILL 13/16" SWITCH MOUNTING HOLES ACCORDING TO THE DIMENSION GIVEN ON THE CONSTRUCTION DRAWING. INSTALL SWITCH WITH 3/4" BOLTS AND SHEAR PLATES AS REQUIRED BY CONSTRUCTION STANDARDS.

(F) INSTALL CONTROL ROD, WORKING FROM THE SWITCH DOWN TO THE OPERATING HANDLE. INSTALL CONTROL ROD GUIDES AS SHOWN ON THE CONSTRUCTION DRAWING. CONTROL HANDLE LOCATION MAY BE TURNED 90 DEGREES EITHER DIRECTION TO ACCOMMODATE FIELD CONDITIONS. MAKE CERTAIN THAT THE SWITCH IS IN THE CLOSED POSITION PRIOR TO DRILLING HOLES FOR THE CONTROL ROD GUIDES. SWING ARM STYLE GUIDES SHOULD POINT UPWARDS AT 45 DEGREES WHEN THE SWITCH IS CLOSED. CHECK THAT 17" MINIMUM SPACE IS AVAILABLE ABOVE EYEBOLT GUIDES FOR CONTROL ROD SPLICES WHEN EYE BOLT TYPE GUIDES ARE USED (1" FIBERGLASS AND 3/4" PIPE ONLY).

G. DRILL CONTROL HANDLE MOUNTING BOLT HOLES AT THE DESIRED LOCATION (48" MINIMUM HEIGHT) ATTACH THE MANUAL OPERATING HANDLE ADJUSTING SCREW CLAMP, OR FITTING TO THE CONTROL ROD SECTION. PUT THE HANDLE IN THE "UP" POSITION. CONNECT THE CONTROL HANDLE ADJUSTING SCREW CLAMP OR FITTING TO THE CONTROL ROD. A COMPRESSIVE LOAD (20-30 LBS.) SHOULD BE FELT ON THE CONTROL AS THE CONTROL MOVES TO THE FULLY CLOSED/LOCKED POSITION. USE THE ADJUSTING SCREW TO ACHIEVE THE PROPER COMPRESSION LOAD.

H. CHECK ALL BOLTS TO ENSURE THAT THEY HAVE BEEN ADEQUATELY TORQUED.

J. CUT THE TIE WIRES ON THE SWITCH CONTACT BLADES.

K. OPERATE THE SWITCH TO OPEN. VERIFY THAT THE PADLOCKING HOLES ON THE HANDLE AND THE HANDLE BASE ALIGN.

L. CLOSE THE SWITCH AND CHECK FOR COMPRESSION IN THE CONTROL ROD.

ADJUSTING THE CONTROL ROD COMPRESSION:

1. PULL THE HANDLE DOWNWARD TO ABOUT 45° FROM THE VERTICAL CLOSED POSITION.
2. EXTEND THE ADJUSTING SCREW SO THAT THE SLACK IS REMOVED FROM THE CONTROL ROD AND THE HANDLE REQUIRES 20 TO 30 POUNDS OF FORCE TO MAKE IT "TOGGLE" TO THE FULLY CLOSED POSITION.
3. CHECK THAT THE CLOSE PADLOCK HOLE ON THE HANDLE AND THE HANDLE BASE ALIGN.
4. TIGHTEN THE ADJUSTING NUT LOCK-NUT.

M. OPERATE THE SWITCH SEVERAL TIMES USING A RAPID MOTION THROUGHOUT THE HANDLE ROTATION. SWING THE HANDLE DOWN TO REMOVE THE TOGGLE LOAD AND OPERATE THE SWITCH IN ONE SWIFT MOTION WHEN OPENING THE SWITCH. CLOSE THE SWITCH USING A CONTINUOUS MOTION.

N. VERIFY THAT THE SWITCH CONTACT BLADES ARE FULLY SEATED WHEN THE SWITCH IS CLOSED.

O. CHECK THE ARC-HORNS OR INTERRUPTERS ARE OPERATING PROPERLY. SEE THE APPROPRIATE INTERRUPTER INSTALLATION AND ADJUSTMENT INSTRUCTION SHEET INCLUDED IN THE SWITCH INSTALLATION DRAWING PACKAGE.

BILL OF MATERIALS:

ITEM	DESCRIPTION	QUANTITY	STANDARD PAGE	STOCK NUMBER	DESIGN UNIT
1	SWITCH, GANG OPERATED, 15 kV, 600 AMP WITH AMPRUMPTER, INCLUDING 30' OF CONTROL ROD	1	-	SEE TABLE 1	SEE TABLE 1
2	ADDITIONAL 10' CONTROL ROD WITH 2 EYE NUTS AND COUPLING	AS REQ'D	-	S602932	I-ROD
3	BOLT, MACHINE, 3/4", GALV W/ NUT	2	390	-	-
	WASHER, FLAT, ROUND, 3/4" X 2" OD, GALV	2	390	S800256	-
	WASHER, CURVED, RIB, 4" X 4" X 17/32", 13/16" HOLE, FOR 3/4" BOLT, GALV	2	390	S797760	-
	WASHER, 3/4", DOUBLE COIL SPRING, TYPE M-W, STEEL, TIN/ZINC COAT	2	390	S798496	-
4	WIRE, BARE STRAND OR POLY COVERED (SIZE AS REQUIRED)	AS REQ'D	711	-	-
5	TERMINAL, COMPRESSION LUG	6	784	-	-
6	BOLT, MACHINE, 5/8", GALV W/ NUT	AS REQ'D	390	-	-
	WASHER, FLAT, ROUND, 5/8" X 1 3/4" OD, GALV	AS REQ'D	390	S800320	-
	WASHER, CURVED, RIB, 3" X 3" X 5/16", 11/16" HOLE, FOR 5/8" BOLT, GALV	AS REQ'D	390	S797792	-
	WASHER, 5/8", DOUBLE COIL SPRING, TYPE M-W, STEEL, TIN/ZINC COAT	AS REQ'D	390	S798560	-
7	CONNECTOR, WEDGE (SIZE AS REQUIRED)	AS REQ'D	783-785	-	-
8	PADLOCK, SCHLAGE ELECTRIC SERIES	1	-	S514848	-

NOTES: NONE

REFERENCE:

(a) WHEN ATTACHING 1/0 AND LARGER COPPER JUMPERS, USE A COPPER COMPRESSION TERMINAL OH 784. NOTE: THE PROPER TORQUE VALUE FOR THIS CONNECTION IS 40 FT-POUNDS.

(b) FOR POLE STEPPING - SEE OH363

c. FOR FEEDER CIRCUIT SECTIONALIZING AND PROTECTION, SEE DM6111.

d. SWITCH OPERATING RODS MAY EXTEND ONE-HALF THEIR DIAMETER INTO THE CLIMBING SPACE (G.O. 95, 54.7-A3).

(e) FOR REFLECTOR STRIPS REQUIRED ON ALL SECTIONALIZING/TIELINE SWITCHES AND SERVICE RESTORER POLES, SEE OH208.

f. NEUTRALS SHALL BE SOLIDLY TIED TOGETHER AT ALL SWITCHES REGARDLESS WHETHER THEY ARE NORMALLY OPEN OR CLOSED. THIS INCLUDES TIE SWITCHES TO CIRCUITS EMANATING FROM DIFFERENT SUBSTATIONS, SEE DM6221, D.3.

g. FOR BONDING REQUIREMENTS, SEE OH1003.

h. BOND SWITCH HANDLE BRACKET FOR ALL INSTALLATIONS.

REV	CHANGE	DRWN	BY	CHKD	APVD	DATE
H	REVISE TO 3D FORMAT	DV	JIK	-	-	03/03/2023
G	EDITORIAL CHANGES	EDM	JIK	JES	CZH	12/06/2021
F	INSTALLATION UPDATE	EDM	JAC	JES	CZH	12/10/2020

© 1998 - 2023 San Diego Gas and Electric Company. All rights reserved. Removal of this copyright notice without permission is not permitted under law.

SDG&E ELECTRIC OVERHEAD CONSTRUCTION STANDARDS

INERTIA GANG SWITCH, 12KV
UNDERARM LOADBREAK TYPE, SINGLE CIRCUIT
UNDERARM HORIZONTAL CONFIGURATION

SCALE: NOT TO SCALE

DRAWING NO: OH1231.2

SHEET: 2 OF 2

X Indicates Latest Revision | Completely Revised | New Page | Information Removed

SCOPE: THIS STANDARD SHOWS THE INSTALLATION OF CUTOUTS USED TO SECTIONALIZE CIRCUITS ON TANGENT POSITION.

ATTENTION:

* USE THIS PAGE FOR NEW CONSTRUCTION AND WHEN ADDING SECTIONALIZING CUTOUTS TO EXISTING PIN AND INSULATOR CONSTRUCTION.

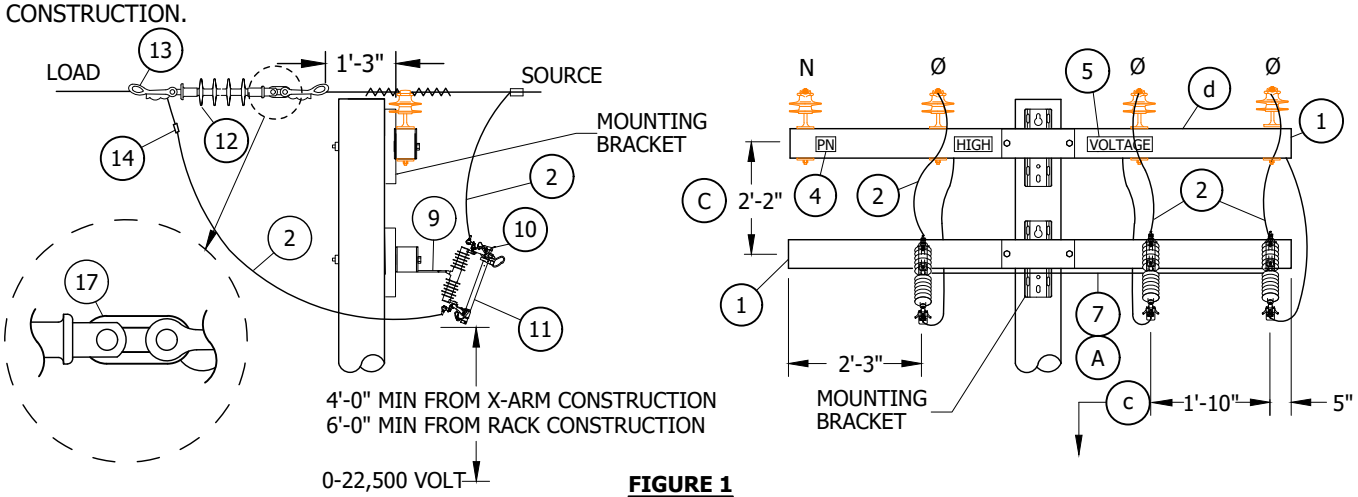

FIGURE 1

NEW CONSTRUCTION AND EXISTING WITH NEUTRAL ON OUTSIDE PIN/DEADEND POSITION

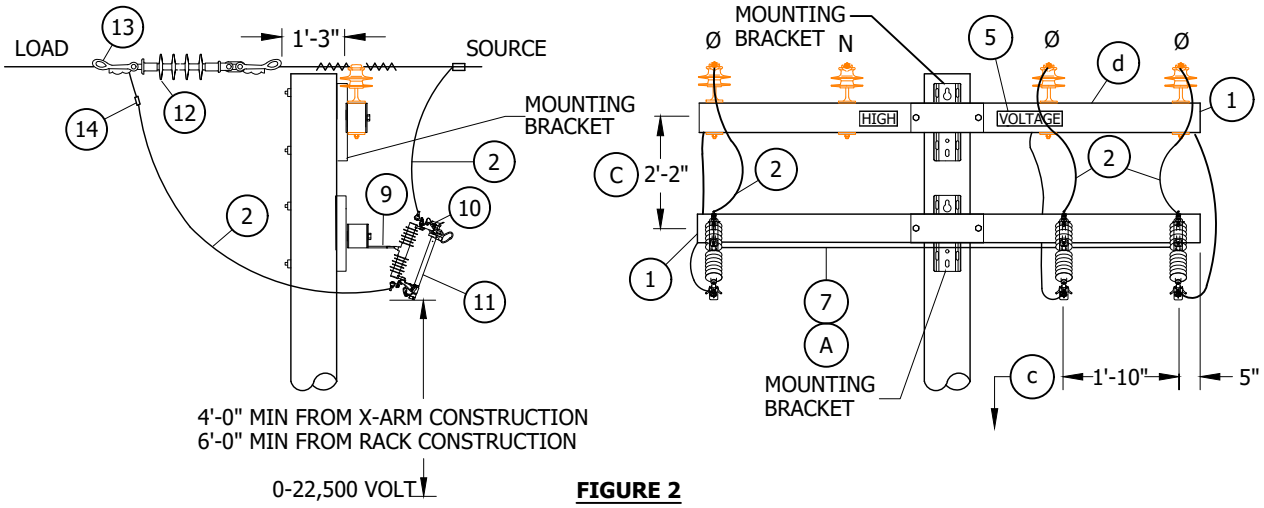

FIGURE 2

NEW CONSTRUCTION AND EXISTING WITH NEUTRAL ON INSIDE PIN/DEADEND POSITION

TABLE 1

OVERHEAD MACRO UNITS SECTIONALIZING CUTOUTS 12KV - TANGENT - PIN & INSULATOR			
PHASE	**AMPS**	**COA**	**MU ID**
2	100	10'	2X10D1
2	200	10'	2X10D2
2	300	10'	2X10D3
3	100	10'	3X10D1
3	200	10'	3X10D2
3	300	10'	3X10D3

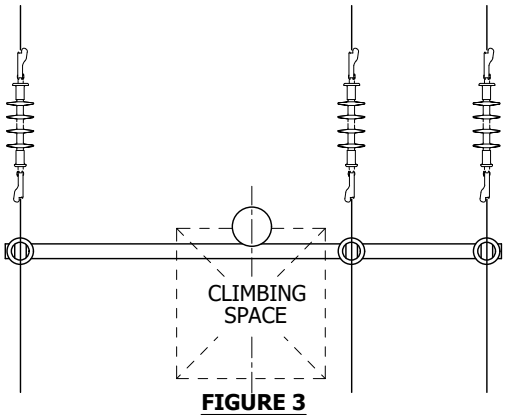

FIGURE 3

CLIMBING SPACE

© 1998 - 2019 San Diego Gas & Electric Company. All rights reserved. Removal of this copyright notice without permission is not permitted under law.

REV	CHANGE	BY	DSGN	APPV	DATE	REV	CHANGE	BY	DSGN	APPV	DATE
C	FIGURE UPDATE	GLW	JES	CZH	11/12/2019	F					
B	DRAWING UPDATE	PEI	--	--	02/18/2019	E					
A	ORIGINAL ISSUE	--	PTA	RDG	01/01/1996	D					

TABLE OF CONTENTS

ATTENTION:

* USE THE CONSTRUCTION SHOWN ON THIS PAGE WHEN ADDING SECTIONALIZING CUTOUTS TO EXISTING DEAD-ENDS ONLY. NOT FOR NEW CONSTRUCTION.

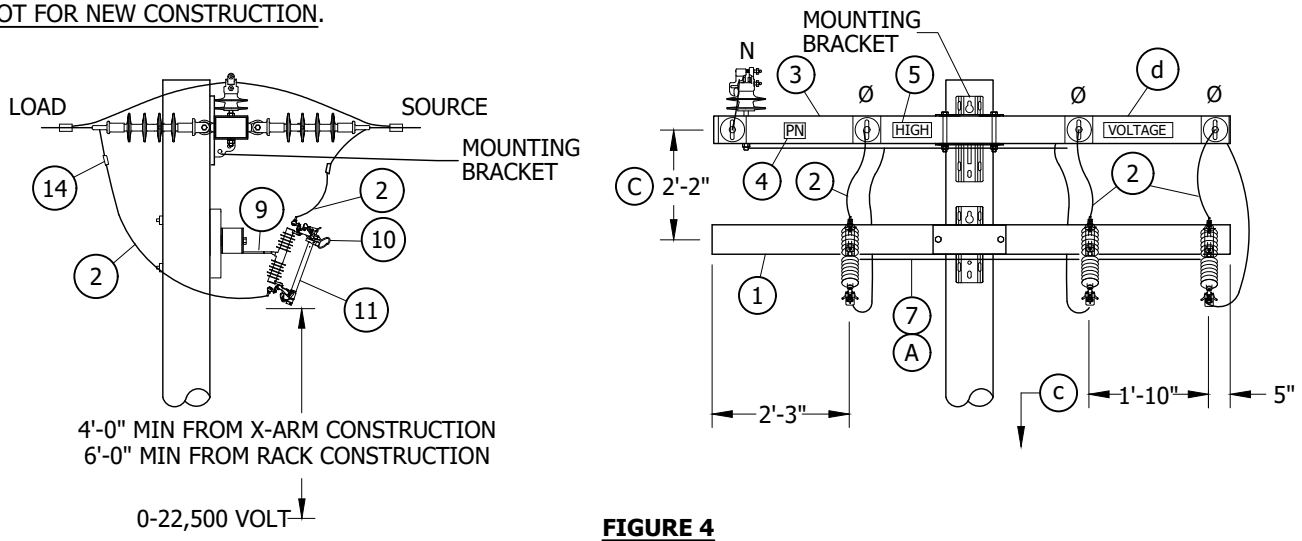

FIGURE 4

EXISTING CONSTRUCTION WITH NEUTRAL ON OUTSIDE PIN/DEADEND POSITION

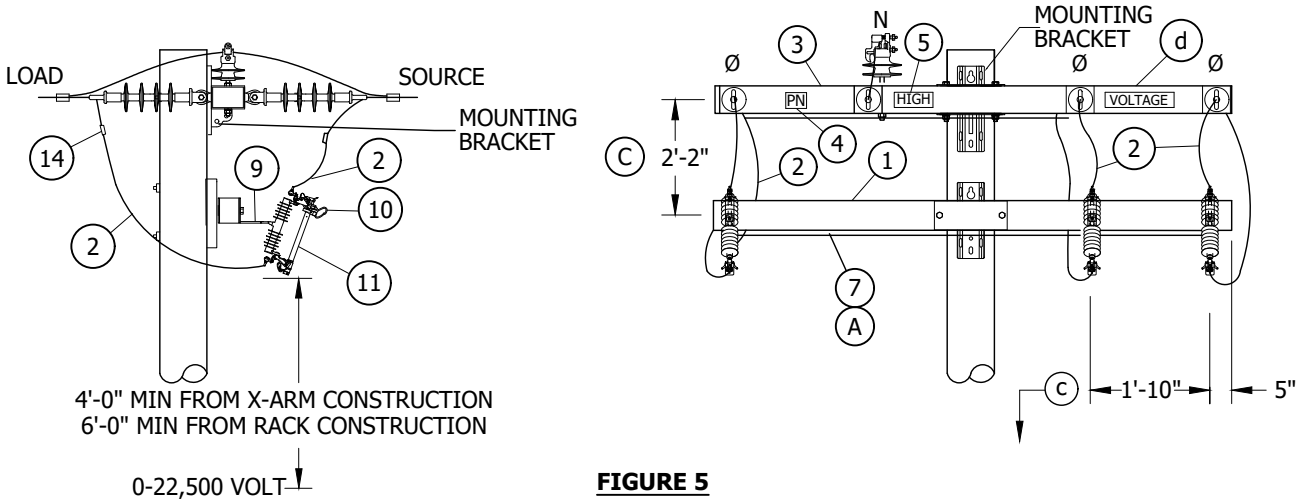

FIGURE 5

EXISTING CONSTRUCTION WITH NEUTRAL ON INSIDE PIN/DEADEND POSITION

TABLE 2

OVERHEAD MACRO UNITS SECTIONALIZING CUTOUTS 12KV - TANGENT - PIN & INSULATOR			
PHASE	**AMPS**	**COA**	**MU ID**
2	100	10'	2X10D1
2	200	10'	2X10D2
2	300	10'	2X10D3
3	100	10'	3X10D1
3	200	10'	3X10D2
3	300	10'	3X10D3

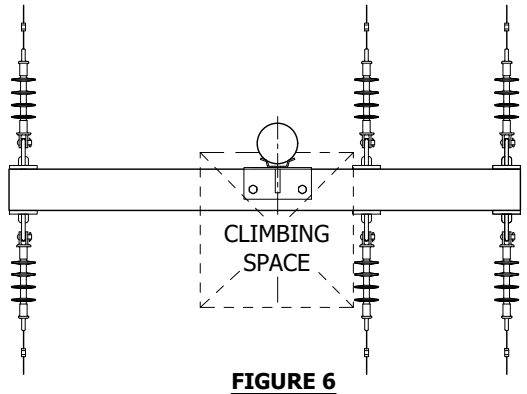

FIGURE 6

CLIMBING SPACE

© 1998 - 2019 San Diego Gas & Electric Company. All rights reserved. Removal of this copyright notice without permission is not permitted under law.

REV	CHANGE	BY	DSGN	APPV	DATE	REV	CHANGE	BY	DSGN	APPV	DATE
C	FIGURE UPDATE	GLW	JES	CZH	11/12/2019	F					
B	DRAWING UPDATE	PEI	--	--	02/18/2019	E					
A	ORIGINAL ISSUE	--	PTA	RDG	01/01/1996	D					

X Indicates Latest Revision | Completely Revised | New Page | Information Removed

SHEET 2 OF 6

SDG&E ELECTRIC OVERHEAD CONSTRUCTION STANDARDS

SECTIONALIZING CUTOUTS INSTALLATION
TANGENT POSITION - DEAD END (ALTERNATE)

OH1240.2

TABLE OF CONTENTS

INSTALLATION:

(A) BOND CUTOUTS IN HEAVY CONTAMINATION DISTRICTS AS IDENTIFIED ON STANDARD 287.

B. CUTOUTS INSTALLED ON LINE ARMS MUST BE BONDED IN ALL CONTAMINATION DISTRICTS.

(C) IF ADDITIONAL SPACE IS REQUIRED BELOW THE CUTOUT ARM, THE SEPARATION BETWEEN THE LINE ARM AND CUTOUT ARM MAY BE REDUCED TO 12" WITH THE USE OF SPACE BOLTS.

D. SECTIONALIZING FUSES AND A STATION ARE NOT ALLOWED ON THE SAME POLE. A DEVIATION REQUEST WILL NOT BE APPROVED FOR THE THIS CONSTRUCTION.

BILL OF MATERIALS:

ITEM	DESCRIPTION	QUANTITY	STANDARD PAGE	STOCK NUMBER	ASSEMBLY UNITS
1	FIBERGLASS CROSSARM TANGENT 3 3/4" X 5 3/4" X (LENGTH AS REQ'D)	AS REQ'D	379	-	-
2	#4/7 STRAND, COVERED JUMPER WIRE	-	-	-	POLY4J
3	FIBERGLASS CROSSARM DEADEND 3 3/4" X 5 3/4" X (LENGTH AS REQ'D)	AS REQ'D	379	-	-
4	SIGN, PN, ADHESIVE	AS REQ'D	208.3	S647650	HV/D
5	SIGN, HIGH VOLTAGE	-	-	S647648	THV
6	PIN, INSULATOR, STRAIGHT 12KV, 1" OR 1 3/8"	-	396	-	-
7	SQUARE BOND WIRE CONDUIT	AS REQ'D	-	-	-
8	INSULATOR, LINE 12KV	-	750	-	-
9	BRACKET, CUTOUT/ARRESTER, FOR CROSSARM MOUNTING	-	-	S166070	VSBRKT
10	CUTOUT, 12KV AND FUSE HOLDER	-	1212	-	-
11	FUSE, 12KV	-	1207	-	-
12	INSULATOR, SUSPENSION, 12KV CLEVIS	-	750	-	-
13	CLAMP, STRAIGHT LINE, DEADEND	-	741	-	-
14	COMPRESSION, WEDGE, OR HOT-LINE CLAMP	AS REQ'D	783-787	-	-
15	WIRE, JUMPER, BARE STRANDED CU (SIZE AS REQ'D)	-	715	-	-
16	WIRE, #8 BARE SOLID ANNEALED COPPER	-	-	S812928	-
17	LINK, CHAIN, 1/2" X 2-3/8", GALVANIZED	-	-	S465750 (X)	-

NOTES:

(X) THIS ITEM IS EXEMPT.

REFERENCE:

a. FOR POLE STEPPING, SEE STANDARD 363.

b. SEE DESIGN MANUAL, SECTION 6100 FOR APPLICATION OF SECTIONALIZING CUTOUTS.

(c) REFLECTOR STRIPS ARE REQUIRED ON ALL SECTIONALIZING/TIELINES SWITCHES AND SERVICE RESTORER POLES (SEE STANDARD 208.3 ITEM 12).

(d) FIBERGLASS CROSSARMS - SEE STANDARD 379.

TABLE OF CONTENTS

© 1998 - 2019 San Diego Gas & Electric Company. All rights reserved. Removal of this copyright notice without permission is not permitted under law.

REV	CHANGE	BY	DSGN	APPV	DATE	REV	CHANGE	BY	DSGN	APPV	DATE
C	FIGURE UPDATE	GLW	JES	CZH	11/12/2019	F					
B	DRAWING UPDATE	PEI	--	--	02/18/2019	E					
A	ORIGINAL ISSUE	--	PTA	RDG	01/01/1996	D					

X Indicates Latest Revision | Completely Revised | New Page | Information Removed

SDG&E ELECTRIC OVERHEAD CONSTRUCTION STANDARDS

SECTIONALIZING CUTOUTS INSTALLATION
TANGENT POSITION

OH1240.3

SCOPE: THIS STANDARD SHOWS THE INSTALLATION OF CUTOUTS USED TO SECTIONALIZE CIRCUITS ON BUCK CORNER POSITION.

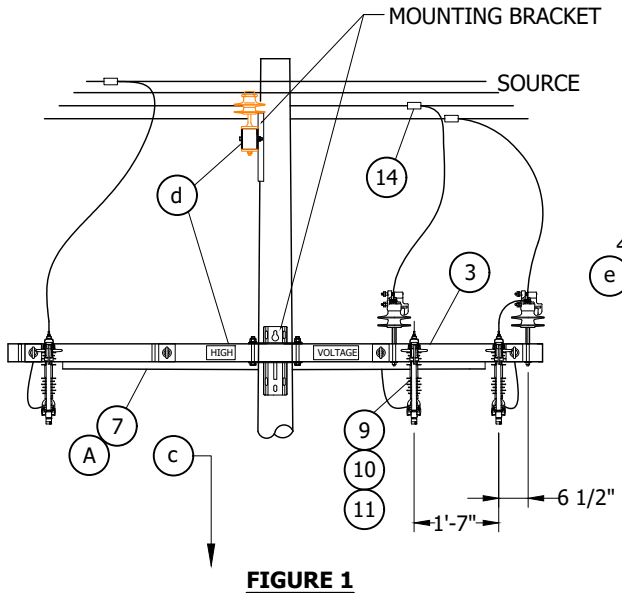

FIGURE 1
SIDE VIEW

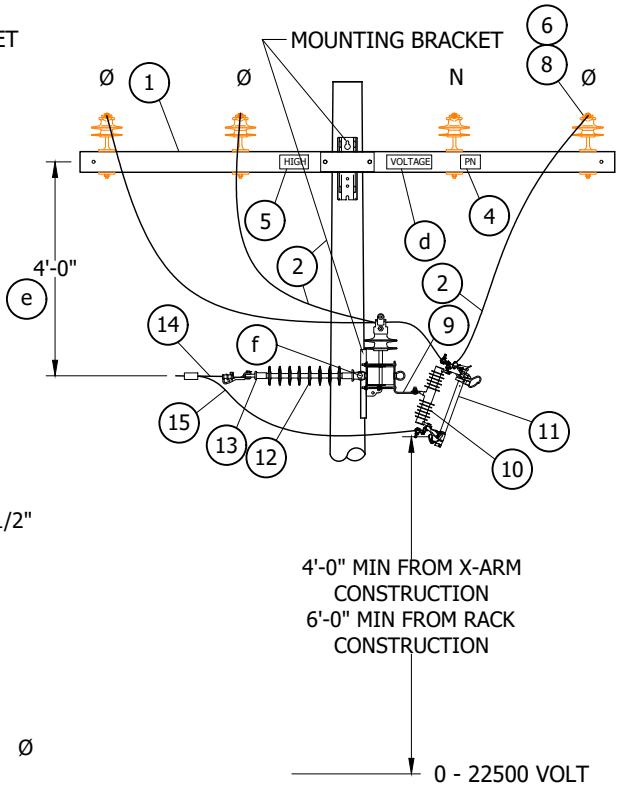

FIGURE 1
FRONT VIEW

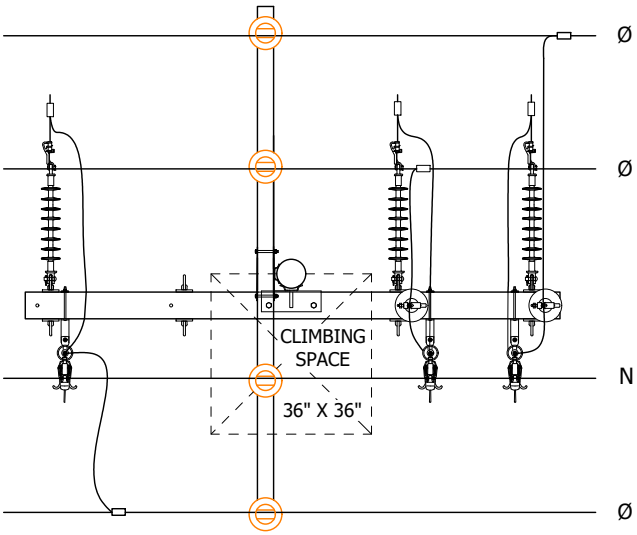

FIGURE 1
PLAN VIEW

TABLE 1

OVERHEAD MACRO UNITS SECTIONALIZING CUTOUTS 12KV - BUCK POSITION			
PHASE	**AMPS**	**XARM**	**MU ID**
2	100	10'	2XB1
2	200	10'	2XB2
2	300	10'	2XB3
3	100	10'	3XB1
3	200	10'	3XB2
3	300	10'	3XB3

© 1998 - 2019 San Diego Gas & Electric Company. All rights reserved. Removal of this copyright notice without permission is not permitted under law.

REV	CHANGE	BY	DSGN	APPV	DATE	REV	CHANGE	BY	DSGN	APPV	DATE
C	FIGURE UPDATE	GLW	JES	CZH	11/12/2019	F					
B	DRAWING UPDATE	PEI	--	--	02/18/2019	E					
A	ORIGINAL ISSUE	--	PTA	RDG	01/01/1996	D					

X Indicates Latest Revision | Completely Revised | New Page | Information Removed

SDG&E ELECTRIC OVERHEAD CONSTRUCTION STANDARDS

SECTIONALIZING CUTOUTS INSTALLATION
BUCK CORNER POSITION

OH1240.4

TABLE OF CONTENTS

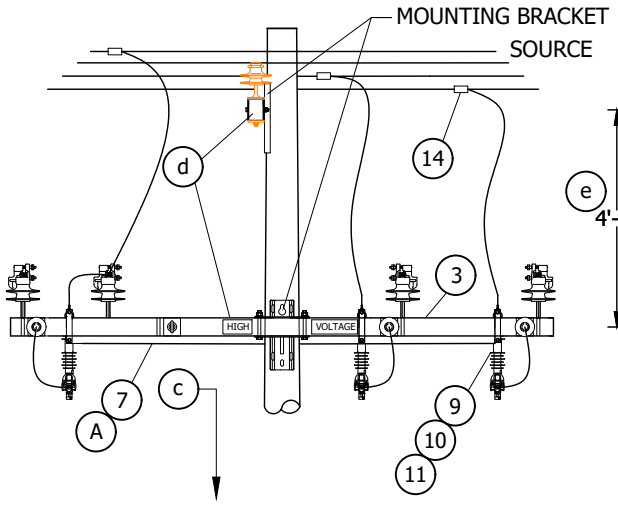

FIGURE 2
SIDE VIEW

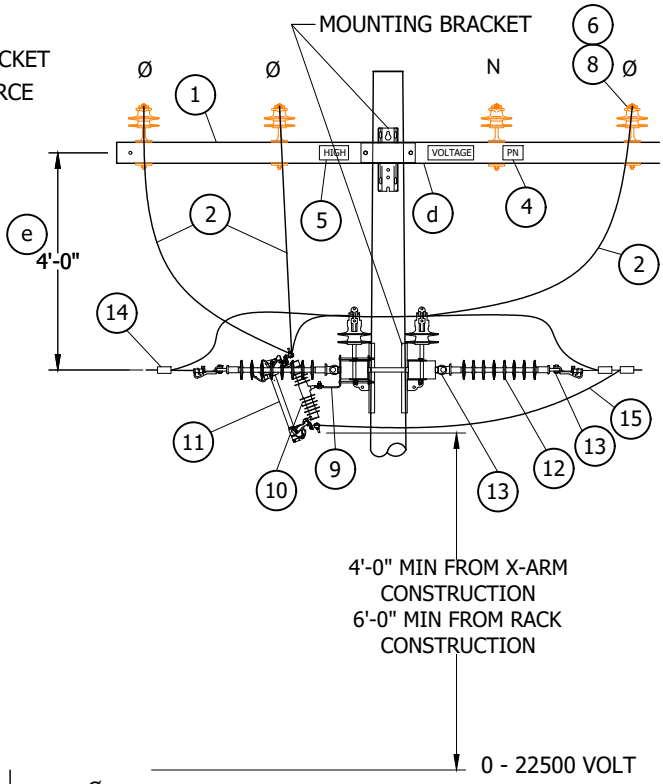

FIGURE 2
FRONT VIEW

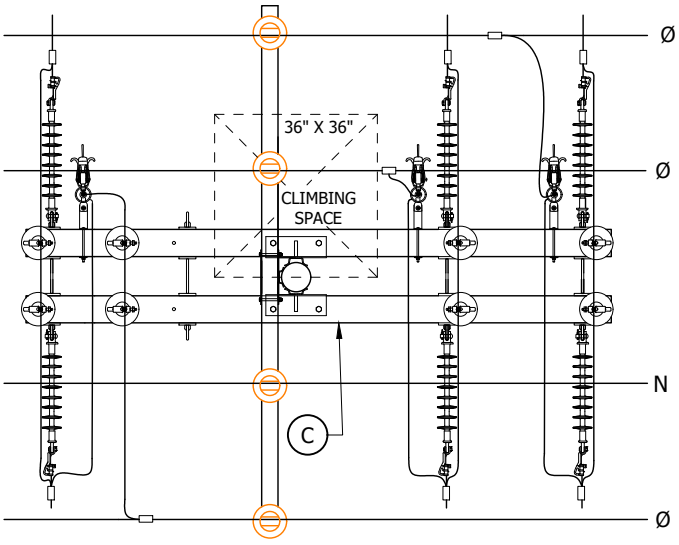

FIGURE 2
PLAN VIEW

TABLE 2

OVERHEAD MACRO UNITS SECTIONALIZING CUTOUTS 12KV - BUCK POSITION			
PHASE	**AMPS**	**XARM**	**MU ID**
2	100	10'	2XB1
2	200	10'	2XB2
2	300	10'	2XB3
3	100	10'	3XB1
3	200	10'	3XB2
3	300	10'	3XB3

TABLE OF CONTENTS

© 1998 - 2019 San Diego Gas & Electric Company. All rights reserved. Removal of this copyright notice without permission is not permitted under law.

REV	CHANGE	BY	DSGN	APPV	DATE	REV	CHANGE	BY	DSGN	APPV	DATE
C	FIGURE UPDATE	GLW	JES	CZH	11/12/2019	F					
B	DRAWING UPDATE	PEI	--	--	02/18/2019	E					
A	ORIGINAL ISSUE	--	PTA	RDG	01/01/1996	D					

X Indicates Latest Revision | Completely Revised | New Page | Information Removed

SDG&E ELECTRIC OVERHEAD CONSTRUCTION STANDARDS

SECTIONALIZING CUTOUTS INSTALLATION
BUCK CORNER POSITION

OH1240.5

INSTALLATION:

(A) BOND CUTOUTS IN HEAVY CONTAMINATION DISTRICTS AS IDENTIFIED ON STD. 287. CUTOUTS MOUNTED ON LINE ARMS MUST BE BONDED IN ALL CONTAMINATION DISTRICTS-SEE STANDARD 1003.

B. SECTIONALIZING FUSES AND A STATION ARE NOT ALLOWED ON THE SAME POLE. A DEVIATION REQUEST WILL NOT BE APPROVED FOR THIS CONSTRUCTION.

(C) SINGLE CROSS-ARM MAY BE USED FOR BACK TO BACK DEADENDS.

D. WHERE PRACTICABLE AN EQUIPMENT ARM MAY BE UTILIZED FOR THE INSTALLATION CUT-OUTS.

BILL OF MATERIALS:

ITEM	DESCRIPTION	QUANTITY	STANDARD PAGE	STOCK NUMBER	ASSEMBLY UNITS
1	FIBERGLASS CROSSARM TANGENT 3 3/4" X 5 3/4" X (LENGTH AS REQ'D)	AS REQ'D	379	-	-
2	#4/7 STRAND, COVERED JUMPER WIRE	-	-	-	POLY4J
3	FIBERGLASS CROSSARM DEADEND 3 3/4" X 5 3/4" X (LENGTH AS REQ'D)	AS REQ'D	379	-	-
4	SIGN, PN, ADHESIVE	AS REQ'D	208.3	S647650	HV/D
5	SIGN, HIGH VOLTAGE	-	-	S647648	THV
6	PIN, INSULATOR, STRAIGHT 12KV, 1" OR 1 3/8"	-	396	-	-
7	SQUARE BOND WIRE CONDUIT	AS REQ'D	-	-	-
8	INSULATOR, LINE 12KV	-	750	-	-
9	BRACKET, CUTOUT/ARRESTER, FOR CROSSARM MOUNTING	-	-	S166070	VSBRKT
10	CUTOUT, 12KV AND FUSE HOLDER	-	1212	-	-
11	FUSE, 12KV	-	1207	-	-
12	INSULATOR, SUSPENSION, 12KV CLEVIS	-	750	-	-
13	CLAMP, STRAIGHT LINE, DEAD END	-	741	-	-
14	COMPRESSION, WEDGE, OR HOT-LINE CLAMP	AS REQ'D	783-787	-	-
15	WIRE, JUMPER, BARE STRANDED CU (SIZE AS REQ'D)	-	715	-	-
16	WIRE, #8 BARE SOLID ANNEALED COPPER	-	-	S812928	-

NOTES: NONE

REFERENCE:

a. REFER TO STANDARD 363 FOR POLE STEPPING.

b. SEE DESIGN MANUAL, SECTION 5600 FOR APPLICATION OF SECTIONALIZING CUTOUTS.

(c) REFLECTOR STRIPS ARE REQUIRED ON ALL SECTIONALIZING/TIELINE SWITCHES AND SERVICE RESTORER POLES. (SEE STANDARD 208.3 ITEM 12)

(d) FIBERGLASS CROSSARMS - SEE STANDARD 379.

(e) WHERE THE VERTICAL SEPARATION BETWEEN CONDUCTOR LEVELS ON LINE AND BUCK ARMS IS 4 FEET OR MORE, THE CLIMBING SPACE SHALL BE PROVIDED ON ONE SIDE OR FACE OF THE POLE FOR EACH LEVEL AS SPECIFIED IN G0 95 RULE 54.7-A1.
DIMENSIONS: 0-7,500 - VOLTS 30 INCHES
7,500-46,000 - VOLTS 36 INCHES

WHERE THE VERTICAL SEPARATION BETWEEN CONDUCTOR LEVELS ON LINE AND BUCK ARMS IS LESS THAN 4 FEET, SUCH SEPARATIONS SHALL NOT BE LESS THAN TWO FEET AND THE CLIMBING SPACE SHALL NOT BE LESS THAN PRESCRIBED G0 95 RULE 54.7-A2b AND THE DIMENSIONS SHALL BE IN ACCORDANCE WITH THE HIGHEST VOLTAGE ADJACENT TO THE CLIMBING QUADRANT.
DIMENSIONS: 0-7,500 - VOLTS 30 INCHES
7,500-35,000 - VOLTS 42 INCHES

(f) REFER TO STANDARD 432 FOR CONFIGURATION.

© 1998 - 2019 San Diego Gas & Electric Company. All rights reserved. Removal of this copyright notice without permission is not permitted under law.

REV	CHANGE	BY	DSGN	APPV	DATE	REV	CHANGE	BY	DSGN	APPV	DATE
C	FIGURE UPDATE	GLW	JES	CZH	11/12/2019	F					
B	DRAWING UPDATE	PEI	--	--	02/18/2019	E					
A	ORIGINAL ISSUE	--	PTA	RDG	01/01/1996	D					

SCOPE: THIS STANDARD SHOWS THE INSTALLATION METHOD FOR A FUSE AND SWITCH IN PARALLEL TO BE USED WITH #336.4 ACSR OR #4/0 COPPER AND LARGER CONDUCTORS.

ATTENTION:

* MATERIALS ORDERED ARE BASED ON AN EXISTING CONSTRUCTION WITH 10-FOOT LINEARMS.

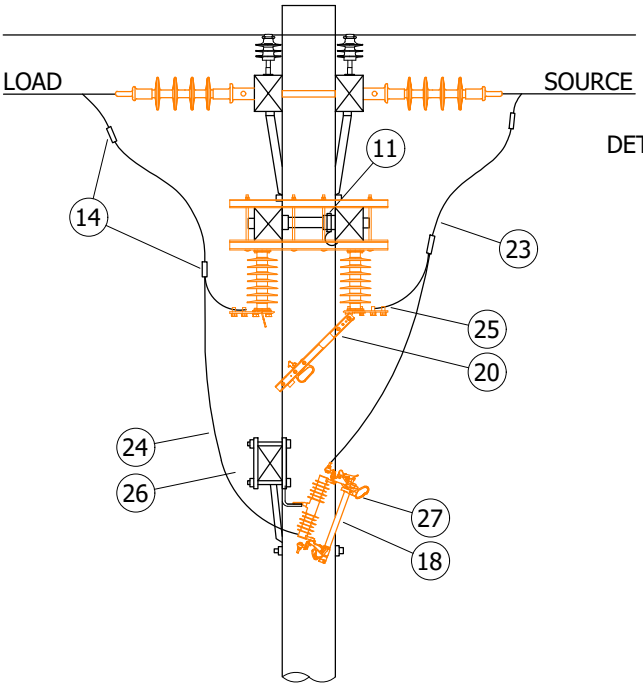

FIGURE 1
SIDE VIEW

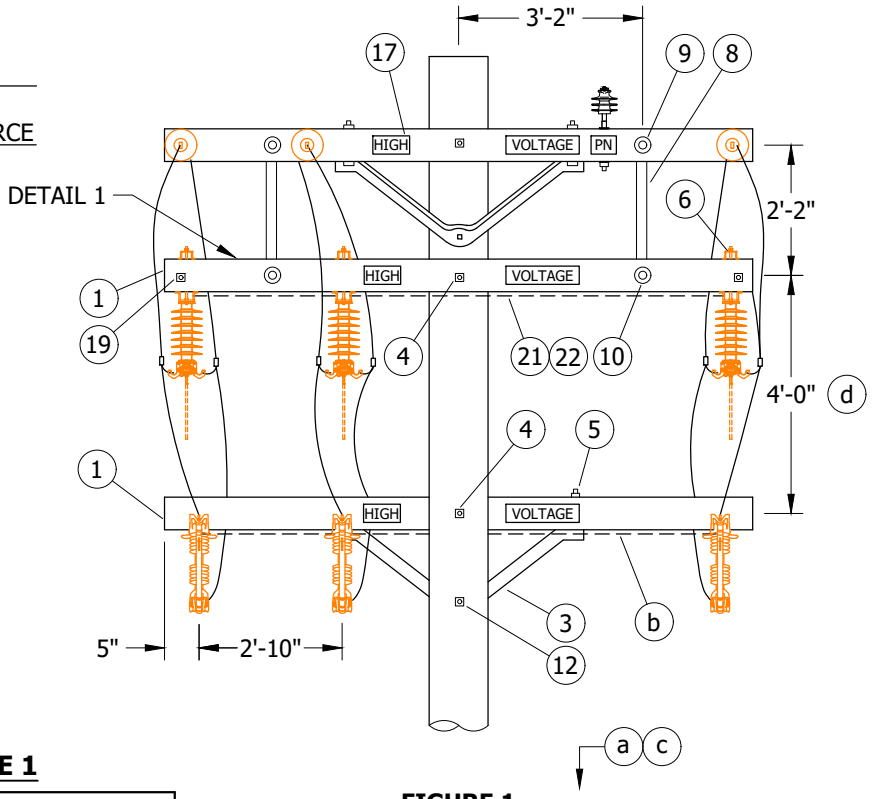

FIGURE 1
FRONT VIEW

TABLE 1

OVERHEAD MACRO UNITS
S/C2XA

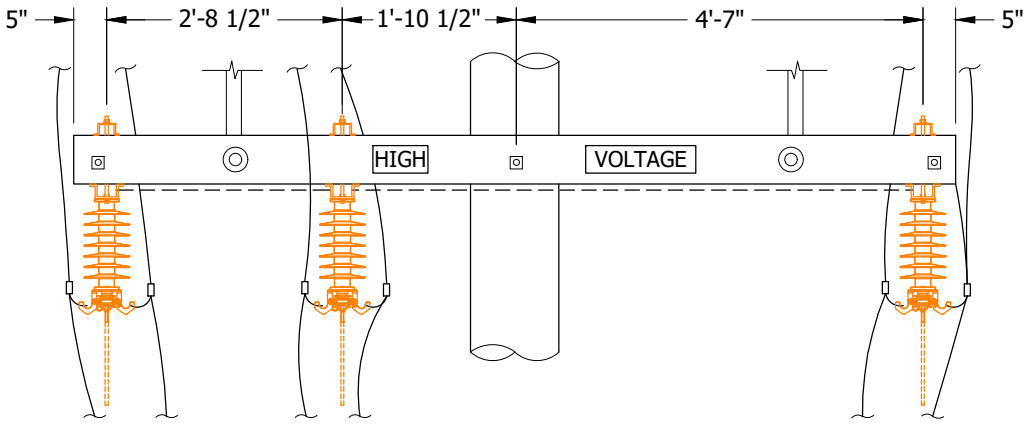

DETAIL 1

© 1998 - 2021 San Diego Gas & Electric Company. All rights reserved. Removal of this copyright notice without permission is not permitted under law.

REV	CHANGE	DR	BY	DSN	APV	DATE	REV	CHANGE	DR	BY	DSN	APV	DATE
C	TABLE UPDATE	-	DEC	JS	CZH	01/14/2020	F						
B	REVISION	-	-	PIA	VCR	03/01/2002	E						
A	REVISION	-	-	PIA	CMK	01/01/1998	D	TABLE UPDATE	EDM	DEC	JES	CZH	12/12/2021

X Indicates Latest Revision | Completely Revised | New Page | Information Removed

SDG&E ELECTRIC OVERHEAD CONSTRUCTION STANDARDS

CROSSARM MOUNTED PARALLEL FUSE AND HOOKSTICK SWITCH

OH1242.1

TABLE OF CONTENTS

ATTENTION:

* MATERIALS ORDERED ARE BASED ON AN EXISTING CONSTRUCTION WITH 12-FOOT LINEARMS.

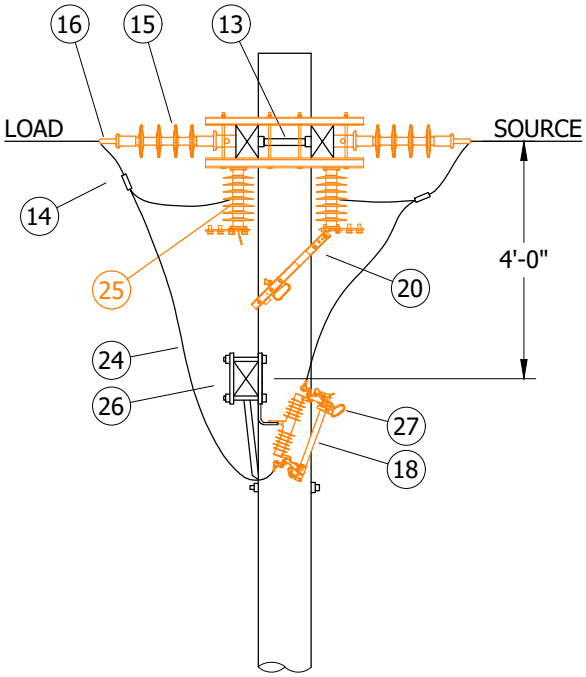

FIGURE 2
SIDE VIEW

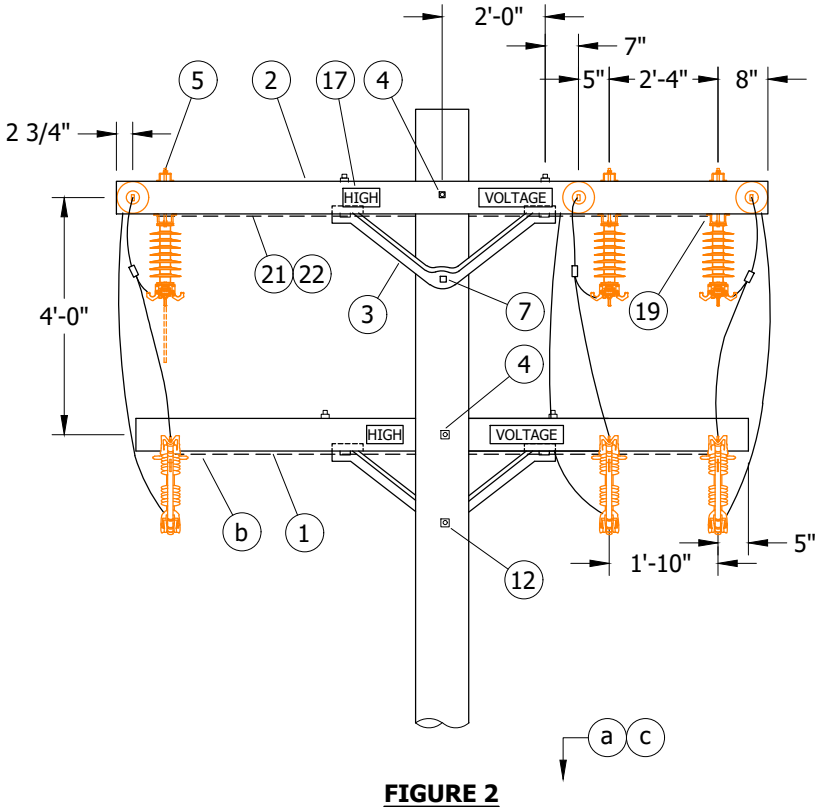

FIGURE 2
FRONT VIEW

TABLE 2

OVERHEAD MACRO UNITS
S/C1XA

TABLE OF CONTENTS

© 1998 - 2021 San Diego Gas & Electric Company. All rights reserved. Removal of this copyright notice without permission is not permitted under law.

REV	CHANGE	DR	BY	DSN	APV	DATE	REV	CHANGE	DR	BY	DSN	APV	DATE
C	TABLE UPDATE	-	DEC	JS	CZH	01/14/2020	F						
B	REVISION	-	-	PIA	VCR	03/01/2002	E						
A	REVISION	-	-	PIA	CMK	01/01/1998	D	TABLE UPDATE	EDM	DEC	JES	CZH	12/12/2021

INSTALLATION:

A. SECTIONALIZING FUSES AND A STATION ARE NOT ALLOWED ON THE SAME POLE. A DEVIATION REQUEST WILL NOT BE APPROVED FOR THE THIS CONSTRUCTION.

BILL OF MATERIALS:

ITEM	DESCRIPTION	QUANTITY		STANDARD PAGE	STOCK NUMBER	DESIGN UNITS
		FIG. 1	FIG. 2			
1	CROSSARM, 3 3/4" X 5 3/4" X 10'-0"	3	1	-	S294128	-
2	CROSSARM, 3 3/4" X 5 3/4" X 12'-0"	-	2	-	S294160	-
3	BRACE, 4'-0", ANGLE, GALV.	1	3	-	S164032	-
4	BOLT, MACH, GALV., 5/8" X (LENGTH AS REQ'D), 2 SQUARE & 1 DOUBLE COIL SPRING WASHERS	2	2	390	-	-
5	BOLT, MACH, GALV., 1/2"X 7", 1 ROUND & 1 DOUBLE COIL SPRING WASHER	10	14	390	-	-
6	BOLT, MACH, GALV., 1/2" X 8", 1 ROUND & 1 DOUBLE COIL SPRING WASHER	2	2	390	-	-
7	BOLT, MACH, GALV., 5/8" X (LENGTH AS REQ'D), 1 DOUBLE COIL SPRING WASHER	-	1	390	-	-
8	BRACE, FLAT, CROSSARM, 28"	2	-	-	S164192	-
9	BOLT, MACH, GALV., 3/8" X 4 1/2", 1 RD & 1 SPRING WASHER	2	-	390	-	-
10	BOLT, MACH, GALV., 1/2" X 5", 1 ROUND & 1 DOUBLE COIL SPRING WASHER	2	-	390	-	-
11	BOLT, SPACE, GALV., 5/8" X (LENGTH AS REQ'D), 2 ROUND, 4 SQUARE, 2 DOUBLE COIL SPRING WASHERS & 1 NUT	2	-	390	-	-
12	BOLT, MACH, GALV., 5/8" X (LENGTH AS REQ'D), 1 SQUARE & 1 DOUBLE COIL SPRING WASHER	1	1	390	-	-
13	BOLT, SPACE, GALV., 5/8" X (LENGTH AS REQ'D), 2 ROUND, 2 SQUARE, 2 DOUBLE COIL SPRING WASHERS & 1 NUT	-	3	390	-	-
14	CONNECTOR, WIRE, COMPRESSION (SIZE AS REQ'D)	AS REQ'D		783-785	-	-
15	SUSPENSION, CLEVIS, 12KV	6	6	750	-	-
16	CLAMP, STRAIGHT LINE, DEADEND	6	6	739	-	-
17	SIGN, HIGH VOLTAGE & 9 ROOFING NAILS, GALV.	2	2	-	S647648	-
		-	-	-	S492224	-
18	FUSE	3	3	1207	-	-
19	BOLT, MACH, GALV., 3/8" X 2", 2 ROUND & 1 LOCK WASHER	4	4	390	-	-
20	SWITCH, DISCONNECT, UNDERARM, 27KV, 900A (I)	3	3	-	S706680 (II)	D900UA
		-	-	-	S706682 (III)	E900UA
21	WIRE, BARE SOLID ANNEALED COPPER, #8	24"	26"	-	S812928	-
22	STAPLES, FENCE, GALV., 1 1/4"	AS REQ'D		-	S678528	-
23	WIRE, JUMPER, COVERED STRANDED CU OR AL, (SIZE AS REQ'D)	28'-0"	-	711	-	-
24	WIRE, JUMPER, COVERED STRANDED CU, #6 OR #2	30'-0"	36'-0"	-	-	-
		30'-0"	36'-0"	-	-	-
25	TERMINAL, COMPRESSION, CU OR AL (SIZE AS REQ'D)	6	6	784	-	-
26	BRACKET, CUTOUT/ARRESTER, FOR CROSSARM MOUNTING	3	3	-	S166070	-
27	CUTOUT BODY, 12KV, AND FUSE HOLDER (100A OR 200A)	3	3	1212	-	-

TABLE OF CONTENTS

© 1998 - 2021 San Diego Gas & Electric Company. All rights reserved. Removal of this copyright notice without permission is not permitted under law.

REV	CHANGE	DR	BY	DSN	APV	DATE	REV	CHANGE	DR	BY	DSN	APV	DATE
C	TABLE UPDATE	-	DEC	JS	CZH	01/14/2020	F						
B	REVISION	-	-	PIA	VCR	03/01/2002	E						
A	REVISION	-	-	PIA	CMK	01/01/1998	D	TABLE UPDATE	EDM	DEC	JES	CZH	12/12/2021

NOTES:

(I) SWITCH, DISCONNECT, 14.4KV, 600A, (S707008, DU: D600) MOVED TO FMO.

(II) REQUIRED IN CONTAMINATION DISTRICT 1 AND PREFERRED IN COASTAL DISTRICTS (OC, NC, BC, CM). (e)

(III) PREFERRED FOR INLAND DISTRICTS (NE, RA, EA, ME).

REFERENCE:

(a) POLE STEPPING, SEE OH363.

(b) BOND CUTOUTS IN HEAVY CONTAMINATION DISTRICTS AS IDENTIFIED IN OH287.

(c) REFLECTOR STRIPS ARE REQUIRED ON ALL SECTIONALIZING/TIELINE SWITCHES AND SERVICE RESTORER POLES, SEE OH208.

(d) DISCONNECT SWITCH INSTALLATION MAY VARY WITH POSITION OF NEUTRAL CONDUCTOR, SEE OH1222.

(e) CONTAMINATION DISTRICTS, SEE OH287.

TABLE OF CONTENTS

© 1998 - 2021 San Diego Gas & Electric Company. All rights reserved. Removal of this copyright notice without permission is not permitted under law.

REV	CHANGE	DR	BY	DSN	APV	DATE	REV	CHANGE	DR	BY	DSN	APV	DATE
C	TABLE UPDATE	-	DEC	JS	CZH	01/14/2020	F						
B	REVISION	-	-	PIA	VCR	03/01/2002	E						
A	REVISION	-	-	PIA	CMK	01/01/1998	D	TABLE UPDATE	EDM	DEC	JES	CZH	12/12/2021

X Indicates Latest Revision | Completely Revised | New Page | Information Removed

SDG&E ELECTRIC OVERHEAD CONSTRUCTION STANDARDS

CROSSARM MOUNTED PARALLEL FUSE AND HOOKSTICK SWITCH

OH1242.4

SCOPE: THIS STANDARD DESCRIBES THE PURPOSE AND USE OF SURGE ARRESTERS ON THE DISTRIBUTION SYSTEM.

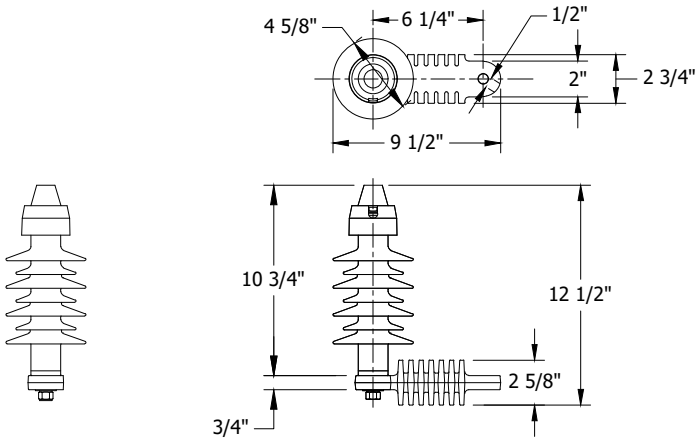

FIGURE 1
LIGHTNING ARRESTER

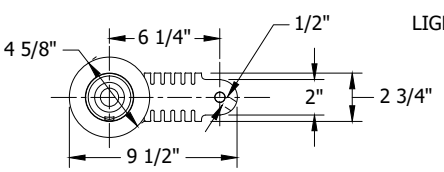

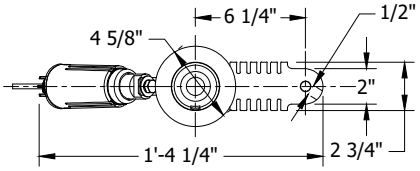

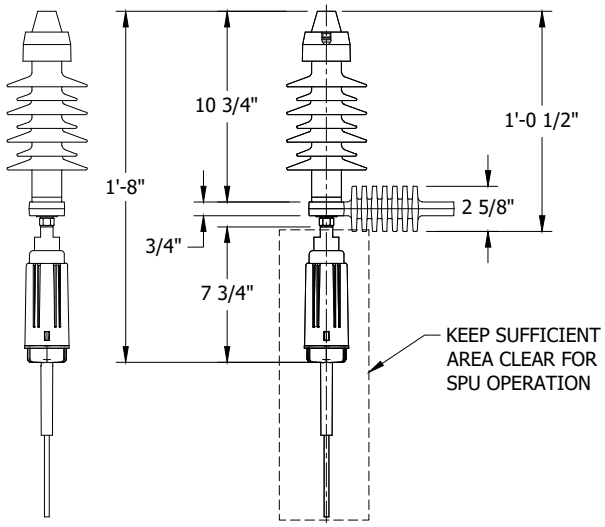

FIGURE 2
PREFERRED METHOD

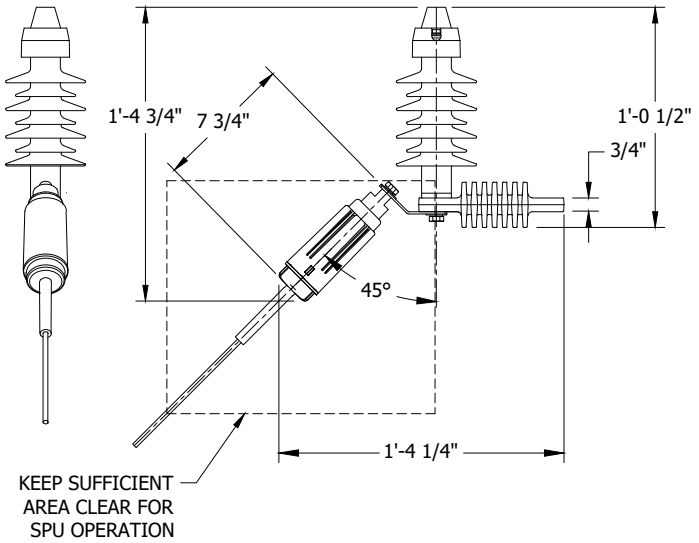

FIGURE 3
45 DEG ANGLE (ALTERNATE METHOD)

TABLE 1

RATINGS: USED FOR SELECTING ARRESTER TO BE USED ON THE DISTRIBUTION SYSTEM					
APPLICATION VOLTAGE-KV	**ARRESTER RATING-KV**	**STOCK NUMBER**	**DESIGN UNITS**	**LIGHTNING ARRESTER STOCK NUMBER**	**LIGHTNING ARRESTER DESIGN UNITS**
2.4 DELTA	3	S113210	CFLA3	S113216	LA3
2.4/4.16 WYE					
6.9/12 WYE	12	S113214	CFLA12	S113248	LA12
7.2/12.5 WYE					
12 (3 WIRE)				--	--

© 1998 - 2022 San Diego Gas & Electric Company. All rights reserved. Removal of this copyright notice without permission is not permitted under law.

REV	CHANGE	DR	BY	DSN	APV	DATE	REV	CHANGE	DR	BY	DSN	APV	DATE
C	TABLE UPDATE	-	VMV	JES	CZH	12/09/2019	F						
B	DRAWING UPDATE	PEI	-	-	-	02/18/2019	E	BILL OF MATERIALS UPDATE	EDM	JAC	JES	KRG	07/25/2022
A	UPDATE TABLE	-	JC	KA	DW	09/05/2014	D	TABLE UPDATE	EDM	VMV	JES	CZH	12/06/2021

X Indicates Latest Revision | Completely Revised | New Page | Information Removed

SDG&E ELECTRIC OVERHEAD CONSTRUCTION STANDARDS

SURGE (LIGHTNING) ARRESTERS APPLICATION

OH1247.1

TABLE OF CONTENTS

INSTALLATION:

GENERAL

A. SURGE (LIGHTNING) ARRESTERS ARE USED TO KEEP LIGHTNING AND OTHER SURGES WITHIN THE INSULATION LIMITS OF THE DEVICES WHICH THEY'RE INSTALLED TO PROTECT. WHEN THEY ARE REQUIRED, INSTALL THEM AS SHOWN ELSEWHERE IN THIS STANDARDS BOOK, OR WITHIN THE DISTANCES SPECIFIED IN THE "PARTIAL ARRESTER PROTECTION AREA" BELOW, WHEN UPGRADING EXISTING INSTALLATIONS WOULD REQUIRE A POLE CHANGEOUT.

B. OUR OPERATING TERRITORY HAS BEEN DIVIDED INTO TWO LIGHTNING ARRESTER APPLICATION AREAS. THEY ARE SHOWN ON SHEET 3 "SURGE ARRESTER APPLICATION MAP". SURGE ARRESTERS WILL NORMALLY BE PURCHASED WITHOUT MOUNTING BRACKETS. THE CUTOUT/ARRESTER BRACKETS ARE AN EXEMPT ITEM, M&S S165454 (X). (a)

APPLICATION

C. PARTIAL ARRESTER PROTECTION AREA - APPLY ARRESTERS ON THE FOLLOWING DISTRIBUTION EQUIPMENT AS DESCRIBED:

1. TRANSFORMERS & BOOSTERS: SINGLE PHASE STATIONS 100KVA AND LARGER, AND THREE PHASE STATIONS HAVING A TOTAL NAMEPLATE RATING LARGER THAN 150KVA. A SEPARATE TWO-ROD GROUND IS REQUIRED FOR THE ARRESTERS, WHICH SHALL NOT BE INTERCONNECTED TO THE STATION GROUND (NOT APPLICABLE TO STEEL POLES).
2. INSTALL REGULATORS, SERVICE RESTORERS, CAPACITORS, CABLE POLES, PRIMARY METERING, AND SCADA-MATE SWITCHES ON VOLTAGE SENSOR SIDE OF SWITCH, STATIONARY CONTACT SIDE.
3. ARRESTER WILL BE USED ON EQUIPMENT LOCATED IN A TIER 2 OR TIER 3 HIGH FIRE THREAT DISTRICT (HFTD).

D. GENERAL ARRESTER APPLICATION AREA - APPLY ARRESTERS TO ALL OF THE FOLLOWING EQUIPMENT IN THE AREA DESIGNATED ON SHEET 3:

1. TRANSFORMERS, REGULATORS, SERVICE RESTORERS, CAPACITORS, CABLE POLES, BOOSTERS, SCADA SWITCHES (ALL TYPES), AND PRIMARY METERING.
2. NEW CONSTRUCTION INSTALLED IN THE GENERAL APPLICATION AREA WILL USE ARRESTERS.

BILL OF MATERIALS: NONE

NOTES:

I. ARRESTERS MAY BE APPLIED, WITH THE APPROVAL OF THE DISTRICT ENGINEERING SECTION, TO THOSE CIRCUITS NOT ALREADY DESIGNATED AS GENERAL ARRESTER PROTECTION AREAS BUT WHICH HAVE EXPERIENCED A LIGHTNING CAUSED INTERRUPTION.

II. ARRESTERS MAY BE APPLIED TO EQUIPMENT AS SPECIFIED IN "GENERAL ARRESTER PROTECTION AREA" ABOVE IN AREAS DESIGNATED AS "PARTIAL ARRESTER PROTECTION AREA" WITH THE APPROVAL OF DISTRICT ENGINEERING SECTION. AFTER SUCH AREAS ARE DESIGNATED, THE "SURGE ARRESTER APPLICATION MAP" SHEET 3 WILL BE REVISED TO INCLUDE THEM.

III. PORCELAIN ARRESTERS SHALL BE REPLACED WITH THE CURRENTLY EXEMPT POLYMER ARRESTER IN THE COURSE OF DOING OTHER WORK INVOLVING A 3 OR 4 PERSON CREW, SUCH AS CMP OR NEW BUSINESS. THIS WILL IMPROVE RELIABILITY AND AVIAN PROTECTION, AND WILL REDUCE EVENTFUL OPERATIONS. BE SURE TO INSTALL ARRESTERS WITH THE APPROPRIATE AVIAN PROTECTION COVER-UP (S289630) AS THOSE ARE STOCKED SEPARATELY. (b)

IV. ARRESTER IS AVAILABLE FOR USE IN HIGH FIRE THREAT DISTRICT (HFTD). THE DEVICE IS DESIGNED TO AVOID WILDFIRE HAZARDS CAUSED BY THERMALLY OVERLOADED SURGE ARRESTERS.

(X) THIS ITEM IS EXEMPT.

REFERENCE:

(a) FOR BRACKET, SEE OH397.

(b) SEE OH1640: LIGHTNING ARRESTER AND CUTOUT COVER-UP DEVICES FOR AVIAN PROTECTION.

TABLE OF CONTENTS

© 1998 - 2022 San Diego Gas & Electric Company. All rights reserved. Removal of this copyright notice without permission is not permitted under law.

REV	CHANGE	DR	BY	DSN	APV	DATE	REV	CHANGE	DR	BY	DSN	APV	DATE
C	TABLE UPDATE	-	VMV	JES	CZH	12/09/2019	F						
B	DRAWING UPDATE	PEI	-	-	-	02/18/2019	E	BILL OF MATERIALS UPDATE	EDM	JAC	JES	KRG	07/25/2022
A	UPDATE TABLE	-	JC	KA	DW	09/05/2014	D	TABLE UPDATE	EDM	VMV	JES	CZH	12/06/2021

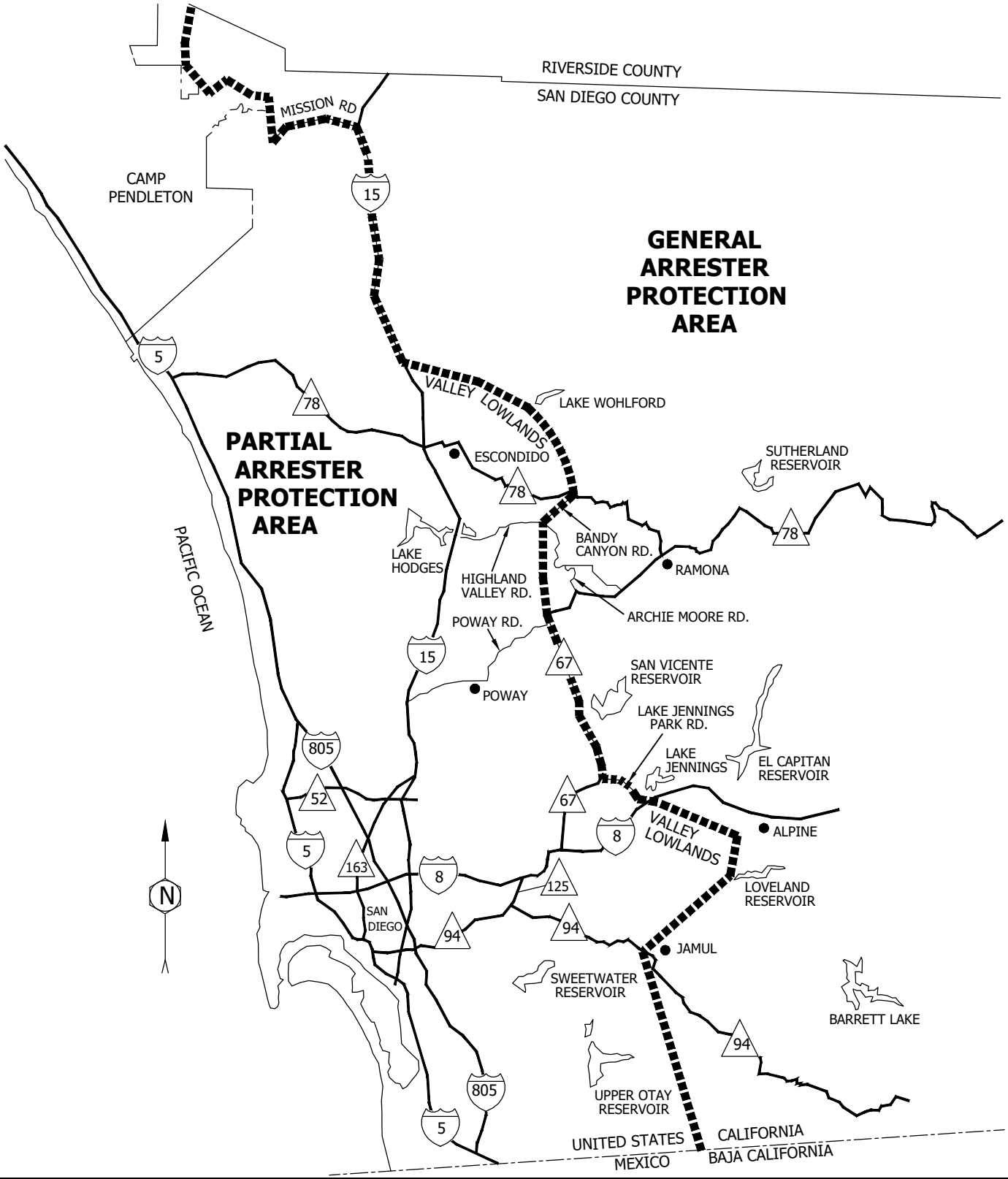

TABLE OF CONTENTS

© 1998 - 2022 San Diego Gas & Electric Company. All rights reserved. Removal of this copyright notice without permission is not permitted under law.

REV	CHANGE	DR	BY	DSN	APV	DATE	REV	CHANGE	DR	BY	DSN	APV	DATE
C	TABLE UPDATE	-	VMV	JES	CZH	12/09/2019	F						
B	DRAWING UPDATE	PEI	-	-	-	02/18/2019	E	BILL OF MATERIALS UPDATE	EDM	JAC	JES	KRG	07/25/2022
A	UPDATE TABLE	-	JC	KA	DW	09/05/2014	D	TABLE UPDATE	EDM	VMV	JES	CZH	12/06/2021

X Indicates Latest Revision | Completely Revised | New Page | Information Removed

SHEET 3 OF 3

SDG&E ELECTRIC OVERHEAD CONSTRUCTION STANDARDS

SURGE (LIGHTNING) ARRESTERS APPLICATION

OH1247.3

SCOPE: THIS STANDARD SHOWS METHODS OF INSTALLING LIGHTNING ARRESTERS ON 4KV CIRCUITS.

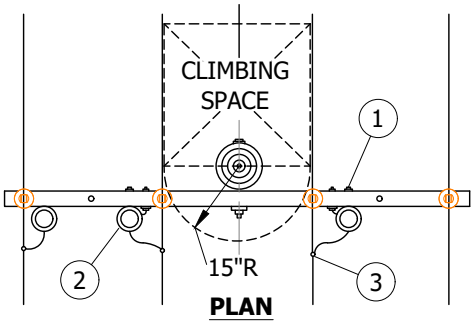

PLAN

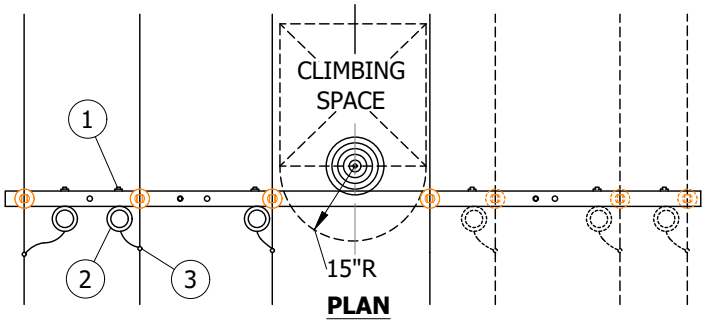

PLAN

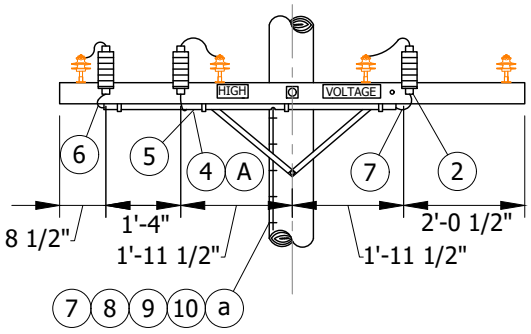

FIGURE 1
SINGLE CIRCUIT - THRU LINE

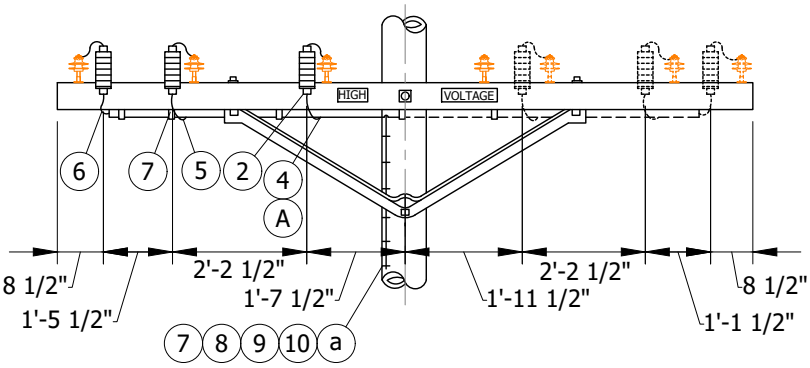

FIGURE 2
TWIN CIRCUIT - THRU LINE

INSTALLATION:

(A) INTERCONNECT ARRESTER GROUND LEAD DISCONNECTS WITH #6 BARE COPPER AND GROUND IT WITH #4 BARE COPPER NEAR CENTER ARRESTER.

BILL OF MATERIALS:

ITEM	DESCRIPTION	QUANTITY		STANDARD PAGE	STOCK NUMBER	DESIGN UNITS
		FIGURE 1	FIGURE 2			
1	BOLT, MACH, GALV, 1/2" X 5", 1 RD WASH & 1 NUT	3	6	392	-	-
2	ARRESTER, LIGHTNING, 3KV	3	6	-	S113220	3KVTA
3	CONNECTOR, AS REQ'D	3	6	783, 786	-	-
4	CONNECTOR, COMPRESSION	1	1	-	S257792	-
5	CONNECTOR, COMPRESSION	1	4	-	S257952	-
6	FLEXIBLE ARRESTER GROUND STRAP	AS REQ'D	AS REQ'D	-	S698754	-
7	#4 CU SOLID GROUND WIRE, PVC COVERED	50'	50'	-	S812490	GNDPVC
8	GROUND ROD, 5/8" X 8', COPPERWELD	1	1	-	S603074 (X)	
9	COPPER BONDED GROUND CONNECTOR	1	1	-	S259010	-
10	GALVANIZED STAPLES FOR PVC COVERED GROUND WIRE	AS REQ'D	AS REQ'D	-	S678562	-

NOTES:

(X) THIS ITEM IS EXEMPT.

REFERENCE:

(a) GROUNDING METHODS - SEE OH1002.5.

© 1998 - 2020 San Diego Gas & Electric Company. All rights reserved. Removal of this copyright notice without permission is not permitted under law.

REV	CHANGE	DR	BY	DSN	APV	DATE	REV	CHANGE	DR	BY	DSN	APV	DATE
C	TABLE UPDATE	EDM	JIK	JES	CZH	05/11/2020	F						
B	DRAWING UPDATE	PEI	-	-	-	02/18/2019	E						
A	ORIGINAL ISSUE	-	-	TQ	DW	03/20/2014	D						

X Indicates Latest Revision | Completely Revised | New Page | Information Removed

SDG&E ELECTRIC OVERHEAD CONSTRUCTION STANDARDS

LIGHTNING ARRESTER INSTALLATIONS ON 4KV CIRCUITS

OH1251.1

TABLE OF CONTENTS

SCOPE: THIS STANDARD SHOWS THE INSTALLATION METHOD OF A NOVA SWITCH FOR USE AS A SERVICE RESTORER, LINE SWITCH OR A TIE SWITCH.

ATTENTION:

* THIS INSTALLATION REQUIRES VEHICLE ACCESS AND IS NOT TO BE INSTALLED ON AN EXISTING CABLE POLE. AUTO-SECTIONALIZING IS NOT AVAILABLE ON THIS SCADA SWITCH.

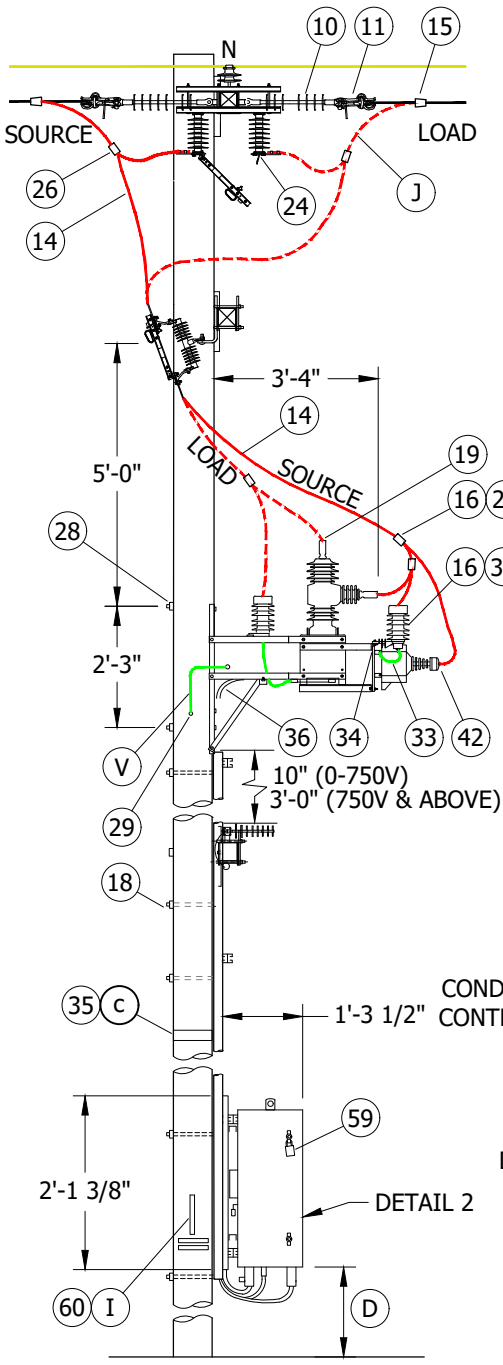

FIGURE 1
SIDE VIEW

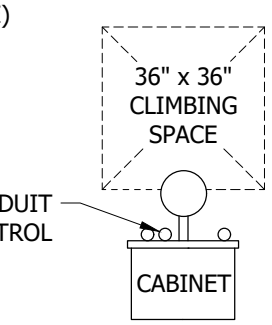

FIGURE 1
DEADEND WIRE BYPASS SWITCH
VIEW A-A

TABLE 1

OVERHEAD MACRO UNITS	
SERVICE RESTORER	SRNOVA
LINE/TIE SWITCH	SWNOVA

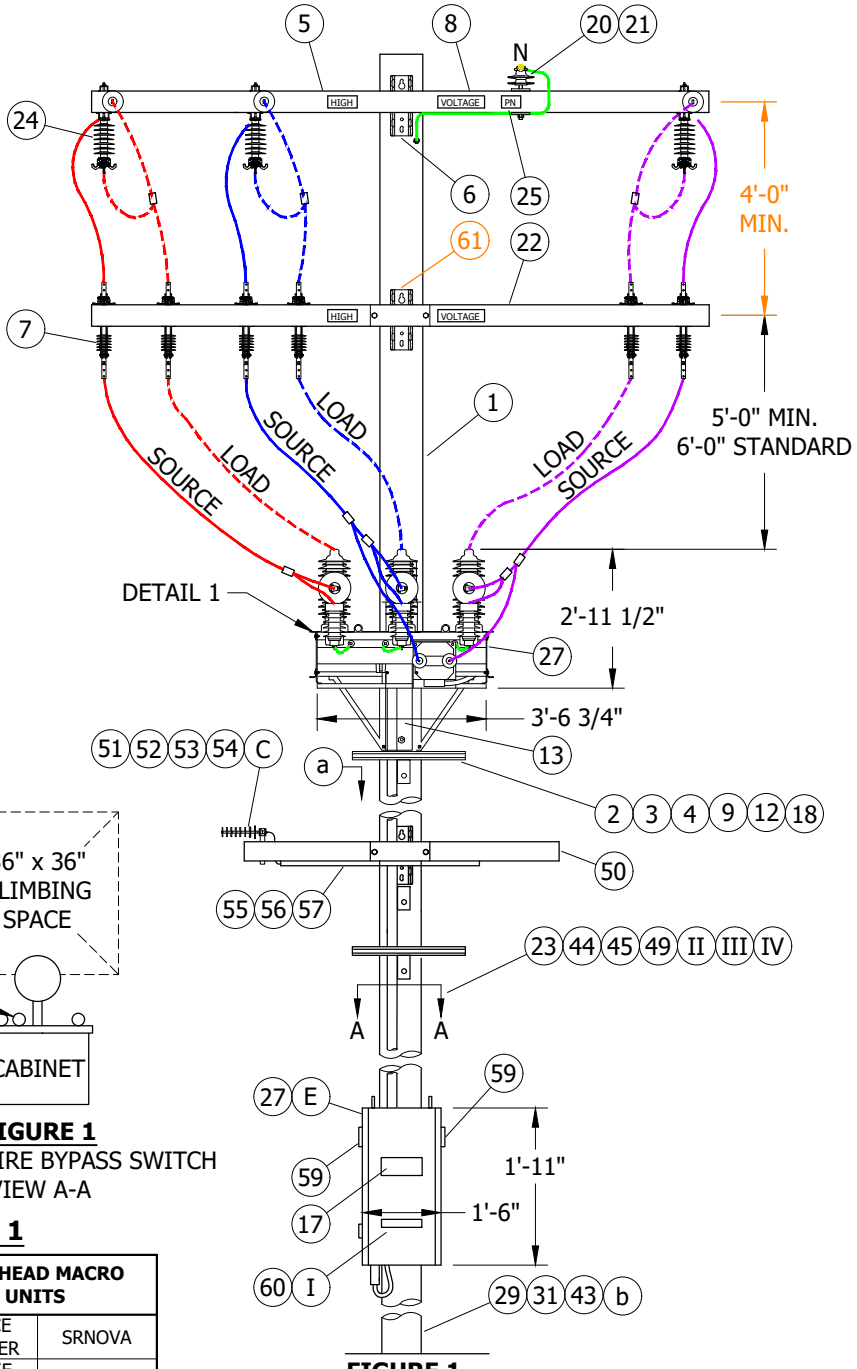

FIGURE 1
FRONT VIEW

© 1998 - 2021 San Diego Gas & Electric Company. All rights reserved. Removal of this copyright notice without permission is not permitted under law.

REV	CHANGE	DR	BY	DSN	APV	DATE	REV	CHANGE	DR	BY	DSN	APV	DATE
C	EDITORIAL CHANGES	-	GW	JS	CZH	05/01/2018	F	DRAWING UPDATE	EDM	RSL	JES	CZH	12/12/2021
B	TABLE UPDATES	-	JS	JS	MDJ	10/03/2017	E	DRAWING CHANGES	-	MRF	JES	CZH	10/07/2019
A	TABLE UPDATES	-	SL	JS	MDJ	10/20/2016	D	EDITORIAL CHANGES	-	GW	JS	CZH	12/05/2018

X Indicates Latest Revision | Completely Revised | New Page | Information Removed

SDG&E ELECTRIC OVERHEAD CONSTRUCTION STANDARDS

NOVA SWITCH AND SCADA FORM 6 CONTROLLER
WITH HOOKSTICK BYPASS SWITCHES

OH1271.1

TABLE OF CONTENTS

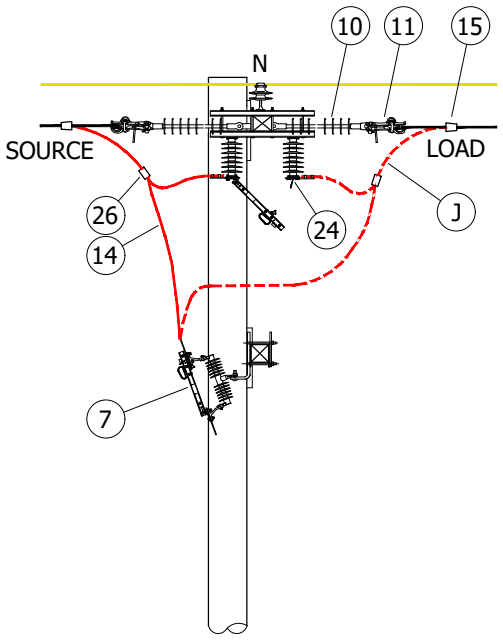

FIGURE 2
SIDE VIEW

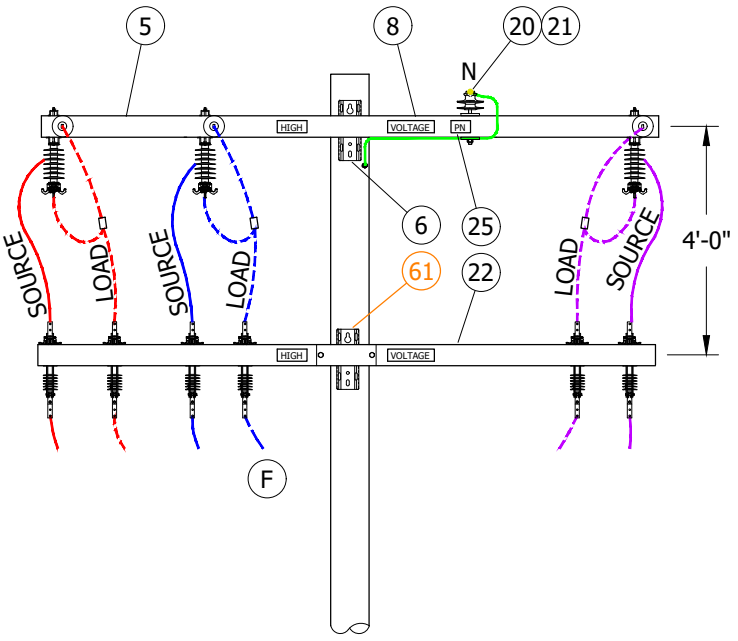

FIGURE 2
FRONT VIEW

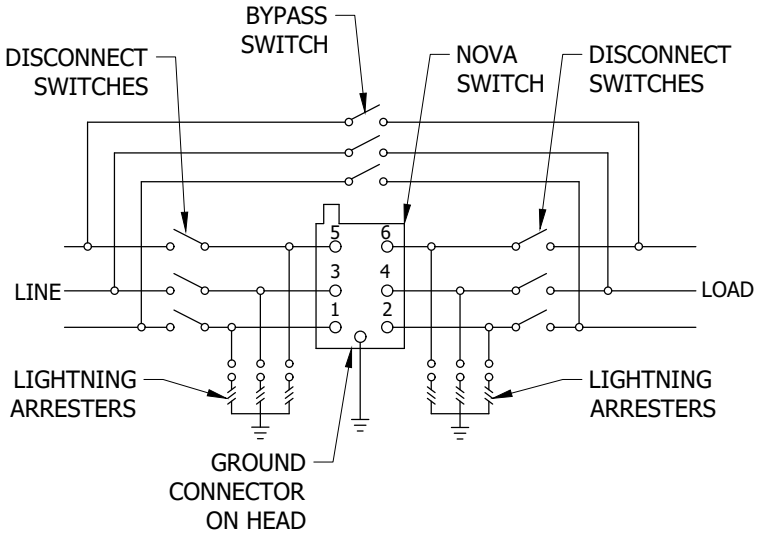

FIGURE 3
SCHEMATIC DIAGRAM

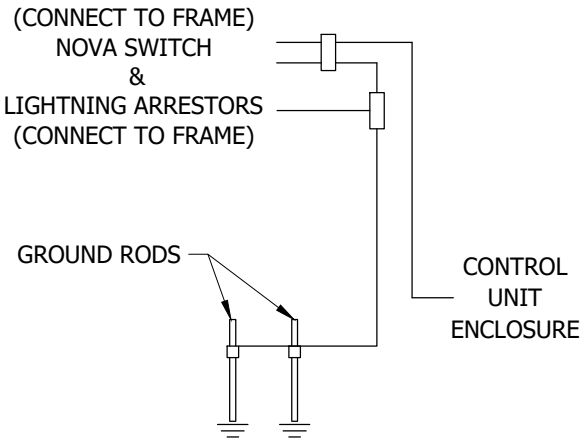

FIGURE 4
GROUND WIRING (A)

TABLE OF CONTENTS

© 1998 - 2021 San Diego Gas & Electric Company. All rights reserved. Removal of this copyright notice without permission is not permitted under law.

REV	CHANGE	DR	BY	DSN	APV	DATE	REV	CHANGE	DR	BY	DSN	APV	DATE
C	EDITORIAL CHANGES	-	GW	JS	CZH	05/01/2018	F	DRAWING UPDATE	EDM	RSL	JES	CZH	12/12/2021
B	TABLE UPDATES	-	JS	JS	MDJ	10/03/2017	E	DRAWING CHANGES	-	MRF	JES	CZH	10/07/2019
A	TABLE UPDATES	-	SL	JS	MDJ	10/20/2016	D	EDITORIAL CHANGES	-	GW	JS	CZH	12/05/2018

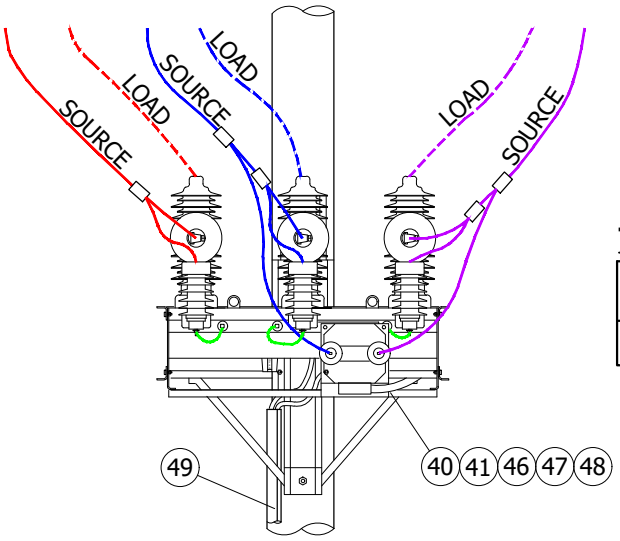

DETAIL 1
NOVA SWITCH WIRING (B)
FRONT VIEW

TABLE 2

OVERHEAD MACRO UNIT
SRSEC

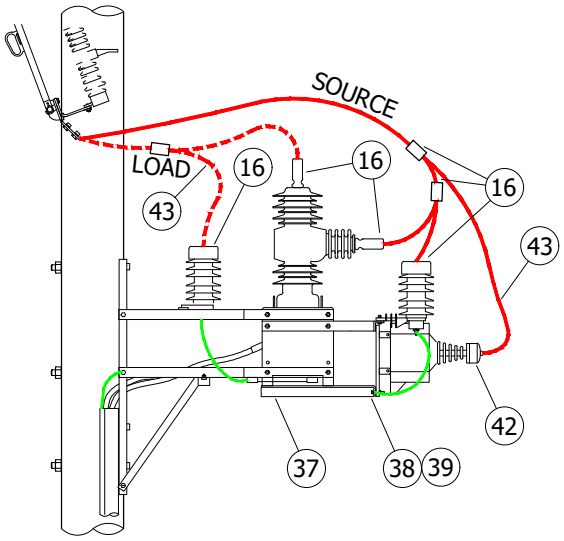

DETAIL 1
NOVA SWITCH WIRING (B)
SIDE VIEW

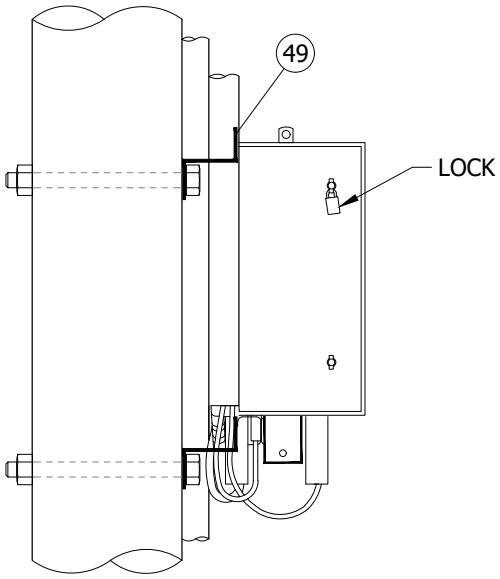

DETAIL 2
SIDE VIEW

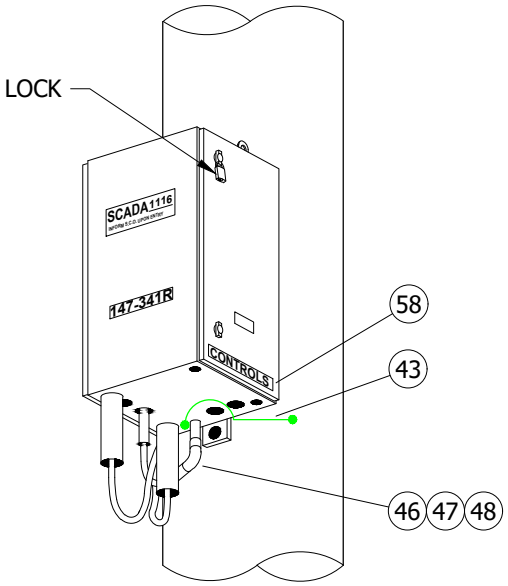

DETAIL 2
ISOMETRIC VIEW

TABLE OF CONTENTS

© 1998 - 2021 San Diego Gas & Electric Company. All rights reserved. Removal of this copyright notice without permission is not permitted under law.

REV	CHANGE	DR	BY	DSN	APV	DATE	REV	CHANGE	DR	BY	DSN	APV	DATE
C	EDITORIAL CHANGES	-	GW	JS	CZH	05/01/2018	F	DRAWING UPDATE	EDM	RSL	JES	CZH	12/12/2021
B	TABLE UPDATES	-	JS	JS	MDJ	10/03/2017	E	DRAWING CHANGES	-	MRF	JES	CZH	10/07/2019
A	TABLE UPDATES	-	SL	JS	MDJ	10/20/2016	D	EDITORIAL CHANGES	-	GW	JS	CZH	12/05/2018

INSTALLATION:

(A) CONNECT GROUND LEAD TO NOVA SWITCH. CONNECT LIGHTNING ARRESTER GROUND LEADS AND GROUND CONNECTOR ON HEAD OF NOVA SWITCH TO MOUNTING FRAME AND GROUND BUS. CONNECT CONTROL UNIT ENCLOSURE GROUND WIRE TO THE NOVA SWITCH - SEE DETAIL 3 FOR GROUND WIRING.

(B) SCADA FORM 6 CONTROLLER REQUIRES 120V SUPPLY COMING FROM THE SOURCE SIDE USING A PT MOUNTED TO THE NOVA SWITCH FRAME.

(C) PLANNER TO SPECIFY QUADRANT OF POLE FOR ANTENNA MOUNT WITH DATA FROM THE "SCADA TELECOMMUNICATIONS COORDINATION" FORM. SEE PROJECT MANAGEMENT INTRANET SITE FOR FORMS.

(D) BOTTOM OF RTU CABINET TO BE MOUNTED 10 FEET FROM GROUND LEVEL WHEN NOT SUBJECT TO TRAFFIC CONTACT. IF VULNERABLE TO VEHICLE DAMAGE, MOUNT BOTTOM OF RTU CABINET 13'-6" FROM GROUND LEVEL. CONSIDER LARGE VEHICLES PARKING PARALLEL TO CURB.

(E) CONTROL AND ANTENNA CONNECTIONS ARE TO BE MADE BY KEARNY CREW. LINE CREW MOUNTS NOVA SWITCH TO POLE AND LEAVES CONTROL CABLE AND VOLTAGE CABLE ON SITE OR WITH KEARNY CREW. IF THE CONTROL AND VOLTAGE CABLES ARE LEFT ON SITE, DO NOT REMOVE THEM FROM PLASTIC BAG OR REMOVE CAPS. WATER ENTRY WILL DAMAGE THE CABLES.

(F) BYPASS SWITCHES SHALL ALWAYS BE INSTALLED. THEY WILL ALLOW FOR CREWS TO BYPASS THE SWITCH FOR MAINTENANCE OR FAILURES. THIS IS TRUE FOR APPLICATIONS AS A SERVICE RESTORER (SR), LINE SWITCH, OR TIE SWITCH. LINE WIRE LESS THAN 4/0 MUST BE DEAD ENDED TO PREVENT IN-LINE BYPASS SWITCHES FROM ROLLING DURING OPERATION.

G. THE NEW NOVA SWITCH COMES WITH INTERNAL VOLTAGE SENSORS AND DO NOT NEED EXTERNAL LYNDSEY SENSORS INSTALLED. THIS WILL BE NOTED BY A "VTC" STICKER ON THE BOTTOM OF THE SWITCH.

H. ORIENTATION OF THE SWITCH SHOULD BE SUCH THAT THE SOURCE FEEDS INTO THE HORIZONTAL BUSHING AND LOAD FEEDS OUT THE VERTICAL BUSHING. A DEVIATION REQUEST IS REQUIRED FOR INSTALLATIONS IN "BUCK" POSITION.

(J) TAPPING OPTIONS: TAIL TAP, STIRRUP AND HOTLINE CLAMP, OR LINE TAP.

BILL OF MATERIALS:

ITEM	DESCRIPTION	QUANTITY	STANDARD PAGE	STOCK NUMBER	DESIGN UNITS
1	POLE AS REQ'D IN TIER 2 & TIER 3	-	354	-	-
2	LADDER ARM BRACKET	AS REQ'D	1401	S167186 (X)	RARM/L
3	DOUBLE UNISTRUT ARM, 2'-0"	AS REQ'D	1401	S216702 (X)	
4	CLAMPING CHANNEL NUT W/SPRING, 1/2"	AS REQ'D	1401	S503488	
5	CROSSARM, DEADEND (VIII)	AS REQ'D	-	-	-
6	BOLT, MACH, GALV, 3/4" X (LENGTH AS REQ'D) 2 SQUARE, CURVED & 2 COIL SPRING WASHERS	AS REQ'D	390	-	-
7	SWITCH, DISCONNECT, HOOKSTICK, CUTOUT, 27KV, 900A	6	-	S706670 (VI)	PS900
				S707004 (VII)	P900D
	BRACKET, MOUNTING, CUTOUT	6	397	S166070	CO/B
8	SIGN, HIGH VOLTAGE STICKER	AS REQ'D	-	S647660	-
9	NUT STUD, 1/2" X 1 3/8", CLAMPING UNISTRUT	AS REQ'D	1401	-	-
10	INSULATOR, SUSPENSION, 35KV, LONG DEADEND	AS REQ'D	-	S428958	LONGDE
11	CLAMP, STRAIGHT LINE, D.E.	AS REQ'D	739	-	-
12	UNISTRUT PIPE CLAMPS, 3"	AS REQ'D	1401	S229632	UPC3IN
13	SCHEDULE 40, PVC, 3"	AS REQ'D	1404/4204	S251360	PVC-3
14	WIRE, POLY COVERED COPPER, (SIZE AS REQ'D WITH MINIMUM SIZE EQUAL TO LINE CONDUCTOR AMPACITY, OR GREATER	AS REQ'D	711	-	-
15	CONNECTOR, WIRE, WEDGE (SIZE AS REQ'D)	AS REQ'D	784	-	-
16	TAPE, SELF-FUSING, 1" X 36'-0", GRAY	AS REQ'D	1274	S721736 (X)	-
	TAPE, SELF-FUSING, 2" X 36'-0", GRAY	AS REQ'D	1274	S721738 (X)	-
17	DECAL "SCADA" "INFORM S.C.O. UPON ENTRY"	1	207	S301934	-

TABLE OF CONTENTS

© 1998 - 2021 San Diego Gas & Electric Company. All rights reserved. Removal of this copyright notice without permission is not permitted under law.

REV	CHANGE	DR	BY	DSN	APV	DATE	REV	CHANGE	DR	BY	DSN	APV	DATE
C	EDITORIAL CHANGES	-	GW	JS	CZH	05/01/2018	F	DRAWING UPDATE	EDM	RSL	JES	CZH	12/12/2021
B	TABLE UPDATES	-	JS	JS	MDJ	10/03/2017	E	DRAWING CHANGES	-	MRF	JES	CZH	10/07/2019
A	TABLE UPDATES	-	SL	JS	MDJ	10/20/2016	D	EDITORIAL CHANGES	-	GW	JS	CZH	12/05/2018

BILL OF MATERIALS (CONT'D):

ITEM	DESCRIPTION	QUANTITY	STANDARD PAGE	STOCK NUMBER	DESIGN UNITS
18	5/8" GALVANIZED BOLTS (LENGTH AS REQUIRED)	AS REQ'D	390	-	-
19	TERMINAL, COMPRESSION, CU OR AL (SIZE AS REQ'D)	AS REQ'D	784	-	-
20	INSULATOR, PIN, 12KV, (SIZE AS REQ'D)	AS REQ'D	396	S532706 (X)	-
21	INSULATOR, LINE, 12KV	AS REQ'D	750	-	-
22	FIBERGLASS CROSSARM, TANGENT-EQUIPMENT ARM	AS REQ'D	379	-	-
23	RISER CONSTRUCTION (IV)	AS REQ'D	1404/4204	-	-
24	SWITCH, DISCONNECT UNDERARM, 27KV, 900A (F)	3	-	S706680 (VI)	D900UA
				S706682 (VII)	E900UA
25	SIGN, PN	2	208	S648000	PN
26	CONNECTOR, 2-BOLT (SIZE AS REQ'D) (E)	6	785	-	-
27	NOVA RECLOSER/SWITCH, SCADA COMPATIBLE, 630A,INCLUDES: MOUNTING BRACKET, INTERNAL VOLTAGE SENSORS, AND BIRD GUARD BUSHING COVERS	1	-	S571960	NOVASW OR NOVASR
	CONTROLLER, FORM6DC, COMPATIBLE WITH NOVA DC SWITCH, INCLUDES: 35'-0" CONTROL CABLE AND VOLTAGE CABLE	1	-	S273950	
	TRANSCEIVER, MDS RADIO	AS REQ'D	-	S749500	SOTRAN
	TRANSCEIVER, MDS RADIO SPREADSPECTRUM	AS REQ'D	-	S749504	SPRAD
28	BOLT, MACH, GALV., 3/4" X (LENGTH AS REQ'D), 1 SQUARE CURVED RIBBED & 1 DOUBLE COIL SPRING WASHER	4	390	-	-
29	COPPER BONDED GROUND CONNECTOR	1	-	S259010	-
30	ARRESTER, LIGHTNING, 12KV	6	-	S113248	LA12
31	GROUND ROD, 5/8" X 8'-0", COPPERWELD	1	-	S603074 (X)	-
32	BOLT, MACH, GALV., 1/2" X 2", 1 ROUND & 1 LOCK WASHER	6	390	-	-
33	FLEXIBLE ARRESTER GROUND STRAP, ROUND	AS REQ'D	-	S403522	-
34	CONNECTOR, SPLIT BOLT, #2	AS REQ'D	-	S269536	-
35	VISIBILITY STRIP — ADHESIVE STRIP	1	208	S304060	-
	VISIBILITY STRIP — NAIL ON			S304064	-
36	GRIP, CONTROL CABLE, NOVA	1	-	S392408	-
	GRIP, SENSOR CABLE	1	-	S392406	-
37	BRACKET, NOVA, PT MOUNT (B)	1	-	S165430	PTBRKT
38	POTENTIAL TRANSFORMER, 12,000/120V (B)	1	-	S762716	SRPT
39	BOLT, MACH, GALV., 3/8" X 1 1/2", AND 1 LOCK WASHER (B)	4	-	S154146 (X)	-
40	CONDUIT, 1", FLEXIBLE STEEL (B)	6'-0"	-	S249952	-
41	WIRE, 3 CONDUCTOR #12 CONTROL CABLE (B)	40'-0"	-	S192640	-
42	BUSHING COVER	2	-	S289188 (X)	BSHCOV
43	#4 4/7 COVERED CU STRANDED	25'-0"	-	S815044	POLY4J
44	BRACKET, LADDER ARM	AS REQ'D	1404/4204	-	-
45	CHANNEL, DOUBLE, GALVANIZED, 24"	AS REQ'D	1404/4204	-	-
46	TERMINAL, ADAPTOR, PVC, 3/4"	1	-	S102754	-
47	ELBOW, 90'-0", PULLING, PVC, 3/4"	1	-	-	-
48	NIPPLE, PIPE, SCREW, GALV., 3/4" X 1"	1	-	-	-

TABLE OF CONTENTS

© 1998 - 2021 San Diego Gas & Electric Company. All rights reserved. Removal of this copyright notice without permission is not permitted under law.

REV	CHANGE	DR	BY	DSN	APV	DATE	REV	CHANGE	DR	BY	DSN	APV	DATE
C	EDITORIAL CHANGES	-	GW	JS	CZH	05/01/2018	F	DRAWING UPDATE	EDM	RSL	JES	CZH	12/12/2021
B	TABLE UPDATES	-	JS	JS	MDJ	10/03/2017	E	DRAWING CHANGES	-	MRF	JES	CZH	10/07/2019
A	TABLE UPDATES	-	SL	JS	MDJ	10/20/2016	D	EDITORIAL CHANGES	-	GW	JS	CZH	12/05/2018

BILL OF MATERIALS (CONT'D):

ITEM	DESCRIPTION	QUANTITY	STANDARD PAGE	STOCK NUMBER	DESIGN UNITS
49	NUT, CLAMPING, CHANNEL, W/SPRING, 1/2" (IV)	AS REQ'D	1404/4204	-	-
50	FIBERGLASS CROSSARM, TANGENT, 6'-0"	AS REQ'D	379	S294354	6FT
51	ANTENNA, SCADA, COMMUNICATION, BROADBAND AND CONNECTORS	1	-	S109570	ANT
52	NIPPLE, PIPE 2" X 7", ALUMINUM	1	-	-	ANTXMB
53	BOLT, MACH GALV., 5/8" X 14"	1	-	S154880	
54	CENTERING WASHER, GALV.	2	-	S795520	
55	CABLE, FLEXIBLE, 1/2" COAXIAL SCADA ANTENNA	AS REQ'D	-	S191906	ANTCAB
56	CONNECTOR, COAXIAL, STRAIGHT	2	-	S254170	-
57	U-GUARD, 1" X 10'-0"	AS REQ'D	-	S251234	IUMOLD
58	TAG "CONTROLS"	1	204	-	-
59	PADLOCK, SCHLAGE ELECTRIC SERIES	2	-	S514848	-
60	TAG, SWITCH NUMBER	2	204	-	-
61	BOLT, MACH, GALV, 5/8" X (LENGTH AS REQ'D) 2 SQUARE, CURVED & 2 COIL SPRING WASHERS	AS REQ'D	390	-	-

NOTES:

(I) THE NOVA SWITCH MACRO UNITS, "SRNOVA" AND "SWNOVA", WILL GENERATE TWO SWITCH NUMBERS. THE HIGHER NUMBER SHALL BE ASSIGNED TO THE NOVA SWITCH AND THE LOWER NUMBER TO THE BYPASS DISCONNECT. WHEN INSTALLED AS A NOVA SERVICE RESTORER (MACRO UNIT "SRNOVA"), THE "R" DESIGNATION WILL BE ASSIGNED TO THE HIGHER NUMBER. BE SURE THE MAPS ARE COMPOSED IN THIS MANNER AND THE SITE IS PROPERLY IDENTIFIED.

FOR EXAMPLE:
SERVICE RESTORER (SRNOVA)

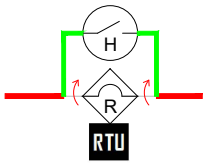

SCADA 1000
123-45R (NOVA SWITCH)
123-44 OPEN (BYPASS DISCONNECTS)

LINE SWITCH (SWNOVA)

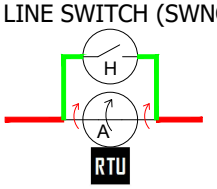

SCADA 1000
123-45 (NOVA SWITCH)
123-44 OPEN (BYPASS DISCONNECTS)

TIE SWITCH (SWNOVA)

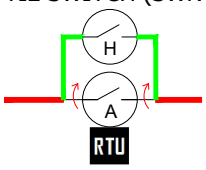

SCADA 1000
123-T2-456 (NOVA SWITCH)
123-T1-456 OPEN (BYPASS DISCONNECTS)

© 1998 - 2021 San Diego Gas & Electric Company. All rights reserved. Removal of this copyright notice without permission is not permitted under law.

REV	CHANGE	DR	BY	DSN	APV	DATE	REV	CHANGE	DR	BY	DSN	APV	DATE
C	EDITORIAL CHANGES	-	GW	JS	CZH	05/01/2018	F	DRAWING UPDATE	EDM	RSL	JES	CZH	12/12/2021
B	TABLE UPDATES	-	JS	JS	MDJ	10/03/2017	E	DRAWING CHANGES	-	MRF	JES	CZH	10/07/2019
A	TABLE UPDATES	-	SL	JS	MDJ	10/20/2016	D	EDITORIAL CHANGES	-	GW	JS	CZH	12/05/2018

TABLE OF CONTENTS

NOTES (CONT'D):

(II) ONE TELECOMMUNICATION PROVIDER PER POLE.

(III) THIS ITEM SUPPLIED AND INSTALLED BY TELECOMMUNICATION.

(IV) ALL COAXIAL CABLES AND ANTENNA GROUNDS MUST BE IN CONDUIT AND PLACED ON LADDER ARMS OFF THE POLE AND EXTEND DOWN TO THE ANCILLARY EQUIPMENT.

(V) INSTALL GROUND FROM BOTTOM OF SWITCH FRAME TO POLE/GROUND WIRE.

(VI) REQUIRED IN CONTAMINATION DISTRICT 1 AND PREFERRED IN COASTAL DISTRICTS (OC, NC, BC, CM). (e)

(VII) PREFERRED FOR INLAND DISTRICTS (NE, RA, EA, ME).

(VIII) FIBERGLASS CROSSARMS SHALL BE UTILIZED ON STEEL AND FIBERGLASS POLES. FOR WOOD POLES IN CONTAMINATION DISTRICT 1, WOOD CROSSARMS ARE REQUIRED.

(X) THIS ITEM IS EXEMPT.

REFERENCE:

(a) FOR POLE STEPPING, SEE OH363.

(b) FOR GROUNDING METHODS, SEE OH1002.

(c) REFLECTOR STRIPS ARE REQUIRED ON ALL SECTIONALIZING/TIELINE SWITCHES AND SERVICE RESTORER POLES, SEE OH208, TABLE 1.

d. VERIFY IF LOCATION RESIDES IN AVIAN PROTECTION AREA IN LS GIS. IF SO REFER TO OH CONSTRUCTION STANDARDS, SECTION 1600 FOR PROPER WILDLIFE PROTECTION.

(e) FOR CONTAMINATION DISTRICTS, SEE OH287.

TABLE OF CONTENTS

© 1998 - 2021 San Diego Gas & Electric Company. All rights reserved. Removal of this copyright notice without permission is not permitted under law.

REV	CHANGE	DR	BY	DSN	APV	DATE	REV	CHANGE	DR	BY	DSN	APV	DATE
C	EDITORIAL CHANGES	-	GW	JS	CZH	05/01/2018	F	DRAWING UPDATE	EDM	RSL	JES	CZH	12/12/2021
B	TABLE UPDATES	-	JS	JS	MDJ	10/03/2017	E	DRAWING CHANGES	-	MRF	JES	CZH	10/07/2019
A	TABLE UPDATES	-	SL	JS	MDJ	10/20/2016	D	EDITORIAL CHANGES	-	GW	JS	CZH	12/05/2018

X Indicates Latest Revision | Completely Revised | New Page | Information Removed

SDG&E ELECTRIC OVERHEAD CONSTRUCTION STANDARDS

NOVA SWITCH AND SCADA FORM 6 CONTROLLER WITH HOOKSTICK BYPASS SWITCHES

OH1271.7

SCOPE: THIS STANDARD SHOWS THE INSTALLATION METHOD OF AN ELASTIMOLD MVR SWITCH FOR USE AS A SERVICE RESTORER, LINE SWITCH OR A TIE SWITCH.

ATTENTION:

* THIS INSTALLATION REQUIRES ALL WEATHER 24/7 VEHICLE ACCESS AND IS NOT TO BE INSTALLED ON AN EXISTING CABLE POLE. SUBMIT "SCADA TELECOMMUNICATION COORDINATION" FORM BEFORE DESIGN BEGINS TO DETERMINE COMMUNICATION REQUIREMENTS.

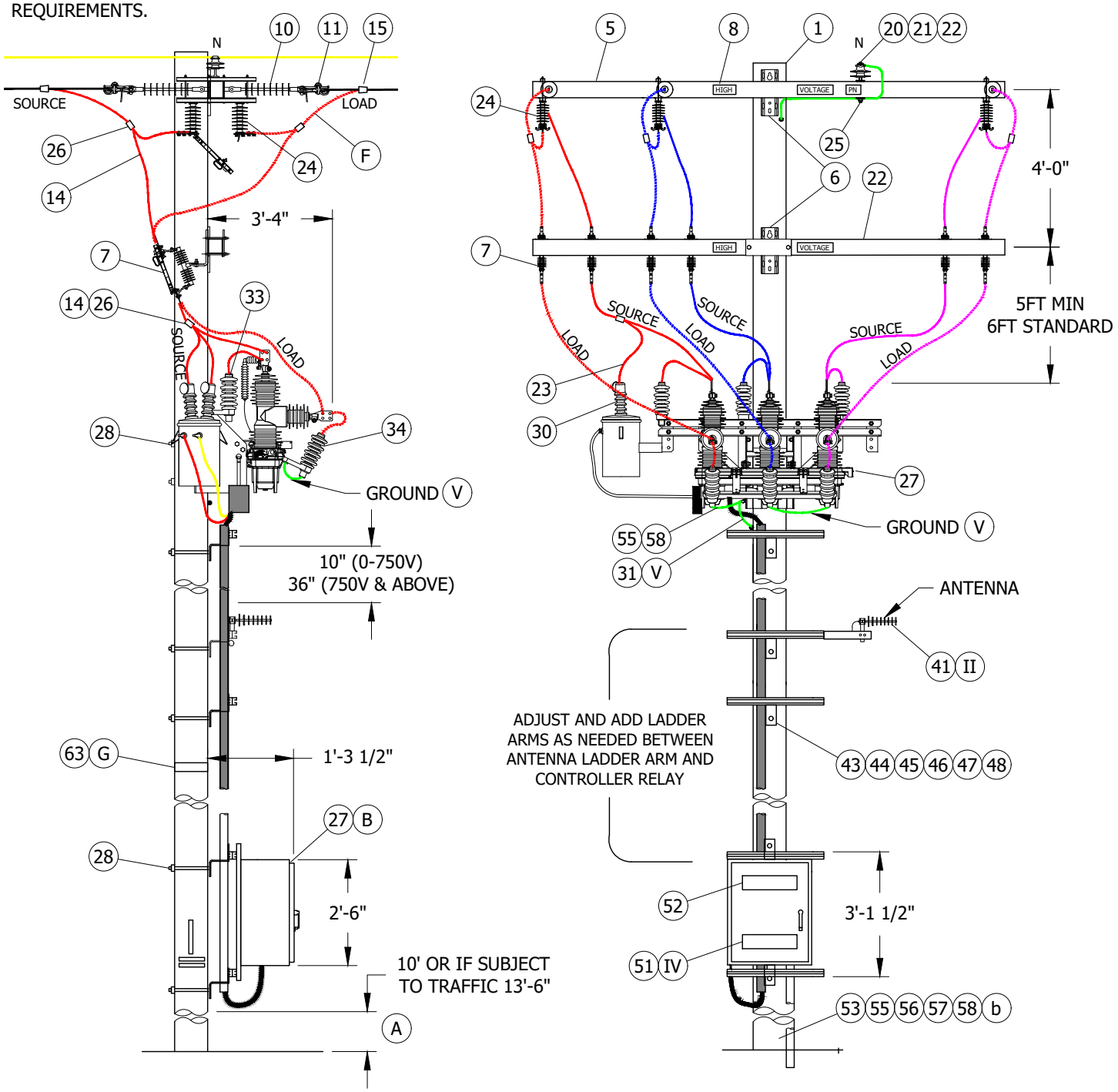

© 1998 - 2020 San Diego Gas & Electric Company. All rights reserved. Removal of this copyright notice without permission is not permitted under law.

REV	CHANGE	DR	BY	DSN	APV	DATE	REV	CHANGE	DR	BY	DSN	APV	DATE
C	UPDATED FIGURE	-	GW	JS	CZH	10/7/2018	F						
B	COMPLETELY REVISED	-	SL	JS	MDJ	3/1/2018	E	EDITORIAL CHANGES	PEI	JA	JES	CZH	10/12/2020
A	UPDATED MATERIALS	-	JC	IL	MDJ	4/15/2016	D	DRAWING CHANGES	EDM	MRF	JES	CZH	4/13/2020

X Indicates Latest Revision | Completely Revised | New Page | Information Removed

SHEET 1 OF 9

SDG&E ELECTRIC OVERHEAD CONSTRUCTION STANDARDS

ELASTIMOLD MVR SWITCH AND SCADA 651R2 CONTROLLER WITH HOOKSTICK BYPASS SWITCHES

OH1272.1

TABLE OF CONTENTS

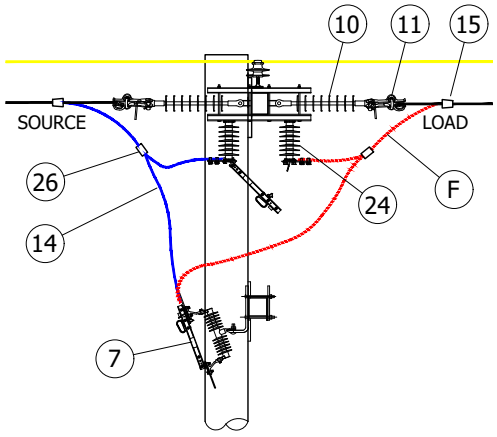

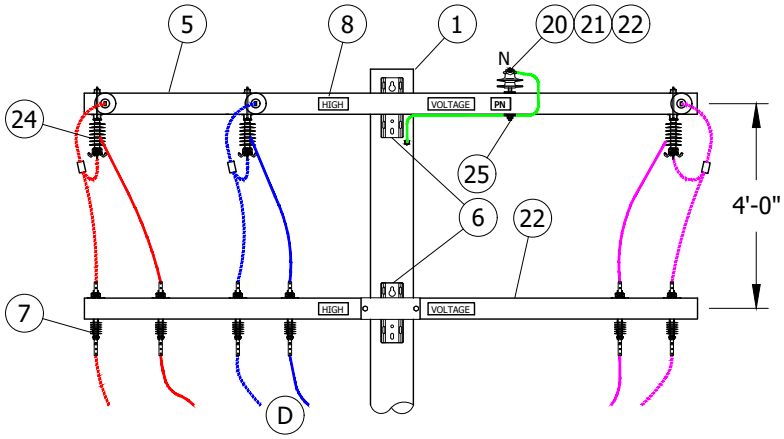

DEADEND WIRE BYPASS SWITCH DETAIL
FOR WIRE SIZES BELOW 4/0 AWG

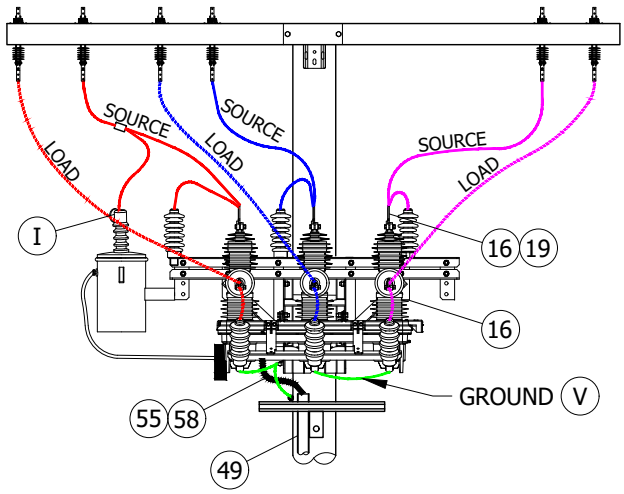

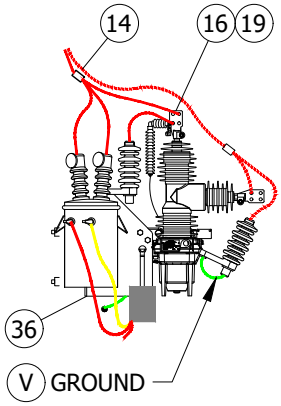

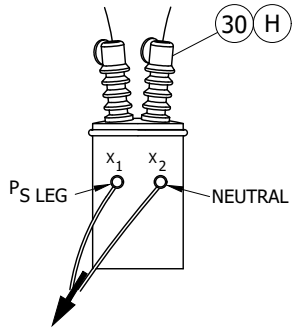

PT DIAGRAM

NOTE: MAKE LOW SIDE OF PT CONNECTIONS TO TERMINAL BLOCK FOUND ON RECLOSER FRAME. PT AND CONNECTIONS OMITTED ON SIDE VIEW. MAKE PRIMARY CONNECTIONS TO TWO OF THE THREE AVAILABLE PHASES.

TABLE OF CONTENTS

© 1998 - 2020 San Diego Gas & Electric Company. All rights reserved. Removal of this copyright notice without permission is not permitted under law.

REV	CHANGE	DR	BY	DSN	APV	DATE	REV	CHANGE	DR	BY	DSN	APV	DATE
C	UPDATED FIGURE	-	GW	JS	CZH	10/7/2018	F						
B	COMPLETELY REVISED	-	SL	JS	MDJ	3/1/2018	E	EDITORIAL CHANGES	PEI	JA	JES	CZH	10/12/2020
A	UPDATED MATERIALS	-	JC	IL	MDJ	4/15/2016	D	DRAWING CHANGES	EDM	MRF	JES	CZH	4/13/2020

X Indicates Latest Revision | Completely Revised | New Page | Information Removed

SDG&E ELECTRIC OVERHEAD CONSTRUCTION STANDARDS

ELASTIMOLD MVR SWITCH AND SCADA 651R2
CONTROLLER WITH HOOKSTICK BYPASS SWITCHES

OH1272.2

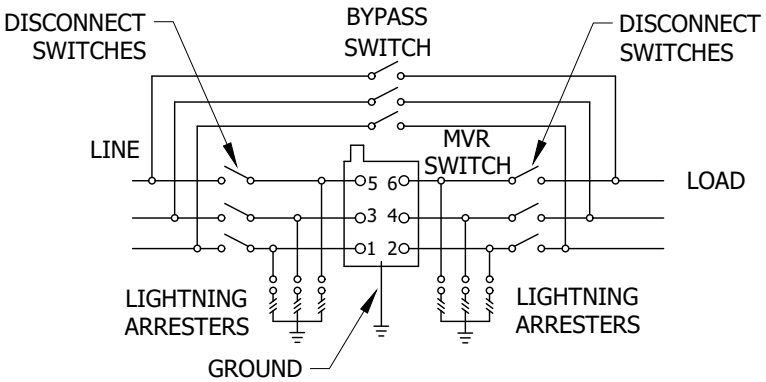

SCHEMATIC DIAGRAM

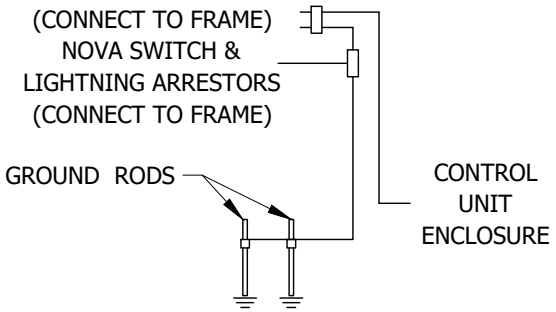

GROUND WIRING DETAIL (A)

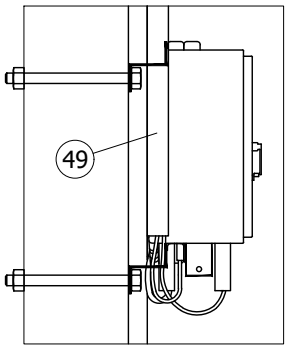

SIDE VIEW

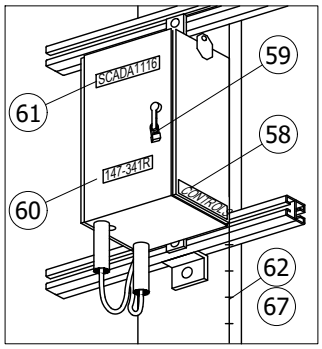

3D VIEW

ELASTIMOLD MVR SWITCH WIRING DETAIL

INSTALLATION:

(A) CONNECT GROUND LEAD TO MVR SWITCH. CONNECT CONTROL UNIT ENCLOSURE GROUND WIRE AND GROUND TO THE MVR SWITCH. (b)

(B) RTU TO BE MOUNTED 10' FROM GROUND LEVEL TO BOTTOM OF RTU CABINET WHEN NOT SUBJECT TO TRAFFIC CONTACT. IF VULNERABLE TO VEHICLE DAMAGE, MOUNT RTU 13' - 6" FROM GROUND LEVEL TO BOTTOM OF RTU CABINET. CONSIDER LARGE VEHICLES PARKING PARALLEL TO CURB.

C. CONTROL, PT TERMINAL BLOCK-RELAY, AND ANTENNA CONNECTIONS ARE TO BE MADE BY KEARNY CREW. LINE CREW MOUNTS MVR SWITCH TO POLE AND LEAVES CONTROL CABLE AND VOLTAGE CABLE ON SITE OR WITH KEARNY CREW. IF THE CONTROL & VOLTAGE CABLES ARE LEFT ON SITE, **DO NOT REMOVE THEM FROM PLASTIC BAG OR REMOVE CAPS. WATER ENTRY WILL DAMAGE THE CABLES.**

(D) BY-PASS SWITCHES SHALL ALWAYS BE INSTALLED. THEY WILL ALLOW FOR CREWS TO BY-PASS THE SWITCH FOR MAINTENANCE OR FAILURES. THIS IS TRUE FOR APPLICATIONS AS A SERVICE RESTORER (SR), LINE SWITCH, OR TIE SWITCH.

(E) ORIENTATION OF THE SWITCH SHOULD BE SUCH THAT THE SOURCE FEEDS INTO THE VERTICAL BUSHING AND LOAD FEEDS OUT THE HORIZONTAL BUSHING.

(F) TAPPING OPTIONS: TAIL TAP, STIRRUP AND HOTLINE CLAMP, OR LINE TAP.

(G) DELINEATOR/REFLECTOR STRIPS ARE REQUIRED ON ALL SECTIONALIZING/TIELINE SWITCHES AND SERVICE RESTORER POLES. (c)

(H) IN AVIAN PROTECTION AREAS, USE APPROPRIATE AVIAN COVER-UP. (d) INCLUDING THE USE OF SQUIRREL TAPE.

(J) PLEASE REFERENCE JUNE 2020 NEWSLETTER; THE MVR SHALL NOT BE INSTALLED INSIDE HFTD TIER 2 OR 3 WITHOUT PRIOR APPROVAL OF EDE & SPACE.

© 1998 - 2020 San Diego Gas & Electric Company. All rights reserved. Removal of this copyright notice without permission is not permitted under law.

REV	CHANGE	DR	BY	DSN	APV	DATE	REV	CHANGE	DR	BY	DSN	APV	DATE
C	UPDATED FIGURE	-	GW	JS	CZH	10/7/2018	F						
B	COMPLETELY REVISED	-	SL	JS	MDJ	3/1/2018	E	EDITORIAL CHANGES	PEI	JA	JES	CZH	10/12/2020
A	UPDATED MATERIALS	-	JC	IL	MDJ	4/15/2016	D	DRAWING CHANGES	EDM	MRF	JES	CZH	4/13/2020

X Indicates Latest Revision | Completely Revised | New Page | Information Removed

TABLE OF CONTENTS

BILL OF MATERIALS:

ITEM	DESCRIPTION	QUANTITY	STANDARD PAGE	STOCK NUMBER	DESIGN UNITS
1	POLE AS REQ'D IN TIER 2 AND TIER 3	-	354	-	-
5	FIBERGLASS CROSSARM, DEADEND	AS REQ'D	-	-	-
6	BOLT, MACH, GALV, 3/4" X (LENGTH AS REQ'D) 2 SQUARE, CURVED & 2 COIL SPRING WASHERS	AS REQ'D	392	-	-
7	SWITCH, DISCONNECT 27KV, 900A	6	-	S706670	PS900
	BRACKET, MOUNTING, CUTOUT	6	397	S166070	CO/B
8	SIGN, HIGH VOLTAGE STICKER	AS REQ'D	-	S647660	-
10	INSULATOR, SUSPENSION, 35KV, LONG DEADEND	AS REQ'D	-	S428958	LONGDE
11	CLAMP, STRAIGHT LINE, D.E.	AS REQ'D	739-743	-	-
14	WIRE, POLY INSULATED COPPER, (SIZE AS REQ'D WITH MINIMUM SIZE EQUAL TO LINE CONDUCTOR AMPACITY, OR GREATER)	AS REQ'D	716	-	-
15	CONNECTOR, WIRE, WEDGE (SIZE AS REQ'D)	AS REQ'D	784	-	-
16	TAPE, SELF-FUSING, 1 IN X 36 FT, GRAY	AS REQ'D	1274.8	S721736 (X)	-
17	TAPE, SELF-FUSING, 2 IN X 36 FT, GRAY	AS REQ'D	1274.8	S721738 (X)	-
19	TERMINAL, COMPRESSION, CU OR AL (SIZE AS REQ'D)	AS REQ'D	794-795	-	-
20	INSULATOR, PIN, 12KV, (SIZE AS REQ'D)	AS REQ'D	396	P532706 (X)	-
21	INSULATOR, LINE 12KV	AS REQ'D	750	-	-
22	FIBERGLASS, CROSSARM, TANGENT	AS REQ'D	379	-	-
23	#4 4/7 COVERED CU STRANDED	25FT	-	S815044	POLY 4J
24	SWITCH, DISCONNECT UNDERARM, 27KV, 900A (D)	3	-	S706680	D900UA
				S706682	E900UA
25	SIGN, PN DECAL	2	208	S648004 (X)	-
26	CONNECTOR, (SIZE AS REQ'D)	6	787	-	-
27	ELASTIMOLD RECLOSER/SWITCH SCADA COMPATIBLE, 800A, INCLUDES: MOUNTING BRACKET, INTERNAL VOLTAGE SENSOR, AND 12000/120 VOLTS (J) (B) (E)	1	3675.2	S571970	EM-SW OR EM-SR
	TRANSFORMER, 1KVA, 12000/120 VOLT, INTERNAL FUSE	1	1121.3	S762772	120VPT
	CONTROLLER, SEL 651R2, COMPATIBLE WITH ELASTIMOLD MVR SWITCH, INCLUDES: 40 FT. 32-PIN CONFIG. CONTROL CABLE	1	-	S274578	-
	TRANSCEIVER, MDS RADIO	AS REQ'D	-	S749500	-
	TRANSCEIVER, MDS RADIO SPREADSPECTURM	AS REQ'D	-	S749504	-
28	BOLT, MACH, GALV, 3/4" X (LENGTH AS REQ'D), 1 SQUARE CURVED RIBBED & 1 COIL SPRING WASHER	4	392	-	-
31	POLY COVERED 4/7 STRAND COPPER	AS REQ'D	-	S815044	POLY 4J
33	FLEXIBLE ARRESTER GROUND STRAP, ROUND	AS REQ'D	-	S403522	LAGND
34	ARRESTER, LIGHTNING, SURGE	6	1247.1	-	-
43	LADDER ARM BRACKET	AS REQ'D	1401.1	S167186 (X)	RARM/L
44	2' DOUBLE UNISTRUT ARM	AS REQ'D	1401.1	S216702 (X)	
45	1/2" CLAMPING CHANNEL NUT W/SPRING	AS REQ'D	1401.1	S503488	

TABLE OF CONTENTS

© 1998 - 2020 San Diego Gas & Electric Company. All rights reserved. Removal of this copyright notice without permission is not permitted under law.

REV	CHANGE	DR	BY	DSN	APV	DATE	REV	CHANGE	DR	BY	DSN	APV	DATE
C	UPDATED FIGURE	-	GW	JS	CZH	10/7/2018	F						
B	COMPLETELY REVISED	-	SL	JS	MDJ	3/1/2018	E	EDITORIAL CHANGES	PEI	JA	JES	CZH	10/12/2020
A	UPDATED MATERIALS	-	JC	IL	MDJ	4/15/2016	D	DRAWING CHANGES	EDM	MRF	JES	CZH	4/13/2020

BILL OF MATERIALS (CONT'D):

ITEM	DESCRIPTION	QUANTITY	STANDARD PAGE	STOCK NUMBER	DESIGN UNITS
46	5/8" GALVANIZED BOLTS (LENGTH AS REQUIRED)	AS REQ'D	392.1, .2	-	-
47	NUT STUD 1/2" X 1-3/8", CLAMPING UNISTRUT	AS REQ'D	1401.1	-	-
48	3" UNISTRUT PIPE CLAMPS	AS REQ'D	1401.1	S229632	UPC3IN
49	3" SCHEDULE 40 PVC	AS REQ'D	4204.3	S251360	PVC-3
41	ANTENNA, SCADA, COMMUNICATIONS, BROADBAND, AND CONNECTORS	1	590-594	S109570	ANT
52	NIPPLE, PIPE 2" X 7", ALUMINUM	1	-	-	ANTXMB
53	BOLT, MACH GALV, 5/8" X 14"	1	-	S154880	
54	CENTERING WASHER, GALV	2	-	S795520	
55	CABLE, FLEXIBLE, 1/2" COAXIAL SCADA ANTENNA	AS REQ'D	-	S191906	ANTCAB
56	CONNECTOR, COAXIAL, STRAIGHT	2	-	S254170	-
57	U-GUARD, 1" X 10'	AS REQ'D	-	S251235	IUMOLD
58	TAG "CONTROLS"	1	204	-	-
59	PADLOCK, SCHLAGE ELECTRIC SERIES (IV)	2	-	S514848	-
60	TAG, SWITCH NUMBER	2	204	-	-
61	DECAL "SCADA" "INFORM S.C.O. UPON ENTRY"	1	207	S301934	-
62	#4 CU SOLID GROUND WIRE, PVC COVERED (G)	50'	-	S812490	GNDPVC
63	VISIBILITY STRIP — ADHESIVE STRIP	1	208	S304060	-
	VISIBILITY STRIP — NAIL ON			S304064	-
64	GROUND ROD, 5/8" X 8', COPPERWELD	1	-	S603074 (X)	-
65	COPPER BONDED GROUND CONNECTOR	8	-	S259010	GNDPVC
66	LUG, SINGLE-HOLE, #4, T&B	6	-	SXXXXXX	-
67	GALVANIZED STAPLES FOR PVC COVERED GROUND WIRE (WOOD ONLY)	AS REQ'D	-	S678564 (X)	-

NOTES:

(I) SEL 651R2 CONTROLLER REQUIRES 120-VOLT SUPPLY COMING FROM THE SOURCE SIDE USING A PT MOUNTED TO THE MVR SWITCH FRAME.

(II) PLANNER TO SPECIFY QUADRANT OF POLE FOR ANTENNA MOUNT WITH DATA FROM THE "SCADA TELECOMMUNICATIONS COORDINATION" FORM. SEE PROJECT MANAGEMENT INTRANET SITE FOR FORMS.

III. THE NEW MVR SWITCH COMES WITH INTERNAL AND SUPPLEMENTAL VOLTAGE SENSORS AND DO NOT NEED EXTERNAL LYNDSEY SENSORS INSTALLED.

(IV) THE ELASTIMOLD MVR SWITCH MACRO UNITS, "SR-EM" AND "SW-EM", WILL GENERATE TWO SWITCH NUMBERS. THE HIGHER NUMBER SHOULD BE ASSIGNED TO THE MVR SWITCH AND THE LOWER NUMBER TO THE BY-PASS DISCONNECT. WHEN INSTALLED AS AN MVR SERVICE RESTORER (MACRO UNIT "SR-EM"), THE "R" DESIGNATION WILL BE ASSIGNED TO THE HIGHER NUMBER. BE SURE THE MAPS ARE COMPOSED IN THIS MANNER AND THE SITE IS PROPERLY IDENTIFIED.

TABLE OF CONTENTS

© 1998 - 2020 San Diego Gas & Electric Company. All rights reserved. Removal of this copyright notice without permission is not permitted under law.

REV	CHANGE	DR	BY	DSN	APV	DATE	REV	CHANGE	DR	BY	DSN	APV	DATE
C	UPDATED FIGURE	-	GW	JS	CZH	10/7/2018	F						
B	COMPLETELY REVISED	-	SL	JS	MDJ	3/1/2018	E	EDITORIAL CHANGES	PEI	JA	JES	CZH	10/12/2020
A	UPDATED MATERIALS	-	JC	IL	MDJ	4/15/2016	D	DRAWING CHANGES	EDM	MRF	JES	CZH	4/13/2020

NOTES (CONT'D):

FOR EXAMPLE:

SERVICE RESTORER ("SR-EM" MU)

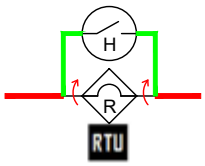

SCADA 1000
123-45R
123-44 OPEN

(ELASTIMOLD MVR SWITCH)
(BY-PASS DISCONNECTS)

LINE SWITCH ("SW-EM" MU)

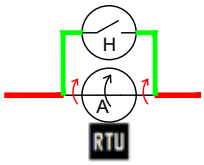

SCADA 1000
123-45
123-44 OPEN

(ELASTIMOLD MVR SWITCH)
(BY-PASS DISCONNECTS)

TIE SWITCH ("SW-EM" MU)

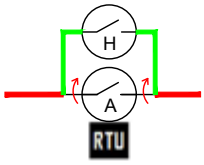

SCADA 1000
123-T2-456
123-T1-456 OPEN

(ELASTIMOLD MVR SWITCH)
(BY-PASS DISCONNECTS)

(V) INSTALL GROUND FROM BOTTOM BOLT OF LIGHTNING ARRESTER TO ARRESTER MOUNTING BOLT. ALL GROUND FROM LIGHTNING ARRESTER ARE TO BE INTENTIONALLY GROUNDED TO POLE.

(X) THIS MATERIAL IS EXEMPT.

REFERENCE:

a. POLE STEPPING - SEE STANDARD 363.

(b) GROUNDING METHODS, SEE STANDARD 1002.

(c) DELINEATOR/REFLECTOR, SEE STANDARD 208.

(d) AVIAN PROTECTION, SEE STANDARD 1600.

TABLE OF CONTENTS

© 1998 - 2020 San Diego Gas & Electric Company. All rights reserved. Removal of this copyright notice without permission is not permitted under law.

REV	CHANGE	DR	BY	DSN	APV	DATE	REV	CHANGE	DR	BY	DSN	APV	DATE
C	UPDATED FIGURE	-	GW	JS	CZH	10/7/2018	F						
B	COMPLETELY REVISED	-	SL	JS	MDJ	3/1/2018	E	EDITORIAL CHANGES	PEI	JA	JES	CZH	10/12/2020
A	UPDATED MATERIALS	-	JC	IL	MDJ	4/15/2016	D	DRAWING CHANGES	EDM	MRF	JES	CZH	4/13/2020

INSTRUCTIONS FOR APPLYING ANIMAL GUARD TAPING

1. TO BEGIN COVER UP OF RECLOSER BUSHING, FIRST REMOVE THE 3 PREINSTALLED EXTERNAL SENSORS ATTACHED TO THE VERTICAL NEMA-4 PAD TERMINALS.

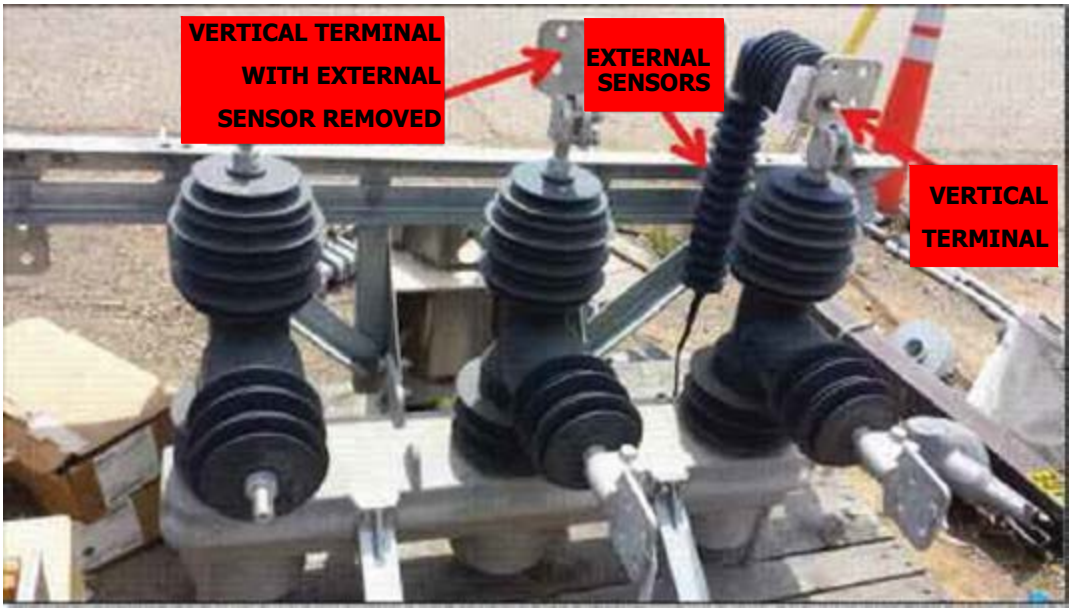

2. ONCE THE EXTERNAL SENSORS ARE REMOVED, APPLY THE SCOTCH 70 SELF FUSING TAPE (S720384) TO THE BASE OF EACH NEMA-4 VERTICAL TERMINAL WITH ENOUGH WRAPS TO COVER THE ENTIRE METAL SURFACE. SELF-FUSING TAPE COMES IN TWO SIZES: 1 INCH (S721736) AND 2 INCH (S721738).

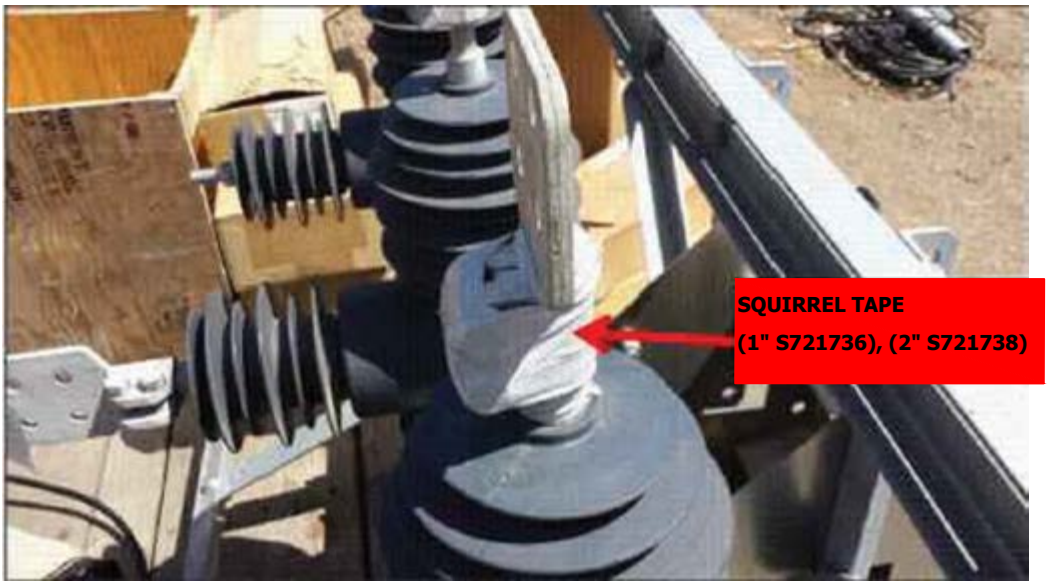

TABLE OF CONTENTS

© 1998 - 2020 San Diego Gas & Electric Company. All rights reserved. Removal of this copyright notice without permission is not permitted under law.

REV	CHANGE	DR	BY	DSN	APV	DATE	REV	CHANGE	DR	BY	DSN	APV	DATE
C	UPDATED FIGURE	-	GW	JS	CZH	10/7/2018	F						
B	COMPLETELY REVISED	-	SL	JS	MDJ	3/1/2018	E	EDITORIAL CHANGES	PEI	JA	JES	CZH	10/12/2020
A	UPDATED MATERIALS	-	JC	IL	MDJ	4/15/2016	D	DRAWING CHANGES	EDM	MRF	JES	CZH	4/13/2020

3. APPLY THE SCOTCH 70 TAPE TO THE NEMA-4 VERTICAL TERMINAL BASES, MAKE THE HIGH VOLTAGE CONNECTIONS TO THE TERMINAL AS REQUIRED. APPLY A LATER OF SCOTCH 130C TAPE (S720480) OVER THE AREA COVERED BY THE SCOTCH 70 TAPE UNTIL THE SCOTCH 130C IS NO LONGER VISIBLE.

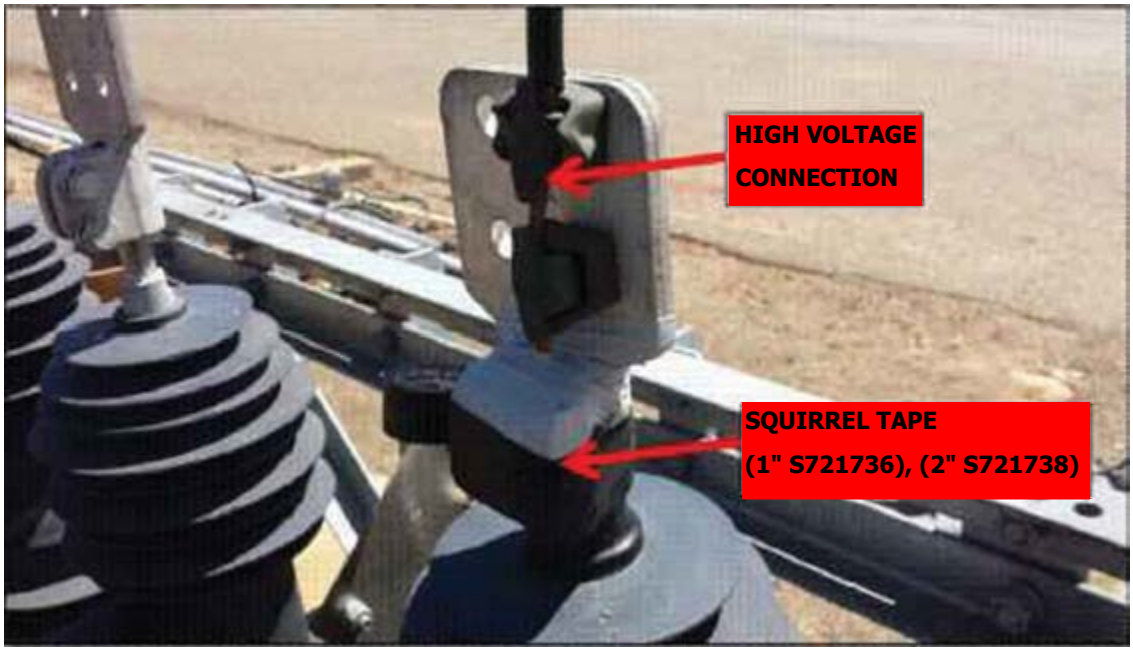

4. REATTACH THE EXTERNAL VOLTAGE SENSORS BACK TO THE VERTICAL NEMA-4 BUSHINGS USING A RATCHET WRENCH AT A TORQUE SETTING OF 25 FT-LBS. MAKE SURE TO RECONNECT THE SMALL CANNON PLUG FROM THE BOTTOM OF EXTERNAL SENSORS INTO THE RECEPTACLES FOUND ON THE FRAME OF RECLOSER FOR EACH PHASE.



TABLE OF CONTENTS

© 1998 - 2020 San Diego Gas & Electric Company. All rights reserved. Removal of this copyright notice without permission is not permitted under law.

REV	CHANGE	DR	BY	DSN	APV	DATE	REV	CHANGE	DR	BY	DSN	APV	DATE
C	UPDATED FIGURE	-	GW	JS	CZH	10/7/2018	F						
B	COMPLETELY REVISED	-	SL	JS	MDJ	3/1/2018	E	EDITORIAL CHANGES	PEI	JA	JES	CZH	10/12/2020
A	UPDATED MATERIALS	-	JC	IL	MDJ	4/15/2016	D	DRAWING CHANGES	EDM	MRF	JES	CZH	4/13/2020

5. AFTER APPLYING COVERUP WITH THE SCOTCH 70 AND 130C TAPE, APPLY THE SCOTCH SUPER 88 TAPE (S720600) TO THE ENTIRE NEMA-4 VERTICAL TERMINALS.



6. REPEAT STEPS 1-7 FOR EACH OF THE 3 NEMA-4 VERTICAL BUSHING TERMINALS.
7. REPEAT STEPS 2-3 AND 5-7 FOR EACH OF THE 3 NEMA-4 HORIZONTAL BUSHING TERMINALS. THESE TERMINATIONS DO NOT HAVE ANY EXTERNAL VOLTAGE SENSOR DEVICES.

TABLE OF CONTENTS

© 1998 - 2020 San Diego Gas & Electric Company. All rights reserved. Removal of this copyright notice without permission is not permitted under law.

REV	CHANGE	DR	BY	DSN	APV	DATE	REV	CHANGE	DR	BY	DSN	APV	DATE
C	UPDATED FIGURE	-	GW	JS	CZH	10/7/2018	F						
B	COMPLETELY REVISED	-	SL	JS	MDJ	3/1/2018	E	EDITORIAL CHANGES	PEI	JA	JES	CZH	10/12/2020
A	UPDATED MATERIALS	-	JC	IL	MDJ	4/15/2016	D	DRAWING CHANGES	EDM	MRF	JES	CZH	4/13/2020

X Indicates Latest Revision | Completely Revised | New Page | Information Removed

SDG&E ELECTRIC OVERHEAD CONSTRUCTION STANDARDS

ELASTIMOLD MVR SWITCH AND SCADA 651R2
CONTROLLER WITH HOOKSTICK BYPASS SWITCHES

OH1272.9

SCOPE: THIS STANDARD SHOWS THE INSTALLATION METHOD OF AN INTELLIRUPTER PULSECLOSER FROM S&C. IT CAN BE USED IN APPLICATIONS FOR A LINE, TIE, OR SERVICE RESTORER SWITCH.

ATTENTION:

* THIS INSTALLATION REQUIRES VEHICLE ACCESS.

** SUBMIT "SCADA TELECOMMUNICATION COORDINATION" FORM BEFORE DESIGN BEGINS TO DETERMINE COMMUNICATION REQUIREMENTS.

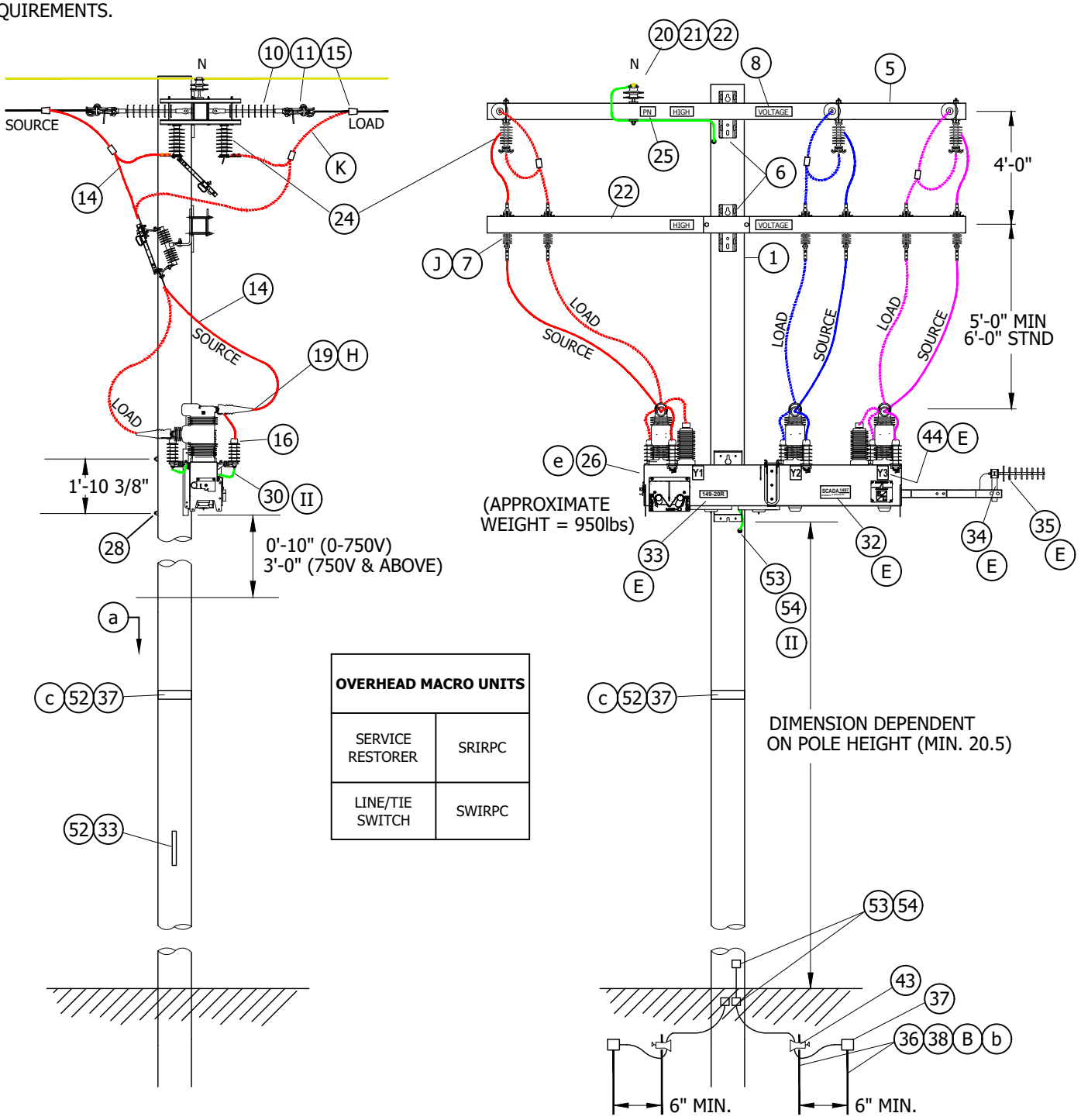

OVERHEAD MACRO UNITS	
SERVICE RESTORER	SRIRPC
LINE/TIE SWITCH	SWIRPC

© 1998 - 2019 San Diego Gas & Electric Company. All rights reserved. Removal of this copyright notice without permission is not permitted under law.

REV	CHANGE	DR	BY	DSN	APV	DATE	REV	CHANGE	DR	BY	DSN	APV	DATE
C	DRAWING UPDATE	EDM	MRF	JES	CZH	11/12/2019	F						
B	DRAWING UPDATE	--	GW	JS	MDJ	4/1/2018	E						
A	REVISION	--	--	PIA	MC	5/29/2009	D						

X Indicates Latest Revision | Completely Revised | New Page | Information Removed

SDG&E ELECTRIC OVERHEAD CONSTRUCTION STANDARDS

INTELLIRUPTER PULSECLOSER SWITCH

OH1273.1

TABLE OF CONTENTS

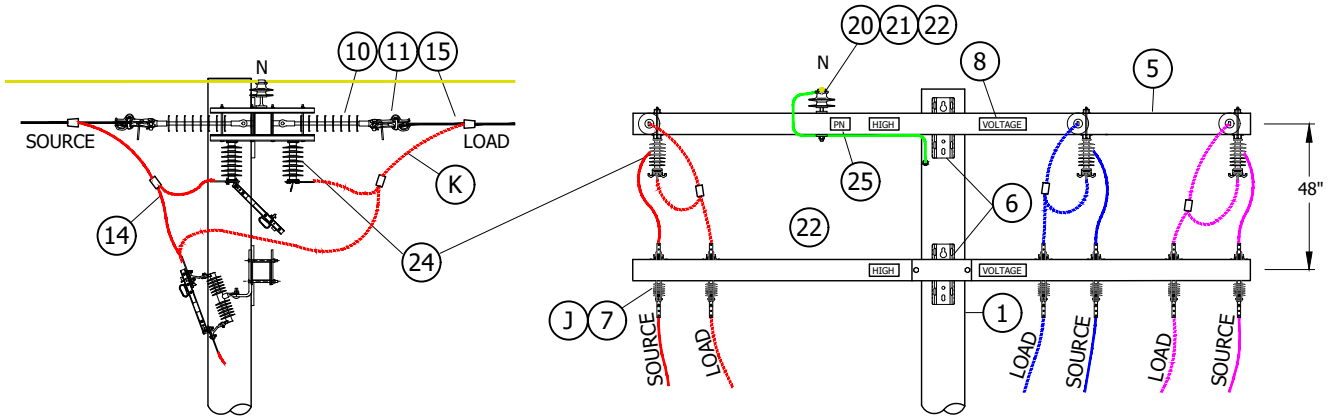

DETAIL 1
DEADEND WIRE BYPASS SWITCH (F)
(WIRE SIZE 1/0 AND LARGER)

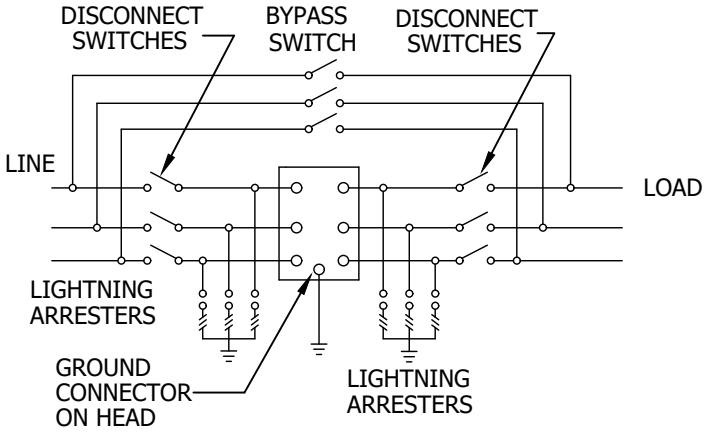

DETAIL 2 (H)
SCHEMATIC DIAGRAM

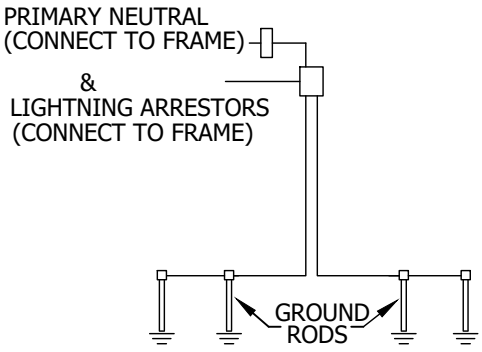

DETAIL 3
GROUND WIRING DETAIL (A) (B)

TABLE OF CONTENTS

© 1998 - 2019 San Diego Gas & Electric Company. All rights reserved. Removal of this copyright notice without permission is not permitted under law.

REV	CHANGE	DR	BY	DSN	APV	DATE	REV	CHANGE	DR	BY	DSN	APV	DATE
C	DRAWING UPDATE	EDM	MRF	JES	CZH	11/12/2019	F						
B	DRAWING UPDATE	--	GW	JS	MDJ	4/1/2018	E						
A	REVISION	--	--	PIA	MC	5/29/2009	D						

X Indicates Latest Revision | Completely Revised | New Page | Information Removed

SDG&E ELECTRIC OVERHEAD CONSTRUCTION STANDARDS

INTELLIRUPTER PULSECLOSER SWITCH

OH1273.2

INSTALLATION:

(A) CONNECT GROUND LEADS TO INTELLIRUPTER. CONNECT LIGHTNING ARRESTER GROUND LEADS TO GROUND CONNECTOR ON MOUNTING FRAME.

(B) GROUNDING NOTE 1 (FOR WOOD POLES): GROUND SWITCH MOUNTING BRACKET TO POLE GROUND. CONNECT PRIMARY NEUTRAL TO POLE GROUND IF PRESENT.
GROUND NOTE 2 (FOR STEEL POLES): INSTALL TWO SEPARATE GROUND RUNS FROM BASE OF SWITCH TO BASE OF POLE, IN ADJACENT POLE QUADRANTS. CONNECT EACH RUN TO SEPARATE GROUND RODS.

C. BUCK POSITIONS ALLOWED BY DEVIATION REQUEST ONLY.

D. SIX FOOT CLEARANCE TO SECONDARY OR COMMUNICATIONS PREFERRED FOR OPERATIONAL PURPOSES. FORTY-EIGHT MINIMUM REQUIRED PER G.O. 95.

(E) TO BE MADE BY KEARNY SCADA CREW.

(F) BY-PASS SWITCHES SHALL ALWAYS BE INSTALLED. THEY WILL ALLOW CREWS TO BY-PASS THE SWITCH FOR MAINTENANCE OR FAILURES. THIS IS TRUE FOR APPLICATIONS AS A SERVICE RESTORER (SR), LINE SWITCH, OR TIE SWITCH.

DETAIL 2 - FOR WIRE SIZE LESS THAN 1/0, USE UNDER THE ARM DISCONNECTS. MORE DISTANCE WILL BE REQUIRED BETWEEN THE LINE ARM AND SOURCE/LOAD DISCONNECT ARM. 12FT FIBERGLASS CROSS-ARMS SHALL BE USED IN THIS CONSTRUCTION TO AVOID THE NEED FOR METAL BRACING.

G. THE INTELLIRUPTER COMES WITH INTERNAL VOLTAGE SENSORS ON THE SOURCE AND LOAD SIDE.

(H) ORIENTATION OF THE SWITCH SHOULD BE SUCH THAT THE SOURCE FEEDS INTO THE UPPER BUSHING AND LOAD FEEDS OUT THE LOWER BUSHING.

(J) NEW INSTALLATIONS - LINE CREWS TO LEAVE INTELLIRUPTER BY-PASSED AND DE-ENERGIZED, WITH THE SOURCE & LOAD DISCONNECTS OPEN AND THE BY-PASS DISCONNECTS CLOSED. WHEN KEARNY HAS COMMISSIONED THE SITE FOR SERVICE THE SITE WILL BE PLACED IN ITS NORMAL CONFIGURATION.

(K) TAPPING OPTIONS: TAIL TAP, STIRRUP AND HOTLINE CLAMP, OR LINE TAP.

TABLE OF CONTENTS

BILL OF MATERIALS:

ITEM	DESCRIPTION	QUANTITY	STANDARD PAGE	STOCK NUMBER	DESIGN UNITS
1	POLE AS REQ'D IN TIER 2 & 3	-	354	-	-
5	FIBERGLASS CROSSARM, DEADEND	AS REQ'D	-	-	-
6	BOLT, MACH, GALV, 3/4" X (LENGTH AS REQ'D) 2 SQUARE, CURVED & 2 COIL SPRING WASHERS	AS REQ'D	392	-	-
7	SWITCH, DISCONNECT, 27KVA 900A	6	-	S706670	PS900
	BRACKET, MOUNTING, CUTOUT	6	397	S166070	CO/B
8	SIGN, HIGH VOLTAGE STICKER	AS REQ'D	-	S647650	-
10	INSULATOR, SUSPENSION, 35KV, LONG DEADEND	AS REQ'D	-	S428958	LONGDE
11	CLAMP, STRAIGHT LINE, D.E.	AS REQ'D	739-743	-	-
14	WIRE, POLY INSULATED COPPER, (SIZE AS REQ'D WITH MINIMUM SIZE EQUAL TO LINE CONDUCTOR AMPACITY, OR GREATER	AS REQ'D	716	-	-
15	CONNECTOR, WIRE, WEDGE (SIZE AS REQ'D)	AS REQ'D	784	-	-
16	TAPE, SELF-FUSING, 1 IN X 36 FT, GRAY	AS REQ'D	1274.8	S721736 (X)	-
	TAPE, SELF-FUSING, 2 IN X 36 FT, GRAY			S721738 (X)	-

© 1998 - 2019 San Diego Gas & Electric Company. All rights reserved. Removal of this copyright notice without permission is not permitted under law.

REV	CHANGE	DR	BY	DSN	APV	DATE	REV	CHANGE	DR	BY	DSN	APV	DATE
C	DRAWING UPDATE	EDM	MRF	JES	CZH	11/12/2019	F						
B	DRAWING UPDATE	--	GW	JS	MDJ	4/1/2018	E						
A	REVISION	--	--	PIA	MC	5/29/2009	D						

BILL OF MATERIALS (CONT'D):

ITEM	DESCRIPTION	QUANTITY	STANDARD PAGE	STOCK NUMBER	DESIGN UNITS
19	TERMINAL, COMPRESSION, CU OR AL (SIZE AS REQ'D)	AS REQ'D	794-795	-	-
20	INSULATOR, PIN, 12KV, (SIZE AS REQ'D)	AS REQ'D	396	-	-
21	INSULATOR, LINE 12KV	AS REQ'D	750	-	-
22	FIBERGLASS, CROSSARM, TANGENT	AS REQ'D	379	-	-
23	#4 4/7 COVERED CU STRANDED	25FT	-	S815044	POLY4J
24	SWITCH, DISCONNECT, UNDERARM, 900A (F)	3	-	S706680	D900UA
25	SIGN, PN DECAL	2	208	S648002	PN-D
26	15.5KV, 630A, W/BRACKET, LIGHTNING ARRESTERS, WILDLIFE (E) (e)	1	-	S709010	IRPCSW IRPSCR
	TRANSCEIVER, MDS RADIO (9710)	AS REQ'D	-	S749500	SOTRAN
	TRANSCEIVER, MDS RADIO SPREADSPECTRUM (9810)	AS REQ'D	-	S749504	SSTRAN
28	BOLT, MACH, GALV, 3/4" X (LENGTH AS REQ'D), 1 SQUARE CURVED RIBBED & 1 COIL SPRING WASHER	4	392	-	-
30	FLEXIBLE ARRESTER GROUND STRAP	AS REQ'D	-	S698754	LAGND
31	POLY COVERED 4/7 STRAND COPPER	AS REQ'D	-	S815044	POLY4J
32	DECAL "SCADA" "INFORM S.C.O. UPON ENTRY"	1	207	S301934	-
33	TAG, SWITCH NUMBER (J)	2	204	-	-
34	NIPPLE, PIPE, 2" X 7", ALUMINUM	1	-	-	-
35	YAGI, ANTENNA, SCADA, COMMUNICATION, BROADBAND AND CONNECTORS	1	-	S109570	ANT
36	GROUND ROD, 5/8" X 8', COPPERWELD	4	-	S603074 (X)	-
37	VISIBILITY STRIP (c)	1	208	S304064	-
43	GROUND ROD, CLAMP	2	-	S230018 (X)	-
44	DECALS, "X", WHITE ON BLACK REFLECTIVE	12	-	-	-
52	SCREW, SELF-TAPPING, #10-16 X 3/4"	AS REQ'D	-	S618086 (X)	-
53	BLIND NUT, 1/2"	AS REQ'D	-	S503460 (X)	-
54	CONNECTOR, SPLIT BOLT, BRONZE	AS REQ'D	4505	S262560	-

TABLE OF CONTENTS

© 1998 - 2019 San Diego Gas & Electric Company. All rights reserved. Removal of this copyright notice without permission is not permitted under law.

REV	CHANGE	DR	BY	DSN	APV	DATE	REV	CHANGE	DR	BY	DSN	APV	DATE
C	DRAWING UPDATE	EDM	MRF	JES	CZH	11/12/2019	F						
B	DRAWING UPDATE	--	GW	JS	MDJ	4/1/2018	E						
A	REVISION	--	--	PIA	MC	5/29/2009	D						

NOTES:

I. THE INTELLIRUPTER MACRO UNITS, "SRIRPC" AND "SWIRPC", WILL GENERATE TWO SWITCH NUMBERS. THE HIGHER NUMBER SHALL BE ASSIGNED TO THE INTELLIRUPTER AND THE LOWER NUMBER TO THE BY-PASS DISCONNECT. WHEN INSTALLED AS A SERVICE RESTORER (MACRO UNIT "SRIRPC"), THE "R" DESIGNATION WILL BE ASSIGNED TO THE HIGHER NUMBER. BE SURE THE MAPS ARE COMPOSED IN THIS MANNER AND THE SITE IS PROPERLY IDENTIFIED.

FOR EXAMPLE:

SERVICE RESTORER (SRIRPC)

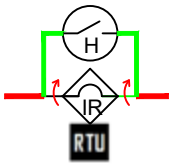

SCADA 1000
123-45R
123-44 OPEN

(INTELLIRUPTER)
(BY-PASS DISCONNECTS)

TIE SWITCH (SWIRPC)

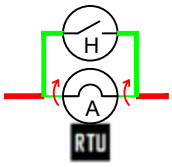

SCADA 1000
123-T2-456
123-T1-456 OPEN

(INTELLIRUPTER)
(BY-PASS DISCONNECTS)

LINE SWITCH (SWIRPC)

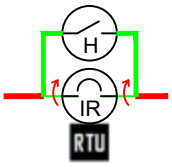

SCADA 1000
123-45
123-44 OPEN

(INTELLIRUPTER)
(BY-PASS DISCONNECTS)

(II) INSTALL GROUND FROM BOTTOM BOLT OF LIGHTNING ARRESTER TO ARRESTER MOUNTING BOLT. ALL GROUND FROM LIGHTNING ARRESTER ARE TO BE INTENTIONALLY GROUNDED TO POLE.

(X) THIS ITEM IS EXEMPT.

REFERENCES:

(a) POLE STEPPING - SEE STANDARD 363.

(b) GROUNDING METHODS, SEE STANDARD 1002.

(c) DELINEATOR/REFLECTOR, SEE STANDARD 208.

d. AVIAN PROTECTION, SEE STANDARD 1600.

(e) FOR OPERATION OF INTELLIRUPTER SWITCH - SEE ELECTRIC STANDARD PRACTICE 151.

TABLE OF CONTENTS

© 1998 - 2019 San Diego Gas & Electric Company. All rights reserved. Removal of this copyright notice without permission is not permitted under law.

REV	CHANGE	DR	BY	DSN	APV	DATE	REV	CHANGE	DR	BY	DSN	APV	DATE
C	DRAWING UPDATE	EDM	MRF	JES	CZH	11/12/2019	F						
B	DRAWING UPDATE	--	GW	JS	MDJ	4/1/2018	E						
A	REVISION	--	--	PIA	MC	5/29/2009	D						

SCOPE: THIS STANDARD SHOWS THE INSTALLATION METHOD OF THE SIEMENS DISTRIBUTION RECLOSER (SDR) SWITCH, ALLOWED IN TWO-WIRE AND THREE-WIRE CONFIGURATIONS, FOR USE AS A SERVICE RESTORER, LINE SWITCH OR A TIE SWITCH.

ATTENTION:

* THIS INSTALLATION REQUIRES ALL WEATHER 24/7 VEHICLE ACCESS AND IS NOT TO BE INSTALLED ON AN EXISTING CABLE POLE.

** SUBMIT "SCADA TELECOMMUNICATION COORDINATION" FORM BEFORE DESIGN BEGINS TO DETERMINE COMMUNICATION REQUIREMENTS.

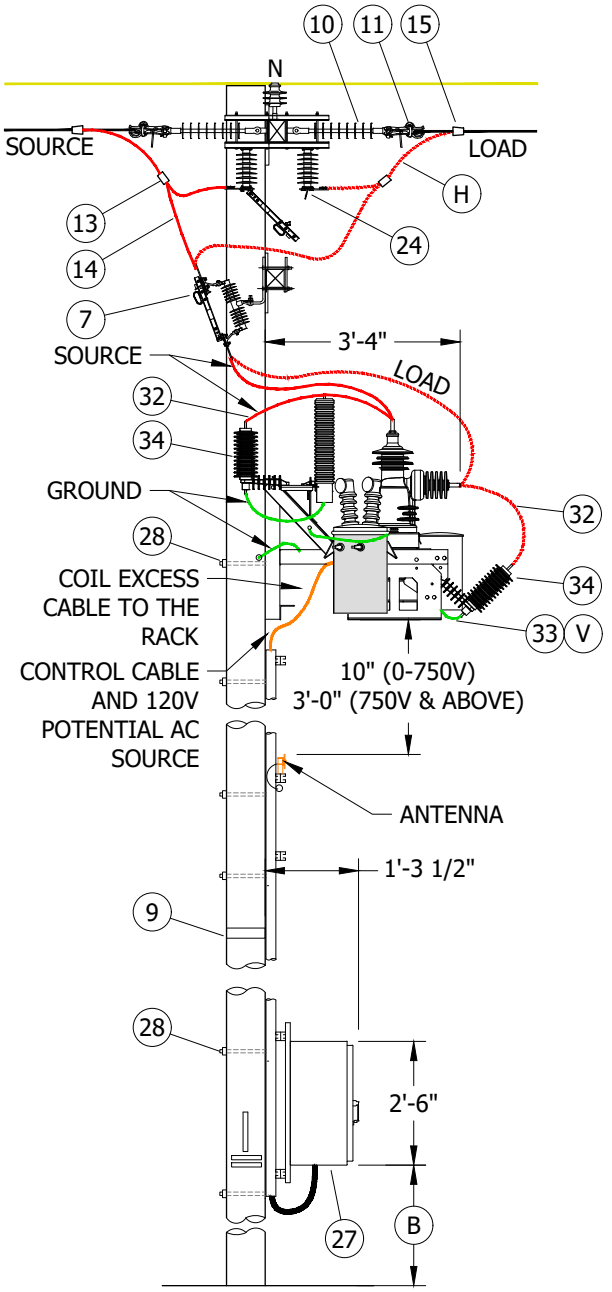

FIGURE 1
THREE-WIRE CONFIGURATION
SIDE VIEW

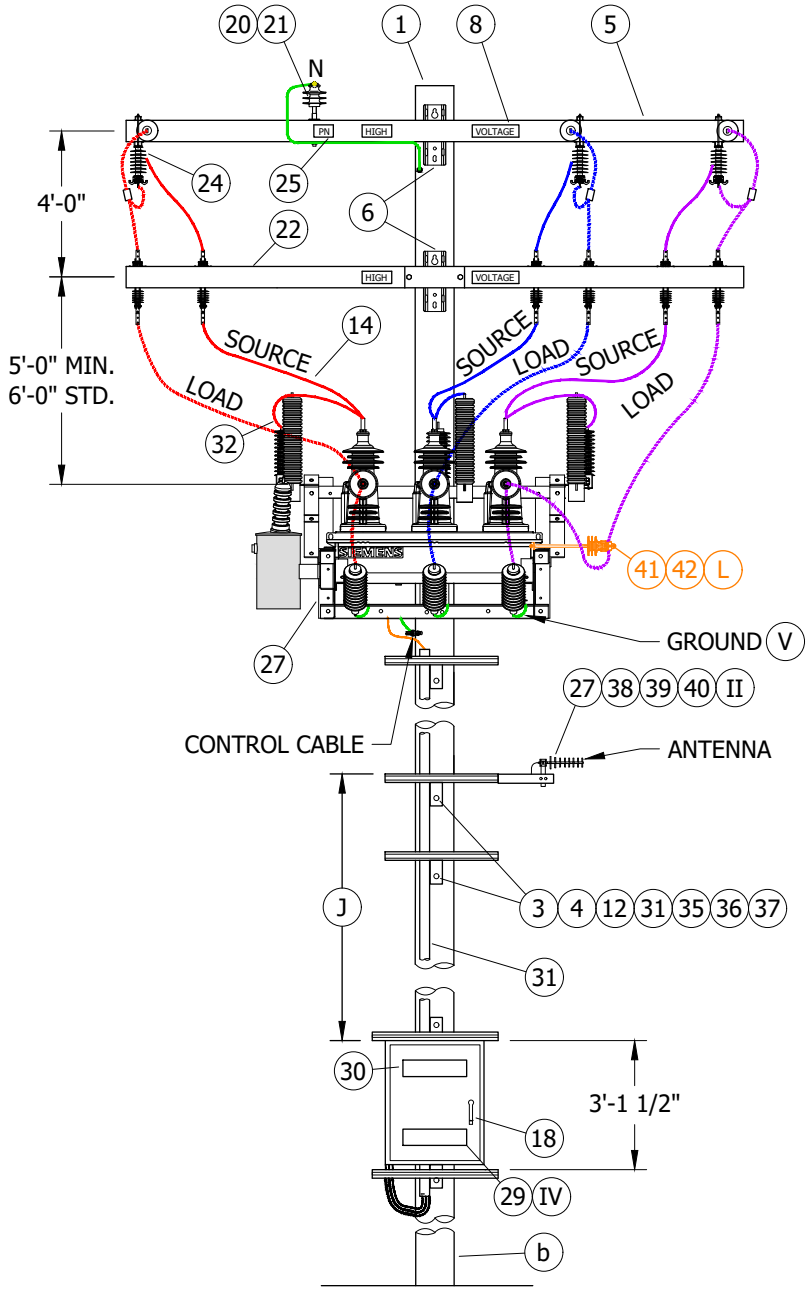

FIGURE 1
THREE-WIRE CONFIGURATION
FRONT VIEW

© 1998 - 2022 San Diego Gas & Electric Company. All rights reserved. Removal of this copyright notice without permission is not permitted under law.

REV	CHANGE	DR	BY	DSN	APV	DATE	REV	CHANGE	DR	BY	DSN	APV	DATE
D	DRAWING UPDATE	-	MRF	GLW	CZH	02/10/2020	G	DRAWING UPDATE	EDM	EJA	JAS	KRG	12/12/2022
C	DRAWING UPDATE	-	MRF	GW	CZH	07/10/2019	F	EDITORIAL CHANGES	EDM	RSL	JES	CZH	10/11/2021
B	EDITORIAL CHANGES	-	GW	JS	CZH	10/07/2018	E	DRAWING UPDATE	GLC	RSL	JES	CZH	11/09/2020

TABLE OF CONTENTS

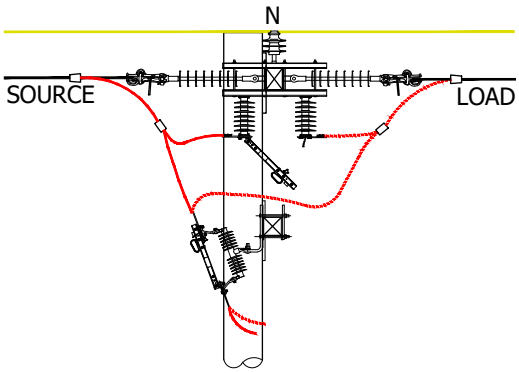

FIGURE 2
DEADEND WIRE BYPASS SWITCH DETAIL
FOR WIRE SIZES BELOW 4/0 AWG
SIDE VIEW

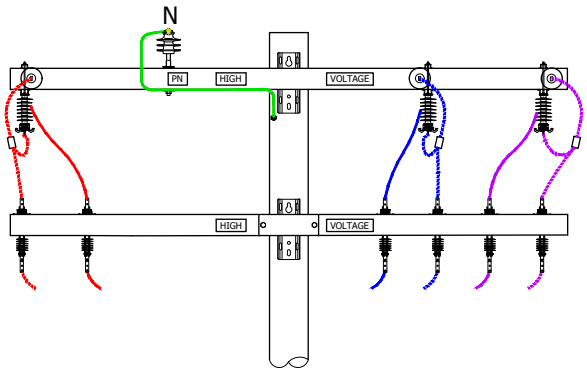

FIGURE 2
DEADEND WIRE BYPASS SWITCH DETAIL
FOR WIRE SIZES BELOW 4/0 AWG
FRONT VIEW

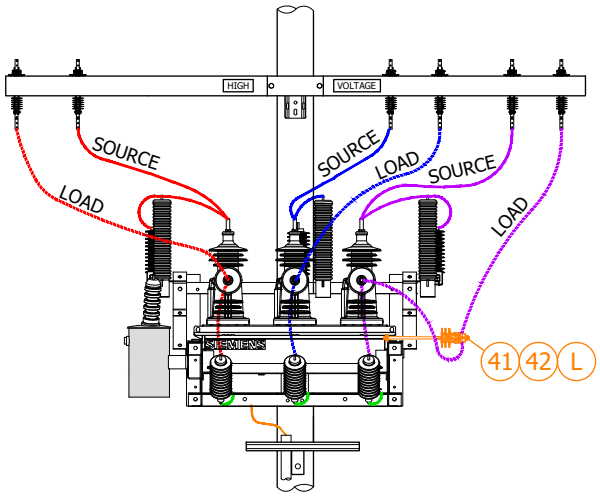

FIGURE 3
FRONT VIEW

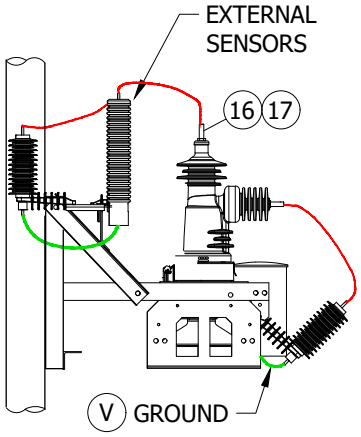

FIGURE 4
SIDE VIEW

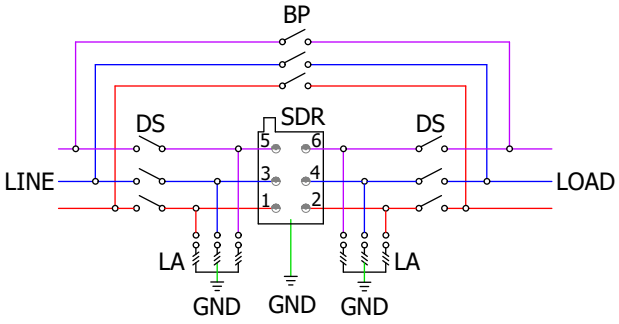

FIGURE 5
SIEMENS SDR SWITCH THREE-WIRE
SCHEMATIC WIRING DIAGRAM
SEE TABLE 1

TABLE 1

SCHEMATIC ABBREVIATIONS	
ABBR	**DEFINITION**
BP	BYPASS SWITCH
DS	DISCONNECT SWITCH
GND	GROUND
LA	LIGHTNING ARRESTER
SDR	SDR SWITCH

TABLE OF CONTENTS

© 1998 - 2022 San Diego Gas & Electric Company. All rights reserved. Removal of this copyright notice without permission is not permitted under law.

REV	CHANGE	DR	BY	DSN	APV	DATE	REV	CHANGE	DR	BY	DSN	APV	DATE
D	DRAWING UPDATE	-	MRF	GLW	CZH	02/10/2020	G	DRAWING UPDATE	EDM	EJA	JAS	KRG	12/12/2022
C	DRAWING UPDATE	-	MRF	GW	CZH	07/10/2019	F	EDITORIAL CHANGES	EDM	RSL	JES	CZH	10/11/2021
B	EDITORIAL CHANGES	-	GW	JS	CZH	10/07/2018	E	DRAWING UPDATE	GLC	RSL	JES	CZH	11/09/2020

ATTENTION:

* THIS INSTALLATION REQUIRES ALL WEATHER 24/7 VEHICLE ACCESS AND IS NOT TO BE INSTALLED ON AN EXISTING CABLE POLE.

** SUBMIT "SCADA TELECOMMUNICATION COORDINATION" FORM BEFORE DESIGN BEGINS TO DETERMINE COMMUNICATION REQUIREMENTS.

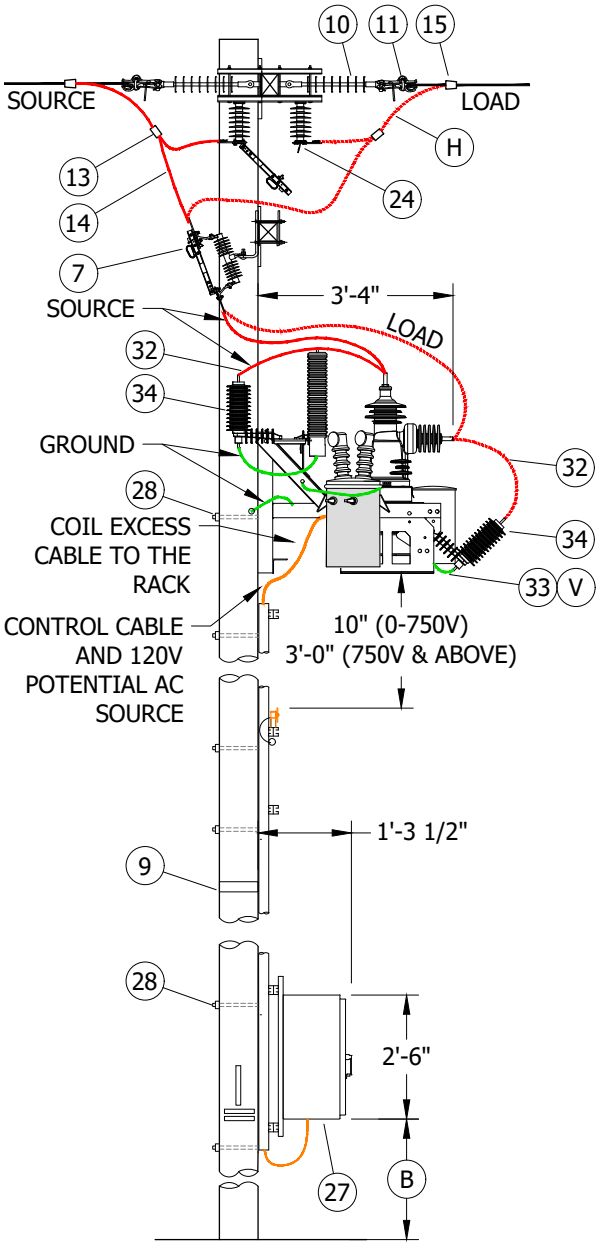

FIGURE 6
TWO-WIRE CONFIGURATION
SIDE VIEW

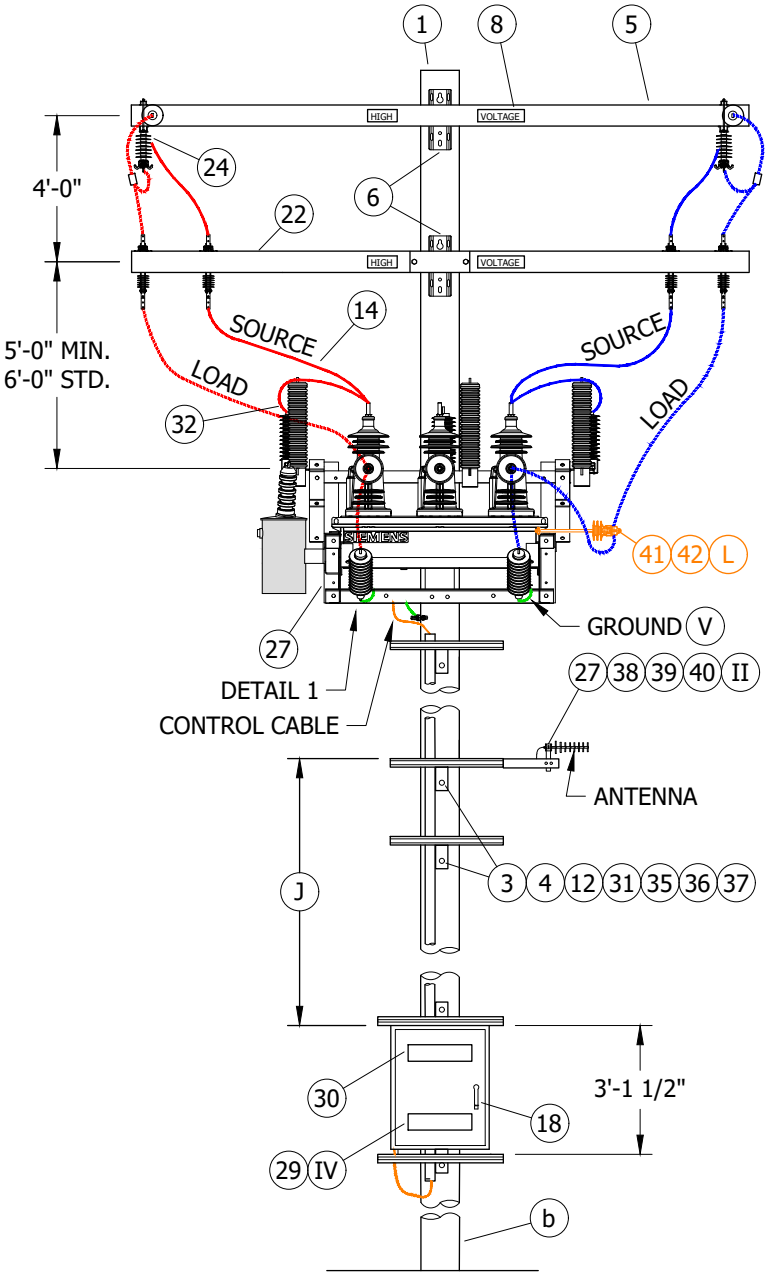

FIGURE 6
TWO-WIRE CONFIGURATION
FRONT VIEW

TABLE OF CONTENTS

© 1998 - 2022 San Diego Gas & Electric Company. All rights reserved. Removal of this copyright notice without permission is not permitted under law.

REV	CHANGE	DR	BY	DSN	APV	DATE	REV	CHANGE	DR	BY	DSN	APV	DATE
D	DRAWING UPDATE	-	MRF	GLW	CZH	02/10/2020	G	DRAWING UPDATE	EDM	EJA	JAS	KRG	12/12/2022
C	DRAWING UPDATE	-	MRF	GW	CZH	07/10/2019	F	EDITORIAL CHANGES	EDM	RSL	JES	CZH	10/11/2021
B	EDITORIAL CHANGES	-	GW	JS	CZH	10/07/2018	E	DRAWING UPDATE	GLC	RSL	JES	CZH	11/09/2020

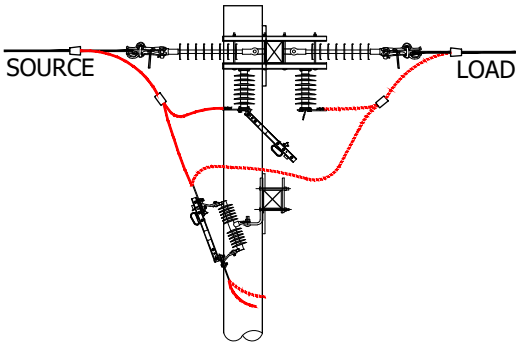

FIGURE 7
DEADEND WIRE BYPASS SWITCH DETAIL
FOR WIRE SIZES BELOW 4/0 AWG
SIDE VIEW

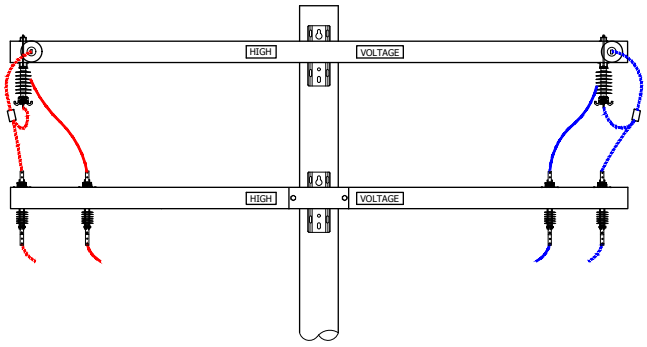

FIGURE 7
DEADEND WIRE BYPASS SWITCH DETAIL
FOR WIRE SIZES BELOW 4/0 AWG
FRONT VIEW

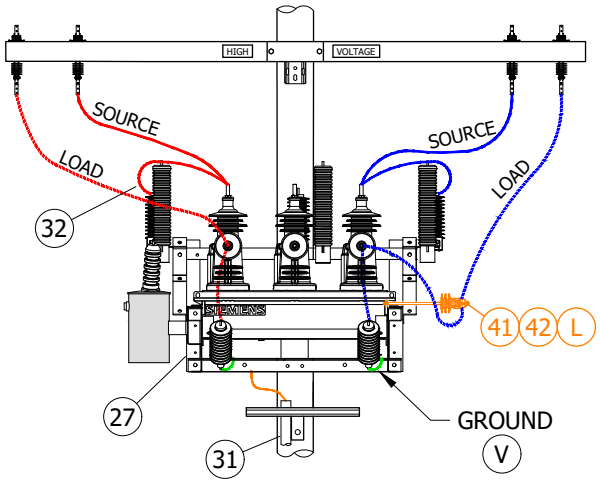

FIGURE 8
FRONT VIEW

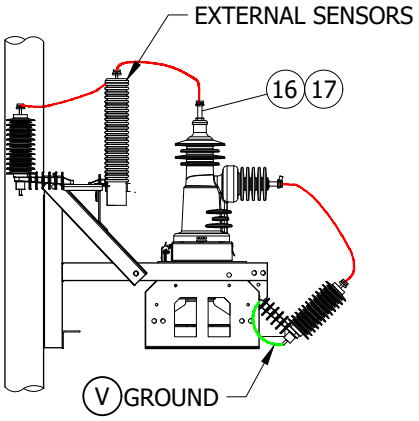

FIGURE 9
SIDE VIEW

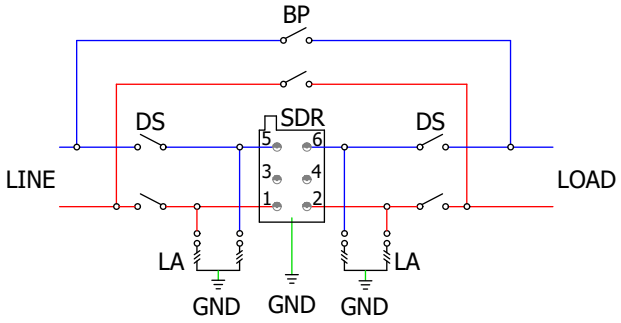

FIGURE 10
SIEMENS SDR SWITCH
TWO-WIRE SCHEMATIC WIRING DIAGRAM
SEE TABLE 1

© 1998 - 2022 San Diego Gas & Electric Company. All rights reserved. Removal of this copyright notice without permission is not permitted under law.

REV	CHANGE	DR	BY	DSN	APV	DATE	REV	CHANGE	DR	BY	DSN	APV	DATE
D	DRAWING UPDATE	-	MRF	GLW	CZH	02/10/2020	G	DRAWING UPDATE	EDM	EJA	JAS	KRG	12/12/2022
C	DRAWING UPDATE	-	MRF	GW	CZH	07/10/2019	F	EDITORIAL CHANGES	EDM	RSL	JES	CZH	10/11/2021
B	EDITORIAL CHANGES	-	GW	JS	CZH	10/07/2018	E	DRAWING UPDATE	GLC	RSL	JES	CZH	11/09/2020

TABLE OF CONTENTS

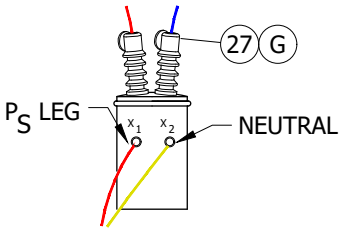

FIGURE 11
PT DIAGRAM (K)

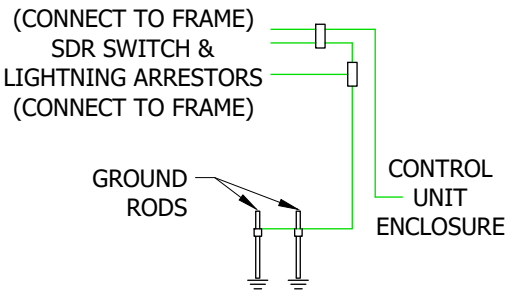

FIGURE 12
SIEMENS SDR SWITCH
GROUND WIRING DETAIL (A)

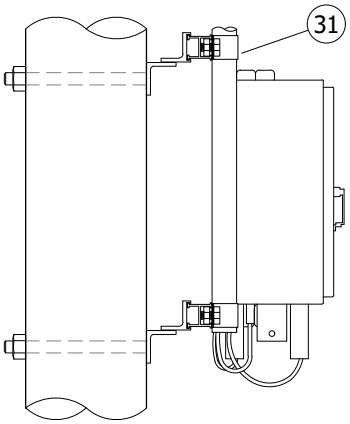

FIGURE 13
SIDE VIEW

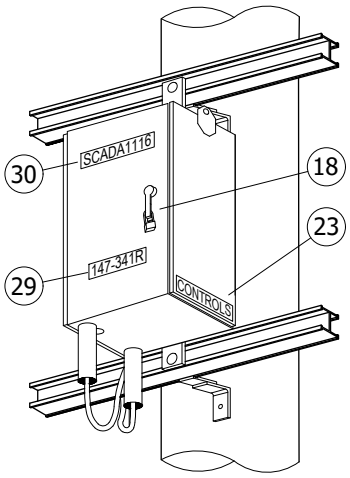

FIGURE 13
ISO VIEW

INSTALLATION:

(A) CONNECT GROUND LEAD TO SDR SWITCH. CONNECT CONTROL UNIT ENCLOSURE GROUND WIRE AND GROUND TO THE SDR SWITCH. (b)

(B) RTU TO BE MOUNTED WITH BOTTOM OF CABINET 10 FEET FROM GROUND LEVEL WHEN NOT SUBJECT TO TRAFFIC CONTACT. IF VULNERABLE TO VEHICLE DAMAGE, MOUNT WITH BOTTOM OF RTU CABINET 13'-6" FROM GROUND LEVEL. CONSIDER LARGE VEHICLES PARKING PARALLEL TO CURB.

C. CONTROL, PT TERMINAL BLOCK-RELAY, AND ANTENNA CONNECTIONS ARE TO BE MADE BY KEARNY CREW. LINE CREW MOUNTS SDR SWITCH TO POLE AND LEAVES CONTROL CABLE AND VOLTAGE CABLE ON SITE OR WITH KEARNY CREW. IF THE CONTROL & VOLTAGE CABLES ARE LEFT ON SITE. **DO NOT REMOVE CABLES FROM PLASTIC BAG OR REMOVE CAPS. WATER ENTRY WILL DAMAGE THE CABLES.**

D. BYPASS SWITCHES SHALL ALWAYS BE INSTALLED. THEY WILL ALLOW FOR CREWS TO BYPASS THE SWITCH FOR MAINTENANCE OR FAILURES. THIS IS TRUE FOR APPLICATIONS AS A SERVICE RESTORER (SR), LINE SWITCH, OR TIE SWITCH.

E. ORIENTATION OF THE SWITCH SHOULD BE SUCH THAT THE SOURCE FEEDS INTO THE VERTICAL BUSHING AND LOAD FEEDS OUT THE HORIZONTAL BUSHING. A DEVIATION REQUEST IS REQUIRED FOR INSTALLATION IN "BUCK" POSITION.

(F) DELINEATOR/REFLECTOR STRIPS ARE REQUIRED ON ALL SECTIONALIZING/TIELINE SWITCHES AND SERVICE RESTORER POLES. (c)

© 1998 - 2022 San Diego Gas & Electric Company. All rights reserved. Removal of this copyright notice without permission is not permitted under law.

REV	CHANGE	DR	BY	DSN	APV	DATE	REV	CHANGE	DR	BY	DSN	APV	DATE
D	DRAWING UPDATE	-	MRF	GLW	CZH	02/10/2020	G	DRAWING UPDATE	EDM	EJA	JAS	KRG	12/12/2022
C	DRAWING UPDATE	-	MRF	GW	CZH	07/10/2019	F	EDITORIAL CHANGES	EDM	RSL	JES	CZH	10/11/2021
B	EDITORIAL CHANGES	-	GW	JS	CZH	10/07/2018	E	DRAWING UPDATE	GLC	RSL	JES	CZH	11/09/2020

INSTALLATION (CONT'D):

(G) IN AVIAN PROTECTION AREAS, USE APPROPRIATE AVIAN COVER-UP INCLUDING THE USE OF SQUIRREL TAPE. (d)

(H) TAPPING OPTIONS: TAIL TAP, STIRRUP AND HOTLINE CLAMP, OR LINE TAP.

(J) ADJUST AND ADD LADDER ARMS AS NEEDED BETWEEN ANTENNA LADDER ARM OR CROSSARM AND CONTROLLER RELAY.

(K) MAKE LOW SIDE OF PT CONNECTIONS TO TERMINAL BLOCK FOUND ON RECLOSER FRAME. PT AND CONNECTIONS OMITTED ON SIDE VIEW. MAKE PRIMARY CONNECTIONS TO TWO OF THE THREE AVAILABLE PHASES ON THE SOURCE SIDE.

(L) FOR USE ONLY IF ADDITIONAL JUMPER SUPPORT IS NEEDED

BILL OF MATERIALS:

ITEM	DESCRIPTION	QUANTITY	STANDARD PAGE	STOCK NUMBER	DESIGN UNITS	MACRO
1	POLE AS REQ'D IN TIER 2 AND TIER 3	--	354	--	--	--
2	GROUNDING, #4 PVC GROUND WIRE, RODS & CONNECTORS (VIII) STEEL POLE	1	1002	--	GNDPSP	--
	GROUNDING, #4 PVC GROUND WIRE, RODS & CONNECTORS (VIII) WOOD/FG				GNDPVC	--
3	BOLTS, GALV., 5/8" (LENGTH AS REQUIRED)	AS REQ'D	390	--	--	--
4	CLAMP, PIPE, STEEL, GALV., UNISTRUT, 4"	AS REQ'D	1404	S229664	UPC4IN	--
5	CROSSARM, DEADEND, FIBERGLASS	AS REQ'D	--	--	--	--
6	BOLT, MACH, GALV, 3/4" X (LENGTH AS REQ'D) 2 SQUARE, CURVED & 2 COIL SPRING WASHERS	AS REQ'D	390	--	--	--
7	SWITCH, DISCONNECT, 27KV, 900A	AS REQ'D	--	S706670 (VI)	PS900	--
	SWITCH, DISCONNECT, 27KV, 900A			S707004 (VII)	P900D	--
	BRACKET, MOUNTING, CUTOUT	AS REQ'D	397	S166070	CO/B	--
8	SIGN, HIGH VOLTAGE, STICKER	AS REQ'D	--	S647650	--	--
9	VISIBILITY STRIP (F)	--	208	--	--	--
10	INSULATOR, SUSPENSION, 35KV, LONG DEADEND	AS REQ'D	--	S428958	LONGDE	--
11	CLAMP, STRAIGHT LINE, DEADEND	AS REQ'D	739	--	--	--
12	NUT STUD, CLAMPING UNISTRUT, 1/2" X 1 3/8"	AS REQ'D	1404/4204	--	--	--
13	CONNECTORS, TWO BOLT	AS REQ'D	--	S262370	CN1000	--
14	WIRE, POLY INSULATED COPPER, (SIZE AS REQ'D WITH MINIMUM SIZE EQUAL TO LINE CONDUCTOR AMPACITY, OR GREATER	AS REQ'D	711	--	--	--
15	CONNECTOR, WIRE, WEDGE (SIZE AS REQ'D)	AS REQ'D	783	--	--	--
16	TAPE, SELF-FUSING, 1 IN X 36 FT, GRAY	AS REQ'D	--	S721736 (X)	--	--
17	TAPE, SELF-FUSING, 2 IN X 36 FT, GRAY	AS REQ'D	--	S721738 (X)	--	--
18	PADLOCK, SCHLAGE ELECTRIC SERIES (III)	2	--	S514848	--	--
19	TERMINAL, COMPRESSION, CU OR AL (SIZE AS REQ'D) (VIII)	AS REQ'D	784	--	--	--
20	INSULATOR, PIN, 12KV (SIZE AS REQ'D)	AS REQ'D	396	--	--	--
21	INSULATOR, LINE, 12KV	AS REQ'D	750	--	--	--
22	CROSSARM, FIBERGLASS, TANGENT	AS REQ'D	379	--	--	--
23	TAG, "CONTROLS"	1	204	--	--	--
24	SWITCH, DISCONNECT, UNDERARM, 27KV, 900A	AS REQ'D	--	S706680 (VI)	D900UA	--
	SWITCH, DISCONNECT, UNDERARM, 27KV, 900A			S706682 (VII)	E900UA	--
25	SIGN, PN DECAL	AS REQ'D	208	S648004 (X)	--	--
26	CONNECTOR (SIZE AS REQ'D)	AS REQ'D	783-785	--	--	--

TABLE OF CONTENTS

© 1998 - 2022 San Diego Gas & Electric Company. All rights reserved. Removal of this copyright notice without permission is not permitted under law.

REV	CHANGE	DR	BY	DSN	APV	DATE	REV	CHANGE	DR	BY	DSN	APV	DATE
D	DRAWING UPDATE	-	MRF	GLW	CZH	02/10/2020	G	DRAWING UPDATE	EDM	EJA	JAS	KRG	12/12/2022
C	DRAWING UPDATE	-	MRF	GW	CZH	07/10/2019	F	EDITORIAL CHANGES	EDM	RSL	JES	CZH	10/11/2021
B	EDITORIAL CHANGES	-	GW	JS	CZH	10/07/2018	E	DRAWING UPDATE	GLC	RSL	JES	CZH	11/09/2020

BILL OF MATERIALS (CONT'D):

ITEM	DESCRIPTION	QUANTITY	STANDARD PAGE	STOCK NUMBER	DESIGN UNITS	MACRO
27	RECLOSER/SWITCH, SIEMENS (SDR), SCADA COMPATIBLE, 630A, INCLUDES: MOUNTING BRACKET, INTERNAL VOLTAGE SENSOR, AND EXTERNAL LINDSEY VOLTAGE SENSORS	1	3675	S571958	SS-SR OR SS-SW	--
	TRANSFORMER, 1KVA, 12000/120 VOLT, INTERNAL FUSE	1	1121	S762772	120VPT	--
	CONTROLLER, SEL 651-R2, COMPATIBLE WITH SDR SWITCH, INCLUDES: 40 FT. 40-PIN CONFIGURATION CONTROL CABLE	1	--	S274586	--	SELSDR
	TRANSCEIVER, MDS RADIO SPREADSPECTURM	AS REQ'D	--	S749504	--	
	CONNECTOR, COAXIAL, STRAIGHT	2	--	S254170	--	
	ANTENNA, SCADA, COMMUNICATIONS, BROADBAND, AND CONNECTORS	1	590	S109570	ANT	
	CABLE, FLEXIBLE, COAXIAL SCADA ANTENNA, 1/2"	AS REQ'D	--	S191906	ANTCAB	
	TRANSCEIVER, MDS RADIO	AS REQ'D	--	S749500	--	--
28	BOLT, MACH, GALV., 3/4" X (LENGTH AS REQ'D), 1 SQUARE CURVED RIBBED & 1 COIL SPRING WASHER	4	390	--	--	--
29	TAG, SWITCH NUMBER	2	204	--	--	--
30	DECAL "SCADA" "INFORM S.C.O. UPON ENTRY"	1	207	S301934	--	--
31	SCHEDULE 40 PVC, 4" (FOR SIEMENS CONTROL CABLE RUN ONLY)	AS REQ'D	1404/4204	S251392	S40-4	--
32	4/7, COVERED CU STRANDED, #4	25FT	--	S815044	POLY4J	--
33	HARNESS, GROUNDING, SINGLE, 12", STRANDED TIN, COPPER	AS REQ'D	--	S403522	--	--
34	ARRESTER, LIGHTNING, SURGE	6	1247	--	--	--
35	CHANNEL, CLAMPING, NUT W/SPRING, 1/2"	AS REQ'D	1404/4204	S503488	--	RARM/L
36	BRACKET, LADDER ARM	AS REQ'D		S167186 (X)	--	
37	DOUBLE UNISTRUT ARM, 2'-0"	AS REQ'D		S216702 (X)	--	
38	NIPPLE, PIPE, ALUMINUM, 2" X 7"	1	--	--	--	ANTXMB
39	BOLT, MACH GALV., 5/8" X 14"	1	--	S154880	--	
40	WASHER, CENTERING, GALV.	2	--	S795520	--	
41	BRACKET, INSULATOR, STANDOFF	AS REQ'D	390	--	--	--
42	INSULATOR, VISE-TOP	AS REQ'D	750	--	--	--

TABLE OF CONTENTS

NOTES:

I. SEL 651-R2 CONTROLLER REQUIRES 120V SUPPLY COMING FROM THE SOURCE SIDE USING A PT MOUNTED TO THE SDR SWITCH FRAME.

(II) PLANNER TO SPECIFY QUADRANT OF POLE FOR ANTENNA MOUNT WITH DATA FROM THE "SCADA TELECOMMUNICATIONS COORDINATION" FORM. SEE PROJECT MANAGEMENT INTRANET SITE FOR FORMS.

(III) THE NEW SDR SWITCH COMES WITH INTERNAL AND SUPPLEMENTAL VOLTAGE SENSORS AND REQUIRES EXTERNAL LYNDSEY SENSORS INSTALLED ON THE SOURCE SIDE.

(IV) THE SIEMENS SDR SWITCH MACRO UNITS, "SR-SS" AND "SW-SS", WILL GENERATE TWO SWITCH NUMBERS. THE HIGHER NUMBER SHOULD BE ASSIGNED TO THE SDR SWITCH AND THE LOWER NUMBER TO THE BY-PASS DISCONNECT. WHEN INSTALLED AS AN SDR SERVICE RESTORER (MACRO UNIT "SR-SS"), THE "R" DESIGNATION WILL BE ASSIGNED TO THE HIGHER NUMBER. BE SURE THE MAPS ARE COMPOSED IN THIS MANNER AND THE SITE IS PROPERLY IDENTIFIED.

© 1998 - 2022 San Diego Gas & Electric Company. All rights reserved. Removal of this copyright notice without permission is not permitted under law.

REV	CHANGE	DR	BY	DSN	APV	DATE	REV	CHANGE	DR	BY	DSN	APV	DATE
D	DRAWING UPDATE	-	MRF	GLW	CZH	02/10/2020	G	DRAWING UPDATE	EDM	EJA	JAS	KRG	12/12/2022
C	DRAWING UPDATE	-	MRF	GW	CZH	07/10/2019	F	EDITORIAL CHANGES	EDM	RSL	JES	CZH	10/11/2021
B	EDITORIAL CHANGES	-	GW	JS	CZH	10/07/2018	E	DRAWING UPDATE	GLC	RSL	JES	CZH	11/09/2020

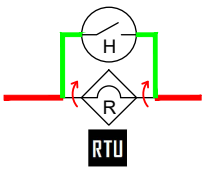

SCADA 1000
123-45R
123-44 OPEN

EXAMPLE 1
SERVICE RESTORER ("SR-SS")

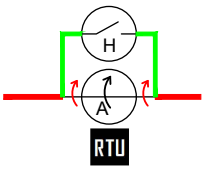

SCADA 1000
123-45
123-44 OPEN

EXAMPLE 2
LINE SWITCH ("SW-SS")

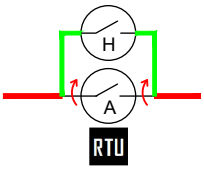

SCADA 1000
123-T2-456
123-T1-456 OPEN

EXAMPLE 3
TIE SWITCH ("SW-SS")

FIGURE 13
SIEMENS DR SWITCH
BYPASS DISCONNECTS (IV)

NOTES (CONT'D):

(V) INSTALL GROUND FROM BOTTOM BOLT OF LIGHTNING ARRESTER TO ARRESTER MOUNTING BOLT. ALL GROUND FROM LIGHTNING ARRESTER ARE TO BE INTENTIONALLY GROUNDED TO POLE.

(VI) REQUIRED IN CONTAMINATION DISTRICT 1 AND PREFERRED IN COASTAL DISTRICTS (OC, NC, BC, CM).

(VII) PREFERRED FOR INLAND DISTRICTS (NE, RA, EA, ME).

(VIII) NOT SHOWN ON FIGURES.

(X) THIS ITEM IS EXEMPT.

REFERENCE:

a. FOR POLE STEPPING, SEE OH363UG4205.

(b) FOR GROUNDING METHODS, SEE OH1002.

(c) FOR DELINEATOR/REFLECTOR, SEE OH208.

(d) FOR AVIAN PROTECTION, SEE SECTION OH1600.

TABLE OF CONTENTS

© 1998 - 2022 San Diego Gas & Electric Company. All rights reserved. Removal of this copyright notice without permission is not permitted under law.

REV	CHANGE	DR	BY	DSN	APV	DATE	REV	CHANGE	DR	BY	DSN	APV	DATE
D	DRAWING UPDATE	-	MRF	GLW	CZH	02/10/2020	G	DRAWING UPDATE	EDM	EJA	JAS	KRG	12/12/2022
C	DRAWING UPDATE	-	MRF	GW	CZH	07/10/2019	F	EDITORIAL CHANGES	EDM	RSL	JES	CZH	10/11/2021
B	EDITORIAL CHANGES	-	GW	JS	CZH	10/07/2018	E	DRAWING UPDATE	GLC	RSL	JES	CZH	11/09/2020

INSTRUCTIONS FOR APPLYING ANIMAL GUARD TAPING

1. TO BEGIN COVER UP OF RECLOSER BUSHING, ATTACH SOURCE-SIDE EXTERNAL SENSORS, ARRESTORS, AND LOAD-SIDE LIGHTNING ARRESTORS TO SWITCH FRAME.

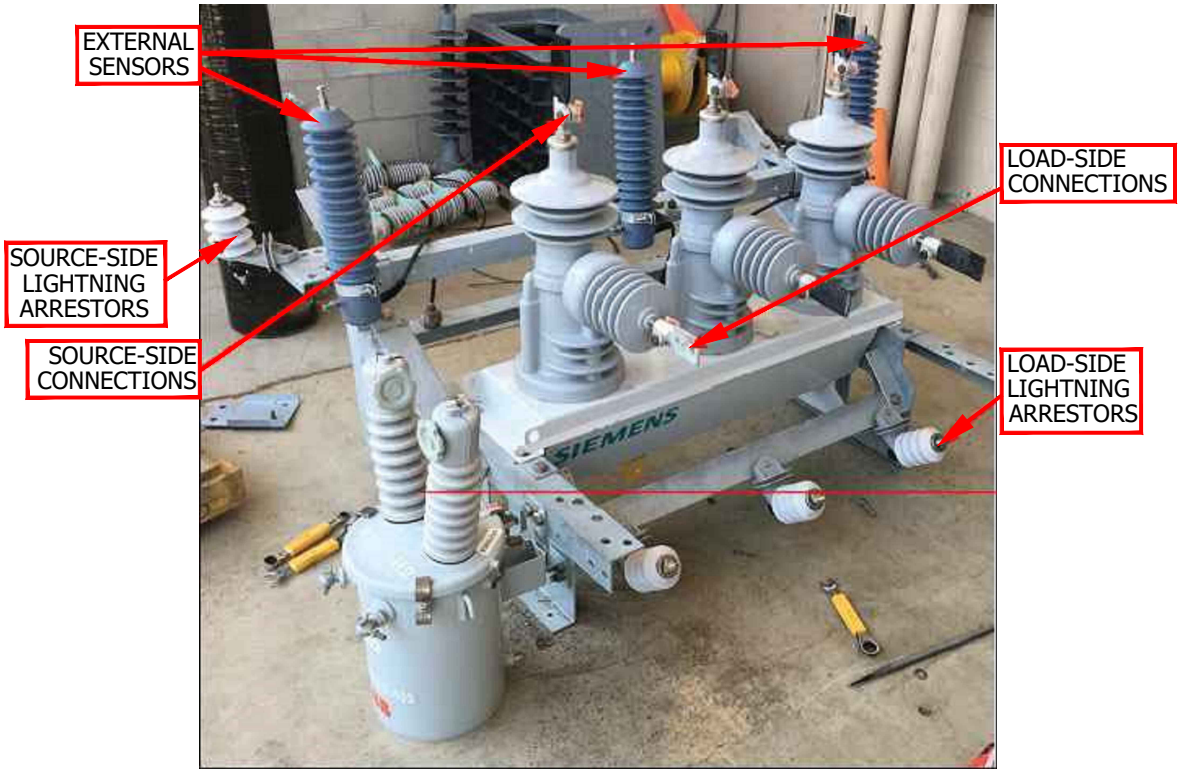

2. USING NEMA 4-PADS, MAKE ALL HIGH VOLTAGE CONNECTIONS TO LOAD/SOURCE SIDES OF THE SWITCH, LIGHTNING ARRESTORS AND SOURCE-SIDE EXTERNAL SENSORS.



TABLE OF CONTENTS

© 1998 - 2022 San Diego Gas & Electric Company. All rights reserved. Removal of this copyright notice without permission is not permitted under law.

REV	CHANGE	DR	BY	DSN	APV	DATE	REV	CHANGE	DR	BY	DSN	APV	DATE
D	DRAWING UPDATE	-	MRF	GLW	CZH	02/10/2020	G	DRAWING UPDATE	EDM	EJA	JAS	KRG	12/12/2022
C	DRAWING UPDATE	-	MRF	GW	CZH	07/10/2019	F	EDITORIAL CHANGES	EDM	RSL	JES	CZH	10/11/2021
B	EDITORIAL CHANGES	-	GW	JS	CZH	10/07/2018	E	DRAWING UPDATE	GLC	RSL	JES	CZH	11/09/2020

3. APPLY HIGH VOLTAGE SQUIRREL TAPE (S721736, S721738) TO ALL EXPOSED CONNECTIONS ON SOURCE-SIDE, LOAD-SIDE, AND CONTROL CABLE OF SWITCH, ENSURING COVERAGE EXTENDS PAST BASE OF NEMA-4 AND OTHER CONNECTIONS.



SOURCE-SIDE CONNECTIONS



LOAD-SIDE CONNECTIONS

4. ENSURE ALL GROUND CONNECTIONS FOR SWITCH FRAME, EXTERNAL SOURCE-SIDE SENSORS, AND LIGHTNING ARRESTORS ARE ATTACHED TO THE FRAME.

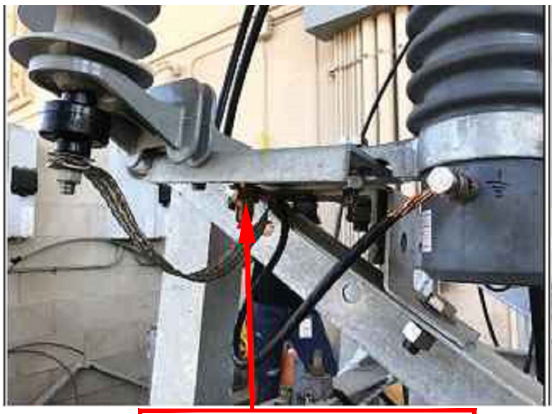

GROUND CONNECTION POINT ON FRAME FOR SENSORS AND ARRESTORS



GROUND SWITCH FOR SWITCH FRAME



LOAD-SIDE ARRESTOR GROUND

TABLE OF CONTENTS

© 1998 - 2022 San Diego Gas & Electric Company. All rights reserved. Removal of this copyright notice without permission is not permitted under law.

REV	CHANGE	DR	BY	DSN	APV	DATE	REV	CHANGE	DR	BY	DSN	APV	DATE
D	DRAWING UPDATE	-	MRF	GLW	CZH	02/10/2020	G	DRAWING UPDATE	EDM	EJA	JAS	KRG	12/12/2022
C	DRAWING UPDATE	-	MRF	GW	CZH	07/10/2019	F	EDITORIAL CHANGES	EDM	RSL	JES	CZH	10/11/2021
B	EDITORIAL CHANGES	-	GW	JS	CZH	10/07/2018	E	DRAWING UPDATE	GLC	RSL	JES	CZH	11/09/2020

5. ENSURE TO WRAP CONTROL CABLE AND CONNECTOR LOCATED NEAR NAMEPLATE ON THE BACK OF THE SWITCH.



TABLE OF CONTENTS

© 1998 - 2022 San Diego Gas & Electric Company. All rights reserved. Removal of this copyright notice without permission is not permitted under law.

REV	CHANGE	DR	BY	DSN	APV	DATE	REV	CHANGE	DR	BY	DSN	APV	DATE
D	DRAWING UPDATE	-	MRF	GLW	CZH	02/10/2020	G	DRAWING UPDATE	EDM	EJA	JAS	KRG	12/12/2022
C	DRAWING UPDATE	-	MRF	GW	CZH	07/10/2019	F	EDITORIAL CHANGES	EDM	RSL	JES	CZH	10/11/2021
B	EDITORIAL CHANGES	-	GW	JS	CZH	10/07/2018	E	DRAWING UPDATE	GLC	RSL	JES	CZH	11/09/2020

SCOPE: THIS STANDARD SHOWS AND DESCRIBES THE INSTALLATION OF OVERHEAD FAULT INDICATORS WITH RATINGS OF 800 AND 1000 AMPS ON 3/0, 4/0, 336 AND 636 CONDUCTORS.

CAUTION:

* DO NOT INSTALL DOWNSTREAM OF A FUSE.

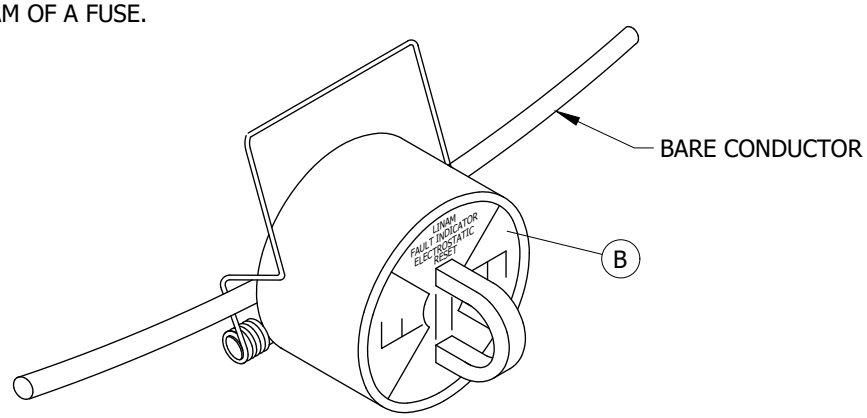

FIGURE 1

TABLE 1

OVERHEAD FAULT INDICATORS					
FOR APPLICATION ON CONDUCTOR SIZE	TRIP RATING (AMPS)	CALIBRATED EXTERNAL DIAMETER (IN)	STOCK NUMBER	DESIGN UNITS	
				UG	OH
3/0, 4/0, 336, 636	800	0.700	S423750	FI800	800FI
3/0, 4/0, 336, 636	1,000	0.700	S423752	FI1000	1000FI

INSTALLATION:

A. THESE ARE SINGLE PHASE, SELF-CONTAINED UNITS WITH ELECTROSTATIC RESET AND INRUSH RESTRAINT. THEY WILL RESET THEMSELVES AFTER SEVERAL MINUTES OF AT LEAST 5KV LINE-TO-GROUND POTENTIAL.

(B) THE INDICATOR WILL SHOW AN ORANGE OR RED TARGET WHEN A FAULT CURRENT EXCEEDING A TRIP VALUE PASSES THROUGH IT'S SENSOR CORE. RESET WILL OCCUR WITHIN SEVERAL MINUTES WHEN THE CONDUCTOR HAS A LINE TO GROUND VOLTAGE OF 5KV OR MORE.

C. ALL NEW INSTALLATION OR REPLACEMENT OF FAULT INDICATORS MUST BE APPROVED BY DISTRIBUTION PLANNING.

D. ANY "OLD STYLE" FAULT INDICATORS REMAINING IN THE SYSTEM SHOULD BE REMOVED AND SCRAPPED. THESE ARE SINGLE AND THREE PHASE UNITS WITH A REMOTE TARGET, BLACK IN COLOR, AND MANUFACTURED BY EDISON CONTROL.

E. UPON COMPLETION OF INSTALLATION, TRIP TEST EACH FAULT INDICATOR WITH TEST TOOL (STOCK NO. S746756).

BILL OF MATERIALS: NONE

NOTES:

I. TYPICAL APPLICATIONS ARE FEEDER CABLE POLES, LINE SWITCHES AND FEEDER SPLIT POINTS.

II. INSTALL FAULT INDICATORS DIRECTLY ON OVERHEAD LINE CONDUCTORS UNLESS MONITORING A CABLE FED FROM A POLE WITH TANGENT OVERHEAD CONDUCTORS. IN THIS CASE, INSTALL FAULT INDICATORS ON JUMPERS FROM OVERHEAD CONDUCTOR TO SWITCH.

III. THE INDICATOR IS PLACED ON AN OVERHEAD CONDUCTOR USING HOT LINE TOOLS. REFER TO INSTALLATION SHEET PROVIDED WITH EACH UNIT FOR DETAILS.

REFERENCE:

a. SEE DESIGN MANUAL DM6113 FOR APPLICATION CRITERIA.

© 1998 - 2020 San Diego Gas & Electric Company. All rights reserved. Removal of this copyright notice without permission is not permitted under law.

REV	CHANGE	DR	BY	DSN	APV	DATE	REV	CHANGE	DR	BY	DSN	APV	DATE
C	FORMATTING	EDM	JIK	-	-	9/28/2020	F						
B	DRAWING UPDATE	-	PEI	-	-	2/18/2019	E						
A	ORIGINAL ISSUE	-	-	PTA	RDG	1/1/1996	D						

X Indicates Latest Revision | Completely Revised | New Page | Information Removed

SDG&E ELECTRIC OVERHEAD AND UNDERGROUND CONSTRUCTION STANDARDS

SHEET 1 OF 1

OVERHEAD FAULT INDICATOR INSTALLATION AND OPERATION

OH1275.1
UG4359.1

TABLE OF CONTENTS

SCOPE: THIS STANDARD SHOWS AND DESCRIBES THE INSTALLATION OF OVERHEAD AUTORANGING FAULT INDICATORS, BOTH ILLUMINATED AND WIRELESS.

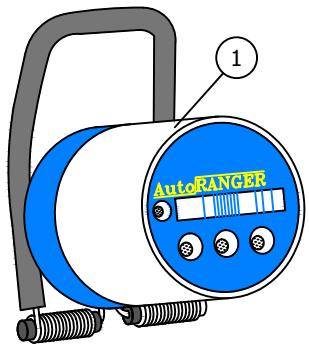

FIGURE 1

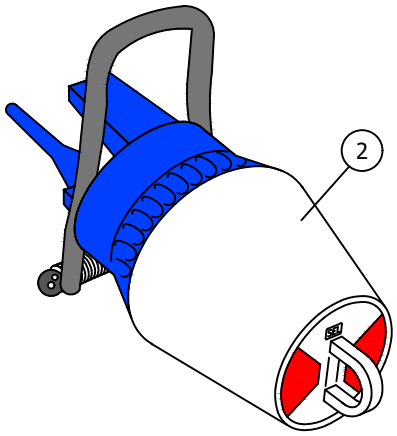

FIGURE 2

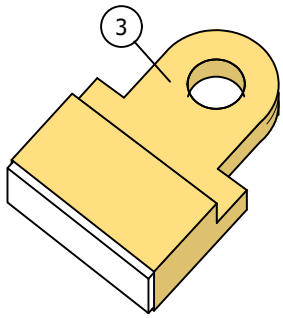

FIGURE 3

TABLE 1 - FAULT INDICATORS

ITEM	MATERIAL	STOCK NO.	ASSEMBLY UNIT
1	SEL AUTORANGER AR-OH	S423702	AUTOFI
2	SEL WIRELESS WSO	S423710	WFI
3	CRSRTT MAGNET RESET TOOL	S423706	--

TABLE 2 - AUTORANGER TRIP VALUES (1)

LOAD CURRENT RANGE (AMPS)	TRIP VALUE (AMPS)
10<I<25	25
25<I<50	100
50<I<100	200
100<I<200	400
200<I<300	600
300<I<400	800
400<I<500	1000
500<I	1200

TABLE 3 - WIRELESS WSO TRIP VALUES (2)

LOAD CURRENT RANGE (AMPS)	TRIP VALUE (AMPS)
5<I<25	50
25<I<50	100
50<I<100	200
100<I<200	400
200<I<300	600
300<I<400	800
400<I<500	1000
500<I	1200

INSTALLATION:

A. IDENTIFY PHASE USING THE AP30 PHASING TOOL. (1) (2)

B. USE THE "A", "B", AND "C" NOMENCLATURE. (1) (2)

C. AFFIX A 1-INCH SILVER OVER BLACK REFLECTIVE TAG TO THE SIDE OF EACH UNIT DENOTING WHICH PHASE IT IS MONITORING. (1) (2)

PHASE "A" STOCK NUMBER: S303700
PHASE "B" STOCK NUMBER: S303701
PHASE "C" STOCK NUMBER: S303702
PHASE "0" STOCK NUMBER: S302058

TABLE OF CONTENTS

© 1998 - 2019 San Diego Gas & Electric Company. All rights reserved. Removal of this copyright notice without permission is not permitted under law.

REV	CHANGE	BY	DSGN	APPV	DATE	REV	CHANGE	BY	DSGN	APPV	DATE
C	EDITORIAL CHANGES	JS	JS	CZH	3/18/2019	F					
B	DRAWING UPDATE	PEI	-	-	2/18/2019	E					
A	EDITORIAL CHANGES	DS	SL	MDJ	2/10/2016	D					

INSTALLATION (CONT'D):

D. ANNOTATE NODE ID AND PHASE FOR EACH UNIT ON JOB PACKAGE, IN NOTE SECTION, OR ON A SEPARATE PIECE OF PAPER. TURN IN PAPERWORK TO DISTRICT ENGINEER OR ASSIGNED ENGINEER AFTER INSTALLATION. (2)

E. CRSRTT RESET TOOL CAN BE USED TO ACTIVATE THE AUTORANGER AND WIRELESS FAULT INDICATORS. (3)

F. THE AUTORANGER UNITS NEED TO BE ACTIVATED WITH CRSRTT RESET TOOL (1)

1. REMOVE SHORTING BAR AND PLACE EXPOSED MAGNET DIRECTLY AGAINST THE AUTORANGER LOGO AND HOLD FOR 3 TO 5 SEOCNDS.
2. RED LEDS REPEAT SEVERAL THREE-FLASH SEQUENCES THEN AMBER LEDS REPEAT SEVERAL TWO-FLASH SEQUENCES.
3. ONCE THIS IS SEEN THE DEVICE IS READY TO BE PLACED INTO SERVICE.
4. IF NOT, USE NEW UNIT AND SEND BACK THE MALFUNCTIONING UNIT TO ELECTRIC DISTRIBUTION ENGINEERING.
5. PLACE ACTIVATED UNIT ON AN ENERGIZED LINE USING HOTSTICK TO GRASP THE HOOKEYE ON THE FACE OF THE INDICATOR. FOR MORE DETAILS ON PROPER INSTALLATION SEE ESP 322. (1)

G. THE WIRELESS FAULT INDICATOR UNITS NEED TO BE ACTIVATED WITH CRSRTT RESET TOOL. (2)

1. REMOVE SHORTING BAR AND PLACE EXPOSED MAGNET DIRECTLY AGAINST THE ACTIVATE STICKER AND HOLD FOR 3 TO 5 SECONDS.
2. THE FRONT PANEL WILL ROLL TO RED.
3. ONCE THIS IS SEEN THE DEVICE IS READY TO BE PLACED INTO SERVICE.
4. IF NOT, USE NEW UNIT AND SEND BACK THE MALFUNCTIONING UNIT TO ELECTRIC DISTRIBUTION ENGINEERING.
5. PLACE ACTIVATED UNIT ON AN ENERGIZED LINE USING HOTSTICK TO GRASP THE HOOKEYE ON THE FACE OF THE INDICATOR. FOR MORE DETAILS ON PROPER INSTALLATION SEE ESP 322.

BILL OF MATERIALS: NONE

NOTES:

I. TYPICAL APPLICATIONS ARE DOWNSTREAM OF LINE SWITCHES, CIRCUIT BIFURCATING POINTS, AND DOWNSTREAM OF BRIDGED FUSES. OTHER POINTS OF INSTALLATION MAY BE SUBMITTED TO DISTRIBUTION ENGINEERING FOR CONSIDERATION.

II. INSTALL FAULT INDICATORS DIRECTLY ON OVERHEAD LINES, USING "LIVE LINE" METHODS.

III. EACH FAULT INDICATOR IS PLACED ON AN OVERHEAD CONDUCTOR USING HOT LINE TOOLS. REFER TO INSTALLATION SHEET PROVIDED WITH EACH UNIT FOR DETAILS.

IV. IT IS NOT NECESSARY TO SUBMIT A FUSING REQUEST FOR THESE FAULT INDICATORS.

V. EXPECTED BATTERY LIFE FOR THESE UNITS IS APPROXIMATELY 15-20 YEARS.

VI. WIRELESS FI INFORMATION MUST BE ENTERED INTO THE ONRAMP TOTAL VIEW (OTV) SYSTEM AFTER INSTALLATION BY THE DISTRICT ENGINEER OR ASSIGNED ENGINEER. PROVIDE COMPLETED INSTALLATION PAPERWORK TO THE DISTRICT ENGINEER OR ASSIGNED ENGINEER.

VII. FOLLOW SEL'S INSTALLATION GUIDELINES DETAILED IN ESP 322.

REFERENCE:

a. SEE ELECTRIC STANDARD PRACTICE 322 FOR DETAILS ON USAGE OF THESE UNITS.

© 1998 - 2019 San Diego Gas & Electric Company. All rights reserved. Removal of this copyright notice without permission is not permitted under law.

REV	CHANGE	BY	DSGN	APPV	DATE	REV	CHANGE	BY	DSGN	APPV	DATE
C	EDITORIAL CHANGES	JS	JS	CZH	3/18/2019	F					
B	DRAWING UPDATE	PEI	-	-	02/18/2019	E					
A	EDITORIAL CHANGES	DS	SL	MDJ	02/10/2016	D					

X Indicates Latest Revision | Completely Revised | New Page | Information Removed

SDG&E ELECTRIC OVERHEAD STANDARDS

OVERHEAD AUTORANGING FAULT INDICATOR INSTALLATION AND OPERATION

OH1276.2

TABLE OF CONTENTS

MAIN TABLE OF CONTENTS

PAGE	SUBJECT
1309	CAPACITOR FUSING TABLE
1311	CAPACITOR AND VOLTAGE REGULATOR INFORMATION
1314	CAPACITOR CONNECTION
1320	4KV SWITCHED CAPACITOR INSTALLATION 150 & 300 KVAR
1325	12KV SCADA CAPACITOR INSTALLATION 600 & 1200 KVAR
1341	STEP VOLTAGE REGULATOR INSTALLATION
1352	VOLTAGE REGULATOR STATION, WYE, 12KV, THREE POLES
1355	VOLTAGE REGULATOR STATION, CLOSED DELTA, 12KV, PLATFORM MOUNTED, SCADA CONTROLLED
1356	VOLTAGE REGULATOR STATION, WYE, 12KV, PLATFORM MOUNTED, SCADA CONTROLLED

REV	CHANGE	DRWN	BY	CHKD	APVD	DATE
I	OH1316 MOVED TO FMO	EDM	JIK	JES	KRG	04/08/2022
H	REVISED TO 3D FORMAT	ARC	JIK	-	-	11/30/2021
G	UPDATE TABLE OF CONTENTS	-	PEI	-	-	02/18/2019

SDG&E ELECTRIC OVERHEAD CONSTRUCTION STANDARDS

CAPACITORS, REGULATORS SECTION
TABLE OF CONTENTS

SCALE: NOT TO SCALE

DRAWING NO: OH1301.1

SHEET: 1 OF 1

© 1998 - 2022 San Diego Gas and Electric Company. All rights reserved. Removal of this copyright notice without permission is not permitted under law.

Indicates Latest Revision | Completely Revised | New Page | X Information Removed

SCOPE: THIS STANDARD LISTS VARIOUS FUSING REQUIREMENTS FOR 2.4KV, 4KV, 12KV & 12.47KV CAPACITORS.

TABLE 1:

SHUNT CAPACITOR STATIONS (I)				
TOTAL BANK KVAR	PHASE	FUSE SIZE IN AMPS PRIMARY		
		2.4KV	4KV	12 & 12.47KV
1350	3	-	-	100
1200	3	-	-	75
1200	3	-	-	80 CMU (V)(VII)
900	3	-	-	60
600	3	-	-	40
600	3	-	-	40 CMU (V)(VII)
450	3	-	100	30
400	3	-	(IV) 75	-
300	3	-	60	20
300	3	-	(VI)(VII) 60 CMU	-
225	3	-	50	15
200	3	-	(III) 40	-
180	3	-	40	15
150	3	50	30	10
150	3	-	(VI)(VII) 30 CMU	-
130	3	75	50	-
100	1	-	40	20
90	3	30	20	10
75	3	25	15	5
65	3	40	30	-
50	1	30	20	10
45	3	15	10	5
25	1	15	10	5
15	1	10	5	5

INSTALLATION: NONE

BILL OF MATERIALS: NONE

NOTES:

(I) THE NEUTRAL BUS OF CAPACITOR BANKS ON THE 12 AND 12.47KV SYSTEMS ARE TO BE FLOATING (NOT CONNECTED TO THE SYSTEM NEUTRAL OR GROUND RODS) WHEN USING THIS FUSING TABLE.

II. FUSE SIZES FOR SEVERAL STATIONS HAVE BEEN REDUCED. CHECK FUSE SIZES IN ALL 3 CUTOUTS WHEN REFUSING BANKS.

(III) THESE FUSES ARE FOR BANKS CONSISTING OF 200 KVAR 7200V CAPACITORS (DELTA CONNECTED) FOR USE ON THE 4KV SYSTEM.

(IV) THESE FUSES ARE FOR BANKS CONSISTING OF 400 KVAR 7200V CAPACITORS (DELTA CONNECTED) FOR USE ON THE 4KV SYSTEM.

(V) 12KV SCADA CAPACITOR.

(VI) 4KV SWITCHED CAPACITOR.

(VII) SMU FUSES MAY BE USED IF CMU FUSES ARE NOT AVAILABLE.

REFERENCE: NONE

TABLE OF CONTENTS

REV	CHANGE	DRWN	BY	CHKD	APVD	DATE
C	REVISED TO 3D FORMAT	ARC	JIK	-	-	12/09/2021
B	DRAWING UPDATE	-	JCE	JS	CZH	05/23/2019
A	EDITORIAL CHANGES	-	JC	IL	MDJ	09/18/2015

SDG&E

A Sempra Energy utility

SDG&E ELECTRIC OVERHEAD CONSTRUCTION STANDARDS

CAPACITOR FUSING TABLE

SCALE: NOT TO SCALE

DRAWING NO: OH1309.1

SHEET: 1 OF 1

© 1998 - 2021 San Diego Gas and Electric Company. All rights reserved. Removal of this copyright notice without permission is not permitted under law.

X Indicates Latest Revision | Completely Revised | New Page | Information Removed

SCOPE: THIS STANDARD LISTS THE INFORMATION NEEDED TO DETERMINE PROPER CAPACITOR APPLICATIONS.

TABLE 1:

PREFIX	PHASE	VOLTAGE	DESCRIPTION	KVAR	STOCK NUMBER	ASSEMBLY UNIT
PC	3	2400/4160Y	OVERHEAD SWITCHED CAPACITOR RACK w/PT	150	S206238	PC-150
PC	3	2400/4160Y	OVERHEAD SWITCHED CAPACITOR RACK w/PT	300	S206242	PC-300
CAP	3	7200/12470Y	OVERHEAD SWITCHED CAPACITOR RACK w/PT	600	S206230	CAP60S
CAP	3	7200/12470Y	OVERHEAD SWITCHED CAPACITOR RACK w/PT	1200	S203234	CAP-OS

INSTALLATION: NONE

BILL OF MATERIALS: NONE

NOTES: NONE

REFERENCE: NONE

SCOPE: THIS STANDARD SHOWS THE PREFIXES, PURCHASING STATUS, STOCK NUMBERS, AND BUCK OR BOOST CAPABILITIES OF VOLTAGE REGULATORS.

TABLE 1:

VOLTAGE REGULATORS							
PREFIX	PHASE	VOLTAGE	DESCRIPTION	KVA	AMPS	STOCK NUMBER	ASSEMBLY UNITS
G	1	2400/4160Y	FEEDER VOLTAGE REGULATOR	25	100	(A) S581280	G25
				50	200	(A) S581408	G50
				75	300	(A) S581472	G75
GH	1	12,000	FEEDER VOLTAGE REGULATOR	144	100	(A) S581505	GH100A
				288	200	(A) S581506	GH200A
				432	300	(A) S581260	GH300A

INSTALLATION:

(A) 16 - 5/8% STEPS BELOW AND ABOVE NEUTRAL.

BILL OF MATERIALS: NONE

NOTES:

I. "GH" REGULATOR IS RATED AT 14,400V, AND CAN BE USED IN 6,930V, 7,200V, AND 12,000V INSTALLATIONS.

II. JANUARY 2018 AND NEWER "GH" REGULATORS WILL BE TAPPED TO THE 6,930V POSITION.

REFERENCE: NONE

TABLE OF CONTENTS

REV	CHANGE	DRWN	BY	CHKD	APVD	DATE
D	REVISED TO 3D FORMAT	ARC	JIK	-	-	12/10/2021
C	DRAWING UPDATE FROM OH1312	-	PEI	-	-	02/18/2019
B	EDITORIAL CHANGES	-	KR	JS	MDJ	01/25/2018

SDG&E ELECTRIC OVERHEAD CONSTRUCTION STANDARDS

CAPACITOR AND VOLTAGE REGULATOR INFORMATION

SCALE: NOT TO SCALE

DRAWING NO: OH1311.1

SHEET: 1 OF 1

© 1998 - 2021 San Diego Gas and Electric Company. All rights reserved. Removal of this copyright notice without permission is not permitted under law.

X Indicates Latest Revision | Completely Revised | New Page | Information Removed

SCOPE: THIS STANDARD SHOWS DIAGRAMS OF 4KV AND 12KV CAPACITOR CONNECTIONS.

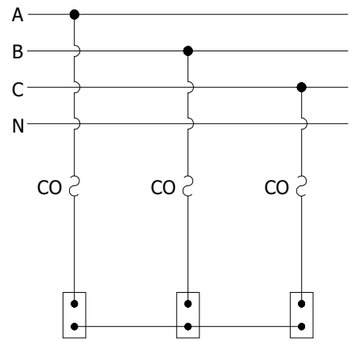

DIAGRAM OF 4KV WYE CONNECTED
(UNGROUNDED RACK)
130 KVAR MAXIMUM
130 KVAR (3-400 KVAR 7.2 KV UNITS)
65 KVAR (3-200 KVAR 7.2 KV UNITS)

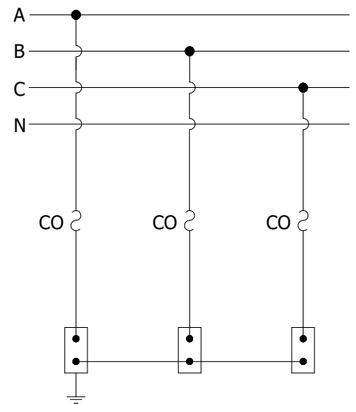

RACKGRND
DIAGRAM OF 4KV WYE CONNECTED
(GROUNDED RACK)
FIXED 65KVAR (3-200KVAR 7.2 KV UNITS)
FIXED 130KVAR (3-400KVAR 7.2 KV UNITS)

REFER TO STD. 1325

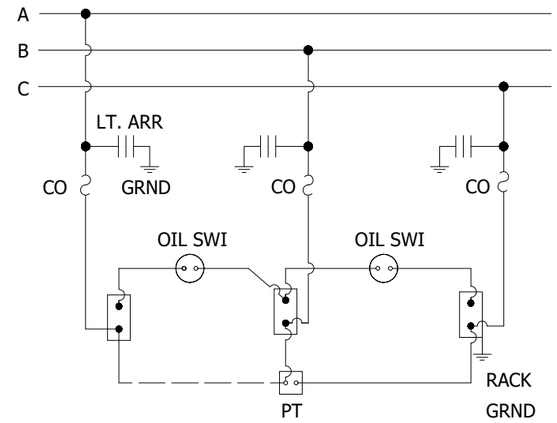

12KV/120V
SCHEMATIC DIAGRAM
1200 KVAR (3-400 KVAR UNITS)
600 KVAR (3-200 KVAR UNITS)

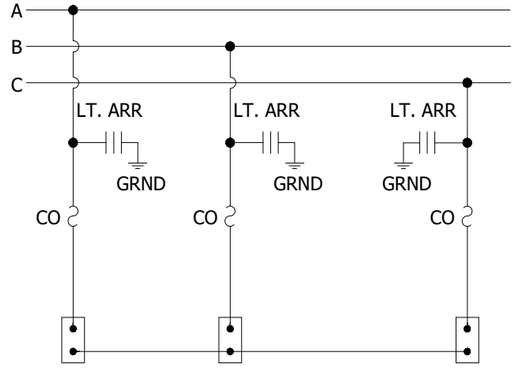

SCHEMATIC DIAGRAM
1200 KVAR (3-400 KVAR UNITS)
600 KVAR (3-200 KVAR UNITS)

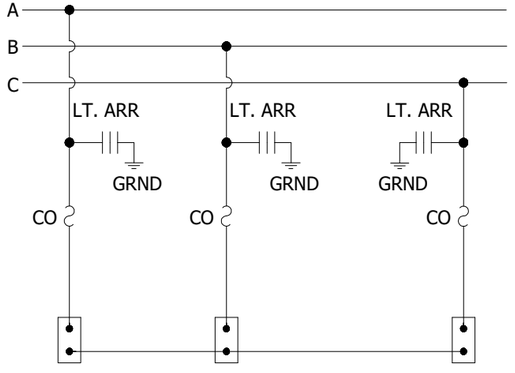

SCHEMATIC DIAGRAM
1200 KVAR (3-400 KVAR UNITS)
600 KVAR (3-200 KVAR UNITS)

INSTALLATION: NONE

BILL OF MATERIALS: NONE

NOTES:

I. SEE STD. 1309 FOR CAPACITOR FUSING.

REFERENCE: NONE

REV	CHANGE	DRWN	BY	CHKD	APVD	DATE
C	REVISED TO 3D FORMAT	ARC	JIK	-	-	02/14/2022
B	DRAWING UPDATE	-	PEI	-	-	02/18/2019
A	NO CHANGES-REAFFIRMED	-	JC	IL	JS/MDJ	11/13/2015

SDG&E ELECTRIC OVERHEAD CONSTRUCTION STANDARDS

CAPACITOR CONNECTION
4KV-WYE AND 12KV-WYE (FIXED/SWITCHED)

SCALE: NOT TO SCALE

DRAWING NO:	SHEET:
OH1314.1	1 OF 1

X Indicates Latest Revision | Completely Revised | New Page | Information Removed

© 1998 - 2022 San Diego Gas and Electric Company. All rights reserved. Removal of this copyright notice without permission is not permitted under law.

TABLE OF CONTENTS

SCOPE: THIS CONSTRUCTION STANDARD SHALL BE USED FOR ALL 4KV SCADA CAPACITOR STATIONS.

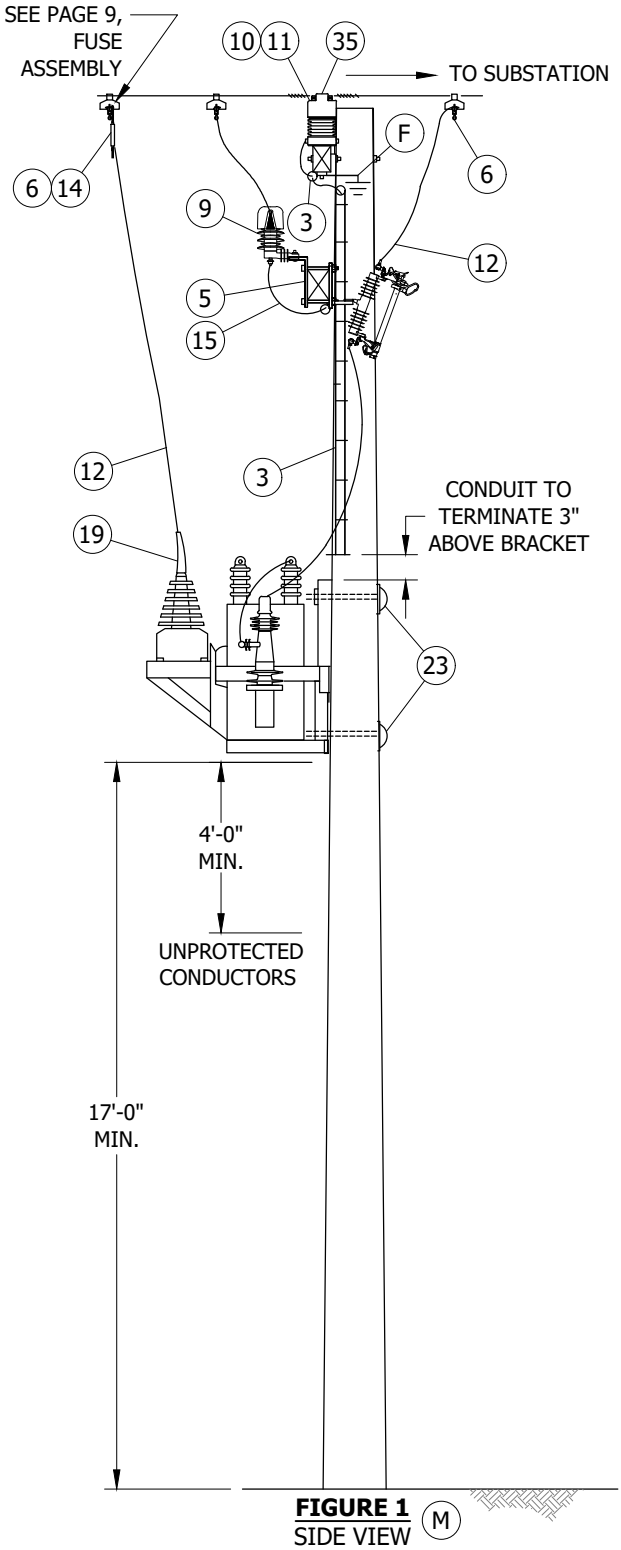

FIGURE 1 (M)
SIDE VIEW

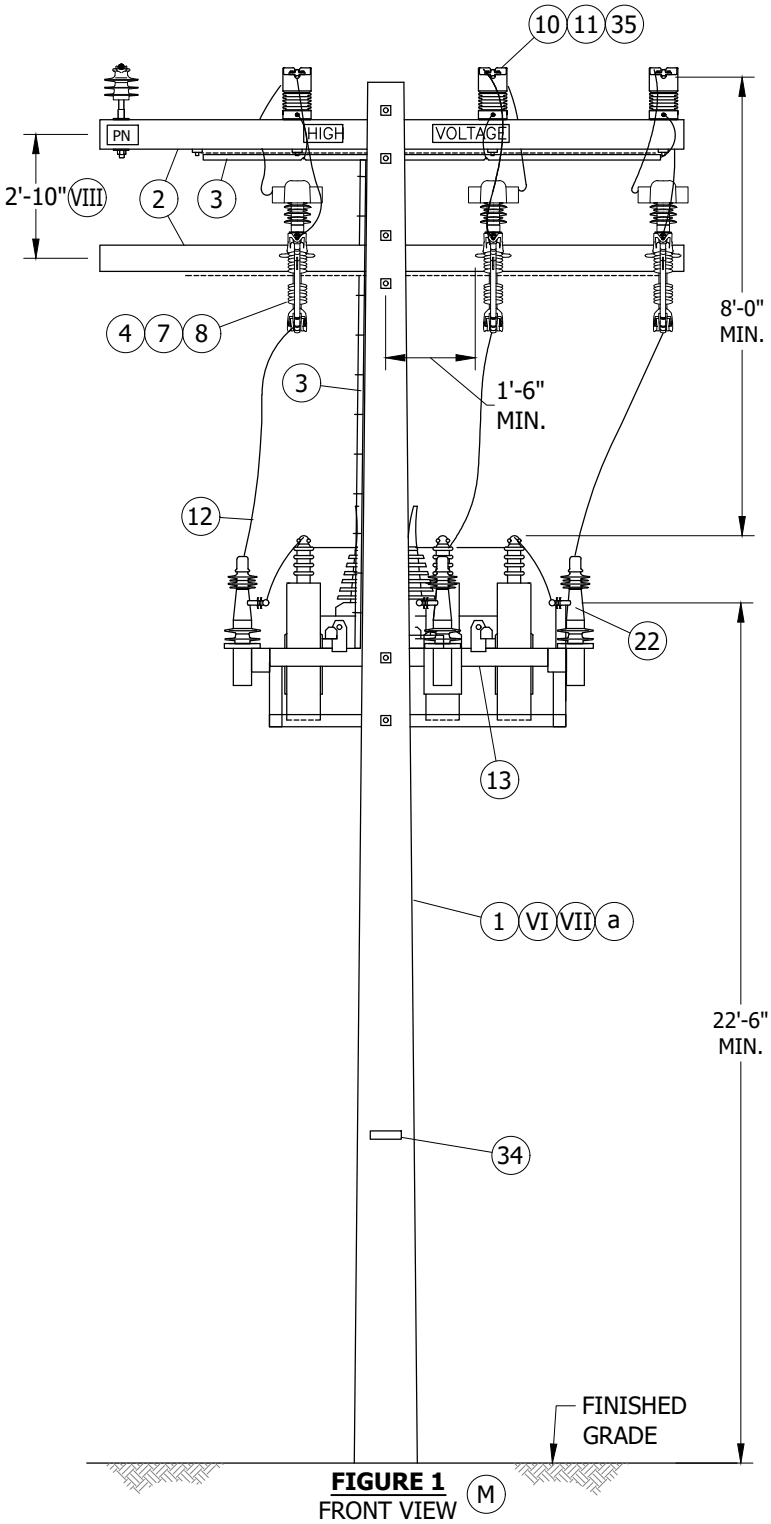

FIGURE 1 (M)
FRONT VIEW

TABLE OF CONTENTS

© 1998 - 2021 San Diego Gas & Electric Company. All rights reserved. Removal of this copyright notice without permission is not permitted under law.

REV	CHANGE	DR	BY	DSN	APV	DATE	REV	CHANGE	DR	BY	DSN	APV	DATE
C	EDITORIAL CHANGES	-	GW	JS	MDJ	03/01/2018	F	FIGURE UPDATE	EDM	SPC	GLW	CZH	12/06/2021
B	TABLE UPDATES	-	SL	JS	MDJ	10/27/2016	E	DRAWING UPDATE	EDM	JIK	JES	CZH	07/27/2021
A	ORIGINAL ISSUE	-	JC	IL	ML	02/26/2015	D	EDITORIAL CHANGES	-	JS	JS	CZH	06/01/2018

X Indicates Latest Revision | Completely Revised | New Page | Information Removed

SDG&E ELECTRIC OVERHEAD CONSTRUCTION STANDARDS

SHEET 1 OF 11

4KV SCADA CAPACITOR INSTALLATION
150 & 300 KVAR

OH1320.1

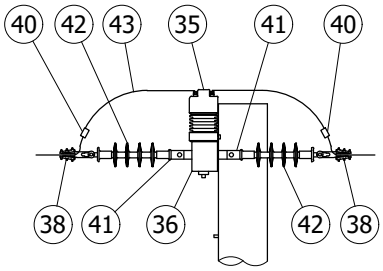

FIGURE 2
ALTERNATE DEADEND CONSTRUCTION (VIII)

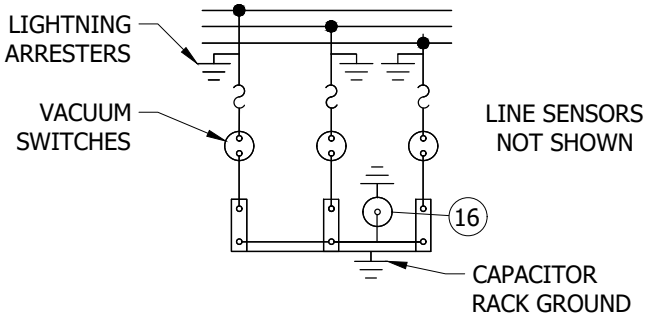

FIGURE 3
WIRING DIAGRAM

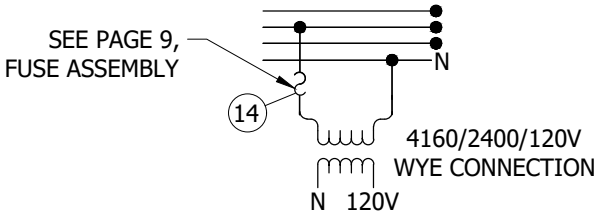

FIGURE 4
POTENTIAL TRANSFORMER CONNECTION

TABLE OF CONTENTS

© 1998 - 2021 San Diego Gas & Electric Company. All rights reserved. Removal of this copyright notice without permission is not permitted under law.

REV	CHANGE	DR	BY	DSN	APV	DATE	REV	CHANGE	DR	BY	DSN	APV	DATE
C	EDITORIAL CHANGES	-	GW	JS	MDJ	03/01/2018	F	FIGURE UPDATE	EDM	SPC	GLW	CZH	12/06/2021
B	TABLE UPDATES	-	SL	JS	MDJ	10/27/2016	E	DRAWING UPDATE	EDM	JIK	JES	CZH	07/27/2021
A	ORIGINAL ISSUE	-	JC	IL	ML	02/26/2015	D	EDITORIAL CHANGES	-	JS	JS	CZH	06/01/2018

ATTENTION:

* ROLL UP AND STRAP EXCESS HARNESS CABLES BEHIND CAPACITOR RACK. DO NOT ATTEMPT TO SHORTEN.

** MATERIALS ORDERED ARE BASED ON A 50-FOOT POLE

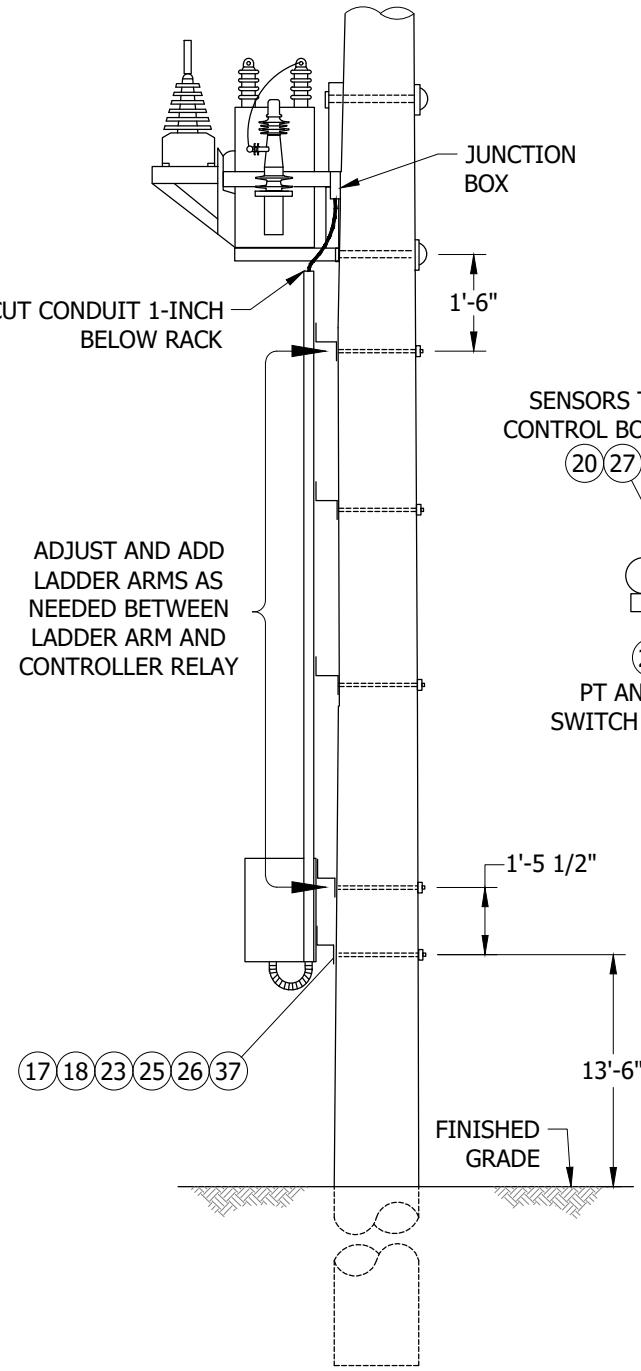

FIGURE 5
SIDE VIEW

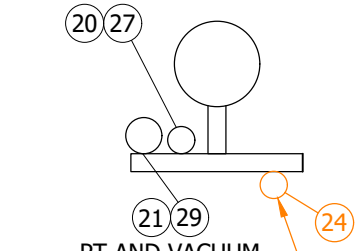

FIGURE 5
VIEW A-A

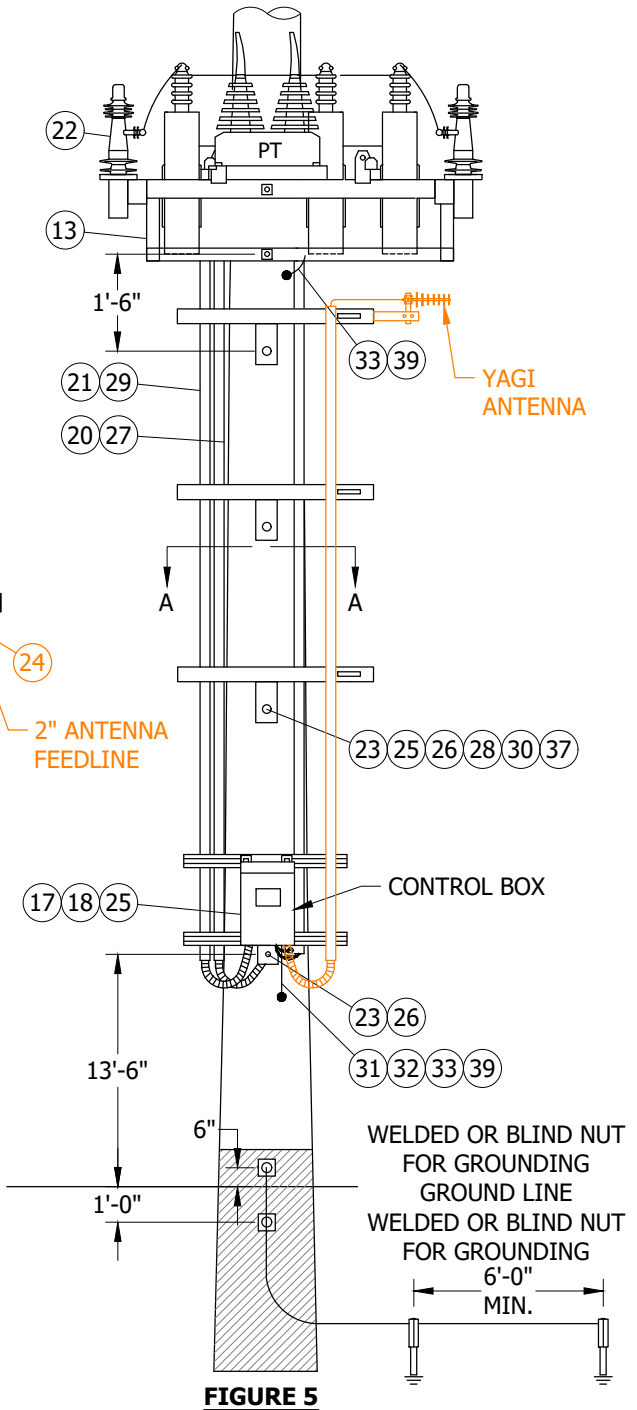

FIGURE 5
FRONT VIEW

© 1998 - 2021 San Diego Gas & Electric Company. All rights reserved. Removal of this copyright notice without permission is not permitted under law.

REV	CHANGE	DR	BY	DSN	APV	DATE	REV	CHANGE	DR	BY	DSN	APV	DATE
C	EDITORIAL CHANGES	-	GW	JS	MDJ	03/01/2018	F	FIGURE UPDATE	EDM	SPC	GLW	CZH	12/06/2021
B	TABLE UPDATES	-	SL	JS	MDJ	10/27/2016	E	DRAWING UPDATE	EDM	JIK	JES	CZH	07/27/2021
A	ORIGINAL ISSUE	-	JC	IL	ML	02/26/2015	D	EDITORIAL CHANGES	-	JS	JS	CZH	06/01/2018

X Indicates Latest Revision | Completely Revised | New Page | Information Removed

SDG&E ELECTRIC OVERHEAD CONSTRUCTION STANDARDS

4KV SCADA CAPACITOR INSTALLATION
150 & 300 KVAR

TABLE OF CONTENTS

CAUTION:

* TO AVOID ELECTRICAL SHOCK, DO NOT INTERRUPT SENSOR GROUNDS ONCE ENERGIZED.

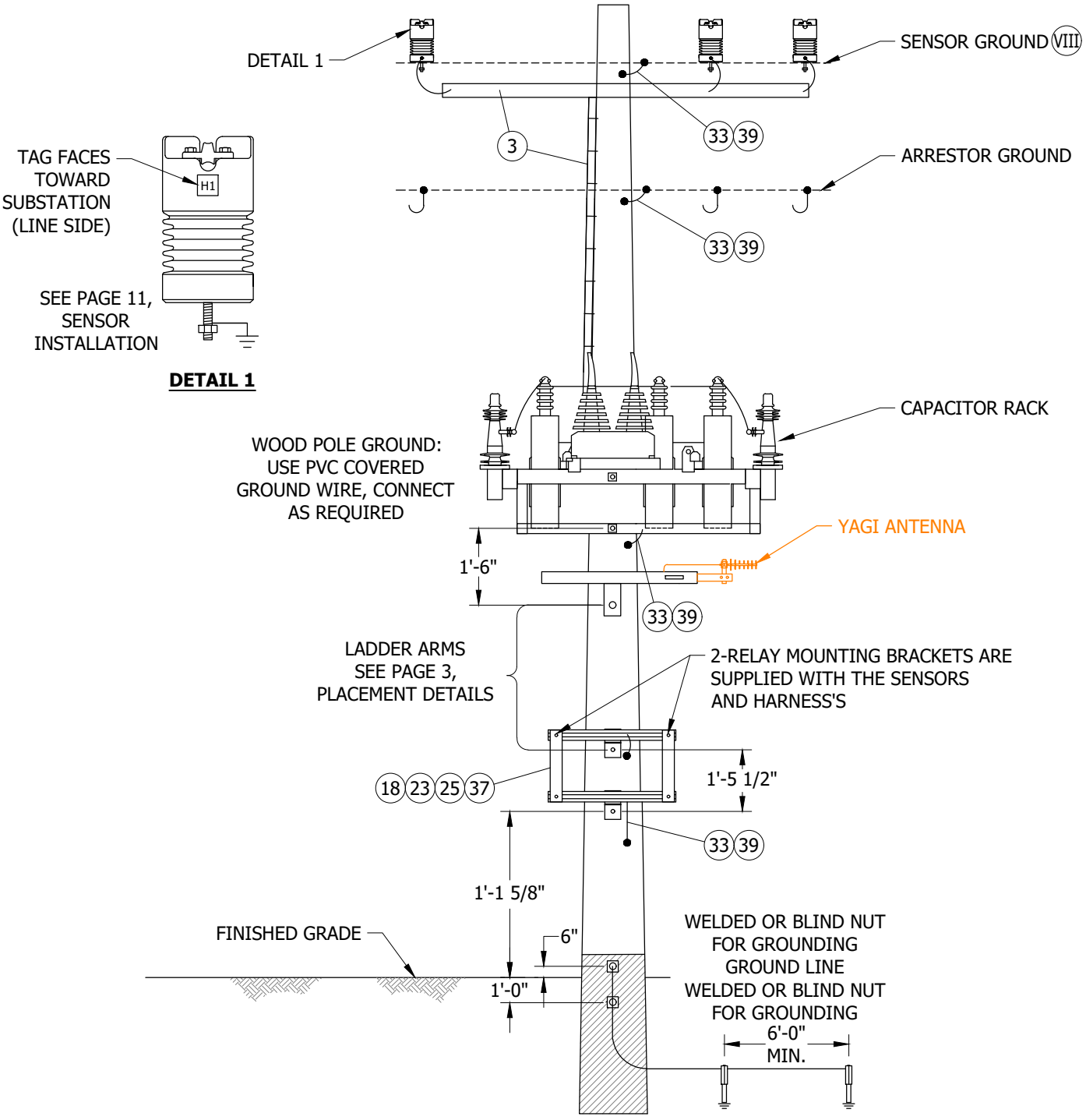

FIGURE 6

© 1998 - 2021 San Diego Gas & Electric Company. All rights reserved. Removal of this copyright notice without permission is not permitted under law.

REV	CHANGE	DR	BY	DSN	APV	DATE	REV	CHANGE	DR	BY	DSN	APV	DATE
C	EDITORIAL CHANGES	-	GW	JS	MDJ	03/01/2018	F	FIGURE UPDATE	EDM	SPC	GLW	CZH	12/06/2021
B	TABLE UPDATES	-	SL	JS	MDJ	10/27/2016	E	DRAWING UPDATE	EDM	JIK	JES	CZH	07/27/2021
A	ORIGINAL ISSUE	-	JC	IL	ML	02/26/2015	D	EDITORIAL CHANGES	-	JS	JS	CZH	06/01/2018

TABLE OF CONTENTS

CAUTION:

* TO ENSURE THE PROCEDURE FOR LINE SENSOR CONNECTION IS DONE CORRECTLY, LINE SENSOR MUST BE TAPPED TO GROUND BEFORE ENERGIZING. (SEE PAGE 11, SENSOR INSTALLATION)

** OPEN VACUUM SWITCHES BEFORE OPENING CUTOUTS. VACUUM SWITCHES CAN BE OPENED MANUALLY OR ELECTRICALLY. VACUUM SWITCH CAN ONLY BE CLOSED ELECTRICALLY.

INSTALLATION:

A. CAPACITORS LOCATED IN THE TIER 2 & TIER 3 AREAS SHALL BE INSTALLED ON GALVANIZED OR WEATHERING STEEL POLES, HAVING A MINIMUM HEIGHT AND CLASS OF 50-1. STEEL POLES ARE PREFERRED FOR CONSTRUCTION; WOOD POLES MAY BE USED OUTSIDE THE TIER 2 & TIER 3 AREAS ONLY, MINIMUM 50-1. POLE LOADING CALCULATIONS SHALL BE COMPLETED AND ARCHIVED FOR ALL INSTALLATIONS FOR NEW AND EXISTING POLES. POLES WITH C-TRUSS OR ANY TYPE OF REINFORCEMENT SHALL NOT BE USED AND REQUIRE CHANGE OUT.

B. THE CENTER VACUUM SWITCH CAN BE MOVED TO MATCH THE CENTER PHASE POSITION.THE CAPACITOR RACK IS DRILLED FOR THIS AND SLACK IS PROVIDED IN THE WIRING.

C. THE POTENTIAL TRANSFORMER, OR PT, SHALL BE CONNECTED TO THE 4KV CIRCUIT IN WYE, DIRECTLY TO THE LINE USING THE 3A CURRENT-LIMITING FUSE. SEE STANDARD DRAWING OF CONNECTION, ON PG. 9, FUSE ASSEMBLY WEDGE TAP STIRRUPS ARE REQUIRED USING THE NO. 4 COVERED WIRE; AVIAN COVERS ARE REQUIRED ON THE PT.

D. AVIAN PROTECTION COVERS ARE REQUIRED FOR ALL INSTALLATIONS.

E. FIBERGLASS CROSSARMS ARE REQUIRED FOR ALL LOCATIONS, WHETHER IT IS TANGENT OR DEADEND CONSTRUCTION.

(F) **ON ALL POLES:** GROUNDING OF THE ARM-MOUNTED LINE SENSORS IS REQUIRED. THE ARRESTORS, CAPACITOR RACK, YAGI ANTENNA, AND THE CAPACITOR RELAY CONTROL BOX ALSO REQUIRE GROUNDING. ON WOOD POLES, CREW TO INSTALL SEPARATE GROUND RUN TO THE CONTROLLER. ON WOOD AND STEEL POLES CREW TO USE COMMON GROUND FOR ARRESTORS, CAPACITOR RACK, AND YAGI ANTENNA. SEE PAGE 4, GROUNDING POINTS.

G. DO NOT TIE CAPACITOR BANK NEUTRAL TO 4KV CIRCUIT NEUTRAL. IT IS TO REMAIN FLOATING. IT HAS A SENSOR TO DETECT SINGLE PHASING.

H. PVC COVERING WIRE IS NOT PERMITTED IN THE CLIMBING SPACE. (b)

J. **ACCESS:** ALL CAPACITOR SITES REQUIRE ALL WEATHER 24/7 VEHICLE ACCESS FOR AERIAL LIFTS AND DERRICK TRUCKS.

K. **PHASE IDENTIFICATION:** ALL CAPACITORS SITES SHALL BE PHASE IDENTIFIED WITH THE AP30. THE CROSSARM SHALL BE MARKED FOR A, B, AND C PHASES. THE SENSOR WIRING HARNESS AND VACUUM SWITCH WIRING HARNESS ARE TO BE MARKED 1, 2, 3, AND MATCH A/1, B/2, C/3 PHASE MARKING.

L. IT IS REQUIRED FOR CUTOUTS TO FACE IN THE DIRECTION OF THE SUBSTATION/SOURCE. THE LINE ARM SENSOR TAG MUST ALSO FACE TOWARD THE SUBSTATION/SOURCE.

(M) SEE FIGURE 2 FOR ALTERNATE DEADEND CONSTRUCTION, FIGURE 3 FOR WIRING DIAGRAM, AND FIGURE 4 FOR POTENTIAL TRANSFORMER CONNECTION.

BILL OF MATERIALS:

ITEM	DESCRIPTION	QUANTITY	STANDARD PAGE	STOCK NUMBER	DESIGN UNITS
1	POLE, STEEL GALVANIZED 50-1 (MINIMUM HEIGHT)	AS REQ'D	354	-	-
	POLE, STEEL WEATHERING 50-1 (MINIMUM HEIGHT)	AS REQ'D	354	-	-
2	CROSSARM, FIBERGLASS 10'-0" TANGENT	2	379	S294378	-
3	2" CONDUIT UNDER ARM AND STRAPPED TO POLE (FOR SENSOR CABLES) (II)	10'-0"	-	S229536	-
4	CUTOUTS	3	1212	S298018	CMU
5	DOUBLE CUTOUT & ARRESTOR BRACKET	3	397	S165446 (X)	A/CB-S
6	WEDGE TAP CONNECTORS AND STIRRUPS	AS REQ'D	783, 788	-	-

© 1998 - 2021 San Diego Gas & Electric Company. All rights reserved. Removal of this copyright notice without permission is not permitted under law.

REV	CHANGE	DR	BY	DSN	APV	DATE	REV	CHANGE	DR	BY	DSN	APV	DATE
C	EDITORIAL CHANGES	-	GW	JS	MDJ	03/01/2018	F	FIGURE UPDATE	EDM	SPC	GLW	CZH	12/06/2021
B	TABLE UPDATES	-	SL	JS	MDJ	10/27/2016	E	DRAWING UPDATE	EDM	JIK	JES	CZH	07/27/2021
A	ORIGINAL ISSUE	-	JC	IL	ML	02/26/2015	D	EDITORIAL CHANGES	-	JS	JS	CZH	06/01/2018

TABLE OF CONTENTS

BILL OF MATERIALS (CONT'D):

ITEM	DESCRIPTION		QUANTITY	STANDARD PAGE	STOCK NUMBER	DESIGN UNITS
7	CMU FUSE, 150 KVAR, 30A (IX)		3	1207	S368702	CMU30
8	CMU FUSE, 300 KVAR, 65A (IX)		3	1207	S368708	CMU65
9	WYE ARRESTORS,4KV		3	1247	S113210 (XII)	CFLA3
					S113216 (XIII)	LA3
10	LINE VOLTAGE AND CURRENT SENSORS (III)(c)		3	-	-	-
11	SENSOR INSULATOR STUD BOLTS		3	396	S701760	STUD-W
12	POLY COVERED 4/7 STRAND COPPER		65'-0"	-	S815044	POLY-4J
13	CAPACITOR, SCADA, OVERHEAD RACK	150 KVAR	1	1320.1	S206238	PC-150
		300 KVAR	1		S206242	PC300
14	CURRENT LIMITING FUSE, 3A		1	1207	S365752	CP-PTF
15	FLEXIBLE GROUND STRAP		AS REQ'D	1002	S698754	LAGND
16	CAPACITOR NEUTRAL VOLTAGE SENSOR (III)		1	-	-	-
17	CAPACITOR CONTROLLER RELAY (I)		AS REQ'D	-	S274880	-
18	BRACKETS FOR MOUNTING RELAY (III)		2	-	-	-
19	BOOT PT CONNECTION COVER (AVIAN PROTECTION)		2	-	-	-
20	LINE & NEUTRAL SENSOR WIRING HARNESS (III)		1	-	-	-
21	PT, VACUUM WIRING HARNESS (III)		1	-	-	-
22	VACUUM SWITCHES (III)		3	-	-	-
23	GALVANIZED BOLTS, 5/8" (LENGTH AS REQUIRED)		AS REQ'D	390	-	-
24	COAXIAL CABLE (ANTENNA FEEDLINE) (XI)(I)		AS REQ'D	-	S191906	ANTCAB
25	LADDER ARM BRACKET		AS REQ'D	1404	S167186 (X)	RARM/L
26	DOUBLE UNISTRUT ARM, 2'-0"		AS REQ'D	1404	S216702 (X)	
27	SCH. 40 PVC, 2"		AS REQ'D	-	S251296	PVC-2
28	UNISTRUT PIPE CLAMPS, 2"		AS REQ'D	1404	S229536	UPC2IN
29	SCH. 40 PVC, 3"		AS REQ'D	-	S251360	PVC-3
30	UNISTRUT PIPE CLAMPS, 3"		AS REQ'D	1404	S229632	UPC3IN
31	STATION GROUNDING ASSEMBLY (WOOD POLE ONLY)		1	-	-	GNDPVC
	STATION GROUNDING ASSEMBLY (STEEL POLE ONLY)		1	-	-	GNDPSP
32	GROUND WIRE #4 PVC COVERED		AS REQ'D	-	S812490	POLY-4
33	GROUND POINTS STEEL POLE BLIND NUTS, 1/2"		AS-REQ'D	1002	S503460 (X)	-
34	TAG, STATION NUMBER		1	208	-	-
35	AVIAN SENSOR COVER		3	-	S289606	LCVMI
36	FIBERGLASS DEADEND ARM, 10'-0"		1	379	S294380	4DF
37	NUT STUD 1/2" X 1 3/8", CLAMPING UNISTRUT		AS REQ'D	4204	S507000	-
38	DEADEND STRAIN CLAMP		AS REQ'D	789	-	-
39	1/2" SPLIT BOLT STUD, 1/2" X 13		AS REQ'D	4505	S262560	SPCONN
40	WEDGE TAP CONNECTOR		AS REQ'D	784	-	-
41	CLEVIS DEADEND, BOLT CLOSED TYPE, 5/8"		AS REQ'D	-	S235712	-
42	SUSPENSION TYPE INSULATOR		AS REQ'D	-	S301934	-
43	COVERED WIRE (SIZE AS REQUIRED)		AS REQ'D	-	-	-
44	BOND WIRE, NO. 8 (XI)		AS REQ'D	1003	S812928	-
45	SPLIT BOLT STUD, 3/8", 3/8" X 16 (XI)		2	4505	S262626 (X)	-
46	CLAMP, HOT-LINE (XI)		AS REQ'D	788	S227680	-
47	ANTENNA (MAY BE YAGI OR OTHER)		--	--	S109570	ANT

TABLE OF CONTENTS

© 1998 - 2021 San Diego Gas & Electric Company. All rights reserved. Removal of this copyright notice without permission is not permitted under law.

REV	CHANGE	DR	BY	DSN	APV	DATE	REV	CHANGE	DR	BY	DSN	APV	DATE
C	EDITORIAL CHANGES	-	GW	JS	MDJ	03/01/2018	F	FIGURE UPDATE	EDM	SPC	GLW	CZH	12/06/2021
B	TABLE UPDATES	-	SL	JS	MDJ	10/27/2016	E	DRAWING UPDATE	EDM	JIK	JES	CZH	07/27/2021
A	ORIGINAL ISSUE	-	JC	IL	ML	02/26/2015	D	EDITORIAL CHANGES	-	JS	JS	CZH	06/01/2018

NOTES:

(I) ITEMS SUPPLIED BY KEARNY.

(II) U-GUARD MAY BE INSTALLED AS ACCEPTABLE SUBSTITUTE

(III) INCLUDED WITH SCADA CAPACITOR RACK W/PT AS A KIT.

IV. KEARNY CREWS WILL CLOSE CUTOUTS AFTER THE RELAY IS INSTALLED.

V. THE LINE-ARM SENSOR WIRING HARNESS (2" CONDUIT), FROM THE LINE-ARM TO THE CAPACITOR RACK, SHALL TERMINATE 3 INCHES ABOVE THE CAPACITOR RACK. THE LADDER ARM LOCATED 18 INCHES BELOW THE CAPACITOR RACK SHALL HAVE WIRING HARNESS CONDUITS TERMINATED ONE-INCH BELOW THE CAPACITOR RACK.

(VI) STEEL POLE REQUIRED IN TIER 2 & TIER 3 AREAS. 50'-0" MINIMUM HEIGHT.

(VII) WOOD POLE USED OUTSIDE TIER 2 & TIER 3 AREAS. 50'-0" MINIMUM HEIGHT.

(VIII) IT IS RECOMMENDED THAT THE ENTIRE X-ARM, INCLUDING THE SENSORS, BE ASSEMBLED ON THE GROUND. IT CAN THEN BE INSTALLED AS A UNIT AND GROUNDED WITH ALL ENERGIZED PHASES TEMPORARILY MOVED IN THE CLEAR, IN A MANNER SIMILAR TO THE SCADA-MATE OR INTELLIRUPTER.

(IX) SMU FUSES MAY BE USED IF CMU FUSES ARE NOT AVAILABLE.

(X) THIS ITEM IS EXEMPT.

(XI) NOT SHOWN ON FIGURES.

(XII) CAL FIRE APPROVED LIGHTNING ARRESTERS FOR NEW INSTALLATIONS INSIDE HFTD TIER 2 OR TIER 3.

(XIII) NON-CAL FIRE APPROVED LIGHTNING ARRESTERS FOR NEW INSTALLATIONS OUTSIDE HFTD TIER 2 OR TIER 3.

REFERENCE:

(a) FOR POLE SELECTION, REFER TO OH301, POLES, ARMS AND HARDWARE.

(b) G.O. 95 RULE 22.2C

(c) REFER TO OH 540, LOAD MONITORING.

TABLE OF CONTENTS

© 1998 - 2021 San Diego Gas & Electric Company. All rights reserved. Removal of this copyright notice without permission is not permitted under law.

REV	CHANGE	DR	BY	DSN	APV	DATE	REV	CHANGE	DR	BY	DSN	APV	DATE
C	EDITORIAL CHANGES	-	GW	JS	MDJ	03/01/2018	F	FIGURE UPDATE	EDM	SPC	GLW	CZH	12/06/2021
B	TABLE UPDATES	-	SL	JS	MDJ	10/27/2016	E	DRAWING UPDATE	EDM	JIK	JES	CZH	07/27/2021
A	ORIGINAL ISSUE	-	JC	IL	ML	02/26/2015	D	EDITORIAL CHANGES	-	JS	JS	CZH	06/01/2018

X Indicates Latest Revision | Completely Revised | New Page | Information Removed

SDG&E ELECTRIC OVERHEAD CONSTRUCTION STANDARDS

4KV SCADA CAPACITOR INSTALLATION
150 & 300 KVAR

OH1320.7

SCOPE: THIS STANDARD SHOWS THE SCADA CAPACITOR WIRING HARNESS INSTALLATION.

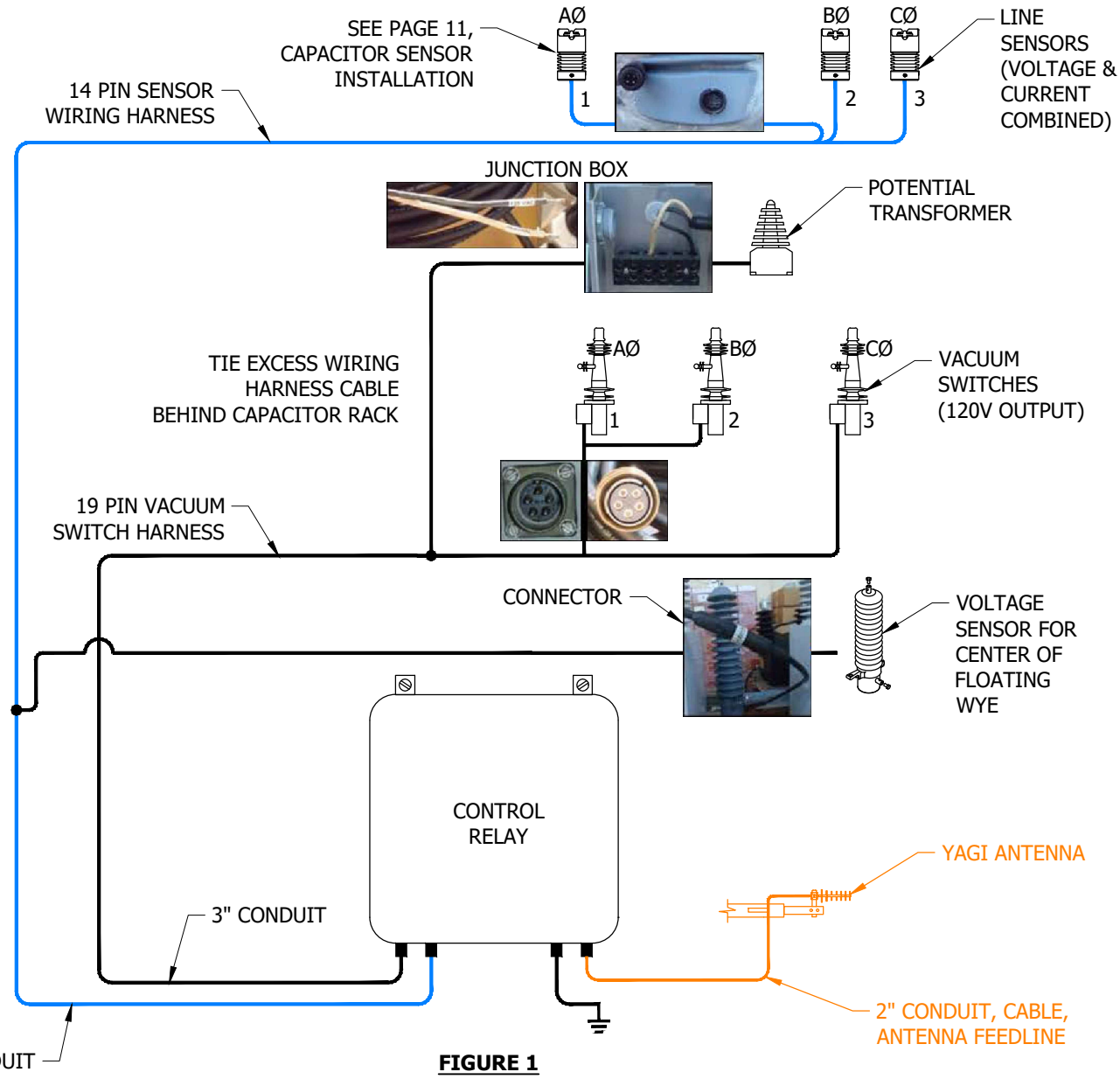

FIGURE 1

INSTALLATION: NONE

BILL OF MATERIALS: NONE

NOTES:

I. THE SENSOR HARNESS AND THE VACUUM SWITCH HARNESS MUST BE IN SEPARATE CONDUITS, FOR NOISE ISOLATION.

II. TO PLUG IN SENSORS AND VACUUM SWITCH WIRING HARNESS PLUGS, LINE UP DETENTS OF THE HARNESS AND THE SENSORS OR VACUUM SWITCHES, PUSH IN UNTIL SEATED (DO NOT FORCE). ENGAGE THE THREADS OF THE CANNON PLUG AND HAND TIGHTEN ONLY. (DO NOT CROSS THREAD THE PLUG).

REFERENCE: NONE

© 1998 - 2021 San Diego Gas & Electric Company. All rights reserved. Removal of this copyright notice without permission is not permitted under law.

REV	CHANGE	DR	BY	DSN	APV	DATE	REV	CHANGE	DR	BY	DSN	APV	DATE
C	EDITORIAL CHANGES	-	GW	JS	MDJ	03/01/2018	F	FIGURE UPDATE	EDM	SPC	GLW	CZH	12/06/2021
B	TABLE UPDATES	-	SL	JS	MDJ	10/27/2016	E	DRAWING UPDATE	EDM	JIK	JES	CZH	07/27/2021
A	ORIGINAL ISSUE	-	JC	IL	ML	02/26/2015	D	EDITORIAL CHANGES	-	JS	JS	CZH	06/01/2018

TABLE OF CONTENTS

SCOPE: THIS PAGE SHOWS THE SCADA CAPACITOR POTENTIAL TRANSFORMER FUSE ASSEMBLY AND CONNECTION USING THE THOMAS & BETTS 3-AMP HI-TECH CURRENT-LIMITING FUSE. THE PT IS Y (WYE) CONNECTED DIRECTLY TO THE LINE CONDUCTORS, USING THE OUTSIDE PHASES, AND COVERED WIRE.

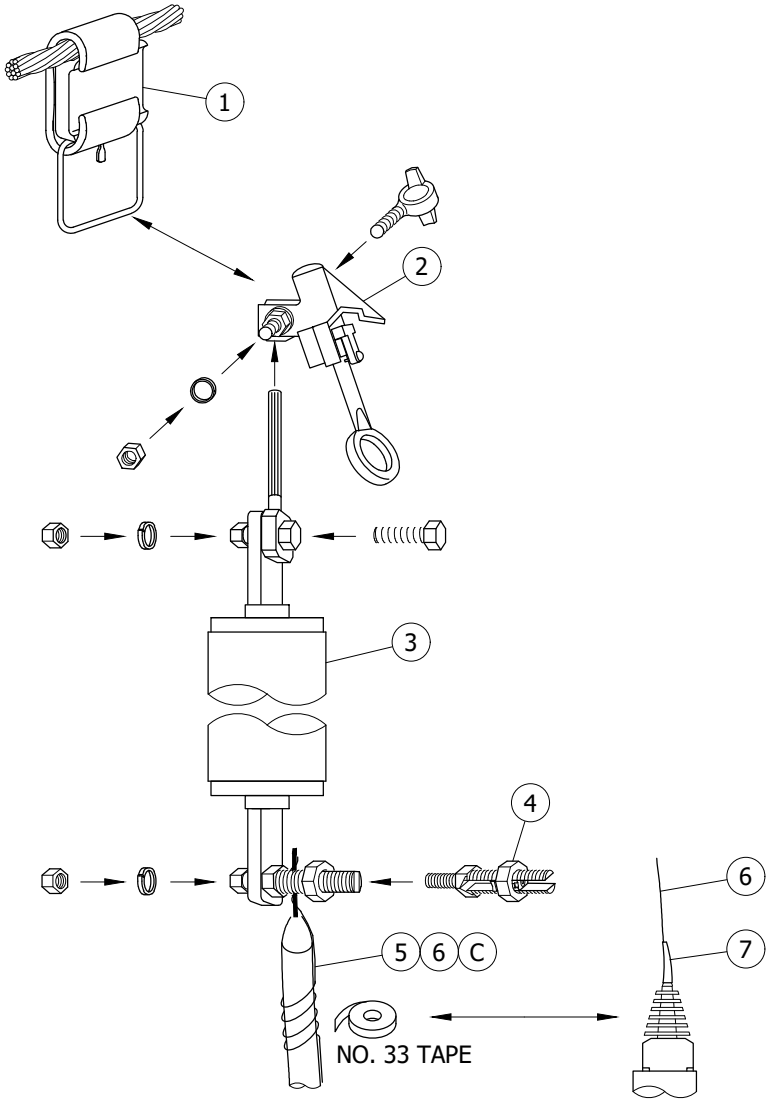

FIGURE 1

INSTALLATION:

A. THE HI-TECH FUSE IS A FULLY RATED CURRENT-LIMITING FUSE. THE PVC COVERED NO. 4 CONDUCTOR SHOULD BE CUT TO LENGTH AND ATTACHED TO THE FUSE. USING LIVE-LINE TOOLS (SHOT-GUN/GRIP-ALL CLAMP STICK), CONNECT THE FUSE TO THE WEDGE TAP STIRRUP, ENERGIZING THE PT, CHECK VOLTAGE AT THE JUNCTION BOX ON THE CAPACITOR RACK. THIS FUSE IS REQUIRED FOR THE TESTING AND ENERGIZING OF THE PT TO THE LINE CONDUCTOR. LIMIT THE AMOUNT OF SLACK IN THE WIRE BETWEEN THE FUSE AND THE PT.

B. EACH FUSE REQUIRES A CHECK WITH AN OHM METER, OR CONTINUITY LIGHT BEFORE INSTALLING AND ENERGIZING.

(C) SKIN ABOUT 1 1/2" OF INSULATION FROM THE NO. 4 PVC COVERED WIRE. TAKE A SECTION OF NO. 8 BOND WIRE, INSERT IT WITH THE SKINNED NO. 4 WIRE INTO THE 3/8-INCH SPLIT BOLT STUD AND TIGHTEN. AFTER IT IS SECURE, WRAP THE BOND WIRE AROUND THE INSULATED WIRE ABOUT THREE TURNS TIGHT AND TAPE FROM THE BOTTOM UP USING NO. 33 TAPE. THIS WILL PROVIDE STRAIN SUPPORT TO THE STRANDED WIRE AT THE BOTTOM OF THE HI-TECH FUSE.

© 1998 - 2021 San Diego Gas & Electric Company. All rights reserved. Removal of this copyright notice without permission is not permitted under law.

REV	CHANGE	DR	BY	DSN	APV	DATE	REV	CHANGE	DR	BY	DSN	APV	DATE
C	EDITORIAL CHANGES	-	GW	JS	MDJ	03/01/2018	F	FIGURE UPDATE	EDM	SPC	GLW	CZH	12/06/2021
B	TABLE UPDATES	-	SL	JS	MDJ	10/27/2016	E	DRAWING UPDATE	EDM	JIK	JES	CZH	07/27/2021
A	ORIGINAL ISSUE	-	JC	IL	ML	02/26/2015	D	EDITORIAL CHANGES	-	JS	JS	CZH	06/01/2018

TABLE OF CONTENTS

BILL OF MATERIALS:

ITEM	DESCRIPTION	QUANTITY	STANDARD PAGE	STOCK NUMBER	DESIGN UNITS
1	WEDGE TAP CONNECTORS AND STURRUPS	AS REQ'D	783	--	--
2	CLAMP, HOT-LINE	AS REQ'D	788	S227680	--
3	FUSE, CURRENT LIMITING, 3A	1	1207	S365752	CP-PTF
4	3/8" SPLIT BOLT STUD, 3/8" X 16	2	4505	S262626 (X)	--
5	WIRE, BOND, NO. 8	AS REQ'D	1003	S812928	--
6	WIRE, POLY COVERED, 4/7 STRAND, COPPER	--	--	S814044	POLY4J
7	BOOT, PT, CONNECTION COVER, (AVIAN PROTECTION)	2	--	--	--

NOTES:

(X) THIS ITEM IS EXEMPT.

REFERENCE: NONE

TABLE OF CONTENTS

© 1998 - 2021 San Diego Gas & Electric Company. All rights reserved. Removal of this copyright notice without permission is not permitted under law.

REV	CHANGE	DR	BY	DSN	APV	DATE	REV	CHANGE	DR	BY	DSN	APV	DATE
C	EDITORIAL CHANGES	-	GW	JS	MDJ	03/01/2018	F	FIGURE UPDATE	EDM	SPC	GLW	CZH	12/06/2021
B	TABLE UPDATES	-	SL	JS	MDJ	10/27/2016	E	DRAWING UPDATE	EDM	JIK	JES	CZH	07/27/2021
A	ORIGINAL ISSUE	-	JC	IL	ML	02/26/2015	D	EDITORIAL CHANGES	-	JS	JS	CZH	06/01/2018

X Indicates Latest Revision | Completely Revised | New Page | Information Removed

SDG&E ELECTRIC OVERHEAD CONSTRUCTION STANDARDS

4KV SCADA CAPACITOR FUSE ASSEMBLY
150 & 300 KVAR

OH1320.10

SCOPE: THIS PAGE SHOWS THE CORRECT INSTALLATION OF THE SCADA CAPACITOR LINE VOLTAGE AND CURRENT SENSOR.

ATTENTION:

* READ THE INSTALLATION DOCUMENTS THAT COME IN THE BOX. THE LINE VOLTAGE SENSOR READS VOLTAGE AND CURRENT AND IS **NOT A TRANSFORMER**.

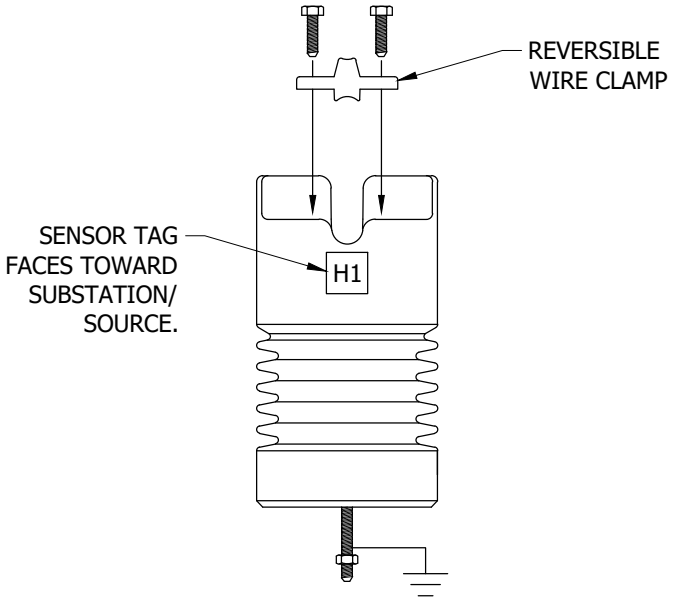

FIGURE 1



FIGURE 2
INCORRECT INSTALLATION

INSTALLATION:

(A) FOR CORRECT INSTALLATION OF REVERSIBLE WIRE CLAMP, SELECT SIDE OF CLAMP THAT PROPERLY FITS WIRE SIZE.

BILL OF MATERIALS: NONE

NOTES:

I. THE VOLTAGE LINE AND CURRENT SENSOR SHALL BE GROUNDED BEFORE THE CONDUCTORS ARE INSTALLED ON THE SENSOR.

II. THE CONDUCTOR CLAMPS ON THE SENSOR ARE A MECHANICAL AND ELECTRICAL CONNECTIONS. THIS PLACE, REQUIRES THE CLAMP TO HOLD/CLAMP THE WIRE IN PLACE, THE CLAMP HAS TWO SIDES TO COVER ALL WIRE SIZES, SELECT THE CORRECT SIDE/SIZE. **INSULATED WIRE** MUST HAVE THE INSULATION REMOVED OR THE SENSOR **WILL NOT FUNCTION**. IT IS REQUIRED THAT ALL WIRES INSTALLED IN THE VOLTAGE SENSORS BE CLEANED AND A CONTACT AID AND CORROSION INHIBITOR BE PLACED ON THE CONDUCTOR AT THE POINT THAT THE CLAMP IS TIGHTENED DOWN, THE BOLTS AND CLAMP ARE TO HOLD THE CONDUCTOR IN PLACE AND MAKE CONTACT TO OPERATE THE SENSOR. (USE PENADROX)

REFERENCE: NONE

TABLE OF CONTENTS

© 1998 - 2021 San Diego Gas & Electric Company. All rights reserved. Removal of this copyright notice without permission is not permitted under law.

REV	CHANGE	DR	BY	DSN	APV	DATE	REV	CHANGE	DR	BY	DSN	APV	DATE
C	EDITORIAL CHANGES	-	GW	JS	MDJ	03/01/2018	F	FIGURE UPDATE	EDM	SPC	GLW	CZH	12/06/2021
B	TABLE UPDATES	-	SL	JS	MDJ	10/27/2016	E	DRAWING UPDATE	EDM	JIK	JES	CZH	07/27/2021
A	ORIGINAL ISSUE	-	JC	IL	ML	02/26/2015	D	EDITORIAL CHANGES	-	JS	JS	CZH	06/01/2018

SCOPE: THIS CONSTRUCTION STANDARD SHALL BE USED FOR ALL 12KV SCADA CAPACITOR STATIONS.

ATTENTION:

* SEE FIGURE 3 FOR ALTERNATE DEADEND ARRANGEMENT.

** SEE FIGURE 2 FOR ALTERNATE SENSOR ARM CONSTRUCTION.

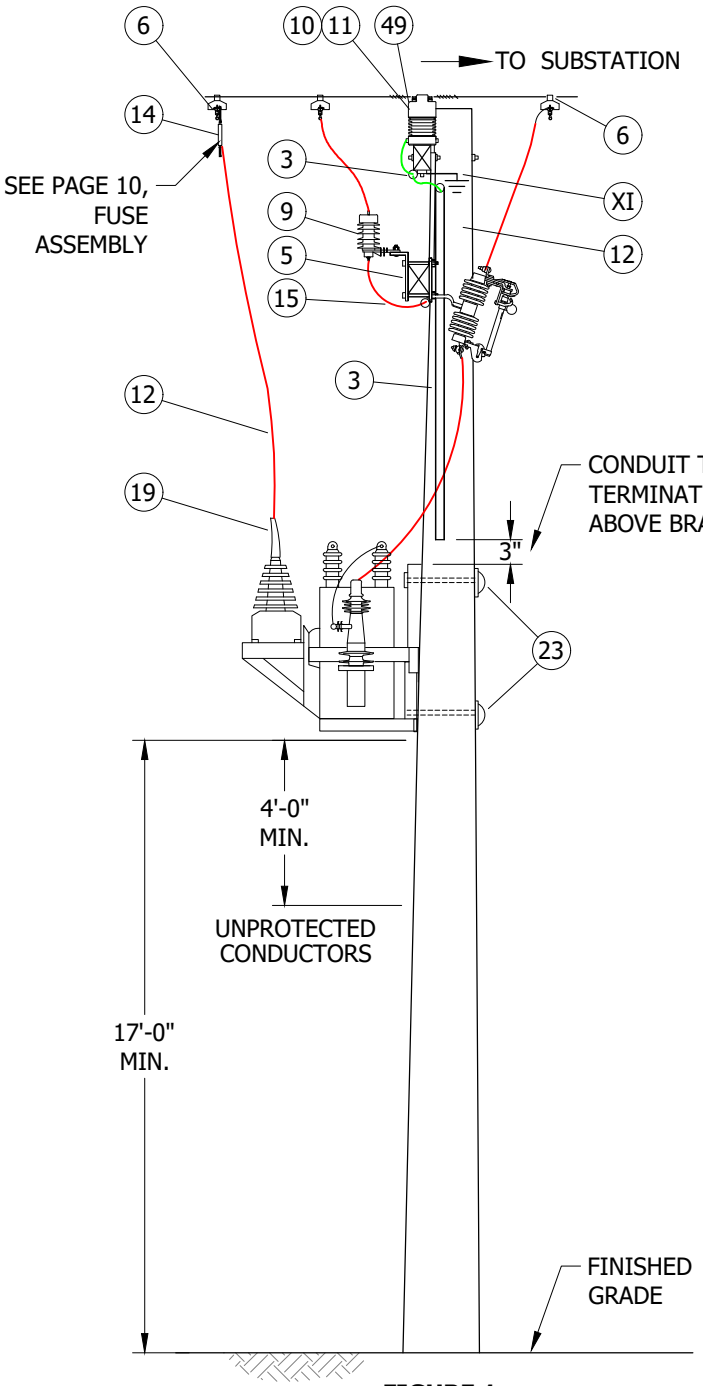

FIGURE 1 (0)
SIDE VIEW

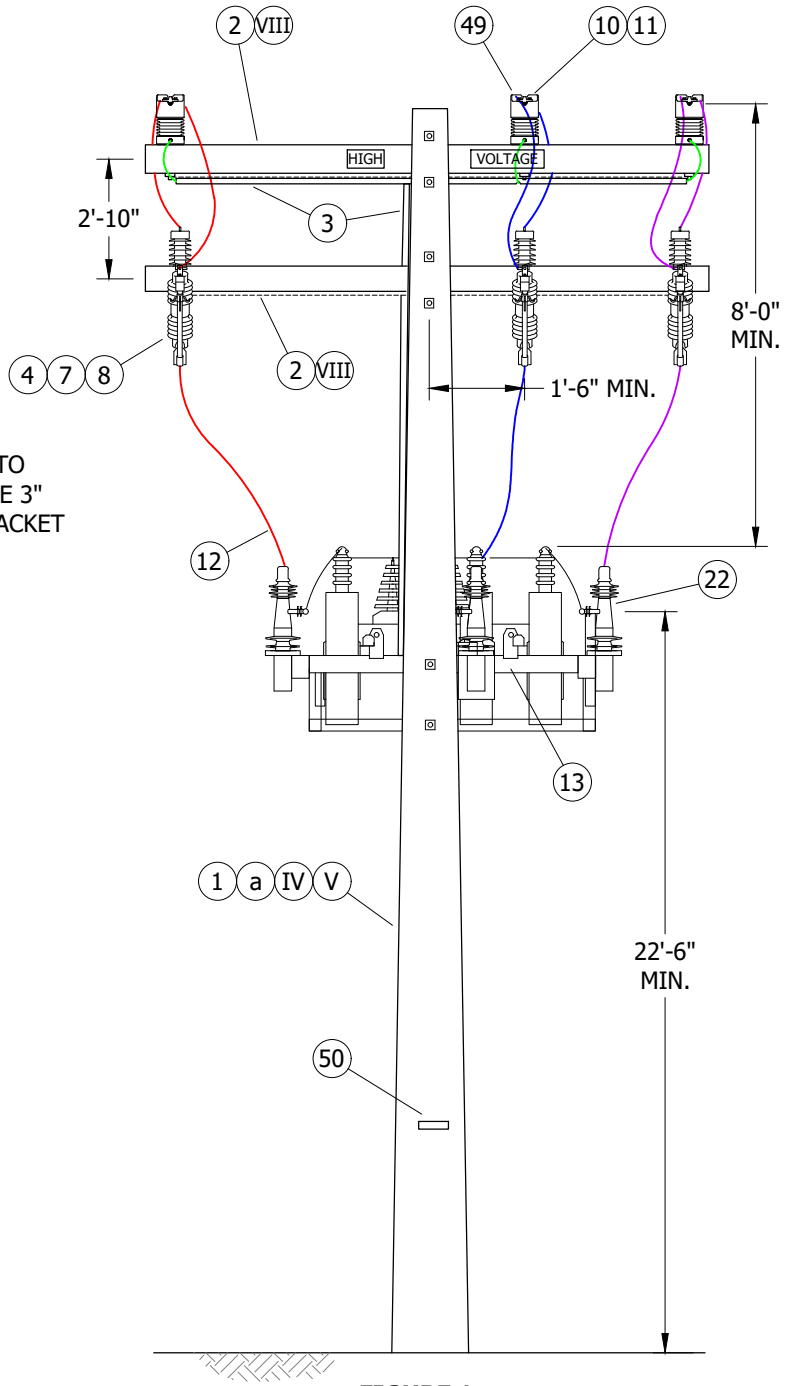

FIGURE 1 (0)
REAR VIEW

© 1998 - 2020 San Diego Gas & Electric Company. All rights reserved. Removal of this copyright notice without permission is not permitted under law.

REV	CHANGE	DR	BY	DSN	APV	DATE	REV	CHANGE	DR	BY	DSN	APV	DATE
C	EDITORIAL CHANGES	-	GW	JS	MDJ	3/1/2018	F						
B	TABLE UPDATES	-	SL	JS	MDJ	11/28/2016	E	TABLE UPDATE	EDM	JCE	JS	CZH	11/9/2020
A	EDITIORIAL CHANGES	-	JC	IL	MDJ	2/28/2015	D	EDITORIAL CHANGES	-	JK	JS	CZH	8/30/2018

X Indicates Latest Revision | Completely Revised | New Page | Information Removed

SDG&E ELECTRIC OVERHEAD CONSTRUCTION STANDARDS

12KV SCADA CAPACITOR INSTALLATION WITH LINE ARM SENSORS
600 & 1200KVAR

OH1325.1

TABLE OF CONTENTS

TABLE OF CONTENTS

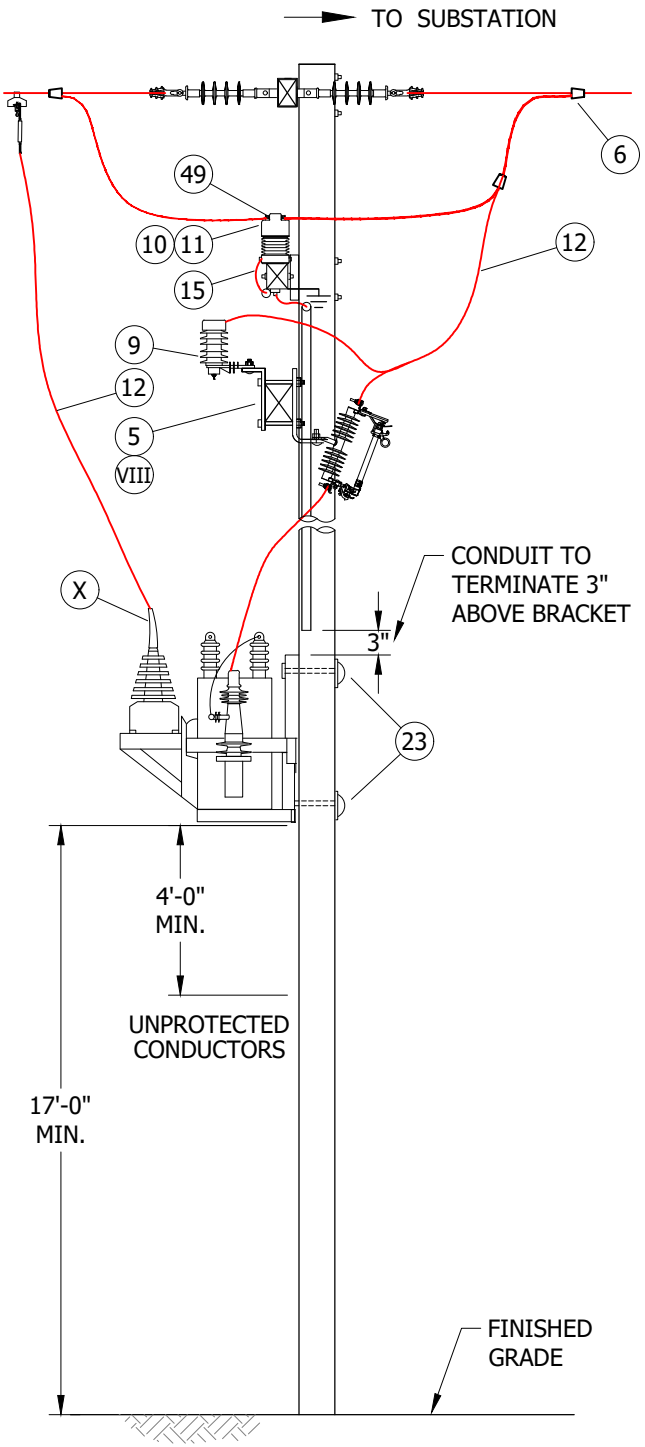

FIGURE 2 (0)
SIDE VIEW

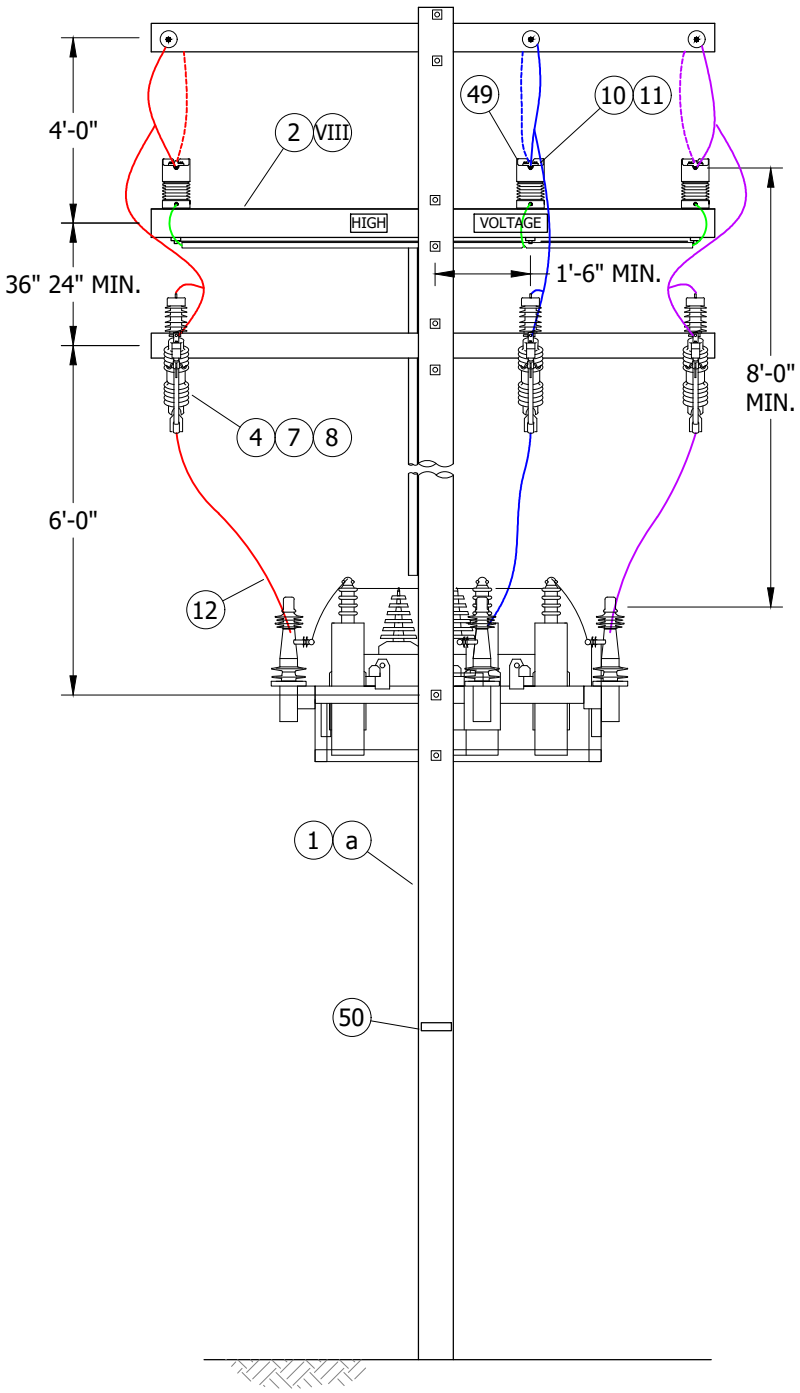

FIGURE 2 (0)
REAR VIEW

© 1998 - 2020 San Diego Gas & Electric Company. All rights reserved. Removal of this copyright notice without permission is not permitted under law.

REV	CHANGE	DR	BY	DSN	APV	DATE	REV	CHANGE	DR	BY	DSN	APV	DATE
C	EDITORIAL CHANGES	-	GW	JS	MDJ	3/1/2018	F						
B	TABLE UPDATES	-	SL	JS	MDJ	11/28/2016	E	TABLE UPDATE	EDM	JCE	JS	CZH	11/9/2020
A	EDITIORIAL CHANGES	-	JC	IL	MDJ	2/28/2015	D	EDITORIAL CHANGES	-	JK	JS	CZH	8/30/2018

X Indicates Latest Revision | Completely Revised | New Page | Information Removed

SDG&E ELECTRIC OVERHEAD CONSTRUCTION STANDARDS

12KV SCADA CAPACITOR INSTALLATION
WITH EQUIPMENT ARM SENSORS
600 & 1200KVAR

OH1325.2

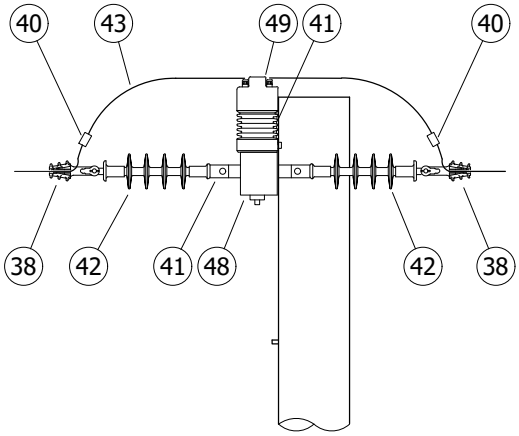

FIGURE 3
ALTERNATE DEADEND CONSTRUCTION

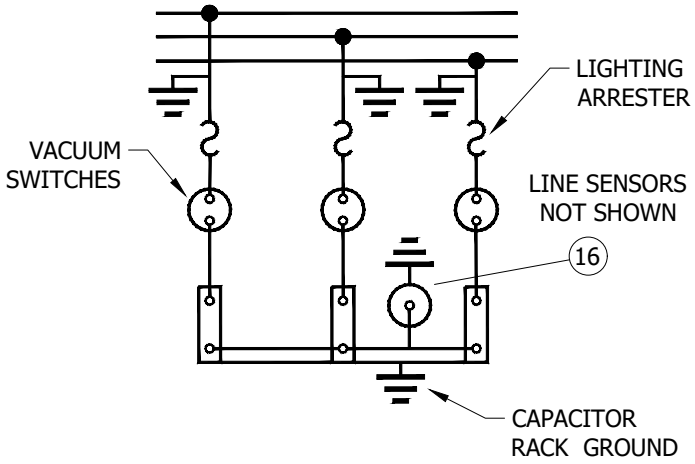

FIGURE 4
WIRING DIAGRAM

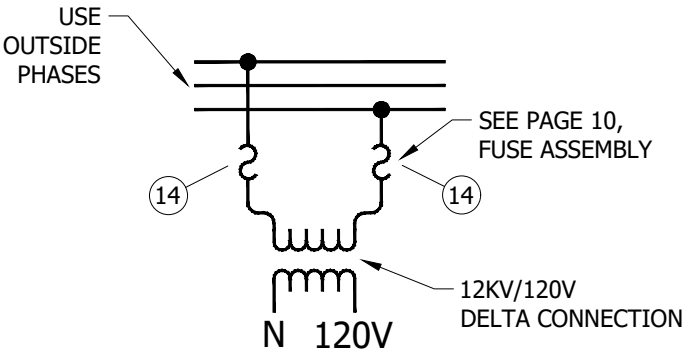

FIGURE 5
POTENTIAL TRANSFORMER CONNECTION

TABLE OF CONTENTS

© 1998 - 2020 San Diego Gas & Electric Company. All rights reserved. Removal of this copyright notice without permission is not permitted under law.

REV	CHANGE	DR	BY	DSN	APV	DATE	REV	CHANGE	DR	BY	DSN	APV	DATE
C	EDITORIAL CHANGES	-	GW	JS	MDJ	3/1/2018	F						
B	TABLE UPDATES	-	SL	JS	MDJ	11/28/2016	E	TABLE UPDATE	EDM	JCE	JS	CZH	11/9/2020
A	EDITIORIAL CHANGES	-	JC	IL	MDJ	2/28/2015	D	EDITORIAL CHANGES	-	JK	JS	CZH	8/30/2018

TABLE OF CONTENTS

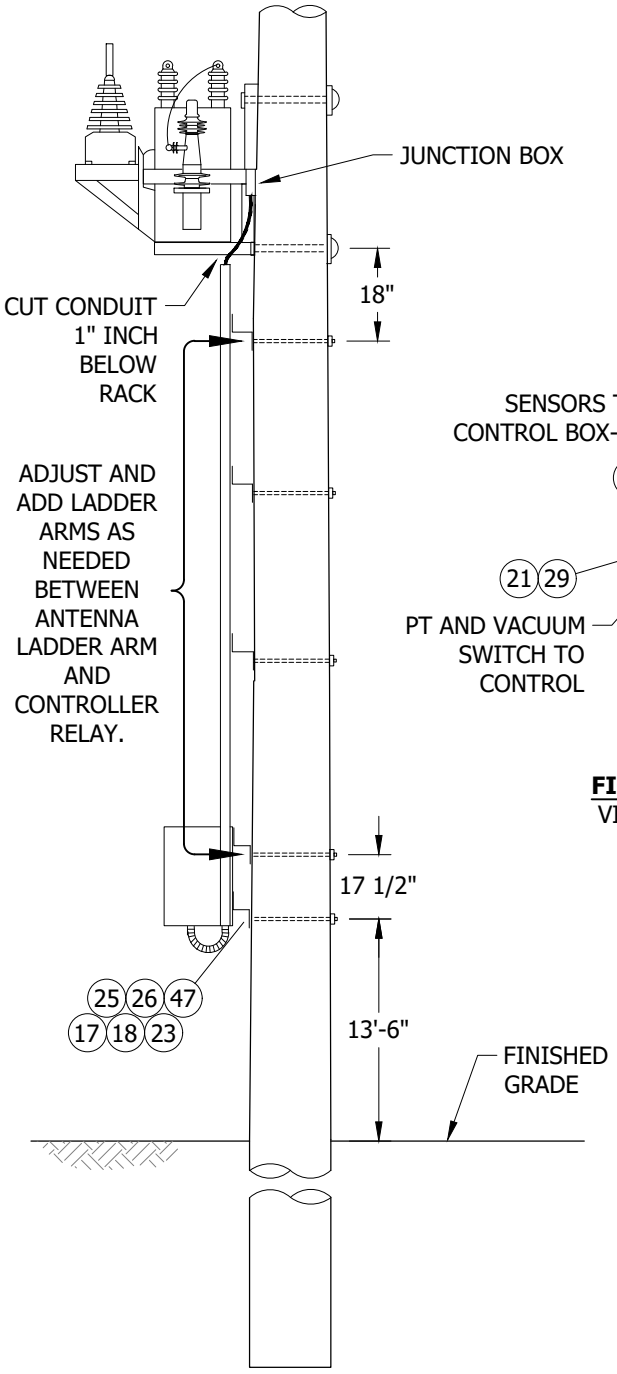

FIGURE 6
SIDE VIEW

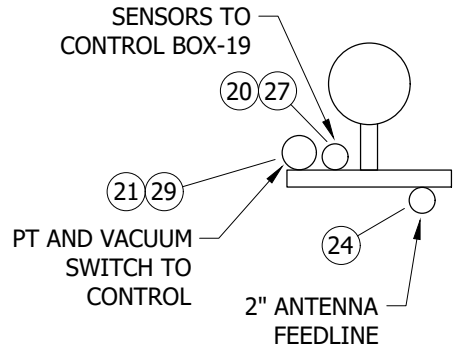

FIGURE 6
VIEW A-A

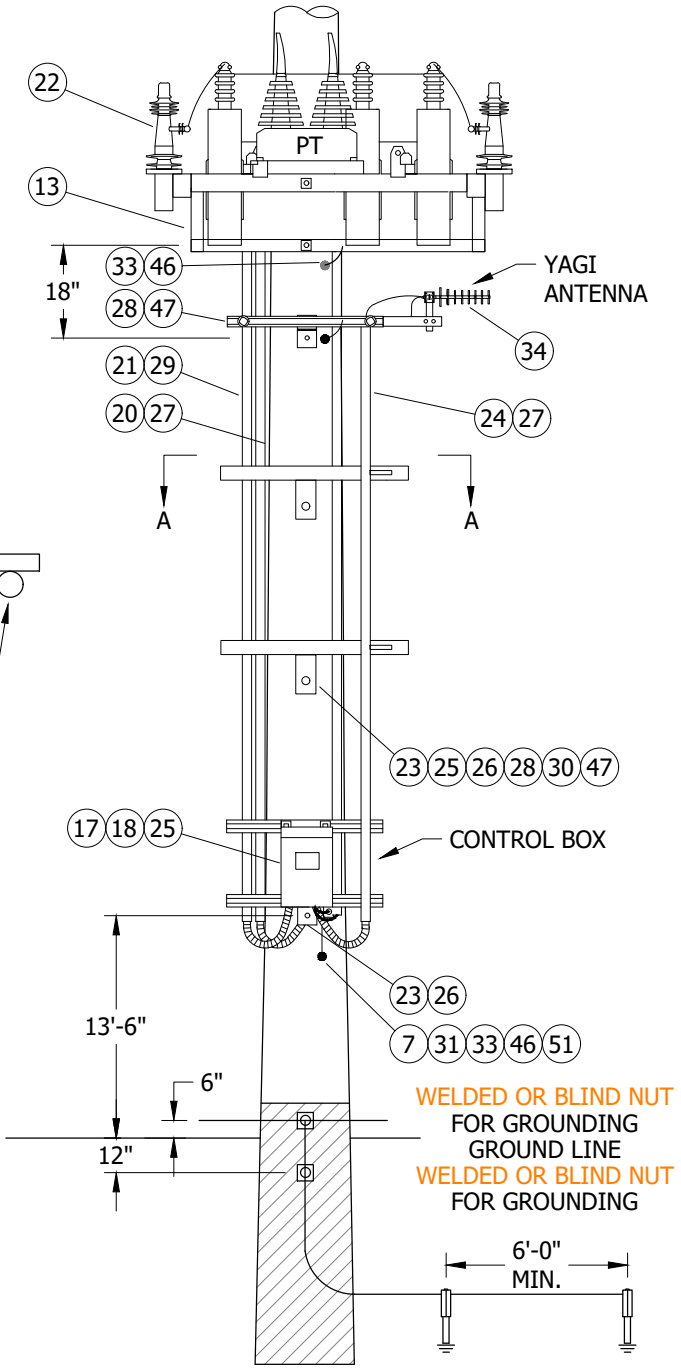

FIGURE 6
FRONT VIEW

ATTENTION:

* ROLL UP AND STRAP EXCESS HARNESS CABLES BEHIND CAPACITOR RACK. DO NOT ATTEMPT TO SHORTEN.

** MATERIALS ORDERED ARE BASED ON A 50'-0" POLE.

© 1998 - 2020 San Diego Gas & Electric Company. All rights reserved. Removal of this copyright notice without permission is not permitted under law.

REV	CHANGE	DR	BY	DSN	APV	DATE	REV	CHANGE	DR	BY	DSN	APV	DATE
C	EDITORIAL CHANGES	-	GW	JS	MDJ	3/1/2018	F						
B	TABLE UPDATES	-	SL	JS	MDJ	11/28/2016	E	TABLE UPDATE	EDM	JCE	JS	CZH	11/9/2020
A	EDITIORIAL CHANGES	-	JC	IL	MDJ	2/28/2015	D	EDITORIAL CHANGES	-	JK	JS	CZH	8/30/2018

X Indicates Latest Revision | Completely Revised | New Page | Information Removed

SDG&E ELECTRIC OVERHEAD CONSTRUCTION STANDARDS

12KV SCADA CAPACITOR PLACEMENT DETAILS
600 & 1200KVAR

OH1325.4

CAUTION:

* TO AVOID POSSIBLE SHOCK, DO NOT INTERRUPT SENSOR GROUNDS ONCE ENERGIZED.

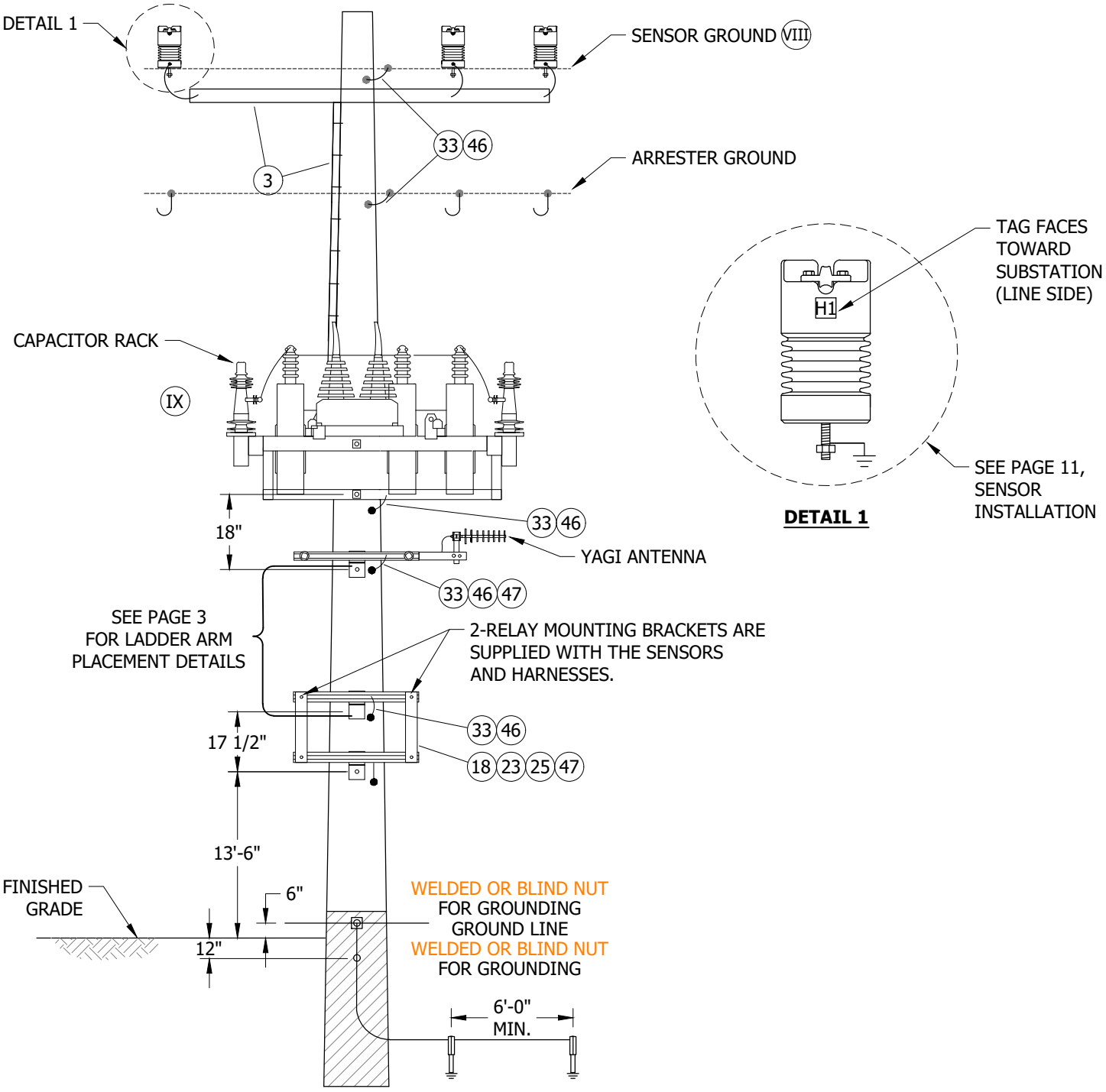

FIGURE 7
FRONT VIEW

© 1998 - 2020 San Diego Gas & Electric Company. All rights reserved. Removal of this copyright notice without permission is not permitted under law.

REV	CHANGE	DR	BY	DSN	APV	DATE	REV	CHANGE	DR	BY	DSN	APV	DATE
C	EDITORIAL CHANGES	-	GW	JS	MDJ	3/1/2018	F						
B	TABLE UPDATES	-	SL	JS	MDJ	11/28/2016	E	TABLE UPDATE	EDM	JCE	JS	CZH	11/9/2020
A	EDITIORIAL CHANGES	-	JC	IL	MDJ	2/28/2015	D	EDITORIAL CHANGES	-	JK	JS	CZH	8/30/2018

X Indicates Latest Revision | Completely Revised | New Page | Information Removed

SDG&E ELECTRIC OVERHEAD CONSTRUCTION STANDARDS

SHEET 5 OF 11

12KV SCADA CAPACITOR GROUND POINTS
600 & 1200KVAR

OH1325.5

TABLE OF CONTENTS

CAUTION:

* TO ENSURE THE PROCEDURE FOR LINE SENSOR CONNECTIONS IS DONE CORRECTLY, LINE SENSOR MUST BE TAPPED TO GROUND BEFORE ENERGIZING. (SEE PAGE 11, SENSOR INSTALLATION).

** OPEN VACUUM SWITCHES BEFORE OPENING CUTOUTS. VACUUM SWITCHES CAN BE OPENED MANUALLY OR ELECTRICALLY. VACUUM SWITCH CAN ONLY BE CLOSED ELECTRICALLY.

INSTALLATION:

A. CAPACITORS LOCATED IN THE TIER 2 & TIER 3 AREAS SHALL BE INSTALLED ON GALVANIZED OR WEATHERING STEEL POLES, HAVING A MINIMUM HEIGHT AND CLASS OF 50-1. STEEL POLES ARE PREFERRED FOR CONSTRUCTION; WOOD POLES MAY BE USED OUTSIDE THE TIER 2 & TIER 3 AREAS ONLY, MINIMUM 50-1. POLE LOADING CALCULATIONS SHALL BE COMPLETED AND ARCHIVED FOR ALL INSTALLATIONS FOR NEW AND EXISTING POLES. POLES WITH C-TRUSS OR ANY TYPE OF REINFORCEMENT SHALL NOT BE USED AND REQUIRE CHANGE OUT.

B. THE CENTER VACUUM SWITCH CAN BE MOVED TO MATCH THE CENTER PHASE POSITION. THE CAPACITOR RACK IS DRILLED FOR THIS AND SLACK IS PROVIDED IN THE WIRING.

C. THE POTENTIAL TRANSFORMER (PT) SHALL BE CONNECTED TO THE 12KV CIRCUIT IN DELTA, DIRECTLY TO THE LINE USING THE THREE-AMP CURRENT-LIMITING FUSE. SEE STANDARD DRAWING OF CONNECTION, ON PAGE 10, FUSE ASSEMBLY. WEDGE TAP STIRRUPS ARE REQUIRED USING THE NO.4 COVERED WIRE; AVIAN COVERS ARE REQUIRED ON THE PT.

D. AVIAN PROTECTION COVERS ARE REQUIRED FOR ALL INSTALLATIONS.

E. FIBERGLASS CROSSARMS ARE REQUIRED FOR ALL LOCATIONS, WHETHER IT IS TANGENT OR DEAD-END CONSTRUCTION.

F. **ACCESS:** ALL CAPACITOR SITES REQUIRE ALL WEATHER 24/7 VEHICLE ACCESS FOR AERIAL LIFTS AND DERRICK TRUCKS.

G. **PHASE IDENTIFICATION:** ALL CAPACITORS SITES SHALL BE PHASE IDENTIFIED WITH THE AP20 OR AP30. THE CROSSARM SHALL BE MARKED FOR "A", "B", AND "C" PHASES. THE SENSOR WIRING HARNESS AND VACUUM SWITCH WIRING HARNESS ARE TO BE MARKED "1", "2", "3", AND MATCH A/1, B/2, C/3 PHASE MARKING.

H. IT IS REQUIRED FOR CUT-OUTS TO FACE IN THE DIRECTION OF THE SUBSTATION/SOURCE. THE LINE ARM SENSOR TAG MUST ALSO FACE TOWARD THE SUBSTATION/SOURCE.

J. THE LINE-ARM SENSOR WIRING HARNESS (TWO-INCH CONDUIT), FROM THE LINE-ARM TO THE CAPACITOR RACK, SHALL TERMINATE THREE-INCHES ABOVE THE CAPACITOR RACK. THE LADDER ARM LOCATED 18-INCHES BELOW THE CAPACITOR RACK SHALL HAVE WIRING HARNESS CONDUITS TERMINATED ONE-INCH BELOW THE CAPACITOR RACK.

K. BOND CUTOUTS IN HEAVY CONTAMINATION DISTRICTS ARE SHOWN ON STANDARD 287. IN AREAS WHERE BONDING IS REQUIRED, TO AVOID BONDWIRE AND LIGHTNING ARRESTER GROUNDWIRE ON THE SAME CROSSARM, USE TWO CROSSARMS: ONE FOR CUTOUTS AND ONE FOR LIGHTNING ARRESTERS

L. **ON ALL POLES:** GROUNDING OF THE ARM-MOUNTED LINE SENSORS IS REQUIRED. THE ARRESTORS, CAPACITOR RACK, YAGI ANTENNA, AND THE CAPACITOR RELAY CONTROL BOX ALSO REQUIRE GROUNDING. ON WOOD POLES, CREW TO INSTALL SEPARATE GROUND RUN TO THE CONTROLLER. ON WOOD AND STEEL POLES CREW TO USE COMMON GROUND FOR ARRESTERS, CAPACITOR RACK, AND YAGI ANTENNA. SEE PAGE 5, GROUNDING POINTS.

M. DO NOT TIE CAPACITOR BANK NEUTRAL TO 12KV CIRCUIT NEUTRAL. IT IS TO REMAIN FLOATING. IT HAS A SENSOR TO DETECT SINGLE PHASING.

N. PVC COVERED WIRE IS NOT PERMITTED IN THE CLIMBING SPACE. (b)

(O) SEE FIGURE 4 FOR WIRING DIAGRAM AND FIGURE 5 FOR POTENTIAL TRANSFORMER CONNECTION.

TABLE OF CONTENTS

© 1998 - 2020 San Diego Gas & Electric Company. All rights reserved. Removal of this copyright notice without permission is not permitted under law.

REV	CHANGE	DR	BY	DSN	APV	DATE	REV	CHANGE	DR	BY	DSN	APV	DATE
C	EDITORIAL CHANGES	-	GW	JS	MDJ	3/1/2018	F						
B	TABLE UPDATES	-	SL	JS	MDJ	11/28/2016	E	TABLE UPDATE	EDM	JCE	JS	CZH	11/9/2020
A	EDITIORIAL CHANGES	-	JC	IL	MDJ	2/28/2015	D	EDITORIAL CHANGES	-	JK	JS	CZH	8/30/2018

X Indicates Latest Revision | Completely Revised | New Page | Information Removed

SDG&E ELECTRIC OVERHEAD CONSTRUCTION STANDARDS

12KV SCADA CAPACITOR INSTALLATION
600 & 1200KVAR

OH1325.6

BILL OF MATERIALS:

ITEM	DESCRIPTION		QUANTITY	STANDARD PAGE	STOCK NUMBER	DESIGN UNITS
1	POLE, STEEL, GALVANIZED, 50-1 (MINIMUM HEIGHT)		1	354.4	S549604	-
2	CROSSARM, FIBERGLASS, TANGENT (SIZE AS NEEDED)		2	379.1	-	-
3	2" CONDUIT UNDERARM AND STRAPPED TO POLE (FOR SENSOR CABLES) (II)		10'-0"	-	S229536	-
4	CUTOUTS		3	1212	S298018	CMU
5	DOUBLE CUTOUT & ARRESTER BRACKET		3	397	S165446 (X)	A/CB-S
6	WEDGE TAP CONNECTORS AND STIRRUPS ARE REQUIRED FOR ALL INSTALLATIONS		AS REQ'D	788 784.1, .2	AS NEEDED	-
7	GROUND WIRE #4 PVC COVERED		65'-0"	-	S812490	POLY4
8	CMU FUSES (VI)	600KVAR 40A CMU FUSE	3	1207.2	S368704	-
		1200KVAR 80A CMU FUSE	3	1207.2000	S368710	-
9	12KV ARRESTORS		3	1247.1	S113248	LA12
10	LINE VOLTAGE AND CURRENT SENSORS (III) (C)		3	-	S635880	-
11	SENSOR INSULATOR STUD BOLTS - SEE NOTE A - SHALL BE GROUNDED		3	751	S701760	STUD-W
12	POLY COVERED 4/7 STRAND COPPER		65'-0"	-	S815044	POLY4J
13	OVERHEAD SCADA CAPACITOR RACK W/PT	600 KVAR	1	1325.1	S206230	CAP60S
		1200 KVAR	1	1325.1000	S206234	CAP-OS
14	3A CURRENT LIMITING FUSE		2	1207.2	S365752	CP-PTF
15	FLEXIBLE GROUND STRAP		AS REQ'D	1002.1	S698754	LAGND
16	CAPACITOR NEUTRAL VOLTAGE SENSOR		1	-	S635884	-
	CAPACITOR CONTROLLER RELAY	(III)	-	-	S274880	-
18	BRACKETS FOR MOUNTING RELAY	(I)	2	-	-	-
19	BOOT PT CONNECTION COVER (AVIAN PROTECTION)	(III)	2	-	-	-
20	LINE & NEUTRAL SENSOR WIRING HARNESS		1	-	-	-
21	PT - VACUUM SWITCH WIRING HARNESS	(III)	1	-	-	-
22	VACUUM SWITCHES	(III)	3	-	-	-
23	5/8" GALVANIZED BOLTS (LENGTH AS REQUIRED)	(III)	AS REQ'D	392.1, .2	-	-
24	COAXIAL CABLE (ANTENNA FEEDLINE)		-	-	S191906	ANTCAB
25	LADDER ARM BRACKET 26, 2'-0" DOUBLE UNISTRUT ARM	(I)	-	1404.1	S167186 (X)	RARM/L
26	2'-0" DOUBLE UNISTRUT ARM		-	1404.1	S216702 (X)	
27	2" SCH. 40 PVC		-	-	S251296	PVC-2
28	2" UNISTRUT PIPE CLAMPS		-	1404.1	S229536	UPC2IN
29	3" SCH. 40 PVC		-	-	S251360	PVC-3
30	3" UNISTRUT CLAMPS		-	1404.1	S229632	UPC3IN
31	STATION GROUNDING ASSEMBLY (STEEL POLE ONLY)		1	-	-	GNDSP
33	BLIND NUTS, 1/2"		AS REQ'D	1002	S503460 (X)	-
34	ANTENNA (MAY BE YAGI OR OTHER)	(I)	-	-	S109570	ANT
35	NIPPLE PIPE 2" X 6" GALVANIZED	(I)	-	-	S500960	-

TABLE OF CONTENTS

© 1998 - 2020 San Diego Gas & Electric Company. All rights reserved. Removal of this copyright notice without permission is not permitted under law.

REV	CHANGE	DR	BY	DSN	APV	DATE	REV	CHANGE	DR	BY	DSN	APV	DATE
C	EDITORIAL CHANGES	-	GW	JS	MDJ	3/1/2018	F						
B	TABLE UPDATES	-	SL	JS	MDJ	11/28/2016	E	TABLE UPDATE	EDM	JCE	JS	CZH	11/9/2020
A	EDITIORIAL CHANGES	-	JC	IL	MDJ	2/28/2015	D	EDITORIAL CHANGES	-	JK	JS	CZH	8/30/2018

BILL OF MATERIALS (CONT'D):

ITEM	DESCRIPTION	QUANTITY	STANDARD PAGE	STOCK NUMBER	DESIGN UNITS
36	RADIO SPREAD SPECTRUM MODEL 9810 (I)	-	354.4	S749504	SSTRAN
36	TRANSCEIVER FIXED CHANNEL MODEL 9710 (I)	-	354.4	S749500	SOTRAN
37	DECAL "SCADA INFORM SCO UPON ENTRY" (I)	-	354.2	S301934	-
38	DEAD-END STRAIN CLAMP	AS REQ'D	789	-	-
39	HOT-LINE CLAMP	AS REQ'D	788	S227680	-
40	WEDGE TAP CONNECTOR	AS REQ'D	784.1	-	-
41	CLEVIS DEAD END 5/8" BOLT CLOSED TYPE	AS REQ'D	-	S235712	-
42	SUSPENSION TYPE INSULATOR	AS REQ'D	-	S301934	-
43	COVERED WIRE (SIZE AS REQUIRED)	AS REQ'D	-	-	-
44	NO. 8 BOND WIRE	AS REQ'D	1003	S812928	-
45	3/8" SPLIT BOLT STUD, 3/8" X 16	2	4505	S262626 (X)	-
46	1/2" SPLIT BOLT STUD, 1/2" X 13	AS REQ'D	4505	S262560	SPCONN
47	NUT STUD 1/2" X 1 3/8", CLAMPING UNISTRUT	AS REQ'D	4204	S507000	-
48	CROSSARM, FIBERGLASS, DEAD-END (SIZE AS NEEDED) (DETAIL 2)	1	379.2	-	-
49	AVIAN SENSOR COVER	3	-	S289606	LCVMI
50	TAG - STATION NUMBER	1	208	-	-

NOTES:

(I) ITEMS SUPPLIED BY KEARNY.

(II) U-GUARD MAY BE INSTALLED AS ACCEPTABLE SUBSTITUTE.

(III) INCLUDED WITH SCADA CAPACITOR RACK W/PT AS A KIT.

(IV) STEEL POLE REQUIRED IN TIER 2 & TIER 3 AREAS. 50'-0" MINIMUM HEIGHT.

(V) WOOD POLE USED OUTSIDE TIER 2 & TIER 3 AREAS. 50'-0" MINIMUM HEIGHT.

(VI) SMU FUSES MAY BE USED IF CMU FUSES ARE NOT AVAILABLE.

VII. KEARNY CREWS WILL CLOSE CUTOUTS AFTER THE RELAY IS INSTALLED.

(VIII) IT IS RECOMMENDED THAT THE ENTIRE CROSSARM, INCLUDING THE SENSORS, BE ASSEMBLED ON THE GROUND. IT CAN THEN BE INSTALLED AS A UNIT AND GROUNDED WITH ALL ENERGIZED PHASES TEMPORARILY MOVED IN THE CLEAR, IN A MANNER SIMILAR TO THE SCADA-MATE OR INTELLIRUPTER.

(IX) FOR WOOD POLE GROUND USE USE PVC COVERED GROUND WIRE AND CONNECT AS REQUIRED.

(X) THIS ITEM IS EXEMPT.

(XI) LINE SENSOR GROUND.

REFERENCE:

(a) FOR POLE SELECTION, REFER TO OH301, POLES, ARMS AND HARDWARE.

(b) G.O. 95 RULE 22.2C.

(c) REFER TO OH540, LOAD MONITORING.

TABLE OF CONTENTS

© 1998 - 2020 San Diego Gas & Electric Company. All rights reserved. Removal of this copyright notice without permission is not permitted under law.

REV	CHANGE	DR	BY	DSN	APV	DATE	REV	CHANGE	DR	BY	DSN	APV	DATE
C	EDITORIAL CHANGES	-	GW	JS	MDJ	3/1/2018	F						
B	TABLE UPDATES	-	SL	JS	MDJ	11/28/2016	E	TABLE UPDATE	EDM	JCE	JS	CZH	11/9/2020
A	EDITIORIAL CHANGES	-	JC	IL	MDJ	2/28/2015	D	EDITORIAL CHANGES	-	JK	JS	CZH	8/30/2018

SCOPE: THIS STANDARD SHOWS THE SWITCHED CAPACITOR WIRING HARNESS INSTALLATION.

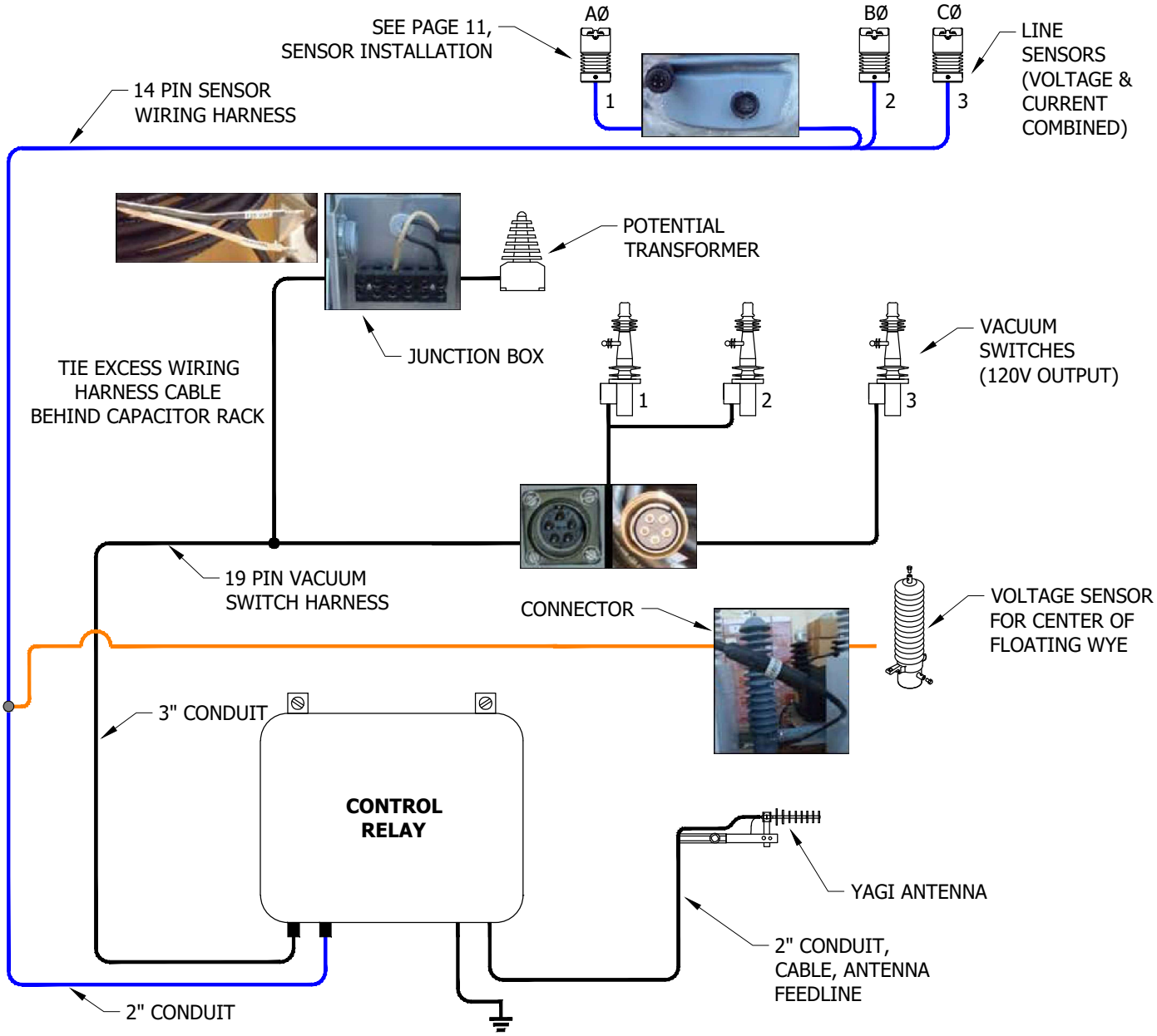

FIGURE 1

INSTALLATION: NONE

BILL OF MATERIALS: NONE

NOTES:

I. THE SENSOR HARNESS AND THE VACUUM SWITCH HARNESS MUST BE IN SEPARATE CONDUITS, FOR NOISE ISOLATION.

II. TO PLUG IN SENSORS AND VACUUM SWITCH WIRING HARNESS PLUGS, LINE UP DETENTS OF THE HARNESS AND THE SENSORS OR VACUUM SWITCHES, PUSH IN UNTIL SEATED (DO NOT FORCE). ENGAGE THE THREADS OF THE CANNON PLUG AND HAND TIGHTEN ONLY. (DO NOT CROSS THREAD THE PLUG).

REFERENCE: NONE

© 1998 - 2020 San Diego Gas & Electric Company. All rights reserved. Removal of this copyright notice without permission is not permitted under law.

REV	CHANGE	DR	BY	DSN	APV	DATE	REV	CHANGE	DR	BY	DSN	APV	DATE
C	EDITORIAL CHANGES	-	GW	JS	MDJ	3/1/2018	F						
B	TABLE UPDATES	-	SL	JS	MDJ	11/28/2016	E	TABLE UPDATE	EDM	JCE	JS	CZH	11/9/2020
A	EDITIORIAL CHANGES	-	JC	IL	MDJ	2/28/2015	D	EDITORIAL CHANGES	-	JK	JS	CZH	8/30/2018

SCOPE: THIS PAGE SHOWS THE SWITCHED CAPACITOR POTENTIAL TRANSFORMER FUSE ASSEMBLY AND CONNECTION USING THE THOMAS & BETTS 3A HI-TECH CURRENT-LIMITING FUSE.THE PT IS Y (WYE) CONNECTED DIRECTLY TO THE LINE CONDUCTORS, USING THE OUTSIDE PHASES, AND COVERED WIRE.

INSTALLATION:

A. THE HI-TECH FUSE IS A FULLY RATED CURRENT-LIMITING FUSE. THE PVC COVERED NO. 4 CONDUCTOR SHOULD BE CUT TO LENGTH AND ATTACHED TO THE FUSE. USING LIVE-LINE TOOLS (SHOT-GUN/GRIP-ALL CLAMP STICK), CONNECT THE FUSE TO THE WEDGE TAP STIRRUP, ENERGIZING THE PT. CHECK VOLTAGE AT THE JUNCTION BOX ON THE CAPACITOR RACK. THIS FUSE IS REQUIRED FOR THE TESTING AND ENERGIZING OF THE PT TO THE LINE CONDUCTOR. LIMIT THE AMOUNT OF SLACK IN THE WIRE BETWEEN THE FUSE AND THE PT.

B. EACH FUSE REQUIRES A CHECK WITH AN OHM METER, OR CONTINUITY LIGHT BEFORE INSTALLING AND ENERGIZING.

(C) SKIN ABOUT 1 1/2" OF INSULATION FROM THE NO. 4 PVC COVERED WIRE. TAKE A SECTION OF NO. 8 BOND WIRE, INSERT IT WITH THE SKINNED NO. 4 WIRE INTO THE 3/8-INCH SPLIT BOLT STUD AND TIGHTEN. AFTER IT IS SECURE, WRAP THE BOND WIRE AROUND THE INSULATED WIRE ABOUT THREE TURNS TIGHT AND TAPE FROM THE BOTTOM UP USING NO. 33 TAPE. THIS WILL PROVIDE STRAIN SUPPORT TO THE STRANDED WIRE AT THE BOTTOM OF THE HI-TECH FUSE.

BILL OF MATERIALS: NONE

NOTES: NONE

REFERENCE: NONE

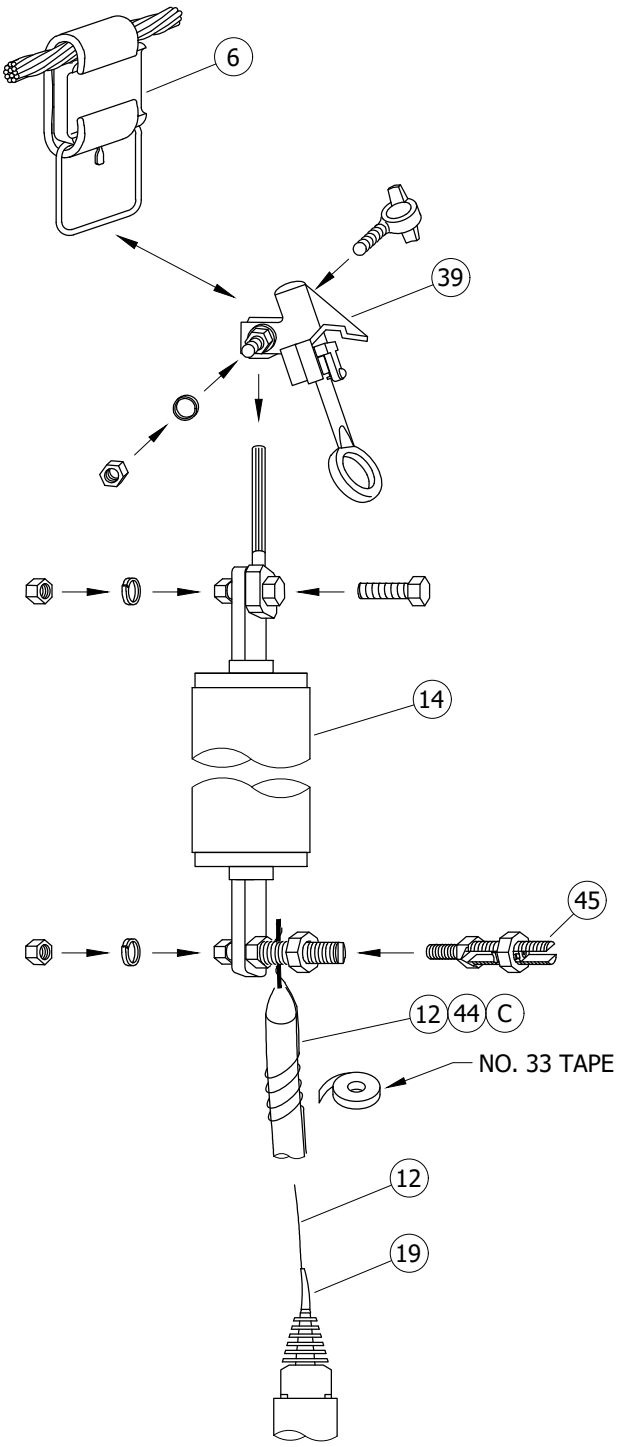

FIGURE 1

TABLE OF CONTENTS

© 1998 - 2020 San Diego Gas & Electric Company. All rights reserved. Removal of this copyright notice without permission is not permitted under law.

REV	CHANGE	DR	BY	DSN	APV	DATE	REV	CHANGE	DR	BY	DSN	APV	DATE
C	EDITORIAL CHANGES	-	GW	JS	MDJ	3/1/2018	F						
B	TABLE UPDATES	-	SL	JS	MDJ	11/28/2016	E	TABLE UPDATE	EDM	JCE	JS	CZH	11/9/2020
A	EDITIORIAL CHANGES	-	JC	IL	MDJ	2/28/2015	D	EDITORIAL CHANGES	-	JK	JS	CZH	8/30/2018

X Indicates Latest Revision | Completely Revised | New Page | Information Removed

SDG&E ELECTRIC OVERHEAD CONSTRUCTION STANDARDS

12KV SCADA CAPACITOR FUSE ASSEMBLY
600 & 1200KVAR

OH1325.10

SCOPE: THIS PAGE SHOWS THE CORRECT INSTALLATION OF THE SWITCHED CAPACITOR LINE VOLTAGE AND CURRENT SENSOR.

ATTENTION:

* READ THE INSTALLATION DOCUMENTS THAT COME IN THE BOX. THE LINE VOLTAGE SENSOR READS VOLTAGE AND CURRENT AND IS **NOT A TRANSFORMER.**

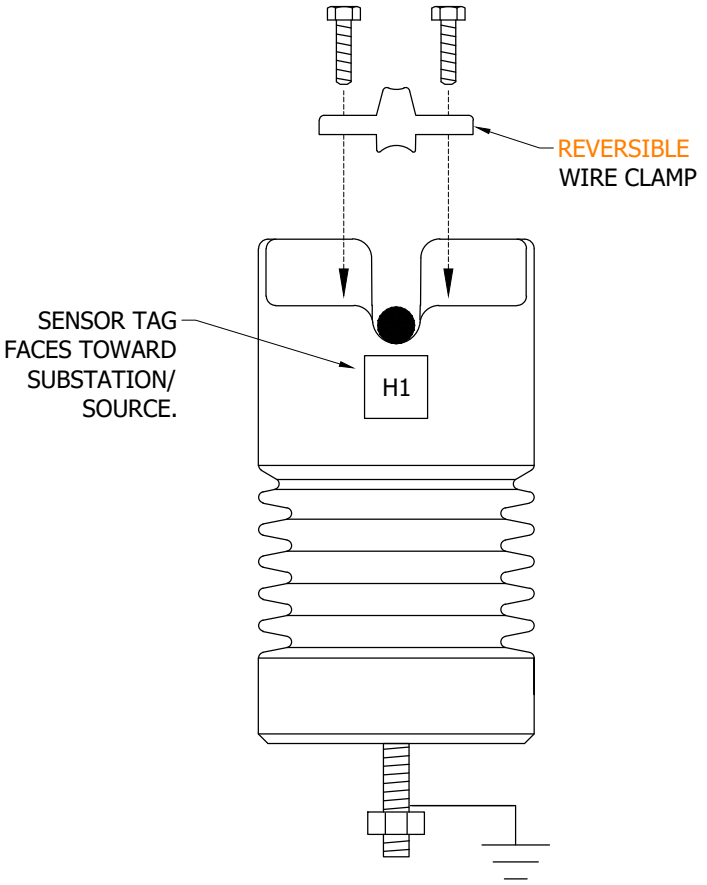

FIGURE 1



FIGURE 2
INCORRECT INSTALLATION

INSTALLATION:

(A) FOR CORRECT INSTALLATION OF REVERSIBLE WIRE CLAMP, SELECT SIDE OF CLAMP THAT PROPERLY FITS WIRE SIZE.

BILL OF MATERIALS: NONE

NOTES:

I. THE VOLTAGE LINE AND CURRENT SENSOR SHALL BE GROUNDED BEFORE THE CONDUCTORS IS INSTALLED ON THE SENSOR.

II. THE CONDUCTOR CLAMPS ON THE SENSOR ARE A MECHANICAL AND ELECTRICAL CONNECTIONS. THIS PLACE, REQUIRES THE CLAMP TO HOLD/CLAMP THE WIRE IN PLACE, THE CLAMP HAS TWO SIDES TO COVER ALL WIRE SIZES, SELECT THE CORRECT SIDE/SIZE. **INSULATED WIRE** MUST HAVE THE INSULATION REMOVED OR THE SENSOR **WILL NOT FUNCTION**. IT IS REQUIRED THAT ALL WIRES INSTALLED IN THE VOLTAGE SENSORS BE CLEANED AND A CONTACT AID AND CORROSION INHIBITOR BE PLACED ON THE CONDUCTOR AT THE POINT THAT THE CLAMP IS TIGHTENED DOWN, THE BOLTS AND CLAMP ARE TO HOLD THE CONDUCTOR IN PLACE AND MAKE CONTACT TO OPERATE THE SENSOR. (USE PENADROX)

REFERENCE: NONE

© 1998 - 2020 San Diego Gas & Electric Company. All rights reserved. Removal of this copyright notice without permission is not permitted under law.

REV	CHANGE	DR	BY	DSN	APV	DATE	REV	CHANGE	DR	BY	DSN	APV	DATE
C	EDITORIAL CHANGES	-	GW	JS	MDJ	3/1/2018	F						
B	TABLE UPDATES	-	SL	JS	MDJ	11/28/2016	E	TABLE UPDATE	EDM	JCE	JS	CZH	11/9/2020
A	EDITIORIAL CHANGES	-	JC	IL	MDJ	2/28/2015	D	EDITORIAL CHANGES	-	JK	JS	CZH	8/30/2018

X Indicates Latest Revision | Completely Revised | New Page | Information Removed

SDG&E ELECTRIC OVERHEAD CONSTRUCTION STANDARDS

12KV SCADA CAPACITOR SENSOR INSTALLATION
600 & 1200KVAR

OH1325.11

TABLE OF CONTENTS

SCOPE: THIS STANDARD SHOWS METHOD OF CONSTRUCTION FOR A 2.4 OR 4KV, SINGLE-PHASE, 12 OR 24KVA POLE MOUNTED REGULATOR.

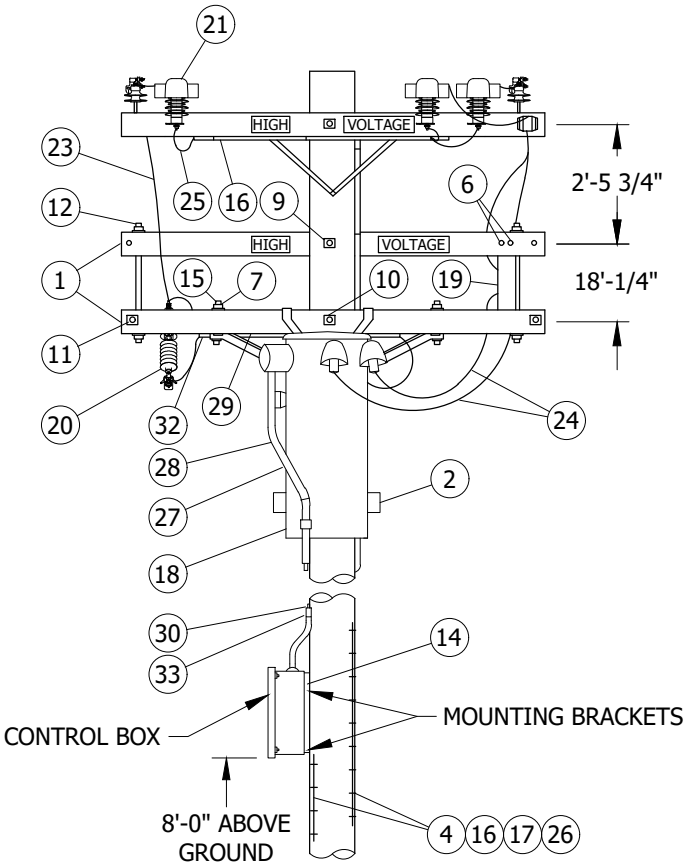

FIGURE 1
FRONT VIEW

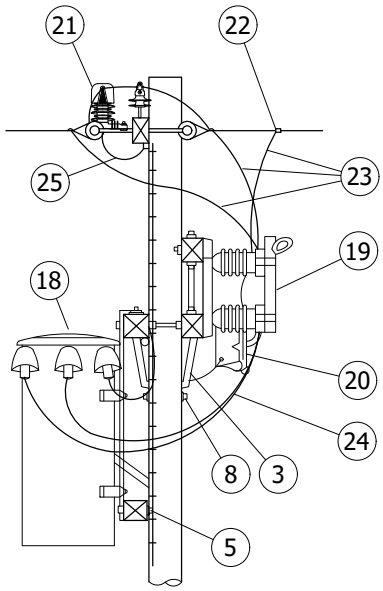

FIGURE 1
SIDE VIEW

INSTALLATION:

A PVC SCHEDULE 40 CAN BE USED AS A SUBSTITUTE.

B NO LONGER PURCHASED, SALVAGE FROM EXISTING INSTALLATION.

C CAN BE SUBSTITUTED WITH 12KV 100A CUTOUT.

BILL OF MATERIALS:

ITEM	DESCRIPTION	QUANTITY		STANDARD PAGE	STOCK NUMBER	DESIGN UNITS
		2.4KV	4KV			
1	TRANSFORMER ARM, 3 3/4" X 5 3/4" X 8'-0"	3	3	380	-	-
2	KICK ARM, 3 1/2" X 4 1/2" X 2'-0"	1	1	380		
3	BRACE, ANGLE CROSSARM, 4'-0"	2	2	390	S164032	-
4	CONNECTOR, GROUND, COPPER BONDED	2	2	-	S259010	-
5	MACH BOLT, GALV., 3/8" X 4 1/2" - 2 RD WASH & 1 NUT	2	2	390	-	-
6	MACH BOLT, GALV., 1/2" X 6 1/2" - 2 RD WASH & 1 NUT	4	4	390	-	-

© 1998 - 2021 San Diego Gas & Electric Company. All rights reserved. Removal of this copyright notice without permission is not permitted under law.

REV	CHANGE	DR	BY	DSN	APV	DATE	REV	CHANGE	DR	BY	DSN	APV	DATE
C	TABLE UPDATE	EDM	JIK	JES	CZH	6/8/2020	F						
B	DRAWING UPDATE	PEI	-	-	-	2/18/2019	E						
A	ORIGINAL ISSUE	-	-	PTA	JJ	10/7/2005	D	BILL OF MATERIALS UPDATE	EDM	DWC	JES	CZH	3/5/2021

X Indicates Latest Revision | Completely Revised | New Page | Information Removed

SDG&E ELECTRIC OVERHEAD CONSTRUCTION STANDARDS

STEP-VOLTAGE REGULATOR INSTALLATION 2.4 OR 4KV, SINGLE-PHASE, 12 OR 24KVA POLE MOUNTED

OH1341.1

TABLE OF CONTENTS

BILL OF MATERIALS (CONT'D):

ITEM	DESCRIPTION	QUANTITY 2.4KV	QUANTITY 4KV	STANDARD PAGE	STOCK NUMBER	DESIGN UNITS
7	MACH BOLT, GALV., 1/2" X 7" - 1 RD WASH & 1 NUT	4	4	390	-	-
8	MACH BOLT, GALV., 5/8" X 10" - 1 NUT	1	1	390	-	-
9	MACH BOLT, GALV., 5/8" X 14" - 2 SQ WASH & 1 NUT	2	2	390	-	-
10	MACH BOLT, GALV., 5/8" X 18", 2-3" X 4" WASH & 1 NUT	1	1	390	-	-
11	SPACE BOLTS, GALV., 5/8" X 20" - 4 WASH & 4 NUTS	4	4	390	-	-
12	SPACE BOLTS, GALV., 5/8" X 26" - 4 WASH & 4 NUTS	4	4	390	-	-
13	LAG SCREW, GALV., 1/2" X 4" (I)	1	1	-	S621568	-
14	LAG SCREW, GALV., 5/8" X 5"	2	2	-	S621602 (X)	-
15	HIGH VOLTAGE SIGN AND ROOFING NAILS	1	1	-	S647648 S492224	-
16	GROUND ROD, 5/8" X 8'-0", COPPERWELD	2	2	-	S603074 (X)	GNDPVC
17	#4 CU SOLID GROUND WIRE, PVC COVERED	100'-0"	100'-0"	-	S812490	
18	G.E. STEP VOLTAGE REGULATOR, TYPE ML4, 2.4KV	1	1	1311	-	-
19	KEARNEY BYPASS SWITCH, 7.5KV (C)	1	1	-	S706720 S706784	-
20	G.E. DISCONNECT CUTOUT, #6 X 241, 5KV	1	0	1212	-	-
21	LIGHTNING ARRESTER, 3 KV W/48" COVERED LEAD WIRE	3	2	-	S113220	3KVTA
22	WIRE CONNECTOR, SPLIT BOLT (SIZE AS REQUIRED)	4	4	-	-	-
23	W.P. STRAND, COPPER WIRE (SAME SIZE AS PRIMARY)	11'-0"	7'-0"	711	-	-
24	R.C. STRAND, COPPER WIRE (SAME SIZE AS PRIMARY)	18'-0"	23'-0"	-	S194304	-
25	FLEXIBLE ARRESTER GROUND STRAP	AS REQ'D		-	S698754	-
26	GALVANIZED STAPLES FOR PVC COVERED GROUND WIRE	AS REQ'D		-	S678564 (X)	-
27	CONTROL CABLE, SIZE 19/25	24'-0"	24'-0"	-	-	-
28	CONDUIT, GALV., 1"	23'-0"	23'-0"	-	S250880	-
29	CONDUIT, FIBER, 1" (A)(B)	4'-0"	4'-0"	-	S249952	-
30	CONDUIT, FIBER, 1 1/4" (A)(B)	19'-0"	19'-0"	-	S250016	-
31	1" PIPE STRAP & 2 - 8D NAILS, GALV. (I)	3	3	-	S697792 S491584	-
32	1" FIBER CONDUIT STRAP & 2 - 8D NAILS, GALV.	3	3	-	S696576 S491584	-
33	1 1/4" FIBER CONDUIT STRAP & 2 -10D NAILS, GALV.	11	11	-	S696608 S491392	-

TABLE OF CONTENTS

NOTES:

(I) NOT SHOWN ON FIGURES.

(X) THIS ITEM IS EXEMPT.

REFERENCE:

a. SEE OH363 FOR POLE STEPPING.

© 1998 - 2021 San Diego Gas & Electric Company. All rights reserved. Removal of this copyright notice without permission is not permitted under law.

REV	CHANGE	DR	BY	DSN	APV	DATE	REV	CHANGE	DR	BY	DSN	APV	DATE
C	TABLE UPDATE	EDM	JIK	JES	CZH	6/8/2020	F						
B	DRAWING UPDATE	PEI	-	-	-	2/18/2019	E						
A	ORIGINAL ISSUE	-	-	PTA	JJ	10/7/2005	D	BILL OF MATERIALS UPDATE	EDM	DWC	JES	CZH	3/5/2021

SCOPE: THIS STANDARD SHOWS THE METHOD OF CONSTRUCTION FOR A 12KV, THREE-POLE, CLOSED DELTA, VOLTAGE REGULATOR STATION.

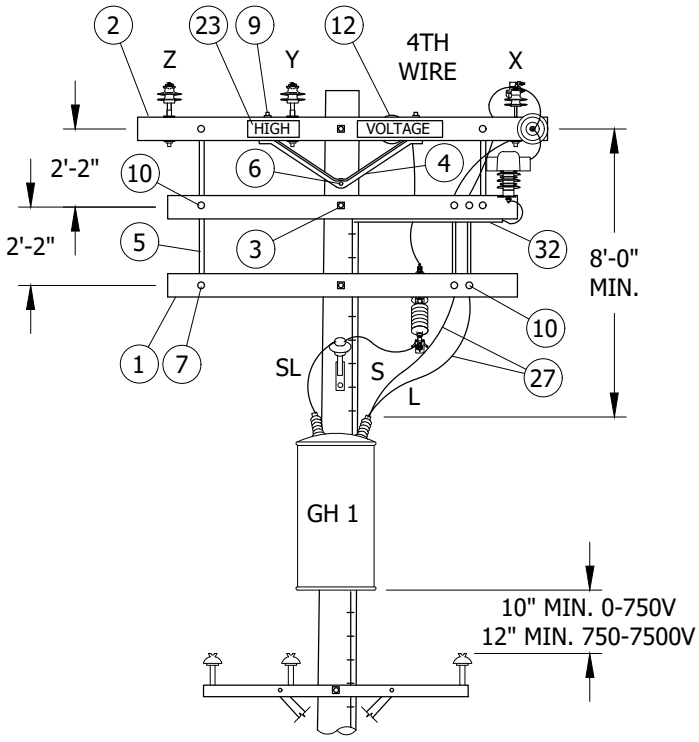

FIGURE 1
POLE 1
FRONT VIEW

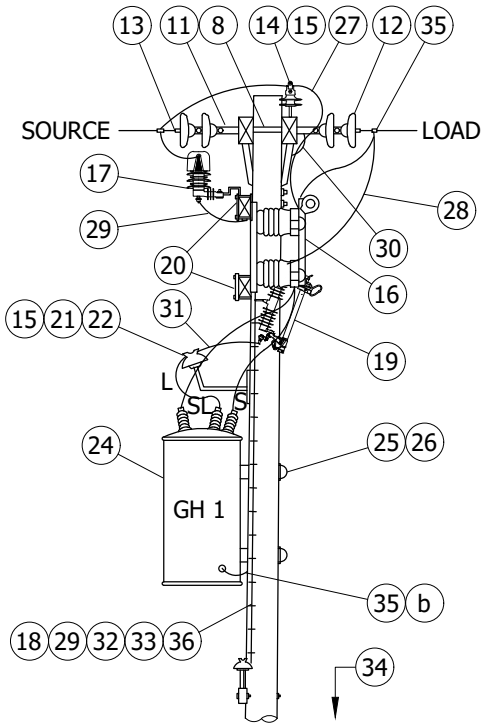

FIGURE 1
POLE 1
SIDE VIEW

TABLE OF CONTENTS

© 1998 - 2021 San Diego Gas & Electric Company. All rights reserved. Removal of this copyright notice without permission is not permitted under law.

REV	CHANGE	DR	BY	DSN	APV	DATE	REV	CHANGE	DR	BY	DSN	APV	DATE
C	TABLE UPDATE	EDM	JIK	JES	CZH	6/8/2020	F						
B	DRAWING UPDATE	PEI	-	-	-	2/18/2019	E						
A	ORIGINAL ISSUE	-	-	PTA	JJ	10/7/2005	D	BILL OF MATERIALS UPDATE	EDM	DWC	JES	CZH	3/5/2021

X Indicates Latest Revision | Completely Revised | New Page | Information Removed

SDG&E ELECTRIC OVERHEAD CONSTRUCTION STANDARDS

VOLTAGE REGULATOR STATION CLOSED DELTA,
12KV, THREE POLES

OH1341.3

TABLE OF CONTENTS

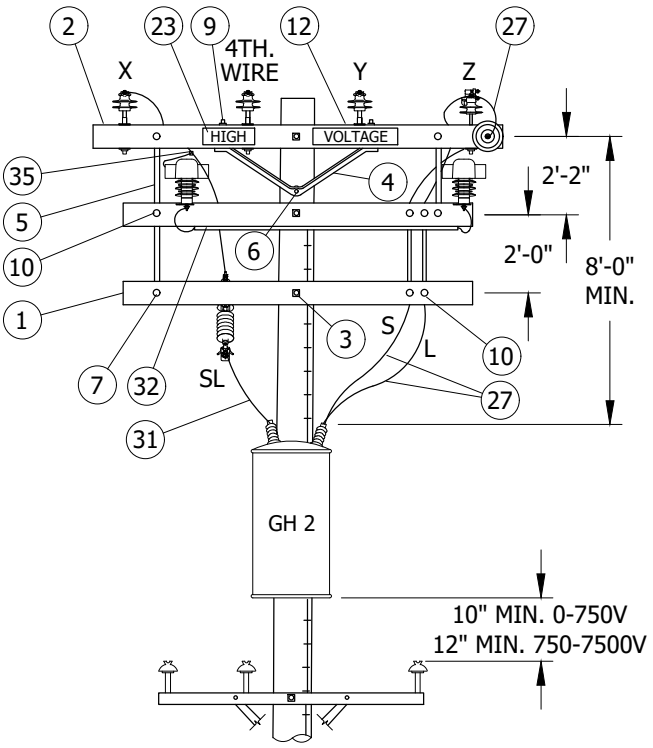

FIGURE 2
POLE 2
FRONT VIEW

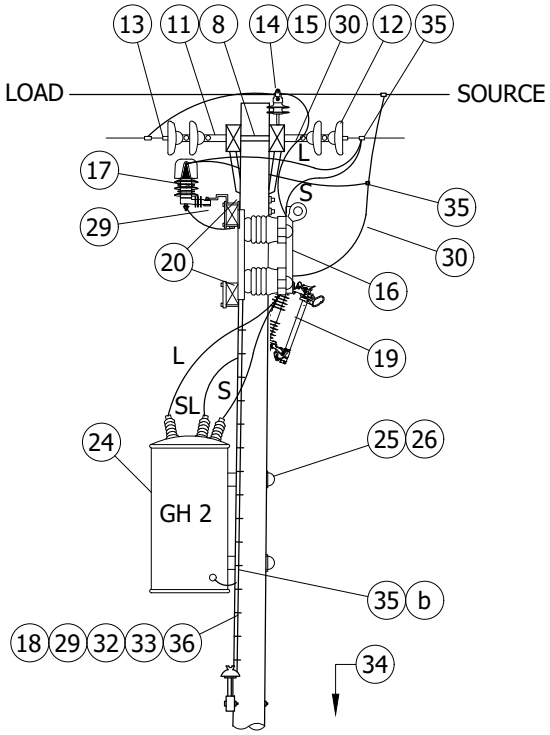

FIGURE 2
POLE 2
SIDE VIEW

© 1998 - 2021 San Diego Gas & Electric Company. All rights reserved. Removal of this copyright notice without permission is not permitted under law.

REV	CHANGE	DR	BY	DSN	APV	DATE	REV	CHANGE	DR	BY	DSN	APV	DATE
C	TABLE UPDATE	EDM	JIK	JES	CZH	6/8/2020	F						
B	DRAWING UPDATE	PEI	-	-	-	2/18/2019	E						
A	ORIGINAL ISSUE	-	-	PTA	JJ	10/7/2005	D	BILL OF MATERIALS UPDATE	EDM	DWC	JES	CZH	3/5/2021

X Indicates Latest Revision | Completely Revised | New Page | Information Removed

SDG&E ELECTRIC OVERHEAD CONSTRUCTION STANDARDS

VOLTAGE REGULATOR STATION CLOSED DELTA,
12KV, THREE POLES

OH1341.4

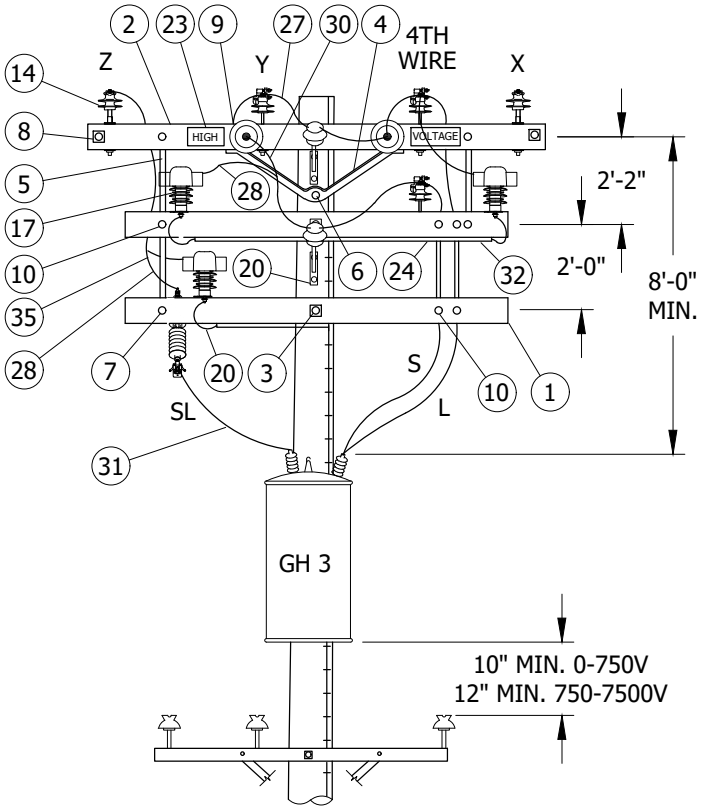

FIGURE 3
POLE 3
FRONT VIEW

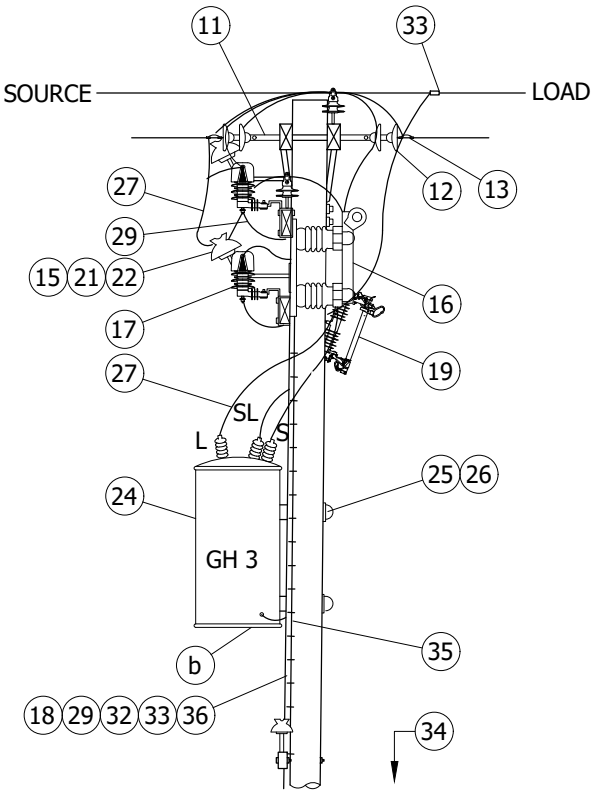

FIGURE 3
POLE 3
SIDE VIEW

TABLE 1

OVERHEAD MACRO UNITS STEP-VOLT REG STATION CLOSED DELTA-3 POLES	
POLE	**MU I.D.**
1	REG3P1
2	REG3P2
3	REG3P3

© 1998 - 2021 San Diego Gas & Electric Company. All rights reserved. Removal of this copyright notice without permission is not permitted under law.

REV	CHANGE	DR	BY	DSN	APV	DATE	REV	CHANGE	DR	BY	DSN	APV	DATE
C	TABLE UPDATE	EDM	JIK	JES	CZH	6/8/2020	F						
B	DRAWING UPDATE	PEI	-	-	-	2/18/2019	E						
A	ORIGINAL ISSUE	-	-	PTA	JJ	10/7/2005	D	BILL OF MATERIALS UPDATE	EDM	DWC	JES	CZH	3/5/2021

X Indicates Latest Revision | Completely Revised | New Page | Information Removed

SDG&E ELECTRIC OVERHEAD CONSTRUCTION STANDARDS

VOLTAGE REGULATOR STATION CLOSED DELTA, 12KV, THREE POLES

OH1341.5

TABLE OF CONTENTS

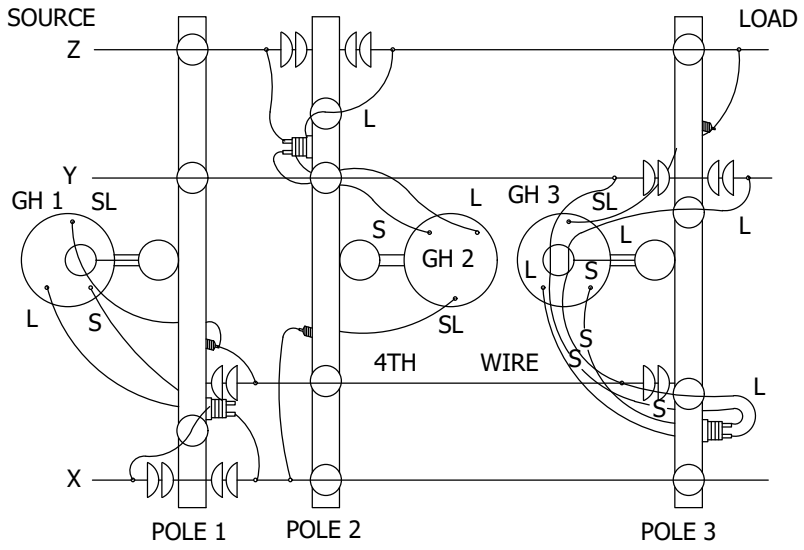

FIGURE 4
BASIC WIRING DIAGRAM

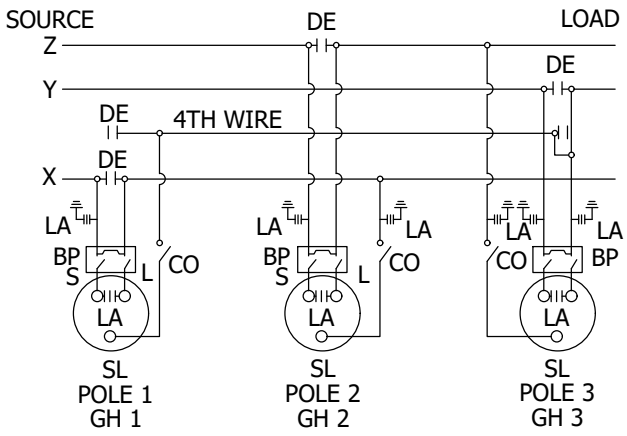

FIGURE 5
SCHEMATIC

CAUTION:

* WHEN CONNECTING A STATION, REGULATORS MUST BE ON NEUTRAL. CLOSE CUTOUT TO SL BUSHING BEFORE CLOSING BYPASS DISCONNECT ON THAT POLE. WHEN DISCONNECTING A STATION, PUT REGULATORS ON NEUTRAL AND OPEN BYPASS DISCONNECT BEFORE OPENING CUTOUT TO SL BUSHING. THIS AVOIDS A SERIOUS OVER-VOLTAGE CONDITION.

INSTALLATION:

A. INTERCONNECT ARRESTER GROUND LEAD DISCONNECTS WITH #6 BARE COPPER AND GROUND IT WITH #2 BARE COPPER NEAR CENTER ARRESTER.

B. CONTROLS WILL BE MOUNTED BY KEARNY MAINTENANCE.

C. INSTALL DOUBLE COIL SPRING WASHER ON END OF BOLT WHICH ATTACHES TO LARGEST METALLIC OBJECT, SUCH AS A BRACKET OR BRACE.

D. BOND ALL DEADEND HARDWARE.

BILL OF MATERIALS:

ITEM	DESCRIPTION	QUANTITY			STANDARD PAGE	STOCK NUMBER	DESIGN UNITS
		POLE 1	POLE 2	POLE 3			
1	CROSSARM, 4 PIN 3 3/4" X 5 3/4" X 10'-0"	2	2	2	-	S294128	-
2	CROSSARM, 6 PIN, 3 3/4" X 5 3/4" X 12'-0"	2	2	2	-	S294160	-
3	BOLT, MACHINE, 5/8" X (LENGTH AS REQ'D), 2 FLAT WASH., 1 DBL. COIL SPRING WASHER	3	3	3	390	-	-
4	BRACE, ANGLE CROSSARM, 6'-0"	2	2	2	-	S164160	-
5	BRACE, FLAT CROSSARM, 28"	3	3	3	-	S164192	-
6	BOLT MACH GALV 5/8" X (LENGTH AS REQ'D) AND 1 DOUBLE COIL SPRING WASHER	1	1	1	390	-	-
7	BOLT, MACHINE, 3/8" X 5", 1 RD. WASH., 1 DBL. COIL SPRING WASHER	3	3	3	390	-	-
8	BOLT, SPACE, 5/8" X (LENGTH AS REQ'D), 4 WASH. & 4 NUTS, 2 DBL. COIL SPRING WASHER	3	3	3	390	-	-
9	WASHER, 1 DBL. COIL SPRING	4	4	4	390	-	-
10	BOLT, MACHINE, 1/2" X 5", 1 RD. WASH., 1 DBL. COIL SPRING WASHER	6	6	6	390	-	-

© 1998 - 2021 San Diego Gas & Electric Company. All rights reserved. Removal of this copyright notice without permission is not permitted under law.

REV	CHANGE	DR	BY	DSN	APV	DATE	REV	CHANGE	DR	BY	DSN	APV	DATE
C	TABLE UPDATE	EDM	JIK	JES	CZH	6/8/2020	F						
B	DRAWING UPDATE	PEI	-	-	-	2/18/2019	E						
A	ORIGINAL ISSUE	-	-	PTA	JJ	10/7/2005	D	BILL OF MATERIALS UPDATE	EDM	DWC	JES	CZH	3/5/2021

BILL OF MATERIALS (CONT'D):

ITEM	DESCRIPTION	QUANTITY			STANDARD PAGE	STOCK NUMBER	DESIGN UNITS
		POLE 1	POLE 2	POLE 3			
11	CLEVIS, DEADEND CLOSED	3	2	3	-	S235712	-
12	INSULATOR, SUSPENSION, 12KV	6	4	6	-	S431648	-
13	CLAMPS, DEADEND	3	2	3	739	-	-
14	PIN, INSULATOR, 1"	7	7	7	-	S532706 (X)	-
15	INSULATOR, PIN TYPE, 55-5	8	7	9	-	S429056	-
16	SWITCH, BYPASS	1	1	1	-	S706944	-
17	ARRESTER, LIGHTNING (12KV)	1	2	3	-	S113248	-
18	GALVANIZED STAPLES FOR PVC COVERED GROUND WIRE	AS REQ'D	AS REQ'D	AS REQ'D	-	S678564 (X)	-
19	SWITCH, DISCONNECT, HOOKSTICK, CUTOUT, 27KV, 900A	1	1	1	-	S706670 (I) S707004 (II)	PS900 P900D
20	BRACKET, CUTOUT/ARRESTER, FOR CROSSARM MOUNTING	2	3	4	-	S166070 (X)	-
21	BRACKET, INSULATOR, 1"	1	-	2	-	S166134	-
22	SCREW, LAG, 5/8" X 5"	2	-	4	-	S621602	-
23	SIGN, HIGH VOLTAGE & 8 NAILS, GALV.	2	2	2	-	S647648 S492224	-
24	REGULATOR, STEP VOLTAGE, 1/0	1	1	1	1311	-	-
25	BOLT, MACHINE, 3/4" X (LENGTH AS REQ'D), 1 SQ. CURV. WASH., 1 DBL. COIL SPRING WASHER	2	2	2	390	-	-
26	COVER, BOLT, PLASTIC	2	2	2	-	S285696	-
27	WIRE, 1/0 BARE STRANDED COPPER	(3.9#) 12'-0"	(3.9#) 12'-0"	(3.9#) 12'-0"	-	S808944	-
28	WIRE, BARE STRANDED COPPER, #6	(1.0#) 12'-0"	(1.8#) 22'-0"	(1.8#) 22'-0"	-	S813536	-
29	FLEXIBLE ARRESTER GROUND STRAP	AS REQ'D	AS REQ'D	AS REQ'D	-	S698754	-
30	WIRE, ANNEALED SOLID COPPER, #8	(.25#) 5'-0"	(.25#) 5'-0"	(.25#) 5'-0"	-	S812928	-
31	WIRE, BARE STRANDED COPPER, #4	(.65#) 5'-0"	(.51#) 4'-0"	(.51#) 4'-0"	-	S812480	-
32	#4 CU SOLID GROUND WIRE, PVC COVERED	50'-0"	50'-0"	50'-0"	-	S812490	GNDPVC
33	GROUND ROD, 5/8" X 8'-0", COPPERWELD (c)	1	1	1	-	S603074 (X)	
34	STEPS, POLE	AS REQ'D	AS REQ'D	AS REQ'D	-	S692992	-
35	CONNECTORS, WIRE (SIZE AS REQ'D)	AS REQ'D	AS REQ'D	AS REQ'D	783 - 785	-	-
36	CONNECTOR, GROUND, COPPER BONDED	1	1	1	-	S259010	-

TABLE OF CONTENTS

NOTES:

(I) REQUIRED IN CONTAMINATION DISTRICT 1 AND PREFERRED IN COASTAL DISTRICTS (OC, NC, BC, CM). (a)

(II) PREFERRED FOR INLAND DISTRICTS (NE, RA, EA, ME).

(X) THIS ITEM IS EXEMPT.

REFERENCE:

(a) SEE OH287 FOR CONTAMINATION DISTRICTS.

(b) SEE OH1002 FOR GROUNDING METHOD AND APPLICATION. REGULATOR TANKS SHALL BE PERMANENTLY GROUNDED.

(c) SEE OH363 FOR POLE STEPPING.

d. SEE OH379 FOR FIBERGLASS CROSSARM.

© 1998 - 2021 San Diego Gas & Electric Company. All rights reserved. Removal of this copyright notice without permission is not permitted under law.

REV	CHANGE	DR	BY	DSN	APV	DATE	REV	CHANGE	DR	BY	DSN	APV	DATE
C	TABLE UPDATE	EDM	JIK	JES	CZH	6/8/2020	F						
B	DRAWING UPDATE	PEI	-	-	-	2/18/2019	E						
A	ORIGINAL ISSUE	-	-	PTA	JJ	10/7/2005	D	BILL OF MATERIALS UPDATE	EDM	DWC	JES	CZH	3/5/2021

SCOPE: THIS STANDARD SHOWS METHOD OF CONSTRUCTION FOR A 12KV, THREE-POLE, WYE VOLTAGE REGULATOR STATION.

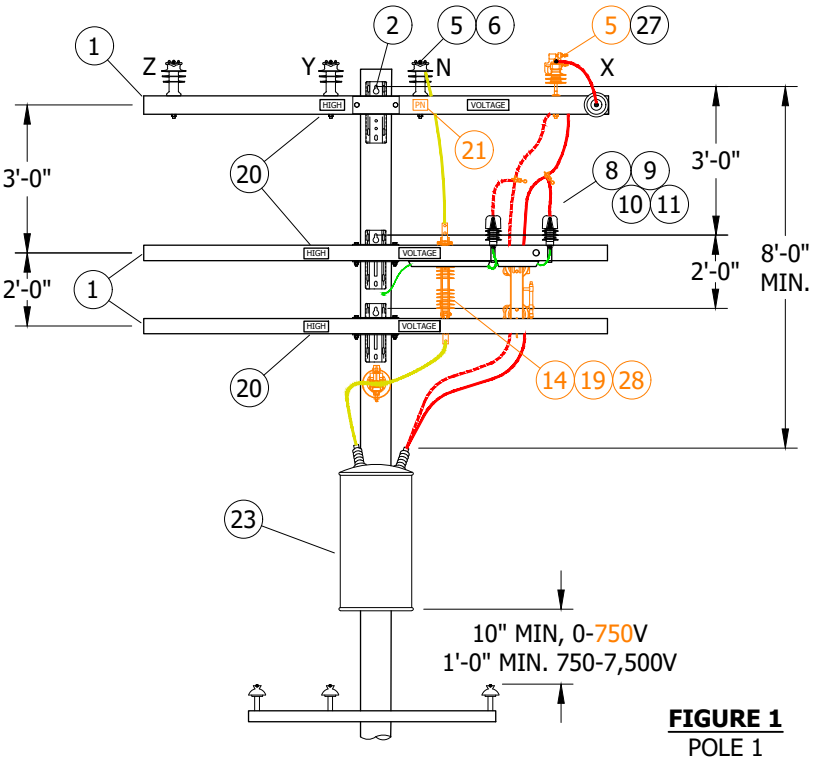

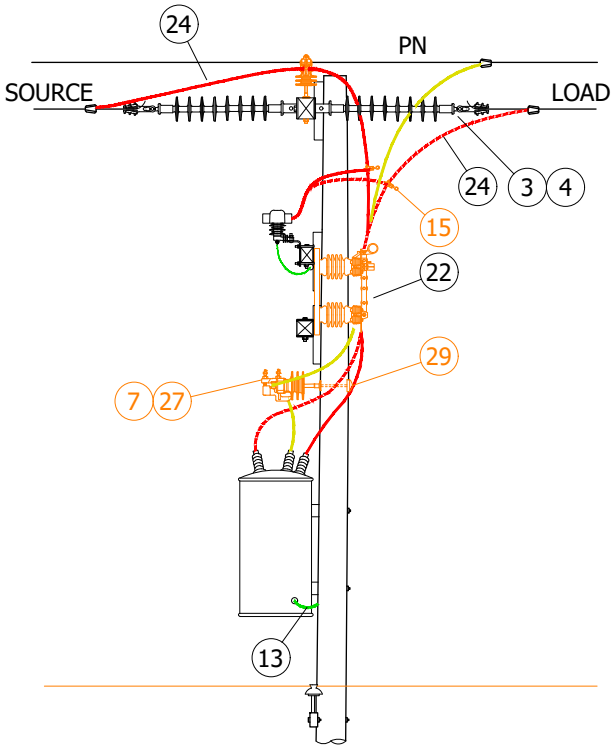

FIGURE 1
POLE 1

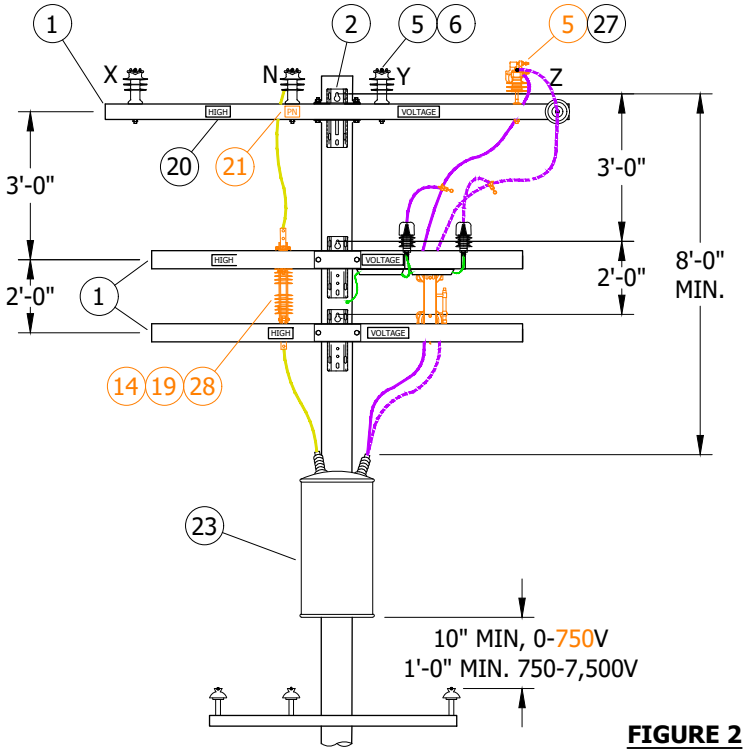

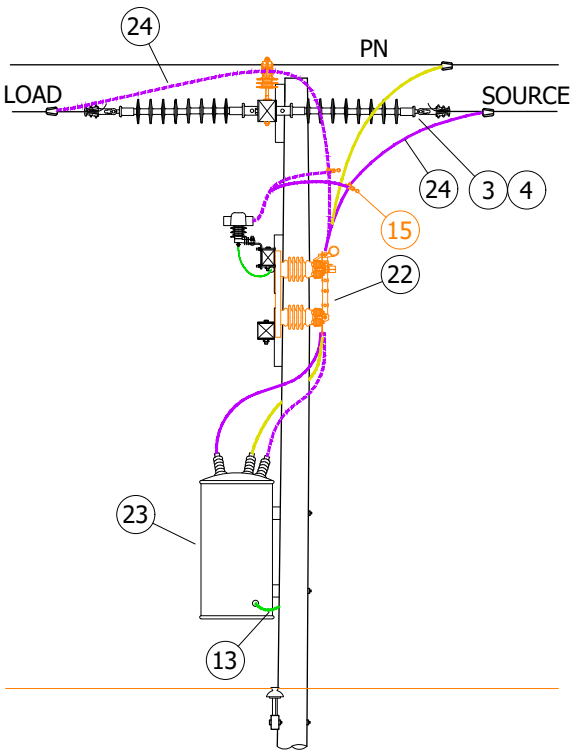

FIGURE 2
POLE 2

TABLE OF CONTENTS

© 1998 - 2023 San Diego Gas & Electric Company. All rights reserved. Removal of this copyright notice without permission is not permitted under law.

REV	CHANGE	DR	BY	DSN	APV	DATE	REV	CHANGE	DR	BY	DSN	APV	DATE
C	DRAWING UPDATE	PEI	-	-	-	02/18/2019	F	DRAWING UPDATE	EDM	MRF	MRF	KRG	02/09/2023
B	EDITORIAL CHANGES	-	GW	JS	MDJ	05/01/2018	E	DRAWING UPDATE	EDM	JIK	JES	CZH	03/05/2021
A	EDITORIAL CHANGES	-	JBH	JBH	MDJ	08/11/2016	D	TABLE UPDATE	-	JIK	JES	CZH	04/13/2020

X Indicates Latest Revision | Completely Revised | New Page | Information Removed

SDG&E ELECTRIC OVERHEAD CONSTRUCTION STANDARDS

SHEET 1 OF 5

VOLTAGE REGULATOR STATION
WYE, 12KV, THREE-POLE

OH1352.1

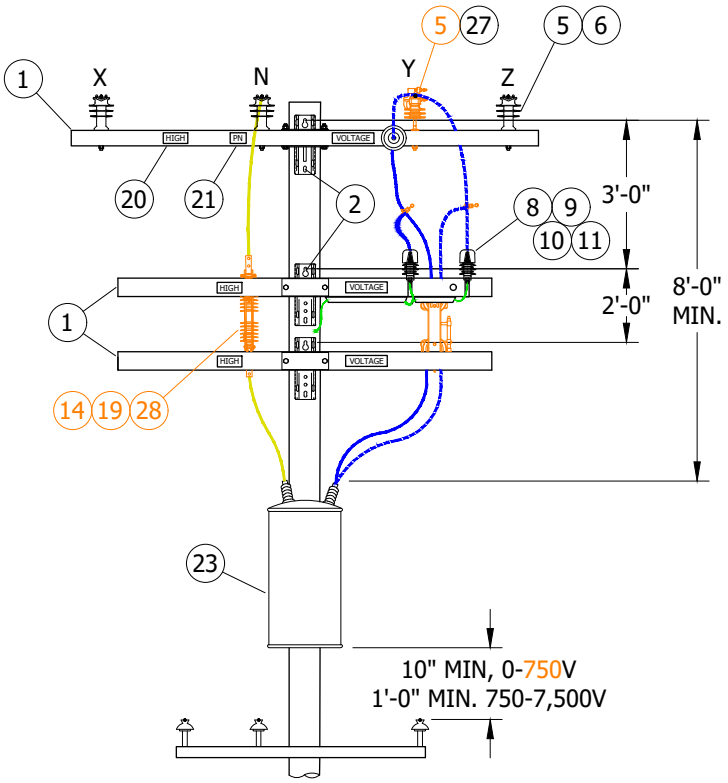

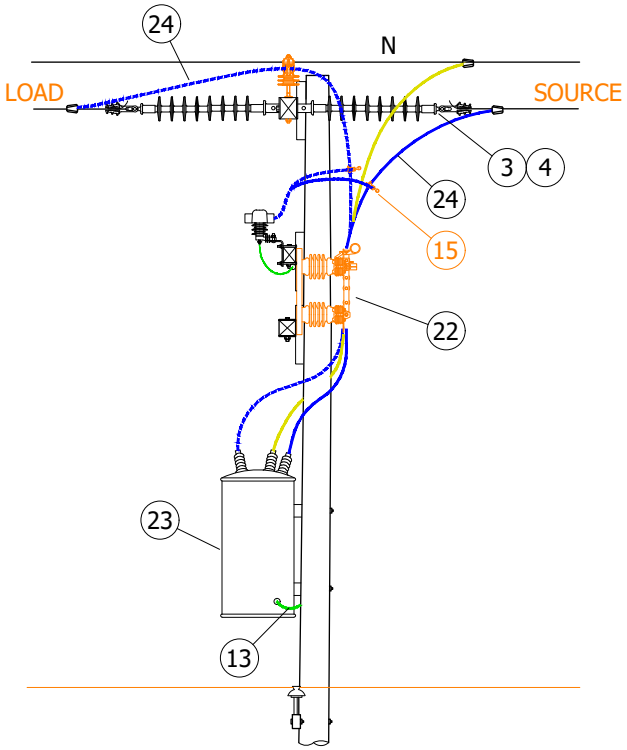

FIGURE 3
POLE 3

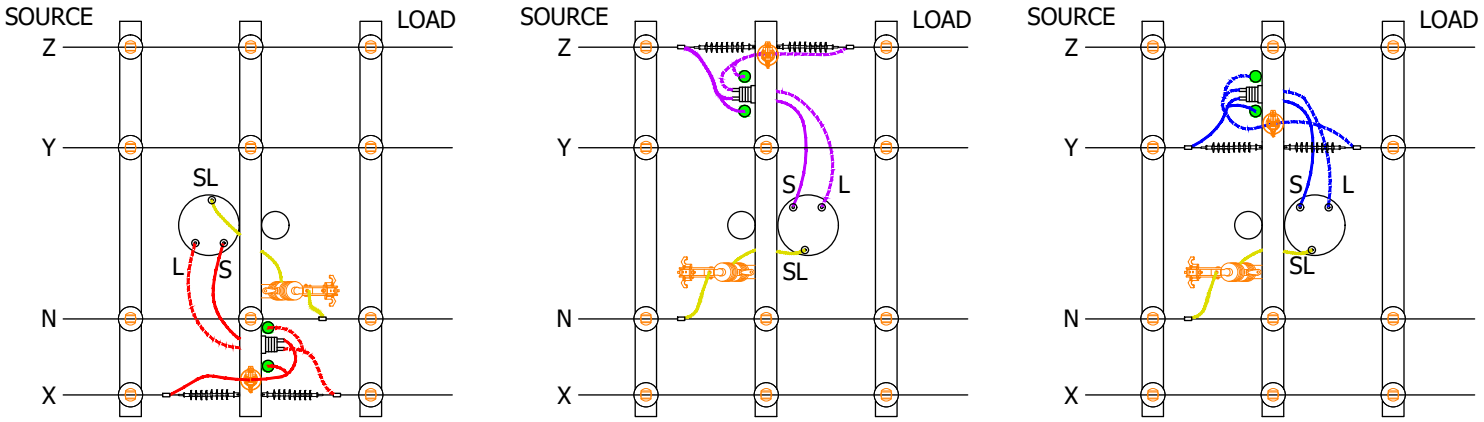

FIGURE 4

© 1998 - 2023 San Diego Gas & Electric Company. All rights reserved. Removal of this copyright notice without permission is not permitted under law.

REV	CHANGE	DR	BY	DSN	APV	DATE	REV	CHANGE	DR	BY	DSN	APV	DATE
C	DRAWING UPDATE	PEI	-	-	-	02/18/2019	F	DRAWING UPDATE	EDM	MRF	MRF	KRG	02/09/2023
B	EDITORIAL CHANGES	-	GW	JS	MDJ	05/01/2018	E	DRAWING UPDATE	EDM	JIK	JES	CZH	03/05/2021
A	EDITORIAL CHANGES	-	JBH	JBH	MDJ	08/11/2016	D	TABLE UPDATE	-	JIK	JES	CZH	04/13/2020

X Indicates Latest Revision | Completely Revised | New Page | Information Removed

SDG&E ELECTRIC OVERHEAD CONSTRUCTION STANDARDS

VOLTAGE REGULATOR STATION
WYE, 12KV, THREE-POLE

OH1352.2

TABLE OF CONTENTS

TABLE 1

SCHEMATIC ABBREVIATIONS	
ABBR	**DEFINITION**
BP	BYPASS
D	DISCONNECT
DE	DEADEND
L	LOAD
LA	LIGHTING ARRESTER
S	SOURCE
SLA	SERIES LIGHTNING ARRESTER
SL	SOURCELOAD

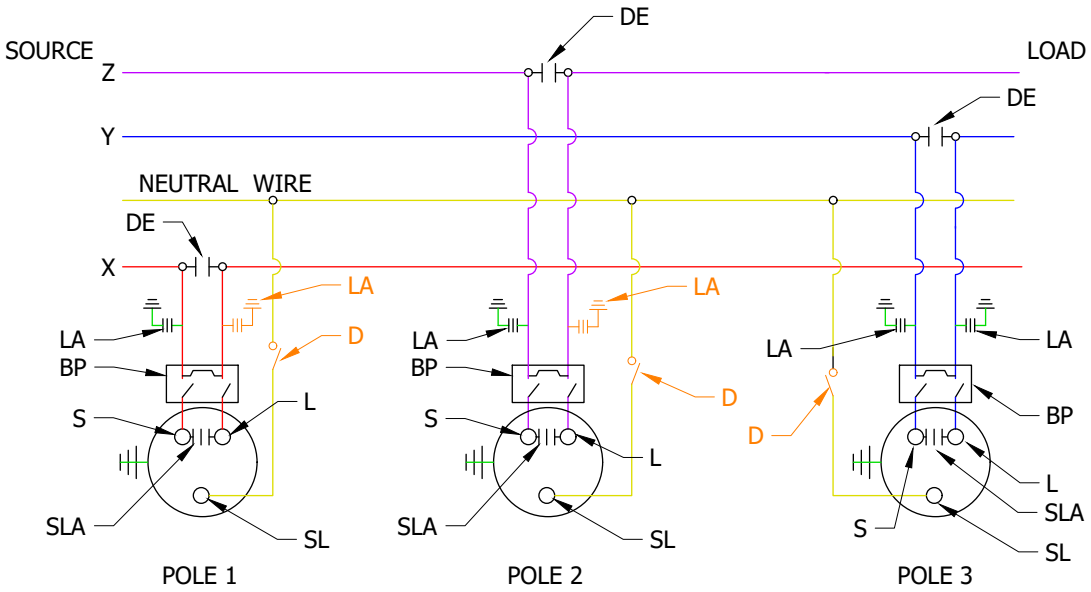

FIGURE 5
SCHEMATIC
SEE TABLE 1

CAUTION:

* WHEN CONNECTING A STATION, REGULATORS MUST BE ON NEUTRAL. CLOSE CUTOUT TO SL BUSHING BEFORE CLOSING ASSOCIATED BYPASS DISCONNECT. WHEN DISCONNECTING A STATION, PUT REGULATORS ON NEUTRAL "HAND CONTROL/MANUAL" AND OPEN BYPASS DISCONNECT BEFORE OPENING CUTOUT TO SL BUSHING. THIS AVOIDS A SERIOUS FAULT CONDITION.

INSTALLATION:

A. COIL ANY EXCESS CONTROL CABLE AND ATTACH TO REGULATOR POLE MOUNT BRACKET WITH PLASTIC TIES.

B. REGULATOR TANKS SHOULD BE PERMANENTLY GROUNDED.

C. PHASE I.D. REQUIRED.

D. WHEN USING COVERED WIRE A VISE-TOP WILL BE USED WITH NYLON JAWS. WHEN USING ALUMINUM WIRE A VISE-TOP WILL BE USED WITH ALUMINUM JAWS. WHEN USING COPPER WIRE A VISE-TOP WILL BE USED WITH BRONZE JAWS. THERE ARE NO EXCEPTIONS TO THESE RULES.

BILL OF MATERIALS:

ITEM	DESCRIPTION	QUANTITY	STANDARD PAGE	STOCK NUMBER	DESIGN UNITS
1	CROSSARM, FIBERGLASS, DEADEND (SIZE AS REQUIRED)	1	379	--	--
	CROSSARM, FIBERGLASS, STACKED DEADEND (SIZE AS REQUIRED)	1	379	--	--
	CROSSARM, FIBERGLASS, TANGENT (SIZE AS REQUIRED)	2	379	--	--
2	BOLT, MACHINE, 3/4" X (LENGTH AS REQ'D), 1 SQ. CURVED RIBBED WASHER, 1 SINGLE COIL SPRING WASHER	AS REQ'D	--	--	--
3	INSULATOR, SUSPENSION, 35KV, CLEVIS, POLYMER	AS REQ'D	750	S428958	LONGDE
4	CLAMPS, DEADEND	AS REQ'D	739	--	--
5	PIN, INSULATOR, 1"	1	396	S532706 (X)	PS1
6	INSULATOR, POLY TIE TOP, 1" (MATERIAL AS REQUIRED)	1	750	--	--

© 1998 - 2023 San Diego Gas & Electric Company. All rights reserved. Removal of this copyright notice without permission is not permitted under law.

REV	CHANGE	DR	BY	DSN	APV	DATE	REV	CHANGE	DR	BY	DSN	APV	DATE
C	DRAWING UPDATE	PEI	-	-	-	02/18/2019	F	DRAWING UPDATE	EDM	MRF	MRF	KRG	02/09/2023
B	EDITORIAL CHANGES	-	GW	JS	MDJ	05/01/2018	E	DRAWING UPDATE	EDM	JIK	JES	CZH	03/05/2021
A	EDITORIAL CHANGES	-	JBH	JBH	MDJ	08/11/2016	D	TABLE UPDATE	-	JIK	JES	CZH	04/13/2020

TABLE OF CONTENTS

BILL OF MATERIALS (CONT'D):

ITEM	DESCRIPTION		QUANTITY	STANDARD PAGE	STOCK NUMBER	DESIGN UNITS
7	PIN, INSULATOR, STAND-OFF		AS REQ'D	390	S529248	PS/01
8	ARRESTER, LIGHTNING, (12 KV)		1	1247	S113248	LA12
9	SELF FUSING SILICONE TAPE, 1" (SQUIRREL TAPE)		AS REQ'D	1640	S721736 (X)	--
	SELF FUSING SILICONE TAPE, 2" (SQUIRREL TAPE)		AS REQ'D	1640	S721738 (X)	--
10	BRACKET, CUTOUT/ARRESTER, CROSSARM MOUNTING		1	397	S165452 (X)	COBKT
11	FLEXIBLE ARRESTER GROUND STRAP		1	1002	S698754	LAGND
12	CONNECTORS, WIRE (SIZE AS REQ'D) (III)		AS REQ'D	783-785	--	--
13	GROUNDING, #4 PVC GROUND WIRE, RODS & CONNECTORS	STEEL POLE	1	1002	--	GNDPSP
		WOOD/FG POLE			--	GNDPVC
14	SWITCH, DISCONNECT, HOOKSTICK, CUTOUT, 27KV, 900A		1	--	S706670 (IV)	PS900
					S707004 (V)	P900D
15	CLAMP, HOT LINE		AS REQ'D	788	--	--
16	STAPLES, GALVANIZED FOR PVC GROUND WIRE (III)	WOOD POLE	--	1002	S678564	--
17	STRAP, 3/8", GALVANIZED (JIFFY-CLIP) (III)		AS REQ'D	1002	S697304 (X)	--
18	SCREW, SELF-TAPPING (III)		AS REQ'D	1002	S618086	--
19	BRACKET, S/S, 2" X 3"		1	--	S166072	--
20	SIGN, ADHESIVE STICKER, HIGH VOLTAGE		AS REQ'D	208	S647650 (X)	--
21	SIGN, ADHESIVE STICKER, PN		AS REQ'D	208	S648004	PN-D
22	SWITCH, BYPASS		1	--	S706944	BYPASS
23	REGULATOR, STEP VOLTAGE, 10-STEP		1	1311	--	--
24	POLY COVERED JUMPER WIRE (SIZE AS REQ'D WITH MINIMUM SIZE EQUAL TO LINE CONDUCTOR AMPACITY OR GREATER)		AS REQ'D	718	--	--
25	WIRE, #8 ANNEALED SOLID COPPER FOR BONDING (III)		AS REQ'D	1002	--	BOND85
26	STRAP, 1/4", GALVANIZED (JIFFY-CLIP) (III)		AS REQ'D	1002	S697302	--
27	INSULATOR, POLY VISE-TOP, 1"		AS REQ'D	750	--	--
28	BOLT, MACHINE, 1/2" X 1 1/2", SS, W/ 1 ROUND & 1 LOCK WASHER		1	--	--	--
29	COVER, BOLT, PLASTIC	WOOD OR FG POLE	AS REQ'D	--	S285696	--

NOTES:

I. THESE ITEMS SUPPLIED BY SCADA PROJECT CREW (KEARNY). ANTENNA, RADIO AND CONTROLLER CONNECTION TO BE MADE BY KEARNY CREW.

II. CONTROLS WILL BE MOUNTED BY KEARNY SCADA CREW.

(III) NOT SHOWN ON FIGURES

(IV) REQUIRED IN CONTAMINATION DISTRICT 1 AND PREFERRED IN COASTAL DISTRICTS (OC, NC, BC, CM). (d)

(V) PREFERRED FOR INLAND DISTRICTS (NE, RA, EA, ME).

VI. STANDARD DISTANCE BETWEEN POLES IS 18 FEET. MAXIMUM DISTANCE BETWEEN POLES IS 30 FEET. ANY DISTANCE BEYOND 30 FEET REQUIRES A DEVIATION. (e)

(X) THIS ITEM IS EXEMPT.

REFERENCE:

a. FOR BONDING REQUIREMENTS, SEE OH1003.

b. FOR GROUNDING METHOD AND APPLICATION, SEE OH1002.

© 1998 - 2023 San Diego Gas & Electric Company. All rights reserved. Removal of this copyright notice without permission is not permitted under law.

REV	CHANGE	DR	BY	DSN	APV	DATE	REV	CHANGE	DR	BY	DSN	APV	DATE
C	DRAWING UPDATE	PEI	-	-	-	02/18/2019	F	DRAWING UPDATE	EDM	MRF	MRF	KRG	02/09/2023
B	EDITORIAL CHANGES	-	GW	JS	MDJ	05/01/2018	E	DRAWING UPDATE	EDM	JIK	JES	CZH	03/05/2021
A	EDITORIAL CHANGES	-	JBH	JBH	MDJ	08/11/2016	D	TABLE UPDATE	-	JIK	JES	CZH	04/13/2020

X Indicates Latest Revision | Completely Revised | New Page | Information Removed

SDG&E ELECTRIC OVERHEAD CONSTRUCTION STANDARDS

VOLTAGE REGULATOR STATION
WYE, 12KV, THREE-POLE

OH1352.4

TABLE OF CONTENTS

REFERENCE (CONT'D):

c. FOR MINIMUM CASE CLEARANCE ABOVE GROUND, SEE G.O. 95 RULE 58.1-B. (2).

(d) SEE OH287: CONTAMINATION DISTRICTS.

(e) SEE OH105UG3005: CONSTRUCTION STANDARDS/DEVIATION REQUEST FORM AND PROCEDURE.

TABLE OF CONTENTS

© 1998 - 2023 San Diego Gas & Electric Company. All rights reserved. Removal of this copyright notice without permission is not permitted under law.

REV	CHANGE	DR	BY	DSN	APV	DATE	REV	CHANGE	DR	BY	DSN	APV	DATE
C	DRAWING UPDATE	PEI	-	-	-	02/18/2019	F	DRAWING UPDATE	EDM	MRF	MRF	KRG	02/09/2023
B	EDITORIAL CHANGES	-	GW	JS	MDJ	05/01/2018	E	DRAWING UPDATE	EDM	JIK	JES	CZH	03/05/2021
A	EDITORIAL CHANGES	-	JBH	JBH	MDJ	08/11/2016	D	TABLE UPDATE	-	JIK	JES	CZH	04/13/2020

X Indicates Latest Revision | Completely Revised | New Page | Information Removed

SDG&E ELECTRIC OVERHEAD CONSTRUCTION STANDARDS

SHEET 5 OF 5

VOLTAGE REGULATOR STATION
WYE, 12KV, THREE-POLE

OH1352.5

SCOPE: THIS STANDARD SHOWS THE METHOD OF CONSTRUCTION FOR A 12KV, TWO POLE, PLATFORM MOUNTED, CLOSED DELTA, VOLTAGE REGULATOR STATION.

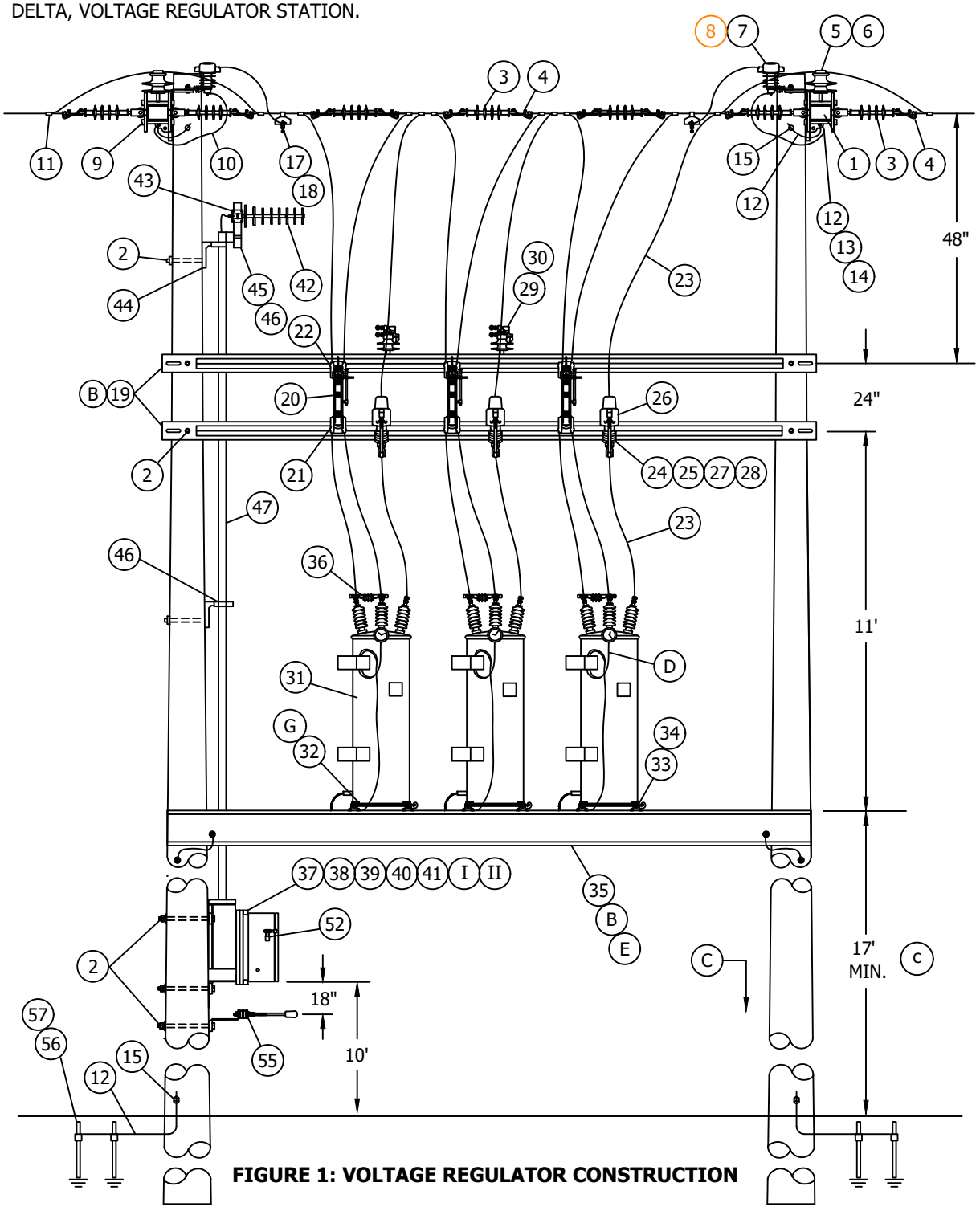

FIGURE 1: VOLTAGE REGULATOR CONSTRUCTION

© 1998 - 2018 San Diego Gas & Electric Company. All rights reserved. Removal of this copyright notice without permission is not permitted under law.

REV	CHANGE	BY	DSGN	APPV	DATE	REV	CHANGE	BY	DSGN	APPV	DATE
C	EDITORIAL CHANGES	GW	JS	MDJ	5/1/2018	F					
B	EDITORIAL CHANGES	SL	JS	MDJ	3/31/2017	E					
A	EDITORIAL CHANGES	JBH	JBH	MDJ	8/11/2016	D					

X Indicates Latest Revision | Completely Revised | New Page | Information Removed

SDG&E ELECTRIC OVERHEAD CONSTRUCTION STANDARDS

VOLTAGE REGULATOR STATION, CLOSED DELTA,
12KV, PLATFORM MOUNTED, SCADA CONTROLLED

OH1355.1

TABLE OF CONTENTS

FIGURE 1

OVERHEAD MACRO UNIT STEP-VOLT REG STATION CLOSED DELTA-PLATFORM

REGPLA

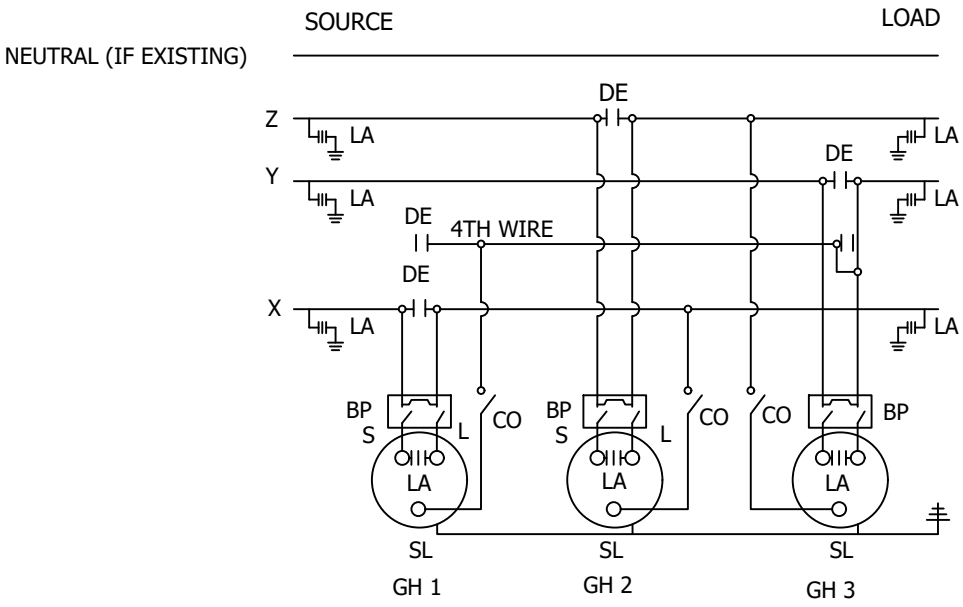

FIGURE 1: WIRE SCHEMATIC

POLE HEIGHT	NO STECOMMUNICATION	2 LEVELS 2" COMMUNICATION
45'	H2	NA
50'	H2	NA
55'	H2	H4
60'	H4	H4
65'	H4	H4
70'	H4 (SW)	H4 (SW)

TABLE 1: STEEL POLE SELECTION GUIDE

© 1998 - 2018 San Diego Gas & Electric Company. All rights reserved. Removal of this copyright notice without permission is not permitted under law.

REV	CHANGE	BY	DSGN	APPV	DATE	REV	CHANGE	BY	DSGN	APPV	DATE
C	EDITORIAL CHANGES	GW	JS	MDJ	5/1/2018	F					
B	EDITORIAL CHANGES	SL	JS	MDJ	3/31/2017	E					
A	EDITORIAL CHANGES	JBH	JBH	MDJ	8/11/2016	D					

TABLE OF CONTENTS

BILL OF MATERIAL:

ITEM	DESCRIPTION	QUANTITY	STOCK NO. OR CONSTR. STD.	ASSEMBLY UNITS
1	CROSSARM, FIBERGLASS DEADEND (SIZE AS REQ'D)	AS REQ'D	379	-
2	BOLT, MACHINE, 3/4" X (LENGTH AS REQ'D), 1 SQ. CURVED RIBBED WASHER, DBL. COIL SPRING WASHER	AS REQ'D	392	-
3	INSULATOR, SUSPENSION, 12KV, CLEVIS, NON-PORC	17	S431650	1DES
4	CLAMPS, DEAD END	20	STD. 741-744	-
5	PIN, INSULATOR, 1"	6	S532704	PS1
6	INSULATOR, PIN TYPE, 12KV	6	S429050	56-1NP
7	ARRESTER, LIGHTNING (12KV)	6	S113248	LA12
8	SELF FUSING SILICONE TAPE 1" (SQUIRREL TAPE)	AS REQ'D	S721732	-
	SELF FUSING SILICONE TAPE 2" (SQUIRREL TAPE)	AS REQ'D	S721734	-
9	BRACKET, CUTOUT/ARRESTER, FOR CROSSARM MOUNTING	6	S166070	LA/B-S
10	FLEXIBLE ARRESTER GROUND STRAP	6	S698754	LAGND
11	CONNECTORS, WIRE (SIZE AS REQ'D)	AS REQ'D	STD. 783-787	-
12	#4 CU SOLID GROUND WIRE, PVC COVERED	36'	S812490	4POLY
13	STRAP, 3/8", GALVANIZED	AS REQ'D	S697304	-
14	SCREW, SELF-TAPPING	AS REQ'D	S618082	-
15	CONNECTOR, SPLIT BOLT, BRONZE, 1/2" X 13	10	S262560	SPCONN
16	SIGN, HIGH VOLTAGE	4	STD. 208	-
17	STIRRUP (SIZE AS REQ'D)	6	STD. 788	-
18	HOTLINE CLAMP	6	S227680	-
19	MOUNTING BRACKET, SWITCH/CUTOUT, 18'-0", ALUMINUM, PAIR	1	S167348	18VRSB
20	SWITCH, BYPASS	3	S706944	BYPASS
21	LUG, BRONZE, CABLE TAP	12	S471296	TL6
22	BOLT, MACHINE, 1/2 X 2-1/2", S/S W/FLAT, RD & LOCK WASHER	12	-	-
23	WIRE, 1/0 THW COPPER	110'	S808032	TW1/0S
24	CUTOUT, 12KV	3	STD. 1212	-
25	BLADE, DISCONNECT CUTOUT	3	STD. 1212	-
26	CUTOUT COVER	3	STD. 1640	-
27	BRACKET, S/S, 2" X 3"	3	S166072	-
28	BOLT, MACHINE, 1/2" X 1-1/2", S/S, W/1 ROUND & 1 LOCK WASHER	6	-	-
29	PIN, INSULATOR, SHORT SHANK	2	S532426	PSS1
30	INSULATOR, CLAMPTOP, NON-PORC, 1"	2	S429060	56-1PT
31	REGULATOR, STEP VOLTAGE 1ϕ	3	STD. 1311	-
32	BOLT, MACHINE, 1/2" X 3", S/S, W/1 FLAT ROUND & 1 BELLVILLE WASHER	12	-	-
33	WIRE, CU, 1/0 B.S.	2'	S813568	BS1/0
34	TERMINAL, COMPRESSION, 1/0 COPPER	3	S729664	CT1/0C
35	PLATFORM, REGULATOR, 18'-0", ALUMINUM	1	S543330	18VRPF
36	REGULATOR BUSHING/LA COVER	3	S289618	BCVREG
37	BRACKET, CONDUIT, STANDOFF	2	S167184	-
38	CHANNEL, 1-5/8" X 1-5/8", BACK-TO-BACK, GALVANIZED	10'	-	-
39	NUT STUD, 1/2" X 1-3/8"	AS REQ'D	S507000	-

TABLE OF CONTENTS

© 1998 - 2018 San Diego Gas & Electric Company. All rights reserved. Removal of this copyright notice without permission is not permitted under law.

REV	CHANGE	BY	DSGN	APPV	DATE	REV	CHANGE	BY	DSGN	APPV	DATE
C	EDITORIAL CHANGES	GW	JS	MDJ	5/1/2018	F					
B	EDITORIAL CHANGES	SL	JS	MDJ	3/31/2017	E					
A	EDITORIAL CHANGES	JBH	JBH	MDJ	8/11/2016	D					

X Indicates Latest Revision | Completely Revised | New Page | Information Removed

SDG&E ELECTRIC OVERHEAD CONSTRUCTION STANDARDS

VOLTAGE REGULATOR STATION, CLOSED DELTA, 12KV, PLATFORM MOUNTED, SCADA CONTROLLED

OH1355.3

BILL OF MATERIAL:

ITEM	DESCRIPTION	QUANTITY	STOCK NO. OR CONSTR. STD.	ASSEMBLY UNITS
40	NUT, HEX, S/S, 1/2"	AS REQ'D	S550636	-
41	WASHER, S/S SPRING 1/2"	AS REQ'D	S796944	-
42	ANTENNA, SCADA, COMMUNICATION, BROADBAND & CONNECTORS	1	S109570	ANT
43	CABLE, FLEXABLE, 1/2", COAXIAL, SCADA ANTENNA	25'	S191906	ANTCAB
44	BRACKET, LADDER ARM	4	S167184	LARM
45	NIPPLE, PIPE, 2" X 6", GALVANIZED	1	S500960	-
46	CLAMP, PIPE, STEEL, GALVANIZED, UNISTRUT, 3"	AS REQ'D	S229536	UPC2IN
47	CONDUIT, PVC, SCHEDULE 40, 2" X 10'	3	S251296	PVC-2
48	CONDUIT, PVC, SCHEDULE 40, 3" X 10'	1	S251360	PVC-3
49	CLAMP, PIPE, STEEL, GALVANIZED, UNISTRUT, 3"	AS REQ'D	S229632	UPC3IN
50	CABINET, RADIO ENCLOSURE	1	-	-
51	RADIO, SPREAD SPECTRUM, MODEL 9810	1	S749504	SSTRAN
	TRANSCEIVER, FIXED CHANNEL, MODEL 9710	1	S749500	SOTRAN
52	PADLOCK, SCHLAGE ELECTRIC SERIES	4	S514848	-
53	CONDUIT, LIQUIDITE, 1/2"	AS REQ'D	-	-
54	DECAL "SCADA" "INFORM SCO UPON ENTRY"	1	S301934	-
55	LADDER SAFETY SUPPORT BRACKET	1	S166884	LSBRKT
56	GROUND ROD, 5/8" X 8', COPPER WELD	2	S603072	-
57	COPPER BONDED GROUND CONNECTOR	2	S529010	-

INSTALLATION:

A. CAUTION: WHEN CONNECTING A STATION, REGULATORS MUST BE ON NEUTRAL. CLOSE CUTOUT TO SL BUSHING BEFORE CLOSING ASSOCIATED BYPASS DISCONNECT. WHEN DISCONNECTING A STATION, PUT REGULATORS ON NEUTRAL "HAND CONTROL/MANUAL" AND OPEN BYPASS DISCONNECT BEFORE OPENING CUTOUT TO SL BUSHING. THIS AVOIDS A SERIOUS FAULT CONDITION.

(B) BEFORE BOLTING PLATFORM OR BY-PASS SWITCH MOUNTING ARMS TO POLE, SLIDE ALL REGULATOR, SWITCH AND CUTOUT MOUNTING BOLTS INTO CHANNEL. INSTALL HORIZONTAL PLATFORMS BRACES TO PLATFORM BEFORE SETTING REGULATORS. SECURE REGULATORS TO PLATFORM AFTER HORIZONTAL PLATFORM BRACES ARE SECURE.

(C) THIS CONSTRUCTION WILL BE BUILT ON THE APPROPRIATE CLASS OF STEEL POLES AND 30' OF TRUCK ACCESS MUST BE MAINTAINED ON SWITCH SIDE OF STRUCTURE.

(D) COIL ANY EXCESS CONTROL CABLE AND ATTACH TO REGULATOR POLE MOUNT BRACKET WITH PLASTIC TIES.

(E) WHEN BOLTING PLATFORM COMPONENTS INTO AN ASSEMBLY, PLACE BELLVILLE WASHERS UNDER NUTS.

F. PHASE I.D. REQUIRED.

(G) REGULATOR TANKS SHOULD BE PERMANENTLY GROUNDED.

H. REGULATOR POSITION INDICATOR SHOULD FACE TOWARDS STREET.

NOTES:

(I) THESE ITEMS SUPPLIED BY SCADA PROJECT CREW (KEARNY). ANTENNA, RADIO AND CONTROLLER CONNECTIONS TO BE MADE BY KEARNY CREW.

(II) CONTROLS WILL BE MOUNTED BY KEARNY SCADA CREW.

REFERENCE:

a. FOR BONDING REQUIREMENTS - SEE STANDARD 1003.

b. REGULATOR TANKS SHALL BE PERMANENTLY GROUNDED. FOR GROUNDING METHOD AND APPLICATION, SEE STANDARD 1002.

(c) FOR MININUM CASE CLEARANCE ABOVE GROUND, SEE G.O. 95 RULE 58.1-B. (2)

© 1998 - 2018 San Diego Gas & Electric Company. All rights reserved. Removal of this copyright notice without permission is not permitted under law.

REV	CHANGE	BY	DSGN	APPV	DATE	REV	CHANGE	BY	DSGN	APPV	DATE
C	EDITORIAL CHANGES	GW	JS	MDJ	5/1/2018	F					
B	EDITORIAL CHANGES	SL	JS	MDJ	3/31/2017	E					
A	EDITORIAL CHANGES	JBH	JBH	MDJ	8/11/2016	D					

X Indicates Latest Revision | Completely Revised | New Page | Information Removed

SDG&E ELECTRIC OVERHEAD CONSTRUCTION STANDARDS

VOLTAGE REGULATOR STATION, CLOSED DELTA, 12KV, PLATFORM MOUNTED, SCADA CONTROLLED

OH1355.4

TABLE OF CONTENTS

SCOPE: THIS STANDARD SHOWS THE METHOD OF CONSTRUCTION FOR A 12KV, TWO POLE, PLATFORM MOUNTED, WYE, VOLTAGE REGULATOR STATION.

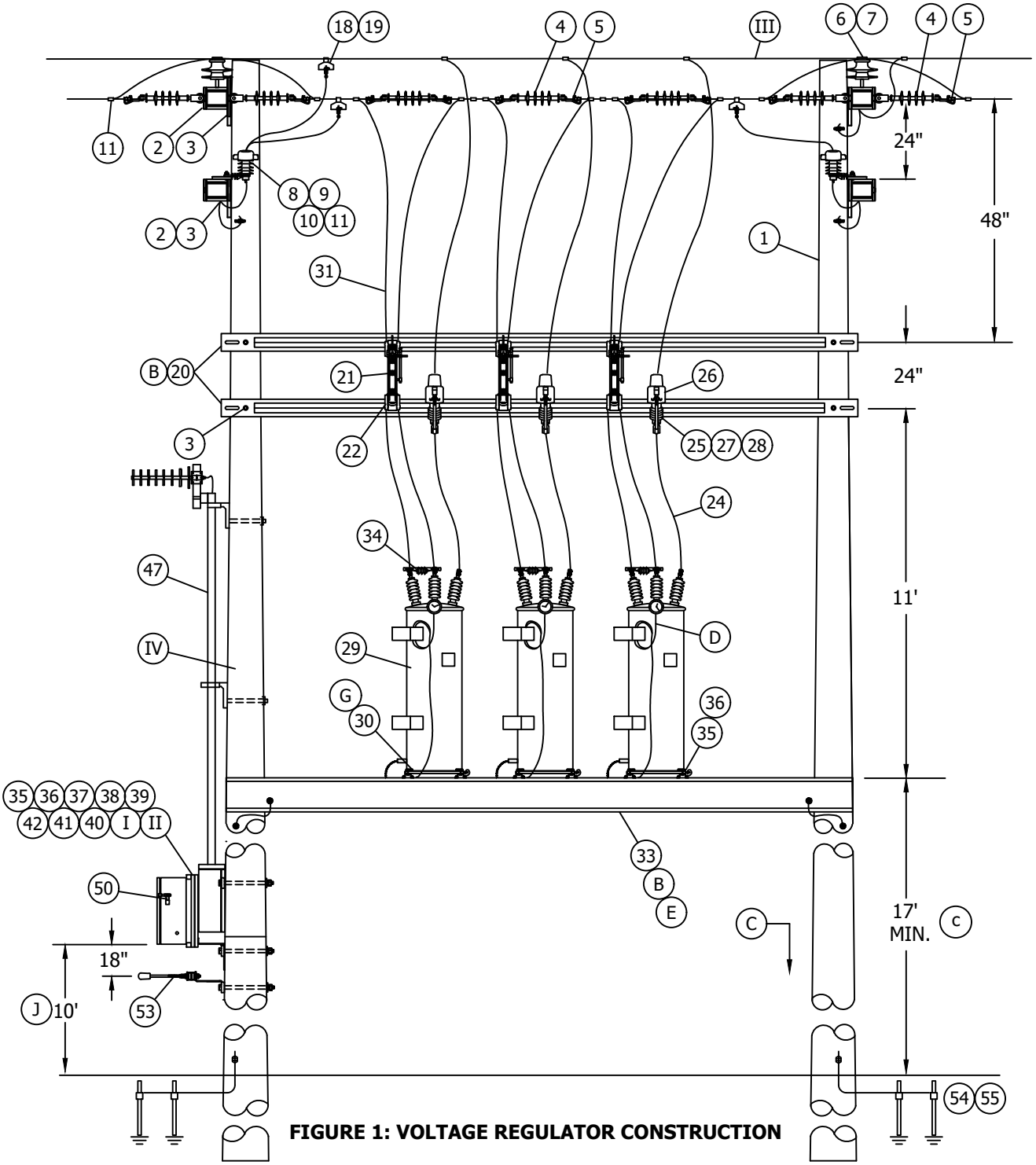

FIGURE 1: VOLTAGE REGULATOR CONSTRUCTION

© 1998 - 2018 San Diego Gas & Electric Company. All rights reserved. Removal of this copyright notice without permission is not permitted under law.

REV	CHANGE	BY	DSGN	APPV	DATE	REV	CHANGE	BY	DSGN	APPV	DATE
C						F					
B	EDITORIAL CHANGES	GW	JS	MDJ	3/1/2018	E					
A	EDITORIAL CHANGES	JBH	JBH	MDJ	8/11/2016	D					

Indicates Latest Revision | Completely Revised | New Page | Information Removed

SHEET 1 OF 5

SDG&E ELECTRIC OVERHEAD CONSTRUCTION STANDARD

VOLTAGE REGULATOR STATION, WYE,
12KV, PLATFORM MOUNTED, SCADA CONTROLLED

OH 1356.1

TABLE OF CONTENTS

TABLE OF CONTENTS

OVERHEAD MACRO UNIT
STEP-VOLT REG STATION
WYE-PLATFORM

REGPLY

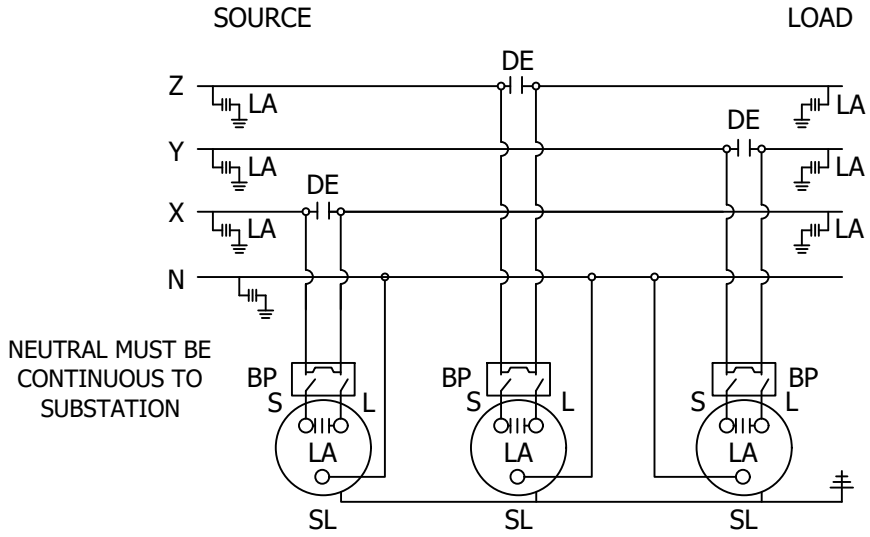

FIGURE 2:
WYE BANK SCHEMATIC

© 1998 - 2018 San Diego Gas & Electric Company. All rights reserved. Removal of this copyright notice without permission is not permitted under law.

REV	CHANGE	BY	DSGN	APPV	DATE	REV	CHANGE	BY	DSGN	APPV	DATE
C						F					
B	EDITORIAL CHANGES	GW	JS	MDJ	3/1/2018	E					
A	EDITORIAL CHANGES	JBH	JBH	MDJ	8/11/2016	D					

Indicates Latest Revision | Completely Revised | New Page | Information Removed

SDG&E ELECTRIC OVERHEAD CONSTRUCTION STANDARD

VOLTAGE REGULATOR STATION, WYE,
12KV, PLATFORM MOUNTED, SCADA CONTROLLED

OH 1356.2

BILL OF MATERIAL:

ITEMS	DESCRIPTION	QUANTITY	CONSTR. STD OR PAGE NO.	STOCK NUMBER	ASSEMBLY UNITS
1 A,B	STEEL POLE REQUIRED IN THE TIER 2 & TIER 3 AREAS SELECT THE FINISH NEEDED BELOW	-	-		-
1A	POLE - STEEL GALVANIZED 50-1 (MINIMUM HEIGHT)	1	354.4	S549604	-
1B	POLE - STEEL WEATHERING 50-1 (MINIMUM HEIGHT)	1	354.4	S550420	-
1C	POLE 50-1 WOOD POLE USED OUTSIDE THE TIER 2 & TIER 3 AREAS ONLY (MINIMUM HEIGHT)	1	354.2	S550605	-
1D	USING EXISTING WOOD POLES OUTSIDE THE TIER 2 & TIER 3 AREAS ONLY - SEE NOTES	-	-		-
2	CROSSARM - FIBERGLASS - TANGENT AND/OR DEADEND (SIZE AS REQ'D)	AS REQ'D	379		-
3	BOLT - MACHINE - 3/4" X (LENGTH AS REQ'D) - 1 SQ. CURVED RIBBED WASHER - 1 SPRING LOCK WASHER	AS REQ'D	392		-
4	INSULATOR - SUSPENSION - 12KV - CLEVIS - NON-PORC	17		S431650	1DES
5	CLLAMPS - DEAD END	20	STD. 741-744		-
6	PIN - INSULATOR - 1"	8		S632704	PS1
7	INSULATOR - POLY VICE-TOP - PIN TYPE - 12KV	8	750.2		
8	ARRESTER - LIGHTNING (12KV)	7		S113248	LA12
9	LIGHTNING ARRESTER COVER	7		S289630	
10	BRACKET - CUTOUT/ARRESTER - FOR CROSSARM MOUNTING	7		S166070	LA/B-S
11	FLEXIBLE ARRESTER GROUND STRAP	7		S698754	LAGND
12	CONNECTORS - WIRE (SIZE AS REQ'D)	AS REQ'D	STD. 783-787		-
13	#4 CU SOLID GROUND WIRE - PVC COVERED	36'		S812490	4POLY
14	STRAP - 3/8" - GALVANIZED	AS REQ'D		S697304	-
15	SCREW - SELF-TAPPING	AS REQ'D		S618082	-
16	CONNECTOR - SPLIT BOLT - BRONZE - 1/2" X 13	AS REQ'D		S262560	SPCONN
17	SIGN - HIGH VOLTAGE	AS REQ'D	STD. 208		-
18	STIRRUP (SIZE AS REQ'D)	7	STD. 788		-
19	HOTLINE CLAMP	7		S227680	-
20	MOUNTING BRACKET - SWITCH/CUTOUT - 18'-0" - ALUMINUM - (B) PAIR	1		S167348	18VRSB
21	SWITCH - BYPASS	3		S706944	BYPASS
22	LUG - BRONZE - CABLE TAP	12		S471296	TL6
23	BOLT - MACHINE - 1/2" X 2-1/2" - S/S W/FLAT - RD & LOCK WASHER	12	-		-
24	WIRE - POLY COVERED - COPPER - 1/0	AS REQ'D	718	S812102	OW1/0
25	BLADE - DISCONNECT CUTOUT	3	STD. 1212		-
26	CUTOUT COVER	3	STD. 1640		-
27	BRACKET - S/S - 2" X 3"	3		S166072	-

TABLE OF CONTENTS

© 1998 - 2018 San Diego Gas & Electric Company. All rights reserved. Removal of this copyright notice without permission is not permitted under law.

REV	CHANGE	BY	DSGN	APPV	DATE	REV	CHANGE	BY	DSGN	APPV	DATE
C						F					
B	EDITORIAL CHANGES	GW	JS	MDJ	3/1/2018	E					
A	EDITORIAL CHANGES	JBH	JBH	MDJ	8/11/2016	D					

BILL OF MATERIAL:

ITEMS	DESCRIPTION	QUANTITY	CONSTR. STD OR PAGE NO.	STOCK NUMBER	ASSEMBLY UNITS
28	BOLT - MACHINE - 1/2" X 1-1/2" - S/S - W/1 ROUND & 1 LOCK WASHER	6	-	-	-
29	REGULATOR - STEP VOLTAGE 1ϕ	3	STD. 1311		-
30	BOLT - MACHINE - 1/2" X 3" - S/S - W/1 FLAT ROUND & 1 BELLVILLE WASHER	12	-	-	-
31	WIRE - COPPER - (SIZE AS REQ'D WITH MINIMUM SIZE EQUAL TO LINE CONDUCTOR AMPACITY, OR GREATER)	AS REQ'D	-	S813568	BS1/0
32	TERMINAL - COMPRESSION - COPPER	AS REQ'D	-		-
33	PLATFORM - REGULATOR - 18'-0" - ALUMINUM (B)(E)	1	-	S543330	18VRPF
34	REGULATOR BUSHING/LA COVER	3	-	S289618	BCVREG
35	BRACKET - CONDUIT - STANDOFF	2	-	S167184	-
36	CHANNEL - 1-5/8" X 1-5/8" - BACK-TO-BACK - GALVANIZED	10'	-	-	-
37	NUT STUD - 1/2" X 1-3/8"	AS REQ'D	-	S507000	-
38	NUT - HEX - S/S - 1/2"	AS REQ'D	-	S550536	-
39	WASHER - S/S SPRING 1/2"	AS REQ'D	-	S796944	-
40	ANTENNA - SCADA - COMMUNICATION - BROADBAND & CONNECTORS	1	-	S109570	ANT
41	CABLE - FLEXABLE - 1/2" - COAXIAL - SCADA ANTENNA	25'	-	S191906	ANTCAB
42	BRACKET - LADDER ARM	4	-	S167184	LA-ARM
43	NIPPLE - PIPE - 2" X 6" - GALVANIZED	1	-	S500960	-
44	CLAMP - PIPE - STEEL - GALVANIZED - UNISTRUT - 2"	AS REQ'D	-	S229536	CL-2IN
45	CONDUIT - PVC - SCHEDULE 40 - 2" X 10'	3	-	S251296	S40-2"
46	CONDUIT - PVC - SCHEDULE 40 - 3" X 10'	1	-	S251360	S40-3"
47	CLAMP - PIPE - STEEL - GALVANIZED - UNISTRUT - 2"	AS REQ'D	-	S229632	CL-3IN
48	CABINET - RADIO ENCLOSURE (I)	1	-	-	-
49	RADIO - SPREAD SPECTRUM - MODEL 9810 (I)	1	-	S749504	SSTRAN
	OR				
	TRANSCEIVER - FIXED CHANNEL - MODEL 9710 (I)	1	-	S749500	SOTRAN
50	PADLOCK - SCHLAGE ELECTRIC SERIES (I)	4	-	S514848	-
51	CONDUIT - LIQUIDTITE - 1/2" (I)	AS REQ'D	-	-	-
52	DECAL "SCADA" "INFORM SCO UPON ENTRY" (I)	1	-	S301934	-
53	LADDER SAFETY SUPPORT BRACKET	1	-	S166884	LSBRKT
54	GROUND ROD - 5/8" X 8' - COPPER WELD	2	-	S603072	-
55	COPPER BONDED GROUND CONNECTOR	2	-	S259010	-

TABLE OF CONTENTS

© 1998 - 2018 San Diego Gas & Electric Company. All rights reserved. Removal of this copyright notice without permission is not permitted under law.

REV	CHANGE	BY	DSGN	APPV	DATE	REV	CHANGE	BY	DSGN	APPV	DATE
C						F					
B	EDITORIAL CHANGES	GW	JS	MDJ	3/1/2018	E					
A	EDITORIAL CHANGES	JBH	JBH	MDJ	8/11/2016	D					

Indicates Latest Revision | Completely Revised | New Page | Information Removed

SDG&E ELECTRIC OVERHEAD CONSTRUCTION STANDARD

VOLTAGE REGULATOR STATION, WYE,
12KV, PLATFORM MOUNTED, SCADA CONTROLLED

OH 1356.4

TABLE OF CONTENTS

INSTALLATION:

A. CAUTION: WHEN CONNECTING A STATION, REGULATORS MUST BE ON NEUTRAL. CLOSE CUTOUT TO SL BUSHING BEFORE CLOSING ASSOCIATED BYPASS DISCONNECT. WHEN DISCONNECTING A STATION, PUT REGULATORS ON NEUTRAL "HAND CONTROL/MANUAL" AND OPEN BYPASS DISCONNECT BEFORE OPENING CUTOUT TO SL BUSHING. THIS AVOIDS A SERIOUS FAULT CONDITION.

(B) BEFORE BOLTING PLATFORM OR BY-PASS SWITCH MOUNTING ARMS TO POLE, SLIDE ALL REGULATOR, SWITCH AND CUTOUT MOUNTING BOLTS INTO CHANNEL. INSTALL HORIZONTAL PLATFORMS BRACES TO PLATFORM BEFORE SETTING REGULATORS. SECURE REGULATORS TO PLATFORM AFTER HORIZONTAL PLATFORM BRACES ARE SECURE.

(C) THIS CONSTRUCTION WILL BE BUILT ON THE APPROPRIATE CLASS OF STEEL POLES AND 30' OF TRUCK ACCESS MUST BE MAINTAINED ON SWITCH SIDE OF STRUCTURE.

(D) COIL ANY EXCESS CONTROL CABLE AND ATTACH TO REGULATOR POLE MOUNT BRACKET WITH PLASTIC TIES.

(E) WHEN BOLTING PLATFORM COMPONENTS INTO AN ASSEMBLY, PLACE BELLVILLE WASHERS UNDER NUTS.

F. PHASE I.D. REQUIRED.

(G) REGULATOR TANKS SHOULD BE PERMANENTLY GROUNDED.

(H) WHEN USING COVERED WIRE A VISE-TOP WILL BE USED WITH NYLON JAWS. WHEN USING ALUMINUM WIRE A VISE-TOP WILL BE USED WITH ALUMINUM JAWS. WHEN USING COPPER WIRE A VISE-TOP WILL BE USED WITH BRONZE JAWS. THERE ARE NO EXCEPTION TO THESE RULES.

(I) CIRCUIT LINE CAN BE TANGENT OR DEAD END CONSTRUCTION.

(J) CONTROLLER TO BE MOUNTED 10 FEET FROM GROUND LEVEL TO BOTTOM OF CONTROLLER WHEN NO SUBJECT TO TRAFFIC CONTACT. IF VULNERABLE TO VEHICLE DAMAGE, MOUNT CONTROLLER 13'-6" FROM GROUND LEVEL TO BOTTOM OF CONTROLLER.

NOTES:

(I) THESE ITEMS SUPPLIED BY SCADA PROJECT CREW (KEARNY). ANTENNA, RADIO AND CONTROLLER CONNECTIONS TO BE MADE BY KEARNY CREW.

(II) CONTROLS WILL BE MOUNTED BY KEARNY SCADA CREW.

(III) NEUTRAL MUST BE CONTINUOUS TO SUBSTATION.

(IV) CLIMBING SPACE MUST BE MAINTAIN.

REFERENCE:

a. FOR BONDING REQUIREMENTS - SEE STANDARD 1003.

b. REGULATOR TANKS SHALL BE PERMANENTLY GROUNDED. FOR GROUNDING METHOD AND APPLICATION, SEE STANDARD 1002.

(c) FOR MININUM CASE CLEARANCE ABOVE GROUND, SEE G.O. 95 RULE 58.1-B. (2)

© 1998 - 2018 San Diego Gas & Electric Company. All rights reserved. Removal of this copyright notice without permission is not permitted under law.

REV	CHANGE	BY	DSGN	APPV	DATE	REV	CHANGE	BY	DSGN	APPV	DATE
C						F					
B	EDITORIAL CHANGES	GW	JS	MDJ	3/1/2018	E					
A	EDITORIAL CHANGES	JBH	JBH	MDJ	8/11/2016	D					

Indicates Latest Revision | Completely Revised | New Page | Information Removed

SDG&E ELECTRIC OVERHEAD CONSTRUCTION STANDARD

SHEET 5 OF 5

VOLTAGE REGULATOR STATION, WYE,
12KV, PLATFORM MOUNTED, SCADA CONTROLLED

OH 1356.5

PAGE	SUBJECT
1401	TABLE OF CONTENTS
1402	STANDARD JOINT CABLE POLE RISER POSITIONS USING LADDER ARM BRACKETS AND RISER(S)
1403	POLE QUADRANT AND RISER IDENTIFICATION
1404	CABLE POLE RISER INSTALLATION
1406	GENERAL INFORMATION - 12.47KV & BELOW CABLE POLES
1414	0-750V UNDERGROUND SERVICE FROM AN OVERHEAD LINE
	CABLE POLE CONSTRUCTION
1418	PRIMARY CABLE POLE CONSTRUCTION, LINE AND BUCK
1435	CABLE POLE MVI / MVS 200 / 600 AMP CABLE POLE APPLICATION
1440	12.47KV AND BELOW CROSSARM CABLE POLE, 3 PHASE, I/C PER PHASE, NON-PORCELAIN TERMINATION
1442	THREE-PHASE, CABLE POLE, 12KV, NON-PORCELAIN 900 AMP DISCONNECT
1444	POLE TOP SWITCH 12KV RISER LOADBREAK TYPE SINGLE CIRCUIT
1447	12.47KV AND BELOW CABLE POLE, 3 PHASE, 1/C PER PHASE, ALLEY ARM CONSTRUCTION
1451	12.47KV AND BELOW DEADEND CABLE POLE, 6 OR 7 OH CONDUCTORS, 1 OR 2 TERMINALS PER CONDUCTOR, HOOKSTICK SWITCHED
1452	ELASTIMOLD MVR SWITCH AND SCADA 651R2 CONTROLLER CABLE POLE

MAIN TABLE OF CONTENTS

REV	CHANGE	DRWN	BY	CHKD	APVD	DATE
G	REVISED TO 3D FORMAT	GLC	JIK	-	-	01/27/2022
F	EDITORIAL CHANGES	EDM	DWC	JES	CZH	03/09/2020
E	EDITORIAL CHANGES	-	MRF	JES	CZH	07/16/2019

SDG&E

A Sempra Energy utility®

© 1998 - 2022 San Diego Gas and Electric Company. All rights reserved. Removal of this copyright notice without permission is not permitted under law.

SDG&E ELECTRIC OVERHEAD CONSTRUCTION STANDARDS

CABLE POLES
TABLE OF CONTENTS

SCALE: NOT TO SCALE

DRAWING NO: OH1401.1

SHEET: 1 OF 1

X Indicates Latest Revision | Completely Revised | New Page | Information Removed

SCOPE: THIS STANDARD SHOWS NORMAL CABLE POLE RISER POSITIONS FOR SDG&E AND COMMUNICATIONS COMPANIES.

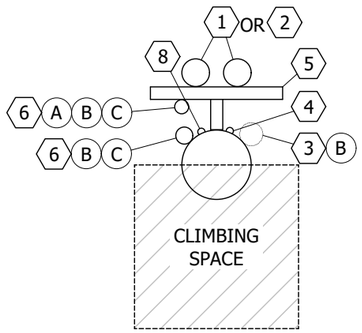

FIGURE 1
DEADEND OR
Ⓥ THROUGH CONSTRUCTION
MULTIPLE RISER

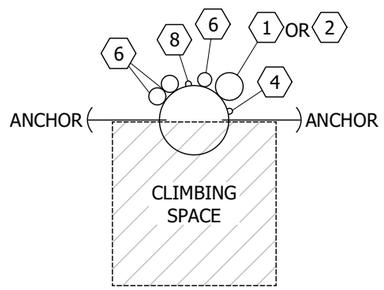

FIGURE 2
DEADEND CONSTRUCTION
SINGLE POWER RISER

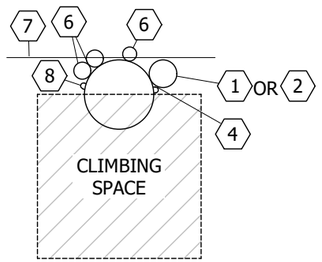

FIGURE 3
THROUGH CONSTRUCTION
SINGLE POWER RISER

TABLE 1:

TITLE	
ITEM	**DESCRIPTION**
1	SDG&E PRIMARY RISER
2	SDG&E SECONDARY RISER
3	SDG&E EXISTING RISER
4	SDG&E GROUND
5	BRACKET, LADDER ARM ASSEMBLY
6	COMMUNICATION RISER STATION
7	COMMUNICATION TANGENT THRU POSITION
8	COMMUNICATION GROUND

INSTALLATION:

Ⓐ COMMUNICATIONS ONLY POINT OF ATTACHMENT FOR LADDER ARM BRACKET CONSTRUCTION SHALL BE ON THE BACKSIDE OF LADDER ARM BRACKET ASSEMBLY. GALVANIZED UNISTRUT PIPE CLAMPS SHALL BE USED TO SECURE THE CONDUIT. COMMUNICATIONS MAY ATTACH ON THE BACK OF THE LADDER ARM ASSEMBLY ALONGSIDE SDG&E'S RISER. LADDER ARMS MAY BE INSTALLED BY COMMUNICATIONS COMPANY PROVIDED THEY ARE INSTALLED PER SDG&E CONSTRUCTION STANDARDS AND MEET SDG&E MATERIAL SPECIFICATIONS.

Ⓑ FOR NEW CONSTRUCTION WITH AN EXISTING SDG&E RISER ON THE POLE (FIGURE 3), ONE THREE-INCH RISER MAX. ON THE POLE AND ONE THREE-INCH RISER MAX. ON THE BACKSIDE OF THE LADDER ARM BRACKET ARE PERMITTED BACK TO BACK.

Ⓒ WHEN A LADDER ARM IS EXISTING, AND THE BACK OF LADDER ARM POSITIONS AND POLE POSITIONS ON COMMUNICATIONS SIDE OF POLE ARE OCCUPIED, ADDITIONAL COMMUNICATIONS RISERS MUST BE PLACED ON ANOTHER POLE.

BILL OF MATERIALS: NONE

NOTES:

I. 1/2 POLE CLIMBING SPACE APPLIES TO A LEVEL 4 FEET BELOW THE LOWEST LEVEL OF FACILITIES. COMMUNICATIONS, SECONDARY, PRIMARY, ETC., SEE OVERHEAD STANDARD SECTION 200 FOR CLIMBING SPACE REQUIREMENTS.

II. CHANGES TO THESE STANDARD RISER POSITIONS MUST NOT REDUCE THE CLIMBING SPACE TO LESS THAN 1/2 POLE.

III. CONDUIT RISER AT BASE OF POLE NOT TO INFRINGE ON CURB OR SIDEWALK POSITIIONS.

IV. SPARE CONDUITS ARE NOT CONSIDERED AS RISERS.

Ⓥ NEW CONSTRUCTION WITH EXISTING SDG&E RISER.

REFERENCE:

a. PVC RISERS ARE NOT PERMITTED WITHIN THE CLIMBING SPACE PER G.O. 95 RULE 22.2C.

b. NO C.A.T.V. OR TELCO JUMPERS ALLOWED IN CLIMBING SPACE PER G.O. 95 RULE 84.7.

c. SEE OVERHEAD STANDARDS SECTION 200 FOR ALLOWABLE G.O. 95 CLIMBING SPACE OBSTRUCTIONS.

d. SEE OH363UG4205 FOR INSTALLATION OF POLE STEPS.

e. SEE OH1403UG4203 FOR POLE QUADRANT AND RISER IDENTIFICATION.

f. SEE STANDARD OH1404UG4204 WHEN INSTALLING A SINGLE RISER, MODIFYING EXISTING CABLE POLE TO INCLUDE SECOND RISER OR FOR MULTIPLE CONDUIT RUNS AND JOINT POLE INSTALLATION.

g. SEE UG4620 FOR TELECOMMUNICATION INSTALLATION.

TABLE OF CONTENTS

REV	CHANGE	DRWN	BY	CHKD	APVD	DATE
D	REVISED TO 3D FORMAT	GLC/DV	JIK	-	-	01/27/2022
C	DRAWING UPDATE	EDM	JAC	GLW	CZH	02/10/2021
B	DRAWING UPDATE	PEI	-	-	-	02/18/2019

SDG&E ELECTRIC OVERHEAD AND UNDERGROUND CONSTRUCTION STANDARDS

STANDARD JOINT CABLE POLE RISER POSITIONS USING LADDER ARM BRACKETS AND SINGLE RISER

SCALE: NOT TO SCALE

DRAWING NO: OH1402.1 UG4202.1

SHEET: 1 OF 1

© 1998 - 2022 San Diego Gas and Electric Company. All rights reserved. Removal of this copyright notice without permission is not permitted under law.

Indicates Latest Revision | Completely Revised | New Page | Information Removed

TABLE OF CONTENTS

SCOPE: THIS STANDRD SHOWS CABLE POLE RISER LOCATIONS, SDGE QUADRANT AND SIGNS FOR MARKING POLE RISER INSTALLATIONS.

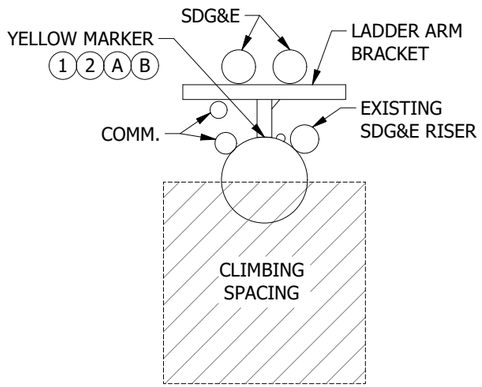

CONFIGURATION 1
DEAD END THROUGH CONSTRUCTION
MULTIPLE POWER RISER

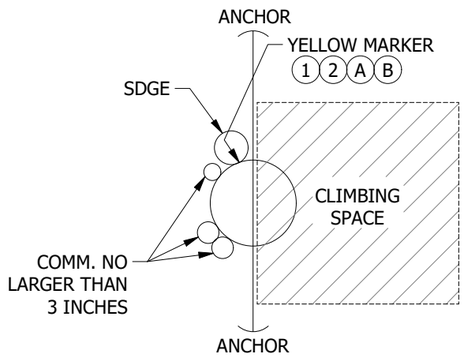

CONFIGURATION 2
DEAD END CONSTRUCTION
SINGLE POWER RISER

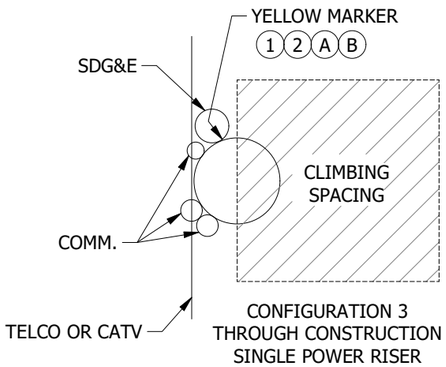

CONFIGURATION 3
THROUGH CONSTRUCTION
SINGLE POWER RISER

FIGURE 1
IDENTIFYING CABLE POLE RISER LOCATION

INSTALLATION:

(A) NAIL THE SIGN TO THE RISER POLE APPROXIMATELY 5 FEET ABOVE GROUND WITH THE PROPER SIDE SHOWING.

(B) USE ONE MARKER TO SHOW SDG&E RISER LOCATION.

BILL OF MATERIAL:

ITEM	DESCRIPTION	QUANTITY	STANDARD PAGE	STOCK NUMBER	DESIGN UNIT
1	MARKER, YELLOW PLASTIC WITH RAISED LETTERING STATING "PLACE-ELECTRIC RISER HERE 1" CLEAR-FROM-POLE SDG&E" ON ONE SIDE AND "PLACE ELECTRIC RISER HERE" FOLLOWED BY THREE ILLUSTRATIONS, THEN "SDGE" ON REVERSE SIDE. TWO 1/8" HOLES, APPROX. DIMENSIONS 3" X 9.25" X 1/16"	1	1403/4203	S476312	-
2	NAIL, ROOFING, 1-3/4", #11, 1/2" HEAD	AS REQ'D	-	S492192	-

NOTES: NONE

REFERENCE:

a. SEE OH1402UG4202 FOR STANDARD JOINT CABLE POLE RISER POSITIONS.

b. SEE OH1404UG4204 FOR CABLE POLE RISER POSITION.

SCOPE: THIS STANDARD SHOWS THE SIGN USED FOR MARKING POLE RISER INSTALLATIONS.

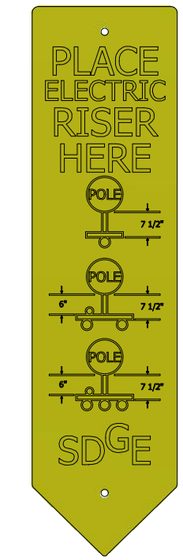

FIGURE 1
PREFERRED CONSTRUCTION (A)
FRONT

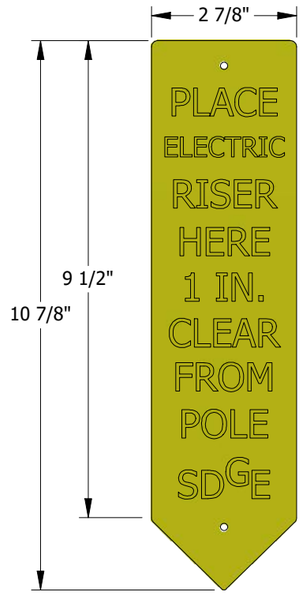

FIGURE 2
ALTERNATE CONSTRUCTION (B)
REVERSE

INSTALLATION:

(A) USE THE SIDE OF THE SIGN STATING "PLACE ELECTRIC RISER HERE" (FRONT), WHEN LADDER ARM BRACKETS ARE INSTALLED.

(B) FOR ALTERNATIVE CONSTRUCTION USE THE SIDE OF THE SIGN STATING "PLACE ELECTRIC RISER HERE 1-INCH CLEAR FROM POLE" REVERSE, WHEN A SINGLE CONDUIT IS INSTALLED.

C. REMOVE SIGN WHEN THE POLE RISER(S) IS INSTALLED.

BILL OF MATERIAL: NONE

NOTES:

I. SIGN IS AVAILABLE TO MARK SDG&E RISER LOCATIONS ON CABLE. THE SIGN STOCK NUMBER S476312 IS MADE OF FLEXIBLE PLASTIC, WITH RAISED LETTERING ON EACH SIDE. SIGNS ARE TO BE ATTACHED TO POLES WITH 1 3/4 INCH NAILS STOCK NUMBER S492192.

II. "PLACE ELECTRIC RISER HERE SHOWING 3 POLE RISER POSITIONS, SDG&E" IS PRINTED ON FRONT SIDE.

III. "PLACE ELECTRIC RISER HERE 1-INCH CLEAR FROM POLE, SDG&E" ON THE REVERSE SIDE.

IV. WHEN THE RISER LOCATION HAS BEEN DETERMINED, THE SIGNS ARE TO BE PLACED ON THE POLE, APPROXIMATELY 5 FEET ABOVE GROUND LEVEL BY THE CUSTOMER PROJECT PLANNER, PROJECT COORDINATOR, GENERAL FOREMAN, INSPECTOR OR WORKING FOREMAN SETTING THE POLE. RISER LOCATIONS ARE SHOWN ON OH1402UG4202.

REFERENCE:

a. SEE OH1403UG4203 FOR POLE QUADRANT AND RISER IDENTIFICATION.

b. SEE OH1404/UG4204 FOR CABLE POLE RISER INSTALLATION.

REV	CHANGE	DRWN	BY	CHKD	APVD	DATE
D	REVISED TO 3D FORMAT	AMP	JIK	-	-	04/14/2022
C	DRAWING UPDATE	EDM	JAC	GLW	CZH	02/10/2021
B	DRAWING UPDATE	PEI	-	-	-	02/18/2019

SDG&E ELECTRIC OVERHEAD AND UNDERGROUND CONSTRUCTION STANDARDS

POLE QUADRANT AND RISER IDENTIFICATION

SCALE: NOT TO SCALE

DRAWING NO: OH1403.1 UG4203.1

SHEET: 1 OF 1

© 1998 - 2022 San Diego Gas and Electric Company. All rights reserved. Removal of this copyright notice without permission is not permitted under law.

X Indicates Latest Revision | Completely Revised | New Page | Information Removed

SCOPE: THIS STANDARD SHOWS NEW CONSTRUCTION FOR SINGLE AND MULTIPLE CONDUIT RISERS

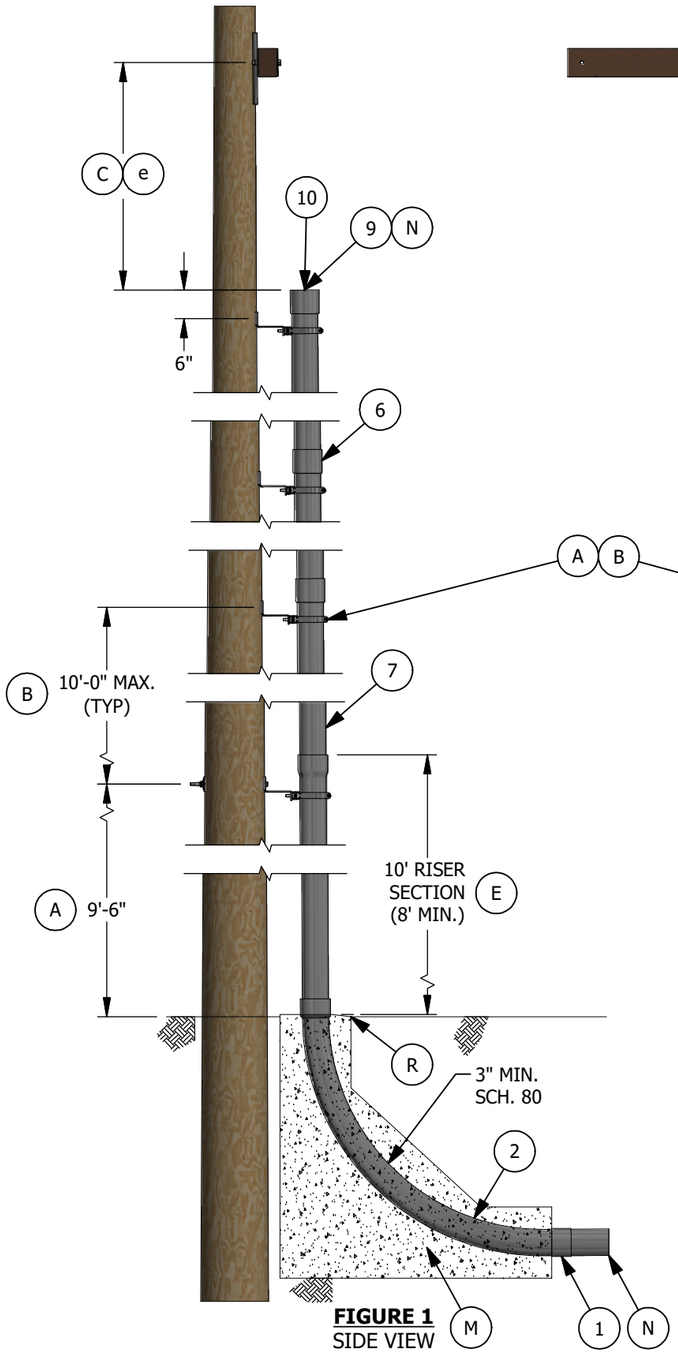

FIGURE 1
SIDE VIEW

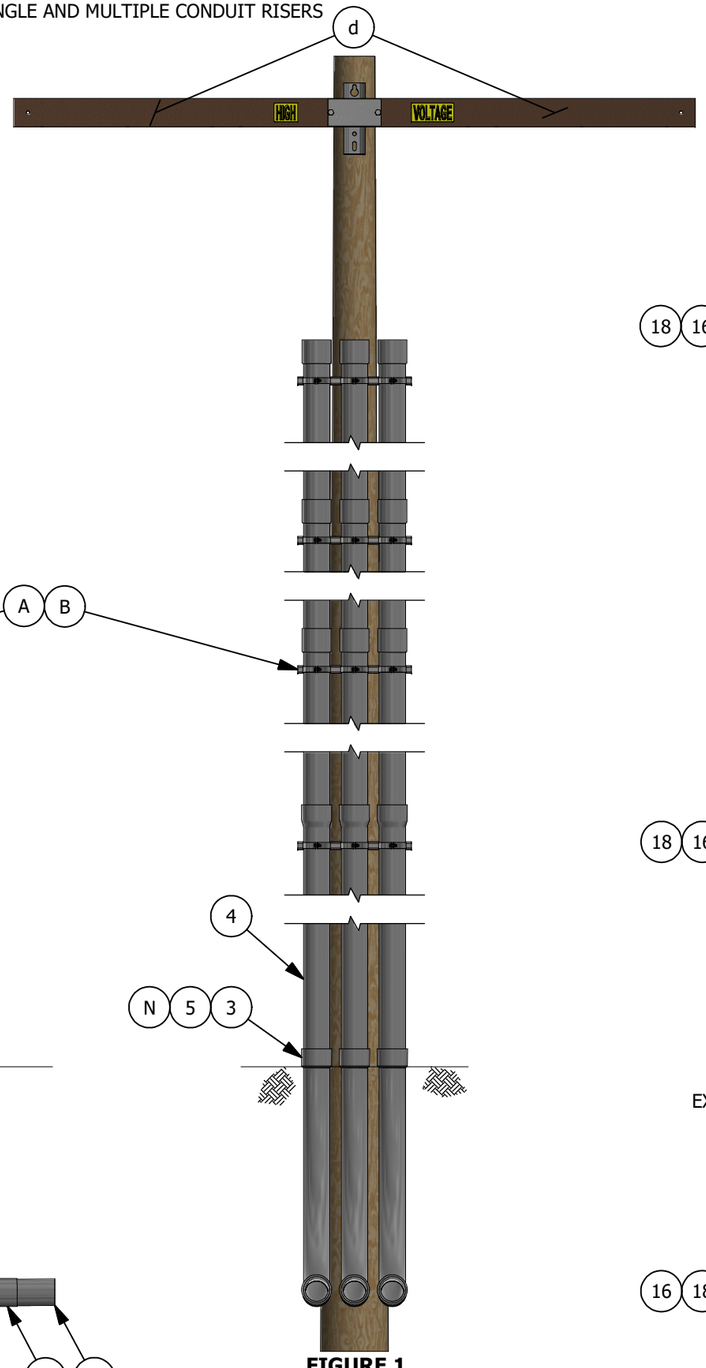

FIGURE 1
FRONT VIEW

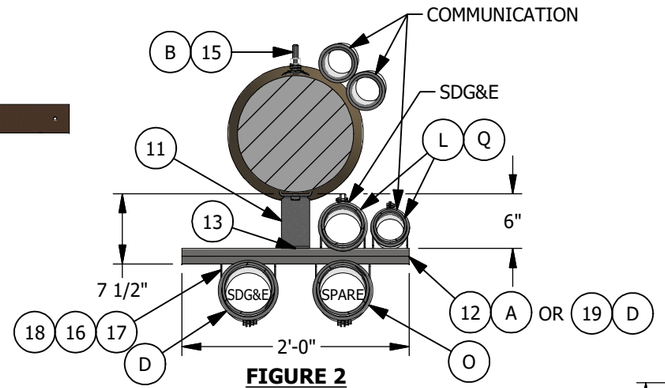

FIGURE 2
PREFERRED CONSTRUCTION FOR NEW SINGLE RISER WITH AND WITHOUT EXISTING RISER(S) ON POLE
G

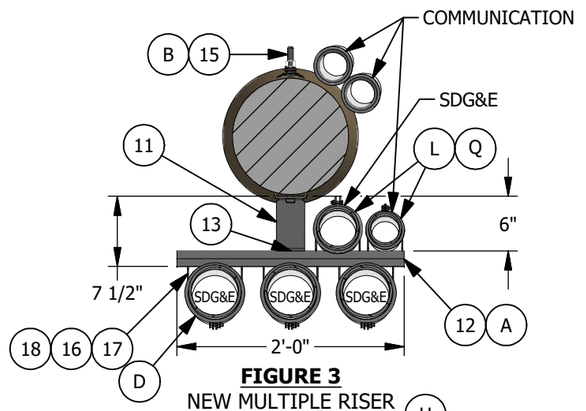

FIGURE 3
NEW MULTIPLE RISER CONSTRUCTION
H

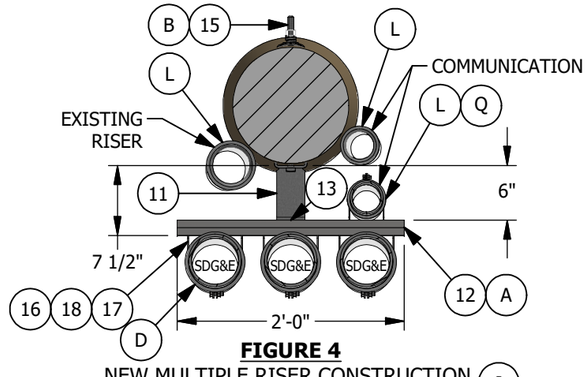

FIGURE 4
NEW MULTIPLE RISER CONSTRUCTION WITH RISER(S) ON POLE
J

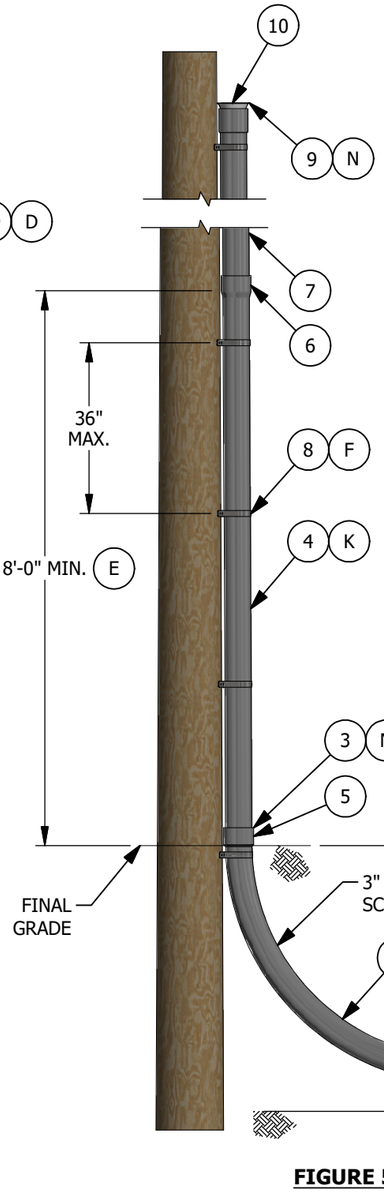

FIGURE 5
ALTERNATE NEW CONSTRUCTION FOR ONE RISER UP TO 3-INCH CABLE POLE
K

TABLE OF CONTENTS

REV	CHANGE	DRWN	BY	CHKD	APVD	DATE
D	REVISE TO 3D FORMAT	DV	JIK	-	-	11/11/2021
C	FORMATTING	EDM	JIK	-	-	09/16/2021
B	DRAWING UPDATE	PEI	-	-	-	02/18/2019

SDG&E
A Sempra Energy utility

SDG&E ELECTRIC OVERHEAD AND UNDERGROUND CONSTRUCTION STANDARDS

CABLE POLE RISER INSTALLATION

SCALE: NOT TO SCALE

DRAWING NO: OH1404.1 UG4204.1

SHEET: 1 OF 3

© 1998 - 2021 San Diego Gas and Electric Company. All rights reserved. Removal of this copyright notice without permission is not permitted under law.

X Indicates Latest Revision | Completely Revised | New Page | Information Removed

TABLE OF CONTENTS

INSTALLATION:

(A) MOUNT FIRST BRACKET LADDER ARM NO LOWER THAN 9'-6". IF THE FIRST BRACKET EXTENDS TOWARD A STREET OR DRIVEWAY, OFFSET THE UNISTRUT CHANNEL TO CLEAR LARGE VEHICLES.

(B) INSTALL AT LEAST ONE LADDER ARM BRACKET FOR EACH COUPLING JOINT OF CONDUIT - 10-FOOT MAX. DISTANCE BETWEEN BRACKETS. ALL LADDER ARM BRACKETS ARE TO BE ATTACHED TO THE POLE WITH BOLTS. NOT LAG SCREWS.

(C) REFER TO INDIVIDUAL CABLE POLE STANDARD FOR CORRECT MEASUREMENT.

(D) CENTER CONDUIT POSITION SHALL BE USED FOR MULTIPLE SDG&E SECONDARY RUNS OR SDG&E TELECOMMUNICATION CONDUIT. OTHER CONDUIT POSITIONS ON THE FRONT OF THE BRACKET SHALL BE USED FOR A SINGLE OR DOUBLE CONDUIT. THE 8 INCH UNISTRUT CHANNEL (ITEM 19) MAY BE INSTALLED FOR A SINGLE RISER WHERE NO COMMUNICATIONS IS ANTICIPATED.

(E) RISERS OF PLASTIC CONDUIT SHALL BE EPC-80 PVC SCHEDULE 80, FROM THE GROUND LINE TO A LEVEL NOT LESS THAN 8 FEET ABOVE THE GROUND LINE PER G.O. 95 RULE 54.6-E AND SDG&E CONDUIT SIZING REQUIREMENTS.

(F) FOR SINGLE RISER CONSTRUCTION, SEPARATION OF PIPE STRAPS (ITEM 8) SHALL BE 3 FEET MAXIMUM.

(G) USE FIGURE 2 FOR PREFERRED CONSTRUCTION FOR A SINGLE RISER

1. WHEN INSTALLING A SINGLE RISER.
2. WHEN ADDING A SINGLE RISER TO AN EXISTING RISER POLE. AN EXISTING SINGLE SDG&E RISER WOULD REMAIN ON THE POLE UNLESS IT IS CREATING A G.O. 95 INFRACTION. IF AN INFRACTION EXISTS, MOVE THE EXISTING RISER TO THE LADDER ARM BRACKET ALONG WITH THE NEW RISER SHOWN IN DETAIL "B".

(H) USE FIGURE 3:
WHEN INSTALLING MORE THAN ONE RISER.

(J) USE FIGURE 4:
WHEN ADDING A RISER(S) TO AN EXISTING SDG&E RISER POLE. AN EXISTING SINGLE SDG&E RISER WOULD REMAIN ON THE POLE UNLESS IT IS CREATING A G.O. INFRACTION. IF AN INFRACTION EXISTS, MOVE THE EXISTING RISER TO THE LADDER ARM BRACKET.

(K) USE FIGURE 5 FOR ALTERNATE CONSTRUCTION FOR A SINGLE RISER

1. FIELD CONDITIONS DO NOT ALLOW ROOM FOR LADDER ARM BRACKETS, (I.E. CONDUIT WOULD EXTEND INTO THE STREET, SIDEWALK, DRIVEWAY, ETC.). THIS INSTALLATION WOULD BE LIMITED TO ONE SDG&E RISER, UP TO 3" (NO OTHER RISER(S) LARGER THAN 3 INCH WOULD BE ON THE POLE). ONE HALF OF THE POLE MUST REMAIN CLEAR FOR CLIMBING SPACE AND G.O. REQUIREMENTS MUST BE FOLLOWED.
2. WHEN AN EXISTING RISER IS ALREADY ON THE POLE AND IT MAY BE RE-USED. (I.E. REMOVING A STREET LIGHT FUSE BOX FROM A POLE AND NEW CONDUIT WILL CONNECT TO THE EXISTING CONDUIT WHERE THE FUSE BOX WAS LOCATED, CUSTOMER RE-WIRE JOB, ETC.).

(L) ONE RISER ON THE POLE 3-INCH MAX. AND ONE RISER ON THE BACK SIDE OF THE LADDER ARM BRACKET 3-INCH MAX. ARE PERMITTED BACK-TO-BACK. A MAXIMUM OF TWO 4-INCH COMMUNICATIONS RISERS ARE PERMITTED ON THE BACK SIDE OF A LADDER ARM ASSEMBLY. THE ADJACENT POLE QUADRANT MUST BE VACANT TO INSTALL ANY 4 INCH RISER ON THE BACK OF THE LADDER ARM BRACKET, AND MUST REMAIN VACANT AFTER INSTALLATION.

(M) SLURRY ENCASEMENT IS REQUIRED AROUND THE ELBOW(S) FOR 5-INCH PRIMARY CONDUIT(S).

(N) EACH CONDUIT RUN BETWEEN SUBSTRUCTURES, PADS, CUSTOMER SERVICE RISERS, ETC., SHALL BE ONE SIZE CONDUIT CONTINUOUSLY, I.E. NO REDUCERS ARE ALLOWED WITHIN A CONDUIT RUN EXCEPT WHERE THE CONDUIT ENTERS A SUBSTRUCTURE OR ABOVE GROUND LEVEL ON A RISER POLE. IF A 3-INCH RISER IS ALREADY INSTALLED AND THE GRIP SIZE REQUIRES A 2-INCH RISER, A 2" TO 3" REDUCER MAY BE USED TO ACCOMMODATE THE GRIP. THE SAME WOULD APPLY TO OTHER SIZE CONDUITS AS HAS BEEN DESCRIBED. GRIPS ARE NOT REQUIRED ON SECONDARY RISERS.

(O) SPARE CONDUIT REFERS TO AN EMPTY CONDUIT THAT IS SPECIFIED BY THE PLANNER FOR OPERATING AND MAINTENANCE REQUIREMENTS.

INSTALLATION (CONT'D):

SPARE CONDUITS SHOULD BE CONSIDERED OR INSTALLED:

1. WHEN REQUESTED BY A CUSTOMER AT HIS OWN EXPENSE, BUT NOT TO EXCEED CONDUIT LIMITATIONS IN THIS STANDARD.
2. WHEN IT IS ECONOMICAL TO INSTALL CONDUIT IN LIEU OF CONCRETE, BUT NOT TO EXCEED
3. BASED ON FUTURE CONSTRUCTION LIMITATIONS SUCH AS BENEATH BRIDGES, ROADWAYS AND RAILROAD TRACKS, BUT NOT TO EXCEED CONDUIT LIMITATIONS IN THIS STANDARD.
4. IN CONVERSION OR NEW BUSINESS PROJECTS TO ALLOW EASY BYPASS OF THE POLE DURING REMOVAL. CONDUITS INSTALLED FOR THIS PURPOSE SHALL NOT GO UP THE POLE BUT, RATHER, SHALL EXTEND PAST THE POLE A MINIMUM OF 6 FEET.

P FUTURE SPARE CONDUIT REFERS TO AN EMPTY CONDUIT SPECIFIED BY EITHER THE PLANNER OR DISTRIBUTION PLANNING FOR AREAS WITH GROWTH POTENTIAL. FUTURE FEEDER CONDUIT SPECIFIED BY DISTRIBUTION PLANNING MUST BE SUPPORTED BY THE LONG TERM FEEDER ARRANGEMENT PLAN.

(Q) COMMUNICATIONS ONLY POINT OF ATTACHMENT FOR LADDER ARM BRACKET CONSTRUCTION SHALL BE ON THE BACK SIDE OF THE ARM BRACKET ASSEMBLY, (GALVANIZED UNISTRUT PIPE CLAMPS SHALL BE USED TO SECURE THE CONDUIT). COMMUNICATIONS MAY ATTACH ON THE BACK OF THE ASSEMBLY ALONGSIDE SDG&E'S RISER.

(R) SLOPE SLURRY ENCASEMENT 1/4-INCH ABOVE GRADE OF PAVED AREA TO DRAIN WATER AWAY FROM CONDUIT RISER.

BILL OF MATERIALS:

ITEM	DESCRIPTION	CONDUIT SIZE	AL CABLE	QUANTITY	STANDARD PAGE	STOCK NUMBER	DESIGN UNIT
1	COUPLING, 3" IPS DIRECT/ENCASED BURIAL	3"	-	AS REQ'D	-	S279904	-
	COUPLING, 4" DB/EB, PVC	4"	-	AS REQ'D	-	S279936	-
	COUPLING, 5" IPS, DIRECT/ENCASED BURIAL	5"	-	AS REQ'D	-	S280032	-
2	ELBOW, 3" SCH 80 PVC (CONDUIT RISER	3" - 36" R	-	AS REQ'D	-	S322472	3"CP-B
	CONDUIT RISER BEND, SCHEDULE 80 4"_48"	4" - 48" R	-	AS REQ'D	-	S322480	4"CP-B
	ELBOW, (CONDUIT RISER BEND) SCHEDULE 80,	5" - 48" R	-	AS REQ'D	-	S322488	5"CP-B
3	REDUCER, 4" X 3" SCH.80, SPIGOT TO SPIGOT	4" TO 3"	-	AS REQ'D	-	S573408	4-3RED
	REDUCER, 5" IPS TO 4" IPS, PVC SCHED	5" TO 4"	-	AS REQ'D	-	S573424	5-4RED
4	PVC SCHEDULE 80 3" W/CPLG	3"	-	AS REQ'D	-	S251552	S80-3"
	CONDUIT, PVC, SCH. 80, 4" X 10'	4"	-	AS REQ'D	-	S251584	S80-4"
	CONDUIT. 5" X 10' SCH. 80 PVC	5"	-	AS REQ'D	-	S251592	S80-5"
5	COUPLING, PVC, SCHEDULE 80, 3" IPS	3"	-	AS REQ'D	-	S280544	-
	COUPLING, 4" PVC SCH 80 SWEDGED, PER NEMA TC2	4"	-	AS REQ'D	-	S280576	-
	COUPLING, 5" SCH.80 PVC, SWEDGED	5"	-	AS REQ'D	-	S280592	-
6	COUPLING 3" PVC SCHEDULE 40, PER NEMA	3"	-	AS REQ'D	-	S280448	-
	COUPLING 4" SCHEDULE 40 PVC PER NEMA TC2	4"	-	AS REQ'D	-	S280480	-
	COUPLING, 5" PVC SCH 40, PER NEMA TC2.	5"	-	AS REQ'D	-	S280496	-
7	3" SCHEDULE 40 PVC	3"	-	AS REQ'D	-	S251360	S40-3"
	4" SCHEDULE 40 PVC	4"	-	AS REQ'D	-	S251392	S40-4"
	CONDUIT PVC 5 IN X 10FT SCH 40, WITH	5"	-	AS REQ'D	-	S251408	S40-5"
8	STRAP, CONDUIT, 3 INCH, 2-1/4 INCH DIAMETER	3"	-	AS REQ'D	-	S697920	-
	STRAP, CONDUIT,4IN, TWO 1/4IN DIAMETER	4"	-	AS REQ'D	-	S697952	-
	STRAP, PIPE, 5", TWO HOLE	5"	-	AS REQ'D	-	S697984	-
9	GRIP, CONDUIT RISER, CLOSED DOUBLE MESH 1-COND #2 SOLID, 2" CONDUIT, 1"-1.24"	3"	1/C#2 SOL	AS REQ'D	-	S393984 (N)	2G1#2A
	GRIP, CONDUIT RISER, CLOSED DOUBLE MESH 2 OR 3 COND #2 SOLID, 3" CONDUIT, 2"-2.49"	3"	2-1/C#2 SOL, 3-1/C#2 SOL	AS REQ'D	-	S394048 (N)	3G2#2A, 3G3#2A
	GRIP, 4" CONDUIT RISER, CLOSED SINGLE MESH FOR #2 SOLID CABLE.	4"	3-1/C#2 SOL	AS REQ'D	-	S394104 (N)	4G3#2A
	GRIP, CONDUIT RISER, CLOSED DOUBLE MESH 3-1COND #2 SOLID, 4" CONDUIT, 2.5"-2.99" ALSO 3-1COND 4/0 COPPER	4"	4/0	AS REQ'D	-	S394080 (N)	4G#2/0, 4G4/0C
	GRIP, 4" CONDUIT RISER, CLOSED SINGLE MESH FOR 350MCM CABLE.	4"	350 KCMIL	AS REQ'D	-	S394100 (N)	4G-350

REV	CHANGE	DRWN	BY	CHKD	APVD	DATE
D	REVISE TO 3D FORMAT	DV	JIK	-	-	11/11/2021
C	FORMATTING	EDM	JIK	-	-	09/16/2021
B	DRAWING UPDATE	PEI	-	-	-	02/18/2019

SDG&E
A Sempra Energy utility

© 1998 - 2021 San Diego Gas and Electric Company. All rights reserved. Removal of this copyright notice without permission is not permitted under law.

SDG&E ELECTRIC OVERHEAD AND UNDERGROUND CONSTRUCTION STANDARDS

CABLE POLE RISER INSTALLATION

SCALE: NOT TO SCALE

DRAWING NO: OH1404.2 UG4204.2

SHEET: 2 OF 3

X Indicates Latest Revision | Completely Revised | New Page | Information Removed

BILL OF MATERIALS: (CONT'D)

ITEM	DESCRIPTION	QUANTITY	CONDUIT SIZE	AL CABLE	STANDARD PAGE	STOCK NUMBER	DESIGN UNIT
9	GRIP, 5" CONDUIT RISER, CLOSED SINGLE MESH FOR 350MCM CABLE.	AS REQ'D	5"	350 KCMIL	-	S394102 (N)	5G-350
	GRIP, 5" CONDUIT RISER, CLOSED SINGLE MESH FOR 750MCM OR 500MCM CABLE.	AS REQ'D	5"	500 KCMIL 750 KCMIL	-	S394096 (N)	5G500C, 5G-750
	GRIP, 5" CONDUIT RISER, CLOSED SINGLE MESH FOR 1000 MCM CABLE.	AS REQ'D	5"	1000 KCMIL	-	S394098 (N)	5G1000
10	PROTECTOR, NYLON CABLE	AS REQ'D	-	-	-	S558720	-
11	BRACKET, CONDUIT STANDOFF, CONSTRUCTED	AS REQ'D	-	-	-	S167186 (X)(B)	LA-ARM
12	CHANNEL, 1-5/8" X 1-5/8" BACK TO BACK	AS REQ'D	-	-	-	S216702 (X)(B)	LA-ARM
13	NUT, STUD, 1/2" X 1-3/8"	AS REQ'D	-	-	-	S507000	-
14	2" UNISTRUT PIPE CLAMPS	AS REQ'D	-	-	-	S229536 (VI)	CL-2IN
15	BOLT, MACHINE, 5/8" X 16", GALV W/ NUT	AS REQ'D	-	-	OH390	S154912 (B)	-
	WASHER CURVED RIB, 3" X 3" W/11/16" HOLE FOR 5/8" BOLT HOT DIPPED GALVANIZED	AS REQ'D	-	-	OH390	S797792 (B)	-
	WASHER, 5/8", DOUBLE COIL SPRING, TYPE M-W, STEEL, TIN/ZINC COAT	AS REQ'D	-	-	OH390	S798560 (B)	-
16	CLAMP, PIPE, STEEL, GALV., UNISTRUT, 4"	AS REQ'D	-	-	-	S229664	CL-4IN
17	5" GALV. PIPE CLAMP	AS REQ'D	-	-	-	S229668	CL-5IN
18	CLAMP, PIPE, STEEL 3"	AS REQ'D	-	-	-	S229632	CL-3IN
19	CHANNEL, GALV., 8"	AS REQ'D	-	-	-	S216840 (D)	-

NOTES:

I. ALL CABLE POLE RISERS, PRIMARY AND SECONDARY SHALL BE 3 IN MINIMUM CONDUIT.

II. THIS CONSTRUCTION IS LIMITED TO A MAXIMUM OF FOUR SDG&E RISERS (NO MORE THAN TWO PRIMARY RISER).

III. WHEN POSSIBLE, RISER SHOULD BE INSTALLED ON THE SIDE OF THE POLE OPPOSITE TRAFFIC FLOW.

IV. SPARE CONDUITS SHALL BE CAPPED JUST ABOVE GROUND LEVEL TO PREVENT MOISTURE OR WIRE ENTRY AND KEEP DEBRIS OUT, SPARES ARE NOT TO BE CONSIDERED AS A RISER.

V. WHENEVER POSSIBLE, SINGLE RISES SHOULD BE INSTALLED AWAY FROM THE TRAFFIC TOWARD THE SIDEWALK.

(VI) NOT SHOWN ON FIGURES.

(X) THIS ITEM IS EXEMPT.

REFERENCE:

a. FOR POLE STEPS, SEE OH363UG4205.

b. FOR MATERIAL REQUIREMENTS, ETC., SEE UG3944.

c. FOR POSITIONING OF RISERS INVOLVING MORE THAN ONE UTILITY, SEE OH1402UG4202.

(d) FOR NON-PORCELAIN TERMINAL MOUNTING BRACKET INSTALLATION AND MATERIALS, SEE OH1407UG4207.

(e) FOR 0 - 750V UNDERGROUND SERVICE FROM AN OVERHEAD LINE, SEE OH1414UG4214.

f. FOR TELECOMMUNICATION INSTALLATION, SEE UG4620, UG4621, UG4622, UG4623, UG4624, UG4625, AND UG4626.

g. PVC RISERS ARE NOT PERMITTED WITHIN THE CLIMBING SPACE PER G.O. 95 RULE 22.2C.

(h) FOR DEPTH REQUIREMENTS, SEE UG3370.

TABLE OF CONTENTS

REV	CHANGE	DRWN	BY	CHKD	APVD	DATE
D	REVISE TO 3D FORMAT	DV	JIK	-	-	11/11/2021
C	FORMATTING	EDM	JIK	-	-	09/16/2021
B	DRAWING UPDATE	PEI	-	-	-	02/18/2019

SDG&E ELECTRIC OVERHEAD AND UNDERGROUND CONSTRUCTION STANDARDS

CABLE POLE RISER INSTALLATION

SCALE: NOT TO SCALE

DRAWING NO: OH1404.3 UG4204.3

SHEET: 3 OF 3

© 1998 - 2021 San Diego Gas and Electric Company. All rights reserved. Removal of this copyright notice without permission is not permitted under law.

X Indicates Latest Revision | Completely Revised | New Page | Information Removed

SCOPE: THIS STANDARD SHOWS GENERAL INFORMATION FOR CABLE POLES AT 12.47KV & BELOW.

ATTENTION

* NEW PRIMARY CABLE POLE INSTALLATIONS SHALL BE TRUCK ACCESSIBLE. EXISTING POLE LOCATIONS THAT ARE NOT TRUCK ACCESSIBLE CAN BE GRANDFATHERED BY DEVIATION.

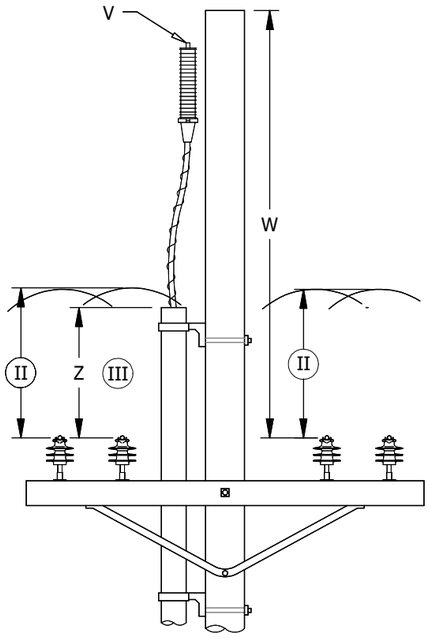

FIGURE 1
CONFIGURATION 1

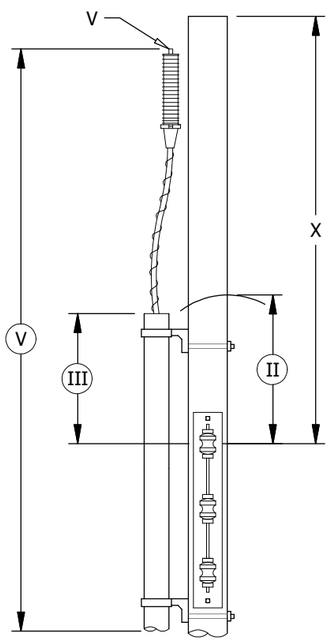

FIGURE 1
CONFIGURATION 2

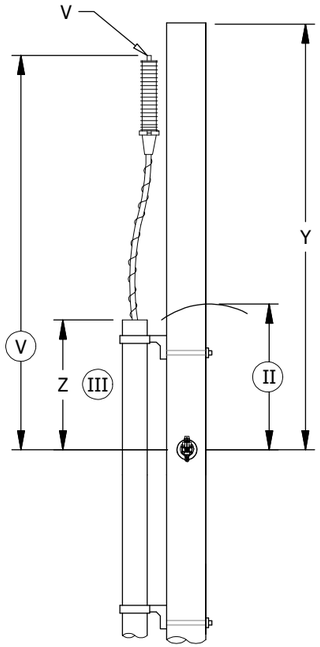

FIGURE 1
CONFIGURATION 3

TABLE 1

CLEARANCES						
VOLTAGE OF LEAD WIRES CONNECTED TO TERMINALS V (V) (I)	MINIMUM SEPARATION TO CONDUCTORS BELOW					
	SUPPLY ON CROSSARMS W (IN) (a)(b)			RACK CONSTRUCTION 0-750V X (IN) (c)	CABLE 0-750V Y (IN) (d)	COMMUNICATIONS CROSSARMS AND CABLE Z (IN) (e)
	0-750V	750-7,500V	7,500-20,000V			
0-750	24	--	--	72 UNGUARDED OR 48 WITH GUARD	72	36
750-7,500	48	48	--			48
7,500-20,000	48	48	48			60

INSTALLATION: NONE

BILL OF MATERIALS: NONE

NOTES:

(I) TERMINALS MAY BE BRACKET OR CROSSARM MOUNTED.
(II) 24-INCH MINIMUM RADIAL DIMENSION. (a)
(III) 18-INCH MINIMUM VERTICAL DIMENSION FROM CONDUIT EDGE OR LOWEST POINT OF CONDUCTOR LOOP. (a)
IV. USE THIS PAGE ONLY TO OBTAIN MINIMUM SEPARATIONS BETWEEN CONDUCTORS. DO NOT USE FOR CONSTRUCTION.
(V) 22'-6" MINIMUM TO GROUND.

REFERENCE:

(a) SEE G.O. 95 RULE 54.6F.
(b) SEE G.O. 95 TABLE 2, CASES 9, 10, 11.
(c) SEE G.O. 95 RULE 54.9E.
(d) SEE G.O. 95 RULE 54.10E
(e) SEE G.O. 95 RULE 92.1F3.

REV	CHANGE	DRWN	BY	CHKD	APVD	DATE
E	EDITORIAL CHANGES	EDM	MRF	GLW	KRG	06/27/2022
D	REVISED TO 3D FORMAT	AMP	JIK	-	-	01/27/2022
C	FORMATTING	EDM	JIK	-	-	09/16/2021

SDG&E ELECTRIC OVERHEAD AND UNDERGROUND CONSTRUCTION STANDARDS

GENERAL INFORMATION - 12.47KV & BELOW CABLE POLES

SCALE: NOT TO SCALE

DRAWING NO: OH1406.1 UG4206.1

SHEET: 1 OF 1

X Indicates Latest Revision | Completely Revised | New Page | Information Removed

© 1998 - 2022 San Diego Gas and Electric Company. All rights reserved. Removal of this copyright notice without permission is not permitted under law.

TABLE OF CONTENTS

SCOPE: THIS STANDARD SHOWS THE VARIOUS METHODS OF SECONDARY CONSTRUCTION WHEN UNDERGROUND CUSTOMERS ARE SERVED FROM OVERHEAD SECONDARY.



FIGURE 1
TERMINAL CONSTRUCTION (a)
ISOMETRIC VIEW

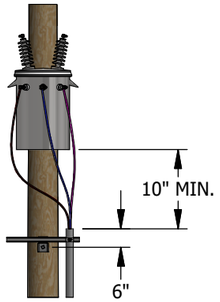

FIGURE 1
TERMINAL CONSTRUCTION (a)
FRONT VIEW

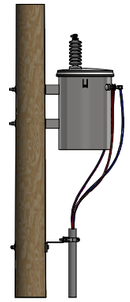

FIGURE 1
TERMINAL CONSTRUCTION (a)
SIDE VIEW

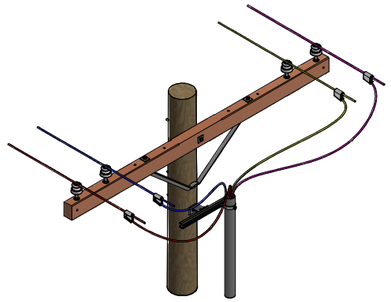

FIGURE 2
OPEN SECONDARY "AIR MAILING"
ISOMETRIC VIEW

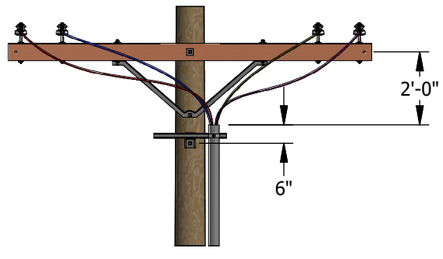

FIGURE 2
OPEN SECONDARY "AIR MAILING"
FRONT VIEW

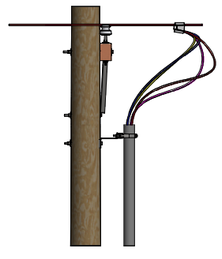

FIGURE 2
OPEN SECONDARY "AIR MAILING"
SIDE VIEW

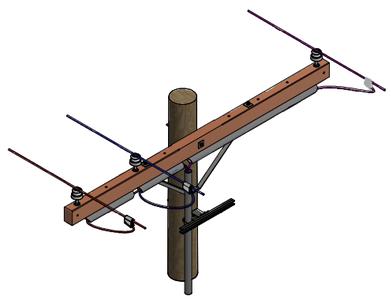

FIGURE3
CROSSARM CONSTRUCTION
#2 CABLE MAX.
ISOMETRIC VIEW

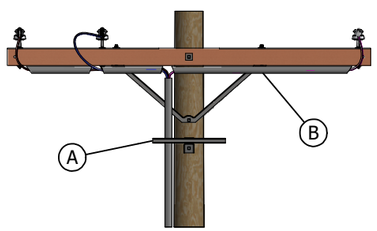

FIGURE 3
CROSSARM CONSTRUCTION
#2 CABLE MAX.
FRONT VIEW

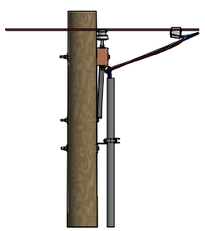

FIGURE 3
CROSSARM CONSTRUCTION
#2 CABLE MAX.
SIDE VIEW

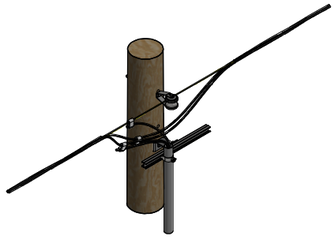

FIGURE 4
SECONDARY AERIAL CABLE
TANGENT CONSTRUCTION
ISOMETRIC VIEW

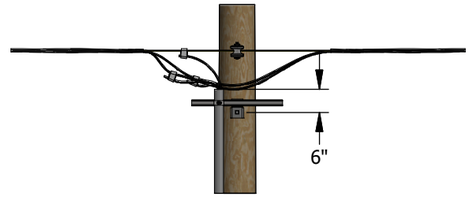

FIGURE 4
SECONDARY AERIAL CABLE
TANGENT CONSTRUCTION
FRONT VIEW

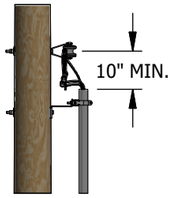

FIGURE 4
SECONDARY AERIAL CABLE
TANGENT CONSTRUCTION
SIDE VIEW

INSTALLATION:

(A) INSTALL CONDUIT ON THE BACK SIDE OF THE LADDER ARM BRACKET.

(B) INSTALL CABLE IN SCHEDULE 40 PVC UNDER ARM.

C. PVC RISER SHALL NOT BE INSTALLED IN THE CLIMBING SPACE. (b)

BILL OF MATERIALS: NONE

NOTES: NONE

REFERENCE:

(a) FOR RISER CONSTRUCTION, SEE OH1404UG4204.

(b) SEE G.O. 95, RULE 22.2 (C).

TABLE OF CONTENTS

REV	CHANGE	DRWN	BY	CHKD	APVD	DATE
D	REVISED TO 3D FORMAT	EDM	JIK	-	-	02/23/2022
C	FORMATTING	EDM	JIK	-	-	09/16/2021
B	DRAWING UPDATE	PEI	-	-	-	02/18/2019

SDG&E ELECTRIC OVERHEAD AND UNDERGROUND CONSTRUCTION STANDARDS

0-750V UNDERGROUND SERVICE FROM AN OVERHEAD LINE

SCALE: NOT TO SCALE

DRAWING NO: OH1414.1 UG4214.1

SHEET: 1 OF 1

© 1998 - 2022 San Diego Gas and Electric Company. All rights reserved. Removal of this copyright notice without permission is not permitted under law.

X Indicates Latest Revision | Completely Revised | New Page | Information Removed

SCOPE: THIS STANDARD TO BUILD A BUCK POSITION, 12.47KV AND BELOW, THREE-PHASE CABLE POLE WITH CUTOUT MOUNTED NON-PORCELAIN TERMINALS FOR #2/0 AND SMALLER UNDERGROUND CABLE IS TO BE USED ONLY WHEN NECESSARY TO AVOID THE SETTING OF AN ADDITIONAL POLE.

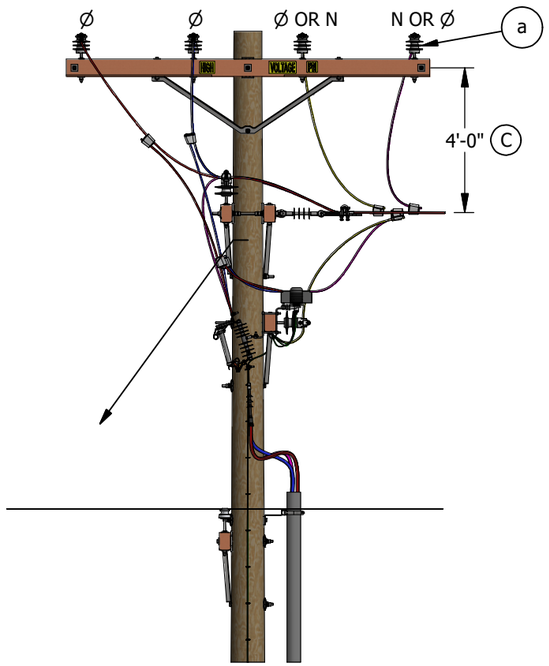

FIGURE 1
FRONT VIEW

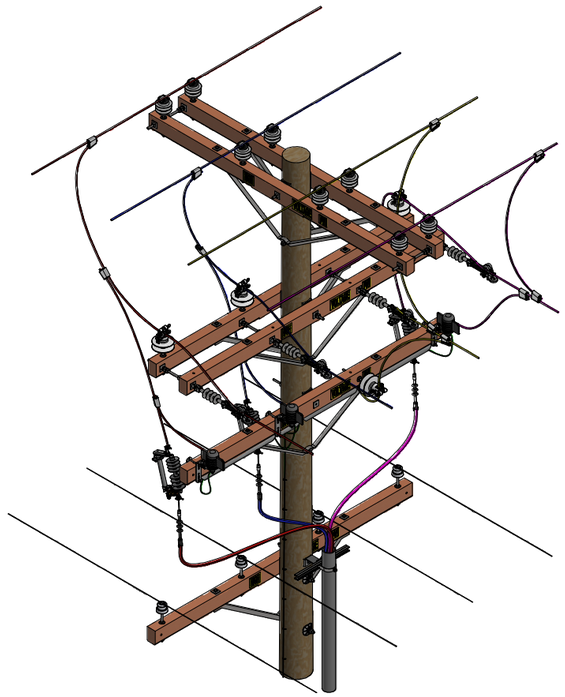

FIGURE 1
ISOMETRIC VIEW

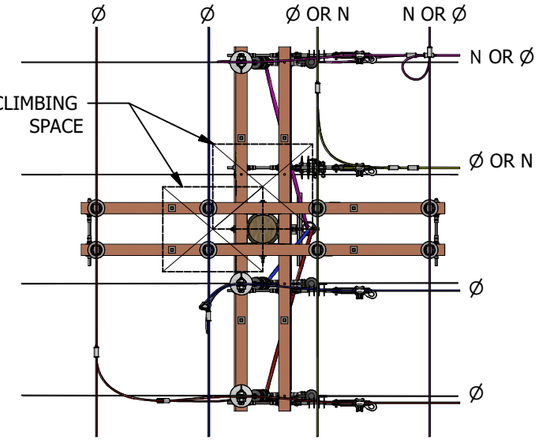

FIGURE 1
CLIMBING SPACE VIEW
PLAN VIEW

INSTALLATION:

A. THE CONSTRUCTION SHOWN BELOW THE BUCK ARM IS TYPICAL AND IS FOR ILLUSTRATION ONLY. FOR PROPER RISER, POTHEAD AND POTHEAD ARM CONSTRUCTION, SEE APPROPRIATE CABLE POLE STANDARDS IN THIS SECTION.

(B) TO MAINTAIN CLIMBING SPACE, BUCK ARM MINIMUM FOR THREE-PHASE CABLE POLE IS 12-FEET. BUCK ARM MINIMUM FOR SINGLE-PHASE CABLE POLE IS 10-FEET.

(C) A MINIMUM OF 48 INCHES MUST EXIST BETWEEN THE LINE ARM AND BUCK ARM TO MAINTAIN CLIMBING SPACE THROUGH THE BUCK ARM LEVEL AND UP TO THE LINE ARM LEVEL. (b)

BILL OF MATERIALS: NONE

NOTES: NONE

REFERENCE:

(a) ON ALL NEW CONSTRUCTION AND WHEN ADDING TO EXISTING CONSTRUCTION, NEUTRAL TO BE INSTALLED IN OUTSIDE PIN POSITION PER DM5124.

(b) SEE OH251.

TABLE OF CONTENTS

REV	CHANGE	DRWN	BY	CHKD	APVD	DATE
D	REVISED TO 3D FORMAT	EDM	JIK	-	-	04/12/2022
C	FORMATTING	EDM	JIK	-	-	09/16/2021
B	DRAWING UPDATE	PEI	-	-	-	02/18/2019

SDG&E
A Sempra Energy utility

SDG&E ELECTRIC OVERHEAD AND UNDERGROUND CONSTRUCTION STANDARDS

12.47KV AND BELOW CROSSARM CABLE POLE, THREE-PHASE NON-PORCELAIN TERMINALS, LINE AND BUCK

SCALE: NOT TO SCALE

DRAWING NO: OH1418.1 UG4218.1

SHEET: 1 OF 1

© 1998 - 2022 San Diego Gas and Electric Company. All rights reserved. Removal of this copyright notice without permission is not permitted under law.

X Indicates Latest Revision | Completely Revised | New Page | Information Removed

SCOPE: THIS STANDARD SHOWS CONSTRUCTION OF A MOLDED VACUUM INTERRUPTER (MVI) ON A DEADEND OR TANGENT CABLE POLE UTILIZING 200A OR 600A CABLE.

ATTENTION:

* NEW PRIMARY CABLE POLE INSTALLATIONS SHALL BE TRUCK ACCESSIBLE. EXISTING CABLE POLE LOCATIONS THAT ARE NOT TRUCK ACCESSIBLE CAN BE GRANDFATHERED BY DEVIATION.

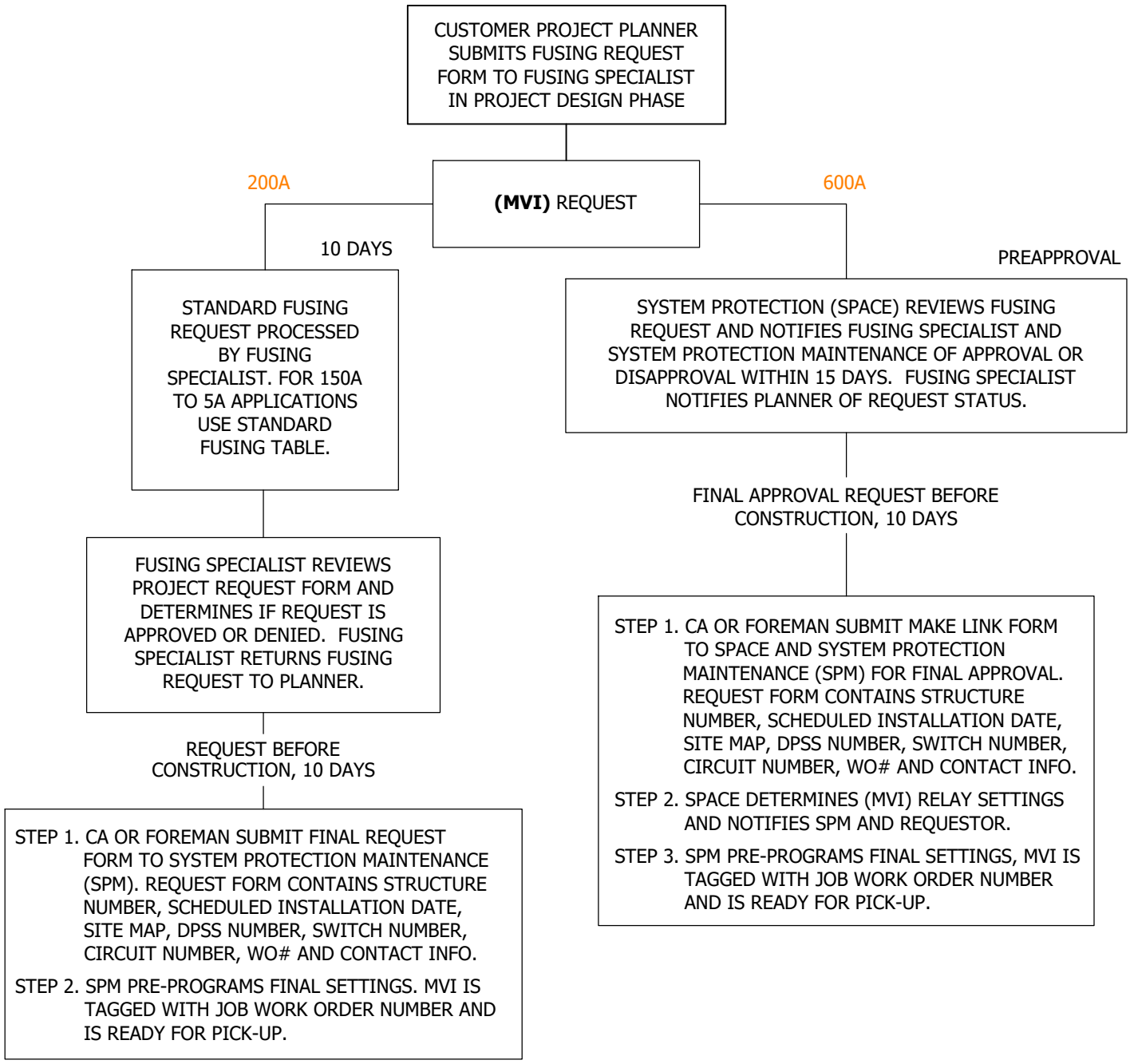

FIGURE 1
FUSING WORKFLOW CHART

© 1998 - 2022 San Diego Gas & Electric Company. All rights reserved. Removal of this copyright notice without permission is not permitted under law.

REV	CHANGE	DR	BY	DSN	APV	DATE	REV	CHANGE	DR	BY	DSN	APV	DATE
E	DRAWING UPDATE	PEI	-	-	-	02/18/2019	H	DRAWING UPDATE	EDM	DWC	GLW	KRG	05/10/2022
D	COMPLETELY REVISED	-	JCL	TR	MJC	10/05/2012	G	BILL OF MATERIALS UPDATE	EDM	DEC	JES	CZH	02/08/2021
C	COMPLETELY REVISED	-	JC	TR	MDC	09/27/2012	F	TABLE UPDATE	-	JAC	JES	CZH	11/12/2019

TABLE OF CONTENTS

TABLE OF CONTENTS

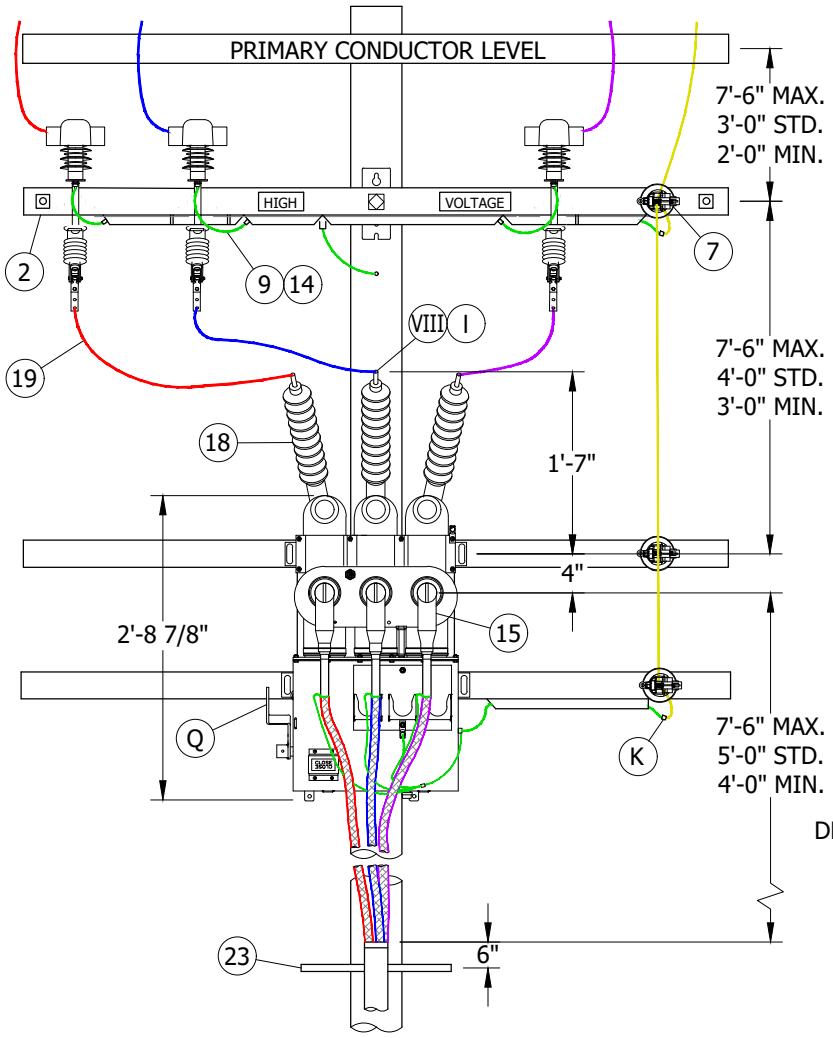

FIGURE 2
FRONT VIEW (XII)

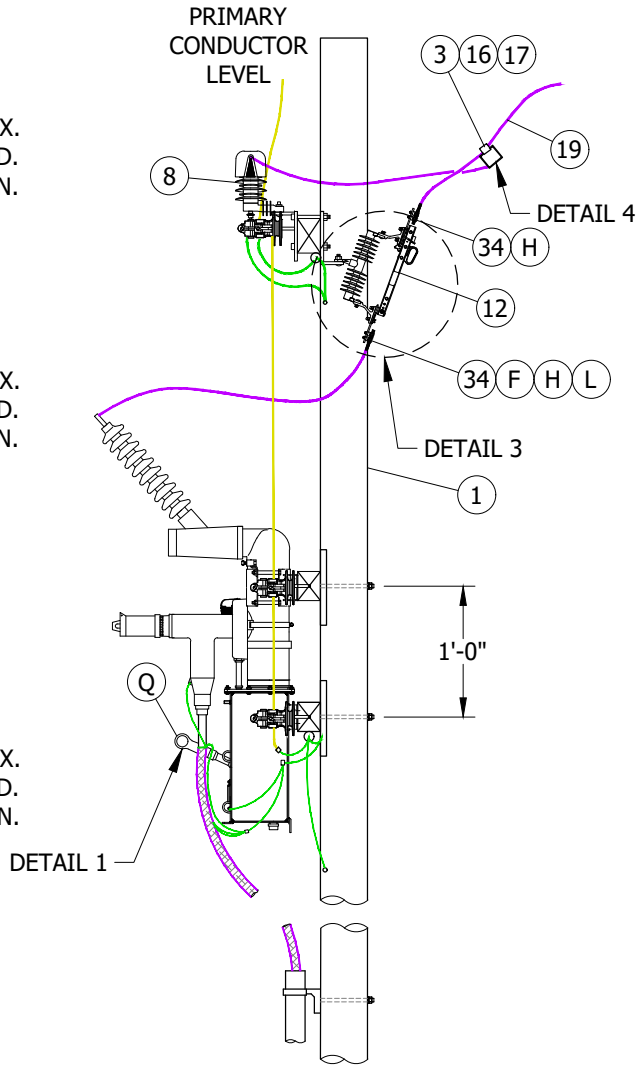

FIGURE 2
SIDE VIEW (XII)

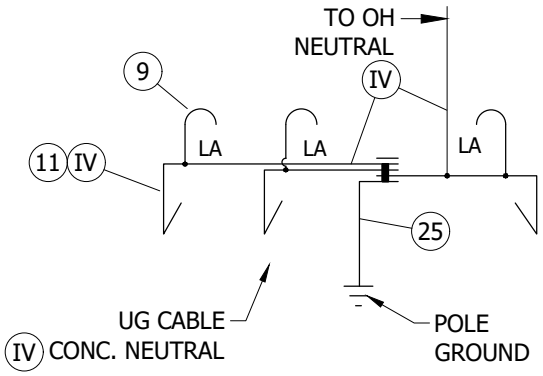

FIGURE 3
600A GROUND WIRING

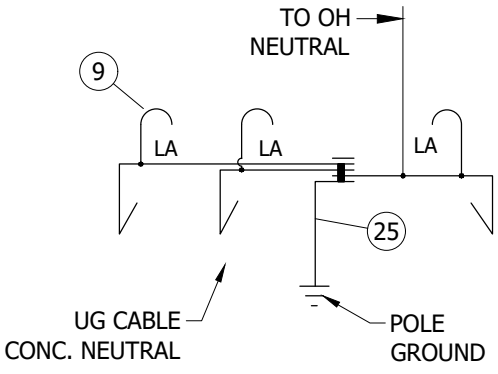

FIGURE 4
200A GROUND WIRING

© 1998 - 2022 San Diego Gas & Electric Company. All rights reserved. Removal of this copyright notice without permission is not permitted under law.

REV	CHANGE	DR	BY	DSN	APV	DATE	REV	CHANGE	DR	BY	DSN	APV	DATE
E	DRAWING UPDATE	PEI	-	-	-	02/18/2019	H	DRAWING UPDATE	EDM	DWC	GLW	KRG	05/10/2022
D	COMPLETELY REVISED	-	JCL	TR	MJC	10/05/2012	G	BILL OF MATERIALS UPDATE	EDM	DEC	JES	CZH	02/08/2021
C	COMPLETELY REVISED	-	JC	TR	MDC	09/27/2012	F	TABLE UPDATE	-	JAC	JES	CZH	11/12/2019

Indicates Latest Revision | X Completely Revised | New Page | Information Removed

SDG&E ELECTRIC OVERHEAD AND UNDERGROUND CONSTRUCTION STANDARDS

CABLE POLE MVI/MV200/600A THREE-PHASE
CABLE POLE APPLICATION

OH1435.2
UG4235.2

TABLE OF CONTENTS

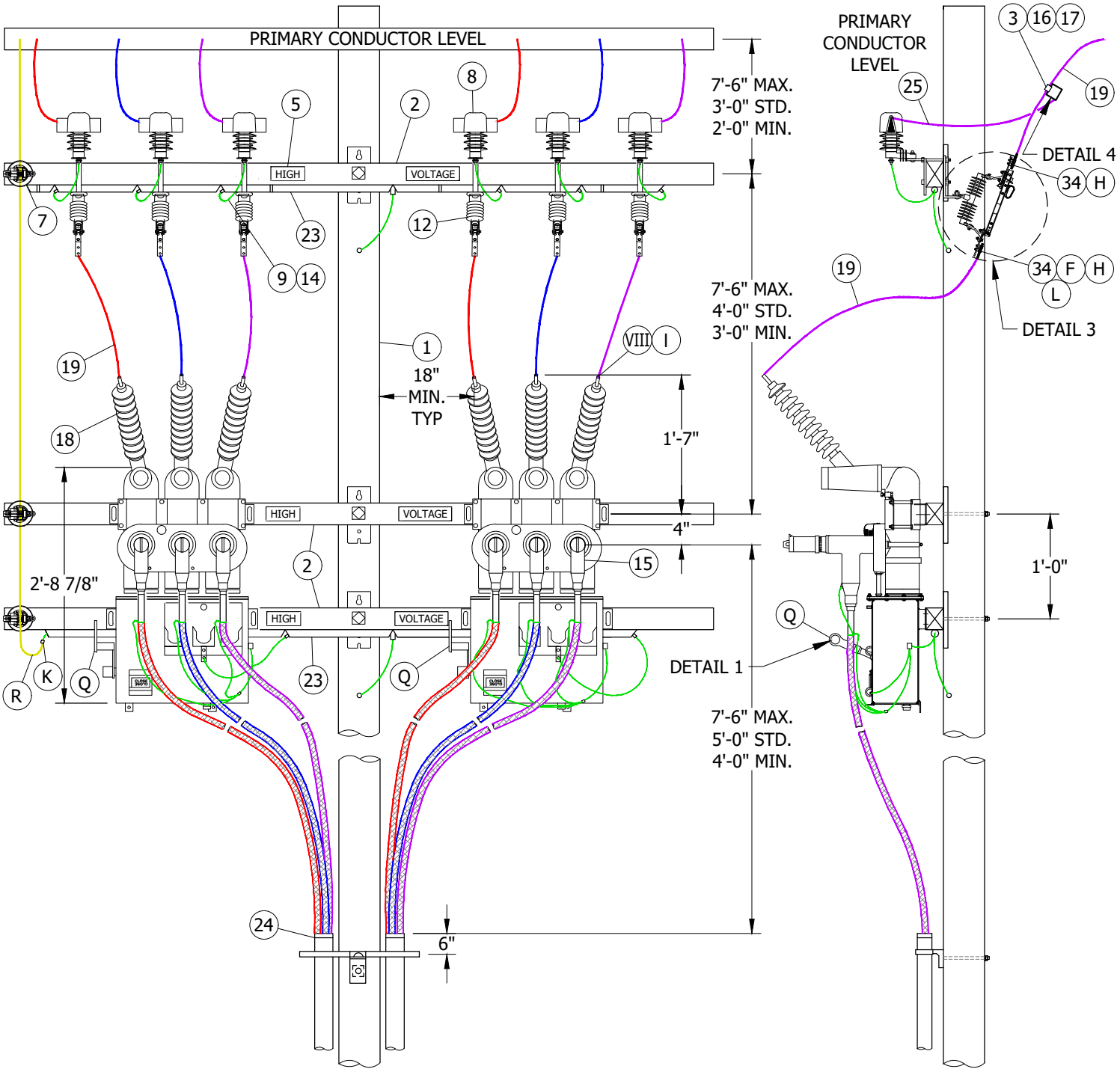

FIGURE 5
FRONT VIEW

FIGURE 5
SIDE VIEW

© 1998 - 2022 San Diego Gas & Electric Company. All rights reserved. Removal of this copyright notice without permission is not permitted under law.

REV	CHANGE	DR	BY	DSN	APV	DATE	REV	CHANGE	DR	BY	DSN	APV	DATE
E	DRAWING UPDATE	PEI	-	-	-	02/18/2019	H	DRAWING UPDATE	EDM	DWC	GLW	KRG	05/10/2022
D	COMPLETELY REVISED	-	JCL	TR	MJC	10/05/2012	G	BILL OF MATERIALS UPDATE	EDM	DEC	JES	CZH	02/08/2021
C	COMPLETELY REVISED	-	JC	TR	MDC	09/27/2012	F	TABLE UPDATE	-	JAC	JES	CZH	11/12/2019

Indicates Latest Revision | Completely Revised | X New Page | Information Removed

SDG&E ELECTRIC OVERHEAD AND UNDERGROUND CONSTRUCTION STANDARDS

CABLE POLE MVI/MV200/600A THREE-PHASE
CABLE POLE APPLICATION

OH1435.3
UG4235.3

ATTENTION:

* THIS FIGURE ILLUSTRATES SINGLE-PHASE OVERHEAD CONSTRUCTION WITH TWO SINGLE-PHASE UNDERGROUND CABLES.

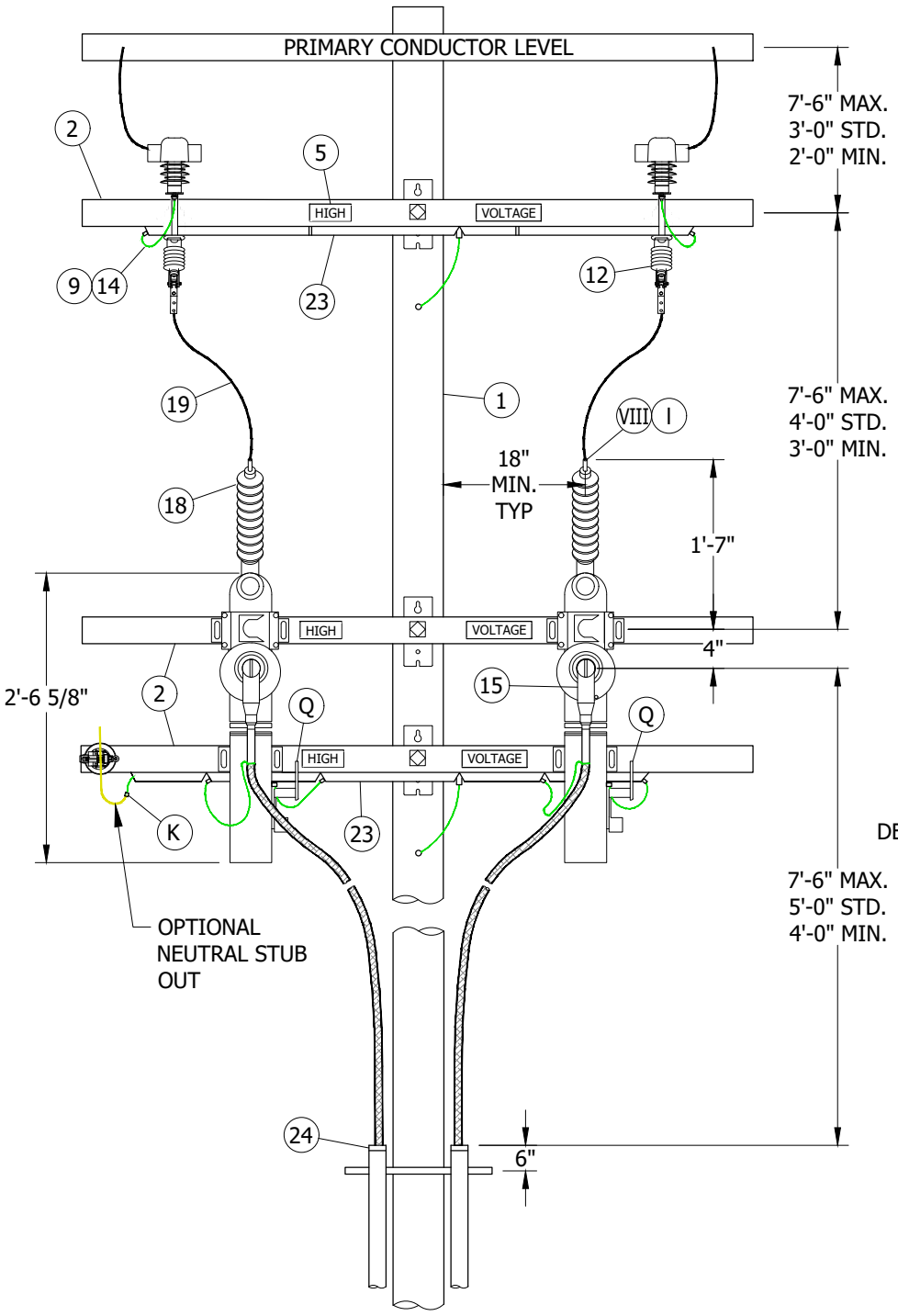

FIGURE 6
FRONT VIEW (XI)

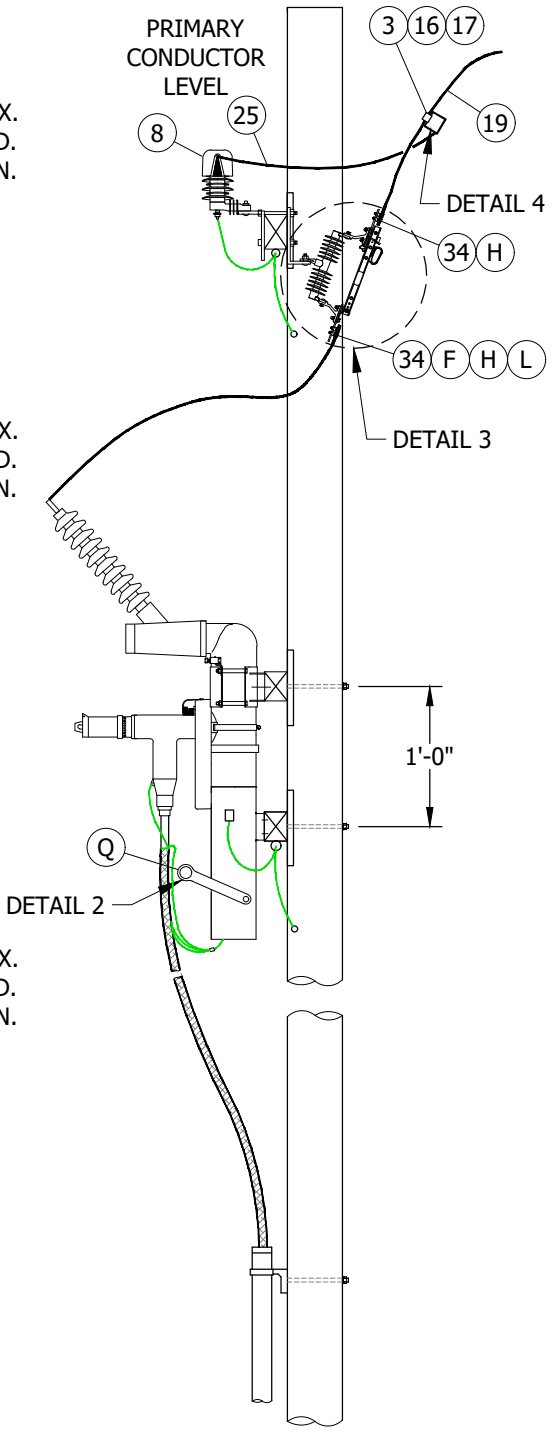

FIGURE 6
SIDE VIEW (XI)

© 1998 - 2022 San Diego Gas & Electric Company. All rights reserved. Removal of this copyright notice without permission is not permitted under law.

REV	CHANGE	DR	BY	DSN	APV	DATE	REV	CHANGE	DR	BY	DSN	APV	DATE
E	DRAWING UPDATE	PEI	-	-	-	02/18/2019	H	DRAWING UPDATE	EDM	DWC	GLW	KRG	05/10/2022
D	COMPLETELY REVISED	-	JCL	TR	MJC	10/05/2012	G	BILL OF MATERIALS UPDATE	EDM	DEC	JES	CZH	02/08/2021
C	COMPLETELY REVISED	-	JC	TR	MDC	09/27/2012	F	TABLE UPDATE	-	JAC	JES	CZH	11/12/2019

Indicates Latest Revision | Completely Revised | X New Page | Information Removed

SHEET 4 OF 9

SDG&E ELECTRIC OVERHEAD AND UNDERGROUND CONSTRUCTION STANDARDS

CABLE POLE MVI/MV200A SINGLE-PHASE CONSTRUCTION
CABLE POLE APPLICATION

OH1435.4
UG4235.4

TABLE OF CONTENTS

TABLE OF CONTENTS

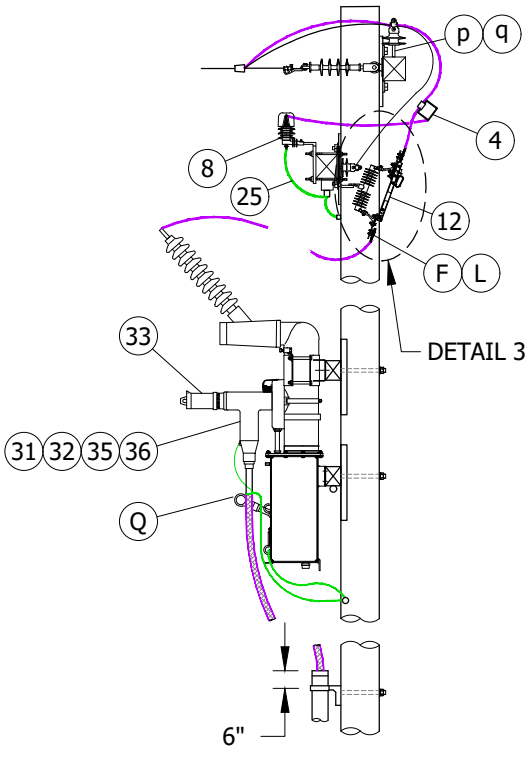

EXAMPLE 1

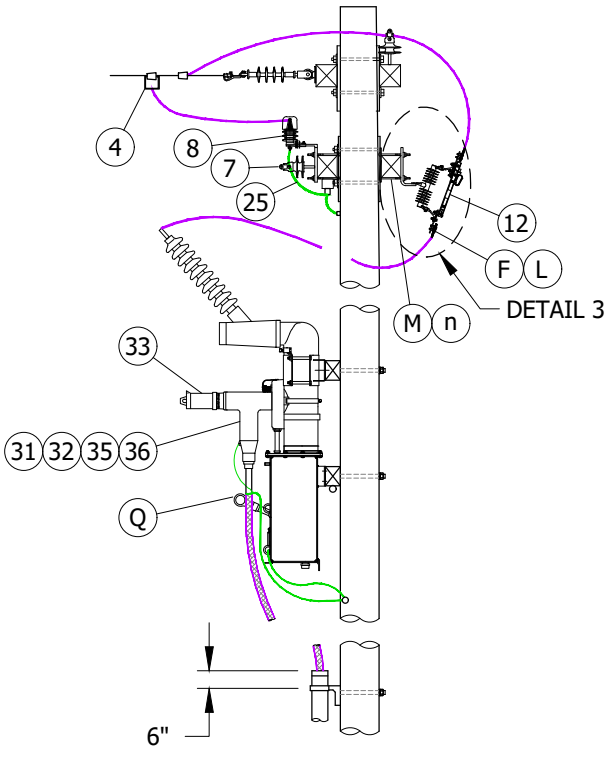

EXAMPLE 2

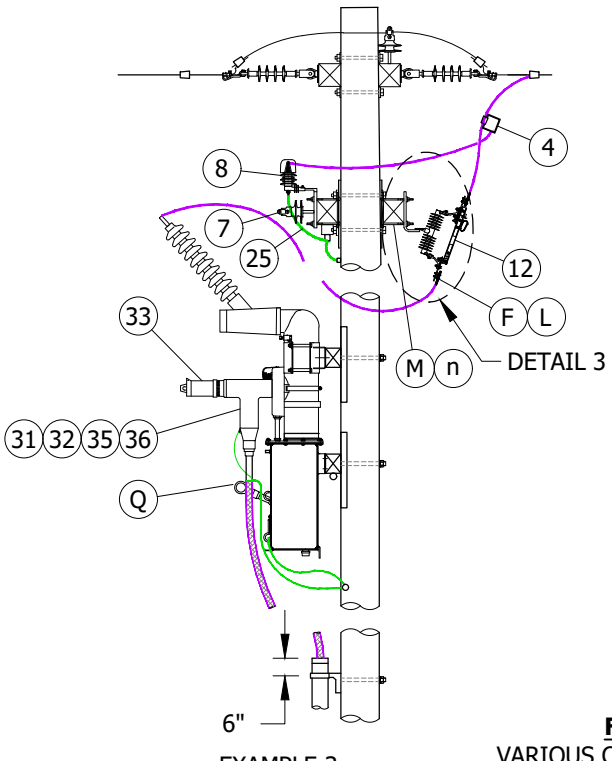

EXAMPLE 3

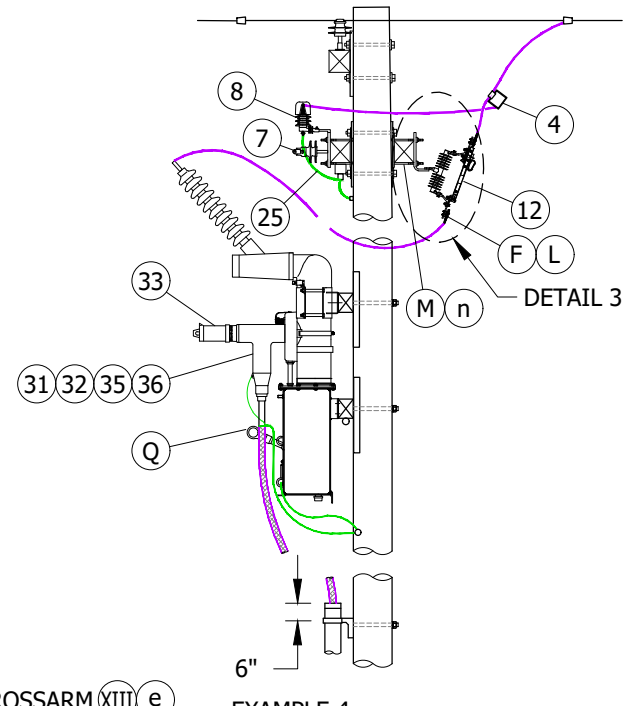

EXAMPLE 4

FIGURE 7
VARIOUS COMMON CROSSARM AND JUMPER CONFIGURATIONS

XIII e

© 1998 - 2022 San Diego Gas & Electric Company. All rights reserved. Removal of this copyright notice without permission is not permitted under law.

REV	CHANGE	DR	BY	DSN	APV	DATE	REV	CHANGE	DR	BY	DSN	APV	DATE
E	DRAWING UPDATE	PEI	-	-	-	02/18/2019	H	DRAWING UPDATE	EDM	DWC	GLW	KRG	05/10/2022
D	COMPLETELY REVISED	-	JCL	TR	MJC	10/05/2012	G	BILL OF MATERIALS UPDATE	EDM	DEC	JES	CZH	02/08/2021
C	COMPLETELY REVISED	-	JC	TR	MDC	09/27/2012	F	TABLE UPDATE	-	JAC	JES	CZH	11/12/2019

Indicates Latest Revision | Completely Revised | X New Page | Information Removed

SDG&E ELECTRIC OVERHEAD AND UNDERGROUND CONSTRUCTION STANDARDS

CABLE POLE MVI/MV200/600A
CABLE POLE APPLICATION

OH1435.5
UG4235.5

TABLE OF CONTENTS

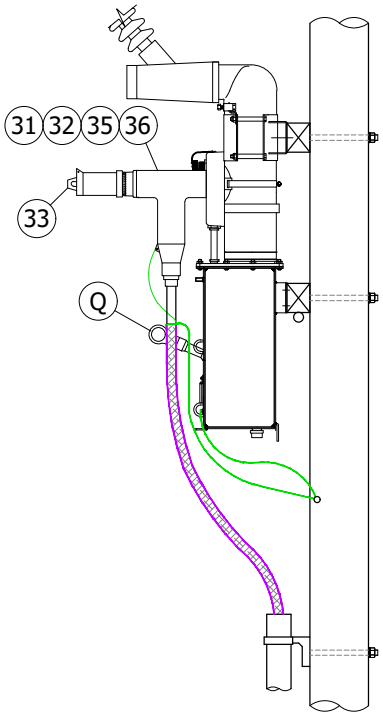

FIGURE 8
600A/200A CONNECTOR
200A APPLICATION ONLY

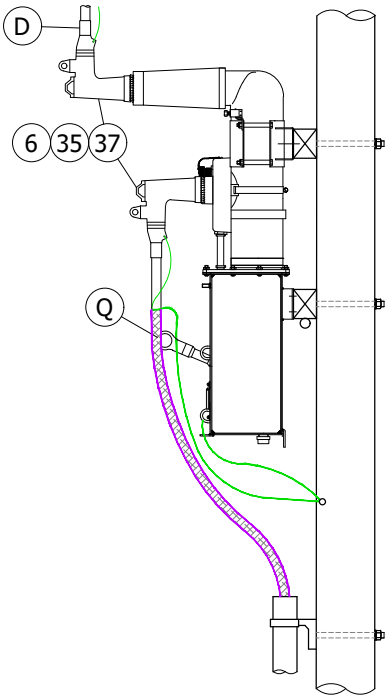

FIGURE 9
200A

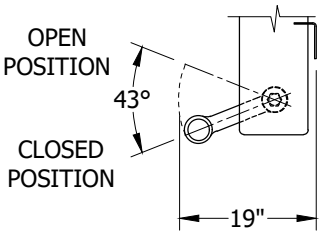

DETAIL 1
THREE-PHASE SWITCH

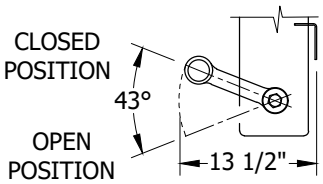

DETAIL 2
SINGLE-PHASE SWITCH

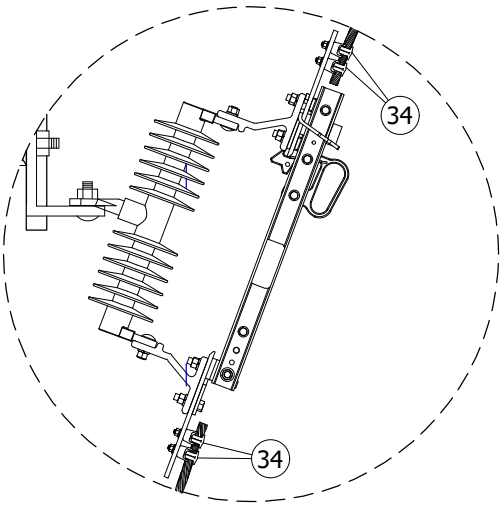

DETAIL 3

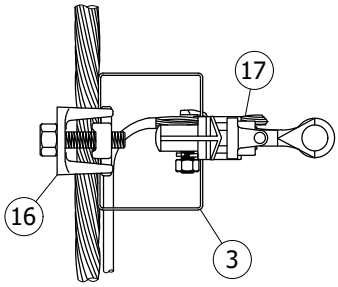

DETAIL 4
OPTION 1

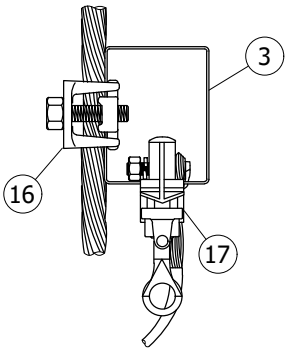

DETAIL 4
OPTION 2

© 1998 - 2022 San Diego Gas & Electric Company. All rights reserved. Removal of this copyright notice without permission is not permitted under law.

REV	CHANGE	DR	BY	DSN	APV	DATE	REV	CHANGE	DR	BY	DSN	APV	DATE
E	DRAWING UPDATE	PEI	-	-	-	02/18/2019	H	DRAWING UPDATE	EDM	DWC	GLW	KRG	05/10/2022
D	COMPLETELY REVISED	-	JCL	TR	MJC	10/05/2012	G	BILL OF MATERIALS UPDATE	EDM	DEC	JES	CZH	02/08/2021
C	COMPLETELY REVISED	-	JC	TR	MDC	09/27/2012	F	TABLE UPDATE	-	JAC	JES	CZH	11/12/2019

Indicates Latest Revision | X Completely Revised | New Page | Information Removed

SDG&E ELECTRIC OVERHEAD AND UNDERGROUND CONSTRUCTION STANDARDS

CABLE POLE MVI/MV200/600A
CABLE POLE APPLICATION

OH1435.6
UG4235.6

INSTALLATION:

A. NEW CABLE POLES SHALL HAVE A STANDARD DEPTH OF 9 FEET. IN MOST CASES, THIS WILL REQUIRE A 5-FOOT TALLER POLE.

B. THIS CONSTRUCTION IS FOR BOTH 200A AND 600A MVI CONSTRUCTION, WIRE SIZE TO MATCH PRIMARY REQUIREMENTS.

C. CONNECT OVERHEAD NEUTRAL, UNDERGROUND CONCENTRIC CABLE NEUTRAL, AND ARRESTER GROUND TO BUS UNDER CUTOUT/ARRESTOR ARM.

(D) SEAL CABLE WITH MASTIC FOR WATER TIGHT SEAL.

E. REDUCE QUANTITIES AS REQUIRED WHEN NOT USING NEUTRAL.

(F) BRUSH WIRE, INSTALL PENETROX "INHIBITOR" AND BELLEVILLE WASHER.

G. DIMENSIONS CAN VARY BASED ON CROSSARM SIZE AND/OR CONFIGURATION.

(H) REQUIRES TWO TAP LUGS PER CONNECTION.

J. ARM MAY BE DRILLED TO REPOSITION BOTTOM BRACKET BOLT ALLOWING CONDUIT TO SET FLUSH ON BOTTOM OF CROSSARM.

(K) CONCENTRIC WITH POLE GROUND, CONNECTION AREA.

(L) MAINTAIN SIX INCHES OF BARE WIRE BELOW DISCONNECT FOR PROPER GROUNDING OF UNDERGROUND CABLE.

(M) DOUBLE EQUIPMENT-ARM CONSTRUCTION IS REQUIRED FOR CONTAMINATION DISTRICT I.

N. **BEFORE MVI INSTALLATION THE CORRECT PREPROGRAMMED SETTINGS MUST BE SENT TO KEARNY AND THE MVI LOAD CURVE PROGRAM INSTALLED BEFORE IT CAN BE RELEASED FOR CONSTRUCTION AND READY FOR PICK UP BY THE CREW. SEE MVI FUSING REQUEST AND APPROVAL PROCESS FLOWCHART.**

O. PHASE MARKING SHALL BE COMPLETED USING THE PHASE TRAKKER JR. OR AP30 AND MARKED ON THE CROSS ARM AND MVI FOR ALL INSTALLATIONS.

P. REQUIRES 24/7 ACCESS FOR AERIAL LIFT/DERRICK.

(Q) MAKE UP JUMPERS SO THEY DO NOT INTERFERE WITH HANDLES NORMAL OPERATION.

(R) NEUTRAL TIE REQUIRED ON FOUR WIRE SYSTEM.

BILL OF MATERIALS:

ITEM	DESCRIPTION	WIRE SIZE	QUANTITY	STANDARD PAGE	STOCK NUMBER	DESIGN UNITS
1	POLE MIN. 50-1 STEEL OR WOOD	--	1	303	--	--
2	CROSSARM	--	AS REQ'D	379	--	--
3	CONNECTOR, STIRRUP, BAIL, #2 TIN PLATED CU	--	AS REQ'D	--	S227650	BAIL
4	CONNECTOR, WEDGE, STIRRUP OR BAIL, #2 SOLID CU	--	AS REQ'D	783	--	--
5	SIGN HIGH VOLTAGE 8 NAILS/SCREWS	--	AS REQ'D	--	S647648	HV
6	BUSHING PLUG	--	AS REQ'D	--	S544676	--
7	PIN & INSULATORS-HENDRIX	--	AS REQ'D	750	--	--
8	ARRESTORS, 12KV	--	AS REQ'D	1247	S113248	LA12
9	FLEXIBLE ARRESTOR GROUND STRAP (DISTRICTS I AND II)	--	AS REQ'D	1002	S698754	--
10	WEDGE TAP CONNECTIONS (V)	--	AS REQ'D	784	--	--
11	WIRE, HENDRIX, 1/0 STR. CU. SOFT-DRAWN, COVERED (CONCENTRIC BUS WIRE) (IX) 200A	--	30'-0"	711	S812120	HEND1/0
	WIRE, 4/0 STR. CU. SOFT-DRAWN, COVERED (CONCENTRIC BUS WIRE) (IX) 600A	--	30'-0"	711	S812126	HEND4/0
12	SWITCH, DISCONNECT, 27KV, 900A	--	AS REQ'D	--	S706670 (III)	PS900
				--	S707004 (XIII)	P900D
	BRACKET, MOUNTING, CUTOUT			397	S166070	CO/B

TABLE OF CONTENTS

© 1998 - 2022 San Diego Gas & Electric Company. All rights reserved. Removal of this copyright notice without permission is not permitted under law.

REV	CHANGE	DR	BY	DSN	APV	DATE	REV	CHANGE	DR	BY	DSN	APV	DATE
E	DRAWING UPDATE	PEI	-	-	-	02/18/2019	H	DRAWING UPDATE	EDM	DWC	GLW	KRG	05/10/2022
D	COMPLETELY REVISED	-	JCL	TR	MJC	10/05/2012	G	BILL OF MATERIALS UPDATE	EDM	DEC	JES	CZH	02/08/2021
C	COMPLETELY REVISED	-	JC	TR	MDC	09/27/2012	F	TABLE UPDATE	-	JAC	JES	CZH	11/12/2019

Indicates Latest Revision | X Completely Revised | New Page | Information Removed

SDG&E ELECTRIC OVERHEAD AND UNDERGROUND CONSTRUCTION STANDARDS

CABLE POLE MVI/MV200/600A
CABLE POLE APPLICATION

OH1435.7
UG4235.7

BILL OF MATERIALS (CONT'D):

ITEM	DESCRIPTION		WIRE SIZE	QUANTITY	STANDARD PAGE	STOCK NUMBER	DESIGN UNITS
13	STRAP, ARRESTOR GROUND (V)		--	AS REQ'D	1002	S698754	LAGND
14	CUTOUT/ARRESTOR BRACKETS		--	AS REQ'D	--	S165452	COBKT
15	MVI 600A TO 200A		--	SELECT	3675	S708416	S63PFI
	MVI 600A TO 600A					S708418	S66PFI
16	CONNECTOR, BRONZE, 2 BOLT, CONNECTOR, COPPER TAP 3/0-1000		--	--	--	S262370 (X)	CN1000
17	CONNECTOR, CLAMP, HOT LINE		--	AS REQ'D	788	S227680 (X)	--
18	AERIAL BUSHING KIT FOR MVI, THREE PHASE (VI)		--	1	--	S442500	AKMV13
19	LEAD WIRE, THW, LENGTH PER PHASE	200A	1/0	10'-0"	--	S808034 (X)	--
		600A	500 KCMIL		--	S808928	--
20	CONNECTOR, TERMINAL COMPRESSION LUG (V)		--	AS REQ'D	4174	--	--
21	GROUNDING, #4 PVC GRND WIRE, RODS, & CONNECTORS	STEEL POLE	--	1	1002	--	GNDPSP
		WOOD POLE					GNDPVC
22	CABLE GRIP FOR PRIMARY CABLE (V)		--	1	4204	--	--
23	CONDUIT, SQ. 2" X 2" X 10'-0" PVC (SQUARE)		--	AS REQ'D	--	S251534	SQC-2
	CONDUIT, SCH 40, 2" X 10'-0" PVC (ROUND)		--		--	S251296	PVC2
24	GRIP, RISER, 5-INCH, KELLEMS (1000 AL)		--	AS REQ'D	4204	S394098	5G1000
25	WIRE, POLY COVERED 4/7 STRAND COPPER		--	AS REQ'D	711	S812490	POLY4
26	TRXLPECN-PEJ, STR, 3-1/C (V)		350 KCMIL	--	--	S197608	PJN350
27	EPR-PEJ, COMP, 3-1/C (V)		750 KCMIL	--	--	S195010	CPJ750
28	TRXLPECN-PEJ, STR, 3-1/C (V)		1000 KCMIL	--	--	S197618	PJI000
29	TRXLPECN-PEJ, SOL, 3-1/C (V)		#2	--	--	S197622	PJN3/2
30	TRXLPECN-PEJ, STR, 3-1/C (V)		#2/0	--	--	S197606	PJN2/0
31	ELBOW TEE		--	AS REQ'D	--	S326578	--
32	ELBOW TAP PLUG		--	AS REQ'D	--	S547328	--
33	RECEPTACLE, INSULATING, 200A		--	AS REQ'D	--	S204304	--
34	CONNECTOR, TAP LUG, 1/0 TO 500MCM CU TAP LUG BRONZE		--	AS REQ'D	--	S471232	TL1/0
35	CONDUCTOR CONNECTOR		350 AL	AS REQ'D	--	S258698	--
			750 AL			S258704	
			750 AL			S258708	
			1000 AL			S258702	
36	CABLE ADAPTER		350 AL	AS REQ'D	--	S102027	--
			750 AL			S102034	
			750 AL			S102051	
			1000 AL			S102050	
37	LOADBREAK ELBOW CONNECTOR		#2 AL	AS REQ'D	--	S443838	--
			2/0 AL			S443840	

TABLE OF CONTENTS

© 1998 - 2022 San Diego Gas & Electric Company. All rights reserved. Removal of this copyright notice without permission is not permitted under law.

REV	CHANGE	DR	BY	DSN	APV	DATE	REV	CHANGE	DR	BY	DSN	APV	DATE
E	DRAWING UPDATE	PEI	-	-	-	02/18/2019	H	DRAWING UPDATE	EDM	DWC	GLW	KRG	05/10/2022
D	COMPLETELY REVISED	-	JCL	TR	MJC	10/05/2012	G	BILL OF MATERIALS UPDATE	EDM	DEC	JES	CZH	02/08/2021
C	COMPLETELY REVISED	-	JC	TR	MDC	09/27/2012	F	TABLE UPDATE	-	JAC	JES	CZH	11/12/2019

NOTES:

I. THIS APPLICATION OFFERS THE ABILITY TO PROGRAM SINGLE-PHASE AND THREE-PHASE SWITCHES FOR HIGHER LOAD AND RELIABILITY ISSUES FOR NEW AND EXISTING FACILITIES.

II. THE THREE-PHASE SWITCH WILL ALSO REDUCE THE POSSIBILITY OF FERRO-RESONANCE DURING SERVICE RESTORATION.

(III) REQUIRED IN CONTAMINATION DISTRICT 1 AND PREFERRED IN COASTAL DISTRICTS (OC, NC, BC, CM). (m)

(IV) MINIMUM 480A COPPER WIRE REQUIRED (OPTION FOR USE OF COVERED WIRE).

(V) NOT SHOWN OF FIGURES.

(VI) BRACKET IS INCLUDED.

VII. ONLY TRANSPORT IN CLOSED POSITION TO PROLONG LIFE OF UNIT.

(VIII) USE APPROPRIATE AVIAN COVER AS REQUIRED.

(IX) ALLOWED SUBSTITUTION FOR CONCENTRIC BUS WIRE SHOULD MATCH EQUIVALENT AMPERAGE.

(X) THIS ITEM IS EXEMPT.

(XI) CAN ALSO BE CONSTRUCTED WITH SINGLE MVI FOR N TYPE TRANSFORMERS.

(XII) CAN ALSO BE CONSTRUCTED WITHOUT CENTER PHASE FOR SINGLE-PHASE DELTA SYSTEM.

(XIII) PREFERRED FOR INLAND DISTRICTS (NE, RA, EA, ME).

REFERENCE:

a. FOR CABLE IDENTIFICATION, SEE UG3202.

b. FOR STRUCTURE/EQUIPMENT IDENTIFICATION, SEE UG3211.

c. FOR HIGH VOLTAGE DECAL, SEE UG3221.

d. FOR MVI SPECIFICATIONS, SEE UG3675.

(e) FOR POLE GROUNDING, SEE OH1002.

f. FOR SEALING JACKETED CABLE, SEE UG4108.

g. FOR (PREFERRED I) AND (ALTERNATE) TRENCH GROUND WIRE, SEE UG4510.

h. FOR EQUIPMENT GROUNDING, SEE UG4512.

i. FOR GROUNDING PAD MOUNTED EQUIPMENT, SEE UG4520.

j. FOR GROUNDING HARDWARE AND CONNECTIONS, SEE UG4505.

k. FOR CABLE POLE RISERS, SEE OH1404UG4204.

(l) FOR AVIAN PROTECTION/COVER-UP, SEE OH1600 SECTION.

(m) FOR CONTAMINATION DISTRICTS, SEE OH287.

(n) FOR BONDING GENERAL INFORMATION, SEE OH1003.

o. FOR SPLICING, SEE UG4180.

(p) SEE OH750: INSULATORS.

(q) SEE OH396: INSULATOR PINS AND SPACERS.

TABLE OF CONTENTS

© 1998 - 2022 San Diego Gas & Electric Company. All rights reserved. Removal of this copyright notice without permission is not permitted under law.

REV	CHANGE	DR	BY	DSN	APV	DATE	REV	CHANGE	DR	BY	DSN	APV	DATE
E	DRAWING UPDATE	PEI	-	-	-	02/18/2019	H	DRAWING UPDATE	EDM	DWC	GLW	KRG	05/10/2022
D	COMPLETELY REVISED	-	JCL	TR	MJC	10/05/2012	G	BILL OF MATERIALS UPDATE	EDM	DEC	JES	CZH	02/08/2021
C	COMPLETELY REVISED	-	JC	TR	MDC	09/27/2012	F	TABLE UPDATE	-	JAC	JES	CZH	11/12/2019

X Indicates Latest Revision | Completely Revised | New Page | Information Removed

SDG&E ELECTRIC OVERHEAD AND UNDERGROUND CONSTRUCTION STANDARDS

CABLE POLE MVI/MV200/600A
CABLE POLE APPLICATION

OH1435.9
UG4235.9

SCOPE: THIS STANDARD SHOWS THE CONSTRUCTION METHOD FOR THREE-PHASE UNDERGROUND CABLE, UNDER 15KV WITH LESS THAN 200A CAPACITY.

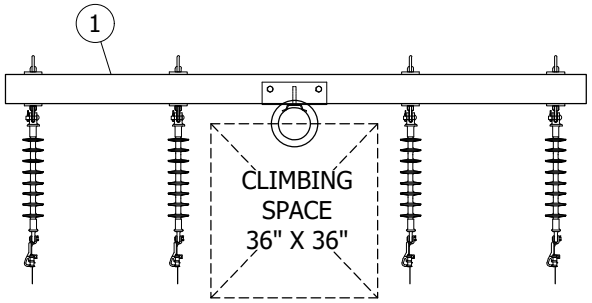

FIGURE 1 (a)
TOP VIEW

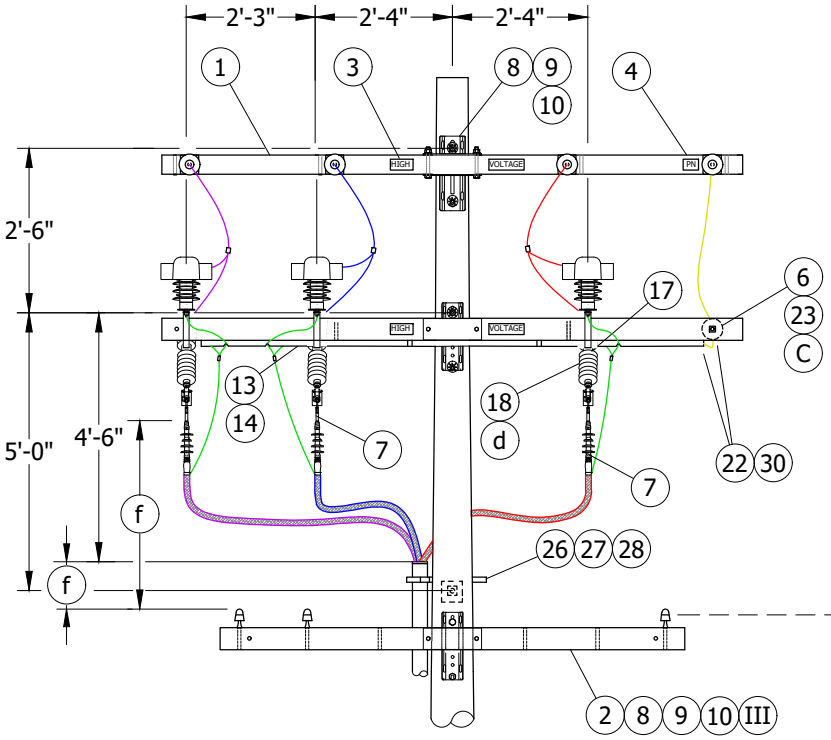

FIGURE 1 (II)
FRONT VIEW

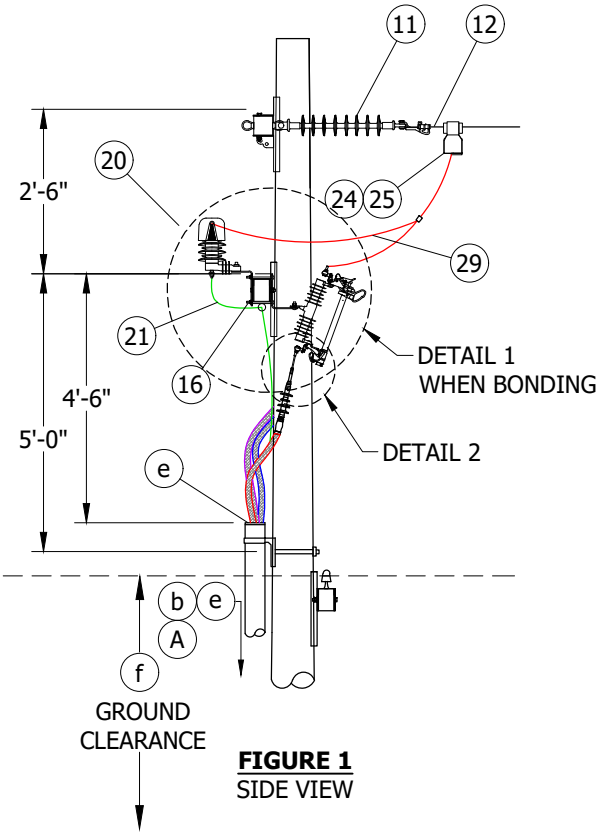

FIGURE 1
SIDE VIEW

TABLE OF CONTENTS

© 1998 - 2021 San Diego Gas & Electric Company. All rights reserved. Removal of this copyright notice without permission is not permitted under law.

REV	CHANGE	DR	BY	DSN	APV	DATE	REV	CHANGE	DR	BY	DSN	APV	DATE
C	TABLE UPDATES	EDM	JCE	JES	CZH	11/09/2020	F						
B	COMPLETLY REVISED	-	JBH	IL	MDJ	10/25/2016	E						
A	COMPLETLY REVISED	-	JBH	IL	MDJ	09/08/2016	D	FORMATTING	EDM	JIK	-	-	09/16/2021

X Indicates Latest Revision | Completely Revised | New Page | Information Removed

SDG&E ELECTRIC OVERHEAD AND UNDERGROUND CONSTRUCTION STANDARDS

12.47KV AND BELOW CROSSARM CABLE POLE,
THREE-PHASE, 1/C PER PHASE,
NON-PORCELAIN TERMINALS

OH1440.1
UG4240.1

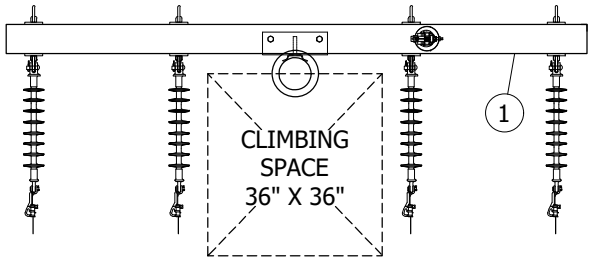

FIGURE 2 (a)
TOP VIEW

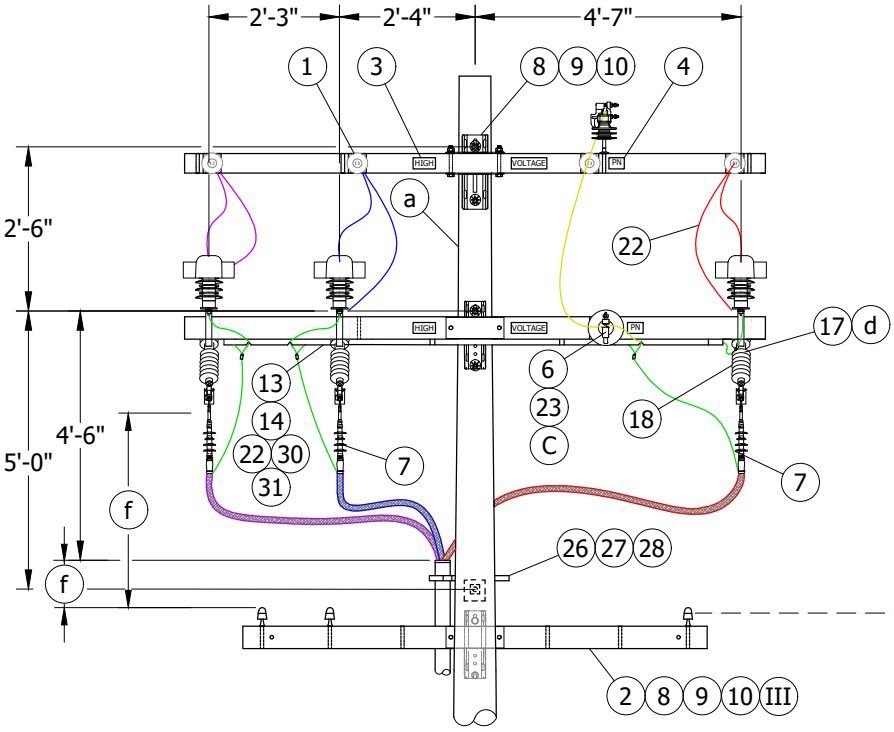

FIGURE 2 (II)
FRONT VIEW

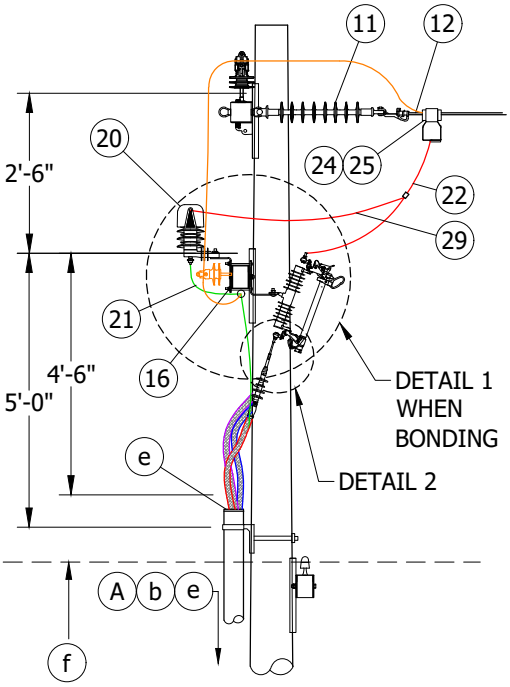

GROUND
CLEARANCE (f)

FIGURE 2
SIDE VIEW

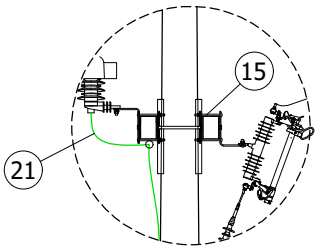

DETAIL 1 (D) (c)

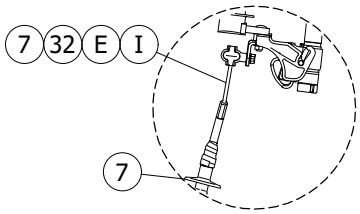

DETAIL 2

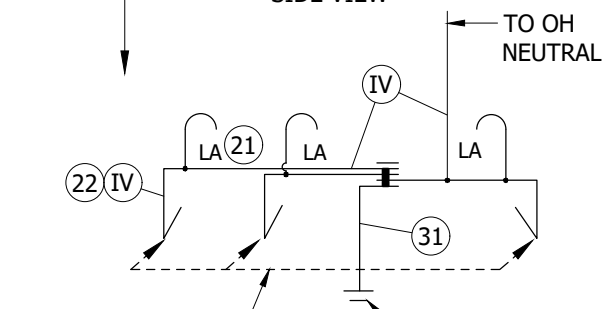

DETAIL 3
GROUND WIRING

TABLE OF CONTENTS

© 1998 - 2021 San Diego Gas & Electric Company. All rights reserved. Removal of this copyright notice without permission is not permitted under law.

REV	CHANGE	DR	BY	DSN	APV	DATE	REV	CHANGE	DR	BY	DSN	APV	DATE
C	TABLE UPDATES	EDM	JCE	JES	CZH	11/09/2020	F						
B	COMPLETLY REVISED	-	JBH	IL	MDJ	10/25/2016	E						
A	COMPLETLY REVISED	-	JBH	IL	MDJ	09/08/2016	D	FORMATTING	EDM	JIK	-	-	09/16/2021

X Indicates Latest Revision | Completely Revised | New Page | Information Removed

SDG&E ELECTRIC OVERHEAD AND UNDERGROUND CONSTRUCTION STANDARDS

12.47KV AND BELOW CROSSARM CABLE POLE,
THREE-PHASE, 1/C PER PHASE,
NON-PORCELAIN TERMINALS

OH1440.2
UG4240.2

INSTALLATION:

(A) NEW CABLE POLES SHALL HAVE A STANDARD DEPTH OF NINE FEET. IN MOST CASES, THIS WILL REQUIRE A FIVE-FOOT TALLER POLE.

B. REDUCE QUANTITIES AS REQUIRED WHEN NOT USING NEUTRAL OR WHEN CONSTRUCTING SINGLE-PHASE.

(C) INTERCONNECT OVERHEAD NEUTRAL AND CONCENTRIC CABLE NEUTRAL CONDUCTORS TO LIGHTNING ARRESTER GROUND. INSTALL NEUTRAL JUMPER FROM LINE TO CONCENTRIC ON ARRESTER SIDE OF POLE.

(D) BOND CUTOUTS IN HEAVY CONTAMINATION DISTRICTS. IN AREAS WHERE BONDING IS REQUIRED, TO AVOID BONDWIRE AND LIGHTNING ARRESTER GROUNDWIRE ON THE SAME CROSSARM, USE TWO CROSSARMS: ONE FOR CUTOUTS AND ONE FOR LIGHTNING ARRESTERS. (i)

(E) WRAP HALF OF EXPOSED ALUMINUM PORTION OF PIN CONNECTOR WITH SILICONE TAPE TO PREVENT CORROSION. INSERT PIN INTO BOTTOM OF CUTOUT CLAMP.

BILL OF MATERIALS:

ITEM	DESCRIPTION	QUANTITY	STANDARD PAGE	STOCK NUMBER	DESIGN UNITS
1	CROSSARM, FIBERGLASS, DEADEND (SIZE AS REQ'D)	1	379	--	--
2	CROSSARM, FIBERGLASS, TANGENT (SIZE AS REQ'D)	1	379	--	--
3	SIGN, "HIGH VOLTAGE" STICKER	AS REQ'D	208	S647650	HV/D
4	SIGN, "PN", ADHESIVE	AS REQ'D	208	S648004 (X)	PN-D
5	PIN, INSULATOR (SIZE AS REQ'D) (V)	AS REQ'D	396	--	--
6	INSULATOR, POLY, VISE-TOP (SIZE AS REQ'D)	AS REQ'D	750	--	--
7	TERMINATIONS, OUTDOOR, #2 SOLID	3	4111	S732918	CP-#2N
	CONNECTOR, COMPRESSION, #2 SOLID			S729930	
	TERMINATIONS, OUTDOOR, 2/0 ALUMINUM	3		S732918	CP2/0N
	CONNECTOR, COMPRESSION, 2/0 ALUMINUM			S729934	
8	BOLT, MACHINE, 3/4" (SIZE AS REQ'D)	AS REQ'D	390	--	--
9	WASHER, SPRING LOCK, 3/4"	AS REQ'D	390	S796802 (X)	LK-WSH
10	WASHER, SQUARE CURVED	AS REQ'D		S797760	RIBWSH
11	INSULATOR, SUSPENSION, CLEVIS, 35KV	AS REQ'D	750	S428958	LONGDE
12	CLAMP, STRAIGHT LINE, DEADEND	AS REQ'D	739	--	--
13	STRAP, PIPE, GALV., 1/4", ONE HOLE	AS REQ'D	1002	S697302	BOND8
14	SCREW, SELF-TAPPING, 1 1/4", #12, 24 THREAD	AS REQ'D	1002	S618086 (X)	--
15	BRACKET, CUTOUT/ARRESTER, FOR CROSSARM MOUNTING	AS REQ'D	397	S166070	CO/B
16	BRACKET, DOUBLE, CUTOUT/ARRESTER FOR CROSSARM MOUNTING	3		S165446 (X)	DBLBKT
17	CUTOUT, 12KV, (AS NEEDED PER FUSING REQUEST)	3	1212	--	--
18	FUSE HOLDER, (AS NEEDED PER FUSING REQUEST)	3	1212	--	--
19	COVER, CUTOUT (V)	3	1640	S289626	CCOVSL
20	ARRESTER, LIGHTNING, 12KV	3	1247	S113248	LA12
21	STRAP, ARRESTER GROUND	AS REQ'D	1002	S698754	LAGND
22	WIRE, COPPER, AWG 2 (CONCENTRIC BUS WIRE)	50'-0"	711	S812122	HEND2
23	PIN, TRANSFORMER ADAPTER, LEAD THREAD, 1"	1	396	S529248	PS/01
24	CLAMP, HOTLINE	AS REQ'D	788	S227680	--
25	CONNECTOR, WEDGE, STIRRUP	3		--	--

TABLE OF CONTENTS

© 1998 - 2021 San Diego Gas & Electric Company. All rights reserved. Removal of this copyright notice without permission is not permitted under law.

REV	CHANGE	DR	BY	DSN	APV	DATE	REV	CHANGE	DR	BY	DSN	APV	DATE
C	TABLE UPDATES	EDM	JCE	JES	CZH	11/09/2020	F						
B	COMPLETLY REVISED	-	JBH	IL	MDJ	10/25/2016	E						
A	COMPLETLY REVISED	-	JBH	IL	MDJ	09/08/2016	D	FORMATTING	EDM	JIK	-	-	09/16/2021

BILL OF MATERIALS (CONT'D):

ITEM	DESCRIPTION	QUANTITY	STANDARD PAGE	STOCK NUMBER	DESIGN UNITS
26	BRACKET, LADDER ARM	AS REQ'D	1404/4204	S167186 (X)	RSARM
27	NUT STUD 1/2" X 1 3/8" CLAMPING CHANNEL WITH SPRING	AS REQ'D		S507000	
28	CHANNEL, DOUBLE, GALVANIZED, 24" X 1 5/8" X 1 5/8"	AS REQ'D		S216702 (X)	
29	WIRE, #4-7, POLY COVERED, STRANDED COPPER (ARRESTER JUMPER)	20'-0"	--	S8115044	POLY4J
30	CONNECTORS, WIRE COMPRESSION, CU OR AL	AS REQ'D	785	--	--
31	GROUNDING, #4 PVC GRND WIRE, RODS, CONN-STEEL POLE	1	1002	--	GNDPSP
	GROUNDING, WIRE, #4 PVC, RODS & CONNECTORS (FOR WOOD POLES)	AS REQ'D		--	GNDPVC
32	TAPE, SILICONE	AS REQ'D	--	S720384	--

NOTES:

(I) INSTALL TERMINATION BY FOLLOWING MANUFACTURER'S INSTRUCTIONS INCLUDED IN KIT.

(II) USE FIGURE 1 FOR ALL NEW CONSTRUCTION AND WHEN ADDING TO EXISTING CONSTRUCTION WITH NEUTRAL ON OUTSIDE PIN POSITION. (j)

(III) NEW CONSTRUCTION SHALL USE AERIAL CABLE CONSTRUCTION FOR SECONDARY APPLICATIONS. EXISTING CONSTRUCTION CAN USE CROSSARMS FOR OPEN WIRE SECONDARY CONSTRUCTION. (h)

(IV) MINIMUM 230A COPPER WIRE REQUIRED (OPTION FOR USE OF COVERED WIRE).

(V) NOT SHOWN ON FIGURES.

(X) THIS ITEM IS EXEMPT.

REFERENCE:

(a) FOR ALLOWABLE WORKING AND CLIMBING SPACE, SEE OH251.

(b) FOR POLE STEPPING, SEE OH363.

(c) FOR GROUNDING METHODS, SEE OH1002.

(d) FOR FUSING, SEE OH SECTION 1200 AND UG SECTION 4300.

(e) FOR RISER POSITIONS, SEE OH1402UG4202.

(f) FOR MINIMUM VERTICAL SEPARATION PER G.O. 95, SEE OH1406UG4206.

g. FOR VISE-TOP INSULATORS, SEE OH750.

(h) FOR SECONDARY CABLE CONSTRUCTION, SEE OH612.

(i) FOR BONDING, SEE CONTAMINATION DISTRICTS OH287.

(j) SEE DM5124.2.

TABLE OF CONTENTS

© 1998 - 2021 San Diego Gas & Electric Company. All rights reserved. Removal of this copyright notice without permission is not permitted under law.

REV	CHANGE	DR	BY	DSN	APV	DATE	REV	CHANGE	DR	BY	DSN	APV	DATE
C	TABLE UPDATES	EDM	JCE	JES	CZH	11/09/2020	F						
B	COMPLETLY REVISED	-	JBH	IL	MDJ	10/25/2016	E						
A	COMPLETLY REVISED	-	JBH	IL	MDJ	09/08/2016	D	FORMATTING	EDM	JIK	-	-	09/16/2021

SCOPE: THIS STANDARD ILLUSTRATES THE CONSTRUCTION METHODS FOR 3-PHASE 12KV 350-1000KCM UNDERGROUND CABLE USING 900A DISCONNECTS.

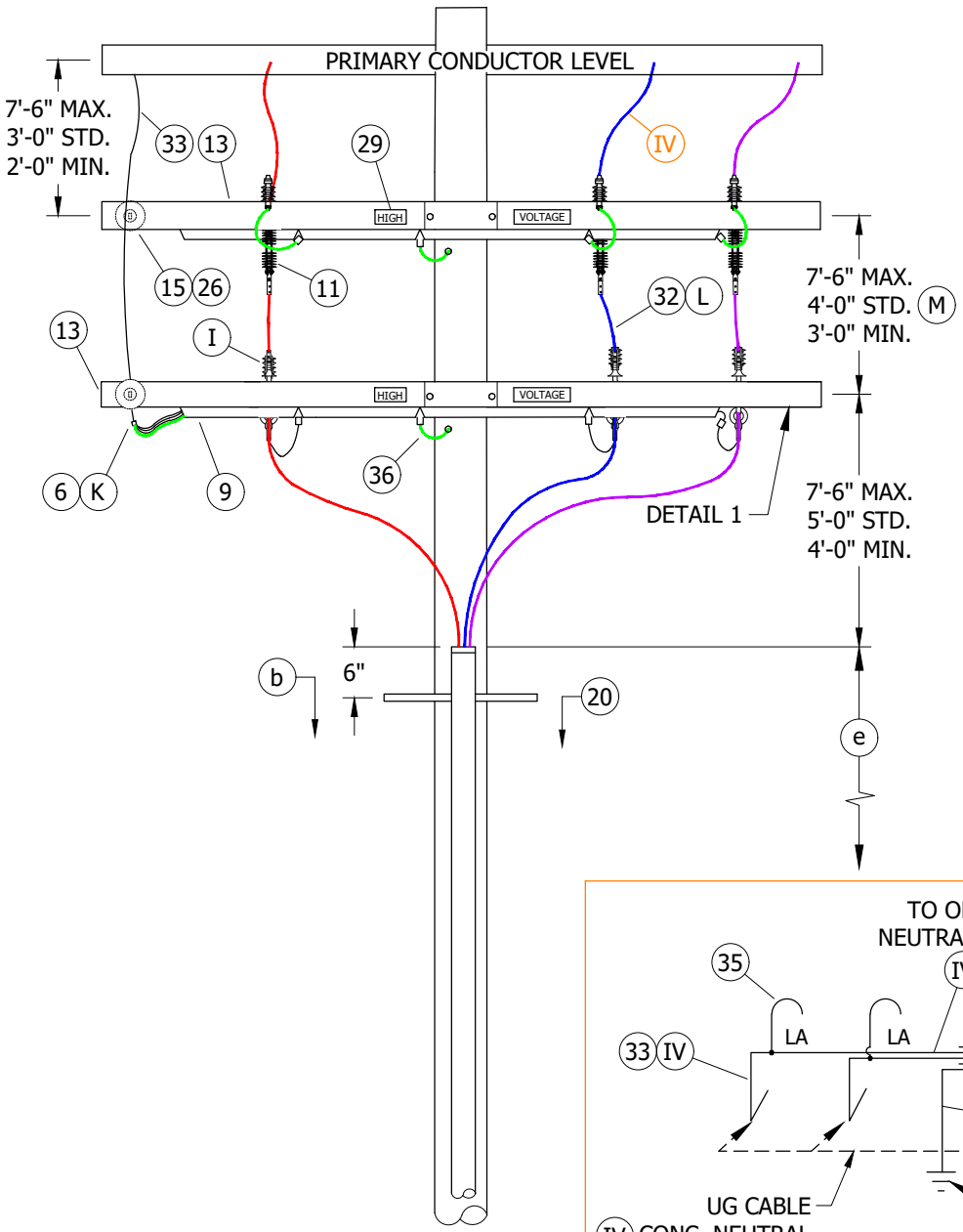

FIGURE 1
BACK VIEW OF ARM

DETAIL 1
GROUND WIRING (1)

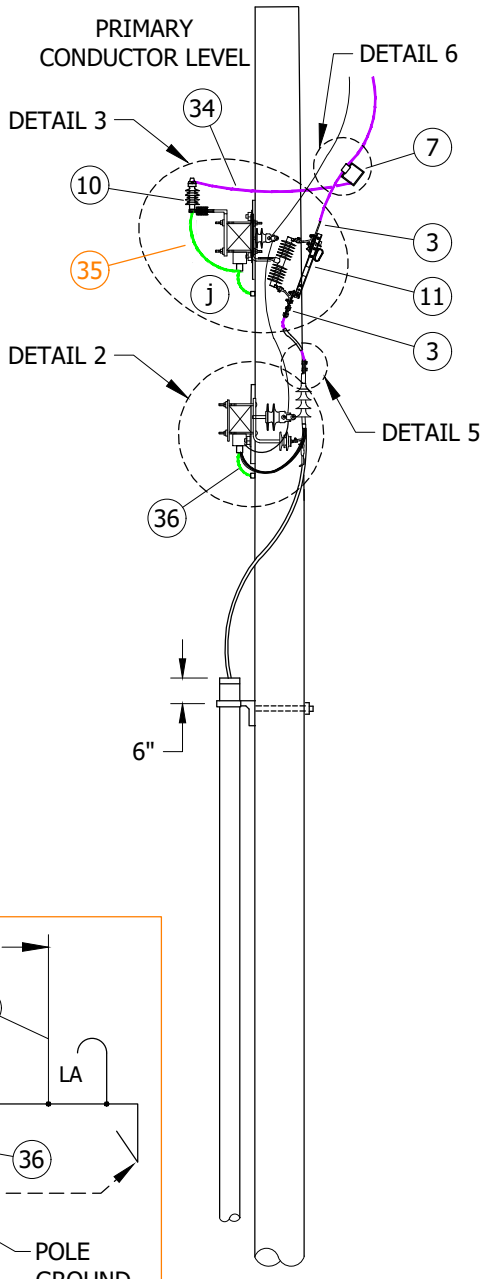

FIGURE 1
SIDE VIEW

© 1998 - 2020 San Diego Gas & Electric Company. All rights reserved. Removal of this copyright notice without permission is not permitted under law.

REV	CHANGE	DR	BY	DSN	APV	DATE	REV	CHANGE	DR	BY	DSN	APV	DATE
C	FIGURE UPDATE	EDM	DWC	JES	CZH	3/9/2020	F						
B	EDITORIAL CHANGES	-	GW	JS	MDJ	4/1/2018	E						
A	REVISION	-	-	PEA	JJ	10/20/2005	D	DRAWING UPDATE	EDM	DWC	JES	CZH	12/11/2020

X Indicates Latest Revision | Completely Revised | New Page | Information Removed

SDG&E ELECTRIC OVERHEAD AND UNDERGROUND CONSTRUCTION STANDARDS

THREE PHASE, CABLE-POLE-12KV,
NON-PORCELAIN 900 AMP DISCONNECT
PREFERRED METHOD

SHEET
1 OF 6

OH1442.1
UG4242.1

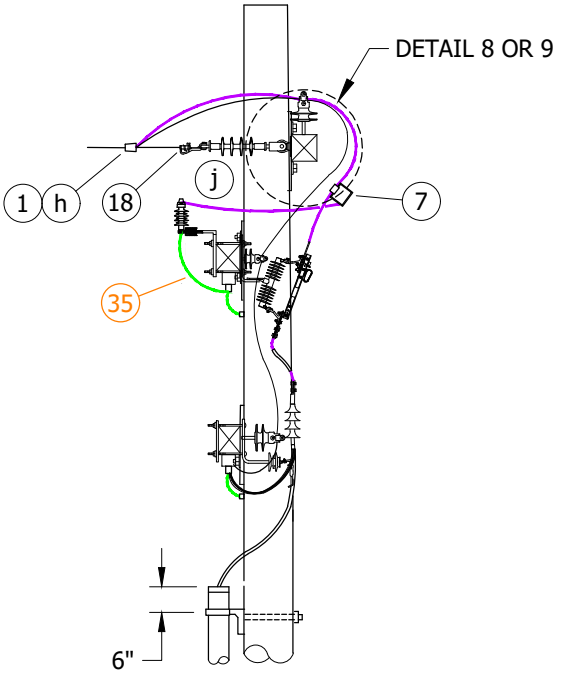

FIGURE 2
SIDE VIEW

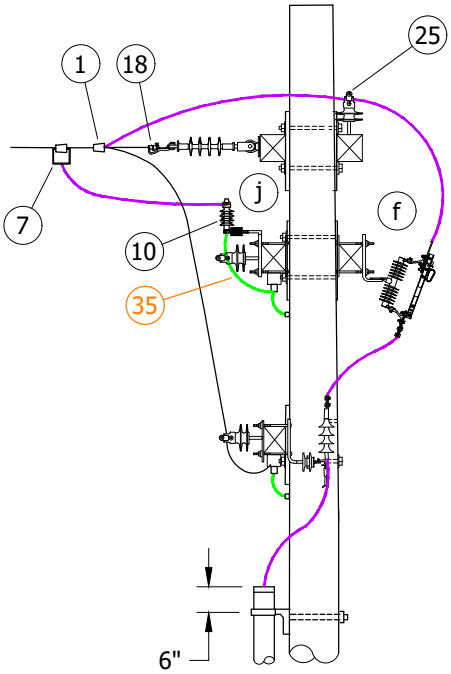

FIGURE 3
SIDE VIEW
ILLUSTRATES SECOND ARM FOR BONDING

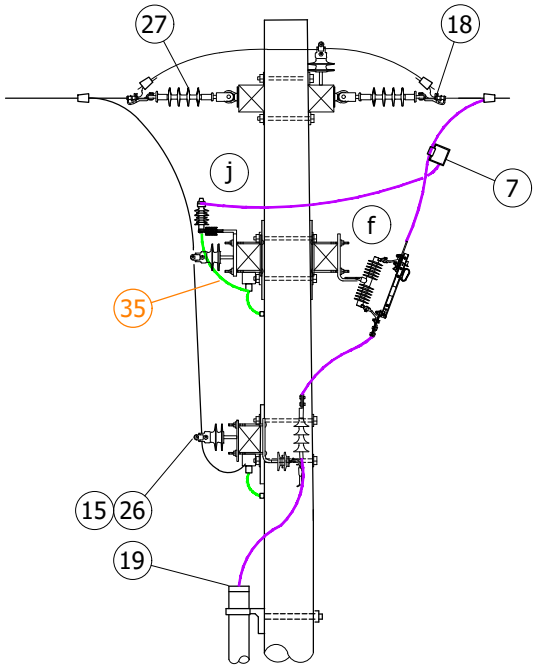

FIGURE 4
SIDE VIEW

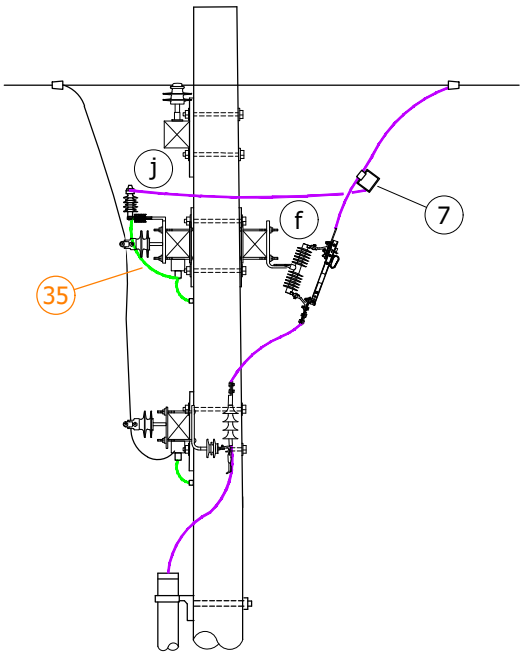

FIGURE 5
SIDE VIEW

© 1998 - 2020 San Diego Gas & Electric Company. All rights reserved. Removal of this copyright notice without permission is not permitted under law.

REV	CHANGE	DR	BY	DSN	APV	DATE	REV	CHANGE	DR	BY	DSN	APV	DATE
C	FIGURE UPDATE	EDM	DWC	JES	CZH	3/9/2020	F						
B	EDITORIAL CHANGES	-	GW	JS	MDJ	4/1/2018	E						
A	REVISION	-	-	PEA	JJ	10/20/2005	D	DRAWING UPDATE	EDM	DWC	JES	CZH	12/11/2020

X Indicates Latest Revision | Completely Revised | New Page | Information Removed

SDG&E ELECTRIC OVERHEAD AND UNDERGROUND CONSTRUCTION STANDARDS

THREE PHASE, CABLE-POLE-12KV,
NON-PORCELAIN 900 AMP DISCONNECT
OPTIONAL METHOD

OH1442.2
UG4242.2

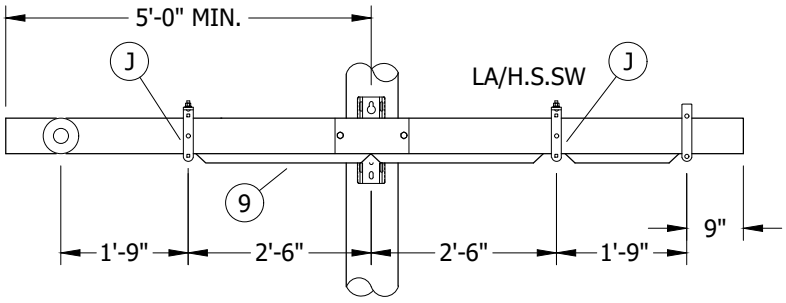

DETAIL 1
FRONT VIEW
CONDUIT WITH CABLE SUPPORT BRACKETS

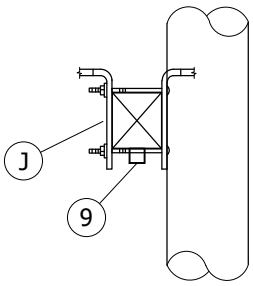

DETAIL 1
SIDE VIEW, ENLARGED
CONDUIT WITH CABLE SUPPORT BRACKETS

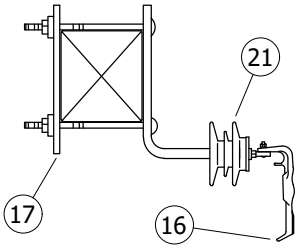

DETAIL 2
PREFERRED BRACKET
CONFIGURATION

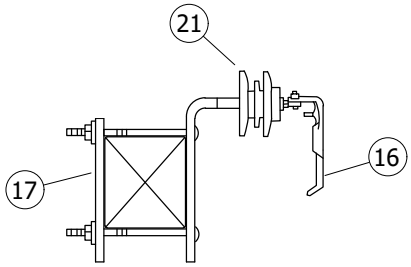

DETAIL 2
OPTIONAL BRACKET
CONFIGURATION
(NOT SHOWN)

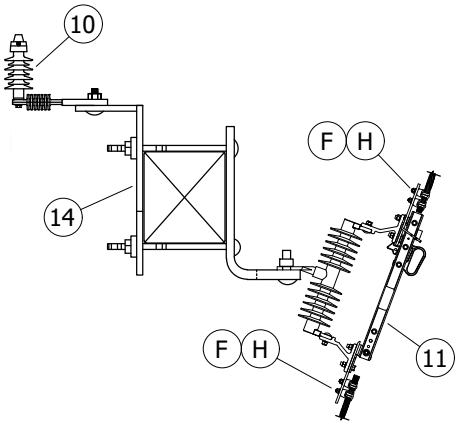

DETAIL 3
DOUBLE BRACKET

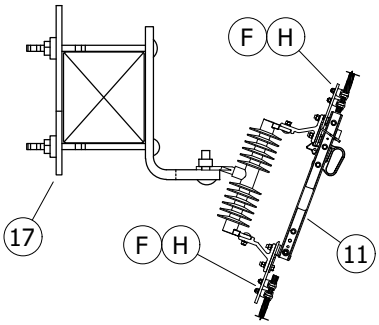

DETAIL 4
SINGLE BRACKET

© 1998 - 2020 San Diego Gas & Electric Company. All rights reserved. Removal of this copyright notice without permission is not permitted under law.

REV	CHANGE	DR	BY	DSN	APV	DATE	REV	CHANGE	DR	BY	DSN	APV	DATE
C	FIGURE UPDATE	EDM	DWC	JES	CZH	3/9/2020	F						
B	EDITORIAL CHANGES	-	GW	JS	MDJ	4/1/2018	E						
A	REVISION	-	-	PEA	JJ	10/20/2005	D	DRAWING UPDATE	EDM	DWC	JES	CZH	12/11/2020

X Indicates Latest Revision | Completely Revised | New Page | Information Removed

SDG&E ELECTRIC OVERHEAD AND UNDERGROUND CONSTRUCTION STANDARDS

THREE PHASE, CABLE-POLE-12KV,
NON-PORCELAIN 900 AMP DISCONNECT

OH1442.3
UG4242.3

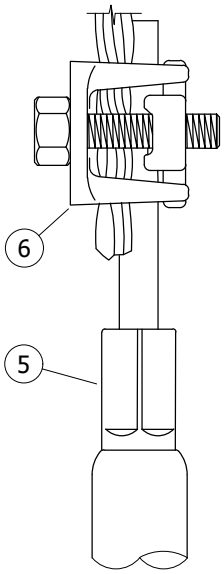

DETAIL 5
OPTION 1
PREFERRED

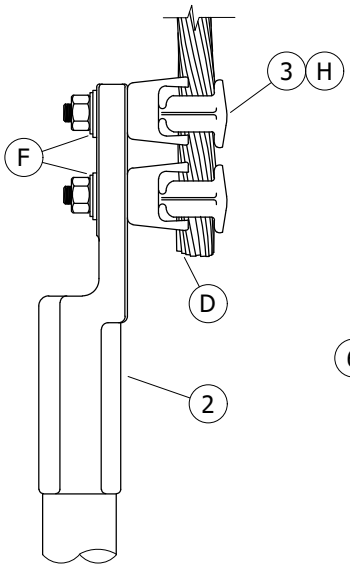

DETAIL 5
OPTION 2

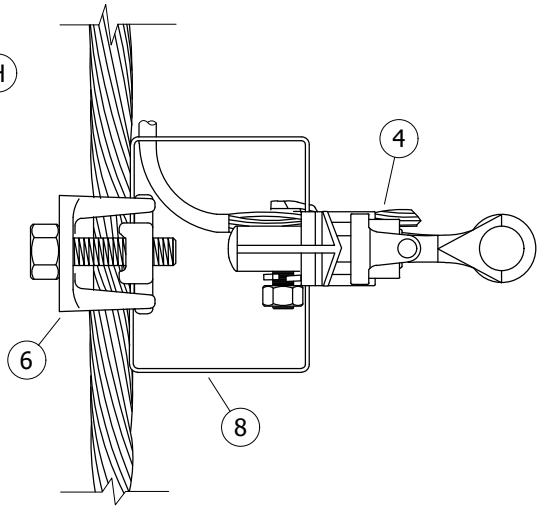

DETAIL 6
OPTION 1

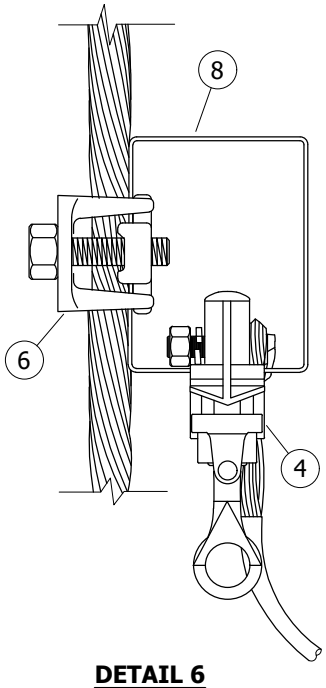

DETAIL 6
OPTION 2

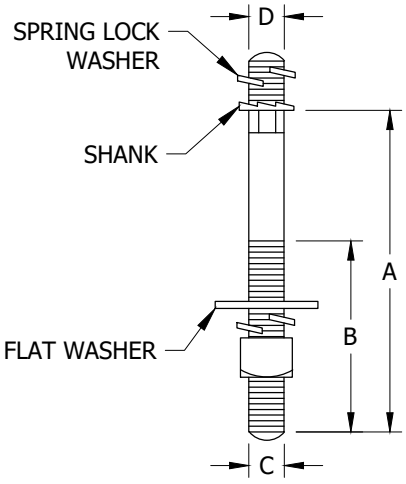

DETAIL 7
INSULATOR PIN FOR
35KV INSULATORS

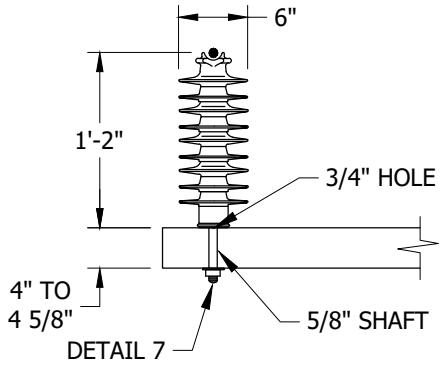

DETAIL 8
35KV F-NECK INSULATOR
TANGENT OR SINGLE DEADEND ARM

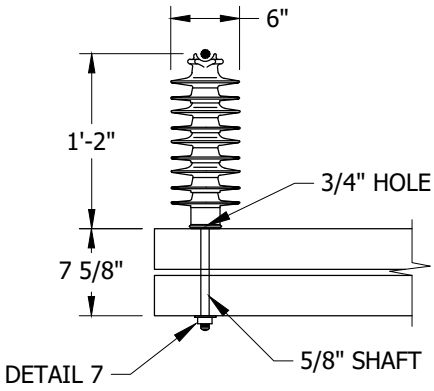

DETAIL 9
35KV F-NECK INSULATOR
STACKED ARM

TABLE 1

DESCRIPTION	A	B	C	D	STOCK NUMBER	DESIGN UNITS
HARDWARE POST INSULATOR STUD, FIBERGLASS,WOOD	7 1/2"	3 1/2"	4 1/2"	3/4"	S701760	STUD-W
	10"	4"	5/8"	1 3/4"	S701762	STUD-L

© 1998 - 2020 San Diego Gas & Electric Company. All rights reserved. Removal of this copyright notice without permission is not permitted under law.

REV	CHANGE	DR	BY	DSN	APV	DATE	REV	CHANGE	DR	BY	DSN	APV	DATE
C	FIGURE UPDATE	EDM	DWC	JES	CZH	3/9/2020	F						
B	EDITORIAL CHANGES	-	GW	JS	MDJ	4/1/2018	E						
A	REVISION	-	-	PEA	JJ	10/20/2005	D	DRAWING UPDATE	EDM	DWC	JES	CZH	12/11/2020

INSTALLATION:

A. NEW CABLE POLES SHALL HAVE A STANDARD DEPTH OF 9 FEET. IN MOST CASES, THIS WILL REQUIRE A 5-FOOT TALLER POLE.

B. THIS CONSTRUCTION TO BE USED WITH 350 AND LARGER UNDERGROUND CABLE.

C. INTERCONNECT OVERHEAD NEUTRAL, AND CONCENTRIC CABLE NEUTRAL CONDUCTOR TO LIGHTNING ARRESTER GROUND.

(D) INSTALLATION OF WIRE CAN BE MADE ON EITHER SIDE OF TERMINAL COMPRESSION LUG.

(E) REDUCE QUANTITIES AS REQUIRED WHEN NOT USING NEUTRAL.

(F) BRUSH WIRE, INSTALL PENETROX "INHIBITOR" AND BELLEVILLE WASHER.

G. DIMENSIONS CAN VARY BASED ON CROSSARM SIZE AND/OR CONFIGURATION.

(H) REQUIRES TWO TAP LUGS PER CONNECTION.

(J) ARM MAY BE DRILLED TO REPOSITION BOTTOM BOLT ALLOWING CONDUIT TO SET FLUSH ON BOTTOM OF CROSSARM.

(K) CONCENTRIC WITH POLE GROUND, CONNECTION AREA.

(L) MAINTAIN SIX INCHES OF BARE WIRE BELOW DISCONNECT FOR PROPER GROUNDING OF UNDERGROUND CABLE.

(M) CENTER OF CUTOUT ARM SHALL NOT BE MOUNTED HIGHER THAN THIRTY-FIVE FEET FROM GROUND.

BILL OF MATERIALS:

ITEM	DESCRIPTION	WIRE RANGE	QUANTITY	STANDARD PAGE	STOCK NUMBER	DESIGN UNITS	SAP CU
1	CONNECTOR, WEDGE (PREFERRED)	--	AS REQ'D	783	--	--	--
2	CONNECTOR, TERMINAL COMPRESSION LUG	--	AS REQ'D	4174.2	--	--	--
3	CONNECTOR, TAP LUG, 1/0 TO 500MCM CU TAP LUG - BRONZE	--	12 TO 18	--	S471232	TL1/0	TL1/0
4	CONNECTOR, CLAMP, HOT LINE	--	3	788	S227680 (X)	--	--
5	CONNECTOR PIN (PREFERRED) UNDERGROUND STANDARD	--	AS REQ'D	UG4111.2	--	--	--
6	CONNECTOR, BRONZE, 2 BOLT, CONNECTOR, COPPER TAP 3/0-1000	--	--	--	S262370 (X)	CN1000	CN1000
7	CONNECTOR, WEDGE, STIRRUP OR BAIL, #2 SOLID CU	--	3	783	--	--	--
8	CONNECTOR, STIRRUP, BAIL, #2 TIN PLATED CU	--	AS REQ'D	--	S227650	BAIL	BAIL
9	CONDUIT, SQ. 2" X 2" X 10'-0" PVC (SQUARE)	--	AS REQ'D	--	S251534	SQC-2	SQC-2
	CONDUIT, SCH 40, 2" X 10'-0" PVC (ROUND)	--	AS REQ'D	--	S251296	PVC2	PVC2
10	EQUIPMENT, ARRESTER, LIGHTNING	--	3	1247.2	S113248	LA12	LA12
11	EQUIPMENT, POLYMER, SINGLE-DISC, 900A, SWITCH, CABLE POLE	--	3	--	S707004 (VI)	P900DC	P900DC
					S706670 (V)	PS900	--
12	GROUNDING, #4 PVC GRND WIRE, RODS, CONN-STEEL POLE (II)	--	1	1002	--	GNDPSP	GNDPSP
	GROUNDING, WIRE, #4 PVC, RODS & CONNECTORS (FOR WOOD POLES) (II)	--	--	--	--	GNDPVC	GNDPVC
13	HARDWARE, CROSSARM, FIBERGLASS, 10'-0", 4 PIN TANGENT (MINIMUM)	--	AS REQ'D	379	S294378	4TF	4TF
14	HARDWARE, BRACKET, DOUBLE, CUTOUT, ARRESTER	--	3	--	S165454	DBLBKT	DBLBKT
15	HARDWARE, STAND OFF PIN, 1 3/8" (E)	--	2	396	S529214	PS/O1+	PS/O1LG
16	HARDWARE, BRACKET, CABLE SUPPORT, WITH POLY	--	3	4207	S166064	NP-BKT	NP-BKT
17	HARDWARE, BRACKET, CUTOUT/ARRESTOR CROSSARM MOUNTING	--	3	397	S165452 (X)	CO/B	--
18	HARDWARE, CLAMP, STRAIGHT LINE, D.E. (AS NEEDED) (II)	--	AS REQ'D	739	--	--	--
19	HARDWARE, GRIP, RISER, 5-INCH, KELLEMS (1000 AL)	--	AS REQ'D	4204	S394098	5G1000	5G1000
20	HARDWARE, RISER ARM BRACKET & 24" CHANNEL (ASSEMBLY)	--	AS REQ'D	1404/4204	--	RSRARM (I)	RSRARM
21	HARDWARE, STANDOFF (350MCM AND ABOVE) (OPTIONAL)	--	AS REQ'D	--	S429040 (X)	--	--
22	HARDWARE, PIN, POST, STUD, FG/WOOD (STANDARD ARM) (II)	--	AS REQ'D	396.2	S701760	STUD-W	STUD-W
23	HARDWARE, PIN, POST, STUD, FG/WOOD (STACKED DEADEND ARM) (II)	--	AS REQ'D	396.2	S701762	STUD-L	STUD-L

© 1998 - 2020 San Diego Gas & Electric Company. All rights reserved. Removal of this copyright notice without permission is not permitted under law.

REV	CHANGE	DR	BY	DSN	APV	DATE	REV	CHANGE	DR	BY	DSN	APV	DATE
C	FIGURE UPDATE	EDM	DWC	JES	CZH	3/9/2020	F						
B	EDITORIAL CHANGES	-	GW	JS	MDJ	4/1/2018	E						
A	REVISION	-	-	PEA	JJ	10/20/2005	D	DRAWING UPDATE	EDM	DWC	JES	CZH	12/11/2020

BILL OF MATERIALS: (CONT'D)

ITEM	DESCRIPTION	WIRE RANGE	QUANTITY	STANDARD PAGE	STOCK NUMBER	DESIGN UNITS	SAP CU
24	HARDWARE,PIN, 1 3/8" COBB FORGED STEEL GALV. (II)	--	2	--	S532448	PS1+	PS1LG
25	INSULATOR, VICE TOP, PIN, 1 3/8", UNIVERSAL (g)	--	3 TO 4	750.2	S429272	IPULG	IPULG
26	INSULATOR, WHITE, NEUTRAL, "F" NECK, 1 3/8" PIN (OPTIONAL)	--	2	--	S432220	IWN	IWN
27	INSULATOR, SUSPENSION, 35KV, POLYMER	--	AS REQ'D	750.3	S428958	LONGDE	LONGDE
28	INSULATOR, HENDRIX 35KV POLY LINE POST (II)	--	AS REQ'D	750	S429144	LP-14F	LP-14F
29	STICKER, "HIGH VOLTAGE", VINYL, ADHESIVE	--	AS REQ'D	208.3	S647650 (X)	--	--
30	STICKER, TAGS, SWITCH NUMBER	--	--	208	--	--	--
31	STICKER, "PN", VINYL, ADHESIVE	--	AS REQ'D	--	S648004 (X)	--	--
32	WIRE, 500 STR. CU, BARE (III)	--	AS REQ'D	711	S813792	BS500	BS500
33	WIRE, 4/0 STR. CU, SOFT-DRAWN, COVERED (CONCENTRIC BUS WIRE)	--	30'-0"	711	S812126	HEND4/0	HEND4/0
34	WIRE, POLY COVERED 4/7 STRAND COPPER	--	AS REQ'D	711	S815044	POLY4J	POLY4J
35	STRAP, ARRESTER GROUND	--	AS REQ'D	1002	S698754	LAGND	LAGND
36	WIRE, POLY COVERED, #4 SOLID COPPER (POLE GROUND)	--	AS REQ'D	711	S812490	POLY4	POLY4
37	WILDLIFE, COVER, 900A DISCONNECT (AS REQ'D) (II)	--	3	1620.7	S286948	9COCVR	9COCVR

NOTES:

(I) MINIMUM CROSSARM TEN-FOOT.
(II) NOT SHOWN ON FIGURES.
(III) WIRE SIZE IS APPLICABLE TO AMPERAGE OF PRIMARY SOURCE.
(IV) MINIMUM 480A COPPER WIRE REQUIRED (OPTION FOR USE OF COVERED WIRE).
(V) REQUIRED IN CONTAMINATION DISTRICT 1 AND PREFERRED IN COASTAL DISTRICTS (OC, NC, BC, CM).
(VI) PREFERRED FOR INLAND DISTRICTS (NE, RA, EA, ME).
(X) THIS ITEM IS EXEMPT.

REFERENCE:

a. ALLOWABLE WORKING AND CLIMBING SPACE - SEE OH251.
(b) POLE STEPPING - SEE OH363.
c. GROUNDING METHODS - SEE OH1002.
d. RISER POSITION - SEE OH1404/UG4204.
(e) MINIMUM VERTICAL SEPARATION AS PER G.O. 95 - SEE OH1406/UG4206.
(f) FOR BONDING GENERAL INFORMATION - SEE OH1003.
(g) PER CONTAMINATION DISTRICT REQUIREMENTS - SEE OH287.
(h) REFERENCE GELPACT - SEE OH783.16.
i. MINIMUM CROSSARM BOLT REQUIREMENT - SEE OH379.
(j) FIBERGLASS CROSSARM GROUNDING DETAIL OPTION, SEE OH1002.1. FIGURE 5 AND FIGURE 6.

© 1998 - 2020 San Diego Gas & Electric Company. All rights reserved. Removal of this copyright notice without permission is not permitted under law.

REV	CHANGE	DR	BY	DSN	APV	DATE	REV	CHANGE	DR	BY	DSN	APV	DATE
C	FIGURE UPDATE	EDM	DWC	JES	CZH	3/9/2020	F						
B	EDITORIAL CHANGES	-	GW	JS	MDJ	4/1/2018	E						
A	REVISION	-	-	PEA	JJ	10/20/2005	D	DRAWING UPDATE	EDM	DWC	JES	CZH	12/11/2020

X Indicates Latest Revision | Completely Revised | New Page | Information Removed

SDG&E ELECTRIC OVERHEAD AND UNDERGROUND CONSTRUCTION STANDARDS

THREE PHASE, CABLE-POLE-12KV,
NON-PORCELAIN 900 AMP DISCONNECT

OH1442.6
UG4242.6

SCOPE: THIS STANDARD SHOWS A SIDE BREAK GANG OPERATED POLE TOP 900A RISER MOUNTING SWITCH FOR CIRCUIT TIES OR SECTIONALIZING PURPOSES.

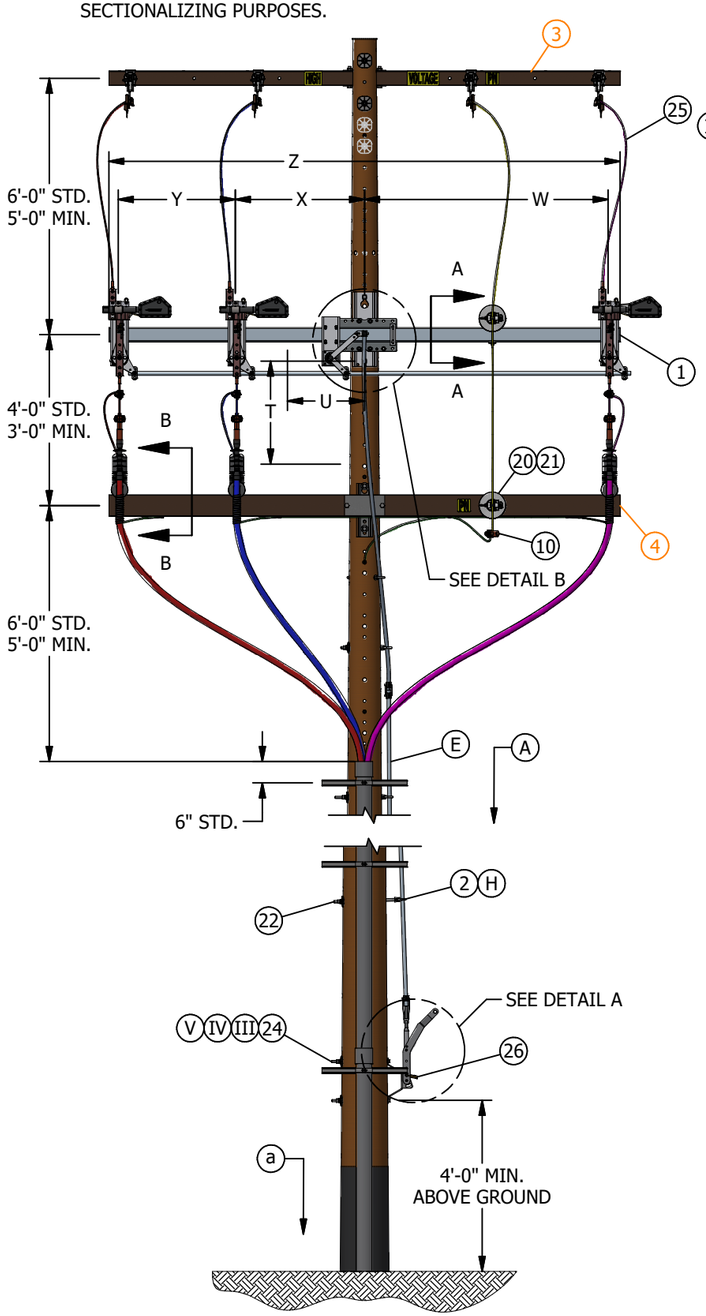

FIGURE 1
FRONT VIEW

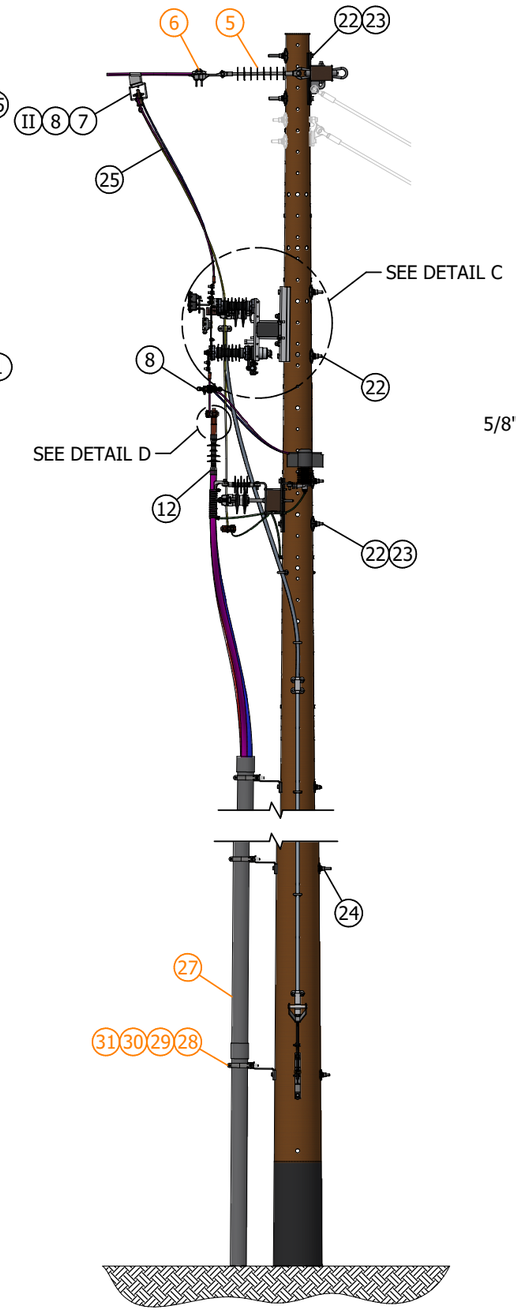

FIGURE 1
SIDE VIEW

ATTENTION:

* NEW PRIMARY CABLE POLE INSTALLATIONS SHALL BE TRUCK ACCESSIBLE. EXISTING CABLE POLE LOCATIONS THAT ARE NOT TRUCK ACCESSIBLE CAN BE GRANDFATHERED BY DEVIATION.

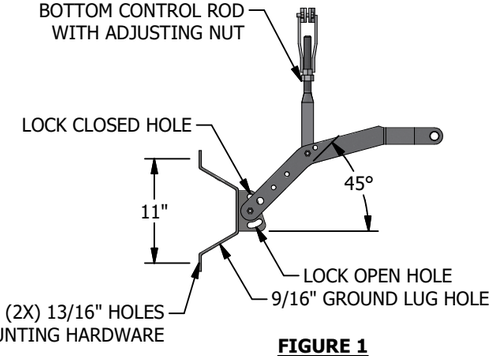

FIGURE 1
DETAIL A
POSITION OF HANDLE FOR
CONTROL ROD COMPRESSION

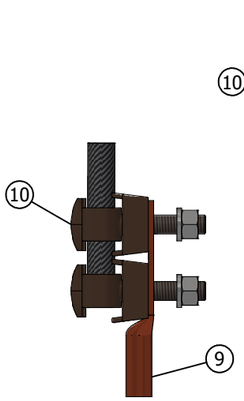

FIGURE 1
DETAIL D
CONFIGURATION 1

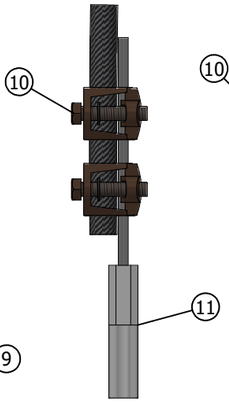

FIGURE 1
DETAIL D
CONFIGURATION 2
2/0 AND BELOW

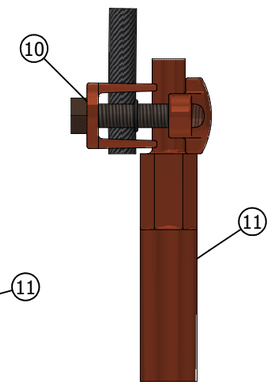

FIGURE 1
DETAIL D
CONFIGURATION 3
350 AND ABOVE

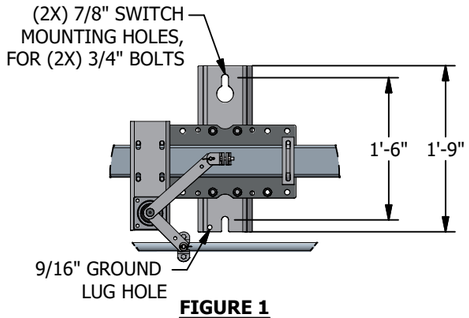

FIGURE 1
DETAIL B

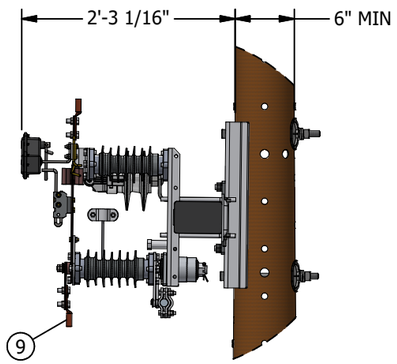

FIGURE 1
DETAIL C

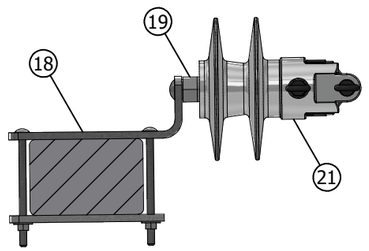

FIGURE 1
SECTION A-A

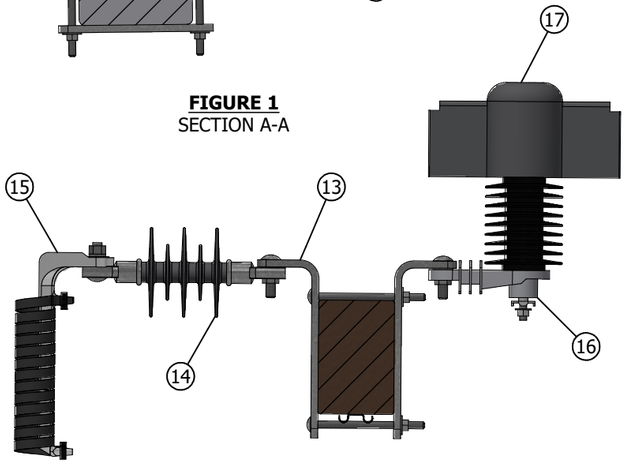

FIGURE 1
SECTION B-B

REV	CHANGE	DRWN	BY	CHKD	APVD	DATE
E	REVISE TO 3D FORMAT/BILL OF MATERIALS UPDATE	DV	JIK	-	-	3/15/2023
D	FIGURE UPDATE	EDM	MRF	GLW	KRG	5/31/2022
C	FORMATTING	EDM	JIK	-	-	9/16/2021

SDG&E ELECTRIC OVERHEAD AND UNDERGROUND CONSTRUCTION STANDARDS

POLE TOP SWITCH 12KV
RISER LOADBREAK TYPE SINGLE CIRCUIT

SCALE: NOT TO SCALE

DRAWING NO: OH1444.1 UG4244.1

SHEET: 1 OF 3

© 1998 - 2023 San Diego Gas and Electric Company. All rights reserved. Removal of this copyright notice without permission is not permitted under law.

X Indicates Latest Revision | Completely Revised | New Page | Information Removed

TABLE OF CONTENTS

TABLE OF CONTENTS

TABLE 1:

SWITCH CONFIGURATIONS									
TYPE	SWITCH WEIGHT (LBS)	Z (FT)	Y (IN)	X (IN)	W (IN)	T (IN)	U (IN)	STOCK NUMBER	DESIGN UNIT
CENTER PH. LEFT	240 LBS.	10	33	26	55	31 5/8	34 1/8	S709312	RGS10L
CENTER PH. RIGHT	240 LBS.	10	33	24	57	31 5/8	34 1/8	S709310	RGS10R
CENTER PH. LEFT	250 LBS.	12	33	36	69	31 5/8	34 1/8	S709316	RGS12L
CENTER PH. RIGHT	250 LBS.	12	33	36	69	31 5/8	34 1/8	S709314	RGS12R
CENTER PH. LEFT	265 LBS.	15	33	54	87	44 7/8	47 5/8	S709318	RGS15L
CENTER PH. RIGHT	265 LBS.	15	33	54	87	44 7/8	47 5/8	S709320	RGS15R

INSTALLATION:

(A) REFLECTOR STRIPS ARE REQUIRED ON ALL SECTIONALIZING/TIE SWITCHES AND SERVICE RESTORER POLES. (d)

B. NEUTRALS SHALL BE SOLIDLY TIED TOGETHER AT ALL SWITCHES REGARDLESS OF WHETHER THEY ARE NORMAL OPEN OR CLOSED. THIS INCLUDES CIRCUIT TIES. (e)

RECIPROCATING CONTROL ROD SWITCH INSTALLATION:

C. THE SWITCH IS SUPPLIED WITH THE CONTACTS TIED IN THE CLOSED POSITION. DO NOT CUT THESE TIES UNTIL THE SWITCH AND CONTROL ROD INSTALLATION IS COMPLETE.

D. PROVIVED V-BRACES ARE REQUIED ON THE FIFTEEN-FOOT SWITCHES.

(E) VERIFY THE POLE QUADRANT WHERE THE CONTROL ROD WILL BE INSTALLED.

F. THE OPERATION HANDLE SHOULD BE LOCATED 42 INCHES FROM GROUND GRADE, OR AT ANY INCREASED ELEVATION.

G. DRILL 13/16-INCH SWITCH MOUNTING HOLES ACCORDING TO THE DIMENSION GIVEN ON THE CONSTRUCTION DRAWING. INSTALL SWITCH WITH 3/4-INCH BOLTS AND SHEAR PLATES ARE REQUIRED BY CONSTRUCTION STANDARDS.

(H) INSTALL CONTROL ROD, WORKING FROM THE SWITCH DOWN TO THE OPERATING HANDLE. INSTALL CONTROL ROD GUIDES AS SHOWN ON THE CONSTRUCTION DRAWING. MAKE CERTAIN THAT THE SWITCH IS IN THE CLOSED POSITION PRIOR TO DRILLING HOLES FOR THE CONTROL ROD GUIDES. SWING ARM STYLE GUIDES SHOULD POINT UPWARDS AT 45 DEGREES WHEN THE SWITCH IS CLOSED. CHECK THAT 17 INCHES MINIMUM SPACE IS AVAILABLE ABOVE EYEBOLT GUIDES FOR CONTROL RODS SPLICES WHEN EYE BOLT TYPE GUIDES ARE USED (1-INCH FIBERGLASS AND 3/4-INCH PIPE ONLY). MINIMUM TWO GUIDES PER TEN-FOOT SECTION OF CONTROL ROD.

J. DRILL CONTROL HANDLE MOUNTING BOLT HOLES AT THE DESIRED LOCATION (42-INCH MINIMUM HEIGHT). ATTACH THE MANUAL OPERATION HANDLE ADJUSTING SCREW CLAMP, OR FITTING TO THE CONTROL ROD SECTION. PUT THE HANDLE IN THE "UP" POSITION. CONNECT THE CONTROL HANDLE ADJUSTING SCREW CLAMP OR FITTING TO THE CONTROL ROD. A COMPRESSIVE LOAD (20-30 LBS.) SHOULD BE FELT ON THE CONTROL AS THE CONTROL MOVES TO THE FULLY CLOSED/LOCKED POSITION. USE THE ADJUSTING SCREW TO ACHIEVE THE PROPER COMPRESSION LOAD.

K. CHECK ALL BOLTS TO ENSURE THAT THEY HAVE BEEN ADEQUATELY TORQUED.

L. CUT THE TIE WIRES ON THE SWITCH CONTACT BLADES.

M. OPERATE THE SWITCH TO OPEN. VERIFY THAT THE PADLOCKING HOLES ON THE HANDLE AND THE HANDLE BASE ALIGN, SWITCH CONTACTS FULL ENGAGED/CLOSED.

N. CLOSE THE SWITCH AND CHECK FOR COMPRESSION IN THE CONTROL ROD.

O. ADJUSTING THE CONTROL ROD COMPRESSION:

1. PULL THE HANDLE DOWNWARD TO ABOUT 45 DEGREES FROM THE VERTICAL CLOSED POSITION.
2. EXTEND THE ADJUSTING SCREW SO THAT THE SLACK IS REMOVED FROM THE CONTROL ROD AND THE HANDLE REQUIRES 20 TO 30 POUNDS OF FORCE TO MAKE IT "TOGGLE" TO THE FULLY CLOSED POSITION.
3. CHECK THAT THE CLOSE PADLOCK HOLE ON THE HANDLE AND THE HANDLE BASE ALIGN.
4. TIGHTEN THE ADJUSTING NUT/LOCK-NUT.

P. OPERATE THE SWITCH SEVERAL TIMES USING A RAPID MOTION THROUGHOUT THE HANDLE ROTATION. SWING THE HANDLE DOWN TO REMOVE THE TOGGLE LOAD AND OPERATE THE SWITCH IN ONE SWIFT MOTION WHEN OPENING THE SWITCH. CLOSE THE SWITCH USING A CONTINUOUS MOTION.

INSTALLATION (CONT'D):

Q. VERIFY THAT THE SWITCH CONTACT BLADES ARE FULLY SEATED WHEN THE SWITCH IS CLOSED.

R. CHECK THE ARC-HORNS OR INTERRUPTERS ARE OPERATION PROPERLY. SEE THE APPROPRIATE INTERRUPTER INSTALLATION AND ADJUSTMENT INSTRUCTION SHEER INCLUDED IN THE SWITCH INSTALLATION DRAWING PACKAGE.

BILL OF MATERIALS:

ITEM	DESCRIPTION	QUANTITY	CALLOUTS	STANDARD PAGE	STOCK NUMBER	DESIGN UNIT
1	SWITCH, GANG OPERATED, 15KV, 600A WITH AMPRUPTER, INCLUDING 30'-0" OF CONTROL ROD	1	-	-	SEE TABLE 1	-
2	ADDITIONAL 10' CONTROL ROD WITH 2 EYE NUTS AND COUPLING	2	(VII) (XX)	-	S602932	I-ROD
3	FIBERGLASS CROSSARM, DEADEND	1	-	379	-	-
4	FIBERGLASS CROSSARM, TANGENT	1	-	379	-	-
5	INSULATOR, DEAD-END, 35KV, GALV, SALISBURY	4	-	750	S428958	LONGDE
6	CLAMP, STRAIGHT LINE, DEADEND	4	-	739	-	-
7	CONNECTOR, WEDGE TYPE WITH STIRRUP (SIZE AS REQ'D)	4	-	788	-	-
8	CLAMP, HOT LINE, BRONZE (SIZE AS REQ'D)	6	-	788	-	-
9	TERMINAL, COMPRESSION, CU OR AL (SIZE AS REQ'D)	6	(XX)	795	-	-
10	CONNECTOR, TWO-BOLT FOR 4/0 COPPER	-	(XX)	-	S262336	CN4/0
	CONNECTOR, TWO-BOLT FOR 1000 KCMIL	4	(X) (XX)	-	S262370	CN1000
	CONNECTOR, EYE BOLT (SIZE AS REQ'D)	-	(XX)	787	-	-
11	TERMINAL, PIN, ALUMINUM/COPPER	3	(XX)	4111	S729944	C1000N
	TERMINAL, PIN, ALUMINUM/COPPER,	-	(XX)	4111	S729930	CP-#2N
12	TERMINAL, 12KV TERMINAL, POLY	3	-	4111	S727138	C1000N
13	BRACKET, CUTOUT ARRESTER, HOT DIPPED 3/8"	3	-	397	S165454	COABKT
14	INSULATOR, POLYMER COUPLING, 9 INCHES IN LENGTH.	3	-	1355	S429040	-
15	BRACKET, MOUNTING CS 820	3	-	-	S166064	NP-BKT
16	ARRESTER, LIGHTNING, 10KV	3	-	-	S113248	-
17	COVER, LIGHTNING ARRESTER, 4" DIAMETER	3	-	1640	S289602	-
18	BRACKET, CUTOUT / ARRESTER CROSSARM MOUNTING	1	-	397	S165452	COBKT
19	PIN, TRANSFORMER 1-3/8"	1	-	396	S529214	PS/O1LG
20	PIN, INSULATOR, 12KV, FORGED STEEL, GALV	1	-	396	S532448	PS1LG
21	INSULATOR, LINE, 12kV	2	-	750	-	-
22	BOLT, MACHINE, 3/4", GALV W/ NUT	6	(XX)	390	-	-
	WASHER, CURVED, RIB, 4" X 4" X 17/32", 13/16" HOLE, FOR 3/4" BOLT, GALV	6	(XX)	390	S797760	-
	WASHER, 3/4", DOUBLE COIL SPRING, TYPE M-W, STEEL, TIN/ZINC COAT	6	(XX)	390	S798496	-
23	WASHER, FLAT, ROUND, 3/4" X 2", GALV	4	(XX)	390	S800256	-
24	BOLT, MACHINE, 5/8", GALV W/ NUT	12	(XX)	390	-	-
	WASHER, CURVED, RIB, 3" X 3" X 5/16", 11/16" HOLE, FOR 5/8" BOLT, GALV	12	(XX)	390	S797792	-
	WASHER, 5/8", DOUBLE COIL SPRING, TYPE M-W, STEEL, TIN/ZINC COAT	12	(XX)	390	S798560	-
25	WIRE, BARE STRAND OR POLY COVERED, (SIZE AS REQUIRED)	-	(XX)	711	-	-
26	PADLOCK, SCHLAGE ELECTRIC SERIES	1	-	-	S514848	-
27	CONDUIT, 4" X 10FT, PVC SCHEDULE 40	3	(XX)	1404	S251392	S40-4"
28	CLAMP, PIPE, STEEL, GALV., UNISTRUT, 4"	5	(XX)	1404	S229664	CL-4IN
29	CHANNEL, 1-5/8" X 1-5/8" BACK TO BACK	5	(XX)	1404	S216702	RARM/L
30	NUT, STUD, 1/2" X 1-3/8" GALV 13	10	(XX)	-	S507000	-
31	BRACKET, CONDUIT STANDOFF, CONSTRUCTED	5	(XX)	1404	S167186	RARM/L

REV	CHANGE	DRWN	BY	CHKD	APVD	DATE
E	REVISE TO 3D FORMAT/BILL OF MATERIALS UPDATE	DV	JIK	-	-	3/15/2023
D	FIGURE UPDATE	EDM	MRF	GLW	KRG	5/31/2022
C	FORMATTING	EDM	JIK	-	-	9/16/2021

SDGE

SDG&E ELECTRIC OVERHEAD AND UNDERGROUND CONSTRUCTION STANDARDS

POLE TOP SWITCH 12KV
RISER LOADBREAK TYPE SINGLE CIRCUIT

SCALE: NOT TO SCALE

DRAWING NO: OH1444.2 UG4244.2

SHEET: 2 OF 3

© 1998 - 2023 San Diego Gas and Electric Company. All rights reserved. Removal of this copyright notice without permission is not permitted under law.

X Indicates Latest Revision | Completely Revised | New Page | Information Removed

NOTES:

I. SWITCH OPERATING RODS MAY EXTEND ONE-HALF THEIR DIAMETER INTO THE CLIMBING SPACE. (d)

(II) IN CONTAMINATION DISTRICT 1, COMPRESSION OR WEDGE CONNECTORS ARE PREFERRED. IN CONTAMINATION DISTRICTS 2 & 3, STIRRUP WEDGE CONNECTORS ARE PREFERRED FOR UG CABLE 2/0 AND BELOW, AND WEDGE CONNECTORS ARE PREFERRED FOR UG CABLE 350 AND ABOVE.

(III) CONTROL ROD IS SHOWN ROTATED 90 DEGREES TO THE RIGHT TO ALLOW FOR EXTERNAL RISERS ALONG FACE OF POLE.

(IV) SWITCH HANDLE SHOWN IN CLOSED POSITION.

(V) SWITCH HANDLE CAN BE ROTATED UP TO 180 DEGREES FROM FACE OF POLE IN EITHER DIRECTION.

(VI) ORIENT SWITCH ARM BRACE BRACKET 180 DEGREES FROM NORMAL POSITION FOR USE AS MOUNTING BRACKET FOR THE NEUTRAL STANDOFF.

(VII) NOT SHOWN ON FIGURES.

(X) THIS ITEM IS EXEMPT.

(XX) QUANTITY SHOWN IN THE BILL OF MATERIALS ARE FROM THE SPECIFIC CONSTRUCTION THAT IS ILLUSTRATED IN THIS STANDARD. YOU MUST ADJUST THE QUANTITY BASED ON THE NEEDS OF YOUR JOB.

REFERENCE:

(a) FOR POLE STEPPING, SEE OH363.

b. FOR FEEDER CIRCUIT SECTIONALIZING AND PROTECTION, SEE DM6111.

c. FOR CONDUCTOR CLEARANCE, SEE G.O. 95, 54.7-A3.

(d) FOR POLE MARKING, SEE OH208.

(e) FOR NEUTRAL REQUIREMENT, SEE DM6221.

f. FOR BONDING REQUIREMENTS, SEE OH1003.

TABLE OF CONTENTS

REV	CHANGE	DRWN	BY	CHKD	APVD	DATE
E	REVISE TO 3D FORMAT/BILL OF MATERIALS UPDATE	DV	JIK	-	-	3/15/2023
D	FIGURE UPDATE	EDM	MRF	GLW	KRG	5/31/2022
C	FORMATTING	EDM	JIK	-	-	9/16/2021

© 1998 - 2023 San Diego Gas and Electric Company. All rights reserved. Removal of this copyright notice without permission is not permitted under law.

SDG&E ELECTRIC OVERHEAD AND UNDERGROUND CONSTRUCTION STANDARDS

POLE TOP SWITCH 12KV
RISER LOADBREAK TYPE SINGLE CIRCUIT

SCALE: NOT TO SCALE

DRAWING NO: OH1444.3 UG4244.3

SHEET: 3 OF 3

X Indicates Latest Revision | Completely Revised | New Page | Information Removed

SCOPE: THIS STANDARD SHOWS ALLEY ARM CONSTRUCTION FOR 12.47KV AND BELOW, THREE-PHASE CABLE POLE USING NON-PORCELAIN TERMINALS WITH CROSSARM MOUNTED TERMINALS FOR #2/0 AND SMALLER U.G. CABLE. THIS CONSTRUCTION IS TO BE USED FOR ALL CONTAMINATION DISTRICTS.

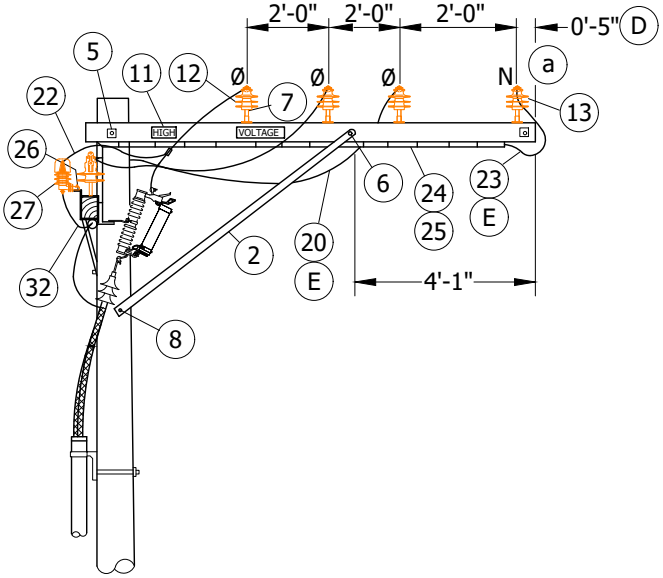

FIGURE 1
TANGENT CONSTRUCTION
SIDE VIEW

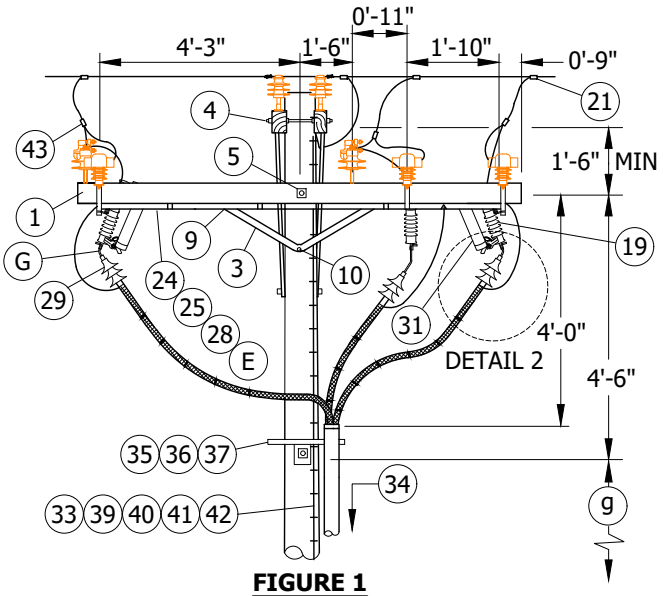

FIGURE 1
TANGENT CONSTRUCTION
FRONT VIEW

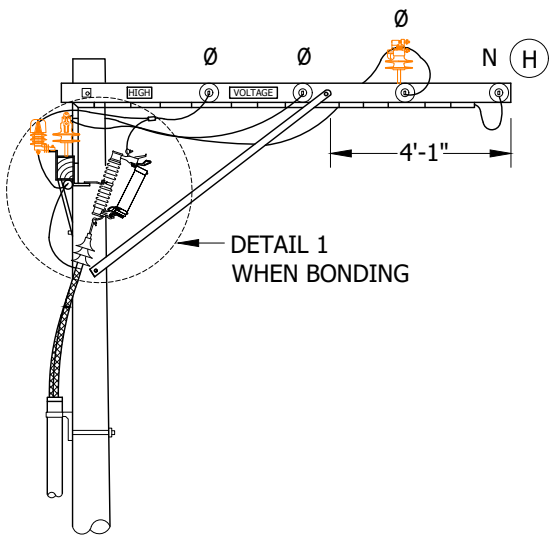

FIGURE 2
DEADEND CONSTRUCTION
SIDE VIEW

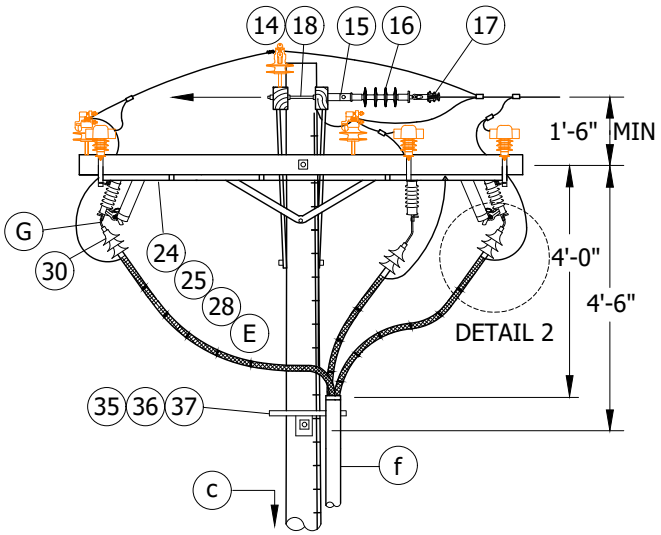

FIGURE 2
DEADEND CONSTRUCTION
FRONT VIEW

TABLE OF CONTENTS

© 1998 - 2020 San Diego Gas & Electric Company. All rights reserved. Removal of this copyright notice without permission is not permitted under law.

REV	CHANGE	DR	BY	DSN	APV	DATE	REV	CHANGE	DR	BY	DSN	APV	DATE
C	TABLE UPDATE	EDM	JIK	JES	CZH	4/13/2020	F						
B	DRAWING UPDATE	PEI	-	-	-	02/18/2019	E						
A	ORIGINAL ISSUE	-	-	PTA	JJ	10/20/2005	D						

X Indicates Latest Revision | Completely Revised | New Page | Information Removed

SHEET
1 OF 5

SDG&E ELECTRIC OVERHEAD AND UNDERGROUND CONSTRUCTION STANDARDS

12.47KV AND BELOW CABLE POLE THREE-PHASE,
1/C PER PHASE, ALLEY ARM CONSTRUCTION,
NON-PORCELAN TERMINALS

OH1447.1
UG4247.1

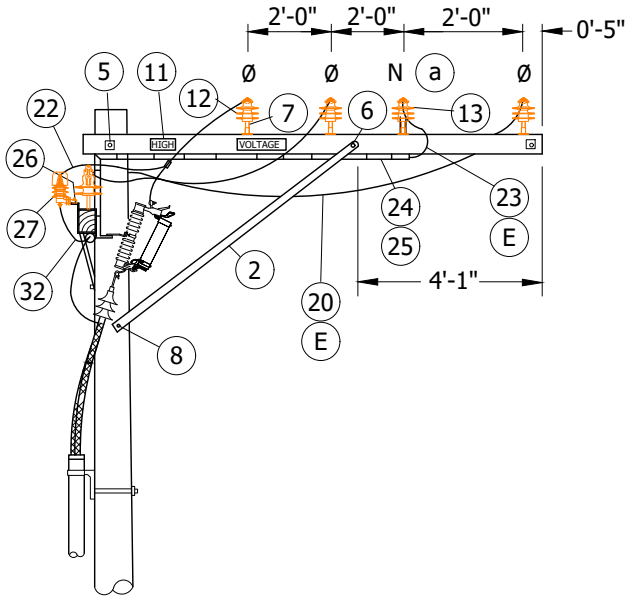

FIGURE 3
TANGENT CONSTRUCTION
SIDE VIEW

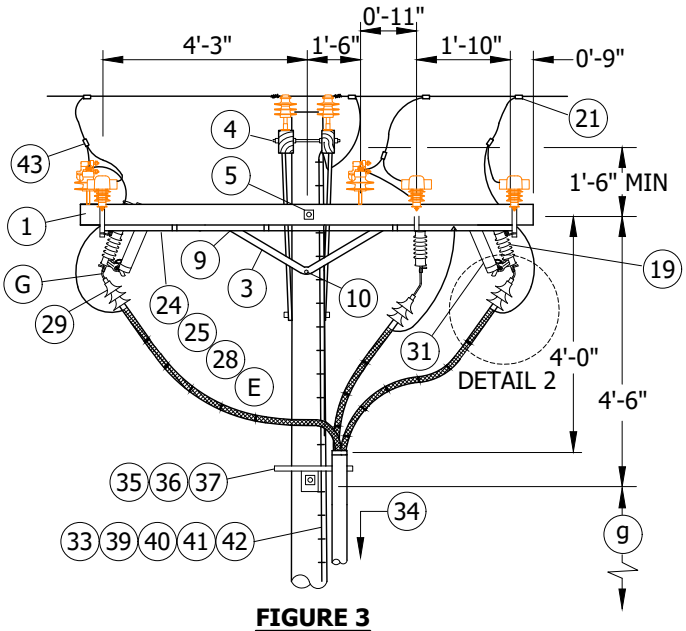

FIGURE 3
TANGENT CONSTRUCTION
FRONT VIEW

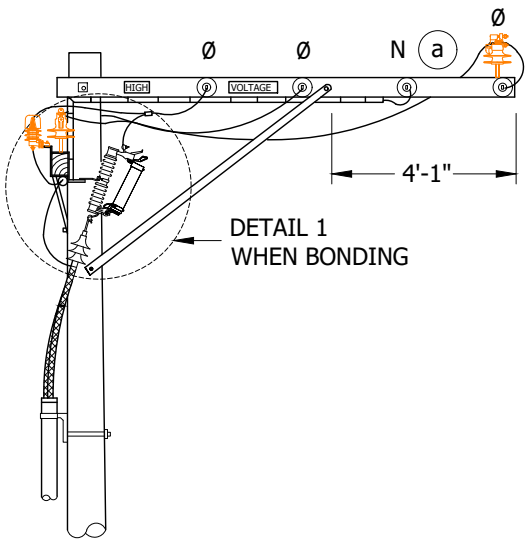

FIGURE 4
DEADEND CONSTRUCTION
SIDE VIEW

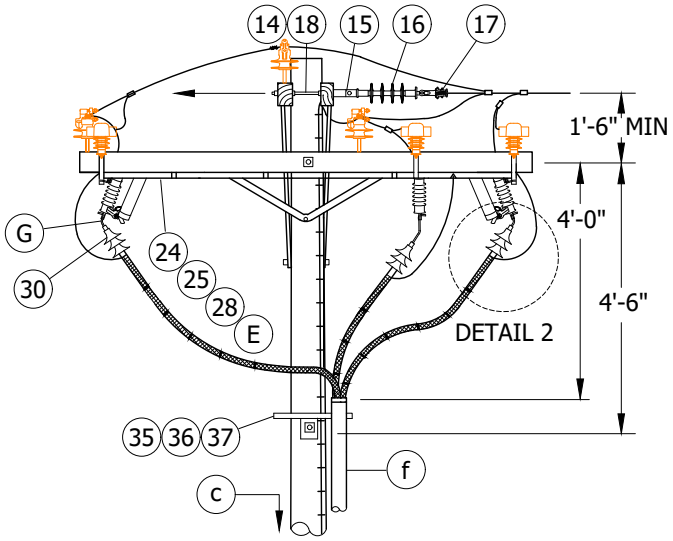

FIGURE 4
DEADEND CONSTRUCTION
FRONT VIEW

TABLE OF CONTENTS

© 1998 - 2020 San Diego Gas & Electric Company. All rights reserved. Removal of this copyright notice without permission is not permitted under law.

REV	CHANGE	DR	BY	DSN	APV	DATE	REV	CHANGE	DR	BY	DSN	APV	DATE
C	TABLE UPDATE	EDM	JIK	JES	CZH	4/13/2020	F						
B	DRAWING UPDATE	PEI	-	-	-	02/18/2019	E						
A	ORIGINAL ISSUE	-	-	PTA	JJ	10/20/2005	D						

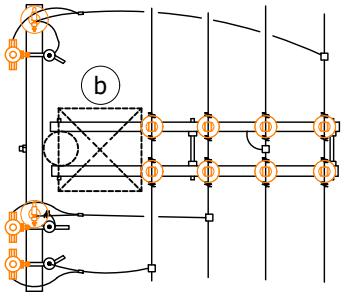

FIGURE 5
TANGENT CONSTRUCTION
CLIMBING SPACE

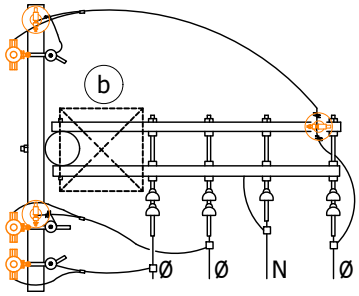

FIGURE 6
DEADEND CONSTRUCTION
CLIMBING SPACE

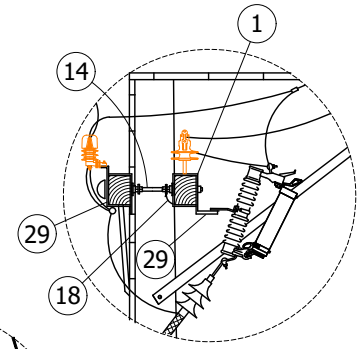

DETAIL 1 (D)

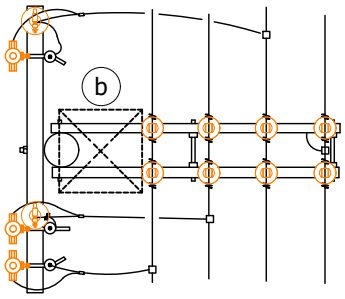

FIGURE 7
TANGENT CONSTRUCTION
CLIMBING SPACE

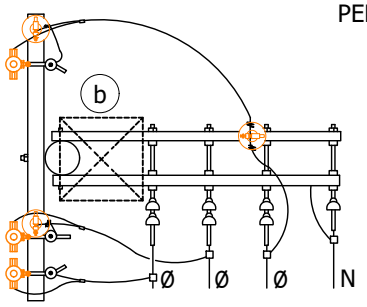

FIGURE 8
DEADEND CONSTRUCTION
CLIMBING SPACE

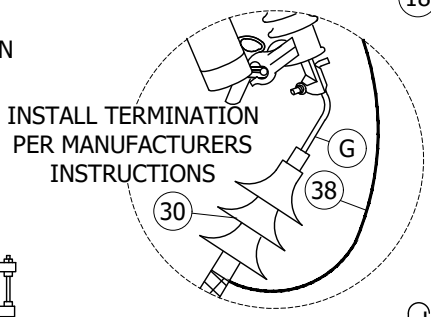

DETAIL 2

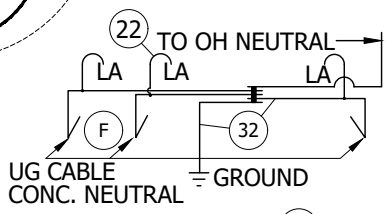

DETAIL 3 (F)
GROUND WIRING

INSTALLATION:

A. NEW CABLE POLES SHALL HAVE A STANDARD SETTING DEPTH OF 9'. IN MOST CASES THIS WILL REQUIRE A 5' TALLER POLE.

B. THIS CONSTRUCTION TO BE USED WITH #2/0 AND SMALLER UNDERGROUND CABLE.

(C) REDUCE QUANTITIES AS REQUIRED WHEN NOT USING NEUTRAL.

(D) BOND CUTOUTS IN HEAVY CONTAMINATION DISTRICTS AS SHOWN ON STANDARD 287. IN AREAS WHERE BONDING IS REQUIRED, TO AVOID BONDWIRE AND LIGHTNING ARRESTER GROUNDWIRE ON THE SAME CROSSARM, USE TWO CROSSARMS; ONE FOR CUTOUTS AND ONE FOR LIGHTNING ARRESTERS. USE MATERIAL ITEMS (1), (14), (18) AND (29) WHEN ADDING CROSSARM.

TABLE 1

(E)

UG CABLE SIZE AWG OR KCMIL, AL	OH JUMPER COND SIZE, AWG OR KCMIL, CU	OH NEUT JUMPER SIZE			CABLE POLE NEUT SIZE (CU) UNDER POTHEAD ARM OR TRIPLE TERM BRKT
		CU	AL	-	
2	4	6	2	-	#6 PER PHASE
2/0	4	6	2	-	#6 PER PHASE

(F) INTERCONNECT OVERHEAD NEUTRAL AND CONCENTRIC CABLE NEUTRAL CONDUCTORS TO LIGHTNING ARRESTER GROUND.

(G) WRAP ONE HALF OF EXPOSED ALUMINUM PORTION OF PIN CONNECTOR WITH SILICONE TAPE (S/N 720384) TO PREVENT CORROSION. INSERT THE PIN INTO THE BOTTOM OF THE CUTOUT CLAMP. BEFORE TIGHTENING THE CLAMP, BEND THE TOP OF THE PIN (APPROX. 1-1/2") AT A 90° DEGREE ANGLE.

© 1998 - 2020 San Diego Gas & Electric Company. All rights reserved. Removal of this copyright notice without permission is not permitted under law.

REV	CHANGE	DR	BY	DSN	APV	DATE	REV	CHANGE	DR	BY	DSN	APV	DATE
C	TABLE UPDATE	EDM	JIK	JES	CZH	4/13/2020	F						
B	DRAWING UPDATE	PEI	-	-	-	02/18/2019	E						
A	ORIGINAL ISSUE	-	-	PTA	JJ	10/20/2005	D						

TABLE OF CONTENTS

BILL OF MATERIALS:

ITEM	DESCRIPTION		QUANTITY FIG. 1	QUANTITY FIG. 2	STANDARD PAGE	STOCK NUMBER	DESIGN UNITS
1	CROSSARM, 3-3/4" X 5-3/4" X 10'-0"		3	3	380.2	-	-
2	BRACE, DIAGONAL ALLEY ARM, 7'		2	2	-	S164352	-
3	BRACE, ANGLE CROSSARM, 4'		1	1	-	S164032	-
4	BOLT, SPACE, GALV, 5/8" X (LENGTH AS REQ'D), 4 SQ FLAT WASH, 1DBL COIL SPR WASH (C)		1	-	392.1 & .2	-	-
5	BOLT, MACH, GALV, 5/8" X (LENGTH AS REQ'D), 2 SQ FLAT WASH, 1 DBL COIL SPR WASH		1	2	392.1 & .2	-	-
6	BOLT, SPACE, GALV, 5/8" X (LENGTH AS REQ'D), 2 SQ WASH 2 DBL COIL SPR WASH		1	1	392.1 & .2	-	-
7	PIN, INSULATOR, STRAIGHT, 12KV, (C) OR	1"	10	3	-	S532706 (X)	-
		1-3/8"				S532448	-
8	BOLT, MACH, GALV, 5/8" X (LENGTH AS REQ'D), 1 DBL COIL SPR WASH		1	1	392.1 & .2	-	-
9	BOLT, MACH, GALV, 1/2" X 7", 1 RD WASH, 1 DBL COIL SPR WASH		2	2	392.1 & .2	S678528	-
10	BOLT, MACH, GALV, 5/8" X (LENGTH AS REQ'D), 1 SQ WASH, 1 DBL COIL SPR WASH		1	1	392.1 & .2	-	-
11	SIGN, HIGH VOLTAGE, & 8 ROOFING NAILS		2	2	-	S647648	-
						S492224	-
12	INSULATOR, LINE, 12KV		8	3	750.3	-	-
13	INSULATOR, LINE, 12KV, NEUTRAL (C)		2	2	-	S429216	-
14	BOLT SPACE, GALV, 5/8" X (LENGTH AS REQ'D), 3 SQ FLAT WASH, 2 RD AND 2 DBL COIL SPRING WASHER & 2 NUTS		-	4	392.1 & .2	-	-
15	CLEVIS, DEADEND, 5/8" BOLT, STEEL (C)		-	4	-	S235712	-
16	INSULATOR, SUSPENSION, 12KV , CLEVIS (C)		-	4	750.4	S431650	-
17	CLAMP, STRAIGHT LINE, D.E. (C)		-	4	739-743	-	-
18	WIRE, #8, BARE SOLID ANNEALED COPPER	FT	-	10	-	S812928	-
		LB	-	1			
19	CUTOUT, FOR CURRENT LIMITING FUSE		3	3	1206	-	-
20	WIRE, BARE STRANDED COPPER, (OH JUMPERS)		36'	36'	715	-	-
21	CONNECTOR, WIRE COMPRESSION (SIZE AS REQ'D)		AS REQ'D		784-786	-	-
22	WIRE, #6, BARE STRANDED COPPER		12'	12'	-	S813536	-
23	WIRE, BARE STRANDED COPPER OR ACSR/AW BARE, (OH NEUTRAL JUMPER) (F)		16'	16'	711/715	-	-
24	CONDUIT, PVC, TYPE 2, SCHEDULE 40, 1"		22'	22'	-	S251202 (X)	-
25	STRAPS, PIPE, GALV, 1", & 6D NAILS, GALV		AS REQ'D		-	S697792	-
26	BRACKET, CUTOUT/ARRESTER, FOR CROSSARM MOUNTING		3	3	-	S165446 (X)	-
27	ARRESTER, LIGHTNING W/48" COVERED LEAD WIRE		3	3	1247	S113256	10KTVA
28	WIRE, BARE STRANDED COPPER (UNDER POTHEAD ARM) (E)		12'	12'	715	-	-
29	BRACKET, ARRESTER OR CUTOUT		AS REQ'D		-	S166070	-
30	TERMINALS, UNDERGROUND CABLE		3	3	4111	-	-
31	FUSE, CURRENT-LIMITING, SIZE AS SPECIFIED ON WORK ORDER		3	3	1207	-	-

TABLE OF CONTENTS

© 1998 - 2020 San Diego Gas & Electric Company. All rights reserved. Removal of this copyright notice without permission is not permitted under law.

REV	CHANGE	DR	BY	DSN	APV	DATE	REV	CHANGE	DR	BY	DSN	APV	DATE
C	TABLE UPDATE	EDM	JIK	JES	CZH	4/13/2020	F						
B	DRAWING UPDATE	PEI	-	-	-	02/18/2019	E						
A	ORIGINAL ISSUE	-	-	PTA	JJ	10/20/2005	D						

X Indicates Latest Revision | Completely Revised | New Page | Information Removed

SDG&E ELECTRIC OVERHEAD AND UNDERGROUND CONSTRUCTION STANDARDS

12.47KV AND BELOW CABLE POLE THREE-PHASE,
1/C PER PHASE, ALLEY ARM CONSTRUCTION,
NON-PORCELAN TERMINALS

OH1447.4
UG4247.4

BILL OF MATERIALS (CONT'D):

ITEM	DESCRIPTION		QUANTITY FIG. 1	QUANTITY FIG. 2	STANDARD PAGE	STOCK NUMBER	DESIGN UNITS
32	FLEXIBLE ARRESTER GROUND STRAP		AS REQ'D		-	S698754	-
33	#4 CU SOLID GROUND WIRE, PVC COVERED		50'	50'	-	S812490	GNDPVC
34	RISER CONSTRUCTION		-	-	1400/4200	-	-
35	BRACKET, LADDER ARM		AS REQ'D		1404/4204	S167186 (X)	-
36	NUT, CLAMPING CHANNEL, W/SPRING, 1/2"		AS REQ'D		1404/4204	S503488	-
37	CHANNEL, DOUBLE GALV, 24"		AS REQ'D		1404/4204	S216702 (X)	-
38	WIRE #6 THW	FT.	12'		-	S808288	-
		LB.	3				
39	GROUND ROD, 5/8" X 8', COPPERWELD		1	1	-	S603074 (X)	GNDPVC
40	COPPER BONDED GROUND CONNECTOR		1	1	-	S259010	-
41	GALVANIZED STAPLES FOR PVC COVERED GROUND WIRE		AS REQ'D		-	S678564 (X)	-
42	HOT LINE CLAMP		3	3	788	S227680	-

TABLE 2

UG MACRO UNITS		
CABLE SIZE	W/ LADDER ARMS	W/O LADDER ARMS
3C-#2/0 AL	CP2/0L	CP#2/0
3C-3#2 AL	CP3#2L	CP-3#2

TABLE OF CONTENTS

NOTES:

(X) THIS ITEM IS EXEMPT.

REFERENCE:

(a) ON ALL NEW CONSTRUCTION AND WHEN ADDING TO EXISTING CONSTRUCTION, NEUTRAL TO BE INSTALLED IN OUTSIDE PIN POSITION PER DESIGN MANUAL PAGE 5124.2.

(b) ALLOWABLE WORKING AND CLIMBING SPACE - SEE STANDARD. 251.

(c) POLE STEPPING - SEE STANDARD. 363/4205.

d. GROUNDING METHODS - SEE PAGE 1002.5.

e. SEE STANDARD SECTION 1200/4300 FOR FUSING.

(f) RISER POSITION - SEE STANDARD 1402/4202.

(g) MINIMUM VERTICAL SEPARATION AS PER G.O. 95 - SEE STANDARD. 1406/4206.

© 1998 - 2020 San Diego Gas & Electric Company. All rights reserved. Removal of this copyright notice without permission is not permitted under law.

REV	CHANGE	DR	BY	DSN	APV	DATE	REV	CHANGE	DR	BY	DSN	APV	DATE
C	TABLE UPDATE	EDM	JIK	JES	CZH	4/13/2020	F						
B	DRAWING UPDATE	PEI	-	-	-	02/18/2019	E						
A	ORIGINAL ISSUE	-	-	PTA	JJ	10/20/2005	D						

X Indicates Latest Revision | Completely Revised | New Page | Information Removed

SDG&E ELECTRIC OVERHEAD AND UNDERGROUND CONSTRUCTION STANDARDS

12.47KV AND BELOW CABLE POLE THREE-PHASE,
1/C PER PHASE, ALLEY ARM CONSTRUCTION,
NON-PORCELAN TERMINALS

OH1447.5
UG4247.5

SCOPE: THIS STANDARD SHOWS 6 OR 7 CONDUCTOR CABLE POLE WITH 900A HOOKSTICK SWITCHES FOR 350 KCM AND LARGER U.G. CABLE.

ATTENTION:

* NEW PRIMARY CABLE POLE INSTALLATIONS SHALL BE TRUCK ACCESSIBLE. EXISTING CABLE POLE LOCATIONS THAT ARE NOT TRUCK ACCESSIBLE CAN BE GRANDFATHERED BY DEVIATION.

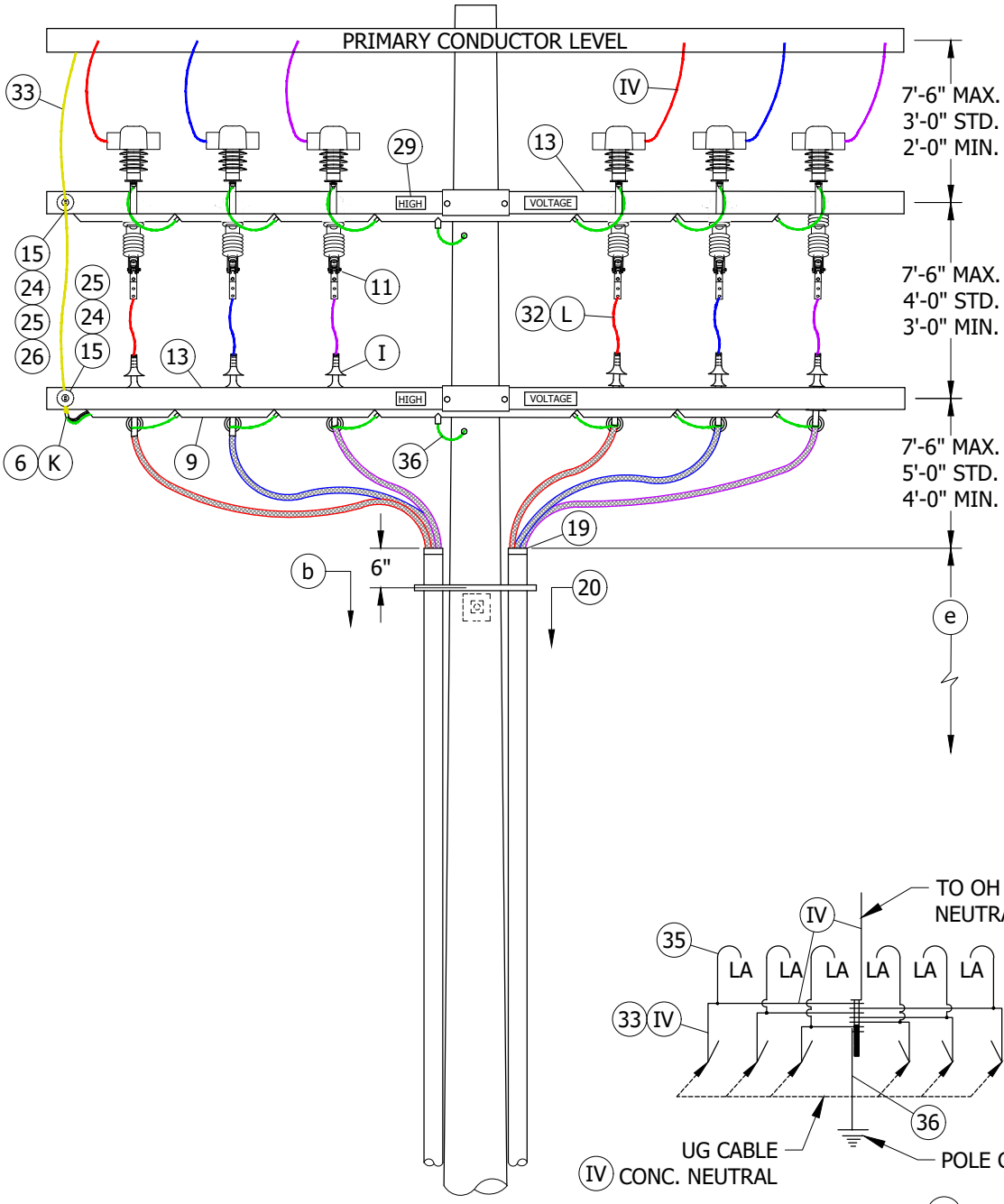

FIGURE 1
FRONT VIEW

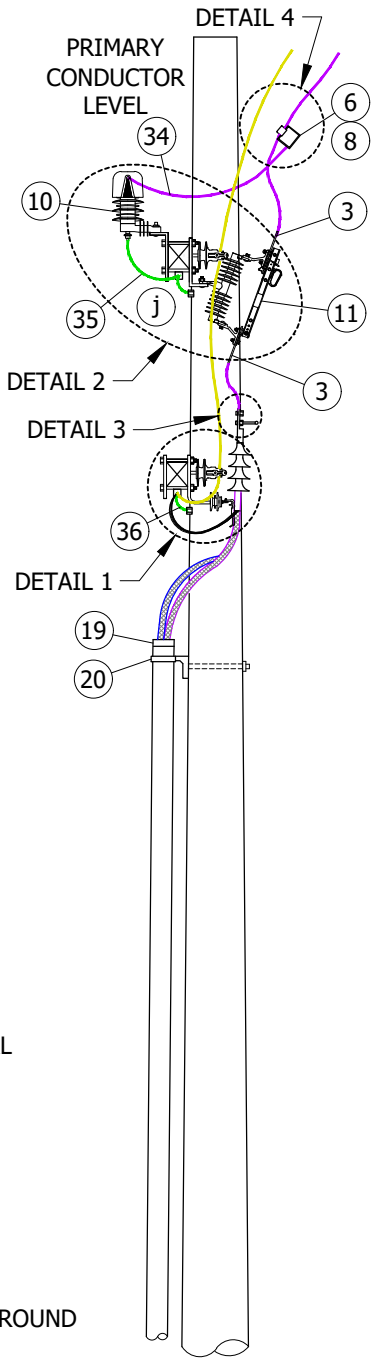

FIGURE 1
SIDE VIEW

FIGURE 2 (12)
GROUND WIRING

© 1998 - 2022 San Diego Gas & Electric Company. All rights reserved. Removal of this copyright notice without permission is not permitted under law.

REV	CHANGE	DR	BY	DSN	APV	DATE	REV	CHANGE	DR	BY	DSN	APV	DATE
C	FIGURE UPDATE	EDM	DWC	JES	CZH	08/13/2021	F						
B	DRAWING UPDATE	PEI	-	-	-	02/18/2019	E						
A	ORIGINAL ISSUE	-	-	PTA	JJ	10/20/2005	D	EDITORIAL CHANGES	EDM	MRF	FRC	KRG	05/31/2022

X Indicates Latest Revision | Completely Revised | New Page | Information Removed

SDG&E ELECTRIC OVERHEAD AND UNDERGROUND CONSTRUCTION STANDARDS

12.47KV AND BELOW DEADEND CABLE POLE,
6 OR 7 CONDUCTORS 1/C PER PHASE, HOOKSTICK SWITCHED,
NON-PORCELIAN TERMINALS

OH1451.1
UG4251.1

TABLE OF CONTENTS

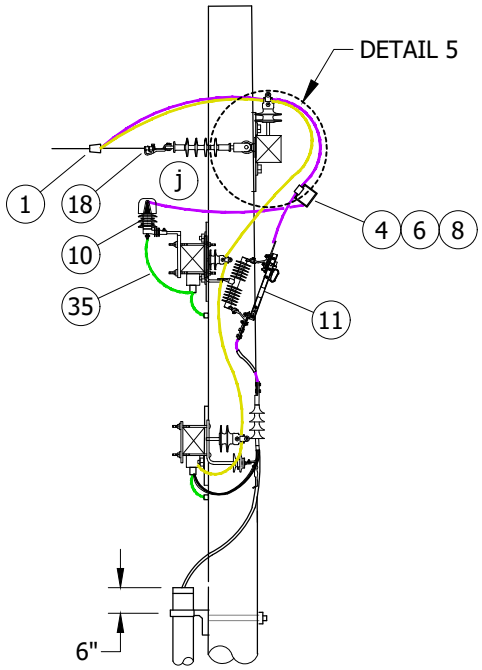

FIGURE 3
SIDE VIEW

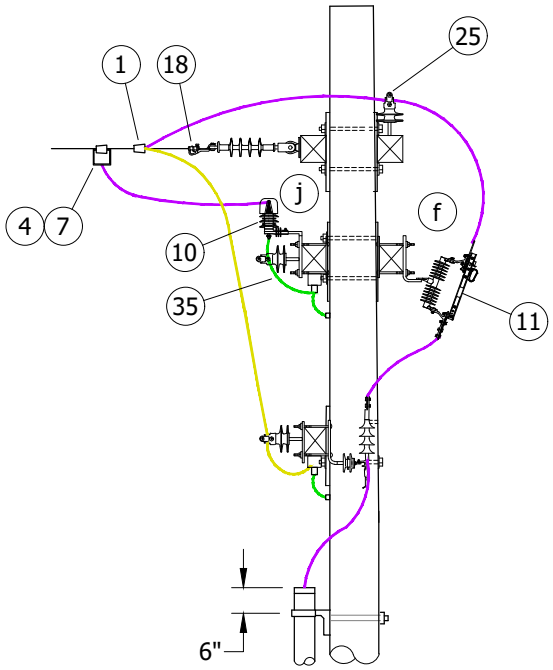

FIGURE 4
SIDE VIEW
ILLUSTRATES SECOND ARM FOR BONDING

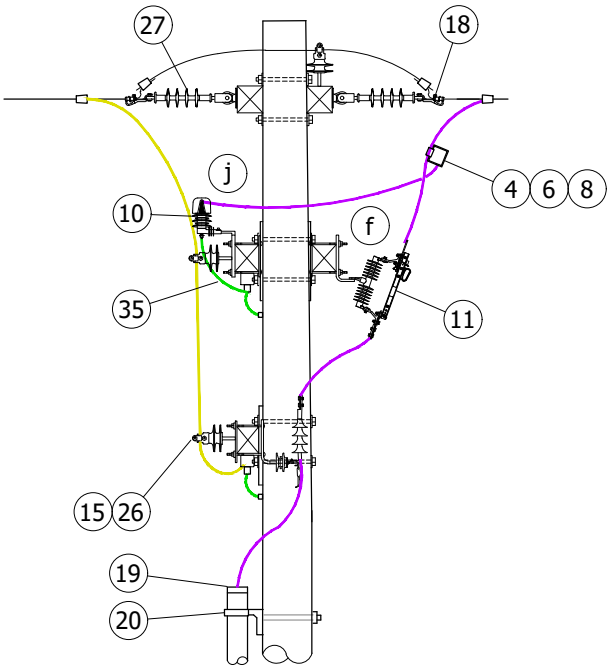

FIGURE 5
SIDE VIEW

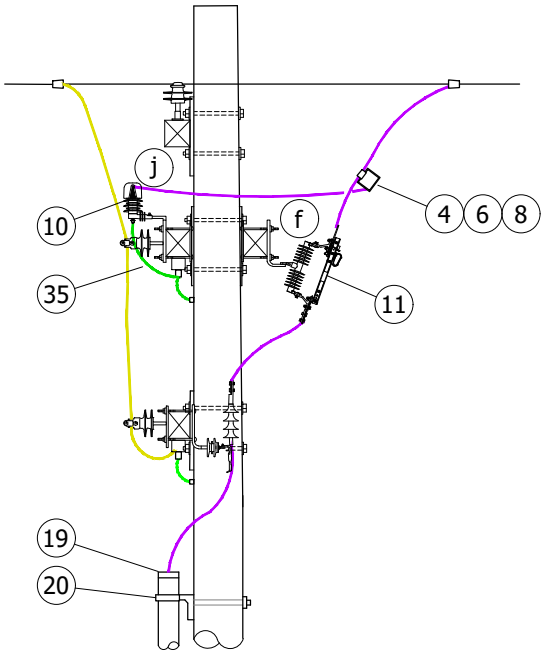

FIGURE 6
SIDE VIEW

TABLE OF CONTENTS

© 1998 - 2022 San Diego Gas & Electric Company. All rights reserved. Removal of this copyright notice without permission is not permitted under law.

REV	CHANGE	DR	BY	DSN	APV	DATE	REV	CHANGE	DR	BY	DSN	APV	DATE
C	FIGURE UPDATE	EDM	DWC	JES	CZH	08/13/2021	F						
B	DRAWING UPDATE	PEI	-	-	-	02/18/2019	E						
A	ORIGINAL ISSUE	-	-	PTA	JJ	10/20/2005	D	EDITORIAL CHANGES	EDM	MRF	FRC	KRG	05/31/2022

X Indicates Latest Revision | Completely Revised | New Page | Information Removed

SDG&E ELECTRIC OVERHEAD AND UNDERGROUND CONSTRUCTION STANDARDS

12.47KV AND BELOW DEADEND CABLE POLE,
6 OR 7 CONDUCTORS 1/C PER PHASE, HOOKSTICK SWITCHED,
NON-PORCELIAN TERMINALS

OH1451.2
UG4251.2

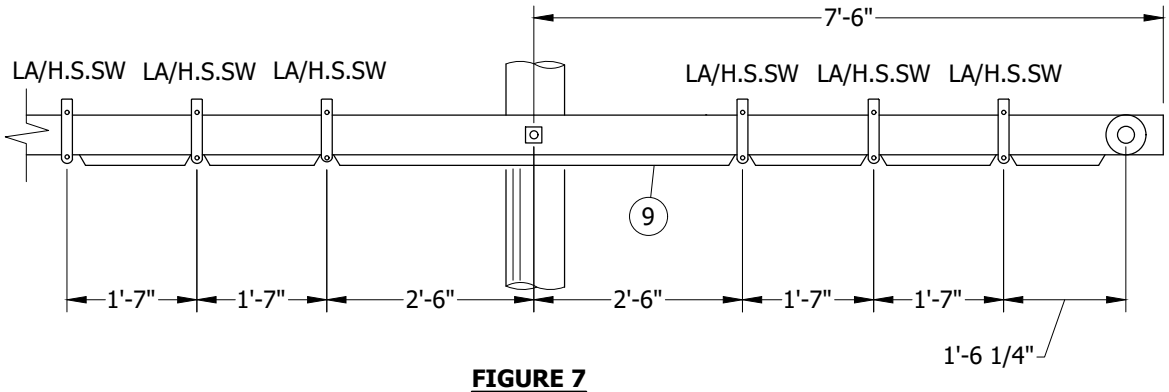

FIGURE 7
15'-0" ARM 6 HOOKSTICK DISCONNECT SWITCHES AND LIGHTNING ARRESTER BRACKETS MOUNTING DETAIL

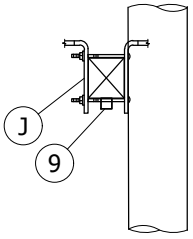

FIGURE 7
CONDUIT WITH CABLE SUPPORT BRACKETS SIDE VIEW

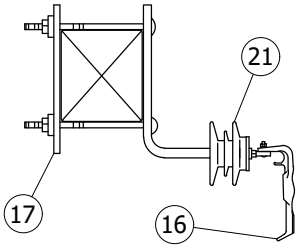

DETAIL 1
PREFERRED BRACKET CONFIGURATION

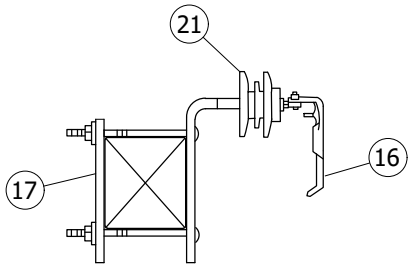

DETAIL 1
OPTIONAL BRACKET CONFIGURATION (NOT SHOWN)

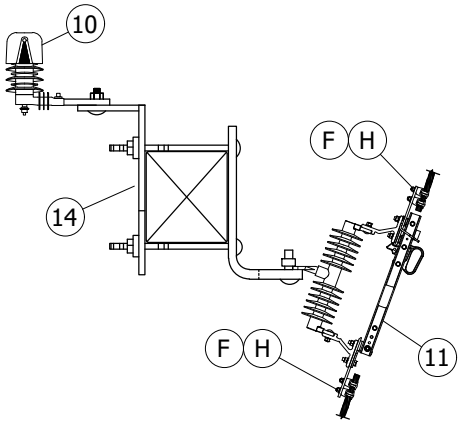

DETAIL 2
DOUBLE BRACKET

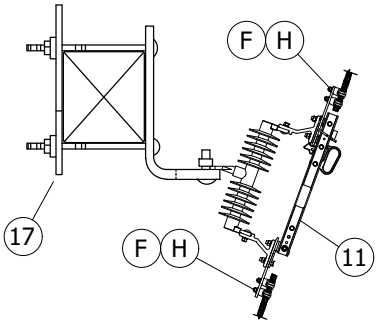

DETAIL 2
SINGLE BRACKET

TABLE OF CONTENTS

© 1998 - 2022 San Diego Gas & Electric Company. All rights reserved. Removal of this copyright notice without permission is not permitted under law.

REV	CHANGE	DR	BY	DSN	APV	DATE	REV	CHANGE	DR	BY	DSN	APV	DATE
C	FIGURE UPDATE	EDM	DWC	JES	CZH	08/13/2021	F						
B	DRAWING UPDATE	PEI	-	-	-	02/18/2019	E						
A	ORIGINAL ISSUE	-	-	PTA	JJ	10/20/2005	D	EDITORIAL CHANGES	EDM	MRF	FRC	KRG	05/31/2022

X Indicates Latest Revision | Completely Revised | New Page | Information Removed

SDG&E ELECTRIC OVERHEAD AND UNDERGROUND CONSTRUCTION STANDARDS

12.47KV AND BELOW DEADEND CABLE POLE,
6 OR 7 CONDUCTORS 1/C PER PHASE, HOOKSTICK SWITCHED,
NON-PORCELIAN TERMINALS

OH1451.3
UG4251.3

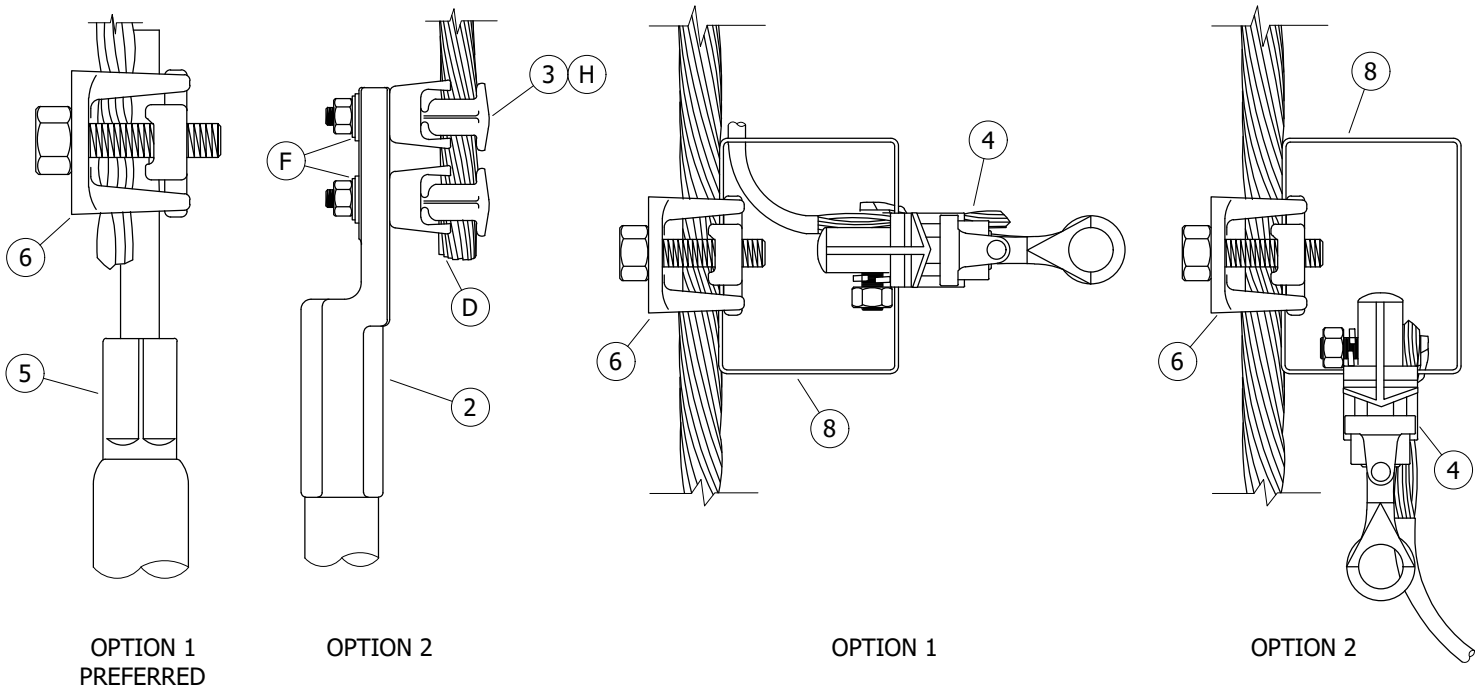

OPTION 1
PREFERRED

OPTION 2

DETAIL 3

OPTION 1

OPTION 2

DETAIL 4

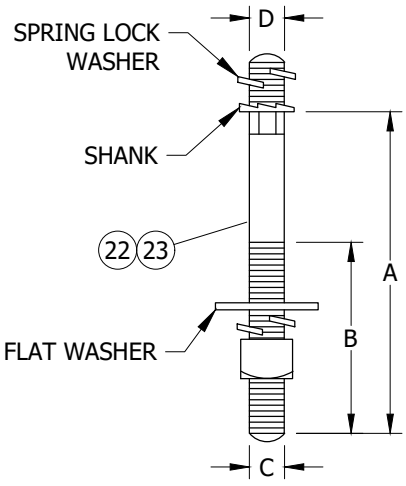

DETAIL 6
INSULATOR PIN FOR
35KV INSULATORS

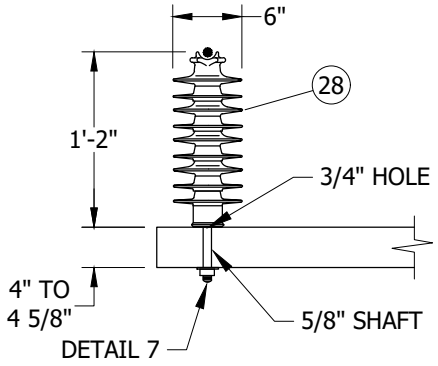

DETAIL 5
35KV F-NECK INSULATOR
TANGENT OR SINGLE DEADEND ARM

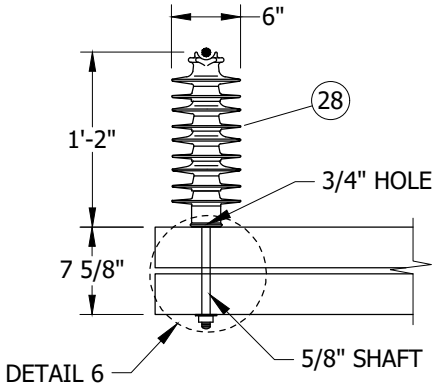

DETAIL 5
35KV F-NECK INSULATOR
STACKED ARM

TABLE 1

DESCRIPTION	A	B	C	D	STOCK NUMBER	DESIGN UNITS
HARDWARE POST INSULATOR STUD, FIBERGLASS,WOOD	7 1/2"	3 1/2"	4 1/2"	3/4"	S701760	STUD-W
	10"	4"	5/8"	1 3/4"	S701762	STUD-L

© 1998 - 2022 San Diego Gas & Electric Company. All rights reserved. Removal of this copyright notice without permission is not permitted under law.

REV	CHANGE	DR	BY	DSN	APV	DATE	REV	CHANGE	DR	BY	DSN	APV	DATE
C	FIGURE UPDATE	EDM	DWC	JES	CZH	08/13/2021	F						
B	DRAWING UPDATE	PEI	-	-	-	02/18/2019	E						
A	ORIGINAL ISSUE	-	-	PTA	JJ	10/20/2005	D	EDITORIAL CHANGES	EDM	MRF	FRC	KRG	05/31/2022

X Indicates Latest Revision | Completely Revised | New Page | Information Removed

SDG&E ELECTRIC OVERHEAD AND UNDERGROUND CONSTRUCTION STANDARDS

12.47KV AND BELOW DEADEND CABLE POLE,
6 OR 7 CONDUCTORS 1/C PER PHASE, HOOKSTICK SWITCHED,
NON-PORCELIAN TERMINALS

OH1451.4
UG4251.4

TABLE OF CONTENTS

INSTALLATION:

A. NEW CABLE POLES SHALL HAVE A STANDARD DEPTH OF 9 FEET. IN MOST CASES, THIS WILL REQUIRE A 5-FOOT TALLER POLE.

B. THIS CONSTRUCTION TO BE USED WITH 350 AND LARGER UNDERGROUND CABLE.

C. INTERCONNECT OVERHEAD NEUTRAL, AND CONCENTRIC CABLE NEUTRAL CONDUCTOR TO LIGHTNING ARRESTER GROUND.

(D) INSTALLATION OF WIRE CAN BE MADE ON EITHER SIDE OF TERMINAL COMPRESSION LUG.

(E) REDUCE QUANTITIES AS REQUIRED WHEN NOT USING NEUTRAL.

(F) BRUSH WIRE, INSTALL PENETROX "INHIBITOR" AND BELLEVILLE WASHER.

G. DIMENSIONS CAN VARY BASED ON CROSSARM SIZE AND/OR CONFIGURATION.

(H) REQUIRES TWO TAP LUGS PER CONNECTION.

(J) ARM MAY BE DRILLED TO REPOSITION BOTTOM BOLT ALLOWING CONDUIT TO SET FLUSH ON BOTTOM OF CROSSARM. (k)

(K) CONCENTRIC WITH POLE GROUND, CONNECTION AREA.

(L) MAINTAIN SIX INCHES OF BARE WIRE BELOW DISCONNECT FOR PROPER GROUNDING OF UNDERGROUND CABLE.

(M) CENTER OF CUTOUT ARM SHALL NOT BE MOUNTED HIGHER THAN THIRTY-FIVE FEET FROM GROUND.

BILL OF MATERIALS:

ITEM	DESCRIPTION	WIRE RANGE	QUANTITY	STANDARD PAGE	STOCK NUMBER	DESIGN UNITS	SAP CU
1	CONNECTOR, WEDGE (PREFERRED)	--	AS REQ'D	783	--	--	--
2	CONNECTOR, TERMINAL COMPRESSION LUG	--	AS REQ'D	784/4174	--	--	--
3	CONNECTOR, TAP LUG, 1/0 TO 500MCM CU TAP LUG - BRONZE	--	AS REQ'D	--	S471232	TL1/0	TL1/0
4	CONNECTOR, CLAMP, HOTLINE	--	6	788	S227680 (X)	--	--
5	CONNECTOR PIN (PREFERRED) UNDERGROUND STANDARD	--	AS REQ'D	4111	--	--	--
6	CONNECTOR, BRONZE, 2 BOLT, CONNECTOR, COPPER TAP 3/0-1000	--	--	--	S262370 (X)	CN1000	CN1000
7	CONNECTOR, WEDGE, STIRRUP OR BAIL, #2 SOLID CU	--	6	783	--	--	--
8	CONNECTOR, STIRRUP, BAIL, #2 TIN PLATED CU	--	AS REQ'D	788	S227650	BAIL	BAIL
9	CONDUIT, SQ. 2" X 2" X 10'-0" PVC (SQUARE)	--	AS REQ'D	--	S251534	SQC-2	SQC-2
	CONDUIT, SCH 40, 2" X 10'-0" PVC (ROUND)	--	AS REQ'D	--	S251296	PVC2	PVC2
10	EQUIPMENT, ARRESTER, LIGHTNING	--	6	1247	S113248	LA12	LA12
11	EQUIPMENT, POLYMER, SINGLE-DISC, 900A, SWITCH, CABLE POLE	--	6	--	S707004 (VI)	P900D	P900D
					S706670 (V)	PS900	--
12	GROUNDING, #4 PVC GRND WIRE, RODS, CONN-STEEL POLE (II)	--	1	1002	--	GNDPSP	GNDPSP
	GROUNDING, WIRE, #4 PVC, RODS & CONNECTORS (FOR WOOD POLES) (II)	--		--	--	GNDPVC	GNDPVC
13	HARDWARE, CROSSARM, FIBERGLASS, 15'-0", 6 PIN TANGENT (FOR STEEL POLES)	--	AS REQ'D	379	S294370	6LTF	6LTF
	HARDWARE, SGALRM 6 PIN 15FT 12KV STD W/6FT ANGLE BR (FOR WOOD POLES)			380	S293712	6L	6L
14	HARDWARE, BRACKET, DOUBLE, CUTOUT, ARRESTER	--	6	--	S165454	DBLBKT	DBLBKT
15	HARDWARE, STAND OFF PIN, 1 3/8" (E)	--	2	396	S529214 (X)	PS/O1+	PS/O1LG
16	HARDWARE, BRACKET, CABLE SUPPORT, WITH POLY	--	6	4207	S166064	NP-BKT	NP-BKT
17	HARDWARE, BRACKET, CUTOUT/ARRESTOR CROSSARM MOUNTING	--	6	397	S165452 (X)	CO/B	--
18	HARDWARE, CLAMP, STRAIGHT LINE, D.E. (AS NEEDED) (II)	--	AS REQ'D	739	--	--	--
19	HARDWARE, GRIP, RISER, 5-INCH, KELLEMS (AS REQ'D)	--	6	1404/4204	--	--	--
20	HARDWARE, RISER ARM BRACKET & 24" CHANNEL (ASSEMBLY)	--	AS REQ'D	1404/4204	--	RSRARM (I)	RSRARM
21	HARDWARE, STANDOFF (350MCM AND ABOVE) (OPTIONAL)	--	AS REQ'D	--	S429040 (X)	--	--
22	HARDWARE, PIN, POST, STUD, FG/WOOD (STANDARD ARM) (II)	--	AS REQ'D	396	S701760	STUD-W	STUD-W
23	HARDWARE, PIN, POST, STUD, FG/WOOD (STACKED DEADEND ARM) (II)	--	AS REQ'D	396	S701762	STUD-L	STUD-L

TABLE OF CONTENTS

© 1998 - 2022 San Diego Gas & Electric Company. All rights reserved. Removal of this copyright notice without permission is not permitted under law.

REV	CHANGE	DR	BY	DSN	APV	DATE	REV	CHANGE	DR	BY	DSN	APV	DATE
C	FIGURE UPDATE	EDM	DWC	JES	CZH	08/13/2021	F						
B	DRAWING UPDATE	PEI	-	-	-	02/18/2019	E						
A	ORIGINAL ISSUE	-	-	PTA	JJ	10/20/2005	D	EDITORIAL CHANGES	EDM	MRF	FRC	KRG	05/31/2022

X Indicates Latest Revision | Completely Revised | New Page | Information Removed

SDG&E ELECTRIC OVERHEAD AND UNDERGROUND CONSTRUCTION STANDARDS

12.47KV AND BELOW DEADEND CABLE POLE,
6 OR 7 CONDUCTORS 1/C PER PHASE, HOOKSTICK SWITCHED,
NON-PORCELIAN TERMINALS

OH1451.5
UG4251.5

BILL OF MATERIALS (CONT'D):

ITEM	DESCRIPTION	WIRE RANGE	QUANTITY	STANDARD PAGE	STOCK NUMBER	DESIGN UNITS	SAP CU
24	HARDWARE,PIN, 1 3/8" COBB FORGED STEEL GALV. (II)	--	2	--	S532448	PS1+	PS1LG
25	INSULATOR, VICE TOP, PIN, 1 3/8", UNIVERSAL (g)	--	AS REQ'D	750	S429272	IPULG	IPULG
26	INSULATOR, WHITE, NEUTRAL, "F" NECK, 1 3/8" PIN (OPTIONAL) (VII)	--	AS REQ'D	--	S432220	IWN	IWN
27	INSULATOR, SUSPENSION, 35KV, POLYMER	--	AS REQ'D	750	S428958	LONGDE	LONGDE
28	INSULATOR, HENDRIX 35KV POLY LINE POST (II)	--	AS REQ'D	750	S429144	LP-14F	LP-14F
29	STICKER, "HIGH VOLTAGE", VINYL, ADHESIVE	--	AS REQ'D	208	S647650 (X)	--	--
30	STICKER, TAGS, SWITCH NUMBER (VII)	--	--	208	--	--	--
31	STICKER, "PN", VINYL, ADHESIVE (VII)	--	AS REQ'D	--	S648004 (X)	--	--
32	WIRE, 500 STR. CU, BARE (III)	--	AS REQ'D	711	S813792	BS500	BS500
33	WIRE, 4/0 STR. CU, SOFT-DRAWN, COVERED (CONCENTRIC BUS WIRE)	--	30'-0"	711	S812126	HEN4/0	HEN4/0
34	WIRE, POLY COVERED 4/7 STRAND COPPER	--	AS REQ'D	711	S815044	POLY4J	POLY4J
35	STRAP, ARRESTER GROUND	--	AS REQ'D	1002	S698754	LAGND	LAGND
36	WIRE, POLY COVERED, #4 SOLID COPPER (POLE GROUND)	--	AS REQ'D	711	S812490	POLY4	POLY4
37	WILDLIFE, COVER, 900A DISCONNECT (AS REQ'D) (II) (VII)	--	6	1620	S286948	9COCVR	9COCVR

NOTES:

(I) MINIMUM CROSSARM 15-FOOT.
(II) NOT SHOWN ON FIGURES.
(III) WIRE SIZE IS APPLICABLE TO AMPERAGE OF PRIMARY SOURCE.
(IV) MINIMUM 480A COPPER WIRE REQUIRED (OPTION FOR USE OF COVERED WIRE).
(V) REQUIRED IN CONTAMINATION DISTRICT 1 AND PREFERRED IN COASTAL DISTRICTS (OC, NC, BC, CM).
(VI) PREFERRED FOR INLAND DISTRICTS (NE, RA, EA, ME).
(VII) NOT SHOWN ON FIGURES.
(X) THIS ITEM IS EXEMPT.

REFERENCE:

a. FOR ALLOWABLE WORKING AND CLIMBING SPACE, SEE OH251.
(b) FOR POLE STEPPING, SEE OH363.
c. FOR GROUNDING METHODS, SEE OH1002.
d. FOR RISER POSITION, SEE OH1404UG4204.
(e) FOR MINIMUM VERTICAL SEPARATION AS PER G.O. 95, SEE OH1406UG4206.
(f) FOR BONDING GENERAL INFORMATION, SEE OH1003.
(g) FOR CONTAMINATION DISTRICT REQUIREMENTS, SEE OH287.
(h) FOR REFERENCE GELPACT, SEE OH783.
i. FOR MINIMUM CROSSARM BOLT REQUIREMENT, SEE OH379.
(j) FOR FIBERGLASS CROSSARM GROUNDING DETAIL OPTION, SEE OH1002.
(k) FOR CROSSARM DRILLING, SEE OH379.

TABLE OF CONTENTS

© 1998 - 2022 San Diego Gas & Electric Company. All rights reserved. Removal of this copyright notice without permission is not permitted under law.

REV	CHANGE	DR	BY	DSN	APV	DATE	REV	CHANGE	DR	BY	DSN	APV	DATE
C	FIGURE UPDATE	EDM	DWC	JES	CZH	08/13/2021	F						
B	DRAWING UPDATE	PEI	-	-	-	02/18/2019	E						
A	ORIGINAL ISSUE	-	-	PTA	JJ	10/20/2005	D	EDITORIAL CHANGES	EDM	MRF	FRC	KRG	05/31/2022

SCOPE: THIS STANDARD COVERS THE INSTALLATION OF THE MVR (MOLDED VACUUM RECLOSER) FOR CABLE POLE APPLICATIONS AS A LINE SWITCH, SERVICE RESTORER OR TIE SWITCH OR BRANCH LINE EQUIPMENT ISOLATION UNIT FOR NEW CONSTRUCTION. LINE SOURCE CAN BE CONSTRUCTED DEADEND OR TANGENT.

ATTENTION: THIS INSTALLATION REQUIRES 24/7, ALL WEATHER VEHICLE ACCESS. A TELECOM COORDINATION FORM MUST BE SUBMITTED BEFORE DESIGN BEGINS TO DETERMINE COMMUNICATION REQUIREMENTS.

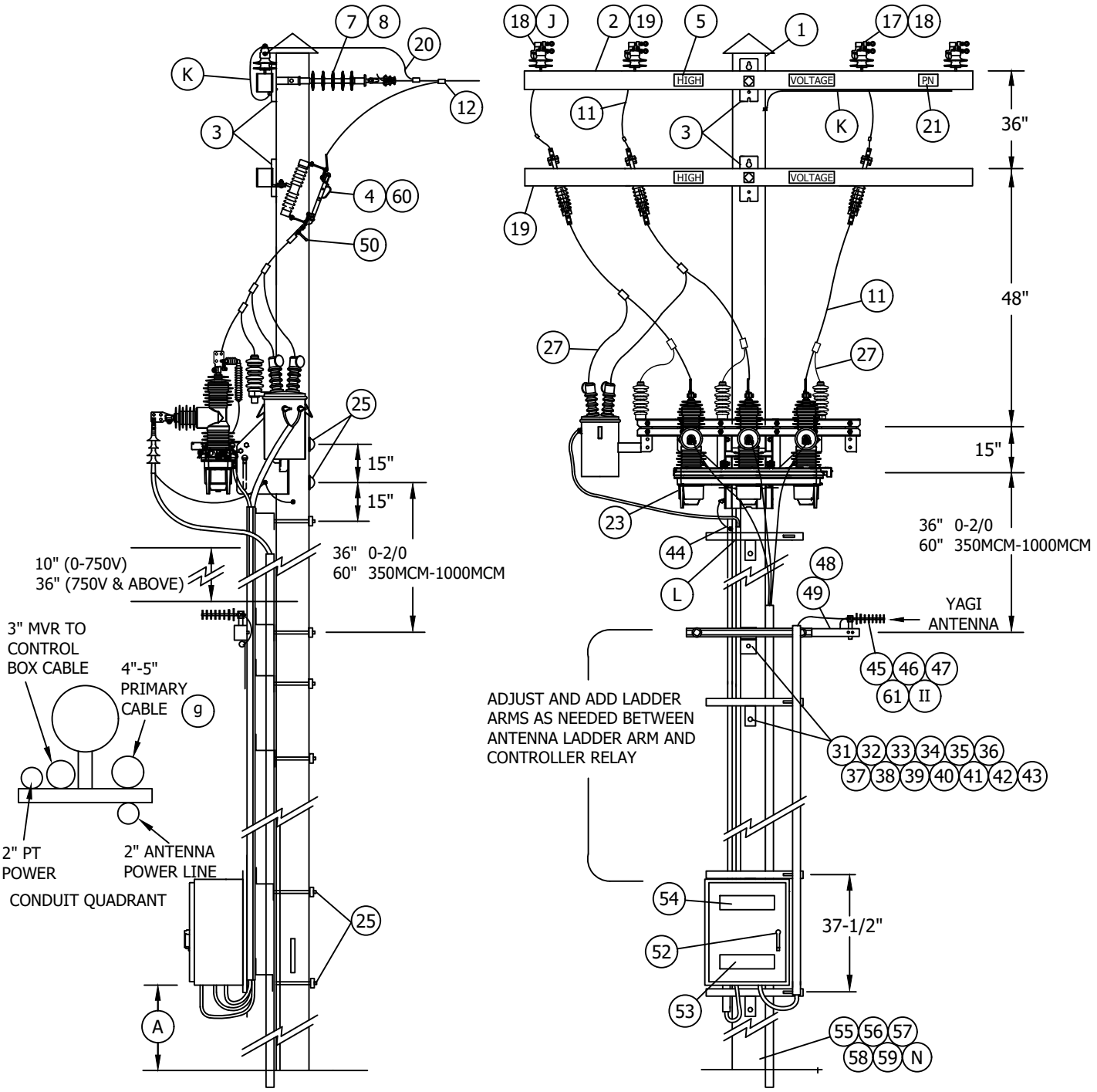

© 1998 - 2020 San Diego Gas & Electric Company. All rights reserved. Removal of this copyright notice without permission is not permitted under law.

REV	CHANGE	DR	BY	DSN	APV	DATE	REV	CHANGE	DR	BY	DSN	APV	DATE
C	DRAWING UPDATE	-	PEI	-	-	02/18/2019	F						
B	EDITORIAL CHANGES	-	GW	JS	MDJ	03/01/2018	E						
A	ORIGINAL ISSUE	-	JC	TR	MDJ	10/25/2016	D	EDITORIAL CHANGES	PEI	JA	JES	CZH	10/12/2020

X Indicates Latest Revision | Completely Revised | New Page | Information Removed

SDG&E ELECTRIC OVERHEAD AND UNDERGROUND CONSTRUCTION STANDARDS

ELASTIMOLD MVR SWITCH AND SCADA 651R2 CONTROLLER CABLE POLE

SHEET 1 OF 10

OH1452.1
UG4252.1

TABLE OF CONTENTS

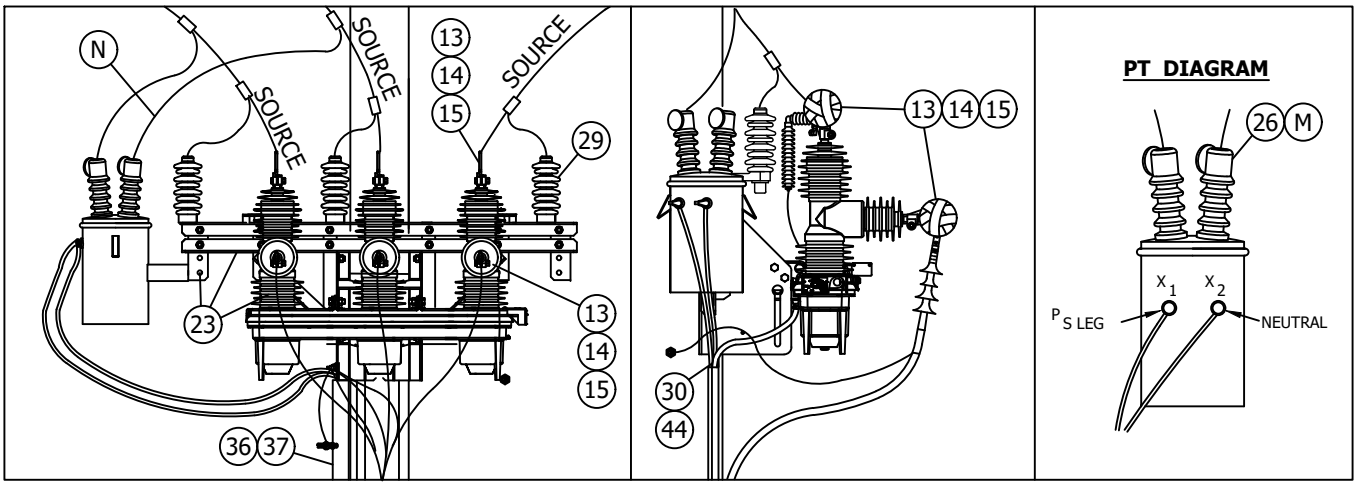

ELASTIMOLD MVR SWITCH WIRING DETAIL (I)

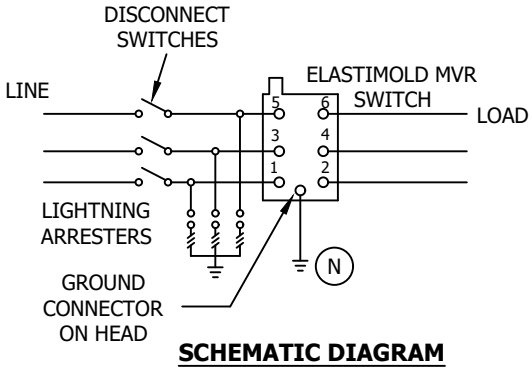

SCHEMATIC DIAGRAM

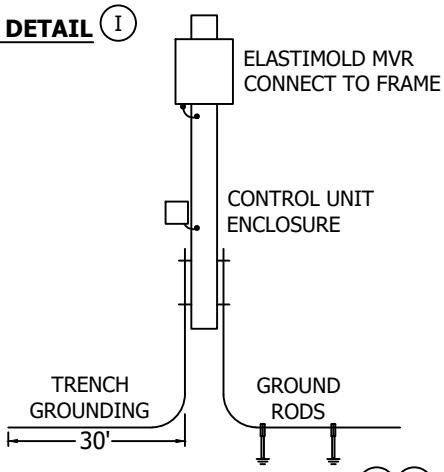

GROUND WIRE DETAIL (b) (c)

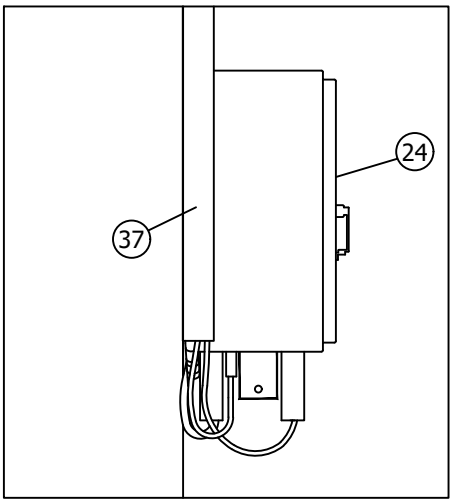

SIDE VIEW

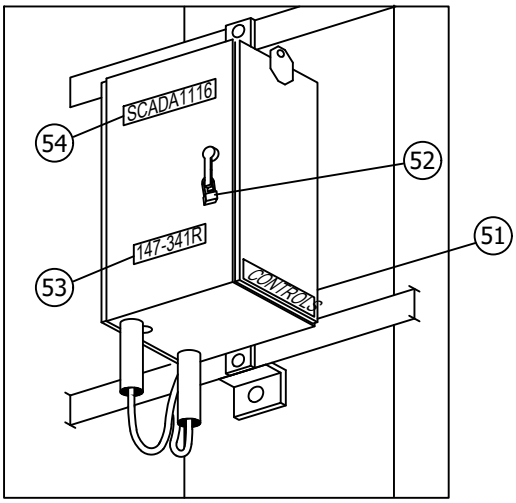

3/4 VIEW

© 1998 - 2020 San Diego Gas & Electric Company. All rights reserved. Removal of this copyright notice without permission is not permitted under law.

REV	CHANGE	DR	BY	DSN	APV	DATE	REV	CHANGE	DR	BY	DSN	APV	DATE
C	DRAWING UPDATE	-	PEI	-	-	02/18/2019	F						
B	EDITORIAL CHANGES	-	GW	JS	MDJ	03/01/2018	E						
A	ORIGINAL ISSUE	-	JC	TR	MDJ	10/25/2016	D	EDITORIAL CHANGES	PEI	JA	JES	CZH	10/12/2020

X Indicates Latest Revision | Completely Revised | New Page | Information Removed

SDG&E ELECTRIC OVERHEAD AND UNDERGROUND CONSTRUCTION STANDARDS

ELASTIMOLD MVR SWITCH AND SCADA 651R2 CONTROLLER CABLE POLE

SHEET 2 OF 10

OH1452.2
UG4252.2

TABLE OF CONTENTS

INSTALLATION:

(A) RTU TO BE MOUNTED TEN FEET FROM GROUND LEVEL TO BOTTOM OF RTU CABINET WHEN NOT SUBJECT TO TRAFFIC CONTACT. IF VULNERABLE TO VEHICLE DAMAGE, MOUNT RTU 13' - 6" FROM GROUND LEVEL TO BOTTOM OF RTU CABINET.

B. CONTROL, PT TERMINAL BLOCK-RELAY, AND ANTENNA CONNECTIONS ARE TO BE MADE BY KEARNY CREW. LINE CREW MOUNTS MVR SWITCH TO OLE AND LEAVES CONTROL CABLE AND VOLTAGE CABLE ON SITE OR WITH KEARNY CREW. IF THE CONTROL & VOLTAGE CABLES ARE LEFT ON SITE, DO NOT REMOVE THEM FROM PLASTIC BAG OR REMOVE CAPS. WATER ENTRY WILL DAMAGE THE CABLES.

(C) DELINEATOR/REFLECTOR STRIPS ARE REQUIRED ON ALL SECTIONALIZING/TIELINE SWITCHES AND SERVICE RESTORER POLES. (d)

D. IN AVIAN PROTECTION AREAS, USE APPROPRIATE AVIAN COVER-UP. (e)

E. ALL MVR SITES REQUIRE ALL WEATHER, 24/7 VEHICLE ACCESS FOR AERIAL LIFTS AND DERRICK TRUCKS.

F. ONLY STEEL POLES ARE TO BE USED FOR THIS CONSTRUCTION, POLE LOADING CALCULATIONS SHALL BE COMPLETED AND ARCHIVED FOR ALL INSTALLATIONS FOR NEW AND EXISTING POLES.

G. COIL ANY EXCESS CONTROL CABLE AND ATTACH TO MVR POLE MOUNT BRACKET WITH PLASTIC TIES.

H. ALL MVR SITES SHALL BE PHASE IDENTIFIED WITH THE AP30. THE CROSSARM SHALL BE MARKED FOR "A", "B", AND "C" PHASES. BOTTOM OF THE MVR SHALL BE MARKED FOR "A", B", AND "C" PHASES. CABLE SHALL BE MARKED AND MATCH "A/1", "B/2", AND "C/3" PHASE MARKING.

(J) WHEN USING COVERED WIRE, A VISE-TOP WILL BE USED WITH NYLON JAWS. WHEN USING ALUMINUM WIRE, A VISE-TOP WILL BE USED WITH ALUMINUM JAWS. WHEN USING COPPER WIRE, A VISE-TOP WILL BE USED WITH BRONZE JAWS. THERE ARE NO EXCEPTIONS TO THESE RULES.

(K) IF THE CIRCUIT IS A FOUR-WIRE SYSTEM, THE SYSTEM NEUTRAL SHALL BE CONNECTED TO THE POLE AND THE CONCENTRIC NEUTRAL IN THE UNDERGROUND SYSTEM.

(L) THE LADDER ARM, LOCATED 15 INCHES BELOW THE MVR RACK, SHALL HAVE WIRING HARNESS AND POWER CONDUITS TERMINATED AT ONE INCH BELOW THE MVR RACK.

(M) THE POTENTIAL TRANSFORMER (PT) SHALL BE CONNECTED TO THE 12KV CIRCUIT IN DELTA, DIRECTLY TO THE LINE, #4/7 COVERED WIRE AND AVIAN COVERS ARE REQUIRED ON THE PT.

(N) GROUNDING OF THE ARRESTERS, MVR RACK, YAGI ANTENNA, AND THE MVR RELAY CONTROLLER BOX IS REQUIRED.

(O) PLEASE REFERENCE JUNE 2020 NEWSLETTER; THE MVR SHALL NOT BE INSTALLED INSIDE HFTD TIER 2 OR 3 WITHOUT PRIOR APPROVAL OF EDE & SPACE.

TABLE OF CONTENTS

BILL OF MATERIALS:

ITEM	DESCRIPTION	QUANTITY	STANDARD PAGE	STOCK NUMBER	ASSEMBLY UNIT
1A, B	STEEL POLE REQUIRED IN THE TIER 2 & TIER 3 AREAS SELECT THE FINISH NEEDED BELOW	-	-	-	-
1A	POLE, STEEL GALVANIZED 50-1 (MINIMUM HEIGHT)	1	354.4	S549604	-
1B	POLE, STEEL WEATHERING 50-1 (MINIMUM HEIGHT)	1	354.4	S550420	-

© 1998 - 2020 San Diego Gas & Electric Company. All rights reserved. Removal of this copyright notice without permission is not permitted under law.

REV	CHANGE	DR	BY	DSN	APV	DATE	REV	CHANGE	DR	BY	DSN	APV	DATE
C	DRAWING UPDATE	-	PEI	-	-	02/18/2019	F						
B	EDITORIAL CHANGES	-	GW	JS	MDJ	03/01/2018	E						
A	ORIGINAL ISSUE	-	JC	TR	MDJ	10/25/2016	D	EDITORIAL CHANGES	PEI	JA	JES	CZH	10/12/2020

X Indicates Latest Revision | Completely Revised | New Page | Information Removed

SDG&E ELECTRIC OVERHEAD AND UNDERGROUND CONSTRUCTION STANDARDS

ELASTIMOLD MVR SWITCH AND SCADA 651R2 CONTROLLER CABLE POLE

OH1452.3
UG4252.3

BILL OF MATERIALS (CONT'D):

ITEM	DESCRIPTION	QUANTITY	STANDARD PAGE	STOCK NUMBER	ASSEMBLY UNIT
2	FIBERGLASS CROSSARM, DEADEND, 10'	AS REQ'D	-	S294372	6DF
3	BOLT, SPACE, GALV, 3/4" X (LENGTH AS REQ'D) 2 SQUARE, CURVED & 2 COIL SPRING WASHERS	AS REQ'D	392	-	-
4	SWITCH, DISCONNECT, 14.4KV, 900A	3	-	S707006	D900
5	SIGN, HIGH VOLTAGE STICKER	AS REQ'D	-	S647650	-
6	SCREWS, SELF TAPPING, 1-1/4", #12, 24 THREADED	AS REQ'D	-	S618082	-
7	INSULATOR, SUSPENSION, 12KV, LONG DEADEND	AS REQ'D	-	S428958	LONGDE
8	CLAMP, STRAIGHT LINE, D.E.	AS REQ'D	739-743	-	-
9	WIRE, #8, BARE SOLID ANNEALED COPPER	30'	-	S812928	BOND8
10	STRAP, PIPE, GALV. 1/4", ONE HOLE	AS REQ'D	-	S697302	-
11	LEAD WIRE, 0-2/0, 200AMP 1/0 POLY	30'	4242.4	S812108	CW1/0
	LEAD WIRE, 350MCM, 600AMP 4/0 POLY	30'	4242.4	S812106	CW500
	LEAD WIRE, 750MCM-1000MCM, 600AMP 500MCM POLY	30'	4242.4	S812102	CW4/0
12	CONNECTOR, WIRE, WEDGE (SIZE AS REQ'D)	AS REQ'D	784	-	-
13	TAPE, HIGH VOLTAGE, SELF FUSING, SCOTCH 70	AS REQ'D	-	S720384	-
14	TAPE, HIGH VOLTAGE, LINELESS RUBBER, SCOTCH 130C	AS REQ'D	1272.8	S720480	-
15	TAPE, HIGH VOLTAGE, VINYL, SCOTCH SUPER 88	AS REQ'D	-	S720600	-
16	TERMINAL, COMPRESSION, CU OR AL (SIZE AS REQ'D)	AS REQ'D	794-795	-	-
17	PIN, INSULATOR, 12KV, 1"	AS REQ'D	396	S532704	PS1
18	INSULATOR, LINE 12KV TANGENT, VICE TOP	AS REQ'D	750	-	-
19	FIBERGLASS, CROSSARM, TANGENT, 10'	AS REQ'D	-	S294374	6TF
20	WIRE, POLY COPPER, (SIZE AS REQ'D WITH MINIMUM SIZE EQUAL TO LINE CONDUCTOR AMPACITY OR GREATER)	25'	-	-	-
21	SIGN, PN DECAL	2	208	S648002	PN-D
22	GRIP, RISER, KELLEMS (SIZE AS REQUIRED)	1	4204.3	-	-
23	ELASTIMOLD RECLOSER/SWITCH SCADA COMPATIBLE, 800A, INCLUDES: MOUNTING BRACKET, INTERNAL VOLTAGE SENSOR, AND 12000/120 VOLT (O)	1	3675.2	S571970	EM-SW OR EM-SR
24	CONTROLLER, SEL 651R2, COMPATIBLE WITH ELASTIMOLD SWITCH, INCLUDES: 40' FT. 32-PIN CONFIG. CONTROL CABLE (IV)	1	-	S274578	-
	TRANSCEIVER, MDS RADIO (IV)	AS REQ'D	-	S749500	SOTRAN
	TRANSCEIVER, MDS RADIO SPREADSPECTRUM (IV)	AS REQ'D	-	S749504	SSTRAN

TABLE OF CONTENTS

© 1998 - 2020 San Diego Gas & Electric Company. All rights reserved. Removal of this copyright notice without permission is not permitted under law.

REV	CHANGE	DR	BY	DSN	APV	DATE	REV	CHANGE	DR	BY	DSN	APV	DATE
C	DRAWING UPDATE	-	PEI	-	-	02/18/2019	F						
B	EDITORIAL CHANGES	-	GW	JS	MDJ	03/01/2018	E						
A	ORIGINAL ISSUE	-	JC	TR	MDJ	10/25/2016	D	EDITORIAL CHANGES	PEI	JA	JES	CZH	10/12/2020

BILL OF MATERIALS (CONT'D):

ITEM	DESCRIPTION	QUANTITY	STANDARD PAGE	STOCK NUMBER	ASSEMBLY UNIT
25	BOLT, MACH, GALV, 3/4" X (LENGTH AS REQ'D), 1 SQUARE CURVED RIBBED & 1 COIL SPRING WASHER	4	392	-	-
26	BUSHING COVER, TRANSFORMER	2	1630.1	S289190	BSHCOV
27	POLY COVERED 4/7 STRAND COPPER	AS REQ'D	-	S815044	POLY4J
28	FLEXIBLE ARRESTER GROUND STRAP	AS REQ'D	-	S698754	LAGND
29	ARRESTER, LIGHTNING, 12KV	3	1247	S113248	LA12
30	GRIP, CONTROL CABLE, MVR	1	-	S392408	-
31	LADDER ARM BRACKET	-	1401.1	S167184	RARM/L
32	2' DOUBLE UNISTRUT ARM	-	1401.1	S216700	
33	1/2" CLAMPING CHANNEL NUT W/SPRING	-	1401.1	S503488	
34	5/8" GALVANIZED BOLTS (LENGTH AS REQUIRED)	AS REQ'D	392.1, .2	-	-
35	NUT STUD 1/2" X 1-3/8", CLAMPING UNISTRUT	AS REQ'D	1401.1	S507000	-
36	2" SCHEDULE 40 PVC	AS REQ'D	4204.3	S251296	S40-2"
37	3" SCHEDULE 40 PVC	AS REQ'D	4204.3	S251360	S40-3"
38	4" SCHEDULE 40 PVC	AS REQ'D	4204.3	S251392	S40-4"
39	5" SCHEDULE 40 PVC	AS REQ'D	4204.3	S251408	S40-5"
40	2" UNISTRUT PIPE CLAMP	AS REQ'D	4204.3	S229536	CL-2IN
41	3" UNISTRUT PIPE CLAMP	AS REQ'D	4204.3	S229632	CL-3IN
42	4" UNISTRUT PIPE CLAMP	AS REQ'D	4204.3	S229664	CL-4IN
43	5" UNISTRUT PIPE CLAMP	AS REQ'D	4204.3	S229668	CL-5IN
44	WEATHER HEAD 2"	1	-	S203290	-
45	NIPPLE, PIPE 2" X 7", ALUMINUM (IV)	1	-	-	ANTXMB
46	BOLT, MACH GALV, 5/8" X 14"	1	-	S154880	
47	CENTERING WASHER, GALV	2	-	S795520	
48	CABLE, FLEXIBLE, 1/2" COAXIAL SCADA ANTENNA (IV)	AS REQ'D	-	S191906	ANTCAB
49	CONNECTOR, COAXIAL, STRAIGHT (IV)	2	-	S254170	-
50	GROUNDING BALL STUD, 5/8" X 3" SHANK	3	-	S700100	GDSTUD
51	TAG "CONTROLS"	1	204	-	-
52	PADLOCK, SCHLAGE ELECTRIC SERIES	2	-	S514848	-

TABLE OF CONTENTS

© 1998 - 2020 San Diego Gas & Electric Company. All rights reserved. Removal of this copyright notice without permission is not permitted under law.

REV	CHANGE	DR	BY	DSN	APV	DATE	REV	CHANGE	DR	BY	DSN	APV	DATE
C	DRAWING UPDATE	-	PEI	-	-	02/18/2019	F						
B	EDITORIAL CHANGES	-	GW	JS	MDJ	03/01/2018	E						
A	ORIGINAL ISSUE	-	JC	TR	MDJ	10/25/2016	D	EDITORIAL CHANGES	PEI	JA	JES	CZH	10/12/2020

BILL OF MATERIALS (CONT'D):

ITEM	DESCRIPTION	QUANTITY	STANDARD PAGE	STOCK NUMBER	ASSEMBLY UNIT
53	TAG, SWITCH NUMBER (IV)	2	204	-	-
54	DECAL "SCADA" "INFORM S.C.O. UPON ENTRY" (IV)	1	207	S301934	-
55	VISIBILITY STRIP (C)	1	208	S304064	-
56	#4 CU SOLID GROUND WIRE, PVC COVERED	50'	-	S812490	GNDPVC
57	GROUND ROD, 5/8" X 8', COPPERWELD	1	-	S603072	GNDPVC
58	COPPER BONDED GROUND CONNECTOR	1	-	S259010	GNDPVC
59	GROUND ENHANCING POWER SOLUTION (GEM)	AS REQ'D	-	S424390	-
60	BRACKET, LIGHTNING ARRESTER	3	397	S166070	LA/BKT
61	ANTENNA, SCADA, COMMUNICATION, BROADBAND & CONNECTORS	1	-	S109570	ANT

NOTES:

(I) SEL 651R2 CONTROLLER REQUIRES 120-VOLT SUPPLY COMING FROM THE SOURCE SIDE USING A PT MOUNTED TO THE MVR SWITCH FRAME.

(II) PLANNER TO SPECIFY QUADRANT OF POLE FOR ANTENNA MOUNT WITH DATA FROM THE "SCADA TELECOMMUNICATIONS COORDINATION" FORM. SEE PROJECT MANAGEMENT INTRANET SITE FOR FORMS.

III. THE NEW MVR SWITCH COMES WITH INTERNAL AND SUPPLEMENTAL VOLTAGE SENSORS AND DO NOT NEED EXTERNAL LINDSEY SENSORS INSTALLED.

(IV) ITEMS SUPPLIED BY KEARNY.

REFERENCES:

a. POLE STEPPING, SEE STANDARD 363.

(b) GROUNDING METHODS, SEE STANDARD 1002.

(c) TRENCH GROUNDING, SEE STANDARD 4510.

(d) DELINEATOR/REFLECTOR STRIPS, SEE STANDARD 208.

(e) AVIAN PROTECTION, SEE STANDARD 1610.

f. CABLE PULLING LIMITATIONS, SEE STANDARD 4003.

(g) MINIMUM CONDUIT SIZES, SEE STANDARD 4002.3

h. CABLE POLE RISER INSTALLATION, SEE STANDARD 4204.

i. ALLOWABLE WORKING AND CLIMBING SPACE, SEE STANDARD 251.

j. MINIMUM VERTICAL SEPARATION AS PER G.O. 95, SEE STANDARD 1406/4206.

k. CABLE IDENTIFICATION, SEE STANDARD 3202.

TABLE OF CONTENTS

© 1998 - 2020 San Diego Gas & Electric Company. All rights reserved. Removal of this copyright notice without permission is not permitted under law.

REV	CHANGE	DR	BY	DSN	APV	DATE	REV	CHANGE	DR	BY	DSN	APV	DATE
C	DRAWING UPDATE	-	PEI	-	-	02/18/2019	F						
B	EDITORIAL CHANGES	-	GW	JS	MDJ	03/01/2018	E						
A	ORIGINAL ISSUE	-	JC	TR	MDJ	10/25/2016	D	EDITORIAL CHANGES	PEI	JA	JES	CZH	10/12/2020

Instructions for Applying Animal Guard Taping

1. To begin the coverup of the recloser bushings, first remove the three preinstalled supplemental voltage sensors attached to the vertical NEMA-4 pad terminals.

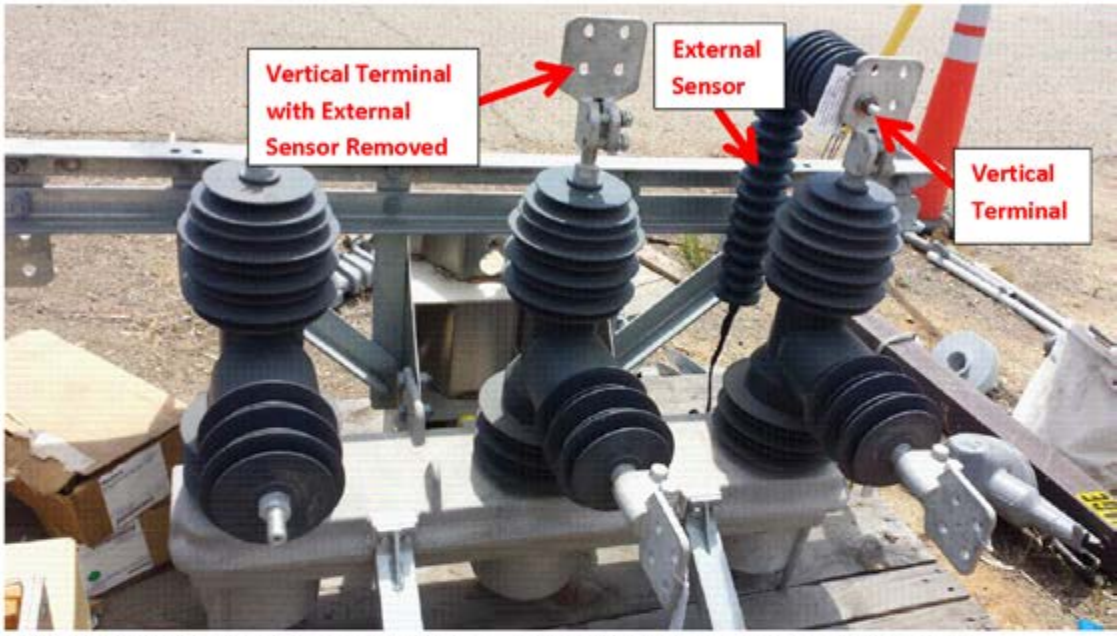

Once the supplemental sensors are removed, apply the Scotch 70 Self Fusing Tape (**stock# S720384**) to the base of each NEMA-4 vertical terminal with enough wraps to cover the entire metal surface.



TABLE OF CONTENTS

© 1998 - 2020 San Diego Gas & Electric Company. All rights reserved. Removal of this copyright notice without permission is not permitted under law.

REV	CHANGE	DR	BY	DSN	APV	DATE	REV	CHANGE	DR	BY	DSN	APV	DATE
C	DRAWING UPDATE	-	PEI	-	-	02/18/2019	F						
B	EDITORIAL CHANGES	-	GW	JS	MDJ	03/01/2018	E						
A	ORIGINAL ISSUE	-	JC	TR	MDJ	10/25/2016	D	EDITORIAL CHANGES	PEI	JA	JES	CZH	10/12/2020

After applying the Scotch 70 tape to the NEMA-4 vertical terminal bases, make the high voltage connections to the terminal as required. Apply a layer of Scotch 130C Tape (**Stock #S720480**) over the area covered by the Scotch 70 tape until the Scotch 130C is no longer visible.

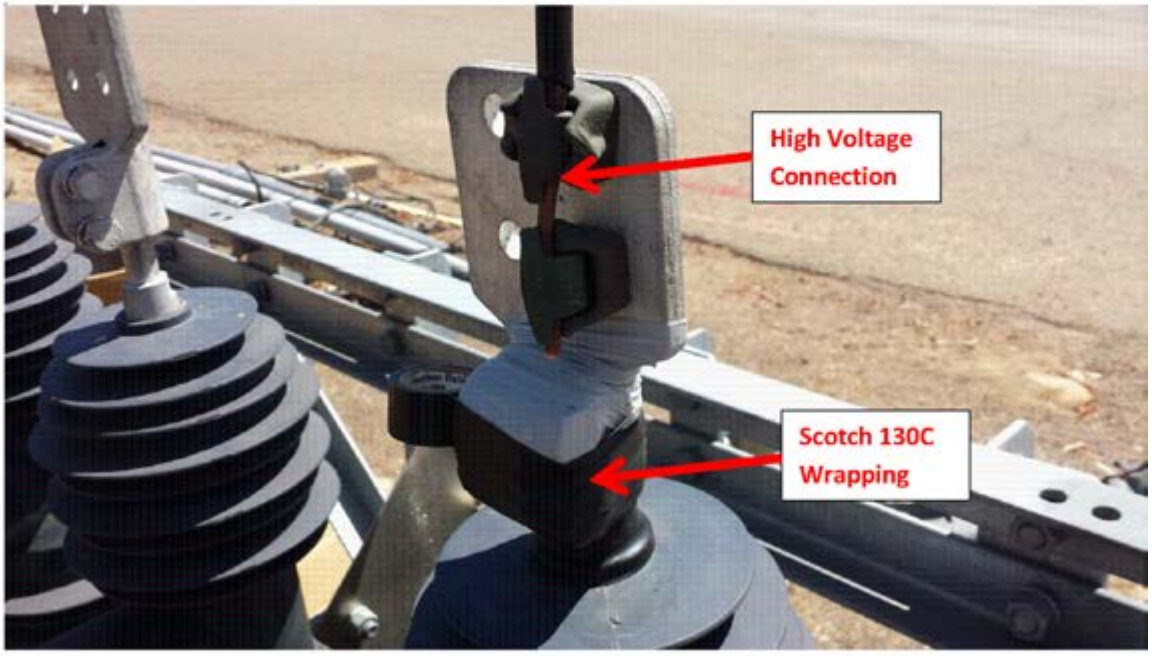

4. REATTACH THE SUPPLEMENTAL VOLTAGE SENSORS BACK TO THE VERTICAL NEMA-4 BUSHINGS USING A RATCHET WRENCH AT A TORQUE SETTING OF 25 FT-LBS. MAKE SURE TO RECONNECT THE SMALL CANNON PLUG FROM THE BOTTOM OF THE SUPPLEMENTAL SENSORS INTO THE RECEPTACLES FOUND ON THE FRAME OF THE RECLOSER FOR EACH PHASE.

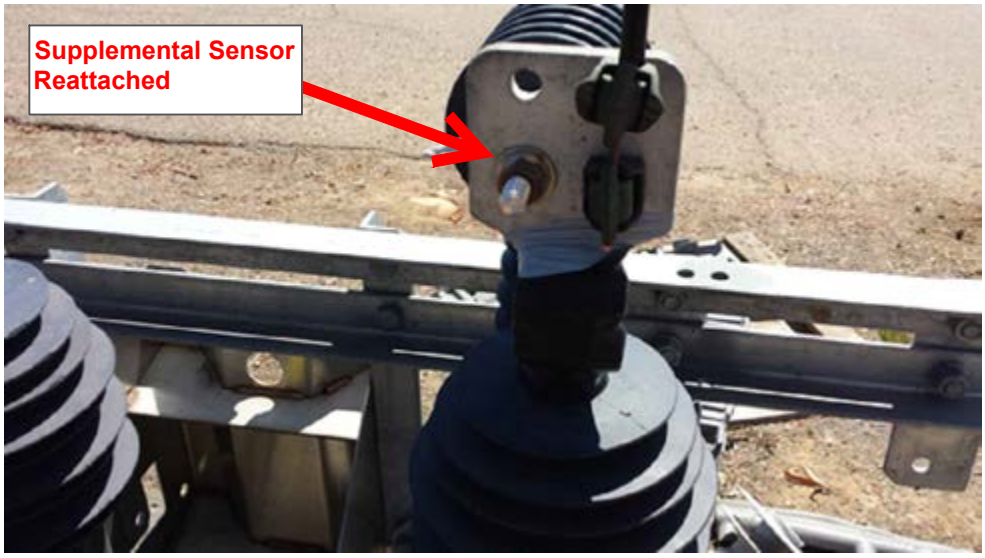

TABLE OF CONTENTS

© 1998 - 2020 San Diego Gas & Electric Company. All rights reserved. Removal of this copyright notice without permission is not permitted under law.

REV	CHANGE	DR	BY	DSN	APV	DATE	REV	CHANGE	DR	BY	DSN	APV	DATE
C	DRAWING UPDATE	-	PEI	-	-	02/18/2019	F						
B	EDITORIAL CHANGES	-	GW	JS	MDJ	03/01/2018	E						
A	ORIGINAL ISSUE	-	JC	TR	MDJ	10/25/2016	D	EDITORIAL CHANGES	PEI	JA	JES	CZH	10/12/2020

X Indicates Latest Revision | Completely Revised | New Page | Information Removed

SDG&E ELECTRIC OVERHEAD AND UNDERGROUND CONSTRUCTION STANDARDS

ELASTIMOLD MVR SWITCH AND SCADA 651R2 CONTROLLER CABLE POLE

OH1452.8
UG4252.8

5. Once the external sensors have been reattached, continue applying the Scotch 70 tape to the remaining exposed metal surface on the NEMA-4 vertical terminals until a complete coverup is made.



6. After applying the Scotch 70, apply the Scotch 130C to the rest of the area until the Scotch 130C covers up the entire section.

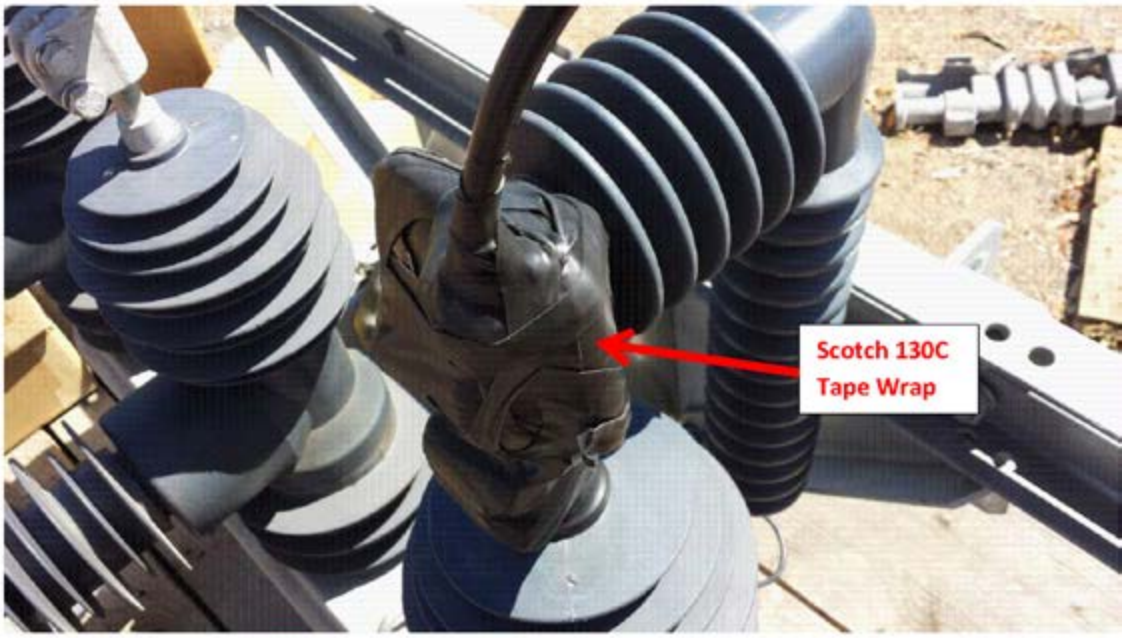

TABLE OF CONTENTS

© 1998 - 2020 San Diego Gas & Electric Company. All rights reserved. Removal of this copyright notice without permission is not permitted under law.

REV	CHANGE	DR	BY	DSN	APV	DATE	REV	CHANGE	DR	BY	DSN	APV	DATE
C	DRAWING UPDATE	-	PEI	-	-	02/18/2019	F						
B	EDITORIAL CHANGES	-	GW	JS	MDJ	03/01/2018	E						
A	ORIGINAL ISSUE	-	JC	TR	MDJ	10/25/2016	D	EDITORIAL CHANGES	PEI	JA	JES	CZH	10/12/2020

X Indicates Latest Revision | Completely Revised | New Page | Information Removed

SDG&E ELECTRIC OVERHEAD AND UNDERGROUND CONSTRUCTION STANDARDS

ELASTIMOLD MVR SWITCH AND SCADA 651R2 CONTROLLER CABLE POLE

OH1452.9
UG4252.9

After applying coverup with the Scotch 70 and 130C tape, apply the Scotch Super 88 Tape (**Stock #S720600**) to the entire the NEMA-4 vertical terminals.



Repeat Steps 1-7 for each of the 3 NEMA-4 vertical bushing terminals.

Repeat Steps 2-3 and 5-7 for each of the 3 NEMA-4 horizontal bushing terminals. These terminations do not have any external voltage sensor devices.

TABLE OF CONTENTS

© 1998 - 2020 San Diego Gas & Electric Company. All rights reserved. Removal of this copyright notice without permission is not permitted under law.

REV	CHANGE	DR	BY	DSN	APV	DATE	REV	CHANGE	DR	BY	DSN	APV	DATE
C	DRAWING UPDATE	-	PEI	-	-	02/18/2019	F						
B	EDITORIAL CHANGES	-	GW	JS	MDJ	03/01/2018	E						
A	ORIGINAL ISSUE	-	JC	TR	MDJ	10/25/2016	D	EDITORIAL CHANGES	PEI	JA	JES	CZH	10/12/2020

X Indicates Latest Revision | Completely Revised | New Page | Information Removed

SDG&E ELECTRIC OVERHEAD AND UNDERGROUND CONSTRUCTION STANDARDS

ELASTIMOLD MVR SWITCH AND SCADA 651R2 CONTROLLER CABLE POLE

OH1452.10
UG4252.10

MAIN TABLE OF CONTENTS

PAGE	SUBJECT
1501	TABLE OF CONTENTS
1509	G.O. 95 MINIMUM CLEARANCES
1510	HIGH INTENSITY DISCHARGE LAMPS
1512	PHOTOELECTRIC CONTROLS
1514	STREET LIGHT OWNERSHIP AND MAINTENANCE IDENTIFICATION DECAL
1518	ROADWAY LIGHTING - HIGH AND LOW PRESSURE SODIUM VAPOR
1519	CUSTOMER OWNED AND INSTALLED STREET LIGHT
1530	DUSK-TO-DAWN LIGHTING, HIGH PRESSURE SODIUM VAPOR
1561	12KV STREET LIGHT TRANSFORMER INSTALLATION
1566	MULTIPLE STREET LIGHT CONTROLLER INSTALLATION
1570	ROADWAY LED LIGHTING INSTALLATION
1571	GE EVOLVE LED ROADWAY LIGHTING FIXTURES
1572	CREE LED ROADWAY LIGHTING FIXTURES
1573	ACUITY LED ROADWAY LIGHTING FIXTURES
1580	LED DECORATIVE LIGHTING FIXTURES (RESERVED)

© 1998 - 2022 San Diego Gas & Electric Company. All rights reserved. Removal of this copyright notice without permission is not permitted under law.

REV	CHANGE	DR	BY	DSN	APV	DATE	REV	CHANGE	DR	BY	DSN	APV	DATE
E	ADDED PAGES TO TABLE OF CONTENTS	-	JIK	JES	CZH	8/20/2019	H	ADDED 1573 TO TABLE OF CONTENTS	AMP	ADW	JES	CZH	12/13/21
D	UPDATED TABLE OF CONTENTS	PEI	-	-	-	02/04/2019	G	ADDED 1572 TO TABLE OF CONTENTS	AMP	RSL	JES	CZH	04/28/21
C	1521 MOVED TO FMO	-	GW	JS	MDJ	10/25/2016	F	EDITORIAL CHANGES	GLC	JIK	GLW	CZH	6/8/2020

SCOPE: THIS STANDARD SHOWS MINIMUM CLEARANCES FOR STREET LIGHT AS REQUIRED BY G.O. 95.

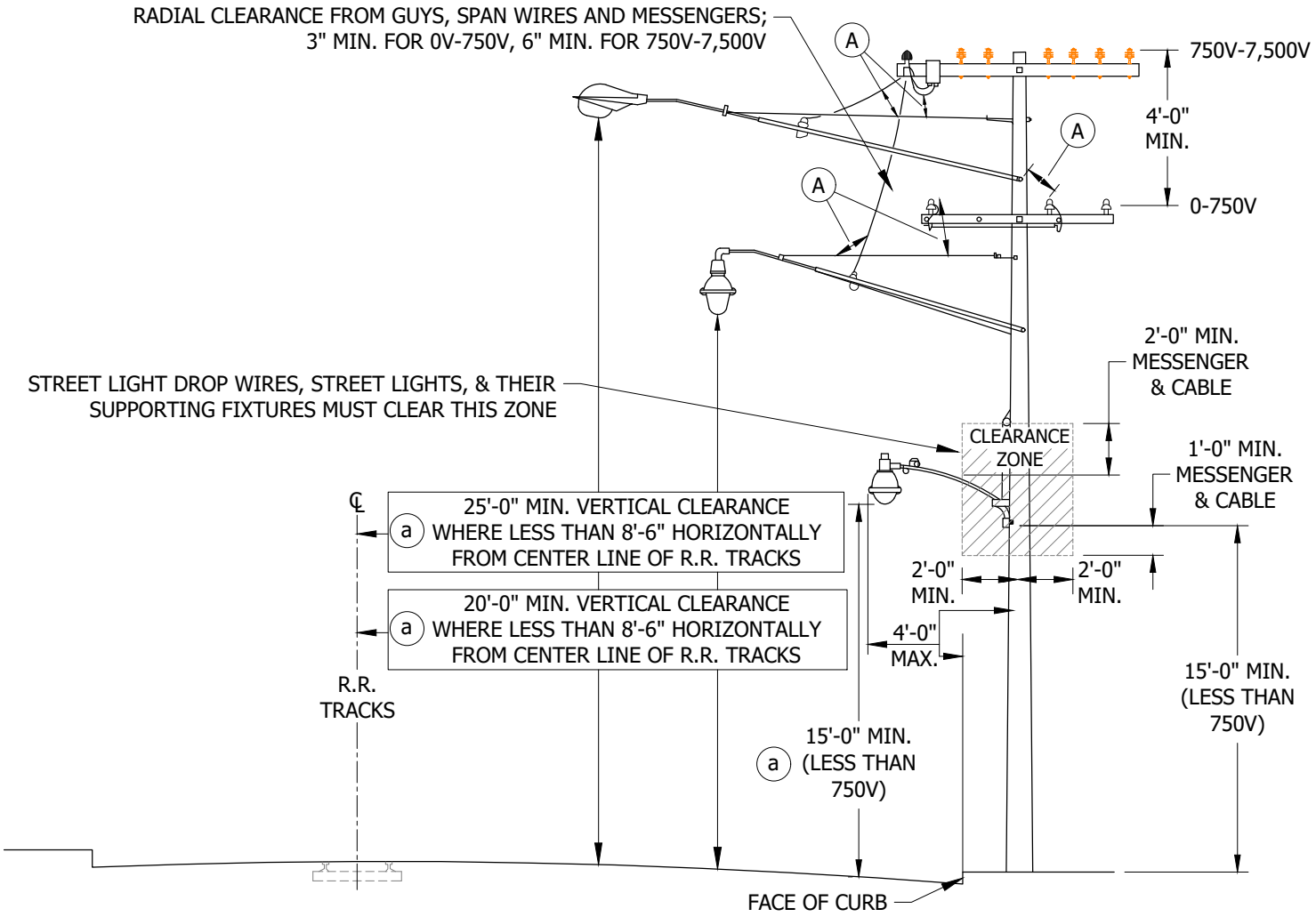

FIGURE 1

TABLE OF CONTENTS

© 1998 - 2021 San Diego Gas & Electric Company. All rights reserved. Removal of this copyright notice without permission is not permitted under law.

REV	CHANGE	DR	BY	DSN	APV	DATE	REV	CHANGE	DR	BY	DSN	APV	DATE
C	DRAWING UPDATE	EDM	GLW	JES	CZH	08/24/2021	F						
B	DRAWING UPDATE	PEI	-	-	-	02/04/2019	E						
A	ORIGINAL ISSUE	-	-	-	PTA/RDG	01/01/1988	D						

X Indicates Latest Revision | Completely Revised | New Page | Information Removed

SDG&E ELECTRIC OVERHEAD CONSTRUCTION STANDARDS

STREET LIGHT G.O. 95 MINIMUM CLEARANCES

OH1509.1

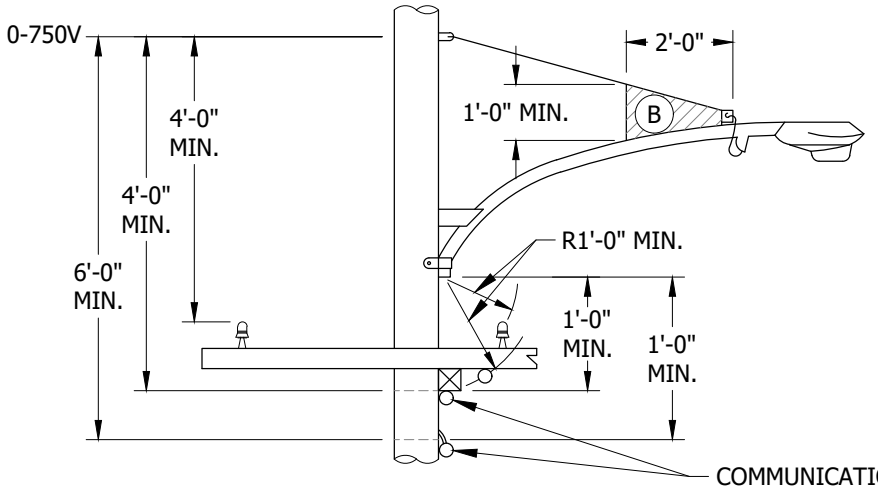

FIGURE 2

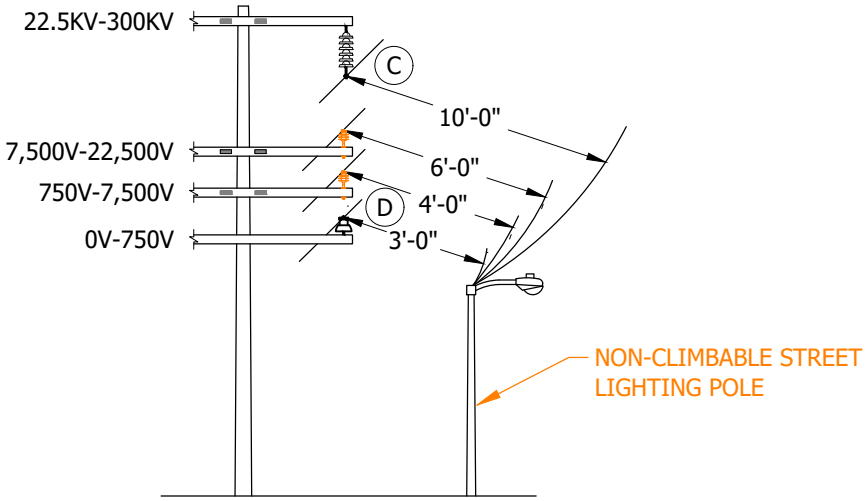

FIGURE 3

INSTALLATION:

(A) ALL STREET LIGHT DROP WIRES, STREET LIGHTS AND THEIR SUPPORTING FIXTURES (INCLUDING RODS, BRACES AND GUYS) SHALL NOT BE LESS THAN 1'-0" RADIALLY FROM UNPROTECTED CONDUCTORS NOT SUPPORTED ON MESSENGERS (INCLUDING LEAD WIRES & TAPS) EXCEPT LEAD WIRES SUPPLYING THE STREET LIGHTS WITHIN 2'-0" OF THEIR POINTS OF ENTRANCE TO THE STREET LIGHTING EQUIPMENT.

(B) STREET LIGHT LEAD WIRE SHALL BE 1'-0" MINIMUM RADIALLY FROM STREET LIGHT HARDWARE EXCEPT IN THE SHADED AREA.

(C) RADIAL CLEARANCES REQUIRED FOR VARIOUS VOLTAGE CONDUCTORS ARE THE SAME AT POLES AS AT MID-SPANS.

(D) MULTI-CONDUCTOR CABLE (SECONDARY CABLE AND SSC) 1'-3" MINIMUM.

BILL OF MATERIALS: NONE

NOTES: NONE

REFERENCE:

(a) SEE CONSTRUCTION PAGES IN OH1500 SECTION FOR SPECIFIC MOUNTING HEIGHTS.

© 1998 - 2021 San Diego Gas & Electric Company. All rights reserved. Removal of this copyright notice without permission is not permitted under law.

REV	CHANGE	DR	BY	DSN	APV	DATE	REV	CHANGE	DR	BY	DSN	APV	DATE
C	DRAWING UPDATE	EDM	GLW	JES	CZH	08/24/2021	F						
B	DRAWING UPDATE	PEI	-	-	-	02/04/2019	E						
A	ORIGINAL ISSUE	-	-	-	PTA/RDG	01/01/1988	D						

SCOPE: THIS STANDARD DESCRIBES ALL THE NECESSARY INFORMATION WHEN ORDERING LAMPS FOR MERCURY VAPOR, HIGH PRESSURE AND LOW PRESSURE SODIUM LUMINARIES.

INSTALLATION:

(A) CLEAR MERCURY VAPOR LAMPS.

(B) DELUXE WHITE OR PHOSPHOR COATED LAMPS, IDENTIFIED BY 'DX'.

C. RATING BASED ON 16,000 HOURS ON LAMPS.

(D) LAMPS NOW BEING PURCHASED WILL WORK IN EITHER BASE UP OR BASE DOWN CONFIGURATION.

(E) LPSV LAMPS MUST BE INSTALLED HORIZONTAL OR BASE UP, AS SHOWN ON THE FOLLOWING FIGURES:

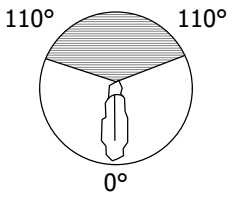

FIGURE 1
FOR 35 AND 55W (E)

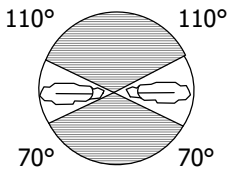

FIGURE 2
FOR 90, 135 AND 180W (E)

F. INSTALLER IS TO SCRIBE A VERTICAL LINE UNDER THE MONTH AND LAST DIGIT OF THE CURRENT YEAR WHEN INSTALLING LAMPS.

BILL OF MATERIALS: NONE

TABLE 1

HIGH PRESSURE SODIUM VAPOR (HPSV) (D)									
LAMP SIZE (WATTS)	MANUFACTURER			ANSI LAMP DESIGNATION	LENGTH (IN)	APPROXIMATE LUMENS		STOCK NUMBER	DESIGN UNITS
	GE LUCALUX	SYLVANIA LUMALUX	N.A. PHILIPS CERAMALUX			INITIAL	MEAN		
50	LU-50	LU-50	C-50S68	S68MS-50	7 3/4	4,000	3,600	S452578	LH50
70	LU-70	LU-70	C-70S62	S62ME-70	7 3/4	5,800	5,220	S452580	LH70
100	LU-100	LU-100	C-100S54	S54SB-100	7 3/4	9,500	8,550	S452582	LH100
150	LU-150/55	LU-150/55	C-150S55	S55SC-150	7 3/4	16,000	14,400	S452584	LH150
200	LU-200	LU-200	C-200S66	S66MN-200	9 3/4	22,000	19,800	S452587	LH200
250	LU-250	LU-250	C-250S50/S	S50VA-250/S	9 3/4	30,000	27,000	S452588	LH250
310	LU-310	LU-310	C-310S67	S67MR-310	9 3/4	37,000	33,000	S452591	LH310
400	LU-400	LU-400	C-400S51	S51WA-400	9 3/4	50,000	45,000	S452592	LH400
1000	LU-1000	LU-1000	C-1000S52	S52XB-1000	15 1/16	140,000	126,000	S452594	LH1000

TABLE OF CONTENTS

© 1998 - 2022 San Diego Gas & Electric Company. All rights reserved. Removal of this copyright notice without permission is not permitted under law.

REV	CHANGE	DR	BY	DSN	APV	DATE	REV	CHANGE	DR	BY	DSN	APV	DATE
C	FORMATTING	EDM	JIK	-	-	01/18/2022	F						
B	DRAWING UPDATE	PEI	-	-	-	02/04/2019	E						
A	ORIGINAL ISSUE	-	-	PTA	RDG	01/01/1996	D						

TABLE 2

MERCURY VAPOR (MV) (D) (NO LONGER USED IN NEW INSTALLATION)							
LAMP SIZE (WATTS)	MANUFACTURER		ANSI LAMP DESIGNATION	LENGTH (IN)	APPROXIMATE LUMENS		STOCK NUMBER
	GE CATALOG NUMBER	SYLVANIA & N.A. PHILIPS CATALOG NUMBERS			INITIAL	MEAN (B)	
175	H175A39-22	H39KB-175	H39KB-175	8 1/4	7,950	7,470	S452352 (A)
	H175DX39-22	H39KC-175/DX	H39KC-175/DX		8,600	7,650	S452580 (B)
250	H25OA37-5	H37KB-250	H37KB-250	8 1/4	11,200	10,300	S452384 (A)
	H25ODX37-5	H37KC-250/DX	H37KC-250/DX		12,100	10,400	S452400 (B)
400	H40OA33-1	H33CD-400	H33CD-400	11 5/16	21,000	19,100	S452416 (A)
	H40ODX33-1	H33GL-400/DX	H33GL-400/DX		22,500	19,100	S452448 (B)
700	H70ODX35-18	H35ND-700/DX	H35ND-700/DX	14 5/16	42,000	33,600	S452576 (B)

TABLE 3

LOW PRESSURE SODIUM VAPOR (LPSV) (E)					
LAMP SIZE (WATTS)	ANSI LAMP DESIGNATION	LENGTH (IN)	APPROXIMATE LUMENS	STOCK NUMBER	DESIGN UNITS
35	L70RB-35	12.2	4,800	S452270	LL35
55	L71RC-55	16.7	8,000	S452280	LL55
90	L72RD-90	20.8	13,500	S452282	L90
135	L73RE-135	30.5	22,500	S452284	LL135
180	L74RF-180	44.1	33,000	S452286	LL180

TABLE OF CONTENTS

NOTES:

(I) ALL LAMPS MUST BE DATE CODED WHEN INSTALLED. SCRIBE A VERTICAL LINE BELOW THE MONTH AND YEAR LOCATED ON THE BASE OF LAMPS. SINCE LAMPS ARE GROUP REPLACED, ONLY THE LAST DIGIT OF THE YEAR IS USED. THEY SHOULD NEVER BE OLDER THAN TEN YEARS. THE FOLLOWING EXAMPLE INDICATES A JUNE 1985 INSTALLATION:



FIGURE 3 (I)

REFERENCE:

a. FOR G.O. 95 MINIMUM CLEARANCE, SEE OH1509.

© 1998 - 2022 San Diego Gas & Electric Company. All rights reserved. Removal of this copyright notice without permission is not permitted under law.

REV	CHANGE	DR	BY	DSN	APV	DATE	REV	CHANGE	DR	BY	DSN	APV	DATE
C	FORMATTING	EDM	JIK	-	-	01/18/2022	F						
B	DRAWING UPDATE	PEI	-	-	-	02/04/2019	E						
A	ORIGINAL ISSUE	-	-	PTA	RDG	01/01/1996	D						

SCOPE: THIS STANDARD SHOWS SEVERAL TYPES OF PHOTOELECTRIC CONTROLS THAT CAN BE USED FOR STREET LIGHT LUMINAIRES.

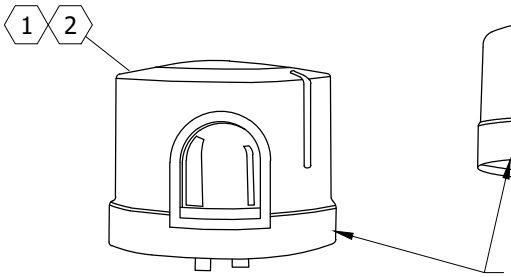

FIGURE 1

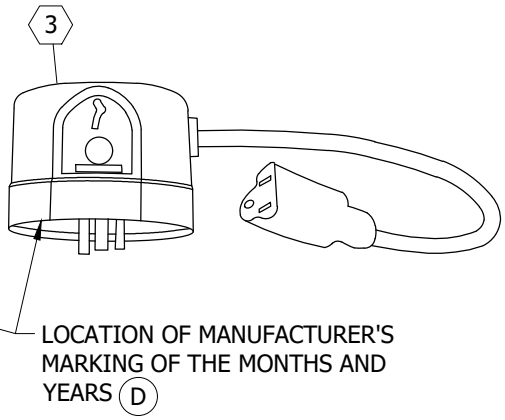

FIGURE 2

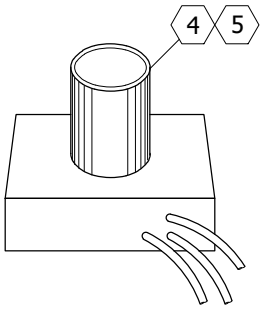

FIGURE 3

INSTALLATION:

A. PHOTOELECTRIC CONTROL SHOULD BE MOUNTED WITH THE PHOTO CELL FACING NORTH.

B. FOR USE ON AUXILIARY HOLIDAY LIGHTING.

(C) USED ON AMERON VICTORIAN LUMINAIRE, LAWNAIRE, LOMALITER.

(D) WHEN INSTALLING AND REMOVING PHOTO-ELECTRIC CONTROLS, INSTALLER IS TO SCRIBE A VERTICAL LINE UNDER THE CURRENT MONTH AND YEAR OR ENTER THE CURRENT DATE IN THE SPACE PROVIDED.

E. USED ON AMERON VICTORIAN LUMINAIRES.

TABLE 1

PHOTOELECTRIC CONTROLS					
ITEM	RATING		NEMA COLOR CODE	STOCK NUMBER	DESIGN UNITS
	VOLTS	WATTS			
(1)	120 TO 277	1,000	GRAY	S273884 (I)	PC-TL
(2)	185 to 305	1,000	RED	S273890	PCTL
(3)	120	1,000	GRAY	S273886	PC-AUX
(4)	105 TO 130	1,000	GRAY	S273700 (C)	PC-MGE
(5)	105 TO 130	1,000	GRAY	S273700 (C)	PC-AM

BILL OF MATERIALS: NONE

NOTES:

(I) S273884 HAS A TEN YEAR WARRANTY. PHOTO-CELL FAILURE RETURN TO ELECTRIC DISTRIBUTION ENGINEERING.

REFERENCE: NONE

© 1998 - 2022 San Diego Gas & Electric Company. All rights reserved. Removal of this copyright notice without permission is not permitted under law.

REV	CHANGE	DR	BY	DSN	APV	DATE	REV	CHANGE	DR	BY	DSN	APV	DATE
C	FORMATTING	EDM	JIK	-	-	01/18/2022	F						
B	DRAWING UPDATE	PEI	-	-	-	02/04/2019	E						
A	COMPLETELY REVISED	-	GW	IL	MDJ	10/03/2016	D						

X Indicates Latest Revision | Completely Revised | New Page | Information Removed

SDG&E ELECTRIC OVERHEAD AND UNDERGROUND CONSTRUCTION STANDARDS

SHEET 1 OF 1

PHOTOELECTRIC CONTROLS

OH1512.1
UG4412.1

TABLE OF CONTENTS

SCOPE: THIS STANDARD SHOWS A UNIFORM METHOD FOR IDENTIFYING SDG&E OWNED AND/OR MAINTAINED STREET LIGHTS.DECALS WILL BE ADDED TO ALL APPLICABLE NEW STREET LIGHTS WHEN INSTALLED, OR ON EXISTING LIGHTS WHEN MAINTAINED.

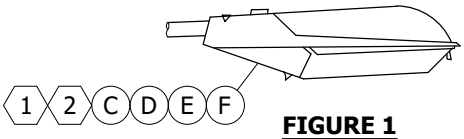

FIGURE 1

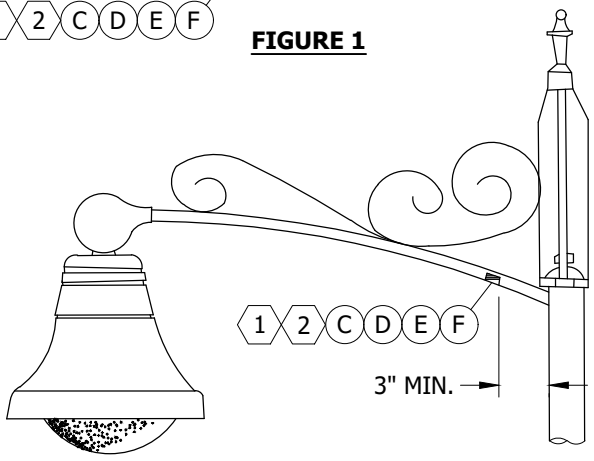

FIGURE 2

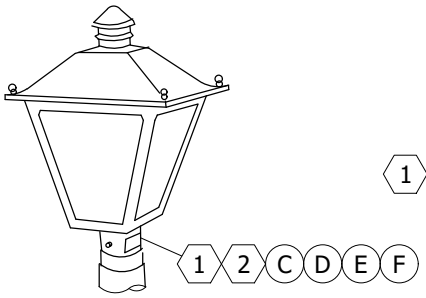

FIGURE 3

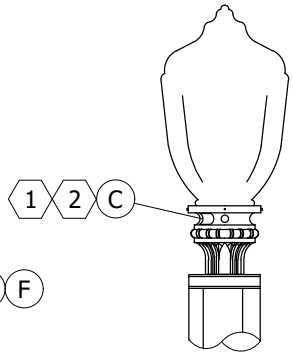

FIGURE 4



FIGURE 5

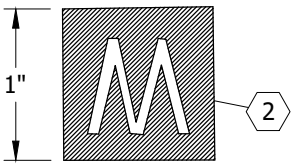

FIGURE 6

TABLE 1

DECALS FOR STREET LIGHT IDENTIFICATION			
ITEM	**DESCRIPTION**	**SCHEDULE**	**STOCK NUMBER**
1	"SDG&E" DECAL, 2 5/8" X 1 7/8"	LSI, OL1, DWL	S332850
2	YELLOW "M" DECAL, 1" X 1"	LS2B	S302112

INSTALLATION:

A. CLEAN SURFACE WITH SOLVENT BEFORE APPLYING DECAL. DECAL HAS A PRESSURE SENSITIVE ADHESIVE BACKING.

B. THE DECAL SHALL BE LOCATED ON THE STREET SIDE OF ALL LUMINAIRES.

C. THE DECAL SHALL BE LOCATED SO IT IS VISIBLE FROM THE GROUND. DO NOT PLACE DECAL ON THE REFRACTOR OR OBSTRUCT EXISTING DECALS OR VENT HOLES. IF VARIATIONS FROM THESE LOCATION ARE REQUIRED, CONTACT DISTRIBUTION STANDARDS.

D. DECAL SHALL BE SECURED TO THE UNDERSIDE OF THE MAST ARM, 3 INCHES MINIMUM FROM POLE.

E. FOR DUAL LUMINAIRE INSTALLATIONS, TWO (2) DECALS ARE REQUIRED.

F. IF DURING MAINTENANCE, A YELLOW LETTER "O" OR A BLUE LETTER "M" DECAL EXISTS, REMOVE THE OLD DECAL AND REPLACE WITH "SDG&E" OR YELLOW "M" DECAL.

BILL OF MATERIALS: NONE

NOTES:

I. FIGURES 1 THROUGH 4 ARE SHOWN AS TYPICAL STREET LIGHT LUMINAIRES ONLY. (a)

II. THE "SDG&E" DECAL INDICATES THE STREET LIGHT IS OWNED AND MAINTAINED BY SDG&E.

III. THE YELLOW "M" DECAL INDICATES THE STREET LIGHT IS MAINTAINED BY SDG&E AND OWNED BY OTHERS.

REFERENCE:

(a) FOR SPECIFIC DETAILS, SEE UG4421, UG4422, UG4423, AND UG4424.

© 1998 - 2022 San Diego Gas & Electric Company. All rights reserved. Removal of this copyright notice without permission is not permitted under law.

REV	CHANGE	DR	BY	DSN	APV	DATE	REV	CHANGE	DR	BY	DSN	APV	DATE
C	FORMATTING	EDM	JIK	-	-	01/18/2022	F						
B	DRAWING UPDATE	PEI	-	-	-	02/04/2019	E						
A	EDITORIAL CHANGES	-	JS	GW	MDJ	09/15/2016	D						

X Indicates Latest Revision | Completely Revised | New Page | Information Removed

SDG&E ELECTRIC OVERHEAD AND UNDERGROUND CONSTRUCTION STANDARDS

STREET LIGHT OWNERSHIP AND MAINTENANCE IDENTIFICATION - DECAL

OH1514.1
UG4414.1

TABLE OF CONTENTS

SCOPE: THIS STANDARD SHOWS TWO TYPES OF STREET LIGHT CONSTRUCTION INSTALLED ON WOOD POLES TO PROVIDE ROADWAY LIGHTING.

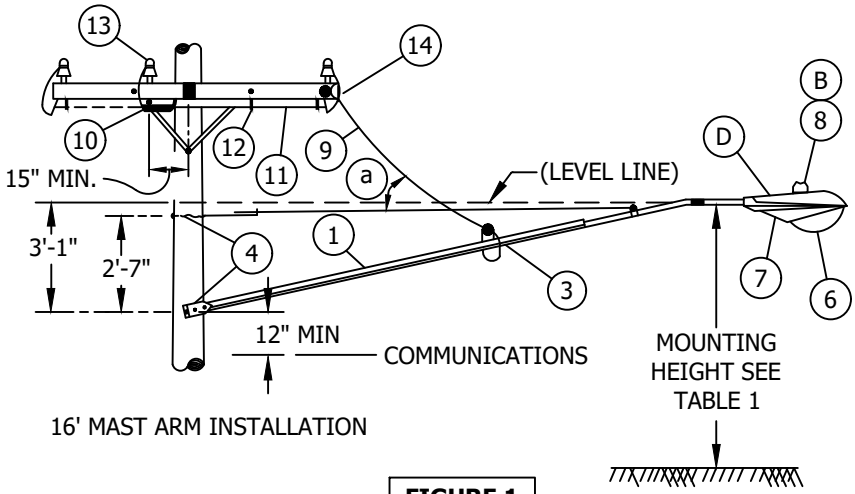

FIGURE 1

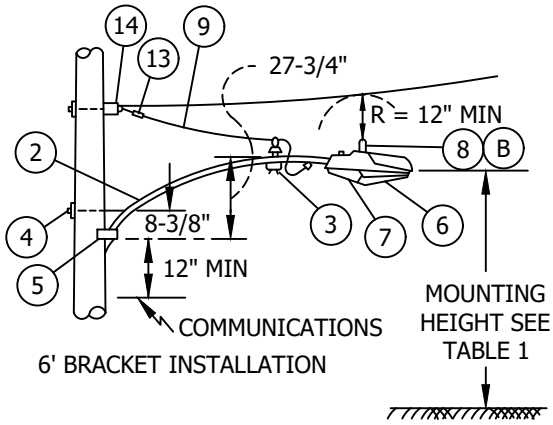

FIGURE 2

INSTALLATION:

(A) ITEMS REQUIRED FOR SECONDARY LINE ARM CONSTRUCTION.

(B) FACE PHOTO CELL TO THE NORTH.

(C) TABLE 2 & 3 PROVIDES STREET LIGHT IDENTIFICATION CODES USED ON MAPS AND WORK ORDERS TO SIGNIFY A PARTICULAR INSTALLATION.

(D) PLACE LEVELING DEVICE ON LEVELING PAD FOR ADJUSTMENT OF LUMINAIRE.

© 1998 - 2019 San Diego Gas & Electric Company. All rights reserved. Removal of this copyright notice without permission is not permitted under law.

REV	CHANGE	BY	DSGN	APPV	DATE	REV	CHANGE	BY	DSGN	APPV	DATE
C						F					
B	DRAWING UPDATE	PEI	-	-	04/22/2019	E					
A	ORIGINAL ISSUE	-	PTA	RDG	01/01/1994	D					

X Indicates Latest Revision | Completely Revised | New Page | Information Removed

SDG&E ELECTRIC OVERHEAD CONSTRUCTION STANDARDS

ROADWAY LIGHTING
HIGH AND LOW PRESSURE SODIUM VAPOR

OH1518.1

TABLE OF CONTENTS

TABLE 1			
HIGH PRESSURE SODIUM VAPOR (HPSV)		LOW PRESSURE SODIUM VAPOR (LPSV)	
LAMP WATTAGE	MOUNTING HEIGHT	LAMP WATTAGE	MOUNTING HEIGHT
70	25' - 28'	35	25' - 28'
100		55	
150		90	
200	30' - 32'	135	30' - 32'
250		180	
400	35' - 37'	-	-
1000	42' - 47'	-	-

TABLE 2 ©			
HIGH PRESSURE SODIUM VAPOR STREET LIGHTING CODE/ASSEMBLY UNIT (NO SPACE)			
WATTS	LUMEN	BRACKET 6'	MAST ARM 16'
70	5,800	6 QN	16 QN
100	9,500	6 RN	16 RN
150	16,000	6 SN	16 SN
200	22,000	6 TL	16 TL
250	30,000	6 UL	16 UL
400	50,000	6 WG	16 WG
1000	140,000	6 XA	16 XA

TABLE 3 ©			
LOW PRESSURE SODIUM VAPOR STREET LIGHTING CODE/ASSEMBLY UNIT (NO SPACE)			
WATTS	LUMEN	BRACKET 6'	MAST ARM 16'
35	4,800	6 FH	16 FH
55	8,000	6 GH	16 GH
90	13,500	6 JH	16 JH
135	22,500	6 KH	16 KH
180	33,000	6 LH	16 LH

TABLE OF CONTENTS

© 1998 - 2019 San Diego Gas & Electric Company. All rights reserved. Removal of this copyright notice without permission is not permitted under law.

REV	CHANGE	BY	DSGN	APPV	DATE	REV	CHANGE	BY	DSGN	APPV	DATE
C						F					
B	DRAWING UPDATE	PEI	-	-	04/22/2019	E					
A	ORIGINAL ISSUE	-	PTA	RDG	01/01/1994	D					

X Indicates Latest Revision | Completely Revised | New Page | Information Removed

SDG&E ELECTRIC OVERHEAD CONSTRUCTION STANDARDS

ROADWAY LIGHTING
HIGH AND LOW PRESSURE SODIUM VAPOR

OH1518.2

BILL OF MATERIALS:

ITEM	DESCRIPTION	QUANTITY		CONSTR. STD OR PAGE NO.	STOCK NUMBER
		FIG 1	FIG 2		
1	ARM, UPSWEEP MAST, 1 1/4" DIA,	1	-	-	110880
2	BRACKET, UPSWEEP, 2" DIA, 6' - 0"	-	1	-	167264
3	BRACKET, SERVICE INSULATOR	1	1	631	166880
4	BOLT, MACH, GALV, 5/8" X (LENGTH AS REQ'D), 2 SQ WASH & 1 DBL COIL SPR WASH	2	1	392	-
5	SCREW, LAG, 1/2" x 4"	-	2	-	621568
6	LAMP	1	1	1510	-
7	LUMINAIRE	1	1	1521.1	-
8	CONTROL, PHOTOELECTRIC, TWISTLOCK BASE, 105-285 VOLT	1	1	1512	273888
9	WIRE, COPPER #8 600V, FLEXIBLE POLYETHYLENE INSULATED DUPLEX	14'	10'	-	811776
10	WIRE, #12 THW, 600V INSULATED COPPER (A)	20'	-	716	808096
11	CONDUIT, PLASTIC, PVC, SCH 40, 3/4" (A)	8'	-	-	251328
12	STRAP, PIPE, GALV, 3/4", 2-10D NAILS (A)	AS REQ'D	-	-	697536
13	CONNECTOR, WIRE	4	2	783-787	-
14	CLEVIS, SECONDARY, DEAD END (A)	1	1	-	235488

NOTES: NONE

REFERENCE:

(a) SEE STANDARD 1509 FOR G.O. 95 MINIMUM CLEARANCE REQUIRED FOR STREET LIGHT INSTALLATION

b. SEE PAGE 1511.1/4411.1 FOR REFRACTOR REPLACEMENT.

TABLE OF CONTENTS

© 1998 - 2019 San Diego Gas & Electric Company. All rights reserved. Removal of this copyright notice without permission is not permitted under law.

REV	CHANGE	BY	DSGN	APPV	DATE	REV	CHANGE	BY	DSGN	APPV	DATE
C						F					
B	DRAWING UPDATE	PEI	-	-	04/22/2019	E					
A	ORIGINAL ISSUE	-	PTA	RDG	01/01/1991	D					

X Indicates Latest Revision | Completely Revised | New Page | Information Removed

SDG&E ELECTRIC OVERHEAD CONSTRUCTION STANDARDS

ROADWAY LIGHTING
HIGH AND LOW PRESSURE SODIUM VAPOR

OH1518.3

SCOPE: THIS STANDARD SHOWS TWO TYPES OF CUSTOMER OWNED AND INSTALLED STREET LIGHTS ON S.D.G.& E. WOOD POLES.

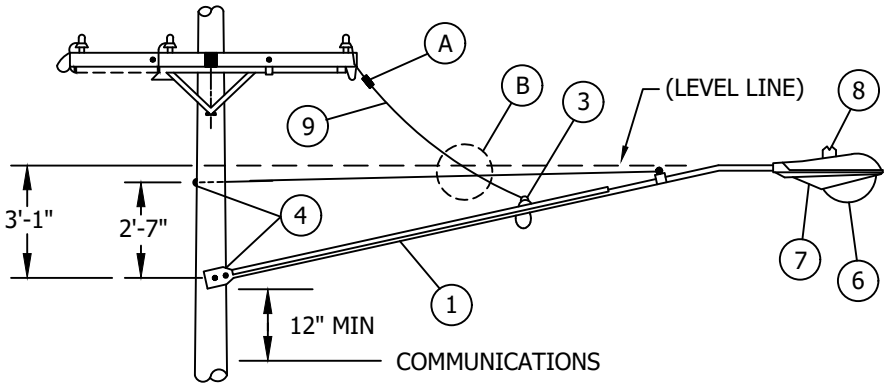

16' MAST ARM INSTALLATION
USING OPEN WIRE SECONDARY CONSTRUCTION

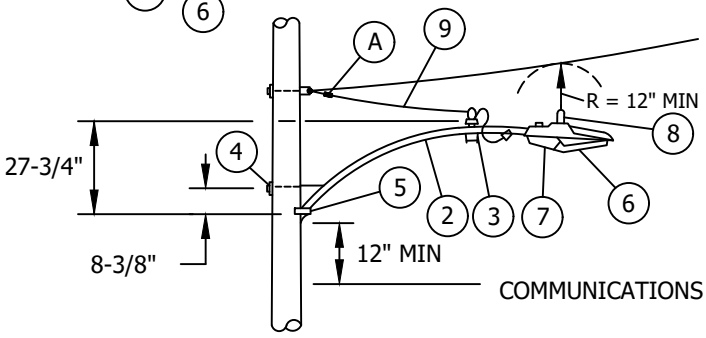

6' BRACKET INSTALLATION
USING SELF SUPPORTING CABLE SECONDARY CONSTRUCTION

INSTALLATION:

(A) POINT OF CUSTOMER'S ATTACHMENT TO BE CONNECTED BY S.D.G.&E. CREWS.

(B) MAINTAIN A MINIMUM OF 12" RADIALLY FROM LEAD WIRE TO SUPPORTING FIXTURES.

BILL OF MATERIALS:

ITEM	DESCRIPTION	QUANTITY	
		16' MAST ARM	6' BRACKET
1	ARM, UPSWEEP MAST, 1-1/4" DIA, 16' - 0"	1	-
2	BRACKET, UPSWEEP, 2" DIA, 6' - 0"	-	1
3	BRACKET, UPSWEEP, 2" DIA, 6' - 0"	1	1
4	BOLT, MACH GALV 5/8" X (LENGTH AS REQUIRED) 2 SQ WASHERS, 1 DBL COIL WASH, 1 NUT	2	1
5	SCREW, LAG, 1/2" X 4"	-	2
6	LAMP	1	1
7	LUMINAIRE	1	1
8	CONTROL, PHOTOELECTRIC, TWISTLOCK BASE, 105 - 285 VOLT	1	1
9	WIRE, COPPER, #8, 600V, FLEXIBLE POLYETHYLENE INSULATED DUPLEX	14'	8'

NOTES: NONE

REFERENCE:

a. SEE STANDARD PAGE 1518 FOR STREET LIGHT INSTALLATION BY S.D.G.&E.

© 1998 - 2019 San Diego Gas & Electric Company. All rights reserved. Removal of this copyright notice without permission is not permitted under law.

REV	CHANGE	BY	DSGN	APPV	DATE	REV	CHANGE	BY	DSGN	APPV	DATE
C						F					
B	DRAWING UPDATE	PEI	-	-	04/22/2019	E					
A	EDITORIAL CHANGES	JS	GW	MDJ	10/03/2016	D					

X Indicates Latest Revision | Completely Revised | New Page | Information Removed

SHEET 1 OF 1

SDG&E ELECTRIC OVERHEAD CONSTRUCTION STANDARDS

CUSTOMER OWNED AND INSTALLED STREET LIGHTS

OH1519.1

TABLE OF CONTENTS

SCOPE: THIS STANDARD SHOWS DUSK TO DAWN LIGHTING INSTALLATIONS USED TO PROVIDE SECURITY LIGHTING IN COMMERCIAL AND RESIDENTIAL AREAS.

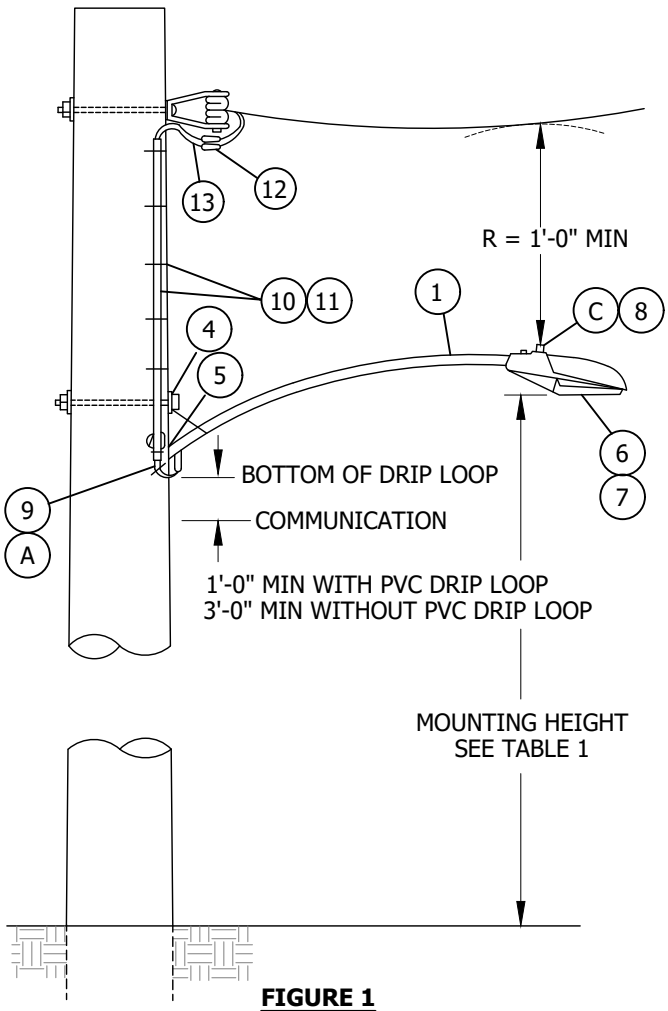

FIGURE 1
30" BRACKET INSTALLATION

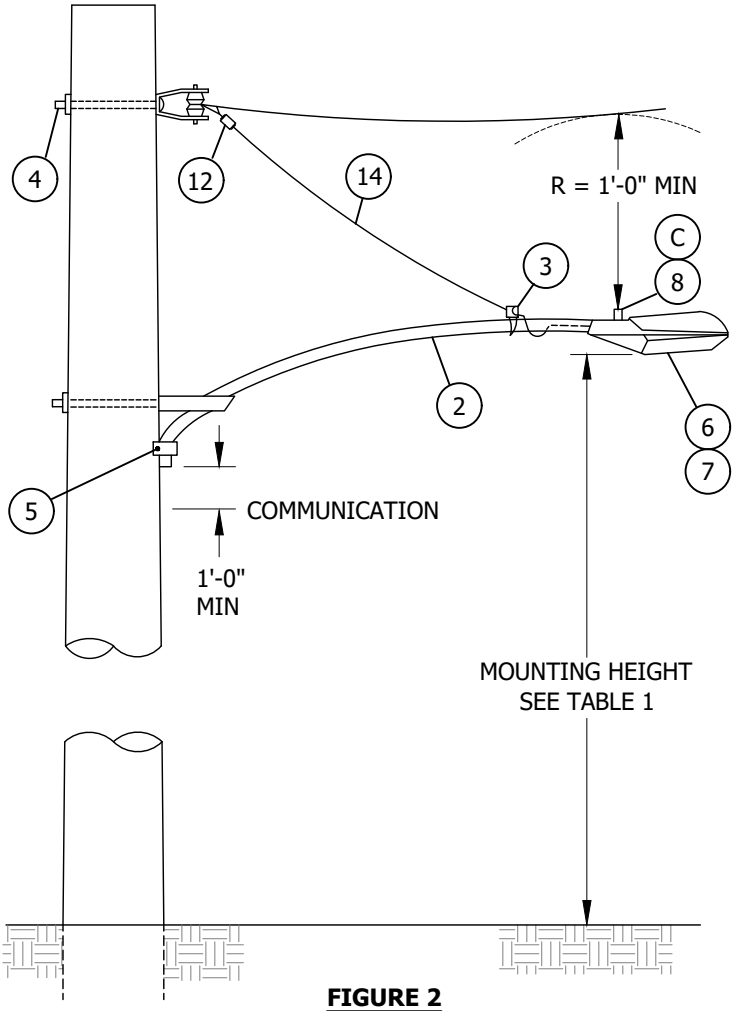

FIGURE 2
6' BRACKET INSTALLATION

TABLE 1

LAMP WATTAGE	HIGH PRESSURE SODIUM VAPORS
	MOUNTING HEIGHT
100	25' - 28'
150	
200	30' - 32'
250	
400	35' - 37'
1000	42' - 47'

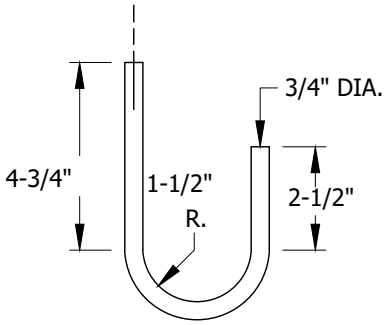

DETAIL
ITEM 9

© 1998 - 2019 San Diego Gas & Electric Company. All rights reserved. Removal of this copyright notice without permission is not permitted under law.

REV	CHANGE	BY	DSGN	APPV	DATE	REV	CHANGE	BY	DSGN	APPV	DATE
C	DRAWING UPDATE	GLW	JES	CZH	11/12/2019	F					
B	DRAWING UPDATE	PEI	-	-	02/04/2019	E					
A	ORIGINAL ISSUE	-	PTA	RDG	01/01/1986	D					

X Indicates Latest Revision | Completely Revised | New Page | Information Removed

SDG&E ELECTRIC OVERHEAD CONSTRUCTION STANDARDS

DUSK TO DAWN LIGHTING HIGH PRESSURE SODIUM VAPOR

OH1530.1

TABLE OF CONTENTS

INSTALLATION:

(A) COMPLETELY ENCLOSE WIRE RUN INTO BRACKET. (FIGURE 1 ONLY)

B. THIS INSTALLATION IS TO BE WIRED FOR 120 VOLT OPERATION.

(C) FACE PHOTO CELL TO THE NORTH.

BILL OF MATERIALS:

ITEM	DESCRIPTION	QUANTITY		STANDARD PAGE	STOCK NUMBER	DESIGN UNITS
		FIG 1	FIG 2			
1	BRACKET, STREET LIGHT GALV. 1 1/4" X	1	-	-	S167200	BKT30
2	BRACKET, STREET LIGHT 2" X 6' UPSWEEP GALV.	-	1	-	S167264	BKT6
3	BRACKET, SERVICE INSULATOR	-	1	631	S166880	INSBKT
4	BOLT, MACH. GALV. 5/8" X (LENGTH AS REQ'D), 1 SQ. WASH 1 DBL COIL WASH.	1	1	392	-	-
5	SCREW, LAG GALV. 1/2" X 4"	1	1	3992	-	-
6	LAMP, HIGH PRESSURE SODIUM VAPOR (HPSV)	1	1	1510	S621568	-
7	LUMINAIRE, HIGH PRESSURE SODIUM VAPOR (HPSV)	1	1	1521	-	-
8	CONTROL, PHOTOELECTRIC, TWISTLOCK, 105-285 VOLTS	1	1	1512	S273888	PC-TL
9	COVER, PVC, DRIP LOOP, (SEE DETAIL ON PAGE 1530.1)	1	-	-	S287248	-
10	CONDUIT, SCHEDULE 40 PVC, 3/4"	AS REQ'D	-	-	S251328	SL3/4P
11	STRAP, PIPE, GALV. 3/4" AND 2-6D NAILS	AS REQ'D	-	-	S697888 S491552	-
12	CONNECTOR, (SIZE AS REQ'D)	2	2	783-787	-	-
13	WIRE, COPPER #12 THW 600V	15'	-	716	808096	THW12
14	WIRE, COPPER #8 600V, FLEXIBLE POLYETHYLENE INSULATED DUPLEX	-	10'	-	S811776	8DX

NOTES:

I. A MAXIMUM OF ONE-HALF OF THE MOUNTING MAY BE INSTALLED IN THE CLIMBING SPACE.

II. THE LUMINAIRE MAY NOT ENCROACH IN THE CLIMBING SPACE.

III. IF ADDITIONAL SUPPORT IS REQUIRED INSTALL BLIND NUT. USE ITEM 5 FOR WOOD POLES.

REFERENCE:

a. SEE STANDARD 1509 FOR G.O. 95 MINIMUM CLEARANCES OF STREET LIGHTS.

b. SEE PAGE 1511.1/4411.1 FOR REFRACTOR REPLACEMENT.

TABLE OF CONTENTS

© 1998 - 2019 San Diego Gas & Electric Company. All rights reserved. Removal of this copyright notice without permission is not permitted under law.

REV	CHANGE	BY	DSGN	APPV	DATE	REV	CHANGE	BY	DSGN	APPV	DATE
C	DRAWING UPDATE	GLW	JES	CZH	11/12/2019	F					
B	DRAWING UPDATE	PEI	-	-	02/04/2019	E					
A	ORIGINAL ISSUE	-	PTA	RDG	01/01/1986	D					

X Indicates Latest Revision | Completely Revised | New Page | Information Removed

SDG&E ELECTRIC OVERHEAD CONSTRUCTION STANDARDS

DUSK TO DAWN LIGHTING HIGH PRESSURE SODIUM VAPOR

OH1530.2

SCOPE: THIS STANDARD SHOWS DUSK TO DAWN LIGHTING CONSTRUCTION USED FOR DIRECTIONAL FLOODLIGHTING.

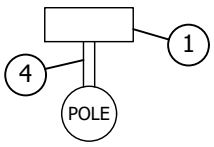

FIGURE 1
SINGLE MOUNTING

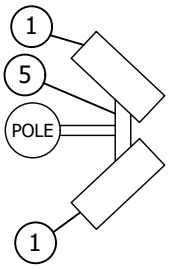

FIGURE 2
TWIN MOUNTING

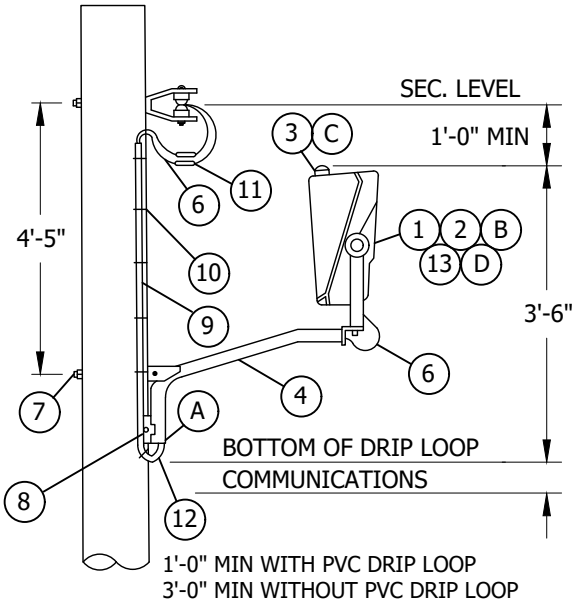

FIGURE 3
SINGLE LIGHT INSTALLATION

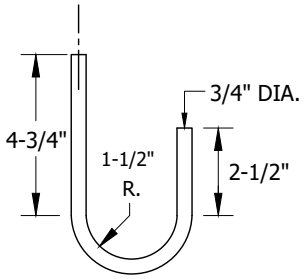

DETAIL
ITEM 12

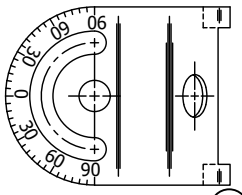

FIGURE 4 (D)
ADJUSTMENT SCALE

INSTALLATION:

(A) COMPLETELY ENCLOSE WIRE RUN INTO BRACKET.

(B) THIS INSTALLATION IS TO BE WIRED FOR 120 VOLT OPERATION.

(C) FACE PHOTO CELL TO THE NORTH.

(D) ADJUSTMENT SCALE TO BE USED FOR VERTICAL POSITIONING OF LUMINAIRE.

(E) THIS MATERIAL ITEM INCLUDED WITH THE LUMINAIRE ASSEMBLY UNIT (ITEM 1).

TABLE 1

LAMP WATTAGE	HIGH PRESSURE SODIUM VAPORS
	MOUNTING HEIGHT
100	25' - 28'
150	
250	30' - 32'
400	
1000	42' - 47'

© 1998 - 2019 San Diego Gas & Electric Company. All rights reserved. Removal of this copyright notice without permission is not permitted under law.

REV	CHANGE	BY	DSGN	APPV	DATE	REV	CHANGE	BY	DSGN	APPV	DATE
C	DRAWING UPDATE	GLW	JES	CZH	11/12/2019	F					
B	DRAWING UPDATE	PEI	-	-	02/04/2019	E					
A	ORIGINAL ISSUE	-	PTA	RDG	01/01/1986	D					

X Indicates Latest Revision | Completely Revised | New Page | Information Removed

SDG&E ELECTRIC OVERHEAD CONSTRUCTION STANDARDS

DUSK TO DAWN LIGHTING HIGH PRESSURE SODIUM VAPOR

OH1530.3

TABLE OF CONTENTS

BILL OF MATERIALS:

ITEM	DESCRIPTION		QUANTITY		STANDARD PAGE	STOCK NUMBER	DESIGN UNITS
			1 LIGHT	2 LIGHT			
1	LUMINAIRES, DIRECTIONAL, G.E. HPSV	120V, 250W REG C 675N043	1	2	-	S474452	DD/S-S
		120V, 400W REG C 675N052	1	2	-	S474454	DD/S-M
		120V, 1000W AUTO-REG C 693N506	1	2	-	S474456	DD/S-L
2	LAMP, HIGH PRESSURE SODIUM VAPOR		1	2	1510	-	(E)
3	PHOTO ELECTRIC CONTROL, TWISTLOCK, 105-285 VOLTS		1	2	-	S273888	(E)
4	BRACKET, WITH 3/4" BOLT FLOODLIGHT UPSWEEP		1	1	-	S166078	(E) BKTFLD
5	BRACKET, TWIN-MOUNTING ADAPTOR WITH TRUNNION MOUNTING BOLTS		-	1	-	S165462	-
6	WIRE, COPPER, THW, 600V, #12		AS REQ'D	AS REQ'D	-	S808096	(E)
7	BOLT, MACH, GALV, 5/8" X (LENGTH AS REQ'D), 1 SQ FLAT & 1 DBL COIL SPR WASHER		1	1	392	-	-
8	SCREW, LAG, GALV, 1/2" X 4"		2	2	392	-	-
9	CONDUIT, SCHEDULE 40, PVC, 3/4"		AS REQ'D	AS REQ'D	-	S251328	SL3/4P
10	STRAPS, PIPE, GALV, 3/4" AND 2-6D NAILS, GALV		AS REQ'D	AS REQ'D	-	S697888	-
			-	-	-	S491552	-
11	CONNECTOR, CU (SIZE AS REQ'D)		2	2	783-787	-	-
12	COVER, PVC, DRIP LOOP, (SEE DETAIL ABOVE)		1	1	-	S287248	(E)
13	REFRACTOR REPLACEMENT		1	2	1511	-	-

TABLE OF CONTENTS

NOTES:

I. THE LUMINAIRE OR THE MOUNTING BRACKET MAY NOT ENCROACH ON THE CLIMBING SPACE.

II. LUMINAIRE DIRECTIONAL LIGHT MAY BE ROTATED 360° TO ACHIEVE PREFERRED LIGHTING PATTERN.

III. IF ADDITIONAL SUPPORT IS REQUIRED INSTALL BLIND NUT. USE ITEM 8 FOR WOOD POLES.

REFERENCE:

a. SEE STANDARD 1509 FOR G.O. 95 MINIMUM CLEARANCES OF STREET LIGHTS.

© 1998 - 2019 San Diego Gas & Electric Company. All rights reserved. Removal of this copyright notice without permission is not permitted under law.

REV	CHANGE	BY	DSGN	APPV	DATE	REV	CHANGE	BY	DSGN	APPV	DATE
C	DRAWING UPDATE	GLW	JES	CZH	11/12/2019	F					
B	DRAWING UPDATE	PEI	-	-	02/04/2019	E					
A	ORIGINAL ISSUE	-	PTA	RDG	01/01/1986	D					

X Indicates Latest Revision | Completely Revised | New Page | Information Removed

SDG&E ELECTRIC OVERHEAD CONSTRUCTION STANDARDS

DUSK TO DAWN LIGHTING HIGH PRESSURE SODIUM VAPOR

OH1530.4

SCOPE: THIS STANDARD SHOWS A CONSTANT CURRENT SERIES LIGHTING REGULATOR OUTPUT TRANSFORMER INSTALLATION THAT IS USED ON EXISTING SERIES LIGHTING CIRCUITS ONLY.

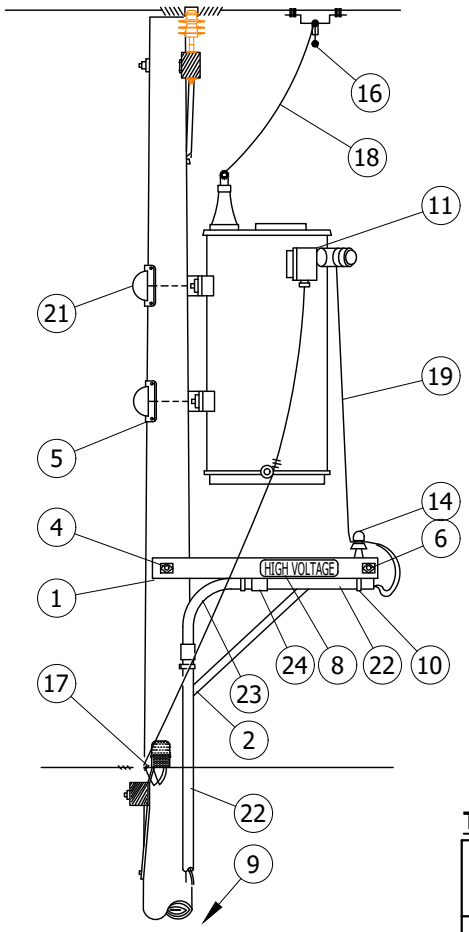

FIGURE 1
SIDE VIEW

TABLE 1

OVERHEAD MACRO UNIT
RH-STL

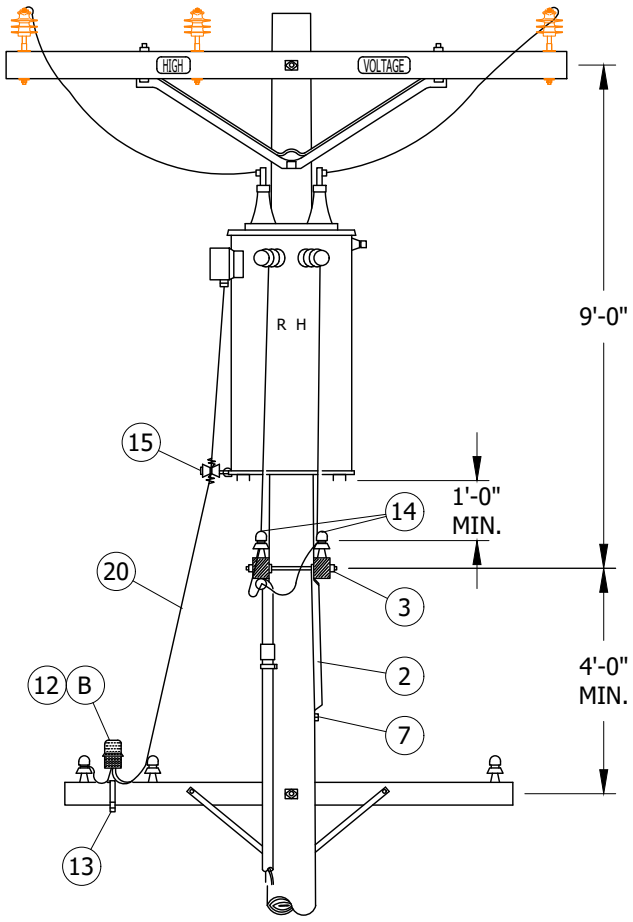

FIGURE 1
FRONT VIEW

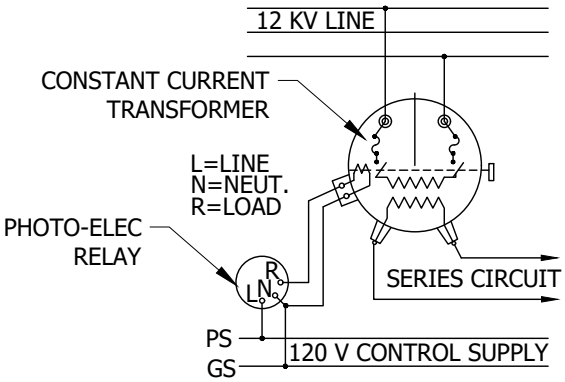

DETAIL 1
WIRING DIAGRAM

© 1998 - 2020 San Diego Gas & Electric Company. All rights reserved. Removal of this copyright notice without permission is not permitted under law.

REV	CHANGE	DR	BY	DSN	APV	DATE	REV	CHANGE	DR	BY	DSN	APV	DATE
C	TABLE UPDATE	EDM	JIK	JES	CZH	3/20/2020	F						
B	DRAWING UPDATE	PEI	-	-	-	2/4/2019	E						
A	ORIGINAL ISSUE	-	-	PTA	RDG	1/1/1993	D						

X Indicates Latest Revision | Completely Revised | New Page | Information Removed

SDG&E ELECTRIC OVERHEAD CONSTRUCTION STANDARDS

PHOTOELECTRIC CONTROLLED REGULATOR OUTPUT
STREET LIGHT TRANSFORMER INSTALLATION, 12KV

OH1561.1

TABLE OF CONTENTS

INSTALLATION:

A. INSTALL STRAIN RELIEF BUSHING ON JUNCTION BOX TO SECURE ITEM 20.

(B) FACE PHOTO CELL TO THE NORTH.

(C) 12KV/6.6A CONSTANT CURRENT TRANSFORMER WITH INTERNAL FUSES SOLENOID CONTROLLED 12KV OIL SWITCH.

BILL OF MATERIALS:

ITEM		DESCRIPTION	QUANTITY	STANDARD PAGE	STOCK NUMBER	DESIGN UNITS
P. T. & F.	1	3 1/2" x 4 1/2" x 4'-0" CROSSARM	2	380.05 ITEM 3	-	-
	2	BRACE ALLEY ARM 4'-0"	1	-	S163808	-
	3	MACH. BOLT, GALV., 5/8" X 5", 1 RD. WASHER & 1 NUT	1	139, 140	-	-
	4	MACH. BOLT, GALV., 5/8" X 18", 2 SQ. WASHERS & 1 NUT	1	139, 140	-	-
	5	MACH. BOLT, GALV., 3/4" X 12", 1 SQ. CURVED WASHER & 1 NUT	3	139, 140	-	-
	6	SPACE BOLT, GALV., 5/8" X 20", 4 SQ. WASHERS & 4 NUTS	1	139, 140	-	-
	7	LAG SCREW, GALV., 5/8" X 5"	1	-	S621602 (X)	-
	8	HIGH VOLTAGE SIGN & GALV. ROOFING NAILS	2	-	S647648, S49222	-
	9	POLE STEPS	15	-	S692992	-
S. L. & S. S.	10	1 1/2" DIAM. PIPE STRAPS, GALV., 2-10D GALV. NAILS.	8	-	S697664, S491392	-
	11	C.C. TRANSFORMER, 12 KV., INCL. 2 POLE BOLT ADAPTER PLATES	1	1121.12 (C)	-	-
	12	PHOTOELECTRIC RELAY, 120 V., 1000 V. MIN.	1	-	S273888	-
	13	MOUNTING BRACKET	-	-	S166432	-
	14	INSULATOR, 4 KV.	2	750	-	-
	15	INSULATOR BRACKET	1	-	S166144-S166208	-
	16	HOT LINE CLAMPS AND STIRRUPS	2	788	-	-
	17	WIRE CONNECTORS	2	783-787	-	-
	18	#6 B. STRAND. COPPER WIRE	12'	-	S813536	-
	19	WIRE 5KV 1/C CABLE #6 STR	60' MIN.	-	S194304	-
	20	WIRE 5KV 1/C CABLE #6 STR	12	-	S814400	-
	21	2-C #16, 600 V. TYPE "S" NEO. JKTD, SUPER SERVICE CORD	2	-	S285696, S492192	-
	22	1 1/2" DIAM. PLASTIC PIPE, PVC TYPE II, SCHEDULE 80, 20' LENGTHS	1	-	S251456	-
	23	1 1/2" DIAM. PLATIC PIPE, 90 ELBOW, PVC TYPE II, SCHEDULE 80	1	-	S322464	-
	24	1 1/2" DIAM. PLASTIC PIPE COUPLING, PVC	3	-	S280512	-

NOTES:

I. G.O. 95 RULE 58.2 REQUIRES PRIMARY CONSTANT CURRENT SERIES LIGHTING CIRCUITS TO BE TREATED AS MORE THAN 750 VOLTS.

II. SDG&E DOES NOT ALLOW FOR CONSTANT CURRENT SERIES LIGHTING CIRCUITS OVER 750 VOLTS TO BE PLACED ON THE SAME ARM WITH 12 KV.

III. CLASS OF POLES SHOULD BE DETERMINED PER STANDARDS 344-361.

(X) THIS ITEM IS EXEMPT.

REFERENCE: NONE

© 1998 - 2020 San Diego Gas & Electric Company. All rights reserved. Removal of this copyright notice without permission is not permitted under law.

REV	CHANGE	DR	BY	DSN	APV	DATE	REV	CHANGE	DR	BY	DSN	APV	DATE
C	TABLE UPDATE	EDM	JIK	JES	CZH	3/20/2020	F						
B	DRAWING UPDATE	PEI	-	-	-	2/4/2019	E						
A	ORIGINAL ISSUE	-	-	PTA	RDG	1/1/1993	D						

X Indicates Latest Revision | Completely Revised | New Page | Information Removed

SDG&E ELECTRIC OVERHEAD CONSTRUCTION STANDARDS

PHOTOELECTRIC CONTROLLED REGULATOR OUTPUT
STREET LIGHT TRANSFORMER INSTALLATION, 12KV

OH1561.2

TABLE OF CONTENTS

SCOPE: THIS STANDARD SHOWS THE VARIOUS METHODS AND INSTALLATIONS OF 120 & 240 VOLT MULTIPLE STREET LIGHT CONTROLLERS.

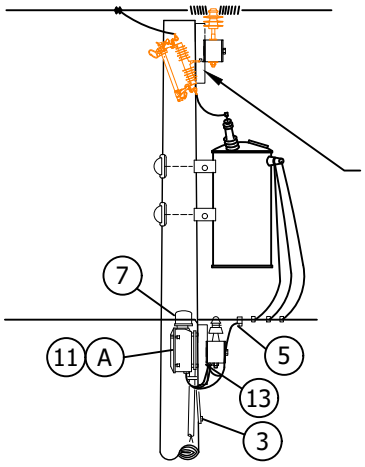

FIGURE 1
SIDE VIEW

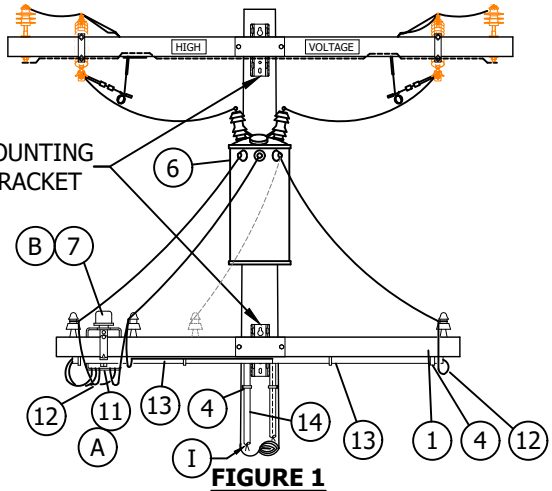

FIGURE 1
FRONT VIEW

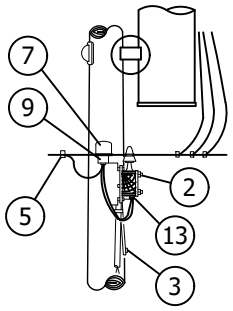

FIGURE 2
SIDE VIEW

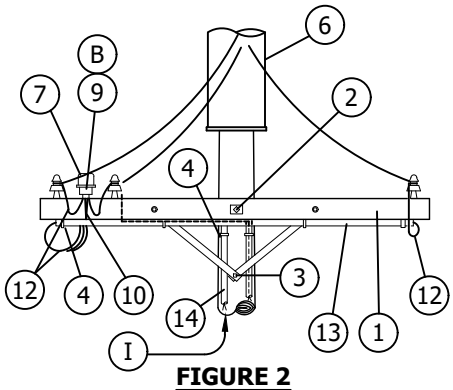

FIGURE 2
FRONT VIEW

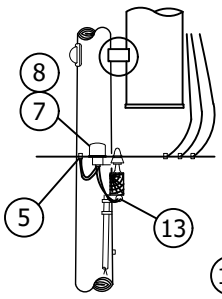

FIGURE 3
SIDE VIEW

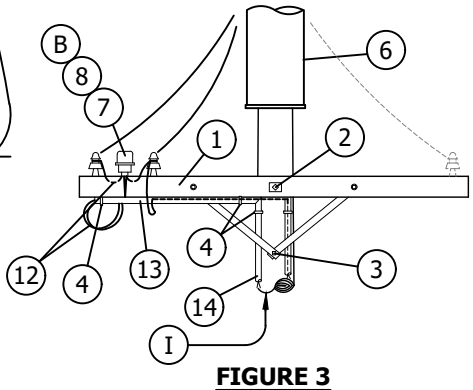

FIGURE 3
FRONT VIEW

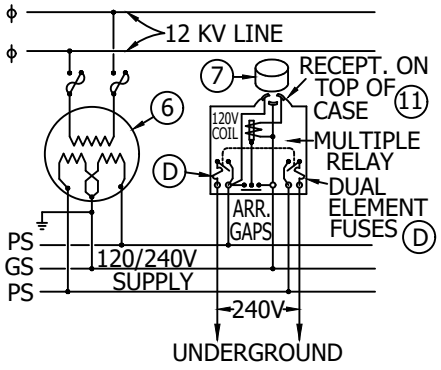

DETAIL 1
WIRING DIAGRAM

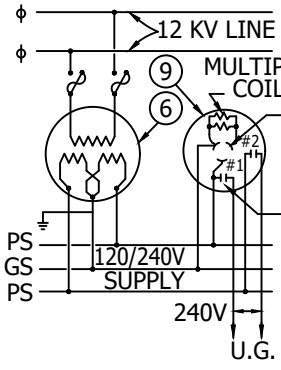

DETAIL 2A
WIRING DIAGRAM

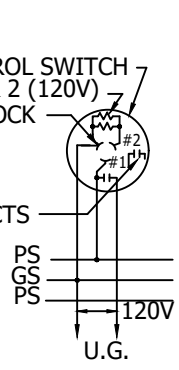

DETAIL 2B
WIRING DIAGRAM

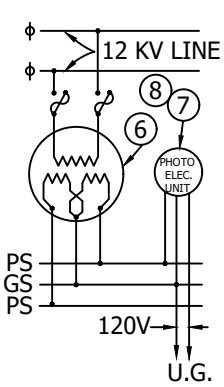

DETAIL 3
WIRING DIAGRAM

© 1998 - 2020 San Diego Gas & Electric Company. All rights reserved. Removal of this copyright notice without permission is not permitted under law.

REV	CHANGE	DR	BY	DSN	APV	DATE	REV	CHANGE	DR	BY	DSN	APV	DATE
C	TABLE UPDATE	EDM	JIK	JES	CZH	4/13/2020	F						
B	DRAWING UPDATE	PEI	-	-	-	02/04/2019	E						
A	ORIGINAL ISSUE	-	-	TQ	DW	09/05/2013	D						

X Indicates Latest Revision | Completely Revised | New Page | Information Removed

SDG&E ELECTRIC OVERHEAD CONSTRUCTION STANDARDS

SHEET 1 OF 4

120 & 240 VOLT MULTIPLE STREET LIGHT CONTROLLER INSTALLATIONS

OH1566.1

TABLE OF CONTENTS

TABLE 1

INCANDESCENT INSTALLATIONS				
LAMP SIZE LUMEN	MAX. NUMBER OF LAMPS			
	DETAIL 2B (9,600W)	DETAIL 2A (3,800W)	DETAIL 2B (1,800W)	DETAIL 3 (1,000W)
2,500 (189 W)	48	18	9	5
4,000 (295 W)	32	12	6	3
6,000 (405 W)	23	8	4	2

TABLE 2

MERCURY VAPOR INSTALLATIONS				
LAMP SIZE LUMEN	MAX. NUMBER OF LAMPS			
	DETAIL 2B (9,600W)	DETAIL 2A (3,800W)	DETAIL 2B (1,800W)	DETAIL 3 (1,000W)
20,000 (405 W)	18	7	3	1

INSTALLATION:

(A) NO LONGER PURCHASED, SALVAGE FROM EXISTING INSTALLATION OR OBTAINED FROM KEARNEY MAINTENANCE.

(B) FACE PHOTO CELL TO THE NORTH.

C. FOR POLE STEPPING REFER TO STANDARD 363.

(D) FUSE REPLACEMENT - FUSETRON, DUAL ELEMENT, 50A, 250V, BUSS TYPE, 100,000 A RMS INTERRUPTION RATING, CLASS K9 FUSE, S365376.

BILL OF MATERIALS:

ITEM	DESCRIPTION	QUANTITY			STANDARD PAGE	STOCK NUMBER	DESIGN UNITS
		FIG 1	FIG 2	FIG 3			
1	3-1/2" x 4-1/2" x 8'-0" CROSSARM	1	1	1	-	S293680	6S
2	MACH. BOLT, GALV., 5/8" X 14", 2 SQ. WASHERS, 1 DBL COIL SPR. WASHER & 1 NUT	1	1	1	390	-	-
3	LAG SCREW, GALV., 1/2" X 4"	1	1	1	-	S621568	-
4	1" PIPE STRAPS WITH 2-6D OR 10D NAILS, GALV.	14	14	12	-	S697792 S491552	-
5	WIRE CONNECTORS	3	3	3	783-787	-	-
6	TRANSFMR. INSTALLN. (WHERE REQ'D INCL. GRNDG. MATL.)	1	1	1	1100	-	-
7	PHOTOELECTRIC RELAY, 120V, 1000W. MIN.	1	1	1	-	S273888	-
8	MOUNTING BRACKET & T. LOCK RECEPT.	-	-	1	-	S166432 S570___	-
9	MULTIPLE CONTROL SW., 2P, 3600W, 240V, 120V COILS (A)	-	1	-	-	S705440 S242688 S242720	-
10	MOUNTING BRACKET FOR ITEM #9	-	1	-	-	-	-
11	MULTIPLE RELAY D.P.S.T., 40A, 240V, 120V COIL, SO. BEND CONTROLLER CO. (R.C.O.C.) TYPE MR-OG SPEC. NO. 6368 COMPLETE WITH 50A DUAL ELEMENT FUSES AND X-ARM MTG. BRACKET (D)	1	-	-	-	S588352	R4CA
					-	S365376	SLFUSE
					-	S166688	-
12	#6 TYPE TW STRANDED COPPER WIRE, 600V	15'	13'	3'	-	S808288	THW6
13	1" DIAM. TYPE II SCHEDULE 40 PVC PIPE	7'-3"	7'-3"	3-6"	-	S251202 (X)	P1-C
14	1" DIAM. TYPE II SCHEDULE 80 PVC PIPE	17'	17'	17'	-	S251424	-

NOTES:

I. CUSTOMER'S SERVICE ENTRANCE CONDUCTORS SHALL RUN CONTINUOUSLY WITHOUT SPLICES FROM LIGHTING INSTALLATION TO SWITCH TERMINALS AND SHALL BE OF A LENGTH SUFFICIENT TO FORM DRIP LOOPS AT POINT OF EMERGENCE ON CROSSARM.

(X) THIS ITEM IS EXEMPT.

REFERENCE: NONE

© 1998 - 2020 San Diego Gas & Electric Company. All rights reserved. Removal of this copyright notice without permission is not permitted under law.

REV	CHANGE	DR	BY	DSN	APV	DATE	REV	CHANGE	DR	BY	DSN	APV	DATE
C	TABLE UPDATE	EDM	JIK	JES	CZH	4/13/2020	F						
B	DRAWING UPDATE	PEI	-	-	-	02/04/2019	E						
A	ORIGINAL ISSUE	-	-	TQ	DW	09/05/2013	D						

TABLE OF CONTENTS

SCOPE: THIS STANDARD SHOWS THE METHODS AND INSTALLATIONS OF A 480 VOLT MULTIPLE STREET LIGHT CONTROLLERS.

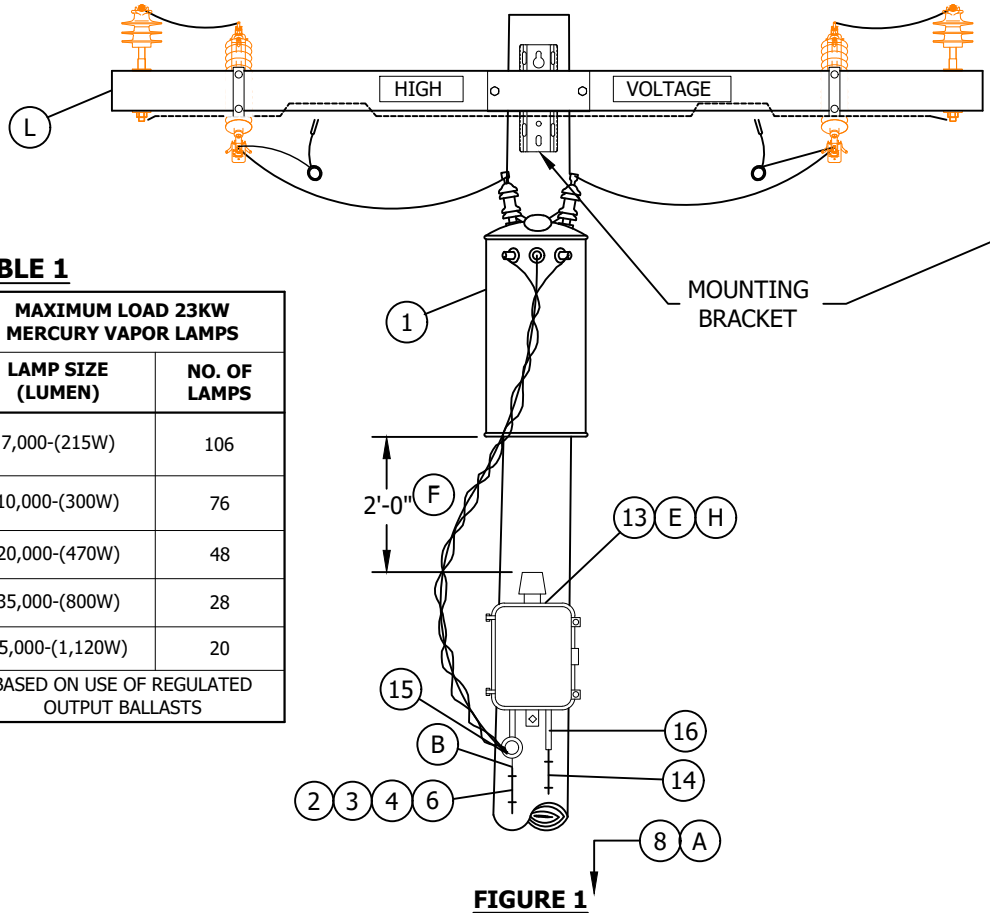

FIGURE 1
FRONT VIEW

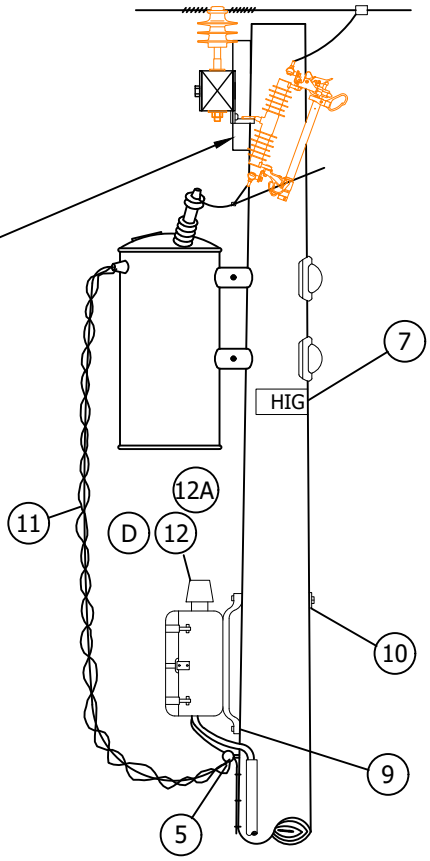

FIGURE 1
SIDE VIEW

TABLE 1

MAXIMUM LOAD 23KW MERCURY VAPOR LAMPS	
LAMP SIZE (LUMEN)	**NO. OF LAMPS**
7,000-(215W)	106
10,000-(300W)	76
20,000-(470W)	48
35,000-(800W)	28
55,000-(1,120W)	20
BASED ON USE OF REGULATED OUTPUT BALLASTS	

INSTALLATION:

(A) POLE TAGS FOR 480V WILL BE MADE UP AT DISTRICT STOREROOM AND ATTACHED BELOW TRANSFORMER TAG ON POLE.

(B) GROUND SECONDARY NEUTRAL ONLY. DO NOT GROUND RELAY CASE.

(C) NO LONGER PURCHASED, SALVAGE FROM EXISTING INSTALLATION OR OBTAIN FROM KEARNEY MAINTENANCE.

(D) FACE PHOTO CELL TO THE NORTH.

(E) RELAY SHALL NOT BE INSTALLED IN CLIMBING SPACE AND SHOULD NOT BE INSTALLED ON SOUTH SIDE OF POLE.

(F) INCREASE THE DISTANCE TO A MINIMUM OF 4 FEET IF THE RELAY IS NOT MOUNTED DIRECTLY BELOW THE TRANSFORMER.

G. FOR POLE STEPPING REFER TO STD. 363.

(H) REPLACEMENT FUSES - FUSETRON, DUAL ELEMENT, 60A, 600V, BUSS TYPE, 100,000 A RMS INTERRUPTION RATING, CLASS K9 FUSE, S365504.

© 1998 - 2020 San Diego Gas & Electric Company. All rights reserved. Removal of this copyright notice without permission is not permitted under law.

REV	CHANGE	DR	BY	DSN	APV	DATE	REV	CHANGE	DR	BY	DSN	APV	DATE
C	TABLE UPDATE	EDM	JIK	JES	CZH	4/13/2020	F						
B	DRAWING UPDATE	PEI	-	-	-	02/04/2019	E						
A	ORIGINAL ISSUE	-	-	TQ	DW	09/05/2013	D						

TABLE OF CONTENTS

BILL OF MATERIALS:

ITEM		DESCRIPTION	QUANTITY	STANDARD PAGE	STOCK NUMBER	DESIGN UNITS
LTI	1	TRANSFORMER INSTALLATION, TYPE "HF" OR "WF"	1	1100	-	-
	2	#4 CU SOLID GROUND WIRE, PVC COVERED	50'	-	S812490	GNDPVC
	3	GROUND ROD, 5/8" X 8', COPPERWELD	1	-	S603074 (X)	-
	4	COPPER BONDED GROUND CONNECTOR	1	-	S259010	-
	5	WIRE CONNECTORS	3	783-787		
	6	GALVANIZED STAPLES FOR PVC COVERED GROUND WIRE	AS REQ'D	-	S678564 (X)	-
	7	SIGN, HIGH VOLTAGE, 8 ROOFING NAILS, GALV	1	-	S647648	-
	8	TAG "480V" (C)	1	-	S720736	-
SL&SS	9	LAG SCREW, GALV., 5/8" X 5"	1	-	S621602 (X)	-
	10	MACH. BOLT, GALV., 5/8" X LENGTH AS REQ'D, 1"SQ. WASH. & 1' NUT	1	390	-	-
	11	SELF-SUPPORTING CABLE, COPPER, 3/C #6	10'	-	S196384	-
	12	PHOTOELECTRIC RELAY, 120V, 1000W, MINIMUM	1	-	S273888	-
	12A	PHOTOELECTRIC RELAY, 120V, 1000W, MINIMUM	1	-	S273920	-
	13	MULTIPLE RELAY, DPST, 60A, 480V, (RCOC) TYPE MR-ZH SPEC. NUMBER 6406, COMPLETE WITH 2-60 AMP DIAL ELEMENT FUSES AND POLE MOUNTING BRACKET. (K)	1	-	S588480	-
	14	CONDUIT, PVC TYPE 11, SCHEDULE 80, 1"	AS REQ'D	-	S251424	-
	15	WIRE HOLDER (F)	1	-	S413792	-
	16	WIRE, TW (3 CONDUCTORS PROVIDED BY CUSTOMER)	-	-	-	-

NOTES:

(X) THIS ITEM IS EXEMPT.

REFERENCE: NONE

TABLE OF CONTENTS

© 1998 - 2020 San Diego Gas & Electric Company. All rights reserved. Removal of this copyright notice without permission is not permitted under law.

REV	CHANGE	DR	BY	DSN	APV	DATE	REV	CHANGE	DR	BY	DSN	APV	DATE
C	TABLE UPDATE	EDM	JIK	JES	CZH	4/13/2020	F						
B	DRAWING UPDATE	PEI	-	-	-	02/04/2019	E						
A	ORIGINAL ISSUE	-	-	TQ	DW	09/05/2013	D						

SCOPE: THIS STANDARD SHOWS TYPICAL LED STREET LIGHT CONSTRUCTION INSTALLED ON WOOD, STEEL, OR FIBERGLASS POLES TO PROVIDE ROADWAY LIGHTING.

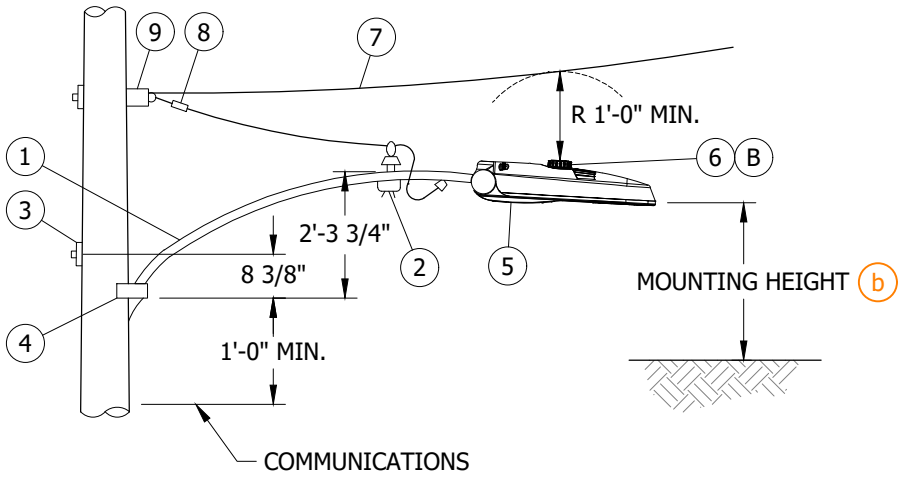

FIGURE 1
6'-0" ARM INSTALLATION

TABLE 1

LED FIXTURES			
LUMENS (IN THOUSANDS)	**MANUFACTURER**	**STANDARD PAGE**	**STOCK NUMBER**
0-5L	GE	1571	S473100, S473102, S473104
	CREE	1572	S473132, S473136, S473138, S473140
	ACUITY	1573	S473434
6-10L	GE	1571	S473106, S473108
	CREE	1572	S473130, S473134, S473142
	ACUITY	1573	S473434, S473438
11-15L	GE	1571	S473112, S473114
	CREE	1572	S473144
	ACUITY	1573	S473438, S473440
20-25L	GE	1571	S473110
	CREE	1572	S473146
	ACUITY	1573	S473440

INSTALLATION:

A. ITEMS REQUIRED FOR SECONDARY LINE ARM CONSTRUCTION.

(B) FACE PHOTO CELL TO THE NORTH.

C. UTILIZE LEVELING FEATURE WITHIN FIXTURE PER MANUFACTURER'S SPECIFICATIONS BEFORE ENERGIZING.

© 1998 - 2022 San Diego Gas & Electric Company. All rights reserved. Removal of this copyright notice without permission is not permitted under law.

REV	CHANGE	DR	BY	DSN	APV	DATE	REV	CHANGE	DR	BY	DSN	APV	DATE
C	STD PAGE & STOCK NUMBERS	AMP	RSL	JAS	KRG	08/12/2022	F						
B	FORMATTING	EDM	JIK	-	-	01/18/2022	E						
A	ORIGINAL ISSUE	-	JIK	JES	CZH	08/20/2019	D						

X Indicates Latest Revision | Completely Revised | New Page | Information Removed

SDG&E ELECTRIC OVERHEAD AND UNDERGROUND CONSTRUCTION STANDARDS

ROADWAY LED LIGHTING INSTALLATION

OH1570.1
UG4470.1

TABLE OF CONTENTS

BILL OF MATERIALS:

ITEM	DESCRIPTION	QUANTITY	STANDARD PAGE	STOCK NUMBER	DESIGN UNITS
1	BRACKET, UPSWEEP, 2" DIA, 6'-0"	1	--	S167264	BKT6
2	BRACKET, SERVICE INSULATOR	1	631	S166880	INSBKT
3	BOLT, MACH, GALV, 5/8" X (LENGTH AS REQ.), 2 SQ. WASHERS & 1 DOUBLE COIL SPRING WASHER.	1	OH390.7	--	--
4	SCREW, LAG, 1/2" X 4" (WOOD POLES ONLY) (I)	2	OH390.7	S621568 (X)	1/2L
	BLIND NUT, 1/2" (STEEL POLES ONLY) (I)	2	OH390.7	S503460 (X)	--
5	LIGHTING FIXTURE	1	(b)	--	--
6	CONTROL, PHOTOELECTRIC, TWISTLOCK BASE 105-285V	1	1512	S273884	PC-TL
7	WIRE, COPPER #8 600V, FLEXIBLE POLYETHYLENE INSULATED DUPLEX	10'-0"	OH711	S196432	DX8C
8	CONNECTOR, WIRE	2	783-785	--	--
9	CLEVIS, SECONDARY, DEADEND	1	OH612	S235488	SDE

NOTES:

(I) THE BLIND NUT AND LAG SCREW ARE OPTIONAL FOR ATTACHING SUPPORT BRACE TO POLE.

(X) THIS ITEM IS EXEMPT.

REFERENCE:

a. FOR G.O. 95 MINIMUM CLEARANCE REQUIRED FOR STREET LIGHT INSTALLATIONS, SEE OH1509.

(b) FOR MANUFACTURER INDICES, SEE OH1571 FOR GENERAL ELECTRIC (GE) PRODUCT INDEX, OH1572 FOR CREE PRODUCT INDEX, AND OH1573 FOR ACUITY PRODUCT INDEX.

c. FOR UNDERGROUND INSTALLATIONS, SEE UG4431.

TABLE OF CONTENTS

© 1998 - 2022 San Diego Gas & Electric Company. All rights reserved. Removal of this copyright notice without permission is not permitted under law.

REV	CHANGE	DR	BY	DSN	APV	DATE	REV	CHANGE	DR	BY	DSN	APV	DATE
C	STD PAGE & STOCK NUMBERS	AMP	RSL	JAS	KRG	08/12/2022	F						
B	FORMATTING	EDM	JIK	-	-	01/18/2022	E						
A	ORIGINAL ISSUE	-	JIK	JES	CZH	08/20/2019	D						

SCOPE: THIS STANDARD SHOWS GE LED FIXTURES USED TO PROVIDE ROADWAY LIGHTING.

TABLE 1

GE LED FIXTURE INDEX

DESCRIPTION	MOUNTING HEIGHT (FT)	WATTAGE (II) (III) (A)	STANDARD PAGE	STOCK NUMBER	DESIGN UNITS	FIGURE DETAIL	HPSV/LPSV EQUIVALENT STOCK NUMBERS (a) (b)
2KL ERL1 TYPE II WIDE	26	14	SHEETS 4-5	S473800	LC14GE	1	S473800
4KL ERL1 TYPE II WIDE	26	31	SHEETS 6-7	S473102	LC31GE	1	S473400
5KL ERL1 TYPE II WIDE	26	39	SHEETS 8-9	S473104	LC39GE	1	S473802 S473402
8KL ERL1 TYPE II WIDE	30	71	SHEETS 10-11	S473106	LC78GE	1	S473404 S473804
10KL ERL1 TYPE III	30	97	SHEETS 12-13	S473108	LC99GE	1	S473406
20KL ERL2 TYPE III	35	174	SHEETS 14-15	S473110	LC174G	3	S473410
11KL ERLH TYPE IV	30	98	SHEETS 16-17	S473112	LC96GE	2	S473806
15KL ERLH TYPE III	30	136	SHEETS 18-19	S473114	LC136G	2	S473408

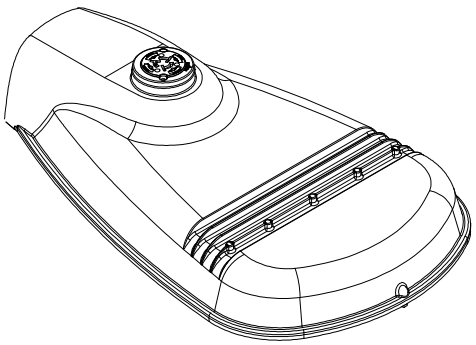

FIGURE 1
ERL1

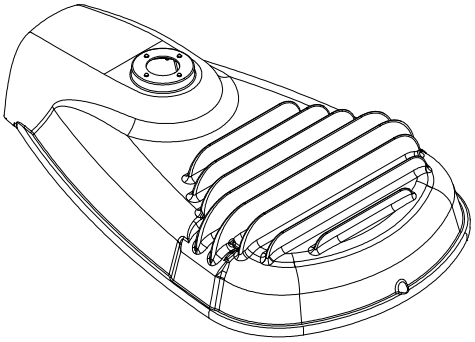

FIGURE 2
ERLH

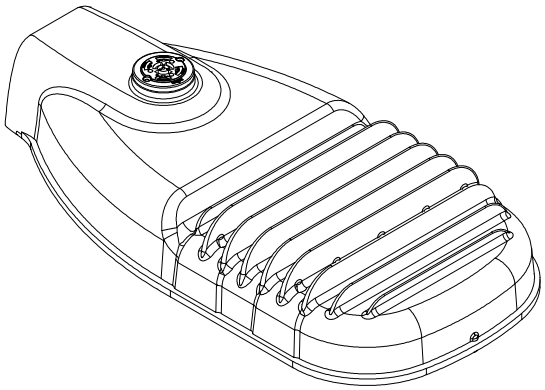

FIGURE 3
ERL2

TABLE OF CONTENTS

© 1998 - 2023 San Diego Gas & Electric Company. All rights reserved. Removal of this copyright notice without permission is not permitted under law.

REV	CHANGE	DR	BY	DSN	APV	DATE	REV	CHANGE	DR	BY	DSN	APV	DATE
C	FORMATTING	EDM	JIK	-	-	01/18/2022	F						
B	TABLE UPDATE	AMP	JIK	JES	CZH	02/12/2020	E						
A	ORIGINAL ISSUE	AMP	JIK	JES	CZH	08/20/2019	D	NOTES UPDATE	AMP	RSL	JAS	KRG	02/16/2023

INSTALLATION:

(A) HPSV/LPSV CONVERSION TO LED: REMOVE AND REPLACE ENTIRE HPSV/LPSV STREET LIGHTING FIXTURE AND BALLAST AND REPLACE WITH EQUIVALENT LED FIXTURE SHOWN IN TABLE 1. FOR OVERHEAD FEED CONVERSIONS, MOUNT THE REPLACEMENT LED FIXTURE AT THE EXISTING FIXTURE HEIGHT OR HIGHER WHILE MAINTAINING REQUIRED CLEARANCES TO OTHER FACILITIES PER OH1509.

B. MECHANICAL INSTALLATION OF FIXTURE

1. BIRD SHIELDS: THE BIRD SHIELD BEHIND THE PIPE CLAMP HAS A 1 1/4-INCH (1.660 OD) OPENING. REMOVE SHIELD IF LARGER PIPE IS USED. SEE FIGURE 4.
2. MOUNTING ARM: UNFASTEN, OPEN AND REMOVE DOOR FROM HINGE CRADLE. ADJUST PIPE CLAMP OPENING SLIGHTLY LARGER THAN PIPE SIZE. INSERT MOUNTING ARM THROUGH BIRD-SHIELD (IF USED) AND INTO THE LUMINAIRE UNTIL IT HITS THE LEVELING-STEPS EXTENDING FROM TOP OF HOUSING. SEE FIGURE 4.
3. LEVELING: TILT THE LUMINAIRE UP OR DOWN USING LEVELING-STEPS. TO LEVEL, HOLD LUMINAIRE APPROXIMATELY LEVEL AND SNUG UP BOLTS. ONCE LEVEL, TIGHTEN EACH MOUNTING BOLT ALTERNATING BETWEEN BOLTS. REFER TO INSTALLATION INSTRUCTIONS FOR BOLT TORQUES. DO NOT OVERTIGHTEN BOLTS. IF UPWARD TILT IS NEEDED, LOOSEN BOLTS SLIGHTLY, LIFT LUMINAIRE AND INSERT IT TO THE NEXT SET OF STEPS. IF DOWNWARD TILT IS NEEDED, EXTRACT THE MOUNTING ARM FROM LUMINAIRE TO SIT ON THE REARWARD STEPS. SEE FIGURE 4.
4. REFERENCE ELECTRICAL CONNECTIONS SECTION FOR COMPLETING ELECTRICAL CONNECTIONS.
5. PHOTOELECTRIC CONTROL: ORIENT THE PHOTOELECTRIC (PE) RECEPTACLE SO THAT THE WORD "NORTH" IS DIRECTED TRUE NORTH. SEAT AND LOCK THE PE CONTROL/RECEPTACLE AND ROTATE CLOCKWISE UNTIL WORD "NORTH" IS TRUE NORTH. LOWER PE RECEPTACLE INTO POSITION, SEE FIGURE 5 AND 6.

(6) FINAL ASSEMBLY: DOOR INTERLOCKS WITH TOP HOUSING IN ALL POSITIONS EXCEPT IN VICINITY OF REMOVAL LOCATION. DOORS ARE DESIGNED TO BE ASSEMBLED TO TOP HOUSING WHILE IN UPRIGHT POSITION. TO REPLACE DOOR, HOLD SLIGHTLY PAST VERTICAL AND TOWARD POLE-SIDE OF HINGE. INSERT HINGE PIN INTO HINGE CRADLE AND LOWER DOOR TO HANG FREE.

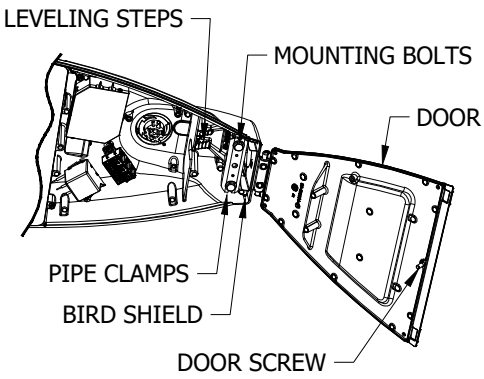

FIGURE 4
INTERNAL VIEW (B6)

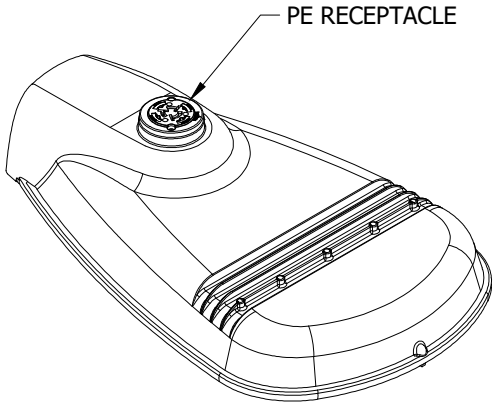

FIGURE 5
TOP VIEW (B6)

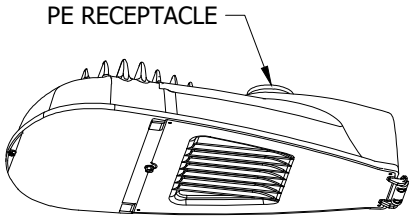

FIGURE 6
BOTTOM VIEW (B6)

C. ELECTRICAL CONNECTIONS OF FIXTURE

1. MAKE ALL CONNECTIONS IN ACCORDANCE WITH THE NATIONAL ELECTRICAL CODE AND APPLICABLE LOCAL CODE REQUIREMENTS INCLUDING GROUNDING. VERIFY SUPPLY VOLTAGE MATCHES NAMEPLATE RATING. USE #6 THRU #16 AWG SERVICE LEADS AND MATCH THE NAMEPLATE'S SERVICE LEAD TEMPERATURE RATING. EXTEND SERVICE LEADS APPROXIMATELY 7 INCHES PAST PIPE/MOUNTING BRACKET END.

TABLE OF CONTENTS
RETURN TO LED FIXTURE INDEX

© 1998 - 2023 San Diego Gas & Electric Company. All rights reserved. Removal of this copyright notice without permission is not permitted under law.

REV	CHANGE	DR	BY	DSN	APV	DATE	REV	CHANGE	DR	BY	DSN	APV	DATE
C	FORMATTING	EDM	JIK	-	-	01/18/2022	F						
B	TABLE UPDATE	AMP	JIK	JES	CZH	02/12/2020	E						
A	ORIGINAL ISSUE	AMP	JIK	JES	CZH	08/20/2019	D	NOTES UPDATE	AMP	RSL	JAS	KRG	02/16/2023

INSTALLATION (CONT'D):

(2) ATTACH SERVICE LEADS TO TERMINAL BLOCK AS SHOWN ON THE WIRING SCHEMATIC. SEE FIGURE 7.

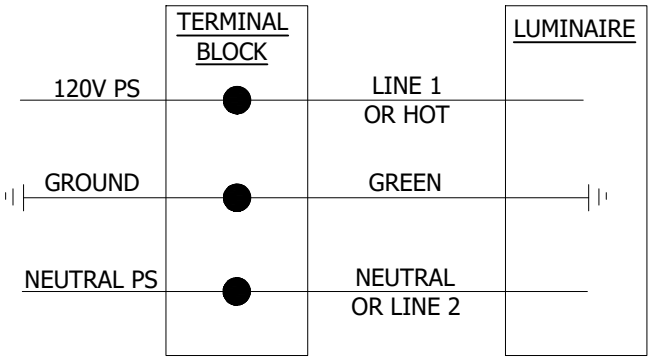

FIGURE 7
WIRING SCHEMATIC (C2)

(3) DIMMING CONTROL INSTRUCTIONS ARE FOR REFERENCE SINCE LUMENS SETTINGS ARE PRESET BY MANUFACTURER FOR ALL STOCK FIXTURES. FOR WIRED DIMMING CONTROLS, ATTACH DIMMING LEADS PER WIRING SCHEMATIC. REFER TO INSTALLATION INSTRUCTIONS FOR BOLT TORQUES. DO NOT OVER TIGHTEN BOLT. SEE FIGURE 8.

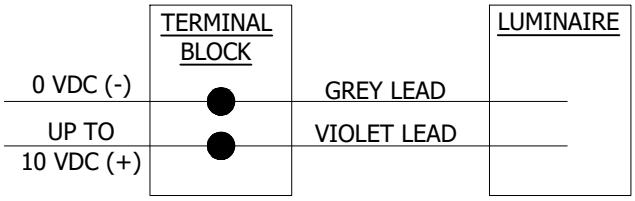

FIGURE 8
DIMMING CONTROL SCHEMATIC (C3)

BILL OF MATERIALS: NONE

NOTES:

I. THIS IS A REPRODUCTION OR ADAPTATION OF MANUFACTURER DATA. REFER TO SPECIFIC PRODUCT INSTALLATION MANUALS PROVIDED WITH STOCK MATERIALS FOR COMPLETE SAFETY AND INSTALLATION INSTRUCTIONS.

(II) MOUNTING HEIGHTS PROVIDED ON PAGE OH1571.1 ARE SPECIFIC TO NEW UNDERGROUND FEED INSTALLATIONS DUE TO STANDARD CONCRETE POLE SIZES AVAILABLE. NEW LED STREETLIGHT INSTALLATIONS OR HPSV-TO-LED UPGRADE INSTALLATIONS MAY BE MOUNTED WITHIN 2 FEET OF THESE REFERENCE MOUNTING HEIGHTS AS LONG AS THE REQUIRED CLEARANCES TO OTHER FACILITIES ARE MAINTAINED PER OH1509.

(III) FOR NEW SDG&E OWNED STREETLIGHT INSTALLATIONS (NOT EXISTING CONVERSIONS), A LIGHTING DESIGN ANALYSIS MAY BE REQUIRED TO DETERMINE THE REQUIRED MOUNTING HEIGHT IF THE REFERENCE MOUNTING HEIGHTS PROVIDED HERE ARE NOT FEASIBLE. CONTACT THE STREET LIGHTING GROUP IN THIS SCENARIO FOR GUIDANCE.

REFERENCE:

(a) OVERHEAD FIELD MAINTENANCE ONLY SECTION 1500 FOR HPSV AND LPSV FIXTURE DETAIL.
(b) SOME FIXTURES ARE NO LONGER AVAILABLE.
c. SEE OH1570 FOR OVERHEAD LIGHTING INSTALLATION.
d. SEE UG4431 FOR UNDERGROUND LIGHTING INSTALLATION.
e. SEE OH1512 FOR PHOTOELECTRIC CONTROLS AVAILABLE.

© 1998 - 2023 San Diego Gas & Electric Company. All rights reserved. Removal of this copyright notice without permission is not permitted under law.

REV	CHANGE	DR	BY	DSN	APV	DATE	REV	CHANGE	DR	BY	DSN	APV	DATE
C	FORMATTING	EDM	JIK	-	-	01/18/2022	F						
B	TABLE UPDATE	AMP	JIK	JES	CZH	02/12/2020	E						
A	ORIGINAL ISSUE	AMP	JIK	JES	CZH	08/20/2019	D	NOTES UPDATE	AMP	RSL	JAS	KRG	02/16/2023

TABLE OF CONTENTS
RETURN TO LED FIXTURE INDEX

SCOPE: THIS STANDARD SHOWS VARIOUS GE EVOLVE LED ROADWAY LIGHTING FIXTURES.

ATTENTION:

* SEE NOTES AND REFERENCES SHEET 21.

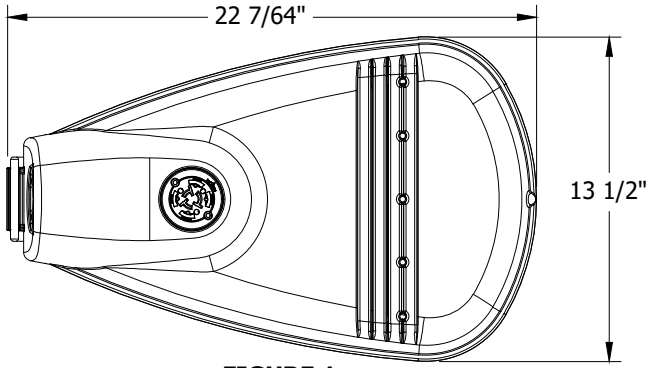

FIGURE 1
TOP VIEW

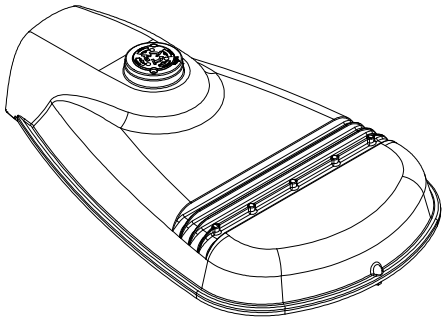

FIGURE 2
ISOMETRIC

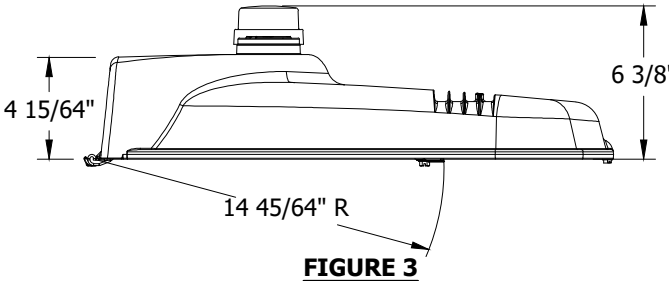

FIGURE 3
SIDE VIEW

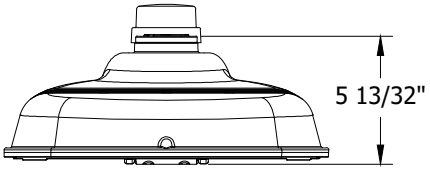

FIGURE 4
FRONT VIEW

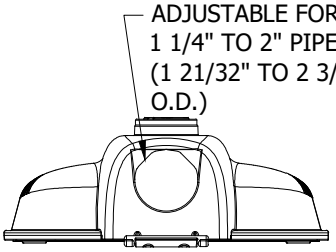

FIGURE 5
BACK VIEW

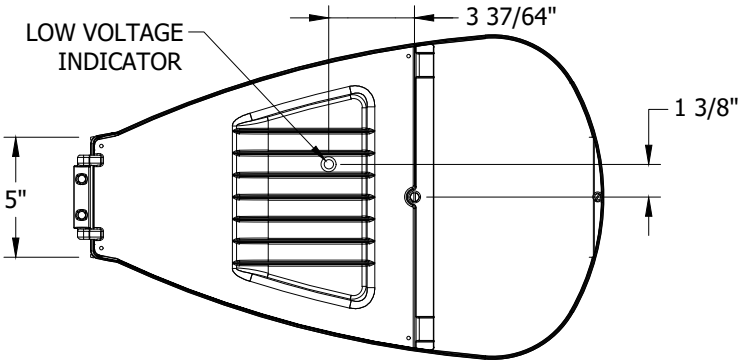

FIGURE 6
BOTTOM VIEW

TABLE 1

MANUFACTURER NAME/STYLE	LUMENS PACKAGE	COLOR TEMPERATURE	UNIT WEIGHT (LBS)	PROJECTED AREA	DISTRIBUTION TYPE	STOCK NUMBER	DESIGN UNITS
GE/ERL1	1900L	3,000K	15.5	SEE TABLE 3	TYPE II WIDE	S473100	LC14GE

TABLE OF CONTENTS

RETURN TO LED FIXTURE INDEX

© 1998 - 2023 San Diego Gas & Electric Company. All rights reserved. Removal of this copyright notice without permission is not permitted under law.

REV	CHANGE	DR	BY	DSN	APV	DATE	REV	CHANGE	DR	BY	DSN	APV	DATE
C	FORMATTING	EDM	JIK	-	-	01/18/2022	F						
B	TABLE UPDATE	AMP	JIK	JES	CZH	02/12/2020	E						
A	ORIGINAL ISSUE	AMP	JIK	JES	CZH	08/20/2019	D	NOTES UPDATE	AMP	RSL	JAS	KRG	02/16/2023

X Indicates Latest Revision | Completely Revised | New Page | Information Removed

SDG&E ELECTRIC OVERHEAD AND UNDERGROUND CONSTRUCTION STANDARDS

GE EVOLVE ROADWAY LIGHTING
2KL FIXTURE

OH1571.4
UG4471.4

TABLE 2

PHOTOMETRIC DIAGRAMS

FIXTURE DESIGN WITHOUT BACKLIGHT SHIELD		PLOT DRAWN IN FOOTCANDLES	GRAPH RADIUS LINES IN CANDELAS
LUMENS	1,900	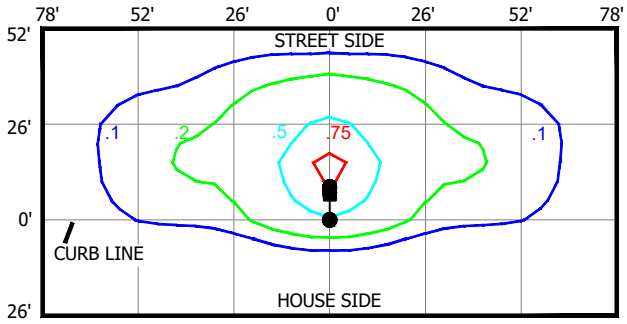	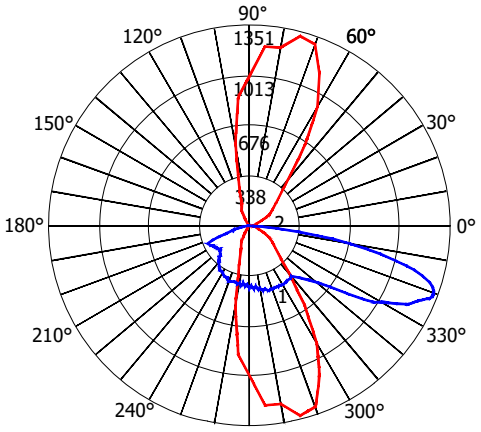
WATTS	14		
MOUNTING HEIGHT	26'		
ARM LENGTH	6'		
ARRANGEMENT	SINGLE		
.IES FILE NAME	ERL1_02B330_-120V.IES		

FIXTURE DESIGN WITH BACKLIGHT SHIELD (C)		PLOT DRAWN IN FOOTCANDLES	GRAPH RADIUS LINES IN CANDELAS
LUMENS	1,800	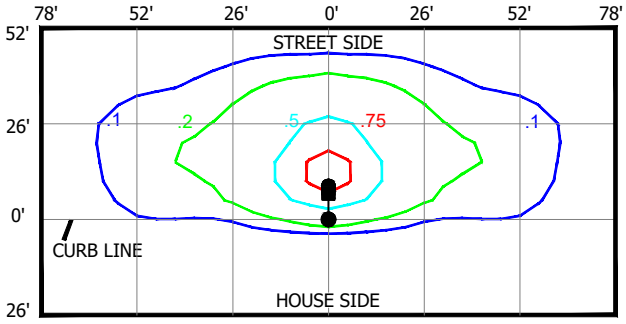	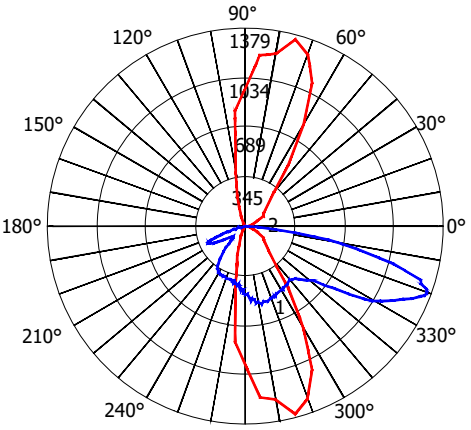
WATTS	14		
MOUNTING HEIGHT	26'		
ARM LENGTH	6'		
ARRANGEMENT	SINGLE		
.IES FILE NAME	ERL1_02B330_-120V-ELSHS-ERL1-BLCK.IES		

TABLE 3

LUMINAIRE ESTIMATED PROJECTED AREA (EPA)

HORIZONTAL TENON. CONFIG.	SINGLE	2 @ 90°	2 @ 180°
--		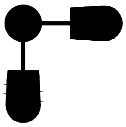	
STANDARD LUMINAIRE (FT^2) (TENON EPA NOT INCLUDED)	0.50	1.0	1.0

© 1998 - 2023 San Diego Gas & Electric Company. All rights reserved. Removal of this copyright notice without permission is not permitted under law.

REV	CHANGE	DR	BY	DSN	APV	DATE	REV	CHANGE	DR	BY	DSN	APV	DATE
C	FORMATTING	EDM	JIK	-	-	01/18/2022	F						
B	TABLE UPDATE	AMP	JIK	JES	CZH	02/12/2020	E						
A	ORIGINAL ISSUE	AMP	JIK	JES	CZH	08/20/2019	D	NOTES UPDATE	AMP	RSL	JAS	KRG	02/16/2023

TABLE OF CONTENTS

RETURN TO LED FIXTURE INDEX

ATTENTION:

* SEE NOTES AND REFERENCES SHEET 21.

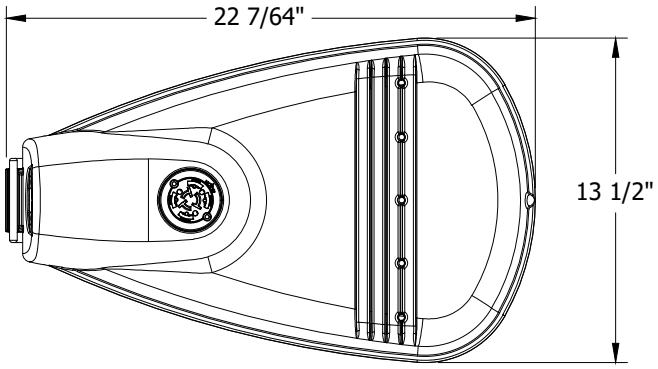

FIGURE 7
TOP VIEW

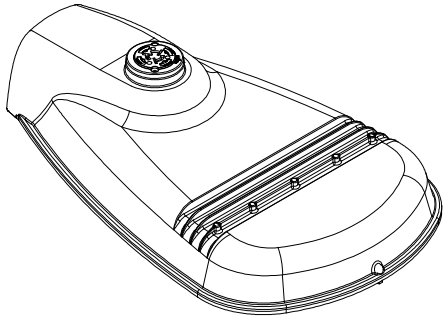

FIGURE 8
ISOMETRIC

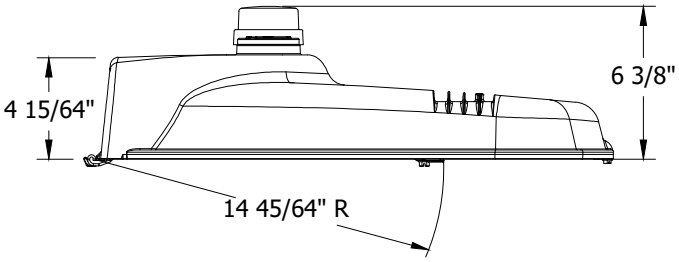

FIGURE 9
SIDE VIEW

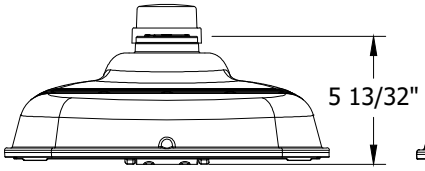

FIGURE 10
FRONT VIEW

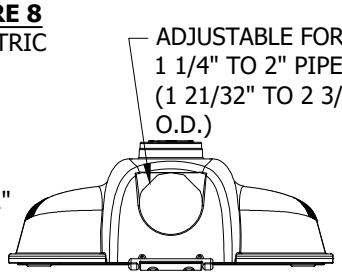

FIGURE 11
BACK VIEW

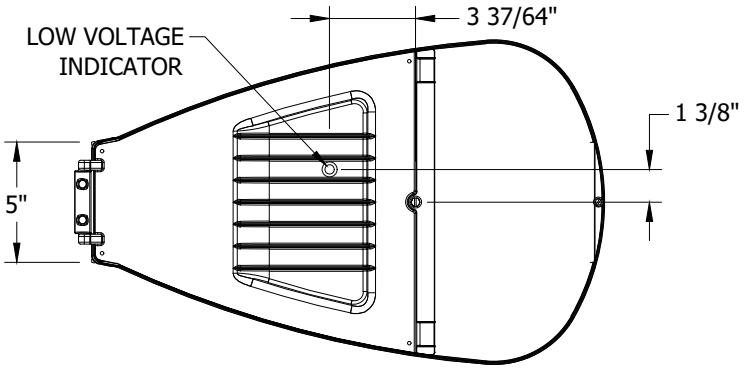

FIGURE 12
BOTTOM VIEW

TABLE 4

MANUFACTURER NAME/STYLE	LUMENS PACKAGE	COLOR TEMPERATURE	UNIT WEIGHT (LBS)	PROJECTED AREA	DISTRIBUTION TYPE	STOCK NUMBER	DESIGN UNITS
GE/ERL1	3900L	3,000K	15.5	SEE TABLE 6	TYPE II WIDE	S473102	LC31GE

TABLE OF CONTENTS

RETURN TO LED FIXTURE INDEX

© 1998 - 2023 San Diego Gas & Electric Company. All rights reserved. Removal of this copyright notice without permission is not permitted under law.

REV	CHANGE	DR	BY	DSN	APV	DATE	REV	CHANGE	DR	BY	DSN	APV	DATE
C	FORMATTING	EDM	JIK	-	-	01/18/2022	F						
B	TABLE UPDATE	AMP	JIK	JES	CZH	02/12/2020	E						
A	ORIGINAL ISSUE	AMP	JIK	JES	CZH	08/20/2019	D	NOTES UPDATE	AMP	RSL	JAS	KRG	02/16/2023

TABLE 5

PHOTOMETRIC DIAGRAMS

FIXTURE DESIGN WITHOUT BACKLIGHT SHIELD		PLOT DRAWN IN FOOTCANDLES	GRAPH RADIUS LINES IN CANDELAS
LUMENS	3,900	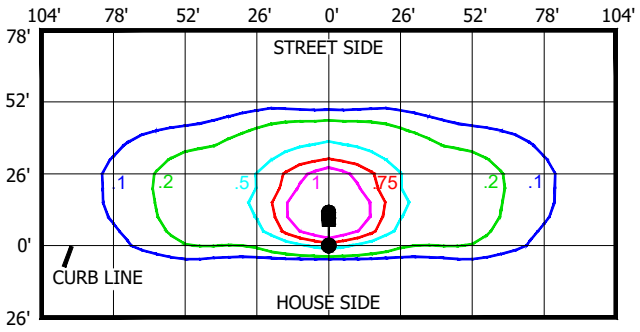	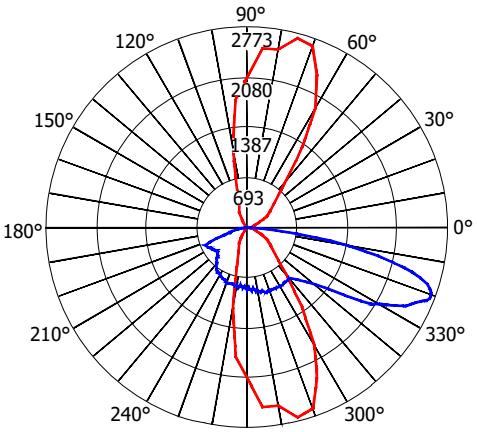
WATTS	31		
MOUNTING HEIGHT	26'		
ARM LENGTH	6'		
ARRANGEMENT	SINGLE		
.IES FILE NAME	ERL1_04B330_ -120-277V.IES		

FIXTURE DESIGN WITH BACKLIGHT SHIELD (C)		PLOT DRAWN IN FOOTCANDLES	GRAPH RADIUS LINES IN CANDELAS
LUMENS	3,700	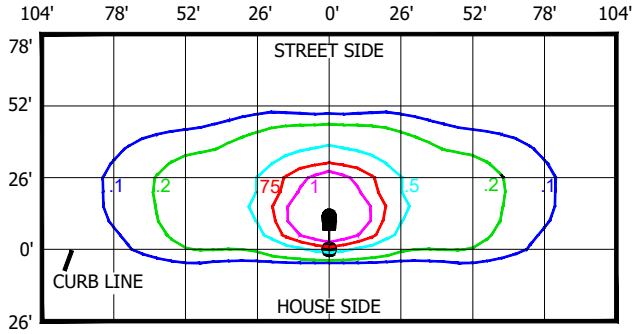	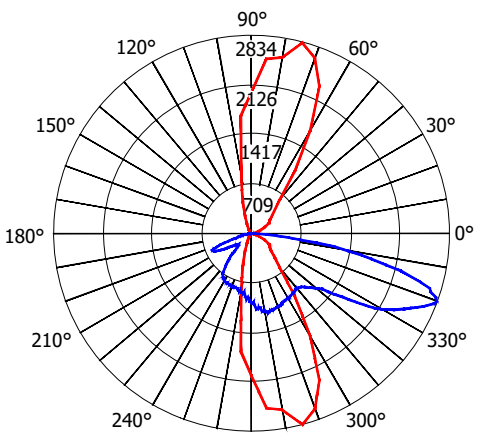
WATTS	31		
MOUNTING HEIGHT	26'		
ARM LENGTH	6'		
ARRANGEMENT	SINGLE		
.IES FILE NAME	ERL1_4B330_ -120-277V-ELSHS -ERL1-BLCK.IES		

TABLE 6

LUMINAIRE ESTIMATED PROJECTED AREA (EPA)			
HORIZONTAL TENON. CONFIG.	SINGLE	2 @ 90°	2 @ 180°
--		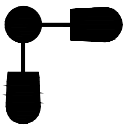	
STANDARD LUMINAIRE (FT^2) (TENON EPA NOT INCLUDED)	0.50	1.0	1.0

© 1998 - 2023 San Diego Gas & Electric Company. All rights reserved. Removal of this copyright notice without permission is not permitted under law.

REV	CHANGE	DR	BY	DSN	APV	DATE	REV	CHANGE	DR	BY	DSN	APV	DATE
C	FORMATTING	EDM	JIK	-	-	01/18/2022	F						
B	TABLE UPDATE	AMP	JIK	JES	CZH	02/12/2020	E						
A	ORIGINAL ISSUE	AMP	JIK	JES	CZH	08/20/2019	D	NOTES UPDATE	AMP	RSL	JAS	KRG	02/16/2023

TABLE OF CONTENTS

RETURN TO LED FIXTURE INDEX

ATTENTION:

* SEE NOTES AND REFERENCES SHEET 21.

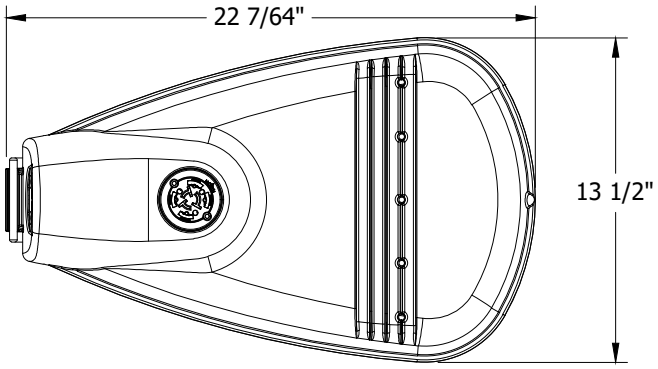

FIGURE 13
TOP VIEW

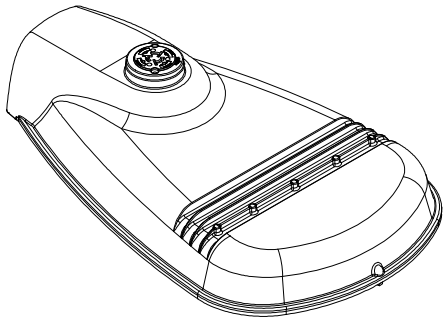

FIGURE 14
ISOMETRIC

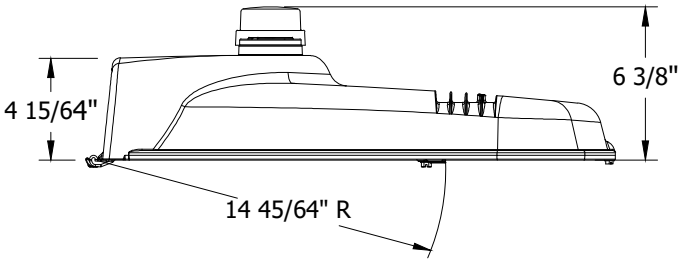

FIGURE 15
SIDE VIEW

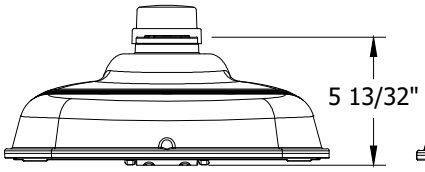

FIGURE 16
FRONT VIEW

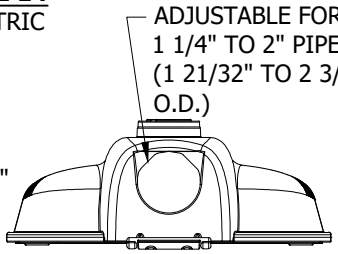

FIGURE 17
BACK VIEW

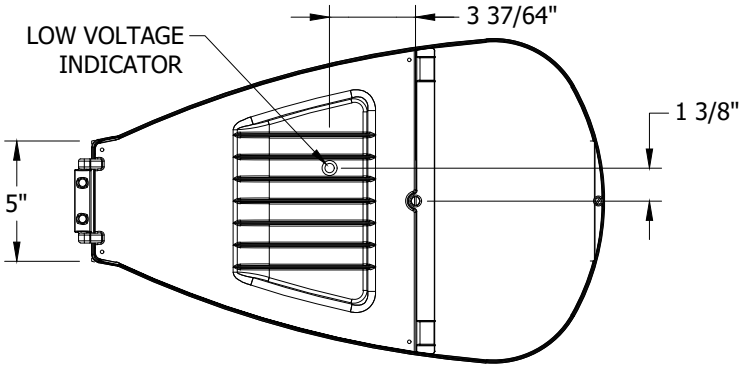

FIGURE 18
BOTTOM VIEW

TABLE 7

MANUFACTURER NAME/STYLE	LUMENS PACKAGE	COLOR TEMPERATURE	UNIT WEIGHT (LBS)	PROJECTED AREA	DISTRIBUTION TYPE	STOCK NUMBER	DESIGN UNITS
GE/ERL1	4900L	3,000K	15.5	SEE TABLE 9	TYPE II WIDE	S473104	LC39GE

© 1998 - 2023 San Diego Gas & Electric Company. All rights reserved. Removal of this copyright notice without permission is not permitted under law.

REV	CHANGE	DR	BY	DSN	APV	DATE	REV	CHANGE	DR	BY	DSN	APV	DATE
C	FORMATTING	EDM	JIK	-	-	01/18/2022	F						
B	TABLE UPDATE	AMP	JIK	JES	CZH	02/12/2020	E						
A	ORIGINAL ISSUE	AMP	JIK	JES	CZH	08/20/2019	D	NOTES UPDATE	AMP	RSL	JAS	KRG	02/16/2023

TABLE OF CONTENTS

RETURN TO LED FIXTURE INDEX

TABLE 8

PHOTOMETRIC DIAGRAMS

FIXTURE DESIGN WITHOUT BACKLIGHT SHIELD		PLOT DRAWN IN FOOTCANDLES	GRAPH RADIUS LINES IN CANDELAS
LUMENS	4,900	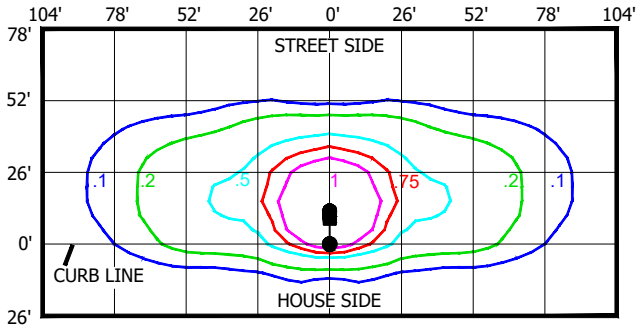	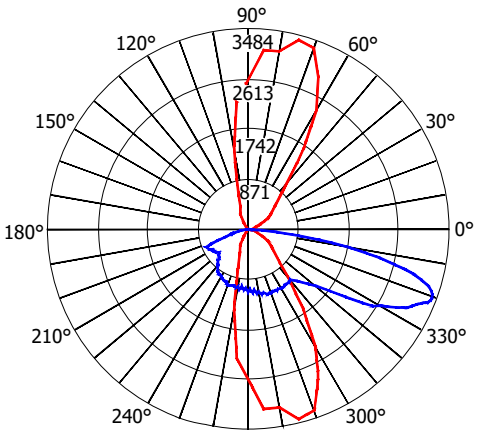
WATTS	39		
MOUNTING HEIGHT	26'		
ARM LENGTH	6'		
ARRANGEMENT	SINGLE		
.IES FILE NAME	ERL1_05B330_ -120-277V.IES		

FIXTURE DESIGN WITH BACKLIGHT SHIELD (C)		PLOT DRAWN IN FOOTCANDLES	GRAPH RADIUS LINES IN CANDELAS
LUMENS	4,600	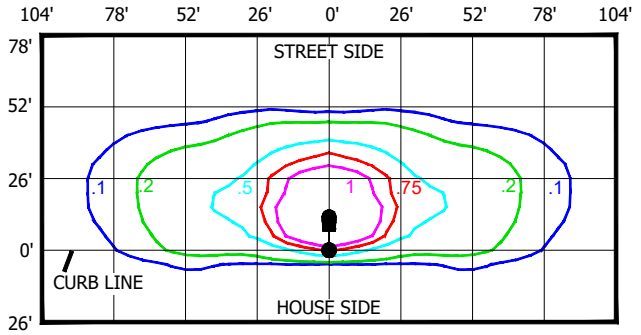	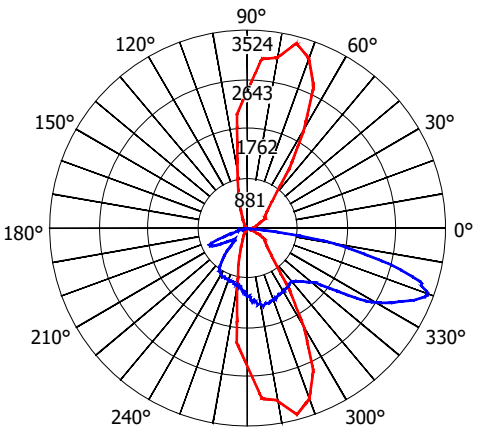
WATTS	39		
MOUNTING HEIGHT	26'		
ARM LENGTH	6'		
ARRANGEMENT	SINGLE		
.IES FILE NAME	ERL1_05B330_ -120-277V-ELSHS -ERL1-BLCK.IES		

TABLE 9

LUMINAIRE ESTIMATED PROJECTED AREA (EPA)			
HORIZONTAL TENON. CONFIG.	SINGLE	2 @ 90°	2 @ 180°
--		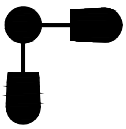	
STANDARD LUMINAIRE (FT^2) (TENON EPA NOT INCLUDED)	0.50	1.0	1.0

TABLE OF CONTENTS

RETURN TO LED FIXTURE INDEX

© 1998 - 2023 San Diego Gas & Electric Company. All rights reserved. Removal of this copyright notice without permission is not permitted under law.

REV	CHANGE	DR	BY	DSN	APV	DATE	REV	CHANGE	DR	BY	DSN	APV	DATE
C	FORMATTING	EDM	JIK	-	-	01/18/2022	F						
B	TABLE UPDATE	AMP	JIK	JES	CZH	02/12/2020	E						
A	ORIGINAL ISSUE	AMP	JIK	JES	CZH	08/20/2019	D	NOTES UPDATE	AMP	RSL	JAS	KRG	02/16/2023

ATTENTION:

* SEE NOTES AND REFERENCES SHEET 21.

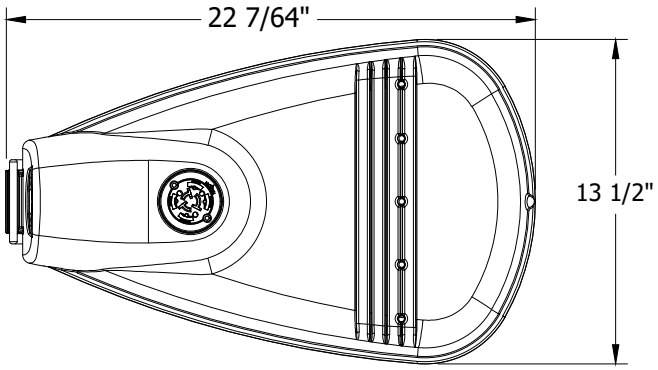

FIGURE 19
TOP VIEW

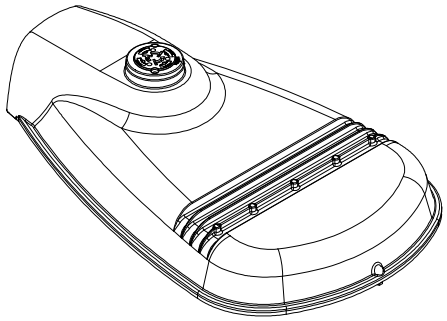

FIGURE 20
ISOMETRIC

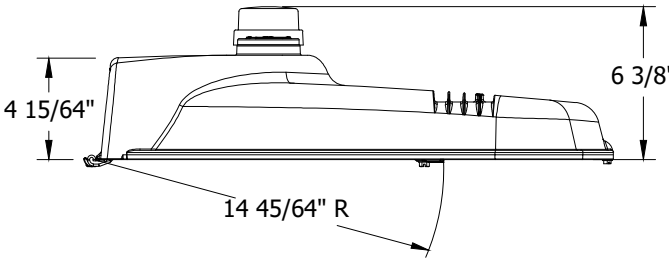

FIGURE 21
SIDE VIEW

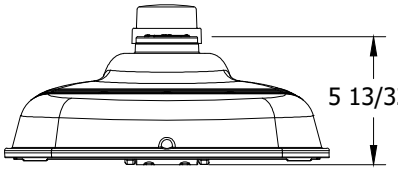

FIGURE 22
FRONT VIEW

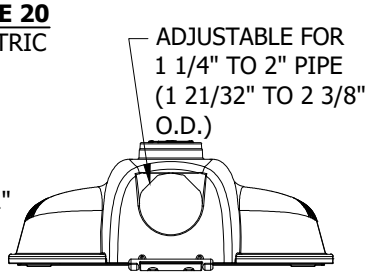

FIGURE 23
BACK VIEW

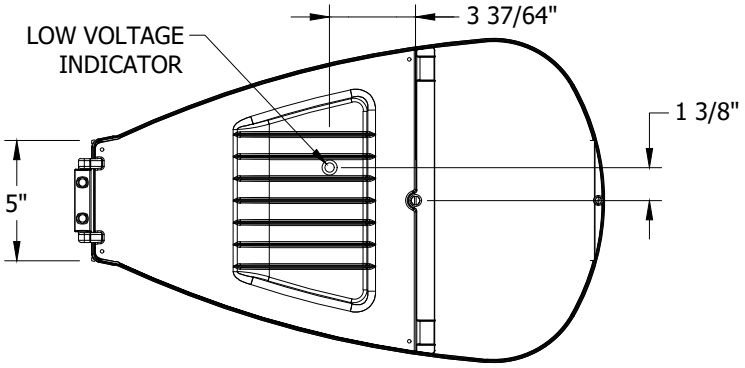

FIGURE 24
BOTTOM VIEW

TABLE 10

MANUFACTURER NAME/STYLE	LUMENS PACKAGE	COLOR TEMPERATURE	UNIT WEIGHT (LBS)	PROJECTED AREA	DISTRIBUTION TYPE	STOCK NUMBER	DESIGN UNITS
GE/ERL1	7800L	3,000K	15.5	SEE TABLE 12	TYPE II WIDE	S473106	LC78GE

© 1998 - 2023 San Diego Gas & Electric Company. All rights reserved. Removal of this copyright notice without permission is not permitted under law.

REV	CHANGE	DR	BY	DSN	APV	DATE	REV	CHANGE	DR	BY	DSN	APV	DATE
C	FORMATTING	EDM	JIK	-	-	01/18/2022	F						
B	TABLE UPDATE	AMP	JIK	JES	CZH	02/12/2020	E						
A	ORIGINAL ISSUE	AMP	JIK	JES	CZH	08/20/2019	D	NOTES UPDATE	AMP	RSL	JAS	KRG	02/16/2023

TABLE 11

PHOTOMETRIC DIAGRAMS			
FIXTURE DESIGN WITHOUT BACKLIGHT SHIELD		**PLOT DRAWN IN FOOTCANDLES**	**GRAPH RADIUS LINES IN CANDELAS**
LUMENS	7,800	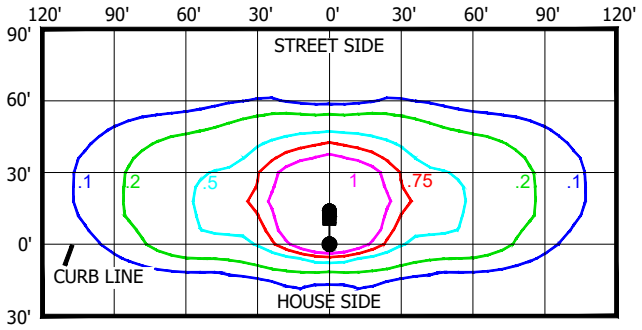	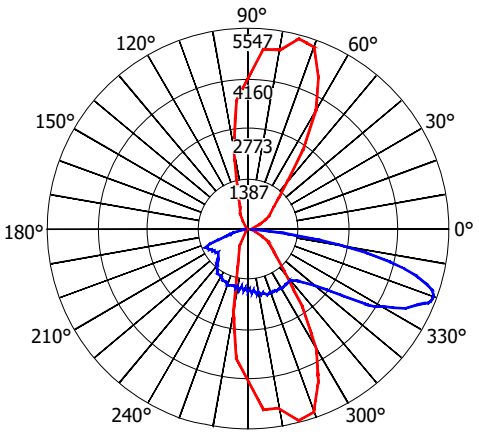
WATTS	71		
MOUNTING HEIGHT	30'		
ARM LENGTH	6'		
ARRANGEMENT	SINGLE		
.IES FILE NAME	ERL1_08B330_ .IES		
FIXTURE DESIGN WITH BACKLIGHT SHIELD (C)		**PLOT DRAWN IN FOOTCANDLES**	**GRAPH RADIUS LINES IN CANDELAS**
LUMENS	7,400	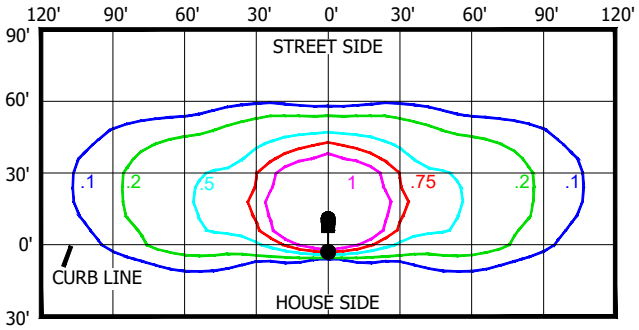	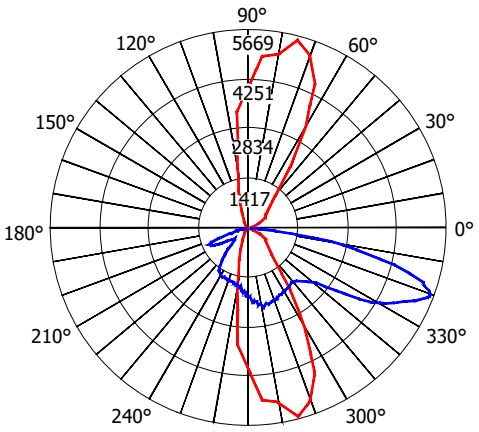
WATTS	71		
MOUNTING HEIGHT	30'		
ARM LENGTH	6'		
ARRANGEMENT	SINGLE		
.IES FILE NAME	ERL1_08B330_ -ELSHS-ERL1-BLCK.IES		

TABLE 12

LUMINAIRE ESTIMATED PROJECTED AREA (EPA)			
HORIZONTAL TENON. CONFIG.	**SINGLE**	**2 @ 90°**	**2 @ 180°**
--		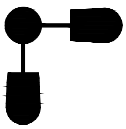	
STANDARD LUMINAIRE (FT^2) (TENON EPA NOT INCLUDED)	0.50	1.0	1.0

TABLE OF CONTENTS

RETURN TO LED FIXTURE INDEX

© 1998 - 2023 San Diego Gas & Electric Company. All rights reserved. Removal of this copyright notice without permission is not permitted under law.

REV	CHANGE	DR	BY	DSN	APV	DATE	REV	CHANGE	DR	BY	DSN	APV	DATE
C	FORMATTING	EDM	JIK	-	-	01/18/2022	F						
B	TABLE UPDATE	AMP	JIK	JES	CZH	02/12/2020	E						
A	ORIGINAL ISSUE	AMP	JIK	JES	CZH	08/20/2019	D	NOTES UPDATE	AMP	RSL	JAS	KRG	02/16/2023

ATTENTION:

* SEE NOTES AND REFERENCES SHEET 21.

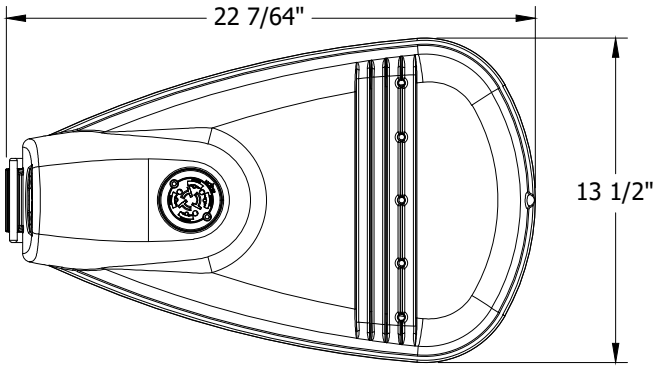

FIGURE 25
TOP VIEW

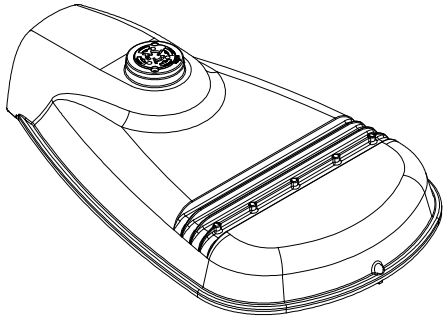

FIGURE 26
ISOMETRIC

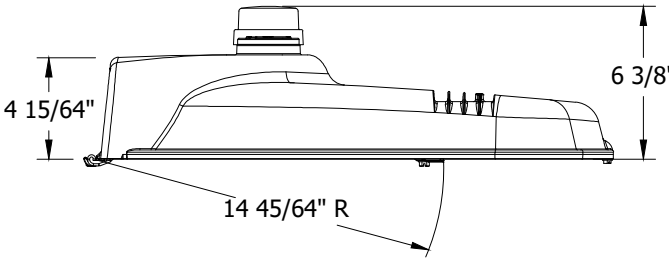

FIGURE 27
SIDE VIEW

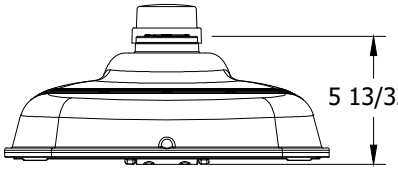

FIGURE 28
FRONT VIEW

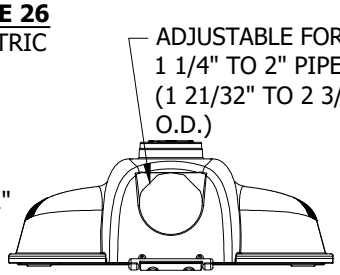

FIGURE 29
BACK VIEW

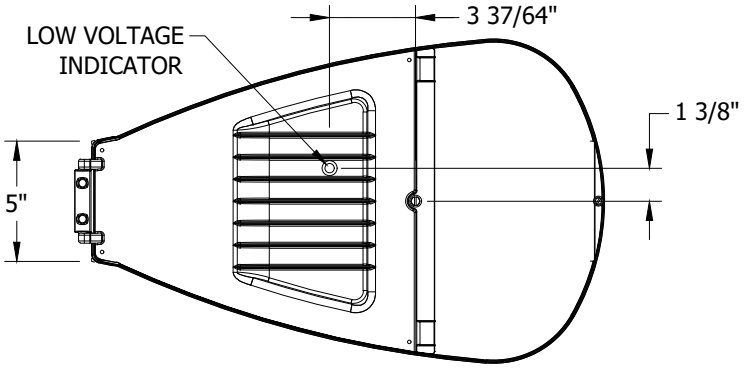

FIGURE 30
BOTTOM VIEW

TABLE 13

MANUFACTURER NAME/STYLE	LUMENS PACKAGE	COLOR TEMPERATURE	UNIT WEIGHT (LBS)	PROJECTED AREA	DISTRIBUTION TYPE	STOCK NUMBER	DESIGN UNITS
GE/ERL1	9600L	3,000K	15.5	SEE TABLE 15	TYPE III	S473108	LC99GE

TABLE OF CONTENTS

RETURN TO LED FIXTURE INDEX

© 1998 - 2023 San Diego Gas & Electric Company. All rights reserved. Removal of this copyright notice without permission is not permitted under law.

REV	CHANGE	DR	BY	DSN	APV	DATE	REV	CHANGE	DR	BY	DSN	APV	DATE
C	FORMATTING	EDM	JIK	-	-	01/18/2022	F						
B	TABLE UPDATE	AMP	JIK	JES	CZH	02/12/2020	E						
A	ORIGINAL ISSUE	AMP	JIK	JES	CZH	08/20/2019	D	NOTES UPDATE	AMP	RSL	JAS	KRG	02/16/2023

TABLE 14

PHOTOMETRIC DIAGRAMS

FIXTURE WITHOUT BACKLIGHT SHIELD		PLOT DRAWN IN FOOTCANDLES	GRAPH RADIUS LINES IN CANDELAS
LUMENS	9,600	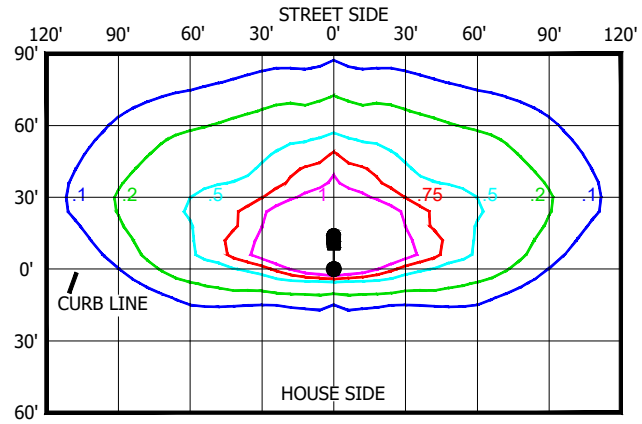	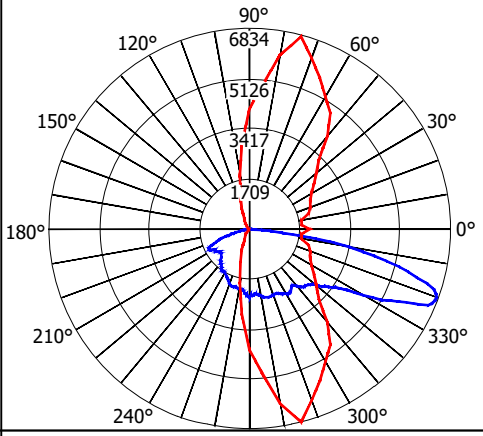
WATTS	97		
MOUNTING HEIGHT	30'		
ARM LENGTH	6'		
ARRANGEMENT	SINGLE		
.IES FILE NAME	ERL1_10C330_ .IES		

FIXTURE WITH BACKLIGHT SHIELD (C)		PLOT DRAWN IN FOOTCANDLES	GRAPH RADIUS LINES IN CANDELAS
LUMENS	9,400	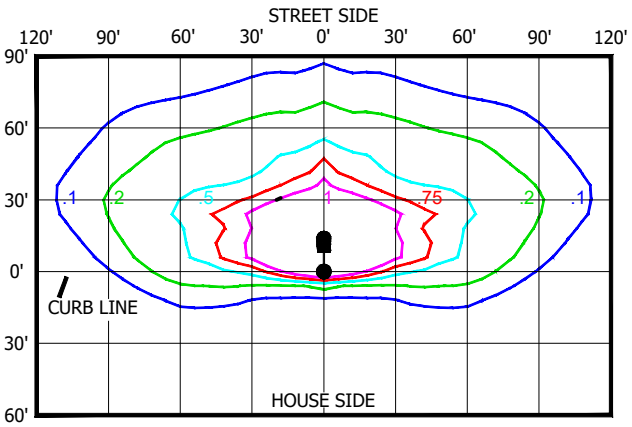	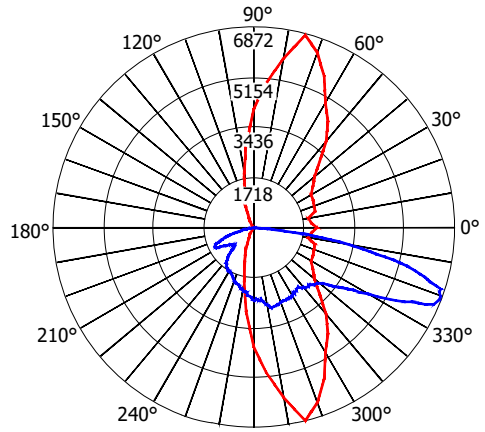
WATTS	97		
MOUNTING HEIGHT	30'		
ARM LENGTH	6'		
ARRANGEMENT	SINGLE		
.IES FILE NAME	ERL1_10C330_ -ELSHS-ERL1-BLCK.IES		

TABLE 15

LUMINAIRE ESTIMATED PROJECTED AREA (EPA)

HORIZONTAL TENON. CONFIG.	SINGLE	2 @ 90°	2 @ 180°
--		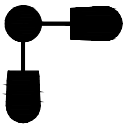	
STANDARD LUMINAIRE (FT^2) (TENON EPA NOT INCLUDED)	0.50	1.0	1.0

© 1998 - 2023 San Diego Gas & Electric Company. All rights reserved. Removal of this copyright notice without permission is not permitted under law.

REV	CHANGE	DR	BY	DSN	APV	DATE	REV	CHANGE	DR	BY	DSN	APV	DATE
C	FORMATTING	EDM	JIK	-	-	01/18/2022	F						
B	TABLE UPDATE	AMP	JIK	JES	CZH	02/12/2020	E						
A	ORIGINAL ISSUE	AMP	JIK	JES	CZH	08/20/2019	D	NOTES UPDATE	AMP	RSL	JAS	KRG	02/16/2023

X Indicates Latest Revision | Completely Revised | New Page | Information Removed

ATTENTION:

* SEE NOTES AND REFERENCES SHEET 21.

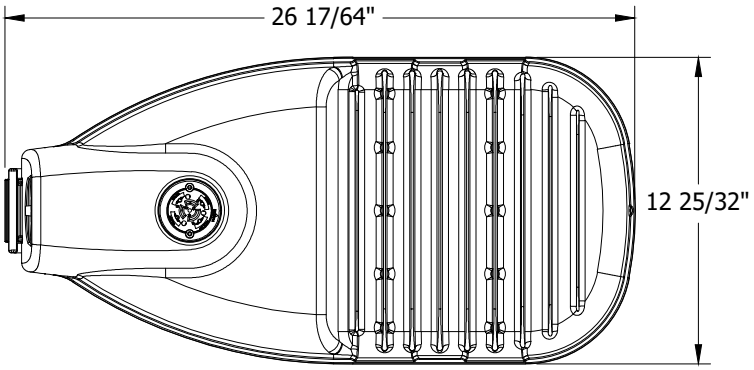

FIGURE 31
TOP VIEW

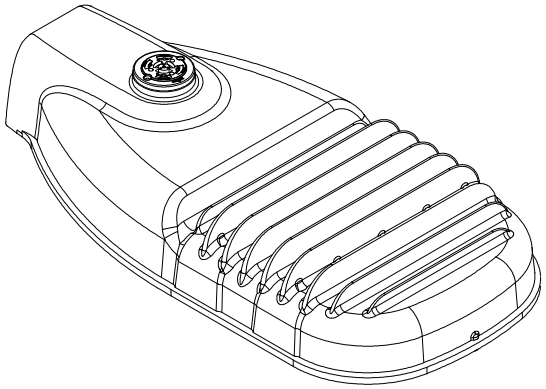

FIGURE 32
ISOMETRIC

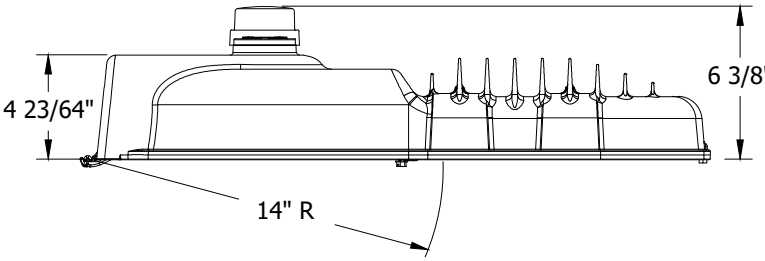

FIGURE 33
SIDE VIEW

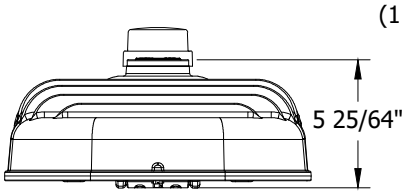

FIGURE 34
FRONT VIEW

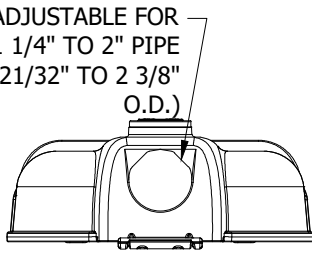

FIGURE 35
BACK VIEW

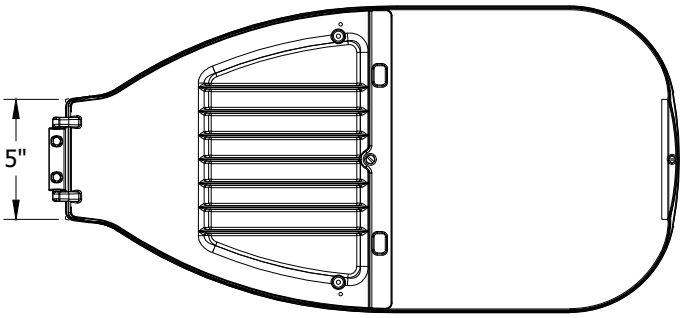

FIGURE 36
BOTTOM VIEW

TABLE 16

MANUFACTURER NAME/STYLE	LUMENS PACKAGE	COLOR TEMPERATURE	UNIT WEIGHT (LBS)	PROJECTED AREA	DISTRIBUTION TYPE	STOCK NUMBER	DESIGN UNITS
GE/ERL2	20100L	3,000K	24.0	SEE TABLE 18	TYPE III	S473110	LC174G

TABLE OF CONTENTS

RETURN TO LED FIXTURE INDEX

© 1998 - 2023 San Diego Gas & Electric Company. All rights reserved. Removal of this copyright notice without permission is not permitted under law.

REV	CHANGE	DR	BY	DSN	APV	DATE	REV	CHANGE	DR	BY	DSN	APV	DATE
C	FORMATTING	EDM	JIK	-	-	01/18/2022	F						
B	TABLE UPDATE	AMP	JIK	JES	CZH	02/12/2020	E						
A	ORIGINAL ISSUE	AMP	JIK	JES	CZH	08/20/2019	D	NOTES UPDATE	AMP	RSL	JAS	KRG	02/16/2023

TABLE 17

PHOTOMETRIC DIAGRAMS

FIXTURE WITHOUT BACKLIGHT SHIELD		PLOT DRAWN IN FOOTCANDLES	GRAPH RADIUS LINES IN CANDELAS
LUMENS	20,100	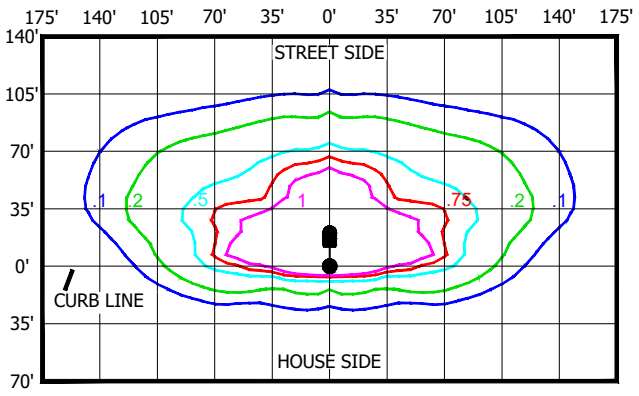	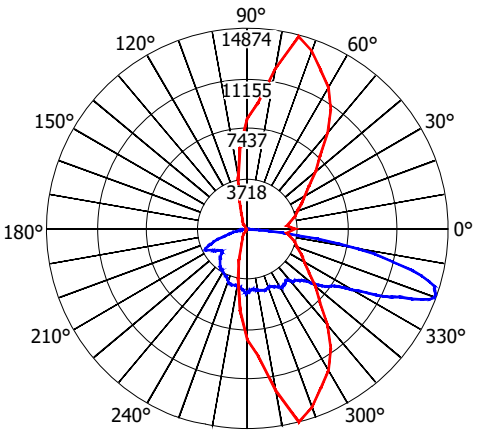
WATTS	174		
MOUNTING HEIGHT	35'		
ARM LENGTH	6'		
ARRANGEMENT	SINGLE		
.IES FILE NAME	ERL2_21C330_ -120-277V.IES		

FIXTURE WITH BACKLIGHT SHIELD (C)		PLOT DRAWN IN FOOTCANDLES	GRAPH RADIUS LINES IN CANDELAS
LUMENS	19,700	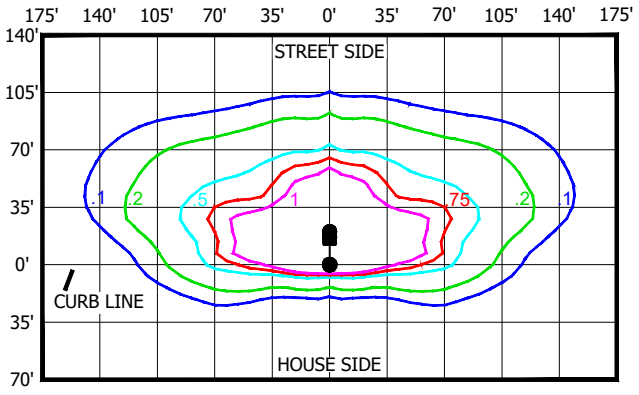	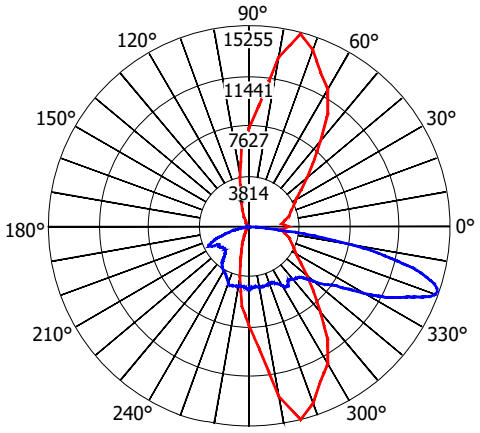
WATTS	174		
MOUNTING HEIGHT	35'		
ARM LENGTH	6'		
ARRANGEMENT	SINGLE		
.IES FILE NAME	ERL2_21C330_ -120-277V-ELSHS -ERL2-BLCK.IES		

TABLE 18

LUMINAIRE ESTIMATED PROJECTED AREA (EPA)			
HORIZONTAL TENON. CONFIG.	SINGLE	2 @ 90°	2 @ 180°
--		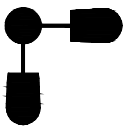	
STANDARD LUMINAIRE (FT^2) (TENON EPA NOT INCLUDED)	0.57	1.14	1.14

TABLE OF CONTENTS

RETURN TO LED FIXTURE INDEX

© 1998 - 2023 San Diego Gas & Electric Company. All rights reserved. Removal of this copyright notice without permission is not permitted under law.

REV	CHANGE	DR	BY	DSN	APV	DATE	REV	CHANGE	DR	BY	DSN	APV	DATE
C	FORMATTING	EDM	JIK	-	-	01/18/2022	F						
B	TABLE UPDATE	AMP	JIK	JES	CZH	02/12/2020	E						
A	ORIGINAL ISSUE	AMP	JIK	JES	CZH	08/20/2019	D	NOTES UPDATE	AMP	RSL	JAS	KRG	02/16/2023

ATTENTION:

* SEE NOTES AND REFERENCES SHEET 21.

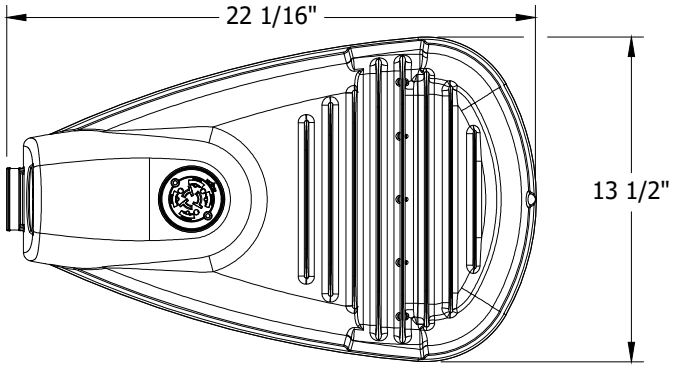

FIGURE 37
TOP VIEW

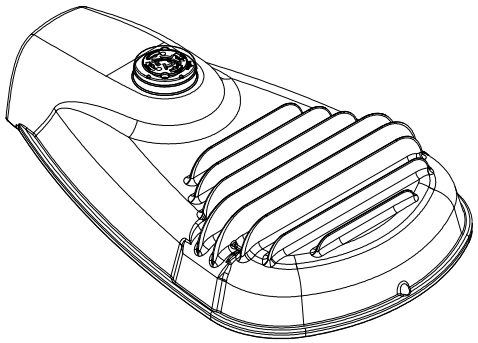

FIGURE 38
ISOMETRIC

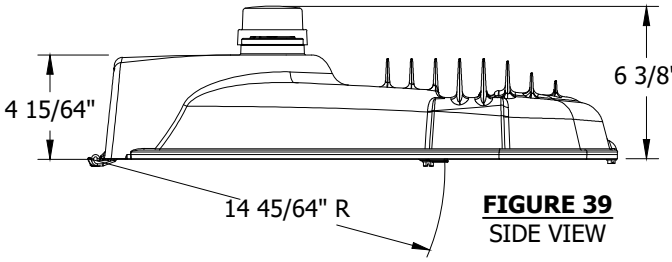

FIGURE 39
SIDE VIEW

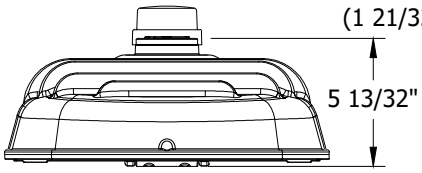

FIGURE 40
FRONT VIEW

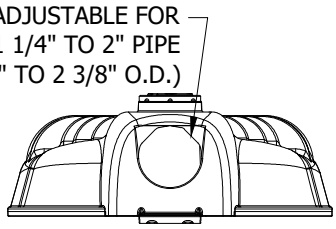

FIGURE 41
BACK VIEW

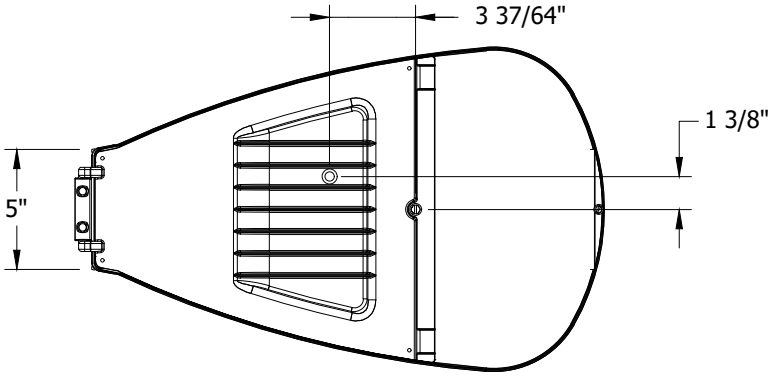

FIGURE 42
BOTTOM VIEW

TABLE 19

MANUFACTURER NAME/STYLE	LUMENS PACKAGE	COLOR TEMPERATURE	UNIT WEIGHT (LBS)	PROJECTED AREA	DISTRIBUTION TYPE	STOCK NUMBER	DESIGN UNITS
GE/ERLH	11000L	3,000K	15.15	SEE TABLE 21	TYPE IV	S473112	LC96GE

TABLE OF CONTENTS

RETURN TO LED FIXTURE INDEX

© 1998 - 2023 San Diego Gas & Electric Company. All rights reserved. Removal of this copyright notice without permission is not permitted under law.

REV	CHANGE	DR	BY	DSN	APV	DATE	REV	CHANGE	DR	BY	DSN	APV	DATE
C	FORMATTING	EDM	JIK	-	-	01/18/2022	F						
B	TABLE UPDATE	AMP	JIK	JES	CZH	02/12/2020	E						
A	ORIGINAL ISSUE	AMP	JIK	JES	CZH	08/20/2019	D	NOTES UPDATE	AMP	RSL	JAS	KRG	02/16/2023

TABLE 20

PHOTOMETRIC DIAGRAMS			
FIXTURE WITHOUT BACKLIGHT SHIELD		**PLOT DRAWN IN FOOTCANDLES**	**GRAPH RADIUS LINES IN CANDELAS**
LUMENS	11,000	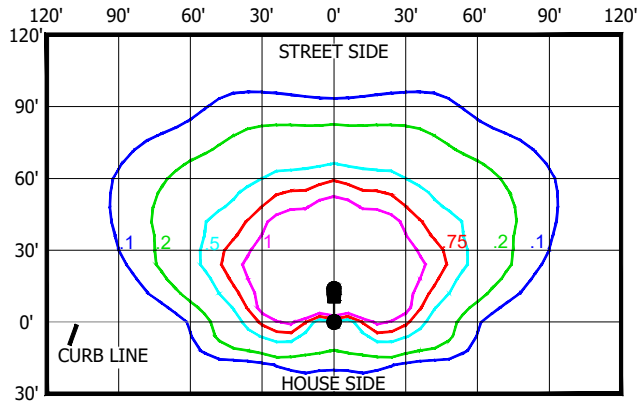	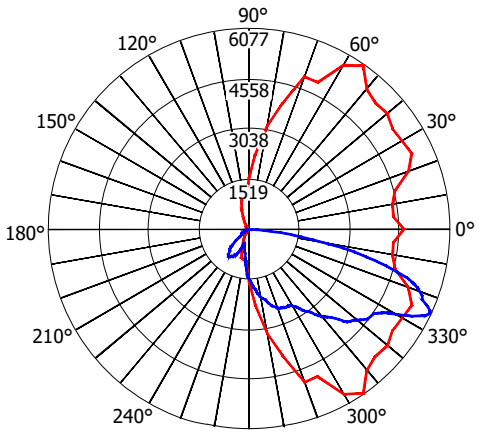
WATTS	98		
MOUNTING HEIGHT	30'		
ARM LENGTH	6'		
ARRANGEMENT	SINGLE		
.IES FILE NAME	ERLH_11D330_.IES		
FIXTURE WITH BACKLIGHT SHIELD (C)		**PLOT DRAWN IN FOOTCANDLES**	**GRAPH RADIUS LINES IN CANDELAS**
LUMENS	10,700	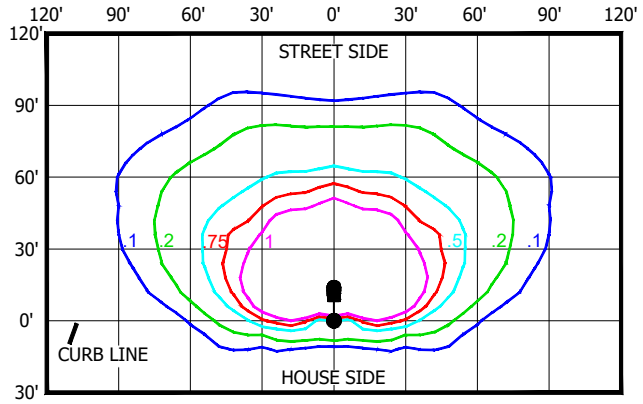	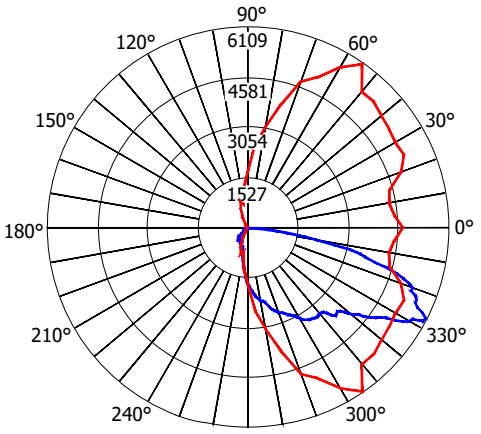
WATTS	98		
MOUNTING HEIGHT	30'		
ARM LENGTH	6'		
ARRANGEMENT	SINGLE		
.IES FILE NAME	ERLH_11D330_ELSHS-ERL1-BLCK.IES		

TABLE 21

LUMINAIRE ESTIMATED PROJECTED AREA (EPA)			
HORIZONTAL TENON. CONFIG.	**SINGLE**	**2 @ 90°**	**2 @ 180°**
--		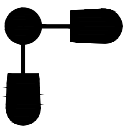	
STANDARD LUMINAIRE (FT^2) (TENON EPA NOT INCLUDED)	0.50	1.0	1.0

© 1998 - 2023 San Diego Gas & Electric Company. All rights reserved. Removal of this copyright notice without permission is not permitted under law.

REV	CHANGE	DR	BY	DSN	APV	DATE	REV	CHANGE	DR	BY	DSN	APV	DATE
C	FORMATTING	EDM	JIK	-	-	01/18/2022	F						
B	TABLE UPDATE	AMP	JIK	JES	CZH	02/12/2020	E						
A	ORIGINAL ISSUE	AMP	JIK	JES	CZH	08/20/2019	D	NOTES UPDATE	AMP	RSL	JAS	KRG	02/16/2023

X Indicates Latest Revision | Completely Revised | New Page | Information Removed

ATTENTION:

* SEE NOTES AND REFERENCES SHEET 21.

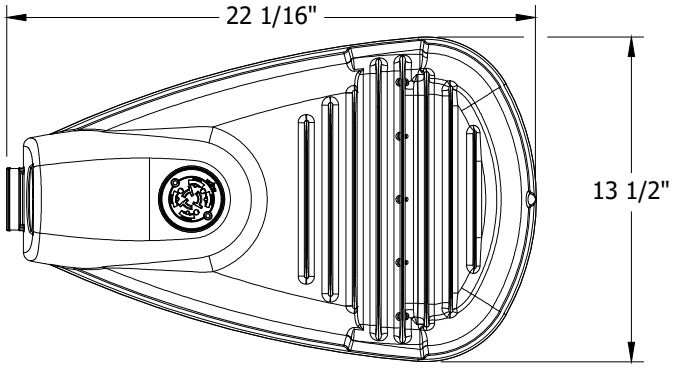

FIGURE 43
TOP VIEW

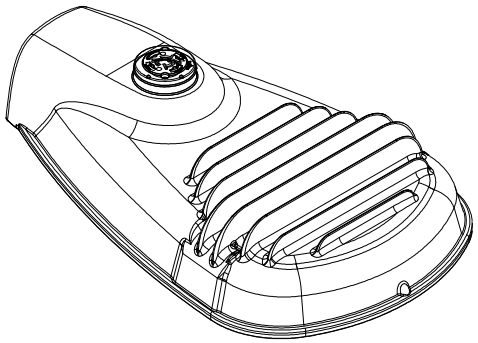

FIGURE 44
ISOMETRIC

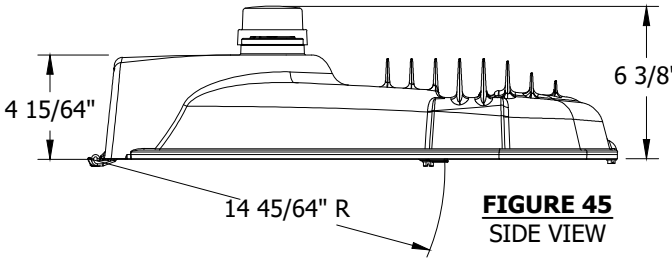

FIGURE 45
SIDE VIEW

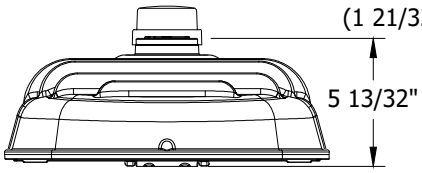

FIGURE 46
FRONT VIEW

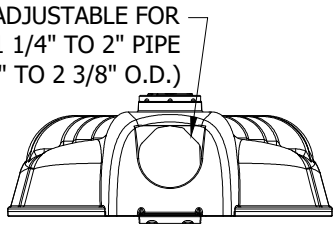

FIGURE 47
BACK VIEW

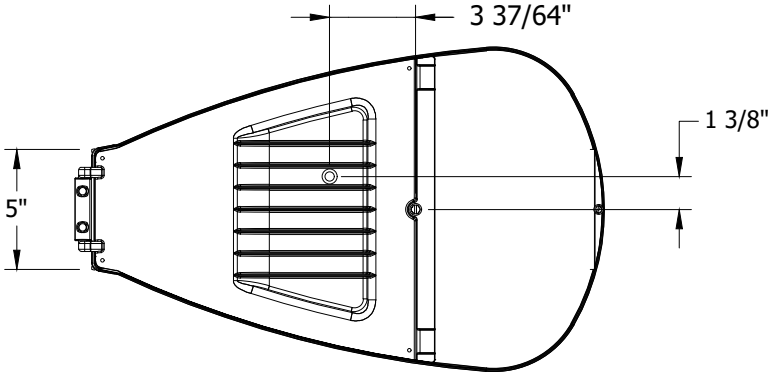

FIGURE 48
BOTTOM VIEW

TABLE 22

MANUFACTURER NAME/STYLE	LUMENS PACKAGE	COLOR TEMPERATURE	UNIT WEIGHT (LBS)	PROJECTED AREA	DISTRIBUTION TYPE	STOCK NUMBER	DESIGN UNITS
GE/ERLH	14400L	3,000K	15.15	SEE TABLE 24	TYPE III	S473114	LC136G

TABLE OF CONTENTS

RETURN TO LED FIXTURE INDEX

© 1998 - 2023 San Diego Gas & Electric Company. All rights reserved. Removal of this copyright notice without permission is not permitted under law.

REV	CHANGE	DR	BY	DSN	APV	DATE	REV	CHANGE	DR	BY	DSN	APV	DATE
C	FORMATTING	EDM	JIK	-	-	01/18/2022	F						
B	TABLE UPDATE	AMP	JIK	JES	CZH	02/12/2020	E						
A	ORIGINAL ISSUE	AMP	JIK	JES	CZH	08/20/2019	D	NOTES UPDATE	AMP	RSL	JAS	KRG	02/16/2023

TABLE 23

PHOTOMETRIC DIAGRAMS

FIXTURE WITHOUT BACKLIGHT SHIELD		PLOT DRAWN IN FOOTCANDLES	GRAPH RADIUS LINES IN CANDELAS
LUMENS	14,400	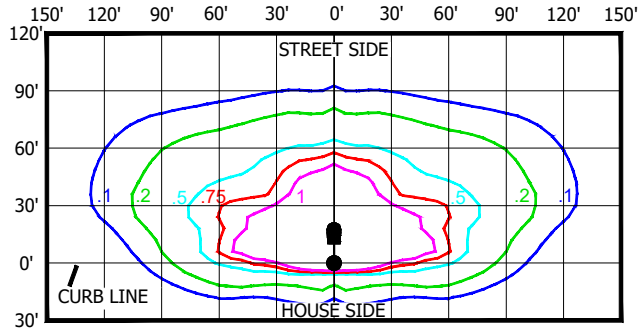	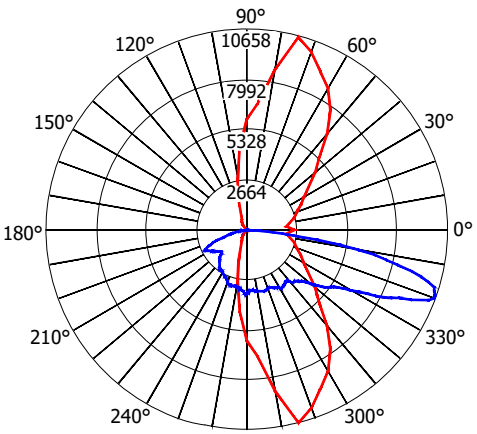
WATTS	136		
MOUNTING HEIGHT	30'		
ARM LENGTH	6'		
ARRANGEMENT	SINGLE		
.IES FILE NAME	ERLH_15C330_ .IES		

FIXTURE WITH BACKLIGHT SHIELD (C)		PLOT DRAWN IN FOOTCANDLES	GRAPH RADIUS LINES IN CANDELAS
LUMENS	14,000	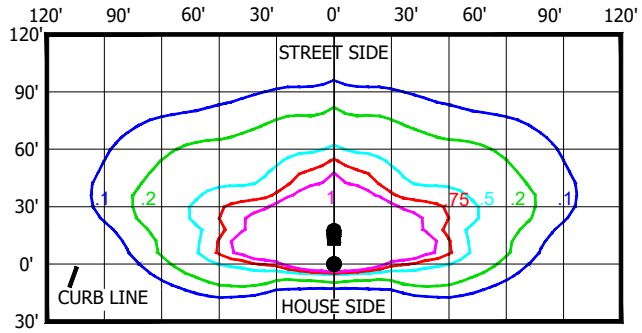	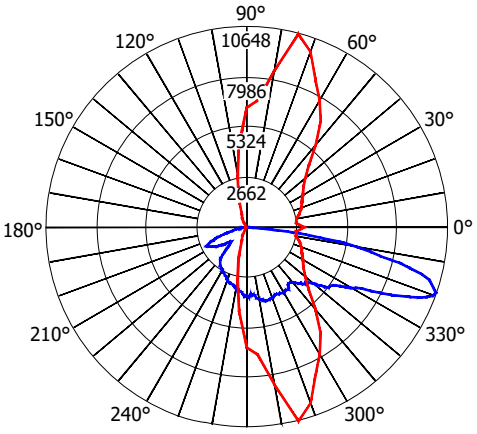
WATTS	136		
MOUNTING HEIGHT	30'		
ARM LENGTH	6'		
ARRANGEMENT	SINGLE		
.IES FILE NAME	ERLH_15C330_ ELSHS-ERL1 -BLCK.IES		

TABLE 24

LUMINAIRE ESTIMATED PROJECTED AREA (EPA)			
HORIZONTAL TENON. CONFIG.	SINGLE	2 @ 90°	2 @ 180°
--		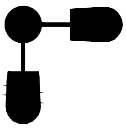	
STANDARD LUMINAIRE (FT^2) (TENON EPA NOT INCLUDED)	0.50	1.0	1.0

TABLE OF CONTENTS

RETURN TO LED FIXTURE INDEX

© 1998 - 2023 San Diego Gas & Electric Company. All rights reserved. Removal of this copyright notice without permission is not permitted under law.

REV	CHANGE	DR	BY	DSN	APV	DATE	REV	CHANGE	DR	BY	DSN	APV	DATE
C	FORMATTING	EDM	JIK	-	-	01/18/2022	F						
B	TABLE UPDATE	AMP	JIK	JES	CZH	02/12/2020	E						
A	ORIGINAL ISSUE	AMP	JIK	JES	CZH	08/20/2019	D	NOTES UPDATE	AMP	RSL	JAS	KRG	02/16/2023

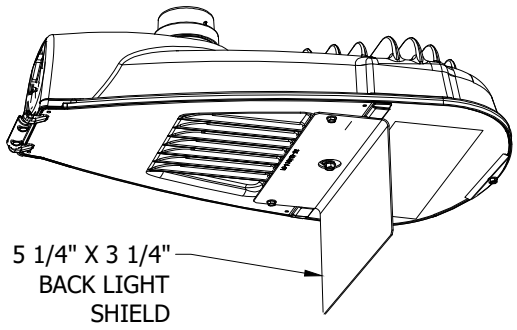

FIGURE 49
ISOMETRIC

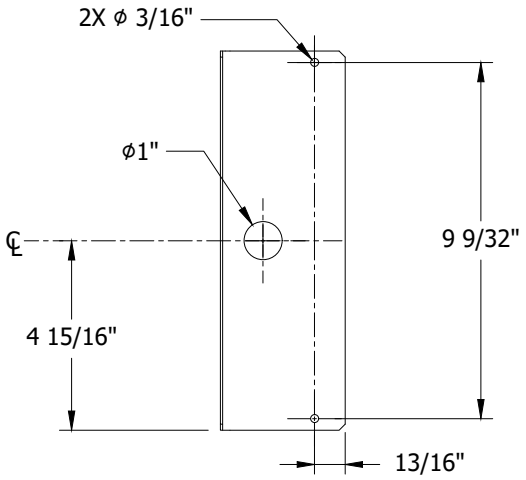

FIGURE 50
TOP VIEW

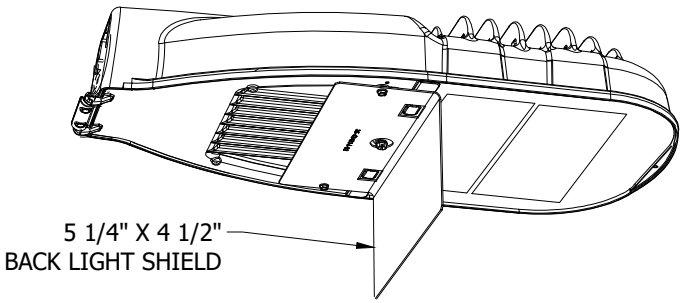

FIGURE 51
ISOMETRIC

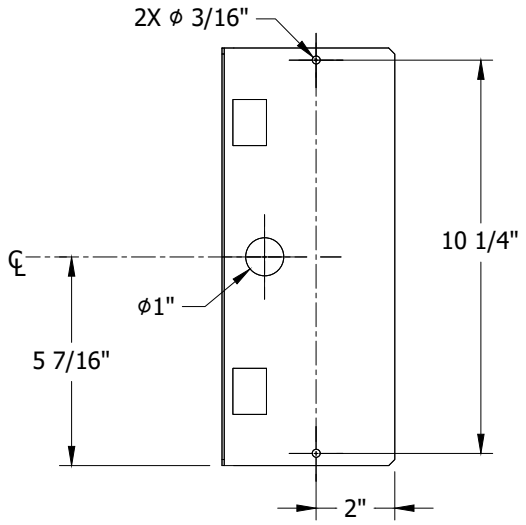

FIGURE 52
TOP VIEW

TABLE 25

GE LED BACK LIGHT SHIELD				
DESCRIPTION	**FIGURE**	**FIXTURE TYPE COMPATIBILITY BY STOCK NUMBER**	**STOCK NUMBER**	**DESIGN UNITS**
ERL1 & ERLH BACK LIGHT SHIELD, 5 1/4" X 3 1/4" X 9 7/8" LONG	49	S473100, S473102, S473104, S473106, S473108, S473112, S473114	S643014	GEBLS1
ERL2 BACK LIGHT SHIELD, 5 1/4" X 4 1/2" X 10 7/8" LONG	51	S473110	S643016	GEBLS2

© 1998 - 2023 San Diego Gas & Electric Company. All rights reserved. Removal of this copyright notice without permission is not permitted under law.

REV	CHANGE	DR	BY	DSN	APV	DATE	REV	CHANGE	DR	BY	DSN	APV	DATE
C	FORMATTING	EDM	JIK	-	-	01/18/2022	F						
B	TABLE UPDATE	AMP	JIK	JES	CZH	02/12/2020	E						
A	ORIGINAL ISSUE	AMP	JIK	JES	CZH	08/20/2019	D	NOTES UPDATE	AMP	RSL	JAS	KRG	02/16/2023

INSTALLATION:

A. REMOVE DOOR FROM LUMINAIRE BEFORE INSTALLING SCREWS TO PREVENT INTERNAL DAMAGE. UNFASTEN DOOR LATCH SCREW, OPEN DOOR, AND REMOVE DOOR FROM HINGE CRADLE.

B. FASTEN SHIELD TO DOOR BY SECURING THE INCLUDED THREAD CUTTING SCREWS INTO THE TWO 3/16-INCH HOLES ON THE SHIELD (SHOWN ON FIGURES 50 AND 52).

C. MAKE SURE THE SHIELD IS ORIENTED CORRECTLY BY VERIFYING THE 1-INCH HOLE IN THE CENTER OF THE SHIELD LINES UP WITH THE LATCH SCREW ON THE DOOR (SHOWN ON FIGURES 49 AND 51). FOR THE ERL2 SHIELD, THE SQUARE CUTOUTS ON THE SHIELD SHOULD LINE UP WITH THE SQUARE BUMPS ON THE DOOR (SHOWN ON FIGURE 51).

D. TO REPLACE DOOR INTO LUMINAIRE, HOLD SLIGHTLY PAST VERTICAL TOWARD THE POLE-SIDE OF THE HINGE. INSERT HINGE PIN INTO HINGE CRADLE AND LOWER DOOR TO VERIFY DOOR CAN HANG FREE. CLOSE DOOR AND SECURE LATCH SCREW.

BILL OF MATERIALS: NONE

NOTES:

I. REFER TO SPECIFIC PRODUCT INSTALLATION MANUALS PROVIDED WITH ITEM FOR COMPLETE SAFETY AND INSTALLATION INSTRUCTIONS.

II. SEE NON-OPERATIONAL ESP TBD FOR IES DESIGN FILES.

(III) MANUFACTURER DATA REPRODUCED OR ADAPTED WHERE NOTED FROM PRODUCT CUT SHEET OLP-3128 (REV 09/06/17) AND INSTALLATION GUIDE GEH-6064-SP (REV 05/17/17).

REFERENCE:

a. FOR OVERHEAD LIGHTING INSTALLATION, SEE OH1570.

b. FOR UNDERGROUND LIGHTING INSTALLATION, SEE UG4431.

(c) FOR BACKLIGHT SHIELD AND INSTALLATION DETAILS, SEE SHEET 20.

TABLE OF CONTENTS

RETURN TO LED FIXTURE INDEX

© 1998 - 2023 San Diego Gas & Electric Company. All rights reserved. Removal of this copyright notice without permission is not permitted under law.

REV	CHANGE	DR	BY	DSN	APV	DATE	REV	CHANGE	DR	BY	DSN	APV	DATE
C	FORMATTING	EDM	JIK	-	-	01/18/2022	F						
B	TABLE UPDATE	AMP	JIK	JES	CZH	02/12/2020	E						
A	ORIGINAL ISSUE	AMP	JIK	JES	CZH	08/20/2019	D	NOTES UPDATE	AMP	RSL	JAS	KRG	02/16/2023

X Indicates Latest Revision | Completely Revised | New Page | Information Removed

SDG&E ELECTRIC OVERHEAD AND UNDERGROUND CONSTRUCTION STANDARDS

GE EVOLVE LED ROADWAY LIGHTING FIXTURES - NOTES AND REFERENCES

OH1571.21
UG4471.21

SCOPE: THIS STANDARD SHOWS CREE RSW & TRAVEYO TYPE LED FIXTURES USED TO PROVIDE ROADWAY LIGHTING.

TABLE 1

CREE LED FIXTURE INDEX							
DESCRIPTION	**DESIGN UNITS**	**MOUNTING HEIGHT** (II) (III) (A)	**MAXIMUM SYSTEM WATTAGE**	**STANDARD PAGE**	**STOCK NUMBER**	**FIGURE DETAIL**	**HPSV/LPSV EQUIVALENT STOCK NUMBERS** (a) (b)
5KL RSW TYPE 3	RWS3	26'	45	OH 1572.6	S473138	1	S473800, S473400, S473802, S473402
5KL RSW TYPE 2	RWS2	26'	45	OH 1572.8	S473140	1	S473800, S473400, S473802, S473402
9KL RSW TYPE 3	RWM3	30'	83	OH 1572.10	S473142	2	S473406, S473806, S473404, S473804
9KL RSW TYPE 2	RWM2	30'	83	OH 1572.12	S473150	2	S473406, S473806, S473404, S473804
14KL RSW TYPE 3	RWL3	30'	136	OH 1572.14	S473144	3	S473408
24KL RSW TYPE 3	RWX3	35'	223	OH 1572.16	S473146	3	S473410
5KL TRV TYPE 3	RESERVED FOR FUTURE USE						
5KL TRV TYPE 2							
10KL TRV TYPE 3							
10KL TRV TYPE 2							
25KL TRV TYPE 3							

TABLE OF CONTENTS

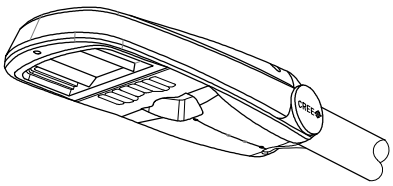

FIGURE 1
RSW SMALL

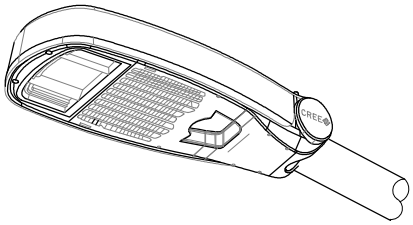

FIGURE 2
RSW MEDIUM

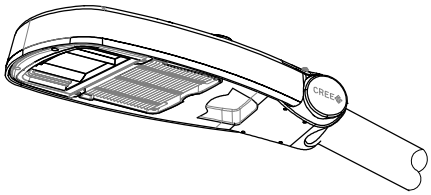

FIGURE 3
RSW LARGE/XL

FUTURE FIGURE

FIGURE 4
TRV SMALL

FUTURE FIGURE

FIGURE 5
TRV MEDIUM

FUTURE FIGURE

FIGURE 6
TRV LARGE

© 1998 - 2021 San Diego Gas & Electric Company. All rights reserved. Removal of this copyright notice without permission is not permitted under law.

REV	CHANGE	DR	BY	DSN	APV	DATE	REV	CHANGE	DR	BY	DSN	APV	DATE
C							F						
B							E						
A	ORIGINAL ISSUE	AMP	RSL	JES	CZH	04/28/21	D						

Indicates Latest Revision | Completely Revised | X New Page | Information Removed

SDG&E ELECTRIC OVERHEAD CONSTRUCTION STANDARDS

ROADWAY LED LIGHTING FIXTURES
CREE - MANUFACTURER INDEX

ATTENTION: INSTALLATION FOR RSW TYPE LED FIXTURES

INSTALLATION:

(A) HPSV/LPSV CONVERSION TO LED: REMOVE AND REPLACE ENTIRE HPSV/LPSV STREET LIGHTING FIXTURE AND BALLAST AND REPLACE WITH EQUIVALENT LED FIXTURE SHOWN IN TABLE 1. FOR OVERHEAD CIRCUIT RECONDUCTOR OR REBUILD, MOUNT THE REPLACEMENT LED FIXTURE AT THE EXISTING FIXTURE HEIGHT OR HIGHER WHILE MAINTAINING REQUIRED CLEARANCES TO OTHER FACILITIES PER OH1509.

B. MECHANICAL INSTALLATION OF FIXTURE

1. SLIDE FIXTURE ON TO A MINIMUM 8" LONG TENON (MAST), THROUGH OPENING ON THE REAR OF HOUSING. SEE **FIGURE 7**.
2. ONCE DESIRED POSITION IS ACHIEVED, OPEN COVER BY HOLDING FIXTURE AND PULLING THE HANDLE AND ALLOW THE COVER TO SWING OPEN. SEE **FIGURE 8 AND 9**.
3. TO LEVEL FIXTURE, USE BUBBLE LEVEL LOCATED INSIDE HOUSING. ADJUST LEVELING OF FIXTURE FROM SIDE TO SIDE BY ROTATION FIXTURE ON POLE. TO LEVEL FROM FRONT TO BACK, SLIDE POLE IN OR OUT TO DIFFERENT STEP IN UPPER HOUSING. EACH STEP CHANGES THE ANGLE IN 2.5 DEGREE INCREMENTS.
4. WHEN TIGHTENING BOLTS, MAKE SURE TO ALTERNATE BETWEEN BOLTS TO KEEP BRACKET STRAIGHT. TIGHTEN MOUNTING BOLTS TO THE APPROPRIATE TORQUE VALUES AS SPECIFIED IN THE MANUFACTURER INSTALLATION GUIDE. DO NOT OVER TIGHTEN. SEE **FIGURE 7** FOR BOLT LOCATION.

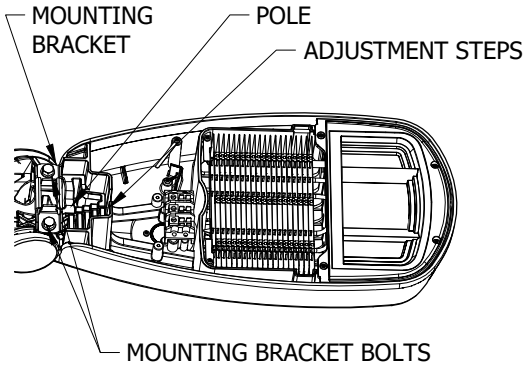

FIGURE 7
INTERNAL VIEW

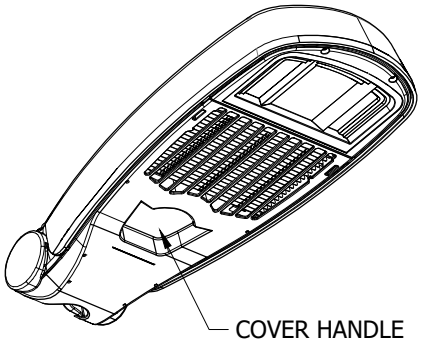

FIGURE 8
BOTTOM VIEW

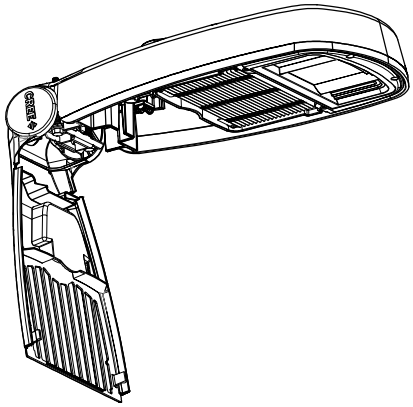

FIGURE 9
BOTTOM VIEW LID OPEN

C. ELECTRICAL CONNECTIONS OF FIXTURES

1. FOR 120/277V CONNECT THE BLACK FIXTURE LEAD TO THE VOLTAGE SUPPLY POSITION OF THE TERMINAL BLOCK (HOT 1 FOR 208/240V WIRING).
2. FOR 120/277V CONNECT THE WHITE FIXTURE LEAD TO THE NEUTRAL SUPPLY POSITION OF THE TERMINAL BLOCK OR (HOT 2 FOR 208/240V WIRING).
3. CONNECT THE GREEN OR GREEN/YELLOW GROUND LEAD TO THE GREEN WIRE POSITION OF THE TERMINAL BLOCK.
4. PUSH EXCESS SUPPLY WIRES INTO POLE AND CLOSE COVER. MAKE SURE THAT NO WIRES ARE PINCHED AND COVER LATCHES ARE FULLY ENGAGED.

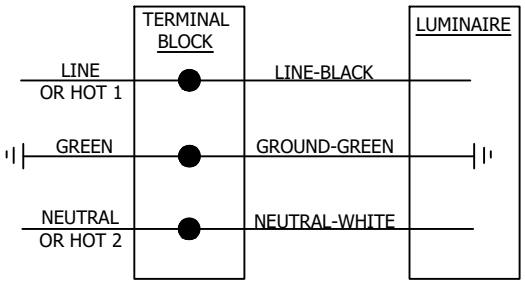

FIGURE 10
WIRING SCHEMATIC

© 1998 - 2021 San Diego Gas & Electric Company. All rights reserved. Removal of this copyright notice without permission is not permitted under law.

REV	CHANGE	DR	BY	DSN	APV	DATE	REV	CHANGE	DR	BY	DSN	APV	DATE
C							F						
B							E						
A	ORIGINAL ISSUE	AMP	RSL	JES	CZH	04/28/21	D						

Indicates Latest Revision | Completely Revised | X New Page | Information Removed

SDG&E ELECTRIC OVERHEAD CONSTRUCTION STANDARDS

ROADWAY LED LIGHTING FIXTURES
INSTALLATION FOR RSW SERIES

OH1572.2
UG4472.2

TABLE OF CONTENTS

D. MODIFYING FIELD ADJUSTABLE OUTPUT (FAO) SETTINGS OF FIXTURE

1. THE FIELD ADJUSTABLE OUTPUT MODULE ENABLES THE RSW FIXTURE TO BE DIMMED AS NEEDED FOR A PARTICULAR INSTALLATION. ALL FIXTURES WILL BE SHIPPED FROM THE FACTORY AT THE MAXIMUM LUMEN OUTPUT AND CAN BE MANUALLY ADJUSTED TO LOWER OUTPUTS FOR PROJECT SPECIFIC NEEDS DURING INSTALLATION.
2. THE FIELD ADJUSTABLE OUTPUT MODULE IS LOCATED INSIDE THE FIXTURE. OPEN THE COVER BY HOLDING FIXTURE AND PULLING THE HANDLE. ALLOW THE COVER TO SWING OPEN.
3. ESTABLISH THE DESIRED POWER OR LUMEN SETTING BY TURNING THE MODULE SWITCH TO THE POSITION DEFINED BY THE AU/CU POWER LEVEL INCLUDED WITH THE DESIGN PACKAGE. REFER TO THE MANUFACTURER SPECIFICATIONS AND FIELD ADJUSTABLE SETTINGS TABLES INCLUDED WITHIN THIS STANDARD FOR EACH FIXTURE. SEE FIGURE 11, 12, AND 13 ADJUSTMENT SWITCH DETAILS FOR EACH FIXTURE SIZE.
4. CLOSE THE COVER ENSURING NO WIRES ARE PINCHED. APPLY A WATTAGE LABEL THAT INDICATES THE ADJUSTED FIXTURE POWER SETTING.

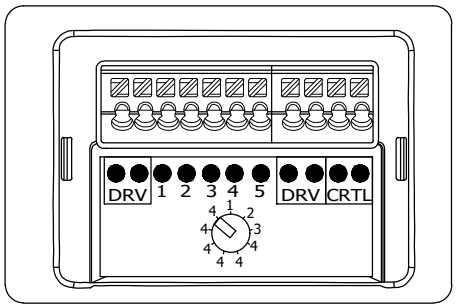

FIGURE 11
SMALL RSW
FAO SWITCH

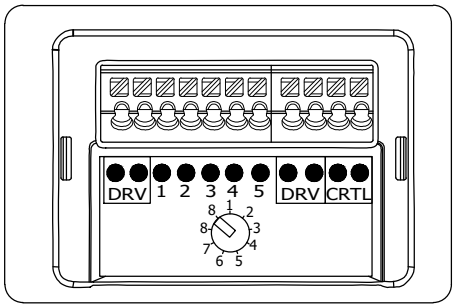

FIGURE 12
MEDIUM RSW
FAO SWITCH

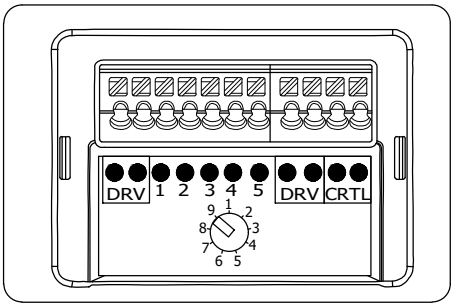

FIGURE 13
LARGE/XL RSW
FAO SWITCH

BILL OF MATERIALS: NONE

NOTES:

I. THIS IS A REPRODUCTION OR ADAPTATION OF MANUFACTURER DATA. REFER TO SPECIFIC PRODUCT INSTALLATION MANUALS PROVIDED WITH STOCK MATERIALS FOR COMPLETE SAFETY AND INSTALLATION INSTRUCTIONS.

(II) MOUNTING HEIGHTS PROVIDED ON PAGE OH1572.1 ARE SPECIFIC TO NEW UNDERGROUND FEED INSTALLATIONS DUE TO STANDARD CONCRETE POLE SIZES AVAILABLE. NEW LED STREETLIGHT INSTALLATIONS OR HPSV-TO-LED UPGRADE INSTALLATIONS MAY BE MOUNTED WITHIN 2 FEET OF THESE REFERENCE MOUNTING HEIGHTS AS LONG AS THE REQUIRED CLEARANCES TO OTHER FACILITIES ARE MAINTAINED PER OH1509.

(III) FOR NEW SDG&E OWNED STREETLIGHT INSTALLATION (NOT EXISTING CONVERSIONS), A LIGHTING DESIGN ANALYSIS MAY BE REQUIRED TO DETERMINE THE MOUNTING HEIGHT IF THE REFERENCE MOUNTING HEIGHT PROVIDED HERE ARE NOT FEASIBLE. CONTACT THE STREET LIGHTING GROUP IN THIS SCENARIO FOR GUIDANCE.

REFERENCE:

(a) SEE OVERHEAD FIELD MAINTENANCE ONLY SECTION 1500 FOR HPSV AND LPSV FIXTURE DETAILS.

(b) SOME FIXTURES ARE NO LONGER AVAILABLE.

c. SEE OH1570 FOR OVERHEAD LIGHTING INSTALLATION.

d. SEE UG4431 FOR UNDERGROUND LIGHTING INSTALLATION.

e. SEE OH1512 FOR PHOTOELECTRIC CONTROLS AVAILABLE.

© 1998 - 2021 San Diego Gas & Electric Company. All rights reserved. Removal of this copyright notice without permission is not permitted under law.

REV	CHANGE	DR	BY	DSN	APV	DATE	REV	CHANGE	DR	BY	DSN	APV	DATE
C							F						
B							E						
A	ORIGINAL ISSUE	AMP	RSL	JES	CZH	04/28/21	D						

TABLE OF CONTENTS

SCOPE: THIS STANDARD SHOWS TRAVEYO TYPE LED FIXTURES USED TO PROVIDE ROADWAY LIGHTING.

ATTENTION: INSTALLATION FOR TRAVEYO TYPE LED FIXTURES

INSTALLATION:

RESERVED FOR FUTURE CONTENT

TABLE OF CONTENTS

© 1998 - 2021 San Diego Gas & Electric Company. All rights reserved. Removal of this copyright notice without permission is not permitted under law.

REV	CHANGE	DR	BY	DSN	APV	DATE	REV	CHANGE	DR	BY	DSN	APV	DATE
C							F						
B							E						
A	ORIGINAL ISSUE	AMP	RSL	JES	CZH	04/28/21	D						

BILL OF MATERIALS: NONE

NOTES: NONE

REFERENCE:

a. SEE OH1570 FOR OVERHEAD LIGHTING INSTALLATION.

b. SEE UG4431 FOR UNDERGROUND LIGHTING INSTALLATION.

TABLE OF CONTENTS

© 1998 - 2021 San Diego Gas & Electric Company. All rights reserved. Removal of this copyright notice without permission is not permitted under law.

REV	CHANGE	DR	BY	DSN	APV	DATE	REV	CHANGE	DR	BY	DSN	APV	DATE
C							F						
B							E						
A	ORIGINAL ISSUE	AMP	RSL	JES	CZH	04/28/21	D						

	Indicates Latest Revision		Completely Revised	X New Page		Information Removed

SDG&E ELECTRIC OVERHEAD CONSTRUCTION STANDARDS

ROADWAY LED LIGHTING FIXTURES INSTALLATION FOR TRAVEYO SERIES

OH1572.5
UG4472.5

SCOPE: THIS STANDARD SHOWS VARIOUS CREE LED ROADWAY LIGHTING FIXTURES.

ATTENTION: SEE NOTES & REFERENCES PAGE OH1572.19. LUMEN OUTPUT SETTING MUST BE IDENTIFIED FOR THIS FIXTURE INSTALLATION USING TABLE 2 ON NEXT SHEET.

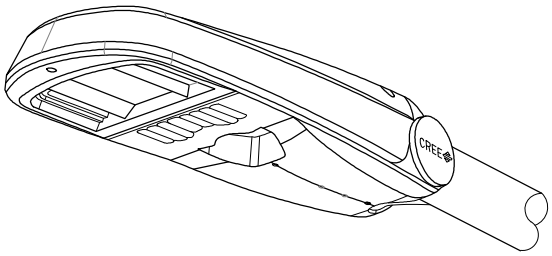

FIGURE 1
ISOMETRIC

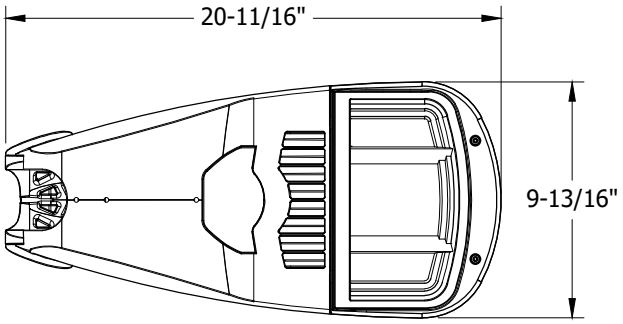

FIGURE 2
BOTTOM

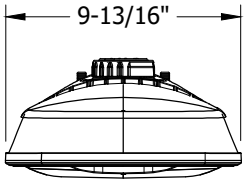

FIGURE 3
FRONT

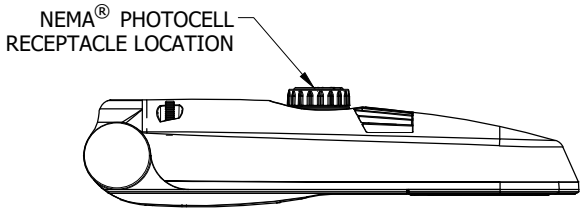

FIGURE 4
SIDE

TABLE OF CONTENTS

TABLE 1

STOCK NUMBER	MANUFACTURER NAME/STYLE	LUMENS PACKAGE	COLOR TEMPERATURE	UNIT WEIGHT	PROJECTED AREA	DISTRIBUTION TYPE	DESIGN UNITS
S473138	CREE / RSW SMALL	5000L	3000K	8.45 LBS	SEE LUMINAIRE EPA TABLE	TYPE III MEDIUM	RWS3

LUMINAIRE ESTIMATED PROJECTED AREA (EPA)

HORIZONTAL TENON. CONFIG.	SINGLE	2 @ 90°	2 @ 180°
STANDARD LUMINAIRE (FT^2) (TENON EPA NOT INCLUDED)	0.61	0.89	1.22

© 1998 - 2021 San Diego Gas & Electric Company. All rights reserved. Removal of this copyright notice without permission is not permitted under law.

REV	CHANGE	DR	BY	DSN	APV	DATE	REV	CHANGE	DR	BY	DSN	APV	DATE
C							F						
B							E						
A	ORIGINAL ISSUE	AMP	RSL	JES	CZH	04/28/21	D						

Indicates Latest Revision | Completely Revised | X New Page | Information Removed

PHOTOMETRIC DIAGRAMS

FIXTURE DESIGN WITHOUT BACKLIGHT SHIELD

LUMENS: 5000
WATTS: 45
MOUNTING HEIGHT: 26'
ARM LENGTH: 6'
ARRANGEMENT: SINGLE
.IES FILE NAME:
RSWS-A-HT-3ME-5L-30K7-UL_CONFIGURED.IES

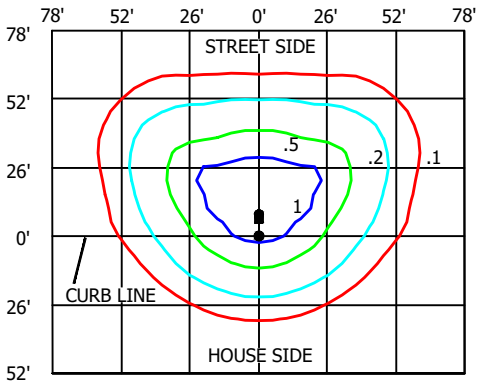

PLOT DRAWN IN FOOTCANDLES

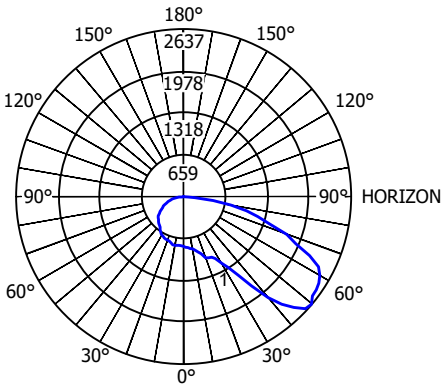

GRAPH RADIUS LINES ARE IN CANDELAS

FIXTURE DESIGN WITH BACKLIGHT SHIELD

LUMENS: 4630
WATTS: 45
MOUNTING HEIGHT: 26'
ARM LENGTH: 6'
ARRANGEMENT: SINGLE
.IES FILE NAME:
RSWS-A-HT-3ME-3L-30K7-UL W-RSW-BLSS_11675461.01.IES

SEE SHEET OH1572.18 FOR BACKLIGHT SHIELD DETAILS AND INSTALLATION

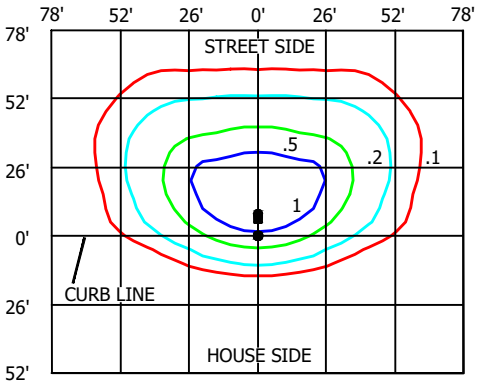

PLOT DRAWN IN FOOTCANDLES

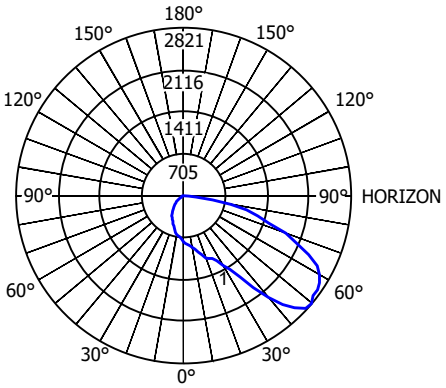

GRAPH RADIUS LINES ARE IN CANDELAS

TABLE OF CONTENTS

ATTENTION: LUMEN OUTPUT "Q" SETTING MUST BE INCLUDED FOR EACH FIXTURE WITHIN THE CONSTRUCTION NOTES FOR EACH LOCATION IN THE JOB PACKAGE.

TABLE 2

Q OPTION SETTING	ACTUAL SYSTEM WATTS	NOMINAL LABEL WATTAGE	LUMEN OUTPUT	LUMEN OUTPUT WITH BACKLIGHT SHIELD	HPSV EQUIVALENT WATTAGE
Q4 (FULL POWER)	45	50	5,000	4,630	100
Q3	41	40	4,654	4,310	70
Q2	36	40	4,105	3,801	50-70
Q1	30	30	3,617	3,350	50-70

© 1998 - 2021 San Diego Gas & Electric Company. All rights reserved. Removal of this copyright notice without permission is not permitted under law.

REV	CHANGE	DR	BY	DSN	APV	DATE	REV	CHANGE	DR	BY	DSN	APV	DATE
C							F						
B							E						
A	ORIGINAL ISSUE	AMP	RSL	JES	CZH	04/28/21	D						

Indicates Latest Revision | Completely Revised | X New Page | Information Removed

SDG&E ELECTRIC OVERHEAD CONSTRUCTION STANDARDS

CREE RSW ROADWAY LIGHTING
5KL FIXTURE

OH1572.7
UG4472.7

ATTENTION: SEE NOTES & REFERENCES PAGE OH1572.19. LUMEN OUTPUT SETTING MUST BE IDENTIFIED FOR THIS FIXTURE INSTALLATION USING TABLE 4 ON NEXT SHEET.

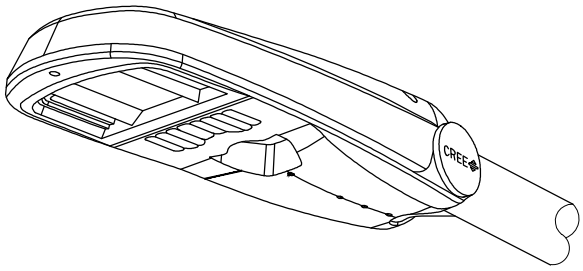

FIGURE 5
ISOMETRIC

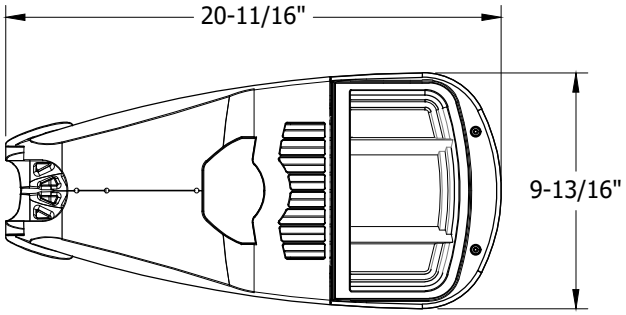

FIGURE 6
BOTTOM

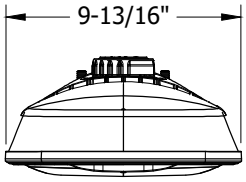

FIGURE 7
FRONT

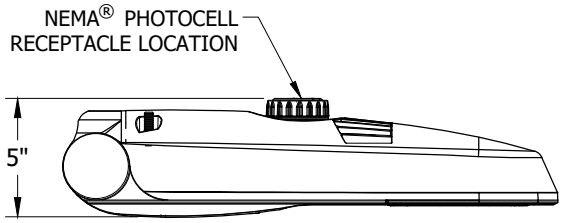

FIGURE 8
SIDE

TABLE 3

STOCK NUMBER	MANUFACTURER NAME/STYLE	LUMENS PACKAGE	COLOR TEMPERATURE	UNIT WEIGHT	PROJECTED AREA	DISTRIBUTION TYPE	DESIGN UNITS
S473140	CREE / RSW SMALL	5000L	3000K	8.45 LBS	SEE LUMINAIRE EPA TABLE	TYPE II MEDIUM	RWS2

LUMINAIRE ESTIMATED PROJECTED AREA (EPA)

HORIZONTAL TENON. CONFIG.	SINGLE	2 @ 90°	2 @ 180°
STANDARD LUMINAIRE (FT^2) (TENON EPA NOT INCLUDED)	0.61	0.89	1.22

© 1998 - 2021 San Diego Gas & Electric Company. All rights reserved. Removal of this copyright notice without permission is not permitted under law.

REV	CHANGE	DR	BY	DSN	APV	DATE	REV	CHANGE	DR	BY	DSN	APV	DATE
C							F						
B							E						
A	ORIGINAL ISSUE	AMP	RSL	JES	CZH	04/28/21	D						

Indicates Latest Revision | Completely Revised | X New Page | Information Removed

TABLE OF CONTENTS

PHOTOMETRIC DIAGRAMS

FIXTURE DESIGN WITHOUT BACKLIGHT SHIELD

LUMENS: 5000
WATTS: 45
MOUNTING HEIGHT: 26'
ARM LENGTH: 6'
ARRANGEMENT: SINGLE
.IES FILE NAME:
RSWS-A-HT-2ME-5L-30K7-UL_11644102.07.IES

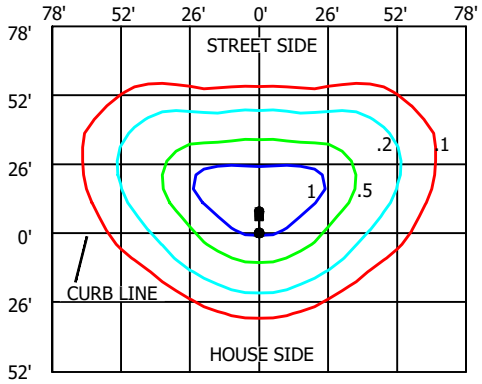

PLOT DRAWN IN FOOTCANDLES

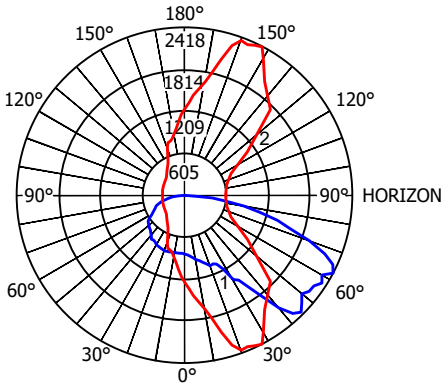

GRAPH RADIUS LINES ARE IN CANDELAS

FIXTURE DESIGN WITH BACKLIGHT SHIELD

LUMENS: 4630
WATTS: 45
MOUNTING HEIGHT: 26'
ARM LENGTH: 6'
ARRANGEMENT: SINGLE
.IES FILE NAME:
RSWS-A-HT-2ME-5L-30K7-UL W-RSW-BLSS_11675461.01.IES

SEE SHEET OH1572.18 FOR BACKLIGHT SHIELD DETAILS AND INSTALLATION

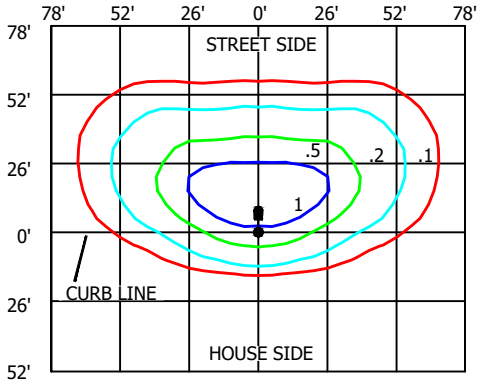

PLOT DRAWN IN FOOTCANDLES

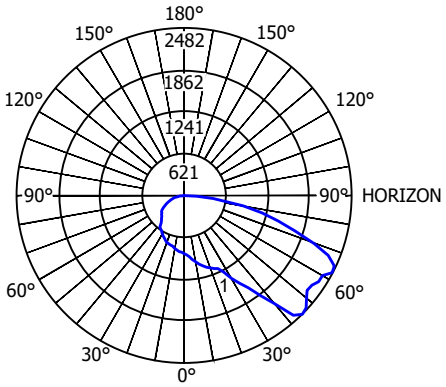

GRAPH RADIUS LINES ARE IN CANDELAS

TABLE OF CONTENTS

ATTENTION: LUMEN OUTPUT "Q" SETTING MUST BE INCLUDED FOR EACH FIXTURE WITHIN THE CONSTRUCTION NOTES FOR EACH LOCATION IN THE JOB PACKAGE.

TABLE 4

Q OPTION SETTING	ACTUAL SYSTEM WATTS	NOMINAL LABEL WATTAGE	LUMEN OUTPUT	LUMEN OUTPUT WITH BACKLIGHT SHIELD	HPSV EQUIVALENT WATTAGE
Q4 (FULL POWER)	45	50	5,000	4,630	100
Q3	41	40	4,654	4,310	70
Q2	36	40	4,105	3,801	50-70
Q1	30	30	3,617	3,350	50-70

© 1998 - 2021 San Diego Gas & Electric Company. All rights reserved. Removal of this copyright notice without permission is not permitted under law.

REV	CHANGE	DR	BY	DSN	APV	DATE	REV	CHANGE	DR	BY	DSN	APV	DATE
C							F						
B							E						
A	ORIGINAL ISSUE	AMP	RSL	JES	CZH	04/28/21	D						

Indicates Latest Revision | Completely Revised | X New Page | Information Removed

ATTENTION: SEE NOTES & REFERENCES PAGE OH1572.19. LUMEN OUTPUT SETTING MUST BE IDENTIFIED FOR THIS FIXTURE INSTALLATION USING TABLE 6 ON NEXT SHEET.

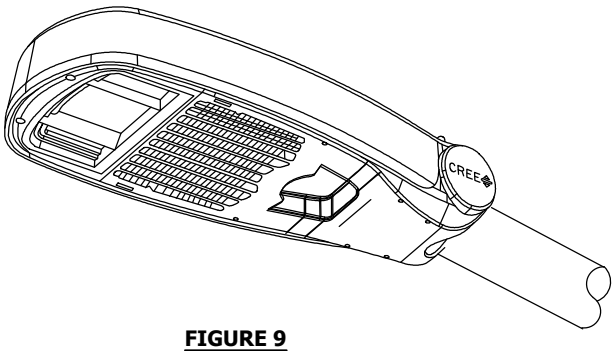

FIGURE 9
ISOMETRIC

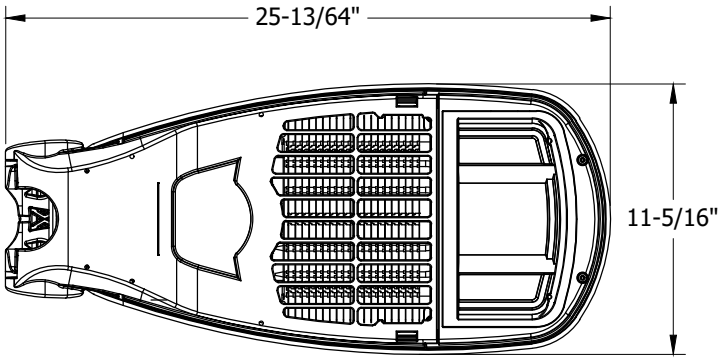

FIGURE 10
BOTTOM

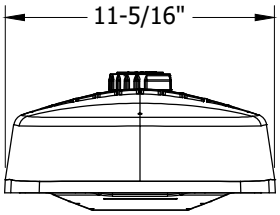

FIGURE 11
FRONT

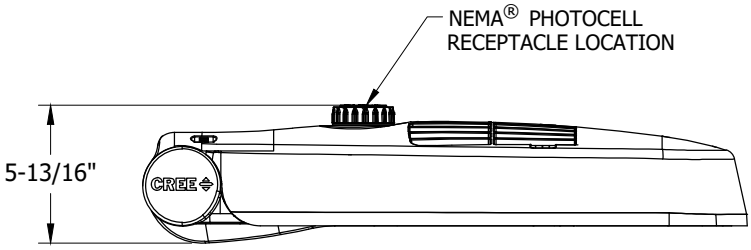

FIGURE 12
SIDE

TABLE OF CONTENTS

TABLE 5

STOCK NUMBER	MANUFACTURER NAME/STYLE	LUMENS PACKAGE	COLOR TEMPERATURE	UNIT WEIGHT	PROJECTED AREA	DISTRIBUTION TYPE	DESIGN UNITS
S473142	CREE / RSW MEDIUM	9000L	3000K	15.6 LBS	SEE LUMINAIRE EPA TABLE	TYPE III MEDIUM	RWM3

LUMINAIRE ESTIMATED PROJECTED AREA (EPA)

HORIZONTAL TENON. CONFIG.	SINGLE	2 @ 90°	2 @ 180°
STANDARD LUMINAIRE (FT^2) (TENON EPA NOT INCLUDED)	0.86	1.24	1.71

© 1998 - 2021 San Diego Gas & Electric Company. All rights reserved. Removal of this copyright notice without permission is not permitted under law.

REV	CHANGE	DR	BY	DSN	APV	DATE	REV	CHANGE	DR	BY	DSN	APV	DATE
C							F						
B							E						
A	ORIGINAL ISSUE	AMP	RSL	JES	CZH	04/28/21	D						

Indicates Latest Revision | Completely Revised | X New Page | Information Removed

PHOTOMETRIC DIAGRAMS

FIXTURE DESIGN WITHOUT BACKLIGHT SHIELD

LUMENS: 9325
WATTS: 83
HT: 30'
ARM LENGTH: 6'
ARRANGEMENT: SINGLE
.IES FILE NAME:
RSWM-A-HT-3ME-9L-30K7-UL-GY-N_12311460.02A.IES

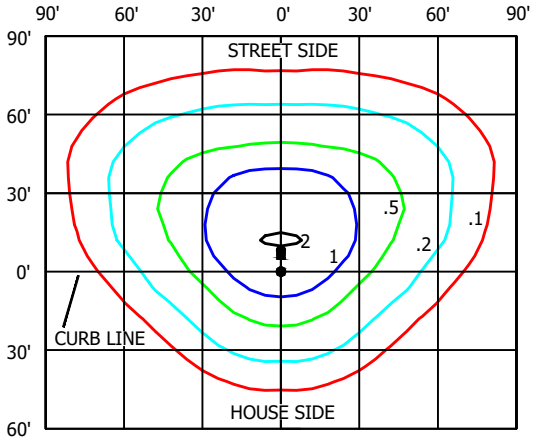

PLOT DRAWN IN FOOTCANDLES

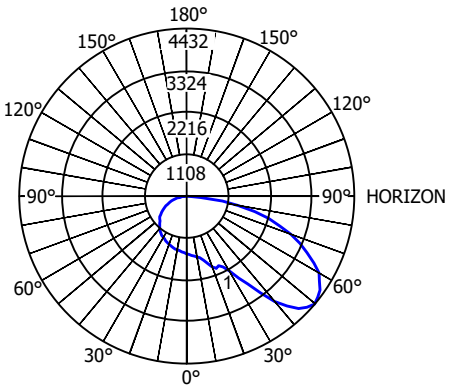

GRAPH RADIUS LINES ARE IN CANDELAS

FIXTURE DESIGN WITH BACKLIGHT SHIELD

LUMENS: 8550
WATTS: 83
MOUNTING HEIGHT: 30'
ARM LENGTH: 6'
ARRANGEMENT: SINGLE
.IES FILE NAME:
RSWM-A-HT-3ME-9L-30K7-UL W_RSW-BLSM_11705478.03.IES

SEE SHEET OH1572.18 FOR BACKLIGHT SHIELD DETAILS AND INSTALLATION

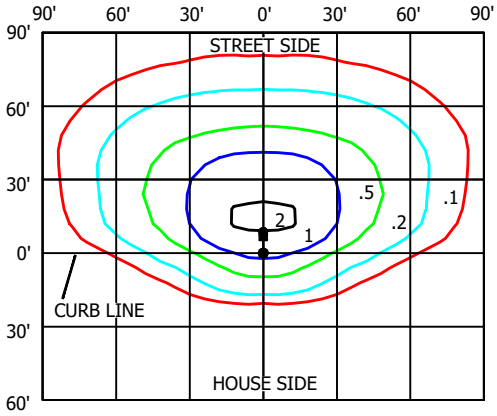

PLOT DRAWN IN FOOTCANDLES

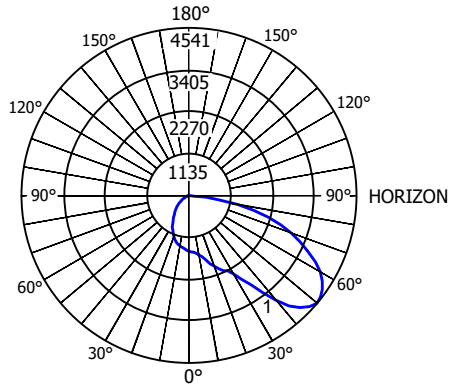

GRAPH RADIUS LINES ARE IN CANDELAS

ATTENTION: LUMEN OUTPUT "Q" SETTING MUST BE INCLUDED FOR EACH FIXTURE WITHIN THE CONSTRUCTION NOTES FOR EACH LOCATION IN THE JOB PACKAGE.

TABLE 6

Q OPTION SETTING	ACTUAL SYSTEM WATTS	NOMINAL LABEL WATTAGE	LUMEN OUTPUT	HPSV EQUIVALENT WATTAGE
Q8 (FULL POWER)	83	80	9,325	150
Q7	81	80	9,100	150
Q6	75	80	8,975	150
Q5	69	70	8,325	150
Q4	65	70	7,750	100-150
Q3	61	60	7,300	100
Q2	60	60	7,000	100
Q1	50	50	6,500	100

© 1998 - 2021 San Diego Gas & Electric Company. All rights reserved. Removal of this copyright notice without permission is not permitted under law.

REV	CHANGE	DR	BY	DSN	APV	DATE	REV	CHANGE	DR	BY	DSN	APV	DATE
C							F						
B							E						
A	ORIGINAL ISSUE	AMP	RSL	JES	CZH	04/28/21	D						

Indicates Latest Revision | Completely Revised | X New Page | Information Removed

SDG&E ELECTRIC OVERHEAD CONSTRUCTION STANDARDS

CREE RSW ROADWAY LIGHTING
9KL FIXTURE

OH1572.11
UG4472.11

TABLE OF CONTENTS

ATTENTION: SEE NOTES & REFERENCES PAGE OH1572.19. LUMEN OUTPUT SETTING MUST BE IDENTIFIED FOR THIS FIXTURE INSTALLATION USING TABLE 8 ON NEXT SHEET.

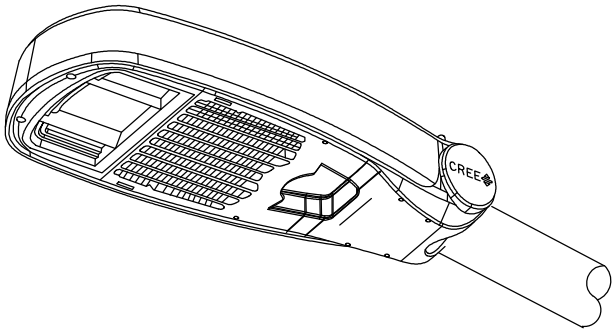

FIGURE 13
ISOMETRIC

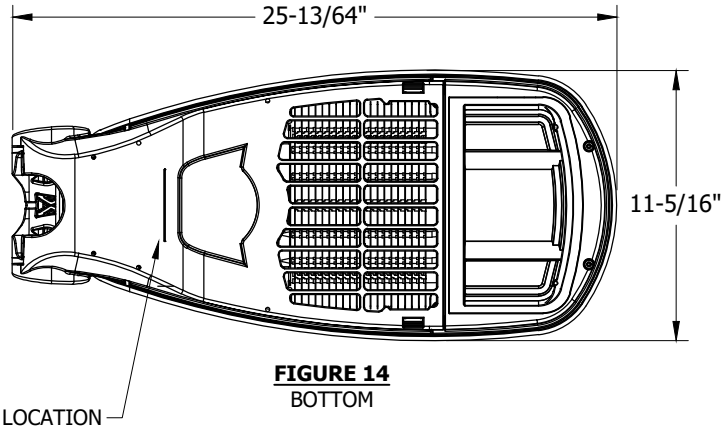

FIGURE 14
BOTTOM

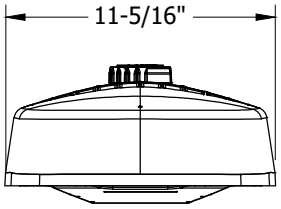

FIGURE 15
FRONT

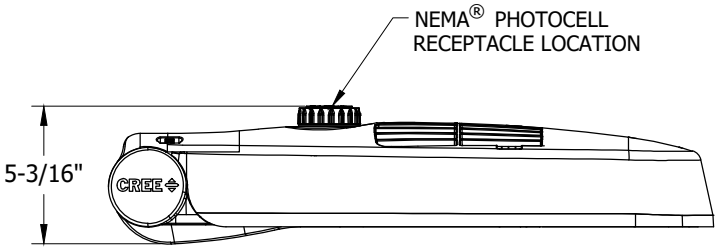

FIGURE 16
SIDE

TABLE 7

STOCK NUMBER	MANUFACTURER NAME/STYLE	LUMENS PACKAGE	COLOR TEMPERATURE	UNIT WEIGHT	PROJECTED AREA	DISTRIBUTION TYPE	DESIGN UNITS
S473150	CREE / RSW MEDIUM	9000L	3000K	15.6 LBS	SEE LUMINAIRE EPA TABLE	TYPE II MEDIUM	RWM2

LUMINAIRE ESTIMATED PROJECTED AREA (EPA)

HORIZONTAL TENON. CONFIG.	SINGLE	2 @ 90°	2 @ 180°
STANDARD LUMINAIRE (FT^2) (TENON EPA NOT INCLUDED)	0.86	1.24	1.71

© 1998 - 2021 San Diego Gas & Electric Company. All rights reserved. Removal of this copyright notice without permission is not permitted under law.

REV	CHANGE	DR	BY	DSN	APV	DATE	REV	CHANGE	DR	BY	DSN	APV	DATE
C							F						
B							E						
A	ORIGINAL ISSUE	AMP	RSL	JES	CZH	04/28/21	D						

Indicates Latest Revision | Completely Revised | X New Page | Information Removed

TABLE OF CONTENTS

PHOTOMETRIC DIAGRAMS

FIXTURE DESIGN WITHOUT BACKLIGHT SHIELD

LUMENS: 9325
WATTS: 83
HT: 30'
ARM LENGTH: 6'
ARRANGEMENT: SINGLE
.IES FILE NAME:
RSWM-A-HT-2ME-9L-30K7-UL-GY-N_12311460.05A.IES

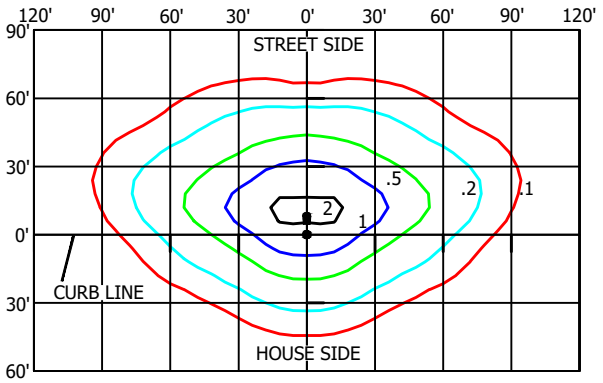

PLOT DRAWN IN FOOTCANDLES

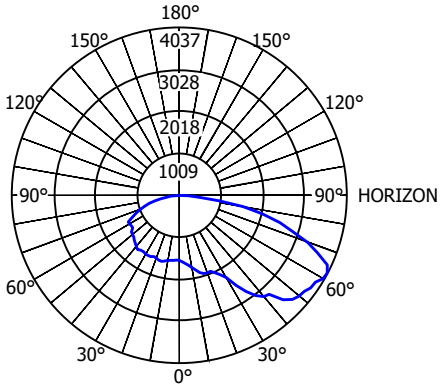

GRAPH RADIUS LINES ARE IN CANDELAS

FIXTURE DESIGN WITH BACKLIGHT SHIELD

LUMENS: 8550
WATTS: 83
MOUNTING HEIGHT: 30'
ARM LENGTH: 6'
ARRANGEMENT: SINGLE
.IES FILE NAME:
RSWM-A-HT-2ME-9L-30K7-UL W-RSW-BLSM_11705478.01.IES

SEE SHEET OH1572.18 FOR BACKLIGHT SHIELD DETAILS AND INSTALLATION

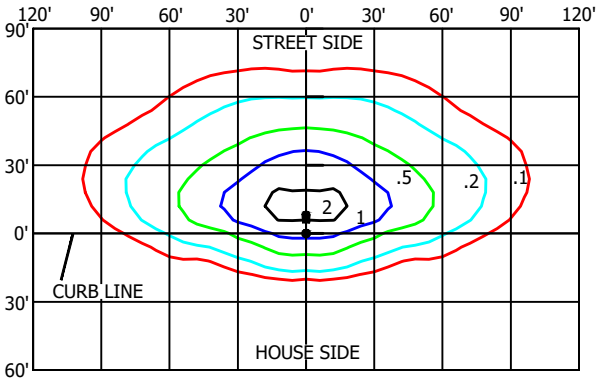

PLOT DRAWN IN FOOTCANDLES

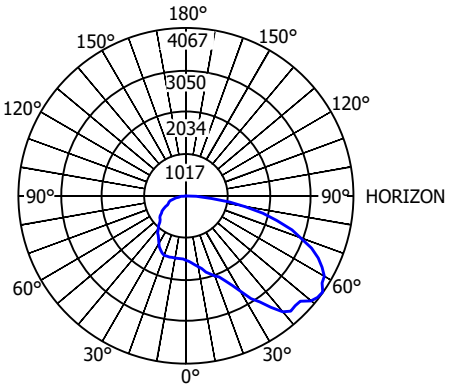

GRAPH RADIUS LINES ARE IN CANDELAS

TABLE OF CONTENTS

ATTENTION: LUMEN OUTPUT "Q" SETTING MUST BE INCLUDED FOR EACH FIXTURE WITHIN THE CONSTRUCTION NOTES FOR EACH LOCATION IN THE JOB PACKAGE.

TABLE 8

Q OPTION SETTING	ACTUAL SYSTEM WATTS	NOMINAL LABEL WATTAGE	LUMEN OUTPUT	LUMEN OUTPUT WITH BACKLIGHT SHIELD	HPSV EQUIVALENT WATTAGE
Q8 (FULL POWER)	83	80	9,325	8,550	150
Q7	81	80	9,100	8,350	150
Q6	75	80	8,975	8,250	150
Q5	69	70	8,325	7,650	150
Q4	65	70	7,750	7,125	100-150
Q3	61	60	7,300	6,700	100
Q2	60	60	7,000	6,425	100
Q1	50	50	6,500	5,975	100

© 1998 - 2021 San Diego Gas & Electric Company. All rights reserved. Removal of this copyright notice without permission is not permitted under law.

REV	CHANGE	DR	BY	DSN	APV	DATE	REV	CHANGE	DR	BY	DSN	APV	DATE
C							F						
B							E						
A	ORIGINAL ISSUE	AMP	RSL	JES	CZH	04/28/21	D						

Indicates Latest Revision | Completely Revised | X New Page | Information Removed

SDG&E ELECTRIC OVERHEAD CONSTRUCTION STANDARDS

CREE RSW ROADWAY LIGHTING
9KL FIXTURE

OH1572.13
UG4472.13

ATTENTION: SEE NOTES & REFERENCES PAGE OH1572.19. LUMEN OUTPUT SETTING MUST BE IDENTIFIED FOR THIS FIXTURE INSTALLATION USING TABLE 10 ON NEXT SHEET.

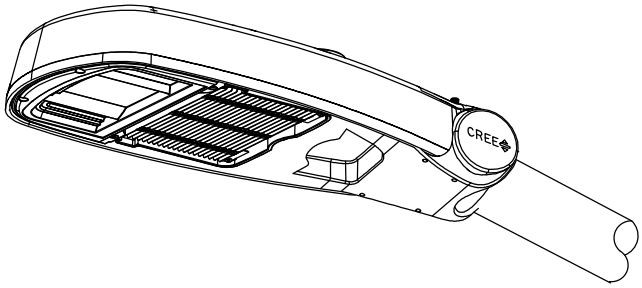

FIGURE 17
ISOMETRIC

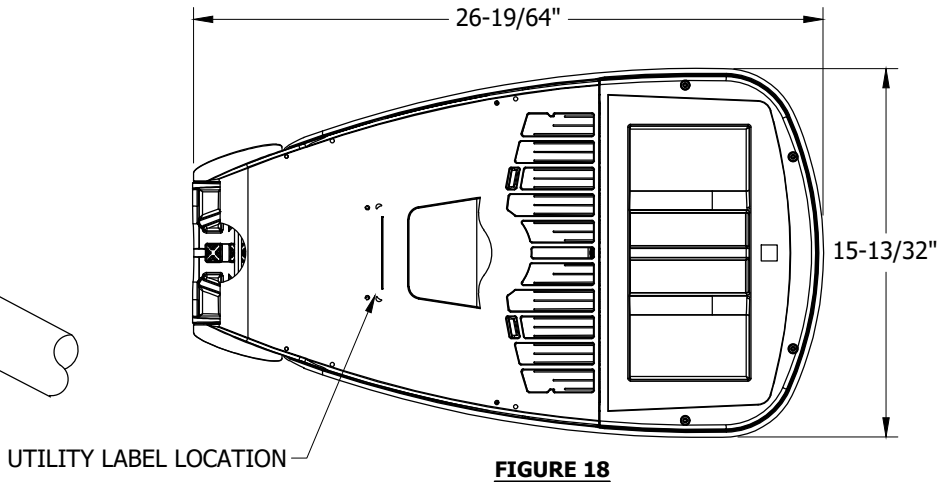

FIGURE 18
SIDE

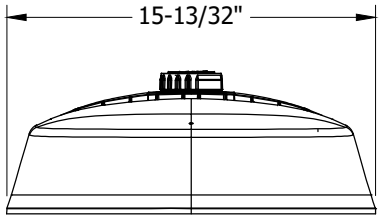

FIGURE 19
FRONT

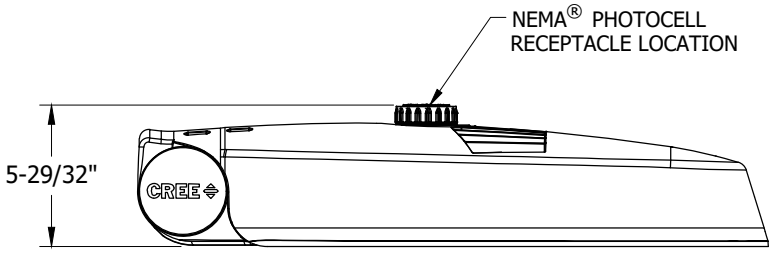

FIGURE 20
BOTTOM

TABLE OF CONTENTS

TABLE 9

STOCK NUMBER	MANUFACTURER NAME/STYLE	LUMENS PACKAGE	COLOR TEMPERATURE	UNIT WEIGHT	PROJECTED AREA	DISTRIBUTION TYPE	DESIGN UNITS
S473144	CREE / RSW LARGE	14000L	3000K	20.2 LBS	SEE LUMINAIRE EPA TABLE	TYPE III MEDIUM	RWL3

LUMINAIRE ESTIMATED PROJECTED AREA (EPA)

HORIZONTAL TENON. CONFIG.	SINGLE	2 @ 90°	2 @ 180°
STANDARD LUMINAIRE (FT^2) (TENON EPA NOT INCLUDED)	1.00	1.55	2.00

© 1998 - 2021 San Diego Gas & Electric Company. All rights reserved. Removal of this copyright notice without permission is not permitted under law.

REV	CHANGE	DR	BY	DSN	APV	DATE	REV	CHANGE	DR	BY	DSN	APV	DATE
C							F						
B							E						
A	ORIGINAL ISSUE	AMP	RSL	JES	CZH	04/28/21	D						

Indicates Latest Revision | Completely Revised | X New Page | Information Removed

PHOTOMETRIC DIAGRAMS

FIXTURE DESIGN WITHOUT BACKLIGHT SHIELD

LUMENS: 14575
WATTS: 136
HT: 30'
ARM LENGTH: 6'
ARRANGEMENT: SINGLE
.IES FILE NAME:
RSWL-A-H-T-3ME-14L-30K7-UL-GY-N_12081584.04A.IES

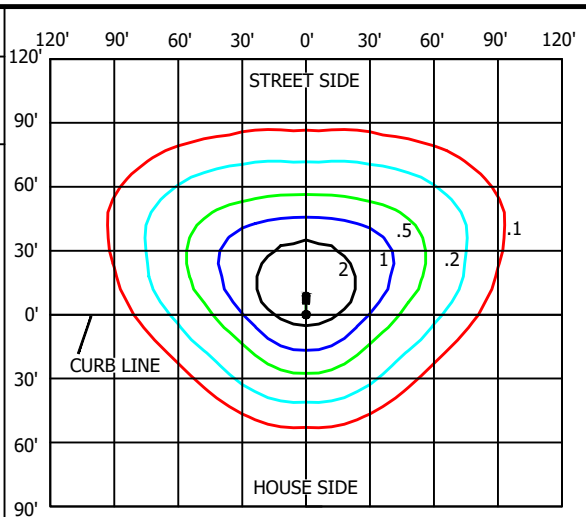

PLOT DRAWN IN FOOTCANDLES

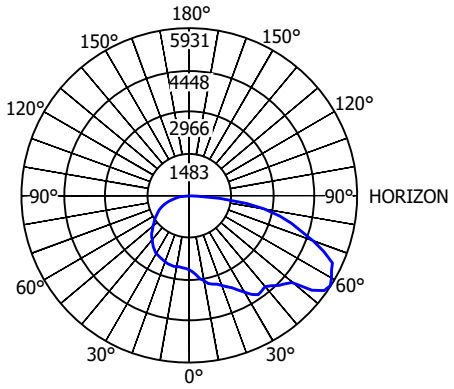

GRAPH RADIUS LINES ARE IN CANDELAS

FIXTURE DESIGN WITH BACKLIGHT SHIELD

LUMENS: 12875
WATTS: 136
MOUNTING HEIGHT: 30'
ARM LENGTH: 6'
ARRANGEMENT: SINGLE
.IES FILE NAME:
RSWL-A-HT-3ME-14L-30K7-UL-GY-N W RSW-BLSL_12081584.07A.IES

SEE SHEET OH1572.18 FOR BACKLIGHT SHIELD DETAILS AND INSTALLATION

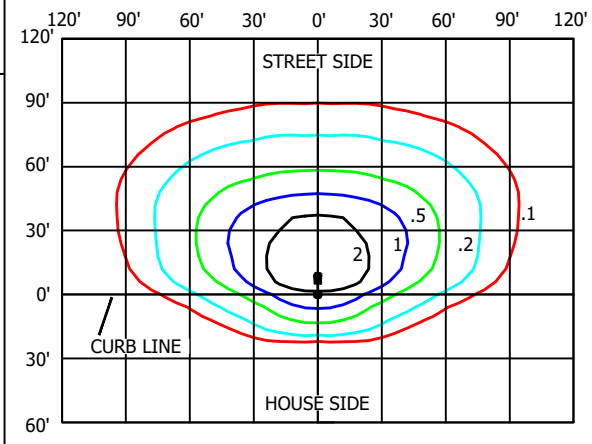

PLOT DRAWN IN FOOTCANDLES

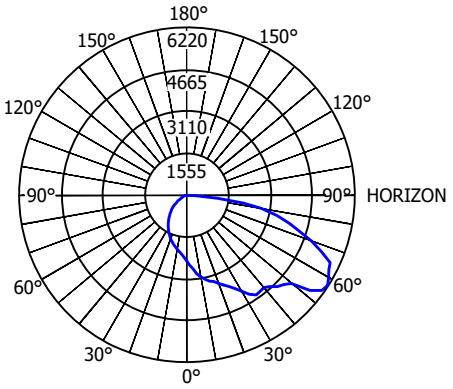

GRAPH RADIUS LINES ARE IN CANDELAS

TABLE OF CONTENTS

ATTENTION: LUMEN OUTPUT "Q" SETTING MUST BE INCLUDED FOR EACH FIXTURE WITHIN THE CONSTRUCTION NOTES FOR EACH LOCATION IN THE JOB PACKAGE.

TABLE 10

Q OPTION SETTING	ACTUAL SYSTEM WATTS	NOMINAL LABEL WATTAGE	LUMEN OUTPUT	LUMEN OUTPUT WITH BACKLIGHT SHIELD	HPSV EQUIVALENT WATTAGE
Q9 (FULL POWER)	136	140	14,575	12,875	250
Q8	133	130	14,425	12,725	250
Q7	126	130	13,850	12,225	250
Q6	120	120	13,400	11,825	150-250
Q5	110	110	12,375	10,925	150-250
Q4	102	100	11,575	10,225	150
Q3	90	90	10,500	9,275	150
Q2	81	80	9,250	8,175	100-150
Q1	70	70	8,350	7,375	100-150

© 1998 - 2021 San Diego Gas & Electric Company. All rights reserved. Removal of this copyright notice without permission is not permitted under law.

REV	CHANGE	DR	BY	DSN	APV	DATE	REV	CHANGE	DR	BY	DSN	APV	DATE
C							F						
B							E						
A	ORIGINAL ISSUE	AMP	RSL	JES	CZH	04/28/21	D						

Indicates Latest Revision | Completely Revised | X New Page | Information Removed

SDG&E ELECTRIC OVERHEAD CONSTRUCTION STANDARDS

CREE RSW ROADWAY LIGHTING
14KL FIXTURE

OH1572.15
UG4472.15

ATTENTION: SEE NOTES & REFERENCES PAGE OH1572.19. LUMEN OUTPUT SETTING MUST BE IDENTIFIED FOR THIS FIXTURE INSTALLATION USING TABLE 12 ON NEXT SHEET.

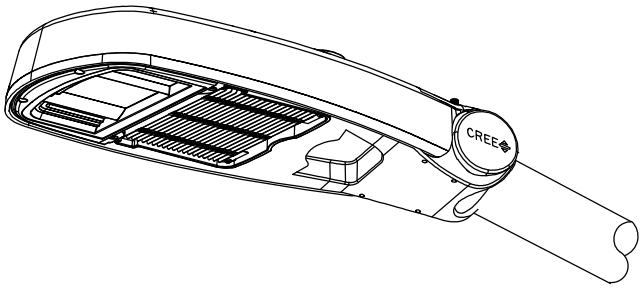

FIGURE 21
ISOMETRIC

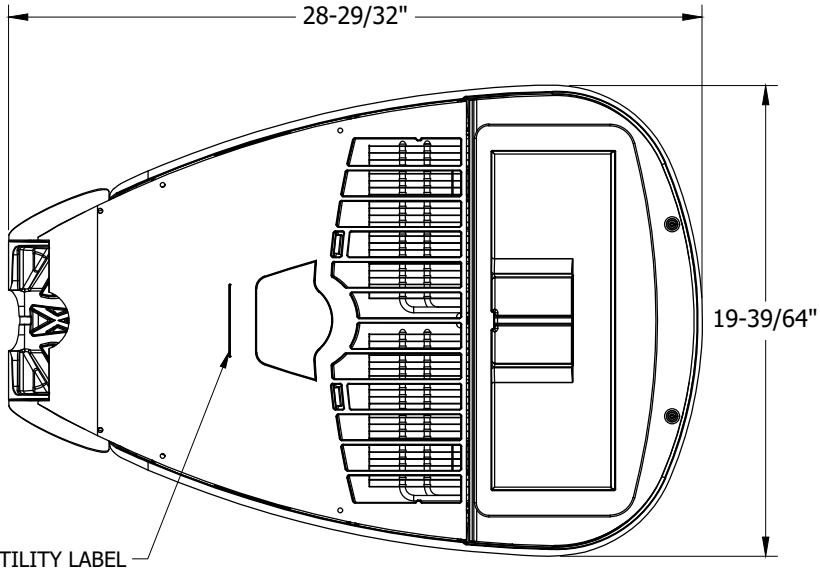

FIGURE 22
BOTTOM

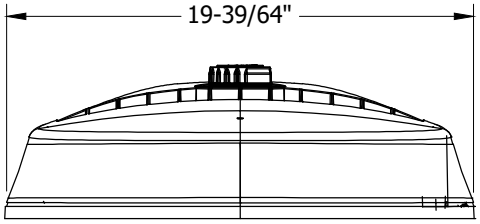

FIGURE 23
FRONT

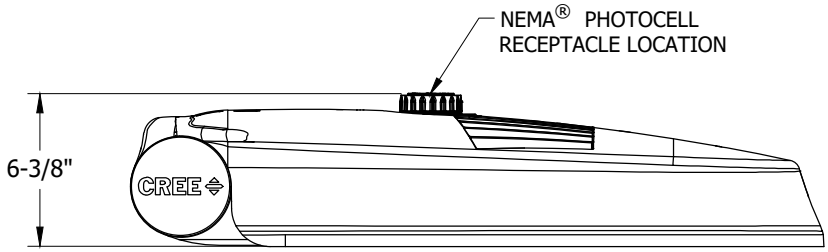

FIGURE 24
SIDE

TABLE OF CONTENTS

TABLE 11

STOCK NUMBER	MANUFACTURER NAME/STYLE	LUMENS PACKAGE	COLOR TEMPERATURE	UNIT WEIGHT	PROJECTED AREA	DISTRIBUTION TYPE	DESIGN UNITS
S473146	CREE / RSW EXTRA LARGE	24000L	3000K	28.8 LBS	SEE LUMINAIRE EPA TABLE	TYPE III MEDIUM	RWX3

LUMINAIRE ESTIMATED PROJECTED AREA (EPA)

HORIZONTAL TENON. CONFIG.	SINGLE	2 @ 90°	2 @ 180°
STANDARD LUMINAIRE (FT^2) (TENON EPA NOT INCLUDED)	1.17	1.93	2.33

© 1998 - 2021 San Diego Gas & Electric Company. All rights reserved. Removal of this copyright notice without permission is not permitted under law.

REV	CHANGE	DR	BY	DSN	APV	DATE	REV	CHANGE	DR	BY	DSN	APV	DATE
C							F						
B							E						
A	ORIGINAL ISSUE	AMP	RSL	JES	CZH	04/28/21	D						

Indicates Latest Revision | Completely Revised | X New Page | Information Removed

SDG&E ELECTRIC OVERHEAD CONSTRUCTION STANDARDS

CREE RSW ROADWAY LIGHTING
24KL FIXTURE

OH1572.16
UG4472.16

PHOTOMETRIC DIAGRAMS

FIXTURE DESIGN WITHOUT BACKLIGHT SHIELD

LUMENS: 23800
WATTS: 223
HT: 35'
ARM LENGTH: 6'
ARRANGEMENT: SINGLE
.IES FILE NAME:
RSWX-A-HT-3ME-24L-30K7-UL-GY-N_11983868.04.IES

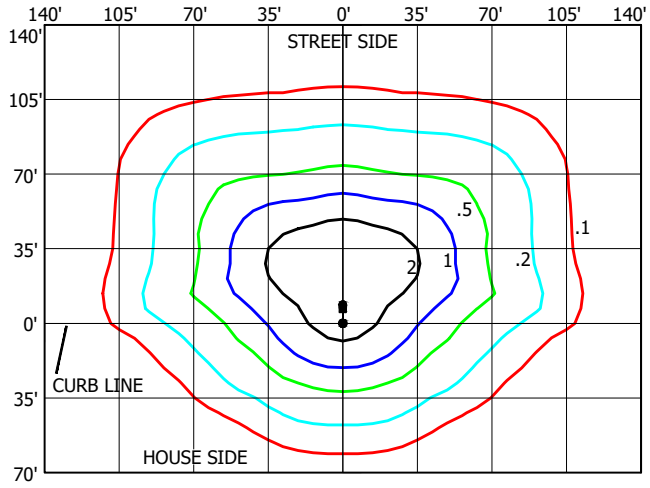

PLOT DRAWN IN FOOTCANDLES

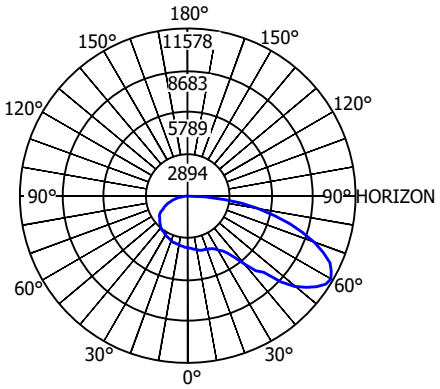

GRAPH RADIUS LINES ARE IN CANDELAS

THIS SPACE INTENTIONALLY LEFT BLANK - NO BACKLIGHT SHIELD AVAILABLE FOR THIS FIXTURE

TABLE OF CONTENTS

ATTENTION: LUMEN OUTPUT "Q" SETTING MUST BE INCLUDED FOR EACH FIXTURE WITHIN THE CONSTRUCTION NOTES FOR EACH LOCATION IN THE JOB PACKAGE.

TABLE 12

Q OPTION SETTING	ACTUAL SYSTEM WATTS	NOMINAL LABEL WATTAGE	LUMEN OUTPUT	LUMEN OUTPUT WITH BACKLIGHT SHIELD	HPSV EQUIVALENT WATTAGE
Q9 (FULL POWER)	223	220	23,800	22,800	400
Q8	212	210	22,800	21,800	400
Q7	200	200	21,700	20,800	400
Q6	191	190	20,900	20,000	250-400
Q5	172	170	19,100	18,300	250-400
Q4	156	160	17,800	17,100	250-400
Q3	138	140	15,900	15,300	250
Q2	121	120	14,350	13,725	250
Q1	107	110	12,875	12,325	150-250

© 1998 - 2021 San Diego Gas & Electric Company. All rights reserved. Removal of this copyright notice without permission is not permitted under law.

REV	CHANGE	DR	BY	DSN	APV	DATE	REV	CHANGE	DR	BY	DSN	APV	DATE
C							F						
B							E						
A	ORIGINAL ISSUE	AMP	RSL	JES	CZH	04/28/21	D						

Indicates Latest Revision | Completely Revised | X New Page | Information Removed

SDG&E ELECTRIC OVERHEAD CONSTRUCTION STANDARDS

CREE RSW ROADWAY LIGHTING
24KL FIXTURE

OH1572.17
UG4472.17

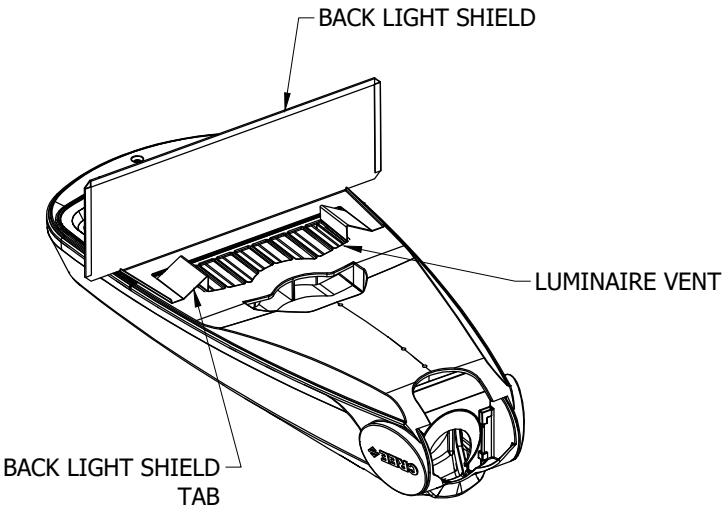

FIGURE 25
ISOMETRIC

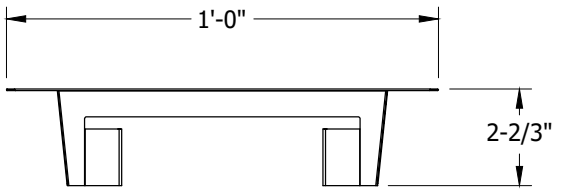

FIGURE 26
TOP VIEW

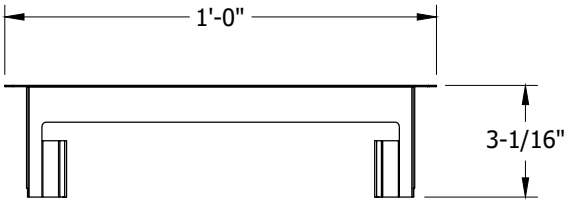

FIGURE 27
TOP VIEW

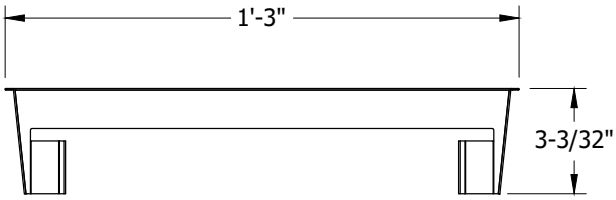

FIGURE 28
TOP VIEW

TABLE 13

RSW LED BACK LIGHT SHIELD				
STOCK NUMBERS	**DESCRIPTION**	**FIGURE**	**FIXTURE TYPE COMPATIBILITY BY STOCK NUMBER**	**DESIGN UNITS**
S643018	RSW, BACK LIGHT SHIELD, SMALL	26	S473138, S472140	RWBSS
S643020	RSW, BACK LIGHT SHIELD, MEDIUM	27	S473142, S473150	RWBSM
S643022	RSW, BACK LIGHT SHIELD, LARGE	28	S473144	RWBSL

© 1998 - 2021 San Diego Gas & Electric Company. All rights reserved. Removal of this copyright notice without permission is not permitted under law.

REV	CHANGE	DR	BY	DSN	APV	DATE	REV	CHANGE	DR	BY	DSN	APV	DATE
C							F						
B							E						
A	ORIGINAL ISSUE	AMP	RSL	JES	CZH	04/28/21	D						

Indicates Latest Revision | Completely Revised [X] | New Page | Information Removed

TABLE OF CONTENTS

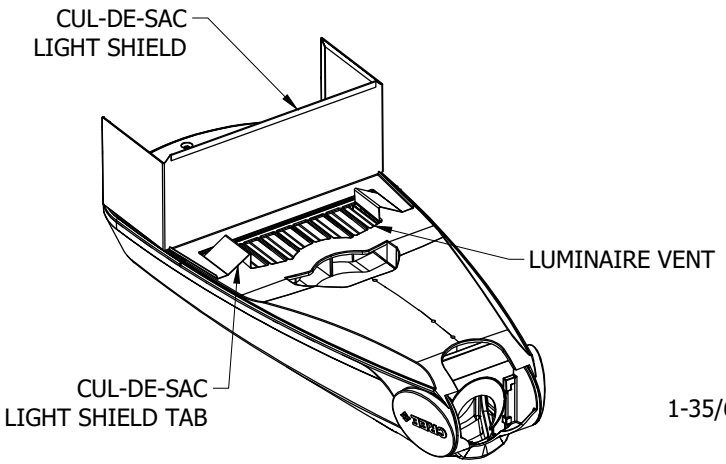

FIGURE 29
ISOMETRIC

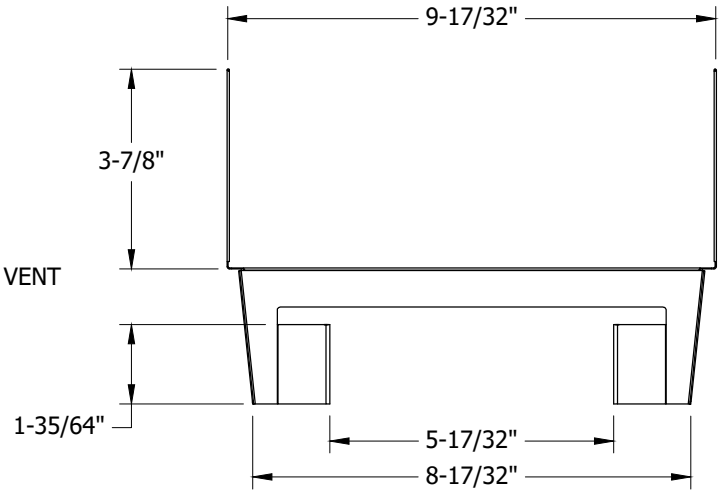

FIGURE 30
TOP VIEW

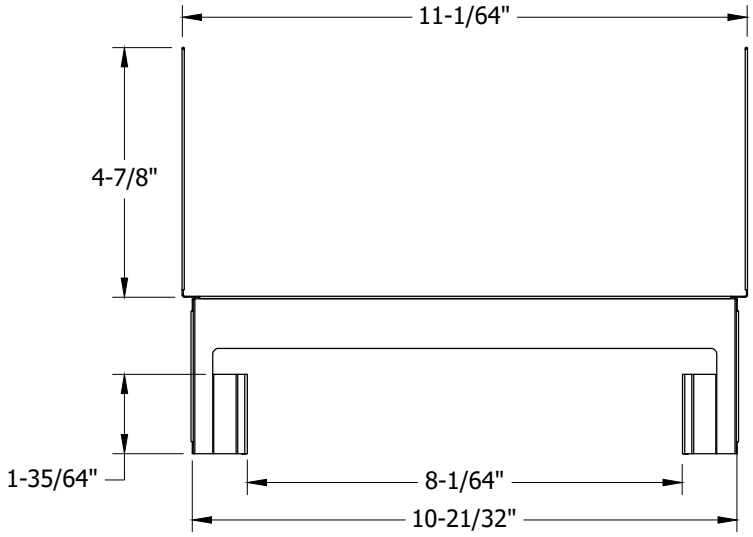

FIGURE 31
TOP VIEW

TABLE 14

RSW CUL-DE-SAC LIGHT SHIELD				
STOCK NUMBERS	**DESCRIPTION**	**FIGURE**	**FIXTURE TYPE COMPATIBILITY BY STOCK NUMBER**	**DESIGN UNITS**
S643024	RSW, CUL-DE-SAC LIGHT SHIELD, SMALL	30	S473138, S472140	RWCSS
S643026	RSW, CUL-DE-SAC LIGHT SHIELD, MEDIUM	31	S473142, S473150	RWCSM

© 1998 - 2021 San Diego Gas & Electric Company. All rights reserved. Removal of this copyright notice without permission is not permitted under law.

REV	CHANGE	DR	BY	DSN	APV	DATE	REV	CHANGE	DR	BY	DSN	APV	DATE
C							F						
B							E						
A	ORIGINAL ISSUE	AMP	RSL	JES	CZH	04/28/21	D						

Indicates Latest Revision | Completely Revised | X New Page | Information Removed

TABLE OF CONTENTS

INTSALLATION

A. CUL-DE-SAC AND BACK LIGHT SHIELDS

1. INSERT ONE OF THE TABS ON THE LIGHT SHIELD INTO THE FIRST SLOT IN THE LUMINAIRE VENT BY PRESSING THE TAB DOWN INTO THE SLOT. SEE FIGURES 25 AND 29 FOR BACK LIGHT OR CUL-DE-SAC LIGHT SHIELD VARIATIONS RESPECTIVELY.
2. INSERT THE OTHER LIGHT SHIELD TAB INTO THE LAST SLOT ON THE LUMINAIRE VENT BY PRESSING THE TAB DOWN INTO THE SLOT. SEE FIGURES 25 AND 29 FOR BACK LIGHT OR CUL-DE-SAC LIGHT SHIELD VARIATIONS RESPECTIVELY.

BILL OF MATERIALS: NONE

NOTES:

I. REFER TO SPECIFIC PRODUCT INSTALLATION MANUALS PROVIDED WITH ITEM FOR COMPLETE SAFETY AND INSTALLATION INSTRUCTIONS.

REFERENCES:

a. SEE OVERHEAD CONSTRUCTION STANDARD 1570 FOR OVERHEAD LIGHTING INSTALLATION.
b. SEE UNDERGROUND CONSTRUCTION STANDARD 4431 FOR UNDERGROUND LIGHTING INSTALLATION.
c. SEE OVERHEAD CONSTRUCTION STANDARD 1512 FOR PHOTOELECTRIC CONTROLS AVAILABLE.

TABLE OF CONTENTS

© 1998 - 2021 San Diego Gas & Electric Company. All rights reserved. Removal of this copyright notice without permission is not permitted under law.

REV	CHANGE	DR	BY	DSN	APV	DATE	REV	CHANGE	DR	BY	DSN	APV	DATE
C							F						
B							E						
A	ORIGINAL ISSUE	AMP	RSL	JES	CZH	04/28/21	D						

	Indicates Latest Revision		Completely Revised	X	New Page		Information Removed

SDG&E ELECTRIC OVERHEAD CONSTRUCTION STANDARDS

CREE RSW ROADWAY LIGHTING
FIXTURES - LIGHT SHIELDS

OH1572.20
UG4472.20

SCOPE: THIS STANDARD SHOWS ACUITY BRANDS ATB TYPE LED LIGHT FIXTURES USED TO PROVIDE ROADWAY LIGHTING.

TABLE 1

ACUITY LED FIXTURE INDEX							
DESCRIPTION	**DESIGN UNIT**	**MOUNTING HEIGHT** (II) (III) (A)	**MAXIMUM SYSTEM WATTAGE**	**STANDARD PAGE**	**STOCK NUMBER**	**FIGURE DETAIL**	**HPSV/LPSV EQUIVALENT STOCK NUMBERS** (a) (b)
7KL ATBX TYPE II	ATBX	26'	60	OH1573.5	S473434	1	S473800, S473400, S473802, S473402
11KL ATBS TYPE III	ATBS	30'	82	OH1573.7	S473438	2	S473404, S473804, S473406, S473806
20KL ATBM TYPE III	ATBM	35'	190	OH1573.9	S473440	3	S473410, S473408

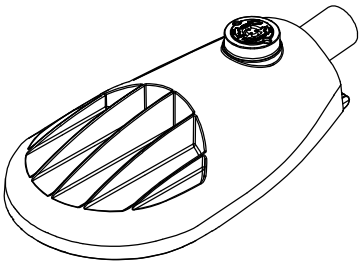

FIGURE 1
ATBX

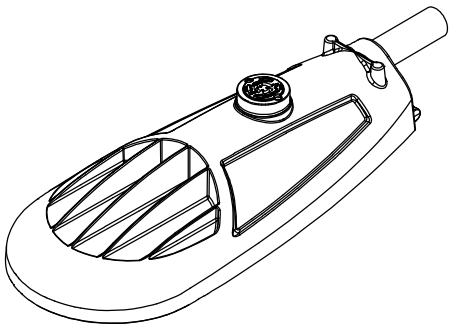

FIGURE 2
ATBS

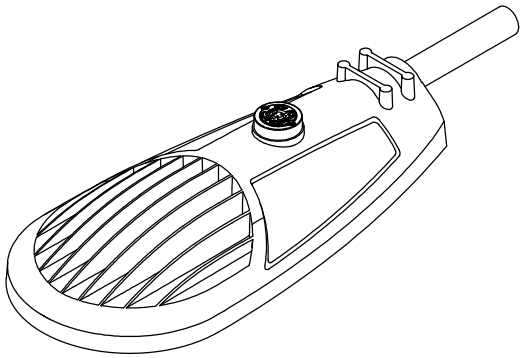

FIGURE 3
ATBM

TABLE OF CONTENTS

© 1998 - 2021 San Diego Gas & Electric Company. All rights reserved. Removal of this copyright notice without permission is not permitted under law.

REV	CHANGE	DR	BY	DSN	APV	DATE	REV	CHANGE	DR	BY	DSN	APV	DATE
C							F						
B							E						
A	ORIGINAL ISSUE	AMP	ADW	JES	CZH	12/13/21	D						

Indicates Latest Revision | Completely Revised X | New Page | Information Removed

SDG&E ELECTRIC OVERHEAD CONSTRUCTION STANDARDS

ROADWAY LED LIGHTING FIXTURES
ACUITY BRANDS MANUFACTURER INDEX

OH1573.1
UG4473.1

ATTENTION: INSTALLATION FOR ATB TYPE LED FIXTURES

INSTALLATION:

(A) HPSV/LPSV CONVERSION TO LED: REMOVE AND REPLACE ENTIRE HPSV/LPSV STREET LIGHTING FIXTURE AND BALLAST AND REPLACE WITH EQUIVALENT LED FIXTURE SHOWN IN TABLE 1. FOR OVERHEAD FEED CONVERSIONS, MOUNT THE REPLACEMENT LED FIXTURE AT THE EXISTING FIXTURE HEIGHT OR HIGHER WHILE MAINTAINING REQUIRED CLEARANCES TO OTHER FACILITIES PER OH1509.

B. MECHANICAL INSTALLATION OF FIXTURE

1. DETERMINE THE SIZE OF THE MAST ARM**.** THIS LUMINAIRE IS DESIGNED TO ACCOMMODATE A MAST ARM FROM 1-1/4 INCH TO 2 INCH DIAMETER.

2. THE LUMINAIRE IS FACTORY SET TO MOUNT TO THE 1-1/4 INCH ARM. TO MOUNT TO A 2 INCH ARM, THE V-SHAPED BRACKET MUST BE FLIPPED. REMOVE THE FITTER BOLTS AND FLIP THE BRACKET.

3. THE REAR OPENING MUST BE ENLARGED FOR ATBS AND ATBM FIXTURE TYPES. KNOCKOUTS ARE CAST AROUND THE REAR OPENING FOR THIS PURPOSE. TO REMOVE THIS EXCESS MATERIAL, STRIKE WITH A HAMMER OR GRASP WITH PLIERS AND BREAK OFF.

4. LOOSEN (DO NOT REMOVE) THE FITTER BOLTS. LIFT THE LUMINAIRE INTO POSITION IN FRONT OF THE MAST ARM SUCH THAT THE MAST ARM ENTERS THROUGH THE OPENING AT THE REAR OF THE LUMINAIRE HOUSING. THE LUMINAIRE SHOULD BE MOUNTED WITH THE PLASTIC LENS FACING DOWN. THE LUMINAIRE TILT ANGLE MAY BE ADJUSTED BY THE ADJUSTMENT STEPS LOCATED IN THE REAR OF THE HOUSING. TIGHTEN THE FITTER BOLTS TO THE VALUES SPECIFIED IN MANUFACTURER INSTALLATION GUIDE. DO NOT OVER TIGHTEN BOLTS.

5. **PHOTOELECTRIC CONTROL:** PLUG THE PHOTOCONTROL INTO THE RECEPTACLE ENSURING GASKET IS FIRMLY SEATED. TWIST CLOCKWISE UNTIL IT LOCKS INTO POSITION. IF PHOTOCONTROL RECEPTACLE ROTATION IS REQUIRED, LOOSEN THE TWO PHILIPS HEAD RECEPTACLE SCREWS COMPLETELY. ROTATE 90°, 180° OR 270°, THEN RE-TIGHTEN SCREWS UNTIL SNUG, USING 20-25 IN-LBS OF TORQUE.

TABLE OF CONTENTS

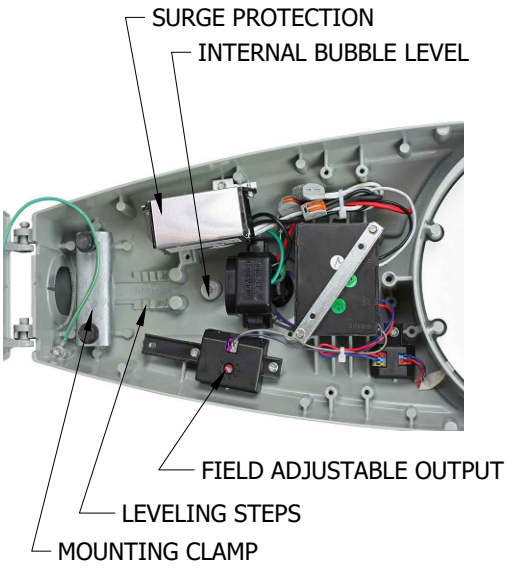

FIGURE 4
INTERNAL VIEW

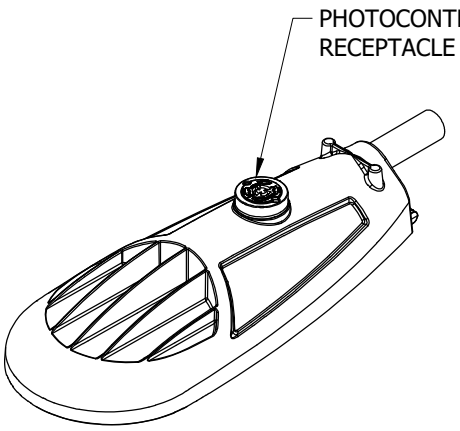

FIGURE 5
TOP VIEW



FIGURE 6
BOTTOM VIEW

© 1998 - 2021 San Diego Gas & Electric Company. All rights reserved. Removal of this copyright notice without permission is not permitted under law.

REV	CHANGE	DR	BY	DSN	APV	DATE	REV	CHANGE	DR	BY	DSN	APV	DATE
C							F						
B							E						
A	ORIGINAL ISSUE	AMP	ADW	JES	CZH	12/13/21	D						

Indicates Latest Revision | Completely Revised X | New Page | Information Removed

SDG&E ELECTRIC OVERHEAD CONSTRUCTION STANDARDS

ROADWAY LED LIGHTING FIXTURES
INSTALLATION

OH1573.2
UG4473.2

C. ELECTRICAL CONNECTIONS OF FIXTURE

1. PULL UP THE TERMINAL BLOCK COVER.

2. FEED THE SUPPLY WIRES THROUGH THE MAST ARM, DRESS THEM SO THEY DO NOT INTERFERE WITH ANY COMPONENTS AND SO THEY WILL NOT BE PINCHED IN THE DOOR, AND CONNECT THEM TO THE PROPER TERMINALS ON THE TERMINAL BLOCK.

3. VERIFY THE SUPPLY VOLTAGE IS CORRECT AS NOTED ON THE NAMEPLATE LABEL.

4. ATTACH SERVICE LEADS TO TERMINAL BLOCK AS SHOWN ON THE WIRING SCHEMATIC. SEE DIAGRAM 1.

5. PUSH DOWN THE TERMINAL BLOCK COVER TO KEEP TERMINALS COVERED. TIGHTEN THE TERMINAL BLOCK SCREW TO THE VALUES SPECIFIED IN MANUFACTURER INSTALLATION GUIDE. DO NOT OVER TIGHTEN SCREW.

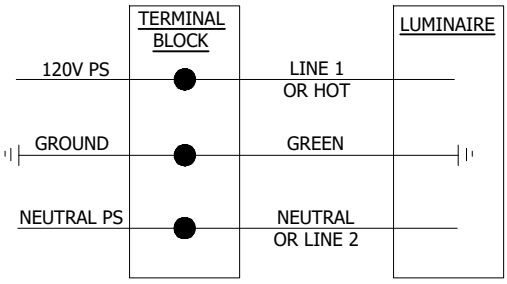

DIAGRAM 1
WIRING SCHEMATIC

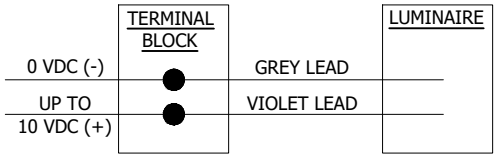

DIAGRAM 2
DIMMING CONTROL SCHEMATIC

D. MODIFYING FIELD ADJUSTABLE OUTPUT (FAO) SETTINGS OF FIXTURE

1. THE FIELD ADJUSTABLE OUTPUT MODULE IS LOCATED INSIDE THE FIXTURE. OPEN THE COVER BY REMOVING THE WINGNUT AND ALLOW COVER TO SWING OPEN.

2. ESTABLISH THE DESIRED POWER OR LUMEN SETTING BY TURNING THE SWITCH TO THE POSITION DEFINED BY THE POWER LEVEL INCLUDED WITH THE DESIGN PACKAGE. REFER TO THE MANUFACTURER SPECIFICATIONS AND THE FIELD ADJUSTABLE SETTINGS TABLES INCLUDED WITHIN THIS STANDARD FOR EACH FIXTURE. SEE FIGURE 7 FOR ADJUSTMENT SWITCH DETAILS .

3. CLOSE THE COVER ENSURING NO WIRES ARE PINCHED AND SCREW IN WINGNUT. APPLY A WATTAGE LABEL THAT INDICATES THE ADJUSTED FIXTURE POWER SETTING.

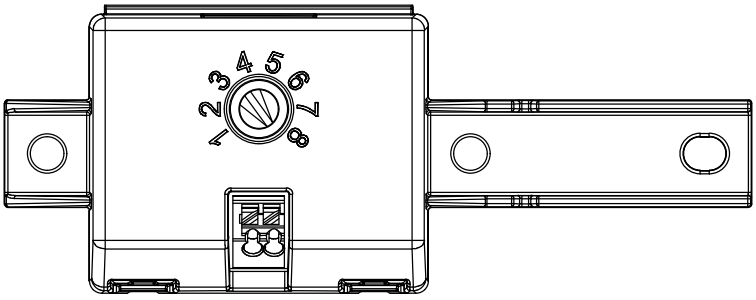

FIGURE 7
FAO SWITCH

© 1998 - 2021 San Diego Gas & Electric Company. All rights reserved. Removal of this copyright notice without permission is not permitted under law.

REV	CHANGE	DR	BY	DSN	APV	DATE	REV	CHANGE	DR	BY	DSN	APV	DATE
C							F						
B							E						
A	ORIGINAL ISSUE	AMP	ADW	JES	CZH	12/13/21	D						

Indicates Latest Revision | Completely Revised X | New Page | Information Removed

TABLE OF CONTENTS

BILL OF MATERIALS: NONE

NOTES:

I. THIS IS A REPRODUCTION OR ADAPTATION OF MANUFACTURER DATA. REFER TO SPECIFIC PRODUCT INSTALLATION MANUALS PROVIDED WITH STOCK MATERIALS FOR COMPLETE SAFETY AND INSTALLATION INSTRUCTIONS.

(II) MOUNTING HEIGHTS PROVIDED ON PAGE OH1573.1 ARE SPECIFIC TO NEW UNDERGROUND FEED INSTALLATIONS DUE TO STANDARD CONCRETE POLE SIZES AVAILABLE. NEW LED STREETLIGHT INSTALLATIONS OR HPSV-TO-LED UPGRADE INSTALLATIONS MAY BE MOUNTED WITHIN 2 FEET OF THESE REFERENCE MOUNTING HEIGHTS AS LONG AS THE REQUIRED CLEARANCES TO OTHER FACILITIES ARE MAINTAINED PER OH1509.

(III) FOR NEW SDG&E OWNED STREETLIGHT INSTALLATIONS (NOT EXISTING CONVERSIONS), A LIGHTING DESIGN ANALYSIS MAY BE REQUIRED TO DETERMINE THE REQUIRED MOUNTING HEIGHT IF THE REFERENCE MOUNTING HEIGHTS PROVIDED HERE ARE NOT FEASIBLE. CONTACT THE STREET LIGHTING GROUP IN THIS SCENARIO FOR GUIDANCE.

REFERENCE:

(a) OVERHEAD FIELD MAINTENANCE ONLY SECTION 1500 FOR HPSV AND LPSV FIXTURE DETAIL.

(b) SOME FIXTURES ARE NO LONGER AVAILABLE.

c. SEE OH1570 FOR OVERHEAD LIGHTING INSTALLATION.

d. SEE UG4431 FOR UNDERGROUND LIGHTING INSTALLATION.

e. SEE OH1512 FOR PHOTOELECTRIC CONTROLS AVAILABLE.

TABLE OF CONTENTS

© 1998 - 2021 San Diego Gas & Electric Company. All rights reserved. Removal of this copyright notice without permission is not permitted under law.

REV	CHANGE	DR	BY	DSN	APV	DATE	REV	CHANGE	DR	BY	DSN	APV	DATE
C							F						
B							E						
A	ORIGINAL ISSUE	AMP	ADW	JES	CZH	12/13/21	D						

Indicates Latest Revision | Completely Revised | X | New Page | Information Removed

SDG&E ELECTRIC OVERHEAD CONSTRUCTION STANDARDS

ROADWAY LED LIGHTING FIXTURES INSTALLATION

OH1573.4
UG4473.4

SCOPE: THIS STANDARD SHOWS VARIOUS ACUITY LED ROADWAY LIGHTING FIXTURES

ATTENTION: SEE NOTES & REFERENCES PAGE OH1573.12. LUMEN OUTPUT SETTINGS MUST BE IDENTIFIED FOR THIS FIXTURE INSTALLATION USING TABLE 2 ON THE NEXT SHEET.

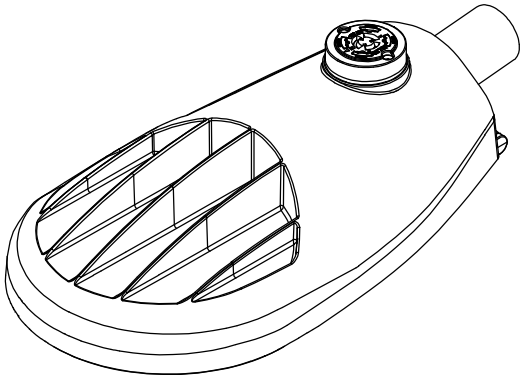

FIGURE 1
ISOMETRIC

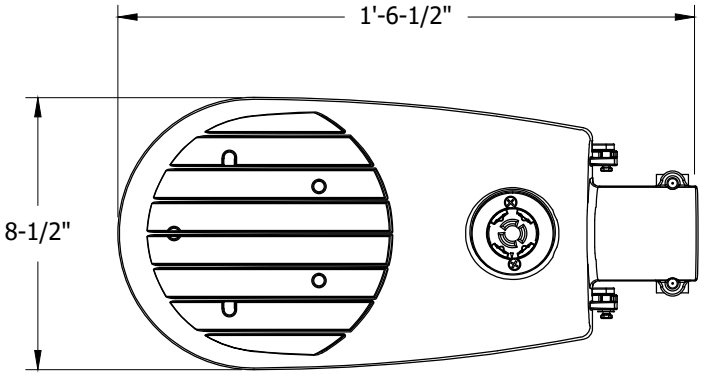

FIGURE 2
TOP VIEW

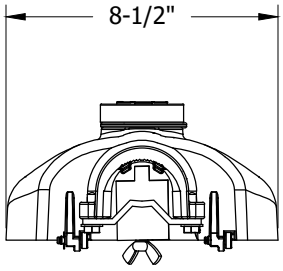

FIGURE 3
REAR VIEW

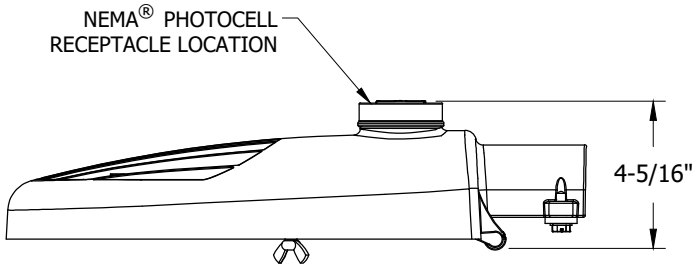

FIGURE 4
SIDE VIEW

TABLE 1

STOCK NUMBER	MANUFACTURER NAME/STYLE	LUMENS PACKAGE	COLOR TEMPERATURE	UNIT WEIGHT	PROJECTED AREA	DISTRIBUTION TYPE	DESIGN UNITS
S473434	ACUITY/ATBX	7,133L	3000K	8 LBS	SEE LUMINAIRE EPA TABLE	TYPE II	ATBX

LUMINAIRE ESTIMATED PROJECTED AREA (EPA)

HORIZONTAL TENON. CONFIG.	SINGLE	2 @ 90°	2 @ 180°
STANDARD LUMINAIRE (FT^2) (TENON EPA NOT INCLUDED)	.26	.52	.52

© 1998 - 2021 San Diego Gas & Electric Company. All rights reserved. Removal of this copyright notice without permission is not permitted under law.

REV	CHANGE	DR	BY	DSN	APV	DATE	REV	CHANGE	DR	BY	DSN	APV	DATE
C							F						
B							E						
A	ORIGINAL ISSUE	AMP	ADW	JES	CZH	12/13/21	D						

Indicates Latest Revision | Completely Revised X | New Page | Information Removed

SDG&E ELECTRIC OVERHEAD CONSTRUCTION STANDARDS

ACUITY ATB ROADWAY LIGHTING
7KL FIXTURE

OH1573.5
UG4473.5

TABLE OF CONTENTS

PHOTOMETRIC DIAGRAMS

FIXTURE WITHOUT BACKLIGHT SHIELD

LUMENS: 7133
WATTS: 60
MOUNTING HEIGHT: 26'
ARM LENGTH: 6'
ARRANGEMENT: SINGLE
.IES FILE NAME:
ATBX_P70_XXXXX_R2_3K.IES

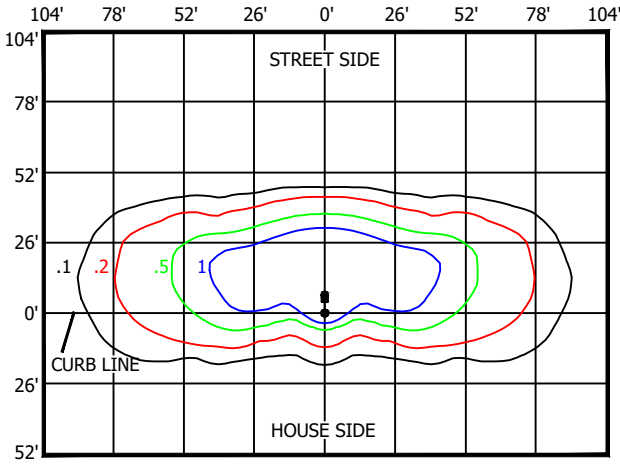

PLOT DRAWN IN FOOTCANDLES

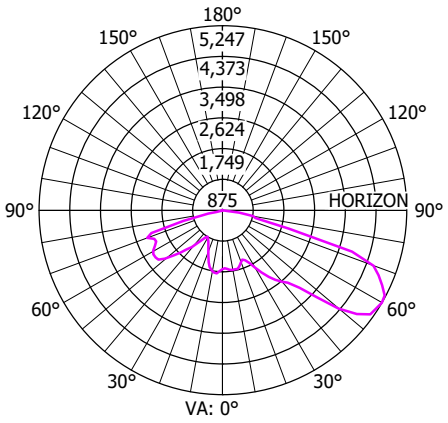

GRAPH RADIUS LINES ARE IN CANDELAS

FIXTURE WITH BACKLIGHT SHIELD

LUMENS: 6217
WATTS: 60
MOUNTING HEIGHT: 26'
ARM LENGTH: 6'
ARRANGEMENT: SINGLE
.IES FILE NAME:
ATBX_P70_XXXXX_R2_3K
_HSS.IES

SEE SHEET OH1573.11 FOR BACK LIGHT SHIELD DETAILS AND INSTALLATION

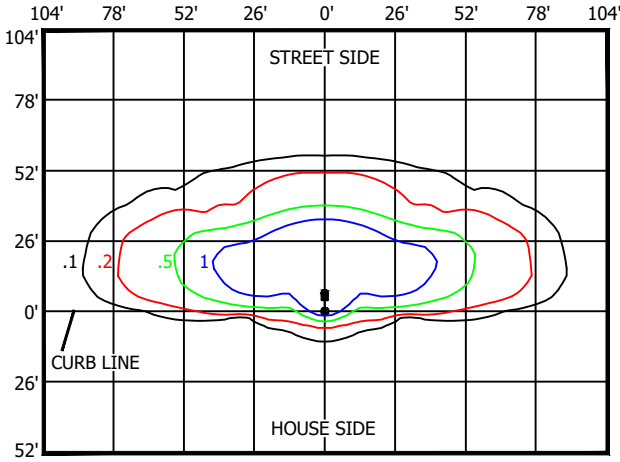

PLOT DRAWN IN FOOTCANDLES

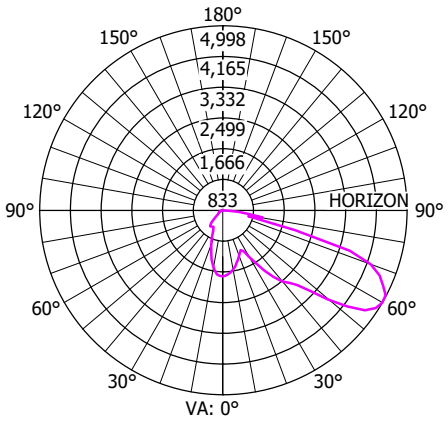

GRAPH RADIUS LINES ARE IN CANDELAS

ATTENTION: LUMEN OUTPUT FAO SWITCH POSITION MUST BE INCLUDED FOR EACH FIXTURE WITHIN THE CONSTRUCTION NOTES FOR EACH LOCATION IN THE JOB PACKAGE.

TABLE 2

FAO SWITCH POSITION	ACTUAL SYSTEM WATTS	NOMINAL LABEL WATTAG	LUMEN OUTPUT	LUMEN OUTPUT WITH BACKLIGHT SHIELD	HPS EQUIVALENT WATTAGE
8	60	60	7133	6,217	150W
7	56	60	6,776	5,906	150W
6	49	50	6,063	5,284	150W
5	41	40	5,278	4,601	100W
4	33	30	4,422	3,855	100W
3	25	30	3,495	3,046	70W
2	17	20	2,497	2,176	50W
1	10	10	1,427	1,243	N/A

© 1998 - 2021 San Diego Gas & Electric Company. All rights reserved. Removal of this copyright notice without permission is not permitted under law.

REV	CHANGE	DR	BY	DSN	APV	DATE	REV	CHANGE	DR	BY	DSN	APV	DATE
C							F						
B							E						
A	ORIGINAL ISSUE	AMP	ADW	JES	CZH	12/13/21	D						

Indicates Latest Revision | Completely Revised X | New Page | Information Removed

SDG&E ELECTRIC OVERHEAD CONSTRUCTION STANDARDS

ACUITY ATB ROADWAY LIGHTING
7KL FIXTURE

OH1573.6
UG4473.6

TABLE OF CONTENTS

SCOPE: THIS STANDARD SHOWS VARIOUS ACUITY LED ROADWAY LIGHTING FIXTURES

ATTENTION: SEE NOTES & REFERENCES PAGE OH1573.12. LUMEN OUTPUT SETTINGS MUST BE IDENTIFIED FOR THIS FIXTURE INSTALLATION USING TABLE 4 ON THE NEXT SHEET.

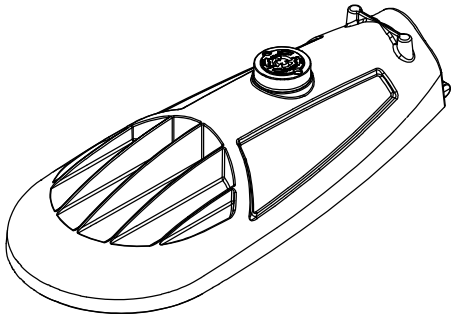

FIGURE 5
ISOMETRIC

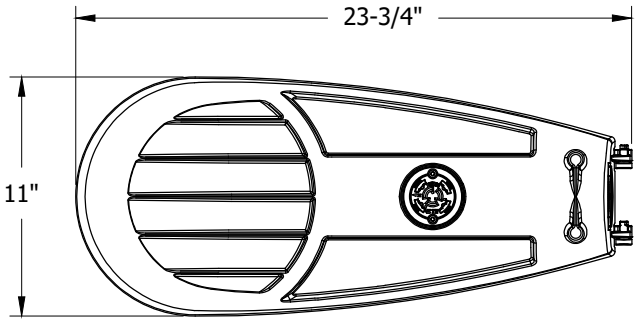

FIGURE 6
TOP VIEW

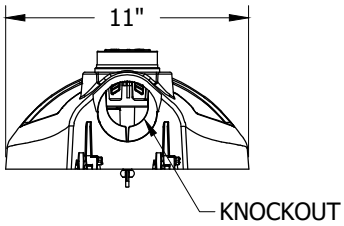

FIGURE 7
REAR VIEW

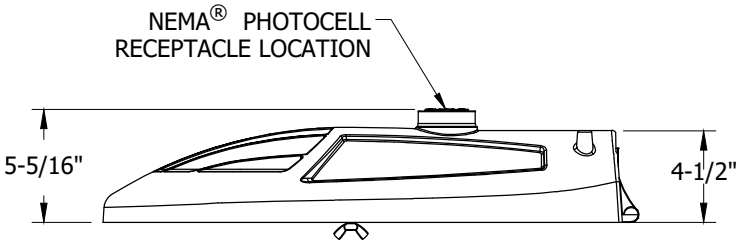

FIGURE 8
SIDE VIEW

TABLE OF CONTENTS

TABLE 3

STOCK NUMBER	MANUFACTURER NAME/STYLE	LUMENS PACKAGE	COLOR TEMPERATURE	UNIT WEIGHT	PROJECTED AREA	DISTRIBUTION TYPE	DESIGN UNITS
S473438	ACUITY/ATBS	10,624L	3000K	12 LBS	SEE LUMINAIRE EPA TABLE	TYPE III	ATBS

LUMINAIRE ESTIMATED PROJECTED AREA (EPA)

HORIZONTAL TENON. CONFIG.	SINGLE	2 @ 90°	2 @ 180°
STANDARD LUMINAIRE (FT^2) (TENON EPA NOT INCLUDED)	.30	.60	.60

© 1998 - 2021 San Diego Gas & Electric Company. All rights reserved. Removal of this copyright notice without permission is not permitted under law.

REV	CHANGE	DR	BY	DSN	APV	DATE	REV	CHANGE	DR	BY	DSN	APV	DATE
C							F						
B							E						
A	ORIGINAL ISSUE	AMP	ADW	JES	CZH	12/13/21	D						

Indicates Latest Revision | Completely Revised X | New Page | Information Removed

SDG&E ELECTRIC OVERHEAD CONSTRUCTION STANDARDS

ACUITY ATB ROADWAY LIGHTING
11KL FIXTURE

OH1573.7
UG4473.7

PHOTOMETRIC DIAGRAMS

FIXTURE WITHOUT BACKLIGHT SHIELD

LUMENS: 10624
WATTS: 82
MOUNTING HEIGHT: 30'
ARM LENGTH: 6'
ARRANGEMENT: SINGLE
.IES FILE NAME:
ATBS_P50_XXXXX_R3_3K.IES

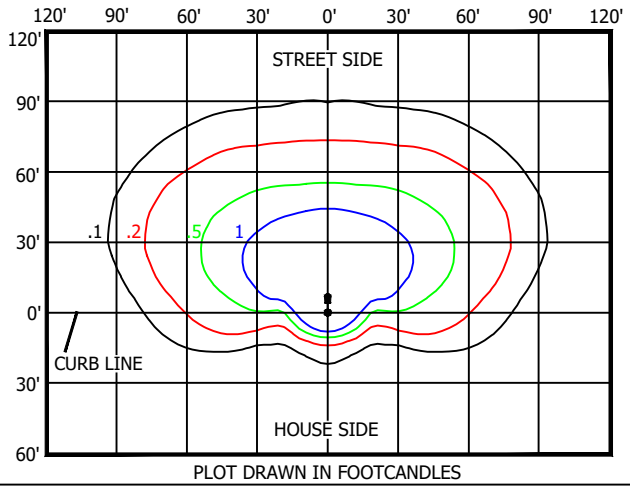

PLOT DRAWN IN FOOTCANDLES

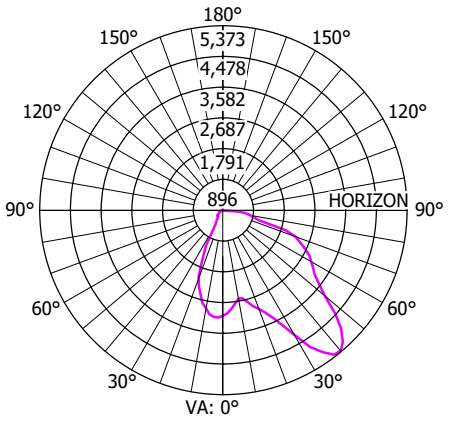

GRAPH RADIUS LINES ARE IN CANDELAS

FIXTURE WITH BACKLIGHT SHIELD

LUMENS: 9423
WATTS: 82
MOUNTING HEIGHT: 30'
ARM LENGTH: 6'
ARRANGEMENT: SINGLE
.IES FILE NAME:
ATBS_P50_XXXXX_R3_3K
_HSS.IES

SEE SHEET OH1573.11 FOR BACK LIGHT SHIELD DETAILS AND INSTALLATION

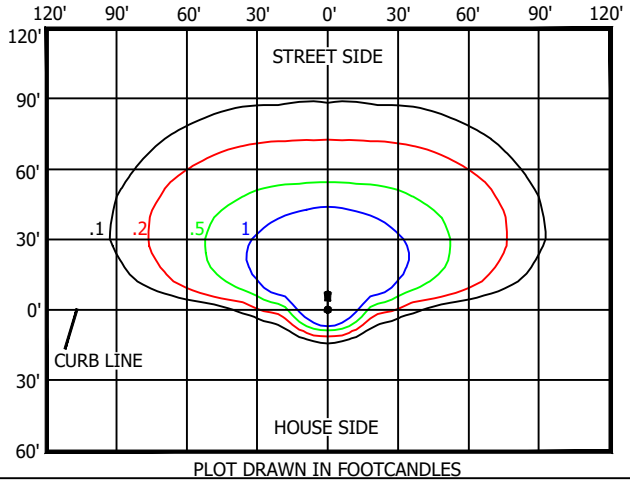

PLOT DRAWN IN FOOTCANDLES

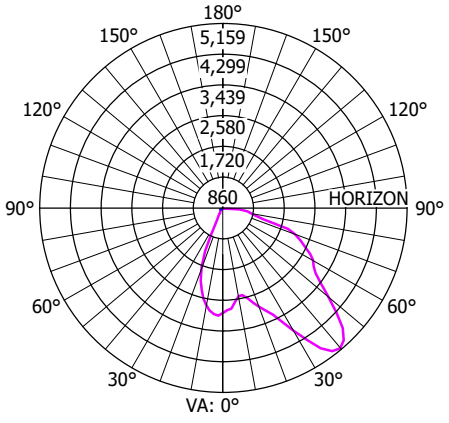

GRAPH RADIUS LINES ARE IN CANDELAS

ATTENTION: LUMEN OUTPUT FAO SWITCH POSITION MUST BE INCLUDED FOR EACH FIXTURE WITHIN THE CONSTRUCTION NOTES FOR EACH LOCATION IN THE JOB PACKAGE.

TABLE 4

FAO SWITCH POSITION	ACTUAL SYSTEM WATTS	NOMINAL LABEL WATTAG	LUMEN OUTPUT	LUMEN OUTPUT WITH BACKLIGHT SHIELD	HPS EQUIVALENT WATTAGE
8	82	80	10,624	9,423	250W
7	76	80	9,987	8,858	200W
6	66	70	8,712	7,727	200W
5	56	60	7,543	6,690	150W
4	45	50	6,268	5,560	150W
3	34	30	4,781	4,240	100W
2	25	30	3,612	3,204	70W
1	16	20	2,337	2,073	50W

© 1998 - 2021 San Diego Gas & Electric Company. All rights reserved. Removal of this copyright notice without permission is not permitted under law.

REV	CHANGE	DR	BY	DSN	APV	DATE	REV	CHANGE	DR	BY	DSN	APV	DATE
C							F						
B							E						
A	ORIGINAL ISSUE	AMP	ADW	JES	CZH	12/13/21	D						

Indicates Latest Revision | Completely Revised X | New Page | Information Removed

SDG&E ELECTRIC OVERHEAD CONSTRUCTION STANDARDS

ACUITY ATB ROADWAY LIGHTING
11KL FIXTURE

OH1573.8
UG4473.8

TABLE OF CONTENTS

SCOPE: THIS STANDARD SHOWS VARIOUS ACUITY LED ROADWAY LIGHTING FIXTURES

ATTENTION: SEE NOTES & REFERENCES PAGE OH1573.12. LUMEN OUTPUT SETTINGS MUST BE IDENTIFIED FOR THIS FIXTURE INSTALLATION USING TABLE 6 ON THE NEXT SHEET.

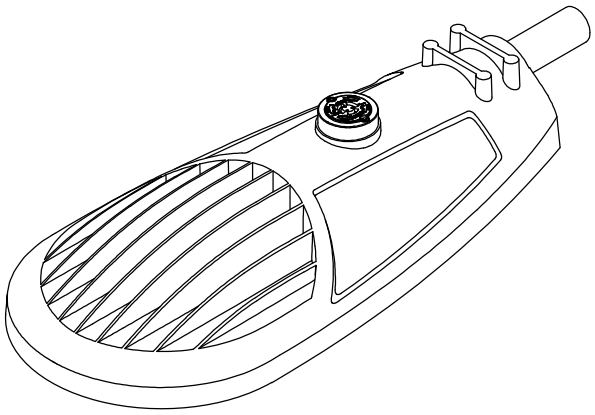

FIGURE 9
ISOMETRIC

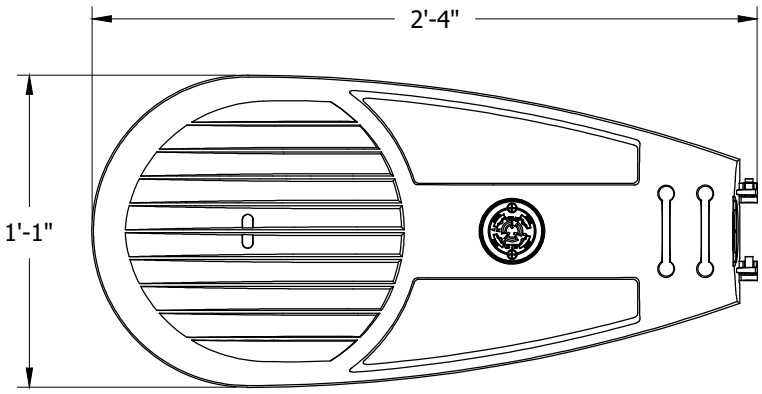

FIGURE 10
TOP VIEW

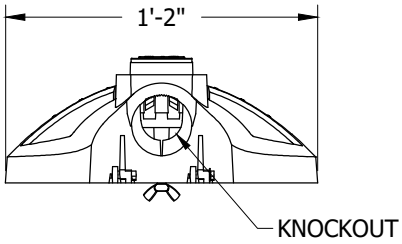

FIGURE 11
REAR VIEW

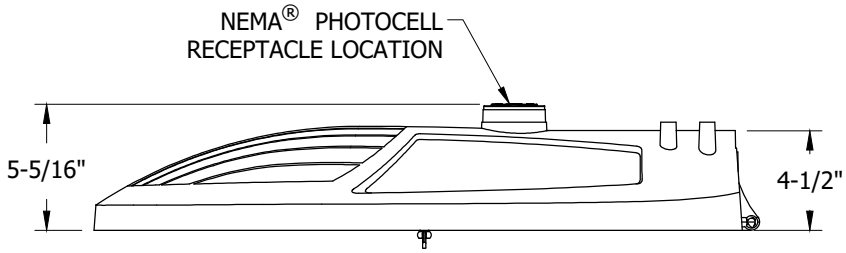

FIGURE 12
SIDE VIEW

TABLE OF CONTENTS

TABLE 5

STOCK NUMBER	MANUFACTURER NAME/STYLE	LUMENS PACKAGE	COLOR TEMPERATURE	UNIT WEIGHT	PROJECTED AREA	DISTRIBUTION TYPE	DESIGN UNITS
S473440	ACUITY/ATBM	20,142L	3000K	21 LBS	SEE LUMINAIRE EPA TABLE	TYPE III	ATBM

LUMINAIRE ESTIMATED PROJECTED AREA (EPA)

HORIZONTAL TENON. CONFIG.	SINGLE	2 @ 90°	2 @ 180°
STANDARD LUMINAIRE (FT^2) (TENON EPA NOT INCLUDED)	.30	.60	.60

© 1998 - 2021 San Diego Gas & Electric Company. All rights reserved. Removal of this copyright notice without permission is not permitted under law.

REV	CHANGE	DR	BY	DSN	APV	DATE	REV	CHANGE	DR	BY	DSN	APV	DATE
C							F						
B							E						
A	ORIGINAL ISSUE	AMP	ADW	JES	CZH	12/13/21	D						

Indicates Latest Revision | Completely Revised X | New Page | Information Removed

SDG&E ELECTRIC OVERHEAD CONSTRUCTION STANDARDS

ACUITY ATB ROADWAY LIGHTING
21KL FIXTURE

OH1573.9
UG4473.9

PHOTOMETRIC DIAGRAMS

FIXTURE WITHOUT BACKLIGHT SHIELD

LUMENS: 20142
WATTS: 190
MOUNTING HEIGHT: 35'
ARM LENGTH: 6'
ARRANGEMENT: SINGLE
.IES FILE NAME:
ATBM_P70_XXXXX_R3_3K.IES

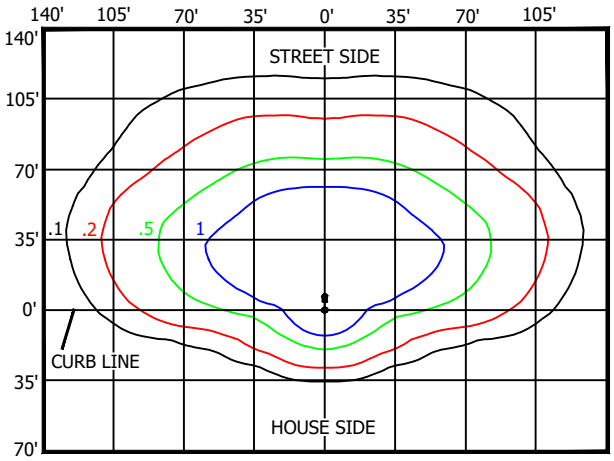

PLOT DRAWN IN FOOTCANDLES

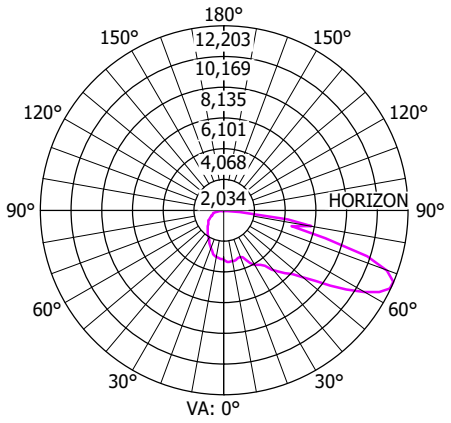

GRAPH RADIUS LINES ARE IN CANDELAS

FIXTURE WITH BACKLIGHT SHIELD

LUMENS: 18978
WATTS: 190
MOUNTING HEIGHT: 35'
ARM LENGTH: 6'
ARRANGEMENT: SINGLE
.IES FILE NAME:
ATBM_P70_XXXXX_R3_3K
_HSS.IES

SEE SHEET OH1573.11 FOR BACK LIGHT SHIELD DETAILS AND INSTALLATION

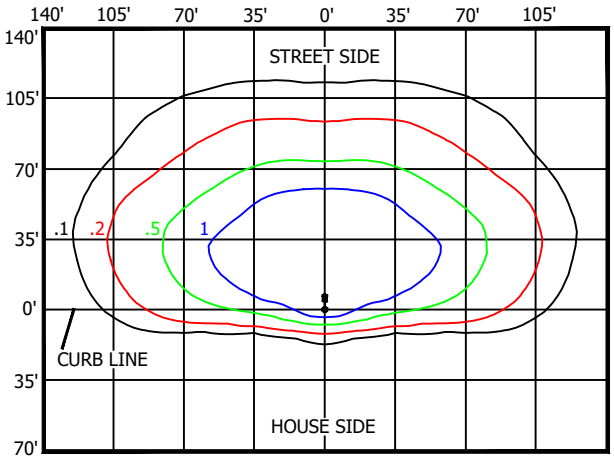

PLOT DRAWN IN FOOTCANDLES

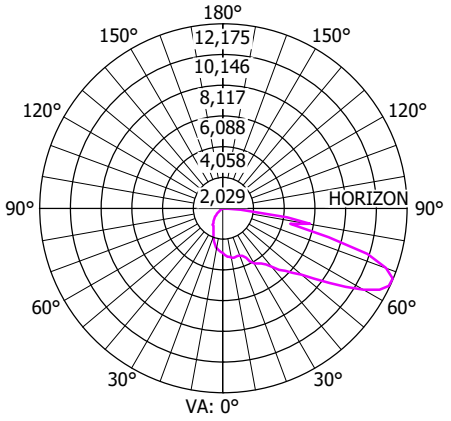

GRAPH RADIUS LINES ARE IN CANDELAS

ATTENTION: LUMEN OUTPUT FAO SWITCH POSITION MUST BE INCLUDED FOR EACH FIXTURE WITHIN THE CONSTRUCTION NOTES FOR EACH LOCATION IN THE JOB PACKAGE.

TABLE 6

FAO SWITCH POSITION	ACTUAL SYSTEM WATTS	NOMINAL LABEL WATTAG	LUMEN OUTPUT	LUMEN OUTPUT WITH BACKLIGHT SHIELD	HPS EQUIVALENT WATTAGE
8	190	190	20,142	18,978	400W
7	190	190	20,142	18,978	400W
6	150	150	17,725	16,701	310W
5	125	130	15,711	14,803	310W
4	101	100	13,294	12,525	250W
3	76	80	10,474	9,869	200W
2	53	50	7,654	7,212	150W
1	30	30	4,431	4,175	100W

© 1998 - 2021 San Diego Gas & Electric Company. All rights reserved. Removal of this copyright notice without permission is not permitted under law.

REV	CHANGE	DR	BY	DSN	APV	DATE	REV	CHANGE	DR	BY	DSN	APV	DATE
C							F						
B							E						
A	ORIGINAL ISSUE	AMP	ADW	JES	CZH	12/13/21	D						

Indicates Latest Revision | Completely Revised X | New Page | Information Removed

SDG&E ELECTRIC OVERHEAD CONSTRUCTION STANDARDS

ACUITY ATB ROADWAY LIGHTING
21KL FIXTURE

OH1573.10
UG4473.10

TABLE OF CONTENTS

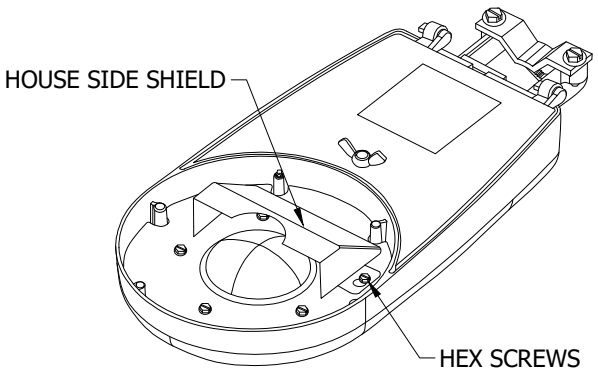

FIGURE 13
ISOMETRIC

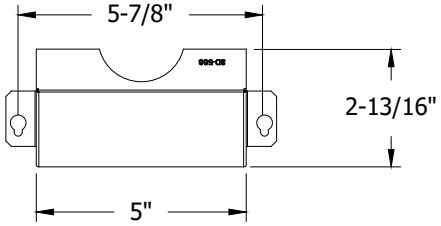

FIGURE 15
TOP VIEW

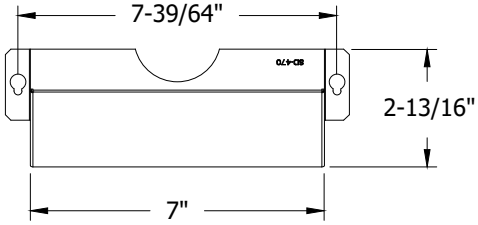

FIGURE 16
TOP VIEW

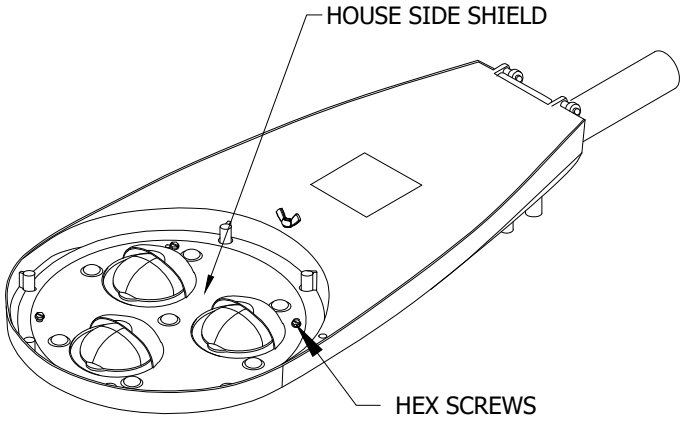

FIGURE 14
ISOMETRIC

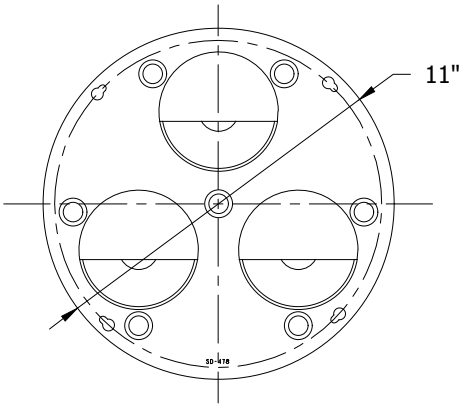

FIGURE 17
TOP VIEW

TABLE 7

ATB HOUSE SIDE SHIELD				
STOCK NUMBER	**DESCRIPTION**	**FIGURE**	**FIXTURE TYPE COMPATIBILITY BY STOCK NUMBER**	**DESIGN UNITS**
S643034	ATB HOUSE SIDE SHIELD, X-SMALL	15	S473434	ATBXHSS
S632032	ATB HOUSE SIDE SHIELD, SMALL	16	S473438	ATBSHSS
S643030	ATB HOUSE SIDE SHIELD, MEDIUM	17	S473440	ATBMHSS

© 1998 - 2021 San Diego Gas & Electric Company. All rights reserved. Removal of this copyright notice without permission is not permitted under law.

REV	CHANGE	DR	BY	DSN	APV	DATE	REV	CHANGE	DR	BY	DSN	APV	DATE
C							F						
B							E						
A	ORIGINAL ISSUE	AMP	ADW	JES	CZH	12/13/21	D						

Indicates Latest Revision | Completely Revised X | New Page | Information Removed

SDG&E ELECTRIC OVERHEAD CONSTRUCTION STANDARDS

ACUITY ATB ROADWAY LIGHTING
FIXTURES - HOUSE SIDE SHIELD

OH1573.11
UG4473.11

TABLE OF CONTENTS

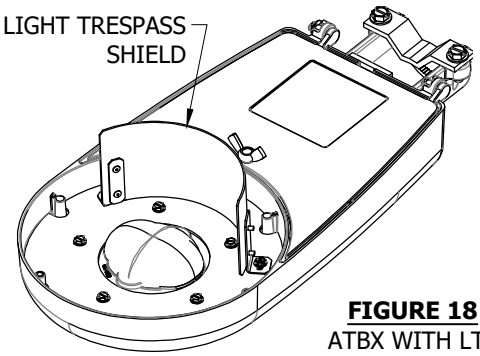

FIGURE 18
ATBX WITH LTS

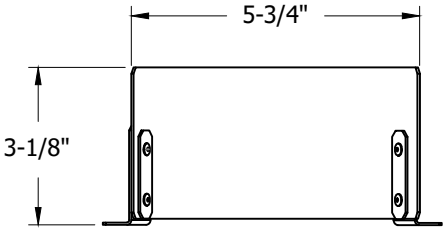

FIGURE 21
ATBX LTS

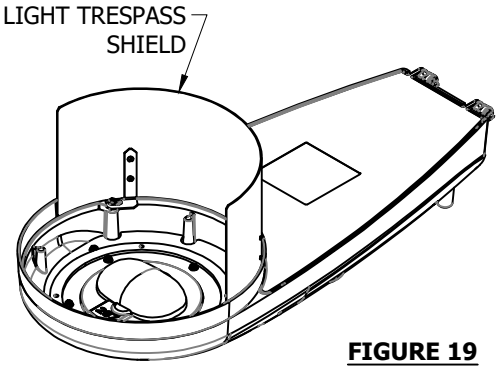

FIGURE 19
ATBS WITH LTS

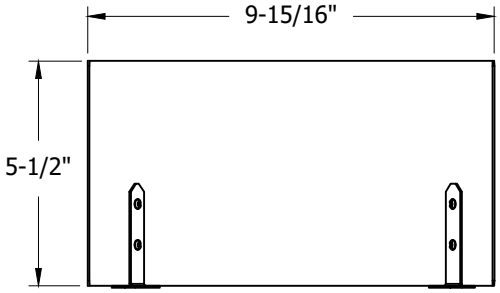

FIGURE 22
ATBS LTS

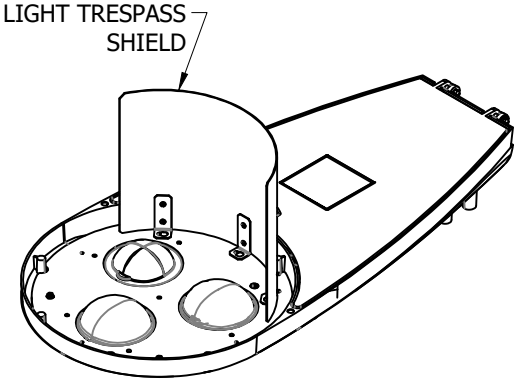

FIGURE 20
ATBM WITH LTS

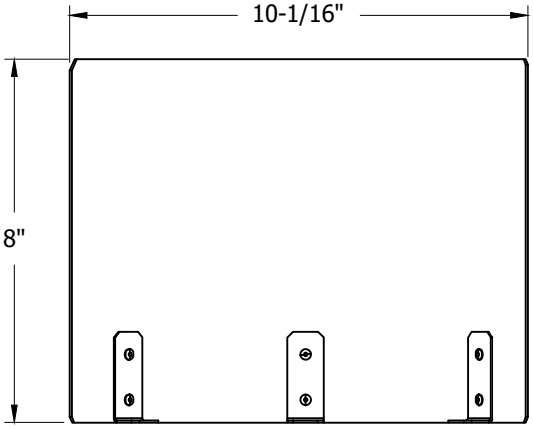

FIGURE 23
ATBM LTS

TABLE 7

ATB LIGHT TRESPASS SHIELD				
STOCK NUMBER	**DESCRIPTION**	**FIGURE**	**FIXTURE TYPE COMPATIBILITY BY STOCK NUMBER**	**DESIGN UNITS**
S463040	ATB LIGHT TRESPASS SHIELD, X-SMALL	18	S473434	ATBXLTS
S463038	ATB LIGHT TRESPASS SHIELD, SMALL	19	S473438	ATBSLTS
S463036	ATB LIGHT TRESPASS SHIELD, MEDIUM	20	S473440	ATBMLTS

© 1998 - 2021 San Diego Gas & Electric Company. All rights reserved. Removal of this copyright notice without permission is not permitted under law.

REV	CHANGE	DR	BY	DSN	APV	DATE	REV	CHANGE	DR	BY	DSN	APV	DATE
C							F						
B							E						
A	ORIGINAL ISSUE	AMP	ADW	JES	CZH	12/13/21	D						

Indicates Latest Revision | Completely Revised X | New Page | Information Removed

TABLE OF CONTENTS

INSTALLATION:

A. LIGHT SHIELDS

1. PRE-INSTALL PROVIDED #8 HEX WASHER HEAD SCREWS IN HOLES IN LUMINAIRE OPTICAL PLATE. DO NOT FULLY TIGHEN.
2. ALIGN KEYHOLE SLOTS IN SHIELD BASE TO SCREWS. SHIFT SHIELD SLIGHTLY FOWARD TO ENGAGE KEYHOLE SLOTS ONTO SCREW HEADS.
3. TIGHEN SCREWS UNTIL SNUG.

BILL OF MATERIALS: NONE

NOTES:

I. REFER TO SPECIFIC PRODUCT INSTALLATION MANUALS PROVIDED WITH ITEM FOR COMPLETE SAFETY AND INSTALLATION INSTRUCTIONS.

REFERENCE:

a. SEE OVERHEAD CONSTRUCTION STANDARD 1570 FOR OVERHEAD LIGHTING INSTALLATION.

b. SEE UNDERGROUND CONSTRUCTION STANDARD 4431 FOR UNDERGROUND LIGHTING INSTALLATION.

c. SEE OVERHEAD CONSTRUCTION STANDARD 1512 FOR PHOTOELECTRIC CONTROLS AVAILABLE.

TABLE OF CONTENTS

© 1998 - 2021 San Diego Gas & Electric Company. All rights reserved. Removal of this copyright notice without permission is not permitted under law.

REV	CHANGE	DR	BY	DSN	APV	DATE	REV	CHANGE	DR	BY	DSN	APV	DATE
C							F						
B							E						
A	ORIGINAL ISSUE	AMP	ADW	JES	CZH	12/13/21	D						

Indicates Latest Revision | Completely Revised [X] | New Page | Information Removed

SHEET 13 OF 13

SDG&E ELECTRIC OVERHEAD CONSTRUCTION STANDARDS

ACUITY ATB ROADWAY LIGHTING
FIXTURES - LIGHT SHIELDS

OH1573.13
UG4473.13

MAIN TABLE OF CONTENTS

PAGE	SUBJECT
1610	AVIAN PROTECTION - GENERAL
1615	AVIAN MORTALITY REPORTING REQUIREMENTS AND PROCEDURES
1620	PIN AND INSULATOR COVER-UP DEVICES FOR AVIAN PROTECTION
1630	AVIAN COVER-UP PROTECTION AND TRANSFORMER LEAD WIRES
1640	LIGHTNING ARRESTER AND CUTOUT COVER-UP DEVICES FOR AVIAN PROTECTION
1654	MODIFIED CONSTRUCTION FOR EXISTING POLES AVIAN SAFE CONSTRUCTION
1655	CROSSARM CONSTRUCTION - 4-WIRE TANGENT TWO LEVELS - AVIAN SAFE CONSTRUCTION

REV	CHANGE	DRWN	BY	CHKD	APVD	DATE
J	OH1650, OH1651, OH1652, OH1653 MOVED TO FMO	ARC	RSL	JAS	KRG	04/07/2023
I	OH1660 MOVED TO FMO	EDM	RSL	JAS	KRG	09/30/2022
H	REVISED TO 3D FORMAT	ARC	JIK	-	-	06/14/2022

© 1998 - 2023 San Diego Gas and Electric Company. All rights reserved. Removal of this copyright notice without permission is not permitted under law.

SDG&E ELECTRIC OVERHEAD CONSTRUCTION STANDARDS

WILDLIFE PROTECTION
TABLE OF CONTENTS

SCALE: NOT TO SCALE

DRAWING NO: OH1601.1

SHEET: 1 OF 1

Indicates Latest Revision | Completely Revised | New Page | X Information Removed

TABLE OF CONTENTS

SCOPE: THIS STANDARD REFERENCES THE DESIGNATED AVIAN PROTECTION CRITICAL AREAS AND THOSE STANDARDS AND PUBLICATIONS WHICH PROVIDE GUIDANCE FOR THE APPLICATION OF AVIAN SAFE CONSTRUCTION.

THE SAN DIEGO GAS AND ELECTRIC AVIAN PROTECTION PLAN (APP) WAS APPROVED AND IMPLEMENTED IN JANUARY 2005.

THE APP WAS DEVELOPED IN A PARTNERSHIP BETWEEN THE DEPARTMENTS OF LAND PLANNING AND NATURAL RESOURCES AND ELECTRIC DISTRIBUTION ENGINEERING AND STANDARDS.

FOLLOWING THIS PLAN ASSURES THAT SDG&E IS IN COMPLIANCE WITH ITS 50 YEAR ENVIRONMENTAL PERMIT AND FEDERAL LAWS THAT PROTECT BOTH RAPTORS AND ALL MIGRATORY BIRDS.

THE PLAN INCLUDES THE FOLLOWING:

- INTRODUCTION
- AVIAN PROTECTION CONSIDERATIONS
- METHODS OF AVIAN PROTECTION
- PLAN IMPLEMENTATION AND FUTURE MANAGEMENT ACTIONS

ANOTHER DOCUMENT, THE "AVIAN PROTECTION PROCEDURES MANUAL" WAS DEVELOPED AS A GUIDE FOR THE OPERATING DISTRICTS AND CONTAINS THE FOLLOWING:

- INTRODUCTION
- PROCEDURES FOR INJURED OR DECEASED BIRDS
- PROCEDURES FOR NESTING BIRDS
- MODIFICATION OF EXISTING FACILITIES
- POWERLINE PLANNING PERSONNEL TRAINING

WITHIN THESE CONSTRUCTION STANDARDS, YOU WILL FIND GUIDANCE FOR THE FOLLOWING:

- APP CRITICAL AREAS
- AVIAN MORTALITY REPORTING
- PIN AND INSULATOR COVER-UP DEVICES FOR AVIAN PROTECTION
- TRANSFORMER COVER-UP DEVICES FOR AVIAN PROTECTION
- LIGHTNING ARRESTER AND CUTOUT COVER-UP DEVICES FOR AVIAN PROTECTION
- CROSSARM CONSTRUCTION - 3-WIRE TANGENT AVIAN SAFE CONSTRUCTION
- OVERHEAD PROJECTS THAT INCLUDE KNOWN AVIAN NESTING ON DISTRIBUTION STRUCTURES MUST COORDINATE WITH ENVIRONMENTAL SERVICES EARLY IN DESIGN PROCESS AND INCLUDE AVIANTEAM@SEMPRAUTILITIES.COM IN JOB WALKS TO IDENTITY THE SPECIES, NESTING PATTERNS, AND THE OVERHEAD STANDARD THAT CAN BEST MITIGATE ELECTRICAL CONTACTS

AVIAN PROTECTION PLAN (APP) CRITICAL AREAS:

AREA	DESCRIPTION
APP-1	CAMP PENDLETON
APP-2	DEL DIOS, HARMONY GROVE, LAKE HODGES, SAN DIEGUITO CREEK
APP-3	PAUMA VALLEY, RINCON
APP-4	MESA GRANDE, MORETTIS JUNCTION
APP-5	CHIHUAHUA VALLEY, DAMERON VALLEY, OAK GROVE VALLEY
APP-6	LAKE HENSHAW, PUERTA LA CRUZ, SAN JOSE DEL VALLE, SAN YSIDRO VALLEY, VOLCAN MOUNTAIN -NORTHEAST, WARNER SPRINGS
APP-7	BALLENA VALLEY, SAN TERESA VALLEY, LAKE SUTHERLAND
APP-8	SANTA YSABEL, WITCH CREEK, WYNOLA
APP-9	BANNER, HARRISON PARK, JULIAN, PINE HILLS
APP-10	SAN FELIPE VALLEY, VOLCAN MOUNTAIN - EAST
APP-11	GRAPEVINE CANYON, RANCHITA, YAQUI WELLS
APP-12	MESCAL BAJADA, YAQUI MEADOWS, YAQUI PASS
APP-13	BORREGO VALLEY
APP-14	BARONA MESA, BARONA VALLEY
APP-15	EL CAPITAN RESERVOIR
APP-16	CREST, HARBISON CANYON, SYCUAN INDIAN RESERVATION
APP-17	DULZURA, ENGINEER SPRINGS
APP-18	BARRETT JUNCTION, BARRETT LAKE, HAUSER CANYON, POTRERO
APP-19	CORTE MADERA VALLEY, LONG VALLEY
APP-20	BOULDER OAKS, CAMERON SPRINGS, CAMPO, MORENA VILLAGE
APP-21	MC CAIN VALLEY
APP-22	BOULEVARD, LIVE OAK SPRINGS, MANZANITA
APP-23	BOULDER PEAK, JACUMBA VALLEY
APP-24	CARRIZO VALLEY, VALLECITO VALLEY
APP-25	BORDER FIELD STATE PARK
APP-26	OTAY MESA, OTAY RIVER VALLEY
APP-27	MISSION GORGE, MURPHY CANYON, SPRING CANYON, BEELER CANYON
APP-28	SYCAMORE CANYON - WEST
APP-29	PALA, COUSER CANYON
APP-30	SAN PASQUAL
APP-31	RAMONA,RAMONA GRASSLANDS
APP-32	MIRAMAR, PENASQUITOS, ROSE CANYON, SAN CLEMENTE CANYON

AREA	DESCRIPTION
APP-7	BALLENA VALLEY
APP-9	BANNER
APP-14	BARONA MESA
APP-14	BARONA VALLEY
APP-18	BARRETT JUNCTION
APP-18	BARRETT LAKE
APP-27	BEELER CANYON
APP-25	BORDER FIELD STATE PARK
APP-13	BORREGO VALLEY
APP-23	BOULDER PEAK
APP-20	BOULDER OAKS
APP-22	BOULEVARD
APP-20	CAMERON SPRINGS
APP-20	CAMPO
APP-1	CAMP PENDLETON
APP-24	CARRIZO VALLEY
APP-5	CHIHUAHUA VALLEY
APP-19	CORTE MADERA VALLEY
APP-29	COUSER CANYON
APP-16	CREST
APP-5	DAMERON VALLEY
APP-2	DEL DIOS
APP-17	DULZURA
APP-15	EL CAPITAN RESERVOIR
APP-17	ENGINEER SPRINGS
APP-11	GRAPEVINE CANYON
APP-16	HARBISON CANYON
APP-2	HARMONY GROVE
APP-9	HARRISON PARK
APP-9	HAUSER CANYON
APP-23	JACUMBA VALLEY
APP-9	JULIAN
APP-6	LAKE HENSHAW
APP-2	LAKE HODGES
APP-7	LAKE SUTHERLAND
APP-22	LIVE OAK SPRINGS
APP-19	LONG VALLEY
APP-12	MESCAL BAJADA
APP-28	MIRAMAR
APP-20	MISSION GORGE
APP-4	MORENA VILLAGE
APP-28	MORETTIS JUNCTION
APP-28	MURPHY CANYON
APP-5	OAK GROVE VALLEY
APP-26	OTAY MESA
APP-26	OTAY RIVER VALLEY
APP-3	PALA
APP-3	PAUMA VALLEY
APP-32	PENASQUITOS
APP-9	PINE HILLS
APP-18	POTRERO
APP-6	PUERTA LA CRUZ
APP-31	RAMONA
APP-31	RAMONA GRASSLANDS
APP-11	RANCHITA
APP-3	RINCON
APP-32	ROSE CANYON
APP-32	SAN CLEMENTE CANYON
APP-2	SAN DIEGUITO CREEK
APP-10	SAN FELIPE VALLEY
APP-6	SAN JOSE DEL VALLE
APP-30	SAN PASQUAL
APP-8	SANTA YSABEL
APP-7	SAN TERESA VALLEY
APP-6	SAN YSIDRO VALLEY
APP-28	SPRING CANYON
APP-28	SYCAMORE CANYON
APP-16	SYCUAN INDIAN RESERVATION
APP-24	VALLECITO VALLEY
APP-10	VOLCAN MOUNTAIN - EAST
APP-6	VOLCAN MOUNTAIN - N/E
APP-6	WARNER SPRINGS
APP-8	WITCH CREEK
APP-8	WYNOLA

REV	CHANGE	DRWN	BY	CHKD	APVD	DATE
D	SCOPE UPDATE	ARC	RSL	GRW	KRG	04/07/2023
C	REVISED TO 3D FORMAT	ARC	JIK	-	-	06/14/2022
B	DRAWING UPDATE	-	PEI	-	-	01/15/2019

SDGE

SDG&E ELECTRIC OVERHEAD CONSTRUCTION STANDARDS

AVIAN PROTECTION - GENERAL

SCALE: NOT TO SCALE

DRAWING NO: OH1610.1

SHEET: 1 OF 2

© 1998 - 2023 San Diego Gas and Electric Company. All rights reserved. Removal of this copyright notice without permission is not permitted under law.

X Indicates Latest Revision | Completely Revised | New Page | Information Removed

AREA	DESCRIPTION
APP-22	MANZANITA
APP-21	MC CAIN VALLEY
APP-4	MESA GRANDE

AREA	DESCRIPTION
APP-12	YAQUI MEADOWS
APP-12	YAQUI PASS
APP-11	YAQUI WELLS

TABLE OF CONTENTS

REV	CHANGE	DRWN	BY	CHKD	APVD	DATE
D	SCOPE UPDATE	ARC	RSL	GRW	KRG	04/07/2023
C	REVISED TO 3D FORMAT	ARC	JIK	-	-	06/14/2022
B	DRAWING UPDATE	-	PEI	-	-	01/15/2019

© 1998 - 2023 San Diego Gas and Electric Company. All rights reserved. Removal of this copyright notice without permission is not permitted under law.

SDG&E ELECTRIC OVERHEAD CONSTRUCTION STANDARDS

AVIAN PROTECTION - GENERAL

SCALE: NOT TO SCALE

DRAWING NO: OH1610.2

SHEET: 2 OF 2

X Indicates Latest Revision | Completely Revised | New Page | Information Removed

TABLE OF CONTENTS

SCOPE: THIS STANDARD OUTLINES THE REQUIREMENT AND PROCEDURE FOR REPORTING ALL AVIAN MORTALITIES.

REPORTING REQUIREMENT

WHEN A DEAD OR INJURED BIRD IS FOUND NEAR OR ON SDG&E EQUIPMENT AND FACILITIES (E.G. POLES, TOWERS, SUBSTATIONS) AN AVIAN MORTALITY REPORT (AMR) WITH DIGITAL PHOTOS MUST BE COMPLETED AND FORWARDED TO THE SDG&E ENVIRONMENTAL PROGRAMS, BIOLOGICAL RESOURCES (EPBR) BIOLOGIST WITHIN 24 HOURS.

REPORTING PROCEDURE

IDENTIFY THE SPECIES IF POSSIBLE, ESPECIALLY TO DETERMINE WHETHER OR NOT THE BIRD IS AN EAGLE. WHENEVER THERE IS DOUBT, CONTACT EPBR FOR GUIDANCE. FOR ALL BIRD MORTALITIES, TAKE A CLOSE-UP DIGITAL PHOTO OF THE BIRD FOR IDENTIFICATION PURPOSES.

ALWAYS INCLUDE A COMMONLY KNOWN OBJECT IN YOUR PHOTO (E.G. PENCIL, LIGHTER, KEYS, ETC.) FOR SIZE REFERENCE. USE A RULER OR TAPE MEASURE IF THE NUMBERS ARE LARGE ENOUGH TO SHOW IN THE PHOTO. IF A BIRD CARCASS IS DAMAGED BEYOND RECOGNITION, TAKE A CLOSE-UP PHOTO OF BOTH THE TALONS AND THE BEAK. ALWAYS TAKE A PHOTO OF THE TOP OF THE POLE OR STRUCTURE WHERE THE BIRD MADE CONTACT. THIS WILL HELP IDENTIFY WHAT TYPE OF RETROFIT IS NECESSARY TO MAKE THAT STRUCTURE AVIAN SAFE. SEND ALL PHOTOS WITH THE AMR TO THE PRIMARY SDG&E CONTACT(S) WITHIN 24 HOURS.

COMPLETE AN AVIAN MORTALITY REPORT FORM. THIS REPORT FORM IS AVAILABLE ON THE ENVIRONMENTAL SERVICES WEBSITE. CLICK HERE FOR THE FORM AND CONTACT INFORMATION. FILL OUT THE REPORT FORM AS COMPLETELY AS POSSIBLE. SUBMIT THIS REPORT FORM, WITH PHOTOS OF BOTH THE INJURED OR DEAD BIRD, AND THE POLE OR STRUCTURE, TO THE SDG&E EPBR BIOLOGIST WITHIN 24 HOURS AFTER THE CONTACT IS DISCOVERED AND RECORDED.

FOR DISPOSAL INSTRUCTIONS OF ANY DEAD BIRD, CONTACT EPBR. **DO NOT TRANSPORT ANY DEAD BIRDS WITHOUT AUTHORIZATION.**

INSTALLATION: NONE

BILL OF MATERIALS: NONE

NOTES :

I. IF YOU HAVE ANY QUESTIONS ABOUT THESE REPORTING PROCEDURES, OR, ARE UNSURE ABOUT ANY ACTION THAT YOU MAY NEED TO TAKE CONCERNING AVIAN MORTALITY REPORTING, PLEASE CALL ONE OF THE CONTACTS LISTED IN THIS CONSTRUCTION STANDARD.

II. IF THE BIRD IS INJURED, OR, YOU OBSERVE THE PRESENCE OF A LEG BAND OR WING MARKER, CONTACT THE SDG&E EPBR BIOLOGIST IMMEDIATELY. EAGLES (INCLUDES GOLDEN, BALD AND OSPREY) EXIST WITHIN SDG&E SERVICE TERRITORY, AND AN EAGLE ELECTROCUTION COULD OCCUR ON OUR LINES OR FACILITIES. ADULT EAGLES RANGE ANYWHERE FROM 30" TO 40" IN LENGTH AND HAS A 78" TO 84" WINGSPAN. IF AN EAGLE IS ELECTROCUTED, EPBR MUST BE CONTACTED IMMEDIATELY AND SPECIAL ARRANGEMENT MUST BE MADE FOR TRANSPORT OF THE BIRD.

III. **IT IS ILLEGAL TO TRANSPORT EAGLES IN THE U.S.** CALL THE EPBR BIOLOGIST IMMEDIATELY. YOU WILL BE GIVEN GUIDANCE ON THE NEXT COURSE OF ACTION TO TAKE. **DO NOT TRANSPORT ANY EAGLE UNLESS AUTHORIZED BY EPBR**.

REFERENCE:

a. THE BALD AND GOLDEN EAGLE PROTECTION ACT (16 U.S.C. 668-668C)
b. THE MIGRATORY BIRD TREATY ACT (16 U.S.C. 703-712)
c. SDG&E STANDARD PRACTICE 147 "AVIAN MORTALITY REPORTING PROCEDURE".

REV	CHANGE	DRWN	BY	CHKD	APVD	DATE
D	REVISED TO 3D FORMAT	ARC	JIK	-	-	06/14/2022
C	EDITORIAL CHANGES	-	JIK	JES	CZH	11/12/2019
B	DRAWING UPDATE	-	PEI	-	-	01/15/2019

SDG&E

A Sempra Energy utility

SDG&E ELECTRIC OVERHEAD CONSTRUCTION STANDARDS

AVIAN MORTALITY REPORTING REQUIREMENTS AND PROCEDURES

SCALE: NOT TO SCALE

DRAWING NO: OH1615.1

SHEET: 1 OF 1

© 1998 - 2022 San Diego Gas and Electric Company. All rights reserved. Removal of this copyright notice without permission is not permitted under law.

X Indicates Latest Revision | Completely Revised | New Page | Information Removed

SCOPE: THIS STANDARD ILLUSTRATES THE INSTALLATION OF AVIAN PROTECTION COVER-UP DEVICES FOR PIN AND INSULATOR CONSTRUCTION.

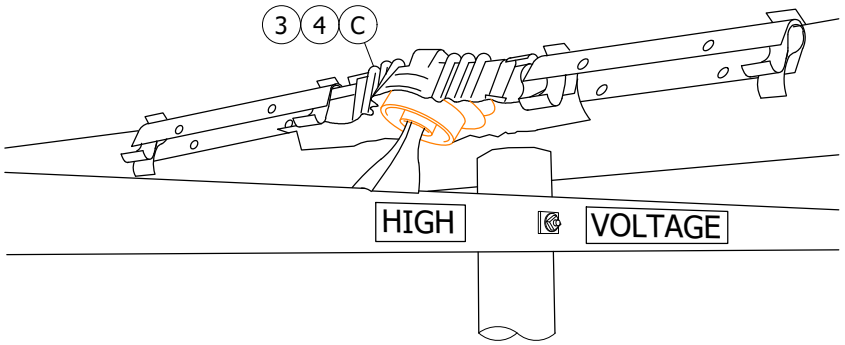

FIGURE 1

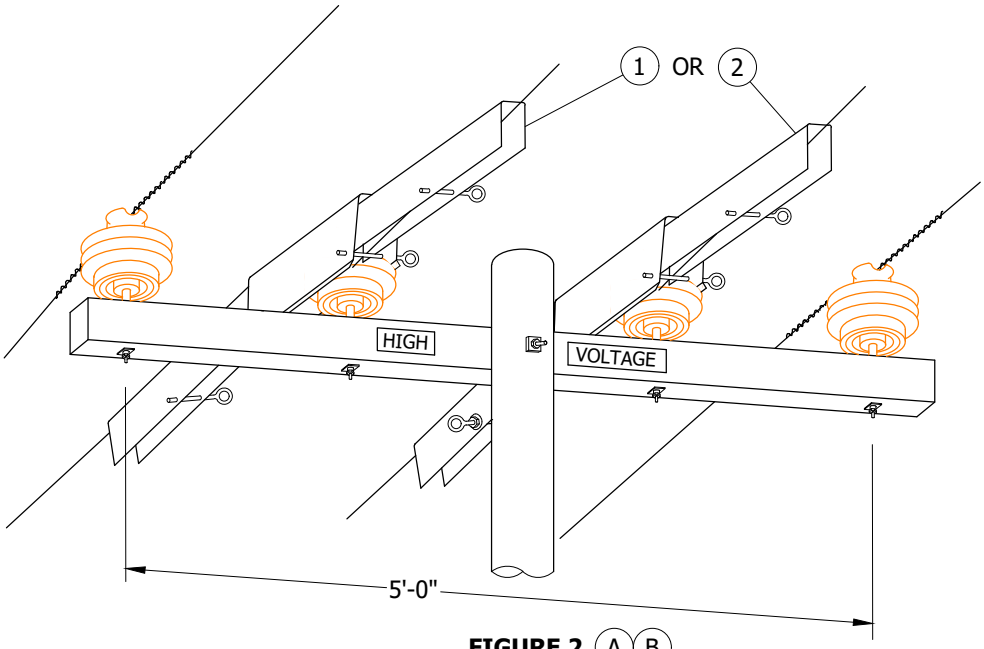

FIGURE 2 A B

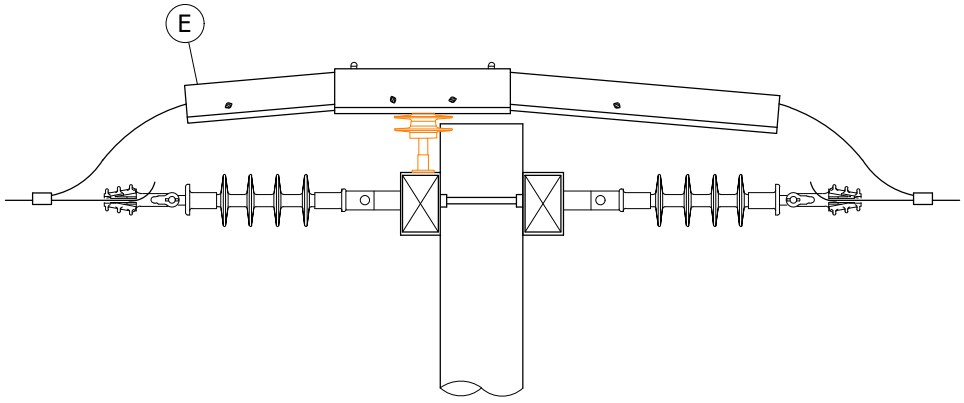

FIGURE 3

© 1998 - 2021 San Diego Gas & Electric Company. All rights reserved. Removal of this copyright notice without permission is not permitted under law.

REV	CHANGE	DR	BY	DSN	APV	DATE	REV	CHANGE	DR	BY	DSN	APV	DATE
C	EDITORIAL CHANGES	-	JS	JS	CZH	08/01/2018	F	FIGURE UPDATE	EDM	JIK	JES	CZH	10/01/2021
B	DRAWING UPDATE	-	GW	JS	MDJ	04/01/2018	E	EDITORIAL CHANGES	-	JC	JS	CZH	04/22/2019
A	REVISION	-	-	-	TQ/DW	06/06/2013	D	DRAWING UPDATE	PEI	-	-	-	01/15/2019

X Indicates Latest Revision | Completely Revised | New Page | Information Removed

SDG&E ELECTRIC OVERHEAD CONSTRUCTION STANDARDS

PIN AND INSULATOR COVER-UP DEVICES FOR AVIAN PROTECTION

TABLE OF CONTENTS

TABLE OF CONTENTS

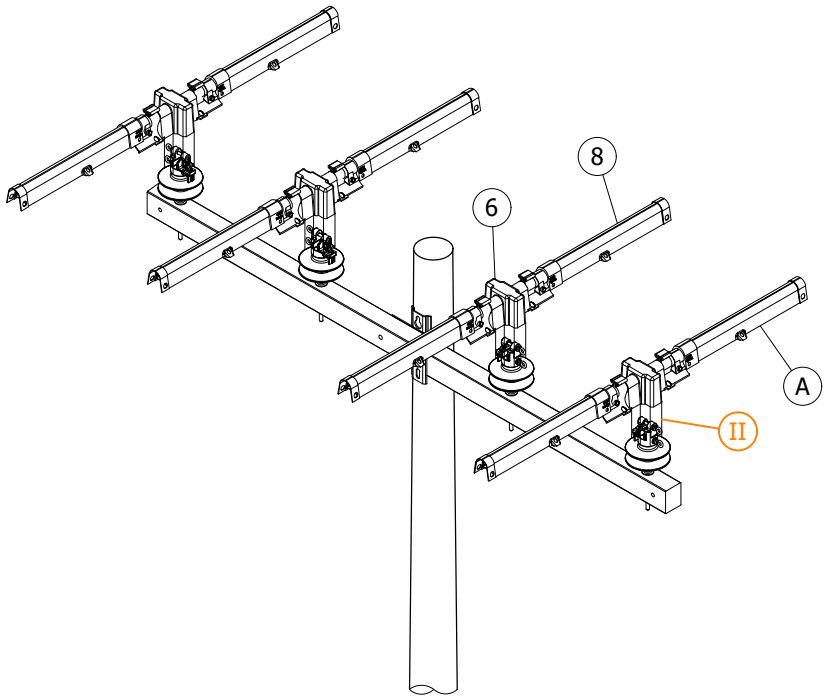

FIGURE 4

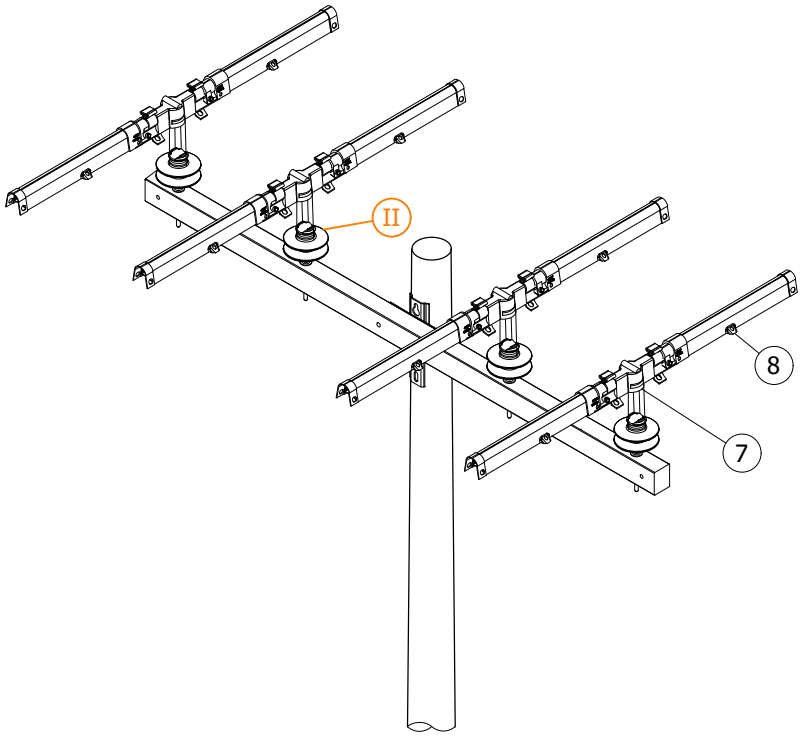

FIGURE 5

© 1998 - 2021 San Diego Gas & Electric Company. All rights reserved. Removal of this copyright notice without permission is not permitted under law.

REV	CHANGE	DR	BY	DSN	APV	DATE	REV	CHANGE	DR	BY	DSN	APV	DATE
C	EDITORIAL CHANGES	-	JS	JS	CZH	08/01/2018	F	FIGURE UPDATE	EDM	JIK	JES	CZH	10/01/2021
B	DRAWING UPDATE	-	GW	JS	MDJ	04/01/2018	E	EDITORIAL CHANGES	-	JC	JS	CZH	04/22/2019
A	REVISION	-	-	-	TQ/DW	06/06/2013	D	DRAWING UPDATE	PEI	-	-	-	01/15/2019

TABLE OF CONTENTS

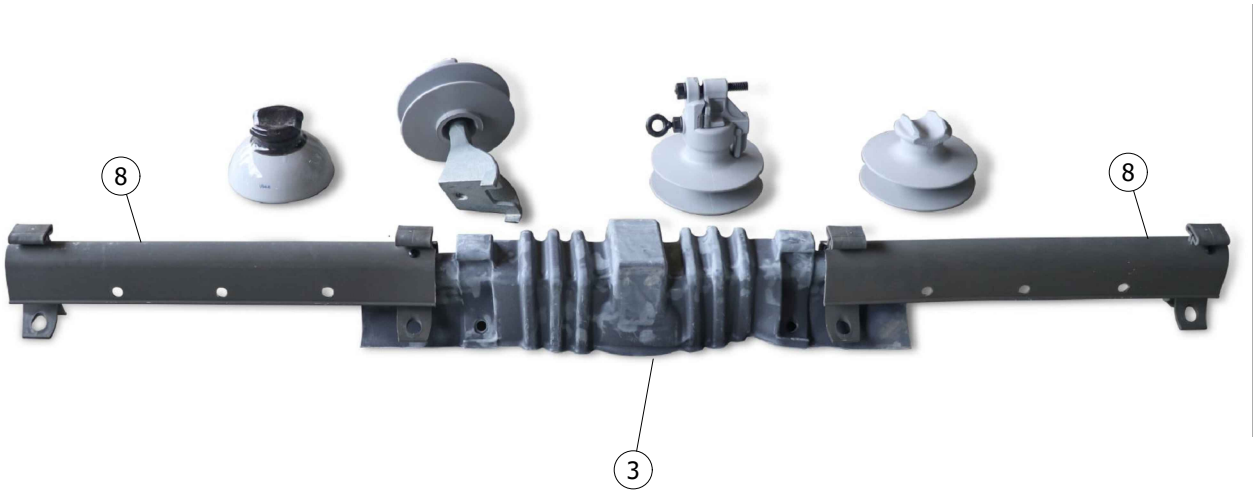

FIGURE 6

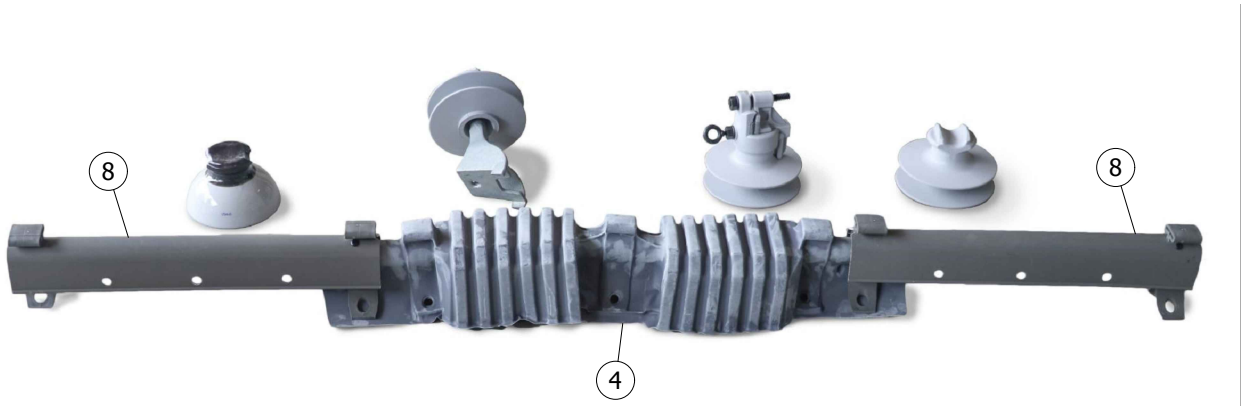

FIGURE 7

© 1998 - 2021 San Diego Gas & Electric Company. All rights reserved. Removal of this copyright notice without permission is not permitted under law.

REV	CHANGE	DR	BY	DSN	APV	DATE	REV	CHANGE	DR	BY	DSN	APV	DATE
C	EDITORIAL CHANGES	-	JS	JS	CZH	08/01/2018	F	FIGURE UPDATE	EDM	JIK	JES	CZH	10/01/2021
B	DRAWING UPDATE	-	GW	JS	MDJ	04/01/2018	E	EDITORIAL CHANGES	-	JC	JS	CZH	04/22/2019
A	REVISION	-	-	-	TQ/DW	06/06/2013	D	DRAWING UPDATE	PEI	-	-	-	01/15/2019

TABLE OF CONTENTS

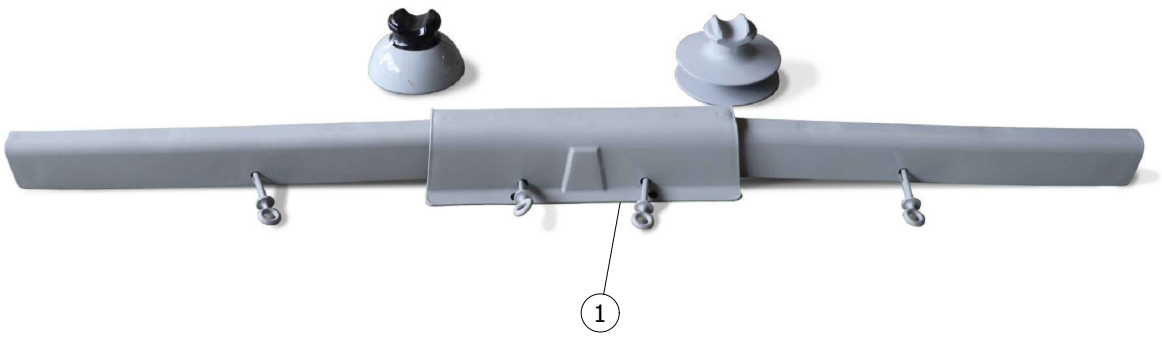

FIGURE 8

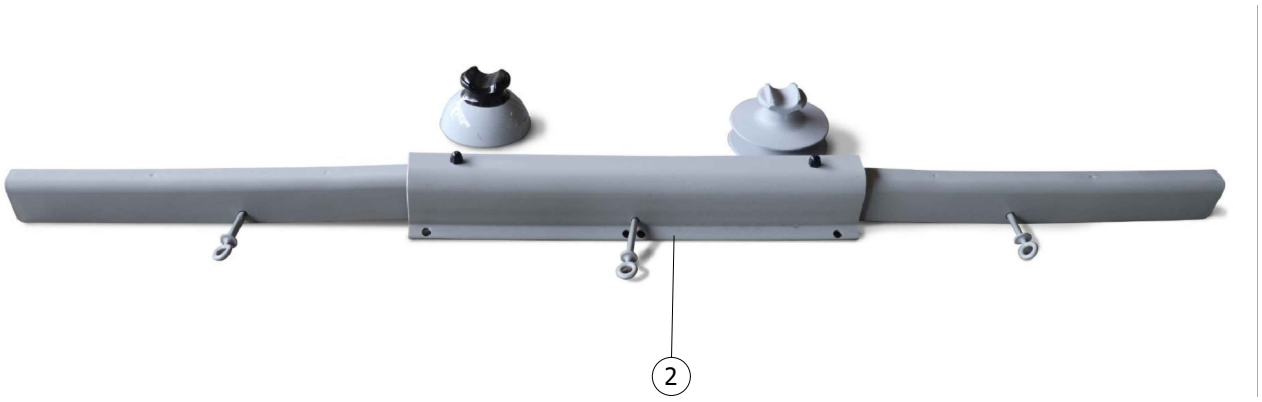

FIGURE 9

© 1998 - 2021 San Diego Gas & Electric Company. All rights reserved. Removal of this copyright notice without permission is not permitted under law.

REV	CHANGE	DR	BY	DSN	APV	DATE	REV	CHANGE	DR	BY	DSN	APV	DATE
C	EDITORIAL CHANGES	-	JS	JS	CZH	08/01/2018	F	FIGURE UPDATE	EDM	JIK	JES	CZH	10/01/2021
B	DRAWING UPDATE	-	GW	JS	MDJ	04/01/2018	E	EDITORIAL CHANGES	-	JC	JS	CZH	04/22/2019
A	REVISION	-	-	-	TQ/DW	06/06/2013	D	DRAWING UPDATE	PEI	-	-	-	01/15/2019

TABLE OF CONTENTS

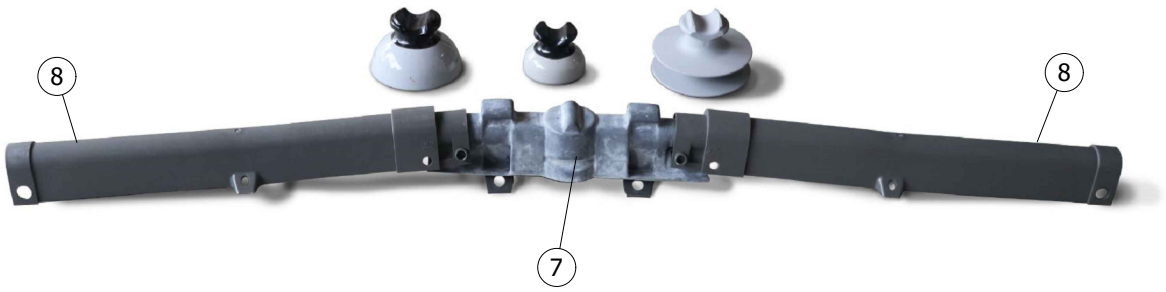

FIGURE 10

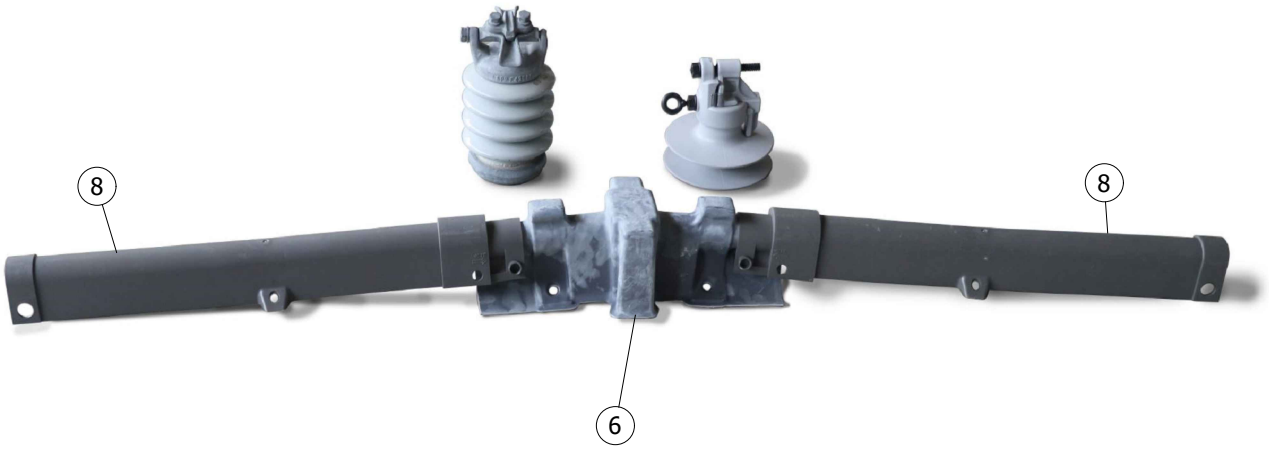

FIGURE 11

© 1998 - 2021 San Diego Gas & Electric Company. All rights reserved. Removal of this copyright notice without permission is not permitted under law.

REV	CHANGE	DR	BY	DSN	APV	DATE	REV	CHANGE	DR	BY	DSN	APV	DATE
C	EDITORIAL CHANGES	-	JS	JS	CZH	08/01/2018	F	FIGURE UPDATE	EDM	JIK	JES	CZH	10/01/2021
B	DRAWING UPDATE	-	GW	JS	MDJ	04/01/2018	E	EDITORIAL CHANGES	-	JC	JS	CZH	04/22/2019
A	REVISION	-	-	-	TQ/DW	06/06/2013	D	DRAWING UPDATE	PEI	-	-	-	01/15/2019

TABLE OF CONTENTS

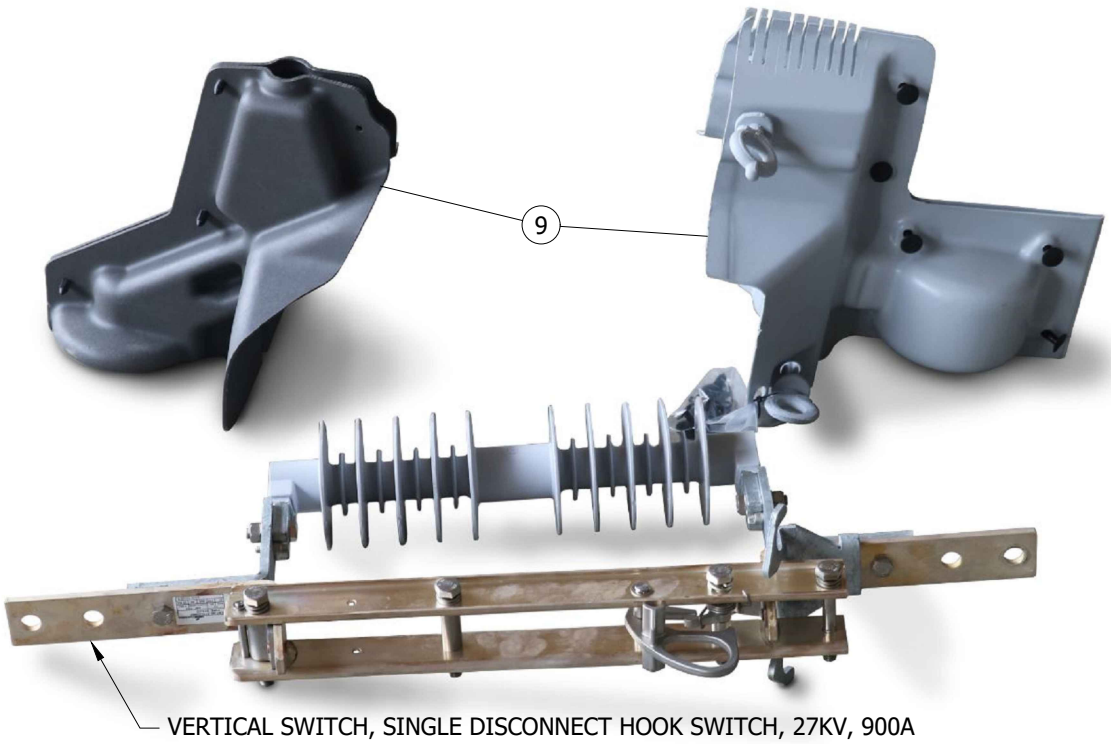

FIGURE 12

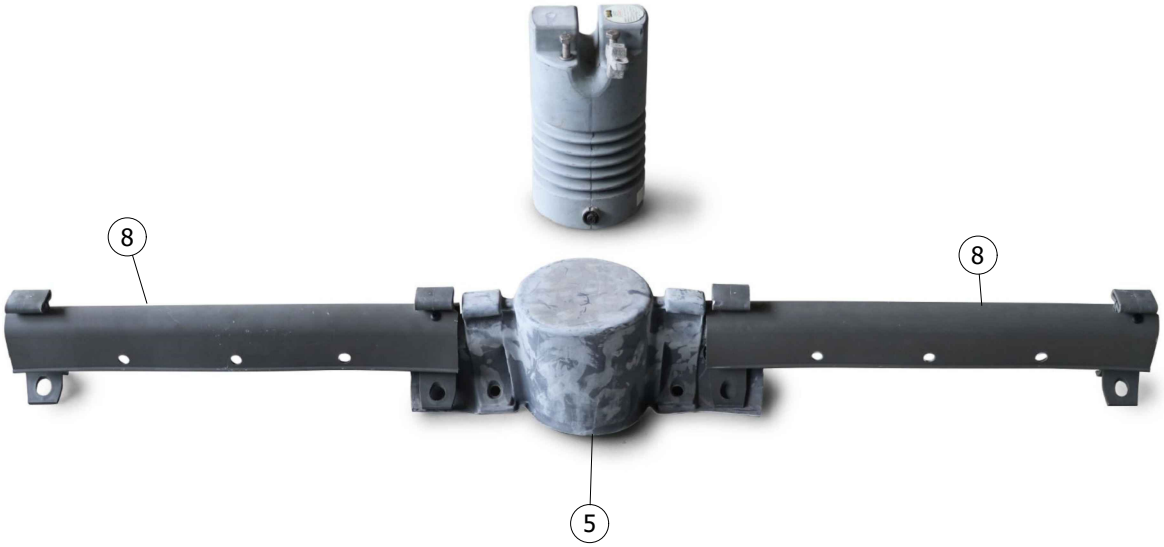

FIGURE 13

© 1998 - 2021 San Diego Gas & Electric Company. All rights reserved. Removal of this copyright notice without permission is not permitted under law.

REV	CHANGE	DR	BY	DSN	APV	DATE	REV	CHANGE	DR	BY	DSN	APV	DATE
C	EDITORIAL CHANGES	-	JS	JS	CZH	08/01/2018	F	FIGURE UPDATE	EDM	JIK	JES	CZH	10/01/2021
B	DRAWING UPDATE	-	GW	JS	MDJ	04/01/2018	E	EDITORIAL CHANGES	-	JC	JS	CZH	04/22/2019
A	REVISION	-	-	-	TQ/DW	06/06/2013	D	DRAWING UPDATE	PEI	-	-	-	01/15/2019

INSTALLATION:

(A) REQUIRED MINIMUM DISTANCE OF UNCOVERED CONDUCTOR PHASE-TO-PHASE OR PHASE-TO-NEUTRAL OVER TOP OF CROSSARM IS 5 FEET. THIS MAY REQUIRE MORE THAN ONE COVER-UP DEVICE PER CROSSARM LEVEL.

(B) WHEN INSTALLING A COVER-UP DEVICE THAT INCLUDES PINS, INSTALL PINS WITH EYELET FACING POLE. EACH COVER INCLUDES FOUR PINS, TWO LONG PINS FOR THE P&I CAP AND TWO SHORT PINS FOR EXTENSIONS.

(C) WHEN INSTALLING A COVER-DEVICE THAT INCLUDES CLIPS, INSTALL EXTENSIONS SO THAT CLIP IS OVER OUTSIDE OF THE P&I CAP.

D. WHEN USING A PIN AND INSULATOR COVER-UP FOR AN OVER-THE-ARM JUMPER, JUMPER COVER MAY BE SUBSTITUTED FOR ONE OR BOTH OF THE EXTENSIONS.(b)

(E) WHEN INSTALLING PIN AND INSULATOR COVER-UP ON OVER-THE-ARM JUMPERS, IT IS PERMITTED TO CUT BACK PIN AND INSULATOR COVER EXTENSION ON SHORT JUMPER SIDE AS LONG AS THE PIN IS NOT ELIMINATED. JUMPER COVER MAY BE SUBSTITUTED FOR THE SHORT SIDE JUMPER EXTENSION.(b)

F. FOR DOUBLE ARMS ON ENGINEERED STEEL POLES, IT MAY BE NECESSARY TO USE TWO SINGLE COVERS. EXTENSION COVERS CAN BE CUT AND DRILLED AS NEEDED AND PINNED TO DESIRED LENGTH.

BILL OF MATERIALS:

ITEM	DESCRIPTION	QUANTITY	STANDARD PAGE	STOCK NUMBER	DESIGN UNITS
1	PIN AND INSULATOR COVER, SINGLE 55-3, 55-5, OR 56-1 (III)(V)	AS REQ'D	-	S289642	PIC55
2	PIN AND INSULATOR COVER, DOUBLE 55-3, 55-5, OR 56-1 (III)(VI)	AS REQ'D	-	S289652	DBL555
3	PIN AND INSULATOR COVER, SINGLE 55-3, 55-5, OR 56-1 SIDE TIE, OR VPI (IV)	AS REQ'D	-	S289650	VPICOV
4	PIN AND INSULATOR COVER, DOUBLE 55-3, 55-5, OR 56-1 SIDE TIE, OR DOUBLE VPI/CLAMP TOP	AS REQ'D	-	S289654	DBLVPI
5	CAPACITOR SENSOR COVER	AS REQ'D	-	S289606	LCVMI
6	COVER, AVIAN HENDRIX VICE TOP	AS REQ'D	-	S289658	VPPCVR
7	COVER, AVIAN FOR TIE TOP, INSULATORS (VII)	AS REQ'D	-	S289656	PORCVR
8	COVER, AVIAN, EXTENSION ARM, FOR RAPTOR COVERS	AS REQ'D	-	S289660	EXACVR
9	COVER, 900A DISCONNECT, CUTOUT STYLE	AS REQ'D	-	S286948	9COCVR

NOTES:

I. THESE COVER-UP DEVICES ARE FOR INCIDENTAL WILDLIFE CONTACT ONLY. THEY ARE NOT RATED PERSONAL PROTECTION AND SHOULD BE TREATED AS A BARE WIRE.

(II) COVER ALL CONDUCTORS ON 10-FOOT CROSSARMS OR LESS. FOR 12-FOOT AND 15-FOOT CROSSARMS COVER ONLY THE INSIDE CONDUCTORS.

(III) ARM EXTENSIONS ARE INCLUDED WITH INSULATOR COVERS.

(IV) COVERUPS WILL WORK ON ALL INSULATORS SHOWN BUT THE PREFERRED USE IS ON SIDE TIES AND ANGLES.

(V) WILL BE USED UNTIL STOCK IS DEPLETED. WILL BE REPLACED WITH S289656.

(VI) WILL BE USED UNTIL STOCK IS DEPLETED. WILL BE REPLACED WITH S289654.

(VII) WILL REPLACE S289642.

REFERENCE:

a. FOR DETERMINING WHERE AVIAN PROTECTION COVER-UP DEVICES SHOULD BE INSTALLED, SEE OH1610.

(b) FOR JUMPER COVER, SEE OH1630.

TABLE OF CONTENTS

© 1998 - 2021 San Diego Gas & Electric Company. All rights reserved. Removal of this copyright notice without permission is not permitted under law.

REV	CHANGE	DR	BY	DSN	APV	DATE	REV	CHANGE	DR	BY	DSN	APV	DATE
C	EDITORIAL CHANGES	-	JS	JS	CZH	08/01/2018	F	FIGURE UPDATE	EDM	JIK	JES	CZH	10/01/2021
B	DRAWING UPDATE	-	GW	JS	MDJ	04/01/2018	E	EDITORIAL CHANGES	-	JC	JS	CZH	04/22/2019
A	REVISION	-	-	-	TQ/DW	06/06/2013	D	DRAWING UPDATE	PEI	-	-	-	01/15/2019

SCOPE: THIS STANDARD ILLUSTRATES THE INSTALLATION OF AVIAN PROTECTION COVER UP FOR BOTH SINGLE PHASE AND THREE PHASE TRANSFORMER CONSTRUCTION IN AVIAN PROTECTION CRITICAL AREAS AND FOR ALL NEW TRANSFORMER INSTALLATIONS.

CAUTION:

* THIS COVER UP METHOD IS FOR INCIDENTAL WILDLIFE CONTACT ONLY. THEY ARE NOT RATED FOR PERSONAL PROTECTION AND SHOULD BE TREATED AS ENERGIZED CONDUCTORS.

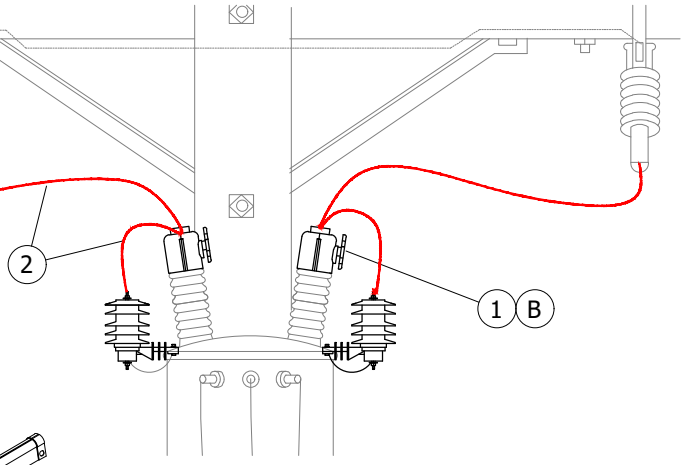

FIGURE 1
SINGLE-PHASE (C)

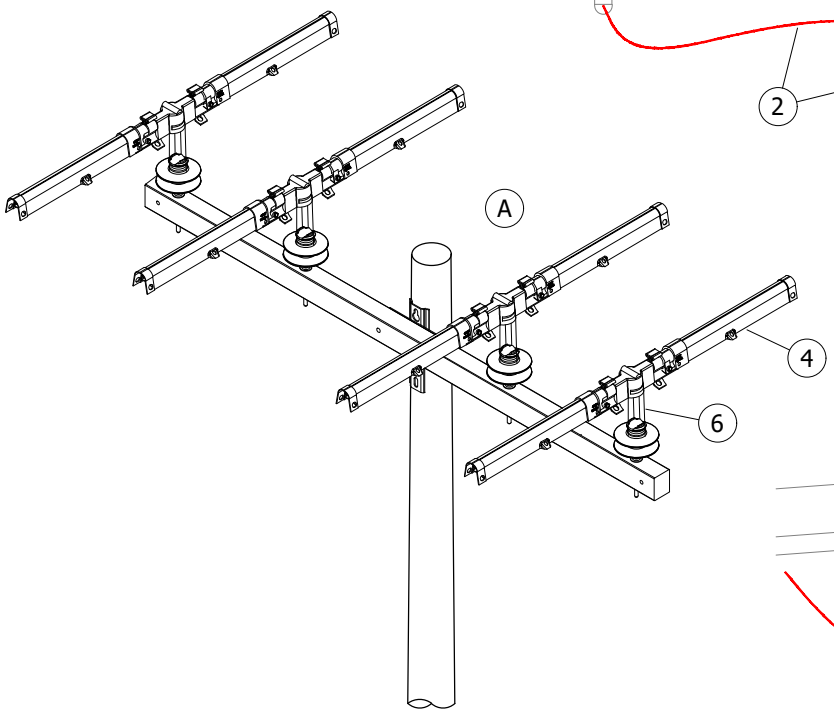

FIGURE 2
THREE-PHASE

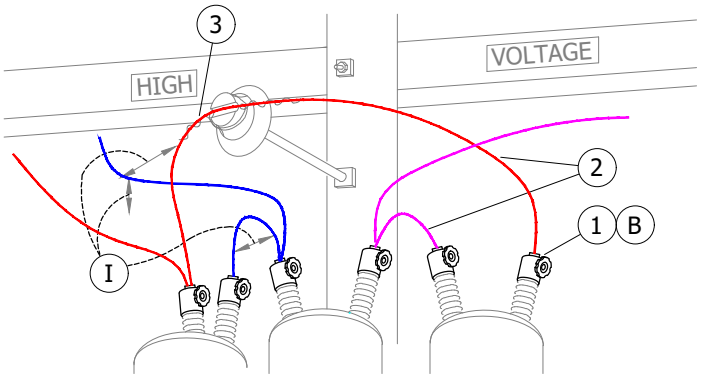

FIGURE 3
THREE-PHASE

INSTALLATION:

(A) THE REQUIRED MINIMUM DISTANCE OF UNCOVERED CONDUCTOR PHASE-TO-PHASE, PHASE-TO-NEUTRAL, OR PHASE-TO-GROUND IS 60".

(B) THE HAND WHEEL THAT IS SUPPLIED WITH THE BUSHING COVER MUST BE INSTALLED TO SECURE THE COVER TO THE BUSHING AND PREVENT ANIMALS FROM MAKING CONTACT WITH THE BUSHING CONNECTION. THE JUMPER WIRE SHALL BE SECURED USING THE EYEBOLT TIGHTENING NUT, WHILE THE HAND WHEEL SHALL THREAD ONTO THE REMAINING THREADS. IF THERE ARE NOT ENOUGH THREADS REMAINING, THE EYEBOLT TIGHTENING NUT SHALL BE REPLACED WITH THE HAND WHEEL AND HAND TIGHTENED ONLY.

(C) USE SELF FUSING SILICONE TAPE (SQUIRREL TAPE) FOR COVERING HIGH VOLTAGE CONNECTIONS. FOR DIFFICULT TO COVER TERMINATIONS, LAYER TAPE PER MANUFACTURERS INSTRUCTIONS.

© 1998 - 2022 San Diego Gas & Electric Company. All rights reserved. Removal of this copyright notice without permission is not permitted under law.

REV	CHANGE	DR	BY	DSN	APV	DATE	REV	CHANGE	DR	BY	DSN	APV	DATE
C	NOTES UPDATE	-	JC	JS	CZH	04/22/2019	F						
B	DRAWING UPDATE	-	PEI	-	-	01/15/2019	E	TABLE UPDATE	EDM	RSL	JES	FRC	02/14/2022
A	ORIGINAL ISSUE	-	-	PIA	MJC	03/21/2012	D	TABLE UPDATE	EDM	GLW	JES	CZH	09/14/2020

Indicates Latest Revision | X | Completely Revised | New Page | Information Removed

SDG&E ELECTRIC OVERHEAD CONSTRUCTION STANDARDS

AVIAN COVER-UP PROTECTION AND TRANSFORMER LEAD WIRES

OH1630.1

TABLE OF CONTENTS

BILL OF MATERIALS:

ITEM	DESCRIPTION	QUANTITY	STANDARD PAGE	STOCK NUMBER	DESIGN UNITS
1	BUSHING COVER, TRANSFORMER	AS REQ'D	--	S289188 (X)	BSGCOV
2	WIRE, #4-7 STR CU, WITH POLYETHYLENE COVER (B)	AS REQ'D	--	S815044	POLY4J
3	WIRE, #6 SOLID CU, COVERED (TIE WIRE)	AS REQ'D	--	S811852	CS6C
4	EXTENSION ARM COVER	AS REQ'D	1620	--	--
5	SELF FUSING SILICONE TAPE 1" (SQUIRREL TAPE)	AS REQ'D	--	S721736 (X)	--
	SELF FUSING SILICONE TAPE 2" (SQUIRREL TAPE)	AS REQ'D	--	S721738 (X)	--
6	COVER, AVIAN FOR TIE TOP INSULATORS	AS REQ'D	--	S289656	PORCVR

NOTES:

(I) REQUIRES AVIAN PROTECTION.

(X) THIS ITEM IS EXEMPT.

REFERENCE:

a. FOR DETERMINING WHERE AVIAN PROTECTION COVER-UP DEVICES SHOULD BE INSTALLED, SEE OH1610 OR GO TO LAND SERVICES GEOGRAPHIC INFORMATION SYSTEMS (LS-GIS) FOR MAPPING LAYER TITLED "AVIAN AREA" UNDER ENVIRONMENTAL.

b. FOR COMPLETE TABLE OF ALL AVAILABLE AVIAN COVERS; SEE OH1620.

TABLE OF CONTENTS

© 1998 - 2022 San Diego Gas & Electric Company. All rights reserved. Removal of this copyright notice without permission is not permitted under law.

REV	CHANGE	DR	BY	DSN	APV	DATE	REV	CHANGE	DR	BY	DSN	APV	DATE
C	NOTES UPDATE	-	JC	JS	CZH	04/22/2019	F						
B	DRAWING UPDATE	-	PEI	-	-	01/15/2019	E	TABLE UPDATE	EDM	RSL	JES	FRC	02/14/2022
A	ORIGINAL ISSUE	-	-	PIA	MJC	03/21/2012	D	TABLE UPDATE	EDM	GLW	JES	CZH	09/14/2020

X Indicates Latest Revision | Completely Revised | New Page | Information Removed

SDG&E ELECTRIC OVERHEAD CONSTRUCTION STANDARDS

AVIAN COVER-UP PROTECTION AND TRANSFORMER LEAD WIRES

OH1630.2

SCOPE: THIS STANDARD ILLUSTRATES THE INSTALLATION OF AVIAN PROTECTION COVER-UP DEVICES FOR BOTH LIGHTNING ARRESTERS AND CUTOUTS. **ALL LIGHTNING ARRESTERS REQUIRE COVER-UP.** (C)

ATTENTION:

* THESE COVER-UP DEVICES ARE FOR INCIDENTAL WILDLIFE CONTACT ONLY. THEY ARE NOT RATED FOR PERSONAL PROTECTION AND SHOULD BE TREATED AS BARE WIRE.

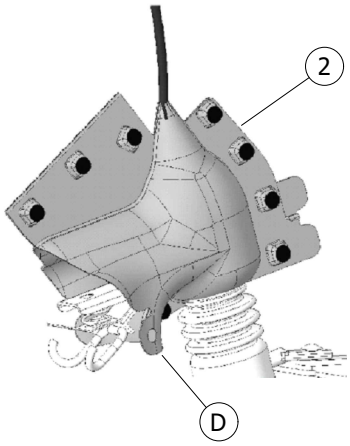

FIGURE 1
UNIVERSAL COVER FOR CMU
AND ALL OTHER CUTOUTS

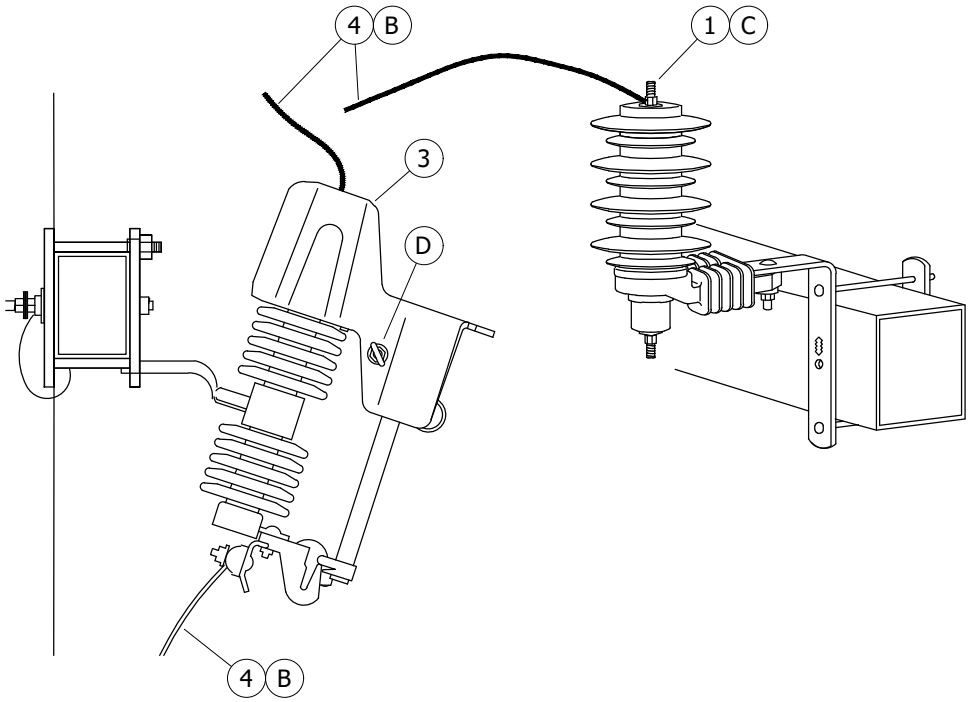

FIGURE 2

INSTALLATION:

A. THE REQUIRED MINIMUM DISTANCE OF UNCOVERED CONDUCTOR PHASE-TO-PHASE, PHASE-TO-NEUTRAL AND PHASE-TO-GROUND IS 60 INCHES.

(B) FOR NEW CONSTRUCTION, OR WHEN DE-ENERGIZING EXISTING CONSTRUCTION, USE #4/7 POLYETHYLENE COVERED JUMPER WIRE IN PLACE OF JUMPER COVER.

(C) USE SELF FUSING SILICONE TAPE FOR COVERING JUMPER WIRE CONNECTIONS, LIGHTNING ARRESTERS, OR ANY DIFFICULT TO COVER TERMINATIONS. DOUBLE LAP TAPE PER MANUFACTURERS INSTRUCTIONS. TAPE SHALL ALSO BE USED IN LIEU OF THE ARRESTER COVERS. (1)

(D) WHEN INSTALLING THE CUTOUT COVER, UNIVERSAL FIT (2) DO NOT PIN THE COVER. THERE IS A PIN PROVIDED BUT DO NOT USE IT. WHEN INSTALLING AN INTERCHANGEABLE CUTOUT COVER-UP DEVICE (3) THAT INCLUDES A PIN, INSTALL THE PIN WITH THE EYELET FACING THE POLE.

E. INSTALL AVIAN COVER UP ON ALL HIGH VOLTAGE CONNECTIONS AND DEVICES PER OVERHEAD STANDARD 1610. INSTALL AVIAN COVER OR PROTECTION TO DEVICES AND CONDUCTORS WHEN REPAIRS ARE MADE DUE TO ANIMAL CONTACTS OUTSIDE THE AVIAN PROTECTION AREA.

TABLE OF CONTENTS

© 1998 - 2021 San Diego Gas & Electric Company. All rights reserved. Removal of this copyright notice without permission is not permitted under law.

REV	CHANGE	DR	BY	DSN	APV	DATE	REV	CHANGE	DR	BY	DSN	APV	DATE
C	EDITORIAL CHANGES	-	JCE	JS	CZH	06/14/2019	F						
B	EDITORIAL CHANGES	-	GW	JS	MDJ	04/01/2019	E						
A	EDITORIAL CHANGES	-	SL	JS	MDJ	09/28/2017	D	TABLE UPDATE	EDM	MRF	JES	CZH	08/25/2021

BILL OF MATERIALS:

ITEM	DESCRIPTION	QUANTITY	STANDARD PAGE	STOCK NUMBER	DESIGN UNITS
1	SELF FUSING SILICONE TAPE, 1" (SQUIRREL TAPE)	AS REQ'D	-	S721736 (X)	-
	SELF FUSING SILICONE TAPE, 2" (SQUIRREL TAPE)	AS REQ'D	-	S721738 (X)	-
2	CUTOUT COVER, UNIVERSAL FIT	AS REQ'D	-	S289662	CCOUNI
3	INTERCHANGEABLE CUTOUT COVER, STANDARD LEAKAGE (INLAND)	AS REQ'D	-	S289626	CCOVSL
4	WIRE, #4/7 CU, WITH POLYETHYLENE COVERING (B)	AS REQ'D	-	S815044	POLY4J

NOTES:

(X) THIS ITEM IS EXEMPT

REFERENCE: NONE

TABLE OF CONTENTS

© 1998 - 2021 San Diego Gas & Electric Company. All rights reserved. Removal of this copyright notice without permission is not permitted under law.

REV	CHANGE	DR	BY	DSN	APV	DATE	REV	CHANGE	DR	BY	DSN	APV	DATE
C	EDITORIAL CHANGES	-	JCE	JS	CZH	06/14/2019	F						
B	EDITORIAL CHANGES	-	GW	JS	MDJ	04/01/2019	E						
A	EDITORIAL CHANGES	-	SL	JS	MDJ	09/28/2017	D	TABLE UPDATE	EDM	MRF	JES	CZH	08/25/2021

SCOPE: THIS STANDARD ILLUSTRATES THE APPLICATION OF COVERED JUMPER WIRE FOR EXISTING POLES IN THREE- OR FOUR-WIRE CONSTRUCTION, SPECIFICALLY IN AVIAN PROTECTION AREAS. THE STANDARD APPLIES TO POLES WHERE ONLY A SINGLE CIRCUIT EXISTS, WITH DEAD-ENDS. THIS CONSTRUCTION IS ONLY TO BE USED ON EXISTING WOOD POLES THAT DO NOT MEET THE CLEARANCE REQUIREMENT FOR UNDERARM CONSTRUCTION, BUT DO MEET THE POLE LOADING CALCULATION. IT ALSO APPLIES WHERE INSTALLATION OF A TALLER POLE IS NOT PRACTICAL.

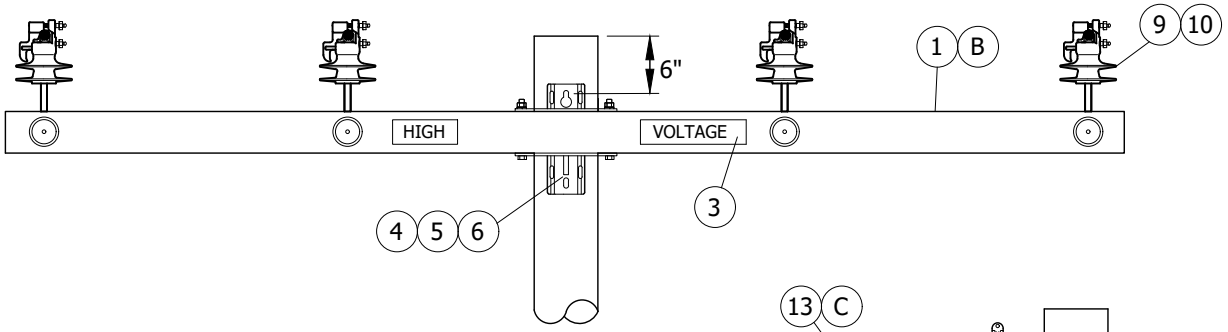

FIGURE 1
FRONT VIEW

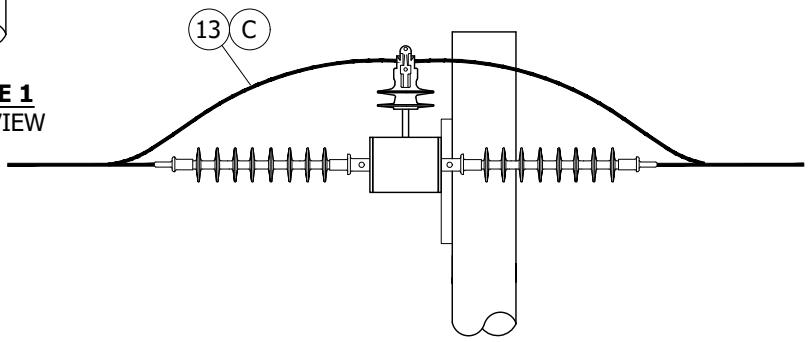

FIGURE 1
SIDE VIEW

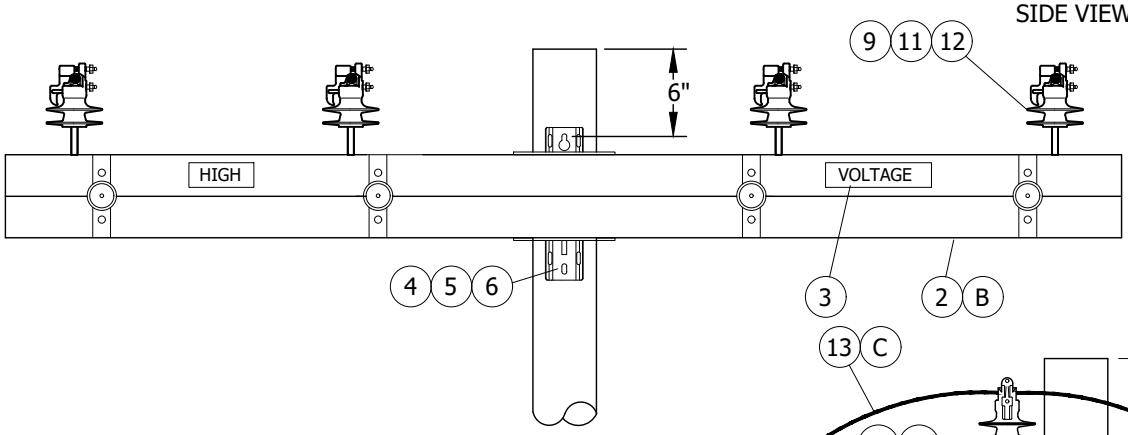

FIGURE 2
FRONT VIEW

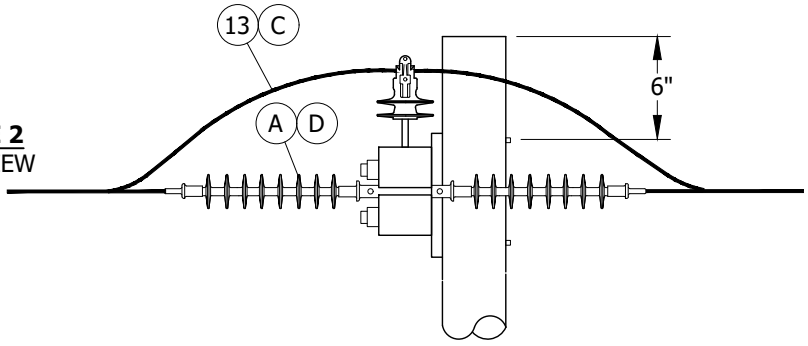

FIGURE 2
SIDE VIEW

TABLE OF CONTENTS

© 1998 - 2020 San Diego Gas & Electric Company. All rights reserved. Removal of this copyright notice without permission is not permitted under law.

REV	CHANGE	DR	BY	DSN	APV	DATE	REV	CHANGE	DR	BY	DSN	APV	DATE
C	BILL OF MATERIALS UPDATE	EDM	GLW	JES	CZH	1/14/2020	F						
B	DRAWING UPDATE	PEI	-	-	-	01/15/2019	E						
A	ORIGINAL ISSUE	-	JC	IL	JS	01/05/2015	D						

X Indicates Latest Revision | Completely Revised | New Page | Information Removed

SDG&E ELECTRIC OVERHEAD CONSTRUCTION STANDARDS

MODIFIED CONSTRUCTION FOR EXISTING POLES
AVIAN SAFE CONSTRUCTION

OH1654.1

INSTALLATION:

(A) SHORTER DEADEND INSULATORS CAN BE USED ON OUTSIDE PHASE POSITION ON ARM SIDE.

(B) ENSURE THE FOLLOWING CALCULATION IS NOT VIOLATED WHEN COMPARING APPLIED LOADS TO ALLOWABLE LOADS SO THAT AN OVERALL SAFETY FACTOR OF TWO IS MAINTAINED:

$$\frac{\text{(APPLIED VERTICAL LOAD)}}{\text{(ALLOWABLE VERTICAL LOAD)}} + \frac{\text{(APPLIED HORIZONTAL LOAD)}}{\text{(ALLOWABLE HORIZONTAL LOAD)}} + \frac{\text{(APPLIED TRANSVERSE LOAD)}}{\text{(ALLOWABLE TRANSVERSE LOAD)}} \leq 1$$

(C) SIZE AS REQUIRED WITH MINIMUM SIZE EQUAL TO LINE CONDUCTOR AMPACITY OR GREATER.

(D) SHACKLES TO BE USED WITH FIBERGLASS, STACKED, DEADEND CROSSARMS IN TRANSVERSE (SIDE STRAIN) APPLICATIONS.

BILL OF MATERIALS:

ITEM	DESCRIPTION	QUANTITY	STANDARD PAGE	STOCK NUMBER	DESIGN UNITS
1	CROSSARM, FIBERGLASS, DEADEND	AS REQ'D	379	-	-
2	CROSSARM, FIBERGLASS, DEADEND, STACKED	AS REQ'D	379	-	-
3	SIGN, ADHESIVE STICKER, HIGH VOLTAGE FOR FIBERGLASS	2	751	S701760	HV/D
4	BOLT, MACHINE, GALV, W/NUT 3/4" X (LENGTH AS REQ'D)	AS REQ'D	392.1	-	-
5	WASHER, CURVED, SQUARE 3/4"	AS REQ'D	392.2	S797760	RIBWSH
6	SPRING, LOCK, WASHER	AS REQ'D	392.1	S796802 (X)	LK-WSH
7	SHACKLE, 5/8" PIN,	AS REQ'D	744	S636432 (X)	30KSHK
8	STRAIN CLAMPS (d)	AS REQ'D	741-743	-	-
9	INSULATOR, 1" THREAD, PIN TYPE	AS REQ'D	750.2	-	-
10	INSULATOR, DE POLYMER, 35KV	AS REQ'D	392.2	S428958	LONGDE
11	BOLT, MACHINE, GALV, W/NUT 5/8" X 10"	AS REQ'D	392.1	-	-
12	PIN, TRANSFORMER	AS REQ'D	396	S529248	PS/01
13	WIRE, POLY COVERED COPPER (c)	AS REQ'D	718	-	-

NOTES:

(X) THIS ITEM IS EXEMPT.

REFERENCE:

a. BONDING FOR CONTAMINATION DISTRICT 1 ONLY, SEE STD. 1003.

b. FIBERGLASS CROSSARM ALLOWABLE LOADING, SEE STANDARD 379.

c. COVERED COPPER EQUIPMENT AND LINE WIRE JUMPERS, SEE STANDARD 718.

(d) STRAIN CLAMP SIZE AND CONDUCTOR USE, SEE STD. 741-743.

TABLE OF CONTENTS

© 1998 - 2020 San Diego Gas & Electric Company. All rights reserved. Removal of this copyright notice without permission is not permitted under law.

REV	CHANGE	DR	BY	DSN	APV	DATE	REV	CHANGE	DR	BY	DSN	APV	DATE
C	BILL OF MATERIALS UPDATE	EDM	GLW	JES	CZH	1/14/2020	F						
B	DRAWING UPDATE	PEI	-	-	-	01/15/2019	E						
A	ORIGINAL ISSUE	-	JC	IL	JS	01/05/2015	D						

X Indicates Latest Revision | Completely Revised | New Page | Information Removed

SDG&E ELECTRIC OVERHEAD CONSTRUCTION STANDARDS

MODIFIED CONSTRUCTION FOR EXISTING POLES
AVIAN SAFE CONSTRUCTION

OH1654.2

SCOPE: THIS STANDARD ILLUSTRATES PHASE CONDUCTOR POSITIONS FOR NEW SINGLE CIRCUIT, TANGENT, FOUR WIRE CONSTRUCTION IN AN AVIAN PROTECTION AREA.

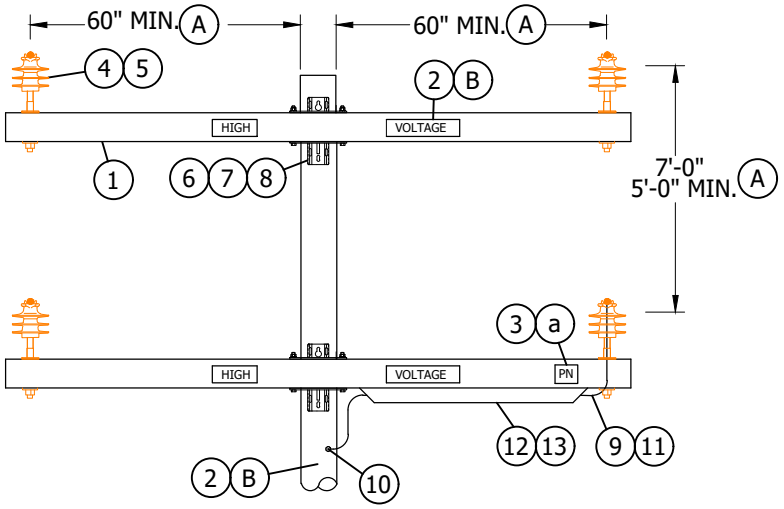

FIGURE 1

INSTALLATION:

(A) THE REQUIRED MINIMUM DISTANCE OF UNCOVERED CONDUCTOR PHASE-TO-PHASE, PHASE-TO-GROUND OR PHASE-TO-NEUTRAL IS 60 INCHES.

(B) HIGH VOLTAGE SIGN CAN BE INSTALLED ON THE CROSS-ARM OR 40 INCHES BELOW THE LOWEST CONDUCTOR LEVEL ABOVE 750 VOLTS.

BILL OF MATERIALS:

ITEM	DESCRIPTION	QUANTITY	STANDARD PAGE	STOCK NUMBER	DESIGN UNITS
1	CROSSARM, FIBERGLASS, TANGENT 12' MIN.	2	379	S294374	6TF
2	SIGN, "HIGH VOLTAGE", ADHESIVE	4	208	S647650	HV/D
3	SIGN, "PN", ADHESIVE	2		-	PN/D
4	PIN, INSULATOR (SIZE AS REQ'D)	4	396.1	-	-
5	INSULATOR, POLY, TIE TOP (SIZE AS REQ'D)	4	750.2	-	-
6	MACHINE BOLT, 3/4" (SIZE AS REQ'D)	4	392	-	-
7	SQUARE CURVED WASHERS	4		S797760	RIBWSH
8	SPRING LOCK WASHER 3/4"	4		S796802 (X)	LK-WSH
9	WIRE, POLY COVERED, COPPER, #4 SOLID GROUND WIRE	AS REQ'D	1002	S812490	POLY4J
10	CONNECTOR, STUD, SPLIT BOLT 1/2" x 13	1	-	S262560	SPCONN
11	CONNECTOR, WIRE, WEDGE (SIZE AS REQ'D)	1	784	-	-
12	SEALANT, CAULKING	1	3408	S631800	-
13	CONDUIT, SQUARE, 1"	AS REQ'D	-	TBD	-

NOTES:

(X) THIS ITEM IS EXEMPT.

REFERENCE:

(a) NEUTRAL GROUNDING METHOD, SEE OVERHEAD STANDARD 1004.

© 1998 - 2020 San Diego Gas & Electric Company. All rights reserved. Removal of this copyright notice without permission is not permitted under law.

REV	CHANGE	DR	BY	DSN	APV	DATE	REV	CHANGE	DR	BY	DSN	APV	DATE
C	FIGURE UPDATE	EDM	GLW	JES	CZH	1/14/2020	F						
B	DRAWING UPDATE	PEI	-	-	-	01/15/2019	E						
A	COMPLETELY REVISED	-	JBH	JBH	MDJ	10/25/2016	D						

X Indicates Latest Revision | Completely Revised | New Page | Information Removed

SDG&E ELECTRIC OVERHEAD CONSTRUCTION STANDARDS

CROSSARM CONSTRUCTION - 4-WIRE TANGENT
TWO LEVELS - AVIAN SAFE CONSTRUCTION

OH1655.1

TABLE OF CONTENTS

MAIN TABLE OF CONTENTS

PAGE	SUBJECT
1701	TABLE OF CONTENTS
1702	CABLE AND MESSENGER
1703	DEADEND TRANSITION: OPEN WIRE TO SPACER CABLE
1704	MID-SPAN SPACER APPLICATIONS
1706	MESSENGER DEADEND LINE ANGLES: 0 TO 6 DEGREES
1707	LINE ANGLES: 7 TO 60 DEGREES
1708	LINE ANGLES: 61 TO 90 DEGREES
1709	TANGENT SINGLE-PHASE TRANSFORMER
1710	THREE-PHASE TRANSFORMER

REV	CHANGE	DRWN	BY	CHKD	APVD	DATE
E	REVISED TO 3D FORMAT	AMP	JIK	-	-	04/06/2022
D	EDITORIAL CHANGES	-	JES	JES	CZH	07/08/2019
C	DRAWING UPDATES	PEI	-	-	-	01/15/2019

SDG&E

A Sempra Energy utility®

© 1998 - 2022 San Diego Gas and Electric Company. All rights reserved. Removal of this copyright notice without permission is not permitted under law.

SDG&E ELECTRIC OVERHEAD CONSTRUCTION STANDARDS

SPACER CABLE SYSTEM
TABLE OF CONTENTS

SCALE: NOT TO SCALE

DRAWING NO: OH1701.1

SHEET: 1 OF 1

X Indicates Latest Revision | Completely Revised | New Page | Information Removed

SCOPE: THIS STANDARD PROVIDES INFORMATION ON THE CABLE AND MESSENGER WIRE.

TABLE 1:

MESSENGER						
MESSENGER SIZE	**AMPACITY**	**DIAMETER (INCHES)**	**WEIGHT (LBS./1000 FT.)**	**BREAKING STRENGTH (LBS)**	**STOCK NUMBER**	**ASSEMBLY UNITS**
7 NO. 6AW	190	0.486	416	22,730	S814046	AWM7#6
127 AWA	430	0.722	699	32,670	S814055	AWA127

TABLE 2:

CONDUCTOR SPACER CABLE						
COVERED CONDUCTOR SIZE	**AMPACITY**	**CONDUCTOR DIAMETER**	**WEIGHT (LBS./1000 FT.)**	**TYPE / STRANDS**	**STOCK NUMBER**	**ASSEMBLY UNITS**
1/0 AWG	234	0.366	215	COMPACT 7 STR.	S195866	SPC1/0
3/0 AWG	309	0.423	297	COMPACT 7 STR.	S195806	SPC3/0
336.4 KCMIL	475	0.603	497	COMPACT 19 STR.	S195802	SPC336
636 KCMIL	702	0.835	839	COMPACT 19 STR.	S195804	SPC636

TABLE 3:

DEAD-END GRIPS FOR MESSENGER / CONDUCTOR WIRE						
MESSENGER CONDUCTOR SIZE	**GRIP NUMBER**	**OUTER COVER DIAMETER**	**LENGTH (INCHES)**	**GRIP COLOR**	**STOCK NUMBER**	**ASSEMBLY UNITS**
7 NO. 6 AWA	MG-4128	0.486	39	BLUE	S392950	GDE 7 #6
127 AWA	MG-4179	0.722	63	BLACK	-	-
1/0 AWG	CG-0115	0.666	34	GREEN	S392952	GDE1/0
3/0 AWG	CG-0117	0.753	36	ORANGE	S392954	GDE3/0
336.4 KCMIL	CG-0120	0.933	42	YELLOW	S392956	GDE336
636 KCMIL	CG-0124	1.175	48	ORANGE	S392958	GDE636

INSTALLATION: NONE

BILL OF MATERIAL: NONE

NOTES:

I. MESSENGER WIRE - IT'S THE MAIN BACKBONE SUPPORT MEMBER OF THE SPACER CABLE SYSTEM. CAN ALSO BE USED AS SYSTEM NEUTRAL.

II. SPACER CONDUCTORS - STRANDED HARD-DOWN ALUMINUM CONDUCTORS WITH 3 EXTRUDED LAYERS OF COVERING. TO BE USED IN SPACER CABLE SYSTEMS, IN WHICH CONDUCTORS ARE SUSPENDED FROM THE MESSENGER USING POLYETHYLENE SPACERS.

III. MESSENGER DEAD-END GRIP - DEAD-END CONNECTION THAT HAS A TENSILE STRENGTH EQUAL TO THE MESSENGER STRENGTH.

IV. CONDUCTOR DEAD-END GRIP - USED IN SPACE CABLE SYSTEM TO DEAD-END THE PHASE CONDUCTORS. THEY ARE APPLIED DIRECTLY OVER THE COVERING, WITH NO STRIPPING REQUIRED.

V. AUTOMATIC DEAD-END GRIPS ARE NOT TO BE USED ON SPACER CABLE SYSTEMS.

REFERENCE: NONE

TABLE OF CONTENTS

REV	CHANGE	DRWN	BY	CHKD	APVD	DATE
D	REVISED FOR 3D FORMAT	AMP	JIK	-	-	05/10/2022
C	DRAWING UPDATES	PEI	PEI	-	-	01/15/2019
B	EDITORIAL CHANGES	JS	JS	JS	CZH	08/01/2018

SDG&E A Sempra Energy utility

SDG&E ELECTRIC OVERHEAD CONSTRUCTION STANDARDS

CABLE AND MESSENGER

SCALE: NOT TO SCALE

DRAWING NO: OH1702.1

SHEET: 1 OF 1

© 1998 - 2022 San Diego Gas and Electric Company. All rights reserved. Removal of this copyright notice without permission is not permitted under law.

X Indicates Latest Revision | Completely Revised | New Page | Information Removed

SCOPE: TRANSITION POLE - WHERE CONVENTIONAL OPEN 3- OR 4-WIRE SYSTEM STOPS AT DEAD-END CROSSARM AND TRANSITIONS TO THE SPACER CABLE SYSTEM.

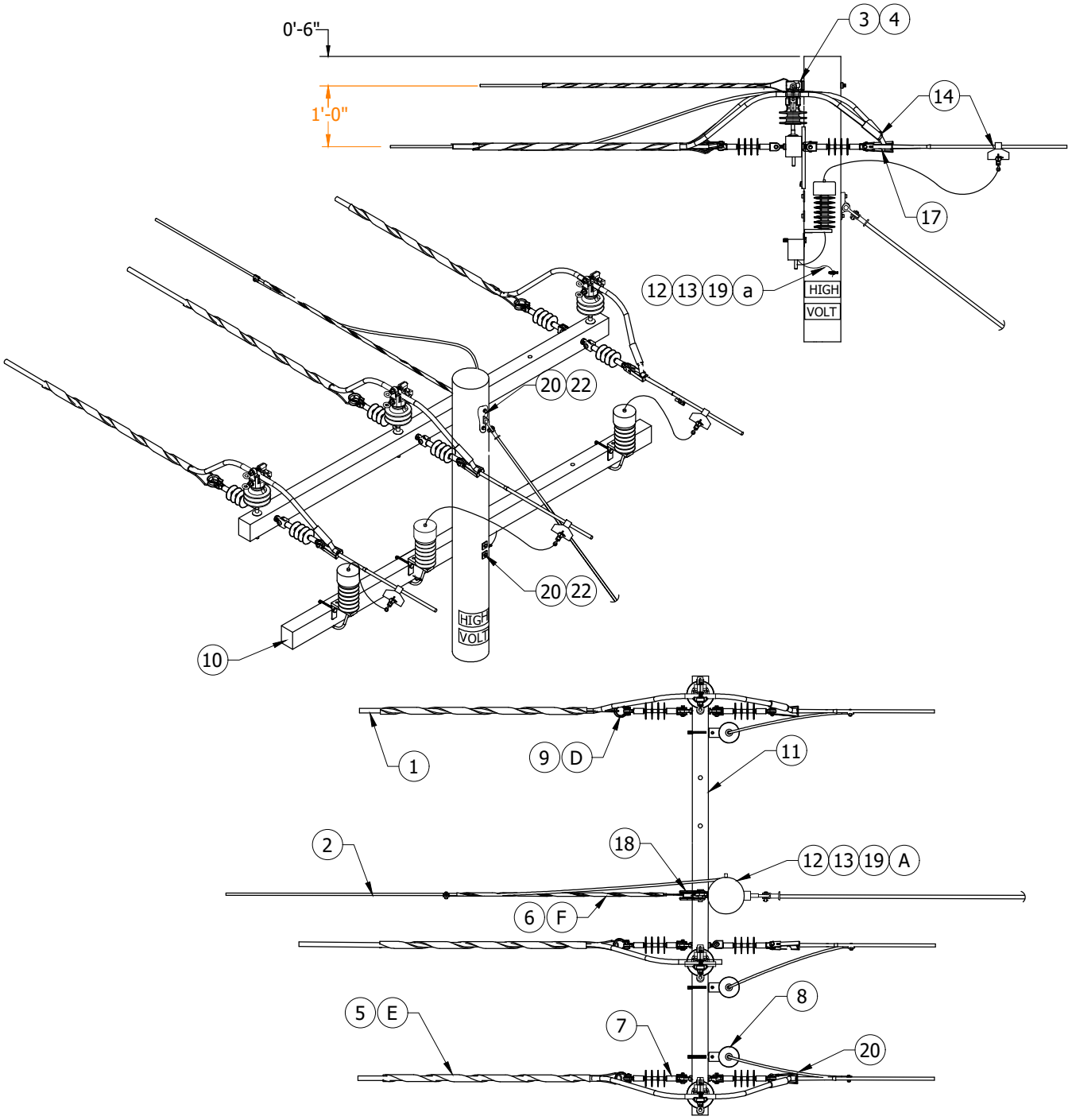

TABLE OF CONTENTS

© 1998 - 2019 San Diego Gas & Electric Company. All rights reserved. Removal of this copyright notice without permission is not permitted under law.

REV	CHANGE	BY	DSGN	APPV	DATE	REV	CHANGE	BY	DSGN	APPV	DATE
C	EDITORIAL CHANGES	JS	JS	CZH	08/01/2018	F					
B	EDITORIAL CHANGES	SL	JS	MDJ	07/25/2017	E	FIGURE UPDATE	JES	JES	CZH	07/08/2019
A	ORIGINAL ISSUE	JC	IL	MDJ	11/07/2014	D	DRAWING UPDATES	PEI	-	-	01/15/2019

X Indicates Latest Revision | Completely Revised | New Page | Information Removed

SHEET 1 OF 2

SDG&E ELECTRIC OVERHEAD CONSTRUCTION STANDARDS

DEAD-END TRANSITION: OPEN CABLE TO SPACER WIRE

OH1703.1

INSTALLATION:

A. WHEN INSTALLING SPACER CABLE WIRE ABOVE OR IN THE PRESENCE OF 3-PHASE EQUIPMENT, REFERENCE STANDARD 1710 FOR CLEARANCE AND HARDWARE. SPACER CABLE WIRE MUST BE A MINIMUM OF 7 FEET FROM 3-PHASE EQUIPMENT.

B. WHEN INSTALLING SPACER CABLE WIRE ABOVE OR IN THE PRESENCE OF SINGLE-PHASE EQUIPMENT REFERENCE STANDARD 1709 FOR SINGLE-PHASE EQUIPMENT CLEARANCES AND HARDWARE. SPACER CABLE WIRE MUST BE A MINIMUM OF 7 FEET FROM SINGLE-PHASE EQUIPMENT.

C. FOR EXTRA HEAVY LOADING CONDITIONS USE 127AWA MESSENGER (S814055) WITH DEAD-END MESSENGER GRIP ME-4179 (S392940) COLOR CODED BLACK.

(D) THIMBLE CLEVIS - USED ON THE LOOPED END OF THE PREFORMED SPACER CONDUCTOR AND MESSENGER GRIPS IN ORDER TO EVENLY DISTRIBUTE THE MECHANICAL STRESS.

(E) CONDUCTOR DEAD-END GRIP - USED IN SPACER CABLE SYSTEM TO DEAD-END THE PHASE CONDUCTORS. THEY ARE APPLIED DIRECTLY OVER THE COVERING, WITH NO STRIPPING REQUIRED.

(F) MESSENGER DEAD-END GRIP - DEAD-END CONNECTION THAT HAS A TENSILE STRENGTH EQUAL TO THE MESSENGER STRENGTH.

BILL OF MATERIALS:

ITEM	DESCRIPTION	QUANTITY	STANDARD PAGE	STOCK NUMBER	ASSEMBLY UNITS
1	SPACER CABLE (SIZE AND TYPE AS REQ.)	AS REQ	1702	--	--
2	MESSENGER (SIZE AND TYPE AS REQUIRED)	AS REQ	1702	--	--
3	INSULATOR, PIN TYPE	3	750	S429060	IPCN1
4	INSULATOR PIN, LONG SHANK	3	396	S532706 (X)	PS1
5	PRE-FORMED CONDUCTOR GRIP, COATED	3	1702	--	--
6	PRE-FORMED MESSENGER GRIP	1	1702	--	--
7	INSULATOR, POLYMER DEAD-END	6	750	S431650	--
8	LIGHTNING ARRESTER W/ MOUNTING BRACKET PER VOLTAGE	3	1247	S113248	LA12
9	THIMBLE CLEVIS	3	--	S236400	TC11K
10	CROSSARM, FIBERGLASS TANGENT	AS REQ	379	--	--
11	CROSSARM, FIBERGLASS DEADEND	AS REQ	379	--	--
12	#4, 7 STRAND, COVERED JUMPER WIRE	AS REQ	718	S815044	POLY4J
13	BLIND NUT, 1/2"	AS REQ	1002	S503460 (X)	--
14	CONNECTORS, WEDGE (SIZE AS REQ.)	AS REQ	784	--	--
15	FIBERGLASS STRAIN INSULATOR	1	928	S430882	FG-GUY
16	PLATE, POLE EYE, GALV.	1	928	S542944	EYE-PL
17	12kV ALUMINUM SIDE OPEN STRAIGHT STRAIN CLAMP, AL. ALLOY	AS REQ	741	--	--
18	HEAVY DUTY THIMBLE CLEVIS	AS REQ	--	S236130	HDTC
19	CONNECTOR, SPLIT BOLT, BRONZE 1/2" X 13	AS REQ	1002	S262560	SPCONN
20	#4, 7 STRAND, COVERED JUMPER WIRE	AS REQ	718	--	POLY4J
21	BOLT, MACHINE, 3/4" X REG'D LENGTH #	AS REQ	392	--	--
22	WASHER, CURVED, SQUARE	AS REQ	392	S797760	--

NOTES:

I. A THIMBLE-CLEVIS MUST BE USED TO PREVENT DAMAGE TO THE LOOP OF THE MESSENGER GRIP.

II. AUTOMATIC DEAD-END GRIPS ARE NOT TO BE USED ON SPACER CABLE SYSTEMS.

(X) THIS ITEM IS EXEMPT.

REFERENCE:

(a) REFER TO WOOD AND STEEL POLE GROUNDING STANDARD 1002.

b. REFERENCE G.O. 95 CLEARANCES.

© 1998 - 2019 San Diego Gas & Electric Company. All rights reserved. Removal of this copyright notice without permission is not permitted under law.

REV	CHANGE	BY	DSGN	APPV	DATE	REV	CHANGE	BY	DSGN	APPV	DATE
C	EDITORIAL CHANGES	JS	JS	CZH	08/01/2018	F					
B	EDITORIAL CHANGES	SL	JS	MDJ	07/25/2017	E	FIGURE UPDATE	JES	JES	CZH	07/08/2019
A	ORIGINAL ISSUE	JC	IL	MDJ	11/07/2014	D	DRAWING UPDATES	PEI	-	-	01/15/2019

X Indicates Latest Revision | Completely Revised | New Page | Information Removed

SHEET 2 OF 2

SDG&E ELECTRIC OVERHEAD CONSTRUCTION STANDARDS

DEAD-END TRANSITION: OPEN CABLE TO SPACER WIRE

OH1703.2

TABLE OF CONTENTS

TABLE OF CONTENTS

SCOPE: THIS STANDARD SHOWS TYPICAL MID-SPAN SPACER APPLICATIONS FOR SLOPES LESS THAN 20 DEGREES AND FOR SLOPES GREATER THAN 20 DEGREES.

ATTENTION:

*BUCKET TRUCK ACCESS TO ALL STRUCTURES, EQUIPMENT, SPACERS AND SYSTEM COMPONENTS IS REQUIRED.

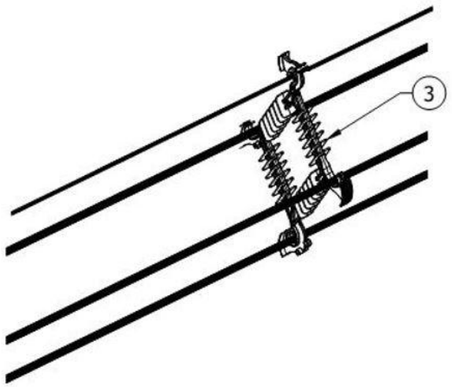

FIGURE 1
TYPICAL MID-SPAN CONFIGURATION
SLOPE LESS THAN 20 DEGREES (S663280)

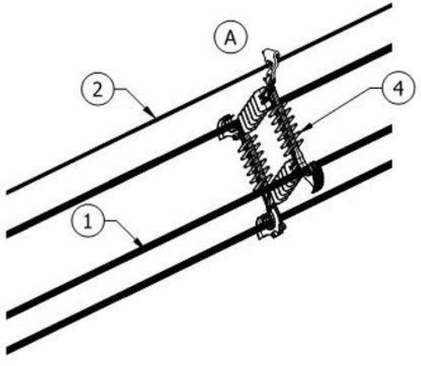

FIGURE 2
TYPICAL MID-SPAN CONFIGURATION
SLOPE 20 DEGREES OR GREATER (S663282)

INSTALLATION:

(A) SLOPE GREATER THAN 20 DEGREES, MUST BE USED.

B. THE FIRST SPACER IS INSTALLED ON THE SPACER CABLE SYSTEM A MINIMUM OF 40 FEET FROM A TRANSITION POLE.

C. EACH CORRESPONDING SPACER WITHIN THE SPAN IS SET AT 30-FOOT INTERVALS, MOVING TOWARD THE NEXT POLE.

D. WHEN INSTALLING SPACER CABLE WIRE ABOVE OR IN THE PRESENCE OF 3-PHASE EQUIPMENT, REFERENCE STANDARD 1710 FOR CLEARANCE AND HARDWARE. SPACER CABLE WIRE MUST BE A MINIMUM OF 7 FEET FROM 3-PHASE EQUIPMENT.

E. WHEN INSTALLING SPACER CABLE WIRE ABOVE OR IN THE PRESENCE OF SINGLE-PHASE EQUIPMENT, REFERENCE STANDARD 1709 FOR SINGLE-PHASE EQUIPMENT CLEARANCES AND HARDWARE. SPACER CABLE WIRE MUST BE A MINIMUM OF 7 FEET FROM SINGLE-PHASE EQUIPMENT.

F. FOR EXTRA HEAVY LOADING CONDITIONS USE 127AWA MESSENGER (S814055) WITH DEADEND MESSENGER GRIP ME-4179 (S392940) COLOR CODED, BLACK.

G. SPACERS (POLYETHYLENE) - WHEN INSTALLED ON THE MESSENGER, MULTIPLE SPACERS PER SPAN ARE INSTALLED TO SEPARATE THE CONDUCTORS AND CLAMP THEM IN A DIAMOND CONFIGURATION. SPACERS WERE DESIGNED TO CONFORM TO G.O. 95.

BILL OF MATERIALS:

ITEM	DESCRIPTION	QUANTITY	STANDARDS PAGE	STOCK NUMBER	ASSEMBLY UNITS
1	SPACER CABLE	AS REQ'D	1702	-	-
2	MESSENGER	AS REQ'D	1702	-	-
3	SPACER INSULATOR	AS REQ'D	-	S663280	SPCINS
4	SPACER INSULATOR STEEP SLOPE	AS REQ'D	-	S663282	SPCSSI

NOTES: NONE

REFERENCE:

a. REFERENCE G.O. 95 CLEARANCES.

b. REFER TO WOOD AND STEEL POLE GROUNDING STANDARD 1002.

REV	CHANGE	DRWN	BY	CHKD	APVD	DATE
G	REVISED TO 3D FORMAT	PEI	-	JIK	-	04/12/2022
F	EDITORIAL CHANGES	GLC	JES	JES	CZH	07/29/2021
E	EDITORIAL CHANGES	-	JES	JES	CZH	07/08/2019

SDG&E ELECTRIC OVERHEAD CONSTRUCTION STANDARDS

MID-SPAN SPACER APPLICATIONS

SCALE: NOT TO SCALE

DRAWING NO: OH1704.1

SHEET: 1 OF 1

© 1998 - 2022 San Diego Gas and Electric Company. All rights reserved. Removal of this copyright notice without permission is not permitted under law.

X Indicates Latest Revision | Completely Revised | New Page | Information Removed

SCOPE: THIS STANDARD IS FOR MESSENGER DEADEND WITH C-BRACKET FOR ALL POLES. LINE ANGLES FROM 0 TO 6 DEGREES.

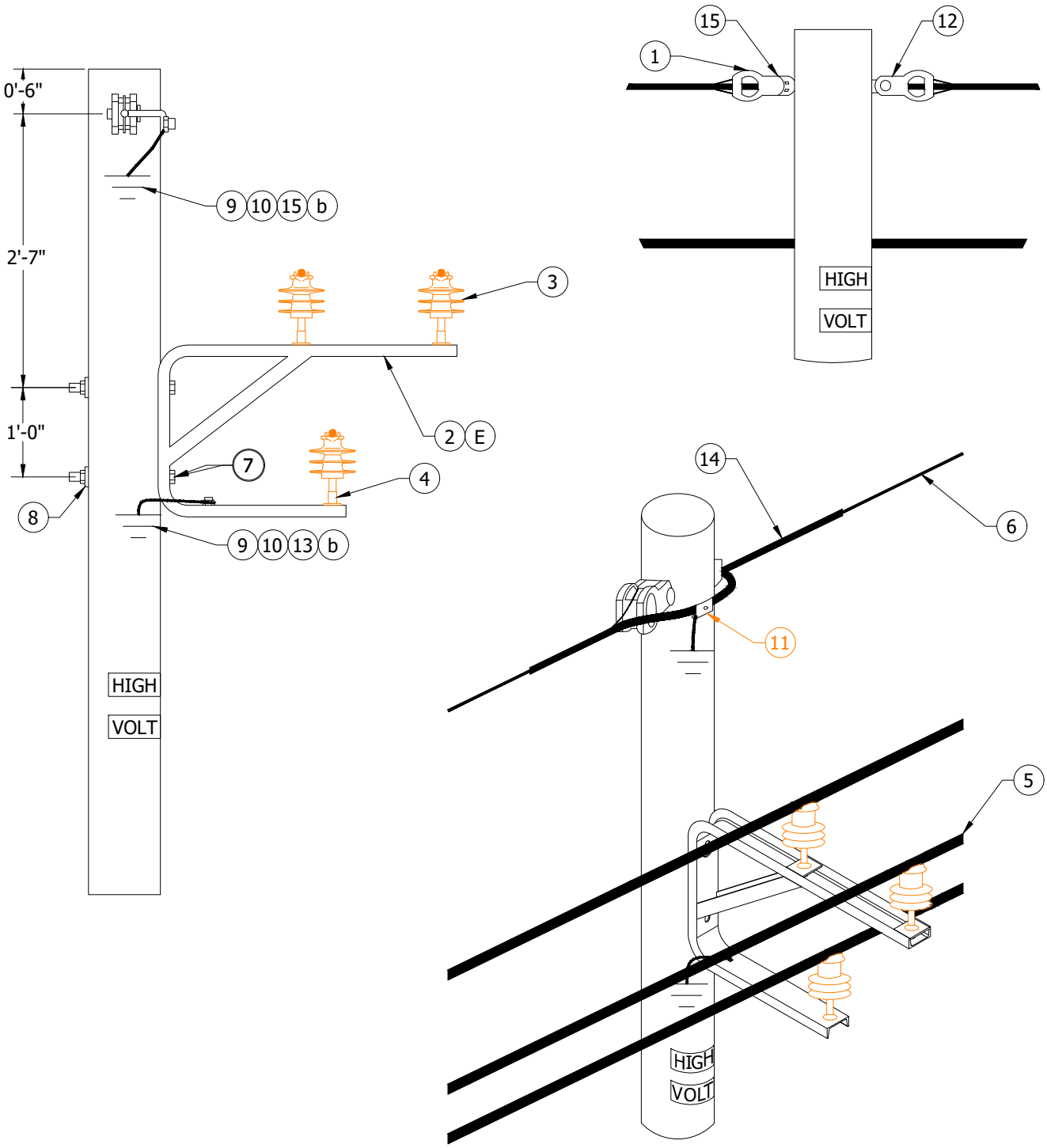

TABLE OF CONTENTS

© 1998 - 2019 San Diego Gas & Electric Company. All rights reserved. Removal of this copyright notice without permission is not permitted under law.

REV	CHANGE	BY	DSGN	APPV	DATE	REV	CHANGE	BY	DSGN	APPV	DATE
C	DRAWING UPDATES	PEI	-	-	01/15/2019	F					
B	EDITORIAL CHANGES	JS	JS	CZH	08/01/2018	E					
A	ORIGINAL ISSUE	-	JC	IL	11/07/2014	D	EDITORIAL CHANGES	JES	JES	CZH	07/08/2019

X Indicates Latest Revision | Completely Revised | New Page | Information Removed

SDG&E ELECTRIC OVERHEAD CONSTRUCTION STANDARDS

SHEET 1 OF 2

MESSENGER DEADEND LINE ANGLES: 0 TO 6 DEGREES

OH1706.1

INSTALLATION:

A. WHEN A GO95 SPACER IS REQUIRED FOR USE ON A MIDSPAN SLOPE GREATER THAN 20 DEGREES, AN RTL-GO95DM SPACER (S663282) MUST BE USED.

B. WHEN INSTALLING SPACER CABLE WIRE ABOVE OR IN THE PRESENCE OF 3-PHASE EQUIPMENT, REFERENCE STANDARD 1710 FOR CLEARANCE AND HARDWARE. SPACER CABLE WIRE MUST BE A MINIMUM OF 7 FEET FROM 3-PHASE EQUIPMENT.

C. WHEN INSTALLING SPACER CABLE WIRE ABOVE OR IN THE PRESENCE OF SINGLE-PHASE EQUIPMENT REFERENCE STANDARD 1709 FOR SINGLE-PHASE EQUIPMENT CLEARANCES AND HARDWARE. SPACER CABLE WIRE MUST BE A MINIMUM OF 7 FEET FROM SINGLE-PHASE EQUIPMENT.

D. FOR EXTRA HEAVY LOADING CONDITIONS USE 127AWA MESSENGER (S814055) WITH D.E. MESSENGER GRIP ME-4179 (S392940) COLOR CODED, BLACK.

(E) THESE BRACKETS MAINTAIN THE DIAMOND CONFIGURATION OF THE PHASE CONDUCTORS ON THE POLE.

F. LOWEST SPACER CABLE WIRE MUST BE INSTALLED A MINIMUM OF 6 FEET FROM FIBER/TELCO.

BILL OF MATERIALS:

ITEM	DESCRIPTION	QUANTITY	STANDARD PAGE	STOCK NUMBER	ASSEMBLY UNITS
1	HEAVY DUTY THIMBLE CLEVIS	2	--	S166130	HDTC
2	BRACKET, "C", TRANSFORMER TAP	1	--	S166152	C-BKT
3	INSULATOR, PIN TYPE	3	750.2	S499060	IPCN1
4	INSULATOR PIN, SHORT SHANK, 1" LEAD THREAD	3	--	S532426	PSS1
5	SPACER CABLE (SIZE AND VOLTAGE RATING AS REQ.)	AS REQ'D	1702	--	--
6	MESSENGER (SIZE AND TYPE AS REQUIRED)	AS REQ'D	1702	--	--
7	MACHINE BOLT, 3/4" X REQ. LENGTH	AS REQ'D	392.1	--	--
8	WASHER, CURVED, SQUARE	AS REQ'D	392.2	S797760	--
9	#4, 7 STRAND, COVERED JUMPER WIRE	AS REQ'D	718	S815044	POLY4J
10	BLIND NUT, 1/2" (IF NOT WELDED GROUNDING NUT)	AS REQ'D	1002	S503460 (X)	--
11	CONNECTOR, WEDGE (SIZE AND TYPE AS REQ.)	AS REQ'D	1702	--	--
12	EYEBOLT, 3/4" X REQ. LENGTH	AS REQ'D	392.1	--	--
13	CONNECTOR, SPLIT BOLT BRONZE, 1/2" X 13	AS REQ'D	1002.3	S262560	SPCONN
14	PRE-FORMED MESSENGER GRIP	AS REQ'D	1702	--	--
15	EYENUT, 3/4"	AS REQ'D	--	S504020	EYENUT

TABLE OF CONTENTS

NOTES:

I. MESSENGER DEADEND GRIP - DEADEND CONNECTION THAT HAS A TENSILE STRENGTH EQUAL TO THE MESSENGER STRENGTH.

II. AUTOMATIC DEADEND GRIPS ARE NOT TO BE USED ON SPACER CABLE SYSTEMS.

(X) THIS ITEM IS EXEMPT.

REFERENCE:

a. REFERENCE G.O. 95 CLEARANCES.

(b) REFER TO WOOD AND STEEL POLE GROUNDING STANDARD 1002.

© 1998 - 2019 San Diego Gas & Electric Company. All rights reserved. Removal of this copyright notice without permission is not permitted under law.

REV	CHANGE	BY	DSGN	APPV	DATE	REV	CHANGE	BY	DSGN	APPV	DATE
C	DRAWING UPDATES	PEI	-	-	01/15/2019	F					
B	EDITORIAL CHANGES	JS	JS	CZH	08/01/2018	E					
A	ORIGINAL ISSUE	-	JC	IL	11/07/2014	D	EDITORIAL CHANGES	JES	JES	CZH	07/08/2019

SCOPE: THIS STANDARD IS FOR LINE ANGLES BETWEEN 7 & 60 DEGREES.

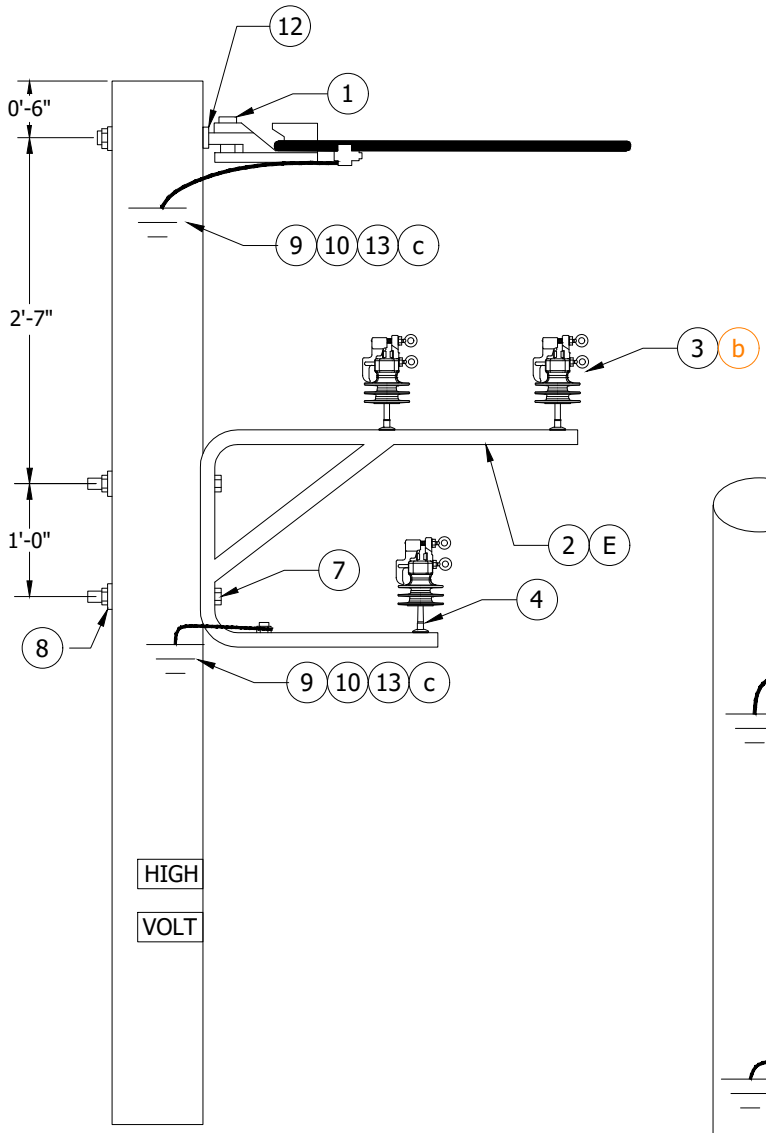

FIGURE 1
SIDE VIEW

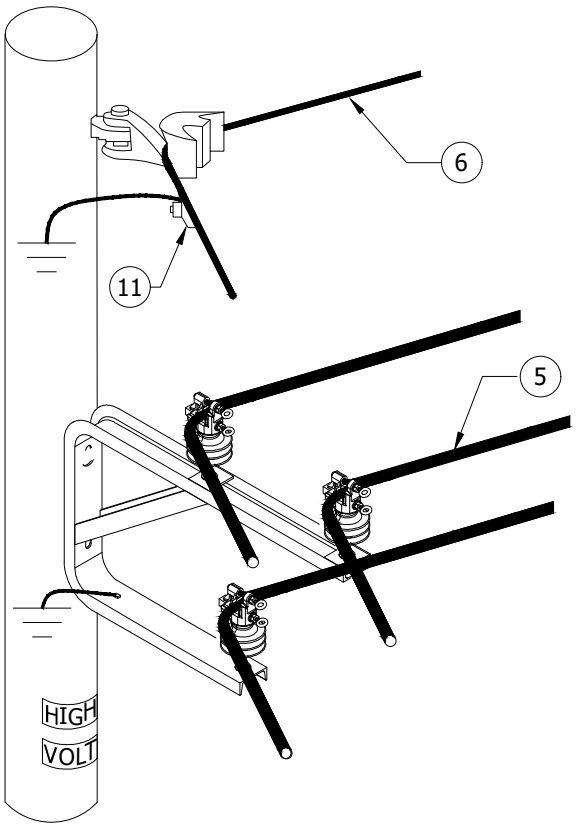

FIGURE 1
ISO VIEW

TABLE OF CONTENTS

© 1998 - 2019 San Diego Gas & Electric Company. All rights reserved. Removal of this copyright notice without permission is not permitted under law.

REV	CHANGE	BY	DSGN	APPV	DATE	REV	CHANGE	BY	DSGN	APPV	DATE
C	DRAWING UPDATES	PEI	-	-	01/15/2019	F					
B	EDITORIAL CHANGES	JS	JS	CZH	08/01/2018	E					
A	ORIGINAL ISSUE	-	JC	IL	11/07/2014	D	EDITORIAL CHANGES	JES	JES	CZH	07/08/2019

X Indicates Latest Revision | Completely Revised | New Page | Information Removed

SDG&E ELECTRIC OVERHEAD CONSTRUCTION STANDARDS

LINE ANGLES: 7 TO 60 DEGREES

OH1707.1

INSTALLATION:

A. WHEN A GO95 SPACER IS REQUIRED FOR USE ON A MIDSPAN, AN RTL-GO95DM SPACER (S663282) MUST BE USED.

B. WHEN INSTALLING SPACER CABLE WIRE ABOVE OR IN THE PRESENCE OF 3-PHASE EQUIPMENT, REFERENCE STANDARD 1710 FOR CLEARANCE AND HARDWARE. SPACER CABLE WIRE MUST BE A MINIMUM OF 7 FEET FROM 3-PHASE EQUIPMENT.

C. WHEN INSTALLING SPACER CABLE WIRE ABOVE OR IN THE PRESENCE OF SINGLE-PHASE EQUIPMENT REFERENCE STANDARD 1709 FOR SINGLE-PHASE EQUIPMENT CLEARANCES AND HARDWARE. SPACER CABLE WIRE MUST BE A MINIMUM OF 7 FEET FROM SINGLE-PHASE EQUIPMENT.

D. FOR EXTRA HEAVY LOADING CONDITIONS USE 127AWA MESSENGER (S814055) WITH DEAD-END MESSENGER GRIP ME-4179 (S392940) COLOR CODED, BLACK.

(E) THESE BRACKETS MAINTAIN THE DIAMOND CONFIGURATION OF THE PHASE CONDUCTORS ON THE POLE.

BILL OF MATERIALS:

ITEM	DESCRIPTION	QUANTITY	STANDARD PAGE	STOCK NUMBER	ASSEMBLY UNITS
1	ANGLE CLAMP (a)	1	776	S232008	SCSM
2	BRACKET, "C", TRANSFORMER TAP	1	-	S166152	C-BKT
3	INSULATOR, PIN TYPE	3	750.2	S429060	IPCIN
4	INSULATOR PIN, SHORT SHANK, 1" THREAD	3	396	S532426	PSS1
5	SPACER CABLE (SIZE AND VOLTAGE RATING AS REQ.)	AS REQ'D	1702	-	-
6	MESSENGER (SIZE AND TYPE AS REQUIRED)	AS REQ'D	1702	-	-
7	MACHINE BOLT, 3/4" X REQ. LENGTH	AS REQ'D	392.1	-	-
8	WASHER, CURVED, SQUARE	AS REQ'D	392.2	S797760	-
9	7-STRAND, COVERED JUMPER WIRE	AS REQ'D	718	S815044	POLY4J
10	BLIND NUT, 1/2"	AS REQ'D	1002	S503460 (X)	-
11	CONNECTOR, WEDGE (SIZE AND TYPE AS REQ.)	AS REQ'D	784.5	-	-
12	EYEBOLT, 3/4" X REQ. LENGTH	1	392.1	-	-
13	CONNECTOR, SPLIT BOLT, BRONZE, 1/2" X 13	AS REQ'D	1002.3	S262560	SPCONN

NOTES:

(X) THIS ITEM IS EXEMPT.

REFERENCE:

(a) CONTACT STANDARDS FOR STOCK NUMBER FOR NEW PART NUMBER PSAC-01.

(b) CONTACT STANDARDS REGARDING CORRECT INSULATOR FOR USE ON ANGLES.

(c) REFER TO WOOD AND STEEL POLE GROUNDING STANDARD 1002.

d. REFERENCE G.O. 95 CLEARANCES.

TABLE OF CONTENTS

© 1998 - 2019 San Diego Gas & Electric Company. All rights reserved. Removal of this copyright notice without permission is not permitted under law.

REV	CHANGE	BY	DSGN	APPV	DATE	REV	CHANGE	BY	DSGN	APPV	DATE
C	DRAWING UPDATES	PEI	-	-	01/15/2019	F					
B	EDITORIAL CHANGES	JS	JS	CZH	08/01/2018	E					
A	ORIGINAL ISSUE	-	JC	IL	11/07/2014	D	EDITORIAL CHANGES	JES	JES	CZH	07/08/2019

SCOPE: THIS STANDARD IS FOR LINE ANGLES BETWEEN 61 & 90 DEGREES.

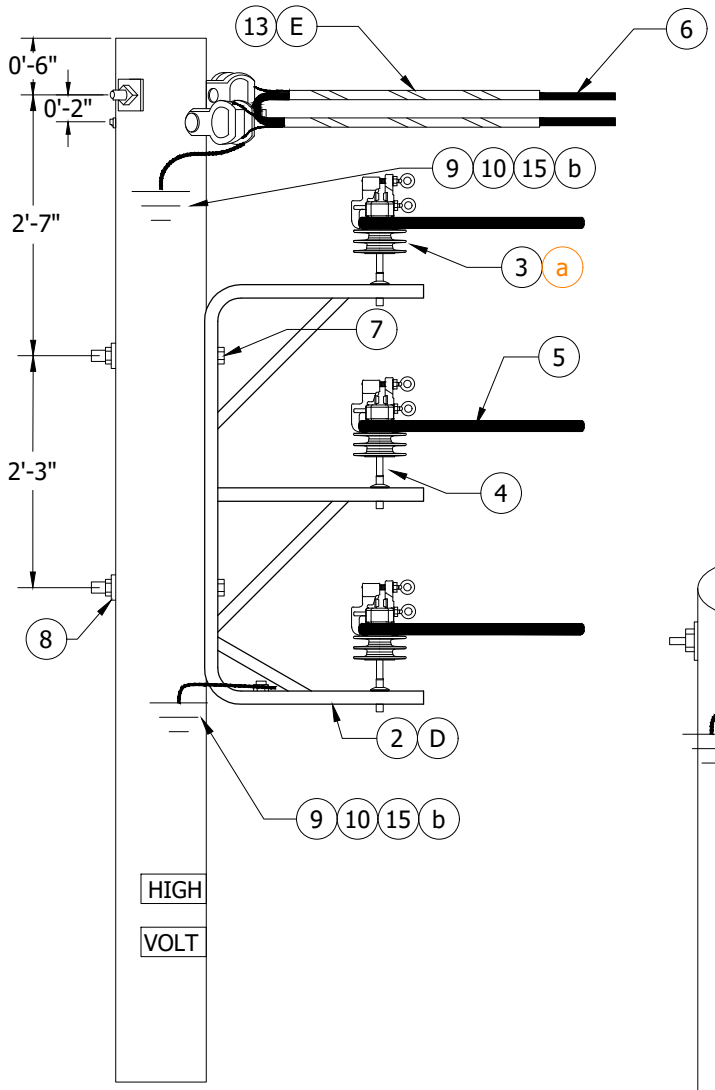

FIGURE 1
SIDE VIEW

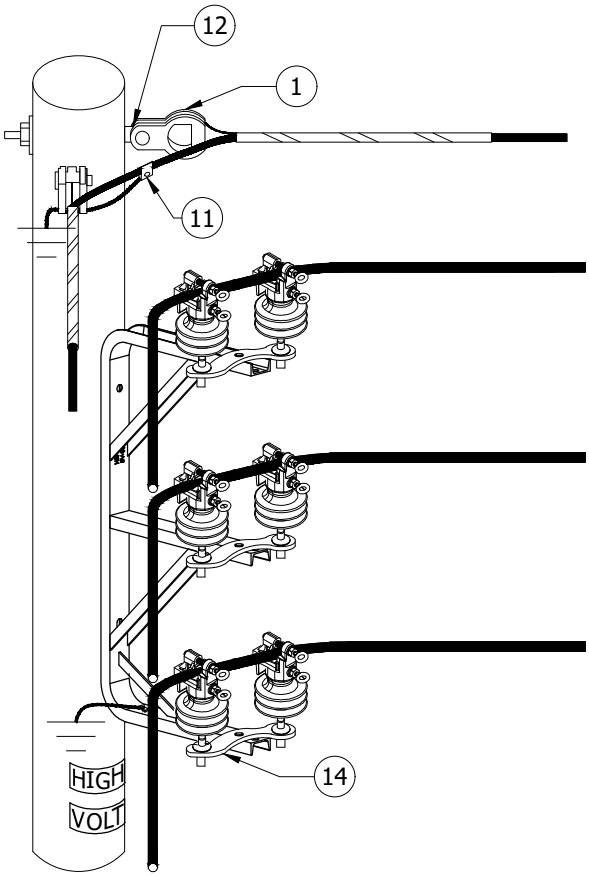

FIGURE 1
ISO VIEW

TABLE OF CONTENTS

© 1998 - 2019 San Diego Gas & Electric Company. All rights reserved. Removal of this copyright notice without permission is not permitted under law.

REV	CHANGE	BY	DSGN	APPV	DATE	REV	CHANGE	BY	DSGN	APPV	DATE
C	DRAWING UPDATES	PEI	-	-	01/15/2019	F					
B	EDITORIAL CHANGES	JS	JS	CZH	08/01/2018	E					
A	ORIGINAL ISSUE	-	JC	IL	11/07/2014	D	EDITORIAL CHANGES	JES	JES	CZH	07/08/2019

X Indicates Latest Revision | Completely Revised | New Page | Information Removed

SDG&E ELECTRIC OVERHEAD CONSTRUCTION STANDARDS

LINE ANGLES: 61 TO 90 DEGREES

OH1708.1

INSTALLATION:

A. WHEN INSTALLING SPACER CABLE WIRE ABOVE OR IN THE PRESENCE OF 3-PHASE EQUIPMENT, REFERENCE STANDARD 1710 FOR CLEARANCE AND HARDWARE. SPACER CABLE WIRE MUST BE A MINIMUM OF 7 FEET FROM 3-PHASE EQUIPMENT.

B. WHEN INSTALLING SPACER CABLE WIRE ABOVE OR IN THE PRESENCE OF SINGLE-PHASE EQUIPMENT REFERENCE STANDARD 1709 FOR SINGLE-PHASE EQUIPMENT CLEARANCES AND HARDWARE. SPACER CABLE WIRE MUST BE A MINIMUM OF 7 FEET FROM SINGLE-PHASE EQUIPMENT.

C. FOR EXTRA HEAVY LOADING CONDITIONS USE 127AWA MESSENGER (S814055) WITH DEAD-END MESSENGER GRIP ME-4179 (S392940) COLOR CODED, BLACK.

(D) THESE BRACKETS MAINTAIN THE DIAMOND CONFIGURATION OF THE PHASE CONDUCTORS ON THE POLE.

(E) MESSENGER DEADEND GRIP - DEAD-END CONNECTION THAT HAS A TENSILE STRENGTH EQUAL TO THE MESSENGER STRENGTH.

BILL OF MATERIALS:

ITEM	DESCRIPTION	QUANTITY	STANDARD PAGE	STOCK NUMBER	ASSEMBLY UNITS
1	HEAVY DUTY THIMBLE CLEVIS	2	-	S236130	HDTC
2	BRACKET, "E", TRANSFORMER TAP	1	-	S166146	E-BKT
3	INSULATOR, PIN TYPE	3	750.2	S429060	IPCN1
4	INSULATOR PIN, SHORT SHANK, 1" THREAD	3	396	S632426	PSS1
5	SPACER CABLE (SIZE AND VOLTAGE RATING AS REQ.)	AS REQ'D	1702	-	-
6	MESSENGER (SIZE AND TYPE AS REQUIRED)	AS REQ'D	1702	-	-
7	MACHINE BOLT, 3/4" X REQ. LENGTH	2	392.1	-	-
8	WASHER, CURVED, SQUARE	4	392.2	S797760	-
9	#4, 7 STRAND, COVERED JUMPER WIRE	AS REQ'D	718	S815044	POLY4J
10	BLIND NUT, 1/2"	AS REQ'D	1002	S503460 (X)	-
11	CONNECTOR, WEDGE (SIZE AND TYPE AS REQ.)	AS REQ'D	784.5	-	-
12	EYEBOLT, 3/4" X REQ. LENGTH	AS REQ'D	392.1	-	-
13	PRE-FORMED MESSENGER GRIP	2	1702	-	-
14	DOUBLE INSULATOR PLATE	2	-	S542978	-
15	CONNECTOR, SPLIT BOLT, BRONZE 1/2" X 13	AS REQ'D	1002.3	S262560	SPCONN

NOTES:

I. AUTOMATIC DEADEND GRIPS ARE NOT BE USED ON SPACER CABLE SYSTEMS.

(X) THIS ITEM IS EXEMPT.

REFERENCE:

(a) CONTACT STANDARDS REGARDING CORRECT INSULATOR FOR USE ON ANGLES.

(b) REFER TO WOOD AND STEEL POLE GROUNDING STANDARD 1002.

c. REFERENCE G.O. 95 CLEARANCES.

TABLE OF CONTENTS

© 1998 - 2019 San Diego Gas & Electric Company. All rights reserved. Removal of this copyright notice without permission is not permitted under law.

REV	CHANGE	BY	DSGN	APPV	DATE	REV	CHANGE	BY	DSGN	APPV	DATE
C	DRAWING UPDATES	PEI	-	-	01/15/2019	F					
B	EDITORIAL CHANGES	JS	JS	CZH	08/01/2018	E					
A	ORIGINAL ISSUE	-	JC	IL	11/07/2014	D	EDITORIAL CHANGES	JES	JES	CZH	07/08/2019

SCOPE: BOLT HOLE SPACING FOR MOUNTING EQUIPMENT ARMS & TRANSFORMERS FOR "C" BRACKET CONFIGURATION.

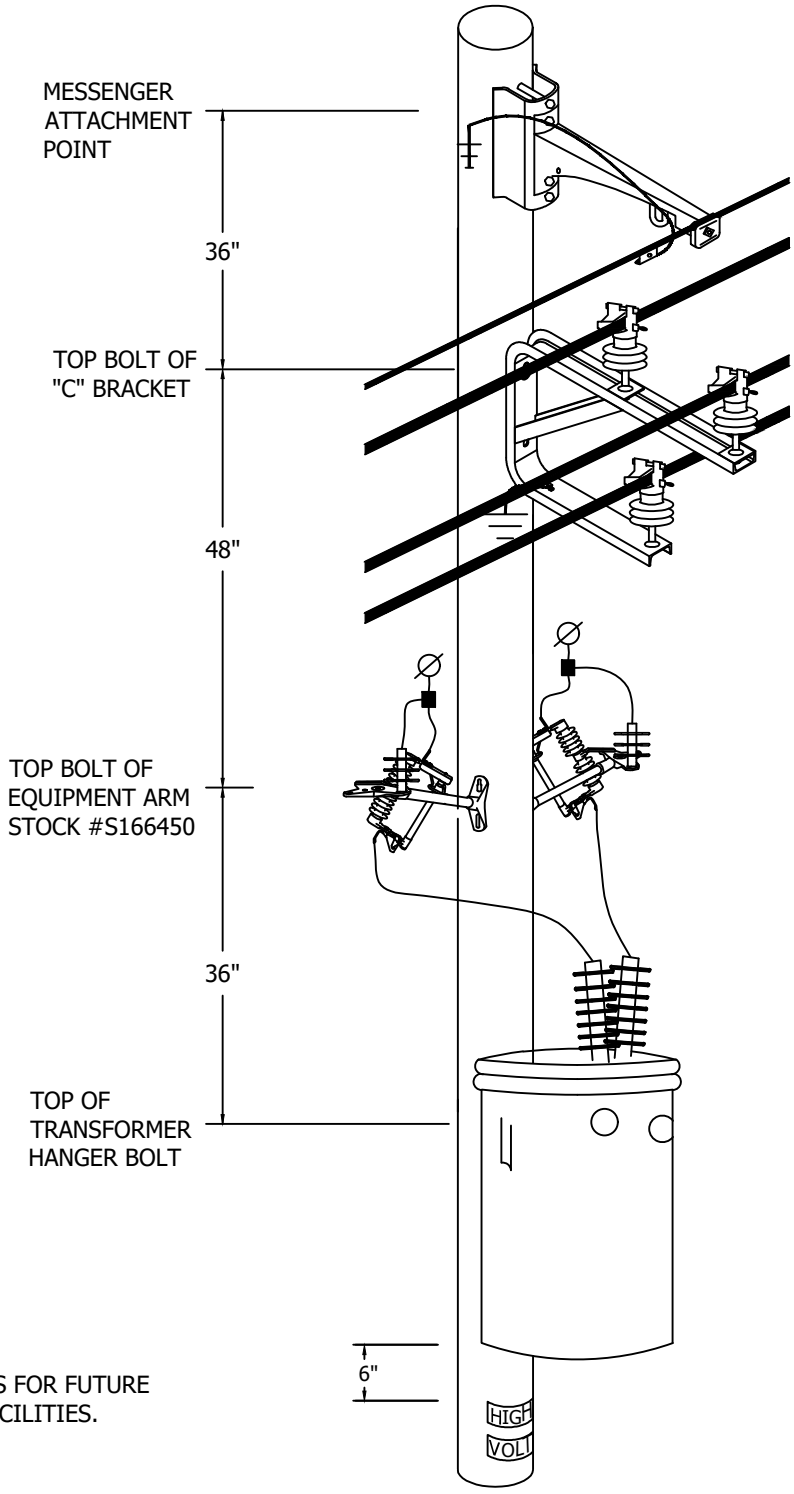

INSTALLATION:
NONE

BILL OF MATERIALS:
NONE

NOTES:
I. ALLOW ROOM ON POLES FOR FUTURE EQUIPMENT AND CIP FACILITIES.

REFERENCE:
NONE

© 1998 - 2018 San Diego Gas & Electric Company. All rights reserved. Removal of this copyright notice without permission is not permitted under law.

REV	CHANGE	BY	DSGN	APPV	DATE	REV	CHANGE	BY	DSGN	APPV	DATE
C	DRAWING UPDATES	PEI	-	-	01/15/2019	F					
B	EDITORIAL CHANGES	JS	JS	CZH	08/01/2018	E					
A	ORIGINAL ISSUE	-	JC	IL	11/07/2014	D					

X Indicates Latest Revision | Completely Revised | New Page | Information Removed

SDG&E ELECTRIC OVERHEAD CONSTRUCTION STANDARD

SHEET 1 OF 1

TANGENT SINGLE-PHASE TRANSFORMER

OH1709.1

TABLE OF CONTENTS

SCOPE: BOLT HOLE CONFIGURATION FOR MOUNTING A THREE-PHASE TRANSFORMER BANK.

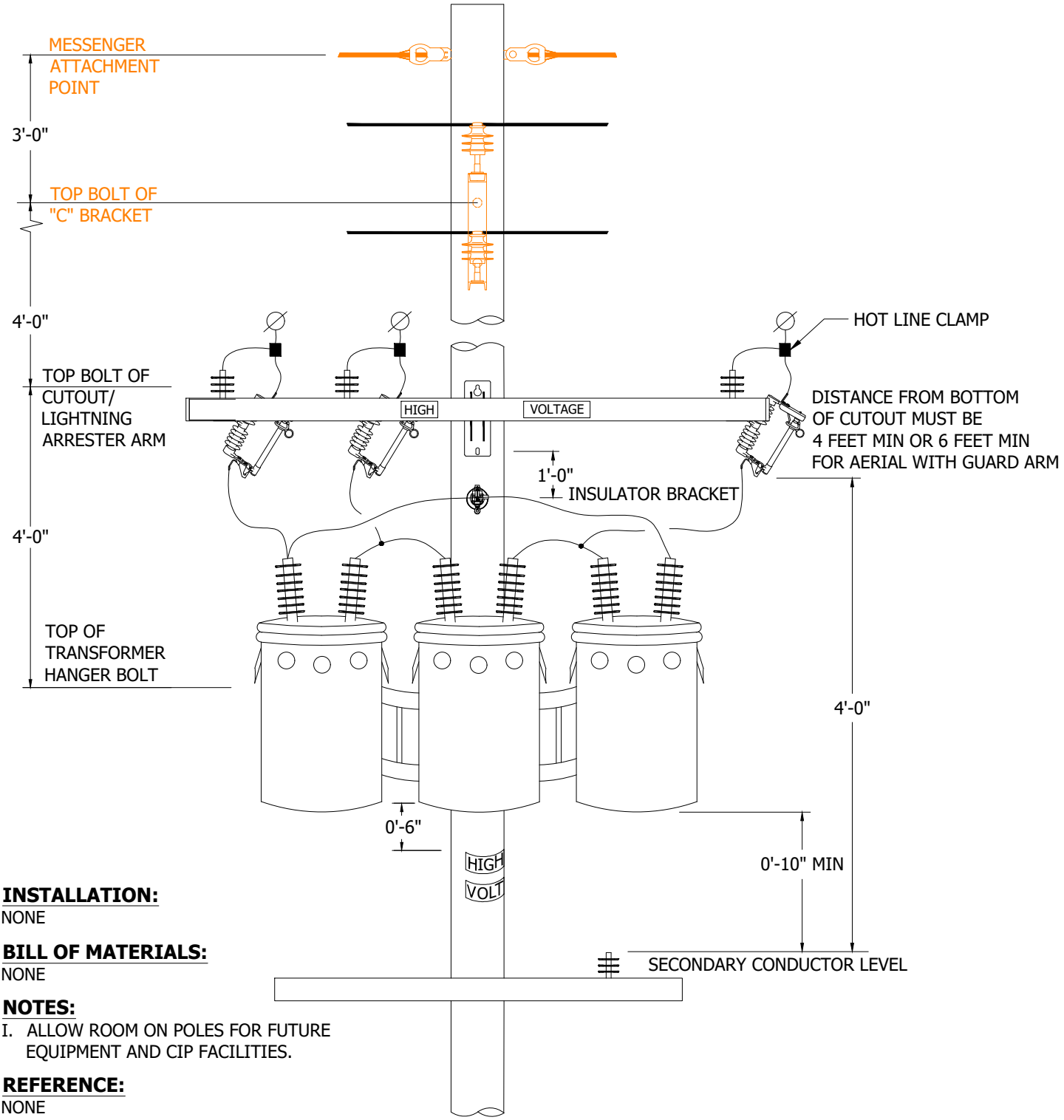

INSTALLATION:
NONE

BILL OF MATERIALS:
NONE

NOTES:
I. ALLOW ROOM ON POLES FOR FUTURE EQUIPMENT AND CIP FACILITIES.

REFERENCE:
NONE

TABLE OF CONTENTS

© 1998 - 2019 San Diego Gas & Electric Company. All rights reserved. Removal of this copyright notice without permission is not permitted under law.

REV	CHANGE	BY	DSGN	APPV	DATE	REV	CHANGE	BY	DSGN	APPV	DATE
C	DRAWING UPDATES	PEI	-	-	01/15/2019	F					
B	EDITORIAL CHANGES	JS	JS	CZH	08/01/2018	E					
A	ORIGINAL ISSUE	-	JC	IL	11/07/2014	D	FIGURE UPDATE	JES	JES	CZH	07/08/2019

X Indicates Latest Revision | Completely Revised | New Page | Information Removed

SDG&E ELECTRIC OVERHEAD CONSTRUCTION STANDARD

SHEET 1 OF 1

THREE-PHASE TRANSFORMER

OH1710.1

PAGE	SUBJECT
1805	DEFINITIONS
1810	EXTERNAL RISER FOUNDATION DETAILS FOR DIRECT-BURIED AND ENGINEERED STEEL CABLE POLES
1811	INTERNAL RISER DRILLED PIER FOUNDATION DETAIL FOR ENGINEERED STEEL CABLE POLES
1812	INTERNAL RISER MICROPILE FOUNDATION DETAIL FOR ENGINEERED STEEL CABLE POLES
1820	EXTERNAL RISER DETAILS ABOVE FOUNDATION
1821	DOUBLE HORIZONTAL FLUTE RISER ABOVE FOUNDATION
1822	SINGLE OR DOUBLE VERTICAL FLUTE RISER ABOVE FOUNDATION
1830	SINGLE CIRCUIT TERMINATION
1831	DOUBLE CIRCUIT HORIZONTAL TERMINATION
1832	SINGLE OR DOUBLE CIRCUIT VERTICAL TERMINATION WITH SECTIONALIZING DEVICES
1840	ENGINEERED STEEL POLE WITHOUT RISERS (NEW SECTION)
1850	APPURTENANT FEATURES (ORIGINALLY 1840)
1860	UNIVERSAL MOUNTING PLATE (ORIGINALLY 1850)

MAIN TABLE OF CONTENTS

© 1998 - 2021 San Diego Gas & Electric Company. All rights reserved. Removal of this copyright notice without permission is not permitted under law.

REV	CHANGE	DR	BY	DSN	APV	DATE	REV	CHANGE	DR	BY	DSN	APV	DATE
C	EDITORIAL CHANGES	-	GW	JS	MDJ	01/18/2018	F						
B	EDITORIAL CHANGES	-	JS	JS	MDJ	12/20/2016	E	EDITORIAL CHANGES	EDM	JIK	JES	CZH	08/25/2021
A	ORIGINAL ISSUE	-	IL	GW	MDJ	09/28/2016	D	EDITORIAL CHANGES	EDM	JIK	JES	CZH	09/18/2019

Indicates Latest Revision | Completely Revised | New Page X | Information Removed

SDG&E ELECTRIC OVERHEAD CONSTRUCTION STANDARDS

ENGINEERED STEEL POLES
TABLE OF CONTENTS

TABLE OF CONTENTS

SCOPE: THIS STANDARD COVERS THE VARIOUS CABLE POLE INSTALLATIONS ON ENGINEERED STEEL POLES AND IDENTIFIES ALLOWABLE SECTIONALIZING EQUIPMENT AND CABLE POLE CONFIGURATIONS PERMITTED ON ENGINEERED STEEL POLE TYPES.

INSTALLATION: NONE

BILL OF MATERIALS: NONE

DEFINITIONS:

- **DIRECT BURY STEEL POLES:** POLE CONSTRUCTION WITH NATIVE SOIL OR SACK SOIL MIX BACKFILLED POLE HOLE. TYPICALLY INSTALLED BY DISTRIBUTION DISTRICT CREWS, WITH NO UNUSUAL ENVIRONMENTAL AND CONSTRUCTION CONSTRAINTS.
- **CONCRETE ENCASED STEEL POLES:** POLE CONSTRUCTION WITH CONCRETE BACKFILLED POLE HOLE. TYPICALLY INSTALLED BY TRANSMISSION CREWS, WITH SUPPORT FROM ENGINEERING.
- **DRILLED PIER FOUNDATION POLES:** FOUNDATION POLE CONSTRUCTION THAT REQUIRES EASY ACCESS FOR LARGE CUSTOM DRILLING RIG TO DRILL (1) LARGE DIAMETER PIER FOUNDATION HOLE IN ALL TYPE SOILS. TYPICALLY INSTALLED BY CONTRACTOR. REQUIRES SUPPORT FROM CIVIL ENGINEERING DEPARTMENT. DISTRIBUTION ONLY POLES REQUIRE PRIOR APPROVAL FROM DISTRIBUTION ENGINEERING FOR INSTALLATION.
- **MICROPILE FOUNDATION POLES:** MULTIPLE SMALL DIAMETER FOUNDATION POLE CONSTRUCTION THAT CAN BE PERFORMED IN REMOTE AND DIFFICULT TO ACCESS AREAS. CUSTOM DRILLING EQUIPMENT OF VARIOUS SIZES CAN BE POSITIONED BY NORMAL ACCESS AND ALSO BY CRANE OR HELICOPTER. TYPICALLY INSTALLED BY CONTRACTOR, REQUIRES SUPPORT FROM CIVIL ENGINEERING DEPARTMENT. DISTRIBUTION ONLY POLES REQUIRE PRIOR APPROVAL FROM DISTRIBUTION ENGINEERING FOR INSTALLATION.

TABLE 1:

SECTIONALIZING EQUIPMENT AND CABLE POLE CONFIGURATION SELECTION CHART			
DESCRIPTION	**DISTRIBUTION ONLY**	**DISTRIBUTION UNDERBUILD**	**ALL FOUNDATION POLES**
HOOK STICK SECTIONALIZING	X	X	X
MVR	X	X	X
10' GANG SWITCH (III)	X	-	-
12' GANG SWITCH (III)	X	X	X
15' GANG SWITCH (III)	X	X	X
SECONDARY RISER ONLY	X	X	X
DIST. RISER, SINGLE CIRCUIT - HOOK STICK	X	X	X
DIST. RISER, SINGLE CIRCUIT - GANG SWITCH (III)	X	X	X
DIST. RISER, TWIN CIRCUIT, STACKED CONSTRUCTION	X	X	X
DIST. RISER, TWIN CIRCUIT, HORIZONTAL CONSTRUCTION - HOOK STICK	X	X	X
DIST. RISER, TWIN CIRCUIT, HORIZONTAL CONSTRUCTION - GANG SWITCH (III)	X	X	X
STANDARD DISTRIBUTION EQUIPMENT SUCH AS TRANSFORMERS, CAPACITORS, RECLOSERS, ETC. (REGULATORS EXCLUDED)	X	X	X

NOTES:

I. REQUIRES GEOTECHNICAL ANALYSIS, SURVEY, EASEMENTS, PLS-CADD DESIGN MODEL AND 6-12 MONTH LEAD TIME. POLE IS TO BE ENGINEERED ACCORDING TO THE DESIGN CRITERIA OF THE AREA. FOR COSTING, CONTACT ENGINEERING FOR ESTIMATE OF STEEL FOUNDATION POLE. DOES NOT INCLUDE PIER OR MICROPILE FOUNDATION.

II. CONFIRM EASEMENTS BEFORE SELECTING TYPE OF RISER CONSTRUCTION TO ENSURE ADEQUATE CLEARANCES.

(III) GANG SWITCH TO STEEL POLE SURFACE MUST MEET MINIMUM CLEARANCE OF 18 INCHES FROM FACE OF POLE TO ENERGIZED SWITCH COMPONENT. IT MAY BE NECESSARY TO REQUEST A 15 FOOT SWITCH ARM WITH THE CENTER PHASE SHIFTED OUT TOWARD THE OUTER PHASE TO MEET THE 18 INCH REQUIREMENT TO THE FACE OF THE POLE. PERMANENT STEPS CANNOT INTERFERE WITH THE PLACEMENT NOR OPERATION OF EQUIPMENT. IF NECESSARY, STEPS CAN BE TEMPORARILY PLACED AROUND EQUIPMENT.

REFERENCE:

a. TE-0042 TECHNICAL SPECIFICATION FOR WELDED TUBULAR STEEL TRANSMISSION POLE STRUCTURES.
b. TE-103 CONSTRUCTION SPECIFICATION TUBULAR STEEL POLE.
c. TE-105 DRILLED PIER AND DIRECT BURY FOUNDATIONS FOR LATTICE TOWERS AND TUBULAR STEEL POLES.
d. TE-146 SPECIFICATIONS FOR DESIGN AND INSTALLATION OF MICROPILE FOUNDATIONS TRANSMISSION STEEL POLES.
e. TE-17105 FOR STEEL POLE CLIMBING AND WORKING STEPS.
f. DISTRIBUTION OVERHEAD STANDARD 310.

REV	CHANGE	DRWN	BY	CHKD	APVD	DATE
D	REVISED TO 3D FORMAT	GLC/DV	JIK	-	-	03/29/2022
C	EDITORIAL CHANGES	-	JIK	JES	CZH	9/18/2019
B	EDITORIAL CHANGES	-	GW	JS	MDJ	1/18/2018

SDG&E

A Sempra Energy utility®

SDG&E ELECTRIC OVERHEAD CONSTRUCTION STANDARDS

ENGINEERED STEEL POLES DEFINITIONS

SCALE: NOT TO SCALE

DRAWING NO: OH1805.1

SHEET: 1 OF 1

© 1998 - 2022 San Diego Gas and Electric Company. All rights reserved. Removal of this copyright notice without permission is not permitted under law.

X Indicates Latest Revision | Completely Revised | New Page | Information Removed

SCOPE: THIS STANDARD SHOWS CONSTRUCTION FOR SINGLE AND MULTIPLE EXTERNAL CONDUIT RISERS ON NEW AND EXISTING STEEL POLES.

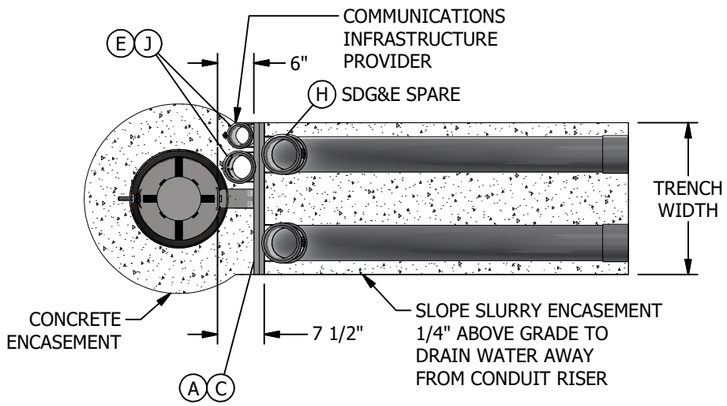

FIGURE 1
PLAN VIEW

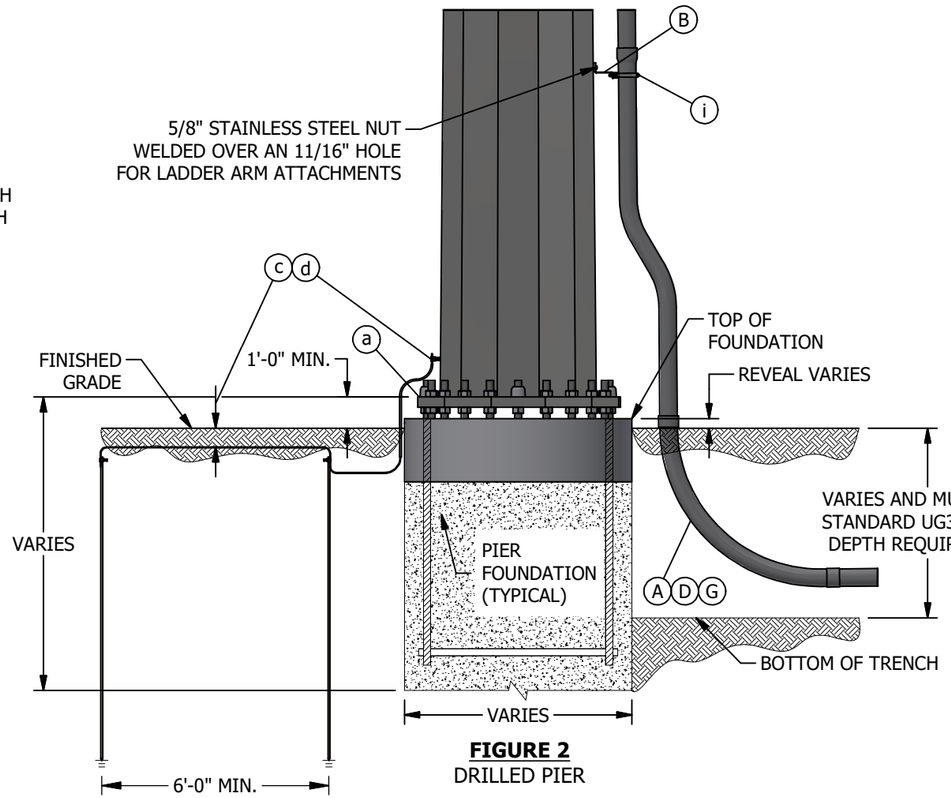

FIGURE 2
DRILLED PIER

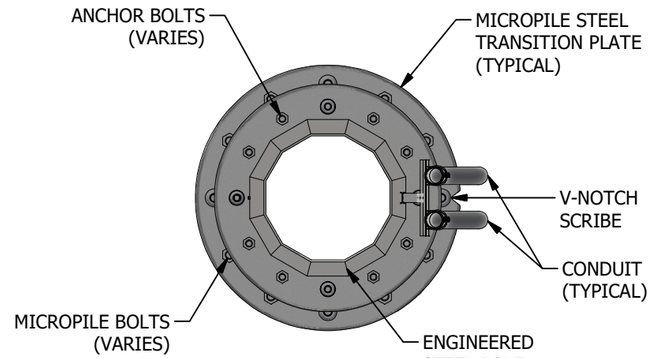

FIGURE 3
PLAN VIEW

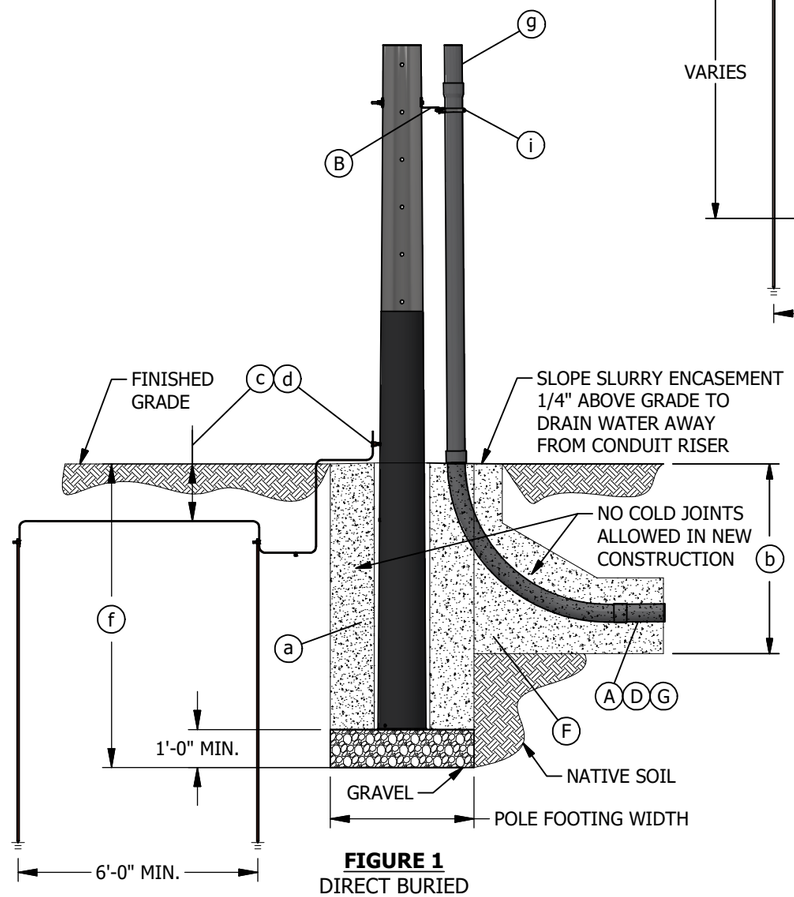

FIGURE 1
DIRECT BURIED

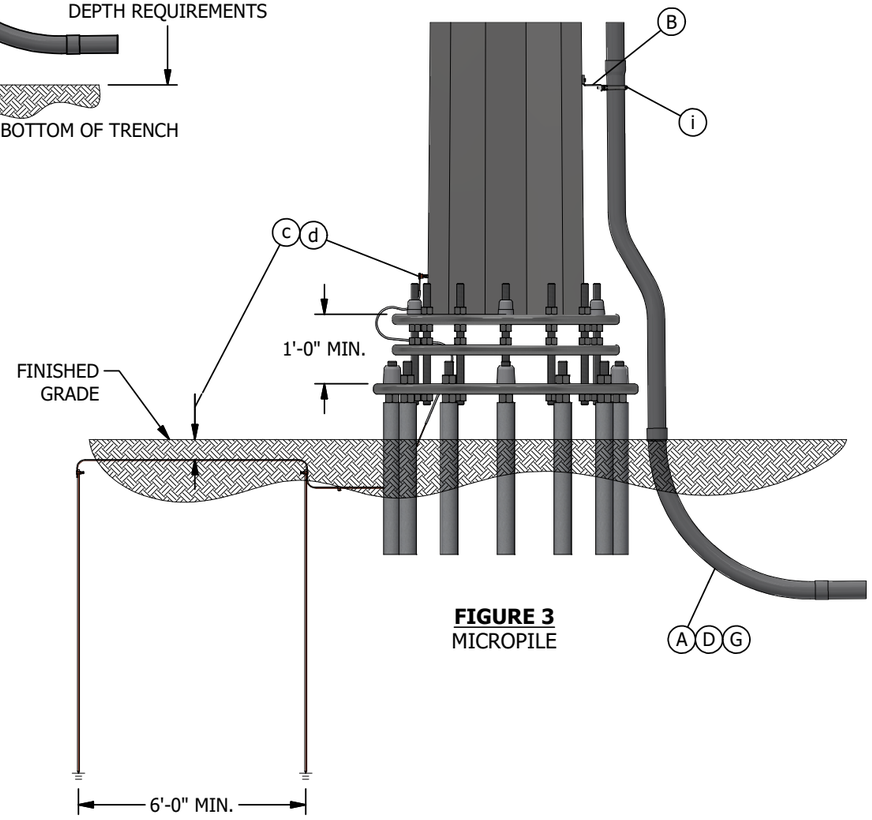

FIGURE 3
MICROPILE

REV	CHANGE	DRWN	BY	CHKD	APVD	DATE
D	REVISE TO 3D FORMAT	DV	JIK	-	-	9/8/2022
C	EDITORIAL CHANGES	-	JIK	JES	CZH	9/18/2019
B	EDITORIAL CHANGES	-	GW	JS	MDJ	1/18/2018

SDG&E ELECTRIC OVERHEAD CONSTRUCTION STANDARDS

LIGHT DUTY AND ENGINEERED STEEL CABLE POLES
DIRECT BURIED, DRILLED PIER AND MICROPILE
EXTERNAL RISER FOUNDATION DETAILS

SCALE: NOT TO SCALE

DRAWING NO:	SHEET:
OH1810.1	1 OF 2

© 1998 - 2022 San Diego Gas and Electric Company. All rights reserved. Removal of this copyright notice without permission is not permitted under law.

X Indicates Latest Revision | Completely Revised | New Page | Information Removed

TABLE OF CONTENTS

TABLE OF CONTENTS

INSTALLATION:

(A) CONSULT WITH CIVIL/STRUCTURAL FOR INSTALLATION OF A NEW EXTERNAL RISER ON AN EXISTING STRUCTURE. CARE MUST BE TAKEN NOT TO PLACE RISER IN AN AREA THAT WOULD VIOLATE CLIMBING/WORKING SPACE.

(B) INSTALL AT LEAST ONE LADDER ARM BRACKET FOR EACH COUPLING JOINT OF CONDUIT. (10-FOOT MAXIMUM DISTANCE BETWEEN BRACKETS). ALL LADDER ARM BRACKETS ARE TO BE ATTACHED TO THE POLE WITH BOLTS, BANDS OR BLIND NUTS ON DIRECT BURIED DISTRIBUTION STEEL POLES AND FOR ENGINEERED STEEL POLES 316 STAINLESS STEEL HEAVY HEX NUTS WELDED TO POLE BY POLE SUPPLIER.

(C) CENTER CONDUIT POSITION SHALL BE USED FOR MULTIPLE SDG&E SECONDARY RUNS OR SDG&E TELECOMMUNICATION CONDUIT.OTHER CONDUIT POSITIONS ON THE FRONT OF THE BRACKET SHALL BE USED FOR A SINGLE OR DOUBLE CIRCUIT. THE 8-INCH UNISTRUT CHANNEL (ITEM 4) MAY BE INSTALLED FOR A SINGLE RISER WHERE NO COMMUNICATIONS IS ANTICIPATED.

(D) RISERS OF PLASTIC CONDUIT SHALL BE EPC-80 PVC SCHEDULE 80 FROM THE GROUND LINE TO A LEVEL NOT LESS THAN 8 FEET ABOVE THE GROUND LINE PER G.O. 95 RULE 54.6-E AND SDG&E CONDUIT SIZING REQUIREMENTS.

(E) A MAXIMUM OF TWO 4-INCH COMMUNICATIONS RISERS ARE PERMITTED ON THE BACK SIDE OF A LADDER ARM ASSEMBLY. THE ADJACENT POLE QUADRANT MUST BE VACANT TO INSTALL ANY 4-INCH RISER ON THE BACK OF THE LADDER ARM BRACKET, AND MUST ALSO REMAIN VACANT AFTER INSTALLATION.

(F) SLURRY ENCASEMENT IS REQUIRED AROUND ELBOW(S) FOR ALL PRIMARY CONDUIT(S).

(G) EACH CONDUIT RUN BETWEEN SUBSTRUCTURES, PADS, CUSTOMER SERVICE RISERS, ETC., SHALL BE ONE SIZE CONDUIT CONTINUOUSLY. NO REDUCERS ARE ALLOWED WITHIN A CONDUIT RUN.

(H) SPARE CONDUIT REFERS TO AN EMPTY CONDUIT THAT IS SPECIFIED BY THE PLANNER FOR OPERATING AND MAINTENANCE REQUIREMENTS.

SPARE CONDUITS SHOULD BE CONSIDERED OR INSTALLED:

1. WHEN REQUESTED BY A CUSTOMER AT HIS OWN EXPENSE, BUT NOT TO EXCEED CONDUIT LIMITATIONS IN THIS STANDARD.
2. WHEN IT IS ECONOMICAL TO INSTALL CONDUIT IN LIEU OF CONCRETE, BUT NOT TO EXCEED CONDUIT LIMITATIONS IN THIS STANDARD.
3. BASED ON FUTURE CONSTRUCTION LIMITATIONS SUCH AS BENEATH BRIDGES, ROADWAYS AND RAILROAD TRACKS, BUT NOT TO EXCEED CONDUIT LIMITATIONS IN THIS STANDARD.
4. IN CONVERSION OR NEW BUSINESS PROJECTS TO ALLOW EASY BYPASS OF THE POLE DURING REMOVAL. CONDUITS INSTALLED FOR THIS PURPOSE SHALL NOT GO UP THE POLE BUT, RATHER, SHALL EXTEND PAST THE POLE A MINIMUM OF 6 FEET.

FUTURE SPARE CONDUIT REFERS TO AN EMPTY CONDUIT SPECIFIED BY EITHER THE PLANNER OR DISTRIBUTION PLANNING FOR AREAS WITH GROWTH POTENTIAL. FUTURE FEEDER CONDUIT SPECIFIED BY DISTRIBUTION PLANNING MUST BE SUPPORTED BY THE LONG TERM FEEDER ARRANGEMENT PLAN.

(J) COMMUNICATIONS ONLY POINT OF ATTACHMENT FOR LADDER ARM BRACKET CONSTRUCTION SHALL BE ON THE BACK SIDE OF THE ARM BRACKET ASSEMBLY, (GALVANIZED UNISTRUT PIPE CLAMPS SHALL BE USED TO SECURE THE CONDUIT). COMMUNICATIONS MAY ATTACH ON THE BACK OF THE ASSEMBLY ALONGSIDE SDG&E'S RISER.

BILL OF MATERIALS: NONE

NOTES:

I. LADDER ARM CONSTRUCTION IS LIMITED TO A MAXIMUM OF FOUR SDG&E RISERS (NO MORE THAN TWO PRIMARY RISERS).

II. WHEN POSSIBLE, A RISER SHOULD BE INSTALLED ON THE SIDE OF THE POLE OPPOSITE TRAFFIC FLOW. SPARE CONDUITS SHALL BE CAPPED JUST ABOVE GROUND LEVEL TO PREVENT MOISTURE OR WIRE ENTRY AND KEEP DEBRIS OUT. SPARES ARE NOT TO BE CONSIDERED AS RISERS. (e)

III. EXISTING POLE WITH NEW RISER CONSTRUCTION:
APPROVAL FROM CIVIL ENGINEERING WILL BE REQUIRED PRIOR TO ANY TRENCHING OR CONCRETE CHIPPING WITHIN A TEN FOOT RADIUS OF AN EXISTING CONCRETE ENCASED STEEL POLE TO ENSURE SOIL INTEGRITY IS NOT COMPROMISED. A "PERMISSION TO ATTACH" FORM MUST BE SUBMITTED FOR ANY DISTRIBUTION MATERIALS THAT ARE BEING INSTALLED OR REMOVED FROM A TRANSMISSION POLE, INCLUDING RISERS. THE "PERMISSION TO ATTACH" FORM IS NOT REQUIRED FOR ANY DISTRIBUTION MATERIAL INSTALLED OR REMOVED THAT HAS BEEN ACCOUNTED FOR IN THE ORIGINAL TRANSMISSION POLE DESIGN. RISER(S) ARE TO BE INSTALLED BY CHIPPING A SECTION OF CONCRETE. DURING THE RISER INSTALLATION PROCESS, THE CORROCOTE PROTECTIVE COATING ON THE POLE IS NOT TO BE DAMAGED. IF DAMAGED, CONTACT THE CONSTRUCTION MANAGER (CM) FOR REPAIR. IN ORDER TO MAINTAIN CONCRETE ENCASEMENT/BACKFILL AROUND THE POLE (AS DESCRIBED IN T.E. SPECIFICATION TE-0105, 7.2.1), PLEASE CONSULT WITH CIVIL ENGINEERING AS TO THE BEST METHOD TO RESTORE THE ENCASEMENT/BACKFILL. (a)

IV. NEW POLE WITH NEW RISER CONSTRUCTION:
THE PREFERRED RISER CONSTRUCTION IS TO HAVE THE RISER INSTALLED AT THE SAME TIME AS THE POLE INSTALLATION TO PROVIDE A SINGLE MONOLITHIC CONCRETE ENCASEMENT/BACKFILL. THIS PREFERRED CONSTRUCTION WILL REQUIRE TRENCHING AND CONDUIT INSTALLATION TO BE COMPLETED WITHIN A 10-FOOT RADIUS OF THE POLE BASE. ANY TRENCH WITHIN A 10-FOOT RADIUS AND OUTSIDE THE POLE HOLE DIAMETER MUST BE BACKFILLED WITH A TWO-SACK CONCRETE SLURRY MIX TO ENSURE SOIL COMPACTION IS RESTORED.
IF IT IS DETERMINED TO BE IMPRACTICAL TO INSTALL THE RISER AT THE SAME TIME AS THE POLE INSTALLATION, THEN THE EXISTING POLE WITH NEW RISER CONSTRUCTION METHOD MAY BE USED OR ANY OTHER AGREED METHOD APPROVED BY CIVIL ENGINEERING.

V. TRANSMISSION STANDARDS SHALL BE ADHERED TO FOR ALL DISTRIBUTION UNDERBUILD.

REFERENCE:

(a) REFER TO TRANSMISSION STANDARD T.E.-0105 FOR PROPER BACKFILLING ON DIRECT EMBEDDED FOUNDATIONS OF STEEL POLES WITH AND WITHOUT UNDERBUILD.

(b) REFER TO UG3370; TRENCHES AND UTILITY POSITIONING - S.D. COUNTY.

(c) REFER TO TRANSMISSION STANDARD 21120 FOR GROUNDING ON A DIRECT EMBEDDED STEEL TRANSMISSION POLE, 21130 FOR GROUNDING ON A PIER FOUNDATION AND 21140 FOR GROUNDING ON A MICROPILE FOUNDATION WITH OR WITHOUT UNDERBUILD.

(d) REFER TO OH1002 FOR GROUNDING ON A DIRECT EMBEDDED DISTRIBUTION STEEL POLE. FOR GROUNDING A DIRECT EMBED STEEL POLE IN A SIDEWALK REFER TO TRANSMISSION STANDARD 21120, DETAIL A.

(e) REFER TO OH102; PEDESTRIAN PATH OF TRAVEL AND ACCESSIBILITY.

(f) REFER TO OH303.3; POLE SETTING DEPTH INFORMATION.

(g) REFER TO OH1820; ENGINEERED STEEL CABLE POLES EXTERNAL RISER DETAILS.

h. REFER TO OH1404/UG4204 FOR PRIMARY RISER BILL OF MATERIALS AND OH1414/UG4214 FOR 0-750V BILL OF MATERIALS.

(i) REFER TO OH1404/UG4204 FOR PLACEMENT OF LADDER ARM BRACKETS.

REV	CHANGE	DRWN	BY	CHKD	APVD	DATE
D	REVISE TO 3D FORMAT	DV	JIK	-	-	9/8/2022
C	EDITORIAL CHANGES	-	JIK	JES	CZH	9/18/2019
B	EDITORIAL CHANGES	-	GW	JS	MDJ	1/18/2018

SDG&E — A Sempra Energy utility

SDG&E ELECTRIC OVERHEAD CONSTRUCTION STANDARDS

EXTERNAL RISER FOUNDATION DETAILS

SCALE: NOT TO SCALE

DRAWING NO: OH1810.2

SHEET: 2 OF 2

© 1998 - 2022 San Diego Gas and Electric Company. All rights reserved. Removal of this copyright notice without permission is not permitted under law.

X Indicates Latest Revision | Completely Revised | New Page | Information Removed

TABLE OF CONTENTS

SCOPE: THIS STANDARD SHOWS NEW CONSTRUCTION FOR SINGLE AND MULTIPLE INTERNAL CONDUIT RISERS ON DRILLED PIER FOUNDATION POLES.

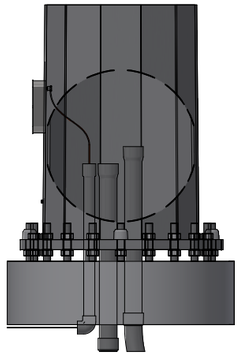

FIGURE 1
DETAIL A
INTERNAL VIEW

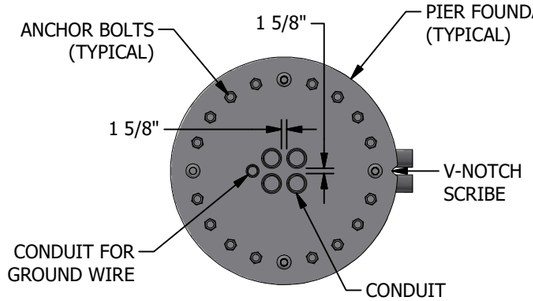

FIGURE 1
SECTION A-A

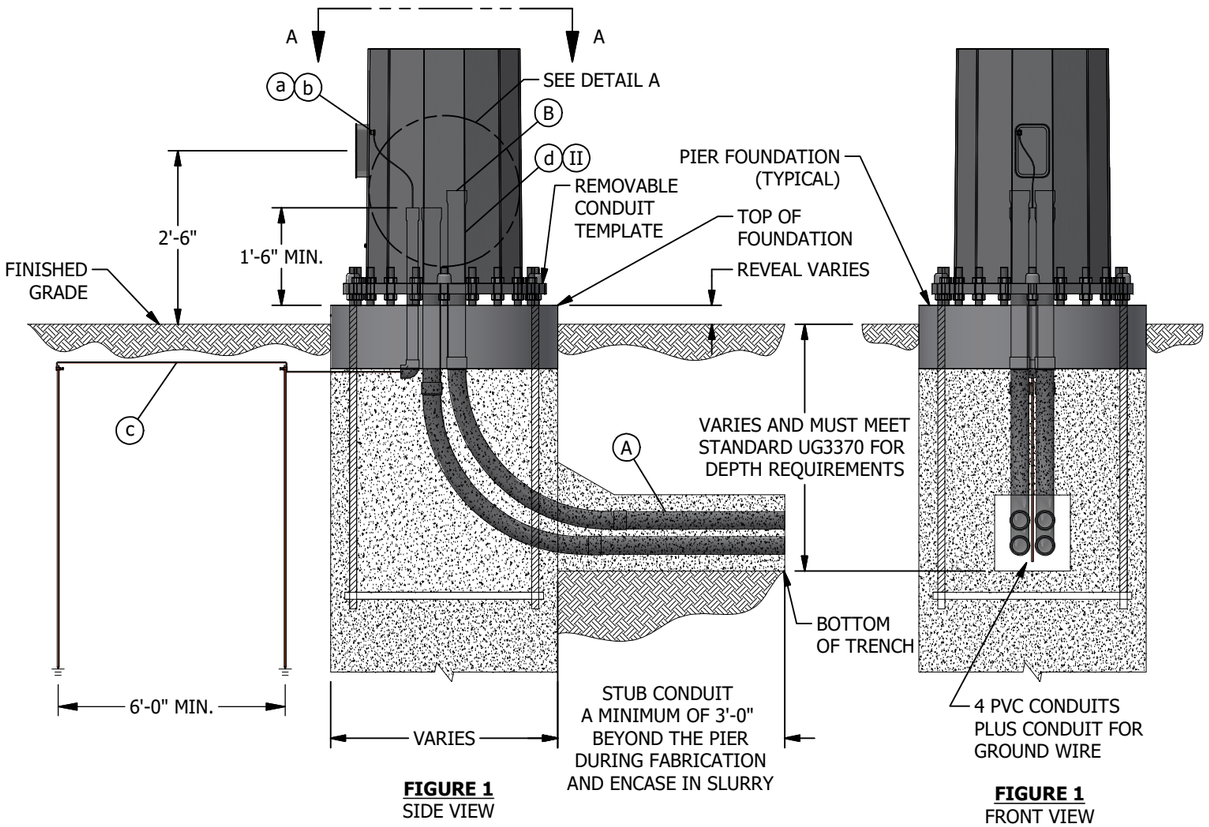

FIGURE 1
SIDE VIEW

FIGURE 1
FRONT VIEW

INSTALLATION:

(A) ALL CONDUIT RUNS COMING FROM SUBSTRUCTURES, EQUIPMENT PADS, CUSTOMER FACILITIES, ETC. MUST TRANSITION TO A 5" CONDUIT EXTERIOR TO THE POLE FOUNDATION. (II)

(B) STUB CONDUITS APPROXIMATELY 18 INCHES ABOVE TOP OF FOUNDATION.

BILL OF MATERIALS: NONE

NOTES:

I. CONDUIT TEMPLATE CAN BE CONSTRUCTED OF PLYWOOD, WOOD FRAMED ASSEMBLY, OR OTHER MATERIAL TO SUPPORT AND POSITION CONDUIT DURING CONCRETE POURING AND CURING.

(II) UNLESS OTHERWISE DIRECTED BY DISTRIBUTION PLANNING, 5" CONDUIT SHALL BE USED FOR ALL INTERNAL RISERS BEGINNING AT EXTERIOR OF THE FOUNDATION AND ENDING AT TOP OF CONDUIT INTERNAL TO STEEL POLE.

REFERENCE:

(a) REFER TO TRANSMISSION STANDARD 21130 FOR GROUNDING A PIER FOUNDATION STEEL DISTRIBUTION POLE.

(b) REFER TO OH1850.2 FOR INTERNAL GROUND NUT LOCATION.

(c) REFER TO OH1002 INSTALLATION NOTE B FOR PROPER BURIAL DEPTH OF GROUND RODS BELOW GROUND SURFACE FOR A STEEL DISTRIBUTION POLE.

(d) REFER TO OH1821 AND OH1822 FOR DETAILS ON CONDUIT EXTENSIONS INTERNAL TO STEEL POLE.

e. REFER TO OH102, PEDESTRIAN PATH OF TRAVEL AND ACCESSIBILITY.

f. REFER TO OH1404/UG4204 FOR PRIMARY RISER BILL OF MATERIALS AND OH1414/UG4214 FOR 0-750V SECONDARY RISER BILL OF MATERIALS.

REV	CHANGE	DRWN	BY	CHKD	APVD	DATE
E	REVISE TO 3D FORMAT	DV	JIK	-	-	10/5/2022
D	FIGURE UPDATE	-	JIK	JES	CZH	9/18/2019
C	DRAWING UPDATE	-	GW	JS	MDJ	1/18/2018

SDGE
A Sempra Energy utility

© 1998 - 2022 San Diego Gas and Electric Company. All rights reserved. Removal of this copyright notice without permission is not permitted under law.

SDG&E ELECTRIC OVERHEAD CONSTRUCTION STANDARDS

ENGINEERED STEEL CABLE POLES
INTERNAL RISER DRILLED PIER FOUNDATION DETAIL

SCALE: NOT TO SCALE

DRAWING NO:	SHEET:
OH1811.1	1 OF 1

X Indicates Latest Revision | Completely Revised | New Page | Information Removed

SCOPE: THIS STANDARD SHOWS NEW CONSTRUCTION FOR SINGLE AND MULTIPLE INTERNAL CONDUIT RISERS ON MICROPILE FOUNDATION POLES.

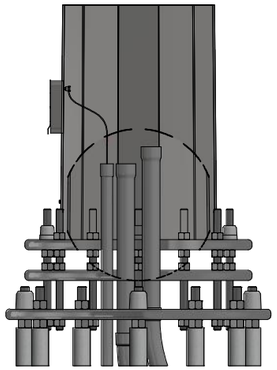

FIGURE 1
DETAIL A
INTERNAL VIEW

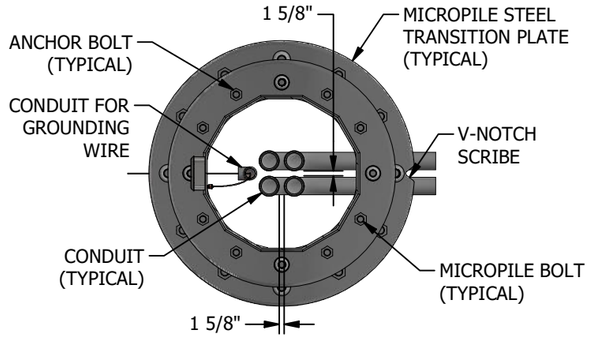

FIGURE 1
SECTION A-A

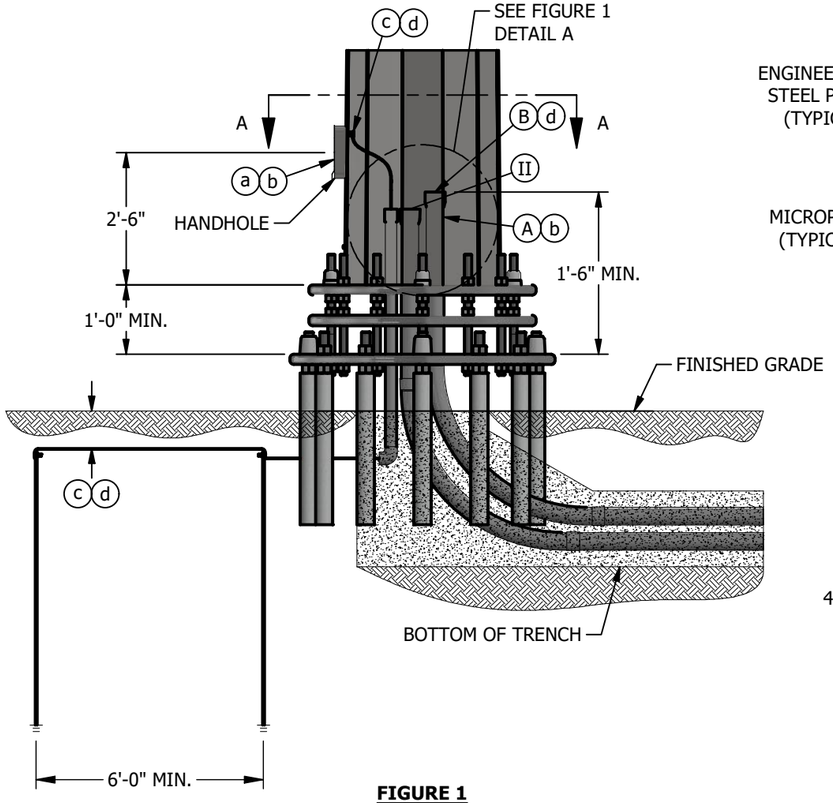

FIGURE 1
SIDE VIEW

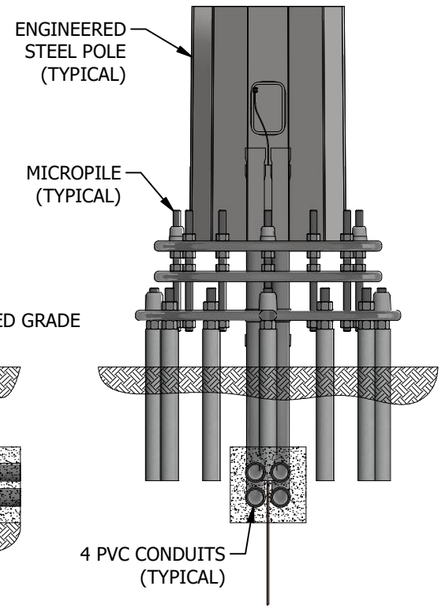

FIGURE 1
FRONT VIEW

INSTALLATION:

(A) ALL CONDUIT RUNS COMING FROM SUBSTRUCTURES, EQUIPMENT PADS, CUSTOMER FACILITIES, ETC. MUST TRANSITION TO A 5" CONDUIT EXTERIOR TO THE POLE FOUNDATION (REFER TO NOTE II).

(B) STUB CONDUITS APPROXIMATELY 18 INCHES ABOVE TOP OF FOUNDATION.

BILL OF MATERIALS: NONE

NOTES:

I. CONDUIT TEMPLATE CAN BE CONSTRUCTED OF PLYWOOD, WOOD FRAMED ASSEMBLY, OR OTHER MATERIAL TO SUPPORT AND POSITION CONDUIT DURING CONCRETE POURING AND CURING.

(II) UNLESS OTHERWISE DIRECTED BY DISTRIBUTION PLANNING, 5" CONDUIT SHALL BE USED FOR ALL INTERNAL RISERS BEGINNING AT EXTERIOR OF THE FOUNDATION AND ENDING AT TOP OF CONDUIT INTERNAL TO STEEL POLE.

REFERENCE:

(a) REFER TO TRANSMISSION STANDARD 21140 FOR GROUNDING A PIER FOUNDATION STEEL DISTRIBUTION POLE.

(b) REFER TO OH1850.2 FOR INTERNAL GROUND NUT LOCATION.

(c) REFER TO OH1002 INSTALLATION NOTE B FOR PROPER BURIAL DEPTH OF GROUND RODS BELOW GROUND SURFACE FOR A STEEL DISTRIBUTION POLE.

(d) REFER TO STANDARDS 1821 AND 1822 FOR DETAILS ON CONDUIT EXTENSIONS INTERNAL TO STEEL POLE.

e. REFER TO DISTRIBUTION STANDARD OH102, PEDESTRIAN PATH OF TRAVEL AND ACCESSIBILITY.

f. REFER TO OH1404/UG4204 FOR PRIMARY RISER BILL OF MATERIALS AND OH1414/UG4214 FOR 0-750V SECONDARY RISER BILL OF MATERIALS.

TABLE OF CONTENTS

REV	CHANGE	DRWN	BY	CHKD	APVD	DATE
E	REVISED TO 3D FORMAT	GLC/DV	JIK	-	-	03/09/2022
D	FIGURE UPDATE	-	JIK	JES	CZH	9/18/2019
C	EDITORIAL CHANGES	-	GW	JS	MDJ	1/18/2018

SDG&E ELECTRIC OVERHEAD CONSTRUCTION STANDARDS

ENGINEERED STEEL CABLE POLES
INTERNAL RISER MICROPILE FOUNDATION DETAIL

SCALE: NOT TO SCALE

DRAWING NO: OH1812.1

SHEET: 1 OF 1

© 1998 - 2022 San Diego Gas and Electric Company. All rights reserved. Removal of this copyright notice without permission is not permitted under law.

X Indicates Latest Revision | Completely Revised | New Page | Information Removed

SCOPE: THIS STANDARD SHOWS NEW CONSTRUCTION FOR SINGLE AND MULTIPLE EXTERNAL CONDUIT RISERS ON NEW AND EXISTING DIRECT EMBED ROUND, DIRECT EMBED 12-SIDED AND ENGINEERED STEEL POLES.

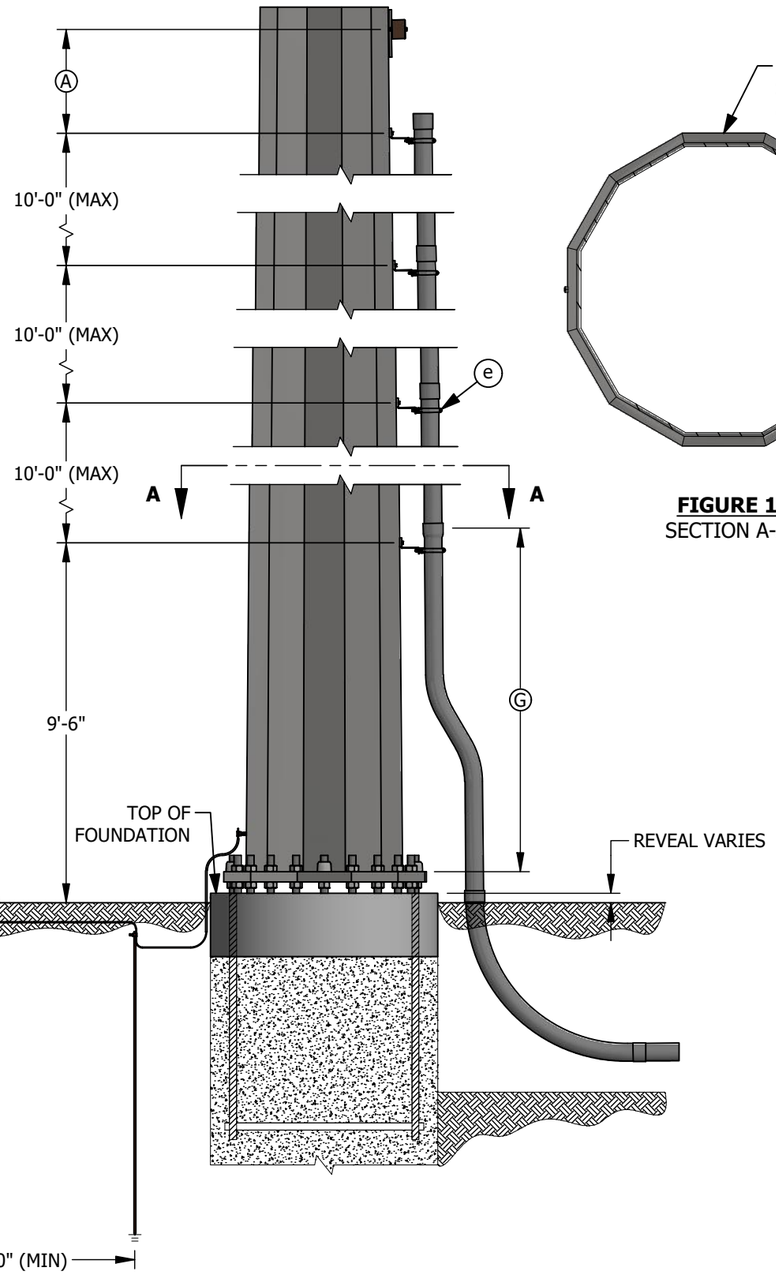

FIGURE 1

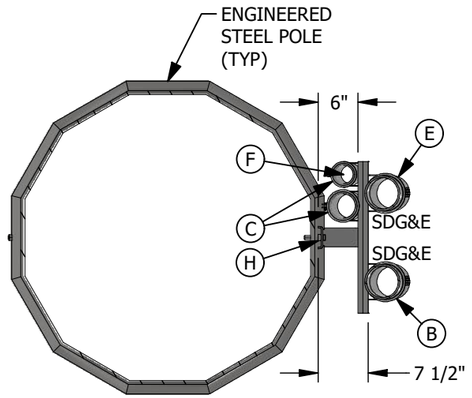

FIGURE 1
SECTION A-A

FIGURE 1

INSTALLATION:

(A) REFER TO APPLICABLE CABLE POLE STANDARD FOR APPROPRIATE MEASUREMENT.

(B) CENTER CONDUIT POSITION SHALL BE USED FOR MULTIPLE SDG&E SECONDARY RUNS OR SDG&E TELECOMMUNICATION CONDUIT. OTHER CONDUIT POSITIONS ON THE FRONT OF THE BRACKET SHALL BE USED FOR A SINGLE OR DOUBLE CIRCUIT. THE 8-INCH UNISTRUT CHANNEL (ITEM 6) MAY BE INSTALLED FOR A SINGLE RISER WHERE NO COMMUNICATIONS IS ANTICIPATED.

(C) A MAXIMUM OF TWO 4-INCH COMMUNICATIONS RISERS ARE PERMITTED ON THE BACK SIDE OF A LADDER ARM ASSEMBLY. THE ADJACENT POLE QUADRANT MUST BE VACANT TO INSTALL ANY 4-INCH RISER ON THE BACK OF THE LADDER ARM BRACKET, AND MUST ALSO REMAIN VACANT AFTER INSTALLATION.

D. EACH CONDUIT RUN BETWEEN SUBSTRUCTURES, PADS, CUSTOMER SERVICE RISERS, ETC., SHALL BE ONE SIZE CONDUIT CONTINUOUSLY. NO REDUCERS ARE ALLOWED WITHIN A CONDUIT RUN.

(E) SPARE CONDUITS

THE TERM "SPARE CONDUIT" REFERS TO AN EMPTY CONDUIT THAT IS SPECIFIED BY THE PLANNER FOR OPERATING AND MAINTENANCE REQUIREMENTS. SPARE CONDUITS SHOULD BE CONSIDERED OR INSTALLED:

1. WHEN REQUESTED BY A CUSTOMER AT HIS OWN EXPENSE, BUT NOT TO EXCEED CONDUIT LIMITATIONS IN THIS STANDARD.
2. WHEN IT IS ECONOMICAL TO INSTALL SPARE CONDUIT, BUT NOT TO EXCEED CONDUIT LIMITATIONS IN THIS STANDARD.
3. BASED ON FUTURE CONSTRUCTION LIMITATIONS SUCH AS BENEATH BRIDGES, ROADWAYS AND RAILROAD TRACKS, BUT NOT TO EXCEED CONDUIT LIMITATIONS IN THIS STANDARD.
4. IN CONVERSION OR NEW BUSINESS PROJECTS TO ALLOW EASY BYPASS OF THE POLE DURING REMOVAL. CONDUITS INSTALLED FOR THIS PURPOSE SHALL NOT GO UP THE POLE. INSTEAD THEY SHALL EXTEND PAST THE POLE A MINIMUM OF 6-FEET.

FUTURE SPARE CONDUITS

THE TERM "FUTURE SPARE CONDUIT" REFERS TO AN EMPTY CONDUIT SPECIFIED BY EITHER THE PLANNER OR DISTRIBUTION PLANNING FOR AREAS WITH GROWTH POTENTIAL. FUTURE FEEDER CONDUIT SPECIFIED BY DISTRIBUTION PLANNING MUST BE SUPPORTED BY THE LONG TERM FEEDER ARRANGEMENT PLAN.

(F) COMMUNICATION ONLY POINT OF ATTACHMENT FOR LADDER ARM BRACKET CONSTRUCTION SHALL BE ON THE BACK SIDE OF THE LADDER ARM BRACKET ASSEMBLY (GALVANIZED UNISTRUT PIPE CLAMPS SHALL BE USED TO SECURE THE CONDUIT). COMMUNICATIONS MAY ATTACH ON THE BACK OF THE ASSEMBLY ALONGSIDE SDG&E'S RISER.

(G) RISERS OF PLASTIC CONDUIT SHALL BE EPC-80 PVC SCHEDULE 80 FROM THE GROUND LINE TO A LEVEL NOT LESS THAN 8 FEET ABOVE THE GROUND LINE PER G.O. 95 RULE 54.6-E AND SDG&E CONDUIT SIZING REQUIREMENTS.

(H) FOR ALL NEW STEEL POLES WITH A RISER, DESIGN SHALL HAVE A 5/8 INCH STAINLESS STEEL NUT WELDED OVER AN 11/16 INCH HOLE FOR LADDER ARM ATTACHMENTS. USE BLIND NUTS FOR NEW STEEL/EXISTING POLES THAT DO NOT HAVE THE WELDED NUTS.

BILL OF MATERIALS: NONE

NOTES:

I. LADDER ARM CONSTRUCTION IS LIMITED TO A MAXIMUM OF FOUR SDG&E RISERS (NO MORE THAN TWO PRIMARY RISERS).

II. WHEN POSSIBLE, A RISER SHOULD BE INSTALLED ON THE SIDE OF THE POLE OPPOSITE TRAFFIC FLOW. SPARE CONDUITS SHALL BE CAPPED JUST ABOVE GROUND LEVEL TO PREVENT MOISTURE OR WIRE ENTRY AND KEEP DEBRIS OUT. SPARES ARE NOT TO BE CONSIDERED AS RISERS. (d)

TABLE OF CONTENTS

REV	CHANGE	DRWN	BY	CHKD	APVD	DATE
D	REVISED TO 3D FORMAT	GLC/DV	JIK	-	-	03/14/2022
C	FIGURE UPDATE	-	JIK	JES	CZH	9/18/2019
B	EDITORIAL CHANGES	-	GW	JS	MDJ	01/18/2018

SDG&E

A Sempra Energy utility®

© 1998 - 2022 San Diego Gas and Electric Company. All rights reserved. Removal of this copyright notice without permission is not permitted under law.

SDG&E ELECTRIC OVERHEAD CONSTRUCTION STANDARDS

DIRECT EMBED OR ENGINEERED STEEL CABLE POLES EXTERNAL RISER DETAIL

SCALE: NOT TO SCALE

DRAWING NO: OH1820.1

SHEET: 1 OF 1

X Indicates Latest Revision | Completely Revised | New Page | Information Removed

TABLE OF CONTENTS

SCOPE: THIS STANDARD SHOWS NEW CONSTRUCTION FOR MUTIPLE CONDUIT RISERS INSTALLED AT THE SAME HORIZONTAL LEVEL ON A FOUNDATION POLE.

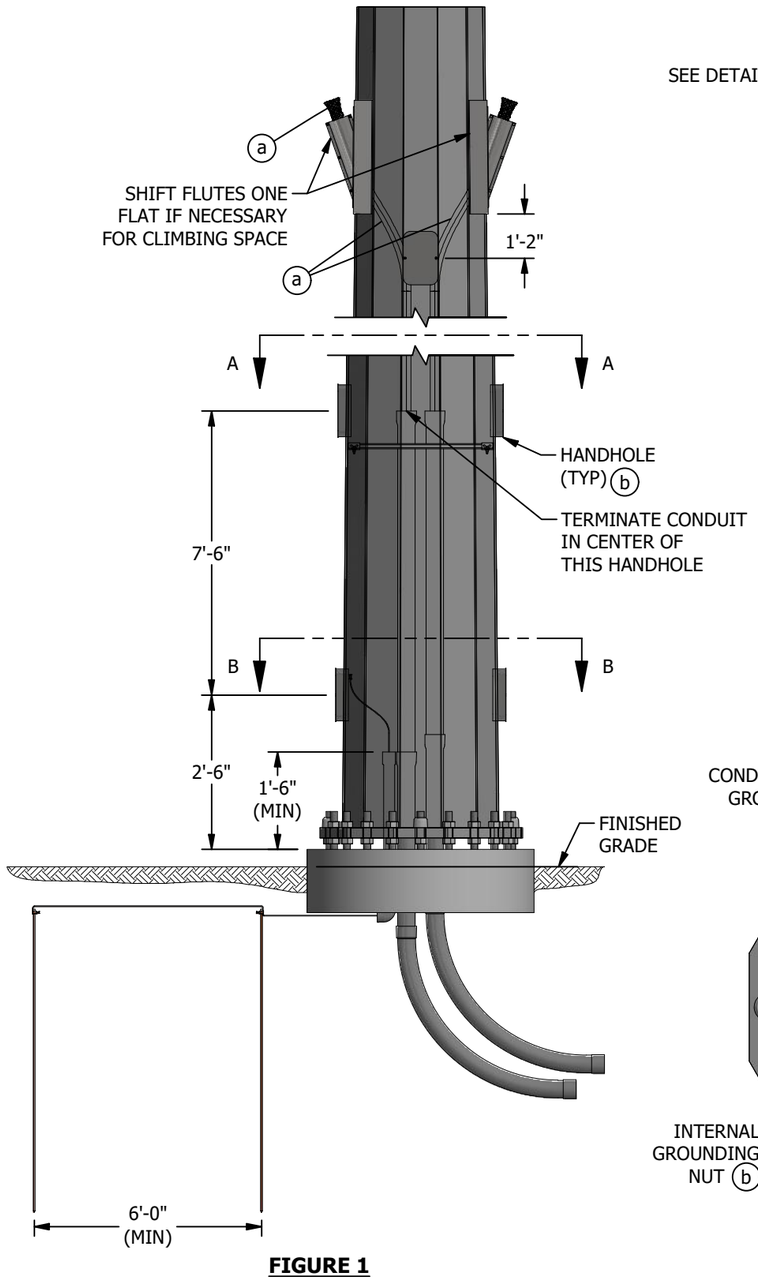

FIGURE 1

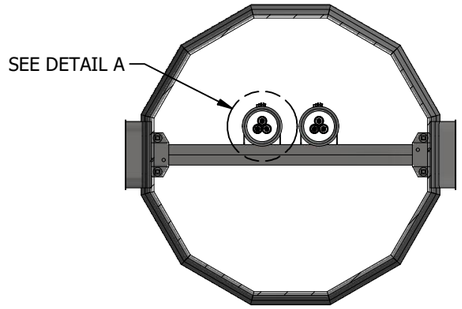

FIGURE 1
SECTION A-A (g)

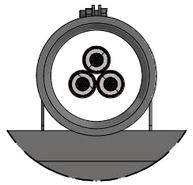

FIGURE 1
DETAIL A

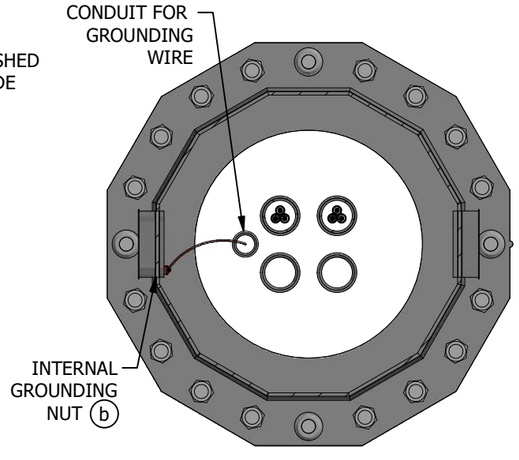

FIGURE 1
SECTION B-B

INSTALLATION:

A. DOUBLE HORIZONTAL TERMINATION CONSTRUCTION IS ONLY ALLOWED ON EXISTING STRUCTURE REPLACEMENTS WHERE POLE SPACE IS NOT AVAILABLE. FOR NEW CONSTRUCTION WITH MULTIPLE CIRCUITS ON ONE POLE, INDIVIDUAL CIRCUITS SHALL BE VERTICALLY SEPARATED. NEUTRAL CONDUCTORS SHALL BE INSTALLED AT THE SAME LEVEL AS THE CORRESPONDING PHASES.

BILL OF MATERIALS: NONE

NOTES:

I. ALL MEASUREMENTS SHALL BE TAKEN FROM THE CENTERLINES OF VANGS, DAVIT ARMS, HANDHOLES AND BOLT HOLES.

REFERENCE:

(a) FOR PROPER GRIP SIZING, SEE OH1404.3.
(b) FOR INTERNAL GROUND NUT LOCATION, SEE OH1850.1.
(c) FOR PROPER BURIAL DEPTH OF GROUND RODS BELOW GROUND SURFACE, SEE OH1002 INSTALLATION NOTE B.
d. FOR STEEL POLE CLIMBING AND WORKING STEPS FOR DISTRIBUTION AND TRANSMISSION POLES, SEE TRANSMISSION STANDARD 17105.
e. FOR PLACEMENT OF LADDER ARM BRACKETS ON PRIMARY AND SECONDARY RISERS, SEE OH1404UG4204.
f. FOR PRIMARY RISER BILL OF MATERIALS, SEE OH1404UG4204 AND FOR 0-750V SECONDARY RISER BILL OF MATERIALS, SEE OH1414UG4214.
(g) FOR REFERENCE DETAILS, SEE OH1850.3.

REV	CHANGE	DRWN	BY	CHKD	APVD	DATE
F	REVISED TO 3D FORMAT	GLC/DV	JIK	-	-	06/14/2022
E	EDITORIAL CHANGES	EDM	JIK	JES	CZH	08/25/2021
D	FIGURE UPDATE	-	JIK	JES	CZH	09/18/2019

SDG&E ELECTRIC OVERHEAD CONSTRUCTION STANDARDS

ENGINEERED STEEL CABLE POLES
DOUBLE HORIZONTAL FLUTE RISER ABOVE FOUNDATION

SCALE: NOT TO SCALE

DRAWING NO:	SHEET:
OH1821.1	1 OF 1

© 1998 - 2022 San Diego Gas and Electric Company. All rights reserved. Removal of this copyright notice without permission is not permitted under law.

X Indicates Latest Revision | Completely Revised | New Page | Information Removed

SCOPE: THIS STANDARD SHOWS NEW CONSTRUCTION FOR MUTIPLE CONDUIT RISERS INSTALLED AT THE SAME HORIZONTAL LEVEL ON A FOUNDATION POLE.

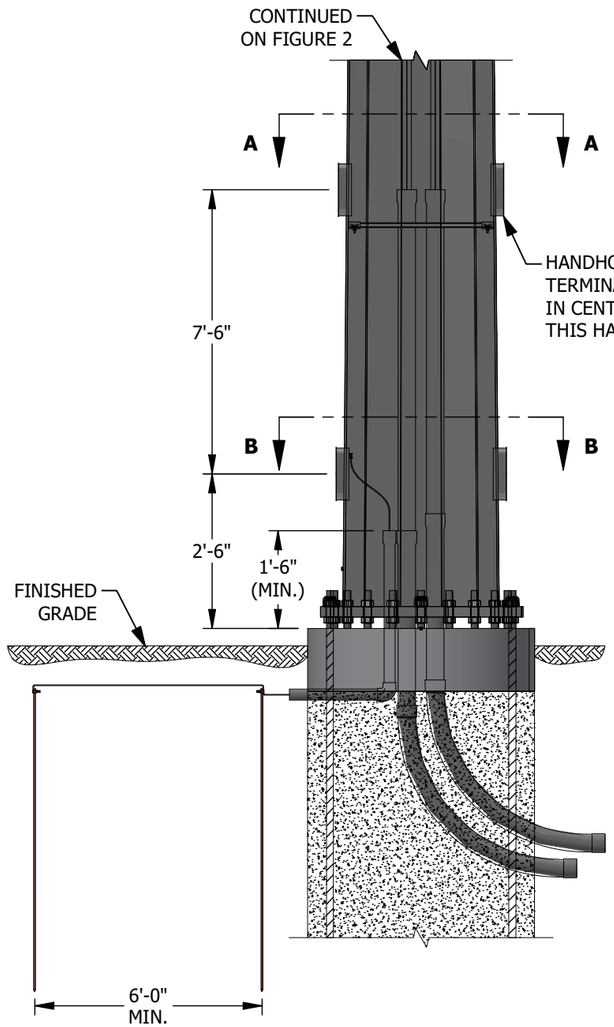

FIGURE 1
LOWER SECTION

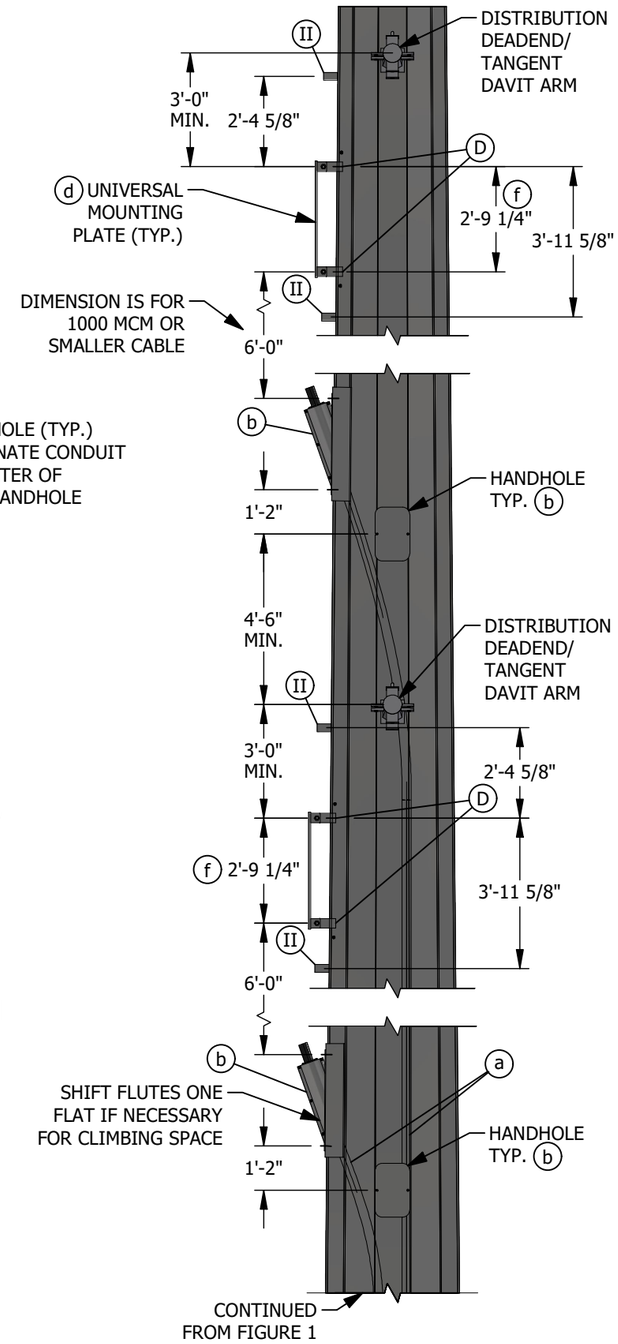

FIGURE 2
UPPER SECTION

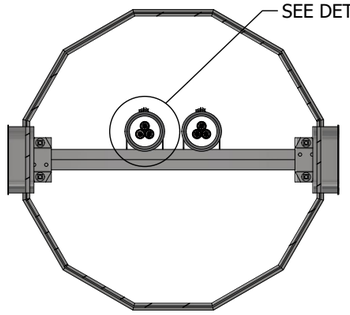

FIGURE 1
SECTION A-A (g)

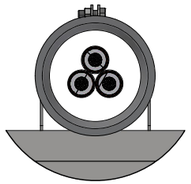

FIGURE 1
DETAIL A

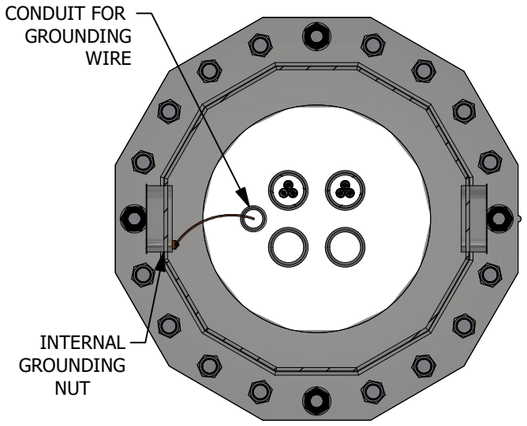

FIGURE 1
SECTION B-B

INSTALLATION:

A. IF BOTTOM FLUTE IS UTILIZED FOR SECONDARY SERVICES, ALLOW FOR SECONDARY VANG(S) AND REFERENCE SECONDARY STANDARDS, WHICH ARE CURRENTLY BEING DESIGNED.

B. FOR ERECTION OF MULTI-SECTION DISTRIBUTION STEEL POLES, THE SEAMS OF THE TWO SECTIONS MUST MATCH AND BE FULLY JOINED TOGETHER PER MANUFACTURER'S GUIDELINES. PRIOR TO LIFTING, THE JOINED SECTIONS SHALL BE PROPERLY CONNECTED PER ASCE 48.

C. FOR ERECTION OF TRANSMISSION POLES REFER TO TE-0103.

(D) ENSURE POLE MANUFACTURER DRILLS FOUR 5/8-INCH THROUGH HOLES ON EACH SIDE OF THE MOUNTING BRACKET (AS SHOWN IN FIGURE 2) AND WELD 1/2-INCH STAINLESS STEEL NUTS OVER EACH HOLE.

BILL OF MATERIALS: NONE

NOTES:

I. ALL MEASUREMENTS SHALL BE TAKEN FROM THE CENTERLINES OF VANGS, DAVIT ARMS, HANDHOLES AND BOLT HOLES.

(II) MOUNTING BRACKET FOR 15'-0" INERTIA SWITCH ARM BRACES. (e)

REFERENCE:

(a) FOR PROPER GRIP SIZING, SEE OH1404.

(b) FOR FLUTE AND HANDHOLE DETAILS, SEE OH1850.

c. FOR STEPPING A STEEL DISTRIBUTION POLE, SEE OH363. SPECIAL ATTENTION TO NOTE "E" TO ENSURE CLIPS ARE INSTALLED AT THE FACTORY WHETHER STEPS ARE PERMANENTLY INSTALLED OR NOT. FOR STEPPING A TRANSMISSION POLE WITH OR WITHOUT UNDERBUILD, SEE TRANSMISSION STANDARD 17105.

(d) FOR UNIVERSAL PLATE DETAILS, SEE OH1860.

(e) FOR DETAILS, SEE OH1444.

(f) DIMENSION IS BETWEEN VANG CENTERLINES, SEE OH1860.

(g) REFERENCE DETAILS ON OH1850.

REV	CHANGE	DRWN	BY	CHKD	APVD	DATE
F	REVISED TO 3D FORMAT	GLC/DV	JIK	JAS	KRG	03/10/2023
E	FIGURE UPDATE	EDM	JIK	JES	CZH	08/25/2021
D	FIGURE UPDATE	EDM	JIK	JES	CZH	09/18/2019

SDG&E ELECTRIC OVERHEAD CONSTRUCTION STANDARDS

ENGINEERED STEEL CABLE POLES SINGLE OR DOUBLE VERTICAL FLUTE RISER ABOVE FOUNDATION

SCALE: NOT TO SCALE

DRAWING NO: OH1822.1

SHEET: 1 OF 1

© 1998 - 2023 San Diego Gas and Electric Company. All rights reserved. Removal of this copyright notice without permission is not permitted under law.

X Indicates Latest Revision | Completely Revised | New Page | Information Removed

TABLE OF CONTENTS

SCOPE: THIS STANDARD SHOWS NEW CONSTRUCTION OF A SINGLE CONDUIT RISER POLE WITH 900A HOOKSTICK SWITCHES FOR 350KCMIL AND LARGER U.G. CABLE

TABLE OF CONTENTS

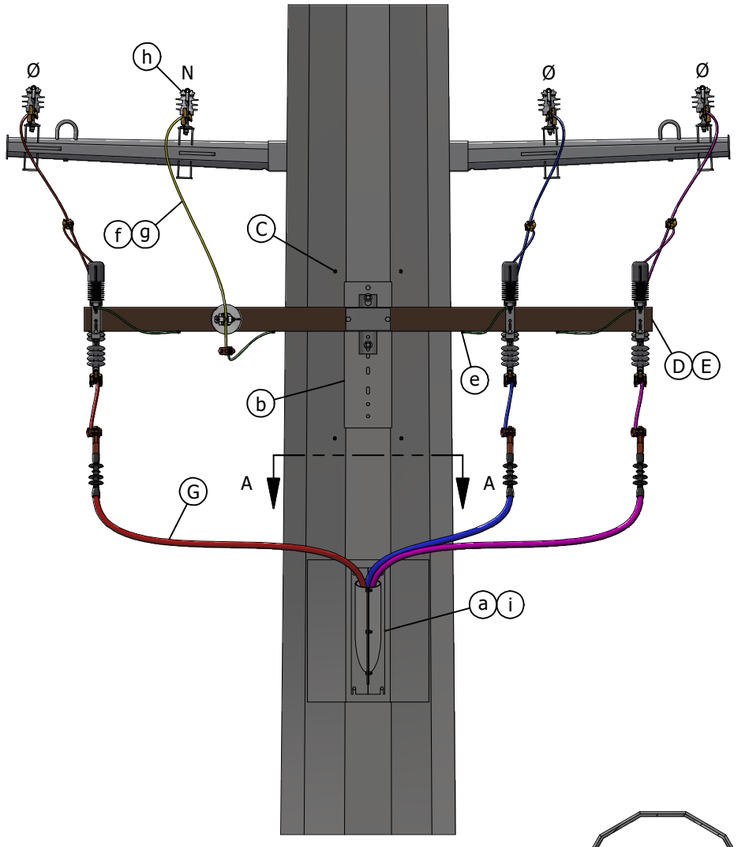

FIGURE 1
INTERNAL RISER
FRONT VIEW

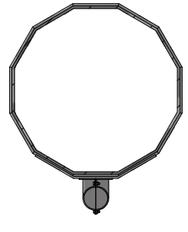

FIGURE 1
SECTION A-A

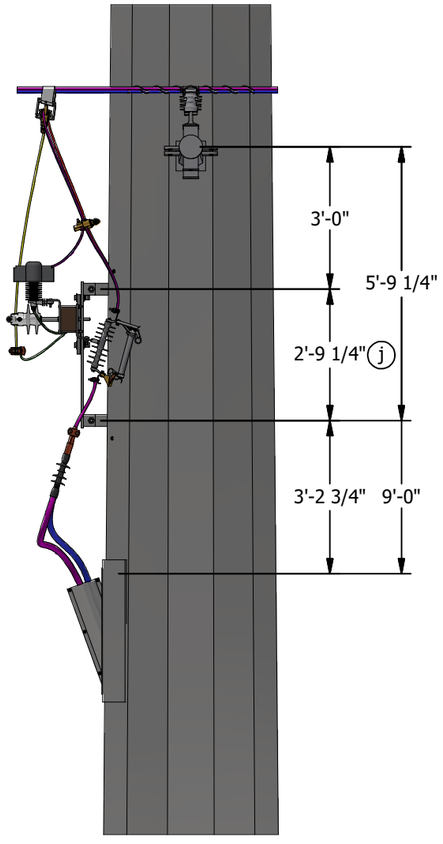

FIGURE 1
INTERNAL RISER
SIDE VIEW

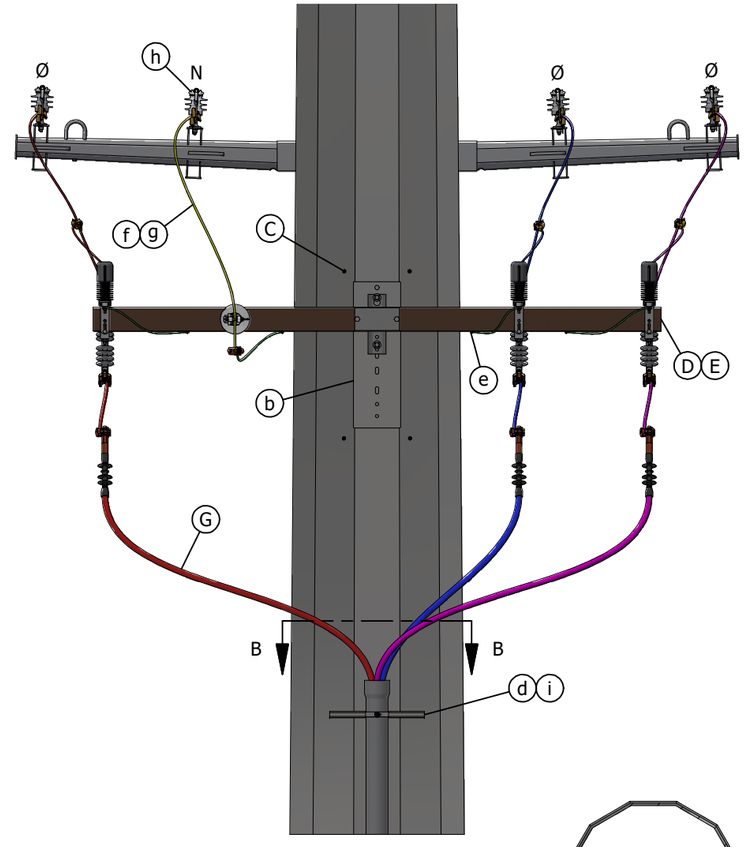

FIGURE 2
EXTERNAL RISER
FRONT VIEW

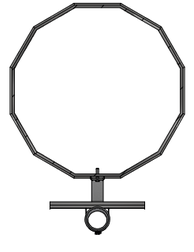

FIGURE 2
SECTION B-B

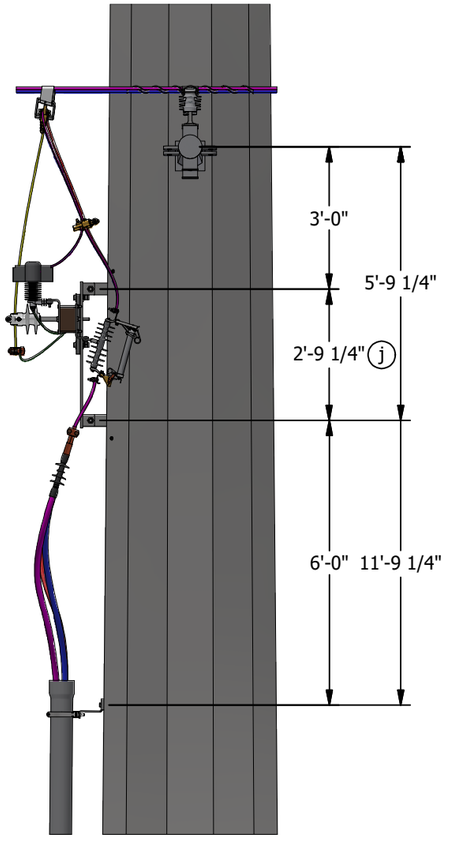

FIGURE 2
EXTERNAL RISER
SIDE VIEW

REV	CHANGE	DRWN	BY	CHKD	APVD	DATE
E	REVISE TO 3D FORMAT	DV	JIK	-	-	6/28/2022
D	FIGURE UPDATE	EDM	JIK	JES	CZH	8/25/2021
C	DRAWING UPDATE	EDM	JIK	JES	CZH	9/18/2019

SDG&E
A Sempra Energy utility

SDG&E ELECTRIC OVERHEAD CONSTRUCTION STANDARDS

ENGINEERED STEEL CABLE POLES
2/0 AND SMALLER SINGLE TERMINATION
INTERNAL AND EXTERNAL RISERS

SCALE: NOT TO SCALE

DRAWING NO:	SHEET:
OH1830.1	1 OF 3

© 1998 - 2022 San Diego Gas and Electric Company. All rights reserved. Removal of this copyright notice without permission is not permitted under law.

X Indicates Latest Revision | Completely Revised | New Page | Information Removed

TABLE OF CONTENTS

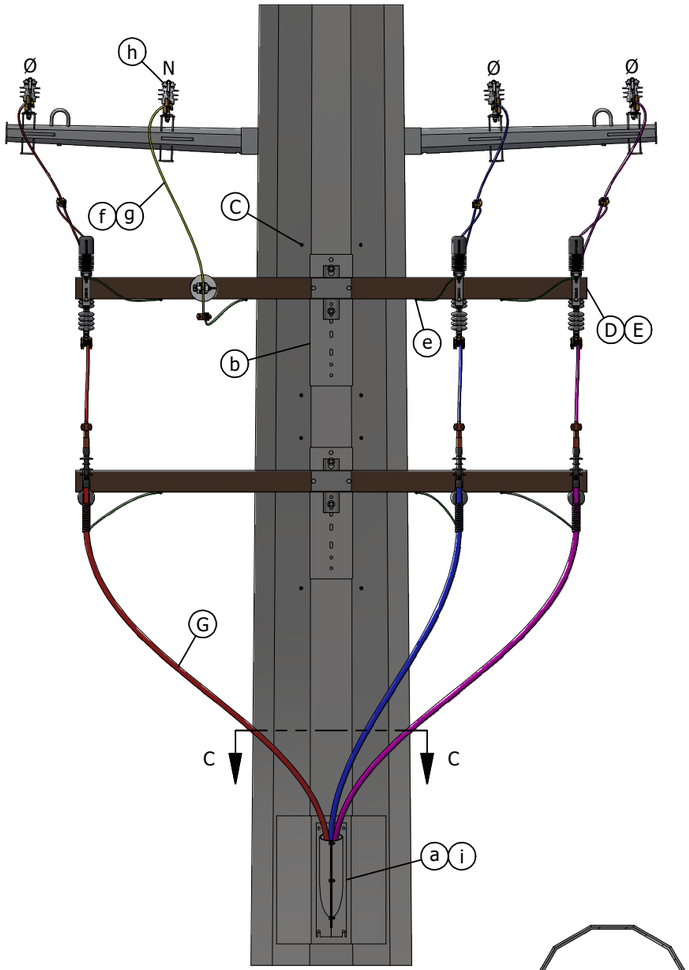

FIGURE 2
INTERNAL RISER
FRONT VIEW

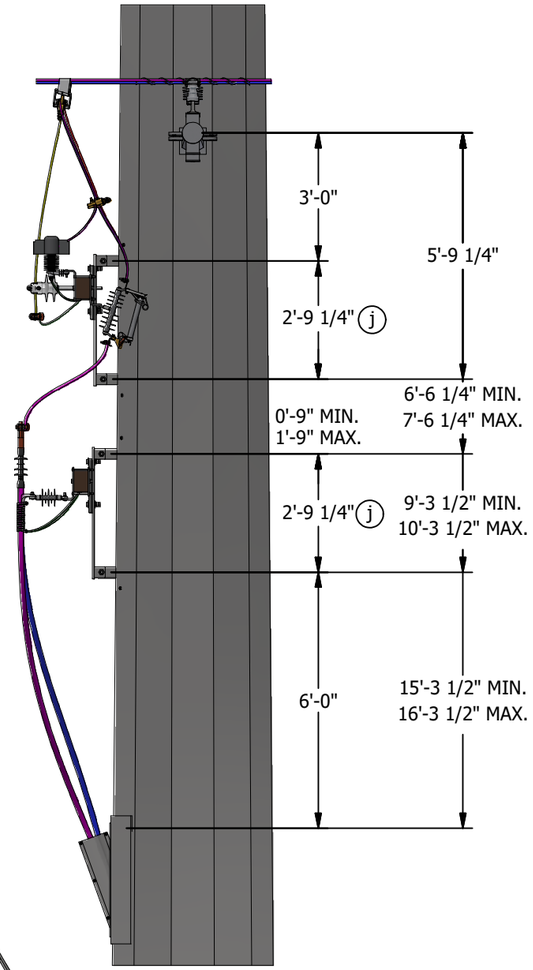

FIGURE 2
INTERNAL RISER
SIDE VIEW



FIGURE 2
SECTION C-C

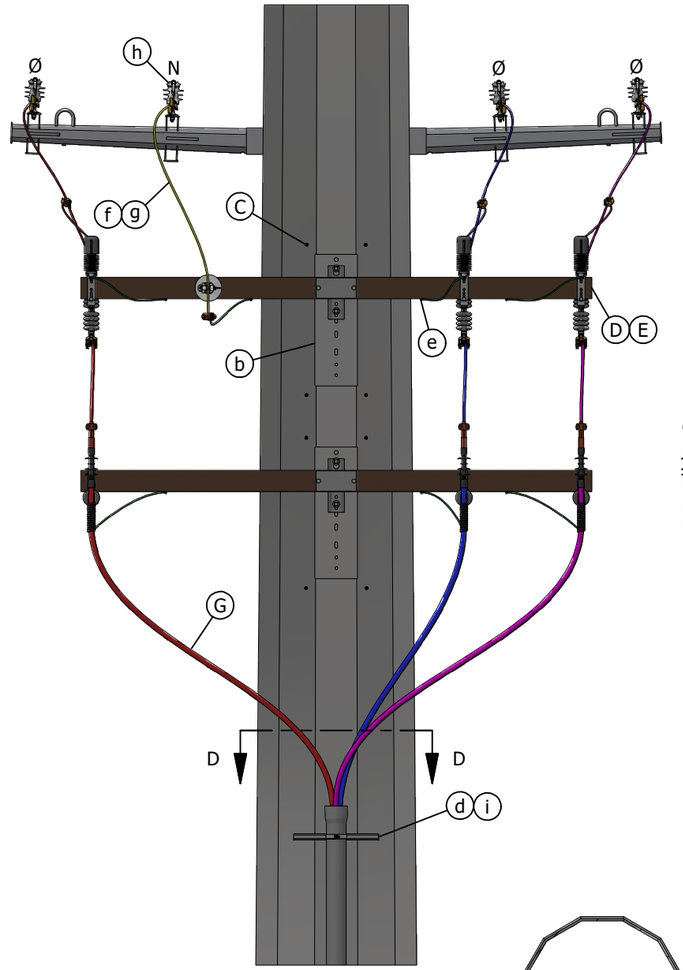

FIGURE 4
EXTERNAL RISER
FRONT VIEW

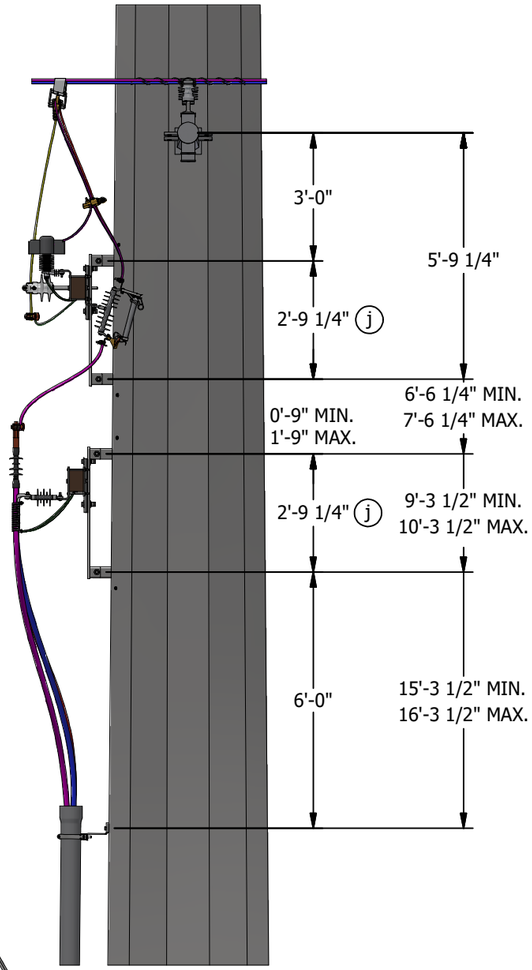

FIGURE 4
EXTERNAL RISER
SIDE VIEW



FIGURE 4
SECTION D-D

REV	CHANGE	DRWN	BY	CHKD	APVD	DATE
E	REVISE TO 3D FORMAT	DV	JIK	-	-	6/28/2022
D	FIGURE UPDATE	EDM	JIK	JES	CZH	8/25/2021
C	DRAWING UPDATE	EDM	JIK	JES	CZH	9/18/2019

SDG&E ELECTRIC OVERHEAD CONSTRUCTION STANDARDS

ENGINEERED STEEL CABLE POLES
350 KCMIL AND LARGER SINGLE TERMINATION
INTERNAL AND EXTERNAL RISERS

SCALE: NOT TO SCALE

DRAWING NO:	SHEET:
OH1830.2	2 OF 3

© 1998 - 2022 San Diego Gas and Electric Company. All rights reserved. Removal of this copyright notice without permission is not permitted under law.

X Indicates Latest Revision | Completely Revised | New Page | Information Removed

TABLE OF CONTENTS

INSTALLATION:

A. IF BOTTOM FLUTE IS UTILIZED FOR SECONDARY SERVICES, ALLOW FOR SECONDARY VANG(S) AND REFERENCE SECONDARY STANDARDS, WHICH ARE CURRENTLY BEING DESIGNED.

B. FOR ERECTION OF MULTI-SECTION DISTRIBUTION STEEL POLES, THE SEAMS OF THE TWO SECTIONS MUST MATCH AND BE FULLY JOINED TOGETHER PER MANUFACTURER'S GUIDELINES. PRIOR TO LIFTING, THE JOINED SECTIONS SHALL BE PROPERLY CONNECTED PER ASCE 48. FOR ERECTION OF TRANSMISSION POLES REFER TO TE-0103.

(C) ENSURE POLE MANUFACTURER DRILLS FOUR 5/8-INCH THROUGH-HOLES ONE ON EACH SIDE OF THE MOUNTING BRACKET (AS SHOWN ON FIGURES) AND WELDS 1/2-INCH STAINLESS STEEL NUTS OVER EACH HOLE.

(D) ONLY 12-FOOT AND 15-FOOT COMPOSITE ARMS WILL BE USED ON TRANSMISSION STRUCTURES.

(E) THE INSIDE INSULATOR POSITION AT 24 INCHES (12'-0" COMPOSITE ARMS) IS NOT TO BE USED. ONLY INSULATOR POSITIONS LOCATED AT 30 INCHES OR MORE FROM CENTER OF ARM MAY BE USED.

F. NEUTRAL CONDUCTORS SHALL BE INSTALLED AT THE SAME LEVEL AS THE CORRESPONDING LINE CONDUCTORS.

(G) FOR 2/0 AND SMALLER, UNDERGROUND CABLE CAN BE TERMINATED DIRECTLY ON THE CUTOUT EQUIPMENT ARM. FOR LARGER UNDERGROUND CABLE A SEPARATE EQUIPMENT ARM MUST BE INSTALLED BELOW THE CUTOUT AND ARRESTER EQUIPMENT ARM.

BILL OF MATERIALS: NONE

NOTES:

I. SECONDARY SERVICE ATTACHMENT VANGS FOR USE ONLY WHEN A TRANSFORMER IS TO BE HUNG ON THE UNIVERSAL PLATE. MOUNT PERPENDICULAR TO LINE FOR OH SECONDARY OR LINKED POLE BANDS. MAINTAIN 10-INCH MINIMUM DISTANCE BETWEEN BOTTOM OF TRANSFORMER AND TOP OF VANGS.

II. ALL MEASUREMENTS SHALL BE TAKEN FROM THE CENTERLINES OF VANGS, DAVIT ARMS, HANDHOLES AND BOLT HOLES.

REFERENCE:

(a) FOR APPURTENANT FEATURES, SEE OH1850.

(b) FOR UNIVERSAL MOUNTING PLATE, SEE OH1860.

c. FOR STEPPING A STEEL DISTRIBUTION POLE, SEE OH363. SPECIAL ATTENTION TO NOTE "E" TO ENSURE CLIPS ARE INSTALLED AT THE FACTORY WHETHER STEPS ARE PERMANENTLY INSTALLED OR NOT. FOR STEPPING A TRANSMISSION POLE WITH OR WITHOUT UNDERBUILD, SEE TRANSMISSION STANDARD 17105.

(d) FOR EXTERNAL RISER DETAIL, SEE OH1820.

(e) FOR NEUTRAL GROUNDING TO STEEL POLE, SEE OH1004.

(f) FOR SIZING NEUTRAL JUMPERS, SEE OH1442UG4242.

(g) FOR SIZING COPPER COMPRESSION CONNECT, SEE OH785.

(h) FOR ALL PRIMARY AND NEUTRAL CONNECTIONS, SEE OH1442UG4242.

(i) FOR PROPER GRIP SIZING TYPICAL, SEE OH1404.3.

(j) DIMENSION IS BETWEEN VANG CENTERLINES, SEE OH1860.

REV	CHANGE	DRWN	BY	CHKD	APVD	DATE
E	REVISE TO 3D FORMAT	DV	JIK	-	-	6/28/2022
D	FIGURE UPDATE	EDM	JIK	JES	CZH	8/25/2021
C	DRAWING UPDATE	EDM	JIK	JES	CZH	9/18/2019

SDGE — A Sempra Energy utility

© 1998 - 2022 San Diego Gas and Electric Company. All rights reserved. Removal of this copyright notice without permission is not permitted under law.

SDG&E ELECTRIC OVERHEAD CONSTRUCTION STANDARDS

ENGINEERED STEEL CABLE POLES
SINGLE TERMINATION INTERNAL AND EXTERNAL RISERS

SCALE: NOT TO SCALE

DRAWING NO:	SHEET:
OH1830.3	3 OF 3

X Indicates Latest Revision | Completely Revised | New Page | Information Removed

SCOPE: THIS STANDARD SHOWS NEW CONSTRUCTION OF A DOUBLE HORIZONTAL CONDUIT RISER POLE WITH 900A HOOKSTICK SWITCHES FOR 350KCMIL AND LARGER U.G. CABLE

TABLE OF CONTENTS

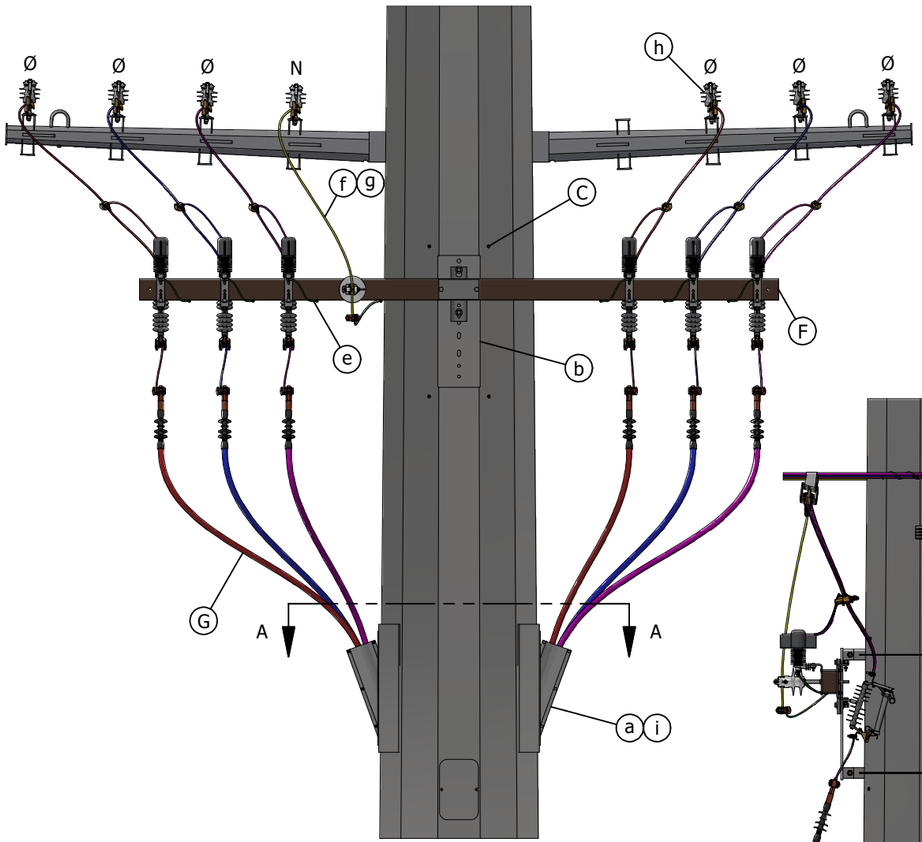

FIGURE 1
INTERNAL RISER
FRONT VIEW

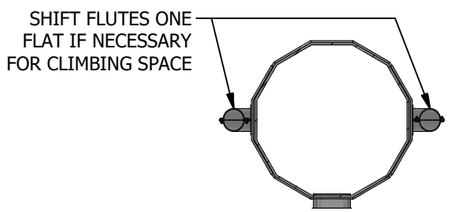

FIGURE 1
SECTION A-A

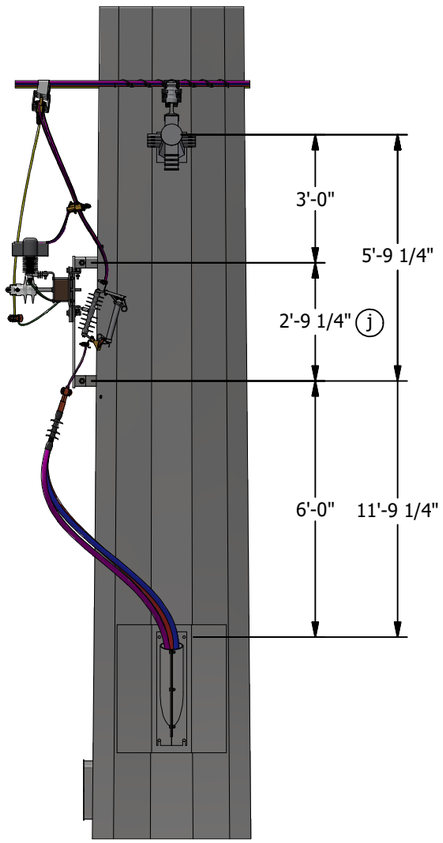

FIGURE 1
INTERNAL RISER
SIDE VIEW

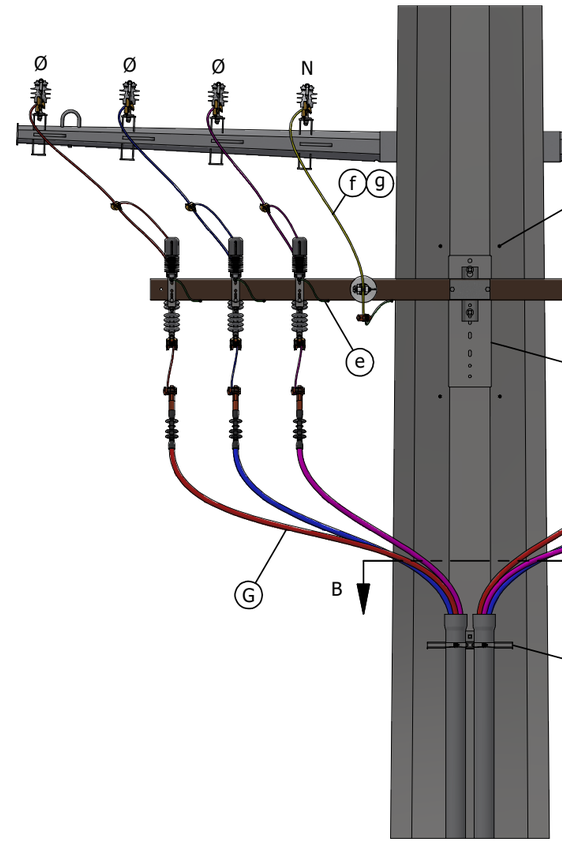

FIGURE 2
EXTERNAL RISER
FRONT VIEW

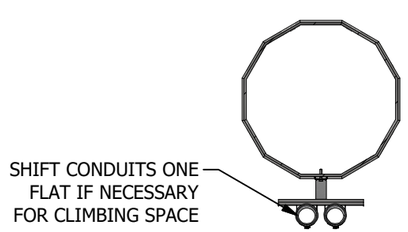

FIGURE 2
SECTION B-B

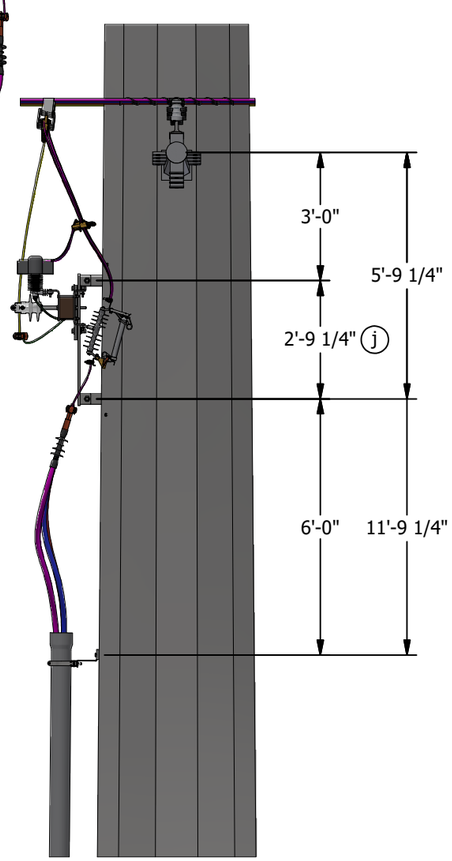

FIGURE 2
EXTERNAL RISER
SIDE VIEW

REV	CHANGE	DRWN	BY	CHKD	APVD	DATE
E	REVISE TO 3D FORMAT	DV	JIK	-	-	8/9/2022
D	FIGURE UPDATE	EDM	JIK	JES	CZH	8/25/2021
C	DRAWING UPDATE	EDM	JIK	JES	CZH	9/18/2019

SDG&E
A Sempra Energy utility

SDG&E ELECTRIC OVERHEAD CONSTRUCTION STANDARDS

ENGINEERED STEEL CABLE POLES
DOUBLE HORIZONTAL TERMINATION
INTERNAL AND EXTERNAL RISERS

SCALE: NOT TO SCALE

DRAWING NO:	SHEET:
OH1831.1	1 OF 2

© 1998 - 2022 San Diego Gas and Electric Company. All rights reserved. Removal of this copyright notice without permission is not permitted under law.

X Indicates Latest Revision | Completely Revised | New Page | Information Removed

TABLE OF CONTENTS

INSTALLATION:

A. IF BOTTOM FLUTE IS UTILIZED FOR SECONDARY SERVICES, ALLOW FOR SECONDARY VANG(S) AND REFERENCE SECONDARY STANDARDS, WHICH ARE CURRENTLY BEING DESIGNED.

B. FOR ERECTION OF MULTI-SECTION DISTRIBUTION STEEL POLES, THE SEAMS OF THE TWO SECTIONS MUST MATCH AND BE FULLY JOINED TOGETHER PER MANUFACTURER'S GUIDELINES. PRIOR TO LIFTING, THE JOINED SECTIONS SHALL BE PROPERLY CONNECTED PER ASCE 48. FOR ERECTION OF TRANSMISSION POLES REFER TO TE-0103.

(C) ENSURE POLE MANUFACTURER DRILLS FOUR 5/8-INCH THROUGH-HOLES ONE ON EACH SIDE OF THE MOUNTING BRACKET (AS SHOWN ON FIGURES) AND WELDS 1/2-INCH STAINLESS STEEL NUTS OVER EACH HOLE.

D. ONLY 12'-0" AND 15'-0" COMPOSITE ARMS WILL BE USED ON TRANSMISSION STRUCTURES.

E. THE INSIDE INSULATOR POSITION AT 24 INCHES (12'-0" COMPOSITE ARMS) IS NOT TO BE USED. ONLY INSULATOR POSITIONS LOCATED AT 30 INCHES OR MORE FROM CENTER OF ARM MAY BE USED.

(F) NEUTRAL CONDUCTORS SHALL BE INSTALLED AT THE SAME LEVEL AS THE CORRESPONDING LINE CONDUCTORS.

(G) FOR 2/0 AND SMALLER, UNDERGROUND CABLE CAN BE TERMINATED DIRECTLY ON THE CUTOUT EQUIPMENT ARM. FOR LARGER UNDERGROUND CABLE, A SEPARATE EQUIPMENT ARM MUST BE INSTALLED BELOW THE CUTOUT AND ARRESTER EQUIPMENT ARM.

BILL OF MATERIALS: NONE

NOTES:

I. SECONDARY SERVICE ATTACHMENT VANGS FOR USE ONLY WHEN A TRANSFORMER IS TO BE HUNG ON THE UNIVERSAL PLATE. MOUNT PERPENDICULAR TO LINE FOR OH SECONDARY OR LINKED POLE BANDS. MAINTAIN 10-INCH MINIMUM DISTANCE BETWEEN BOTTOM OF TRANSFORMER AND TOP OF VANGS.

II. ALL MEASUREMENTS SHALL BE TAKEN FROM THE CENTERLINES OF VANGS, DAVIT ARMS, HANDHOLES AND BOLT HOLES.

III. TWO LEVELS OF DISTRIBUTION CONDUCTORS SHALL BE INSTALLED RATHER THAN A SINGLE 15'-0" CROSSARM WHEN POLE SPACE IS AVAILABLE.

REFERENCE:

(a) FOR APPURTENANT FEATURES, SEE OH1850.

(b) FOR UNIVERSAL MOUNTING PLATE, SEE OH1860.

c. FOR STEPPING A STEEL DISTRIBUTION POLE, SEE OH363. SPECIAL ATTENTION TO NOTE "E" TO ENSURE CLIPS ARE INSTALLED AT THE FACTORY WHETHER STEPS ARE PERMANENTLY INSTALLED OR NOT. FOR STEPPING A TRANSMISSION POLE WITH OR WITHOUT UNDERBUILD, SEE TRANSMISSION STANDARD 17105.

(d) FOR EXTERNAL RISER DETAIL, SEE OH1820.

(e) FOR NEUTRAL GROUNDING TO STEEL POLE, SEE OH1004.

(f) FOR SIZING NEUTRAL JUMPERS, SEE OH1442UG4242.

(g) FOR SIZING COPPER COMPRESSION CONNECTORS, SEE OH785.

(h) FOR ALL PRIMARY AND NEUTRAL CONNECTIONS, SEE OH1442UG4242.

(i) FOR PROPER GRIP SIZING TYPICAL, SEE OH1404.3.

(j) DIMENSION IS BETWEEN VANG CENTERLINES, SEE OH1860.

REV	CHANGE	DRWN	BY	CHKD	APVD	DATE
E	REVISE TO 3D FORMAT	DV	JIK	-	-	8/9/2022
D	FIGURE UPDATE	EDM	JIK	JES	CZH	8/25/2021
C	DRAWING UPDATE	EDM	JIK	JES	CZH	9/18/2019

SDG&E

A Sempra Energy utility

© 1998 - 2022 San Diego Gas and Electric Company. All rights reserved. Removal of this copyright notice without permission is not permitted under law.

SDG&E ELECTRIC OVERHEAD CONSTRUCTION STANDARDS

ENGINEERED STEEL CABLE POLES
DOUBLE HORIZONTAL TERMINATION
INTERNAL AND EXTERNAL RISERS

SCALE: NOT TO SCALE

DRAWING NO: OH1831.2

SHEET: 2 OF 2

X Indicates Latest Revision | Completely Revised | New Page | Information Removed

SCOPE: THIS STANDARD SHOWS NEW CONSTRUCTION OF A DOUBLE VERTICAL TERMINATION POLE WITH 900A HOOKSTICK SWITCHES.

TABLE OF CONTENTS

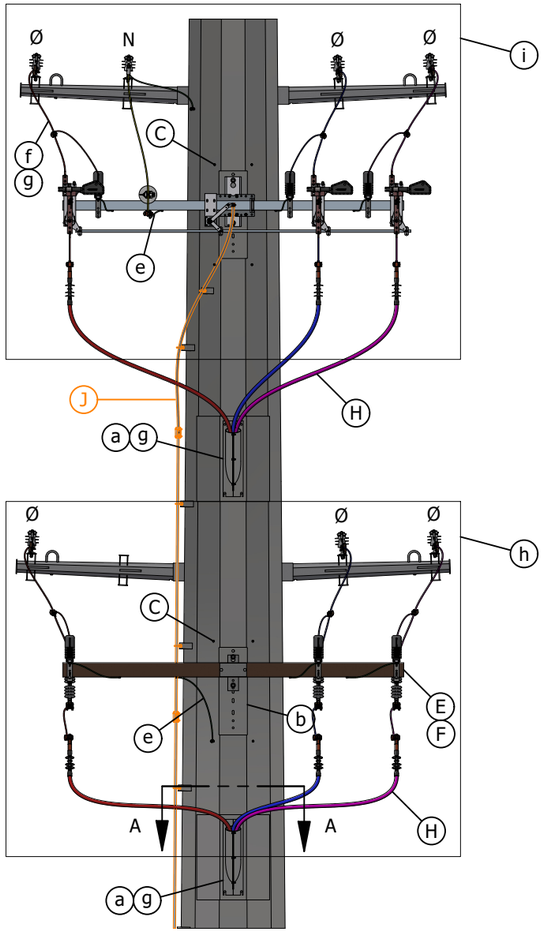

FIGURE 1
2/0 AND SMALLER
FRONT VIEW

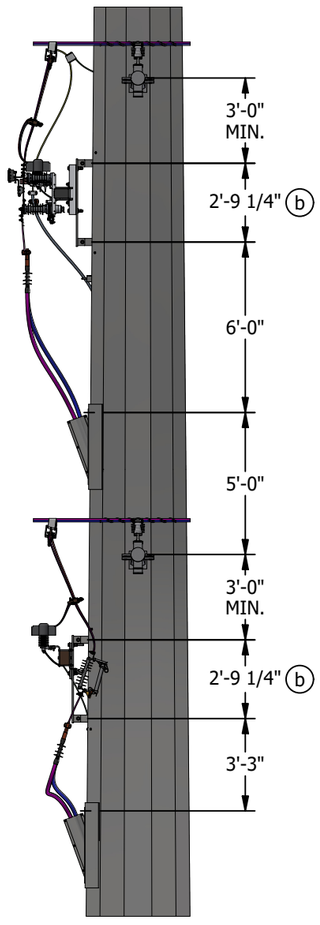

FIGURE 1
2/0 AND SMALLER
SIDE VIEW



FIGURE 1
SECTION A-A

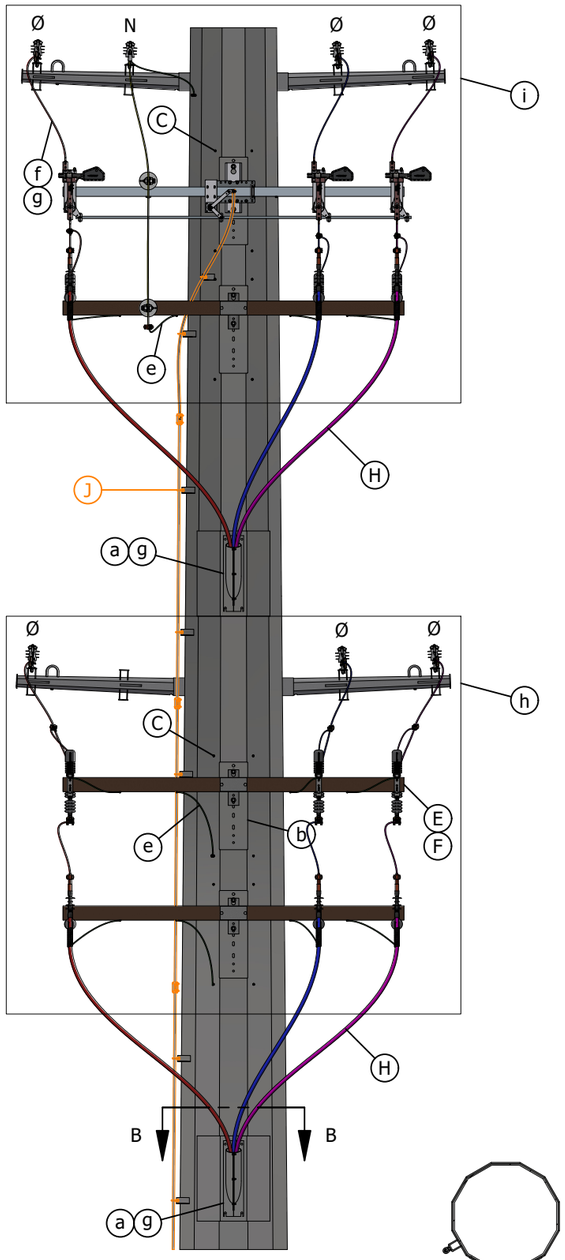

FIGURE 2
350 KCMIL AND LARGER
FRONT VIEW

FIGURE 2
SECTION B-B

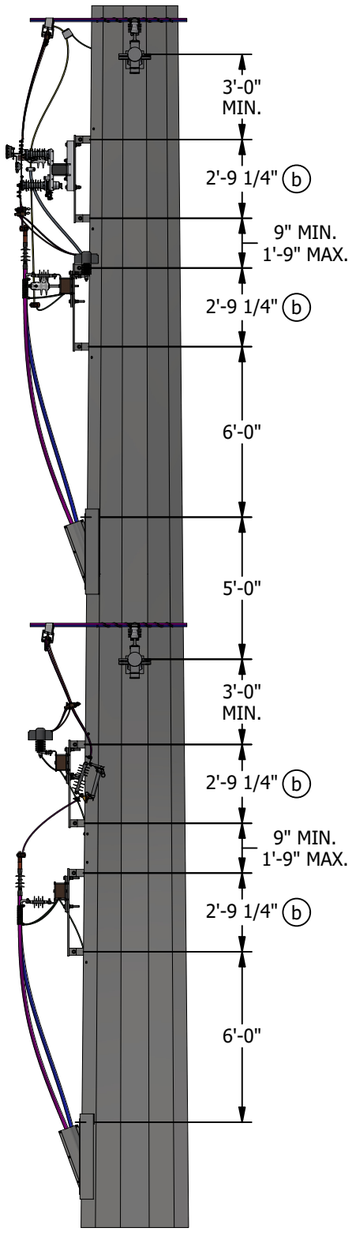

FIGURE 2
350 KCMIL AND LARGER
SIDE VIEW

REV	CHANGE	DRWN	BY	CHKD	APVD	DATE
F	REVISE TO 3D FORMAT/DRAWING UPDATE	DV	JIK	JAS	KRG	12/13/2022
E	FIGURE UPDATE	EDM	JIK	JES	CZH	8/25/2021
D	DRAWING UPDATES	EDM	JIK	JES	CZH	9/18/2019

SDG&E
A Sempra Energy utility

SDG&E ELECTRIC OVERHEAD CONSTRUCTION STANDARDS

ENGINEERED STEEL CABLE POLES
SINGLE OR DOUBLE VERTICAL TERMINATION

SCALE: NOT TO SCALE

DRAWING NO:	SHEET:
OH1832.1	1 OF 2

© 1998 - 2022 San Diego Gas and Electric Company. All rights reserved. Removal of this copyright notice without permission is not permitted under law.

X Indicates Latest Revision | Completely Revised | New Page | X Information Removed

TABLE OF CONTENTS

INSTALLATION:

A. IF BOTTOM FLUTE IS UTILIZED FOR SECONDARY SERVICES, ALLOW FOR SECONDARY VANG(S) AND REFERENCE SECONDARY STANDARDS, WHICH ARE CURRENTLY BEING DESIGNED.

B. FOR ERECTION OF MULTI-SECTION DISTRIBUTION STEEL POLES, THE SEAMS OF THE TWO SECTIONS MUST MATCH AND BE FULLY JOINED TOGETHER PER MANUFACTURER'S GUIDELINES. PRIOR TO LIFTING, THE JOINED SECTIONS SHALL BE PROPERLY CONNECTED PER ASCE 48. FOR ERECTION OF TRANSMISSION POLES REFER TO TE-0103.

(C) ENSURE POLE MANUFACTURER DRILLS FOUR 5/8-INCH THROUGH-HOLES ONE ON EACH SIDE OF THE MOUNTING BRACKET (AS SHOWN ON FIGURES) AND WELDS 1/2-INCH STAINLESS STEEL NUTS OVER EACH HOLE.

D. THIS TYPE OF FLUTE ARRANGEMENT CAN BE USED ON SINGLE CIRCUITS IF DESIRED.

(E) ONLY 12'-0" AND 15'-0" COMPOSITE ARMS WILL BE USED ON TRANSMISSION STRUCTURES.

(F) THE INSIDE INSULATOR POSITION AT 24 INCHES (12'-0" COMPOSITE ARMS) IS NOT TO BE USED. ONLY INSULATOR POSITIONS LOCATED AT 30 INCHES OR MORE FROM CENTER OF ARM MAY BE USED.

G. NEUTRAL CONDUCTORS SHALL BE INSTALLED AT THE SAME LEVEL AS THE CORRESPONDING LINE CONDUCTORS.

(H) FOR 2/0 AND SMALLER, UNDERGROUND CABLE CAN BE TERMINATED DIRECTLY ON THE CUTOUT EQUIPMENT ARM. FOR LARGER UNDERGROUND CABLE A SEPARATE EQUIPMENT ARM MUST BE INSTALLED BELOW THE CUTOUT AND ARRESTER EQUIPMENT ARM.

(J) SWITCH ROD SHOWN FOR REPRESENTATION ONLY. ACTUAL LOCATION TO BE DETERMINED ON A CASE BY CASE BASIS.

BILL OF MATERIALS: NONE

NOTES:

I. SECONDARY SERVICE ATTACHMENT VANGS FOR USE ONLY WHEN A TRANSFORMER IS TO BE HUNG ON THE UNIVERSAL PLATE. MOUNT PERPENDICULAR TO LINE FOR OH SECONDARY OR LINKED POLE BANDS. MAINTAIN 10-INCH MINIMUM DISTANCE BETWEEN BOTTOM OF TRANSFORMER AND TOP OF VANGS.

II. ALL MEASUREMENTS SHALL BE TAKEN FROM THE CENTERLINES OF VANGS, DAVIT ARMS, HANDHOLES AND BOLT HOLES.

III. TWO LEVELS OF DISTRIBUTION CONDUCTORS SHALL BE INSTALLED RATHER THAN A SINGLE 15'-0" CROSSARM WHEN POLE SPACE IS AVAILABLE.

REFERENCE:

(a) FOR APPURTENANT FEATURES, SEE OH1850.

(b) FOR UNIVERSAL MOUNTING PLATE, SEE OH1860.

c. FOR STEPPING A STEEL DISTRIBUTION POLE, SEE OH363. SPECIAL ATTENTION TO NOTE "E" TO ENSURE CLIPS ARE INSTALLED AT THE FACTORY WHETHER STEPS ARE PERMANENTLY INSTALLED OR NOT. FOR STEPPING A TRANSMISSION POLE WITH OR WITHOUT UNDERBUILD, SEE TRANSMISSION STANDARD 17105.

d FOR EXTERNAL RISER DETAIL, SEE OH1820.

(e) FOR NEUTRAL GROUNDING TO STEEL POLE, SEE OH1004.

(f) FOR SIZING NEUTRAL JUMPERS, SEE OH1442UG4242.

(g) FOR SIZING COPPER COMPRESSION CONNECT, SEE OH785.

(h) FOR ALL PRIMARY AND NEUTRAL CONNECTIONS, SEE OH1442UG4242.

(i) FOR ALL PRIMARY AND NEUTRAL CONNECTIONS, SEE OH1444UG4244.

(j) FOR PROPER GRIP SIZING TYPICAL, SEE OH1404.3.

REV	CHANGE	DRWN	BY	CHKD	APVD	DATE
F	REVISE TO 3D FORMAT/DRAWING UPDATE	DV	JIK	JAS	KRG	12/13/2022
E	FIGURE UPDATE	EDM	JIK	JES	CZH	8/25/2021
D	DRAWING UPDATES	EDM	JIK	JES	CZH	9/18/2019

SDG&E

A Sempra Energy utility®

SDG&E ELECTRIC OVERHEAD CONSTRUCTION STANDARDS

ENGINEERED STEEL CABLE POLES
SINGLE OR DOUBLE VERTICAL TERMINATION

SCALE: NOT TO SCALE

DRAWING NO: OH1832.2

SHEET: 2 OF 2

© 1998 - 2022 San Diego Gas and Electric Company. All rights reserved. Removal of this copyright notice without permission is not permitted under law.

X Indicates Latest Revision | Completely Revised | New Page | X Information Removed

SCOPE: THIS STANDARD SHOWS CONSTRUCTION FOR NEW AND EXISTING NON-RISER STEEL POLES.

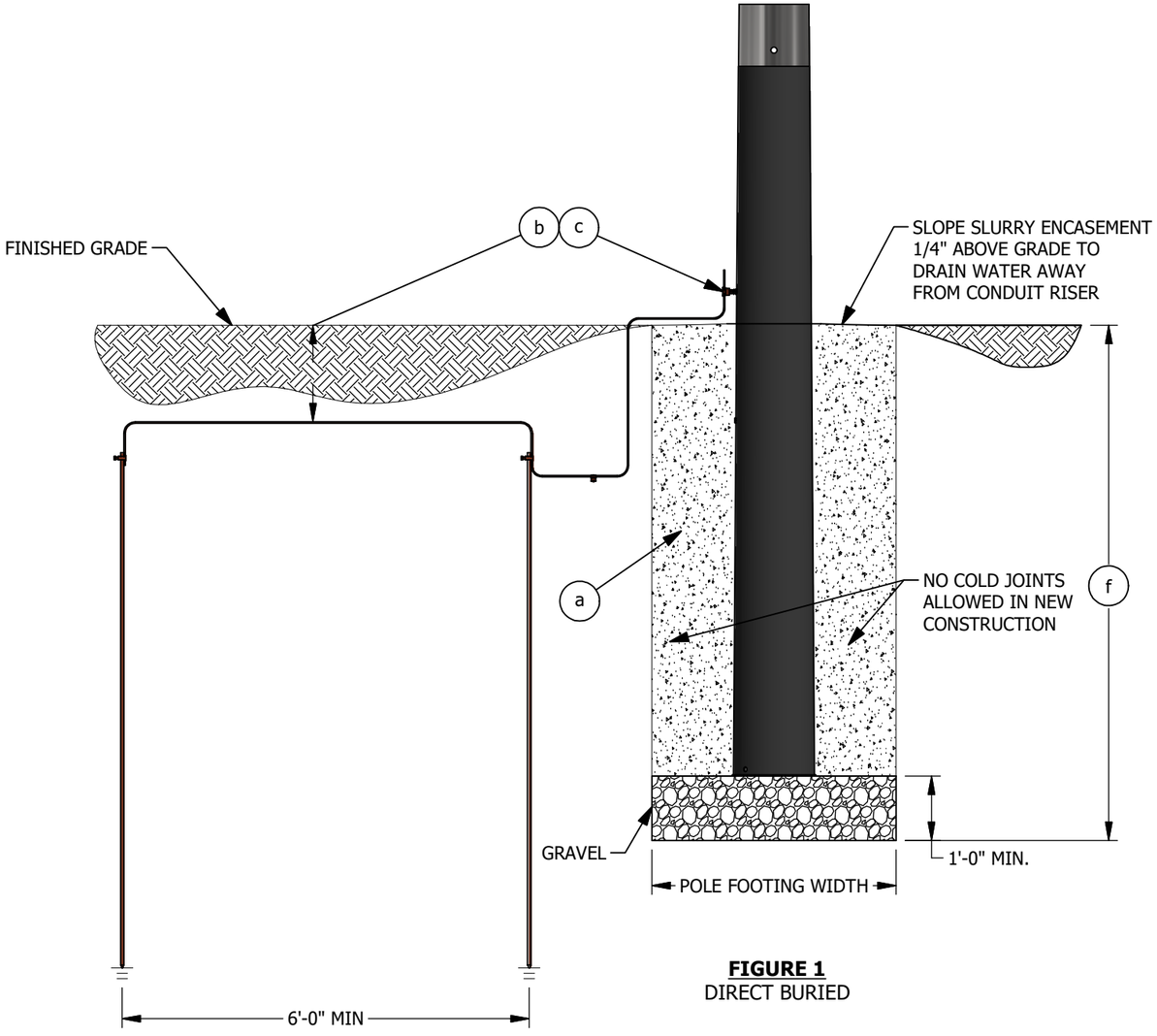

FIGURE 1
DIRECT BURIED

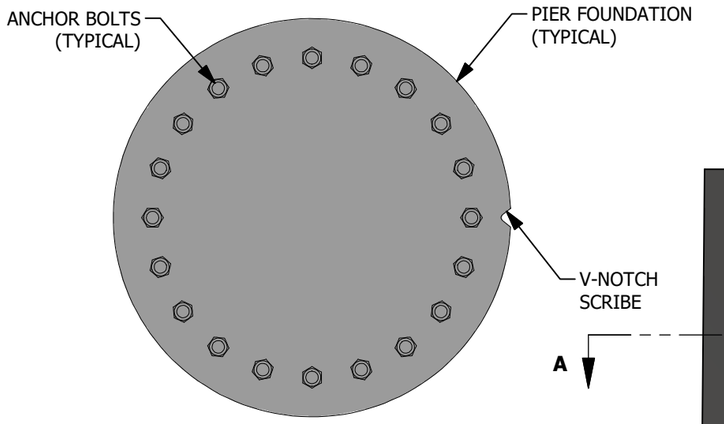

FIGURE 2
SECTION A-A

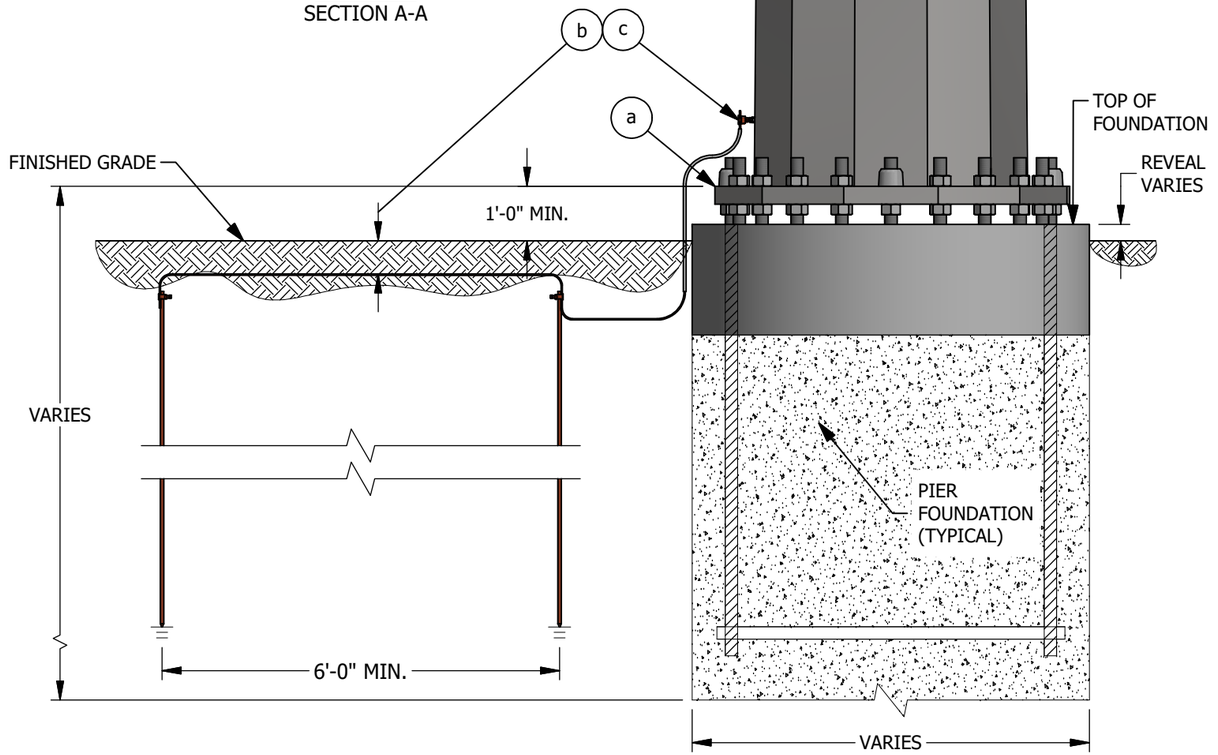

FIGURE 2
DRILLED PIER

REV	CHANGE	DRWN	BY	CHKD	APVD	DATE
C	REVISE TO 3D FORMAT	DV	JIK	-	-	12/8/2021
B	FIGURE UPDATE	EDM	JIK	JES	CZH	8/25/2021
A	ORIGINAL ISSUE	EDM	JIK	JES	CZH	9/18/2019

SDG&E ELECTRIC OVERHEAD CONSTRUCTION STANDARDS

LIGHT DUTY POLES DIRECT BURIED AND ENGINEERED STEEL POLES DRILLED PIER FOUNDATION DETAILS

SCALE: NOT TO SCALE

DRAWING NO: OH1840.1

SHEET: 1 OF 5

X Indicates Latest Revision | Completely Revised | New Page | Information Removed

© 1998 - 2021 San Diego Gas and Electric Company. All rights reserved. Removal of this copyright notice without permission is not permitted under law.

TABLE OF CONTENTS

TABLE OF CONTENTS

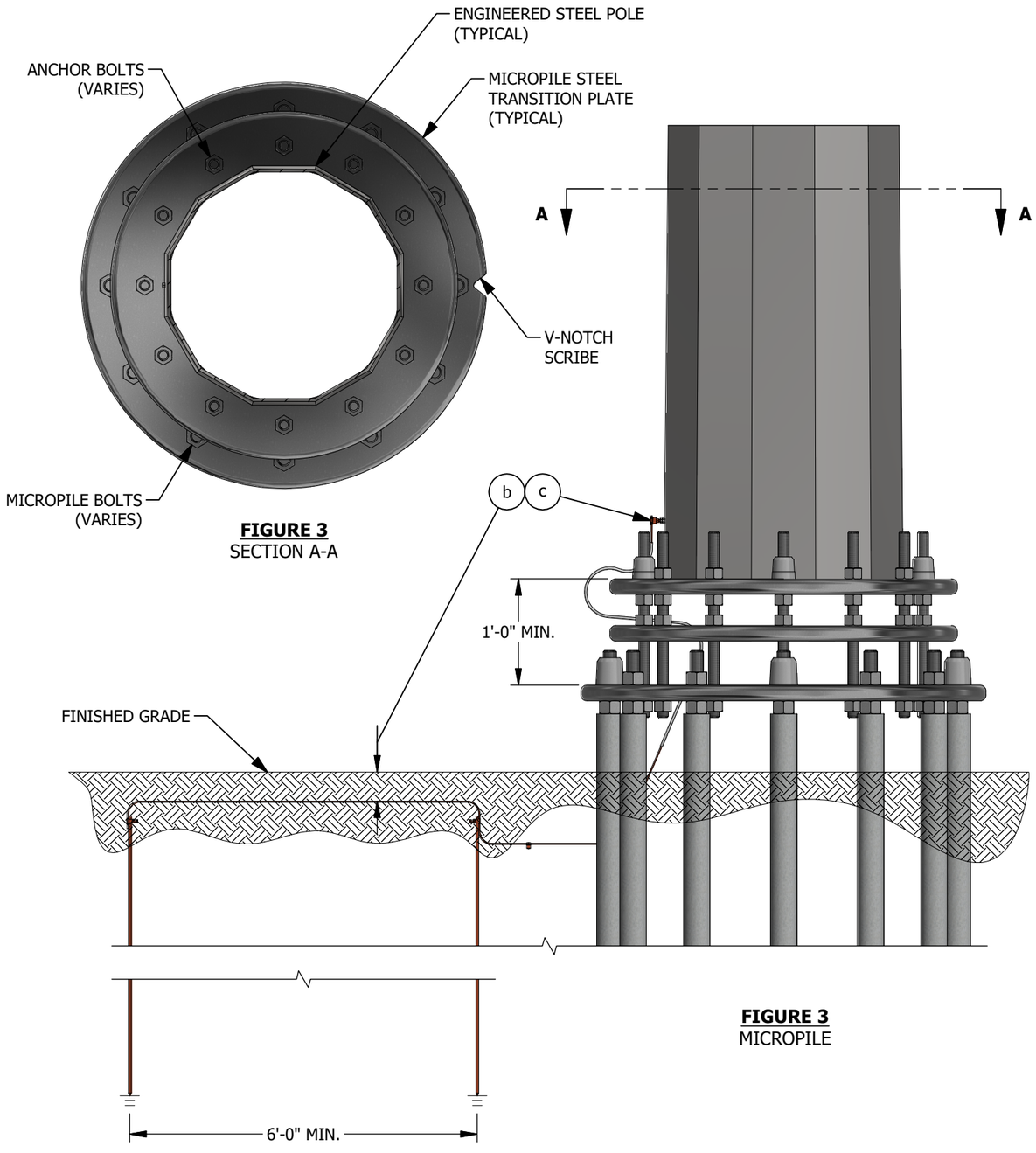

FIGURE 3
SECTION A-A

FIGURE 3
MICROPILE

INSTALLATION: NONE

BILL OF MATERIALS: NONE

NOTES:

I. TRANSMISSION STANDARDS SHALL BE ADHERED TO FOR ALL DISTRIBUTION UNDERBUILD.

II. ENGINEERED POLES AND FOUNDATIONS MUST BE APPROVED BY SDG&E CIVIL/STRUCTURAL ENGINEERING.

REFERENCE:

(a) FOR PROPER BACKFILLING ON DIRECT EMBEDDED FOUNDATIONS OF STEEL POLES WITH AND WITHOUT UNDERBUILD, SEE TRANSMISSION STANDARD T.E.-0105.

(b) FOR GROUNDING ON A DIRECT EMBEDDED STEEL TRANSMISSION POLE, SEE TRANSMISSION STANDARD 21120, FOR GROUNDING ON A PIER FOUNDATION, SEE TRANSMISSION STANDARD 21130 AND FOR GROUNDING ON A MICROPILE FOUNDATION WITH OR WITHOUT UNDERBUILD, SEE TRANSMISSION STANDARD 21140.

(c) FOR GROUNDING ON A DIRECT EMBEDDED DISTRIBUTION STEEL POLE, SEE OH1002. FOR GROUNDING A DIRECT EMBEDDED STEEL POLE IN A SIDEWALK, SEE TRANSMISSION STANDARD 21120, DETAIL A.

d. FOR PROPER BURIAL DEPTH OF GROUND RODS BELOW GROUND SURFACE FOR A STEEL DISTRIBUTION POLES, SEE OH1002 INSTALLATION NOTE B.

e. FOR PEDESTRIAN PATH OF TRAVEL AND ACCESSIBILITY, SEE OH102.

(f) FOR POLE SETTING DEPTH INFORMATION, SEE OH303.

g. FOR STEPPING A STEEL DISTRIBUTION POLE. SPECIAL ATTENTION TO NOTE "E" TO ENSURE CLIPS ARE INSTALLED AT THE FACTORY WHETHER STEPS ARE PERMANENTLY INSTALLED OR NOT, SEE OH363.

h. FOR STEPPING A TRANSMISSION POLE WITH OR WITHOUT UNDERBUILD, SEE TRANSMISSION STANDARD 17105.

REV	CHANGE	DRWN	BY	CHKD	APVD	DATE
C	REVISE TO 3D FORMAT	DV	JIK	-	-	12/8/2021
B	FIGURE UPDATE	EDM	JIK	JES	CZH	8/25/2021
A	ORIGINAL ISSUE	EDM	JIK	JES	CZH	9/18/2019

SDG&E ELECTRIC OVERHEAD CONSTRUCTION STANDARDS

ENGINEERED STEEL POLES MICROPILE FOUNDATION DETAILS

SCALE: NOT TO SCALE

DRAWING NO: OH1840.2

SHEET: 2 OF 5

© 1998 - 2021 San Diego Gas and Electric Company. All rights reserved. Removal of this copyright notice without permission is not permitted under law.

X Indicates Latest Revision | Completely Revised | New Page | Information Removed

SCOPE: THIS STANDARD SHOWS NEW DISTRIBUTION CONSTRUCTION ON AN ENGINEERED STEEL POLE.

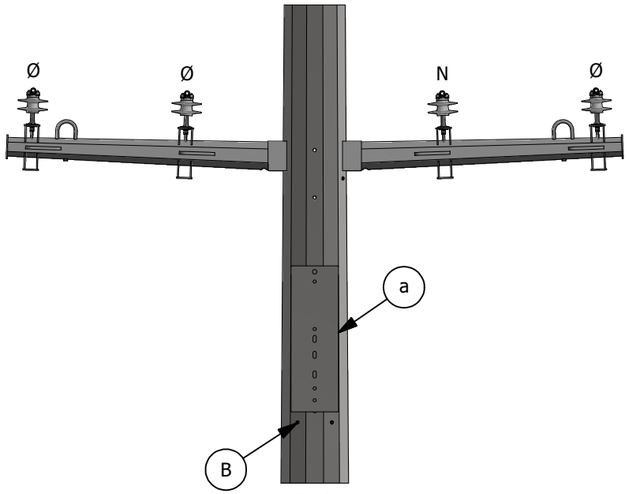

FIGURE 1
FRONT VIEW
SINGLE MOUNTING PLATE

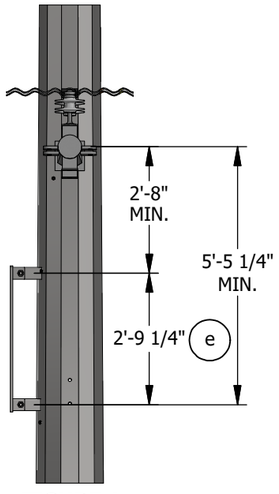

FIGURE 1
SIDE VIEW
SINGLE MOUNTING PLATE

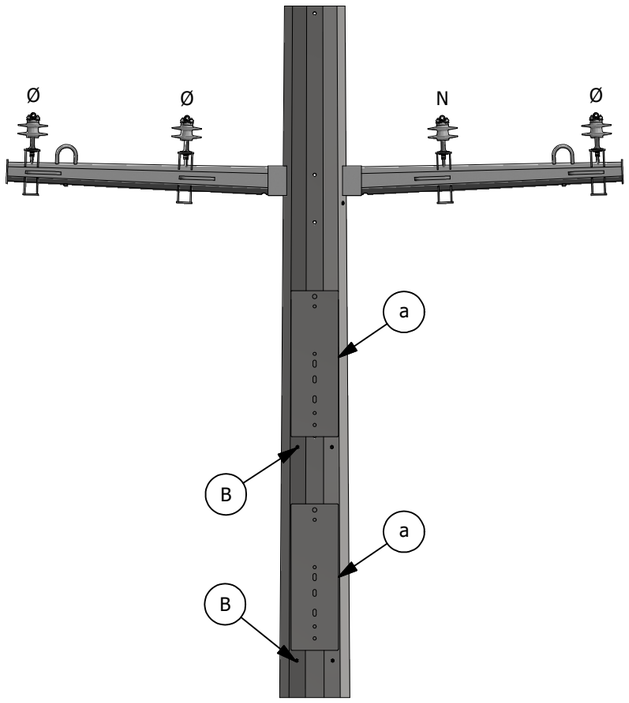

FIGURE 2
FRONT VIEW
DOUBLE MOUNTING PLATE

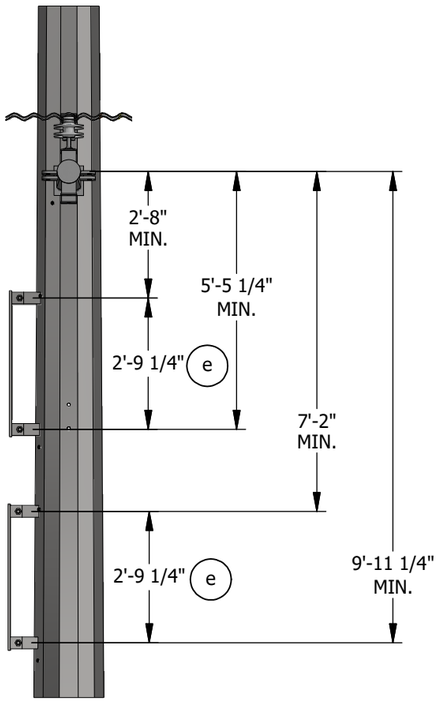

FIGURE 2
SIDE VIEW
DOUBLE MOUNTING PLATE

INSTALLATION:

A. FOR ERECTION OF MULTI-SECTION DISTRIBUTION STEEL POLES, THE SEAMS OF THE TWO SECTIONS MUST MATCH AND BE FULLY JOINED TOGETHER PER MANUFACTURER'S GUIDELINES. PRIOR TO LIFTING, THE JOINED SECTIONS SHALL BE PROPERLY CONNECTED PER ASCE 48. FOR ERECTION OF TRANSMISSION POLES REFER TO TE-0103.

(B) ENSURE POLE MANUFACTURER DRILLS FOUR 5/8" THROUGH-HOLES ONE ON EACH SIDE OF THE MOUNTING BRACKET (AS SHOWN ON DIAGRAM) AND WELDS 1/2" STAINLESS STEEL NUTS OVER EACH HOLE.

C. ONLY 12'-0" AND 15'-0" COMPOSITE ARMS WILL BE USED ON TRANSMISSION STRUCTURES.

D. NEUTRAL CONDUCTORS SHALL BE INSTALLED AT THE SAME LEVEL AS THE CORRESPONDING LINE CONDUCTORS.

BILL OF MATERIALS: NONE

NOTES:

I. SECONDARY SERVICE ATTACHMENT VANGS FOR USE ONLY WHEN A TRANSFORMER IS TO BE HUNG ON THE UNIVERSAL PLATE. MOUNT PERPENDICULAR TO LINE FOR OH SECONDARY OR LINKED POLE BANDS. MAINTAIN TEN-INCH MINIMUM DISTANCE BETWEEN BOTTOM OF TRANSFORMER AND TOP OF VANGS.

II. ALL MEASUREMENTS SHALL BE TAKEN FROM THE CENTERLINES OF VANGS, DAVIT ARMS, HANDHOLES AND BOLT HOLES.

REFERENCE:

(a) FOR UNIVERSAL MOUNTING PLATE, SEE OH1860.

b. FOR STEPPING A STEEL DISTRIBUTION POLE, SEE OH363. SPECIAL ATTENTION TO NOTE "E" TO ENSURE CLIPS ARE INSTALLED AT THE FACTORY WHETHER STEPS ARE PERMANENTLY INSTALLED OR NOT. FOR STEPPING A TRANSMISSION POLE WITH OR WITHOUT UNDERBUILD, SEE TRANSMISSION STANDARD 17105.

c. FOR NEUTRAL GROUNDING TO STEEL POLE, SEE OH1004.

d. FOR SIZING COPPER COMPRESSION CONNECT, SEE OH785.

(e) DIMENSION IS BETWEEN VANG CENTERLINES, SEE OH1860.

TABLE OF CONTENTS

REV	CHANGE	DRWN	BY	CHKD	APVD	DATE
C	REVISE TO 3D FORMAT	DV	JIK	-	-	12/8/2021
B	FIGURE UPDATE	EDM	JIK	JES	CZH	8/25/2021
A	ORIGINAL ISSUE	EDM	JIK	JES	CZH	9/18/2019

SDG&E ELECTRIC OVERHEAD CONSTRUCTION STANDARDS

ENGINEERED STEEL POLE WITH DISTRIBUTION ARM AND ONE OR TWO MOUNTING PLATES

SCALE: NOT TO SCALE

DRAWING NO: OH1840.3

SHEET: 3 OF 5

© 1998 - 2021 San Diego Gas and Electric Company. All rights reserved. Removal of this copyright notice without permission is not permitted under law.

X Indicates Latest Revision | Completely Revised | New Page | Information Removed

TABLE OF CONTENTS

SCOPE: THIS STANDARD SHOWS NEW DOUBLE CIRCUIT DISTRIBUTION CONSTRUCTION ON ONE CROSSARM FOR ENGINEERED STEEL POLES.

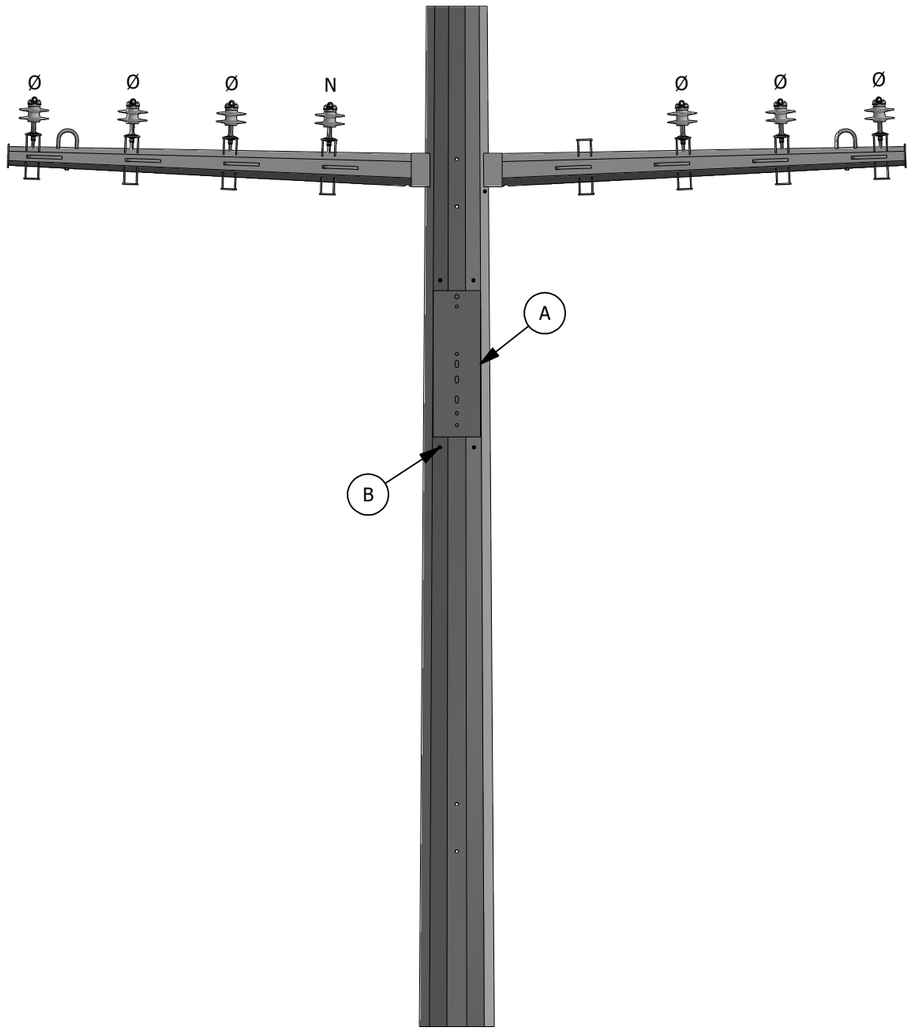

FIGURE 1
FRONT VIEW

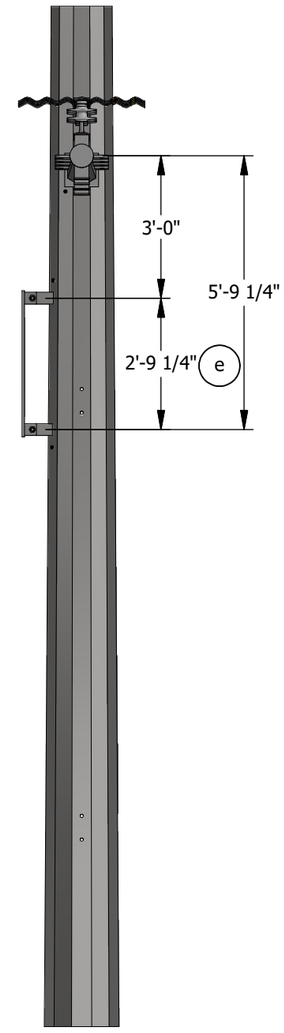

FIGURE 1
SIDE VIEW

INSTALLATION:

A. FOR ERECTION OF MULTI-SECTION DISTRIBUTION STEEL POLES, THE SEAMS OF THE TWO SECTIONS MUST MATCH AND BE FULLY JOINED TOGETHER PER MANUFACTURER'S GUIDELINES. PRIOR TO LIFTING, THE JOINED SECTIONS SHALL BE PROPERLY CONNECTED PER ASCE 48. FOR ERECTION OF TRANSMISSION POLES REFER TO TE-0103.

(B) ENSURE POLE MANUFACTURER DRILLS FOUR 5/8" THROUGH-HOLES ONE ON EACH SIDE OF THE MOUNTING BRACKET (AS SHOWN ON DIAGRAM) AND WELDS 1/2" STAINLESS STEEL NUTS OVER EACH HOLE.

C. ONLY 12'-0" AND 15'-0" COMPOSITE ARMS WILL BE USED ON TRANSMISSION STRUCTURES.

D. NEUTRAL CONDUCTORS SHALL BE INSTALLED AT THE SAME LEVEL AS THE CORRESPONDING LINE CONDUCTORS.

BILL OF MATERIALS: NONE

NOTES:

I. SECONDARY SERVICE ATTACHMENT VANGS FOR USE ONLY WHEN A TRANSFORMER IS TO BE HUNG ON THE UNIVERSAL PLATE. MOUNT PERPENDICULAR TO LINE FOR OH SECONDARY OR LINKED POLE BANDS. MAINTAIN TEN-INCH MINIMUM DISTANCE BETWEEN BOTTOM OF TRANSFORMER AND TOP OF VANGS.

II. ALL MEASUREMENTS SHALL BE TAKEN FROM THE CENTERLINES OF VANGS, DAVIT ARMS, HANDHOLES AND BOLT HOLES.

III. TWO LEVELS OF DISTRIBUTION CONDUCTORS SHALL BE INSTALLED RATHER THAN A SINGLE 15'-0" CROSSARM WHEN POLE SPACE IS AVAILABLE.

REFERENCE:

(a) FOR UNIVERSAL MOUNTING PLATE, SEE OH1860.

b. FOR STEPPING A STEEL DISTRIBUTION POLE, SEE OH363. SPECIAL ATTENTION TO NOTE "E" TO ENSURE CLIPS ARE INSTALLED AT THE FACTORY WHETHER STEPS ARE PERMANENTLY INSTALLED OR NOT. FOR STEPPING A TRANSMISSION POLE WITH OR WITHOUT UNDERBUILD, SEE TRANSMISSION STANDARD 17105.

c. FOR NEUTRAL GROUNDING TO STEEL POLE, SEE OH1004.

d. FOR SIZING COPPER COMPRESSION CONNECT, SEE OH785.

(e) DIMENSION IS BETWEEN VANG CENTERLINES, SEE OH1860.

REV	CHANGE	DRWN	BY	CHKD	APVD	DATE
C	REVISE TO 3D FORMAT	DV	JIK	-	-	12/8/2021
B	FIGURE UPDATE	EDM	JIK	JES	CZH	8/25/2021
A	ORIGINAL ISSUE	EDM	JIK	JES	CZH	9/18/2019

SDGE
A Sempra Energy utility

SDG&E ELECTRIC OVERHEAD CONSTRUCTION STANDARDS

DISTRIBUTION UNDERBUILD ENGINEERED STEEL POLE

SCALE: NOT TO SCALE

DRAWING NO: OH1840.4

SHEET: 4 OF 5

© 1998 - 2021 San Diego Gas and Electric Company. All rights reserved. Removal of this copyright notice without permission is not permitted under law.

X Indicates Latest Revision | Completely Revised | New Page | Information Removed

SCOPE: THIS STANDARD SHOWS NEW VERTICAL DOUBLE CIRCUIT DISTRIBUTION CONSTRUCTION FOR ENGINEERED STEEL POLES.

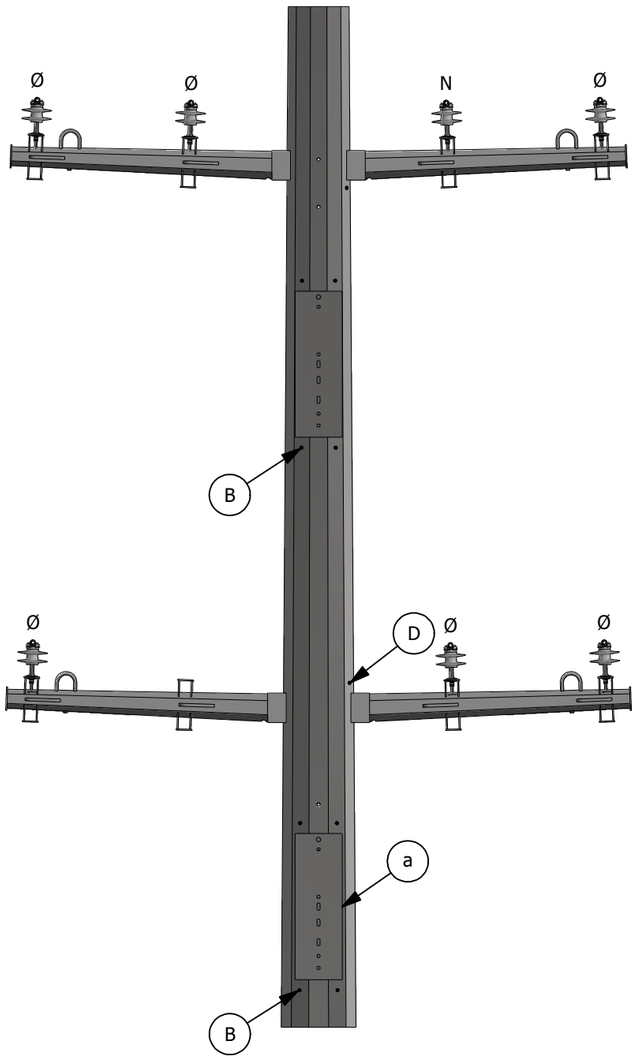

FIGURE 1
FRONT VIEW

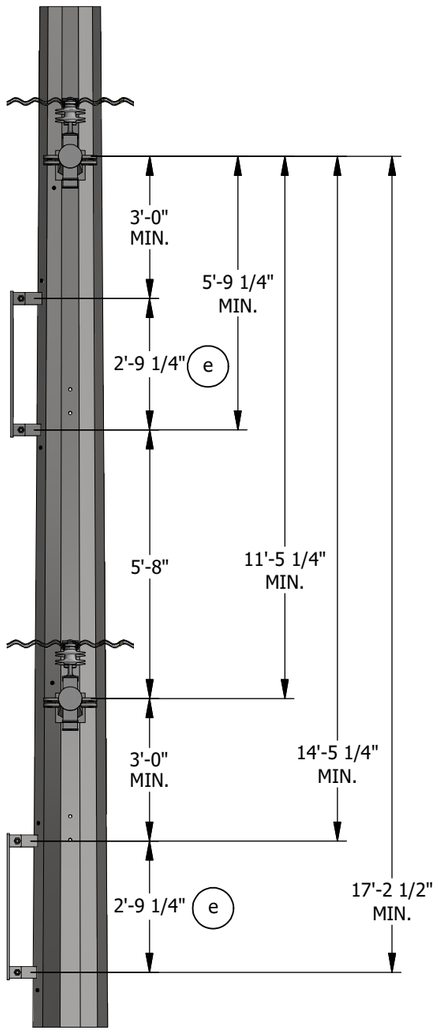

FIGURE 1
SIDE VIEW

INSTALLATION:

A. FOR ERECTION OF MULTI-SECTION DISTRIBUTION STEEL POLES, THE SEAMS OF THE TWO SECTIONS MUST MATCH AND BE FULLY JOINED TOGETHER PER MANUFACTURER'S GUIDELINES. PRIOR TO LIFTING, THE JOINED SECTIONS SHALL BE PROPERLY CONNECTED PER ASCE 48. FOR ERECTION OF TRANSMISSION POLES REFER TO TE-0103.

(B) ENSURE POLE MANUFACTURER DRILLS FOUR 5/8" THROUGH-HOLES ONE ON EACH SIDE OF THE MOUNTING BRACKET (AS SHOWN ON DIAGRAM) AND WELDS 1/2" STAINLESS STEEL NUTS OVER EACH HOLE.

C. ONLY 12'-0" AND 15'-0" COMPOSITE ARMS WILL BE USED ON TRANSMISSION STRUCTURES.

(D) ENSURE POLE MANUFACTURER DRILLS FIVE 5/8" HOLES AND WELDS A 1/2" STAINLESS STEEL NUT OVER EACH HOLE AND INSTALLS BOLTS AND WASHERS. HOLES SHALL BE EQUALLY SPACED FROM TOP DAVIT ARM TO LOWER EQUIPMENT ARM FOR TRANSITIONING THE NEUTRAL FROM TOP CIRCUIT TO LOWER CIRCUIT EQUIPMENT ARM. CARE NEEDS TO BE TAKEN NOT TO INTERFERE WITH CLIMBING/WORKING SPACE.

E. NEUTRAL CONDUCTORS SHALL BE INSTALLED AT THE SAME LEVEL AS THE CORRESPONDING LINE CONDUCTORS.

BILL OF MATERIALS: NONE

NOTES:

I. SECONDARY SERVICE ATTACHMENT VANGS FOR USE ONLY WHEN A TRANSFORMER IS TO BE HUNG ON THE UNIVERSAL PLATE. MOUNT PERPENDICULAR TO LINE FOR OH SECONDARY OR LINKED POLE BANDS. MAINTAIN TEN-INCH MINIMUM DISTANCE BETWEEN BOTTOM OF TRANSFORMER AND TOP OF VANGS.

II. ALL MEASUREMENTS SHALL BE TAKEN FROM THE CENTERLINES OF VANGS, DAVIT ARMS, HANDHOLES AND BOLT HOLES.

III. TWO LEVELS OF DISTRIBUTION CONDUCTORS SHALL BE INSTALLED RATHER THAN A SINGLE 15'-0" CROSSARM WHEN POLE SPACE IS AVAILABLE.

REFERENCE:

(a) FOR UNIVERSAL MOUNTING PLATE, SEE OH1860.

b. FOR STEPPING A STEEL DISTRIBUTION POLE, SEE OH363. SPECIAL ATTENTION TO NOTE "E" TO ENSURE CLIPS ARE INSTALLED AT THE FACTORY WHETHER STEPS ARE PERMANENTLY INSTALLED OR NOT. FOR STEPPING A TRANSMISSION POLE WITH OR WITHOUT UNDERBUILD, SEE TRANSMISSION STANDARD 17105.

c. FOR NEUTRAL GROUNDING TO STEEL POLE, SEE OH1004.

d. FOR SIZING COPPER COMPRESSION CONNECT, SEE OH785.

(e) DIMENSION IS BETWEEN VANG CENTERLINES, SEE OH1860.

TABLE OF CONTENTS

REV	CHANGE	DRWN	BY	CHKD	APVD	DATE
C	REVISE TO 3D FORMAT	DV	JIK	-	-	12/8/2021
B	FIGURE UPDATE	EDM	JIK	JES	CZH	8/25/2021
A	ORIGINAL ISSUE	EDM	JIK	JES	CZH	9/18/2019

SDG&E ELECTRIC OVERHEAD CONSTRUCTION STANDARDS

DISTRIBUTION UNDERBUILD ENGINEERED STEEL POLE

SCALE: NOT TO SCALE

DRAWING NO: OH1840.5

SHEET: 5 OF 5

© 1998 - 2021 San Diego Gas and Electric Company. All rights reserved. Removal of this copyright notice without permission is not permitted under law.

X Indicates Latest Revision | Completely Revised | New Page | Information Removed

SCOPE: THIS STANDARD SHOWS THE DETAILS FOR SPECIFIC FEATURES FOUND ON ENGINEERED STEEL CABLE POLES.

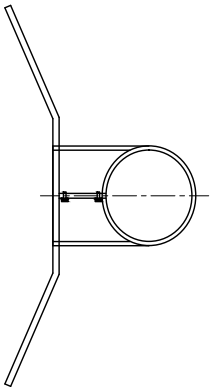

FIGURE 1
VIEW A-A

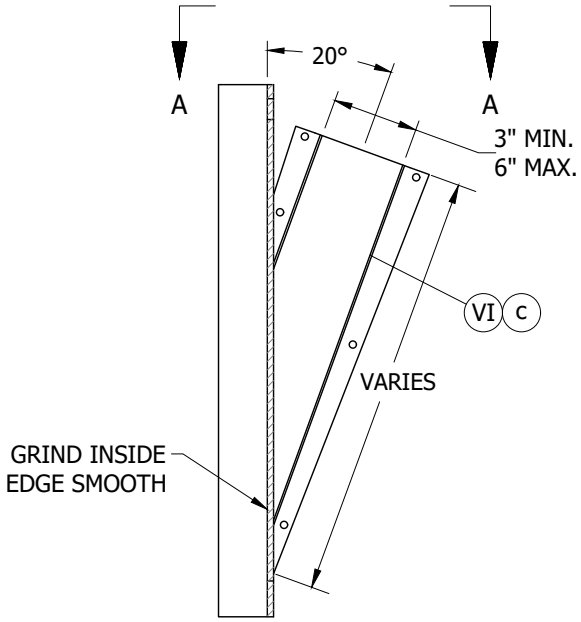

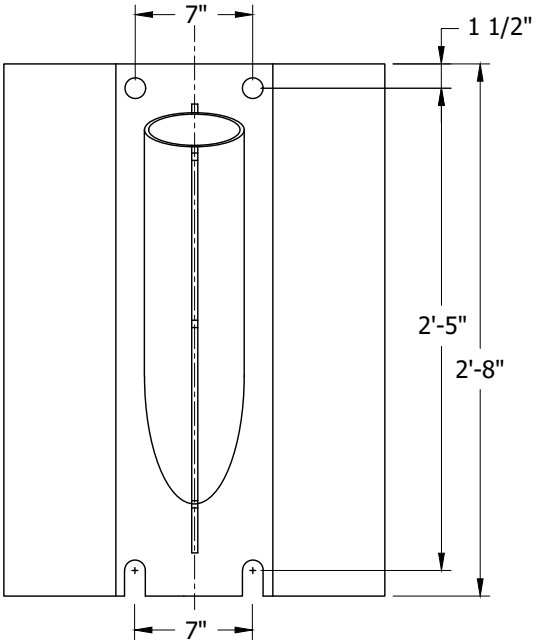

FIGURE 1
TYPICAL DISTRIBUTION RISER FLUTE (REMOVABLE) I III

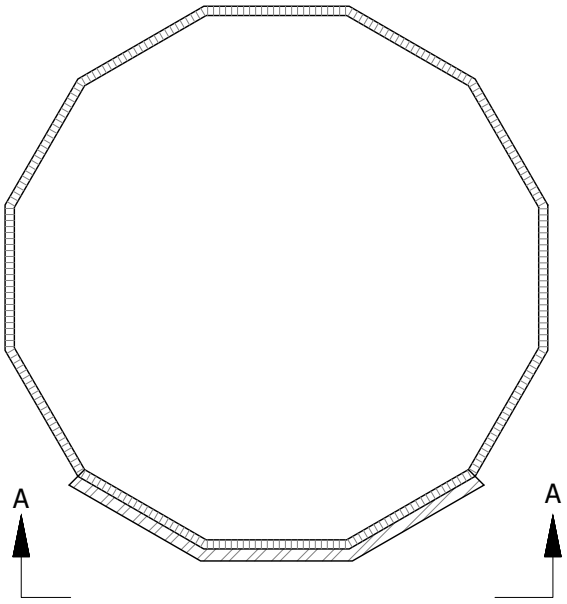

FIGURE 2
TYPICAL DISTRIBUTION RISER SADDLE III

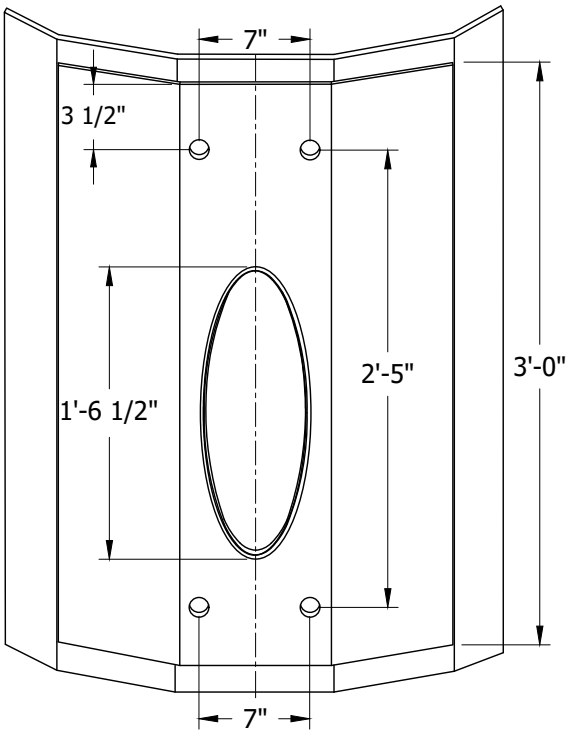

FIGURE 2
ISOMETRIC VIEW A-A

TABLE OF CONTENTS

© 1998 - 2021 San Diego Gas & Electric Company. All rights reserved. Removal of this copyright notice without permission is not permitted under law.

REV	CHANGE	DR	BY	DSN	APV	DATE	REV	CHANGE	DR	BY	DSN	APV	DATE
C	DRAWING UPDATE	-	GW	JES	MDJ	01/18/2018	F						
B	EDITORIAL CHANGES	-	SL	JES	MDJ	12/20/2016	E	FIGURE UPDATE	EDM	JIK	JES	CZH	08/25/2021
A	ORIGINAL ISSUE	-	SL	GLW	MDJ	10/13/2016	D	MOVED FROM OH1840	EDM	JIK	JES	CZH	09/18/2019

X Indicates Latest Revision | Completely Revised | New Page | Information Removed

SDG&E ELECTRIC OVERHEAD CONSTRUCTION STANDARDS

ENGINEERED STEEL CABLE POLES
APPURTENANT FEATURES

OH1850.1

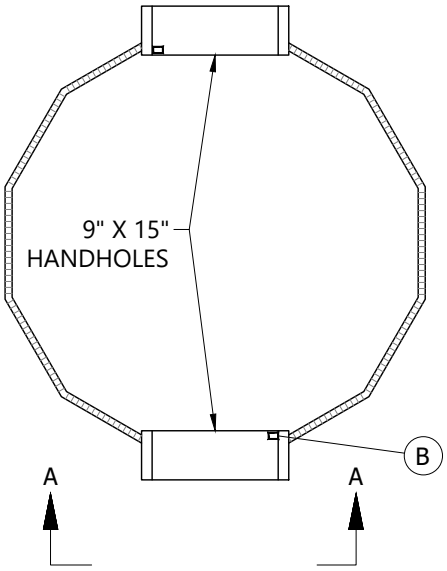

FIGURE 3
TYPICAL POLE BASE PORT OPENING (III)

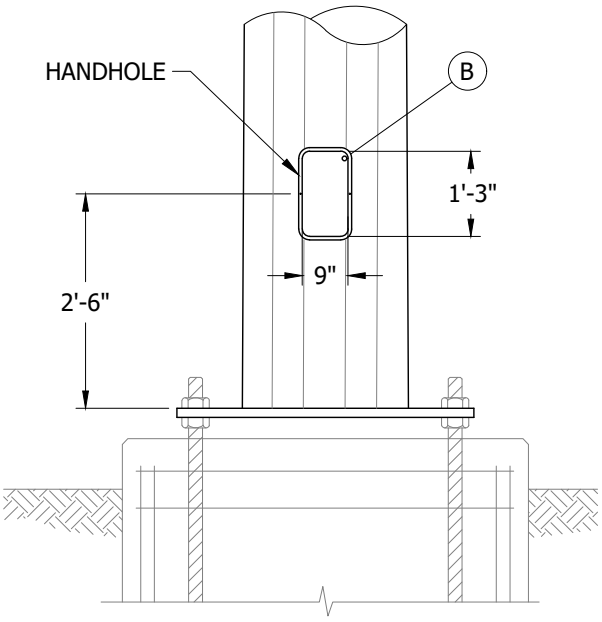

FIGURE 3
VIEW A-A

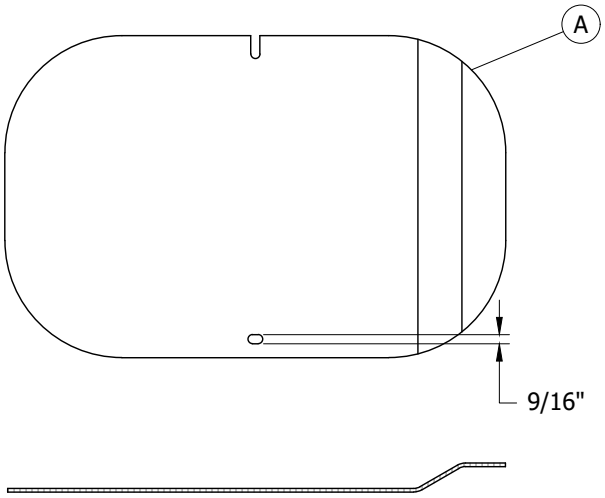

FIGURE 4
TYPICAL POLE BASE PORT OPENING COVER (III)

© 1998 - 2021 San Diego Gas & Electric Company. All rights reserved. Removal of this copyright notice without permission is not permitted under law.

REV	CHANGE	DR	BY	DSN	APV	DATE	REV	CHANGE	DR	BY	DSN	APV	DATE
C	DRAWING UPDATE	-	GW	JES	MDJ	01/18/2018	F						
B	EDITORIAL CHANGES	-	SL	JES	MDJ	12/20/2016	E	FIGURE UPDATE	EDM	JIK	JES	CZH	08/25/2021
A	ORIGINAL ISSUE	-	SL	GLW	MDJ	10/13/2016	D	MOVED FROM OH1840	EDM	JIK	JES	CZH	09/18/2019

TABLE OF CONTENTS

TABLE OF CONTENTS

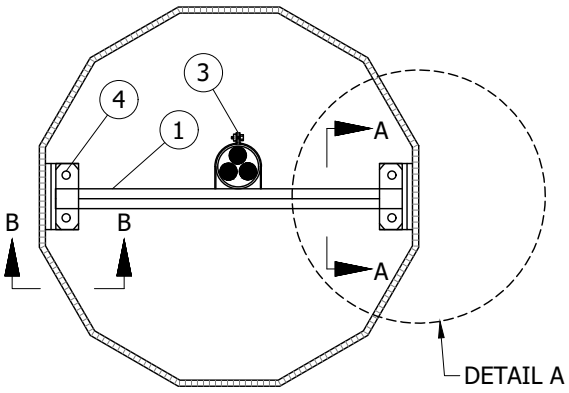

FIGURE 5
TYPICAL CONDUIT SUPPORT PLATE BRACKET (III) (V)

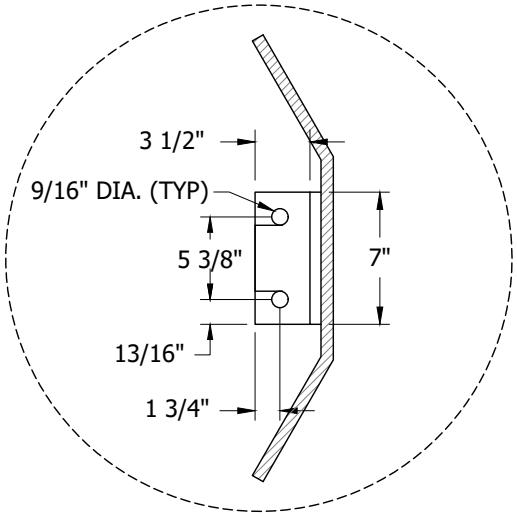

FIGURE 5 (IV)
DETAIL A

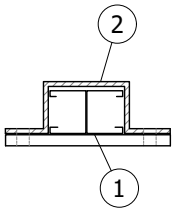

FIGURE 5
VIEW A-A

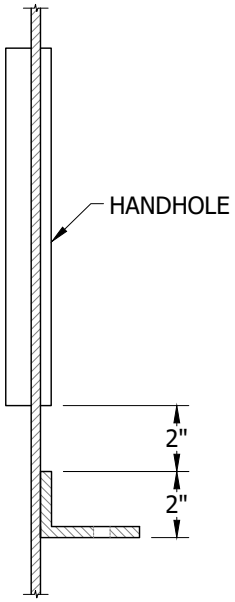

FIGURE 5 (IV)
VIEW B-B

© 1998 - 2021 San Diego Gas & Electric Company. All rights reserved. Removal of this copyright notice without permission is not permitted under law.

REV	CHANGE	DR	BY	DSN	APV	DATE	REV	CHANGE	DR	BY	DSN	APV	DATE
C	DRAWING UPDATE	-	GW	JES	MDJ	01/18/2018	F						
B	EDITORIAL CHANGES	-	SL	JES	MDJ	12/20/2016	E	FIGURE UPDATE	EDM	JIK	JES	CZH	08/25/2021
A	ORIGINAL ISSUE	-	SL	GLW	MDJ	10/13/2016	D	MOVED FROM OH1840	EDM	JIK	JES	CZH	09/18/2019

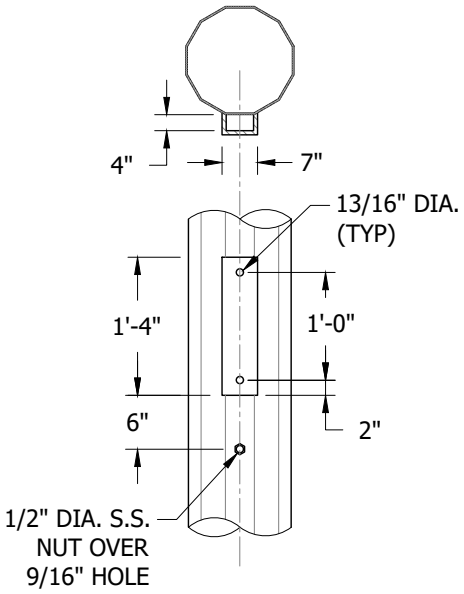

FIGURE 6
FG CROSSARM BRACKET (III)

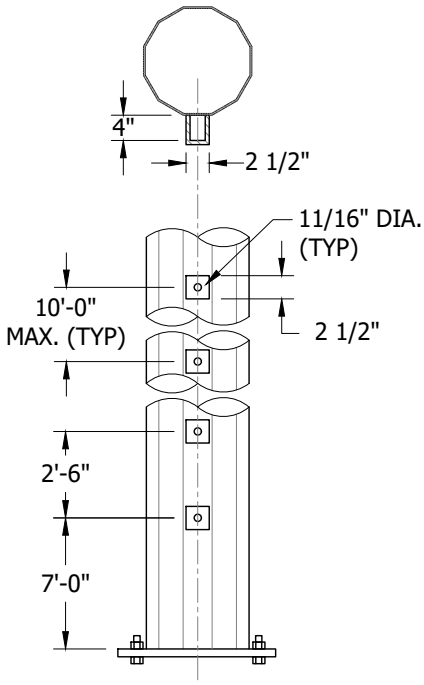

FIGURE 7
UNDERGROUND SECONDARY (III)
LADDER ARM BRACKET

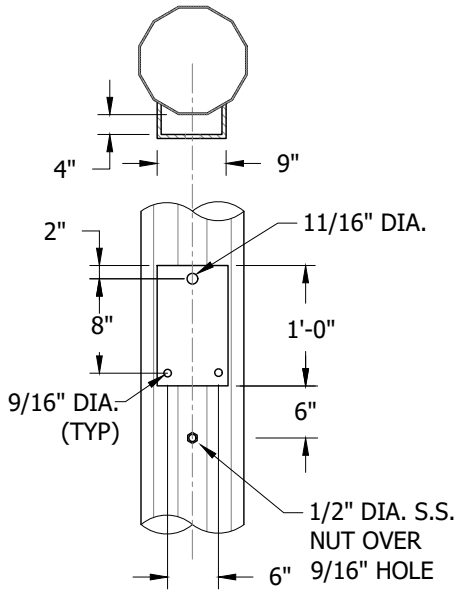

FIGURE 8
STREET LIGHT BRACKET (III)

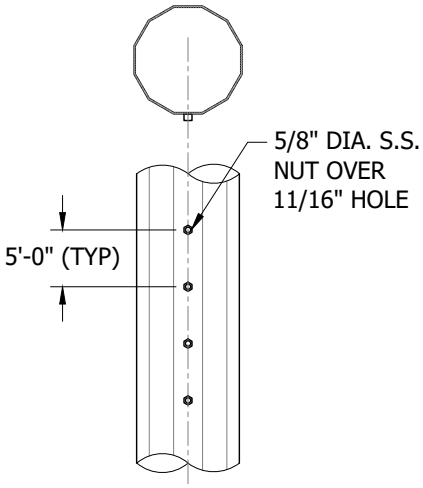

FIGURE 9
GANG OPERATED
SWITCH ROD (III)

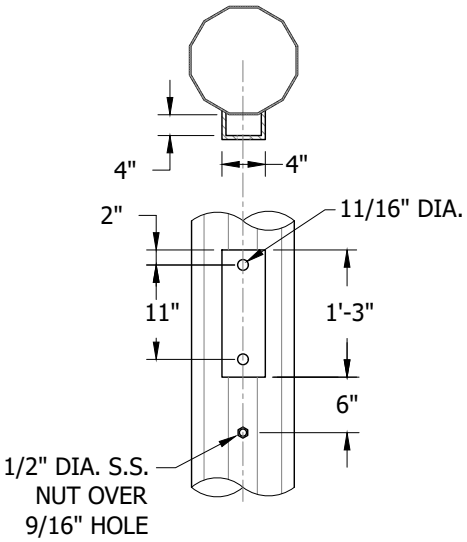

FIGURE 10
GANG OPERATED (III)
SWITCH HANDLE

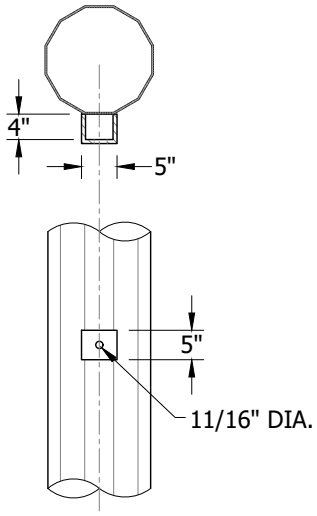

FIGURE 11
SECONDARY TANGENT (III)
CLEVIS BRACKET

TABLE OF CONTENTS

© 1998 - 2021 San Diego Gas & Electric Company. All rights reserved. Removal of this copyright notice without permission is not permitted under law.

REV	CHANGE	DR	BY	DSN	APV	DATE	REV	CHANGE	DR	BY	DSN	APV	DATE
C	DRAWING UPDATE	-	GW	JES	MDJ	01/18/2018	F						
B	EDITORIAL CHANGES	-	SL	JES	MDJ	12/20/2016	E	FIGURE UPDATE	EDM	JIK	JES	CZH	08/25/2021
A	ORIGINAL ISSUE	-	SL	GLW	MDJ	10/13/2016	D	MOVED FROM OH1840	EDM	JIK	JES	CZH	09/18/2019

INSTALLATION:

(A) INSTALL USING 1/2-INCH BOLTS.

(B) WELD 1/2-INCH STAINLESS STEEL GROUNDING NUT IN THE UPPER QUADRANT OF THE LOWER HANDHOLE AND FLUSH TO THE INSIDE OF THE HANDHOLE. (II)

BILL OF MATERIALS:

ITEM	DESCRIPTION	QUANTITY	MFG PART NO.	STANDARD PAGE	STOCK NUMBER	DESIGN UNITS
1	CHANNEL, GALV. 1 5/8" X 1 5/8" BACK TO BACK (LENGTH AS REQUIRED)	1	P1001 HG (UNISTRUT)	-	-	-
2	U-SHAPE FITTING, GALV., 8-HOLE, BACK TO BACK	2	P2328 HG (UNISTRUT)	-	-	-
3	CLAMP, PIPE, STEEL, GALV., UNISTRUT, 3"	AS REQ'D	-	-	S229632	CL-3IN
	CLAMP, PIPE, STEEL, GALV., UNISTRUT, 4"		-	-	S229664	CL-4IN
	CLAMP, PIPE, STEEL, GALV., UNISTRUT, 5"		-	-	S229668	CL-5IN
4	1/2" BOLT, ROUND WASHER, LOCK WASHER AND NUT	4	-	-	-	-

NOTES:

(I) DISTRIBUTION RISER FLUTES SHALL BE INTERCHANGEABLE TO ALLOW FOR FUTURE CABLE UPGRADES.

(II) GROUND NUT IS ONLY PROVIDED IN THE BOTTOM MOST HANDHOLE.

(III) PROVIDED BY STEEL POLE MANUFACTURER.

(IV) UNISTRUT AND CLAMP NOT SHOWN FOR CLARITY.

(V) UNISTRUT, HOLD DOWN CLAMPS, AND CONDUIT CLAMPS PROVIDED BY SDG&E/CONTRACTOR IF REQUIRED.

(VI) TYPICAL FLUTE SIZE IS SIX INCHES. FOR SECONDARY CABLE, THREE-INCH OR FOUR-INCH IS ACCEPTABLE. FLUTES ARE SPLIT IN HALF FOR EASE OF INSTALLING OR REMOVING AROUND EXISTING CABLE.

REFERENCE:

a. FOR DAVIT ARM DETAILS, SEE TRANSMISSION STANDARD 17150.

b. FOR SIZING OF FLUTES AND CONDUIT INSERTS, SEE UG4002.3.

(C) FOR PROPER GRIP SIZING TYPICAL, SEE OH1404.3.

TABLE OF CONTENTS

© 1998 - 2021 San Diego Gas & Electric Company. All rights reserved. Removal of this copyright notice without permission is not permitted under law.

REV	CHANGE	DR	BY	DSN	APV	DATE	REV	CHANGE	DR	BY	DSN	APV	DATE
C	DRAWING UPDATE	-	GW	JES	MDJ	01/18/2018	F						
B	EDITORIAL CHANGES	-	SL	JES	MDJ	12/20/2016	E	FIGURE UPDATE	EDM	JIK	JES	CZH	08/25/2021
A	ORIGINAL ISSUE	-	SL	GLW	MDJ	10/13/2016	D	MOVED FROM OH1840	EDM	JIK	JES	CZH	09/18/2019

SCOPE: THIS STANDARD SHOWS NEW CONSTRUCTION OF A UNIVERSAL MOUNTING PLATE FOR MULTIPLE TYPES OF EQUIPMENT REQUIRING 2-HOLE VERTICAL MOUNTING CONFIGURATIONS

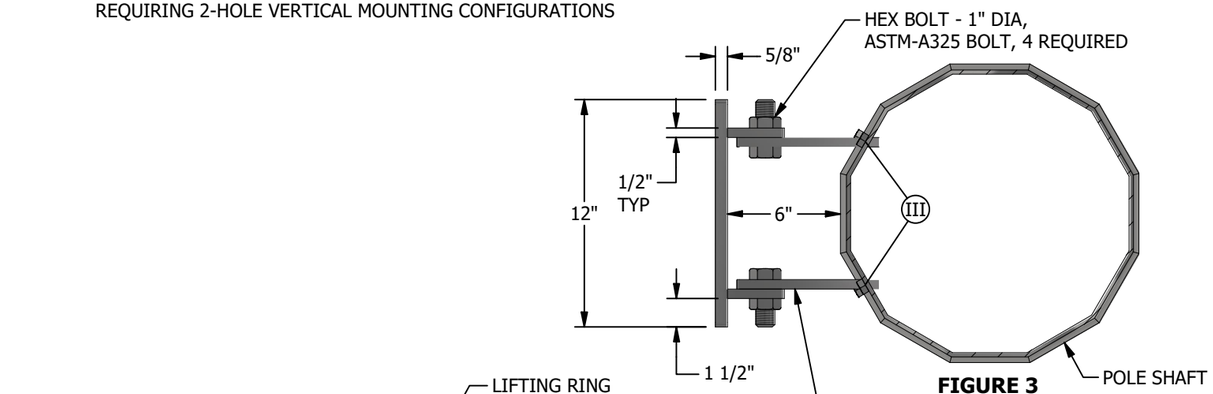

FIGURE 3
PLAN VIEW

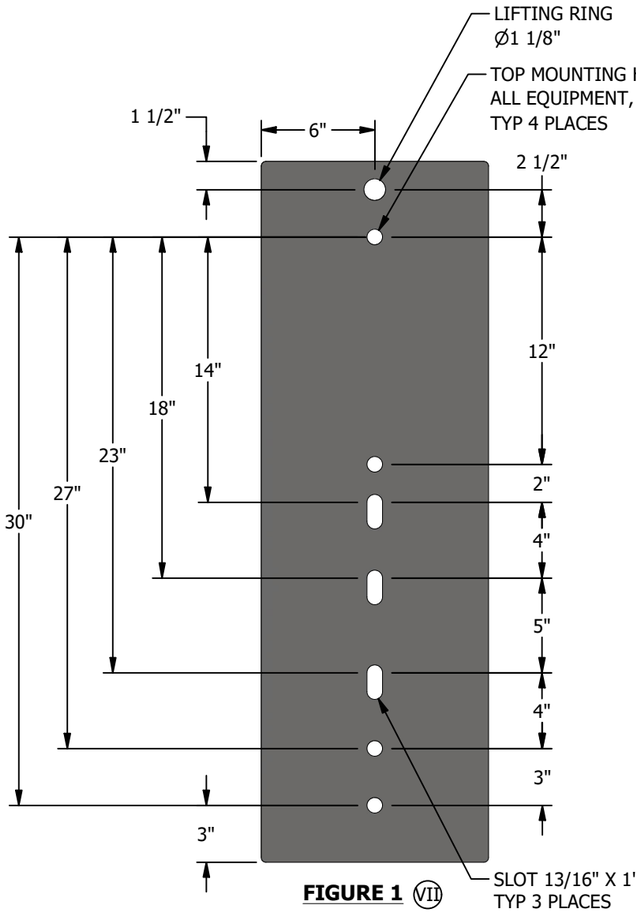

FIGURE 1 (VII)

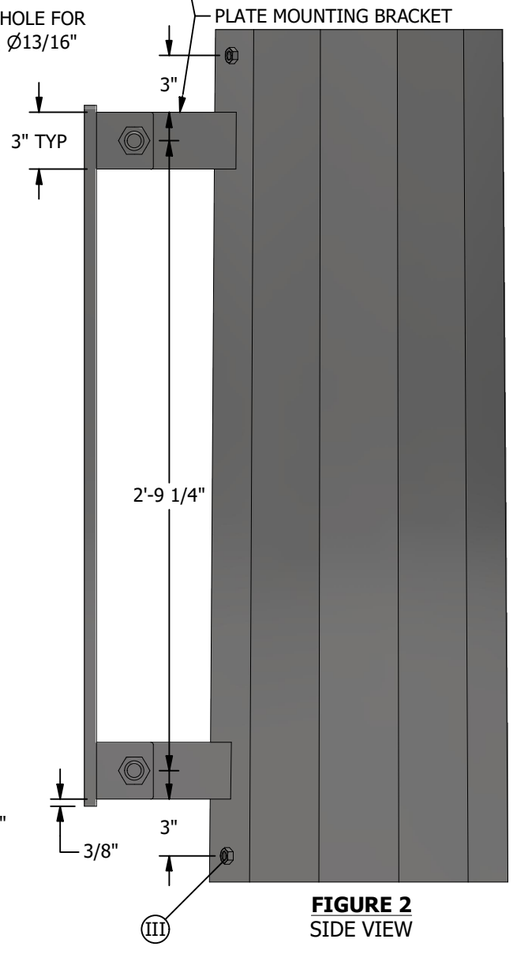

FIGURE 2
SIDE VIEW

TABLE 1:

INDIVIDUAL EQUIPMENT BRACKET DIMENSIONS AND DETAILS (II)						
TYPE	**OVERALL HEIGHT OF EQUIPMENT MOUNTING BRACKET (IN)**	**OVERALL WIDTH OF EQUIPMENT MOUNTING BRACKET (IN)**	**SEPARATION OF MOUNTING BOLT HOLES (IN)**	**BOLT SIZE FOR MOUNTING INDIVIDUAL PIECES OF EQUIPMENT (IN)**	**MAXIMUM NAMEPLATE WEIGHT (LBS) (IV)**	**MAXIMUM HANGING WEIGHT (LBS) (V)**
25kVA - 50kVA 1PH TRANS	14 1/4	4	12	5/8	400/625	2025
MVR SWITCH	20	13	15	3/4	300	300
INERTIA SWITCH	21	7	18	3/4	450	500
1200 KVAR CAPACITOR BANK	21 3/4	7	19	5/8	566	566
INTELLIRUPTER SWITCH	25 1/4	10	23	3/4	835	950
75/100/167kVA 1PH TRANSFORMERS	28 1/2	4	24	3/4	833/1065/1458	4674
NOVA SWITCH	33	9	27	3/4	300	300
3-PH TRANS MTG BRKT (HUBBEL/CHANCE)	32	6	30	3/4	150	(VI)

INSTALLATION:

A. UNIVERSAL PLATE SHOULD BE MOUNTED TO POLE PRIOR TO INSTALLATION OF EQUIPMENT.

BILL OF MATERIALS: NONE

NOTES:

I. COMBINED MAXIMUM ALLOWABLE WEIGHT ON UNIVERSAL PLATE IS 5,000 LBS.

(II) TABLE OF TYPICAL MOUNTING BRACKETS PROVIDED BY EQUIPMENT MANUFACTURERS SHOWN FOR PURPOSES OF DEFINING BOLT SPACING FOR MOUNTING INDIVIDUAL PIECES OF EQUIPMENT ON UNIVERSAL PLATE.

(III) ENSURE POLE MANUFACTURER DRILLS FOUR 5/8" THROUGH-HOLES, TWO ON EACH SIDE OF THE MOUNTING BRACKET (AS SHOWN ON FIGURE 2) AND WELDS 1/2" STAINLESS STEEL NUTS OVER EACH HOLE. GROUND NUTS SHALL BE LOCATED ON SAME FLATS AS VANGS. REFERENCE GROUND LUG.

(IV) MAXIMUM WEIGHT FOR INDIVIDUAL PIECES OF EQUIPMENT.

(V) HANGING WEIGHT INCLUDES MAXIMUM PIECES OF EQUIPMENT PLUS HARDWARE (FOR EXAMPLE: 3 TRANSFORMERS PLUS HUBBELL CLUSTER MOUNT BRACKET OR INERTIA SW PLUS ARRESTERS).

(VI) COMBINED MAXIMUM ALLOWABLE WEIGHT WITH THREE TRANSFORMERS ON HUBBELL BRACKET IS 4,850 LBS.

(VII) ESTIMATED WEIGHT OF PLATE IS 84 LBS.

VIII. POLE TOP PRIMARY METER STATIONS: RETROFITTING PRIMARY METER STATIONS TO ENGINEERED POLES REQUIRE A STANDARD DEVIATION FOR EDE REVIEW AND SPECIFICATIONS.

REFERENCE:

a. REFER TO TRANSMISSION SPECIFICATION TE-0103 CONSTRUCTION SPECIFICATION TUBULAR STEEL POLES, PARAGRAPH 3.5 FOR BOLTING UNIVERSAL PLATE TO POLE VANGS.

TABLE OF CONTENTS

REV	CHANGE	DRWN	BY	CHKD	APVD	DATE
E	NOTES UPDATE	DV	MRF	GLW	KRG	11/04/2022
D	REVISE TO 3D FORMAT	DV	JIK	-	-	10/27/2021
C	MOVED FROM OH1850	-	JIK	JES	CZH	09/18/2019

SDGE
A Sempra Energy utility

SDG&E ELECTRIC OVERHEAD CONSTRUCTION STANDARDS

ENGINEERED STEEL CABLE POLES
UNIVERSAL MOUNTING PLATE

SCALE: NOT TO SCALE

DRAWING NO:	SHEET:
OH1860.1	1 OF 1

© 1998 - 2021 San Diego Gas and Electric Company. All rights reserved. Removal of this copyright notice without permission is not permitted under law.

X Indicates Latest Revision | Completely Revised | New Page | Information Removed

1900 - MISCELLANEOUS EQUIPMENT

1900 - MISCELLANEOUS EQUIPMENT

MAIN TABLE OF CONTENTS

PAGE	SUBJECT
1920	ENERGY STORAGE INTERCONNECTION

REV	CHANGE	DRWN	BY	CHKD	APVD	DATE
C	-	-	-	-	-	-
B	REVISED TO 3D FORMAT	ARC	JIK	-	-	4/12/2022
A	ORIGINAL ISSUE	-	DG	JD	MDJ	4/1/2018

SDGE
A Sempra Energy utility®

SDG&E ELECTRIC OVERHEAD CONSTRUCTION STANDARDS

MISCELLANEOUS EQUIPMENT
TABLE OF CONTENTS

SCALE: NOT TO SCALE

DRAWING NO:	SHEET:
OH1901.1	1 OF 1

© 1998 - 2022 San Diego Gas and Electric Company. All rights reserved. Removal of this copyright notice without permission is not permitted under law.

Indicates Latest Revision | Completely Revised | X | New Page | Information Removed

TABLE OF CONTENTS

SCOPE: THIS STANDARD COVERS ALL APPROVED ENERGY STORAGE INTERCONNECTION CONFIGURATIONS FOR 1MW SYSTEMS AND ABOVE, REGARDLESS OF UTILITY/INDEPENDENT OWNED AND OPERATED.

ATTENTION:

* NO DEVIATIONS WILL BE ALLOWED FOR THE APPROVED PHYSICAL ARRANGEMENT CONFIGURATIONS.

** FORMAL INDIVIDUAL EQUIPMENT DEVIATIONS (MANUFACTURER, MODEL, ETC.) WILL STILL BE ALLOWED ON AN APPLICATION. APPROVAL BASIS.

*** THE BATTERY SYSTEM WILL NOT BE INCLUDED IN DETAIL AND WILL BE DEVELOPED IN A SEPARATE STANDARD.

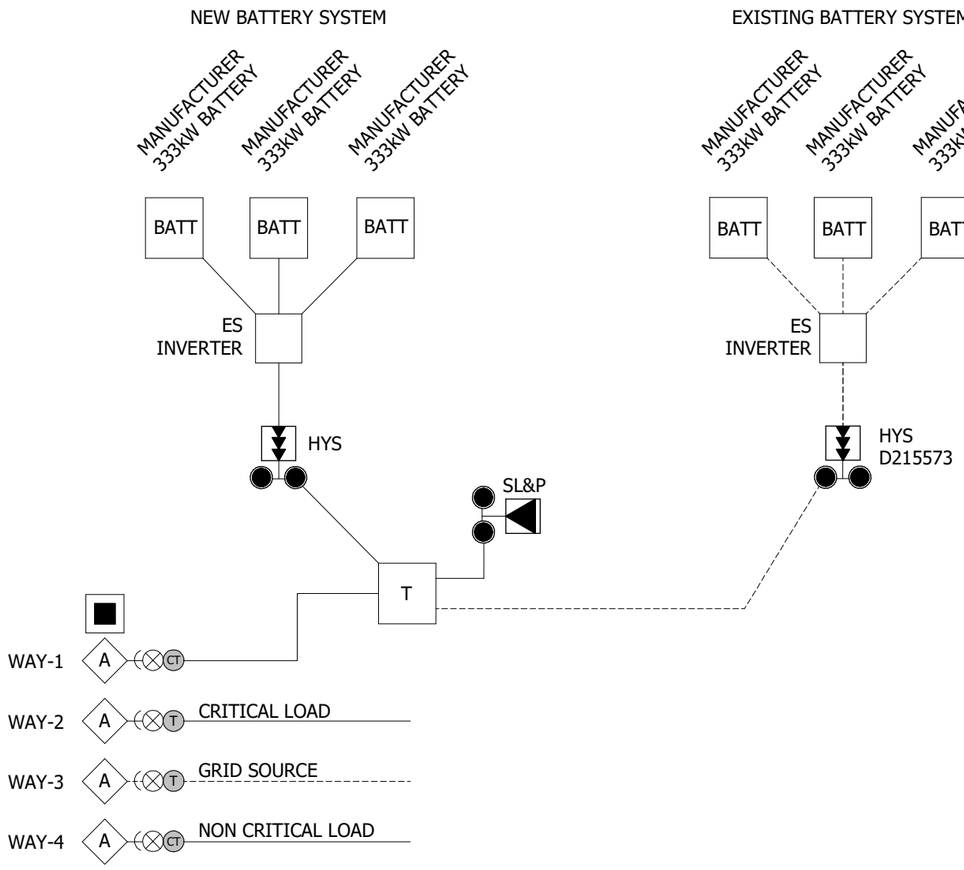

FIGURE 1
MULTI BATTERY SYSTEM (C)

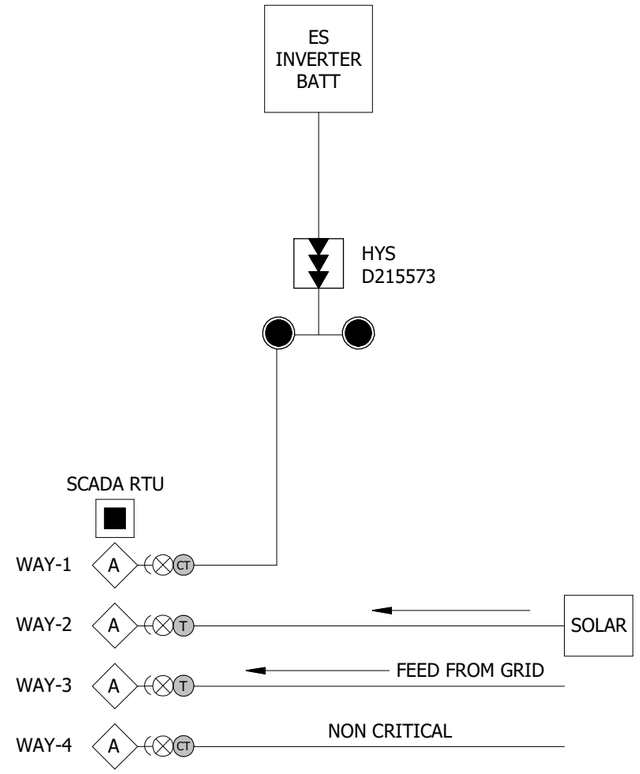

FIGURE 2
ENERGY STORAGE/SOLAR ONELINE (D)

INSTALLATION:

INTERCONNECTION PROCEDURES:

A. OVERVIEW: AN OVERVIEW OF THE GENERATOR INTERCONNECTION PROCEDURES IS AVAILABLE ON THE SDG&E WEBSITE AT THE FOLLOWING URL ADDRESS:
HTTPS://WWW.SDGE.COM/GENERATION-INTERCONNECTIONS/OVERVIEW-GENERATION-INTERCONNECTIONS

B. TARIFFS: THERE ARE TWO GENERATOR INTERCONNECTION PROCESSES COVERED BY DIFFERENT TARIFFS: WDAT AND RULE 21.

1. WDAT - WHOLESALE DISTRIBUTION OPEN ACCESS TARIFF: THE WDAT INTERCONNECTION PROCESS IS OVERSEEN BY FERC. THE WDAT TARIFF IS AVAILABLE ON THE SDG&E WEBSITE AT:
HTTPS://WWW.SDGE.COM/GENERATION-INTERCONNECTIONS/WHOLESALE-GENERATOR-TRANSMISSION-INTERCONNECTIONS
THE WDAT INTERCONNECTION PROCESS MUST BE USED FOR PROJECTS INTERCONNECTING TO THE SDG&E DISTRIBUTION SYSTEM THAT WISH TO SELL ENERGY TO ANY PARTY BESIDES SDG&E. TO INITIATE A REQUEST TO INTERCONNECT A PROJECT TO THE SDG&E DISTRIBUTION SYSTEM UNDER THE WDAT PROCESS, AN INTERCONNECTION REQUEST FORM MUST BE FILLED OUT AND SUBMITTED TO THE SDG&E CUSTOMER GENERATION TEAM. THE INTERCONNECTION REQUEST FORM IS AVAILABLE IN THE WDAT TARIFF IN APPENDIX 1 ON PAGES 329 TO 345.
THIS PAGE RANGE SHOULD BE PRINTED, FILLED OUT, AND SUBMITTED TO THE CUSTOMER GENERATION TEAM AT:
WDATSGIPAPPLICATIONS@SEMPRAUTILITIES.COM

REV	CHANGE	DRWN	BY	CHKD	APVD	DATE
C	REVISED TO 3D FORMAT	ARC	JIK	-	-	03/14/2022
B	FORMATTING	EDM	JIK	-	-	10/26/2021
A	ORIGINAL ISSUE	-	DG	JS	MDJ	04/01/2018

SDG&E
A Sempra Energy utility

© 1998 - 2022 San Diego Gas and Electric Company. All rights reserved. Removal of this copyright notice without permission is not permitted under law.

SDG&E ELECTRIC OVERHEAD AND UNDERGROUND CONSTRUCTION STANDARDS

ENERGY STORAGE INTERCONNECTION

SCALE: NOT TO SCALE

DRAWING NO: OH1920.1 UG4720.1

SHEET: 1 OF 3

X Indicates Latest Revision | Completely Revised | New Page | Information Removed

INSTALLATION (CONT'D):

2. RULE 21: THE ELECTRIC RULE 21 TARIFF INTERCONNECTION PROCESS IS OVERSEEN BY THE CPUC. THE RULE 21 TARIFF IS AVAILABLE ON THE SDG&E WEBSITE AT:
   HTTPS://WWW.SDGE.COM/GENERATION-INTERCONNECTIONS/ELECTRIC-RULE-21
   THE RULE INTERCONNECTION PROCESS CAN ONLY BE USED IF A GENERATOR PROJECT INTERCONNECTING TO THE SDG&E DISTRIBUTION SYSTEM WILL SELL ITS OUTPUT TO SDG&E ONLY. TO INITIATE A REQUEST TO INTERCONNECT A PROJECT TO THE SDG&E DISTRIBUTION SYSTEM UNDER THE RULE 21 PROCESS, AN INTERCONNECTION APPLICATION FORM MUST BE FILLED OUT AND SUBMITTED TO THE SDG&E CUSTOMER GENERATION TEAM. THE INTERCONNECTION APPLICATION FORM IS AVAILABLE ON THE SDG&E WEBSITE AT:
   HTTP://REGARCHIVE.SDGE.COM/TM2/PDF/ELEC_ELEC-SF_142-05203.PDF
   THIS APPLICATION FORM SHOULD BE PRINTED OUT, FILLED OUT, AND SUBMITTED TO THE CUSTOMER GENERATION TEAM AT:
   DGAPPLICATIONS@SEMPRAUTILITIES.COM

CAUTION:

* FOR GENERATION INTERCONNECTION OVERVIEW AND RULES FOLLOWED, GO TO THE LINK:
HTTP://WWW.SDGE.COM/GENERATION-INTERCONNECTIONS/OVERVIEW-GENERATION-INTERCONNECTIONS

CONFIGURATIONS: PRIMARY AND NON-PRIMARY METERING TO BE DETERMINED BY ELECTRIC METERING

Ⓒ GENERAL AND MULTI-BATTERY (REQUIRES HSCC SCADA TRAYER - S704738), SEE FIGURE 1:
WAY 1: ENERGY STORAGE
WAY 2: CRITICAL LOAD
WAY 3: GRID SOURCE
WAY 4: NON-CRITICAL LOAD

1. WAYS 1-4 WILL REQUIRE AUTOMATION CONTROL. WAY 3 WILL BE THE ONLY NON-FAULT INTERRUPTING POSITION. TRIP/CLOSE MODULES WILL NEED TO BE CLOSED, AND THE TRIP CIRCUIT WILL NEED TO BE ENABLED. WORK METHODS WILL CHANGE REGARDING CRITICAL AND NON-CRITICAL LOADS.
2. DESIGN OF ENERGY STORAGE SYSTEM WITH THE INVERTER AND TRANSFORMER AS A SINGLE UNIT IS AN APPROVED OPTION TO HE PRIMARY DISTRIBUTION SYSTEM.

Ⓓ CONFIGURATION 02 (TRADITIONAL SCADA TRAYER), SEE FIGURE 2:
WAY 1: ENERGY STORAGE
WAY 2: SOLAR
WAY 3: GRID SOURCE
WAY 4: LOAD

1. WAYS 1-4 WILL REQUIRE AUTOMATION CONTROL. WAY 3 WILL BE THE ONLY NON-FAULT INTERRUPTING POSITION. TRIP/CLOSE MODULES WILL NEED TO BE CLOSED, AND THE TRIP CIRCUIT WILL NEED TO BE ENABLED. WORK METHODS WILL CHANGE REGARDING CRITICAL AND NON-CRITICAL LOADS.
2. DESIGN OF ENERGY STORAGE SYSTEM WITH THE INVERTER AND TRANSFORMER AS A SINGLE UNIT, AND THE BATTERY AS A SEPARATE UNIT IS AN APPROVED OPTION TO THE PRIMARY DISTRIBUTION SYSTEM.

VOLTAGE LIMITATIONS:

E. PRIMARY METERED SWITCHGEAR INTERCONNECTIONS: 12.0KV (DELTA) OR 12.47KV (WYE) NOMINAL.
F. NON-PRIMARY METERED SWITCHGEAR INTERCONNECTIONS: 480VAC BETWEEN INVERTER OUTPUT AND UTILITY HYS TRANSFORMER.
G. LESS THAN 12KV NOMINAL INTERCONNECTIONS: INTERCONNECTION STUDY TO BE PERFORMED TO DETERMINE EQUIPMENT/CIRCUIT UPGRADING.

CONDUCTOR/CONDUIT LIMITATIONS:

H. ONLY SDG&E APPROVED CONDUITS AND CONDUCTORS WILL BE UTILIZED IN ANY ENERGY STORAGE PROJECT.

AUXILIARY POWER: REFER TO COMPANY POLICY FOR DETAILED AUXILIARY PROCEDURES/PROCESSES.

J. FIRE SUPPRESSION/PROTECTION
K. DETERMINE CONNECTIONS/PLACEMENT (WAYS FOR SWITCH)
L. UPS (INTERCONNECTION)
M. NETWORKING/TELECOMMUNICATIONS/METERING POWERED BY DC AND/OR AC VOLTAGE
N. STATION LIGHT AND POWER

GIS MAPPING:

O. INDIVIDUAL TECH DEVICES WILL BE IDENTIFIED BY PAD STRUCTURES.

COMMUNICATIONS: REFER TO COMPANY POLICY FOR DETAILED COMMUNICATION PROTOCOLS/PROCEDURES.

P. CAL ISO:
   1. METERING (REVENUE)
   2. REMOTE INTELLIGENT GATEWAY (RIG)
   3. AUTOMATED DISPATCH SYSTEM (ADS)
   4. APPROVED COMMUNICATIONS
Q. SDG&E:
   1. VENDOR
   2. IT
   3. SERIAL
   4. TCP/IP
   5. INTERNET
   6. GRID OPS TELEMETRY
   7. METERING (REVENUE)
   8. ELECTRIC METERING
   9. INFORMATION SECURITY (IS)

BILL OF MATERILS: NONE

NOTES:

I. TRAYER 4 WAY SCADA HIGH SPEED CLOSE COIL SWITCH(S) SPECIFICALLY DESIGNED FOR BLACKSTARTING AND ISLANDING CAPABILITIES.
II. FOR OVERHEAD SECTIONALIZING APPLICATIONS, USE ANY APPROVED SCADA RECLOSERS.
III. HYS TRANSFORMER(S) WILL BE REQUIRED FOR ALL NON-PRIMARY METERED INTERCONNECTIONS.

TABLE OF CONTENTS

REV	CHANGE	DRWN	BY	CHKD	APVD	DATE
C	REVISED TO 3D FORMAT	ARC	JIK	-	-	03/14/2022
B	FORMATTING	EDM	JIK	-	-	10/26/2021
A	ORIGINAL ISSUE	-	DG	JS	MDJ	04/01/2018

SDG&E ELECTRIC OVERHEAD AND UNDERGROUND CONSTRUCTION STANDARDS

ENERGY STORAGE INTERCONNECTION

SCALE: NOT TO SCALE

DRAWING NO: OH1920.2 UG4720.2

SHEET: 2 OF 3

© 1998 - 2022 San Diego Gas and Electric Company. All rights reserved. Removal of this copyright notice without permission is not permitted under law.

X Indicates Latest Revision | Completely Revised | New Page | Information Removed

REFERENCE:

a. ELECTRIC DISTRIBUTION OVERHEAD CONSTRUCTION STANDARDS
HTTP://SEMPRA.SHAREPOINT.COM/SITES/SDGE-POWERUP/EDE/EDE%20MANUALS/OVERHEAD%20CONSTRUCTION%20STANDARDS.PDF

b. ELECTRIC DISTRIBUTION UNDERGROUND CONSTRUCTION STANDARDS
HTTP://SEMPRA.SHAREPOINT.COM/SITES/SDGE-POWERUP/EDE/EDE%20MANUALS/UNDERGROUND%20CONSTRUCTION%20STANDARDS.PDF

c. ELECTRIC DISTRIBUTION DESIGN MANUAL (INTERNAL SDG&E ONLY)
HTTP://SEMPRA.SHAREPOINT.COM/SITES/SDGE-POWERUP/EDE/EDE%20MANUALS/ELECTRIC%20DISTRIBUTION%20DESIGN%20MANUAL.PDF

d. ELECTRIC SERVICE STANDARDS
HTTP://SEMPRA.SHAREPOINT.COM/SITES/SDGE-POWERUP/EDE/EDE%20MANUALS/SERVICE%20STANDARDS%20AND%20GUIDE.PDF

e. ELECTRIC STANDARD PRACTICES (INTERNAL SDG&E ONLY)
HTTP://SEMPRA.SHAREPOINT.COM/SITES/SDGE-POWERUP/EDE/EDE%20MANUALS/ELECTRIC%20STANDARD%20PRACTICES.PDF

f. GO 95 LINK
HTTP://WWW.CPUC.CA.GOV/GOS/GO95/GO_95_STARTUP_PAGE.HTML

g. GO 128 LINK
HTTP://WWW.CPUC.CA.GOV/GOS/GO128/GO_128_STARTUP_PAGE.HTML

h. CAL ISO LINK - RESOURCE INTERCONNECTION GUIDE
HTTP://WWW.CAISO.COM/PARTICIPATE/PAGES/RESOURCEINTERCONNECTIONGUIDE/DEFAULT.ASPX

i. CAL ISO LINK - NEW RESOURCE INTERCONNECTION GUIDE
HTTP://WWW.CAISO.COM/PARTICIPATE/PAGES/NEWRESOURCEIMPLEMENTATION/DEFAULT.ASPX

TABLE OF CONTENTS

REV	CHANGE	DRWN	BY	CHKD	APVD	DATE
C	REVISED TO 3D FORMAT	ARC	JIK	-	-	03/14/2022
B	FORMATTING	EDM	JIK	-	-	10/26/2021
A	ORIGINAL ISSUE	-	DG	JS	MDJ	04/01/2018

SDGE
A Sempra Energy utility

© 1998 - 2022 San Diego Gas and Electric Company. All rights reserved. Removal of this copyright notice without permission is not permitted under law.

SDG&E ELECTRIC OVERHEAD AND UNDERGROUND CONSTRUCTION STANDARDS

ENERGY STORAGE INTERCONNECTION

SCALE: NOT TO SCALE

DRAWING NO: OH1920.3 UG4720.3

SHEET: 3 OF 3

X Indicates Latest Revision | Completely Revised | New Page | Information Removed

2000 - COVERED CONDUCTOR

2000 - COVERED CONDUCTOR

MAIN TABLE OF CONTENTS

PAGE	SUBJECT
2004	COVERED CONDUCTOR DATA
2005	SPIRAL DAMPER
2007	COMPOSITE LINE POST INSULATOR
2010	HELICAL TIE
2015	TENSION CLAMP FOR DEADEND CROSSARMS
2025	INSULATION PIERCING CONNECTOR FOR DEADEND
2030	CROSSARMS POLE TOP INSULATOR BRACKET
2035	POLE TOP ASSEMBLY – DEADEND STRUCTURE
2036	POLE TOP ASSEMBLY – TANGENT STRUCTURE
2040	SECONDARY TAPS AND CONNECTORS

© 1998 - 2021 San Diego Gas & Electric Company. All rights reserved. Removal of this copyright notice without permission is not permitted under law.

REV	CHANGE	DR	BY	DSN	APV	DATE	REV	CHANGE	DR	BY	DSN	APV	DATE
C							F						
B	UPDATES TO OH2005	AMP	JES	JES	CZH	03/05/2021	E						
A	ORIGINAL ISSUE	AMP	MRF	JS	CZH	10/19/2020	D						

Indicates Latest Revision | Completely Revised | New Page X | Information Removed

SDG&E ELECTRIC OVERHEAD AND CONSTRUCTION STANDARDS

COVERED CONDUCTOR SYSTEM
TABLE OF CONTENTS

SCOPE: THIS STANDARD LISTS VARIOUS TYPES OF ALUMINUM COVERED CONDUCTORS USED FOR DISTRIBUTION INSTALLATIONS.

TABLE 1

SIZE OF WIRE	AWG OR KCM	ACSR COVERED			AWAC COVERED
		1/0 (I)(III)	336.4 (I)(VII)	636 (I)(VII)	2 (I)(V)
	CODE WORD	--	--	--	--
STOCK NUMBER		S197636	S197638	FUTURE	FUTURE
DESIGN UNITS		CC1/0	CC336		
CU. EQUIV. AWG OR KCM		#2	4/0		
STRANDING (AL/STEEL)		6/1	26/7		
TOTAL DIAMETER - INCHES		0.728	1.05		
CONDUCTOR DIAMETER - INCHES		0.398	0.72		
WEIGHT - LBS PER 1,000 FT		284	688		
MAXIMUM DESIGN TENSION - LBS		1,700	3,000		
ULTIMATE TENSILE STRENGTH - LBS		4,160	14,100		
AMPACITY-AMPERES (PER CONDUCTOR AT 75°C)		234	490		
RESISTANCE OHMS PER 1,000 FT	CONDUCTOR AT 75°C	0.23	0.065		

TABLE 2

		OVERHEAD COVERED CONDUCTOR REEL DIMENSIONS AND WEIGHTS							
		ACSR COVERED							AWAC COVERED
SIZE OF WIRE	AWG	1/0			336.4			636	2
	CODE WORD	--			--			--	--
STOCK NUMBER		S197636			S197638			FUTURE	FUTURE
STRANDING		6/1			26/7				
MANUFACTURER		GENERAL CABLE/PRYSMIAN	SOUTHWIRE	TAIHAN	GENERAL CABLE/PRYSMIAN	SOUTHWIRE	TAIHAN		
REEL SIZE - INCHES		60 X 30	50 X 30	55 X 25	58 X 32	60 X 32	65 X 30		
WIRE QUANTITY - FT		5,000	5,000	5,000	4,000	4,000	4,000		
REEL TARE - LBS		369	198	516	310	320	758		
WIRE WEIGHT - LBS		1,480	1,390	1,445	2,820	2,676	2,764		
REEL + WIRE WEIGHT - LBS		1,849	1,588	1,961	3,130	2,996	3,522		
WIRE WEIGHT - LBS PER 1,000 FT		296	278	289	705	669	691		
LENGTH/LB		3'-4 1/2"	3'-7 1/4"	3'-5 1/2"	1'-5 1/16"	1'-5 7/8"	1'-5 3/8"		

TABLE OF CONTENTS

INSTALLATION:

A. THE CONDUCTOR CLEARANCES SPECIFIED IN GENERAL ORDER 95, RULE 38, TABLE 2, CASES 15 AND 16 ARE SPECIFIC TO BARE CONDUCTORS. THEY ARE NOT APPLICABLE TO THE INSULATED CONDUCTORS UTILIZED IN THIS SECTION WHICH MEET THE DEFINITION OF GENERAL ORDER 95, RULE 21.6.

B. CROSSARM CONSTRUCTION CONFIGURATION FOR COVERED CONDUCTOR:

(THESE ARE THE BASIC CROSSARM CONFIGURATIONS FOR COVERED CONDUCTORS. CROSSARM LENGTHS MAY BE ADJUSTED APPROPRIATELY.)

1. SINGLE-PHASE (2-WIRE) CONSTRUCTION: 6-FOOT CROSSARM
2. THREE-PHASE (3-WIRE) CENTER-PHASE RIDGE/POLETOP PIN CONSTRUCTION: 6- OR 8-FOOT CROSSARM
3. THREE-PHASE (4-WIRE) CONSTRUCTION: 10-FOOT CROSSARM
4. LINE AND BUCK CONFIGURATIONS AND ANGLES SHALL BE CONSTRUCTED ACCORDINGLY TO MAINTAIN CLIMBING SPACE. CLIMBING SPACE IS TO BE MAINTAINED AT ALL TIMES.

© 1998 - 2023 San Diego Gas & Electric Company. All rights reserved. Removal of this copyright notice without permission is not permitted under law.

REV	CHANGE	DR	BY	DSN	APV	DATE	REV	CHANGE	DR	BY	DSN	APV	DATE
C	INSTALLATION UPDATE	EDM	JAC	GLW	KRG	06/27/2022	F						
B	TABLE 1 DATA REVISED	AMP	JES	JES	CZH	03/05/2021	E						
A	ORIGINAL ISSUE	AMP	MRF	JS	CZH	10/19/2020	D	NOTES UPDATE	ARC	ADW	JES	KRG	05/08/2023

BILL OF MATERIALS: NONE

NOTES:

(I) NORMALLY PURCHASED MATERIAL

II. 336.4 KCM MAY BE INSTALLED ON THE COAST. 1/0 COVERED ACSR MAY BE INSTALLED 5 MILES FROM THE COAST. DEVIATION REQUIRED IF LESS THAN 5 MILES FROM THE COAST.

(III) FOR USE IN LIGHT LOADING DISTRICTS ONLY

IV. THE AMPACITY FIGURES GIVEN SHOULD BE CONSIDERED AS MAXIMUM OR CHANGE OUT VALUES. IF INCREASED VALUES ARE DESIRED, CONTACT ELECTRIC DISTRIBUTION ENGINEERING.

(V) MINIMUM REQUIREMENT FOR USE IN HEAVY LOADING DISTRICTS AND TIER 3

VI. COVERED CONDUCTOR USED IN EXTRA HEAVY LOADING WILL NEED TO BE SUBMITTED FOR APPROVAL THROUGH A DEVIATION REQUEST.

(VII) FOR USE IN LIGHT AND HEAVY LOADING DISTRICTS

VIII. COVERED CONDUCTOR CAN EXPERIENCE ICE BUILDUP AND SHALL BE EVALUATED FOR CAPACITY AND SAG CONSIDERATIONS AS REQUIRED BY THE G.O. 95 LOADING DISTRICTS AND SDG&E EXTRA HEAVY ICE DISTRICTS IN THE SAME FASHION AS BARE CONDUCTOR.

REFERENCE: NONE

TABLE OF CONTENTS

© 1998 - 2023 San Diego Gas & Electric Company. All rights reserved. Removal of this copyright notice without permission is not permitted under law.

REV	CHANGE	DR	BY	DSN	APV	DATE	REV	CHANGE	DR	BY	DSN	APV	DATE
C	INSTALLATION UPDATE	EDM	JAC	GLW	KRG	06/27/2022	F						
B	TABLE 1 DATA REVISED	AMP	JES	JES	CZH	03/05/2021	E						
A	ORIGINAL ISSUE	AMP	MRF	JS	CZH	10/19/2020	D	NOTES UPDATE	ARC	ADW	JES	KRG	05/08/2023

X Indicates Latest Revision | Completely Revised | New Page | Information Removed

SDG&E ELECTRIC OVERHEAD CONSTRUCTION STANDARDS

COVERED CONDUCTOR SYSTEM
COVERED CONDUCTOR DATA

OH2004.2

SCOPE: THIS STANDARD SHOWS VARIOUS VIBRATION DAMPER INSTALLATIONS USED FOR COVERED CONDUCTOR. THIS APPLIES TO ALL LOADING ZONES.

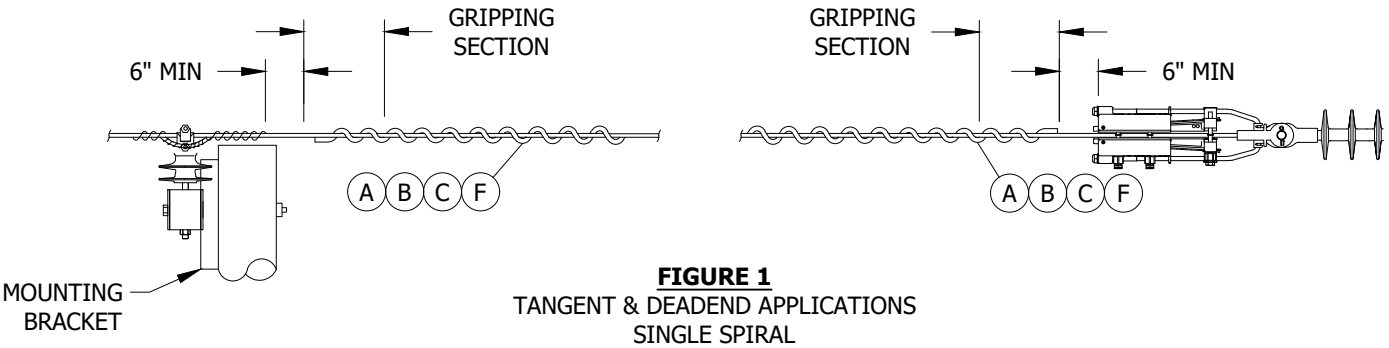

FIGURE 1
TANGENT & DEADEND APPLICATIONS
SINGLE SPIRAL

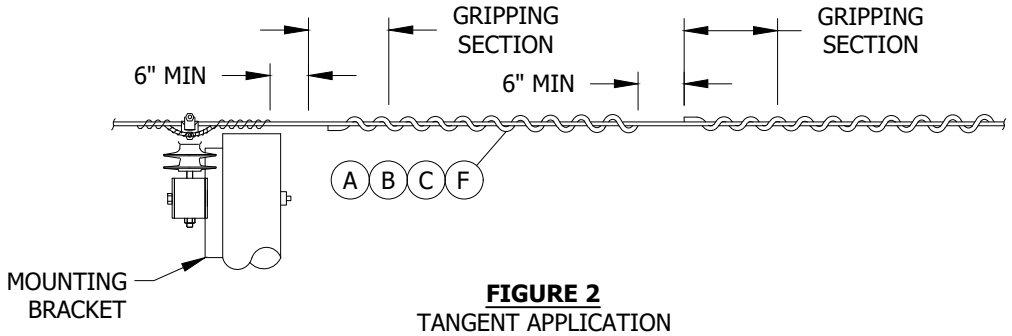

FIGURE 2
TANGENT APPLICATION
DOUBLE SPIRAL IN SERIES

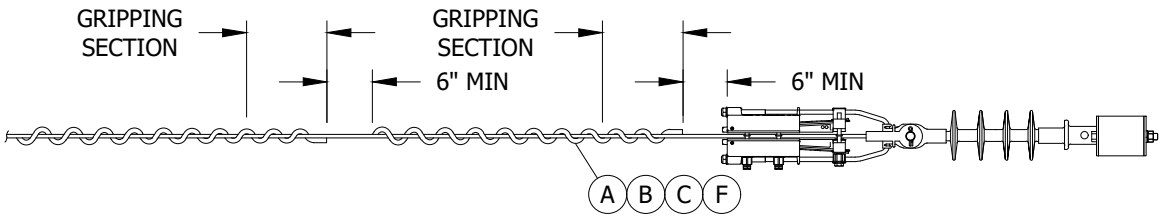

FIGURE 3
DEADEND APPLICATION
DOUBLE SPIRAL IN SERIES



FIGURE 4
SINGLE WRAP DAMPENER

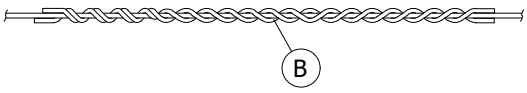

FIGURE 5
DOUBLE WRAP DAMPENER

TABLE OF CONTENTS

© 1998 - 2023 San Diego Gas & Electric Company. All rights reserved. Removal of this copyright notice without permission is not permitted under law.

REV	CHANGE	DR	BY	DSN	APV	DATE	REV	CHANGE	DR	BY	DSN	APV	DATE
C							F						
B	INSTALLATION UPDATE	GLC	MBL	JAS	KRG	03/27/2023	E						
A	ORIGINAL	AMP	JES	JES	CZH	03/05/2021	D						

X Indicates Latest Revision | Completely Revised | New Page | Information Removed

SDG&E ELECTRIC OVERHEAD CONSTRUCTION STANDARDS

COVERED CONDUCTOR SYSTEM
VIBRATION DAMPERS

OH2005.1

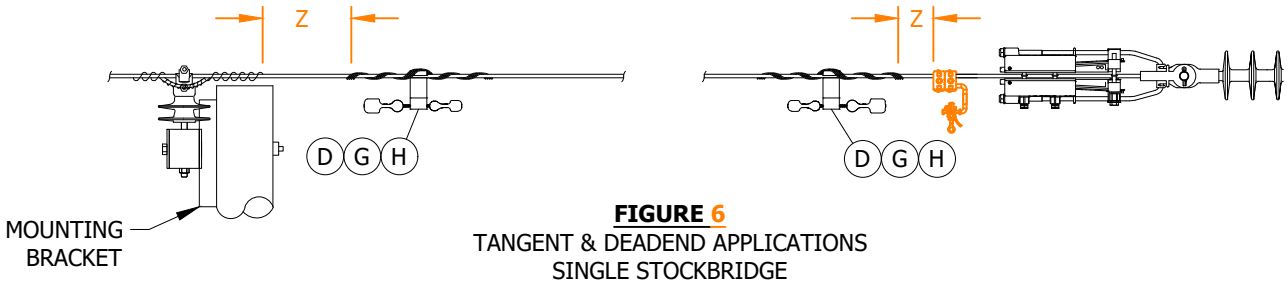

FIGURE 6
TANGENT & DEADEND APPLICATIONS
SINGLE STOCKBRIDGE

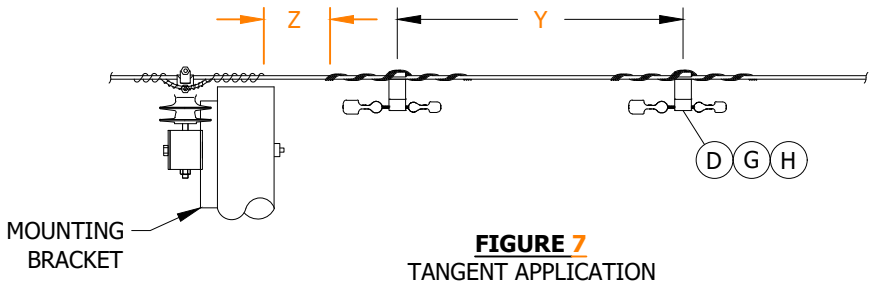

FIGURE 7
TANGENT APPLICATION
DOUBLE STOCKBRIDGE

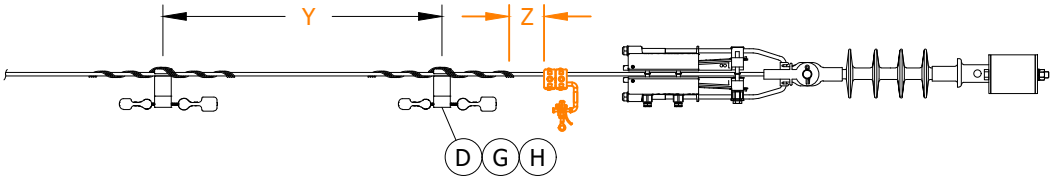

FIGURE 8
DEADEND APPLICATION
DOUBLE STOCKRIDGE

TABLE OF CONTENTS

© 1998 - 2023 San Diego Gas & Electric Company. All rights reserved. Removal of this copyright notice without permission is not permitted under law.

REV	CHANGE	DR	BY	DSN	APV	DATE	REV	CHANGE	DR	BY	DSN	APV	DATE
C							F						
B	INSTALLATION UPDATE	GLC	MBL	JAS	KRG	03/27/2023	E						
A	ORIGINAL	AMP	JES	JES	CZH	03/05/2021	D						

X Indicates Latest Revision | Completely Revised | New Page | Information Removed

SDG&E ELECTRIC OVERHEAD CONSTRUCTION STANDARDS

COVERED CONDUCTOR SYSTEM
VIBRATION DAMPERS

OH2005.2

TABLE 1

SPIRAL DAMPERS FOR COVERED ACSR								
CONDUCTOR DATA		SPIRAL VIBRATION DAMPER	SPAN LENGTH (FEET)	DAMPER PER SPAN *(STANDARD APPLICATION)* (I) (III)	DAMPER PER SPAN *(CROSSING SPAN APPLICATION WITH FINAL TENSIONS <=20% RBS/UTS)* (II) (III)	DAMPER SPACING (INCHES) (SEE FIGS)	STOCK NUMBER	DESIGN UNITS
SIZE	STRAND	INSTALLED WEIGHT (POUNDS)				TANGENT OR DEADEND		
1/0	6/1	3.53	101-500	1	2	6	S300464	TBD
			501-1,000	2	3	6		
			1,001-1,500	3	5	6		
			1,501-2,000	4	6	6		

TABLE 2

STOCKBRIDGE DAMPERS FOR COVERED ACSR								
CONDUCTOR DATA		STOCKBRIDGE DAMPER	SPAN LENGTH (FEET)	DAMPER PER SPAN *(STANDARD APPLICATION)* (I) (IV)			STOCK NUMBER	DESIGN UNITS
SIZE	STRAND	INSTALLED WEIGHT (POUNDS)		QUANTITY	DIMENSION Z	DIMENSION Y		
336.4	26/7	4.7	101-889	2	6"	26"	S300522	TBD
			890-1778	4	6"	26"		

INSTALLATION:

(A) SPIRAL VIBRATION DAMPERS MAY BE PLACED AT EITHER END OF THE SPAN, OR AT BOTH ENDS USING EITHER THE SINGLE OR DOUBLE APPLICATION METHODS TO MAKE UP THE TOTAL NUMBER OF DAMPERS REQUIRED PER SPAN.

(B) SPIRAL DAMPERS MAY BE SUBSET TOGETHER IN SETS OF TWO ON 1/0 CONDUCTORS.

(C) PLACE SPIRAL DAMPERS DIRECTLY ON THE COVERED CONDUCTOR APPROXIMATELY SIX INCHES AWAY FROM AVIAN COVERS, LINE SPLICES, FORMED TIES, HARDWARE, ETC.

(D) PLACE STOCKBRIDGE DAMPERS AT THE SPECIFIED DIMENSION Z BETWEEN THE END OF THE INSULATOR TIE AND THE DAMPER ATTACHMENT ROD; OR DIMENSION Y FROM THE CENTER POINT OF FIRST DAMPER.

E. DO NOT SKIN THE COVERED CONDUCTOR COATING TO PLACE EITHER TYPE OF DAMPER.

(F) THE PREFERRED SPIRAL DAMPER INSTALLATION METHOD IS TO HAVE THE GRIPPING SECTION NEAR THE INSULATOR SUPPORT. PERFORMANCE IS NOT AFFECTED IF REVERSED. SPIRAL DAMPERS MAY BE INSTALLED CLOSE TO THE SUPPORT AND THEN SLID OUT AS NECESSARY TO ACHIEVE SPACING. TO INSTALL SPIRAL DAMPERS, FIRST WRAP THE DAMPING SECTION AROUND THE CONDUCTOR WORKING OUTWARD AWAY FROM THE SUPPORT. FINISH THE INSTALLATION BY WRAPPING THE TIGHTER GRIPPING SECTION AROUND THE CONDUCTOR AFTER THE FINAL SPACING POSITION OF THE DAMPER IS SET.

(G) THE STOCKBRIDGE DAMPER CAN BE INSTALLED WITH EITHER THE LARGE OR SMALL WEIGHT CLOSEST TO THE INSULATOR SUPPORT. TO INSTALL A STOCKBRIDGE DAMPER, FIRST MARK THE CLAMP PLACEMENT DIMENSIONS ON THE CONDUCTOR. HANG THE CENTER OF THE DAMPER CLAMP ON THE PLACEMENT MARK. SET THE FIRST ATTACHMENT ROD BY LINING UP THE CENTER COLOR CODE MARK ON THE ROD WITH THE CLAMP NUB AND THEN WRAP THE ROD AROUND THE CONDUCTOR USING A LEFT-HAND LAY. SNAP IN BOTH ENDS OF THE FIRST ROD BEFORE PROCEEDING WITH THE NEXT ROD AND CONTINUE UNTIL ALL PROVIDED RODS ARE INSTALLED. RODS MAY HAVE GAPS BETWEEN THEM AT THE CLAMP DUE TO THE SHAPE OF THE CLAMP.

(H) STOCKBRIDGE DAMPERS SHOULD BE PLACED ON ONE END OF THE SPAN AT THEIR GIVEN DIMENSION Z AND DIMENSION Y PLACEMENTS FOR SPANS OF 889 FEET OR LESS. IF NOT PHYSICALLY POSSIBLE, THE SECOND DAMPER MAY BE PLACED AT THE OTHER END OF THE SPAN. DAMPERS SHOULD BE PLACED ON BOTH ENDS OF THE SPAN FOR SPANS BETWEEN 890-1778 FEET.

© 1998 - 2023 San Diego Gas & Electric Company. All rights reserved. Removal of this copyright notice without permission is not permitted under law.

REV	CHANGE	DR	BY	DSN	APV	DATE	REV	CHANGE	DR	BY	DSN	APV	DATE
C							F						
B	INSTALLATION UPDATE	GLC	MBL	JAS	KRG	03/27/2023	E						
A	ORIGINAL	AMP	JES	JES	CZH	03/05/2021	D						

INSTALLATION: (CONT'D)

J. DAMPERS SHALL BE REQUIRED ON SPANS WHERE INSULATION PIERCING CONNECTORS (IPC'S) ARE INSTALLED, EXCEPT ON REDUCED SPAN EVEN THOUGH (IPC'S) ARE IN THE REDUCED TENSION SPAN.

BILL OF MATERIALS: NONE

NOTES:

(I) THE STANDARD APPLICATION SCENARIO APPLIES TO SPANS WHERE THE AAMT CASE (COLDEST REGIONAL TEMP, NO ICE OR WIND) INITIAL TENSION IS <30% RBS, AND THE AAT CASE (60F, NO ICE OR WIND) INITIAL TENSION IS <20% RBS.

(II) THE CROSSING SPAN APPLICATION SCENARIO APPLIES TO WATER, CANYON, HIGHWAYS, OR OTHER VIBRATION INDUCING TERRAIN.

(III) CONTACT DISTRIBUTION PLANNING TO CALCULATE APPROPRIATE SPIRAL DAMPER QUANTITIES FOR ANY SPANS NOT MEETING THE STANDARD APPLICATION OR CROSSING SPAN APPLICATION SCENARIO.

(IV) FOR 336.4KCMIL CONDUCTOR SPANS OVER 1778 FEET AND ANY CROSSING SPAN APPLICATIONS, CONTACT DISTRIBUTION PLANNING TO CALCULATE THE APPROPRIATE STOCKBRIDGE DAMPER REQUIREMENTS.

REFERENCE: NONE

© 1998 - 2023 San Diego Gas & Electric Company. All rights reserved. Removal of this copyright notice without permission is not permitted under law.

REV	CHANGE	DR	BY	DSN	APV	DATE	REV	CHANGE	DR	BY	DSN	APV	DATE
C							F						
B	INSTALLATION UPDATE	GLC	MBL	JAS	KRG	03/27/2023	E						
A	ORIGINAL	AMP	JES	JES	CZH	03/05/2021	D						

SCOPE: THIS STANDARD PROVIDES SPECIFICATIONS FOR THE COMPOSITE LINE POST INSULATOR WITH PIN BOLT.

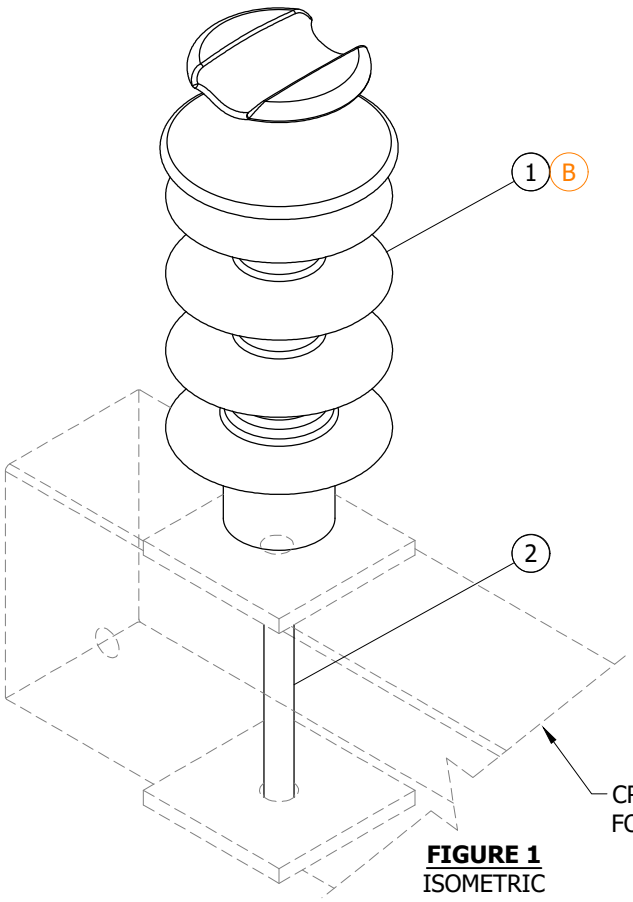

FIGURE 1
ISOMETRIC

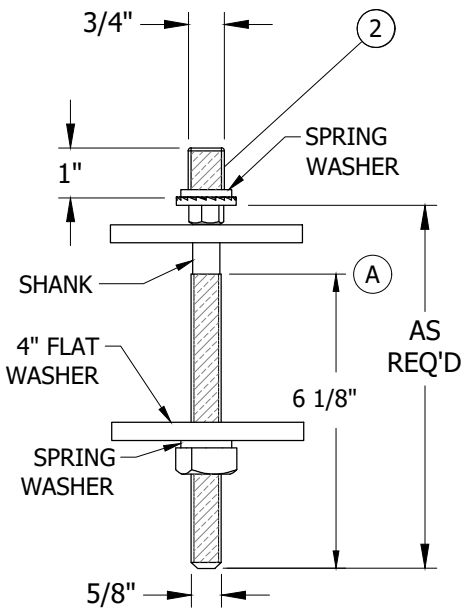

FIGURE 2
POST INSULATOR STUD

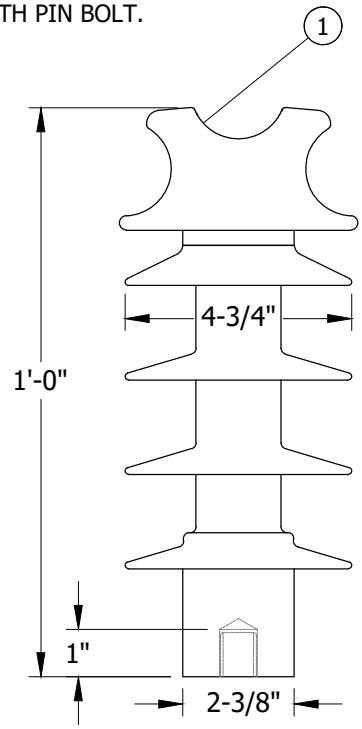

FIGURE 3
POST INSULATOR

INSTALLATION:

(A) LENGTH OF INSULATOR STUD AS REQUIRED.

(B) MAY USE VISE-TOP INSULATOR FOR DEADEND (OVER ARM) JUMPERS.

BILL OF MATERIALS:

ITEM	DESCRIPTION	QUANTITY	STANDARD PAGE	STOCK NUMBER	WEIGHT (LBS)	DESIGN UNITS
1	COMPOSITE LINE POST INSULATOR	AS REQ'D	-	S429322	5.46	SDI82
2	POST INSULATOR STUD	AS REQ'D	OH396.1	-	-	-

NOTES:

I. USE WITH 1/0 AND 336 ACSR COVERED CONDUCTOR. ADDITIONAL CONDUCTOR SIZES TO BE ACCOMMODATED IN LATER REVISIONS.

II. ALLOWABLE TENSION (UPLIFT) LOAD IS 250 LBS. ALLOWABLE CANTILEVER LOAD IS 800 LB (VECTOR SUM OF HORIZONTAL AND TRANSVERSE LOAD, INCLUDES A FACTOR OF SAFETY OF 3.0).

III. CREEPAGE DISTANCE 22 INCHES.

REFERENCE:

a. SEE OH2036 FOR TANGENT ASSEMBLY DETAILS.
b. SEE OH2004 FOR CONDUCTOR DATA.
c. SEE OH750 FOR VISE TOP INSULATORS.

© 1998 - 2021 San Diego Gas & Electric Company. All rights reserved. Removal of this copyright notice without permission is not permitted under law.

REV	CHANGE	DR	BY	DSN	APV	DATE	REV	CHANGE	DR	BY	DSN	APV	DATE
C	EDITORIAL CHANGES	AMP	JES	JES	CZH	03/05/2021	F						
B	STANDARD NUMBER UPDATES	AMP	MRF	JS	CZH	10/19/2020	E						
A	ORIGINAL ISSUE	AMP	MRF	GW/JS	CZH	04/17/2020	D						

SCOPE: THIS STANDARD PROVIDES SPECIFICATIONS FOR THE HELICAL TIE FOR COVERED CONDUCTOR.

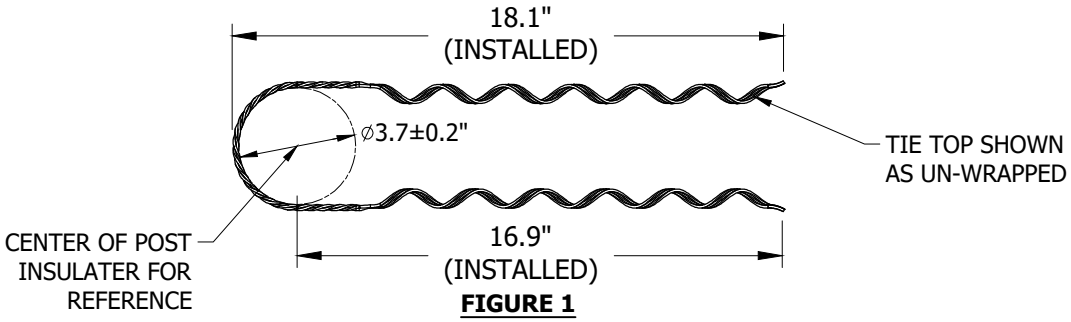

FIGURE 1
TOP VIEW - ITEM 1

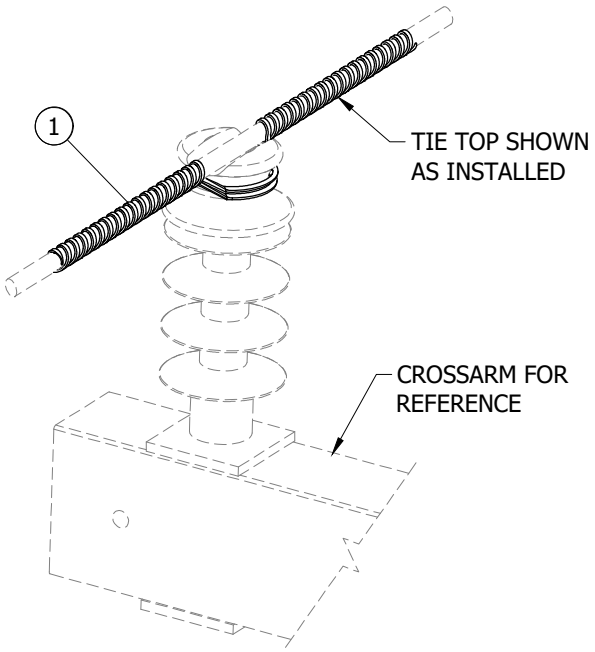

FIGURE 2
SINGLE CROSSARM

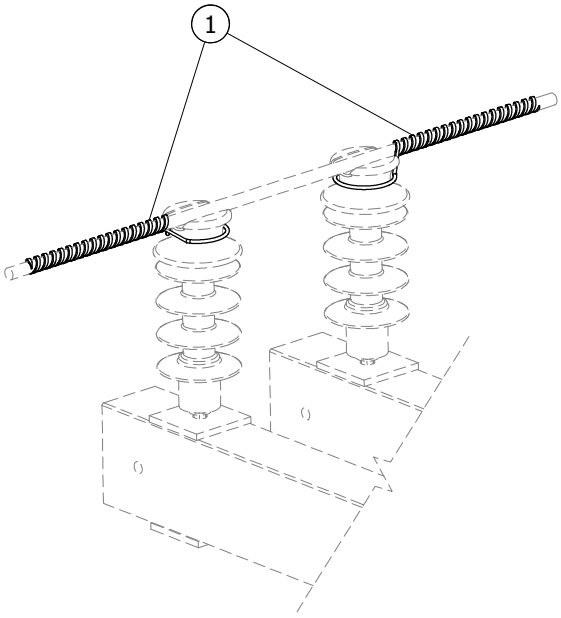

FIGURE 3
DOUBLE CROSSARM

INSTALLATION:

A. TO ACHIEVE A DOUBLE TIE AS SHOWN IN **FIGURE 2**, TWO SINGLE HELICAL TIES ARE INSTALLED IN OPPOSITE DIRECTIONS.

BILL OF MATERIALS:

ITEM	DESCRIPTION	QUANTITY	STANDARD PAGE	STOCK NUMBER	WEIGHT (LBS)	DESIGN UNITS
1A	1/0 AWG HELICAL TIE (KITTED AS SIX (6) TIES PER PACK)	AS REQ'D	-	S738988	-	- (X)
1B	336 ACSR HELICAL TIE (KITTED AS SIX (6) TIES PER PACK)	AS REQ'D	-	S738996	-	- (X)

NOTES:

I. TIE TOP ALLOWABLE UPLIFT IS 250 LBS (AT INSTALLATION).

(X) THIS ITEM IS EXEMPT.

REFERENCE:

a. SEE OH2036 FOR TANGENT ASSEMBLY DETAILS.
b. SEE OH2004 FOR CONDUCTOR DATA.

© 1998 - 2021 San Diego Gas & Electric Company. All rights reserved. Removal of this copyright notice without permission is not permitted under law.

REV	CHANGE	DR	BY	DSN	APV	DATE	REV	CHANGE	DR	BY	DSN	APV	DATE
C	FORMATTING	AMP	JES	JES	CZH	03/05/2021	F						
B	STANDARD NUMBER UPDATES	AMP	MRF	JS	CZH	10/19/2020	E						
A	ORIGINAL ISSUE	AMP	MRF	GW/JS	CZH	04/17/2020	D						

SCOPE: THIS STANDARD SHOWS THE SPECIFICATIONS AND INSTALLATION OF A TENSIONING CLAMP DEADEND ARM CONFIGURATION.

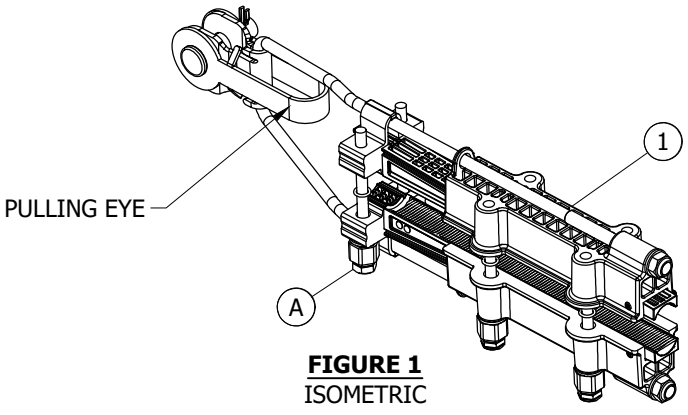

FIGURE 1
ISOMETRIC

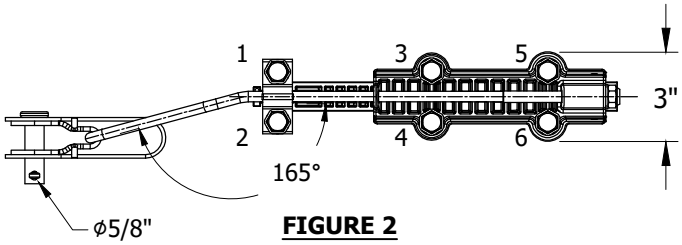

FIGURE 2
BOTTOM

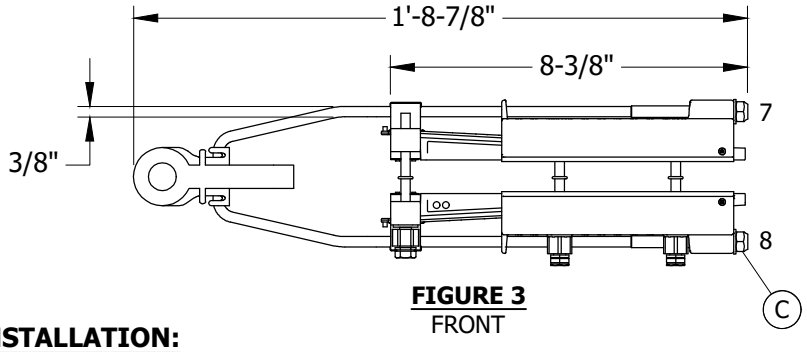

FIGURE 3
FRONT

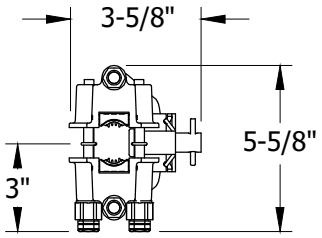

FIGURE 4
END

INSTALLATION:

(A) TIGHTEN BOLTS TO MANUFACTURER SPECIFICATIONS UNTIL BOLT HEAD TORQUES OFF.

(B) THE PROPER BOLT TIGHTENING SEQUENCE IS AS FOLLOWS:

1. REFER TO BOLT NUMBERS 1-6 ON **FIGURE 2** FOR CORRECT BOLT IDENTIFICATION.
2. TIGHTEN BOLTS 1 AND 2 ALTERNATELY UNTIL BOLT HEADS TORQUE OFF.
3. TIGHTEN REMAINING BOLTS IN A "**FIGURE-EIGHT**" SEQUENCE OF 6-5-4-3 REPEATEDLY UNTIL BOLT HEADS TORQUE OFF (APPROXIMATELY 3 REPETITIONS).
4. IF A BOLT PREMATURELY FAILS WHILE TIGHTENING, DO NOT REMOVE THE DEADEND AND KEEPERS FROM THE CONDUCTOR. INSTEAD, REPLACE THE FAILED BOLT WITH ANOTHER AND CONTINUE TO FOLLOW THE TIGHTENING SEQUENCE. SPARE BOLTS FOR THIS DEADEND ARE INCLUDED IN THE TENSION CLAMP KIT.

(C) NUTS 7 AND 8 SHOWN IN **FIGURE 3** ARE INTENDED TO BE USED DURING RIGGING TO MAKE SMALL SAG CORRECTIONS ONLY AFTER CLAMP BOLTS 1 THROUGH 6 ARE INSTALLED AND SHEARED PER NOTE (B).

D. DEADEND CLAMPS SHALL BE INSTALLED WITH BOLTS FACING DOWN AND INWARD TOWARDS POLE.

E. DEADEND TAILS SHALL BE A PREFERRED MINIMUM OF 15" LONG TO FACILITATE TAIL TAPS.

© 1998 - 2021 San Diego Gas & Electric Company. All rights reserved. Removal of this copyright notice without permission is not permitted under law.

REV	CHANGE	DR	BY	DSN	APV	DATE	REV	CHANGE	DR	BY	DSN	APV	DATE
C	EDITORIAL CHANGES	AMP	JES	JES	CZH	03/05/2021	F						
B	STANDARD NUMBER UPDATES	AMP	MRF	JS	CZH	10/19/2020	E						
A	ORIGINAL ISSUE	AMP	MRF	GW/JS	CZH	04/17/2020	D						

X Indicates Latest Revision | Completely Revised | New Page | Information Removed

SDG&E ELECTRIC OVERHEAD CONSTRUCTION STANDARDS

COVERED CONDUCTOR SYSTEM
TENSION CLAMP
FOR DEADEND CROSSARMS

OH2015.1

BILL OF MATERIALS:

ITEM	DESCRIPTION	QUANTITY	STANDARD PAGE	STOCK NUMBER	WEIGHT (LBS)	DESIGN UNITS
1	TENSION CLAMP	AS REQ'D	-	S232334	5.4	SO257S

NOTES:

I. USE WITH 1/0 AND 336 ACSR COVERED CONDUCTOR. ADDITIONAL CONDUCTOR SIZES TO BE ACCOMMODATED IN LATER REVISIONS.

II. MAXIMUM ALLOWABLE TENSION IS 1,890 LBS (INCLUDES A FACTOR OF SAFETY OF 2.0) FOR 1/0 COVERED CONDUCTOR WHEN USED WITH OR WITHOUT PIERCING CONNECTOR S269922.

III. MAXIMUM ALLOWABLE TENSION IS 3,350 LBS (INCLUDES A FACTOR OF SAFETY OF 2.0) FOR 336 COVERED CONDUCTOR WHEN USED WITH OR WITHOUT PIERCING CONNECTOR S269922.

REFERENCE:

a. SEE OH2035 FOR DEADEND ASSEMBLY DETAILS.
b. SEE OH379 FOR CROSSARM SELECTION.
c. SEE OH2004 FOR CONDUCTOR DATA.

© 1998 - 2021 San Diego Gas & Electric Company. All rights reserved. Removal of this copyright notice without permission is not permitted under law.

REV	CHANGE	DR	BY	DSN	APV	DATE	REV	CHANGE	DR	BY	DSN	APV	DATE
C	EDITORIAL CHANGES	AMP	JES	JES	CZH	03/05/2021	F						
B	STANDARD NUMBER UPDATES	AMP	MRF	JS	CZH	10/19/2020	E						
A	ORIGINAL ISSUE	AMP	MRF	GW/JS	CZH	04/17/2020	D						

X Indicates Latest Revision | Completely Revised | New Page | Information Removed

SDG&E ELECTRIC OVERHEAD CONSTRUCTION STANDARDS

COVERED CONDUCTOR SYSTEM
TENSION CLAMP
FOR DEADEND CROSSARMS

OH2015.2

SCOPE: THIS STANDARD PROVIDES SPECIFICATIONS AND INSTALLATION OF AN INSULATION PIERCING CONNECTOR (IPC) FOR A MEDIUM VOLTAGE COVERED CONDUCTOR.

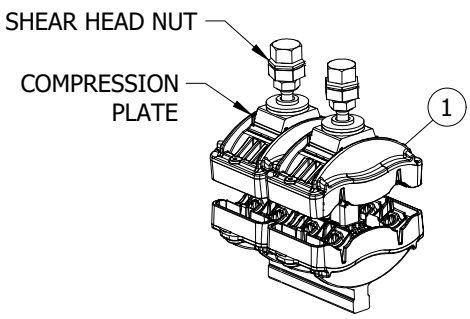

FIGURE 1
CONNECTOR

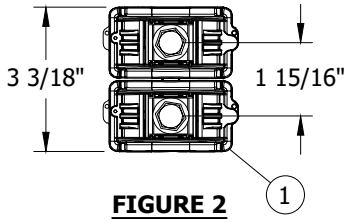

FIGURE 2
FRONT VIEW

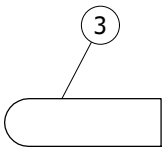

FIGURE 3
END CAP
FRONT VIEW

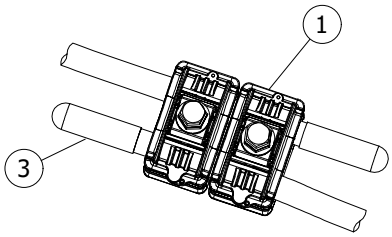

FIGURE 4
JUMPER LEAD CONNECTION

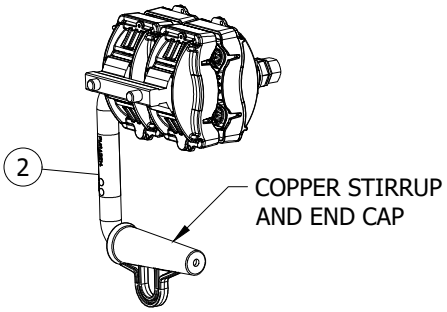

FIGURE 5
CONNECTOR WITH CAPPED STIRRUP

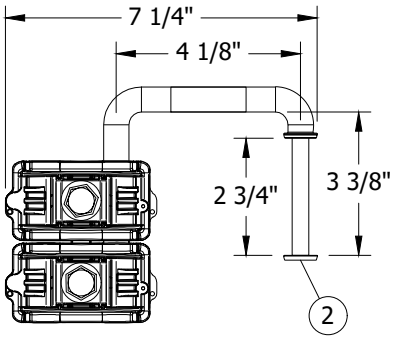

FIGURE 6
FRONT VIEW

INSTALLATION:

A. TIGHTEN TO MANUFACTURER SPECIFICATIONS UNTIL BOLT HEAD TORQUES OFF.

B. CONNECTOR WILL PIERCE THE INSULATING COVER OF THE CONDUCTOR AND WILL INDENT THE ALUMINUM STRANDS TO MAINTAIN ELECTRICAL CONTACT. THIS CONNECTOR IS ALSO COMPATIBLE WITH HENDRIX TAP WIRE.

(C) THIS CONNECTOR IS SUFFICIENT FOR USE ON JUMPER LEAD CONNECTIONS, AND EQUIPMENT LEAD CONNECTIONS FOR COVERED TO COVERED CONNECTIONS ONLY.

D. JUMPER LEAD CONNECTIONS SHOULD USE ITEM 1 (FIGURES 1, 2 AND 4) WHICH DOES NOT INCLUDE A BRANCHING STIRRUP.

E. IPC TAIL SHALL BE A PREFERRED MINIMUM 4-INCH TO FACILITATE END CAPS.

BILL OF MATERIALS:

ITEM	DESCRIPTION	WEIGHT (LBS)	QUANTITY	STANDARD PAGE	STOCK NUMBER	DESIGN UNITS
1	INSULATION PIERCING CONNECTOR, 336 - 1/0	1.28	AS REQ'D	--	S269924	SLW276
2	INSULATION PIERCING CONNECTOR WITH BRANCHING STIRRUP, 336 - 1/0	2.19	AS REQ'D	--	S269922	SLW2761
3	COLD SHRINK END CAP	--	AS REQ'D	--	S627240 (X)	--

NOTES:

I. USE WITH 1/0 AND 336 ACSR COVERED CONDUCTOR. ADDITIONAL CONDUCTOR SIZES TO BE ACCOMMODATED IN LATER REVISIONS.

II. THIS CONNECTOR CAN BE INSTALLED ONTO A CONDUCTOR UNDER TENSION, BUT IT DOES NOT SUPPORT A TENSION LOAD. SEE INSTALLATION NOTE (C).

(X) THIS ITEM IS EXEMPT.

© 1998 - 2022 San Diego Gas & Electric Company. All rights reserved. Removal of this copyright notice without permission is not permitted under law.

REV	CHANGE	DR	BY	DSN	APV	DATE	REV	CHANGE	DR	BY	DSN	APV	DATE
C	EDITORIAL CHANGES	AMP	JES	JES	CZH	03/05/2021	F						
B	STANDARD NUMBER UPDATES	AMP	MRF	JES	CZH	10/19/2020	E						
A	ORIGINAL ISSUE	AMP	MRF	GW/JS	CZH	04/17/2020	D	TABLE UPDATE	EDM	RSL	JES	FRC	02/14/2022

REFERENCE:

a. FOR DEADEND ASSEMBLY DETAILS, SEE OH2035.
b. FOR TANGENT ASSEMBLY DETAILS, SEE OH2036.
c. FOR HOTLINE CLAMPS, SEE OH788.
d. FOR HENDRIX TAP WIRE SIZES 1/0 AND 4/0, SEE OH711.
e. FOR COVERED TO BARE CONNECTIONS WITH GELPACT COVER, SEE OH783.

TABLE OF CONTENTS

© 1998 - 2022 San Diego Gas & Electric Company. All rights reserved. Removal of this copyright notice without permission is not permitted under law.

REV	CHANGE	DR	BY	DSN	APV	DATE	REV	CHANGE	DR	BY	DSN	APV	DATE
C	EDITORIAL CHANGES	AMP	JES	JES	CZH	03/05/2021	F						
B	STANDARD NUMBER UPDATES	AMP	MRF	JES	CZH	10/19/2020	E						
A	ORIGINAL ISSUE	AMP	MRF	GW/JS	CZH	04/17/2020	D	TABLE UPDATE	EDM	RSL	JES	FRC	02/14/2022

X Indicates Latest Revision | Completely Revised | New Page | Information Removed

SDG&E ELECTRIC OVERHEAD CONSTRUCTION STANDARDS

COVERED CONDUCTOR SYSTEM
INSULATION PIERCING CONNECTOR
FOR DEADEND CROSSARMS

OH2025.2

SCOPE: THIS STANDARD SHOWS A POLE TOP BRACKET, TO MOUNT LINE POST INSULATORS AND PROVIDE INCREASED DISTANCE IN SEPARATION OF THE MIDDLE PHASE.

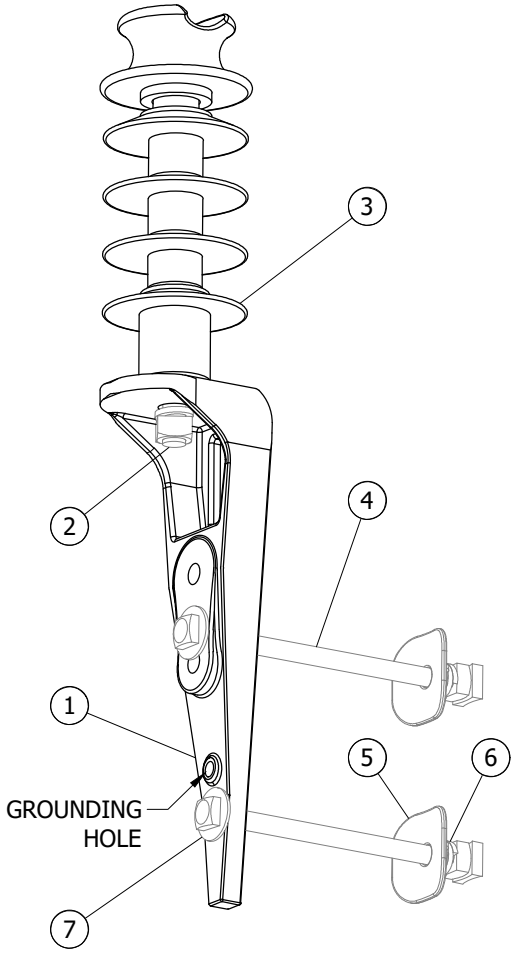

FIGURE 1
ISOMETRIC

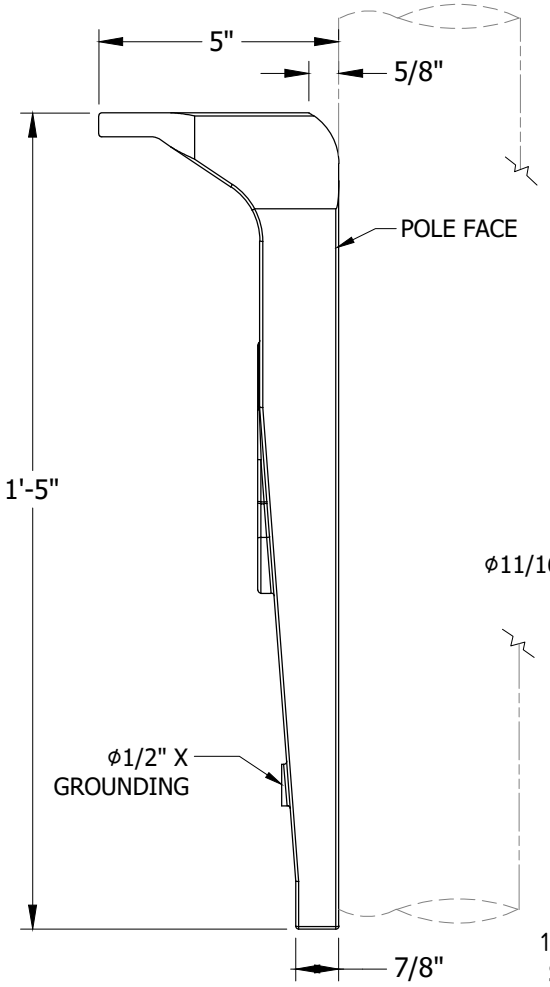

FIGURE 2
SIDE

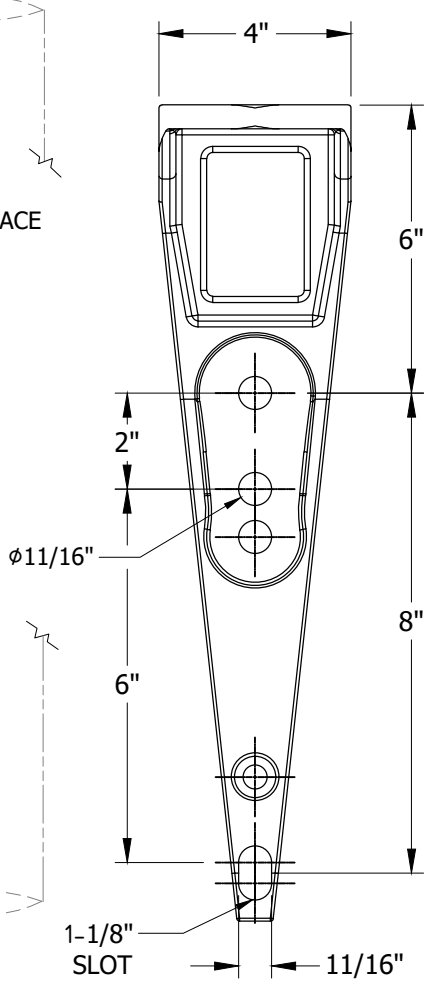

FIGURE 3
FRONT

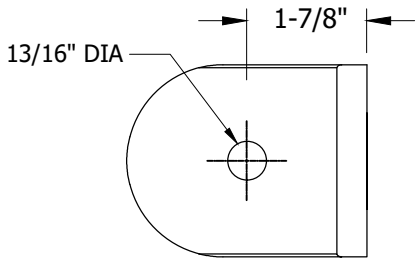

FIGURE 4
TOP

© 1998 - 2021 San Diego Gas & Electric Company. All rights reserved. Removal of this copyright notice without permission is not permitted under law.

REV	CHANGE	DR	BY	DSN	APV	DATE	REV	CHANGE	DR	BY	DSN	APV	DATE
C	FORMATTING	AMP	JES	JES	CZH	03/05/2021	F						
B	STANDARD NUMBER UPDATES	AMP	MRF	JS	CZH	10/19/2020	E						
A	ORIGINAL ISSUE	AMP	MRF	GW/JS	CZH	04/17/2020	D						

X Indicates Latest Revision | Completely Revised | New Page | Information Removed

SDG&E ELECTRIC OVERHEAD CONSTRUCTION STANDARDS

SHEET 1 OF 2

COVERED CONDUCTOR SYSTEM
POLE TOP INSULATOR BRACKET

OH2030.1

INSTALLATION:

A. PREFERENCE IS TO INSTALL THE BRACKET SO THAT IT IS BEARING INTO THE POLE WHEN LOADED.

BILL OF MATERIALS:

ITEM		DESCRIPTION	QUANTITY	STANDARD PAGE	STOCK NUMBER	WEIGHT (LBS)	DESIGN UNITS
1		POLE TOP BRACKET	AS REQ'D	-	S165432	5.07	BPT58G
2		POST INSULATOR STUD, FOR STEEL POLE TOP BRACKET	AS REQ'D	OH396	S701726	-	-
3		COMPOSITE LINE POST INSULATOR	AS REQ'D	OH2007	S429322	-	-
4		MACHINE BOLT 5/8", LENGTH AS REQUIRED.	AS REQ'D	OH390.7	-	-	-
5	A	WASHER, SQUARE, FLAT, 5/8" (I)	AS REQ'D	OH390.9	S799040	-	5/8 SQ
	B	WASHER, SQUARE, CURVED RIB, 3" X 3", 5/8" (I)	AS REQ'D	OH390.9	S797792	-	-
6	A	WASHER , SINGLE COIL SPRING TYPE, 5/8" (II)	AS REQ'D	OH390.9	S796866	-	- (X)
	B	WASHER , DOUBLE COIL SPRING TYPE, 5/8" (II)	AS REQ'D	OH390.9	S798560	-	- (X)
7		WASHER, ROUND, FLAT, 5/8"	AS REQ'D	OH390.9	S800320	-	5/8R

NOTES:

(I) USE FLAT SQUARE WASHER (ITEM 5A) FOR FLAT SURFACES AND USE CURVED SQUARE WASHER (ITEM 5B) FOR ROUND SURFACES.

(II) USE SINGLE COIL SPRING LOCK WASHER (ITEM 6A) FOR STEEL AND FIBERGLASS POLE APPLICATIONS. USE DOUBLE COIL SPRING LOCK WASHER (ITEM 6B) FOR WOOD POLE APPLICATIONS.

III. FOR POLE TOP BRACKET (S165432), WITH LINE ANGLES PULLING BRACKET AWAY FROM POLE, ALLOWABLE STRENGTH IS 1,050 LBS. FOR LINE ANGLES PULLING BRACKET TOWARD THE POLE (BEARING) AND LONGITUDINALLY ALONG THE CONDUCTOR, ALLOWABLE STRENGTH IS 1,120 LBS. ALLOWABLE DESIGN STRENGTHS INCLUDE A FACTOR OF SAFETY OF 2.0.

(X) THIS ITEM IS EXEMPT.

REFERENCE:

a. SEE SHEETS OH2035 AND OH2036 FOR ASSEMBLY DETAILS.

b. SEE OH2007 FOR ALLOWABLE STRENGTH OF INSULATOR S429322.

© 1998 - 2021 San Diego Gas & Electric Company. All rights reserved. Removal of this copyright notice without permission is not permitted under law.

REV	CHANGE	DR	BY	DSN	APV	DATE	REV	CHANGE	DR	BY	DSN	APV	DATE
C	FORMATTING	AMP	JES	JES	CZH	03/05/2021	F						
B	STANDARD NUMBER UPDATES	AMP	MRF	JS	CZH	10/19/2020	E						
A	ORIGINAL ISSUE	AMP	MRF	GW/JS	CZH	04/17/2020	D						

SCOPE: THIS STANDARD SHOWS VARIOUS DEADEND ARM CONFIGURATIONS WITH COVERED CONDUCTOR WIRE ASSEMBLIES.

ATTENTION:

* THIS CONFIGURATION IS NOT PREFERRED AND IS ONLY ACCEPTABLE FOR USE IF DEADEND 3-WIRE DELTA TENSION STRUCTURE CONFIGURATION CANNOT BE USED DUE TO EQUIPMENT OR CLIMBING ISSUES ON AN INDIVIDUAL POLE BASIS. SEE SHEET 2.

** THIS CONFIGURATION REQUIRES THAT CONDUCTORS HAVE BALANCED TENSIONS IN AHEAD AND BACK SPANS ON THE ARM THAT COMPLY WITH THE LOADING LIMITS PROVIDED ON OH379. (e)

*** UNDER NO CIRCUMSTANCES WILL A LONGITUDINAL TENSION IMBALANCE GREATER THAN WHAT IS SHOWN ON OH379 BE ACCEPTABLE FOR A 3-WIRE FLAT APPLICATION. (e)

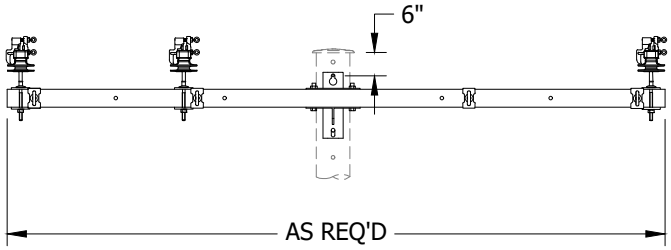

FIGURE 1
ARM LOCATION

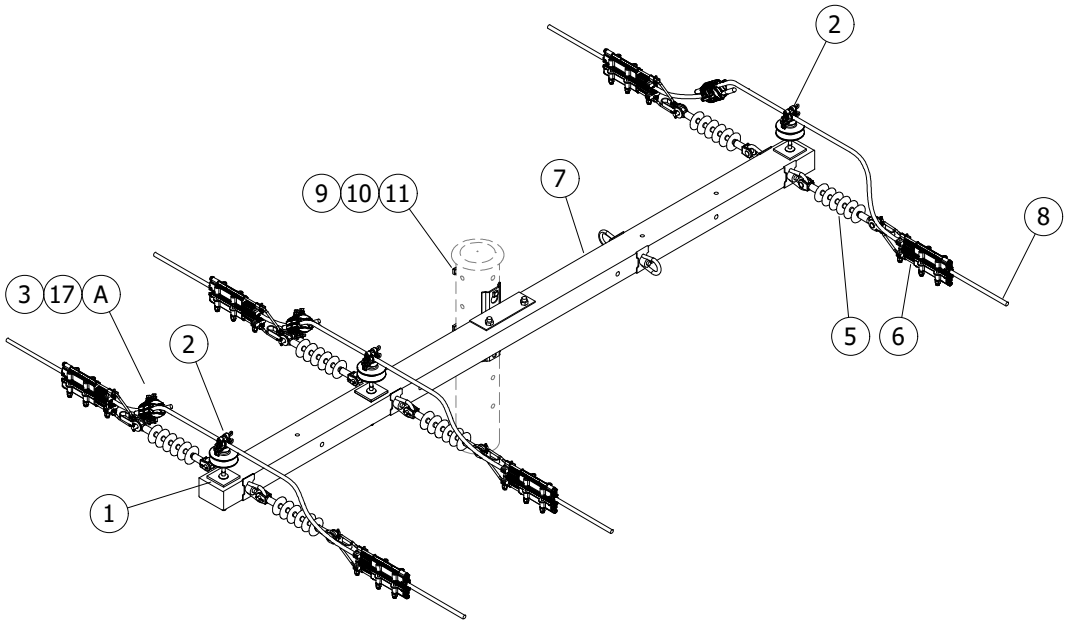

FIGURE 2
3-WIRE POSITION - FLAT DOUBLE DEADEND
(3-WIRE FLAT SINGLE DEADEND IS NOT AN ACCEPTED VARIATION)

© 1998 - 2022 San Diego Gas & Electric Company. All rights reserved. Removal of this copyright notice without permission is not permitted under law.

REV	CHANGE	DR	BY	DSN	APV	DATE	REV	CHANGE	DR	BY	DSN	APV	DATE
C	EDITORIAL CHANGES	AMP	JES	JES	CZH	03/05/2021	F						
B	STANDARD NUMBER UPDATES	AMP	MRF	JS	CZH	10/19/2020	E	DRAWING UPDATE	EDM	MRF	GLW	KRG	09/06/2022
A	ORIGINAL ISSUE	AMP	MRF	GW/JS	CZH	04/17/2020	D	NOTES UPDATE	EDM	SPC	GLW	CZH	12/06/2021

Indicates Latest Revision | Completely Revised | New Page X | Information Removed

SDG&E ELECTRIC OVERHEAD CONSTRUCTION STANDARDS

COVERED CONDUCTOR SYSTEM
POLE TOP ASSEMBLY
DEADEND 3-WIRE FLAT TENSION STRUCTURE

OH2035.1

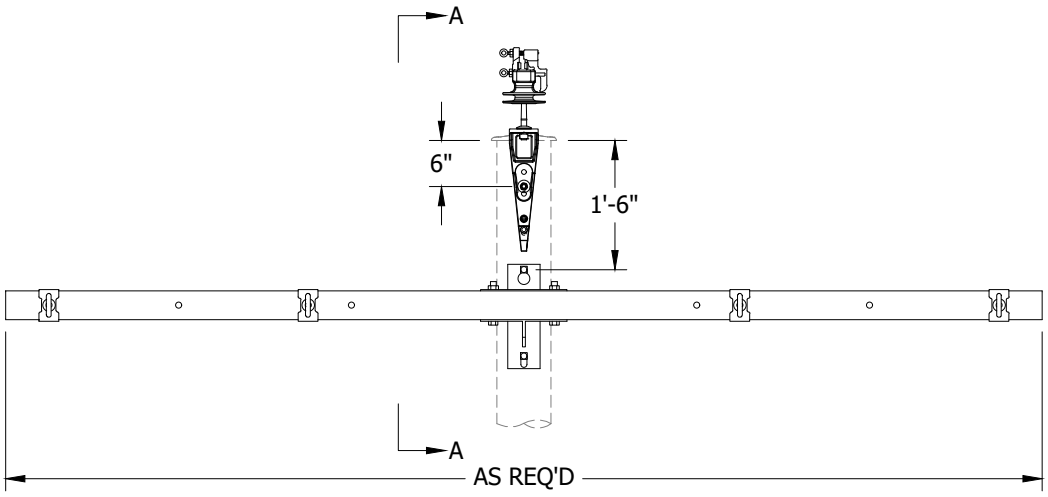

FIGURE 3
ARM LOCATION

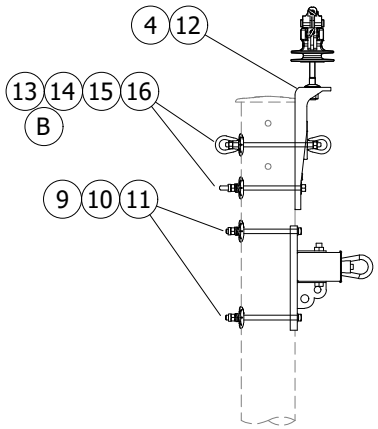

FIGURE 3
ARM AND BRACKET FACE
VIEW A-A

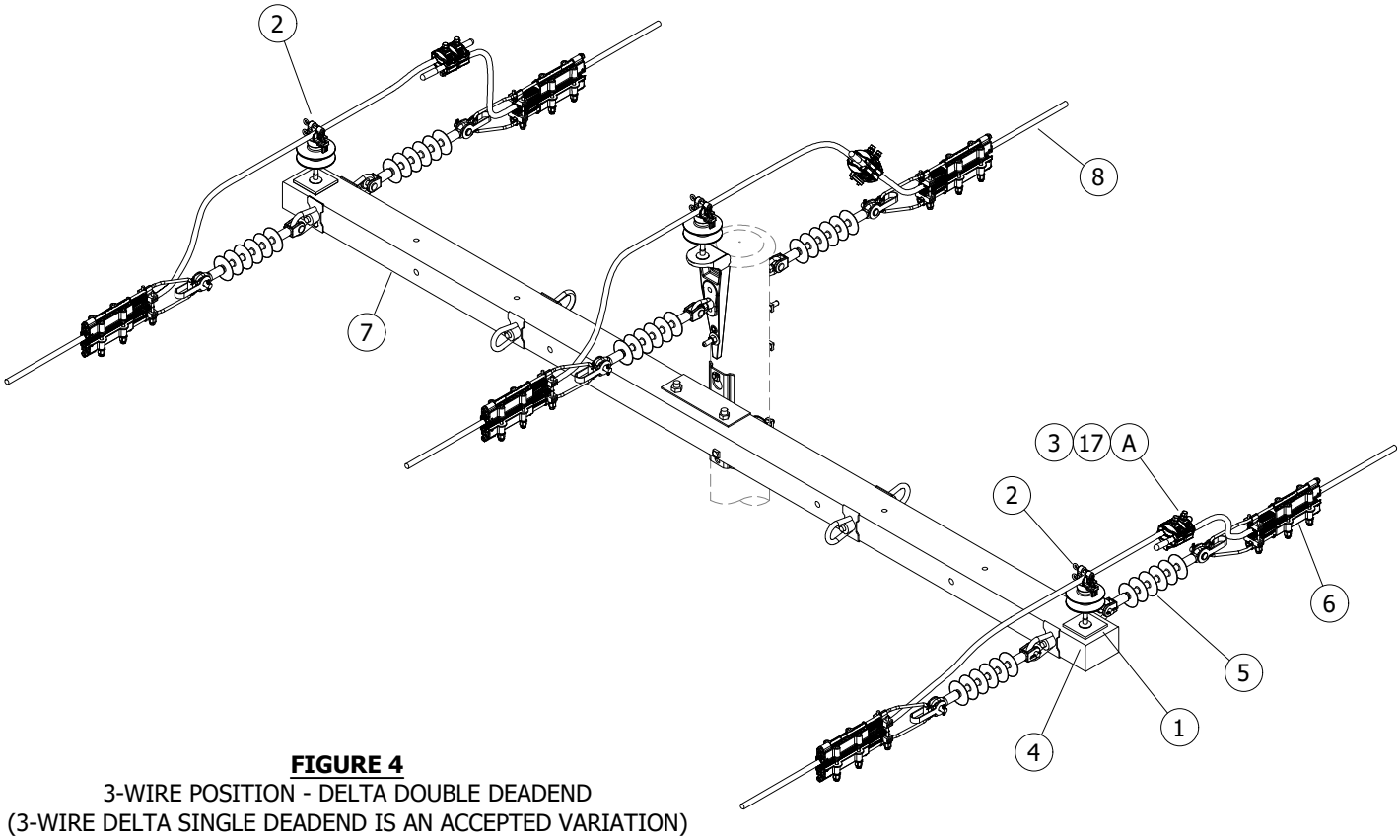

FIGURE 4
3-WIRE POSITION - DELTA DOUBLE DEADEND
(3-WIRE DELTA SINGLE DEADEND IS AN ACCEPTED VARIATION)

© 1998 - 2022 San Diego Gas & Electric Company. All rights reserved. Removal of this copyright notice without permission is not permitted under law.

REV	CHANGE	DR	BY	DSN	APV	DATE	REV	CHANGE	DR	BY	DSN	APV	DATE
C	EDITORIAL CHANGES	AMP	JES	JES	CZH	03/05/2021	F						
B	STANDARD NUMBER UPDATES	AMP	MRF	JS	CZH	10/19/2020	E	DRAWING UPDATE	EDM	MRF	GLW	KRG	09/06/2022
A	ORIGINAL ISSUE	AMP	MRF	GW/JS	CZH	04/17/2020	D	NOTES UPDATE	EDM	SPC	GLW	CZH	12/06/2021

X Indicates Latest Revision | Completely Revised | New Page | Information Removed

SDG&E ELECTRIC OVERHEAD CONSTRUCTION STANDARDS

COVERED CONDUCTOR SYSTEM
POLE TOP ASSEMBLY
DEADEND 3-WIRE DELTA TENSION STRUCTURE

OH2035.2

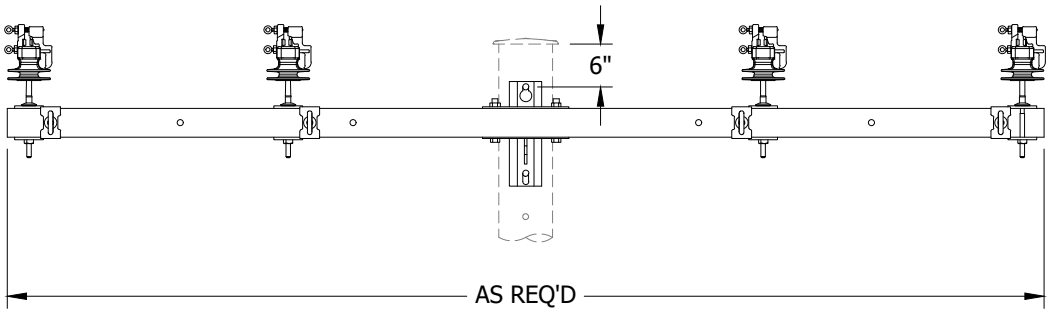

FIGURE 5
ARM LOCATION

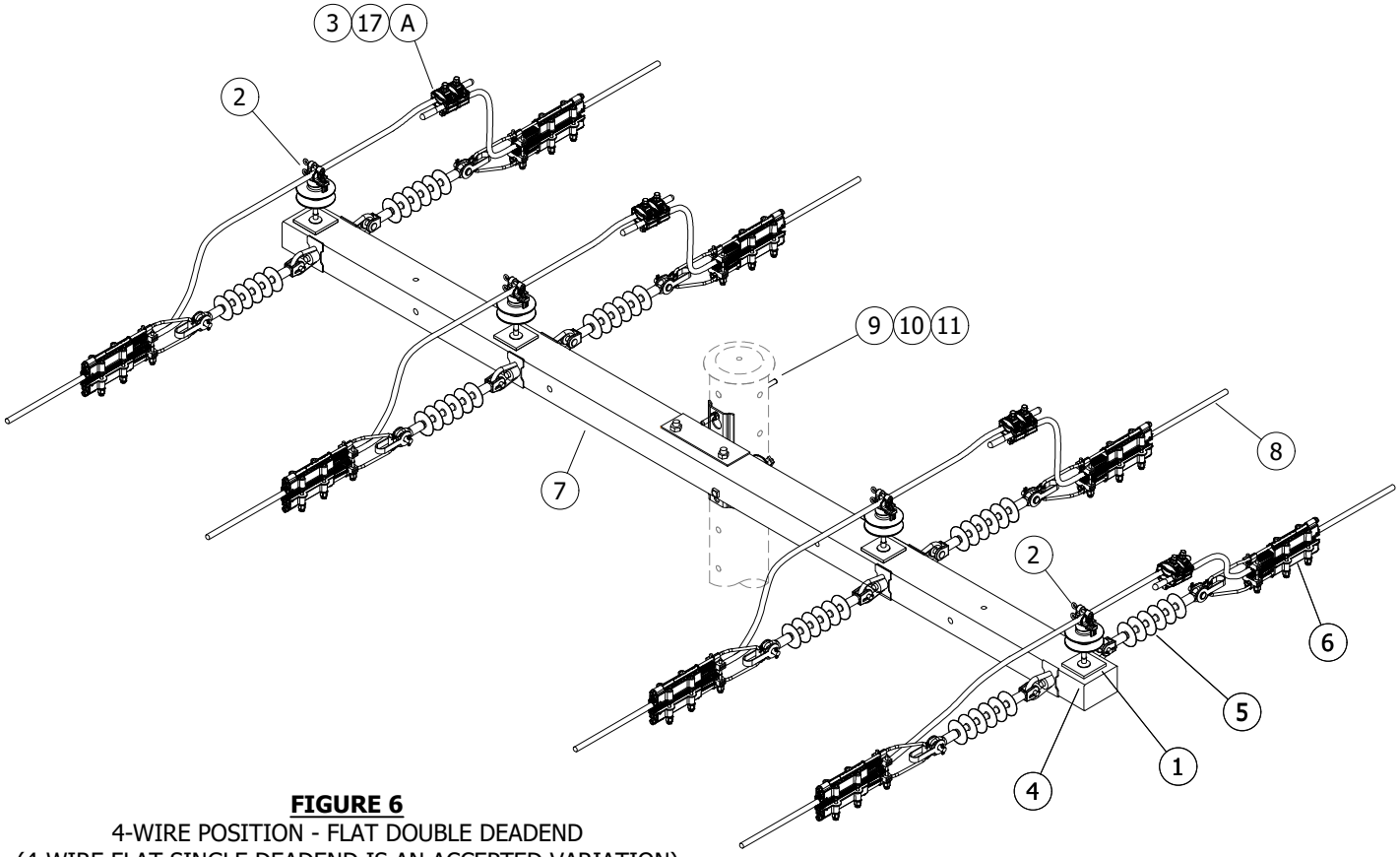

FIGURE 6
4-WIRE POSITION - FLAT DOUBLE DEADEND
(4-WIRE FLAT SINGLE DEADEND IS AN ACCEPTED VARIATION)

© 1998 - 2022 San Diego Gas & Electric Company. All rights reserved. Removal of this copyright notice without permission is not permitted under law.

REV	CHANGE	DR	BY	DSN	APV	DATE	REV	CHANGE	DR	BY	DSN	APV	DATE
C	EDITORIAL CHANGES	AMP	JES	JES	CZH	03/05/2021	F						
B	STANDARD NUMBER UPDATES	AMP	MRF	JS	CZH	10/19/2020	E	DRAWING UPDATE	EDM	MRF	GLW	KRG	09/06/2022
A	ORIGINAL ISSUE	AMP	MRF	GW/JS	CZH	04/17/2020	D	NOTES UPDATE	EDM	SPC	GLW	CZH	12/06/2021

ATTENTION:

* THIS CONFIGURATION IS NOT PREFERRED AND IS ONLY ACCEPTABLE FOR USE IF DEADEND 3-WIRE DELTA TENSION STRUCTURE CONFIGURATION CANNOT BE USED DUE TO EQUIPMENT OR CLIMBING ISSUES ON AN INDIVIDUAL POLE BASIS. SEE SHEET 5.

** THIS CONFIGURATION REQUIRES THAT CONDUCTORS HAVE BALANCED TENSIONS IN AHEAD AND BACK SPANS ON THE ARM THAT COMPLY WITH THE LOADING LIMITS PROVIDED ON OH379. (e)

*** UNDER NO CIRCUMSTANCES WILL A LONGITUDINAL TENSION IMBALANCE GREATER THAN WHAT IS SHOWN ON OH379 BE ACCEPTABLE FOR A 3-WIRE FLAT APPLICATION. (e)

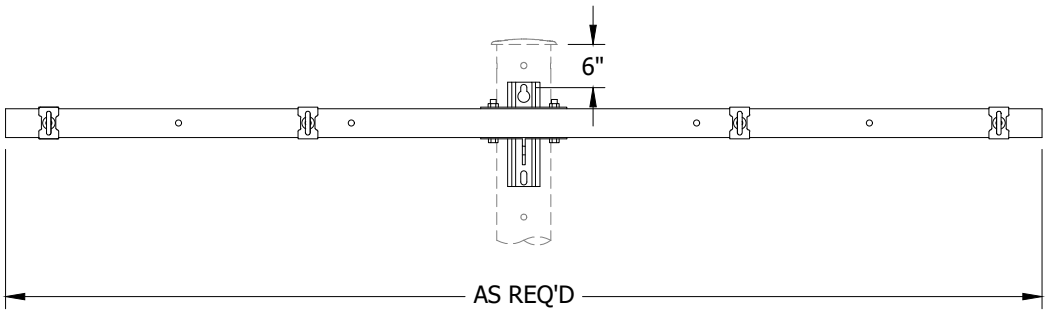

FIGURE 7
ARM LOCATION

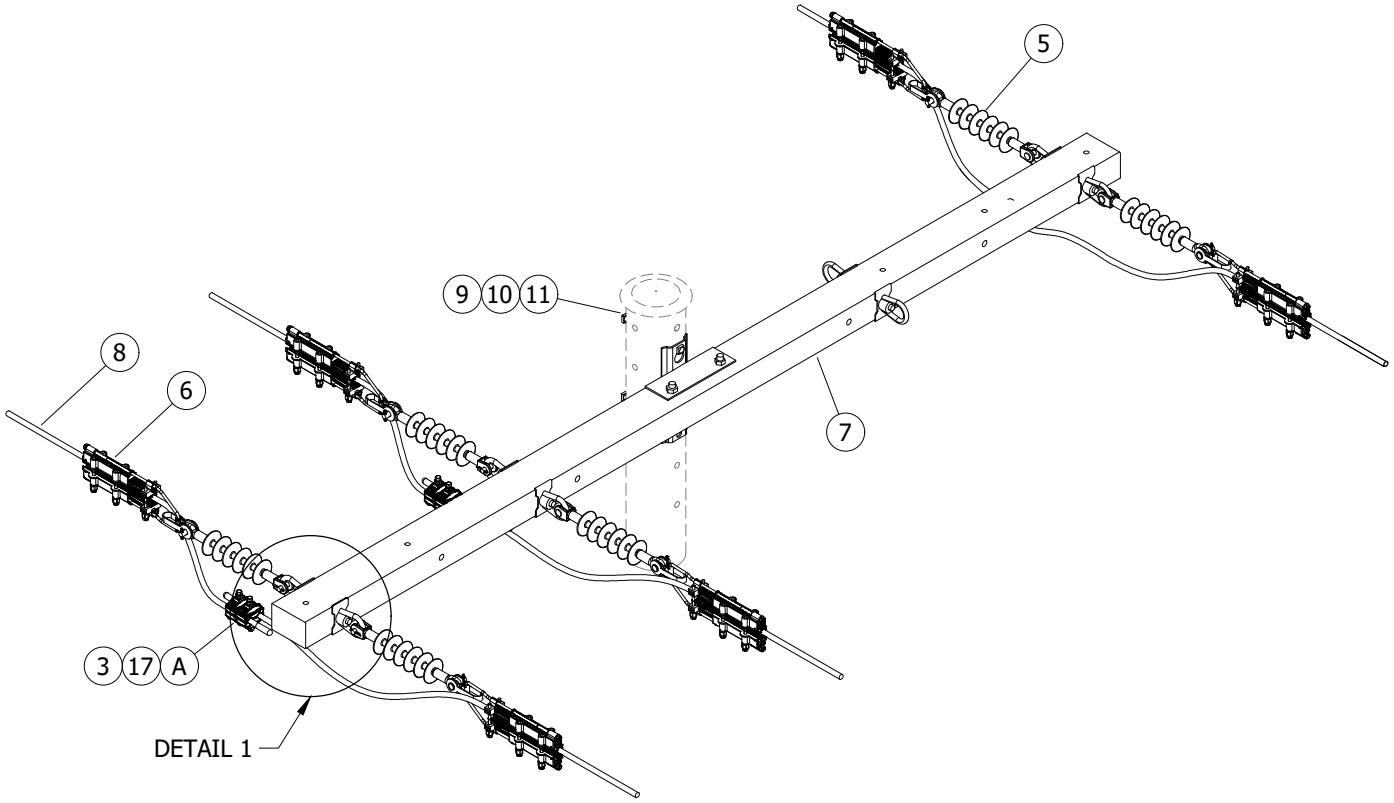

FIGURE 8
3-WIRE POSITION - FLAT DOUBLE DEADEND
(3-WIRE FLAT SINGLE DEADEND IS AN ACCEPTED VARIATION)

© 1998 - 2022 San Diego Gas & Electric Company. All rights reserved. Removal of this copyright notice without permission is not permitted under law.

REV	CHANGE	DR	BY	DSN	APV	DATE	REV	CHANGE	DR	BY	DSN	APV	DATE
C	EDITORIAL CHANGES	AMP	JES	JES	CZH	03/05/2021	F						
B	STANDARD NUMBER UPDATES	AMP	MRF	JS	CZH	10/19/2020	E	DRAWING UPDATE	EDM	MRF	GLW	KRG	09/06/2022
A	ORIGINAL ISSUE	AMP	MRF	GW/JS	CZH	04/17/2020	D	NOTES UPDATE	EDM	SPC	GLW	CZH	12/06/2021

Indicates Latest Revision | Completely Revised | New Page X | Information Removed

SDG&E ELECTRIC OVERHEAD CONSTRUCTION STANDARDS

COVERED CONDUCTOR SYSTEM
POLE TOP ASSEMBLY
DEADEND 3-WIRE FLAT TENSION STRUCTURE WITH UNDER ARM JUMPERS

OH2035.4

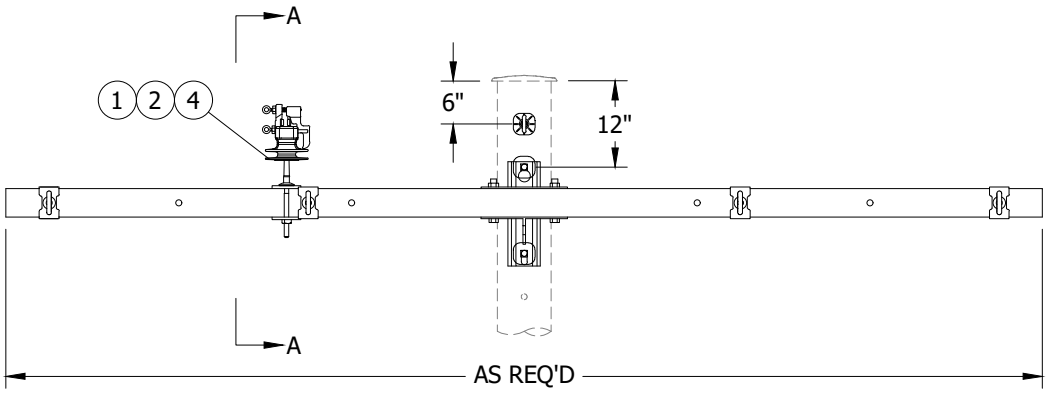

FIGURE 10
ARM LOCATION

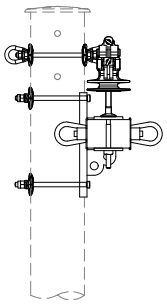

FIGURE 10
ARM AND BRACKET FACE
VIEW A-A

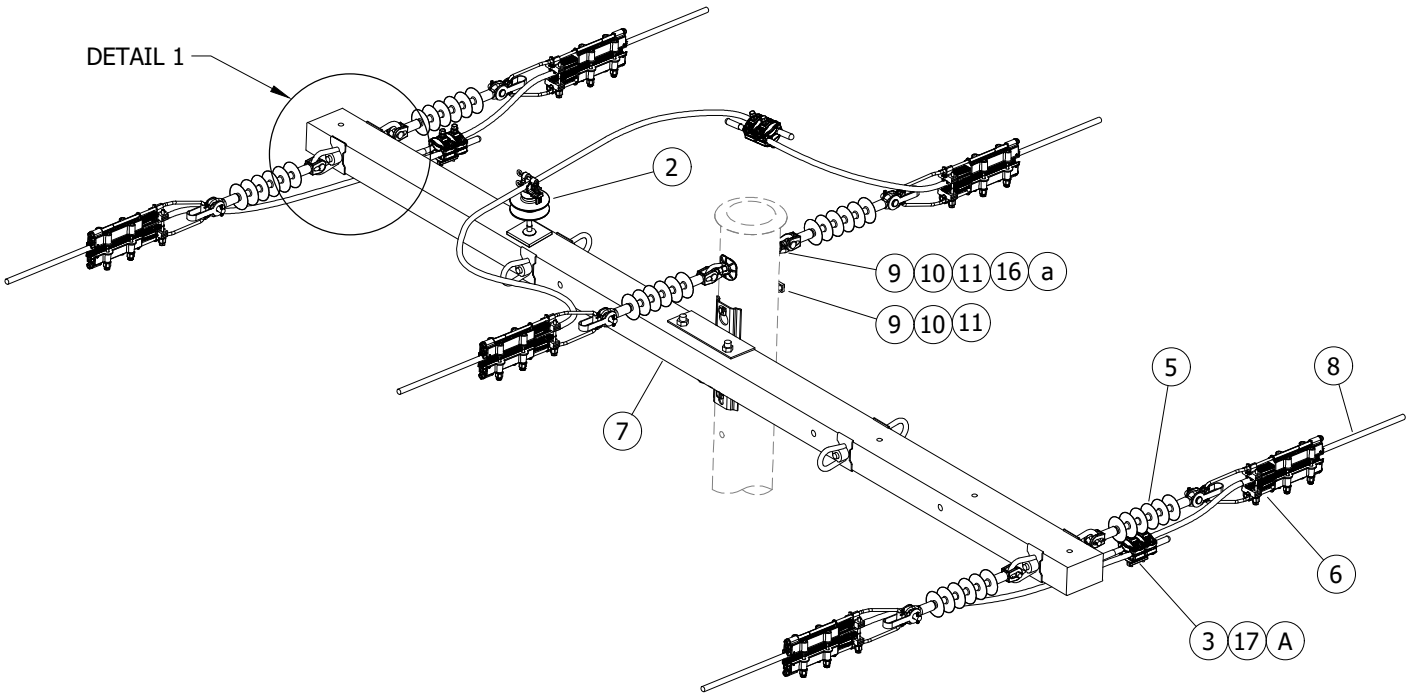

FIGURE 11
3-WIRE WITH UNDER ARM JUMPERS - DELTA DOUBLE DEADEND
(3-WIRE DELTA SINGLE DEADEND IS AN ACCEPTED VARIATION)

© 1998 - 2022 San Diego Gas & Electric Company. All rights reserved. Removal of this copyright notice without permission is not permitted under law.

REV	CHANGE	DR	BY	DSN	APV	DATE	REV	CHANGE	DR	BY	DSN	APV	DATE
C	EDITORIAL CHANGES	AMP	JES	JES	CZH	03/05/2021	F						
B	STANDARD NUMBER UPDATES	AMP	MRF	JS	CZH	10/19/2020	E	DRAWING UPDATE	EDM	MRF	GLW	KRG	09/06/2022
A	ORIGINAL ISSUE	AMP	MRF	GW/JS	CZH	04/17/2020	D	NOTES UPDATE	EDM	SPC	GLW	CZH	12/06/2021

X Indicates Latest Revision | Completely Revised | New Page | Information Removed

SDG&E ELECTRIC OVERHEAD CONSTRUCTION STANDARDS

COVERED CONDUCTOR SYSTEM
POLE TOP ASSEMBLY
DEADEND 3-WIRE DELTA TENSION STRUCTURE

OH2035.5

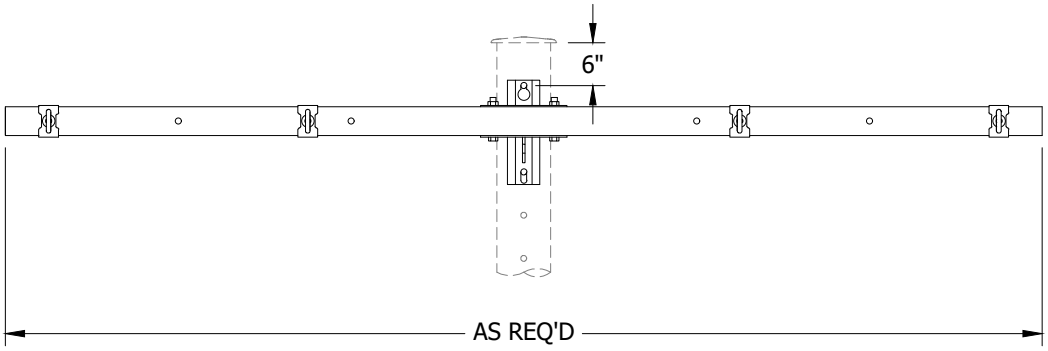

FIGURE 12
ARM LOCATION

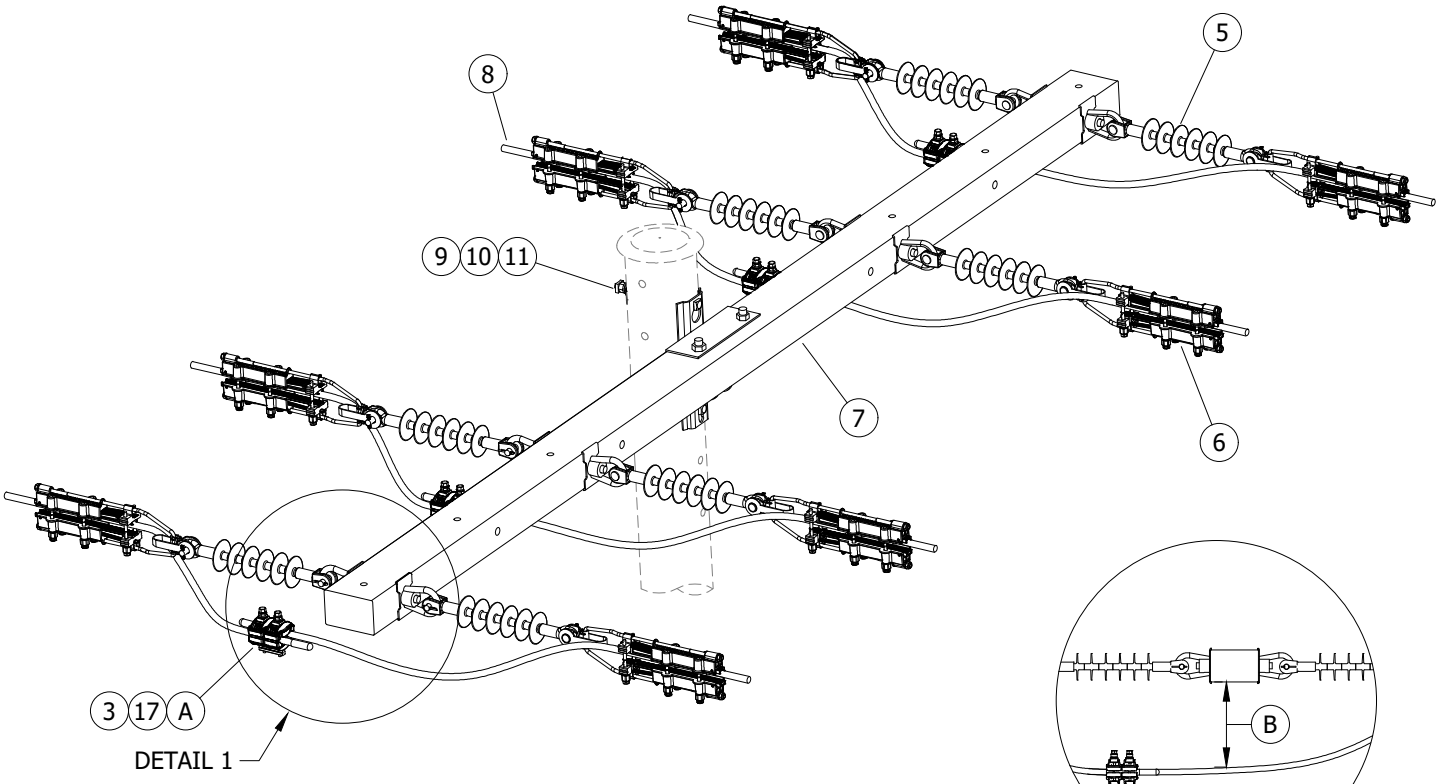

DETAIL 1

FIGURE 13
4-WIRE WITH UNDER ARM JUMPERS - FLAT DOUBLE DEADEND
(4-WIRE FLAT SINGLE DEADEND IS AN ACCEPTED VARIATION)

© 1998 - 2022 San Diego Gas & Electric Company. All rights reserved. Removal of this copyright notice without permission is not permitted under law.

REV	CHANGE	DR	BY	DSN	APV	DATE	REV	CHANGE	DR	BY	DSN	APV	DATE
C	EDITORIAL CHANGES	AMP	JES	JES	CZH	03/05/2021	F						
B	STANDARD NUMBER UPDATES	AMP	MRF	JS	CZH	10/19/2020	E	DRAWING UPDATE	EDM	MRF	GLW	KRG	09/06/2022
A	ORIGINAL ISSUE	AMP	MRF	GW/JS	CZH	04/17/2020	D	NOTES UPDATE	EDM	SPC	GLW	CZH	12/06/2021

X Indicates Latest Revision | Completely Revised | New Page | Information Removed

SDG&E ELECTRIC OVERHEAD CONSTRUCTION STANDARDS

COVERED CONDUCTOR SYSTEM
POLE TOP ASSEMBLY
DEADEND 4-WIRE FLAT TENSION STRUCTURE

OH2035.6

INSTALLATION:

(A) JUMPERS MAY BE MADE UP OF COVERED CONDUCTOR INSTEAD OF ANOTHER TYPICAL COVERED JUMPER WIRE AND MAY USE CONNECTORS AS REQUIRED TO MAKE THE CONNECTION. NO CONNECTOR IS REQUIRED IF CONDUCTOR CAN BE INSTALLED IN A CONTINUOUS FASHION FROM DEADEND TO DEADEND ON AN ARM. JUMPERS MAY BE INSTALLED OVER OR UNDER THE ARM.

(B) JUMPER LOOP MUST MAINTAIN CLEARANCE OF 18 INCHES FROM CROSSARM SURFACE.

C. THE MAXIMUM CROSSARM LENGTH FOR SINGLE CIRCUIT CROSSARMS SHALL NOT EXCEED 10 FEET EXCEPT WHERE NECESSARY TO MAINTAIN EXISTING EASEMENTS OR AT DEFLECTION ANGLES OR FOR LONG SPAN CONDITIONS. FOR NEW CONSTRUCTION, SUCH EXCEPTIONS SHALL NOT EXCEED 12-FOOT MAXIMUM LENGTH. (C)

BILL OF MATERIALS:

ITEM	DESCRIPTION	WEIGHT (LBS)	QUANTITY	STANDARD PAGE	STOCK NUMBER	DESIGN UNITS
1	WASHER, FLAT, SQUARE 4" X 4", 5/8"	--	--	390	S800070	--
2	VISE-TOP	--	AS REQ'D	750	--	--
3	CONNECTOR, INSULATION PIERCING	1.28		2025	S269924	SLW276
4	STUD, POST INSULATOR, FOR FIBERGLASS OR WOOD	--		396	--	--
5	INSULATOR, DEADEND SUSPENSION	--		750	--	--
6	CLAMP, TENSION	5.4		2015	S232334	SO257S
7	FIBERGLASS CROSSARM	--		379	--	--
8	CONDUCTOR, COVERED, 12KV	--		2004	--	--
9	MACHINE OR SPACE BOLT, 3/4" X LENGTH AS REQ'D	--		390	--	--
10	WASHER, SQUARE, FLAT, 3/4"	--			S799104	SQ-WSH
	WASHER, SQUARE, CURVED RIB, 3" X 3", 3/4"	--			S798912	--
11	WASHER , DOUBLE COIL SPRING TYPE, 3/4"	--			S798496	SP-WSH
12	BRACKET, POLE TOP	--		2030	S165432	BPT58G
13	BOLT, MACHINE OR SPACE, 5/8" X LENGTH AS REQ'D	--		390	--	--
14	WASHER, SQUARE, FLAT, 5/8"	--			S799040	5/8 SQ
	WASHER, SQUARE, CURVED RIB, 3" X 3", 5/8"	--			S797792	--
15	WASHER , DOUBLE COIL SPRING TYPE, 5/8"	--			S798560	5/8S
16	EYE NUT OR CLEVIS	--		739	--	--
17	COLD SHRINK END CAP	--		--	S627240	--

NOTES: NONE

REFERENCE:

(a) FOR TYPICAL THROUGH BOLT ASSEMBLY, SEE OH390.

b. FOR HOTLINE CLAMPS, SEE OH788.

(c) SEE OH251.6.

d. FOR NEUTRAL GROUNDING TO STEEL POLE, SEE OH1004.

(e) SEE OH379: FIBERGLASS CROSSARMS.

© 1998 - 2022 San Diego Gas & Electric Company. All rights reserved. Removal of this copyright notice without permission is not permitted under law.

REV	CHANGE	DR	BY	DSN	APV	DATE	REV	CHANGE	DR	BY	DSN	APV	DATE
C	EDITORIAL CHANGES	AMP	JES	JES	CZH	03/05/2021	F						
B	STANDARD NUMBER UPDATES	AMP	MRF	JS	CZH	10/19/2020	E	DRAWING UPDATE	EDM	MRF	GLW	KRG	09/06/2022
A	ORIGINAL ISSUE	AMP	MRF	GW/JS	CZH	04/17/2020	D	NOTES UPDATE	EDM	SPC	GLW	CZH	12/06/2021

X Indicates Latest Revision | Completely Revised | New Page | Information Removed

SDG&E ELECTRIC OVERHEAD CONSTRUCTION STANDARDS

COVERED CONDUCTOR SYSTEM
POLE TOP ASSEMBLY
DEADEND STRUCTURE

OH2035.7

SCOPE: THIS STANDARD SHOWS VARIOUS TANGENT ARM CONFIGURATIONS WITH COVERED WIRE.

ATTENTION:

* TANGENT 3-WIRE DELTA STRUCTURE

** THIS IS THE PREFERRED CONFIGURATION FOR 3-WIRE TANGENT APPLICATIONS.

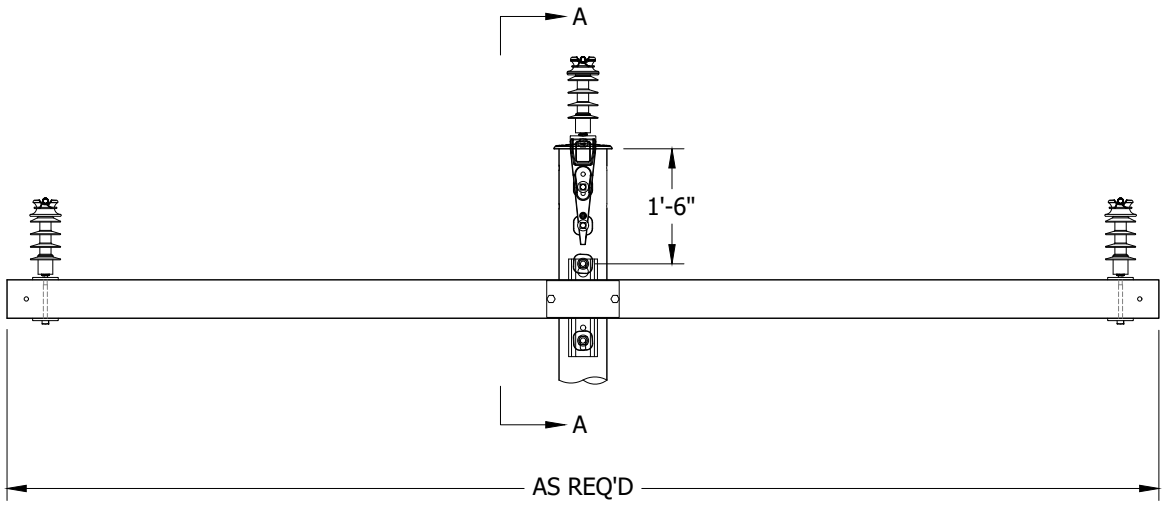

FIGURE 1
ARM LOCATION

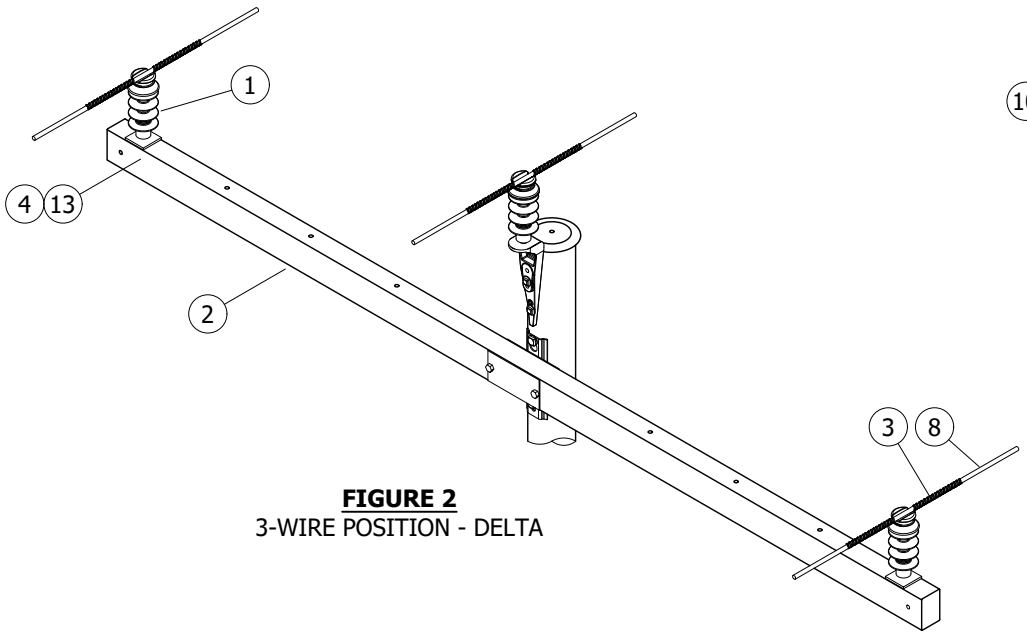

FIGURE 2
3-WIRE POSITION - DELTA

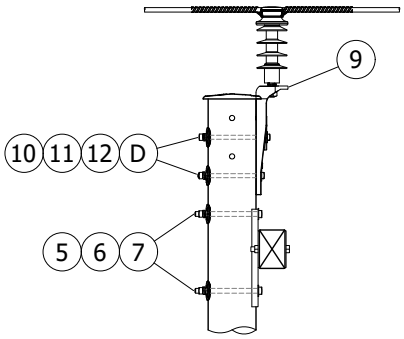

SECTION A-A
ARM AND BRACKET FACE

© 1998 - 2023 San Diego Gas & Electric Company. All rights reserved. Removal of this copyright notice without permission is not permitted under law.

REV	CHANGE	DR	BY	DSN	APV	DATE	REV	CHANGE	DR	BY	DSN	APV	DATE
C	EDITORIAL CHANGES	AMP	JES	JES	CZH	03/05/2021	F						
B	STANDARD NUMBER UPDATES	AMP	MRF	JS	CZH	10/19/2020	E						
A	ORIGINAL ISSUE	AMP	MRF	GW/JS	CZH	04/17/2020	D	NOTES UPDATE	ARC	MRF	GLW	KRG	02/16/2023

X Indicates Latest Revision | Completely Revised | New Page | Information Removed

SDG&E ELECTRIC OVERHEAD CONSTRUCTION STANDARDS

COVERED CONDUCTOR SYSTEM
POLE TOP ASSEMBLY 3-WIRE DELTA TANGENT STRUCTURE

OH2036.1

ATTENTION:

* TANGENT 3-WIRE FLAT STRUCTURE

** THIS CONFIGURATION IS NOT PREFERRED. IT IS ONLY ACCEPTABLE FOR USE IF THE 3-WIRE DELTA CONFIGURATION ON SHEET 1 CANNOT BE USED DUE TO EQUIPMENT OR CLIMBING ISSUES ON AN INDIVIDUAL POLE BASIS.

*** THIS CONFIGURATION REQUIRES THAT CONDUCTORS ON THE ARM HAVE BALANCED TENSIONS IN AHEAD AND BACK SPANS THAT COMPLY WITH THE LOADING LIMITS PROVIDED ON OH379. (C)

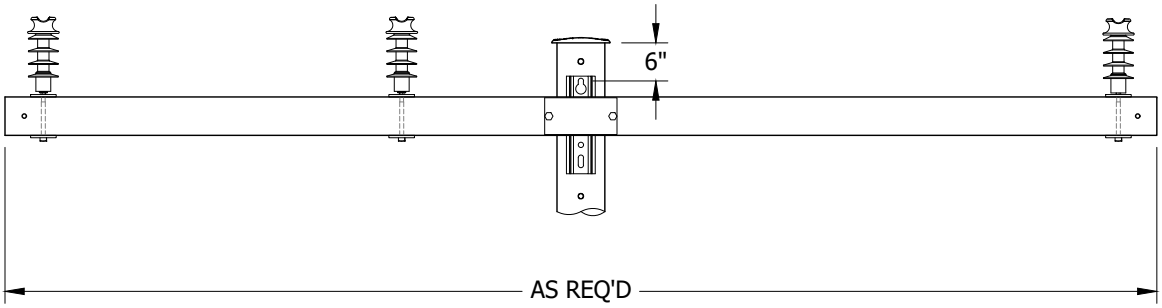

FIGURE 3
ARM LOCATION

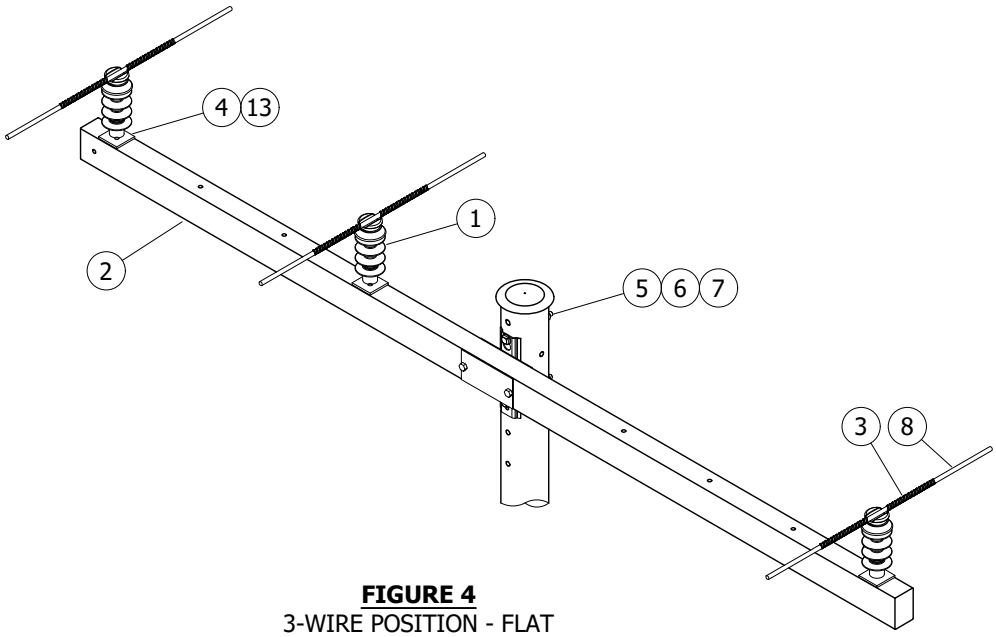

FIGURE 4
3-WIRE POSITION - FLAT

© 1998 - 2023 San Diego Gas & Electric Company. All rights reserved. Removal of this copyright notice without permission is not permitted under law.

REV	CHANGE	DR	BY	DSN	APV	DATE	REV	CHANGE	DR	BY	DSN	APV	DATE
C	EDITORIAL CHANGES	AMP	JES	JES	CZH	03/05/2021	F						
B	STANDARD NUMBER UPDATES	AMP	MRF	JS	CZH	10/19/2020	E						
A	ORIGINAL ISSUE	AMP	MRF	GW/JS	CZH	04/17/2020	D	NOTES UPDATE	ARC	MRF	GLW	KRG	02/16/2023

ATTENTION:

* TANGENT 4-WIRE TIE TOP INSULATORS FOR STRUCTURE

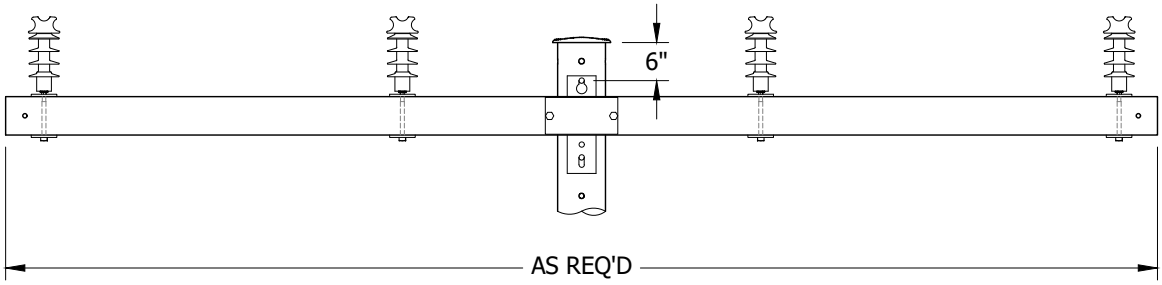

FIGURE 5
ARM LOCATION

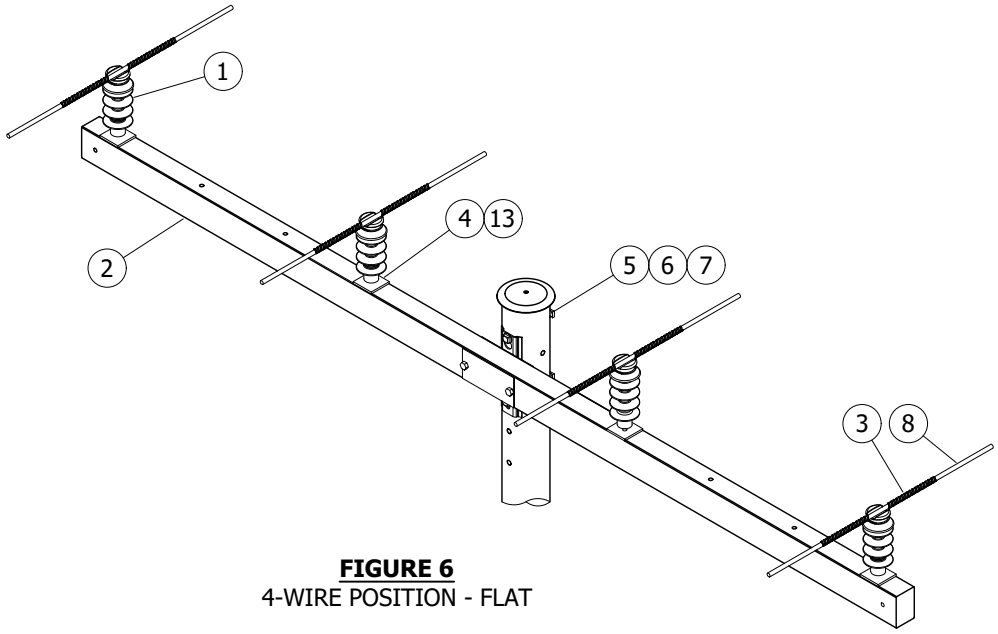

FIGURE 6
4-WIRE POSITION - FLAT

© 1998 - 2023 San Diego Gas & Electric Company. All rights reserved. Removal of this copyright notice without permission is not permitted under law.

REV	CHANGE	DR	BY	DSN	APV	DATE	REV	CHANGE	DR	BY	DSN	APV	DATE
C	EDITORIAL CHANGES	AMP	JES	JES	CZH	03/05/2021	F						
B	STANDARD NUMBER UPDATES	AMP	MRF	JS	CZH	10/19/2020	E						
A	ORIGINAL ISSUE	AMP	MRF	GW/JS	CZH	04/17/2020	D	NOTES UPDATE	ARC	MRF	GLW	KRG	02/16/2023

INSTALLATION:

A. ADDITIONAL FORMED WIRE TIES ARE NEEDED TO TIE THE CONDUCTOR TO THE INSULATOR. (a)

B. TIES CAN BE USED FOR BOTH TOP AND SIDE.

C. TIES ARE INSTALLED ON THE COVERED CONDUCTOR INSULATION.

(D) USE HORIZONTAL "FLAT" CROSSARM ARRANGEMENT, NOT RIDGE-PIN, ON EQUIPMENT POLES AND BUCK POLE INSTALLATIONS.

E. THE MAXIMUM CROSSARM LENGTH FOR SINGLE CIRCUIT CROSSARMS SHALL NOT EXCEED 10 FEET EXCEPT WHERE NECESSARY TO MAINTAIN EXISTING EASEMENTS, AT DEFLECTION ANGLES, OR FOR LONG SPAN CONDITIONS. FOR NEW CONSTRUCTION, SUCH EXCEPTIONS SHALL NOT EXCEED 12-FOOT MAXIMUM LENGTH.

BILL OF MATERIALS:

ITEM		DESCRIPTION	WEIGHT (LBS)	QUANTITY	STANDARD PAGE	STOCK NUMBER	DESIGN UNITS
1		INSULATOR, COMPOSITE LINE POST	5.46	AS REQ'D	2007	S429322	SDI82
2		CROSSARM, FIBERGLASS	--		379	--	--
3		TIE, HELICAL	1.51		2010	S738988	--
4		STUD, POST INSULATOR, FOR FIBERGLASS OR WOOD	--		396	--	--
5		BOLT, MACHINE, 3/4" X LENGTH AS REQ'D	--		390	--	--
6	A	WASHER, SQUARE, FLAT, 3/4"	--			S799104	SQ-WSH
	B	WASHER, SQUARE, CURVED RIB, 3" X 3", 3/4"	--			S798912	--
7		WASHER, DOUBLE COIL SPRING TYPE, 3/4"	--			S798496	SP-WSH
8		CONDUCTOR, COVERED, 12KV	--		2004	--	--
9		BRACKET, POLE TOP	--		2030	S165432	BPT58G
10		BOLT, MACHINE, 5/8" X LENGTH AS REQ'D	--		390	--	--
11	A	WASHER, SQUARE, FLAT, 5/8"	--			S799040	5/8 SQ
	B	WASHER, SQUARE, CURVED RIB, 3" X 3", 5/8"	--			S797792	--
12		WASHER, DOUBLE COIL SPRING TYPE, 5/8"	--			S798560	5/8S
13		WASHER, FLAT, SQUARE, 4" X 4", 5/8"	--			S800070	--

NOTES: NONE

REFERENCE:

(a) SEE OH2010: COVERED CONDUCTOR SYSTEM - HELICAL TIE.

b. FOR HOTLINE CLAMPS, SEE OH788.

(c) SEE OH379: FIBERGLASS CROSSARMS.

d. SEE OH1004: NEUTRAL GROUNDING TO STEEL POLES.

© 1998 - 2023 San Diego Gas & Electric Company. All rights reserved. Removal of this copyright notice without permission is not permitted under law.

REV	CHANGE	DR	BY	DSN	APV	DATE	REV	CHANGE	DR	BY	DSN	APV	DATE
C	EDITORIAL CHANGES	AMP	JES	JES	CZH	03/05/2021	F						
B	STANDARD NUMBER UPDATES	AMP	MRF	JS	CZH	10/19/2020	E						
A	ORIGINAL ISSUE	AMP	MRF	GW/JS	CZH	04/17/2020	D	NOTES UPDATE	ARC	MRF	GLW	KRG	02/16/2023

SCOPE: THIS STANDARD SHOWS THE VARIOUS CONNECTORS, COVERED CONDUCTOR AND SECONDARY TAPS.

TABLE 1

CONNECTORS, SECONDARY TAPS, COVERED CONDUCTOR							
MAIN CONDUCTOR SIZE		TAP CONDUCTOR SIZE					
		#8	#6	#4	#2	#1	1/0
#6	CHOICE #1 (STOCK#)	SLIW52 (S269926)	SLIW52 (S269926)	SLIW54 (S269928)	SLIW54 (S269928)	SLIW54 (S269928)	SLIW54 (S269928)
	CHOICE #2 (STOCK#)	SLIW54 (S269928)	SLIW54 (S269928)				
#4	CHOICE #1 (STOCK#)	SLIW52 (S269926)	SLIW52 (S269926)	SLIW54 (S269928)	SLIW54 (S269928)	SLIW54 (S269928)	SLIW54 (S269928)
	CHOICE #2 (STOCK#)	SLIW54 (S269928)	SLIW54 (S269928)	SLIW57 (S269930)	SLIW57 (S269930)	SLIW57 (S269930)	SLIW57 (S269930)
#2	CHOICE #1 (STOCK#)	SLIW52 (S269926)	SLIW52 (S269926)	SLIW54 (S269928)	SLIW54 (S269928)	SLIW54 (S269928)	SLIW54 (S269928)
	CHOICE #2 (STOCK#)	SLIW54 (S269928)	SLIW54 (S269928)	SLIW57 (S269930)	SLIW57 (S269930)	SLIW57 (S269930)	SLIW57 (S269930)
#1	CHOICE #1 (STOCK#)	SLIW52 (S269926)	SLIW52 (S269926)	SLIW54 (S269928)	SLIW54 (S269928)	SLIW54 (S269928)	SLIW54 (S269928)
	CHOICE #2 (STOCK#)	SLIW54 (S269928)	SLIW54 (S269928)	SLIW57 (S269930)	SLIW57 (S269930)	SLIW57 (S269930)	SLIW57 (S269930)
1/0	CHOICE #1 (STOCK#)	SLIW52 (S269926)	SLIW52 (S269926)	SLIW54 (S269928)	SLIW54 (S269928)	SLIW54 (S269928)	SLIW54 (S269928)
	CHOICE #2 (STOCK#)	SLIW54 (S269928)	SLIW54 (S269928)	SLIW57 (S269930)	SLIW57 (S269930)	SLIW57 (S269930)	SLIW57 (S269930)
2/0	CHOICE #1 (STOCK#)	SLIW52 (S269926)	SLIW52 (S269926)	SLIW54 (S269928)	SLIW54 (S269928)	SLIW54 (S269928)	SLIW54 (S269928)
	CHOICE #2 (STOCK#)	SLIW54 (S269928)	SLIW54 (S269928)	SLIW57 (S269930)	SLIW57 (S269930)	SLIW57 (S269930)	SLIW57 (S269930)
3/0	CHOICE #1 (STOCK#)	SLIW52 (S269926)	SLIW52 (S269926)	SLIW54 (S269928)	SLIW54 (S269928)	SLIW54 (S269928)	SLIW54 (S269928)
	CHOICE #2 (STOCK#)	SLIW54 (S269928)	SLIW54 (S269928)	SLIW57 (S269930)	SLIW57 (S269930)	SLIW57 (S269930)	SLIW57 (S269930)
4/0	CHOICE #1 (STOCK#)	SLIW52 (S269926)	SLIW52 (S269926)	SLIW54 (S269928)	SLIW54 (S269928)	SLIW54 (S269928)	SLIW54 (S269928)
	CHOICE #2 (STOCK#)	SLIW54 (S269928)	SLIW54 (S269928)	SLIW57 (S269930)	SLIW57 (S269930)	SLIW57 (S269930)	SLIW57 (S269930)
250KCMIL	CHOICE #1 (STOCK#)	SLIW52 (S269926)	SLIW52 (S269926)	SLIW54 (S269928)	SLIW54 (S269928)	SLIW54 (S269928)	SLIW54 (S269928)
	CHOICE #2 (STOCK#)	SLIW54 (S269928)	SLIW54 (S269928)	SLIW57 (S269930)	SLIW57 (S269930)	SLIW57 (S269930)	SLIW57 (S269930)
300KCMIL	CHOICE #1 (STOCK#)	SLIW52 (S269926)	SLIW52 (S269926)	SLIW57 (S269930)	SLIW57 (S269930)	SLIW57 (S269930)	SLIW57 (S269930)
	CHOICE #2 (STOCK#)						SLIW58 (S269932)
336.4KCMIL	CHOICE #1 (STOCK#)	SLIW52 (S269926)	SLIW52 (S269926)	SLIW57 (S269930)	SLIW57 (S269930)	SLIW57 (S269930)	SLIW57 (S269930)
	CHOICE #2 (STOCK#)						SLIW58 (S269932)

© 1998 - 2021 San Diego Gas & Electric Company. All rights reserved. Removal of this copyright notice without permission is not permitted under law.

REV	CHANGE	DR	BY	DSN	APV	DATE	REV	CHANGE	DR	BY	DSN	APV	DATE
C	EDITORIAL CHANGES	AMP	JES	JES	CZH	03/05/2021	F						
B	STANDARD NUMBER UPDATES	AMP	MRF	JS	CZH	10/19/2020	E						
A	ORIGINAL ISSUE	AMP	MRF	GW/JS	CZH	04/17/2020	D						

Indicates Latest Revision | Completely Revised | New Page X | Information Removed

SDG&E ELECTRIC OVERHEAD CONSTRUCTION STANDARDS

COVERED CONDUCTOR SYSTEM
SECONDARY TAPS AND CONNECTORS

OH2040.1

TABLE 1 CONT'D

CONNECTORS, SECONDARY TAPS, COVERED CONDUCTOR								
MAIN CONDUCTOR SIZE		TAP CONDUCTOR SIZE						
		2/0	3/0	4/0	250KCMIL	300KCMIL	336.4KCMIL	
#4	CHOICE #1 (STOCK#)	SLIW57 (S269930)	SLIW57 (S269930)					
#2	CHOICE #1 (STOCK#)	SLIW57 (S269930)	SLIW57 (S269930)					
#1	CHOICE #1 (STOCK#)	SLIW57 (S269930)	SLIW57 (S269930)					
1/0	CHOICE #1 (STOCK#)	SLIW57 (S269930)	SLIW57 (S269930)	SLIW58 (S269932)	SLIW58 (S269932)	SLIW58 (S269932)	SLIW58 (S269932)	
	CHOICE #2 (STOCK#)	SLIW58 (S269932)	SLIW58 (S269932)					
2/0	CHOICE #1 (STOCK#)	SLIW57 (S269930)	SLIW57 (S269930)	SLIW58 (S269932)	SLIW58 (S269932)	SLIW58 (S269932)	SLIW58 (S269932)	
	CHOICE #2 (STOCK#)	SLIW58 (S269932)	SLIW58 (S269932)					
3/0	CHOICE #1 (STOCK#)	SLIW57 (S269930)	SLIW57 (S269930)	SLIW58 (S269932)	SLIW58 (S269932)	SLIW58 (S269932)	SLIW58 (S269932)	
	CHOICE #2 (STOCK#)	SLIW58 (S269932)	SLIW58 (S269932)					
4/0	CHOICE #1 (STOCK#)	SLIW57 (S269930)	SLIW57 (S269930)	SLIW58 (S269932)	SLIW58 (S269932)	SLIW58 (S269932)	SLIW58 (S269932)	
	CHOICE #2 (STOCK#)	SLIW57 (S269930)	SLIW58 (S269932)					
250KCMIL	CHOICE #1 (STOCK#)	SLIW57 (S269930)	SLIW57 (S269930)	SLIW58 (S269932)	SLIW58 (S269932)	SLIW58 (S269932)	SLIW58 (S269932)	
	CHOICE #2 (STOCK#)	SLIW58 (S269932)	SLIW58 (S269932)					
300KCMIL	CHOICE #1 (STOCK#)	SLIW57 (S269930)	SLIW57 (S269930)	SLIW58 (S269932)	SLIW58 (S269932)	SLIW58 (S269932)	SLIW58 (S269932)	
	CHOICE #2 (STOCK#)	SLIW58 (S269932)	SLIW58 (S269932)					
336.4KCMIL	CHOICE #1 (STOCK#)	SLIW57 (S269930)	SLIW57 (S269930)	SLIW58 (S269932)	SLIW58 (S269932)	SLIW58 (S269932)	SLIW58 (S269932)	
	CHOICE #2 (STOCK#)	SLIW58 (S269932)	SLIW58 (S269932)					

INSTALLATION: NONE

BILL OF MATERIALS: NONE

NOTES:

I. COLOR CODING SHOWN IN TABLE CORRESPONDS TO BANDING COLOR FOUND ON CONNECTOR FOR VISUAL CONFIRMATION OF CORRECT HARDWARE.

II. THESE CONNECTORS CAN BE INSTALLED ONTO A CONDUCTOR UNDER TENSION BUT THEY DO NOT SUPPORT A TENSION LOAD FROM MAIN OR TAP CONDUCTORS.

REFERENCES: NONE

© 1998 - 2021 San Diego Gas & Electric Company. All rights reserved. Removal of this copyright notice without permission is not permitted under law.

REV	CHANGE	DR	BY	DSN	APV	DATE	REV	CHANGE	DR	BY	DSN	APV	DATE
C	EDITORIAL CHANGES	AMP	JES	JES	CZH	03/05/2021	F						
B	STANDARD NUMBER UPDATES	AMP	MRF	JS	CZH	10/19/2020	E						
A	ORIGINAL ISSUE	AMP	MRF	GW/JS	CZH	04/17/2020	D						